Sonoran Crossing
CAP Wash East
Letter of Map Revision

Technical Data Notebook

Follows FEMA CLOMR Case No. 12-09-0714R
Dibble Project No.: 111204

May 2014

Prepared For:

MACERICH®

Submitted To:

City of Phoenix
SDEV 1100351
KIVA 11-3686
CSPR 1201762

Prepared by:

Dibble Engineering

7500 North Dreamy Draw Drive Suite 200
Phoenix, Arizona 85020
P. 602.957.1155
F. 602.957.2838
www.dibblecorp.com

Registered Professional Engineer (Civil)
CERTIFICATE NO.
37878
JOSHUA E.
PAPWORTH
Date Signed 5/30/14
ARIZONA, U.S.A.
Expires 09/30/14

Sonoran Crossing
CAP Wash East
Letter of Map Revision

Technical Data Notebook

Follows FEMA CLOMR Case No. 12-09-0714R
Dibble Project No.: 111204

May 2014

Prepared For:

MACERICH®

Submitted To:

City of Phoenix
SDEV 1100351
KIVA 11-3686
CSPR 1201762

Prepared by:

Dibble Engineering

7500 North Dreamy Draw Drive Suite 200
Phoenix, Arizona 85020
P. 602.957.1155
F. 602.957.2838
www.dibblecorp.com

Registered Professional Engineer (Civil)
CERTIFICATE NO.
37878
JOSHUA E.
PAPWORTH
Date Signed 5/30/14
ARIZONA, U.S.A.
Expires 09/30/14

City of Phoenix
Floodplain Management, 200 W. Washington St., Phoenix, AZ 85003
Phone: (602) 262-4960 Fax: (602) 262-7322

July 23, 2014

LOMC Clearinghouse
847 South Pickett Street
Alexandria, VA 22304-4605

Attn: LOMR MANAGER

RE: LETTER OF MAP REVISION (LOMR)
Sonoran Crossing CAP Wash East
PANEL 04013C845L, October 16, 2013

Please find the enclosed Letter of Map Revision (LOMR) application for Sonoran Crossing at CAP Wash East in Phoenix, Arizona. The following items are included with this application:

ITEMS

1. Check #20419 in the amount of $5,000.00
2. Overview & Concurrence Form (MT-2 Form 1) – Appendix H.1
3. Riverine Hydrology & Hydraulics Forms (MT-2 Form 2) – Appendix H.1
4. Riverine Structures Form (MT-2 Form 3) – Appendix H.1
5. Annotated FIRM Map (Figure 3)- Appendix H.2
6. Paving and Drainage Plans and Profiles – Appendix I
7. HEC-RAS Model (CD)
8. CLOMR Case No. 12-09-714R dated February 14, 2012

If you have any technical questions regarding this project, please contact Mr. Josh Papworth, P.E., Dibble Engineering; phone number 602-957-1155. If you have any other questions, please contact this office at 602-262-4960.

Sincerely,

Myesha Harris, CFM
Civil Engineer II

cc: Mr. Josh Papworth, P.E., Dibble Engineering
Mr. Brian Cosson, CFM, Arizona Department of Water Resources
Mr. Tim Murphy, PE, CFM, Flood Control District of Maricopa County

Appendices

Appendix A: References
- A.1 Data Collection Summary
- A.2 Referenced Documents

Appendix B: General Documentation and Correspondence
- B.1 General Project Documentation and Correspondence
- B.2 Public Notification
- B.3 FEMA Correspondence

Appendix C: Survey Field Notes
- C.1 Aerial Mapping Certification
- C.2 As-built Survey Data

Appendix D: Hydrologic Analysis Supporting Documentation (None)

Appendix E: Hydraulic Analysis Supporting Documentation
- E.1 Manning's N Value Determination
- E.2 I-17 Freeway Box Culvert Calculations
- E.3 Pipe Culvert Loss Calculations
- E.4 Pre-Project Conditions HEC-RAS Output
- E.5 Pre-Project Conditions HEC-RAS Cross Section Plots
- E.6 Post-Project Conditions HEC-RAS Output
- E.7 Post-Project Conditions HEC-RAS Cross Section Plots

Appendix F: Erosion and Sediment Transport Analysis Supporting Documentation (None)

Appendix G: Reduced Size Floodplain Work Maps

Appendix H: FEMA Documents
- H.1 MT-2 Forms
- H.2 Annotated Current Effective FIRM Panels
- H.3 Flood Profiles

Appendix I: As-built Plans

Exhibit Map (in map pocket) LOMR Floodplain Work Map, 1 in. = 100 ft.
Electronic Files on CD-ROM (in CD Sleeve)

Section 1.0: INTRODUCTION

1.1 PURPOSE OF STUDY

Sonoran Crossing is a planned unit development situated on approximately 106 acres of land in north Phoenix, Arizona. The anticipated land use is commercial/retail and office park. **Sonoran Crossing was previously named North Black Canyon Crossing. Dove Valley Road was previously named Sonoran Boulevard.**

The purpose of this study is a Letter of Map Revision (LOMR) for construction of the channelization of CAP Wash East, a FEMA regulated Zone A floodplain. The constructed channel is referred to as the Frontage Road Channel. This study and application for LOMR follows an approved Conditional Letter of Map Revision (CLOMR), FEMA Case No. 12-09-0714R, 2012.

There are two ephemeral drainage-ways crossing the Sonoran Crossing project: Skunk Creek and CAP Wash East. Skunk Creek is the subject of a separate LOMR. Runoff within the CAP Wash East watershed travels from northeast to southwest, crossing Interstate 17 (I-17) and ultimately entering Skunk Creek south of the CAP Canal.

Construction elements within the project limits that impact CAP Wash East included:

- The I-17 Frontage Road from the Dove Valley Road on-ramp to the Carefree Highway off-ramp consisting of curb & gutter and catch basin/storm drain system.
- 32nd Avenue from Dove Valley Road to the northern project boundary, comprising of multiple lanes, curb & gutter, and a catch basin/storm drain system.
- Long Shadow Trail from the I-17 Frontage Road to 32nd Avenue, consisting of multiple lanes, a median, curb & gutter, and catch basin/storm drain system.
- A planned offsite flow channel partly within Arizona Department of Transportation (ADOT)'s right-of-way to convey the flows of the CAP Wash East from the northern project boundary to the existing I -17 culvert crossing.

This report presents the results of the pre-project and post-project floodplain delineation and requests a Letter of Map Revision (LOMR) for CAP Wash East.

1.2 AUTHORITY FOR STUDY

Dibble Engineering performed the hydrologic and hydraulic analyses for this study for Macerich, a land development company. The City of Phoenix performs floodplain administration and has jurisdictional authority for this reach of CAP Wash East. Hasan Mushtaq, PE is the local Floodplain Administrator. The consultant Project Manager for the project is Mike Gleason, P.E., of Dibble Engineering. The Project Engineer is Josh Papworth, P.E., of Dibble Engineering.

1.3 LOCATION OF STUDY

The site is southeast of I-17 and Carefree Highway intersection, and is bounded by I-17 to the west, Dove Valley Road to the south, Skunk Creek to the east, and Arizona State Land Department (ASLD) property to the north. Sonoran Crossing is located within a portion of the southwest quarter of Section 11, Township

5 North, Range 2 East of the Gila & Salt River Baseline and Meridian, Maricopa County, Arizona. The project is located in north Phoenix, as identified on **Figure 1 – Location Map** and **Figure 2 – Study Limits**.

1.4 SUMMARY OF METHODOLOGY

Floodplain and floodway water surface elevations and horizontal limits are determined using the HEC-RAS Version 4.1.0 computer model. No new hydrology was performed for floodplain delineation.

1.5 COORDINATION AND ACKNOWLEDGEMENTS

Dibble Engineering is in ongoing coordination with the City of Phoenix for this floodplain delineation study.

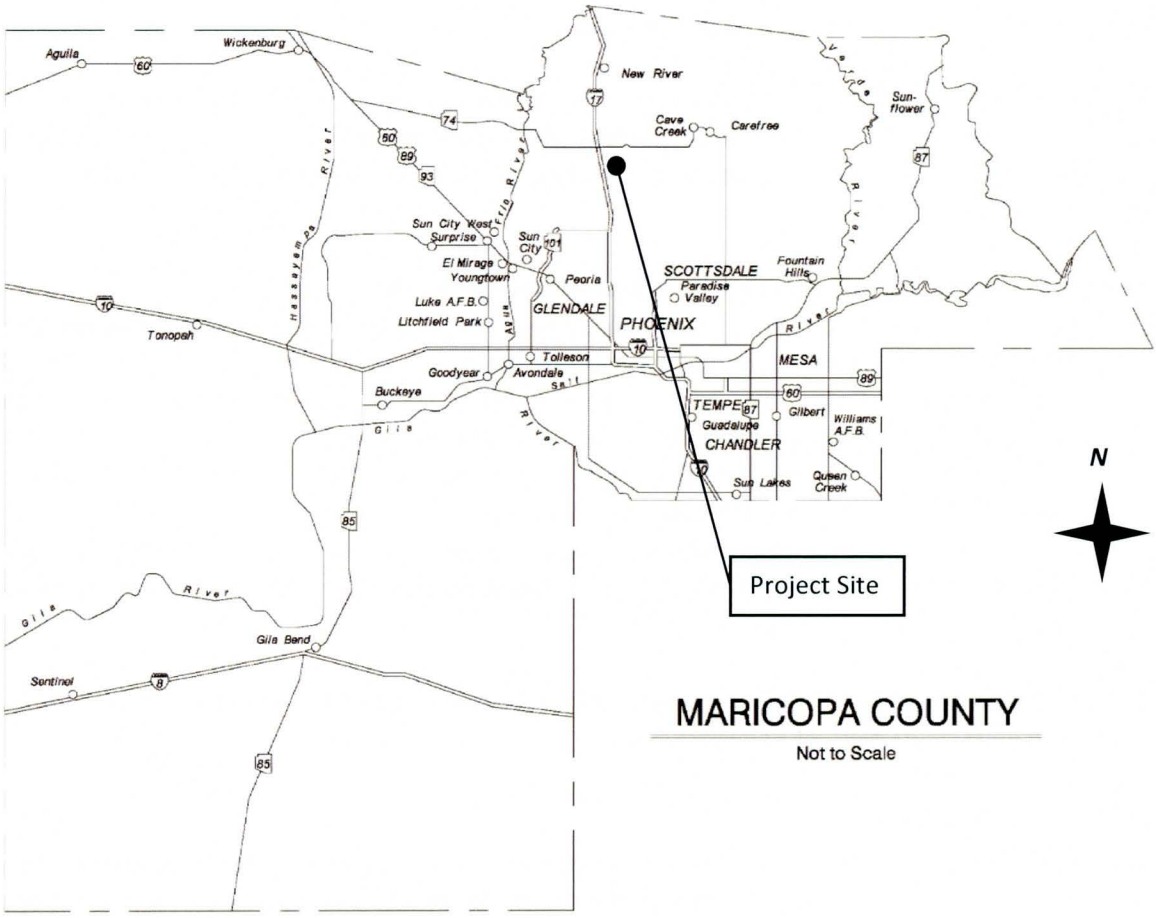

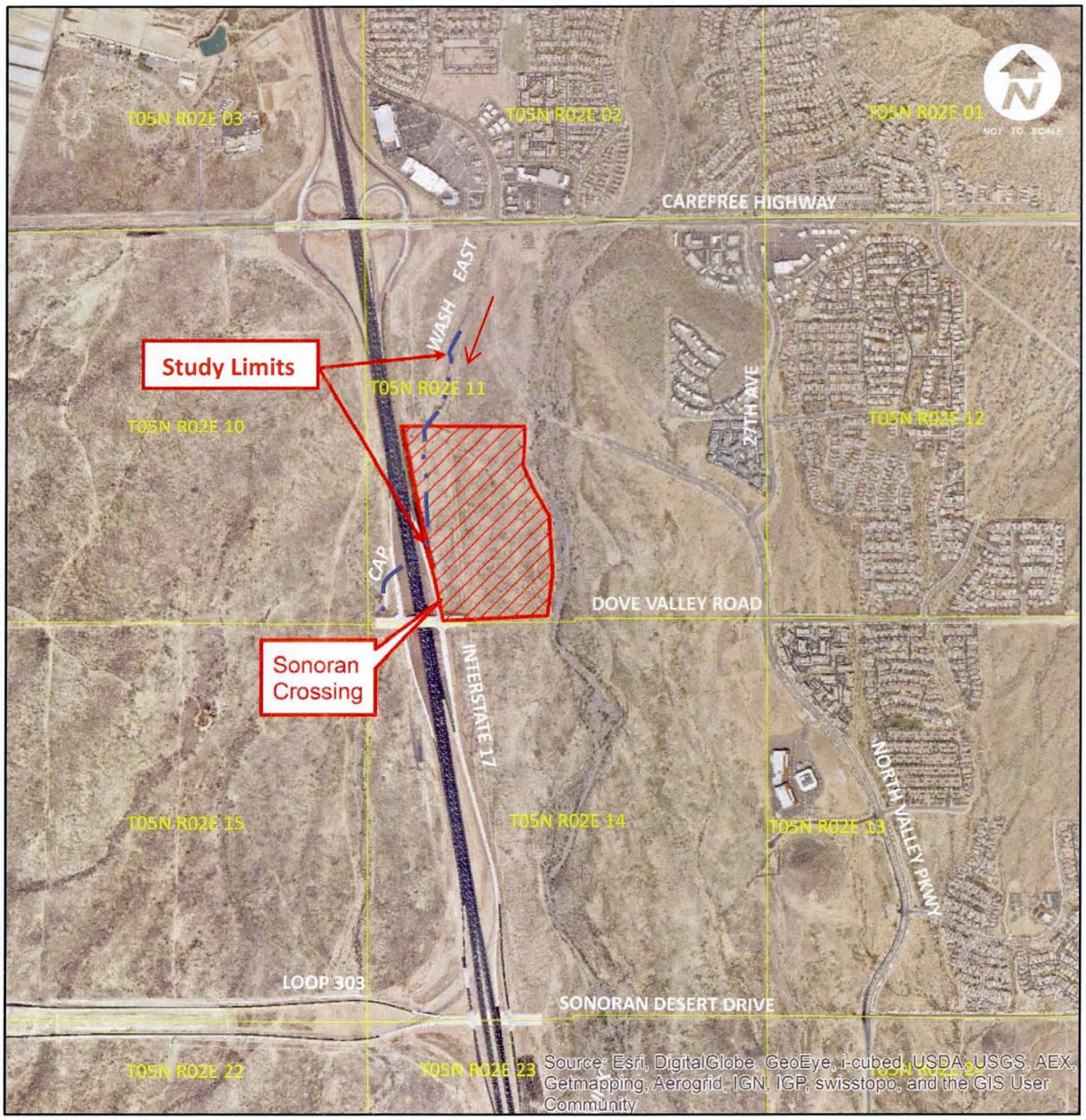

Figure 2 – Study Limits

1.6 STUDY RESULTS

This study provides a revision of the approximate Zone A floodplain to a Zone AE floodplain and floodway due to the channelization of CAP Wash East within the project limits. Results support that the constructed channel contains the base flow. The hydraulic analyses are based on the completed construction and FEMA effective flow rates.

Section 2.0: ADWR/FEMA forms and Local Government/ADWR Abstracts:

The FEMA Revision Request MT-2 Forms can be found in **Appendix H.1.** The FEMA abstracts are included in this section.

STUDY DOCUMENTATION ABSTRACT

INITIAL STUDY		RESTUDY		LOMR	X	CLOMR		OTHER	

Section 2.1. Study Documentation Abstract for FEMA Submittals		
2.1.1	Date Study Accepted	Pending
2.1.2	Study Contractor: Contacts Address Phone Internal Reference No. Subconsultants	Dibble Engineering Josh Papworth, P.E. 7500 North Dreamy Draw, Suite 200 Phoenix, AZ 85020-4660 (602) 957-1155 Dibble Job No. 111204 None
2.1.3	FEMA Technical Review Contractor Address Phone Internal Reference Number	Pending
2.1.4	FEMA Regional Reviewer Phone	Pending
2.1.5	State Technical Reviewer Phone	Arizona Department of Water Resources (ADWR) and Arizona Division of Emergency Management (ADEM) no longer provide technical review
2.1.6	Local Technical Reviewer Phone	City of Phoenix, Floodplain Management Hasan Mustaq, Ph.D., P.E., CFM (602) 262-4026

2.1.7	Reach Description	CAP Wash East 0.4 Miles South of Carefree Highway to Interstate 17 Approximately 0.44 miles FIRM Panel: 04013C0845L
2.1.8	USGS Quadrangle Sheets	New River SE, Arizona, 7.5 minute, 20' C.I. Photo Date: 1964 Latest Photo Revision: 1981 Bisquit Flat, Arizona, 7.5 minute, 20' C.I. Photo Date: 1965 Latest Photo Revision: 1981
2.1.9	Unique Conditions and Problems	None.
2.1.10	Coordination of Discharges (Agency, Date, Comments)	Local agency approval – See 2.1.6 above

Section 3.0: MAPPING AND SURVEY INFORMATION

3.1 FIELD SURVEY INFORMATION

Field survey was provided by three sources. Wood, Patel and Associates provided horizontal and vertical survey control and benchmark verification for aerial mapping conducted in 2011. Hubbard Engineering provided as-built survey of construction plans in September and October of 2013. Survey was conducted under the direct supervision of Adrian Burcham, RLS. Two separate as-built plan sets are provided with this LOMR submittal. Construction that occurred within ADOT right of way is as-built under the title *North Black Canyon Crossings I-17 Northbound Frontage Road*. Construction that occurred within City of Phoenix limits is as-built under the title *Sonoran Crossing On-site Grading and Drainage Plan*. **Appendix I** contains relevant excerpts from as-built plans; complete as-built plans are provided on the compact disk attached to this report.

Dibble Engineering provided as-built topographic survey for post-project condition LOMR hydraulic modeling of the CAP Wash East channelization. This survey was conducted under the direct supervision of Steve Duryea, RLS, in December of 2013.

All field survey was performed on 1983 North American Datum (NAD), horizontally, and the National Geodetic Vertical Datum of 1929 (NGVD 29), vertically. **Appendix C** contains the project results of survey and field notes.

3.2 MAPPING

Pre-project conditions detailed mapping exceeding the standards for FIS mapping requirements defined by the Guidelines and Specifications for Flood Hazard Mapping Partners (April 2003) was developed for the project site by Kenney Aerial Mapping Inc. The flight date was August 18, 2011 at a map scale of 1 inch = 40 feet. This mapping is based on the Maricopa County Department of Transportation (MCDOT) Geodetic Densification and Cadastral Survey (GDACS), 1983 North American Datum (NAD), modified to

ground horizontally; and the National Geodetic Vertical Datum of 1929 (NGVD 29), vertically. Pre-project condition mapping was spliced with as-built topographic survey conducted by Dibble Engineering in December of 2013 for purposes of post-project condition HEC-RAS modeling.

Section 4.0: HYDROLOGY

No new hydrology is performed for this project. The Zone A floodplain is reflected on effective FIRM panel number 04013C0845L. However, this floodplain does not reflect the current FEMA accepted flow rate for CAP Wash East. FEMA approved a Conditional Letter of Map Revision (CLOMR) dated October 17, 2008, FEMA Case No. 09-09-0132R, that updates the 1% annual chance flows for the CAP Wash East based on a new study of existing conditions. The flows are substantially lowered; the updated 1% annual chance flow rate used for this study is 280cfs. **Appendix B.4** contains the letter approving the new flows.

Section 5.0: HYDRAULICS

5.1 METHOD DESCRIPTION

Modeling was performed using HEC-RAS version 4.1, using steady state flow values. The peak flow for the reach is applied at the upstream cross sections. Cross section ground data extraction and floodplain and floodway delineations for the base flood (1-percent-annual-chance) were done using AutoCAD software. The starting water-surface elevation at the downstream limit of the project for both pre-project and post-project conditions is the headwater elevation of the 3 barrel 8'x5' box culvert at Interstate 17. This elevation was determined using HY-8 computer software developed by the Federal Highway Administration (FHWA) and documented in the publication *Hydraulic Design Series No. 5 Hydraulic Design of Highway Culverts*. Physical data for the culvert analysis has been obtained from field survey. Tail water rating curve data is calculated based on survey of the geometry of the existing concrete outlet apron and channel. HY-8 output for this culvert can be found in **Appendix E.2**.

5.2 WORK STUDY MAPS

Appendix G contains pre-project and post-project work study maps (reduced-size) showing the revised floodplain limits. A full size set of work study maps may be found in the map pocket.

5.3 PARAMETER ESTIMATION

5.3.1 Roughness Coefficients

Manning's roughness coefficients, or "n"-values, for channelized portions of CAP Wash East are selected in accordance with guidance provided in Arizona Department of Transportation *Highway Drainage Design Manual (HDDM), Volume II.* A value of 0.014 is selected for the concrete channel sections; 0.035 is selected for riprap lined sections. Photographs of constructed channels are provided in **Appendix E.1**.

Natural wash Manning's n values are determined using procedures developed by the United States Geological Survey. The following supporting materials are used in this analysis:

- Aerial Photographs: August 2011 flight date by Kenney Aerial Mapping Inc. used for the topographic base mapping of study area
- Ground Photographs: Color photographs taken during field reconnaissance trips
- Field Data: Information gathered during field reconnaissance trips

The Manning's n-value is affected by many factors including bed material, cross section irregularities, depth of flow, vegetation, channel alignment, channel shape, and obstructions. The selection procedure consists of selection of a base "n"-value and the addition of several adjustment factors to determine a total roughness coefficient for each channel sub-section (main channel and overbanks).

The base n-value accounts for roughness due to the bed material. Further refinements to the n-value are made based on *Estimated Manning's Roughness Coefficients for Stream Channels and Flood Plains in Maricopa County, Arizona* (Thomsen, 1991). From this publication, it is found that the primary factors affecting the n-value are surface irregularities, obstructions and vegetation with consideration also given for depth and meander. Based on the primary factors, the n-value is estimated from the equation:

$$n = (n_b + n_1 + n_2 + n_3) f_m$$

Where:
n_b = base Manning's value for a straight uniform channel
n_1 = value for surface irregularities
n_2 = value for obstructions
n_3 = value for vegetation
f_m = factor for meander

The selected natural channel n value is 0.033, and the selected natural overbank n value is 0.036. Photographs and n value determination are provided in **Appendix E.1**.

5.3.2 Expansion and Contraction Coefficients

Contraction and expansion loss coefficients are 0.1 and 0.3 respectively for normal conditions; these are increased to 0.3 and 0.5 respectively at channel constrictions, such as at culvert headwall transitions. These elevated values are used at cross sections along the east-west portion of the channel system where runoff is constricted from natural floodplain to a narrower rip rap channel section.

5.4 CROSS SECTION DESCRIPTION

Cross sections are placed at changes in channel alignment and slope, at upstream and downstream culvert headwall locations, and at or near the boundaries of ineffective flow areas. Tighter cross section spacing is used at the upstream limit of the channel system, where natural floodplain runoff is collected within the engineered channel. Cross sections layout is identical between pre project and post project models in areas not affected by construction realignment of the wash. The cross section data for the post-project condition model was developed using the pre-project condition aerial mapping in areas not affected by construction. Cross section data for the constructed channel is cut from a surface generated from as-built survey data. Cross section layout can be seen on pre-project and post-project work study maps provided in **Appendix G**.

5.5 MODELING CONSIDERATIONS

5.5.1 Hydraulic Jump and Drop Analysis

HEC-RAS results suggest that water passes through critical depth in the concrete channel near the inlets of both culvert inlets, and within the 2-54" pipe culvert. The culvert inlet headwall includes a drop structure. A hydraulic jump will form at these locations; the hydraulic jumps are contained entirely within the concrete channel section and are not expected to affect channel stability. In HEC-RAS, both a mixed profile and subcritical profile were evaluated and the subcritical run yielded the highest water surface

elevations. Accordingly, only the subcritical flow regime was used to map floodplain elevations in the wash.

5.5.2 Bridges and Culverts

The CAP Wash East channel contains a segment of parallel pipe culvert beginning at RM 0.405 necessary to convey runoff beneath existing utilities. This is referred to as the Frontage Road Culvert. The 1% annual chance flood is contained within the culvert. The culvert consists of two 54-inch reinforced concrete pipes with an internal alignment and grade change. Access manholes are provided at the alignment change. Cross sections are necessary within HEC-RAS to represent changes in slope or alignment of the culvert. At least one upstream and downstream cross sections is needed for HEC-RAS to perform culvert computations. HEC-RAS uses a combination of the upstream cross section and the culvert barrel geometry to compute hydraulic properties through a culvert. In this case, because there is no overtopping and the upstream and downstream cross section geometries do not restrict the barrel flow area, the hydraulic properties of the linking cross section are not used by HEC-RAS in the culvert computations; rather, the culvert shape and n value provided in the Culvert Data Editor is used by the program to compute hydraulic properties through the culvert. HEC-RAS output notes "The normal depth exceeds the height of the culvert. The program assumes that the normal depth is equal to the height of the culvert." This note is consistent with HEC-RAS methodology for determining hydraulic parameters through a culvert, and signifies that the culvert may be in a surcharged state (HGL above top of pipe). The culvert has two barrels, so the reach lengths in HEC-RAS are an average of the lengths of the two barrels.

Only the most downstream culvert employs a standard exit loss coefficient to account for expansion losses and exit angle; and only the most upstream culvert employs inlet control solution criteria. A bend loss factor, K_b, is entered as entrance or exit loss coefficients at connections between culverts. K_b values are determined based on equations in Arizona Department of Transportation *Highway Drainage Design Manual (HDDM), Volume II*, Chapter 13.4. For alignment or grade changes outside of a manhole, the head loss is

$$h_b=0.0033\ (\Delta)\ (V^2/2g)$$

For losses at a manhole, the head loss is

$$Hj= K \times (V^2/2g),$$

Where:

$$K=K_o \times C_D \times C_d \times C_Q \times C_P \times C_B$$

K_o=initial head loss coefficient based on relative access hole size
C_D= correction factor for pipe diameter (pressure flow only)
C_d= correction factor for pipe diameter (non-pressure flow only)
C_Q= correction factor for relative flow
C_P= correction factor for plunging flow
C_B =correction factor for benching

A Manning's n value of 0.012 has been selected for the culvert barrels.

The following losses have been incorporated into the culvert calculations to account for exit, bend, manhole, and entrance losses. These losses are added as entrance and exit losses within the HEC-RAS Culvert Data Editor. Calculations can be found in **Appendix E.3**.

Culvert Entrance:	Entrance Loss (Beveled Edge) =	0.5*
	Bend Loss (35°) =	0.1
	Total Loss Coefficient =	0.6
MH304 & MH308:	Access Hole with Bend (28°) & Lateral Pipe =	0.4
Culvert Exit:	Exit Loss =	1.0*
	Bend Loss (10°) =	0.0
	Total Loss Coefficient =	1.0

* Entrance and Exit losses are based on guidance in FHWA *Hydraulic Design of Highway Culverts*, 2005.

A trash rack/access barrier is designed at the entrance to the 2 barrel 54" culvert at the north end of the project site. Energy loss for the trash rack is computed using equation 8.38 of the *Drainage Design Manual for Maricopa County, Volume II Hydraulics*, 2010. Rack bars are angled parallel to channel flow, i.e. the approach angle is 0 degrees. A 50% clogging factor is applied to the submerged, open area of the rack to compute the required velocity at peak Q. The difference between this velocity and the channel velocity represents the additional energy needed to pass the peak flow through trash rack. The corresponding head loss in feet is added to HEC-RAS computation at the culvert inlet cross section. This head loss is 0.5 feet. To support calculations, a separate run was performed using closely spaced interpolated cross sections (approximately a 1' spacing) to provide detailed water surface elevations through the inlet drop structure and trash rack. The trash rack calculation is provided in **Appendix E.3**.

As mentioned in **Section 3.1**, as-built survey was performed by both Dibble Engineering and Hubbard Engineering. As-built plans submitted with this LOMR were performed by Hubbard Engineering. Slight differences exist between the as-built plans and the Dibble Engineering surveyed invert elevation of the 2-54" culvert and the I-17 box culvert inlet, likely due to variation in the exact location where inverts were measured. For floodplain modeling, the highest surveyed invert elevations are used. For the 2-54" culvert, this is the Dibble Engineering surveyed values. The survey reports a difference between the invert of the two barrels, so the higher of the two invert elevations is used for modeling (Outlet: 1638.95, Inlet: 1639.78). These inverts are highlighted in the Dibble Engineering post project survey point file provided in **Appendix C.2**. For the I-17 box culvert, the highest surveyed invert at the culvert centerline is provided on the Hubbard Engineering as-built plans, so this is used for HY-8 modeling (1635.42). This may be found on Sheet No. 33 of 68 of the I-17 Northbound Frontage Road as-built plans, provided electronically. The downstream invert elevation is highlighted in the Dibble Engineering pre project survey point file provided in **Appendix C.2**.

5.5.3 Levees and Dikes

No levees or dikes are present within the project limits.

5.5.4 Islands and Flow Splits

There are no hydraulically significant islands or flow splits within the project limits; no islands or flow splits are modeled.

5.5.5 Ineffective Flow Areas

Ineffective flow areas are coded into HEC-RAS cross sections at abrupt changes in conveyance section. The expansion rate is 3 longitudinal to 1 lateral; the contraction rate is 1 to 1.

5.5.6 Supercritical Flow

HEC-RAS results suggest that water passes through critical depth in the concrete channel near the inlets of both culvert inlets due to increases headwall apron slope. These instances are isolated areas limited to two closely spaced cross sections. Therefore, no special treatment of supercritical flow was conducted. In HEC-RAS, both a mixed profile and subcritical profile were evaluated and the subcritical run yielded the highest water surface elevations.

5.6 FLOODWAY MODELING

Floodways were determined using equal conveyance encroachment (HEC-RAS Method 4) to start with; results were then converted to HEC-RAS Method 1 in the final analysis. The floodway encroachments were selected to produce a rise in the water surface elevation that is as near the one-foot maximum as possible while providing a reasonably consistent and realistic conveyance corridor. **Table 1,** in **Section 7.2**, is the **Floodway Data** table.

5.7 PROBLEMS ENCOUNTERED DURING THE STUDY

5.7.1 Special Problems & Solutions

For the east-west portion of the channel system it was necessary to account for energy losses expected due to an abrupt change in flow direction. As the CAP Wash East is collected in the rip rap channel it is forced to turn roughly 55° to the west. To account for this an energy loss factor, K_b, is applied to velocity head ($V^2/2g$) of the wash at each cross section affected by the bend. The total energy loss is equal to K_b x $V^2/2g$. Research done by the Kansas Department of Transportation and documented in the paper *Bend Losses in Rectangular Culverts* was considered in selection of the K value. Results of the study suggest that K_b values for the range of Froude Numbers and the angle of bend found at this location could reasonably be expected to be between 0.42 and 0.28. Due to the uncertainty of this type of hydraulic modeling, a conservative value of 1.0 has been choses for K_b, and applied at HEC-RAS cross sections at river mile stations 0.464, 0.460, 0.455, and 0.441.

5.7.2 Modeling Warnings and Notes

Warning messages and notes provided by HEC-RAS include:

- Critical Depth
  - During standard step iterations, when the assumed water surface was set equal to critical depth, the calculated water surface came back below critical depth. This

indicates that there is not a valid subcritical answer. The program defaulted to critical depth.
  - Multiple critical depths were found at this location. The critical depth with the lowest, valid, energy was used.
- Velocity Head
  - The velocity head has changed by more than 0.5 ft (0.15 m). This may indicate the need for additional cross sections.
- Energy Equation
  - The energy equation could not be balanced within the specified number of iterations. The program selected the water surface that had the least amount of error between computed and assumed values.
  - The energy loss was greater than 1.0 ft (0.3 m) between the current and previous cross section. This may indicate the need for additional cross sections.
- Conveyance Ratio
  - The conveyance ratio (upstream conveyance divided by downstream conveyance) is less 0.7 or greater than 1.4. This may indicate the need for additional cross sections.
- Divided Flow
  - Divided flow computed for this cross section.
- Notes
  - During supercritical flow calculations a hydraulic jump occurred inside the culvert.
  - The user has entered an additional K headloss for this cross section.
  - The user has entered an additional headloss for this cross section.
  - The normal depth exceeds the height of the culvert. The program assumes that the normal depth is equal to the height of the culvert.

Refer to Section 5.5.2 and Section 5.7.1 for an explanation of notes related to additional K headloss. These warnings have been reviewed at the locations where they occur, and are typical of moderately steep washes at times running near critical depth. Resulting water surfaces appear to be reasonable and consistent with field observation and standard methodology.

5.8 FINAL RESULTS

5.8.1 Hydraulic Analysis Results

Output tables for Pre-Project and Post-Project results are provided at the beginning of **Appendix E.4** and **E.6** respectively. Work study maps are on NGVD 29 vertical datum and at a scale of 1"=100' with the 1-foot contour interval topography on 24" x 36" sheets. The study work maps include: cross-section locations, floodplain and floodway water surface elevations, 100-year peak discharges, floodplain/floodway boundaries, base floodplain elevations, zone designations, and road names. Reduced scale pre-project and post-project condition work study maps are provided in **Appendix G**. The full size post-project work maps are included within the map pocket at the back of this report.

5.8.2 Verification of Results

The input parameters for each HEC-RAS model were applied in a manner consistent with standard engineering practices for floodplain delineation studies. The floodplain results appear to be reasonable for flooding sources of this nature. There is no reason to doubt the accuracy or validity of the floodplains delineated in this study.

Section 6.0: EROSION, SEDIMENT TRANSPORT, AND GEOMORPHIC ANALYSIS

6.1 EROSION ANALYSIS

Channelized portions of CAP Wash East are lined with reinforced concrete or rock rip-rap; therefore, erosion potential is limited.

6.2 SEDIMENT TRANSPORT ANALYSIS

No sediment transport analysis was conducted for this study. The contributing watershed is mostly urbanized, and therefore, sediment load is expected to be small and not expected to impact hydraulic performance of the system. This is supported by field observation of the pre-project and post-project condition.

6.3 GEOMORPHIC ANALYSIS

No geomorphic analysis was conducted as part of this specific study.

Section 7.0: DRAFT FIS REPORT DATA

7.1 SUMMARY OF DISCHARGES

No changes are proposed for the effective FIS summary of discharges.

7.2 FLOODWAY DATA

Table 1 - Floodway Data

FLOODING SOURCE		FLOODWAY			BASE FLOOD WATER SURFACE ELEVATION (NGVD 1929)			
CROSS SECTION	DISTANCE[1]	WIDTH (FEET)	SECTION AREA (SQFT)	MEAN VELOCITY (FT/S)	REGULATORY	WITHOUT FW	WITH FW	INCREASE
CAP Wash East								
A	0	30	91	3.1	1638.4	1638.4	1638.4	0.0
B	1096	10	37	7.6	1642.4	1642.4	1642.4	0.0
C	1569	58	59	4.8	1651.7	1651.7	1652.2	0.5
D	2302	55	75	3.7	1657.4	1657.4	1657.7	0.3

1. Feet Above Interstate 17

7.3 ANNOTATED FLOOD INSURANCE RATE MAPS

An annotated FIRM panel is contained in **Appendix H.2**. Base Flood Elevations shown are on NGVD 1929 datum.

7.4 FLOOD PROFILES

The flood profiles created using RASPLOT are included in **Appendix H.3**. Base Flood Elevations shown are on NGVD 1929 datum.

APPENDIX A.1

DATA COLLECTION SUMMARY

Dibble Engineering, *I-17 Northbound Frontage Road, Dove Valley Road to SR74*, April 2013.

Dibble Engineering, *Sonoran Crossing Drainage Report*, August 2012.

Federal Emergency Management Agency, *Flood Insurance Study, Maricopa County, Arizona and Incorporated Areas*, October 16, 2013.

Federal Emergency Management Agency, *Conditional Letter of Map Revision, Case No. 12-09-0713R*, February 2012.

Federal Emergency Management Agency, *Flood Insurance Rate Map, Panels 04013C0845L* and *04013C0865L,* October 16, 2013.

Flood Control District of Maricopa Count, *Adobe Dam/Desert Hills Area Drainage Master Plan*, January 2005.

Flood Control District of Maricopa County, *Skunk Creek Watercourse Master Plan*, August 2001.

Wood Patel, *North Black Canyon Crossing Skunk Creek Conditional Letter of Map Revision Technical Data Notebook*, December 2011.

APPENDIX A.2

REFERENCED DOCUMENTS

ADOT, *Highway Drainage Design Manual, Volume 2, Hydraulics*, January 2007.

Arizona Department of Water Resources, *State Standard 1-97, Requirements for Flood Study Technical Documentation*, August 2012.

Army Corps of Engineers, HEC-RAS Computer Program, Version 4.1.0, Hydrologic Engineering Center, March 2008.

Federal Emergency Management Agency, *Guidelines and Specifications for Flood Hazard Mapping Partners*, April 2003.

Federal Emergency Management Agency, *MT-2 package* (expires February 28, 2014).

Federal Highway Administration, *Hydraulic Design Series No. 5 Hydraulic Design of Highway Culverts,* 2005.

Flood Control District of Maricopa County, *Drainage Design Manual for Maricopa County, Volume 1 Hydrology*, February, 2011.

Flood Control District of Maricopa County, *Drainage Design Manual for Maricopa County, Volume 2, Hydraulics*, June, 2010 (Draft).

Kansas Department of Transportation, *Bend Losses in Rectangular Culverts*, September 2008.

Thomsen, B.W. and Hjalmarson, *Estimated Mannings Roughness Coefficients for Stream Channels and Flood Plains in Maricopa County, Arizona.* U.S. Geological Survey, 1991.

APPENDIX B.1

GENERAL PROJECT DOCUMENTATION AND CORRESPONDENCE

ADOT

Janice K. Brewer, Governor
John S. Halikowski, Director

October 9, 2013

Markham Contracting Co., Inc.
22820 North 19th Avenue
Phoenix, AZ 85027

Subject: Re: ADOT Permit Application # 1210317

TO WHOM IT MAY CONCERN

As per your request Phoenix Maintenance Permits Office has done a final inspection of the above referenced permit. The project appears to be complete meeting ADOT Standards and Specifications. It is within acceptable limits to the Phoenix Maintenance Permits Office.

If I may be of any further assistance to you, please feel free to contact me at 602-712-7522.

Sincerely,

David (Dwight) Loy
Phoenix Maintenance
2140 W. Hilton Avenue
Phoenix, AZ 85009

Constructed by:

Markham Contracting Co., Inc.

Construction Company

September 27, 2013

Completion Date

Red-Lines by:

, PE / ADOT

Construction Administrator Name & Company

Robert Stupak CET/ADOT

Completion Date

As-Built by:

Adrian Burcham, RLS / Hubbard Engineering

As-Built Designer Name & Company

September 10, 2013

Completion Date

APPENDIX B.2

PUBLIC NOTIFICATION

The City of Phoenix Street Transportation Department for floodplain management, in accordance with National Flood Insurance Program regulation 65.7(b)(1), hereby gives notice of the City's intent to establish the CAP Wash East floodway, generally located between Carefree Highway and Interstate 17. Specifically, the floodway hazards shall be established from a point 1920 feet south of the centerline of Carefree Highway to a point 1420 feet north of Dove Valley Road.

Maps and detailed analysis of the floodway revision can be reviewed at the City of Phoenix, Street Transportation Department 5th Floor at City Hall, 200 W. Washington St., Phoenix, AZ 85003. Interested persons may call Hasan Mushtaq P.E., PhD, CFM at the City of Phoenix at (602) 262-4960, Monday through Friday from 8-5 pm for more information.

Dibble Engineering

7500 North Dreamy Draw Drive
Suite 200
Phoenix, Arizona 85020
phone 602.957.1155
fax 602.957.2838
www.dibblecorp.com

July 15, 2014

Mr. Max Masel
Arizona State Land Department
1616 West Adams
Phoenix, AZ 85007

Re: Notification of Revision for CAP Wash East

Via Certified Mail

Dear Mr. Masel:

The Flood Insurance Rate Map (FIRM) for a community depicts land that has been determined to be subject to a 1% (100-year) or greater chance of flooding in any given year. The FIRM is used to determine flood insurance rates and to help the community with floodplain management.

Dibble Engineering is applying for a Letter of Map Revision from the Federal Emergency Management Agency (FEMA) on behalf of Macerich to revise FIRM Panel 845L; Map No.: 04013C 0845L for the City of Phoenix, AZ along CAP Wash East as part of the Sonoran Crossing project. Construction of the Sonoran Crossing project is complete.

The Letter of Map Revision will result in:

1. Establishment of Base (1% annual chance) Flood Elevations (BFEs) and regulatory floodway from a point 1920 feet south of the centerline of Carefree Highway to a point 1420 feet north of Dove Valley Road. Currently, the flooding along CAP Wash East is based on an approximate study.

2. Widening and narrowing of the 1% annual chance floodplain with the maximum widening of 24 feet at a point approximately 2,300 feet south of Carefree Highway and the maximum narrowing of 463 feet at a point approximately 1890 feet north of Dove Valley Road.

This letter is to inform you of the establishment of Base Flood Elevations on your property at the southeast corner of Interstate 17 and Carefree Highway.

If you have any questions or concerns about the proposed project or its effect on your property, you may contact Hasan Mushtaq P.E., PhD, CFM at the City of Phoenix at (602) 262-4960.

Sincerely,
Dibble Engineering

Josh Papworth, PE, CFM
Senior Project Engineer

cc: Hasan Mushtaq, P.E., PhD, CFM, City of Phoenix
Rob Bassett, Macerich

Dibble Engineering

7500 North Dreamy Draw Drive
Suite 200
Phoenix, Arizona 85020
phone 602.957.1155
fax 602.957.2838
www.dibblecorp.com

July 15, 2014

Mr. Eric Bolton
Macerich
11411 North Tatum Boulevard
Phoenix, AZ 85028

Re: Notification of Revision for CAP Wash East

Via Certified Mail

Dear Mr. Bolton:

The Flood Insurance Rate Map (FIRM) for a community depicts land that has been determined to be subject to a 1% (100-year) or greater chance of flooding in any given year. The FIRM is used to determine flood insurance rates and to help the community with floodplain management.

Dibble Engineering is applying for a Letter of Map Revision from the Federal Emergency Management Agency (FEMA) on behalf of Macerich to revise FIRM Panel 845L; Map No.: 04013C 0845L for the City of Phoenix, AZ along CAP Wash East as part of the Sonoran Crossing project. Construction of the Sonoran Crossing project is complete.

The Letter of Map Revision will result in:

1. Establishment of Base (1% annual chance) Flood Elevations (BFEs) and regulatory floodway from a point 1920 feet south of the centerline of Carefree Highway to a point 1420 feet north of Dove Valley Road. Currently, the flooding along CAP Wash East is based on an approximate study.

2. Widening and narrowing of the 1% annual chance floodplain with the maximum widening of 24 feet at a point approximately 2,300 feet south of Carefree Highway and the maximum narrowing of 463 feet at a point approximately 1890 feet north of Dove Valley Road.

This letter is to inform you of the establishment of Base Flood Elevations on your property at the northeast corner of Interstate 17 and Dove Valley Road.

If you have any questions or concerns about the proposed project or its effect on your property, you may contact Hasan Mushtaq P.E., PhD, CFM at the City of Phoenix at (602) 262-4960.

Sincerely,
Dibble Engineering

Josh Papworth, PE, CFM
Senior Project Engineer

cc: Hasan Mushtaq, P.E., PhD, CFM, City of Phoenix
Rob Bassett, Macerich

APPENDIX B.3

FEMA CORRESPONDENCE

Josh Papworth

From: Josh Papworth
Sent: Monday, January 20, 2014 2:58 PM
To: 'JGLindsay@mbakercorp.com'
Subject: Communication Record Case No. 12-09-0713R

James, this email is to provide a record of our conversation from today, January 20, 2014. Thanks for taking a few minutes to answer my questions.

- Regarding project datum. James informed me that the LOMR application may be submitted on NGVD 1929 datum, consistent with the original approved CLOMR for the project. The effective FIS is published using NAVD 1988 datum. James indicated he will apply a datum conversion to the LOMR data provided to update the effective FIS information.
- Regarding the requirement stipulated in the January 21, 2012 CLOMR approval letter: "A copy of the public notice distributed by your community, stating its intent to revise the regulatory floodway, or a signed statement by your community that it has notified all affected property owners and affected adjacent jurisdictions." James informed me that Dibble Engineering or the community (City of Phoenix) may send these floodway change notifications. The community signature of the MT-2 Form 1: Overview and Concurrence ensures community concurrence in the case of the former.
- Regarding the requirement stipulated in the January 21, 2012 CLOMR approval letter: "Evidence that your community has...adopted floodplain management ordinances that incorporate the increased BFEs and revised floodway boundary delineations to reflect post-project conditions..." James informed me that the community signature of the MT-2 Form 1: Overview and Concurrence will satisfy this requirement.
- Regarding the requirement stipulated in the January 21, 2012 CLOMR approval letter: "A letter stating that your community will adopt and enforce the modified regulatory floodway..." James informed me that the community signature of the MT-2 Form 1: Overview and Concurrence will satisfy this requirement.

Josh Papworth PE, CFM
P 623.251.7189
C 602.708.8127
Josh.Papworth@dibblecorp.com
Phoenix | Goodyear | Tucson
Dibble Engineering

Federal Emergency Management Agency

Washington, D.C. 20472

February 14, 2012

CERTIFIED MAIL
RETURN RECEIPT REQUESTED

IN REPLY REFER TO:
Case No.: 12-09-0714R
Community Name: City of Phoenix, AZ
Community No.: 040051

The Honorable Greg Stanton
Mayor, City of Phoenix
200 West Washington Street
Phoenix, AZ 85003

Dear Mayor Stanton:

We are providing our comments with the enclosed Conditional Letter of Map Revision (CLOMR) on a proposed project within your community that, if constructed as proposed, could revise the effective Flood Insurance Study report and Flood Insurance Rate Map for your community.

If you have any questions regarding the floodplain management regulations for your community, the National Flood Insurance Program (NFIP) in general, or technical questions regarding this CLOMR, please contact the Director, Mitigation Division of the Federal Emergency Management Agency (FEMA) Regional Office in Oakland, California, at (510) 627-7175, or the FEMA Map Information eXchange (FMIX) toll free at 1-877-336-2627 (1-877-FEMA MAP). Additional information about the NFIP is available on our website at http://www.fema.gov/nfip.

Sincerely,

Siamak Esfandiary, Ph.D., P.E., Program Specialist
Engineering Management Branch
Federal Insurance and Mitigation Administration

For: Luis Rodriguez, P.E., Chief
Engineering Management Branch
Federal Insurance and Mitigation Administration

List of Enclosures:

Conditional Letter of Map Revision Comment Document

cc: see attached list

List of Courtesy Copies - City of Phoenix, AZ

Hasan Mustaq, P.E., Ph.D., CFM
Floodplain Manager
City of Phoenix

Mr. Tim Murphy, P.E.
Mitigation Planning & Technical Programs Manager
Floodplain Management and Services Division
Flood Control District of Maricopa County

Ms. Kelli Sertich, AICP, CFM
FMS Division Manger
Flood Control District of Maricopa County

Mr. Brian Cosson, CFM
NFIP State Manager
Arizona Department of Water Resources

Mr. Kevin Lavalle
GIS Analyst
Flood Control District of Maricopa County

Mr. Ashok C. Patel P.E., R.L.S., CFM
Project Manager
Wood, Patel & Associates, Inc.

Federal Emergency Management Agency

Washington, D.C. 20472

CONDITIONAL LETTER OF MAP REVISION
COMMENT DOCUMENT

COMMUNITY INFORMATION		PROPOSED PROJECT DESCRIPTION	BASIS OF CONDITIONAL REQUEST
COMMUNITY	City of Phoenix Maricopa County Arizona	CHANNELIZATION	NEW TOPOGRAPHIC DATA HYDRAULIC ANALYSIS FLOODWAY
	COMMUNITY NO.: 040051		
IDENTIFIER	North Black Canyon Crossing - Cap Wash East	APPROXIMATE LATITUDE & LONGITUDE: 33.796, -112.128 SOURCE: USGS QUADRANGLE DATUM: NAD 83	

AFFECTED MAP PANELS

TYPE: FIRM* NO.: 04013C0770F DATE: September 30, 2005

* FIRM - Flood Insurance Rate Map

FLOODING SOURCE(S) AND REACH DESCRIPTION

Cap Wash East – from just upstream to approximately 2,080 feet upstream of Interstate 17

PROPOSED PROJECT DESCRIPTION

Flooding Source	Proposed Project	Location of Proposed Project
Cap Wash East	Channelization	Just upstream to approximately 1,220 feet upstream of Interstate 17

SUMMARY OF IMPACTS TO FLOOD HAZARD DATA

Flooding Source	Effective Flooding	Proposed Flooding	Increases	Decreases
Cap Wash East	Zone A	Zone AE	Yes	Yes
	Floodway	Floodway	Yes	Yes
	No BFEs*	BFEs	Yes	None

* BFEs - Base (1-percent-annual-chance) Flood Elevations

COMMENT

This document provides the Federal Emergency Management Agency's (FEMA's) comment regarding a request for a CLOMR for the project described above. This document is not a final determination; it only provides our comment on the proposed project in relation to the flood hazard information shown on the effective National Flood Insurance Program (NFIP) map. We reviewed the submitted data and the data used to prepare the effective flood hazard information for your community and determined that the proposed project meets the minimum floodplain management criteria of the NFIP. Your community is responsible for approving all floodplain development and for ensuring that all permits required by Federal or State/Commonwealth law have been received. State/Commonwealth, county, and community officials, based on their knowledge of local conditions and in the interest of safety, may set higher standards for construction in the Special Flood Hazard Area (SFHA), the area subject to inundation by the base flood. If the State/Commonwealth, county, or community has adopted more restrictive or comprehensive floodplain management criteria, these criteria take precedence over the minimum NFIP criteria.

This comment is based on the flood data presently available. If you have any questions about this document, please contact the FEMA Map Information eXchange (FMIX) toll free at 1-877-336-2627 (1-877-FEMA MAP) or by letter addressed to the LOMC Clearinghouse, 7390 Coca Cola Drive, Suite 204, Hanover, MD 21076. Additional Information about the NFIP is available on the FEMA website at http://www.fema.gov/nfip.

Siamak Esfandiary, Ph.D., P.E., Program Specialist
Engineering Management Branch
Federal Insurance and Mitigation Administration

125360 PT202.BKR.12090714R.H17 104

Federal Emergency Management Agency

Washington, D.C. 20472

CONDITIONAL LETTER OF MAP REVISION COMMENT DOCUMENT (CONTINUED)

COMMUNITY INFORMATION

To determine the changes in flood hazards that will be caused by the proposed project, we compared the hydraulic modeling reflecting the proposed project (referred to as the proposed conditions model) to the hydraulic modeling reflecting the existing conditions.

The table below shows the changes in the base flood water-surface elevations (WSELs).

Base Flood WSEL Comparison Table

Flooding Source: Cap Wash East		Base Flood WSEL Change (feet)	Location of maximum change
Proposed vs. Existing	Maximum increase	0.03	Approximately 1,360 feet upstream of Interstate 17
	Maximum decrease	2.0	Approximately 920 feet upstream of Interstate 17

Increases due to the proposed project that exceed those permitted under Paragraphs (c)(10) or (d)(3) of Section 60.3 of the NFIP regulations must adhere to Section 65.12 of the NFIP regulations. With this request, your community has complied with all requirements of Paragraph 65.12(a) of the NFIP regulations. Compliance with Paragraph 65.12(b) also is necessary before FEMA can issue a Letter of Map Revision when a community proposes to permit encroachments into the effective regulatory floodway that will cause BFE increases in excess of those permitted under Paragraph 60.3(d)(3).

Subparagraph 60.3(b)(7) of the NFIP regulations requires communities to ensure that the flood-carrying capacity within the altered or relocated portion of any watercourse is maintained. This provision is incorporated into your community's existing floodplain management ordinances; therefore, responsibility for maintenance of the altered or relocated watercourse, including any related appurtenances such as bridges, culverts, and other drainage structures, rests with your community. We may request that your community submit a description and schedule of maintenance activities necessary to ensure this requirement.

This comment is based on the flood data presently available. If you have any questions about this document, please contact the FEMA Map Information eXchange (FMIX) toll free at 1-877-336-2627 (1-877-FEMA MAP) or by letter addressed to the LOMC Clearinghouse, 7390 Coca Cola Drive, Suite 204, Hanover, MD 21076. Additional Information about the NFIP is available on the FEMA website at http://www.fema.gov/nfip.

Siamak Esfandiary, Ph.D., P.E., Program Specialist
Engineering Management Branch
Federal Insurance and Mitigation Administration

Federal Emergency Management Agency
Washington, D.C. 20472

CONDITIONAL LETTER OF MAP REVISION COMMENT DOCUMENT (CONTINUED)

COMMUNITY INFORMATION (CONTINUED)

DATA REQUIRED FOR FOLLOW-UP LOMR

Upon completion of the project, your community must submit the data listed below and request that we make a final determination on revising the effective FIRM and FIS report. If the project is built as proposed and the data below are received, a revision to the FIRM and FIS report would be warranted.

• Form 1, entitled "Overview & Concurrence Form" Detailed application and certification forms must be used for requesting final revisions to the maps. Therefore, when the map revision request for the area covered by this letter is submitted, Form 1 must be included. If as-built conditions differ from the proposed plans, please submit new forms, which may be accessed at http://www.fema.gov/plan/prevent/fhm/dl_mt-2.shtm, or annotated copies of the previously submitted forms showing the revised information.

• Hydraulic analyses, for as-built conditions, of the base flood and the regulatory floodway, together with a topographic work map showing the revised floodplain and floodway boundaries. Please ensure that the revised information ties in with the current effective information at the downstream and upstream ends of the revised reach.

• An annotated copy of the FIRM, at the scale of the effective FIRM, that shows the revised floodplain and floodway boundary delineations shown on the submitted work map and how they tie into the floodplain and floodway boundary delineations shown on the current effective FIRM at the downstream and upstream ends of the revised reach

• As-built plans, certified by a registered professional engineer, of all proposed project elements

This comment is based on the flood data presently available. If you have any questions about this document, please contact the FEMA Map Information eXchange (FMIX) toll free at 1-877-336-2627 (1-877-FEMA MAP) or by letter addressed to the LOMC Clearinghouse, 7390 Coca Cola Drive, Suite 204, Hanover, MD 21076. Additional Information about the NFIP is available on the FEMA website at http://www.fema.gov/nfip.

Siamak Esfandiary, Ph.D., P.E., Program Specialist
Engineering Management Branch
Federal Insurance and Mitigation Administration

Federal Emergency Management Agency

Washington, D.C. 20472

CONDITIONAL LETTER OF MAP REVISION COMMENT DOCUMENT (CONTINUED)

COMMUNITY INFORMATION (CONTINUED)

• A copy of the public notice distributed by your community, stating its intent to revise the regulatory floodway, or a signed statement by your community that it has notified all affected property owners and affected adjacent jurisdictions

• Documentation of the notification to property owners who will be affected by any widening/shifting of the base floodplain and/or any BFE increases along Cap Wash East

• A letter stating that your community will adopt and enforce the modified regulatory floodway, OR, if the State/Commonwealth has jurisdiction over either the regulatory floodway or its adoption by your community, a copy of your community's letter to the appropriate State/Commonwealth agency notifying it of the modification to the regulatory floodway and a copy of the letter from that agency stating its approval of the modification

• FEMA's fee schedule for reviewing and processing requests for conditional and final modifications to published flood information and maps may be accessed at http://www.fema.gov/plan/prevent/fhm/frm_fees.shtm. The fee at the time of the map revision submittal must be received before we can begin processing the request. Payment of this fee can be made through a check or money order, made payable i U.S. funds to the National Flood Insurance Program, or by credit card (Visa or MasterCard only). Please forward the payment, along w the revision application, to the following address:

LOMC Clearinghouse
7390 Coca Cola Drive, Suite 204
Hanover, Maryland 21076

After receiving appropriate documentation to show that the project has been completed, FEMA will initiate a revision to the FIRM and FIS report. Because the flood hazard information (i.e., base flood elevations, base flood depths, SFHAs, zone designations, and/or regulatory floodways) will change as a result of the project, a 90-day appeal period will be initiated for the revision, during which community officials and interested persons may appeal the revised flood hazard information based on scientific or technical data.

This comment is based on the flood data presently available. If you have any questions about this document, please contact the FEMA Map Information eXchange (FMIX) toll free at 1-877-336-2627 (1-877-FEMA MAP) or by letter addressed to the LOMC Clearinghouse, 7390 Coca Cola Drive, Suite 204, Hanover, MD 21076. Additional Informati about the NFIP is available on the FEMA website at http://www.fema.gov/nfip.

Siamak Esfandiary, Ph.D., P.E., Program Specialist
Engineering Management Branch
Federal Insurance and Mitigation Administration

Federal Emergency Management Agency
Washington, D.C. 20472

CONDITIONAL LETTER OF MAP REVISION COMMENT DOCUMENT (CONTINUED)

COMMUNITY INFORMATION (CONTINUED)

COMMUNITY REMINDERS

We have designated a Consultation Coordination Officer (CCO) to assist your community. The CCO will be the primary liaison between your community and FEMA. For information regarding your CCO, please contact:

Ms. Sally M. Ziolkowski
Director, Mitigation Division
Federal Emergency Management Agency, Region IX
1111 Broadway Street, Suite 1200
Oakland, CA 94607-4052
(510) 627-7175

A preliminary study is being conducted for Maricopa County. Preliminary copies of the revised FIRM and FIS report were submitted to your community for review on December 3, 2010, and may become effective before the revision request following this CLOMR is submitted. Please ensure that the data submitted for the revision ties into the data effective at the time of the submittal.

This comment is based on the flood data presently available. If you have any questions about this document, please contact the FEMA Map Information eXchange (FMIX) toll free at 1-877-336-2627 (1-877-FEMA MAP) or by letter addressed to the LOMC Clearinghouse, 7390 Coca Cola Drive, Suite 204, Hanover, MD 21076. Additional Information about the NFIP is available on the FEMA website at http://www.fema.gov/nfip.

Siamak Esfandiary, Ph.D., P.E., Program Specialist
Engineering Management Branch
Federal Insurance and Mitigation Administration

FEMA

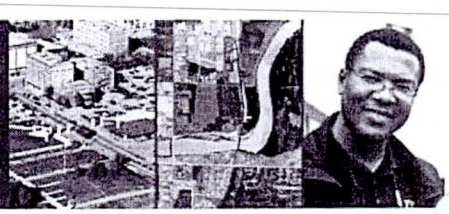

Changes to FEMA's Appeals Process

FEMA has revised its existing appeal policy to expand the due process procedures currently provided for new or modified Base Flood Elevations (BFEs) to other new or modified flood hazard information shown on a Flood Insurance Rate Map (FIRM), including additions or modifications to any Special Flood Hazard Area (SFHA) boundary (both approximate and detailed floodplains), zone designation, and/or regulatory floodway boundary. This policy is known as the Expanded Appeals Process (EAP). The EAP, which became effective on December 1, 2011, affects Letters of Map Revision (LOMRs) issued on or after that date, and a 90-day appeal period will be required for LOMRs that result in **any change** to flood hazards.

To provide expanded due process rights for changes due to LOMRs, any LOMR that requires an appeal period in a community already compliant with the necessary requirements outlined in 44 CFR Section 60.3 **will become effective 120 days from the second newspaper publication date**, following FEMA's current policy for setting LOMR effective dates. This allows time to collect appeals and provides for newspaper publication schedule conflicts. LOMRs with an appeal period in communities that are not currently compliant with the necessary requirements outlined in 44 CFR Section 60.3, or in communities that require adoption of the LOMR, will become effective following a six-month compliance period.

Evidence of public notice or property owner notification of the changes effected by the LOMR will continue to be requested during the review of the LOMR request. This will help to ensure that the affected population is aware of the flood hazard changes in the affected area and the resultant LOMR. However, FEMA will no longer request evidence of property owner acceptance of the changes effected by a LOMR, as such acceptance will have no influence on the effective date of the LOMR. LOMR requests that are currently in-progress with FEMA when the EAP becomes effective will be reviewed to determine whether the notification already provided is sufficient, and such requests will proceed with processing.

Federal Emergency Management Agency

Washington, D.C. 20472

August 17, 2009

CERTIFIED MAIL
RETURN RECEIPT REQUESTED

IN REPLY REFER TO:
Case No.: 09-09-0132R

The Honorable Phil Gordon
Mayor, City of Phoenix
200 West Washington Street
Phoenix, AZ 85003

Community: City of Phoenix, AZ
Community No.: 040051

104

Dear Mayor Gordon:

This responds to a request that the Department of Homeland Security's Federal Emergency Management Agency (FEMA) comment on proposed hydrology for CAP Wash – East in the City of Phoenix, in accordance with Part 65 of the National Flood Insurance Program (NFIP) regulations. In a letter dated October 17, 2008, Dr. Hasan Mushtaq, P.E., CFM, Floodplain Manager of the City of Phoenix, requested that FEMA evaluate a new hydrologic study to determine whether the proposed discharge values along CAP Wash - East are acceptable.

All data required to complete our review of this request for a Conditional Letter of Map Revision (CLOMR) were submitted with letters from Dr. Mushtaq.

A new hydrologic study for CAP Wash – East, using a U.S. Army Corps of Engineers' HEC-1 model, was submitted in support of this request. The hydrologic analysis used a rainfall amount of 3.33 inches, 6-hour-duration storm, determined using NOAA Atlas 2 precipitation data, the Green and Ampt loss rate method, the Maricopa County Unit Hydrograph Procedure 1 (MCUHP1) to build the Clark Unit Hydrograph input for the individual sub-basins, and the normal-depth storage routing procedure. The study resulted in a decrease in the flood discharges along CAP Wash - East from Interstate 17 to Carefree Highway. The proposed flood discharges are considered more reasonable than the effective discharges.

The following table summarizes the base (1-percent-annual-chance) flood discharges proposed by the City of Phoenix Floodplain Management staff (rounded to the nearest 10) and compares them to the effective flood discharges from Letter of Map Revision Case No. 06-09-B520P, dated April 17, 2006.

Location	Drainage Area (square miles)	Discharges (CFS) 1% annual chance (100-year)	
		Proposed	Effective
Carefree Highway	0.12	120	850
Interstate 17	0.34	280	720

If you have any questions regarding floodplain management regulations for your community or the NFIP in general, please contact the Consultation Coordination Officer (CCO) for your community. Information

on the CCO for your community may be obtained by calling the Director, Mitigation Division of FEMA in Oakland, California, at (510) 627-7175. If you have any questions regarding this CLOMR, please call our Map Assistance Center, toll free, at 1-877-FEMA MAP (1-877-336-2627).

Sincerely,

Dahlia Kasperski

Dahlia Kasperski, P.E., CFM, Program Specialist
Engineering Management Branch
Mitigation Directorate

For: Kevin C. Long, Acting Chief
Engineering Management Branch
Mitigation Directorate

Enclosures

cc: Mr. Tim Murphy, P.E., CFM
Floodplain Delineation Branch Manager
Flood Control District of Maricopa County

Dr. Hasan Mushtaq, P.E., CFM
Floodplain Manager
City of Phoenix

Mr. Rob Bassett
Development Manager
Westcor

Mr. Brian Cosson, CFM
NFIP State Manager
Arizona Department of Water Resources
Flood Mitigation Section

APPENDIX C.1

AERIAL MAPPING CERTIFICATION

WOOD/PATEL
MISSION: CLIENT SERVICE™

CIVIL ENGINEERS • HYDROLOGISTS • LAND SURVEYORS • CONSTRUCTION MANAGERS

Darrel E. Wood, P.E., R.LS.
Ashok C. Patel, P.E., R.L.S., CFM
James S. Campbell, P.E.
Thomas R Gettings, R.L.S.
Michael T. Young, P.E.
Peter Hemingway, P.E.
Jeffrey R. Minch, P.E.
Robert D. Gofonia, P.E., R.L.S.
Patrick W. Marum, P.E.
Kenneth L. Knickerbocker, P.E., R.L.S.

August 11, 2011
WP# 113734

SURVEY CONTROL REPORT
North Black Canyon Crossing

The horizontal datum for this survey is based on the Maricopa County Department of Transportation (MCDOT) Geodetic Densification and Cadastral Survey (GDACS) website www.mcdot.maricopa.gov, under the Survey Information Link on July 27, 2011.

Projection: Central Zone, NAD 83, (Epoch 2007)
Datum: GRS-80
Units: International Feet
Geoid Model: Geoid 09

Control point: NR17
PID: AE4812
Latitude: 33°47'56.17438"N
Longitude: 112°05'57.20870"W
Ellipsoid Height: 532.692 (M)
Description: Survey disk surrounded by mass of concrete

Modified to ground at N: 1012761.971, E: 636371.491, being the south quarter corner of Section 11, Township 5 North, Range 2 East, of the Gila and Salt River Meridian, a 3" Maricopa County brass cap stamped "T5NR2E ¼ S11 S14 2001 29891", using a scale factor of 1.0001686744.

Horizontal adjustment: None
Horizontal rotation: None

The vertical datum for this survey is based on City of Phoenix brass cap in handhole, located at the intersection of Dove Valley Alignment and North Valley Parkway, having an elevation of 1631.349, City of Phoenix NGVD 29 Datum.

Wood, Patel & Associates, Inc.

REGISTERED LAND SURVEYOR
CERTIFICATE NO.
47495
EMILY C.
SCHAD
Date Signed 8/11/11
ARIZONA, U.S.A.

EXPIRES 03-31-14
Emily C. Schad, R.L.S.
Survey Project Manager

Y:\WP\Survey Standards\Control Reports\113734 North Black Canyon Crossing MCDOT GDACS SCR 08-11-11.doc

APPENDIX C.2

AS-BUILT SURVEY DATA

Dibble Engineering

7500 North Dreamy Draw Drive
Suite 200
Phoenix, Arizona 85020
phone 602.957.1155
fax 602.957.2838
www.dibblecorp.com

Sonoran Crossing LOMR Mapping

Survey Control Report

Dibble Project # 111204

Prepared by: C. Steve Duryea Jr., R.L.S.
February 12th, 2014

Sonoran Crossing Mapping

Sonoran Crossing is a mixed use development encompassing approximately 105.73 acres located in north Phoenix, Maricopa County, Arizona. The project is bounded by Interstate Highway No. 17 on the west, Skunk Creek on the east, West Carefree Highway on the north and West Dove Valley Road on the south. Drainage improvements were constructed within the project site to reclaim developable land. As a result a Letter of Map Revision (LOMR) has been completed.

Kenney Aerial Mapping Inc., as the sub-consultant, was tasked by Wood, Patel and Associates to provide original photogrammetric mapping for the project area. The mapping was prepared at 1"=40' with a 1' contour interval. Black and white digital ortho-photography was created on the entire area. Wood, Patel and Associates Inc. was the survey consultant and performed the aerial panel survey control.

Dibble Engineering was tasked with preparing the LOMR documentation. Additional field observations were taken to reflect completed improvements.

Project Information:

- Kenney Aerial Project Number: # 110711
- Kenney Aerial Contract Information: Kenney Aerial Mapping Inc.
  4008 N. 15th Avenue
  Phoenix, Az 85015
  John Cahoon, President, C.P.
  Ph: (602)258-6471

Mapping 1"=40' 1' contours

- Total acreage: Approximately 105.73
- Mapping Photo Scale: 1:3600 (1"=300')
- Ortho Photo Scale: 1:3600 (1"=300')
- Aerial Control Points: 18 (Wood, Patel)
- Blind Control Points: 5(Wood, Patel)
- Mean terrain height: 1656'
- Coordinate System: US State Plane NAD 1983
- Zone: Arizona Central Zone 0202
- Datum: NAVD '88
- Units: International Feet
- Geoid Model: Geiod '03
- Ellipsoid Model: WGS84
- Stereo Models: 9
- Ratio of aerial control to models: 1:2
- GPS Base Stations for ABGPS Flights: NA
- Scanning Resolution: 10 microns (2540 DPI)
- Ground Sample Distance: 0.12' (1:3600)
- RMSE of Blind Check Points: Z = .131

Aerial Mapping

Aerial Ground Control

Wood, Patel Inc. set and controlled all of the 18 control points (see attached Wood, Patel Survey Control Report).

- Coordinate System: US State Plane NAD 1983
- Zone: Arizona Central Zone 0202
- Datum: NGVD 29
- Units: International Feet
- Geoid Model: Geoid '03

Dibble did observe and compare some aerial panel points in addition to miscellaneous topographic areas. The findings are:

PANEL COMPARISONS													
Pnt no.	Kenney Aerial Panel Values		Elev.		Pnt no.	Dibble Aerial Panel Values		Elev.		DN:	DE:	DZ:	DZ²	
80202	1016097.13	635221	1660.97		202	1016097.21	635221.05	1660.98		-0.080	-0.050	0.010	0.000	
80204	1014385.19	634426.4	1643.22		204	1014385.22	634426.43	1643.31		-0.030	-0.030	0.090	0.008	
80205	1014400.21	635377.68	1647.25		205	1014400.24	635377.72	1647.22		-0.030	-0.040	0.030	0.001	
80207	1012553.26	634737.3	1655.59		207	1012553.29	634737.32	1655.63		-0.030	-0.020	0.040	0.002	
80208	1012558.99	635826.83	1630.78		208	1012559.03	635826.88	1630.8		-0.040	-0.050	0.020	0.000	
80215	1018039.44	633535.31	1696.49		215	1018039.5	633535.36	1696.52		-0.060	-0.050	0.030	0.001	
80217	1016163.34	634362.74	1658.64		217	1016163.44	634362.78	1658.63		-0.100	-0.040	0.010	0.000	
												0.020	0.012	0.085
											RMSE=			**0.11**

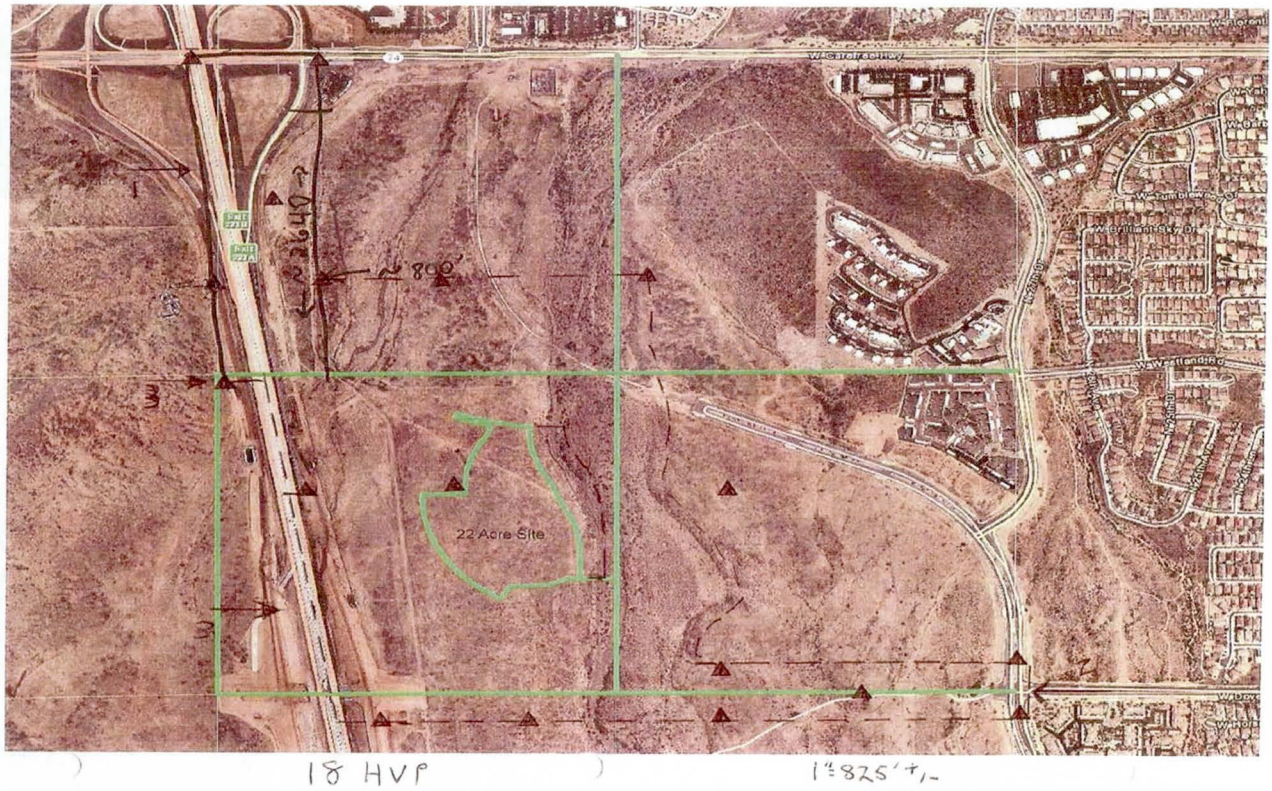

FIGURE 1
SITE AERIAL MAPPING PANEL LOCATIONS

NBCC/MACERICH AERIAL MAPPING CHECKS					
PNT NO	DESCR	DIBBLE ELEV	KAM ELEV	DIF	RMSE
20700	TOE	1671.55	1671.31	0.24	0.058
20701	NG	1671.70	1671.51	0.19	0.036
20702	FNC-BW	1672.06	1671.56	0.5	0.250
20703	NG	1671.31	1671.34	0.03	0.001
20704	NG	1670.66	1670.46	0.2	0.040
20705	FNC-BW	1663.29	1663.28	0.01	0.000
20706	NG	1662.33	1662.21	0.12	0.014
20707	EDR	1662.23	1662.30	0.07	0.005
20708	EDR	1661.79	1661.43	0.36	0.130
20709	NG	1661.80	1661.84	0.04	0.002
20711	NG	1658.54	1658.39	0.15	0.023
20712	NG	1657.02	1657.04	0.02	0.000
20713	EDR	1655.06	1654.90	0.16	0.026
20714	EDR	1654.20	1653.97	0.23	0.053
20715	NG	1653.54	1653.40	0.14	0.020
20716	NG	1653.93	1653.82	0.11	0.012
20717	NG	1654.93	1654.74	0.19	0.036
20718	NG	1656.91	1656.61	0.3	0.090
20719	NG	1658.36	1658.42	0.06	0.004
20720	NG	1658.98	1658.79	0.19	0.036
20721	NG	1659.85	1659.61	0.24	0.058
20722	NG	1660.23	1660.07	0.16	0.026
20723	TOB	1659.16	1659.15	0.01	0.000
20724	TOE	1645.55	1645.75	0.2	0.040
20725	NG	1649.30	1649.31	0.01	0.000
20726	NG	1645.10	1645.44	0.34	0.116
20727	NG	1649.32	1649.16	0.16	0.026
20728	NG	1651.91	1651.61	0.3	0.090
20729	NG	1653.15	1653.23	0.08	0.006
20730	NG	1650.03	1650.13	0.1	0.010
20731	NG	1654.56	1654.24	0.32	0.102
20733	NG	1660.20	1659.83	0.37	0.137
20734	NG	1645.33	1645.07	0.26	0.068
20736	NG	1645.10	1644.98	0.12	0.014
20737	NG	1645.12	1644.86	0.26	0.068
20738	EDR	1644.99	1644.95	0.04	0.002
20739	EDR	1645.30	1645.28	0.02	0.000
20740	NG	1647.65	1647.44	0.21	0.044
20741	NG	1648.36	1648.31	0.05	0.003
20742	NG	1648.41	1648.06	0.35	0.123
20743	NG	1649.50	1649.36	0.14	0.020
20744	NG	1650.62	1650.64	0.02	0.000
20745	NG	1650.21	1650.04	0.17	0.029
20746	TOB	1647.95	1648.03	0.08	0.006
20747	TOE	1632.48	1632.44	0.04	0.002
20748	NG	1634.02	1634.23	0.21	0.044
20749	TOE	1634.94	1634.88	0.06	0.004
20750	TOB	1640.81	1640.52	0.29	0.084
20751	NG	1641.58	1641.83	0.25	0.063
20752	NG	1639.26	1639.21	0.05	0.003
20753	NG	1645.58	1645.25	0.33	0.109

20755	NG	1641.56	1641.34	0.22	0.048
20756	NG	1639.27	1638.96	0.31	0.096
20757	NG	1637.21	1637.11	0.1	0.010
20758	NG	1637.23	1637.04	0.19	0.036
20759	NG	1637.99	1637.84	0.15	0.023
20760	NG	1637.58	1637.27	0.31	0.096
20761	NG	1635.39	1635.45	0.06	0.004
20762	NG	1629.21	1629.08	0.13	0.017
20763	NG	1631.03	1630.94	0.09	0.008
20764	**NG**	**1633.82**	**1632.79**	1.03	
20765	TOE	1634.47	1634.61	0.14	0.020
20766	TOB	1641.95	1641.81	0.14	0.020
20767	NG	1642.88	1642.63	0.25	0.063
20768	NG	1642.63	1642.47	0.16	0.026
20769	NG	1643.22	1642.92	0.3	0.090
20770	NG	1643.34	1643.21	0.13	0.017
20771	NG	1642.97	1642.88	0.09	0.008
20772	NG	1642.42	1642.34	0.08	0.006
20773	NG	1642.54	1642.17	0.37	0.137
20774	EDR	1641.74	1641.45	0.29	0.084
20775	EDR	1641.92	1641.77	0.15	0.023
20776	NG	1641.99	1641.76	0.23	0.053
20777	NG	1640.95	1641.02	0.07	0.005
20779	NG	1640.16	1639.98	0.18	0.032
20780	NG	1637.09	1637.23	0.14	0.020
20782	NG	1636.61	1636.28	0.33	0.109
20783	EDR	1636.44	1636.28	0.16	0.026
20784	EDR	1636.16	1635.90	0.26	0.068
20785	NG	1636.49	1636.30	0.19	0.036
20786	NG	1636.07	1635.93	0.14	0.020
20787	NG	1635.78	1635.49	0.29	0.084
20788	NG	1636.36	1636.26	0.1	0.010
20789	NG	1634.66	1634.59	0.07	0.005
20790	NG	1632.34	1632.33	0.01	0.000
20791	NG	1630.96	1630.79	0.17	0.029
20792	TOE	1625.00	1625.26	0.26	0.068
20793	NG	1625.69	1625.47	0.22	0.048
20794	NG	1624.67	1624.86	0.19	0.036
20795	TOE	1624.73	1624.42	0.31	0.096
20796	TOB	1632.38	1632.47	0.09	0.008
20797	NG	1631.35	1631.49	0.14	0.020
20798	NG	1629.14	1629.18	0.04	0.002
20799	TOE	1628.76	1628.63	0.13	0.017
20800	TOB	1636.10	1636.17	0.07	0.005
20801	NG	1636.91	1636.83	0.08	0.006
20802	NG	1630.32	1630.64	0.32	0.102
20803	NG	1629.92	1629.86	0.06	0.004
20806	NG	1630.99	1631.00	0.01	0.000
20807	NG	1632.07	1632.25	0.18	0.032
20809	NG	1631.50	1631.76	0.26	0.068
20810	NG	1631.75	1631.89	0.14	0.020
20811	NG	1632.16	1632.32	0.16	0.026
20812	NG	1632.70	1632.88	0.18	0.032
20445	EC	1655.18	1655.60	0.42	0.176
20449	CS	1655.71	1655.90	0.19	0.036
20500	EC	1656.22	1656.06	0.16	0.026

20511	EC	1655.94	1655.72	0.22	0.048
20510	CS	1655.62	1655.58	0.04	0.002
20581	EC	1655.30	1655.26	0.04	0.002
20534	EC	1648.45	1648.35	0.1	0.010
20533	EC	1648.85	1648.66	0.19	0.036
20532	EC	1649.22	1648.97	0.25	0.063
20481	EC	1649.63	1649.33	0.3	0.090
20480	EC	1648.97	1648.78	0.19	0.036
20479	EC	1648.41	1648.09	0.32	0.102
20225	EP	1630.40	1630.49	0.09	0.008
20224	EP	1630.77	1630.60	0.17	0.029
20223	EP	1630.94	1630.91	0.03	0.001
20222	EP	1631.23	1631.32	0.09	0.008
20175	EP	1631.36	1631.53	0.17	0.029
20174	EP	1631.19	1631.27	0.08	0.006
20065	EP	1631.00	1631.13	0.13	0.017
20434	AS	1631.46	1631.59	0.13	0.017
20433	AS	1631.80	1631.94	0.14	0.020
20432	AS	1631.47	1631.60	0.13	0.017
20435	AS	1631.19	1631.41	0.22	0.048
20392	EP	1630.86	1630.97	0.11	0.012
20329	EP1	1631.05	1631.14	0.09	0.008
20278	EP1	1631.36	1631.40	0.04	0.002
20200	EP	1631.63	1631.65	0.02	0.000
20192	EP	1631.65	1631.67	0.02	0.000
20162	EP1	1631.83	1631.91	0.08	0.006
20089	EP1	1632.07	1632.09	0.02	0.000
20048	EP	1631.31	1631.59	0.28	0.078
1125	EC	1677.32	1677.51	0.19	0.036
1126	HCR	1677.35	1677.40	0.05	0.003
1127	BOC	1676.95	1677.09	0.14	0.020
1128	GUT	1676.93	1677.05	0.12	0.014
1129	EP1	1676.99	1677.17	0.18	0.032
1200	EP	1677.79	1677.72	0.07	0.005
1201	BOC	1678.29	1678.23	0.06	0.004
1213	BOC	1677.90	1677.97	0.07	0.005
1214	EP	1677.42	1677.67	0.25	0.063
1247	EP	1676.63	1677.07	0.44	0.194
1246	SCUP	1676.47	1676.75	0.28	0.078
1248	GUT	1676.98	1677.21	0.22	0.048
1249	EC	1677.23	1677.31	0.08	0.006
1321	BOC	1678.16	1678.20	0.04	0.002
1322	**GUT**	**1677.71**	**1678.31**	0.6	
1323	EP	1677.83	1677.96	0.13	0.017
1039	EP1	1678.83	1678.98	0.15	0.023
1040	EP1	1679.32	1679.48	0.16	0.026
1041	**NG**	**1678.87**	**1679.48**	0.61	
1006	NG	1678.70	1678.69	0.01	0.000
1007	NG	1678.67	1679.02	0.35	0.123
1009	BOC	1678.99	1679.05	0.06	0.004
1010	**EP1**	**1678.50**	**1679.10**	0.6	
1011	EP	1677.95	1677.99	0.04	0.002
1076	EP1	1679.83	1679.67	0.16	0.026
1075	BOC	1679.91	1680.16	0.24	0.058
1059	BRK	1680.04	1680.12	0.08	0.006
1060	BOC	1680.20	1679.95	0.25	0.063

1061	EP1	1679.57	1679.45	0.12	0.014
1090	GUT	1678.99	1678.96	0.03	0.001
1089	BOC	1679.54	1679.46	0.08	0.006
1088	EC	1679.36	1679.44	0.08	0.006
AVG DIF				0.17	1031.29

The aerial mapping meets National Map Accuracy Standards RMSE = 0.182

Aerial Photography

The aerial mission was completed using a Cessna TU 206 that houses a Zeiss TOP 15 photogrammetric camera system equipped with forward motion compensation and a gyro stabilized mount. Mapping Black and White stereo photography was acquired at a photo scale of 1:3600 (1"=300') for the 1"=40 scale map with 1-foot contours and Ortho-Photography. There were 13 exposures acquired for the mapping flight. The aerial photography was flown on 8/2/2011. All flights were captured under ideal conditions.

Photogrammetric Scanning

The photography was scanned into digital format using a Zeiss photogrammetric scanner. Each exposure was scanned at 10 microns (2540 DPI), which yielded ground sample distances of 0.12'.

Aerial-Triangulation

The 18 aerial control point data were used in digital aerial-triangulation calculation. Aerial-triangulation was performed using Match AT software. All tie and pass points were automatically generated and where these points were lacking we manually measured these points. The control points were measured manually. The AT results computed a Z value RMSE on control points of 0.0496'on the 1:3600 Mapping Flight. The Z value RMSE of blind checkpoints of .131'.

Photogrammetric Data Compilation

The photogrammetric data compilation was collecting using digital stereo compilation systems with Dat-EM Summit Evolution software. The DTM consists of manually digitized breaklines, grid points, and spot elevations. All visible planimetric features within the stereo photography were compiled using the same software. The Digital Terrain Model (DTM) was used to generate the Triangular Irregular Network (TIN). Contours were generated from the TIN using Dat-EM photogrammetric software.

Tuesday July 17th 2012

MACERich

Topo

Drainage

MARICOPA COUNTY

Phoenix AZ

Job: 1204-2012-0717CV

Pts: 5800 → 5851

Sunny 91°

High 99°

WIND NNE 1mph

GUSTS NNE 5mph

CHRIS ALLEN

101204 MACERICH

T@	88		HI	4.80 ✓
BS@	87		HR	6.14 ✓
FS@	86		HR	6.14 ✓
✓ 5800	87 CK	ΔN	+.010	
		ΔE	-.043	
		ΔEL	+.037	
✓ 5801	86CK	ΔN	-.031	
		ΔE	-.012	
		ΔEL	+.002	
✓ 5820	87CK	ΔN	+.017	
		ΔE	-.041	
		ΔEL	+.027	

7/17/12 8/214

* ALL NEW POINTS SHOT IN, ELEVATIONS HAVE BEEN ADJUSTED IN LGD *

7-18-12

* GRID * ELEVATION NEED TO be Adjusted

86* ✓

N 1014601.581
E 633963.749
EL ~~1645.351~~ 1643.368

87* ✓

N ~~1016~~ 1014678.045
E 633917.473
EL ~~1646.012~~ 1644.029

88* ✓

N 1014665.592
E 633981.807
EL ~~1650.585~~ 1648.602

REVIEWED
By randy.bilyeu at 7:33 am, Jul 18, 2012

101205 MACERICH

TS@	~~92~~	199	HI	~~521~~	548
BS@	~~96~~	197	HR	614	
FS@		198	HR	614	
~~5821~~	197 ck	ΔN			
		ΔE			
		ΔEL			

BAD SET UP

SHOOTING IN NEW POINTS

7/17/12

9/214

* GRID *

92	96
N 1014239.42	N 1012839.938
E 634473.134	E 634668.317
EL ~~1643.839~~	EL ~~1661.255~~
1641.86	1659.25

95	199
N 1013217.28	N 1016796.000
E 634635.688	E 633929.993
EL ~~1653.436~~	EL 1661.115
1651.45	

198	197
N 1017289.836	N 1017583.623
E 634003.898	E 634274.241
EL 1669.815	EL 1671.985

101205 MACERICH 7/17/12 10/214

GRID

					83*	84*
T@	85		HI	5 09		
BS@	84		HR	6 14	N 1014950.621	N 1014896.843
FS@	83		HR	6 14	E 634223.242	E 634252.124
					EL ~~1650.391~~ 1648.408	EL ~~1649.879~~ 1647.896
5821	84CK	ΔN	~~+.004~~	+.002		
		ΔE	~~+.027~~	+.010	85*	
		ΔEL	~~+.003~~	-.004	N 1014897.229	
					E 634206.761	
5822	83CK	ΔN	+.086		EL ~~1651.720~~ 1649.737	
		ΔE	+.029			
		ΔEL	-.020			
5840	84CK	ΔN	-.006			
		ΔE	+.034			
		ΔEL	+.007			

* ADJUST ELEVATION

REVIEWED
By randy.bilyeu at 7:33 am, Jul 18, 2012

101205 MACERICH 7/17/12 11/214

TP	199	HT	5.49
BS@	198	HR	6.14
FS@	82	HR	6.14
5841	198CK	ΔN	+.150
		ΔE	+.026
		ΔEL	+.033
5842	82CK	ΔN	-.018
		ΔE	-.004
		ΔEL	-1.858
*5846	GRATE	HR	8.14
5851	198CK	ΔN	+.140
		ΔE	+.011
		ΔEL	+.003

5851 HR 6.14

GRID ✓

82 ✓ (EL NEEDS TO be Adjusted)

N 1016412.314

E 633921.409

EL ~~1663.541~~ 1661.558

REVIEWED
By randy.bilyeu at 7:32 am, Jul 18, 2012

TUESDAY OCTOBER 29th, 2013

101204
MACERICH SONORAN CROSSING
FEMA WASH TOPO

MARICOPA COUNTY
PHOENIX, ARIZONA

JOB: 1204-ABM-131029
PTS: 60,000-60658

SUNNY, CLEAR: ±55°
WIND: NONE
HIGH: ±70°

ADAM MUELLER

M12-04 MACERICH SONORAN CROSSING

SET UP THE ROVER AND USED THE LEICA SMARTNET REFERANCE NETWORK

96 STK

ΔN: .035
ΔE: -.017
ΔZ: .003

60,101 FND-TAG FOUND 3" WASHER SET IN CONCRETE MARKED 2" IPS SCN 40 PVC

96 STK STK

ΔN: .071
ΔE: -.016
ΔZ: -.026

10-29-13

COORD SYS: 1204-LOCAL-NGVD29
GEOID: AZGEOID03
VERTICAL DATUM: ~~NAVD88~~ NGVD29
UNITS: INT FEET
CSF: N/A

GRID COORDS

96 CP

N: 1012839.952
E: 634668.030
EL: 1659.250

WEDNESDAY OCTOBER 30th, 2013

111204
MAERTICH SONORAN CROSSING
FEMA WASH TOPO

MARICOPA COUNTY
PHOENIX, ARIZONA

JOB: 1204-ABM-131030
PTS: 60,700-~~60~~#61146

SUNNY, CLEAR ± 50°
WIND: NONE
HIGH: ± 68°

ADAM MUELLER

M1204 MACERICH SONORAN CROSSING

SET UP THE ROVER AND USED THE LEICA SMARTNET NETWORK

96 STK
ΔN: .042
ΔE: -.004
ΔZ: -.064

60799 FND-TRC FOUND 7" WASHER SET IN CONCRETE MARKED 2" IPS SCH 40 PVC

96 STKSTK
ΔN: .014
ΔE: -.012
ΔZ: -.051

10-30-13

COORD SYS: 1204-LOCAL-NGVD29
GEOID: AZGEOID03
VERTICAL DATUM: NGVD 29
UNITS: INT FEET
CSF: N/A

GRID COORDS

96 CP
N: 1612939.952
E: 634668.030
EL: 1659.25

EQUIPMENT USED: LEICA VIVA GS15 ROVER
SERIAL # 1503080

LEICA VIVA CONTROLLER CS15
SERIAL # 1571789

MONDAY OCTOBER 11th, 2011

101204
MACERICH SONORAN CROSSING
DIRT REMOVAL SURVEY

MARICOPA COUNTY
PHOENIX, ARIZONA

JOB: 1204-BAB-131111
PTS: 70,000 - 70,068
JOB: 1204-ABM-131111
PTS: 61200-61231

SUNNY, CLEAR: ±60°
WIND: NONE
HIGH: ±86°

ADAM MUELLER
BEN BUTWINSKI

1012-04 SONORAN CROSSING

SET UP THE ROVERS AND USED THE LEICA SMARTNET NETWORK

96 STK (ROVER 1)
ΔN: .009
ΔE: -.029
ΔZ: .038

96-STK (ROVER 2)
ΔN: -.043
ΔE: -.010
ΔZ: -.109

11-11-13

COORD SYS: 1204-LOCAL-NGVD29
GEOID: AZGEOID03
VERTICAL DATUM: NGVD29
UNITS: INT FEET
CSF: N/A

GROUND COORDS

96 CP-MAG
N: 1012839.952
E: 634668.030
EL: 1659.25

FRIDAY DECEMBER 6th 2013

11 1204
SONORAN CROSSING
CHANNEL AS-BUILT

MARICOPA, COUNTY
PHOENIX, ARIZONA

JOB: 1204-BAB-B1206
PG: 70,200 - 70,330

±40 °F
SUNNY/CLEAR
WIND/NNW 6MPH
HIGH = ±49°F

BEN BUTWINSKI
ADAM MUELLER

11204 SONORAN CROSSING

SET UP LEICA ROVER AND DIALED ONTO LEICA SMARTNET REFERENCE NETWORK

CHECK INTO #96 MAG
#96_STK ΔN= -.006
ΔE=-.010
ΔEL=-.096

#70209, 70210, 70211 INV-BOX CONC. SHOT AT BOTTOM OF BOX
SEE DIAGRAM TO RIGHT →
SEE PHOTO'S

70212 INV-24" IN WALL OF CONC. CANAL SEE PHOTO

70213-70215 INV-30" IN WALL OF CONC. CANAL SET OF 3
SEE PHOTO

12/06/2013

COORDSYS: 1204-LOCAL-NGVD29
GEIOD: AZ GEIOD 05
VERTICAL DATUM: NGVD29
UNITS: INT. FEET
CSF:

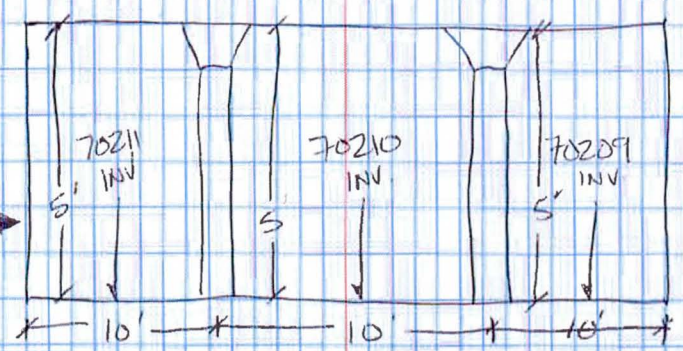

11/20/4 SONORAN CROSSING

70229 INV-24 IN IN CONC.
CANAL WALL SEE PHOTO

70242 INV-54 IN IN WALL OF
CONC. CANAL "CULVERT 45° TURN
NOT BOX" SEE PHOTO

70243 INV-54 IN SAME AS # 70242
SEE PHOTO

ADAMS RNG.
61681 INV-54 IN SAME AS # 70242
ADAMS RNG. HR = 17.362 SEE PHOTO
61682 INV-54 IN SAME AS # 70242
HR = 17.362 SEE PHOTO
SHOT FROM TOP OF CULVERT.

END CHECK IN

#96 STK STK ΔN = -.029
ΔE = -.035
ΔELE -.132

12/06/2013

ROB BUST
70202 IS AT 7.50 NEEDS TO
BE 6.562 THROUGH 70245

AT 70246 HR = 17.362

70244
MHST

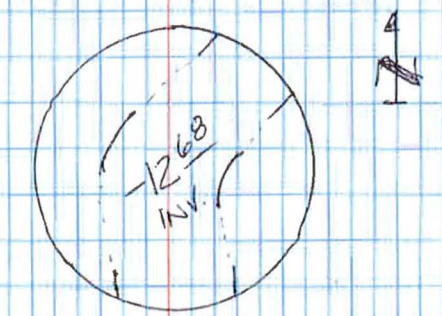

70245
MHST

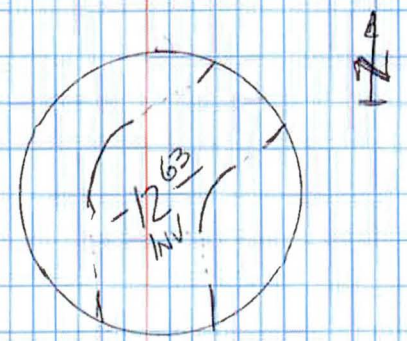

DIBBLE ENGINEERING TOPOGRAPHIC DATA

89	1013361.298	633988.118	1626.993	CP
90	1013175.410	633967.619	1625.593	CP
91	1013298.698	633967.930	1626.853	CP
92	1014239.670	634472.814	1641.860	CP
93	1014040.426	634490.807	1640.600	CP
94	1013607.357	634477.831	1643.660	CP
95	1013217.357	634635.396	1651.450	CP
96	1012839.952	634668.030	1659.250	CP
197	1017584.437	634273.888	1671.985	CP
198	1017290.601	634003.499	1669.815	CP
199	1016796.681	633929.581	1661.115	CP
5004	1012814.147	634655.407	1660.453	RFC ST
5005	1012813.374	634655.473	1659.843	GUT ST
5006	1012811.662	634655.489	1659.836	SLAB ST
5007	1012798.578	634655.495	1660.071	CONC
5008	1012816.421	634660.370	1660.381	RFC
5009	1012815.688	634661.004	1659.799	GUT
5010	1012811.563	634663.451	1659.699	SLAB
5011	1012811.569	634672.037	1659.537	SLAB
5012	1012821.809	634670.995	1659.448	SLAB
5013	1012823.182	634666.411	1659.643	GUT
5014	1012823.384	634665.710	1659.747	RFC HCR ST
5015	1012824.382	634658.133	1660.438	HCR
5016	1012829.274	634658.867	1660.422	HCR
5017	1012828.322	634666.419	1659.658	HCR RFC
5018	1012828.289	634667.227	1659.530	GUT
5019	1012828.286	634670.256	1659.407	SLAB
5020	1012832.447	634669.498	1659.329	SLAB
5021	1012832.111	634667.011	1659.400	GUT
5022	1012831.895	634666.270	1659.924	RFC
5023	1012830.474	634658.908	1660.427	CONC
5024	1012833.902	634659.260	1660.302	CONC
5025	1012821.495	634650.571	1660.695	CONC
5026	1012825.344	634654.360	1660.526	PB
5027	1012829.626	634657.519	1660.442	PB
5028	1012824.835	634657.248	1660.454	TSP LPS
5029	1012813.842	634655.237	1660.415	DIR
5030	1012821.003	634643.474	1660.882	BW ST
5031	1012837.182	634654.761	1660.324	BW
5032	1012849.173	634663.150	1659.635	RFC BW
5033	1012849.887	634663.569	1659.221	GUT
5034	1012850.894	634663.425	1659.112	BW GUT
5035	1012850.045	634661.819	1657.719	TOEC ST
5036	1012812.913	634685.469	1659.158	LS ST
5037	1012832.363	634693.548	1658.555	LS ST
5038	1012824.403	634707.704	1658.317	LS ST
5039	1012874.359	634698.311	1657.896	LS1
5040	1012872.049	634686.181	1658.188	LS
5041	1012869.696	634674.933	1658.515	LS
5042	1012823.701	634766.550	1656.569	EC1 ST
5043	1012825.723	634766.600	1656.482	GUT1 ST
5044	1012826.512	634766.545	1657.021	RFC1 ST
5045	1012832.602	634766.472	1657.092	EC2 ST
5046	1012834.915	634755.707	1657.380	SLAB2
5047	1012829.158	634754.005	1657.311	RFC1
5048	1012828.377	634753.744	1656.801	GUT1
5049	1012823.956	634752.891	1656.979	SLAB1

5050	1012825.984	634752.691	1656.909	SLAB1
5051	1012829.206	634744.671	1656.965	SLAB1
5052	1012831.118	634745.581	1656.920	GUT1
5053	1012831.893	634745.864	1657.424	RFC HCR ST
5054	1012837.271	634748.027	1657.448	HCR SLAB2
5055	1012837.719	634748.302	1657.465	RFC2 ST
5056	1012841.266	634741.763	1657.552	RFC2
5057	1012846.508	634740.288	1657.628	RFC2
5058	1012845.754	634734.587	1657.663	RFC2
5059	1012847.173	634732.792	1657.677	RFC2
5060	1012849.836	634729.565	1657.771	RFC2
5061	1012840.886	634741.205	1657.105	HCR SLAB3
5062	1012845.890	634739.927	1657.188	SLAB2
5063	1012843.384	634736.708	1657.181	HCR
5064	1012845.198	634734.579	1657.434	HCR SLAB4
5065	1012846.627	634732.498	1657.645	HCR SLAB5
5066	1012835.927	634737.906	1657.120	RFC1
5067	1012835.200	634737.581	1657.075	GUT1
5068	1012833.137	634736.455	1657.093	SLAB1
5069	1012835.915	634732.052	1657.167	SLAB1
5070	1012837.854	634733.107	1657.129	GUT1
5071	1012838.519	634733.576	1657.225	RFC1
5072	1012842.092	634728.582	1657.621	RFC1
5073	1012841.525	634727.981	1657.223	GUT1
5074	1012839.850	634726.552	1657.307	SLAB1
5075	1012842.862	634723.058	1657.380	SLAB1
5076	1012844.555	634724.492	1657.294	GUT1
5077	1012845.147	634725.143	1657.691	RFC1 HCR ST
5078	1012849.520	634729.244	1657.756	HCR
5079	1012853.197	634725.448	1657.519	HCR
5080	1012856.759	634722.320	1657.647	HCR
5081	1012849.185	634720.934	1657.485	RFC1
5082	1012848.763	634720.443	1657.412	GUT1
5083	1012848.072	634717.685	1657.491	SLAB1
5084	1012851.215	634715.061	1657.567	SLAB1
5085	1012852.660	634716.959	1657.474	GUT1
5086	1012853.158	634717.403	1657.527	RFC1
5087	1012856.156	634729.169	1658.168	RFC2
5088	1012860.090	634725.548	1658.195	RFC2
5089	1012859.288	634725.488	1657.714	CONC
5090	1012856.029	634728.596	1657.694	CONC
5091	1012857.251	634722.067	1658.145	RFC2
5092	1012853.632	634717.153	1658.021	RFC2
5093	1012850.935	634733.458	1657.703	PB
5094	1012852.377	634736.176	1657.614	PB
5095	1012843.815	634738.522	1657.151	TSP
5096	1012832.860	634766.803	1656.845	GS
5097	1012840.515	634766.856	1656.096	TOEC1 ST
5098	1012844.872	634749.938	1656.454	TOEC1
5099	1012838.524	634747.758	1657.151	GS
5100	1012841.404	634742.125	1657.244	GS
5101	1012846.772	634740.435	1657.324	GS
5102	1012848.174	634740.835	1657.058	TOEC1
5103	1012846.009	634734.769	1657.374	GS
5104	1012850.137	634730.042	1657.560	GS
5105	1012854.610	634733.000	1657.461	TOEC1
5106	1012856.251	634729.704	1657.772	GS
5107	1012857.214	634730.545	1657.757	TOEC1
5108	1012860.854	634726.421	1657.696	TOEC1

5109	1012854.907	634716.582	1657.690	GS
5110	1012865.292	634719.180	1657.611	TOEC1
5111	1012872.311	634711.462	1657.876	SSP
5112	1012856.267	634725.617	1657.464	TSP LPS
5113	1012853.147	634710.878	1657.714	DIR
5114	1012860.039	634708.474	1657.706	SLAB1
5115	1012861.356	634710.334	1657.677	GUT1
5116	1012861.797	634710.967	1658.256	RFC1
5117	1012861.862	634711.185	1657.836	GS
5118	1012871.816	634705.951	1657.931	GS
5119	1012871.864	634705.746	1658.338	RFC1
5120	1012871.325	634705.024	1657.800	GUT1
5121	1012870.936	634702.764	1657.868	SLAB1
5122	1012870.479	634700.647	1657.941	SLAB1
5123	1012885.581	634697.841	1657.787	SLAB1
5124	1012878.125	634702.416	1657.765	GUT1
5125	1012878.366	634703.136	1658.272	RFC1
5126	1012878.449	634703.499	1657.820	GS
5127	1012886.156	634701.181	1657.916	GS
5128	1012886.181	634701.049	1658.260	RFC1
5129	1012885.875	634700.196	1657.721	GUT1
5130	1012886.180	634697.771	1657.812	SLAB1
5131	1012907.994	634698.602	1657.559	GS
5132	1012887.049	634705.487	1657.643	TOEC1
5133	1012912.713	634700.003	1657.367	TOEC1
5134	1012916.396	634699.803	1656.989	TOEC1
5135	1012916.164	634698.204	1657.368	GS
5136	1012908.119	634698.408	1658.052	RFC1
5137	1012907.953	634697.495	1657.525	GUT1
5138	1012907.356	634693.787	1657.573	SLAB1
5139	1012907.044	634692.079	1657.609	LS
5140	1012910.469	634678.957	1657.775	LS
5141	1012902.075	634668.803	1658.141	LS
5142	1012899.393	634656.540	1658.394	SLAB
5143	1012898.876	634654.197	1658.439	BW
5144	1012898.474	634652.516	1657.627	TOEC
5145	1012945.964	634643.622	1657.647	TOEC
5146	1012946.091	634645.223	1657.843	BW
5147	1012946.474	634647.781	1657.794	SLAB
5148	1012948.970	634659.916	1657.578	LS
5149	1012951.198	634671.192	1657.320	LS
5150	1012953.427	634683.153	1657.105	LS1
5151	1012953.616	634684.980	1657.076	SLAB1
5152	1012915.799	634696.639	1657.425	GUT1 BW1 ST
5153	1012915.916	634697.491	1657.992	RFC1
5154	1012936.156	634694.922	1656.688	TOEC1
5155	1012935.572	634692.886	1657.151	GS
5156	1012935.140	634691.023	1657.246	BW1
5157	1012939.539	634690.170	1657.187	BW1
5158	1012940.225	634687.595	1657.272	SLAB1
5159	1012988.599	634684.639	1656.093	TOEC1
5160	1012987.823	634682.743	1656.486	GS
5161	1012987.656	634681.072	1656.506	BW1
5162	1012987.167	634678.740	1656.620	SLAB1
5163	1012965.967	634680.577	1656.936	LS
5164	1012959.948	634669.703	1657.197	LS
5165	1012957.935	634658.104	1657.453	LS
5166	1012977.961	634653.189	1657.185	LS
5167	1012989.677	634649.838	1657.006	LS

5168	1012992.491	634662.529	1656.736	LS
5169	1012994.948	634674.040	1656.506	LS
5170	1012982.787	634640.794	1657.256	SLAB
5171	1012982.439	634638.360	1657.306	BW
5172	1012982.445	634636.605	1657.112	TOEC
5173	1013030.836	634627.571	1656.399	TOEC
5174	1013031.450	634629.026	1656.471	BW
5175	1013031.895	634631.517	1656.427	SLAB
5176	1013033.029	634637.163	1656.326	LS
5177	1013035.674	634650.176	1656.062	LS
5178	1013038.328	634661.744	1655.801	LS1
5179	1013039.771	634668.741	1655.670	SLAB1
5180	1013040.355	634671.165	1655.564	BW1
5181	1013040.687	634672.717	1655.501	GS
5182	1013040.581	634675.127	1655.237	TOEC1
5183	1013047.228	634673.581	1655.160	LP
5184	1013043.922	634661.202	1655.706	DIR
5185	1013049.070	634679.652	1653.598	PB
5186	1013090.328	634665.449	1654.717	TOEC1
5187	1013089.959	634663.466	1654.798	GS
5188	1013089.562	634661.791	1654.603	BW1
5189	1013089.282	634659.439	1654.703	SLAB1
5190	1013087.217	634647.548	1654.917	LS
5191	1013075.182	634638.429	1655.364	LS
5192	1013082.571	634622.612	1655.428	LS
5193	1013067.145	634622.261	1655.765	BW
5194	1013086.775	634618.670	1655.410	BW GUT ST
5195	1013086.719	634616.981	1655.750	MB ST
5196	1013086.522	634616.608	1655.413	TOEC
5197	1013087.254	634620.855	1655.343	SLAB
5198	1013118.580	634608.026	1654.787	TOEC
5199	1013117.938	634605.117	1654.399	GS
5200	1013118.911	634609.573	1654.631	GUT
5201	1013119.510	634611.973	1654.589	LS
5202	1013119.562	634612.132	1654.575	SLAB
5203	1013113.437	634626.910	1654.581	LS
5204	1013126.390	634635.965	1654.083	LS
5205	1013130.435	634651.637	1653.737	SLAB1
5206	1013130.871	634654.084	1653.643	BW1
5207	1013131.161	634655.602	1653.675	GS
5208	1013131.282	634657.925	1653.618	TOEC1
5209	1013187.477	634647.060	1651.849	TOEC1
5210	1013187.253	634645.063	1652.186	GS
5211	1013187.008	634643.448	1652.242	BW1
5212	1013186.635	634640.973	1652.339	SLAB1
5213	1013181.152	634620.650	1652.768	LS
5214	1013178.076	634608.544	1653.012	LS
5215	1013174.852	634597.293	1653.194	SLAB
5216	1013174.778	634597.017	1653.212	LS
5217	1013174.034	634594.593	1653.295	GUT
5218	1013173.756	634593.205	1653.522	MB
5219	1013173.653	634592.806	1653.356	TOEC
5220	1013172.820	634588.472	1652.643	GS
5221	1013222.635	634574.984	1651.340	GS
5222	1013223.622	634579.516	1652.005	TOEC
5223	1013223.644	634579.615	1652.176	MB
5224	1013224.080	634581.069	1651.921	GUT
5225	1013224.600	634583.341	1651.906	LS
5226	1013224.669	634583.712	1651.882	SLAB

5227	1013227.691	634595.045	1651.683	LS
5228	1013231.319	634606.777	1651.436	LS
5229	1013237.159	634631.453	1650.887	SLAB1
5230	1013237.392	634634.065	1650.797	BW1
5231	1013237.776	634635.587	1650.829	GS
5232	1013226.105	634645.726	1649.005	PB
5233	1013224.680	634640.561	1650.316	LP
5234	1013223.478	634634.229	1651.290	DIR
5235	1013289.465	634627.350	1648.801	TOEC1
5236	1013289.314	634625.883	1649.235	GS
5237	1013288.890	634624.300	1649.346	BW1
5238	1013288.126	634621.807	1649.428	SLAB1
5239	1013282.410	634592.471	1650.074	LS
5240	1013278.917	634581.028	1650.258	LS
5241	1013275.481	634569.887	1650.475	SLAB
5242	1013275.415	634569.526	1650.514	LS
5243	1013274.647	634567.237	1650.546	GUT
5244	1013274.366	634565.788	1650.811	MB
5245	1013274.302	634565.453	1650.574	TOEC
5246	1013273.123	634560.195	1649.745	GS
5247	1013322.613	634546.665	1648.322	GS
5248	1013323.895	634552.074	1649.358	TOEC
5249	1013323.886	634552.257	1649.524	MB
5250	1013324.390	634553.568	1649.295	GUT
5251	1013324.987	634555.876	1649.263	LS
5252	1013325.091	634556.233	1649.266	SLAB
5253	1013314.469	634550.691	1649.109	IRV
5254	1013332.599	634566.550	1648.858	LS
5255	1013327.609	634579.870	1648.856	LS
5256	1013343.976	634611.208	1647.886	SLAB1
5257	1013344.739	634613.774	1647.742	BW1
5258	1013327.196	634616.580	1648.235	SLD ST
5259	1013336.976	634614.789	1647.922	SLD
5260	1013338.107	634614.926	1647.863	GRT1 ST
5261	1013337.739	634612.951	1647.999	GRT1
5262	1013341.196	634612.239	1647.904	GRT1
5263	1013341.476	634614.268	1647.795	GRT1 CL
5264	1013338.595	634614.566	1645.953	INV
5265	1013336.854	634614.803	1646.043	INV
5266	1013327.355	634616.774	1646.318	INV
5267	1013339.130	634614.875	1647.838	CONC
5268	1013338.420	634645.398	1637.960	INV
5269	1013345.228	634615.629	1646.768	TOEC1
5270	1013344.320	634610.880	1647.324	GS
5271	1013335.117	634581.604	1648.560	SLAB1 MST
5272	1013333.891	634577.649	1648.706	SLAB1
5273	1013339.266	634579.135	1648.583	GUT1 ST
5274	1013339.902	634580.396	1648.600	MB1
5275	1013339.087	634576.725	1648.594	LS
5276	1013338.985	634576.303	1648.583	SLAB1
5277	1013352.272	634572.766	1648.232	SLAB1
5278	1013352.475	634573.127	1648.240	LS
5279	1013352.971	634575.255	1648.174	GUT1
5280	1013353.191	634576.693	1648.439	MB1
5281	1013353.458	634577.280	1648.131	GS
5282	1013378.087	634569.944	1647.776	MB1
5283	1013378.266	634570.272	1647.433	GS
5284	1013378.149	634568.384	1647.514	GUT1
5285	1013377.820	634566.136	1647.570	LS

5286	1013374.483	634555.232	1647.789	LS
5287	1013371.379	634543.703	1648.044	SLAB
5288	1013371.315	634543.397	1648.050	LS
5289	1013370.756	634541.112	1648.091	GUT
5290	1013370.401	634539.599	1648.324	MB
5291	1013370.380	634539.249	1648.182	TOEC
5292	1013369.433	634535.029	1647.365	GS
5293	1013381.147	634564.973	1647.476	SLAB1
5294	1013385.787	634596.152	1645.093	TOEC1
5295	1013406.898	634565.818	1646.373	TOEC1
5296	1013407.125	634566.040	1646.754	PB
5297	1013402.212	634570.883	1646.532	SSP
5298	1013389.120	634527.058	1646.314	SSP
5299	1013380.500	634520.985	1643.226	LP
5300	1013383.095	634530.208	1646.479	DIR
5301	1013397.454	634516.174	1643.409	PB
5302	1013422.164	634519.032	1645.630	GS
5303	1013423.918	634524.906	1646.765	TOEC
5304	1013423.984	634525.089	1647.001	MB
5305	1013424.283	634526.483	1646.746	GUT
5306	1013424.849	634528.896	1646.699	LS
5307	1013427.764	634540.635	1646.406	LS
5308	1013430.774	634551.451	1646.198	SLAB1
5309	1013430.670	634551.815	1646.194	LS
5310	1013431.010	634554.038	1646.137	GUT1
5311	1013431.430	634555.528	1646.381	MB1
5312	1013431.471	634555.762	1646.233	GS
5313	1013431.423	634556.700	1646.088	TOEC1
5314	1013432.442	634562.212	1644.998	GS
5315	1013482.154	634548.228	1644.359	GS
5316	1013480.229	634542.499	1645.179	TOEC1
5317	1013480.050	634542.307	1645.351	MB1
5318	1013479.803	634540.927	1645.115	GUT1
5319	1013479.122	634538.683	1645.157	LS
5320	1013478.938	634538.376	1645.154	SLAB1
5321	1013475.883	634527.691	1645.363	LS
5322	1013472.754	634516.188	1645.614	SLAB
5323	1013472.614	634515.911	1645.642	LS
5324	1013472.078	634513.579	1645.668	GUT
5325	1013471.788	634512.157	1645.914	MB
5326	1013471.686	634511.729	1645.717	TOEC
5327	1013470.840	634505.302	1644.879	GS
5328	1013518.705	634492.446	1643.998	GS
5329	1013519.718	634499.010	1644.855	TOEC
5330	1013519.901	634499.008	1645.062	MB
5331	1013520.295	634500.459	1644.815	GUT
5332	1013520.618	634502.827	1644.769	LS
5333	1013520.801	634503.099	1644.761	SLAB
5334	1013523.822	634514.837	1644.507	LS
5335	1013526.301	634525.601	1644.285	SLAB1
5336	1013526.289	634525.852	1644.287	LS
5337	1013526.917	634528.162	1644.242	GUT1
5338	1013527.340	634529.658	1644.523	MB1
5339	1013527.962	634530.483	1644.133	TOEC1
5340	1013529.715	634540.291	1642.078	GS
5341	1013577.348	634523.982	1642.106	GS
5342	1013575.692	634516.642	1643.476	TOEC1
5343	1013575.467	634516.488	1643.766	MB1
5344	1013575.155	634515.125	1643.524	GUT1

5345	1013573.536	634513.066	1643.622	LS
5346	1013573.434	634512.903	1643.607	SLAB1
5347	1013572.429	634501.772	1643.788	LS
5348	1013569.313	634490.018	1644.058	SLAB
5349	1013569.271	634489.744	1644.075	LS
5350	1013568.576	634487.320	1644.117	GUT
5351	1013568.272	634485.985	1644.377	MB
5352	1013568.257	634485.589	1644.219	TOEC
5353	1013566.041	634478.071	1643.120	GS
5354	1013614.688	634467.010	1642.768	GS
5355	1013615.563	634472.911	1643.643	TOEC
5356	1013615.584	634473.085	1643.825	MB
5357	1013615.887	634474.576	1643.561	GUT
5358	1013616.494	634476.872	1643.514	LS
5359	1013616.682	634477.142	1643.479	SLAB
5360	1013625.522	634498.773	1642.972	SLAB1
5361	1013625.605	634499.084	1642.983	LS
5362	1013626.031	634501.322	1642.953	GUT1
5363	1013626.397	634502.739	1643.179	MB1
5364	1013626.512	634503.128	1642.614	TOEC1
5365	1013628.763	634514.261	1641.106	GS
5366	1013620.515	634526.177	1640.266	PB
5367	1013618.102	634522.146	1641.041	LP
5368	1013615.241	634509.932	1642.491	DIR
5372	1014197.131	634460.515	1639.326	HW ST
5373	1014194.883	634452.030	1641.597	HW
5374	1014194.663	634450.999	1641.560	HW
5375	1014194.594	634450.873	1642.247	HW
5376	1014194.446	634450.011	1642.232	HW
5377	1014237.309	634443.538	1642.422	HW
5378	1014237.441	634443.469	1641.760	HW
5379	1014259.017	634439.585	1639.600	HW
5380	1014259.123	634440.142	1639.600	HW
5381	1014238.549	634443.899	1641.766	HW
5382	1014237.569	634444.095	1641.735	HW
5383	1014237.453	634444.347	1642.414	HW
5384	1014195.171	634450.747	1642.218	HW
5385	1014195.211	634450.881	1641.570	HW
5386	1014195.491	634451.831	1641.580	HW
5387	1014197.664	634460.326	1639.354	HW CL
5388	1014197.331	634460.583	1638.304	GS
5389	1014196.835	634460.430	1639.013	GS
5390	1014194.124	634449.835	1641.903	GS
5391	1014229.799	634443.666	1641.786	GS
5392	1014237.301	634443.374	1641.730	EC ST
5393	1014233.756	634441.543	1641.743	SLAB
5394	1014237.425	634443.112	1641.063	GS
5395	1014258.667	634439.153	1638.970	GS
5396	1014259.505	634440.361	1638.518	GS
5397	1014258.990	634440.367	1638.316	EC ST
5398	1014255.666	634441.022	1637.488	GST
5399	1014250.690	634448.391	1637.674	GB
5400	1014252.009	634450.173	1638.304	SLAB
5401	1014226.711	634454.870	1638.321	SLAB
5402	1014226.686	634452.631	1637.511	GB
5403	1014197.411	634458.428	1637.711	GB
5404	1014197.953	634460.228	1638.314	SLAB
5405	1014198.919	634461.327	1638.527	GS
5406	1014224.128	634456.346	1638.077	GS

I17 3-8'X5' CULVERT
PRE PROJECT U/S
INVERTS

5407	1014238.044	634444.242	1635.965	CONC
5408	1014235.135	634443.167	1635.830	GB1 ST
5409	1014223.075	634445.611	1635.759	GB1
5410	1014221.267	634445.798	1635.761	GB1 ST
5411	1014209.060	634448.193	1635.716	GB1
5412	1014207.718	634448.425	1635.729	GB1 ST
5413	1014195.887	634450.711	1635.720	GB1
5452	1017632.653	634244.339	1677.369	RFC ST
5453	1017632.850	634243.566	1676.835	GUT ST
5454	1017633.573	634241.697	1676.764	SLAST
5455	1017637.725	634230.736	1676.253	LS ST
5456	1017641.955	634219.249	1675.656	LS ST
5457	1017646.251	634207.902	1675.138	LS ST
5458	1017650.328	634196.599	1674.605	SLAB1 ST
5459	1017650.989	634194.742	1674.575	GUT1 ST
5460	1017651.313	634194.063	1675.007	RFC1 ST
5461	1017625.463	634183.152	1674.687	RFC1
5462	1017625.088	634184.008	1674.208	GUT1
5463	1017624.365	634185.530	1674.264	SLAB1
5464	1017619.980	634196.621	1674.756	LS
5465	1017614.983	634207.773	1675.293	LS
5466	1017610.293	634219.201	1675.895	LS
5467	1017605.662	634230.012	1676.437	SLAB
5468	1017604.911	634231.826	1676.521	GUT
5469	1017604.535	634232.515	1677.077	RFC
5470	1017576.788	634219.333	1676.666	RFC
5471	1017577.174	634218.675	1676.206	GUT
5472	1017578.080	634216.912	1676.099	SLAB
5473	1017582.989	634206.491	1675.565	LS
5474	1017588.518	634195.321	1674.933	LS
5475	1017594.103	634184.322	1674.432	LS
5476	1017599.293	634173.759	1673.962	SLAB1
5477	1017600.152	634172.208	1673.886	GUT1
5478	1017600.406	634171.401	1674.335	RFC1
5479	1017587.970	634164.798	1674.257	RFC1
5480	1017587.518	634165.475	1673.680	GUT1
5481	1017586.715	634167.182	1673.846	SLAB1
5482	1017587.167	634165.415	1673.604	GUT1
5483	1017587.067	634165.080	1673.553	GUT1
5484	1017587.078	634165.107	1673.556	FL ST
5485	1017583.364	634163.208	1673.488	FL
5486	1017579.754	634161.226	1673.502	FL
5487	1017579.690	634161.186	1673.502	GUT1 ST
5488	1017579.032	634161.259	1673.575	GUT1
5489	1017576.034	634159.597	1673.682	GUT1
5490	1017575.192	634160.995	1673.760	SLAB1
5491	1017576.132	634158.827	1674.188	RFC1
5492	1017576.358	634158.727	1674.180	SW ST
5493	1017579.202	634153.498	1674.262	SW
5494	1017581.269	634153.502	1674.277	SW
5495	1017586.824	634156.430	1674.337	SW
5496	1017592.268	634159.261	1674.372	SW
5497	1017593.431	634160.841	1674.361	SW
5498	1017590.862	634166.093	1674.274	SW
5499	1017590.918	634158.307	1674.386	RFC99 ST
5500	1017590.459	634158.046	1673.279	SLAB99 ST
5501	1017591.318	634156.160	1672.883	SLAB99
5502	1017591.895	634156.548	1674.361	RFC99
5503	1017594.988	634151.894	1671.722	RFC99

5504	1017593.987	634151.660	1671.056	SLAB99
5505	1017602.500	634134.576	1666.095	SLAB99
5506	1017603.390	634134.969	1666.837	RFC99
5507	1017610.066	634121.454	1663.084	RFC99
5508	1017609.335	634120.945	1662.424	SLAB99
5509	1017614.734	634116.141	1662.347	SLAB99
5510	1017615.882	634116.537	1662.353	RFC99
5511	1017602.571	634110.412	1662.204	SLAB99
5512	1017601.681	634110.225	1662.186	RFC99 ST
5513	1017601.224	634117.072	1662.980	RFC99
5514	1017602.165	634117.641	1662.300	SLAB99
5515	1017594.417	634132.349	1666.554	SLAB99
5516	1017593.661	634132.041	1667.182	RFC99
5517	1017585.654	634147.813	1671.749	RFC99
5518	1017586.496	634148.245	1671.123	SLAB99
5519	1017584.296	634153.074	1673.053	SLAB99
5520	1017583.957	634152.626	1674.341	RFC99
5521	1017582.895	634154.211	1674.336	RFC99
5522	1017583.562	634154.391	1673.208	SLAB99
5523	1017587.103	634156.290	1673.206	SLAB99
5524	1017569.938	634172.178	1674.191	LS
5525	1017560.708	634155.287	1673.772	SLAB1
5526	1017561.523	634153.713	1673.738	SLAB1
5527	1017562.510	634152.311	1673.694	GUT1
5528	1017562.817	634151.578	1673.662	RFC1
5529	1017563.797	634182.050	1674.613	LS
5530	1017557.573	634192.586	1675.103	LS
5531	1017564.510	634209.706	1675.866	SLAB
5532	1017563.547	634211.342	1675.882	GUT
5533	1017563.243	634212.035	1676.444	RFC
5534	1017550.035	634204.754	1676.107	RFC
5535	1017550.483	634204.029	1675.604	GUT
5536	1017551.412	634202.502	1675.556	SLAB
5537	1017539.234	634192.690	1675.136	SLAB
5538	1017538.369	634194.308	1675.187	SLAB
5539	1017537.539	634195.962	1675.231	GUT
5540	1017537.119	634196.498	1675.251	RFC
5541	1017538.465	634193.905	1675.154	LS ST
5542	1017531.274	634190.178	1674.970	SLAB
5543	1017531.675	634189.798	1674.971	LS
5544	1017563.814	634231.091	1675.333	SLAST
5545	1017565.125	634230.581	1675.329	SLAB
5546	1017566.394	634231.785	1675.356	SLAB
5547	1017565.396	634233.533	1675.344	SLAB
5548	1017563.858	634233.166	1675.331	SLACL
5549	1017563.476	634232.976	1673.602	GST
5550	1017565.301	634233.881	1673.551	GB
5551	1017566.742	634232.046	1674.141	GB
5552	1017566.149	634230.531	1674.559	GB
5553	1017566.069	634230.489	1674.540	GB
5554	1017564.280	634230.473	1674.246	GB
5555	1017563.037	634231.609	1673.994	GCL
5556	1017565.481	634237.141	1673.348	PB
5557	1017564.317	634231.672	1675.339	SE1 ST
5558	1017585.110	634193.474	1674.907	SE1
5559	1017607.037	634149.389	1670.109	SE1
5560	1017606.420	634149.956	1670.129	SLAST
5561	1017607.367	634147.928	1670.132	SLAB
5562	1017609.184	634148.823	1670.142	SLAB

5563	1017608.076	634150.745	1670.137	SLACL
5564	1017606.971	634150.942	1670.124	GST
5565	1017608.505	634151.138	1670.141	GB
5566	1017609.687	634149.023	1669.807	GB
5567	1017608.470	634147.612	1669.667	GB
5568	1017607.168	634147.693	1669.732	GB
5569	1017606.019	634149.831	1670.123	GCL
5570	1017574.260	634160.596	1673.782	LS ST
5571	1017554.629	634150.481	1673.702	LS
5572	1017554.869	634150.132	1673.673	SLAB1
5573	1017549.726	634158.136	1673.900	CONC
5574	1017542.868	634169.593	1674.255	CONC
5575	1017536.419	634179.855	1674.642	CONC
5576	1017532.803	634164.121	1674.128	LS ST
5577	1017497.144	634143.712	1673.570	LS
5578	1017504.242	634131.476	1673.413	CONC
5579	1017497.916	634143.725	1673.570	CONC
5580	1017491.368	634153.899	1673.716	CONC
5581	1017486.312	634162.261	1673.845	SLAB
5582	1017487.508	634160.692	1673.821	LS
5583	1017507.489	634126.270	1673.350	LS
5584	1017508.141	634125.312	1673.347	SLAB1
5585	1017462.889	634101.117	1672.915	SLAB1
5586	1017462.133	634102.346	1672.915	LS
5587	1017459.998	634106.066	1672.879	CONC
5588	1017452.660	634117.972	1672.787	CONC
5589	1017453.524	634118.767	1672.813	LS
5590	1017447.070	634128.755	1672.722	CONC
5591	1017443.985	634133.233	1672.702	LS
5592	1017442.978	634135.320	1672.688	SLAB
5593	1017400.499	634108.936	1671.617	SLAB
5594	1017401.690	634107.352	1671.686	LS
5595	1017403.828	634103.864	1671.749	CONC
5596	1017409.831	634093.185	1672.046	CONC
5597	1017409.907	634093.259	1672.042	LS
5598	1017416.347	634080.984	1672.349	CONC
5599	1017417.409	634078.811	1672.414	LS
5600	1017418.294	634077.354	1672.396	SLAB1
5601	1017405.748	634054.950	1669.864	DPS
5602	1017373.945	634053.790	1671.825	SLAB1
5603	1017373.147	634055.278	1671.801	LS
5604	1017372.601	634056.017	1671.721	CONC
5605	1017365.408	634067.569	1671.140	CONC
5606	1017365.305	634067.584	1671.141	LS
5607	1017358.548	634078.325	1670.663	CONC
5608	1017359.406	634080.939	1670.643	LS
5609	1017358.473	634083.031	1670.538	SLAB
5610	1017315.111	634057.462	1669.614	SLAB
5611	1017316.395	634055.506	1669.724	LS
5612	1017316.773	634055.041	1669.735	CONC
5613	1017321.365	634043.692	1670.304	CONC
5614	1017321.287	634043.925	1670.300	LS
5615	1017327.755	634033.138	1670.975	CONC
5616	1017327.826	634032.728	1670.989	LS
5617	1017328.557	634031.238	1671.047	SLAB1
5618	1017282.182	634008.967	1670.281	SLAB1
5619	1017281.524	634010.299	1670.174	LS
5620	1017276.307	634021.592	1669.408	CONC
5621	1017279.019	634023.254	1669.482	LS

5622	1017271.096	634032.072	1668.803	LS
5623	1017270.319	634034.450	1668.687	SLAB
5624	1017224.945	634014.472	1667.849	SLAB
5625	1017226.157	634010.882	1667.994	LS
5626	1017230.013	634001.249	1668.566	CONC
5627	1017234.539	633989.537	1669.252	LS
5628	1017235.051	633988.304	1669.343	SLAB1
5629	1017187.503	633969.738	1668.468	SLAB1
5630	1017186.846	633971.356	1668.407	LS
5631	1017182.296	633982.644	1667.674	CONC
5632	1017180.232	633989.578	1667.307	LS
5633	1017178.154	633996.346	1666.950	SLAB
5634	1017130.118	633980.318	1666.095	SLAB
5635	1017133.440	633968.989	1666.673	LS
5636	1017134.091	633966.975	1666.794	CONC
5637	1017137.990	633955.305	1667.495	LS
5638	1017138.555	633953.563	1667.580	SLAB1
5639	1017120.087	633947.979	1667.265	SLAB1
5640	1017119.808	633948.257	1667.262	EP ST
5641	1017119.768	633948.261	1667.262	EP1 ST
5642	1017119.317	633949.951	1667.188	LS
5643	1017116.358	633958.277	1666.652	EP
5644	1017112.410	633968.389	1666.065	EP
5645	1017111.975	633974.606	1665.666	SLAB
5646	1017113.745	633969.067	1665.996	SLAB
5647	1017115.568	633961.510	1666.460	CONC
5648	1017062.279	633955.191	1665.162	SLAB
5649	1017062.281	633955.032	1665.272	EP
5650	1017114.727	633962.487	1666.397	LS
5651	1017064.293	633948.485	1665.659	LS
5652	1017065.372	633943.217	1665.939	ASP
5653	1017067.041	633936.190	1666.351	LS
5654	1017067.267	633934.136	1666.435	EP1
5655	1017067.291	633933.917	1666.382	SLAB1
5656	1017016.087	633922.610	1665.605	SLAB1
5657	1017016.066	633922.761	1665.642	EP1
5658	1017015.514	633924.738	1665.566	LS
5659	1017014.239	633931.203	1665.182	ASP
5660	1017013.071	633936.753	1664.892	LS
5661	1017011.426	633943.850	1664.507	EP
5662	1017010.547	633944.048	1664.361	SLAB
5663	1017010.541	633943.950	1664.361	SLAB
5664	1016960.156	633935.300	1663.677	SLAB
5665	1016960.209	633935.118	1663.789	EP
5666	1016961.111	633927.757	1664.190	LS
5667	1016961.417	633922.671	1664.460	ASP
5668	1016962.773	633915.610	1664.860	LS
5669	1016963.403	633913.700	1664.930	EP1
5670	1016963.308	633913.587	1664.872	SLAB1
5671	1016912.272	633907.090	1664.281	SLAB1
5672	1016912.207	633907.224	1664.350	EP1
5673	1016911.970	633909.083	1664.281	LS
5674	1016911.260	633915.319	1663.932	ASP
5675	1016909.826	633921.295	1663.603	LS
5676	1016909.239	633928.632	1663.212	EP
5677	1016909.205	633928.814	1663.084	SLAB
5678	1016858.531	633924.730	1662.553	SLAB
5679	1016858.562	633924.587	1662.686	EP
5680	1016858.743	633917.411	1663.084	LS

5681	1016858.536	633911.956	1663.362	ASP
5682	1016859.427	633904.949	1663.770	LS
5683	1016859.556	633903.030	1663.835	EP1
5684	1016859.524	633902.866	1663.772	SLAB1
5685	1016806.981	633901.051	1663.363	SLAB1
5686	1016807.032	633901.106	1663.427	EP1
5687	1016806.799	633903.280	1663.329	LS
5688	1016806.468	633909.173	1662.976	ASP
5689	1016805.881	633915.702	1662.662	LS
5690	1016805.837	633922.806	1662.249	EP
5691	1016805.776	633922.981	1662.155	SLAB
5692	1016757.534	633923.179	1661.959	SLAB
5693	1016757.507	633923.020	1662.034	EP
5694	1016757.172	633915.904	1662.370	LS
5695	1016756.904	633910.868	1662.592	ASP
5696	1016756.354	633903.557	1662.928	LS
5697	1016756.135	633900.429	1663.085	EP1
5698	1016756.322	633900.281	1662.998	SLAB1
5702	1013393.694	633981.796	1637.131	HW ST
5703	1013394.311	633981.560	1637.147	HW
5704	1013399.676	633995.024	1637.208	HW
5705	1013429.593	634011.739	1637.612	GR ST
5706	1013429.867	634011.508	1637.614	HW
5707	1013447.599	634021.115	1637.573	HW
5708	1013447.524	634021.227	1637.574	HW
5709	1013447.435	634021.375	1638.326	HW
5710	1013447.444	634021.698	1638.344	HW
5711	1013447.417	634021.868	1638.962	HW
5712	1013447.568	634022.620	1638.914	HW
5713	1013447.011	634021.209	1637.597	GR
5714	1013447.209	634022.179	1638.931	GR
5715	1013422.994	634027.011	1638.955	HW
5716	1013406.492	634029.991	1638.997	HW
5717	1013406.344	634030.034	1638.361	HW
5718	1013406.617	634029.473	1639.002	GR
5719	1013384.024	634024.410	1636.329	GR
5720	1013383.737	634024.536	1636.306	HW
5721	1013383.651	634024.665	1636.302	HW
5722	1013370.446	634027.048	1636.241	HW
5723	1013370.262	634026.383	1636.239	HW
5724	1013370.493	634026.617	1636.273	GR
5725	1013383.861	634023.922	1636.319	HW
5726	1013404.795	634029.124	1638.353	HW
5727	1013406.203	634029.421	1638.380	HW
5728	1013406.352	634029.114	1639.024	HW
5729	1013423.625	634026.034	1638.951	HW
5730	1013446.922	634021.973	1638.940	HW
5731	1013446.873	634021.804	1638.342	HW
5732	1013446.793	634021.586	1638.324	HW
5733	1013446.770	634021.466	1637.574	HW
5734	1013429.399	634012.034	1637.577	HW
5735	1013399.131	633995.504	1637.223	HW CL
5736	1013393.460	633981.674	1632.149	CONC
5737	1013398.931	633995.684	1632.232	CONC
5738	1013421.858	634008.253	1632.532	CONC
5739	1013446.514	634021.754	1632.483	CONC
5740	1013434.134	634023.933	1632.517	CONC
5741	1013432.485	634024.224	1632.538	CONC
5742	1013420.499	634026.345	1632.486	CONC

I17 3-8'X5' CULVERT
PRE PROJECT D/S
INVERTS

5743	1013418.663	634026.689	1632.511	CONC
5744	1013406.339	634028.862	1632.536	CONC
5745	1013383.737	634023.660	1632.527	CONC
5746	1013370.157	634026.172	1632.478	CONC
5747	1013369.824	634024.695	1632.464	GST
5748	1013383.116	634022.278	1632.544	GB
5749	1013387.928	634018.270	1632.399	GB
5750	1013393.132	634008.647	1632.184	GB
5751	1013397.834	633999.491	1632.222	GB
5752	1013398.123	633997.124	1632.248	GB
5753	1013392.783	633982.109	1632.164	GB
5754	1013394.524	633981.454	1632.156	CONC
5755	1013400.129	633994.851	1633.003	GS
5756	1013428.052	634010.235	1634.538	GS
5757	1013447.164	634020.502	1637.294	GS
5758	1013448.018	634022.898	1638.518	GS
5759	1013406.169	634030.511	1638.536	GS
5760	1013383.677	634025.232	1635.819	GS
5761	1013370.582	634027.608	1634.907	GS
5762	1013408.543	634018.736	1632.536	CONC
5763	1013367.195	634014.713	1627.013	GB1 ST
5764	1013370.442	634015.135	1627.151	GB1
5765	1013377.591	634002.525	1626.973	GB1
5766	1013383.801	633988.978	1627.263	GB1
5767	1013380.673	633987.274	1627.142	GB1
10025	1013127.891	634734.535	1637.123	MH
10026	1013128.947	634739.603	1636.334	SSP
10027	1013128.683	634741.024	1636.658	SSP
10028	1013196.987	634725.835	1638.440	MH
10029	1013413.643	634673.835	1638.605	SLAB ST
10030	1013414.000	634673.227	1638.624	SLAB
10031	1013413.590	634671.321	1638.697	SLAB
10032	1013412.967	634670.986	1638.702	SLAB
10033	1013408.804	634672.014	1638.694	SLAB
10034	1013408.451	634672.618	1638.680	SLAB
10035	1013408.931	634674.430	1638.631	SLAB
10036	1013409.464	634674.805	1638.615	SLAB CL
10037	1013542.454	634646.374	1640.470	MH
10038	1013550.317	634644.436	1640.407	MH
10039	1013561.264	634624.438	1639.697	SSP
10040	1013667.606	634603.077	1640.285	SSP
10041	1013968.627	634535.980	1639.718	MH
10042	1014069.243	634500.273	1640.289	MH
10043	1014069.497	634503.903	1640.093	SSP
10044	1014068.811	634506.987	1640.064	SSP
10045	1014384.663	634436.629	1643.216	SLAB ST
10046	1014384.959	634436.057	1643.229	SLAB
10047	1014384.343	634434.201	1643.264	SLAB
10048	1014383.700	634433.838	1643.256	SLAB
10049	1014379.680	634435.148	1643.245	SLAB
10050	1014379.351	634435.747	1643.231	SLAB
10051	1014379.974	634437.605	1643.190	SLAB
10052	1014380.534	634437.880	1643.191	SLAB CL
10053	1014433.331	634417.694	1643.908	SSP
10054	1014580.993	634390.463	1644.832	SSP
10055	1014654.977	634388.438	1646.447	MH
10056	1014662.889	634387.405	1646.360	MH
10057	1014841.482	634345.978	1647.991	SSP
10058	1015249.102	634278.406	1649.075	SSP

10059	1015250.644	634277.399	1649.145	SSP
10060	1015249.608	634271.016	1649.732	MH
10061	1015322.950	634233.926	1649.801	SSP
10062	1015059.460	634286.188	1649.382	SLAB ST
10063	1015056.479	634286.737	1649.388	SLAB
10064	1015055.959	634283.726	1649.371	SLAB
10065	1015058.885	634283.182	1649.427	SLAB CL
10066	1015059.238	634282.722	1649.349	SLAB ST
10067	1015059.895	634286.524	1649.367	SLAB
10068	1015056.218	634287.162	1649.421	SLAB
10069	1015055.529	634283.517	1649.335	SLAB CL
10070	1014718.535	634346.007	1646.635	FOPB
10072	1014538.808	634376.317	1644.867	SLAB ST
10073	1014539.377	634379.265	1644.864	SLAB
10074	1014536.341	634379.819	1644.857	SLAB
10075	1014535.743	634376.826	1644.938	SLAB CL
10076	1014535.273	634376.654	1644.786	SLAB ST
10077	1014539.088	634375.834	1644.850	SLAB
10078	1014539.791	634379.540	1644.834	SLAB
10079	1014536.094	634380.328	1644.840	SLAB CL
10080	1014040.229	634490.972	1640.656	SLAB ST
10081	1014037.190	634491.595	1640.613	SLAB
10082	1014038.006	634494.481	1640.671	SLAB
10083	1014041.043	634493.952	1640.606	SLAB CL
10084	1014041.481	634494.222	1640.614	SLAB ST
10085	1014040.562	634490.420	1640.613	SLAB
10086	1014036.776	634491.308	1640.590	SLAB
10087	1014037.719	634494.994	1640.683	SLAB CL
10088	1013778.788	634555.226	1641.076	FMSPB
10089	1013338.238	634645.031	1637.854	INV
10090	1013338.290	634645.012	1639.533	TP
10091	1013304.454	634671.465	1638.153	FMSPB
10092	1012820.866	635058.175	1645.449	X
60000	1012778.434	637055.0267	1633.8285	NG
60001	1012759.707	637054.9815	1632.1179	NG
60002	1012757.968	637093.2005	1632.6413	FNC-BW B
60003	1012758.079	637093.0709	1632.6286	NG
60004	1012775.673	637091.0834	1634.2034	NG
60005	1012776.771	637092.6988	1634.4944	TSPB
60006	1012778.668	637042.4983	1633.6292	NG
60007	1012769.023	637041.3789	1632.6917	NG
60008	1012759.843	637040.1543	1632.0692	NG
60009	1012709.965	637034.4545	1631.7053	NG
60010	1012709.273	637054.7048	1631.4576	NG
60011	1012758.29	637055.0801	1632.1175	FNC-BW
60012	1012708.946	637054.8412	1631.471	FNC-BW
60013	1012659.686	637055.2283	1630.9206	FNC-BW
60014	1012659.489	637055.1478	1630.9454	NG
60015	1012659.337	637044.3199	1630.9417	NG
60016	1012609.744	637041.7662	1630.4228	NG
60017	1012610.034	637055.0292	1630.4361	NG
60018	1012610.041	637055.0229	1630.4262	FNC-BW
60019	1012609.678	637042.7737	1630.411	NG
60020	1012609.123	636993.874	1630.1167	NG
60021	1012609.126	636993.8321	1630.1229	FNC-BW
60022	1012661.315	636989.6587	1630.785	NG
60023	1012715.083	636986.4309	1631.7061	NG
60024	1012762.447	636980.9342	1632.3095	NG

60025	1012776.737	636967.1712	1631.7128	TOB B
60026	1012758.571	636953.8149	1632.1352	TOB
60027	1012757.913	636919.5221	1631.8452	TOB
60030	1012777.457	636992.6728	1632.9985	SIGNS
60031	1012777.751	636943.3161	1630.6659	NG
60032	1012758.392	636942.0608	1632.0078	NG
60033	1012705.971	636941.2431	1631.2549	NG
60034	1012652.543	636934.864	1630.1327	NG
60035	1012608.766	636933.6017	1628.8669	NG
60036	1012608.154	636884.8345	1626.4222	NG
60037	1012608.226	636884.8306	1626.4322	FNC-BW
60038	1012627.63	636884.6991	1628.3516	NG
60039	1012662.813	636888.538	1629.2762	NG
60040	1012717.528	636885.928	1630.8942	NG
60041	1012757.503	636884.9916	1631.1397	TOB
60042	1012756.432	636832.5718	1630.2359	TOB
60043	1012703.679	636826.7212	1629.0429	NG
60044	1012645.077	636823.3908	1626.8828	NG
60045	1012641.919	636822.1351	1625.9191	NG
60046	1012607.413	636833.3561	1625.7873	NG
60047	1012607.416	636833.3919	1625.7697	FNC-BW
60048	1012606.835	636783.7312	1624.202	NG
60049	1012647.19	636781.1786	1624.3124	NG
60050	1012651.137	636781.2705	1625.211	NG
60051	1012702.52	636776.0561	1627.1029	NG
60052	1012755.353	636777.1849	1628.9895	TOB
60053	1012753.69	636730.6219	1627.7299	TOB
60054	1012744.733	636725.6808	1627.4864	TOB
60055	1012694.864	636718.9291	1625.5281	TOB
60056	1012647.077	636709.2529	1622.9056	TOB
60057	1012645.797	636728.1679	1623.3199	NG
60058	1012606.385	636733.6145	1622.0475	NG
60059	1012606.44	636733.3979	1622.0449	FNC-BW
60060	1012617.966	636697.7073	1622.2361	TOB
60061	1012605.971	636693.6085	1621.1507	TOB
60062	1012606.024	636693.6666	1621.1523	FNC-BW
60063	1012605.457	636685.9496	1619.1168	TOE B
60064	1012605.264	636680.0319	1618.7548	TOE1 B
60065	1012649.044	636681.5992	1619.2581	TOE1
60066	1012649.916	636686.8786	1619.3118	TOE
60067	1012693.032	636691.8775	1619.4856	TOE
60068	1012695.468	636682.9019	1619.6806	TOE1
60069	1012748.978	636686.3811	1619.5927	TOE1
60070	1012759.129	636688.7236	1619.6319	TOE1
60071	1012758.524	636697.2922	1619.7804	TOE1
60072	1012748.557	636698.1832	1619.5502	TOE1 TOE
60073	1012757.359	636711.4818	1623.9307	TOB B TOE B
60074	1012768.986	636702.9612	1624.4517	TOB
60075	1012768.8	636689.197	1624.1099	TOB
60076	1012756.629	636675.2156	1623.8846	TOB
60077	1012759.964	636688.2964	1623.2245	HDWL B
60078	1012759.868	636687.5906	1620.9692	NG
60079	1012761.027	636687.7425	1621.9211	NG
60080	1012765.625	636690.9041	1623.0853	NG
60081	1012764.763	636691.263	1623.2193	HDWL
60082	1012764.777	636695.8297	1623.2232	HDWL
60083	1012765.867	636696.0888	1623.1864	NG
60084	1012759.526	636698.907	1620.6628	NG
60085	1012759.75	636697.96	1623.1965	HDWL

60086	1012764.187	636695.1578	1619.1698	CS
60087	1012764.154	636691.6899	1619.2293	CS
60089	1012763.625	636693.5094	1619.5878	INV-24IN RCP
60090	1012767.061	636719.5762	1624.8979	TOE
60091	1012765.894	636745.4967	1625.4788	TOE
60093	1012767.538	636778.3691	1626.4189	TOE
60094	1012767.519	636831.0843	1627.8949	TOE
60095	1012768.51	636885.873	1629.0562	TOE
60096	1012768.471	636918.2343	1630.2259	TOE
60097	1012768.252	636944.1833	1631.2233	TOE
60098	1012776.708	636964.1417	1631.2607	TOE
60099	1012779.436	637092.6212	1634.5444	BOC B
60100	1012780.05	637092.6585	1634.0141	EP B
60101	1012782.068	637092.4141	1633.9759	FND-TAG
60102	1012799.703	637092.8493	1633.6045	AS
60103	1012804.221	637090.4783	1633.4432	WV
60104	1012805.734	637102.9123	1633.5502	WV
60105	1012778.975	637042.8124	1633.8873	BOC
60106	1012779.446	637042.8371	1633.44	EP
60107	1012779.13	636992.726	1632.2818	EP
60108	1012778.682	636992.7026	1632.7507	BOC
60109	1012798.346	636992.7269	1631.8304	AS
60110	1012799.158	637044.4024	1632.9437	AS
60111	1012798.41	636943.7522	1630.4774	AS
60112	1012778.944	636970.0721	1631.692	EP
60113	1012778.349	636970.0871	1632.2089	BOC
60114	1012778.385	636965.0789	1631.4616	BOC EC B
60115	1012777.98	636965.158	1631.4497	EC
60116	1012775.918	636968.9223	1632.16	TSPB
60117	1012778.021	636943.3634	1630.7462	EC
60118	1012778.798	636943.3372	1630.7997	EP
60119	1012778.814	636918.2353	1630.1574	EP
60120	1012777.757	636918.2388	1630.1108	EC
60121	1012798.192	636917.988	1629.7141	EP
60122	1012817.764	636917.7919	1629.3407	EP
60123	1012818.012	636944.3129	1630.0546	EP
60124	1012818.076	636960.5464	1630.5104	EP
60125	1012817.648	636965.5486	1630.724	EP
60126	1012819.145	636965.5468	1630.7462	BOC EC1 B
60127	1012818.598	636965.5177	1630.7064	GUT B
60128	1012819.175	636970.8686	1631.3009	BOC PC
60129	1012818.574	636970.8292	1630.8537	GUT PC
60130	1012817.237	636970.6516	1630.9303	EP PC
60131	1012817.577	636974.7856	1630.9677	EP
60132	1012818.007	636978.8884	1631.1137	EP PT
60133	1012819.387	636978.4684	1631.0893	GUT
60134	1012820.151	636978.5416	1631.4387	BOC ESW B HCR B
60135	1012821.069	636978.2574	1631.4774	ESW PC
60136	1012821.775	636984.2077	1631.2888	BOC
60137	1012821.207	636984.4471	1631.2125	GUT
60138	1012823.795	636989.0024	1631.2923	GUT
60139	1012824.32	636988.6422	1631.3967	BOC
60140	1012827.132	636981.1727	1631.6438	HCR
60141	1012829.471	636985.7814	1631.7854	HCR
60142	1012828.028	636993.6014	1631.8141	HCR BOC
60143	1012827.688	636993.871	1631.3578	GUT
60144	1012830.627	636996.9574	1631.4456	GUT
60145	1012831.16	636996.6214	1631.8981	BOC HCR B
60146	1012838.525	636994.7159	1632.0574	HCR

60147	1012835.863	637000.0803	1631.6303	BOC
60148	1012835.729	637000.6392	1631.5939	GUT
60149	1012840.152	637002.7635	1631.7289	GUT
60150	1012840.521	637002.259	1631.7297	BOC
60151	1012843.029	636997.0721	1632.1228	HCR
60152	1012846.165	637004.1508	1632.2308	HCR BOC
60153	1012846.072	637004.9518	1631.7473	GUT
60154	1012854.165	637005.5495	1631.7955	GUT PT
60155	1012854.075	637004.9097	1632.3083	BOC PT
60156	1012873.844	637004.5172	1632.4925	BOC
60157	1012873.741	637005.1261	1632.0317	GUT
60158	1012873.829	637006.5599	1632.0278	EC99 B
60159	1012872.928	637010.9198	1632.1486	SCO
60160	1012854.055	637006.8964	1631.8506	EC99
60161	1012826.973	637007.1531	1631.6837	EC99
60162	1012821.05	637007.2187	1631.6647	EP
60163	1012826.302	637053.9191	1632.6253	EP
60164	1012832.443	637053.9454	1632.5412	EC99
60165	1012849.693	637053.9177	1633.0372	EC99
60166	1012874.684	637053.6838	1633.39	EC99
60167	1012874.568	637054.9763	1633.3632	EC99 GUT B
60168	1012874.599	637055.564	1633.8732	BOC B
60169	1012866.166	637041.4167	1632.9869	WV
60170	1012866.649	637055.0479	1633.4095	GUT PC
60171	1012866.638	637055.6503	1633.8819	BOC PC
60172	1012825.032	636976.4772	1631.4944	ESW
60173	1012827.175	636970.8887	1631.4193	ESW PT
60174	1012832.17	636970.7231	1631.4728	ESW PC
60175	1012832.953	636977.9371	1631.753	ESW
60176	1012834.344	636983.2604	1631.9094	ESW
60177	1012839.399	636988.8633	1632.1256	ESW
60178	1012845.679	636991.1893	1632.3067	ESW
60179	1012849.614	636991.6031	1632.4232	ESW
60180	1012853.883	636991.8533	1632.5708	ESW PT
60181	1012853.891	636996.7706	1632.5016	ESW PC
60182	1012848.485	636998.7139	1632.4123	ESW
60183	1012846.653	637001.8438	1632.343	ESW PT
60184	1012846.095	637003.9369	1632.3299	ESW
60185	1012837.732	636979.161	1631.9355	TSPB
60186	1012836.19	636971.6088	1631.5057	ELPB
60187	1012834.083	636972.1776	1631.1378	LPS
60188	1012858.764	637055.9745	1633.378	GUT
60189	1012858.783	637056.7416	1633.8278	BOC ESW B HCR B
60190	1012859.022	637057.9268	1633.8715	ESW PC
60192	1012859.929	637061.2159	1633.9486	ESW
60193	1012862.682	637063.5586	1633.9779	ESW
60194	1012867.047	637063.6274	1634.0476	ESW PT
60195	1012867.481	637068.5921	1634.1323	ESW
60196	1012855.724	637063.8788	1633.8277	HCR
60197	1012851.054	637066.2527	1633.7064	HCR
60198	1012852.686	637058.596	1633.2837	BOC
60199	1012852.442	637058.0569	1633.2639	GUT
60200	1012848.326	637060.1179	1633.1985	GUT
60201	1012848.624	637060.8397	1633.2074	BOC
60202	1012843.503	637064.4445	1633.58	BOC HCR
60203	1012843.151	637063.9906	1633.1889	GUT
60204	1012839.579	637067.3227	1633.1168	GUT
60205	1012840.018	637067.8431	1633.5732	BOC HCR B
60206	1012841.941	637075.5515	1633.6793	HCR

60207	1012836.594	637072.7675	1633.1887	BOC
60208	1012836.176	637072.5498	1633.178	GUT
60209	1012833.815	637076.9319	1633.2085	GUT
60210	1012834.203	637077.3398	1633.1786	BOC
60211	1012839.623	637080.1146	1633.5908	HCR
60212	1012832.588	637083.091	1633.5989	HCR BOC
60213	1012832.064	637083.1076	1633.1562	GUT
60214	1012831.6	637090.5488	1633.2068	GUT PT
60215	1012837.173	637090.1458	1633.7446	ESW
60216	1012832.174	637090.4585	1633.5366	ESW BOC PT
60217	1012838.625	637103.2426	1633.4173	FH
60218	1012830.749	637085.7284	1633.2482	FL B
60219	1012829.522	637055.3733	1632.5864	FL FL1 B
60220	1012848.381	637055.0037	1633.0298	FL1
60221	1012866.451	637054.6432	1633.5008	FL1
60222	1012866.972	637091.279	1634.358	FNC-BW1 B
60223	1012866.953	637088.9476	1634.2657	FNC-BW1
60224	1012866.967	637088.8471	1634.2652	NG
60225	1012896.48	637087.4045	1634.5865	NG
60226	1012896.441	637087.5275	1634.5409	FNC-BW1
60227	1012893.653	637072.8262	1634.0611	RRAP B RRAP1 B
60228	1012879.542	637072.7476	1633.7855	RRAP
60229	1012878.139	637053.4845	1633.1094	SIGN B
60230	1012876.68	637007.2148	1631.953	SIGN B
60231	1012845.886	637005.4011	1631.8208	FL1 B
60232	1012823.898	637005.5734	1631.6497	FL1 FL
60233	1012818.872	636978.8097	1631.0739	FL
60234	1012885.541	637068.2433	1632.5096	FL B
60235	1012880.653	637027.904	1632.4932	RRAP
60236	1012885.545	637028.4693	1631.6602	FL
60237	1012894.366	637027.5368	1633.2675	RRAP
60238	1012896.009	637027.5616	1633.343	NG
60239	1012896.031	637027.5609	1633.3254	FNC-BW1
60240	1012893.634	636986.6881	1633.4331	RRAP1
60241	1012895.835	636986.7039	1633.3307	NG
60242	1012895.672	636966.0636	1633.4556	NG
60243	1012895.748	636966.0669	1633.4596	FNC-BW1
60244	1012884.027	636975.3488	1633.4579	RRAP1
60245	1012868.889	636965.2837	1633.3759	RRAP1
60246	1012869.412	636964.8896	1633.2876	FNC-BW1
60247	1012869.371	636964.864	1633.3036	NG
60248	1012857.142	636952.1458	1632.8283	RRAP1 TOB1 B
60249	1012869.161	636948.4856	1633.5277	NG
60250	1012869.165	636948.4981	1633.4973	FNC-BW
60251	1012869.397	636898.4674	1633.3772	FNC-BW
60252	1012869.331	636898.5205	1633.3683	NG
60253	1012860.168	636897.6844	1633.417	TOB1
60254	1012863.021	636845.1376	1632.7955	TOB1
60255	1012869.525	636845.5942	1632.7565	NG
60256	1012869.514	636845.5961	1632.751	FNC-BW1
60257	1012870.39	636791.5215	1633.8293	FNC-BW1
60258	1012870.222	636791.562	1633.6932	NG
60259	1012868.373	636791.2089	1633.4699	TOB1
60260	1012869.362	636752.6193	1633.324	TOB1
60261	1012871.201	636746.08	1632.9373	TOB1
60262	1012878.046	636745.5759	1633.367	TOB1
60263	1012907.261	636743.8841	1633.9768	TOB1
60264	1012954.232	636752.0048	1633.3566	TOB1
60265	1012912.698	636786.9066	1634.1673	NG

60266	1012912.666	636786.8869	1634.1527	FNC-BW1
60267	1012951.675	636783.2931	1634.0948	FNC-BW1
60268	1012951.679	636783.2966	1634.0974	NG
60269	1012954.029	636752.0195	1633.2917	NG
60270	1012912.92	636767.8837	1634.1517	NG
60271	1012884.386	636992.1393	1631.3699	FL
60272	1012877.976	637002.5382	1631.7595	RRAP
60273	1012875.587	636999.0724	1632.921	RRAP
60274	1012860.489	636982.6233	1632.3738	RRAP
60275	1012864.733	636977.5321	1631.4396	FL
60276	1012853.778	636964.3326	1630.6603	FL
60277	1012847.93	636968.9522	1631.6367	RRAP
60278	1012819.613	636941.2693	1629.8047	RRAP
60279	1012833.258	636941.712	1628.8673	FL
60280	1012842.691	636934.3397	1629.9286	RRAP1
60281	1012841.032	636893.7297	1628.1784	RRAP1
60282	1012831.638	636892.5131	1626.2441	FL
60283	1012828.128	636840.8737	1625.176	FL
60284	1012838.791	636840.9032	1626.6218	RRAP1
60285	1012842.576	636794.8886	1626.0851	MHCOMM
60286	1012839.981	636772.573	1625.4589	MHEL
60287	1012853.773	636774.3915	1628.1279	STUBOUT-4
60288	1012838.895	636839.4251	1626.7716	TOE1 B
60289	1012840.24	636801.4405	1626.0811	TOE1
60290	1012845.333	636797.0776	1626.2415	TOE1
60291	1012845.745	636792.6933	1626.2856	TOE1
60292	1012843.212	636781.9549	1626.0765	TOE1
60293	1012843.524	636770.7377	1625.736	TOE1
60294	1012846.003	636758.0331	1625.1295	TOE1
60295	1012852.72	636739.0305	1624.4901	TOE1
60296	1012859.143	636730.2683	1623.8341	TOE1
60297	1012867.232	636727.7689	1623.8268	TOE1
60298	1012910.444	636723.7513	1623.3419	TOE1
60299	1012934.936	636726.0142	1622.9765	TOE1
60300	1012956.274	636730.7988	1622.9167	TOE1 FNC-BW1
60301	1012956.296	636723.378	1622.8878	TOE1
60302	1012956.337	636717.2736	1624.8192	TOB1 B
60303	1012933.217	636716.7445	1623.2399	TOE1
60304	1012934.032	636712.4748	1624.6664	TOB1
60305	1012913.841	636707.8601	1625.1572	TOB1
60306	1012911.58	636714.9191	1622.6178	TOE1
60307	1012904.164	636708.3384	1622.6588	TOE1
60308	1012905.859	636703.117	1622.463	TOE1
60309	1012917.419	636699.8362	1622.3382	TOE1
60310	1012937.911	636701.0284	1622.9732	TOE1
60311	1012937.684	636703.4234	1624.4561	TOB1
60312	1012958.165	636704.6371	1624.3089	TOB1 FNC-BW1
60313	1012957.996	636699.4761	1621.8455	TOE1
60314	1012958.91	636687.0922	1622.5079	TOE1
60315	1012947.325	636691.0429	1622.2398	TOE1
60316	1012915.158	636693.1998	1622.9048	TOE1
60317	1012893.059	636697.4357	1622.712	TOE1
60318	1012893.901	636690.969	1623.7617	NG
60319	1012910.656	636689.8397	1623.6633	NG
60320	1012880.659	636689.822	1623.6845	NG
60321	1012882.146	636697.2201	1622.1493	TOE1
60322	1012861.448	636691.963	1620.5925	TOE1
60323	1012847.485	636686.6729	1619.8239	TOE1
60324	1012848.191	636698.1961	1619.9842	TOE1 B

60325	1012868.182	636700.8632	1620.6464	TOE1
60326	1012877.212	636702.2604	1620.7218	TOE1
60327	1012883.337	636703.4874	1622.188	TOE1
60328	1012896.578	636706.4854	1622.556	TOE1
60329	1012902.156	636714.362	1622.731	TOE1 TOB1 B
60330	1012909.228	636720.892	1623.2234	NG
60331	1012891.848	636709.3088	1623.6273	TOB1
60332	1012879.235	636706.5941	1623.4773	TOB1
60333	1012860.851	636704.5134	1623.5321	TOB1
60334	1012848.717	636705.3311	1622.9022	TOB1
60335	1012824.732	636919.6036	1628.668	BOL
60336	1012824.634	636944.9208	1630.1079	POST
60337	1012799.219	636945.5104	1630.5307	GATED
60338	1012772.217	636945.0156	1630.955	POST
60339	1012771.787	636920.0134	1630.3066	BOL
60340	1012819.08	636960.5082	1630.5397	EC1
60341	1012818.945	636944.3998	1630.0744	EC1
60342	1012818.674	636894.7952	1628.5227	EC1
60343	1012798.15	636894.418	1629.0415	CS
60344	1012777.58	636892.2	1629.3271	EC
60345	1012777.298	636840.2283	1627.8951	EC
60346	1012797.602	636840.1103	1627.4576	CS
60347	1012818.228	636840.7044	1627.0545	EC1 EC99 B
60348	1012828.106	636840.4217	1625.6419	EC99 FL B
60349	1012838.229	636840.5152	1626.9752	EC99
60350	1012837.934	636791.9537	1625.7732	EC99
60351	1012828.152	636792.1007	1624.2418	FL
60352	1012817.87	636792.3789	1625.6922	EC1
60353	1012797.456	636793.2759	1626.1879	CS
60354	1012776.916	636794.6964	1626.649	EC
60355	1012837.481	636757.5858	1624.7577	EC99 RRAP B
60356	1012827.654	636757.6885	1623.3497	EC99 FL
60357	1012817.72	636757.5345	1624.9838	EC99 EC1
60358	1012817.517	636746.0243	1624.6592	EC1
60359	1012797.068	636746.2043	1625.1201	CS
60360	1012776.676	636746.9767	1625.4535	EC
60361	1012776.108	636696.6998	1624.7113	EC
60362	1012796.601	636696.154	1624.3909	CS
60363	1012817.146	636695.6551	1623.9823	EC1
60364	1012828.075	636745.481	1622.0924	FL
60365	1012839.051	636746.862	1623.7358	RRAP
60366	1012840.988	636718.7173	1622.9595	RRAP
60367	1012847.252	636705.2149	1622.9133	RRAP
60368	1012847.423	636696.8462	1620.2569	RRAP
60369	1012847.56	636686.9698	1620.121	RRAP
60370	1012845.721	636676.2588	1622.8477	RRAP
60371	1012831.119	636710.2419	1621.0309	FL
60372	1012836.667	636701.0624	1620.2303	FL
60373	1012839.6	636692.0958	1619.7392	FL
60374	1012836.916	636684.8975	1620.1403	FL
60375	1012830.912	636668.2204	1620.2758	FL
60376	1012833.446	636687.4403	1620.2011	BKL B
60377	1012833.979	636688.488	1619.577	BKL
60378	1012829.382	636690.7705	1619.5483	BKL
60379	1012829.315	636694.3384	1619.5908	BKL
60380	1012833.864	636697.1371	1619.2421	BKL
60381	1012833.266	636698.0404	1619.6936	BKL
60382	1012828.169	636695.1475	1620.9511	BKL
60383	1012827.864	636692.6422	1622.2457	BKL

60384	1012827.958	636690.0541	1621.9683	BKL CL
60385	1012833.116	636688.0354	1623.6251	HDWL B
60386	1012828.612	636690.5678	1623.598	HDWL
60387	1012828.483	636694.4841	1623.5701	HDWL
60388	1012833.243	636697.5877	1623.6046	HDWL
60389	1012812.241	637011.5885	1632.0493	MHSS
60390	1012624.73	636653.8302	1623.4507	NG
60391	1012602.563	636665.7805	1620.8984	NG
60392	1012598.368	636639.145	1621.842	NG
60393	1012598.391	636639.1345	1621.811	FNC-BW
60394	1012618.638	636631.4131	1623.2676	NG
60395	1012611.195	636599.2489	1623.0476	NG
60396	1012611.196	636599.2322	1623.0454	FNC-BW
60397	1012634.914	636651.8313	1623.8064	TOB B
60398	1012651.971	636655.9947	1624.1919	TOB
60399	1012693.714	636657.8517	1626.3403	TOB
60400	1012747.659	636659.299	1627.8612	TOB
60401	1012753.903	636655.178	1627.9198	TOB
60402	1012752.396	636644.9644	1628.029	TOB
60403	1012750.551	636594.3443	1627.8161	TOB
60404	1012698.388	636593.7159	1627.1746	NG
60405	1012649.026	636597.7877	1625.4134	NG
60406	1012610.367	636547.9281	1624.3933	NG
60407	1012610.254	636547.6668	1624.3681	FNC-BW
60408	1012653.035	636549.5812	1626.0276	NG
60409	1012699.949	636554.3566	1627.2569	NG
60410	1012749.273	636542.3534	1627.8739	TOB
60411	1012748.258	636488.3225	1627.4093	TOB
60412	1012696.186	636488.6942	1627.6104	NG
60413	1012652.856	636492.0951	1627.0148	NG
60414	1012610.171	636493.1833	1626.4813	NG
60415	1012610.258	636493.2037	1626.4883	FNC-BW
60416	1012609.629	636443.7398	1626.9809	FNC-BW
60417	1012609.625	636443.7399	1627.0016	NG
60418	1012652.709	636443.343	1627.4952	NG
60419	1012706.286	636440.7055	1627.7371	NG
60420	1012748.019	636438.8244	1627.4374	TOB
60421	1012747.611	636386.5921	1627.794	TOB
60422	1012748.015	636334.2309	1628.6556	TOB
60423	1012747.666	636282.9461	1629.7301	TOB
60424	1012748.793	636231.2851	1629.4241	TOB
60425	1012730.72	636251.7866	1630.1244	TOB
60426	1012695.057	636261.0222	1626.8977	TOB
60427	1012658.511	636262.3487	1625.6303	TOB
60428	1012630.699	636264.9129	1626.5026	TOB
60429	1012605.288	636259.7087	1627.5567	TOB
60430	1012608.207	636386.8473	1626.5057	NG
60431	1012608.199	636386.8431	1626.48	FNC-BW
60432	1012642.028	636387.6937	1626.6172	NG
60433	1012665.315	636390.5135	1627.1367	NG
60434	1012701.05	636387.1428	1628.0127	NG
60435	1012707.92	636334.2509	1628.69	NG
60436	1012706.95	636282.5948	1628.156	NG
60437	1012660.687	636285.6154	1627.7905	NG
60438	1012630.44	636288.1089	1627.7099	NG
60439	1012606.066	636291.6815	1627.4762	NG
60440	1012607.265	636343.4763	1627.1792	NG
60441	1012607.26	636343.47	1627.166	FNC-BW
60442	1012649.173	636344.0625	1628.2431	NG

60443	1012606.538	636229.3485	1619.2104	TOE B
60444	1012632.833	636225.8587	1619.6235	TOE
60445	1012663.819	636231.0198	1620.5846	TOE
60446	1012704.342	636221.8117	1618.8472	TOE
60447	1012727.394	636209.806	1619.4108	TOE
60448	1012605.268	636259.9099	1627.4273	FNC-BW
60449	1012606.574	636229.4566	1619.1506	FNC-BW
60450	1012607.189	636191.281	1620.3765	FNC-BW
60451	1012607.189	636191.2746	1620.3663	NG
60452	1012638.371	636194.1854	1620.7042	NG
60453	1012669.987	636195.2572	1620.4226	NG
60454	1012671.433	636206.9055	1621.0453	TOB B
60455	1012677.724	636210.8298	1619.3504	TOE B
60456	1012677.565	636195.32	1618.4039	TOE
60457	1012675.745	636179.8236	1618.5276	TOE
60458	1012667.167	636174.1854	1618.2716	TOE
60459	1012642.601	636170.8844	1616.8026	TOE
60460	1012606.562	636175.9078	1617.6194	TOE
60461	1012606.199	636160.2503	1617.3173	TOE
60462	1012631.824	636159.2585	1617.8537	TOE
60463	1012658.929	636163.6473	1617.3592	TOE
60464	1012682.302	636164.0966	1618.163	TOE
60465	1012690.548	636163.0429	1618.5162	TOE
60466	1012672.146	636195.8541	1620.4849	TOB
60467	1012669.169	636187.4662	1620.2851	TOB
60468	1012659.845	636183.0011	1620.351	TOB
60469	1012640.777	636182.2457	1619.7438	TOB
60470	1012607.574	636183.3071	1619.666	TOB
60471	1012692.593	636162.9332	1618.5738	TOB B
60472	1012704.673	636165.1646	1616.2089	TOE1 B
60473	1012718.704	636168.0988	1617.0363	TOE1
60474	1012710.687	636179.2881	1616.2502	TOE1
60475	1012711.441	636196.7748	1616.5824	TOE1
60476	1012713.951	636205.5956	1616.7715	TOE1
60477	1012702.344	636206.8623	1616.549	TOE1
60478	1012701.121	636184.5641	1616.1583	TOE1
60479	1012701.419	636174.9317	1615.7476	TOE1 CL
60480	1012691.427	636190.0378	1618.6196	TOB
60481	1012692.633	636209.6374	1618.7744	TOB
60482	1012713.505	636213.9334	1618.2996	TOB
60483	1012726.082	636203.8292	1618.9032	TOB
60484	1012727.493	636171.5863	1618.4991	TOB
60485	1012730.432	636171.1727	1618.9413	NG
60486	1012731.782	636171.0296	1619.7679	BKL B
60487	1012731.119	636172.1203	1618.3354	BKL
60488	1012747.155	636181.8008	1618.3589	BKL
60489	1012747.24	636186.4771	1618.4088	INV
60490	1012747.233	636196.9826	1618.3079	INV
60491	1012747.239	636202.3529	1618.3254	BKL
60492	1012731.072	636205.4708	1618.7569	BKL
60493	1012731.256	636206.8387	1619.938	BKL
60494	1012731.611	636206.1402	1621.1218	HDWL B
60495	1012746.596	636203.3353	1625.203	HDWL
60496	1012747.344	636203.1252	1625.2264	HDWL
60497	1012748.115	636203.0287	1625.6771	HDWL B
60498	1012748.657	636203.8041	1625.4669	BKL
60499	1012749.047	636191.8725	1625.4012	BKL
60500	1012748.135	636192.0714	1625.6264	HDWL
60501	1012747.984	636180.9007	1625.7362	HDWL

60502	1012747.285	636180.9473	1625.2376	HDWL B
60503	1012746.663	636180.4456	1625.3993	HDWL
60504	1012748.857	636180.3979	1625.7463	BKL CL
60505	1012731.772	636171.7473	1621.3886	HDWL
60506	1012749.691	636230.6025	1629.43	TOB B
60507	1012758.572	636217.1738	1629.8759	TOB
60508	1012764.144	636194.2935	1630.7897	TOB
60509	1012763.011	636174.0844	1630.8496	TOB
60510	1012749.36	636151.0328	1631.3148	TOB
60511	1012732.035	636140.63	1631.7107	TOB
60512	1012700.983	636139.2803	1628.5553	TOB
60513	1012677.623	636145.0971	1626.5345	TOB
60514	1012640.374	636149.4778	1625.6535	TOB
60515	1012606.046	636156.1612	1623.992	TOB FNC-BW
60516	1012604.205	636120.4549	1627.856	FNC-BW
60517	1012604.213	636120.4573	1627.8534	NG
60518	1012648.532	636115.9977	1628.0906	NG
60519	1012648.439	636116.0177	1628.09	FNC-BW
60520	1012693.14	636116.3522	1629.4979	NG
60521	1012743.35	636106.3564	1633.0019	NG
60522	1012758.147	636674.9272	1623.8961	TOE B
60523	1012767.02	636670.4367	1624.4195	TOE
60524	1012768.858	636645.9471	1624.4993	TOE
60525	1012775.788	636645.5064	1624.3393	EC
60526	1012796.2	636645.4861	1624.0056	CS
60527	1012816.578	636645.4667	1623.5912	EC1
60528	1012816.215	636593.5568	1623.2709	EC1
60529	1012795.862	636593.6745	1623.72	CS
60530	1012775.427	636593.6087	1624.1146	EC
60531	1012774.995	636541.8379	1623.9827	EC
60532	1012795.357	636541.5711	1623.6457	CS
60533	1012815.946	636541.4145	1623.1938	EC1
60534	1012815.491	636487.8965	1623.2678	EC1
60535	1012794.985	636488.0825	1623.6986	CS
60536	1012774.353	636488.3987	1624	EC
60537	1012774.155	636438.0055	1624.5488	EC
60538	1012768.198	636592.3261	1623.8458	TOE
60539	1012766.91	636542.1149	1623.5499	TOE
60540	1012765.347	636488.6809	1623.8843	TOE
60541	1012763.314	636438.4181	1624.103	TOE
60542	1012758.176	636386.759	1625.6447	TOE
60543	1012773.698	636386.0061	1625.2817	EC
60544	1012794.035	636385.7635	1624.861	CS
60545	1012814.785	636407.6104	1623.9584	EC1 EC99 B
60546	1012825.962	636407.5036	1624.0098	EC99
60547	1012836.879	636407.3403	1623.8854	EC99
60548	1012814.542	636385.7519	1624.3332	EC1
60549	1012836.789	636385.7284	1624.3431	EC99
60550	1012836.191	636334.3334	1625.4965	EC99
60551	1012825.355	636333.8266	1625.4801	CS
60552	1012825.223	636319.5864	1625.8116	CS
60553	1012828.052	636312.5249	1625.9636	CS
60554	1012836.158	636314.4497	1625.945	EC99
60555	1012852.673	636272.4385	1623.0138	EC99
60556	1012868.365	636231.9583	1619.1455	EC99
60557	1012869.196	636229.582	1619.5851	EC99
60558	1012869.895	636210.119	1619.5531	EC99
60559	1012867.685	636210.0789	1618.943	CS
60560	1012870.358	636190.95	1619.5424	EC99

60561	1012868.034	636190.9034	1619.0095	EC99
60562	1012845.631	636190.1389	1618.7477	EC99 BKL B
60563	1012833.236	636196.702	1619.0598	EC99
60564	1012833.184	636201.1486	1618.8578	INV
60565	1012833.413	636211.8935	1618.9068	INV
60566	1012833.335	636217.1634	1618.6851	EC99
60567	1012844.445	636228.7616	1618.8673	EC99
60568	1012852.22	636229.0697	1618.9582	EC99
60569	1012837.783	636266.4319	1622.8544	EC99
60570	1012821.451	636308.1549	1625.8366	EC99
60571	1012819.154	636310.667	1626.2377	EC99
60572	1012825.856	636386.0083	1624.5212	CS
60573	1012814.195	636333.6978	1625.7292	EC1
60574	1012793.792	636333.9132	1626.2048	CS
60575	1012773.426	636350.0971	1626.1304	EC EC2 B
60576	1012772.456	636350.1602	1626.1533	EC2
60577	1012760.78	636354.5471	1626.488	TOE
60578	1012763.053	636333.0625	1626.8026	TOE
60579	1012764.233	636307.5315	1626.9916	TOE
60580	1012773.223	636334.0673	1626.5777	EC
60581	1012770.01	636334.2212	1626.5359	EC2
60582	1012765.962	636307.0268	1627.1286	EC2
60583	1012765.879	636282.005	1627.8151	EC2
60584	1012772.793	636282.2096	1627.9519	EC2
60585	1012772.869	636282.1597	1628.0655	EC
60586	1012765.577	636253.7228	1629.3026	EC2
60587	1012772.547	636253.7908	1629.365	EC2 EC
60588	1012793.632	636281.9965	1627.8781	CS
60589	1012814.066	636310.4628	1626.2422	EC1 EC99
60590	1012813.878	636281.8546	1627.1326	EC1
60591	1012813.483	636229.7959	1628.8694	EC1
60592	1012813.508	636221.7865	1629.1275	EC1
60593	1012793.342	636230.2118	1629.3006	CS
60594	1012772.614	636230.2352	1629.7521	EC
60595	1012816.288	636291.5439	1626.3632	SIGNS
60596	1012829.318	636645.9373	1620.0887	FL
60597	1012839.517	636646.091	1622.3338	RRAP
60598	1012838.952	636592.1658	1621.9678	RRAP
60599	1012829.361	636593.6801	1620.2441	FL
60600	1012829.056	636540.3038	1620.6091	FL
60601	1012838.385	636540.6208	1622.0404	RRAP
60602	1012838.226	636487.653	1622.4872	RRAP
60603	1012830.052	636486.995	1620.6715	FL
60604	1012828.161	636436.552	1621.6773	FL
60605	1012838.101	636437.4818	1622.9541	RRAP
60606	1012838.84	636407.5874	1623.8855	RRAP
60607	1012836.935	636407.9676	1623.9436	RRAP
60608	1012827.056	636416.8105	1623.5663	FL
60609	1012825.81	636408.6348	1623.8689	FL
60610	1012814.987	636437.639	1623.6725	EC98
60611	1012960.167	636675.7759	1626.1533	TOB B FNC-BW1
60612	1012950.028	636681.9112	1626.1105	TOB
60613	1012929.45	636682.7955	1625.9959	TOB
60614	1012909.366	636681.8061	1626.2276	TOB
60615	1012884.466	636681.0477	1625.6693	TOB
60616	1012867.227	636679.96	1625.2943	TOB
60617	1012852.939	636674.6711	1625.3435	TOB
60618	1012849.482	636663.0154	1625.3409	TOB
60619	1012849.471	636645.8029	1625.8741	TOB

60620	1012854.758	636593.6764	1627.4988	TOB
60621	1012856.005	636541.8677	1628.4037	TOB
60622	1012856.971	636486.7037	1629.4978	TOB
60623	1012854.867	636437.3579	1629.1535	TOB
60624	1012853.128	636386.056	1628.2432	TOB
60625	1012845.172	636333.6075	1627.7961	TOB
60626	1012845.689	636316.1519	1627.6331	TOB
60627	1012861.182	636281.2324	1626.9584	TOB
60628	1012878.036	636257.7622	1626.0617	TOB
60629	1012903.558	636270.8266	1627.1351	TOB
60630	1012927.962	636303.1973	1628.3045	TOB
60631	1012951.186	636336.3693	1628.892	TOB
60632	1012895.768	636333.0857	1628.0826	NG
60633	1012901.263	636385.4634	1629.0296	NG
60634	1012905.949	636437.2498	1629.5078	NG
60635	1012910.034	636486.5131	1630.0797	NG
60636	1012912.55	636539.1582	1629.0042	NG
60637	1012912.097	636593.1538	1627.3547	NG
60638	1012908.764	636644.3455	1626.673	NG
60639	1012962.156	636650.292	1626.7102	NG
60640	1012962.174	636650.3672	1626.714	FNC-BW1
60641	1012966.689	636596.1478	1627.369	FNC-BW1
60642	1012966.407	636596.1298	1627.4406	NG
60643	1012970.71	636542.7174	1628.9247	NG
60644	1012970.732	636542.6919	1628.9097	FNC-BW1
60645	1012971.702	636529.6326	1630.1997	FNC-BW1
60646	1012971.688	636529.6461	1630.1954	NG
60647	1012966.459	636491.9257	1629.464	NG
60648	1012966.461	636491.8681	1629.4521	FNC-BW1
60649	1012959.149	636439.0558	1630.3254	FNC-BW1
60650	1012959.128	636439.0602	1630.3367	NG
60651	1012956.73	636412.4017	1628.2381	NG
60652	1012954.607	636388.3785	1628.4972	FNC-BW1
60653	1012954.603	636388.3985	1628.4932	NG
60654	1012953.66	636374.5242	1629.5714	NG
60656	1012951.103	636336.4199	1628.7333	FNC-BW1
60658	1012829.482	636692.0091	1619.7554	INV-24IN RCP
60700	1012813.711	636217.9691	1629.2681	EC B
60701	1012812.748	636217.789	1629.234	EP B
60702	1012812.766	636217.8087	1629.2534	EP1 B
60703	1012773.398	636218.1528	1630.1874	EP1
60704	1012772.352	636218.2374	1630.1298	EC1 B
60705	1012771.892	636176.8474	1631.5679	EC1
60706	1012772.839	636176.8937	1631.5637	EP1
60707	1012791.841	636175.9815	1631.2091	AS
60708	1012815.62	636177.5073	1630.6159	EP
60709	1012816.591	636177.522	1630.6165	EC
60710	1012820.62	636122.0981	1632.2961	EC
60711	1012819.493	636122.0382	1632.3072	EP
60712	1012792.776	636122.6538	1632.7586	AS
60713	1012772.451	636120.1385	1633.1743	EP1
60714	1012771.614	636128.7417	1632.9641	EC1 EC99 B
60715	1012764.461	636128.5696	1632.9336	EC99
60716	1012764.678	636119.6924	1633.0008	EC99
60717	1012771.497	636120.0475	1633.0742	EC1
60718	1012764.303	636079.5039	1633.7325	EC99
60719	1012766.402	636068.4608	1633.8927	EC99
60720	1012771.261	636068.4239	1633.8932	EC1
60721	1012772.194	636068.2531	1633.9895	EP1

60722	1012791.529	636068.0891	1633.6312	AS
60723	1012824.147	636072.5434	1632.9699	EC
60724	1012824.174	636068.4629	1633.103	EC
60725	1012823.081	636072.4135	1633.0642	EP
60726	1012823.095	636068.4319	1633.2427	EP
60727	1012824.102	636057.8407	1633.341	EC
60728	1012823.043	636057.9157	1633.335	EP
60729	1012822.037	636048.0107	1633.6158	EP
60730	1012824.06	636048.1137	1633.4803	EC BOC B
60731	1012823.403	636048.0453	1633.4441	EC GUT B
60732	1012821.975	636042.8167	1633.5754	EP
60733	1012823.312	636042.7652	1633.5502	GUT
60734	1012823.869	636042.6509	1633.886	BOC
60735	1012823.745	636013.6156	1633.9012	BOC
60736	1012823.194	636013.7144	1633.5434	GUT
60737	1012821.832	636013.6457	1633.4673	EP
60738	1012821.329	635971.4121	1633.6018	EP
60739	1012822.83	635971.217	1633.5683	GUT
60740	1012823.698	635971.2226	1633.9969	BOC ESW B
60741	1012824.199	635964.3418	1634.07	BOC HCR B
60742	1012823.618	635964.1956	1633.5826	GUT
60743	1012825.43	635958.1754	1633.72	GUT
60744	1012825.897	635958.4538	1633.6779	BOC
60745	1012831.192	635961.1753	1634.1157	HCR
60746	1012833.463	635956.7293	1634.25	HCR
60747	1012828.118	635953.9456	1633.8223	BOC
60748	1012827.529	635953.6589	1633.7952	GUT
60749	1012831.022	635948.5727	1633.8161	GUT
60750	1012831.341	635949.0071	1634.2952	BOC HCR
60751	1012835.569	635944.9963	1634.2634	BOC HCR B
60752	1012835.074	635944.6275	1633.8394	GUT
60753	1012840.393	635940.8003	1634.0017	GUT
60754	1012840.655	635941.2843	1633.9497	BOC
60755	1012843.163	635946.7677	1634.3116	HCR
60756	1012847.641	635944.3914	1634.3266	HCR
60757	1012845.023	635939.0987	1633.9646	BOC
60758	1012844.744	635938.533	1633.9663	GUT
60759	1012850.557	635936.7454	1633.9214	GUT
60760	1012850.818	635937.4117	1634.3221	BOC HCR ESW1 B
60761	1012851.204	635938.7083	1634.3588	ESW1 PC
60762	1012857.524	635936.4347	1634.2931	BOC PT
60763	1012857.583	635935.7714	1633.9942	GUT PT
60764	1012853.562	635942.8244	1634.2958	ESW1
60765	1012858.04	635944.6426	1634.4772	ESW1 PT
60766	1012844.954	635959.0881	1634.3136	ESW
60767	1012858	635949.5506	1634.4842	ESW
60768	1012842.559	635963.6185	1634.5297	TSPB
60769	1012791.142	635972.2907	1633.9925	AS
60770	1012795.561	635972.0375	1633.8772	WV
60771	1012791.848	635929.5691	1633.7556	WV
60772	1012788.471	635933.1954	1633.866	AS
60773	1012818.147	635933.9355	1633.4726	EP
60774	1012823.908	635931.1033	1633.556	EP B
60775	1012824.33	635934.0569	1633.5307	EP
60776	1012840.518	635934.3275	1633.849	EP
60777	1012857.605	635934.3142	1634.1111	EP
60778	1012858.298	635931.7728	1634.1724	WV
60779	1012861.932	635929.9296	1634.2084	WV
60780	1012857.837	635940.1311	1634.3845	FH

60781	1012852.851	635935.7677	1633.9958	FL B
60782	1012836.47	635936.3755	1633.7584	FL
60783	1012821.18	635936.7446	1633.5191	FL FL1 B
60784	1012820.941	635932.5472	1633.4626	FL1
60785	1012822.066	635954.2383	1633.5528	FL
60786	1012822.361	635970.2156	1633.5744	FL
60787	1012790.647	636014.4838	1634.2213	AS
60788	1012769.964	636048.3973	1634.1967	EP99
60790	1012771.071	636048.296	1634.0964	EP99 EC1 BOC1 B
60791	1012772.106	636048.2902	1634.197	EP1
60792	1012771.571	636043.6436	1634.2741	EP1
60793	1012771.052	636043.6436	1634.6306	BOC1
60794	1012770.773	636014.4799	1634.9995	BOC1
60795	1012771.372	636014.3755	1634.4782	EP1
60796	1012771.065	635972.3257	1634.5068	EP1
60797	1012770.536	635972.3136	1634.9452	BOC1
60798	1012768.606	635964.6105	1634.9311	TSPB
60799	1012773.366	635964.4603	1634.4261	FND-TAG
60800	1012770.777	635932.7956	1634.2934	EP1
60801	1012770.019	635932.6263	1634.7491	BOC1
60802	1012767.965	635942.3308	1634.2665	SIGNS
60803	1012749.318	635933.4601	1632.0568	NG
60804	1012741.534	635935.2683	1631.8887	NG
60805	1012741.571	635935.2698	1631.8835	FNC-BW1 B
60806	1012748.092	635957.8219	1631.8464	FNC-BW1
60807	1012748.305	635957.8165	1631.9029	NG
60808	1012713.887	635970.5556	1631.576	NG
60809	1012713.95	635970.643	1631.5721	FNC-BW1
60810	1012680.709	635982.7328	1631.2696	FNC-BW1
60811	1012680.717	635982.7485	1631.2591	NG
60812	1012668.405	636034.4182	1630.487	NG
60813	1012668.625	636034.4475	1630.4821	FNC-BW1
60814	1012656.284	636085.3305	1629.3376	FNC-BW1
60815	1012656.353	636085.3137	1629.3296	NG
60816	1012708.944	636089.3414	1631.6805	NG
60817	1012710.555	636037.553	1632.0223	NG
60818	1012750.116	636015.0567	1633.5955	NG
60819	1012750.571	636068.4541	1633.511	NG
60820	1012749.942	636120.1351	1632.8781	NG
60821	1012764.573	636074.9621	1633.5688	BOL
60822	1012765.204	636044.3225	1634.1057	POST
60823	1012793.258	636043.5155	1633.9748	GATED
60824	1012830.021	636043.6701	1633.7524	POST
60825	1012831.742	636039.7597	1633.9656	ELPB
60826	1012829.361	636039.524	1633.9172	LPS
60827	1012830.404	636074.3839	1632.0508	BOL
60828	1012765.883	636089.835	1633.6351	GR B
60829	1012767.345	636155.4085	1631.948	GR
60830	1012823.863	636139.3332	1631.8103	GR1 B
60831	1012818.479	636219.7402	1629.3149	GR1
60832	1012767.822	636217.6267	1630.126	GR
60833	1012767.617	636292.903	1627.5895	GR
60834	1012819.741	636354.2905	1625.1645	GR1
60835	1012847.684	636285.767	1623.8733	RRAP B
60836	1012851.129	636285.2365	1624.5354	RRAP
60837	1012866.734	636250.0958	1620.3385	RRAP
60838	1012873.077	636240.7557	1620.9085	RRAP
60839	1012881.191	636238.0168	1621.024	RRAP
60840	1012881.711	636233.4809	1619.7982	RRAP

60841	1012869.238	636232.1058	1619.2244	RRAP
60842	1012869.203	636231.3897	1619.4856	TOE B
60843	1012881.386	636230.2566	1619.9437	TOE
60844	1012902.381	636232.2948	1619.9249	TOE
60845	1012924.779	636249.6248	1621.1635	TOE
60846	1012937.751	636271.8424	1623.1551	TOE
60847	1012954.23	636288.6972	1623.3895	TOE FNC-BW B
60848	1012955.333	636270.5977	1622.7828	FNC-BW
60849	1012955.477	636270.6323	1622.7689	NG
60850	1012953.842	636254.9819	1622.4947	NG
60851	1012950.686	636234.5758	1623.3858	NG
60852	1012950.704	636234.585	1623.3635	FNC-BW
60853	1012950.472	636219.0155	1622.3548	TOE B
60854	1012928.535	636221.041	1622.0887	TOE
60855	1012906.876	636215.0208	1620.7201	TOE
60856	1012893.65	636197.1408	1620.3075	TOE
60857	1012870.94	636199.6315	1619.6645	RRAP B
60858	1012891.95	636194.6621	1620.0216	RRAP TOE
60859	1012893.459	636186.6305	1620.2212	RRAP
60860	1012903.982	636178.2041	1621.346	RRAP
60861	1012930.621	636161.0283	1621.3387	RRAP
60862	1012951.571	636145.4821	1621.545	RRAP
60863	1012974.994	636140.8312	1626.5099	RRAP
60864	1012999.702	636113.604	1629.4189	RRAP
60865	1013022.63	636090.5024	1631.8879	RRAP
60866	1012997.744	636072.4774	1632.7532	RRAP
60867	1012968.442	636062.1908	1633.4676	RRAP
60868	1012963.581	636066.102	1632.6751	RRAP
60869	1012952.524	636099.0195	1628.309	RRAP
60870	1012942.556	636118.3325	1624.9177	RRAP
60871	1012927.874	636135.1521	1621.2573	RRAP
60872	1012898.338	636153.6638	1620.8763	RRAP
60873	1012873.377	636174.7132	1620.1044	RRAP
60874	1012858.565	636179.0699	1620.0591	RRAP
60875	1012848.887	636172.8446	1622.5297	RRAP
60876	1012843.876	636146.5384	1628.5605	RRAP
60877	1012844.137	636125.3108	1630.4514	RRAP
60878	1012843.682	636068.4662	1632.342	RRAP
60879	1012845.589	636048.8061	1633.7902	RRAP
60880	1012824.405	636045.0097	1633.6018	RRAP
60881	1012829.479	636064.6402	1632.9554	FL B
60882	1012835.27	636084.2959	1630.9234	FL
60883	1012835.863	636123.5775	1629.5516	FL
60884	1012838.07	636151.5026	1627.8883	FL
60885	1012841.501	636168.2288	1624.5567	FL
60886	1012848.298	636181.3686	1620.3093	FL
60887	1012854.294	636189.9011	1618.7982	FL
60888	1012845.427	636188.7407	1619.7146	BKL B
60889	1012845.25	636189.7177	1622.7404	HDWL B
60890	1012844.328	636229.033	1623.1703	HDWL1 B
60891	1012843.896	636229.9643	1619.6509	BKL1 B
60892	1012833.798	636219.146	1625.659	HDWL1
60893	1012833.17	636218.4082	1625.9515	HDWL1
60894	1012832.533	636218.2293	1626.1884	HDWL1 B
60895	1012831.678	636218.4676	1625.7249	BKL1
60896	1012831.395	636205.6707	1626.066	BKL1
60897	1012832.286	636205.7173	1626.1903	HDWL1
60898	1012832.274	636195.4693	1626.2212	HDWL1
60899	1012833.536	636195.3887	1625.7422	HDWL

60900	1012832.884	636195.6912	1625.7528	HDWL
60901	1012831.503	636195.2305	1625.9178	BKL BKL1
60902	1012824.909	636074.8713	1632.8041	TOB B
60903	1012828.77	636107.7923	1632.3836	TOB
60904	1012827.309	636122.4155	1632.3086	TOB
60905	1012828.271	636141.7415	1631.9237	TOB
60906	1012825.292	636178.1565	1630.5367	TOB
60907	1012824.397	636221.6835	1629.4395	TOB
60908	1012824.153	636232.3561	1628.5706	TOB
60909	1012822.648	636266.6234	1627.6263	TOB
60910	1012820.769	636283.6009	1627.0811	TOB
60911	1012821.763	636300.3513	1625.6308	TOB TOE B
60912	1012835.884	636260.8023	1621.652	TOE
60913	1012846.092	636234.1782	1618.7127	TOE
60914	1012919.563	636190.4922	1626.1503	NG
60915	1012949.248	636192.1369	1630.7484	TOB B
60916	1012949.987	636190.3505	1630.8391	TOB
60917	1012951.268	636191.5116	1630.6215	FNC-BW
60918	1012967.133	636178.1736	1631.0728	TOB
60919	1012985.506	636158.624	1630.4924	TOB
60920	1012999.857	636155.4417	1630.274	FNC-BW TOB
60921	1013016.056	636124.8886	1630.3851	NG
60922	1013025.726	636108.0276	1630.4656	NG
60923	1013025.816	636108.022	1630.4429	FNC-BW
60924	1013036.622	636084.8482	1632.7935	NG
60925	1012964.332	636061.156	1633.4272	NG
60926	1012914.756	636052.6957	1633.451	NG
60927	1012869.641	636052.8225	1633.8815	NG
60928	1012868.115	636091.1177	1631.0221	NG
60929	1012917.063	636081.924	1630.888	NG
60930	1012959.041	636071.4731	1632.3852	TOB B
60931	1012927.144	636088.6368	1630.2187	TOB
60932	1012896.397	636106.4649	1629.1838	TOB
60933	1012863.156	636132.5253	1628.7755	TOB
60934	1012844.663	636147.2127	1628.2702	TOB
60935	1012877.148	636186.1092	1619.5761	FL B
60936	1012899.167	636166.5375	1619.684	FL
60937	1012926.454	636146.5158	1620.4845	FL
60938	1012946.439	636132.8905	1620.2624	FL
60939	1012948.427	636124.9922	1620.8788	INV 36IN RCP
60940	1012953.158	636132.1729	1621.8072	BKL B
60941	1012951.88	636132.2168	1620.3292	BKL
60942	1012950.349	636125.4022	1620.338	BKL
60943	1012946.686	636124.3512	1620.3952	BKL
60944	1012941.054	636129.047	1621.344	BKL
60945	1012940.108	636128.2129	1621.8228	BKL
60946	1012940.673	636128.3837	1624.8858	HDWL B
60947	1012946.515	636123.8118	1624.8778	HDWL
60948	1012946.388	636122.8268	1624.8179	BKL
60949	1012951.353	636124.2591	1625.0354	BKL CL
60950	1012950.897	636124.7827	1624.8621	HDWL
60951	1012952.476	636131.7402	1624.8575	HDWL
60952	1012968.815	636108.7965	1629.0555	NG
60953	1012961.7	635995.9845	1642.7575	WBLK B
60954	1012962.041	635995.9485	1634.4894	NG
60955	1012961.92	636021.5254	1634.2351	NG
60956	1012961.553	636021.2925	1642.7196	WBLK
60957	1012909.549	636021.23	1642.7459	WBLK
60958	1012909.139	636021.6265	1634.6019	NG

60959	1012907.283	636007.3878	1634.3961	GM
60960	1012906.552	635972.695	1634.8691	EBOX
60961	1012907.821	635966.807	1635.3397	EM
60962	1012909.462	635966.1518	1634.7859	NG
60963	1012909.727	635966.3971	1642.7338	WBLK
60964	1012921.951	635964.9858	1634.9781	EC B
60965	1012921.94	635958.6215	1634.9685	EC
60966	1012927.768	635958.5606	1634.9825	EC
60967	1012927.718	635964.9771	1634.9939	EC CL
60968	1012925.084	635961.5197	1634.9997	EM
60969	1012930.59	635958.3958	1634.5542	ELCAB B
60970	1012930.63	635952.1805	1634.5489	ELCAB
60971	1012936.289	635952.2083	1634.5274	ELCAB
60972	1012936.327	635958.4798	1634.5452	ELCAB CL
60973	1012947.325	635960.9948	1634.3903	STUBOUT-4
60974	1012948.037	635956.3856	1634.3222	TRANS
60975	1012962.127	635966.2164	1634.3822	NG
60976	1012961.743	635966.6005	1642.5935	WBLK
60977	1012961.758	635979.9048	1642.5986	WBLK
60978	1012962.159	635979.7691	1634.5752	NG
60979	1012961.309	635989.5215	1634.7553	GATES
60980	1012962.919	635996.0317	1634.5761	EDR B
60981	1012963.05	635979.902	1634.4948	EDR1 B
60982	1013014.737	635980.1471	1633.7732	EDR1
60983	1013012.507	635996.1471	1633.8466	EDR
60984	1013048.773	635981.2141	1634.0511	EDR1
60985	1013049.494	635997.5551	1633.9926	EDR
60986	1013088.088	635993.8626	1634.2113	EDR
60987	1013075.519	635978.1258	1634.3071	EDR1
60988	1013087.441	635966.4159	1634.3373	EDR1
60989	1013085.65	635947.7613	1634.1436	EDR1
60990	1013107.099	635979.7606	1634.5594	EDR
60991	1013115.685	635953.8131	1634.6792	EDR
60992	1013114.432	635940.9355	1634.565	EDR
60993	1012915.629	636233.2025	1620.5901	NG
60994	1012877.89	636216.4868	1619.721	NG
60995	1013033.704	636034.9249	1633.5518	NG
60996	1013032.181	635962.705	1634.4927	NG
60997	1013082.197	635950.7998	1634.2995	NG
60998	1013091.762	636012.7203	1634.6224	NG
60999	1013097.02	636070.7505	1634.9051	NG
61000	1013101.648	636091.7387	1634.1975	NG
61001	1013098.866	636114.4074	1631.5048	NG
61002	1013098.739	636114.2486	1631.4968	FNC-BW
61003	1013124.989	636116.2124	1631.9987	NG
61004	1013125.081	636116.26	1631.9799	FNC-BW
61006	1013139.329	636088.0482	1634.6398	TOB B RRAP B
61007	1013131.081	636081.3831	1634.791	TOB
61008	1013153.767	636084.392	1633.4358	TOE B
61009	1013142.837	636084.4071	1633.5365	TOE
61010	1013140.488	636076.6944	1633.3753	TOE
61011	1013137.897	636027.4216	1633.5857	TOE
61012	1013127.946	636027.8635	1635.3428	TOB
61013	1013130.608	635975.6758	1634.7332	TOB
61014	1013135.536	635975.1239	1633.74	TOE
61015	1013137.37	635955.3356	1633.8739	TOE
61016	1013132.452	635948.5946	1634.8123	TOB
61017	1013153.726	635931.8682	1634.9487	TOB
61018	1013156.347	635938.8553	1634.1465	TOE

61019	1013198.55	635923.0711	1633.9345	TOE
61020	1013195.893	635916.8512	1635.0698	TOB
61021	1013244.583	635893.2172	1635.3373	TOB
61022	1013247.3	635898.8951	1634.1151	TOE
61023	1013293.587	635875.7891	1634.4717	TOE
61024	1013289.389	635868.5651	1635.9644	TOB
61025	1013324.692	635847.5703	1635.942	TOB
61026	1013327.098	635854.0292	1634.9736	TOE
61027	1013328.803	635857.1987	1634.7274	TOE B
61028	1013330.985	635864.9289	1636.154	TOB B
61029	1013295.756	635886.5716	1635.8076	TOB
61030	1013292.075	635880.7003	1634.5138	TOE
61031	1013248.78	635904.7809	1634.0533	TOE
61032	1013251.43	635911.3477	1635.2777	TOB
61033	1013211.211	635933.4935	1635.4845	TOB
61034	1013202.937	635942.2084	1635.4634	TOB
61035	1013198.6	635953.929	1635.113	TOB
61036	1013203.916	635924.7695	1633.601	TOE
61037	1013194.302	635935.8236	1633.7191	TOE
61038	1013192.355	635950.8351	1633.7707	TOE
61039	1013165.709	635955.7001	1633.9983	NG
61040	1013160.01	636027.4735	1633.4578	NG
61041	1013194.338	636024.4896	1634.4469	TOE
61042	1013200.017	636024.5089	1635.1972	TOB
61043	1013201.394	636059.184	1635.0891	TOB
61044	1013194.145	636057.9727	1633.8038	TOE
61045	1013186.782	636075.2529	1633.2933	TOE
61046	1013196.222	636082.9517	1634.7271	TOB
61047	1013175.809	636090.0397	1634.9992	TOB
61048	1013174.985	636081.5715	1633.4981	TOE
61049	1013156.712	636083.7382	1633.984	TOE
61050	1013155.86	636091.539	1635.4609	TOB
61051	1013154.501	636087.1037	1635.0955	RRAP1 B
61052	1013147.187	636088.0596	1634.711	FL B
61053	1013147.763	636113.0106	1632.7654	FL
61054	1013141.222	636112.1726	1633.2019	RRAP
61055	1013154.76	636111.4736	1633.2443	RRAP1
61056	1013154.674	636163.5859	1633.174	RRAP1
61057	1013146.782	636162.6528	1630.9729	FL
61058	1013137.299	636162.5943	1632.6274	RRAP
61059	1013137.215	636203.5712	1631.9449	RRAP
61060	1013144.471	636204.4942	1629.915	FL
61061	1013154.732	636205.8216	1631.1649	RRAP1
61062	1013154.28	636249.0963	1626.0287	RRAP1
61063	1013152.402	636258.5118	1625.7155	RRAP1
61064	1013137.796	636256.729	1626.0366	RRAP1 RRAP
61065	1013146.599	636252.6411	1625.4407	FL
61066	1013160.173	636068.5414	1633.3096	NG
61067	1013157.324	636117.0655	1632.7368	NG
61068	1013209.766	636118.9402	1633.3415	NG
61069	1013203.772	636090.3173	1634.8127	NG
61070	1013255.533	636091.4153	1634.9288	NG
61071	1013254.326	636119.4236	1633.9234	NG
61072	1013304.74	636119.8227	1634.6065	NG
61073	1013302.641	636091.5909	1634.9714	NG
61074	1013345.041	636089.2109	1635.2229	NG
61075	1013343.965	636122.4892	1635.4529	NG
61076	1013339.342	636035.5923	1635.5702	NG
61077	1013284.819	636041.2972	1635.753	NG

61078	1013234.443	636046.0356	1635.4157	NG
61079	1013224.584	635994.1807	1635.5444	NG
61080	1013273.871	635977.158	1635.9928	NG
61081	1013327.43	635959.3152	1635.2488	NG
61082	1013319.364	635907.7101	1635.7398	NG
61083	1013268.491	635927.2081	1635.8659	NG
61084	1013217.929	635942.3712	1635.6213	NG
61085	1012981.734	636046.1808	1634.2363	TOB B
61086	1012957.935	636047.7494	1633.9656	TOB
61087	1012926.746	636045.8944	1633.684	TOB
61088	1012914.048	636038.9056	1634.3469	TOB
61089	1012917.622	636025.2156	1634.0357	TOB
61090	1012936.796	636026.4536	1634.0047	TOB
61091	1012961.512	636025.8061	1634.1212	TOB
61092	1012978.344	636028.3282	1633.7478	TOB
61093	1012988.331	636034.0126	1634.0502	TOB
61094	1012985.655	636042.5246	1633.9007	TOB CL
61095	1012977.065	636038.7426	1633.4381	TOE B
61096	1012959.317	636038.1587	1633.2344	TOE
61097	1012933.344	636035.8677	1633.1012	TOE
61098	1012922.299	636035.6291	1633.0229	TOE
61099	1012906.422	635964.0797	1635.0297	TOE B
61100	1012901.69	635963.5458	1636.108	TOB B
61101	1012893.471	635992.5668	1636.7562	TOB
61102	1012904.26	635994.1438	1634.4654	TOE
61103	1012904.967	636019.5449	1634.6917	TOE
61104	1012895.29	636038.1888	1634.5862	TOE
61105	1012875.176	636049.9256	1634.1902	TOE
61106	1012854.041	636048.1725	1634.6399	TOE
61107	1012840.589	636045.037	1633.5734	TOE
61108	1012840.867	636035.9542	1633.8656	TOE
61109	1012835.409	636035.7481	1633.6977	TOE
61110	1012835.437	636026.9718	1634.0151	TOE
61111	1012838.163	636020.8126	1634.1216	TOE
61112	1012839.634	636003.3758	1634.0763	TOE
61113	1012850.677	635994.3387	1633.8349	TOE
61114	1012855.233	635993.5857	1633.7913	TOE
61115	1012849.776	635973.6365	1634.2159	NG
61116	1012828.458	635972.3183	1633.8121	NG
61117	1012858.125	635950.7032	1634.4003	NG
61118	1012907.641	635950.6577	1634.5889	NG
61119	1012961.426	635950.4017	1634.2871	NG
61120	1013013.983	635947.4906	1634.0332	NG
61121	1013050.231	635942.9697	1634.1385	NG
61122	1013068.193	635940.4072	1634.116	NG
61123	1013081.275	635948.7324	1634.2186	NG
61124	1012920.26	635959.7813	1634.331	SIGN B
61125	1012901.085	635960.217	1634.1483	SIGN PC
61126	1012865.986	635976.9426	1634.1614	SIGN
61127	1012852.383	636010.4123	1636.0009	SIGN PT
61128	1012852.641	636036.1109	1636.1296	SIGN
61129	1012855.107	636036.1398	1636.6368	SIGN
61130	1012855.004	636011.3222	1636.7395	SIGN PC
61131	1012869.055	635978.4974	1636.7958	SIGN
61132	1012900.683	635963.1709	1636.3961	SIGN PT
61133	1012920.166	635962.8915	1634.7141	SIGN CL
61134	1012890.07	636016.5814	1637.0495	TOB
61135	1012881.061	636029.0051	1636.8783	TOB
61136	1012871.767	636034.9135	1636.9253	TOB

61137	1012855.706	636038.255	1636.5844	TOB
61138	1012851.008	636037.6134	1636.135	TOB
61139	1012849.707	636025.3729	1636.0009	TOB
61140	1012846.167	636013.2852	1635.9153	TOB
61141	1012851.809	636004.4714	1635.9026	TOB
61142	1012841.727	636026.5101	1633.589	ELPB
61143	1012835.597	636029.395	1633.3239	SIGNL B
61144	1012836.093	636032.9684	1634.1499	SIGNL
61145	1012848.46	636033.0725	1634.587	SIGNL
61146	1012849.077	636029.7559	1636.8823	SIGNL CL
61200	1012929.401	636265.6119	1622.983	BKL B TOE B
61201	1012914.165	636256.2519	1622.8816	BKL
61202	1012919.754	636248.0451	1620.8479	TOE
61203	1012900.62	636234.3012	1620.4914	TOE
61204	1012882.653	636231.6193	1619.9228	TOE
61205	1012893.891	636245.7681	1623.1518	BKL
61206	1012876.725	636244.785	1622.3681	BKL
61207	1012863.625	636265.7006	1622.7633	BKL
61208	1012855.859	636283.0641	1622.7785	BKL TOE B
61209	1012860.016	636286.399	1622.4285	TOE
61210	1012903.981	636299.9866	1621.8909	TOE
61211	1012952.262	636311.6101	1622.7782	TOE
61212	1012947.46	636331.1057	1627.8783	TOB B
61213	1012915.476	636319.185	1625.6262	TOB
61214	1012878.122	636310.0839	1625.4855	TOB
61215	1012849.122	636305.9793	1625.727	TOB
61216	1012841.899	636312.4574	1625.9681	TOB
61217	1012841.454	636350.2057	1626.1591	TOB
61218	1012846.429	636382.3381	1626.0177	TOB
61219	1012849.142	636412.5567	1626.4062	TOB
61220	1012847.968	636467.2822	1626.2425	TOB
61221	1012850.882	636513.9758	1626.417	TOB
61222	1012850.039	636565.4827	1626.1084	TOB
61223	1012847.309	636611.4807	1624.834	TOB
61224	1012846.025	636654.9384	1623.9084	TOB
61225	1012847.486	636675.8849	1623.0328	TOB
61226	1012755.015	636217.865	1628.9138	TOB B
61227	1012741.781	636239.5401	1626.7677	TOB
61228	1012733.431	636255.5437	1626.8207	TOB
61229	1012717.627	636265.0122	1624.4897	TOB
61230	1012692.702	636265.7225	1625.3571	TOB
61231	1012664.118	636258.0117	1625.3457	TOB
61300	1012758.702	637054.1255	1632.1133	NG
61301	1012707.718	637054.8008	1631.3649	NG
61302	1012651.447	637055.249	1630.8585	NG
61303	1012610.279	637054.8223	1630.5396	NG
61304	1012609.374	637000.4332	1630.1996	NG
61305	1012647.861	636996.4107	1630.6288	NG
61306	1012701.088	636993.2704	1631.1224	NG
61307	1012757.436	636990.7394	1632.0738	NG
61308	1012758.768	636939.5618	1631.1105	NG
61309	1012700.939	636936.5315	1629.7472	NG
61310	1012646.741	636934.8143	1629.498	NG
61311	1012609.008	636933.6276	1628.9105	NG
61312	1012608.241	636884.6506	1626.3888	NG
61313	1012649.993	636880.394	1627.6475	NG
61314	1012698.249	636877.8635	1628.513	NG
61315	1012755.166	636874.0951	1628.8056	NG
61316	1012756.67	636822.8492	1627.3623	NG

61317	1012700.174	636826.0027	1626.7882	NG
61318	1012643.684	636830.5743	1626.0455	NG
61319	1012607.466	636833.512	1625.6378	NG
61320	1012607.043	636783.7977	1624.1459	NG
61321	1012641.769	636780.2057	1624.1507	NG
61322	1012704.238	636772.978	1625.0891	NG
61323	1012760.106	636767.6929	1625.8424	NG
61324	1012761.929	636707.1407	1623.9554	NG TOB B
61325	1012746.134	636708.6949	1622.1251	TOB
61326	1012706.662	636707.8544	1621.8724	TOB
61327	1012648.584	636701.3121	1621.4763	TOB
61328	1012648.616	636686.5415	1619.0979	TOE B
61329	1012702.417	636692.807	1619.1586	TOE
61330	1012746.785	636699.2262	1619.8307	TOE
61331	1012748.263	636686.2071	1619.3601	TOE
61332	1012707.751	636684.3007	1619.364	TOE
61333	1012650.273	636680.2605	1619.4951	TOE
61334	1012647.224	636660.2978	1621.8925	NG
61335	1012607.959	636666.6131	1620.9303	NG
61336	1012606.527	636680.4094	1618.6204	NG
61337	1012606.91	636685.601	1618.6816	NG
61338	1012606.78	636694.0204	1621.0202	NG
61339	1012606.344	636713.3976	1622.4951	NG
61340	1012701.485	636659.8831	1623.1847	NG
61341	1012756.823	636661.9349	1624.7411	NG
61342	1012757.379	636674.3796	1623.816	NG
61343	1012762.2	636644.5822	1624.7482	NG
61344	1012707.662	636644.5303	1623.9614	NG
61345	1012647.743	636645.7037	1622.6	NG
61346	1012599.519	636638.5164	1621.7415	NG
61347	1012611.288	636599.3046	1622.946	NG
61348	1012647.013	636597.0348	1623.4142	NG
61349	1012693.831	636595.3847	1623.9004	NG
61350	1012752.066	636594.1233	1624.9654	NG
61351	1012756.358	636542.4374	1625.4806	NG
61352	1012699.864	636545.6552	1624.1864	NG
61353	1012646.415	636547.8061	1623.843	NG
61354	1012611.164	636548.2348	1624.2997	NG
61355	1012610.231	636493.1096	1626.3085	NG
61356	1012645.098	636494.0883	1625.2343	NG
61357	1012696.24	636493.6588	1625.5881	NG
61358	1012747.419	636495.2268	1625.0742	NG
61359	1012746.548	636437.4406	1627.2576	NG
61360	1012699.433	636439.2768	1627.4739	NG
61361	1012647.638	636442.7846	1626.9855	NG
61362	1012610.097	636444.3155	1626.8687	NG
61363	1012608.637	636394.0528	1626.3256	NG
61364	1012645.877	636388.3481	1626.6776	NG
61365	1012697.861	636383.1124	1627.5865	NG
61366	1012744.531	636385.2629	1627.3275	NG
61367	1012747.752	636335.814	1627.4317	NG
61368	1012695.437	636340.3834	1627.6466	NG
61369	1012642.378	636343.4477	1627.8384	NG
61370	1012607.114	636343.8729	1627.1027	NG
61371	1012606.286	636292.7486	1627.2868	NG
61372	1012640.591	636294.5741	1627.6465	NG
61373	1012693.009	636295.7126	1626.9561	NG
61374	1012718.373	636296.3758	1626.2161	NG
61375	1012754.46	636291.1749	1627.9883	NG

61376	1012755.753	636242.9444	1628.9042	NG
61377	1012657.958	636270.0499	1626.1459	NG
61378	1012630.259	636264.9743	1626.4294	NG
61379	1012606.123	636261.2446	1627.5876	NG
61380	1012640.111	636249.8577	1624.0996	NG
61381	1012618.93	636243.3427	1623.1199	NG
61382	1012761.703	636334.3618	1626.5095	NG
61383	1012763.473	636387.4733	1625.2266	NG
61384	1012763.665	636438.1548	1624.0071	NG
61385	1012768	636490.2958	1623.5924	NG
61386	1012769.586	636540.0225	1623.4928	NG
61387	1012770.247	636596.4275	1623.7814	NG
61388	1012770.552	636646.0276	1624.0913	NG
61389	1012770.466	636676.0403	1624.006	NG
61390	1012770.422	636696.2124	1624.0023	NG
61391	1012775.415	636749.5578	1625.2174	NG
61392	1012775.765	636797.4136	1626.2302	NG
61393	1012776.672	636851.7886	1627.8536	NG
61394	1012776.691	636897.966	1629.1332	NG
61395	1012776.657	636943.3968	1630.5326	NG
61396	1012775.268	636992.587	1632.5288	NG
61397	1012776.535	637042.8817	1633.4953	NG
61398	1012776.802	637055.6101	1633.6209	NG
61399	1013181.632	636101.5499	1634.8238	NG
61400	1013181.195	636105.8793	1634.0321	NG
61401	1013185.844	636089.3896	1635.0541	NG
61402	1013191.405	636085.5557	1635.1429	NG
61403	1013234.598	636082.1692	1635.3854	NG
61404	1013235.428	636105.5021	1634.9726	NG
61405	1013236.355	636107.4253	1634.4658	NG
61406	1013296.052	636105.353	1635.2641	NG
61407	1013296.486	636109.7987	1634.5506	NG
61408	1013293.476	636089.2493	1635.8506	NG
61409	1013339.778	636087.1232	1636.0526	NG
61410	1013340.773	636111.4854	1635.8269	NG
61411	1013344.184	636118.7894	1635.3026	NG
61412	1013350.491	636119.6653	1635.5008	NG
61413	1013348.744	636103.5238	1635.4734	NG
61414	1013344.295	636064.5148	1635.3928	NG
61415	1013340.102	636065.6308	1636.0982	NG
61416	1013316.973	636064.9815	1636.1579	NG
61417	1013305.429	636015.1593	1635.9439	NG
61418	1013333.067	636009.2613	1636.0122	NG
61419	1013337.173	636009.0407	1635.3138	NG
61420	1013332.908	635953.5432	1635.1963	NG
61421	1013328.422	635953.7032	1635.9544	NG
61422	1013301.823	635958.3667	1636.1064	NG
61423	1013294.993	635907.2021	1636.1776	NG
61424	1013322.772	635898.0147	1635.9652	NG
61501	1014154.914	634430.0493	1642.9997	EC B EC1 B
61502	1014156.252	634430.7737	1643.0035	EC PC
61503	1014176.167	634436.6917	1642.6828	EC
61504	1014194.131	634434.998	1642.7866	EC PT
61505	1014205.854	634432.5681	1642.8528	EC
61506	1014206.003	634432.5113	1641.9668	EC
61507	1014181.811	634413.4196	1642.9635	EC1
61508	1014182.685	634413.8767	1642.9376	EC1
61509	1014192.367	634419.3642	1642.9726	EC1 PC
61510	1014198.69	634421.1247	1642.9771	EC1

61511	1014203.194	634421.0655	1642.9329	EC1 PT
61512	1014203.515	634420.9984	1641.9548	EC1
61513	1014156.693	634429.9489	1642.9375	EC2 B EC3 B
61514	1014156.886	634430.1658	1642.9696	EC2 PC
61515	1014176.031	634435.8729	1642.6701	EC2
61516	1014193.884	634434.2504	1642.7286	EC2 PT
61517	1014205.753	634431.745	1642.7638	EC2
61518	1014205.901	634431.7446	1641.9434	EC2
61519	1014302.458	634411.6524	1642.0542	EC2
61520	1014302.751	634412.5853	1642.0454	EC EC99 B EC98 B
61522	1014334.387	634406.1488	1639.7243	EC98
61523	1014371.423	634398.3747	1636.9856	EC98
61524	1014371.816	634398.2917	1637.0929	EC98
61525	1014371.578	634397.0065	1637.0833	EC98
61526	1014338.467	634405.0647	1642.1519	EC2
61527	1014338.299	634404.2061	1642.4726	EC1
61528	1014371.387	634397.2426	1642.4631	EC1
61529	1014371.519	634398.0434	1642.2711	EC1 EC2
61530	1014304.924	634422.1558	1642.3501	EC99 EC2 B
61532	1014304.946	634422.3543	1642.3876	EC2 EC B
61533	1014305.081	634422.9967	1642.3668	EC
61534	1014342.352	634414.2361	1639.5069	EC99
61535	1014342.286	634414.5296	1642.4857	EC2
61536	1014342.346	634415.2349	1642.3192	EC
61537	1014373.634	634408.5839	1642.3886	EC
61538	1014373.938	634408.5365	1642.4389	EC
61539	1014373.891	634408.7471	1642.345	EC
61540	1014373.401	634407.6467	1637.1642	EC99
61541	1014422.4	634397.5661	1637.1486	EC99
61542	1014420.145	634386.7949	1636.9881	EC99
61543	1014423.617	634398.5109	1642.4448	EC
61544	1014422.597	634397.868	1642.4539	EC2
61545	1014420.459	634387.0984	1642.4573	EC2
61546	1014421.468	634387.7712	1642.4586	EC
61547	1014268.039	634438.7515	1641.379	HDWL B
61548	1014267.995	634438.2954	1641.4872	HDWL
61549	1014226.431	634447.264	1641.4324	HDWL
61550	1014227.986	634453.9374	1641.5087	HDWL
61551	1014228.426	634453.859	1641.4769	HDWL
61552	1014227.026	634447.6205	1641.4632	HDWL CL
61553	1014226.168	634447.1216	1641.1167	BKL B
61554	1014227.111	634452.1735	1640.7302	BKL
61555	1014227.878	634454.5976	1639.4588	BKL
61556	1014228.786	634454.4716	1638.6058	BKL
61557	1014227.377	634448.0324	1637.2714	BKL
61558	1014230.445	634447.1362	1637.9522	INV-30IN RCP
61559	1014234.038	634446.376	1637.8316	INV-30IN RCP
61561	1014238.037	634445.6537	1637.7723	INV-30IN RCP
61562	1014240.071	634445.1152	1637.5523	BKL
61563	1014266.042	634439.7112	1637.6698	BKL
61564	1014268.512	634439.2163	1639.0429	BKL
61565	1014268.434	634438.0304	1640.037	BKL
61566	1014266.636	634438.1913	1641.3242	BKL CL
61567	1014181.85	634414.3358	1642.9152	EC3
61568	1014192.052	634419.9343	1642.9312	EC3 PC
61569	1014198.226	634421.767	1642.8969	EC3
61570	1014203.425	634421.7971	1642.8279	EC3 PT
61571	1014203.612	634421.7437	1641.7922	EC3
61572	1014524.587	634366.2307	1642.6969	EC

61573	1014524.161	634365.4703	1642.6864	EC2
61574	1014556.482	634358.7973	1642.867	EC2
61575	1014556.571	634359.5718	1642.8957	EC EC98 B
61576	1014558.252	634368.5646	1644.7056	EC98 BKL B
61577	1014558.547	634369.9151	1644.6399	EC98
61578	1014568.609	634368.2157	1644.7761	EC98
61579	1014568.371	634366.2595	1644.7338	BKL
61580	1014567.177	634357.6553	1642.8636	EC
61581	1014566.922	634356.839	1642.9178	EC2
61582	1014671.107	634338.6822	1643.1232	EC2
61583	1014671.199	634339.5995	1643.0685	EC
61584	1014671.989	634348.479	1646.1472	BKL
61585	1014672.412	634350.0733	1646.104	EC98
61586	1014776.16	634332.3159	1646.7401	EC98
61587	1014775.883	634330.3738	1646.6316	BKL
61588	1014774.283	634321.6572	1643.2557	EC
61589	1014773.983	634320.8507	1643.2655	EC2
61590	1014876.01	634303.0431	1643.5418	EC2
61591	1014876.066	634303.9279	1643.4986	EC
61592	1014877.517	634312.8697	1647.0146	BKL
61593	1014877.873	634314.7321	1646.9048	EC98
61594	1014982.731	634295.9817	1647.4628	EC98
61595	1014982.449	634294.4307	1647.4004	BKL
61596	1014980.9	634285.6913	1643.6908	EC
61597	1014980.874	634284.7286	1643.7129	EC2
61598	1015080.791	634267.4181	1643.9304	EC2
61599	1015080.972	634268.2989	1643.8871	EC
61600	1015082.184	634276.8736	1647.7778	BKL
61601	1015082.451	634278.6088	1647.8012	EC98
61602	1015189.639	634259.9249	1648.4673	EC98
61603	1015189.369	634258.5977	1648.3799	BKL
61604	1015187.779	634249.7827	1643.8533	EC
61605	1015187.399	634248.7489	1643.871	EC2
61606	1015247.085	634238.3868	1644.264	EC2
61607	1015246.984	634239.1874	1644.3419	EC
61608	1015248.891	634248.2983	1648.6005	BKL
61609	1015249.135	634249.6656	1648.6166	EC98
61610	1015268.084	634246.4167	1648.915	EC98
61611	1015266.295	634244.7903	1649.0187	BKL
61612	1015265.466	634238.2729	1648.8772	BKL
61613	1015266.611	634237.9554	1648.9368	EC98
61614	1015263.806	634221.7734	1648.9091	EC98
61615	1015262.399	634222.0942	1648.8883	BKL
61616	1015261.195	634215.4669	1648.9688	BKL
61617	1015262.281	634213.8076	1648.9751	EC98
61618	1015254.103	634214.8908	1648.8493	EC98
61619	1015254.235	634216.5439	1648.7617	BKL
61620	1015258.508	634239.4914	1645.6409	EC
61621	1015257.478	634238.6373	1645.6392	EC2
61622	1015255.006	634224.7936	1645.6418	EC2
61623	1015255.662	634223.4626	1645.6837	EC
61624	1015245.125	634227.5196	1644.2597	EC
61625	1015245.413	634228.4205	1644.2417	EC2
61626	1015243.623	634218.4773	1648.6502	BKL
61627	1015243.185	634217.1352	1648.6603	EC98
61628	1015183.875	634227.6044	1648.5343	EC98
61629	1015183.917	634228.78	1648.4759	BKL
61630	1015185.366	634237.8921	1643.8749	EC
61631	1015185.45	634238.9006	1643.9245	EC2

61632	1015079.217	634257.4017	1643.8966	EC2
61633	1015079.124	634256.4574	1643.8595	EC
61634	1015077.155	634247.6773	1647.9318	BKL
61635	1015077.103	634246.4126	1647.9587	EC98
61636	1014977.183	634263.6661	1647.4414	EC98
61637	1014977.403	634265.2592	1647.4526	BKL
61638	1014978.977	634273.8349	1643.6734	EC
61639	1014978.836	634274.8116	1643.694	EC2
61640	1014874.862	634292.9312	1643.4377	EC2
61641	1014874.314	634292.0759	1643.4012	EC
61642	1014872.828	634283.7128	1646.949	BKL
61643	1014872.866	634282.0181	1647.0049	EC98
61644	1014770.609	634299.6503	1646.6571	EC98
61645	1014770.849	634301.2832	1646.663	BKL
61646	1014772.241	634309.8919	1643.1513	EC
61647	1014771.959	634310.9308	1643.2472	EC2
61648	1014669.462	634328.7362	1643.0791	EC2
61649	1014669.442	634327.8662	1643.0649	EC
61650	1014667.596	634319.0853	1646.2225	BKL
61651	1014667.426	634317.5856	1646.0839	EC98
61652	1014563.323	634335.6989	1644.6871	EC98
61653	1014563.43	634337.0046	1644.6243	BKL
61654	1014565.049	634346.1167	1642.862	EC
61655	1014565.24	634346.9257	1642.882	EC2
61656	1014565.288	634346.9583	1642.8696	EC2
61657	1014554.85	634348.895	1642.8038	EC2
61658	1014552.854	634337.5967	1644.5663	EC98
61659	1014553.21	634338.8853	1644.5878	EC98 BKL
61660	1014554.679	634348.0179	1642.8193	EC98 EC
61661	1014521.96	634354.6863	1642.6975	EC
61662	1014522.371	634355.4392	1642.7053	EC2
61663	1014418.149	634377.1426	1642.5516	EC2
61664	1014417.954	634376.3334	1642.563	EC
61665	1014369.435	634386.448	1642.4939	EC
61666	1014369.273	634387.3074	1642.5133	EC2
61667	1014300.948	634401.563	1642.2543	EC2
61668	1014300.51	634400.8108	1642.2693	EC
61669	1014237.797	634413.992	1642.1054	EC EC1
61670	1014237.823	634414.8455	1642.0585	EC2 EC3
61671	1015303.149	634277.6055	1650.7208	HDWL B
61672	1015302.337	634277.5822	1650.7223	HDWL
61673	1015304.07	634256.3977	1650.5895	HDWL
61674	1015298.671	634246.0704	1650.5286	HDWL RRAP B
61675	1015318.343	634236.4917	1650.5386	HDWL
61676	1015323.606	634247.1303	1650.5307	HDWL
61677	1015341.203	634258.0949	1650.6329	HDWL
61678	1015340.86	634258.7974	1650.6762	HDWL
61679	1015323.138	634247.8127	1650.5495	HDWL
61680	1015317.948	634237.7106	1650.5893	HDWL
61681	1015312.072	634240.5105	1639.7757	INV-54IN
61682	1015305.72	634243.6389	1639.6988	INV-54IN
61683	1015299.928	634246.437	1650.5299	HDWL
61684	1015304.96	634256.3696	1650.5621	HDWL CL
61685	1015303.046	634278.1336	1649.8237	RRAP B
61686	1015305.727	634285.6063	1650.4286	RRAP
61687	1015302.646	634278.284	1649.9426	FNC-CL B
61688	1015304.936	634285.418	1649.6142	FNC-CL
61689	1015290.331	634288.0527	1649.7794	FNC-CL
61690	1015289.917	634288.5055	1650.0885	EDR B

2-54" CULVERT
U/S INVERTS

61691	1015305.016	634286.2452	1650.1545	FNC-BW
61692	1015308.946	634303.0329	1649.7896	RRAP
61693	1015307.793	634303.4909	1649.8503	FNC-BW
61694	1015291.739	634302.9482	1650.1998	EDR
61695	1015292.929	634373.9522	1650.6126	EDR
61696	1015308.945	634374.192	1650.4216	FNC-BW
61697	1015309.718	634374.1667	1650.5501	RRAP
61698	1015310.344	634433.2926	1650.9289	RRAP
61699	1015309.69	634433.4858	1650.802	FNC-BW
61700	1015293.199	634433.7183	1651.0905	EDR
61701	1015294.398	634483.6638	1651.5165	EDR
61702	1015310.726	634483.5159	1651.0389	FNC-BW
61703	1015311.882	634483.4352	1651.2277	RRAP
61704	1015313.622	634533.9393	1651.3304	RRAP
61705	1015311.691	634533.8322	1651.2535	FNC-BW
61706	1015294.246	634533.5623	1651.596	EDR
61707	1015294.932	634591.4137	1652.0139	EDR
61708	1015312.046	634592.2907	1651.3811	FNC-BW
61709	1015313.481	634592.31	1651.5447	RRAP
61710	1015314.006	634635.146	1651.8805	RRAP
61711	1015312.563	634635.0627	1651.9037	FNC-BW
61712	1015295.166	634633.6477	1652.1317	EDR
61713	1015295.969	634683.4973	1652.4999	EDR
61714	1015313.168	634683.0603	1651.9507	FNC-BW
61715	1015314.751	634683.2442	1651.861	RRAP
61716	1015314.881	634734.2642	1652.5454	RRAP
61717	1015313.343	634734.1994	1652.4555	FNC-BW
61718	1015296.519	634733.6377	1652.602	EDR
61719	1015296.781	634787.313	1652.7786	EDR
61720	1015312.492	634786.3977	1652.7171	FNC-BW
61721	1015313.747	634786.3849	1653.1347	RRAP
61722	1015311.591	634829.0004	1653.2136	RRAP
61723	1015313.158	634829.898	1652.9521	RRAP
61724	1015310.508	634837.8146	1652.9819	FNC-BW
61725	1015296.96	634838.4595	1653.1664	EDR
61726	1015308.209	634876.6787	1653.2689	EDR
61727	1015318.236	634840.6477	1653.0317	GATED
61728	1015325.961	634843.4772	1653.0722	FNC-BW B
61729	1015328.895	634835.1334	1652.7063	TOB B
61730	1015330.734	634835.9799	1652.2566	TOB
61731	1015327.322	634843.6478	1652.9216	TOB
61732	1015325.034	634844.3109	1652.9322	EDR1 B
61733	1015321.596	634875.7815	1653.1241	EDR1 TOB
61734	1015322.316	634936.1599	1653.8367	EDR1 TOB
61735	1015309.438	634936.7188	1653.6907	EDR
61736	1015310.855	634988.8226	1654.0776	EDR
61737	1015322.161	634987.6015	1654.2789	EDR1 TOB
61738	1015324.375	635039.6562	1654.4005	EDR1 TOB
61739	1015310.732	635040.8562	1654.3276	EDR
61740	1015311.646	635092.9483	1654.2825	EDR
61741	1015325.204	635091.8731	1654.2234	EDR1 TOB
61742	1015292.167	635093.5132	1653.8055	NG
61743	1015291.815	635043.5703	1654.0338	NG
61744	1015292.944	634993.7461	1653.8699	NG
61745	1015292.24	634942.4544	1653.6431	NG
61746	1015294.947	634893.0027	1653.0826	NG
61747	1015359.549	634846.8095	1653.5587	FNC-BW
61748	1015359.571	634787.4241	1652.449	FNC-BW
61749	1015372.612	634786.9912	1652.8337	NG

61750	1015371.709	634731.133	1652.4867	NG
61751	1015359.427	634731.3012	1651.6649	FNC-BW
61752	1015373.188	634679.2383	1652.246	NG
61753	1015359.313	634678.55	1651.2792	FNC-BW
61754	1015358.741	634629.6623	1650.1885	FNC-BW
61755	1015373.248	634628.7493	1652.3995	NG
61756	1015371.737	634586.4419	1650.4521	NG
61757	1015358.203	634585.6065	1649.0941	FNC-BW
61758	1015357.783	634534.1369	1649.1781	FNC-BW
61759	1015368.827	634533.385	1649.2649	NG
61760	1015371.551	634483.0065	1649.9411	NG
61761	1015357.548	634482.7485	1649.8226	FNC-BW
61762	1015356.421	634432.1754	1651.2245	FNC-BW
61763	1015371.33	634432.3303	1652.1118	NG
61764	1015371.949	634371.0249	1650.3891	NG
61765	1015355.469	634372.1288	1649.3727	FNC-BW
61766	1015354.221	634325.8617	1650.388	FNC-BW
61767	1015369.788	634324.1854	1650.3982	NG
61768	1015368.016	634286.9109	1650.5379	NG
61769	1015353.795	634287.3768	1650.3308	FNC-BW
61770	1015354.115	634245.9251	1651.2813	FNC-BW FNC-BW1 B
61771	1015370.199	634242.9043	1651.1245	FNC-BW
61772	1015370.095	634243.5153	1651.1383	NG
70000	1012949.377	636336.9088	1628.3325	NG
70001	1012903.489	636334.6405	1626.4769	NG
70002	1012857.375	636335.8078	1626.2342	NG
70003	1012854.242	636378.9253	1626.4881	NG
70004	1012899.233	636371.2862	1627.3088	NG
70005	1012949.471	636361.9513	1629.0688	NG
70006	1012950.888	636381.4461	1629.3756	NG
70007	1012950.812	636394.3774	1627.9212	NG
70008	1012952.583	636413.995	1628.4938	NG
70009	1012954.048	636426.4432	1628.4816	NG
70010	1012954.498	636434.9674	1630.0386	NG
70011	1012936.609	636410.7039	1628.9976	NG
70012	1012901.422	636415.5553	1628.5855	NG
70013	1012856.414	636418.523	1626.6238	NG
70014	1012857.459	636465.2476	1626.7185	NG
70015	1012884.734	636464.1617	1627.8332	NG
70016	1012919.956	636462.9637	1628.6438	NG
70017	1012941.409	636461.3335	1630.2145	NG
70018	1012959.122	636459.4139	1630.0301	NG
70019	1012966.883	636508.5114	1630.1506	NG
70020	1012930.301	636513.8818	1628.9008	NG
70021	1012889.467	636514.5238	1627.9417	NG
70022	1012856.847	636517.882	1626.6091	NG
70023	1012856.862	636569.7585	1626.2029	NG
70024	1012899.203	636565.5559	1627.2401	NG
70025	1012935.278	636562.248	1628.1236	NG
70026	1012966.842	636562.5855	1628.4242	NG
70027	1012963.371	636612.4908	1627.1881	NG
70028	1012928.405	636610.4394	1626.3929	NG
70029	1012889.049	636611.6139	1625.4644	NG
70030	1012856.53	636615.6593	1624.9336	NG
70031	1012860.444	636665.8096	1624.1567	NG
70032	1012905.058	636664.8274	1624.8139	NG
70033	1012939.833	636659.5388	1626.8098	NG
70034	1012957.026	636659.623	1626.4646	NG
70035	1012957.967	636675.9359	1626.0513	TOB B

70036	1012946.905	636684.3571	1625.4429	TOB
70037	1012935.681	636682.0193	1625.6299	TOB
70038	1012926.598	636674.8931	1625.2894	TOB
70039	1012914.659	636682.5145	1623.2121	TOE B
70040	1012931.089	636692.0043	1622.3967	TOE
70041	1012949.742	636693.4505	1621.7493	TOE
70042	1012958.319	636686.3402	1622.8022	TOE
70043	1012957.359	636699.7716	1621.9427	TOE B
70044	1012931.893	636698.0072	1621.7549	TOE
70045	1012906.386	636698.6807	1620.749	TOE
70046	1012874.618	636701.9165	1620.8125	TOE
70047	1012855.441	636698.1474	1620.4766	TOE
70048	1012847.578	636698.7284	1620.0444	TOE
70049	1012847.771	636686.2583	1620.1722	TOE B
70050	1012854.035	636689.89	1620.1565	TOE
70051	1012863.086	636692.3824	1620.8703	TOE
70052	1012878.499	636690.4057	1621.9343	NG
70053	1012903.668	636688.5435	1622.3261	NG
70054	1012903.392	636688.4443	1622.2827	NG
70055	1012908.969	636662.7606	1625.0638	NG
70056	1012883.722	636668.3946	1624.138	NG
70057	1012861.611	636669.3207	1624.0827	NG
70058	1012729.202	636212.3396	1619.0136	TOE B
70059	1012723.69	636228.7337	1618.5	TOE
70060	1012716.728	636240.3202	1618.731	TOE
70061	1012708.595	636246.4442	1618.5116	TOE
70062	1012694.684	636244.3354	1618.4921	TOE
70063	1012670.098	636237.1974	1618.4227	TOE
70064	1012648.293	636233.4566	1618.7596	TOE
70065	1012658.603	636216.0621	1619.7419	NG
70066	1012679.088	636223.5213	1618.2316	NG
70067	1012704.863	636228.6056	1618.3372	NG
70068	1012722.219	636222.0658	1618.4558	NG
70100	1013162.684	636101.0835	1635.3824	TOB B
70101	1013161.293	636114.8158	1632.7563	TOE B
70102	1013172.132	636122.6653	1632.6628	NG
70103	1013182.821	636142.8509	1633.2107	FNC-BW B
70104	1013187.415	636122.7948	1633.0699	FNC-BW
70105	1013217.305	636117.1083	1633.3186	TOE
70106	1013219.905	636104.6202	1635.4122	TOB
70107	1013221.402	636122.0823	1633.3676	NG
70108	1013270.754	636106.6844	1635.387	TOB
70109	1013270.224	636116.6972	1634.2317	TOE
70110	1013270.153	636120.5216	1634.0702	NG
70111	1013330.469	636116.7253	1636.1689	TOB
70112	1013329.385	636121.2678	1635.0329	TOE
70113	1013344.533	636116.9889	1636.4253	TOB
70114	1013351.702	636121.3654	1635.4494	TOE
70115	1013353.329	636121.439	1635.4102	FNC-BW
70116	1013353.14	636118.2726	1635.4012	NG
70117	1013348.495	636064.8993	1635.3142	FNC-BW
70118	1013346.777	636064.6614	1635.4152	NG
70119	1013340.268	636065.9987	1636.2804	NG
70120	1013333.732	636010.0071	1635.8589	NG
70121	1013340.685	636008.5781	1635.147	NG
70122	1013343.541	636008.8796	1635.2611	FNC-BW
70123	1013330.675	636095.9725	1636.1426	NG
70124	1013275.359	636090.1627	1635.7471	NG
70125	1013218.978	636091.2317	1635.5529	NG

70126	1013166.701	636093.6229	1635.3263	NG
70127	1013128.388	636116.5237	1632.0071	FNC-BW B
70128	1013126.31	636208.9578	1631.3766	FNC-BW
70129	1013167.494	636207.8258	1631.1616	FNC-BW
70130	1013182.729	636143.1328	1633.3503	FNC-BW
70200	1014170.049	634422.1529	1635.313	TOE B TOE1 B
70201	1014157.552	634430.0162	1634.0967	TOE PC
70202	1014181.858	634414.908	1634.8916	TOE1 PC
70203	1014188.608	634418.8549	1635.8492	TOE1
70204	1014196.545	634421.8916	1636.1932	TOE1
70205	1014203.521	634422.1411	1636.2672	TOE1 PT
70206	1014176.294	634435.2086	1635.9143	TOE
70207	1014194.161	634433.5608	1636.2695	TOE PT
70208	1014205.581	634431.1888	1636.563	TOE
70209	1014177.967	634417.3356	1635.3635	INV-BOX
70210	1014169.856	634422.4377	1635.3993	INV-BOX
70211	1014161.002	634428.0938	1635.5293	INV-BOX
70212	1014205.483	634421.9647	1637.78	INV-24IN
70213	1014225.949	634427.1008	1637.5753	INV-30IN
70214	1014229.816	634426.3337	1637.5282	INV-30IN
70215	1014233.751	634425.5539	1637.5069	INV-30IN
70216	1014302.469	634411.3043	1636.8091	TOE
70217	1014301.039	634401.9519	1636.7956	TOE1
70218	1014370.559	634387.3691	1636.9583	TOE1
70219	1014371.201	634397.0304	1636.9814	TOE
70220	1014420.587	634386.7135	1637.2414	TOE B
70221	1014418.141	634377.5299	1637.1154	TOE1
70222	1014549.941	634349.9092	1637.1875	TOE1
70223	1014552.839	634359.191	1637.3606	TOE
70224	1014567.1	634356.5439	1637.2627	TOE
70225	1014669.16	634329.1651	1637.6184	TOE1
70226	1014670.934	634338.3378	1637.7227	TOE
70227	1014773.959	634320.4647	1637.82	TOE
70228	1014772.444	634311.0842	1637.8156	TOE1
70229	1014856.662	634297.1894	1639.5382	INV-24IN
70230	1014876.025	634302.6837	1638.0191	TOE
70231	1014875.318	634293.1524	1637.9465	TOE1
70232	1014979.21	634274.9693	1638.0543	TOE1
70233	1014980.888	634284.2688	1638.3497	TOE
70234	1015079.006	634257.7925	1638.4167	TOE1
70235	1015080.781	634267.0574	1638.5272	TOE
70236	1015187.474	634248.5306	1638.7124	TOE
70237	1015185.665	634239.1157	1638.6329	TOE1
70238	1015245.292	634228.6812	1638.6237	TOE1
70239	1015254.401	634225.5947	1638.7179	TOE1
70240	1015256.802	634237.9735	1638.8765	TOE1
70241	1015247.063	634238.1247	1638.8822	TOE1 TOE
70242	1015255.283	634228.8097	1638.753	INV-54IN
70243	1015256.485	634235.1842	1638.8735	INV-54IN
70244	1015289.806	634234.9021	1651.5805	MHST
70245	1015289.719	634228.501	1651.4054	MHST
70246	1015300	634246.4554	1639.71	EC B EC1 B
70247	1015301.249	634249.1936	1639.7656	EC
70248	1015317.799	634237.6997	1639.7272	EC1
70249	1015319.457	634240.6991	1639.7352	EC1
70250	1015322.798	634247.7869	1646.22	EC1
70251	1015340.726	634258.9259	1649.8589	EC1
70252	1015331.103	634263.7418	1646.1598	EC1
70253	1015312.83	634272.7687	1646.0914	EC1

2-54" CULVERT
D/S INVERTS

2-54" MANHOLE RIMS
-12.68=1638.90
-12.63=1638.78
SEE SURVEYORS
FIELD NOTES FOR
MH DIP INFORMATION

70254	1015303.314	634277.5844	1650.0605	EC1
70255	1015305.22	634256.2912	1646.0074	EC1 EC
70256	1015312.756	634272.5783	1646.1051	BKL B
70257	1015305.735	634256.83	1646.0777	BKL
70258	1015322.999	634248.4274	1646.2066	BKL B
70259	1015331.113	634263.6235	1646.1636	BKL
70260	1015313.416	634273.1632	1646.1691	TOE B TOE1 B
70261	1015331.155	634264.048	1646.153	TOE1
70262	1015319.998	634295.6495	1646.1773	TOE
70263	1015339.812	634291.0124	1646.1242	TOE1
70264	1015343.296	634375.0088	1646.2225	TOE1
70265	1015320.164	634373.889	1645.7152	TOE
70266	1015322.54	634434.1513	1645.9916	TOE
70267	1015339.74	634433.0938	1645.937	TOE1
70268	1015340.176	634484.6914	1646.8645	TOE1
70269	1015325.339	634483.1084	1646.8968	TOE
70270	1015328.41	634533.0044	1646.785	TOE
70271	1015341.592	634531.6717	1647.1585	TOE
70272	1015341.77	634588.4358	1646.6205	TOE1
70273	1015327.084	634590.168	1646.7577	TOE
70274	1015326.653	634634.9352	1647.3941	TOE
70275	1015346.525	634632.873	1647.75	TOE1
70276	1015342.667	634684.8645	1647.3224	TOE1
70277	1015328.467	634682.3433	1647.5982	TOE
70278	1015329.513	634733.2154	1647.146	TOE
70279	1015341.445	634734.3078	1647.2508	TOE1
70280	1015328.697	634786.4519	1648.9549	TOE
70281	1015343.95	634792.3473	1648.8342	TOE1
70282	1015344.025	634794.1417	1648.8186	FL B
70283	1015325.436	634843.8997	1653.0931	EC B
70284	1015328.943	634834.7758	1653.0286	EC
70285	1015343.966	634792.351	1648.9087	EC
70286	1015328.894	634786.9781	1649.0514	EC
70287	1015313.889	634829.4523	1653.0269	EC
70288	1015310.7	634838.6587	1653.0083	EC CL
70289	1015329.07	634834.6222	1652.7237	RRAP B
70290	1015336.912	634835.1489	1650.5061	RRAP
70291	1015343.733	634835.4225	1650.5839	RRAP
70292	1015354.377	634835.0169	1652.9303	RRAP
70293	1015340.571	634835.0823	1650.1825	FL
70294	1015339.611	634845.0072	1650.1698	FL
70295	1015339.245	634878.1148	1650.345	FL
70296	1015339.161	634936.3823	1650.5067	FL
70297	1015340.535	634988.1556	1651.1331	FL
70298	1015341.679	635039.9173	1651.5543	FL
70299	1015342.637	635091.9685	1651.5505	FL
70300	1015358.539	635090.2435	1654.9264	TOB B
70301	1015375.853	635090.6253	1655.0874	NG
70302	1015376.205	635040.4206	1655.1792	NG
70303	1015357.47	635040.0308	1654.8937	TOB
70304	1015359.49	634987.5686	1654.7242	TOB
70305	1015375.792	634986.4496	1655.0757	NG
70306	1015374.264	634934.7074	1654.4618	NG
70307	1015356.362	634934.995	1654.3035	TOB
70308	1015356.16	634881.325	1654.0756	TOB
70309	1015370.615	634879.7379	1653.8881	NG
70310	1015369.881	634847.5916	1653.5782	NG
70311	1015355.92	634848.2057	1653.2813	TOB
70312	1015354.437	634835.225	1653.041	TOB

70313	1015359.056	634785.5623	1653.1392	RRAP
70314	1015358.2	634728.8598	1652.3669	RRAP
70315	1015357.893	634678.4026	1651.4977	RRAP
70316	1015357.909	634629.6463	1650.7031	RRAP
70317	1015357.697	634585.8077	1649.5127	RRAP
70318	1015356.526	634532.8616	1649.3317	RRAP
70319	1015356.572	634480.1123	1649.8753	RRAP
70320	1015355.962	634430.2949	1651.1884	RRAP
70321	1015354.849	634367.9017	1649.9361	RRAP
70322	1015353.64	634291.8749	1650.81	RRAP
70323	1015345.116	634256.7137	1650.6566	RRAP
70324	1015342.539	634252.7326	1650.9714	RRAP
70325	1015327.849	634242.7292	1650.4021	RRAP
70326	1015323.282	634232.7503	1650.7756	RRAP
70327	1015320.506	634228.708	1651.6331	RRAP
70328	1015312.176	634233.7662	1651.025	RRAP
70329	1015296.679	634242.244	1650.8702	RRAP
70330	1015298.024	634246.0125	1650.0117	RRAP

APPENDIX D

HYROLOGIC ANALYSIS SUPPORTING DOCUMENTATION

(none)

APPENDIX E.1

MANNING'S N VALUE DOCUMENTATION

Post Project - Photo #1: I-17 Box Culvert Inlet Headwall

Post Project - Photo #2: Concrete Channel

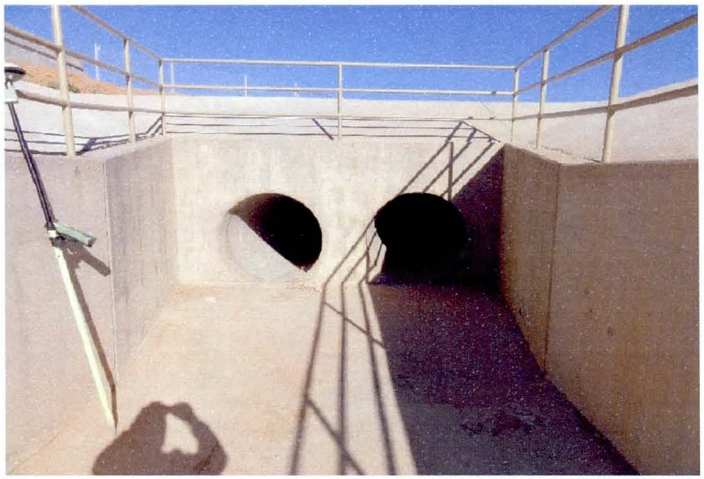

Post Project - Photo #3: 2-54" Outlet Headwall

Post Project - Photo #4: 2-54" Inlet Headwall

Post Project - Photo #5: Riprap Channel

Pre Project - Photo #1: I-17 Box Culvert Outlet Headwall

Pre Project - Photo #2: I-17 Box Culvert Inlet Headwall (Removed)

Pre Project - Photo #3: Upstream of I-17 Box Culvert

Pre Project - Photo #4: Near Sonoran Crossing Property Limit

Pre Project - Photo #5: Upstream of Sonoran Crossing Property Limit

DETERMINATION OF MANNING'S ROUGHNESS COEFFICIENTS

Project: Sonoran Crossing LOMR
Stream: CAP Wash East
Location: Study Reach
Notes: Existing Wash

Channel Conditions		Manning's n Adjustment		Left Overbank	Left Bank (DG)	Left Bank (Rip-Rap)	Channel	Right Bank (DG)	Right Bank (Rip-Rap)	Right Overbank
Channel Material	Firm Soil	n_b	.025 - .032							
	Coarse Sand		.026 - .035				0.026			
	Gravel		.028 - .035	0.028						0.028
	Cobble		.030 - .050							
	Boulder		.040 - .070							
Degree of Irregularity	Smooth	n_1	0	0.000			0.000			0.000
	Minor		.001 - .005							
	Moderate		.006 - .010							
	Severe		.011 - .020							
Effects of Obstruction	Negligible	n_2	.000 - .004	0.003			0.000			0.003
	Minor		.005 - .015							
	Appreciable		.020 - .030							
	Severe		.040 - .060							
Vegetation	Small	n_3	.002 - .010	0.005			0.007			0.005
	Medium		.010 - .025							
	Large		.025 - .050							
	Very Large		.050 - .100							
Variations in Channel Cross Section	Gradual	n_4	0	0.000			0.000			0.000
	Occ. Alt.		.001 - .005							
	Freq. Alt.		.010 - .015							
Subtotal				0.036			0.033			0.036
Degree of Meandering	Minor	m	1	1			1			1
	Appreciable		1.15							
	Severe		1.3							
$n = (n_b+n_1+n_2+n_3+n_4)m$				0.036			0.033			0.036
Manning's n Value Used				**0.036**	**0.000**	**0.000**	**0.033**	**0.000**	**0.000**	**0.036**

APPENDIX E.2

I-17 FREEWAY BOX CULVERT CALCULATIONS

HY-8 Culvert Analysis Report

Crossing - ADOT I-17 Culvert Crossing, Design Discharge - 280.0 cfs

Culvert - Pre Project Condition, Culvert Discharge - 280.0 cfs

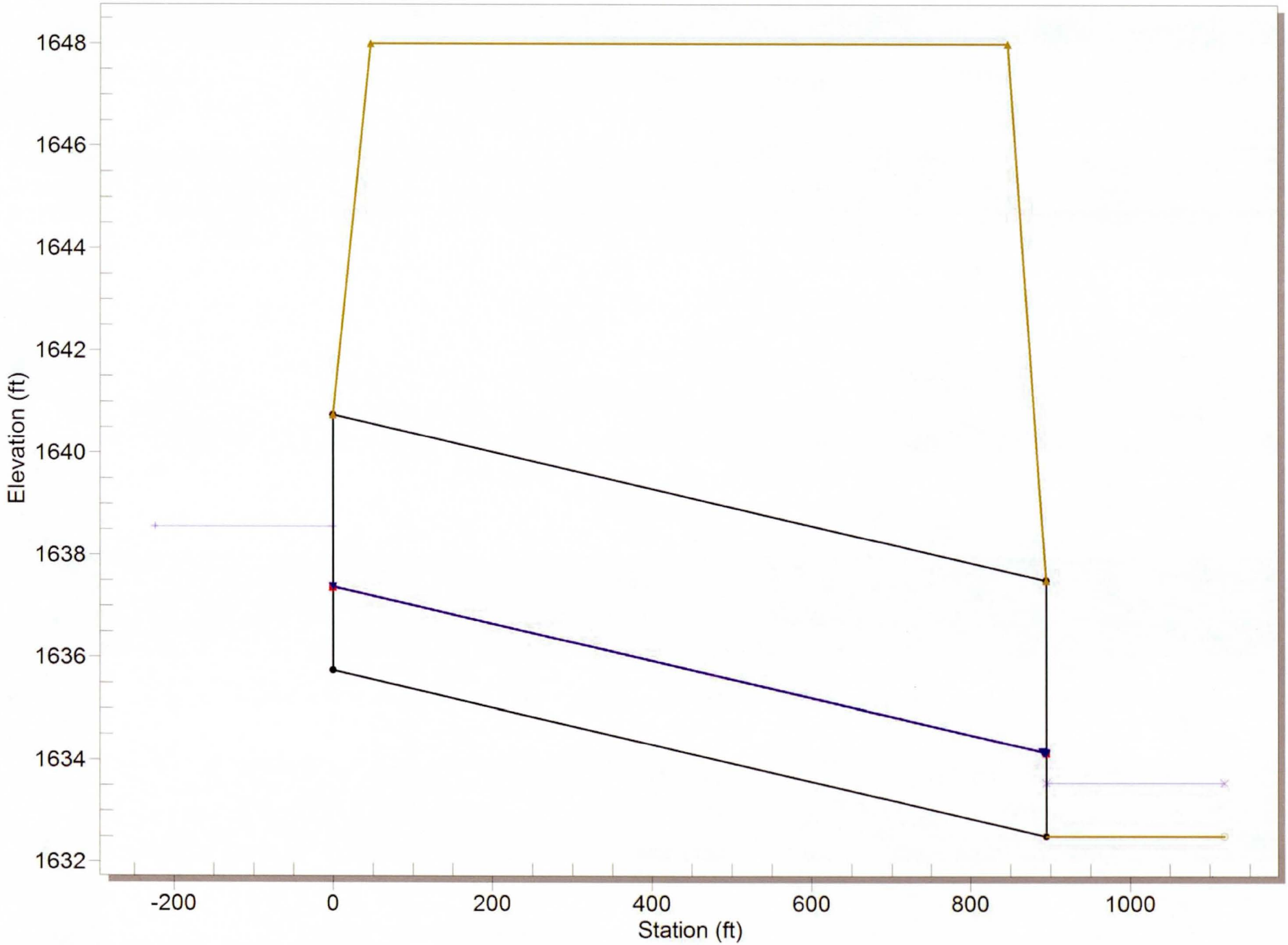

Table 1 - Culvert Summary Table: Pre Project Condition

Total Discharge (cfs)	Culvert Discharge (cfs)	Headwater Elevation (ft)	Inlet Control Depth (f	Outlet Control Depth (f	Flow Type	Normal Depth (f	Critical Depth (f	Outlet Depth (f	Tailwater Depth (f	Outlet Velocity (ft/s)	Tailwater Velocity (ft/s)
	0.00	0.00	1635.7	0.000	0.000	0-NF	0.000	0.000	0.000	0.000	0.000
	35.00	35.00	1636.4	0.692	0.703	2-M2c	0.415	0.404	0.404	0.293	3.608
	70.00	70.00	1636.8	1.098	1.122	2-M2c	0.644	0.642	0.642	0.447	4.545
	105.00	105.00	1637.2	1.439	1.466	2-M2c	0.854	0.841	0.841	0.572	5.203
	140.00	140.00	1637.5	1.743	1.778	2-M2c	1.030	1.019	1.019	0.682	5.727
	175.00	175.00	1637.8	2.023	2.064	2-M2c	1.193	1.182	1.182	0.782	6.169
	210.00	210.00	1638.0	2.284	2.326	2-M2c	1.357	1.335	1.335	0.874	6.556
	245.00	245.00	1638.3	2.531	2.580	2-M2c	1.500	1.479	1.479	0.961	6.901
	280.00	280.00	1638.5	2.758	2.819	2-M2c	1.641	1.617	1.617	1.044	7.216
	315.00	315.00	1638.7	2.976	3.046	2-M2c	1.783	1.749	1.749	1.123	7.504
	350.00	350.00	1639.0	3.186	3.266	2-M2c	1.916	1.876	1.876	1.199	7.773

****

Straight Culvert

Inlet Elevation (invert): 1635.74 ft, Outlet Elevation (invert): 1632.51 ft

Culvert Length: 894.71 ft, Culvert Slope: 0.0036

****

Site Data - Pre Project Condition

Site Data Option: Culvert Invert Data
Inlet Station: 0.00 ft
Inlet Elevation: 1635.74 ft
Outlet Station: 894.70 ft
Outlet Elevation: 1632.51 ft
Number of Barrels: 3

Culvert Data Summary - Pre Project Condition

Barrel Shape: Concrete Box
Barrel Span: 8.00 ft
Barrel Rise: 5.00 ft
Barrel Material: Concrete
Embedment: 0.00 in
Barrel Manning's n: 0.0140
Culvert Type: Straight
Inlet Configuration: Square Edge (90º) Headwall
Inlet Depression: NONE

Crossing Discharge Data

Discharge Selection Method: Specify Minimum, Design, and Maximum Flow
Minimum Flow: 0 cfs
Design Flow: 280 cfs
Maximum Flow: 350 cfs

Table 2 - Summary of Culvert Flows at Crossing: ADOT I-17 Culvert Crossing

Headwater Elevatio	Total Discharge (c	Pre Project Conditi Discharge (cfs)	Roadway Discharg (cfs)	Iterations
1635.74	0.00	0.00	0.00	1
1636.44	35.00	35.00	0.00	1
1636.86	70.00	70.00	0.00	1
1637.21	105.00	105.00	0.00	1
1637.52	140.00	140.00	0.00	1
1637.80	175.00	175.00	0.00	1
1638.07	210.00	210.00	0.00	1
1638.32	245.00	245.00	0.00	1
1638.56	280.00	280.00	0.00	1
1638.79	315.00	315.00	0.00	1
1639.01	350.00	350.00	0.00	1
1648.00	1493.41	1493.41	0.00	Overtopping

Table 3 - Downstream Channel Rating Curve (Crossing: ADOT I-17 Culvert Cro

Flow (cfs)	Water Surfac Elev (ft)	Depth (ft)	Velocity (ft/s	Shear (psf)	Froude Number
0.00	1632.51	0.00	0.00	0.00	0.00
35.00	1632.80	0.29	4.50	0.17	1.46
70.00	1632.96	0.45	5.91	0.26	1.56
105.00	1633.08	0.57	6.93	0.34	1.61
140.00	1633.19	0.68	7.75	0.40	1.65
175.00	1633.29	0.78	8.45	0.46	1.68
210.00	1633.38	0.87	9.06	0.52	1.71
245.00	1633.47	0.96	9.62	0.57	1.73
280.00	1633.55	1.04	10.12	0.62	1.75
315.00	1633.63	1.12	10.59	0.67	1.76
350.00	1633.71	1.20	11.02	0.71	1.77

Tailwater Channel Data - ADOT I-17 Culvert Crossing

Tailwater Channel Option: Rectangular Channel
Bottom Width: 26.50 ft
Channel Slope: 0.0095
Channel Manning's n: 0.0140
Channel Invert Elevation: 1632.51 ft

Roadway Data for Crossing: ADOT I-17 Culvert Crossing

Roadway Profile Shape: Constant Roadway Elevation
Crest Length: 100.00 ft
Crest Elevation: 1648.00 ft
Roadway Surface: Paved
Roadway Top Width: 800.00 ft

HY-8 Culvert Analysis Report

Crossing - I-17 3-8'x5', Design Discharge - 280.0 cfs

Culvert - LOMR Construction, Culvert Discharge - 280.0 cfs

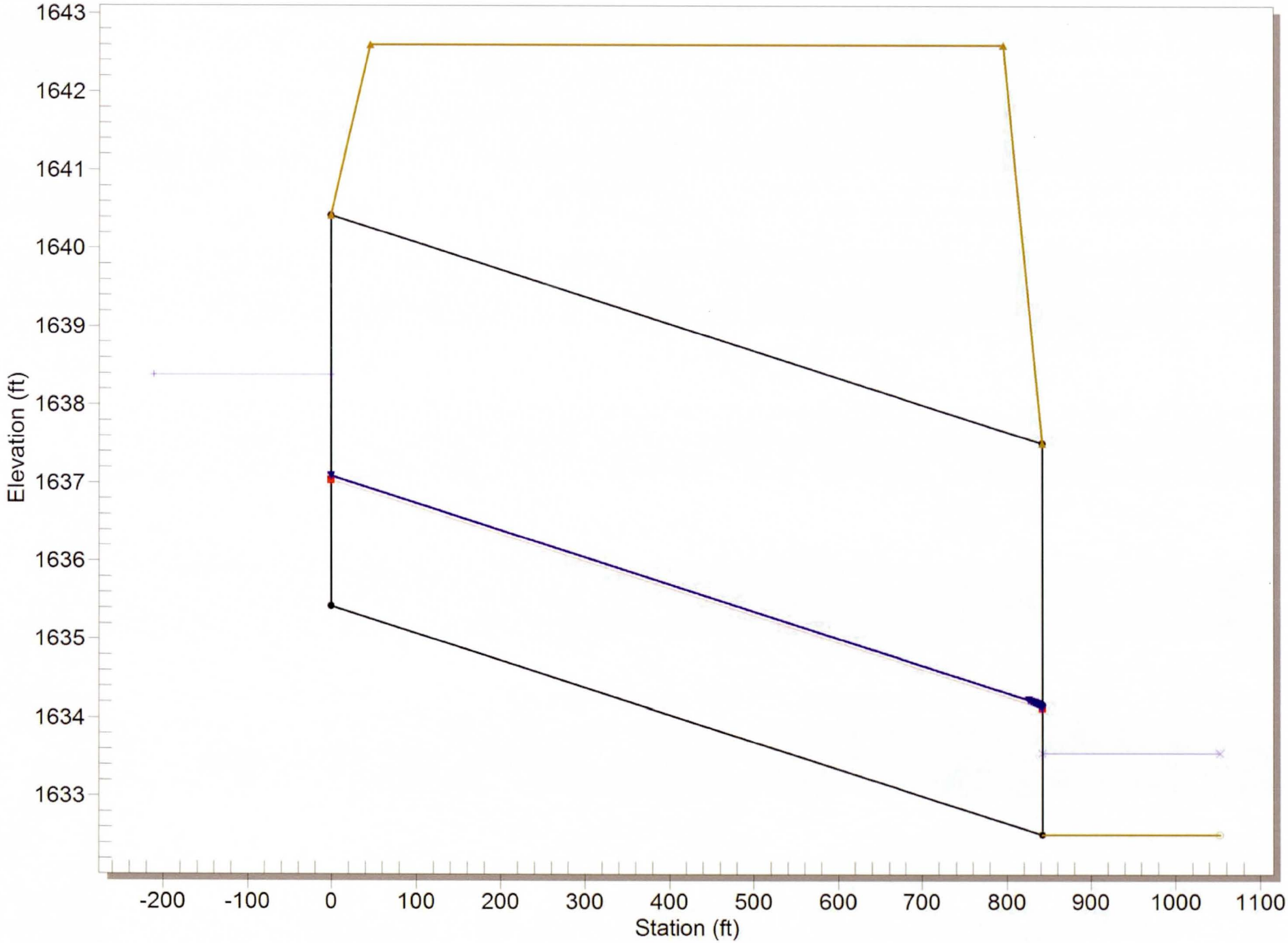

Table 1 - Culvert Summary Table: LOMR Construction

Total Discharge (cfs)	Culvert Discharge (cfs)	Headwater Elevation (ft)	Inlet Control Depth (f	Outlet Control Depth (f	Flow Type	Normal Depth (f	Critical Depth (f	Outlet Depth (f	Tailwater Depth (f	Outlet Velocity (ft/s)	Tailwater Velocity (ft/s)
	0.00	0.00	1635.42	0.000	0.000	0-NF	0.000	0.000	0.000	0.000	0.000
	35.00	35.00	1636.16	0.685	0.737	2-M2c	0.424	0.404	0.404	0.293	3.608
	70.00	70.00	1636.60	1.087	1.180	2-M2c	0.653	0.642	0.642	0.447	4.545
	105.00	105.00	1636.96	1.424	1.539	2-M2c	0.868	0.841	0.841	0.572	5.203
	140.00	140.00	1637.29	1.726	1.869	2-M2c	1.044	1.019	1.019	0.682	5.727
	175.00	175.00	1637.59	2.002	2.169	2-M2c	1.211	1.182	1.182	0.782	6.169
	210.00	210.00	1637.86	2.261	2.444	2-M2c	1.376	1.335	1.335	0.874	6.556
	245.00	245.00	1638.11	2.506	2.711	2-M2c	1.521	1.479	1.479	0.961	6.901
	280.00	280.00	1638.38	2.723	2.961	2-M2c	1.666	1.617	1.617	1.044	7.216
	315.00	315.00	1638.62	2.934	3.198	2-M2c	1.811	1.749	1.749	1.123	7.504
	350.00	350.00	1638.85	3.140	3.437	2-M2c	1.944	1.876	1.876	1.199	7.773

****

Straight Culvert

Inlet Elevation (invert): 1635.42 ft, Outlet Elevation (invert): 1632.51 ft

Culvert Length: 841.71 ft, Culvert Slope: 0.0035

****

Site Data - LOMR Construction

Site Data Option: Culvert Invert Data
Inlet Station: 0.00 ft
Inlet Elevation: 1635.42 ft
Outlet Station: 841.70 ft
Outlet Elevation: 1632.51 ft
Number of Barrels: 3

Culvert Data Summary - LOMR Construction

Barrel Shape: Concrete Box
Barrel Span: 8.00 ft
Barrel Rise: 5.00 ft
Barrel Material: Concrete
Embedment: 0.00 in
Barrel Manning's n: 0.0140
Culvert Type: Straight
Inlet Configuration: Square Edge (0º flare) Wingwall
Inlet Depression: NONE

Crossing Discharge Data

Discharge Selection Method: Specify Minimum, Design, and Maximum Flow
Minimum Flow: 0 cfs
Design Flow: 280 cfs
Maximum Flow: 350 cfs

Table 2 - Summary of Culvert Flows at Crossing: I-17 3-8'x5'

Headwater Elevatio	Total Discharge (c	LOMR Constructic Discharge (cfs)	Roadway Discharg (cfs)	Iterations
1635.42	0.00	0.00	0.00	1
1636.16	35.00	35.00	0.00	1
1636.60	70.00	70.00	0.00	1
1636.96	105.00	105.00	0.00	1
1637.29	140.00	140.00	0.00	1
1637.59	175.00	175.00	0.00	1
1637.86	210.00	210.00	0.00	1
1638.13	245.00	245.00	0.00	1
1638.38	280.00	280.00	0.00	1
1638.62	315.00	315.00	0.00	1
1638.85	350.00	350.00	0.00	1
1642.60	1041.21	1041.21	0.00	Overtopping

Table 3 - Downstream Channel Rating Curve (Crossing: I-17 3-8'x5')

Flow (cfs)	Water Surfac Elev (ft)	Depth (ft)	Velocity (ft/s	Shear (psf)	Froude Number
0.00	1632.51	0.00	0.00	0.00	0.00
35.00	1632.80	0.29	4.50	0.17	1.46
70.00	1632.96	0.45	5.91	0.26	1.56
105.00	1633.08	0.57	6.93	0.34	1.61
140.00	1633.19	0.68	7.75	0.40	1.65
175.00	1633.29	0.78	8.45	0.46	1.68
210.00	1633.38	0.87	9.06	0.52	1.71
245.00	1633.47	0.96	9.62	0.57	1.73
280.00	1633.55	1.04	10.12	0.62	1.75
315.00	1633.63	1.12	10.59	0.67	1.76
350.00	1633.71	1.20	11.02	0.71	1.77

Tailwater Channel Data - I-17 3-8'x5'

Tailwater Channel Option: Rectangular Channel
Bottom Width: 26.50 ft
Channel Slope: 0.0095
Channel Manning's n: 0.0140
Channel Invert Elevation: 1632.51 ft

Roadway Data for Crossing: I-17 3-8'x5'

Roadway Profile Shape: Constant Roadway Elevation
Crest Length: 100.00 ft
Crest Elevation: 1642.60 ft
Roadway Surface: Paved
Roadway Top Width: 750.00 ft

APPENDIX E.3

PIPE CULVERT LOSS CALCUATIONS

Access Hole Losses

* Methodology from ADOT Highway Drainage Design Manual - Hydraulics, 2007; Section 13.4.7

Manhole No. 307, 2-54" Pipe Culvert

Initial Head Loss Coeff.	
Ko=	0.73

Correction Factors		
C_D=	1.00	
C_d=	0.57	
C_Q=	1.00	
C_P=	1.00	
C_B=	1.00 *	*Conservatively set at 1.0 (no benefit from benching)

Final Head Loss Coeff	
K=	0.41

System Parameters	
b=	5 ft.
D_o=	4.5 ft.
Δ=	152 °
D_i=	4.5 ft.
d=	5.52 ft.
Q_i=	140 cfs
Q_o=	140 cfs
h=	3.67 ft.

Bend Losses

* Methodology from ADOT Highway Drainage Design Manual - Hydraulics, 2007; Section 13.4.4

Outlet - 2-54" Pipe Culvert

Δ= 10 ° (Horizontal Alignment Change)
Kbend= 0.03

Inlet - 2-54" Pipe Culvert

Δ= 35 ° (Horizontal Alignment Change)
Kbend= 0.12

Trash Rack Design

* Methodology from Drainage Design Manual for Maricopa County, Volume II Hydraulics, 2010

	CAP Wash East Headwall	
Design Flow (cfs)	280	
Target Velocity (fps)	3.9	Approach Velocity (RM 0.409532)
Target Flow Area	71.79	
Blockage Factor	50%	
Increase due to blockage	143.59	
Steel Area (20% of Total)	35.90	
Target Total Area	**179.49**	
Outlet Pipe Size (ID)	54	
Headwall Width (W)	20	
Trash Rack Height (J)	2.5	
Apron Depth (F)	4.3	
Wingwall Angle	0	
Apron Length (L)	20.00	
Grate Area	99.48	
Steel Spacing (in)	6	
# of Bars	39	
Actual Steel Area (ft^2)	8.08	
Net Area	91.40	
Flow Area	45.70	
Flow Velocity	**6.13**	**Grate Velocity**
Head Loss, Hg (ft)	**0.5**	

Calculated By: JEP

Date: 4/1/2013

CAP East Wash Post Design Plan: CAP East Wash Post Design 3/27/2013

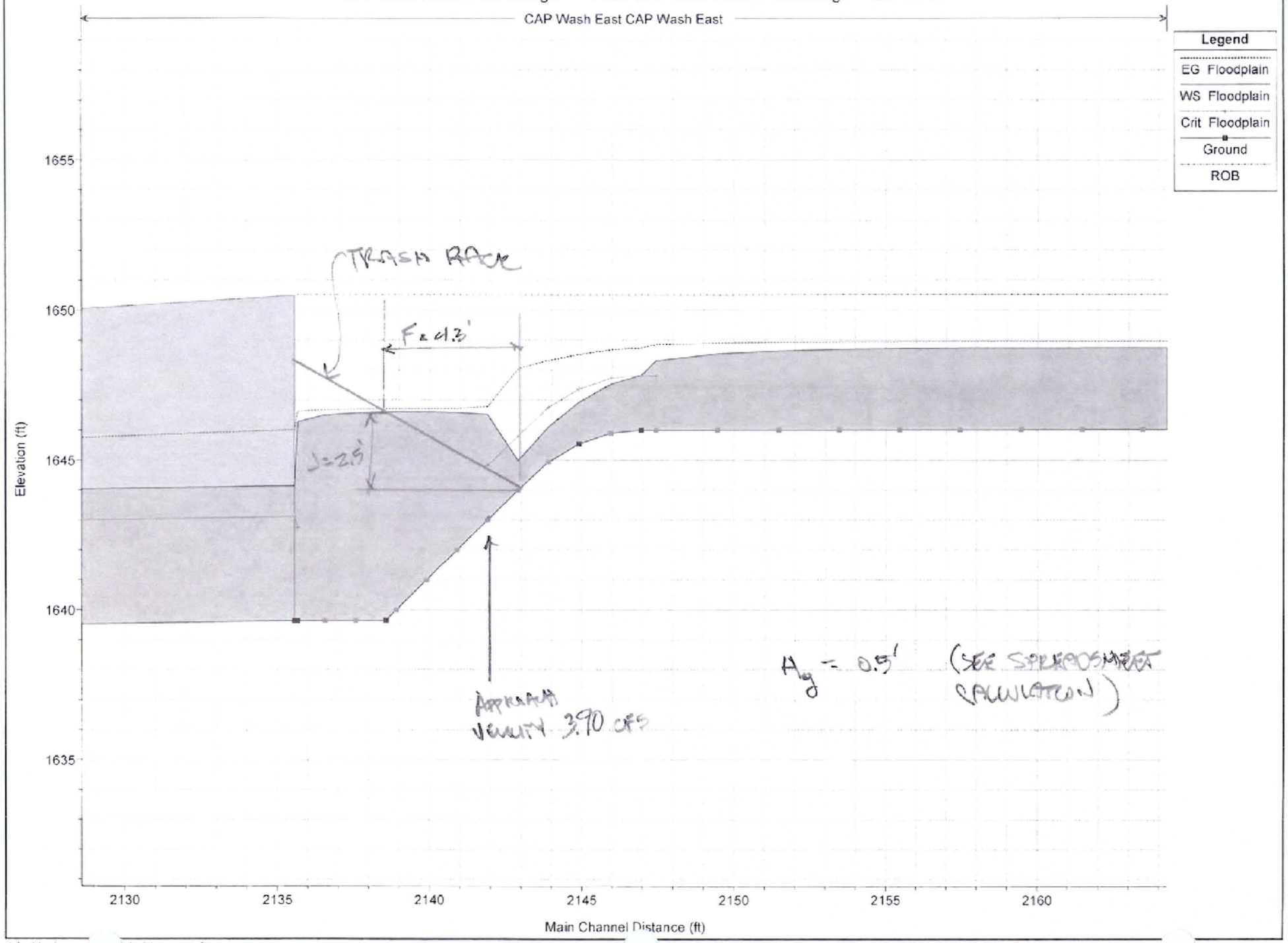

APPENDIX E.4

PRE-PROJECT CONDITIONS HEC-RAS OUTPUT

HEC-RAS Version 4.1.0 Jan 2010
U.S. Army Corps of Engineers
Hydrologic Engineering Center
609 Second Street
Davis, California

```
X     X  XXXXXX    XXXX        XXXX       XX      XXXX
X     X  X        X    X       X   X     X  X    X
X     X  X        X            X   X    X    X   X
XXXXXXX  XXXX     X       XXX  XXXX     XXXXXX    XXXX
X     X  X        X            X  X     X    X        X
X     X  X        X    X       X   X    X    X        X
X     X  XXXXXX    XXXX        X    X   X    X   XXXXX
```

PROJECT DATA
Project Title: CAP Wash East Pre Project
Project File : CAPWashEastPre.prj
Run Date and Time: 2/13/2014 2:47:20 PM

Project in English units

Project Description:
CAP WASH EAST FLOODPLAIN DELINEATION
PRE PROJECT MODEL
COMPLETED AS PART OF
THE LOMR APPLICATION FOR THE FOLLOWING PROJECTS:
SONORAN CROSSING

I-17 NORTHBOUND FRONTAGE ROAD
DIBBLE ENGINEERING
FEBRUARY,
2014

Topographic mapping provided by by Kenney Aerial Mapping Inc. The flight date was August 18, 2011 at a map scale of 1 inch = 40 feet. This mapping is based on the Maricopa County Department of Transportation (MCDOT) Geodetic Densification and Cadastral Survey (GDACS), 1983 North American Datum (NAD), modified to ground horizontally; and the National Geodetic Vertical Datum of 1929 (NGVD 29), vertically.

Cross sections face
downstream

Starting water surface elvation derived from HY8 analysis of
downstream culvert (3 barrel 8'x5' RCBC)

Hydrologic values are based on FEMA
CLOMR dated October 17, 2008 FEMA Case No.: 09-09-0132R that updates the 1% annual chance flows for the CAP Wash-East. The CAP Wash-East October 17, 2008 CLOMR defines the 100-year peak discharge at Carefree Highway as 120 cfs, and 280 cfs at Interstate 17. A flow rate of 280cfs is used in this study.

PLAN DATA

Plan Title: CAP Wash East Pre Project
Plan File : j:\2012\111204 Macerich NBCC\Post-Design\LOMR\CAP Wash East\CD Contents\Hydraulic Models\HEC-RAS\Pre Project\CAPWashEastPre.p01

Geometry Title: CAP Wash East Pre Project
Geometry File : j:\2012\111204 Macerich NBCC\Post-Design\LOMR\CAP Wash East\CD Contents\Hydraulic Models\HEC-RAS\Pre Project\CAPWashEastPre.g01

Flow Title : CAP Wash East Pre Project
Flow File : j:\2012\111204 Macerich NBCC\Post-Design\LOMR\CAP Wash East\CD Contents\Hydraulic Models\HEC-RAS\Pre Project\CAPWashEastPre.f01

Plan Summary Information:
Number of: Cross Sections = 19 Multiple Openings = 0
Culverts = 0 Inline Structures = 0

Bridges = 0 Lateral Structures = 0

Computational Information
Water surface calculation tolerance = 0.01
Critical depth calculation tolerance = 0.01
Maximum number of iterations = 20
Maximum difference tolerance = 0.3
Flow tolerance factor = 0.001

Computation Options
Critical depth computed only where necessary
Conveyance Calculation Method: At breaks in n values only
Friction Slope Method: Average Conveyance
Computational Flow Regime: Subcritical Flow

Encroachment Data
Equal Conveyance = True
Left Offset = 0
Right Offset = 0

River = CAP Wash East Reach = CAP Wash East

RS	Profile	Method	Value1	Value2
0.621	Floodway	1	9978.9	10033.2
0.541	Floodway	1	9977.7	10061.76
0.482	Floodway	1	9993.6	110048.93
0.471	Floodway	1	9977.6	210025.19
0.464	Floodway	1	9982.5	710034.29
0.460	Floodway	1	9990.2	10039.59
0.455	Floodway	1	9986.5	710032.51
0.451	Floodway	1	9996.1	10042.62
0.447	Floodway	1	9995	10038.56
0.444	Floodway	1	9994	10038
0.441	Floodway	1	9994.3	810037.61
0.432	Floodway	1	9987.5	610030.25
0.393	Floodway	1	9964.6	810028.13
0.354	Floodway	1	9941.8	910012.79
0.317	Floodway	1	9963.6	210027.22
0.276	Floodway	1	9961.5	610029.99
0.247	Floodway	1	9979.2	410015.27
0.243	Floodway	1	9717.8	210117.38
0.232	Floodway	1	9761.2	810162.68

FLOW DATA

Flow Title: CAP Wash East Pre Project
Flow File : j:\2012\111204 Macerich NBCC\Post-Design\LOMR\CAP Wash East\CD Contents\Hydraulic Models\HEC-RAS\Pre Project\CAPWashEastPre.f01

Flow Data (cfs)

River	Reach	RS	Floodplain	Floodway
CAP Wash East	CAP Wash East	0.621	280	280

Boundary Conditions

River	Reach	Profile	Upstream	Downstream
CAP Wash East	CAP Wash East	Floodplain	Normal S = 0.008	Known WS = 1638.56
CAP Wash East	CAP Wash East	Floodway	Normal S = 0.008	Known WS = 1639.56

GEOMETRY DATA

Geometry Title: CAP Wash East Pre Project
Geometry File : j:\2012\111204 Macerich NBCC\Post-Design\LOMR\CAP Wash East\CD Contents\Hydraulic Models\HEC-RAS\Pre Project\CAPWashEastPre.g01

CROSS SECTION

RIVER: CAP Wash East
REACH: CAP Wash East RS: 0.621

```
INPUT
Description: 32+77.99
Station Elevation Data     num=      107
     Sta     Elev      Sta     Elev      Sta     Elev      Sta     Elev      Sta     Elev
  9742.3  1659.69  9752.38  1659.58  9755.35  1659.55  9756.43  1659.51   9758.2  1659.44
 9761.44  1659.33  9789.14  1658.41  9789.25  1658.41  9789.44   1658.4  9789.71   1658.4
  9802.1  1658.09  9810.71  1657.97  9824.74  1657.94  9826.51  1657.95  9827.33  1657.93
 9827.82  1657.93  9828.25  1657.92  9829.34  1657.91  9832.19  1657.84  9836.98  1657.84
 9853.55  1657.63  9870.93  1657.62  9874.22  1657.61  9874.67   1657.6  9877.48  1657.52
 9882.03  1657.48  9885.05  1657.38  9889.21  1657.26   9892.5  1656.94  9894.65  1656.78
 9897.72  1656.61  9898.34  1656.58  9900.31  1656.48  9901.67  1656.59   9904.9  1656.85
 9906.75  1657.29  9907.44  1657.42  9911.28  1657.97  9915.78  1657.92  9916.24  1657.91
 9921.83  1657.84  9922.16  1657.83   9922.5  1657.82  9922.78   1657.8  9927.31   1657.1
 9929.07  1656.91   9937.2  1656.86  9938.53   1656.9  9939.45  1656.86  9942.45  1657.21
 9944.31  1657.36  9947.24   1657.5  9947.91  1657.51  9956.69  1657.63  9970.71  1657.77
 9975.99  1657.37   9978.9  1657.17  9979.95  1657.07  9980.86  1656.93  9982.38  1656.67
 9985.44  1656.19  9986.14  1656.07  9992.55  1656.03  9996.15  1655.98  9997.03  1655.97
10000.01  1655.83 10004.28  1655.62  10005.3  1655.64 10010.05  1656.24 10015.15  1656.47
10018.33  1656.57 10021.92  1656.58 10023.08   1656.61 10027.01  1656.83 10027.14  1656.83
10027.79  1656.84 10028.95  1656.93 10031.61  1656.98 10035.86  1656.89 10037.56  1656.87
10040.25  1656.69  10045.5   1656.41 10053.24   1656.81 10054.85  1656.85 10057.71  1656.94
10059.79  1656.99 10067.91  1657.26  10070.4  1657.28 10071.45   1657.31 10072.12  1657.33
10073.59  1657.32 10085.58  1657.62 10093.01  1657.67 10100.95  1657.68 10104.39  1657.68
10108.15  1657.72 10119.78  1657.79 10125.97  1657.77  10133.5  1657.73 10152.09  1657.64
 10152.7  1657.64 10170.45  1657.69 10174.17  1657.68  10174.2  1657.69  10175.3   1657.7
10181.39  1657.65 10184.81  1657.64

Manning's n Values         num=        3
     Sta    n Val      Sta    n Val      Sta    n Val
  9742.3     .036   9978.9     .033 10010.05     .036

Bank Sta: Left    Right     Lengths: Left Channel    Right      Coeff Contr.    Expan.
        9978.91 10010.05               430  422.02     420               .1        .3

CROSS SECTION


RIVER: CAP Wash East
REACH: CAP Wash East       RS: 0.541

INPUT
Description: 28+55.97
Station Elevation Data     num=      147
     Sta     Elev      Sta     Elev      Sta     Elev      Sta     Elev      Sta     Elev
  9738.5   1656.2  9750.92  1655.97  9756.42  1655.85  9757.49  1655.83  9764.99  1655.72
 9786.78  1655.41   9787.8  1655.39  9792.25  1655.34  9797.13  1655.29  9820.58  1655.14
 9821.45  1655.13  9826.53  1655.12  9835.08  1655.13  9850.48  1655.13  9857.36  1655.03
 9857.38  1655.02  9860.19  1654.63  9863.92  1654.55  9866.84  1654.83  9878.41  1654.93
  9878.9  1654.95  9879.35  1654.92  9879.51  1654.91   9879.7   1654.9  9882.12   1654.8
 9883.73  1654.74  9883.94  1654.74  9884.12  1654.74     9885  1654.77  9893.03  1654.49
 9896.22  1654.26  9896.87  1654.23  9897.33  1654.21  9897.59   1654.2  9898.95  1654.09
 9900.47  1654.17  9901.51  1654.21  9910.92  1654.46  9911.52  1654.33  9914.61  1653.63
  9917.5  1652.96  9919.88  1652.76  9921.67  1652.62  9922.64  1652.54  9928.85  1652.49
 9929.02  1652.49  9929.08  1652.49  9929.22  1652.48  9930.49  1652.64  9931.88  1652.84
 9933.01  1653.24  9934.02  1653.48  9936.83  1653.95  9940.36  1654.61  9943.04  1654.73
 9944.63  1654.93  9949.13  1655.16  9951.87  1655.26  9953.51  1655.07   9954.6  1654.98
 9956.06  1654.99  9957.46  1654.96  9961.55  1654.82  9967.72  1654.88  9967.87  1654.88
 9969.86   1654.6  9970.02  1654.61  9972.63  1654.61  9974.29  1654.61  9975.26  1654.61
  9977.7  1654.11  9981.33  1653.66  9983.62  1653.44  9984.52  1653.31  9985.07  1653.25
 9986.33  1653.45  9987.72  1653.64  9991.83  1654.26  9994.25  1654.67  9996.91  1655.17
 9997.42  1655.24  9999.05  1655.19  9999.97  1655.12 10003.59  1654.87 10007.92  1654.34
10013.36  1653.85 10020.64  1654.22 10021.98  1654.29 10022.29  1654.32 10034.43  1654.24
10035.68  1654.23 10037.56  1654.23 10038.14  1654.21 10039.16  1654.19 10040.66   1654.2
10043.47  1654.22 10044.72  1654.23  10047.9   1654.51 10051.82  1654.75 10052.23  1654.78
10052.88  1654.74 10066.61  1653.81 10066.79  1653.83 10074.68  1654.53 10077.85  1654.78
10079.33  1654.88 10079.41  1654.87 10079.79  1654.86 10080.15  1654.84 10084.17  1654.79
10090.86   1654.61 10101.89   1654.51 10103.72  1654.48  10115.8  1654.38 10119.09  1654.36
10125.82  1654.37 10140.37  1654.31 10141.44  1654.33 10143.36  1654.29 10150.43  1654.28
10151.84  1654.32 10155.19  1654.14 10159.76   1653.91 10170.92  1653.56 10171.02  1653.56
10176.62  1653.39 10183.24  1653.65 10185.52  1653.76 10187.12  1653.73 10187.49  1653.73
10189.65   1653.51 10191.16  1653.32 10196.47  1652.75 10200.13  1652.95 10203.58  1653.12
10204.77  1653.18 10210.45  1653.55 10211.07   1653.61 10211.67  1653.65 10214.67  1653.86
10215.54  1653.93 10217.59  1654.06  10220.3  1654.27 10227.65  1654.27 10229.78  1654.27
 10230.9  1654.27 10231.98  1654.28

Manning's n Values         num=        3
     Sta    n Val      Sta    n Val      Sta    n Val
  9738.5     .036   9977.7     .033  10047.9     .036
```

```
Bank Sta: Left   Right    Lengths: Left Channel   Right     Coeff Contr.   Expan.
        9977.7 10047.9              312  311.21     310             .1       .3

CROSS SECTION


RIVER: CAP Wash East
REACH: CAP Wash East      RS: 0.482

INPUT
Description: 25+44.76
Station Elevation Data    num=     145
     Sta    Elev     Sta    Elev     Sta    Elev     Sta    Elev     Sta    Elev
    9755 1652.85 9777.39 1652.75 9787.37 1652.78 9791.42 1652.84  9794.1 1652.77
 9799.49  1652.4 9805.09 1652.41 9808.72 1652.52 9808.76 1652.52 9808.79 1652.52
 9814.64 1652.65 9816.83 1652.68 9821.17  1652.5 9822.14 1652.45 9823.18 1652.42
 9827.35 1652.24 9829.96 1652.13 9833.16 1651.96 9834.83 1651.92 9844.34 1651.61
 9848.56 1651.91 9853.26 1652.24 9855.08    1652 9857.09 1651.76  9858.5 1651.76
 9861.95 1651.79 9862.21  1651.8 9862.61 1651.82 9865.11 1651.76 9867.32  1651.9
 9868.33 1651.98 9868.93 1652.06 9872.88 1652.69  9880.2 1652.52 9884.68 1652.36
 9884.91 1652.36 9885.56 1652.36 9886.23 1652.36  9891.3 1652.36 9895.05 1652.38
 9897.13 1652.37  9917.7 1652.62 9919.88 1652.64 9920.23 1652.66 9920.49 1652.63
 9922.75 1652.54 9936.86 1652.15 9942.03  1652.9 9942.34 1652.97 9943.75 1653.15
 9948.24 1653.58 9951.87 1654.36 9952.02 1654.39 9952.41 1654.31  9962.2 1652.46
 9962.86  1652.3 9970.38 1651.15 9976.62 1651.73  9978.9 1651.86 9979.01 1651.85
  9983.2 1651.74  9991.5  1651.9  9993.6 1651.94 9993.611651.934 9994.16 1651.64
 9994.65 1651.17 9998.61 1649.22  9999.7  1649.410001.61 1649.72 10004.2 1650.03
10007.97 1651.1110008.99  1651.410011.82 1651.4910016.72 1651.6410016.731651.641
10021.51 1651.8910022.41 1651.8610026.92 1651.6810033.33 1651.4610034.91 1651.32
10037.55 1651.0310040.05 1651.2110042.26 1651.3810046.29 1651.4810047.26 1651.47
10060.84 1651.03 10063.8 1650.8610065.47 1650.7510067.01 1650.6510067.83  1650.7
10072.86 1651.15 10076.6 1651.13   10078 1651.1510079.58 1650.7910080.39 1650.66
10082.91 1650.7610083.73 1650.7510084.31 1650.8410084.82  1650.910085.16 1650.93
10085.89    165110086.23 1651.0110086.52 1650.9910086.86 1650.97 10087.8 1650.78
10088.42 1650.7810088.77 1650.7910088.95 1650.7810089.05 1650.7910090.85 1651.01
10101.97 1650.7710102.54  1650.710104.36 1650.5710105.49 1650.5310106.41 1650.43
10108.19 1650.4410112.48 1650.4910113.56 1650.4910114.96 1650.4910116.94 1650.48
10118.96 1650.4910119.95 1650.4910120.14 1650.4910120.98 1650.4810126.19 1650.78
10128.31 1650.9210137.87 1651.3110144.16 1651.4610146.48  1651.710152.85 1652.35
10155.33 1652.5210159.04 1652.4710162.21 1652.59 10162.8 1652.6410163.78 1652.62
10170.81 1651.9510171.41  1651.910175.15 1651.8810177.52 1651.9210183.95 1652.09
10188.15 1652.1810193.78 1652.1110195.84 1652.2510198.44 1652.58 10200.7 1652.56

Manning's n Values        num=       3
     Sta   n Val     Sta   n Val     Sta   n Val
    9755    .036 9993.61    .03310016.73    .036

Bank Sta: Left   Right    Lengths: Left Channel   Right     Coeff Contr.   Expan.
       9993.6110016.73             60.65   60.65   61.27             .3       .5
Ineffective Flow     num=       2
   Sta L   Sta R    Elev  Permanent
 10123.3 10200.7  1652.7       T
    9750 9952.02  1652.7       T

CROSS SECTION


RIVER: CAP Wash East
REACH: CAP Wash East      RS: 0.471

INPUT
Description: 24+84.11
Station Elevation Data    num=     132
     Sta    Elev     Sta    Elev     Sta    Elev     Sta    Elev     Sta    Elev
 9764.13 1652.54 9773.61 1652.54 9783.55  1652.6  9795.3 1652.33 9799.95 1652.16
 9804.53 1651.76 9804.56 1651.75 9804.63 1651.75 9804.71 1651.75  9808.1 1651.73
 9810.78 1651.92 9823.45 1652.67 9823.97 1652.69  9824.1  1652.7 9824.35 1652.71
 9824.88 1652.74  9830.1 1652.62 9831.11 1652.61 9831.43 1652.59  9831.7 1652.58
 9832.73 1652.52 9834.79 1652.43 9836.19 1652.36 9837.69 1652.27 9839.52 1652.15
 9846.71 1651.34 9851.15 1651.25 9859.11 1651.22 9860.22 1651.36 9865.41 1651.86
 9865.85  1651.8 9867.93  1651.6 9870.22  1651.7 9877.79  1651.8 9878.68 1651.78
 9879.25 1651.82 9880.25 1652.06 9882.33 1652.58 9882.92 1652.71  9883.5 1652.67
 9884.12 1652.56 9885.02 1652.43 9886.46 1652.14 9887.13 1651.99 9887.82 1651.96
 9890.92 1651.71 9896.38  1651.5 9897.71 1651.47 9898.42 1651.45 9899.29 1651.44
 9900.53 1651.29 9901.48 1651.29 9903.09 1651.27 9903.82 1651.27 9905.98 1651.44
 9906.58 1651.43  9907.4 1651.55 9908.33 1651.76 9909.79 1651.99 9910.15    1652
 9915.36 1652.48 9916.63 1652.32 9918.06 1652.14 9924.27 1651.06 9924.62 1650.97
 9925.02 1650.95 9925.77 1650.78 9929.24 1650.67 9933.49 1650.77 9936.91 1650.74
 9937.85 1650.95 9941.96 1651.73 9944.45 1651.74 9946.94 1651.65 9947.07 1651.65
```

```
 9948.37 1651.57 9953.13 1651.36 9955.53 1651.43 9958.42 1651.59 9962.97  1651.8
  9963.7 1651.84  9965.4 1651.79 9967.66 1651.77 9969.48 1651.81 9972.55 1651.62
 9973.67 1651.53 9975.19 1651.61 9975.71  1651.6 9977.461651.609 9977.62 1651.61
 9985.15 1650.79  9988.2 1650.51 9990.91 1650.19  9995.1 1649.49 9995.57 1649.42
 9995.61 1649.41 9995.64  1649.4   10000 1648.8210000.97  1648.710004.32  1649.7
10005.08 1649.8510005.92 1649.9710009.341650.906 10009.5 1650.9510010.47 1650.93
10011.75 1650.8910013.08 1650.8510016.35 1650.6610017.58 1650.6510022.08 1650.31
10022.14  1650.310022.23  1650.3   10028  1650.310029.58 1650.3310033.69  1650.3
10035.71 1650.1310036.49 1650.0910041.65 1649.8610042.08 1649.8510043.77 1649.82
10045.35 1649.7610045.95 1649.7410052.01 1649.6810057.14 1650.1710062.51 1650.75
10063.92 1650.8610066.37  1651.310069.45 1651.7210074.75 1652.2310077.08 1652.45
10079.41 1652.7210081.27 1652.96

Manning's n Values        num=       3
     Sta   n Val     Sta   n Val     Sta   n Val
 9764.13    .036 9977.62    .033 10009.5    .036

Bank Sta: Left   Right    Lengths: Left Channel   Right     Coeff Contr.   Expan.
       9977.62 10009.5            33.96    34.3   33.82              .3       .5
Ineffective Flow     num=       2
   Sta L   Sta R    Elev  Permanent
 9764.13    9965  1652.5       T
 10060.310081.27  1652.5       T

CROSS SECTION


RIVER: CAP Wash East
REACH: CAP Wash East      RS: 0.464

INPUT
Description: 24+49.81
Station Elevation Data    num=      99
     Sta    Elev     Sta    Elev     Sta    Elev     Sta    Elev     Sta    Elev
 9765.59 1651.76 9765.84 1651.77 9775.79 1651.55 9791.12 1651.41 9794.84 1651.44
 9802.66 1651.46 9818.53 1651.31 9822.46 1651.26 9825.03 1651.25 9832.03 1651.24
 9865.38 1651.87 9881.12 1651.26 9881.74 1651.25 9884.17 1651.24 9891.85 1651.24
 9893.19 1651.38 9894.08 1651.39 9896.82 1651.34  9908.1 1651.64 9922.85 1651.44
 9934.66 1651.56 9945.45 1651.89 9963.02 1651.47  9964.7 1651.39 9974.14 1650.38
 9982.571649.969 9982.75 1649.96 9983.14 1649.88 9986.22  1649.7 9995.74 1649.09
 9997.98 1649.02 9999.32 1648.89   10000    1649 10000.2 1649.0310000.33 1649.05
10003.43 1649.1610006.18  1649.610006.91 1649.7210008.11 1649.7410013.06 1649.85
10016.451649.89710016.65  1649.910020.82 1649.6710022.14  1649.610022.69 1649.57
10022.95 1649.55 10023.2 1649.5710025.03 1649.6410038.17 1650.1110039.54 1649.98
10040.37 1649.9710041.13 1649.9510041.65 1649.9510043.01 1649.9210043.57 1649.89
10045.63 1649.8510053.55 1649.8210059.51 1649.8610065.86 1649.8810074.59 1649.92
10078.19 1649.7710079.89 1649.9110084.69 1649.9110093.49 1650.2310095.86 1650.32
10098.81 1650.34 10106.9 1650.3710120.11 1650.57   10121  1650.610129.63 1650.84
10132.18 1650.9210139.22 1651.1510148.43 1651.4110149.33 1651.43 10151.1 1651.45
 10155.7 1651.4410163.37 1651.4510163.86 1651.4410164.17 1651.4410165.04 1651.42
10173.99 1651.1810176.23  1651.210180.35 1651.2910185.52 1651.3610194.22 1651.73
10195.22 1651.76   10196 1651.7310196.28 1651.7210198.83 1651.5610201.11 1651.44
10202.81 1651.3410203.73 1651.2810204.82  1651.210205.69 1651.1610206.36 1651.15
10207.44 1651.1410211.55 1651.0910213.55 1651.0610222.72    1651

Manning's n Values        num=       3
     Sta   n Val     Sta   n Val     Sta   n Val
 9765.59    .036 9982.57    .03310016.45    .036

Bank Sta: Left   Right    Lengths: Left Channel   Right     Coeff Contr.   Expan.
       9982.5710016.45            18.9   19.61    18.2              .3       .5
Ineffective Flow     num=       2
   Sta L   Sta R    Elev  Permanent
 9765.59 9971.89    1652       T
 10040.9   10225    1652       T

CROSS SECTION


RIVER: CAP Wash East
REACH: CAP Wash East      RS: 0.460

INPUT
Description: 24+30.20
Station Elevation Data    num=     101
     Sta    Elev     Sta    Elev     Sta    Elev     Sta    Elev     Sta    Elev
 9763.04 1653.53 9773.15 1653.53 9782.57 1653.26 9789.24 1653.23 9808.06 1653.48
 9822.47 1653.18 9825.97 1653.08 9828.24 1653.01 9829.44 1652.97 9850.49 1652.74
 9858.98 1652.61  9867.6 1652.76 9878.65  1652.5 9882.47 1652.68 9883.46 1652.68
```

```
 9884.55 1652.63 9890.34 1652.48 9893.79 1652.48 9895.39 1652.39 9895.68 1652.38
 9897.03 1652.36 9920.58 1652.08 9937.24 1651.76 9941.72 1651.73 9950.85 1651.57
  9953.1 1651.54 9953.16 1651.53 9956.26 1651.52 9957.45 1651.38 9958.19 1651.31
 9959.77 1651.21 9960.83 1651.13  9964.3 1650.68 9965.73  1650.5 9971.47 1649.58
 9975.26  1649.5 9979.13 1649.48 9981.67 1649.45 9984.58 1649.41  9990.2 1649.28
 9996.69 1649.04 9998.41 1648.95   10000  1648.9 10000.1  1648.910000.25  1648.9
10001.82 1649.1710007.87 1649.0710009.97 1649.0510010.68 1649.05 10018.4  1648.9
10019.74 1648.8910026.68 1649.0910027.26 1649.1210039.59 1649.29 10044.8 1649.36
10056.44 1649.36 10064.8 1649.3610068.24 1649.4210077.24 1649.5710082.52 1649.73
10082.79 1649.7410083.18 1649.73 10084.2 1649.7510098.84 1650.4610101.76 1650.58
10102.74 1650.6210109.86 1650.7410113.08 1650.7510117.37 1650.6910122.19 1650.71
10128.79 1650.6310132.38 1650.6510132.69 1650.6510133.07 1650.6410133.59 1650.64
10133.69 1650.6410133.99 1650.65 10134.5 1650.6310134.92 1650.6310135.71 1650.62
10137.98 1650.6110145.12 1650.6510147.16 1650.6210148.76  1650.710150.79 1650.81
10153.87 1650.9410158.33 1651.3310158.69 1651.3410158.76 1651.3510159.02 1651.36
10165.05 1651.4110165.58 1651.3910166.12 1651.3810166.38 1651.3710166.72 1651.36
10166.89 1651.3510167.51  1651.210167.85 1651.0710168.87  1651.110170.47 1651.13
10178.88 1651.23

Manning's n Values        num=       3
     Sta   n Val     Sta   n Val     Sta   n Val
 9763.04    .036  9990.2    .03310039.59    .036

Bank Sta: Left   Right    Lengths: Left Channel   Right     Coeff Contr.   Expan.
        9990.210039.59            27.96   27.95    30.3              .3       .5
Ineffective Flow     num=       2
   Sta L   Sta R    Elev  Permanent
    9800    9971 1651.49       T
 10047.410178.88 1651.49       T

CROSS SECTION


RIVER: CAP Wash East
REACH: CAP Wash East      RS: 0.455

INPUT
Description: 24+02.25
Station Elevation Data    num=      92
     Sta    Elev     Sta    Elev     Sta    Elev     Sta    Elev     Sta    Elev
    9858 1652.27 9859.08 1652.25 9863.69 1652.17 9863.94 1652.17 9864.38 1652.12
 9864.48 1652.11 9864.88 1652.06 9869.39 1651.54 9873.25 1650.95 9877.38  1650.7
 9879.21 1650.55 9879.52 1650.59 9881.02 1650.57 9887.33 1650.44 9889.94 1650.29
 9896.54 1650.24 9909.46 1650.12  9909.8 1650.12 9910.29 1650.12 9928.18 1650.22
 9929.38 1650.19 9932.41 1650.12 9934.96 1650.21 9935.29 1650.21 9939.69 1650.08
 9954.17 1649.74 9966.79 1649.63 9969.58 1649.55 9970.63  1649.6 9974.69  1649.8
 9974.96 1649.82 9978.12 1649.91 9979.34 1649.91 9979.64 1649.92 9981.27  1649.8
 9989.29 1649.58 9990.54 1649.59  9991.1 1649.59 9997.59 1649.38 9997.63 1649.38
 9997.94 1649.35   10000 1649.2510000.17 1649.2410001.91 1649.1610002.79 1649.12
10008.04 1649.0210008.38 1649.0210010.66 1648.8710010.92 1648.8710012.04 1648.85
10012.59 1648.8710014.06 1649.0410015.94 1649.33 10023.8 1649.4610028.37 1649.56
 10037.3 1649.6510042.73 1649.7210051.12 1649.9310054.44  1650.610057.06 1651.15
10060.55 1651.27 10062.6 1651.3410067.18 1651.4910070.62 1651.7510072.89 1651.72
10074.21 1651.7810075.48 1651.7610081.17 1651.7110081.29 1651.7110082.98 1651.65
10086.77 1651.1710091.05 1650.5510091.54 1650.5110092.31  1650.510095.33 1650.39
10098.18 1650.2810100.98 1650.2710101.83 1650.2610109.29 1650.1710110.33 1650.24
10111.17 1650.1910111.93 1650.2110123.93 1650.2510136.12 1650.3910155.05 1650.42
10180.44 1650.3910184.81 1650.39 10185.5 1650.3410186.06 1650.4110198.77 1650.64
10217.27 1650.7410234.98 1650.93

Manning's n Values        num=       3
     Sta   n Val     Sta   n Val     Sta   n Val
    9858    .036 9990.54    .03310028.37    .036

Bank Sta: Left   Right    Lengths: Left Channel   Right     Coeff Contr.   Expan.
       9990.5410028.37            22.55   22.55   26.75              .3       .5
Ineffective Flow     num=       2
   Sta L   Sta R    Elev  Permanent
    9750    9968    1652       T
   10071   10250    1652       T

CROSS SECTION


RIVER: CAP Wash East
REACH: CAP Wash East      RS: 0.451

INPUT
Description: 23+79.70
```

```
Station Elevation Data    num=     132
     Sta    Elev     Sta    Elev     Sta    Elev     Sta    Elev     Sta    Elev
 9967.45 1651.55 9973.89 1651.49 9974.71 1651.45 9976.51 1650.91 9976.89 1650.84
 9977.61 1650.69 9980.74 1650.26 9981.01 1650.22 9982.11 1650.08 9985.17 1650.09
 9986.78 1650.03 9988.62 1649.94 9996.49 1649.36 9996.66 1649.35 9996.78 1649.34
 9996.86 1649.34 9999.99 1649.0810001.61 1648.9510006.14 1648.7710009.12 1648.83
10009.64 1648.8310009.76 1648.8310009.98 1648.8310011.73 1649.0410011.88 1649.05
10012.84 1649.0110013.17    164910014.64 1648.8810015.42 1649.0510016.39 1649.28
 10016.6 1649.2810016.77 1649.2810018.76 1649.2810019.82 1649.2910022.14  1649.3
10023.46  1649.310023.98 1649.3110031.95 1649.2810035.63 1649.41 10036.5 1649.44
10042.14 1649.5410045.37 1649.6710047.43 1649.8310050.96 1649.9910055.63 1650.16
10058.98 1650.3210063.06 1650.4110064.58 1650.3210065.08 1650.2910067.32 1650.19
10069.42 1650.1610070.54 1650.1810076.69 1650.2710077.19 1650.2710089.11 1650.09
10089.46 1650.0810091.54 1650.0110092.14 1650.0110093.05 1650.01 10093.6    1650
10093.92 1649.9910094.75 1649.96   10095 1649.9310096.03 1649.8910101.03 1649.61
10101.64  1649.610102.43 1649.5610103.15 1649.5210105.55 1649.3810107.94 1649.08
10108.37 1649.0310108.54 1649.0310110.46 1649.26 10111.4 1649.4510111.82 1649.52
10112.22 1649.5610112.46 1649.5710112.56 1649.57 10112.7 1649.5710112.85 1649.58
10113.71 1649.6210113.94 1649.6310114.38 1649.6310119.49 1649.8110121.86 1649.77
 10125.4 1649.73 10126.2 1649.6510128.38 1649.6310130.47 1650.1610130.55 1650.18
 10130.6 1650.1610132.99 1649.3810134.17 1649.68 10134.3 1649.6910136.92 1649.71
10137.94 1649.7110140.32 1649.5610141.76 1649.5410142.18 1649.5410142.86 1649.55
10144.28 1649.5510145.01 1649.5910145.51 1649.6310146.45  1649.710147.29 1649.73
10147.95 1649.7810148.04 1649.7910150.97 1649.9710152.64 1650.0110154.74    1650
10156.08 1650.0510156.58 1650.0710158.62 1650.0710160.17 1650.1110160.88 1650.15
 10168.4 1650.2610171.77 1650.24 10183.2 1650.2510199.88 1650.25 10212.2 1650.31
10231.36 1650.4410234.55 1650.5110237.71 1650.5910239.16 1650.6310246.28 1650.74
 10251.2 1650.8410253.85 1650.8810253.89 1650.8910254.86  1650.910255.32  1650.9
10256.55 1650.9310260.75 1651.06

Manning's n Values        num=       3
     Sta   n Val     Sta   n Val     Sta   n Val
 9967.45    .036 9996.66    .03310031.95    .036

Bank Sta: Left   Right    Lengths: Left Channel   Right     Coeff Contr.   Expan.
       9996.6610031.95             21.08   21.32   21.08             .1       .3
Ineffective Flow     num=       1
   Sta L   Sta R    Elev  Permanent
10063.0610260.75    1652       T

CROSS SECTION


RIVER: CAP Wash East
REACH: CAP Wash East      RS: 0.447

INPUT
Description: 23+58.38
Station Elevation Data    num=      90
     Sta    Elev     Sta    Elev     Sta    Elev     Sta    Elev     Sta    Elev
  9973.2 1651.61 9974.58 1651.36 9974.78 1651.33 9975.04  1651.3 9975.97 1651.18
 9978.47 1650.78 9980.43 1650.68 9986.04 1650.15 9989.87 1649.87 9992.05 1649.67
    99951649.128 9995.64 1649.01 9995.94 1648.87 9995.99 1648.87    9996 1648.87
 9997.06 1648.86   10000 1648.8310004.79 1648.7810006.74 1648.99 10008.3 1649.05
10013.49 1649.0310018.09 1649.0810018.52 1649.0710019.13 1649.0710020.02 1649.07
10021.01 1649.0810035.99 1649.1310037.98 1649.2110040.44 1649.3410044.98 1649.55
10049.68 1649.8310051.97 1650.0510057.84 1650.5110059.24 1650.7110060.73 1650.79
10063.09 1650.9410064.72 1650.9510067.02 1650.9710070.22 1650.8610071.53 1650.86
10072.17 1650.84 10073.3 1650.8510074.95 1650.86 10075.6 1650.8510075.99 1650.83
10077.34 1650.8510079.55 1650.7610080.34 1650.7310081.02 1650.7110081.57  1650.7
10081.95 1650.6910083.59 1650.63 10086.6 1650.5410088.03 1650.5210093.29 1650.29
10098.05 1649.8510098.07 1649.85 10098.2 1649.84 10098.4 1649.7910104.73 1648.42
10109.48 1648.4210109.91 1648.43   10115 1649.3810115.42 1649.4710116.48 1649.54
10120.01 1649.7810120.62 1649.7810121.11 1649.7910128.68 1649.8210148.25 1649.95
10151.17 1649.9510151.32 1649.9510152.66 1649.9210152.73 1649.9210152.84 1649.92
10152.91 1649.9210155.38 1649.9510163.16 1649.9810189.22 1650.0410198.41 1650.14
10202.69 1650.12 10211.9 1650.5810214.31  1650.7 10215.6 1650.7210217.54 1650.78
10218.91 1650.7910223.05 1650.7910230.25 1650.8210240.19  1650.810241.44  1650.8

Manning's n Values        num=       3
     Sta   n Val     Sta   n Val     Sta   n Val
  9973.2    .036    9995    .03310035.99    .036

Bank Sta: Left   Right    Lengths: Left Channel   Right     Coeff Contr.   Expan.
          999510035.99             13.4   13.59    13.4             .1       .3
Ineffective Flow     num=       1
   Sta L   Sta R    Elev  Permanent
10067.02   10250 1650.97       T
```

CROSS SECTION

RIVER: CAP Wash East
REACH: CAP Wash East RS: 0.444

INPUT
Description: 23+44.79
Station Elevation Data num= 103

```
     Sta    Elev     Sta    Elev     Sta    Elev     Sta    Elev     Sta    Elev
 9960.49 1651.08 9962.66 1650.84 9964.28 1650.63 9965.53 1650.44 9966.32 1650.26
  9966.8 1650.17 9967.67 1650.02 9968.88 1649.86  9970.4 1649.86 9970.97 1649.86
 9971.68 1649.84 9974.07 1649.95 9975.34    1650 9978.54 1650.18 9980.14 1650.21
 9983.94  1650.3 9985.35 1650.33 9986.88 1650.36 9987.57 1650.31    9988 1650.267
 9992.48 1649.82 9992.82 1649.58    9994 1649.06    9995 1648.62 9995.45 1648.59
  9995.5 1648.59  9995.8 1648.59   10000 1648.58 10002.39 1648.57 10003.95 1648.83
10004.88 1648.96 10006.71 1648.94 10007.06 1648.93 10009.17 1648.91 10028.95 1648.97
10032.21 1648.99 10037.93 1649.04   10038 1649.073 10038.1 1649.12 10041.72 1649.35
10042.93 1649.36 10045.76 1649.47 10046.2 1649.49 10046.76 1649.55 10051.96 1650.27
10057.65 1651.07 10058.16 1651.08 10062.61 1651.12 10066.07 1651.16 10067.4 1651.18
10067.76 1651.15 10072.38 1650.76 10075.02 1650.85 10077.6 1650.85 10083.44 1650.97
10084.09 1650.95   10085 1650.97 10088.42 1650.94 10090.37 1650.91 10091.54 1650.71
10092.64 1650.57 10098.56 1650.04 10102.44 1649.84 10104.88 1649.38 10106.9 1649.06
10110.76 1648.28 10113.71 1648.28 10114.29 1648.29 10115.34 1648.52 10115.99  1648.6
10119.58 1649.25 10120.51  1649.31 10121.76 1649.38 10123.28 1649.49 10124.09 1649.55
10124.91 1649.64 10127.35 1649.81 10127.61 1649.83 10127.75 1649.83 10128.88 1649.84
10129.39 1649.85 10132.3 1649.85 10132.91 1649.87 10133.9 1649.87 10141.29 1649.89
10142.12 1649.89 10149.58 1649.68 10149.94 1649.68 10150.59 1649.69 10150.94 1649.69
10164.73 1649.85 10189.86 1649.97 10195.84 1649.97 10196.89 1649.95 10198.7 1649.94
10200.08 1649.96 10203.67 1650.38 10207.95 1650.54 10214.63 1650.85 10214.92 1650.85
 10216.6 1650.85 10232.4 1650.84 10246.5 1650.91
```

Manning's n Values num= 3

```
     Sta   n Val     Sta   n Val     Sta   n Val
 9960.49    .036    9994    .033   10038    .036
```

```
Bank Sta: Left   Right    Lengths: Left Channel   Right     Coeff Contr.   Expan.
          9994   10038               15   15.48    16.2              .1       .3
```

Ineffective Flow num= 2

```
   Sta L   Sta R    Elev  Permanent
 9960.49    9986  1651.5       T
10061.02   10250  1651.5       T
```

CROSS SECTION

RIVER: CAP Wash East
REACH: CAP Wash East RS: 0.441

INPUT
Description: 23+29.31
Station Elevation Data num= 162

```
     Sta    Elev     Sta    Elev     Sta    Elev     Sta    Elev     Sta    Elev
 9890.43 1650.89 9891.65 1650.87 9904.65 1650.83 9910.94 1650.77 9926.71 1650.57
  9938.7 1650.45 9940.68 1650.42 9943.32 1650.38 9950.77 1650.34 9952.04 1650.35
 9953.15 1650.35 9955.24 1650.39 9955.92 1650.44 9956.96  1650.5 9958.38 1650.56
 9964.83 1650.74 9966.17 1650.75 9967.16 1650.72 9968.12 1650.67 9971.31 1650.29
 9972.64 1650.05 9972.72 1650.03 9974.01 1649.72 9978.34 1649.66 9981.44 1649.54
 9986.11 1650.22 9986.17 1650.22 9986.22 1650.22 9987.94 1650.06 9992.57 1649.85
 9993.24 1649.81 9994.38 1648.94 9995.03 1648.45 9995.11 1648.39 9995.15 1648.36
 9995.17 1648.35   10000 1648.33 10000.5 1648.33 10000.68 1648.33 10000.8 1648.35
10000.96 1648.39 10001.9 1648.63 10003.91 1649.09 10004.28 1649.05 10005.95  1648.9
10010.21 1648.74 10011.83 1648.76 10022.81 1648.86 10036.13 1648.87 10037.61 1648.98
10039.96 1649.17 10042.92 1649.31 10046.61 1649.63 10051.49 1650.35 10055.36 1650.88
10058.56 1650.89 10062.73  1650.91 10066.39 1650.36 10068.69 1650.12 10069.88  1650.1
10071.45  1649.81 10076.91 1650.31 10077.71 1650.34 10078.12 1650.35 10080.79 1650.49
10083.53  1650.51 10086.68 1650.47 10087.53 1650.43 10088.04 1650.42 10094.16 1650.08
 10095.4    1650 10103.25 1649.81 10104.02  1649.81 10115.15 1649.75 10116.37 1649.77
10118.35 1649.73 10121.81  1648.61 10122.48 1648.36 10123.53 1647.95 10124.43 1647.92
10126.47 1647.79 10129.83  1648.51 10130.12 1648.57 10130.46 1648.64 10130.91 1648.71
10131.37 1648.78 10132.98 1649.08 10135.21 1649.51 10136.85 1649.64 10138.08 1649.76
10138.38 1649.79 10138.86 1649.84 10139.13 1649.89 10139.24 1649.91 10139.75 1649.99
10142.17 1650.17 10143.35 1649.97 10143.62  1649.91 10144.81 1650.02 10145.66    1650
10146.62 1649.62 10147.14 1649.52 10147.33 1649.48 10148.18 1649.48 10149.79 1649.46
10151.09 1649.65 10151.14 1649.66 10151.25 1649.64 10155.25 1649.54   10156 1649.56
10172.38 1649.59 10176.55  1649.51 10179.94 1649.52 10183.86 1649.53 10191.94 1649.51
10195.21 1649.75 10195.24 1649.75 10195.26 1649.75 10202.15 1649.83 10203.18 1649.83
10212.54 1650.16 10214.31  1650.2 10215.6 1650.19 10216.65 1650.18 10216.98  1650.2
10221.55 1650.35 10222.5 1650.36 10228.12 1650.23 10228.83 1650.23 10229.21 1650.24
```

```
10234.27 1650.3810241.41 1650.5110242.26 1650.5110243.12 1650.5410246.55 1650.51
10247.36  1650.510251.35 1650.3110252.33  1650.210253.02  1650.210255.11 1650.27
10256.54 1650.2910258.51 1650.2610258.65 1650.2510258.78 1650.2410261.55 1650.08
10262.87  1650.110266.29 1649.9510268.48 1650.2310269.05 1650.3210270.86 1650.36
10286.51 1650.5410288.14 1650.5810290.24 1650.7410292.12  1650.810293.59 1650.79
10295.32 1650.8110295.54  1650.810296.44 1650.7710302.03  1650.510305.29  1650.9
10305.77 1650.9710309.34 1651.26

Manning's n Values        num=       3
     Sta   n Val     Sta   n Val     Sta   n Val
 9890.43    .036 9994.38    .03310037.61    .036

Bank Sta: Left   Right    Lengths: Left Channel   Right     Coeff Contr.   Expan.
       9994.3810037.61             48.5   49.58    52.6              .1       .3
Ineffective Flow     num=       2
   Sta L   Sta R    Elev  Permanent
 9890.43 9986.22  1651.5       T
   1005810309.34  1651.5       T

CROSS SECTION


RIVER: CAP Wash East
REACH: CAP Wash East      RS: 0.432

INPUT
Description: 22+79.73
Station Elevation Data    num=     138
     Sta    Elev     Sta    Elev     Sta    Elev     Sta    Elev     Sta    Elev
 9914.67 1650.83 9928.04 1650.79 9937.12 1650.65 9942.75 1650.62 9957.62 1650.58
 9971.26 1650.33 9982.41 1649.85 9993.32 1649.34 9996.63 1648.69   10000 1648.06
10000.33    164810000.97 1647.9610001.95 1647.8510003.16 1647.8110006.59  1648.3
10007.96 1648.5110008.42 1648.49 10013.8 1648.4810016.51 1648.4810020.16 1648.48
10020.21 1648.48 10021.41648.69210025.67 1649.4510028.51 1649.5410030.75 1649.61
10032.25 1649.6410036.12 1649.7810042.33 1650.6610043.55 1650.8110047.17 1650.82
10048.21  1650.810051.54 1650.5310052.82 1650.5110056.28 1649.8910058.61 1649.39
10058.68 1649.47 10062.2 1649.3210062.46 1649.3110080.79  1648.910083.71 1648.94
10083.86 1648.9410085.46 1648.8810085.54 1648.8810085.87 1648.8810087.12 1648.96
10087.45 1648.9810089.53 1649.07 10090.9 1649.1510092.86 1649.3210094.34 1649.31
10095.21  1649.310097.07 1649.22 10097.5 1649.2210097.88  1649.210098.22 1649.17
10098.86 1649.0610099.91 1648.9410103.36 1648.5510107.76 1648.3610109.96 1648.19
10112.25 1647.9310113.58 1647.7810115.99 1647.5410124.07 1647.2210128.04 1647.06
10133.71 1647.8610137.34 1648.3610138.07 1648.4810139.21 1648.6410141.59  1648.5
10142.04 1648.4810142.24 1648.4510142.59 1648.3910146.67 1647.76   10149 1647.43
10149.79 1647.4110155.79 1647.2110156.84 1647.3810157.25 1647.4510159.17 1647.69
10160.12 1647.7710163.21 1648.2110163.88  1648.310164.86 1648.5210167.07 1648.47
10167.68  1648.4 10167.8 1648.3710168.17 1648.3310169.34 1648.2810171.04 1648.22
10172.07 1648.2410172.75 1648.3110174.66 1648.5510178.46 1648.6910179.74 1648.77
10181.21 1648.8610181.97 1648.8910182.01 1648.8910184.04 1648.8810184.84 1648.84
10187.29 1648.8810189.15 1648.8910203.08 1649.0610208.76 1649.0410210.87 1649.05
10224.08 1649.15   10227  1648.910228.18  1648.810228.26  1648.810228.29  1648.8
 10228.3  1648.810238.29 1648.7810239.38 1648.7610262.86 1648.4610264.17 1648.44
10264.67 1648.43 10268.5 1648.3510279.46 1648.8610280.37 1648.9210281.43    1649
10284.12 1649.32 10287.2 1649.6110288.42 1649.7310289.04 1649.7810295.57 1650.26
10296.45  1650.310298.61 1650.3410304.92 1650.8110311.91 1651.3210312.76 1651.43
10313.15 1651.4410313.88 1651.4910314.54 1651.4910314.67  1651.510314.82 1651.52
10317.79 1651.7310326.21 1652.35 10332.3 1652.75

Manning's n Values        num=       3
     Sta   n Val     Sta   n Val     Sta   n Val
 9914.67    .036 9996.63    .033 10021.4    .036

Bank Sta: Left   Right    Lengths: Left Channel   Right     Coeff Contr.   Expan.
       9996.63 10021.4           204.33  204.34     206              .1       .3
Ineffective Flow     num=       2
   Sta L   Sta R    Elev  Permanent
 9914.67    9977  1651.5       T
10051.19   10350  1651.5       T

CROSS SECTION


RIVER: CAP Wash East
REACH: CAP Wash East      RS: 0.393

INPUT
Description: 20+75.39
Station Elevation Data    num=     158
     Sta    Elev     Sta    Elev     Sta    Elev     Sta    Elev     Sta    Elev
```

```
  9858.5 1650.08 9865.57 1649.97  9866.3 1649.88 9870.64 1649.34  9871.9 1649.44
 9872.33 1649.43 9875.18 1649.58 9884.43 1649.65 9888.92 1649.73 9889.17 1649.73
 9889.53 1649.71 9890.17 1649.71 9898.86  1649.6 9900.97 1649.52 9910.31 1649.17
 9915.41 1648.95 9917.93 1648.95 9919.85 1648.93 9921.19 1648.95 9926.98 1648.92
 9928.54 1648.92  9930.9 1648.92 9932.22 1648.93 9934.45 1648.95 9941.29 1648.84
 9942.25 1648.83 9942.76 1648.81 9947.77 1648.81 9948.12  1648.8 9949.08  1648.8
 9954.21 1648.87 9954.89 1648.83 9960.09 1648.76 9960.52 1648.74 9964.68 1648.69
 9965.36 1648.66  9967.6 1648.51 9968.91 1648.52  9971.9 1648.47  9972.7 1648.49
  9973.9 1648.51 9976.24 1648.56 9977.47 1648.56 9983.84 1648.53 9988.45 1648.28
 9991.53 1648.24 9992.51 1648.15 9995.57 1646.97 9995.86 1646.86 9996.35 1646.84
10000.03 1646.8310001.37 1646.8310006.93 1648.7110007.65 1648.9410010.36 1648.82
10012.69  1648.9 10015.1 1648.7910015.99 1648.7810021.91 1648.73 10024.1 1648.75
   10034 1648.7210037.67 1648.7110040.73 1648.3310041.33 1648.2510041.85 1648.23
10049.14 1648.0110049.33 1648.02 10049.4 1648.0310051.03 1648.1210052.28 1648.16
10053.66 1648.1510053.98 1648.1310054.25 1648.1310056.36 1648.0710057.67 1648.01
10058.91 1648.0210060.94 1648.0410061.82 1648.0510062.35 1648.0710064.18 1648.09
10065.24 1648.2410065.85  1648.310067.31 1648.4110078.36 1648.5910081.66 1648.65
10083.41 1648.8510085.12 1649.06   10087 1648.9910093.95 1648.8410096.37 1648.75
10096.57 1648.7510097.56 1648.7610100.24  1648.710102.58 1648.6510103.55 1648.63
10104.42 1648.4810105.25  1648.410107.67 1647.9410109.09 1647.7310111.77 1647.64
10112.71 1647.6210113.32 1647.7510115.04    164810117.11 1648.4210118.32 1648.66
10119.24  1648.610123.21 1648.3810124.51  1648.310125.29  1648.3 10127.9 1648.23
10131.51 1648.2410133.72  1648.410136.25 1648.6110153.14 1648.7310161.25 1648.76
10167.23 1648.7810170.75 1648.7810171.34 1648.77 10171.7 1648.7610176.62 1648.36
10177.85 1648.3810182.69 1648.4710182.81 1648.4710185.01 1648.4410189.11 1648.39
 10191.1 1648.3710195.94 1648.2510196.73 1648.2310196.82 1648.2310197.07  1648.2
10197.89 1648.1110200.29 1647.8510200.94 1647.7810202.68 1647.7810205.73 1647.78
 10207.2 1647.77 10207.7 1647.7610210.65  1647.810214.23 1647.8310222.04 1647.81
10230.45 1647.7410232.59 1647.7510234.08 1647.7410236.93 1647.66 10244.4 1647.65
10245.76 1647.6110249.64 1647.8610249.99 1647.8810252.25 1648.0310259.98 1648.51
10262.61 1648.6110278.22 1649.42 10279.6 1649.5110285.74 1649.9310287.79 1650.01
10293.46 1650.3410295.59 1650.5610300.26 1650.73

Manning's n Values         num=       3
     Sta   n Val     Sta   n Val     Sta   n Val
  9858.5    .036 9964.68    .03310006.93    .036

Bank Sta: Left   Right    Lengths: Left Channel   Right     Coeff Contr.   Expan.
       9964.6810006.93               200  203.86     210              .1       .3
Ineffective Flow     num=       1
   Sta L   Sta R    Elev  Permanent
10085.12   10300    1650       T

CROSS SECTION


RIVER: CAP Wash East
REACH: CAP Wash East      RS: 0.354

INPUT
Description: 18+71.53
Station Elevation Data    num=     109
     Sta    Elev     Sta    Elev     Sta    Elev     Sta    Elev     Sta    Elev
 9833.19 1647.62 9833.36 1647.62  9837.3 1647.18 9838.68 1647.02 9849.79 1646.81
 9853.42 1646.79 9857.78 1646.52 9861.53  1646.4 9862.72 1646.37 9866.11  1646.7
 9866.12  1646.7 9866.16 1646.71 9866.22 1646.71  9866.6 1646.73 9877.83 1647.23
 9879.54 1647.29 9888.771647.094 9888.94 1647.09 9897.55 1646.83 9901.01 1646.79
 9905.06 1646.81 9918.11 1646.58 9919.43 1646.56 9922.14 1646.58 9927.41 1646.61
 9929.53 1646.64 9939.58 1646.35  9944.3 1646.19 9951.05 1645.91 9960.28 1645.65
 9961.66 1645.64 9963.75 1645.73 9972.21 1646.21 9975.36 1646.52 9977.72 1646.83
 9981.881647.003 9982.05 1647.01 9985.39 1647.07 9985.66 1647.06 9990.68 1646.93
 9991.18 1646.91 9991.65 1646.86 9998.28 1645.9610000.19 1645.8610000.68 1645.83
10002.86 1645.7110006.12 1646.2610009.39 1646.8710009.691646.85510016.88 1646.51
10017.59 1646.4810019.23  1646.410019.45 1646.43 10022.6 1646.8910026.06 1646.88
10030.28 1646.8310031.07 1646.8210032.09 1646.8110048.44 1646.7410050.04 1646.62
10052.32 1646.2910053.02  1646.310057.21 1646.3610060.47 1646.5210061.98 1646.67
10069.06  1646.810069.36  1646.810070.02  1646.810073.67 1646.7110074.01 1646.71
10076.43 1646.7310085.67 1646.8910093.98 1647.1110099.73 1647.1110111.59 1647.22
10111.85 1647.2210112.19 1647.2310112.28 1647.2310113.01 1647.2410129.63 1647.43
10131.73 1647.3610133.99  1647.410136.66 1647.6710151.58 1647.77 10155.1 1647.74
10159.04 1647.7110162.53 1647.5410164.24 1647.4110166.78 1647.4510167.72 1647.46
10174.59 1647.63 10175.8 1647.6510176.74 1647.6710177.75 1647.6910184.07 1647.84
10186.82 1647.8610195.84 1647.88 10199.3 1647.8810201.88 1647.8810204.05 1647.86
10204.92 1647.8610206.36 1647.8610211.64 1647.8310226.08 1647.78 10229.2 1648.04
10233.97 1648.4910241.27 1649.0610247.42 1649.5510253.14 1650.04

Manning's n Values         num=       3
     Sta   n Val     Sta   n Val     Sta   n Val
 9833.19    .036 9990.68    .03310009.69    .036
```

```
Bank Sta: Left   Right    Lengths: Left Channel   Right     Coeff Contr.   Expan.
       9990.6810009.69              198  199.82     200             .1       .3
Ineffective Flow     num=       1
   Sta L   Sta R    Elev  Permanent
   1008010253.14    1650       T

CROSS SECTION


RIVER: CAP Wash East
REACH: CAP Wash East      RS: 0.317

INPUT
Description: 16+71.71
Station Elevation Data    num=     110
     Sta    Elev     Sta    Elev     Sta    Elev     Sta    Elev     Sta    Elev
 9686.69 1645.59 9705.77 1645.41 9705.92  1645.4 9706.41  1645.4 9727.37 1645.32
 9735.78 1645.27 9745.96 1645.23 9748.54 1645.19 9751.52 1645.14 9769.87 1644.88
 9783.18 1645.01 9788.32 1645.08 9790.39  1645.1  9799.2 1645.19 9802.22 1645.21
 9802.77  1645.2 9803.78 1645.18 9817.82 1645.05 9828.09 1645.05 9828.36 1645.04
 9833.78 1644.84 9836.73 1644.78 9843.13 1644.72 9850.02 1644.62 9853.26 1644.65
 9862.71 1645.04 9870.11 1645.15 9870.64 1645.14 9892.74  1644.8 9893.22 1644.79
 9893.42 1644.79 9893.53 1644.79 9894.13 1644.79 9917.06    1645 9920.94 1645.01
 9939.13 1644.97 9945.12 1645.04 9949.58 1645.31 9950.98 1645.31 9970.82 1645.22
 9970.83 1645.22 9977.46 1645.12 9980.76 1644.96 9985.01 1644.89  9989.2 1644.74
 9997.69 1644.54 9999.28 1644.1410000.01 1644.0410002.09 1643.7510002.21 1643.75
 10002.7 1643.7810006.97 1644.16 10009.7  1644.410014.02 1644.6610020.26    1645
10027.21 1645.2310027.22 1645.2310030.21 1645.2410042.54 1645.3210049.51 1645.03
10050.68 1644.9710052.19 1644.9110055.07 1644.8310055.68 1644.7510057.73 1644.83
10058.15 1644.8310063.05 1645.0210067.35 1645.0110069.86 1645.0110071.38    1645
10076.03 1644.8910084.97  1644.610088.32 1644.5210088.77 1644.48 10095.9 1644.49
10096.79  1644.510099.05 1644.6310109.89 1645.2510120.14 1645.29 10122.3 1645.31
10124.54 1645.2910129.44 1645.28 10129.6 1645.2710131.87 1645.0710136.29 1644.97
10146.32 1644.9710147.07 1644.9810151.82 1645.3210152.87  1645.410152.91 1645.41
10154.25 1645.4110177.98 1645.3410180.85 1645.4910182.69 1645.6110187.61 1645.75
10202.67 1645.7710228.05 1645.7610237.34 1645.9310239.87 1646.04 10253.6 1646.58
10257.65 1646.9910258.54 1647.0810261.16 1647.3310264.12 1647.5210269.61 1648.03
10271.69 1648.1410275.18 1648.6110277.02 1648.8810279.36 1649.2310281.93  1649.6

Manning's n Values        num=       3
     Sta   n Val     Sta   n Val     Sta   n Val
 9686.69    .036 9970.83    .03310027.22    .036

Bank Sta: Left   Right    Lengths: Left Channel   Right     Coeff Contr.   Expan.
       9970.8310027.22              260  212.27     180             .1       .3
Ineffective Flow     num=       2
   Sta L   Sta R    Elev  Permanent
    9690    9800    1649       T
   10121   10300    1649       T

CROSS SECTION


RIVER: CAP Wash East
REACH: CAP Wash East      RS: 0.276

INPUT
Description: 14+59.44
Station Elevation Data    num=      82
     Sta    Elev     Sta    Elev     Sta    Elev     Sta    Elev     Sta    Elev
    9675 1643.99 9678.39 1643.94 9680.49 1643.91 9687.16 1643.86 9692.55 1643.87
 9701.86 1643.86 9717.13  1643.8 9722.39 1643.85 9725.37 1643.85  9734.8 1643.76
 9743.42  1643.4  9750.7 1643.61 9756.12 1643.78 9758.59 1643.84 9759.24 1643.85
 9791.32  1643.8 9792.86  1643.8 9792.99  1643.8 9793.06  1643.8 9793.17  1643.8
 9818.82 1643.61 9828.28 1643.48  9830.8 1643.49 9833.11 1643.43  9837.7 1643.37
 9849.06 1642.89 9849.45 1642.88 9861.27 1643.21 9863.01 1643.25 9864.29 1643.24
    9883 1643.35 9887.28 1643.38 9900.45 1643.43 9904.51 1643.46 9911.93 1643.44
 9935.45 1643.48 9937.51 1643.47 9938.07 1643.48 9942.73 1643.11 9943.83 1643.12
 9945.73 1643.12  9972.2 1643.11 9983.78  1643.4 9986.59 1643.49  9986.61643.488
 9990.17 1642.82 9998.26 1641.67 9998.71 1641.51  9999.7 1640.87 9999.97 1640.71
 9999.99  1640.710002.23 1640.7410006.81 1640.7110010.18 1642.2110010.23 1642.23
 10010.3 1642.2510010.41 1642.2710011.07 1642.3710015.13 1643.0610015.57 1643.12
10016.38  1643.210022.31 1643.1910027.26 1643.2810029.99  1643.310044.07 1643.64
10046.64 1643.7810050.03 1643.8610050.93 1643.8710058.64 1643.78 10075.3 1643.74
10083.54 1643.7610089.12 1643.59 10091.4 1643.5510092.58 1643.4810094.15 1643.37
10097.57 1643.15 10101.8 1643.0410115.03 1642.89 10129.4 1642.7510144.85 1642.87
10166.79 1643.5610168.57 1643.64
```

```
Manning's n Values        num=       3
     Sta   n Val     Sta   n Val     Sta   n Val
    9675    .036  9986.6    .03310029.99    .036

Bank Sta: Left   Right    Lengths: Left Channel   Right     Coeff Contr.   Expan.
        9986.610029.99              180  156.47     150              .1       .3
Ineffective Flow     num=       2
   Sta L   Sta R    Elev  Permanent
    9675    9781    1644       T
   1006910168.57    1644       T

CROSS SECTION


RIVER: CAP Wash East
REACH: CAP Wash East      RS: 0.247

INPUT
Description: 13+02.97
Station Elevation Data    num=      99
     Sta    Elev     Sta    Elev     Sta    Elev     Sta    Elev     Sta    Elev
 9761.15 1642.54 9773.69 1642.37 9793.29 1642.04 9796.63 1641.99 9815.34 1641.84
  9822.2 1641.76 9827.01 1641.68 9836.67 1641.49 9836.88 1641.49 9841.57 1641.37
 9844.01 1641.31 9846.07 1641.04 9846.12 1641.03 9846.27 1641.02 9847.13 1640.93
 9850.78 1640.54 9851.03 1640.51 9851.72 1640.55 9855.39 1640.94 9857.29 1641.21
 9859.08 1641.48 9860.53 1641.55  9863.2 1641.68 9867.51 1641.87 9877.29 1641.87
 9880.57 1641.86 9881.61 1641.86 9883.91 1641.84 9893.54 1641.68 9900.75 1641.63
 9918.09  1641.5 9922.02 1641.48 9929.56 1641.67  9938.2 1641.91 9944.76 1641.99
 9945.22     1642 9946.07    1642 9957.78 1642.05 9957.83 1642.05 9965.93 1642.19
 9972.37 1642.14 9979.24  1642.1 9980.85 1642.05 9987.63 1641.13 9989.94 1640.82
 9991.17 1640.67  9995.9 1639.68 9996.88 1639.44 9998.01 1639.21   10000 1638.71
10000.06 1638.69 10000.9 1638.7110002.65 1638.6310003.86 1639.2210005.24 1639.56
10006.88 1640.1610008.28 1640.5810013.73 1641.7610015.04 1641.9710015.27 1642.01
10016.47 1642.1110020.62 1642.2210020.75 1642.22 10020.8 1642.23 10020.9 1642.23
10027.56 1642.4810029.34 1642.5410030.11 1642.5710031.03 1642.6110032.81 1642.59
10038.14  1642.6   10040 1642.6410043.15 1642.7210048.76 1642.8810049.53  1642.8
10053.62 1642.88 10063.2 1642.7310074.03 1642.4410074.79 1642.4110075.42 1642.42
10089.29 1642.62   10090 1642.6210092.16 1642.5910102.59 1642.4310110.61 1642.56
10112.34 1642.5910113.49 1642.6110121.91 1642.8510123.39 1642.9110124.52 1643.05
10134.25  1644.210135.96 1644.4110139.08 1645.0410142.03  1645.5   10145 1646.06
10146.63 1646.5510150.35 1646.7510152.19 1646.84 10152.2 1646.84

Manning's n Values        num=       3
     Sta   n Val     Sta   n Val     Sta   n Val
 9761.15    .036 9979.24    .03310015.27    .036

Bank Sta: Left   Right    Lengths: Left Channel   Right     Coeff Contr.   Expan.
       9979.2410015.27              44.5   22.57      22              .1       .3
Ineffective Flow     num=       1
   Sta L   Sta R    Elev  Permanent
 9761.15    9942    1644       T

CROSS SECTION


RIVER: CAP Wash East
REACH: CAP Wash East      RS: 0.243

INPUT
Description: 12+80.40
Station Elevation Data    num=     107
     Sta    Elev     Sta    Elev     Sta    Elev     Sta    Elev     Sta    Elev
 9717.82 1642.35  9724.8 1642.26 9742.74 1641.76 9748.62 1641.66 9765.23 1641.64
  9772.7 1641.32 9778.17 1641.19 9782.79 1641.04 9786.71 1640.94 9788.57 1640.77
 9793.02 1640.65 9794.35 1640.64 9794.66 1640.62 9800.55  1640.2 9802.01 1640.24
 9806.24  1640.4  9806.4 1640.41 9806.82 1640.43 9811.37 1640.65 9811.69 1640.67
 9811.96 1640.69 9813.01 1640.76 9819.38 1641.19 9820.92 1641.27 9825.21 1641.19
 9827.07 1641.15 9830.75 1641.15 9834.86 1641.28 9839.35 1641.35 9851.53 1641.12
 9852.86  1641.1 9852.96  1641.1 9862.69  1641.2 9883.18 1641.28 9885.77  1641.3
 9890.35  1641.5 9899.42 1641.79 9901.93 1641.87 9904.39 1641.82 9908.42 1641.75
 9920.62 1641.45 9924.78 1641.24 9928.13 1641.08 9932.06 1640.88 9937.831640.509
  9938.6 1640.46 9938.65 1640.45 9938.73 1640.45 9939.86  1640.4 9944.84 1639.11
  9945.5 1638.97 9945.65 1638.97 9945.74 1638.85 9946.78 1638.58 9947.33 1638.43
 9947.55 1638.39 9971.88 1638.31 9972.32  1638.3 9972.77  1638.3 9999.99  1638.1
10000.88 1638.0910000.95 1638.0910000.99 1638.0910001.23 1637.8410001.29 1637.83
10001.29 1637.9510001.32 1637.9410001.52 1637.9410005.02 1637.9610006.19 1638.17
10006.86 1638.4110007.11 1638.4610008.231638.67310010.21 1639.0510010.26 1639.05
10011.77  1639.110016.18 1638.9810019.67 1639.11 10019.7  1639.110019.92 1639.04
 10020.2 1639.1110020.24 1639.1610020.33 1639.1310022.03 1639.83 10023.31640.673
```

```
10024.32 1641.3510025.12 1641.5910027.17 1642.2810036.31 1642.6610039.44 1642.76
10045.92 1642.5310049.54  1642.410053.74 1642.4210055.04 1642.4210064.33 1642.48
10074.35 1642.3410078.84 1642.29 10080.5 1642.3110090.79 1642.5710096.87 1642.77
10096.93 1642.7710101.04 1642.8610103.99 1643.1810110.16 1643.8810114.36 1644.54
10116.79 1644.9610117.38 1645.08

Manning's n Values        num=       3
     Sta   n Val     Sta   n Val     Sta   n Val
 9717.82    .036 9937.83    .015 10023.3    .036

Bank Sta: Left   Right    Lengths: Left Channel   Right     Coeff Contr.   Expan.
       9937.83 10023.3                1      10       1              .3       .5
Ineffective Flow     num=       1
   Sta L   Sta R    Elev  Permanent
 9717.82  9939.8    1644       T

CROSS SECTION


RIVER: CAP Wash East
REACH: CAP Wash East      RS: 0.232

INPUT
Description: 12+24.99
Station Elevation Data    num=      77
     Sta    Elev     Sta    Elev     Sta    Elev     Sta    Elev     Sta    Elev
 9761.28 1642.35 9768.13 1642.26 9784.91 1641.79 9792.78 1641.66 9808.57 1641.64
 9816.57  1641.3 9821.14 1641.18 9825.01 1641.06 9829.79 1640.94 9832.07 1640.73
 9834.65 1640.66 9837.45 1640.65 9838.09  1640.6 9843.68 1640.19 9845.42 1640.25
 9849.17 1640.39  9849.8 1640.42 9851.42 1640.52 9854.16 1640.65 9855.96 1640.73
  9857.5 1640.84 9863.44 1641.24  9863.8 1641.26 9863.88 1641.27 9870.58 1641.15
 9871.59 1641.13 9873.59 1641.12 9878.61 1641.28 9882.65 1641.34  9896.2 1641.09
 9896.27 1641.09 9896.28 1641.09 9906.93  1641.2 9925.85 1641.28 9929.23  1641.3
 9932.64 1641.45 9943.43 1641.79 9945.24 1641.85 9949.78 1641.75 9953.21  1641.7
 9963.58 1641.43 9968.56 1641.18 9972.58 1640.99 9975.14 1640.87 9979.52 1640.58
 9982.65 1640.44 9983.42 1640.41 9983.68  1640.4 9984.69 1640.14 9988.88 1639.24
 9990.36  1638.6 10000.5 1635.72   10043 1635.7210065.51 1639.22 10068.2 1640.39
10069.63 1641.35 10069.8  1641.410072.33 1642.2610083.64 1642.7210084.45 1642.75
10092.71 1642.4710094.51  1642.4 10096.6 1642.4110102.14 1642.4310109.31 1642.47
10117.04 1642.3710123.86 1642.2910126.38 1642.3210135.84 1642.5610141.51 1642.74
 10142.5 1642.7810146.12 1642.8610148.68 1643.1410155.22 1643.8810159.68 1644.58
 10161.8 1644.9510162.68 1645.13

Manning's n Values        num=       3
     Sta   n Val     Sta   n Val     Sta   n Val
 9761.28    .036 9990.36    .01510065.51    .036

Bank Sta: Left   Right    Coeff Contr.   Expan.
       9990.3610065.51             .3       .5
Ineffective Flow     num=       1
   Sta L   Sta R    Elev  Permanent
 9761.28 9983.55    1644       T


SUMMARY OF MANNING'S N VALUES

River:CAP Wash East

      Reach          River Sta.       n1        n2        n3

 CAP Wash East        0.621            .036      .033      .036
 CAP Wash East        0.541            .036      .033      .036
 CAP Wash East        0.482            .036      .033      .036
 CAP Wash East        0.471            .036      .033      .036
 CAP Wash East        0.464            .036      .033      .036
 CAP Wash East        0.460            .036      .033      .036
 CAP Wash East        0.455            .036      .033      .036
 CAP Wash East        0.451            .036      .033      .036
 CAP Wash East        0.447            .036      .033      .036
 CAP Wash East        0.444            .036      .033      .036
 CAP Wash East        0.441            .036      .033      .036
 CAP Wash East        0.432            .036      .033      .036
 CAP Wash East        0.393            .036      .033      .036
 CAP Wash East        0.354            .036      .033      .036
 CAP Wash East        0.317            .036      .033      .036
 CAP Wash East        0.276            .036      .033      .036
 CAP Wash East        0.247            .036      .033      .036
 CAP Wash East        0.243            .036      .015      .036
```

CAP Wash East	0.232	.036	.015	.036

SUMMARY OF REACH LENGTHS

River: CAP Wash East

Reach	River Sta.	Left	Channel	Right
CAP Wash East	0.621	430	422.02	420
CAP Wash East	0.541	312	311.21	310
CAP Wash East	0.482	60.65	60.65	61.27
CAP Wash East	0.471	33.96	34.3	33.82
CAP Wash East	0.464	18.9	19.61	18.2
CAP Wash East	0.460	27.96	27.95	30.3
CAP Wash East	0.455	22.55	22.55	26.75
CAP Wash East	0.451	21.08	21.32	21.08
CAP Wash East	0.447	13.4	13.59	13.4
CAP Wash East	0.444	15	15.48	16.2
CAP Wash East	0.441	48.5	49.58	52.6
CAP Wash East	0.432	204.33	204.34	206
CAP Wash East	0.393	200	203.86	210
CAP Wash East	0.354	198	199.82	200
CAP Wash East	0.317	260	212.27	180
CAP Wash East	0.276	180	156.47	150
CAP Wash East	0.247	44.5	22.57	22
CAP Wash East	0.243	1	10	1
CAP Wash East	0.232			

SUMMARY OF CONTRACTION AND EXPANSION COEFFICIENTS
River: CAP Wash East

Reach	River Sta.	Contr.	Expan.
CAP Wash East	0.621	.1	.3
CAP Wash East	0.541	.1	.3
CAP Wash East	0.482	.3	.5
CAP Wash East	0.471	.3	.5
CAP Wash East	0.464	.3	.5
CAP Wash East	0.460	.3	.5
CAP Wash East	0.455	.3	.5
CAP Wash East	0.451	.1	.3
CAP Wash East	0.447	.1	.3
CAP Wash East	0.444	.1	.3
CAP Wash East	0.441	.1	.3
CAP Wash East	0.432	.1	.3
CAP Wash East	0.393	.1	.3
CAP Wash East	0.354	.1	.3
CAP Wash East	0.317	.1	.3
CAP Wash East	0.276	.1	.3
CAP Wash East	0.247	.1	.3
CAP Wash East	0.243	.3	.5
CAP Wash East	0.232	.3	.5

ERRORS WARNINGS AND NOTES
Errors Warnings and Notes for Plan : Pre Project

River: CAP Wash East Reach: CAP Wash East RS: 0.621 Profile: Floodplain
Warning:Divided flow computed for this cross-section.
Warning:The energy loss was greater than 1.0 ft (0.3 m). between the current and previous cross section. This may indicate
the need for additional cross sections.
River: CAP Wash East Reach: CAP Wash East RS: 0.621 Profile: Floodway
Warning:The energy loss was greater than 1.0 ft (0.3 m). between the current and previous cross section. This may indicate
the need for additional cross sections.
Warning:The parabolic search method failed to converge on critical depth. The program will try the cross section
slice/secant method to find critical depth.
River: CAP Wash East Reach: CAP Wash East RS: 0.541 Profile: Floodplain

```
     Warning:Divided flow computed for this cross-section.
     Warning:The energy loss was greater than 1.0 ft (0.3 m). between the current and previous cross
section.  This may indicate
             the need for additional cross sections.
River: CAP Wash East  Reach: CAP Wash East     RS: 0.541     Profile: Floodway
     Warning:Divided flow computed for this cross-section.
     Warning:The energy loss was greater than 1.0 ft (0.3 m). between the current and previous cross
section.  This may indicate
             the need for additional cross sections.
River: CAP Wash East  Reach: CAP Wash East     RS: 0.482     Profile: Floodplain
     Warning:Divided flow computed for this cross-section.
River: CAP Wash East  Reach: CAP Wash East     RS: 0.482     Profile: Floodway
     Warning:The energy equation could not be balanced within the specified number of iterations.  The
program used critical depth
             for the water surface and continued on with the calculations.
     Warning:The cross section had to be extended vertically during the critical depth calculations.
     Warning:During the standard step iterations, when the assumed water surface was set equal to
critical depth, the calculated
             water surface came back below critical depth.  This indicates that there is not a valid
subcritical answer.  The
             program defaulted to critical depth.
     Warning:The parabolic search method failed to converge on critical depth.  The program will try the
cross section
             slice/secant method to find critical depth.
River: CAP Wash East  Reach: CAP Wash East     RS: 0.471     Profile: Floodplain
     Warning:Divided flow computed for this cross-section.
River: CAP Wash East  Reach: CAP Wash East     RS: 0.471     Profile: Floodway
     Warning:The energy equation could not be balanced within the specified number of iterations.  The
program used critical depth
             for the water surface and continued on with the calculations.
     Warning:The conveyance ratio (upstream conveyance divided by downstream conveyance) is less than 0.7
or greater than 1.4.
             This may indicate the need for additional cross sections.
     Warning:During the standard step iterations, when the assumed water surface was set equal to
critical depth, the calculated
             water surface came back below critical depth.  This indicates that there is not a valid
subcritical answer.  The
             program defaulted to critical depth.
River: CAP Wash East  Reach: CAP Wash East     RS: 0.464     Profile: Floodplain
     Warning:The conveyance ratio (upstream conveyance divided by downstream conveyance) is less than 0.7
or greater than 1.4.
             This may indicate the need for additional cross sections.
River: CAP Wash East  Reach: CAP Wash East     RS: 0.464     Profile: Floodway
     Warning:The conveyance ratio (upstream conveyance divided by downstream conveyance) is less than 0.7
or greater than 1.4.
             This may indicate the need for additional cross sections.
River: CAP Wash East  Reach: CAP Wash East     RS: 0.460     Profile: Floodplain
     Warning:The conveyance ratio (upstream conveyance divided by downstream conveyance) is less than 0.7
or greater than 1.4.
             This may indicate the need for additional cross sections.
River: CAP Wash East  Reach: CAP Wash East     RS: 0.460     Profile: Floodway
     Warning:The conveyance ratio (upstream conveyance divided by downstream conveyance) is less than 0.7
or greater than 1.4.
             This may indicate the need for additional cross sections.
River: CAP Wash East  Reach: CAP Wash East     RS: 0.455     Profile: Floodplain
     Warning:Divided flow computed for this cross-section.
River: CAP Wash East  Reach: CAP Wash East     RS: 0.447     Profile: Floodplain
     Warning:Divided flow computed for this cross-section.
River: CAP Wash East  Reach: CAP Wash East     RS: 0.444     Profile: Floodplain
     Warning:Divided flow computed for this cross-section.
River: CAP Wash East  Reach: CAP Wash East     RS: 0.441     Profile: Floodplain
     Warning:Divided flow computed for this cross-section.
River: CAP Wash East  Reach: CAP Wash East     RS: 0.432     Profile: Floodplain
     Warning:Divided flow computed for this cross-section.
     Warning:The conveyance ratio (upstream conveyance divided by downstream conveyance) is less than 0.7
or greater than 1.4.
             This may indicate the need for additional cross sections.
     Warning:The energy loss was greater than 1.0 ft (0.3 m). between the current and previous cross
section.  This may indicate
             the need for additional cross sections.
River: CAP Wash East  Reach: CAP Wash East     RS: 0.432     Profile: Floodway
     Warning:The conveyance ratio (upstream conveyance divided by downstream conveyance) is less than 0.7
or greater than 1.4.
             This may indicate the need for additional cross sections.
     Warning:The energy loss was greater than 1.0 ft (0.3 m). between the current and previous cross
section.  This may indicate
             the need for additional cross sections.
River: CAP Wash East  Reach: CAP Wash East     RS: 0.393     Profile: Floodplain
     Warning:Divided flow computed for this cross-section.
```

Warning:The energy loss was greater than 1.0 ft (0.3 m). between the current and previous cross section. This may indicate
the need for additional cross sections.
River: CAP Wash East Reach: CAP Wash East RS: 0.393 Profile: Floodway
Warning:The energy equation could not be balanced within the specified number of iterations. The program used critical depth
for the water surface and continued on with the calculations.
Warning:The conveyance ratio (upstream conveyance divided by downstream conveyance) is less than 0.7 or greater than 1.4.
This may indicate the need for additional cross sections.
Warning:The energy loss was greater than 1.0 ft (0.3 m). between the current and previous cross section. This may indicate
the need for additional cross sections.
Warning:During the standard step iterations, when the assumed water surface was set equal to critical depth, the calculated
water surface came back below critical depth. This indicates that there is not a valid subcritical answer. The
program defaulted to critical depth.
Warning:The parabolic search method failed to converge on critical depth. The program will try the cross section
slice/secant method to find critical depth.
River: CAP Wash East Reach: CAP Wash East RS: 0.354 Profile: Floodplain
Warning:Divided flow computed for this cross-section.
Warning:The energy loss was greater than 1.0 ft (0.3 m). between the current and previous cross section. This may indicate
the need for additional cross sections.
River: CAP Wash East Reach: CAP Wash East RS: 0.354 Profile: Floodway
Warning:The conveyance ratio (upstream conveyance divided by downstream conveyance) is less than 0.7 or greater than 1.4.
This may indicate the need for additional cross sections.
Warning:The energy loss was greater than 1.0 ft (0.3 m). between the current and previous cross section. This may indicate
the need for additional cross sections.
River: CAP Wash East Reach: CAP Wash East RS: 0.317 Profile: Floodplain
Warning:Divided flow computed for this cross-section.
Warning:The energy loss was greater than 1.0 ft (0.3 m). between the current and previous cross section. This may indicate
the need for additional cross sections.
River: CAP Wash East Reach: CAP Wash East RS: 0.317 Profile: Floodway
Warning:The energy loss was greater than 1.0 ft (0.3 m). between the current and previous cross section. This may indicate
the need for additional cross sections.
River: CAP Wash East Reach: CAP Wash East RS: 0.276 Profile: Floodplain
Warning:Divided flow computed for this cross-section.
Warning:The velocity head has changed by more than 0.5 ft (0.15 m). This may indicate the need for additional cross sections.
Warning:The conveyance ratio (upstream conveyance divided by downstream conveyance) is less than 0.7 or greater than 1.4.
This may indicate the need for additional cross sections.
Warning:The energy loss was greater than 1.0 ft (0.3 m). between the current and previous cross section. This may indicate
the need for additional cross sections.
River: CAP Wash East Reach: CAP Wash East RS: 0.276 Profile: Floodway
Warning:The conveyance ratio (upstream conveyance divided by downstream conveyance) is less than 0.7 or greater than 1.4.
This may indicate the need for additional cross sections.
Warning:The energy loss was greater than 1.0 ft (0.3 m). between the current and previous cross section. This may indicate
the need for additional cross sections.
River: CAP Wash East Reach: CAP Wash East RS: 0.247 Profile: Floodplain
Warning:The energy equation could not be balanced within the specified number of iterations. The program used critical depth
for the water surface and continued on with the calculations.
Warning:Divided flow computed for this cross-section.
Warning:The conveyance ratio (upstream conveyance divided by downstream conveyance) is less than 0.7 or greater than 1.4.
This may indicate the need for additional cross sections.
Warning:The energy loss was greater than 1.0 ft (0.3 m). between the current and previous cross section. This may indicate
the need for additional cross sections.
Warning:During the standard step iterations, when the assumed water surface was set equal to critical depth, the calculated
water surface came back below critical depth. This indicates that there is not a valid subcritical answer. The
program defaulted to critical depth.
River: CAP Wash East Reach: CAP Wash East RS: 0.247 Profile: Floodway
Warning:The energy equation could not be balanced within the specified number of iterations. The program used critical depth
for the water surface and continued on with the calculations.

Warning:The velocity head has changed by more than 0.5 ft (0.15 m). This may indicate the need for additional cross sections.

Warning:The conveyance ratio (upstream conveyance divided by downstream conveyance) is less than 0.7 or greater than 1.4.
This may indicate the need for additional cross sections.

Warning:The energy loss was greater than 1.0 ft (0.3 m). between the current and previous cross section. This may indicate
the need for additional cross sections.

Warning:During the standard step iterations, when the assumed water surface was set equal to critical depth, the calculated
water surface came back below critical depth. This indicates that there is not a valid subcritical answer. The
program defaulted to critical depth.

River: CAP Wash East Reach: CAP Wash East RS: 0.243 Profile: Floodplain

Warning:The energy equation could not be balanced within the specified number of iterations. The program used critical depth
for the water surface and continued on with the calculations.

Warning:Divided flow computed for this cross-section.

Warning:The conveyance ratio (upstream conveyance divided by downstream conveyance) is less than 0.7 or greater than 1.4.
This may indicate the need for additional cross sections.

Warning:During the standard step iterations, when the assumed water surface was set equal to critical depth, the calculated
water surface came back below critical depth. This indicates that there is not a valid subcritical answer. The
program defaulted to critical depth.

River: CAP Wash East Reach: CAP Wash East RS: 0.243 Profile: Floodway

Warning:The conveyance ratio (upstream conveyance divided by downstream conveyance) is less than 0.7 or greater than 1.4.
This may indicate the need for additional cross sections.

HEC-RAS Plan: Pre Project River: CAP Wash East Reach: CAP Wash East

Reach	River Sta	Profile	Q Total	Min Ch El	W.S. Elev	Crit W.S.	E.G. Elev	E.G. Slope	Vel Chnl	Flow Area	Top Width	Froude # Chl
			(cfs)	(ft)	(ft)	(ft)	(ft)	(ft/ft)	(ft/s)	(sq ft)	(ft)	
CAP Wash East	0.621	Floodplain	280.00	1655.62	1657.37		1657.56	0.006437	4.23	93.02	139.66	0.66
CAP Wash East	0.621	Floodway	280.00	1655.62	1657.68	1657.33	1657.92	0.004896	4.23	73.70	54.30	0.59
CAP Wash East	0.541	Floodplain	280.00	1653.25	1654.22		1654.41	0.008708	1.89	86.79	139.48	0.60
CAP Wash East	0.541	Floodway	280.00	1653.25	1655.22	1654.97	1655.42	0.007267	3.74	77.70	83.11	0.67
CAP Wash East	0.482	Floodplain	280.00	1649.22	1651.65		1651.81	0.008064	3.92	90.12	150.87	0.69
CAP Wash East	0.482	Floodway	280.00	1649.22	1652.19	1652.19	1652.65	0.010986	5.99	56.57	55.32	0.86
CAP Wash East	0.471	Floodplain	280.00	1648.70	1651.09		1651.31	0.007554	4.26	75.91	97.27	0.70
CAP Wash East	0.471	Floodway	280.00	1648.70	1651.34	1651.34	1651.88	0.013366	6.16	50.01	45.12	0.95
CAP Wash East	0.464	Floodplain	280.00	1648.89	1650.90		1651.10	0.004752	3.90	81.10	162.20	0.58
CAP Wash East	0.464	Floodway	280.00	1648.89	1651.17		1651.35	0.003424	3.63	82.10	51.72	0.49
CAP Wash East	0.460	Floodplain	280.00	1648.89	1650.92		1651.00	0.001121	2.26	131.71	191.06	0.29
CAP Wash East	0.460	Floodway	280.00	1648.89	1651.16		1651.27	0.001534	2.73	102.51	49.39	0.33
CAP Wash East	0.455	Floodplain	280.00	1648.85	1650.84		1650.94	0.002300	2.90	111.81	317.58	0.41
CAP Wash East	0.455	Floodway	280.00	1648.85	1650.94		1651.17	0.004003	3.99	73.80	45.94	0.55
CAP Wash East	0.451	Floodplain	280.00	1648.77	1650.72		1650.87	0.003032	3.41	99.33	267.80	0.47
CAP Wash East	0.451	Floodway	280.00	1648.77	1650.87		1651.07	0.003390	3.81	78.02	46.52	0.51
CAP Wash East	0.447	Floodplain	280.00	1648.78	1650.66		1650.81	0.002795	3.31	97.24	208.82	0.46
CAP Wash East	0.447	Floodway	280.00	1648.78	1650.80		1651.00	0.003294	3.70	77.22	43.56	0.49
CAP Wash East	0.444	Floodplain	280.00	1648.57	1650.63		1650.77	0.002359	3.16	97.33	207.82	0.42
CAP Wash East	0.444	Floodway	280.00	1648.57	1650.78		1650.95	0.002616	3.35	83.52	44.00	0.43
CAP Wash East	0.441	Floodplain	280.00	1648.33	1650.60		1650.73	0.002132	3.09	99.57	345.81	0.40
CAP Wash East	0.441	Floodway	280.00	1648.33	1650.75		1650.91	0.002386	3.27	85.54	43.23	0.41
CAP Wash East	0.432	Floodplain	280.00	1647.81	1650.31		1650.57	0.004166	4.55	76.10	310.70	0.57
CAP Wash East	0.432	Floodway	280.00	1647.81	1650.54		1650.77	0.002980	4.15	76.74	42.69	0.49
CAP Wash East	0.393	Floodplain	280.00	1646.83	1648.98	1648.96	1649.22	0.012036	4.52	80.63	351.83	0.85
CAP Wash East	0.393	Floodway	280.00	1646.83	1649.21	1649.21	1649.64	0.013010	5.44	56.09	63.45	0.91
CAP Wash East	0.354	Floodplain	280.00	1645.71	1647.06		1647.17	0.008173	3.49	110.87	236.93	0.69
CAP Wash East	0.354	Floodway	280.00	1645.71	1647.46		1647.64	0.005264	3.66	83.00	70.90	0.59

HEC-RAS Plan: Pre Project River: CAP Wash East Reach: CAP Wash East (Continued)

Reach	River Sta	Profile	Q Total	Min Ch El	W.S. Elev	Crit W.S.	E.G. Elev	E.G. Slope	Vel Chnl	Flow Area	Top Width	Froude # Chl
			(cfs)	(ft)	(ft)	(ft)	(ft)	(ft/ft)	(ft/s)	(sq ft)	(ft)	
CAP Wash East	0.317	Floodplain	280.00	1643.75	1645.31	1645.22	1645.41	0.009563	3.14	120.92	422.42	0.71
CAP Wash East	0.317	Floodway	280.00	1643.75	1645.68	1645.61	1646.05	0.013102	5.00	57.54	63.60	0.90
CAP Wash East	0.276	Floodplain	280.00	1640.70	1643.60	1643.54	1643.78	0.005758	3.89	105.17	312.78	0.62
CAP Wash East	0.276	Floodway	280.00	1640.70	1643.67		1643.96	0.007338	4.53	67.99	68.43	0.70
CAP Wash East	0.247	Floodplain	280.00	1638.63	1641.60	1641.60	1642.33	0.014995	6.84	40.91	81.61	1.01
CAP Wash East	0.247	Floodway	280.00	1638.63	1641.61	1641.61	1642.33	0.014831	6.82	41.08	28.91	1.01
CAP Wash East	0.243	Floodplain	280.00	1637.83	1639.14	1639.14	1639.52	0.003754	4.97	56.34	75.52	1.01
CAP Wash East	0.243	Floodway	280.00	1637.83	1639.48		1639.66	0.001078	3.38	82.94	77.79	0.58
CAP Wash East	0.232	Floodplain	280.00	1635.72	1638.56	1636.78	1638.61	0.000105	1.74	160.84	70.76	0.20
CAP Wash East	0.232	Floodway	280.00	1635.72	1639.56	1636.78	1639.58	0.000032	1.19	235.91	78.90	0.12

APPENDIX E.5

PRE-PROJECT CONDITIONS
HEC-RAS CROSS SECTION PLOTS

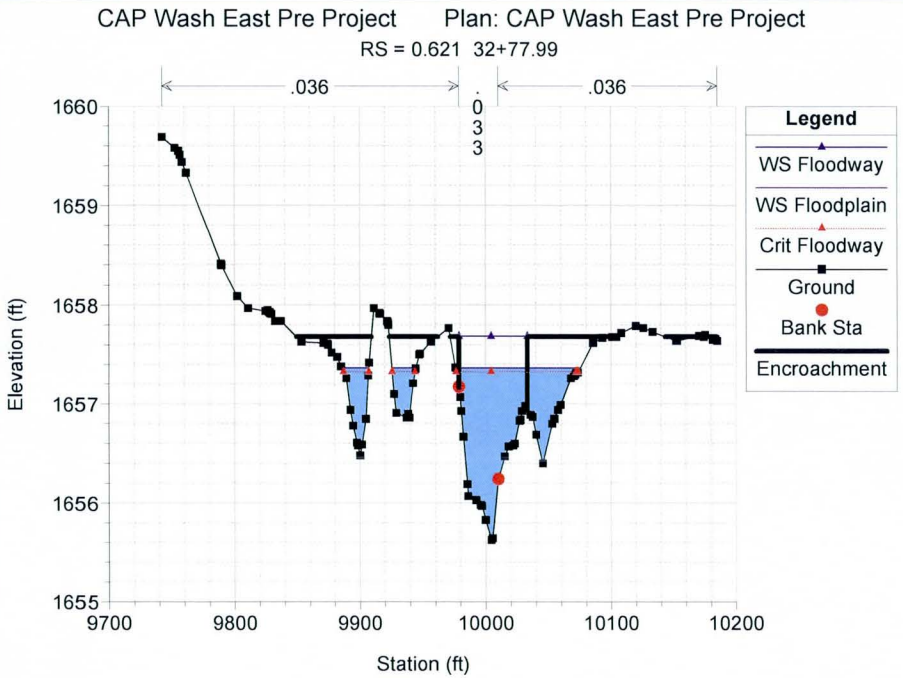
CAP Wash East Pre Project Plan: CAP Wash East Pre Project
RS = 0.621 32+77.99
.036
.033
.036
Legend
WS Floodway
WS Floodplain
Crit Floodway
Ground
Bank Sta
Encroachment
Elevation (ft)
Station (ft)

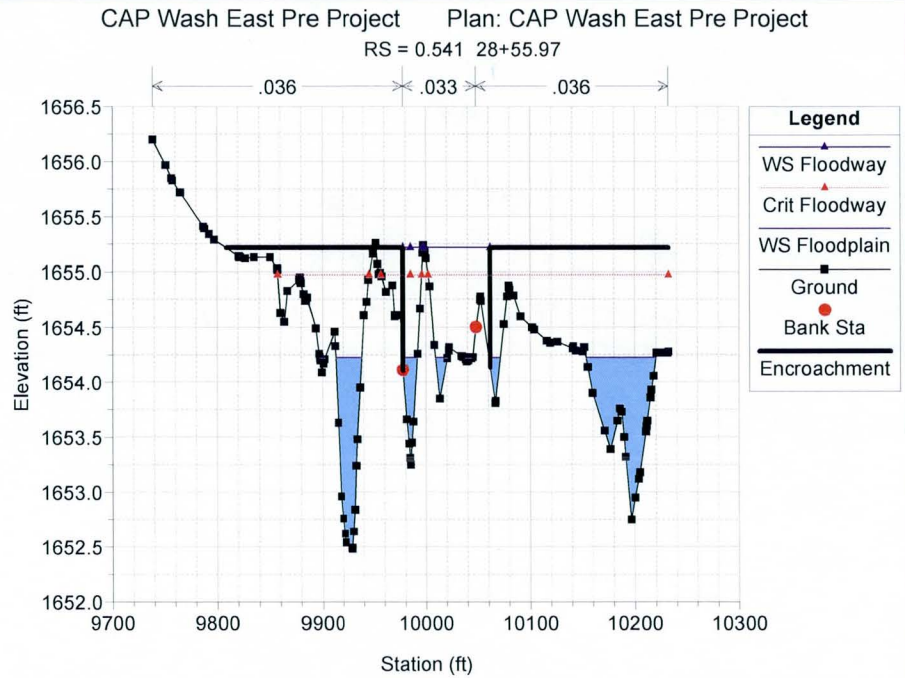
CAP Wash East Pre Project Plan: CAP Wash East Pre Project
RS = 0.541 28+55.97
.036
.033
.036
Legend
WS Floodway
Crit Floodway
WS Floodplain
Ground
Bank Sta
Encroachment
Elevation (ft)
Station (ft)

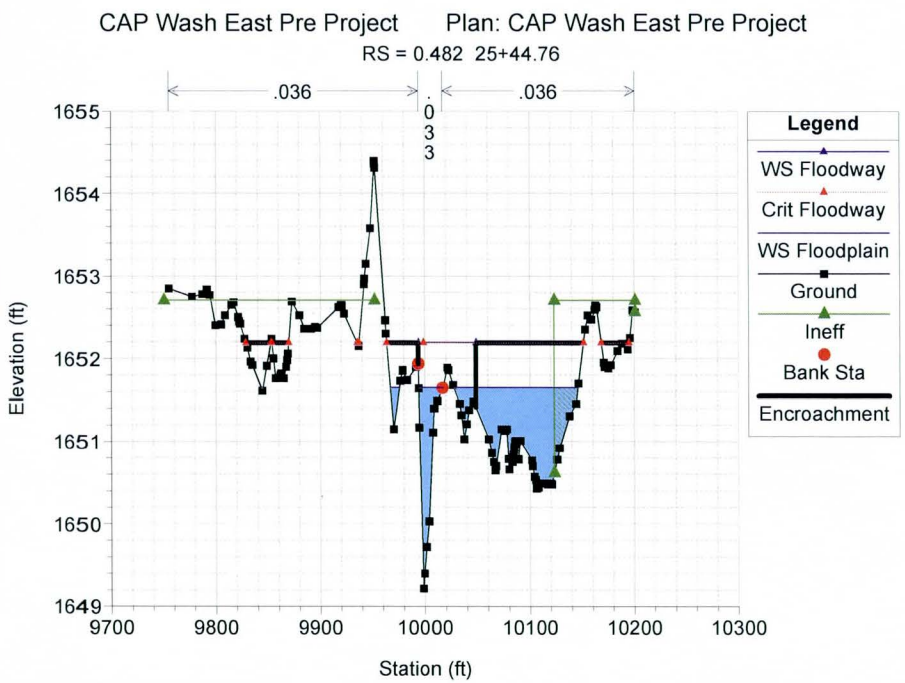
CAP Wash East Pre Project Plan: CAP Wash East Pre Project
RS = 0.482 25+44.76
.036
.033
.036
Legend
WS Floodway
Crit Floodway
WS Floodplain
Ground
Ineff
Bank Sta
Encroachment
Elevation (ft)
Station (ft)

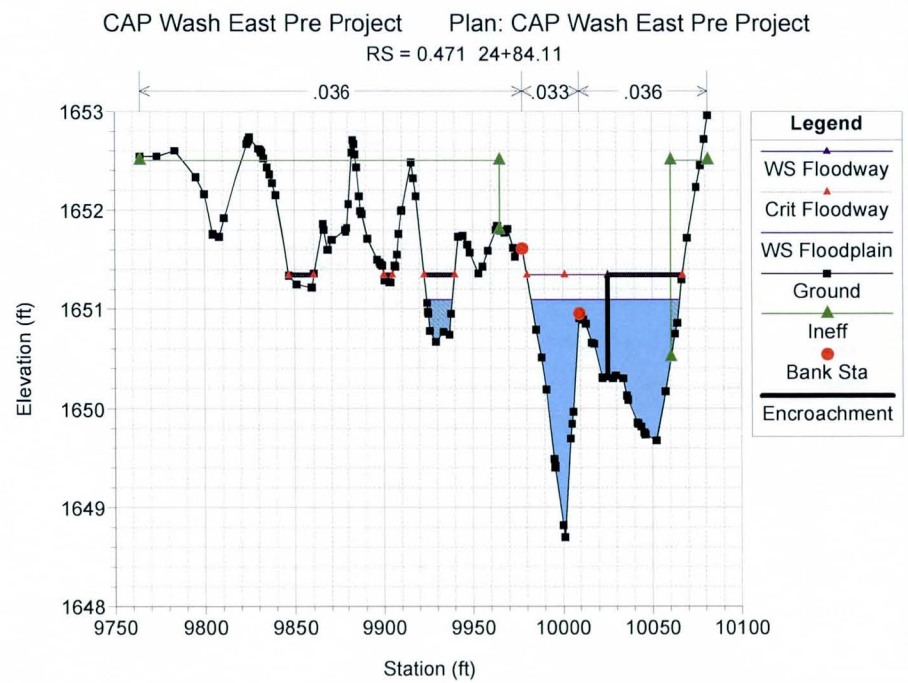
CAP Wash East Pre Project Plan: CAP Wash East Pre Project
RS = 0.471 24+84.11
.036
.033
.036
Legend
WS Floodway
Crit Floodway
WS Floodplain
Ground
Ineff
Bank Sta
Encroachment
Elevation (ft)
Station (ft)

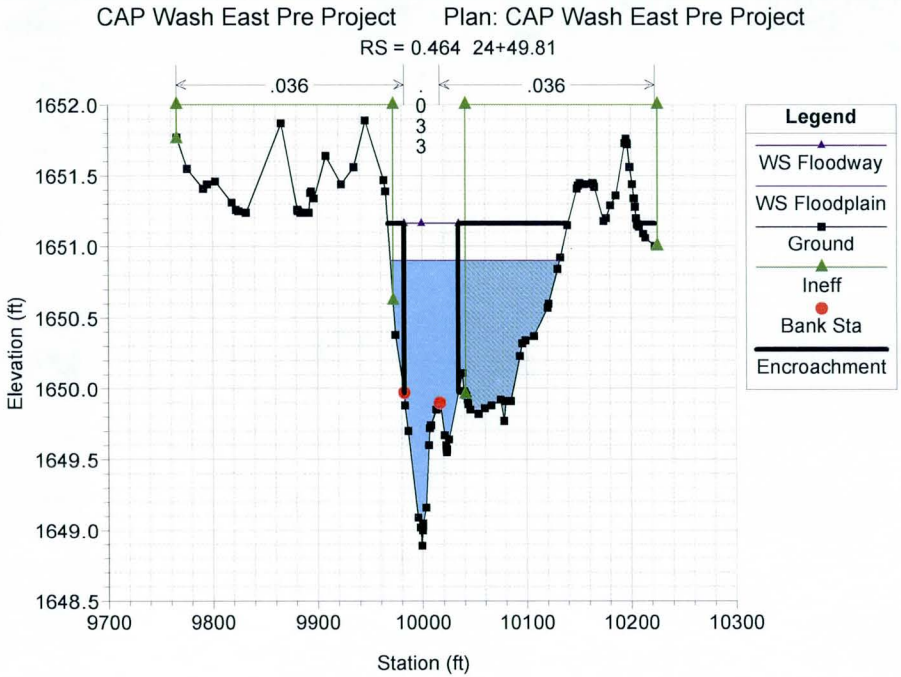
CAP Wash East Pre Project Plan: CAP Wash East Pre Project
RS = 0.464 24+49.81
.036
.033
.036
Legend
WS Floodway
WS Floodplain
Ground
Ineff
Bank Sta
Encroachment
Elevation (ft)
Station (ft)

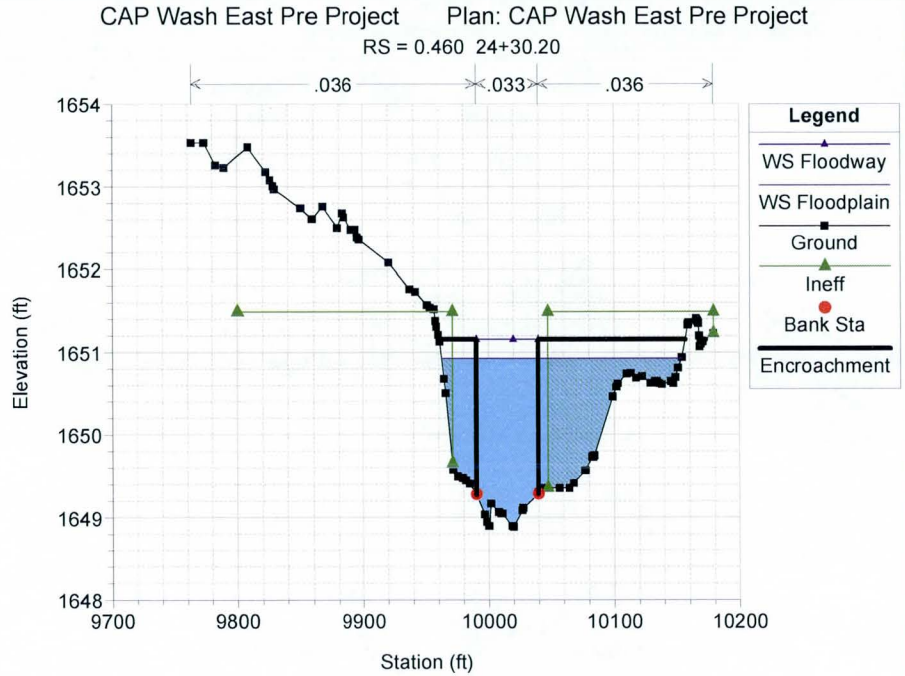
CAP Wash East Pre Project Plan: CAP Wash East Pre Project
RS = 0.460 24+30.20
.036
.033
.036
Legend
WS Floodway
WS Floodplain
Ground
Ineff
Bank Sta
Encroachment
Elevation (ft)
Station (ft)

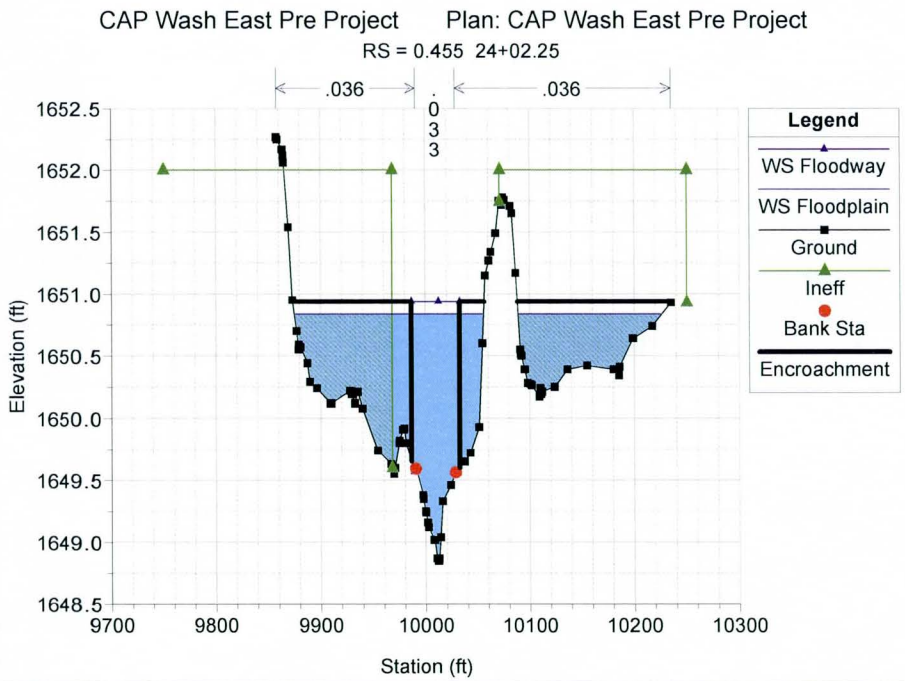
CAP Wash East Pre Project Plan: CAP Wash East Pre Project
RS = 0.455 24+02.25
.036
.033
.036
Legend
WS Floodway
WS Floodplain
Ground
Ineff
Bank Sta
Encroachment
Elevation (ft)
Station (ft)

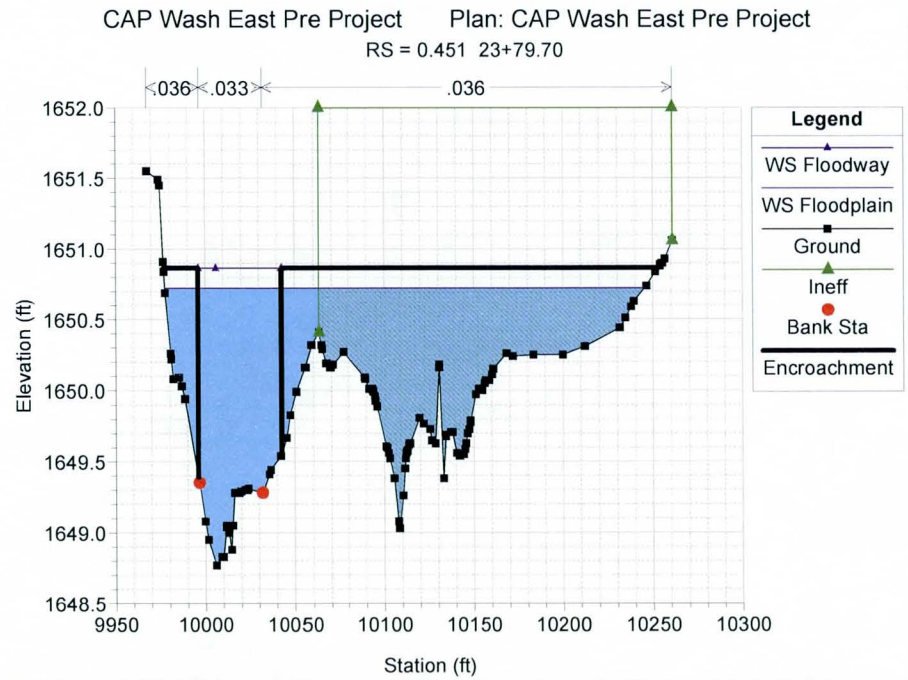
CAP Wash East Pre Project Plan: CAP Wash East Pre Project
RS = 0.451 23+79.70
.036
.033
.036
Legend
WS Floodway
WS Floodplain
Ground
Ineff
Bank Sta
Encroachment
Elevation (ft)
Station (ft)

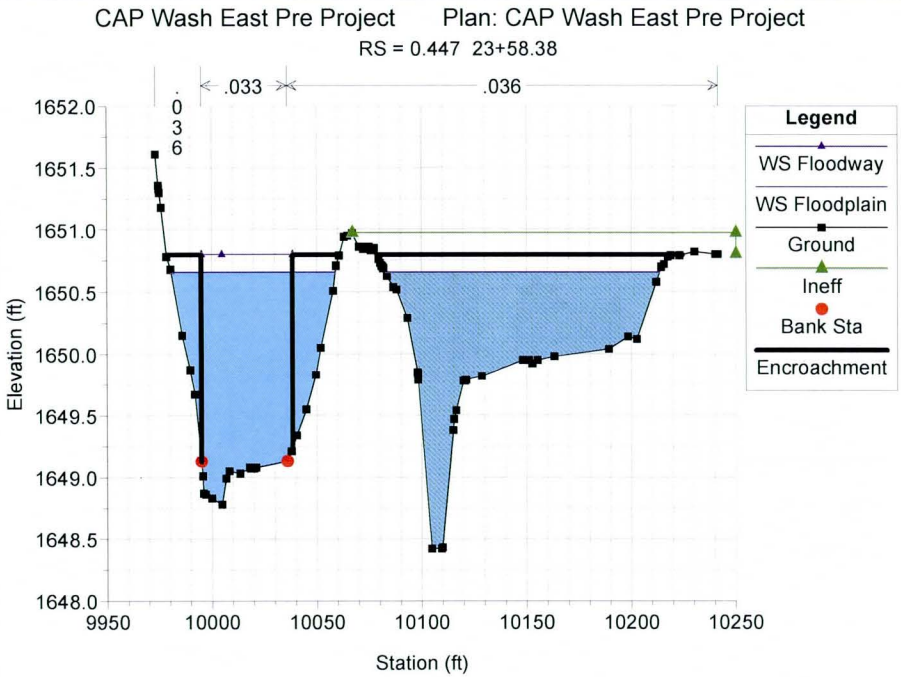
CAP Wash East Pre Project Plan: CAP Wash East Pre Project
RS = 0.447 23+58.38
.036
.033
.036
Legend
WS Floodway
WS Floodplain
Ground
Ineff
Bank Sta
Encroachment
Elevation (ft)
Station (ft)

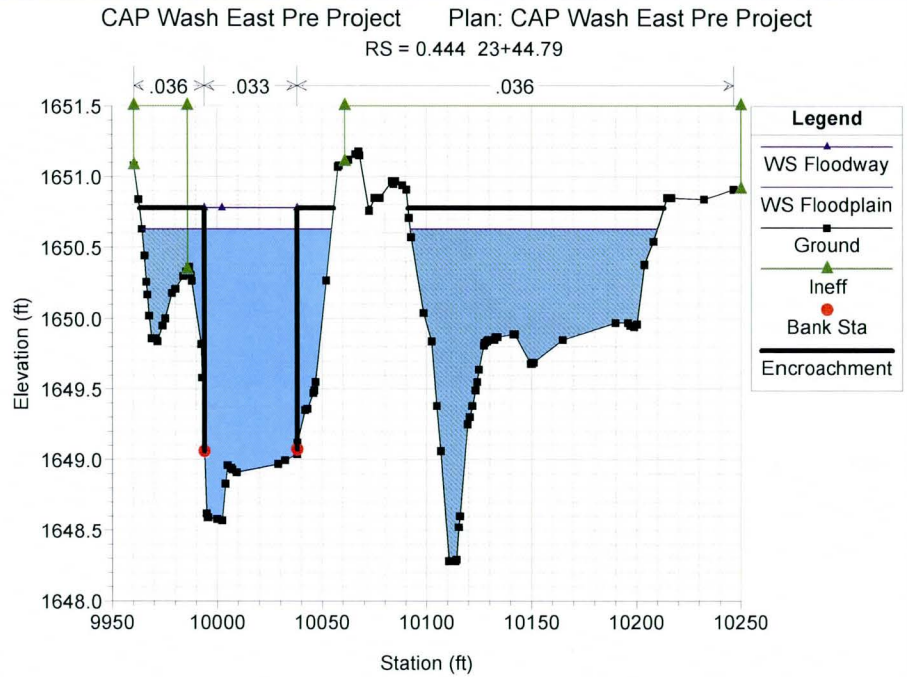
CAP Wash East Pre Project Plan: CAP Wash East Pre Project
RS = 0.444 23+44.79
.036
.033
.036
Legend
WS Floodway
WS Floodplain
Ground
Ineff
Bank Sta
Encroachment
Elevation (ft)
Station (ft)

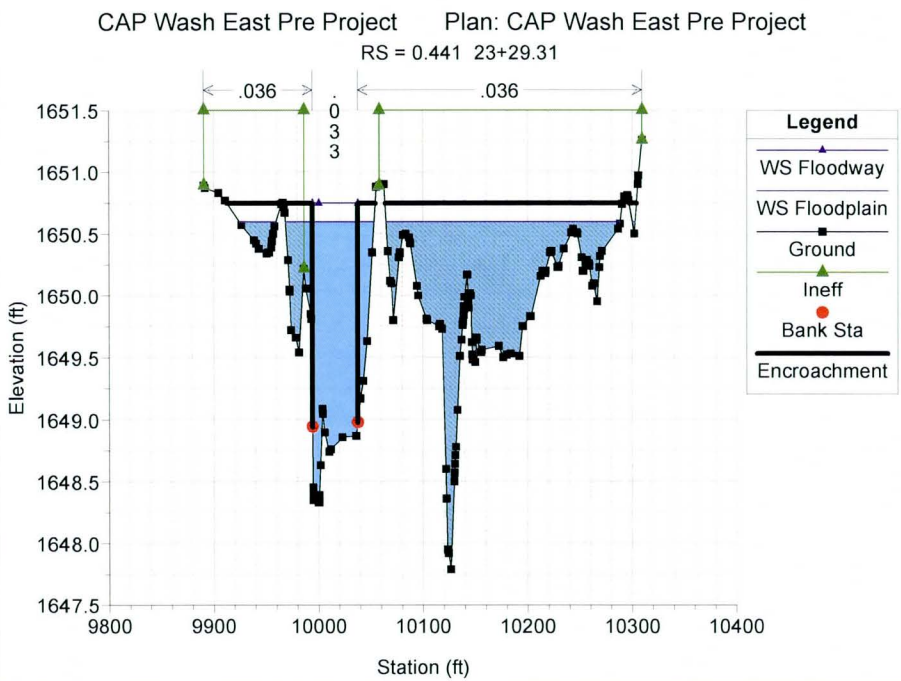
CAP Wash East Pre Project Plan: CAP Wash East Pre Project
RS = 0.441 23+29.31
.036
.033
.036
Legend
WS Floodway
WS Floodplain
Ground
Ineff
Bank Sta
Encroachment
Elevation (ft)
Station (ft)

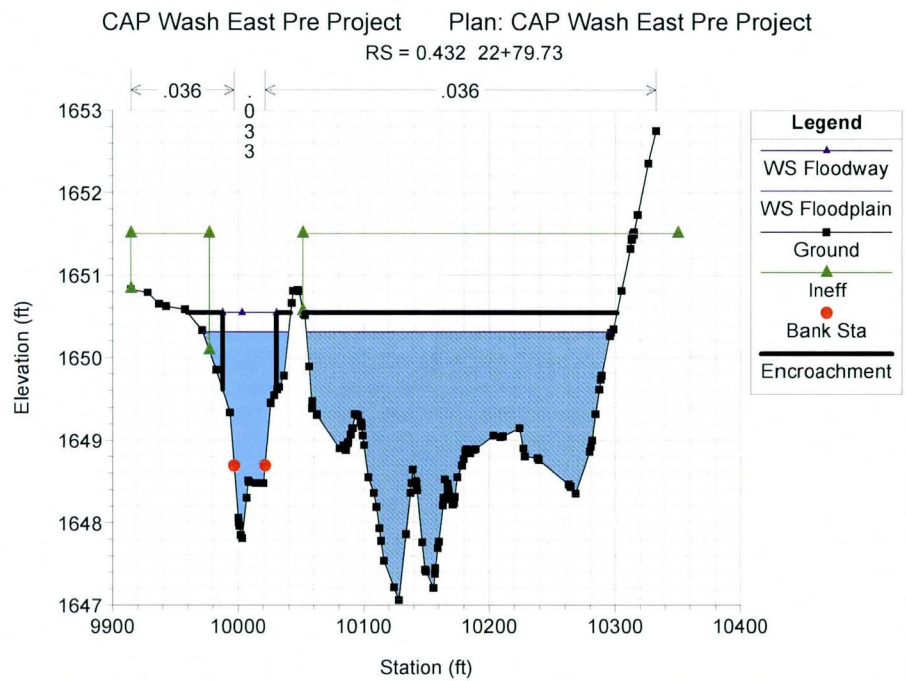
CAP Wash East Pre Project Plan: CAP Wash East Pre Project
RS = 0.432 22+79.73
.036
.033
.036
Legend
WS Floodway
WS Floodplain
Ground
Ineff
Bank Sta
Encroachment
Elevation (ft)
Station (ft)

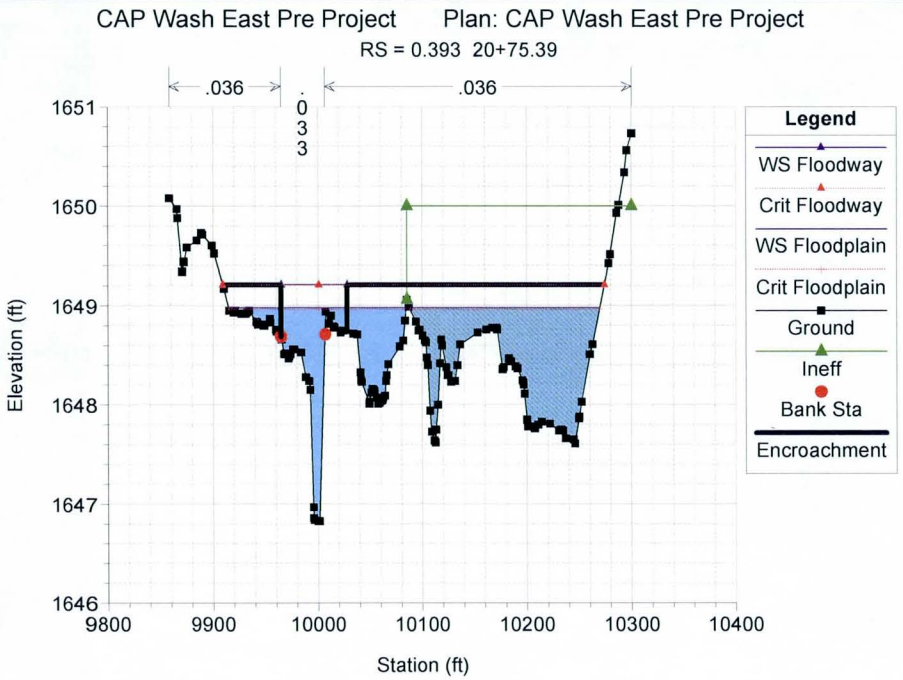
CAP Wash East Pre Project Plan: CAP Wash East Pre Project
RS = 0.393 20+75.39
.036
.033
.036
Elevation (ft)
Station (ft)
Legend
WS Floodway
Crit Floodway
WS Floodplain
Crit Floodplain
Ground
Ineff
Bank Sta
Encroachment

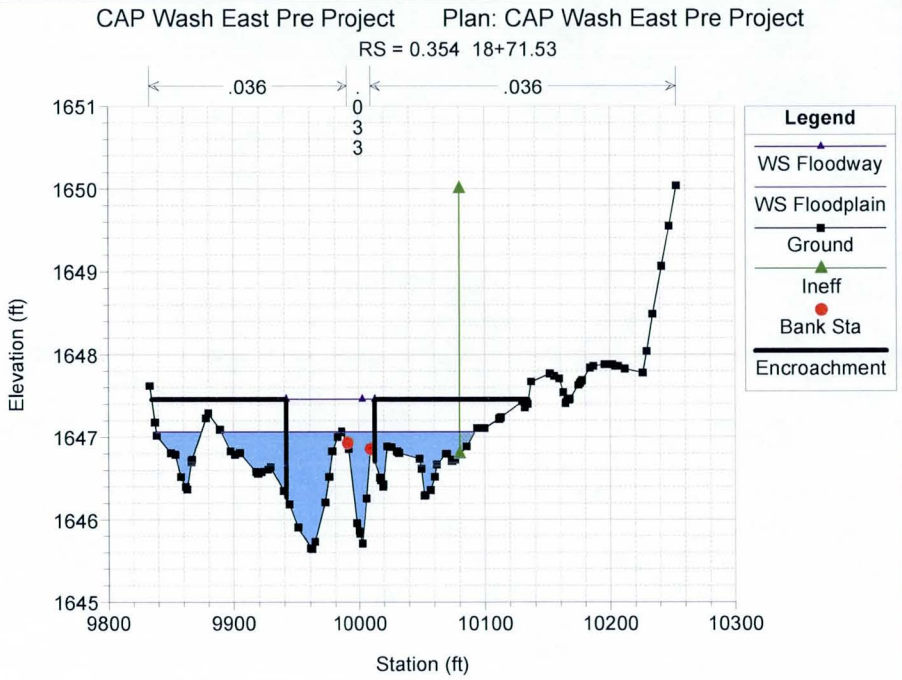
CAP Wash East Pre Project Plan: CAP Wash East Pre Project
RS = 0.354 18+71.53
.036
.033
.036
Elevation (ft)
Station (ft)
Legend
WS Floodway
WS Floodplain
Ground
Ineff
Bank Sta
Encroachment

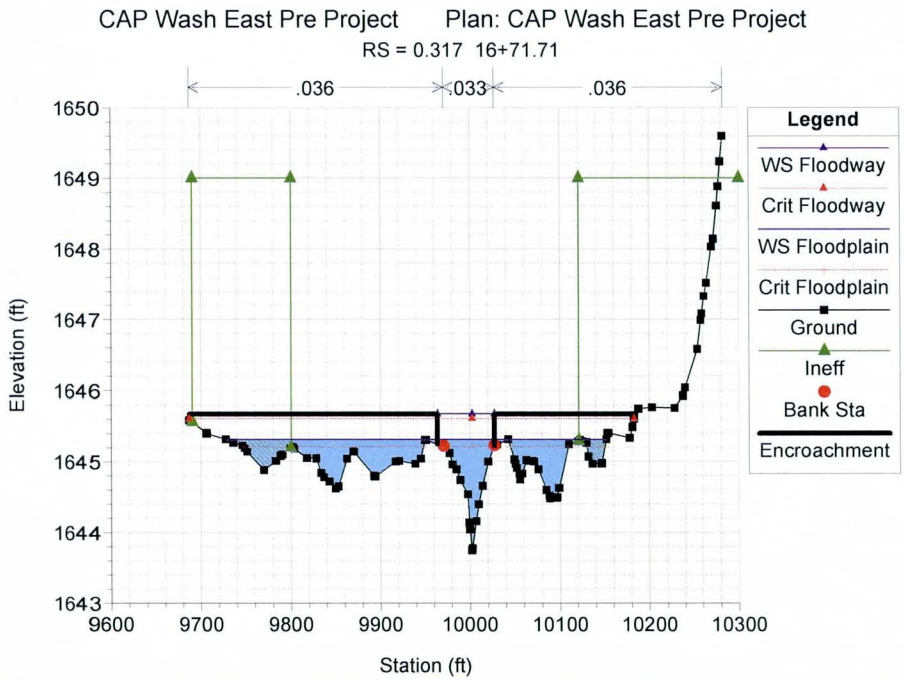
CAP Wash East Pre Project Plan: CAP Wash East Pre Project
RS = 0.317 16+71.71
.036
.033
.036
Elevation (ft)
Station (ft)
Legend
WS Floodway
Crit Floodway
WS Floodplain
Crit Floodplain
Ground
Ineff
Bank Sta
Encroachment

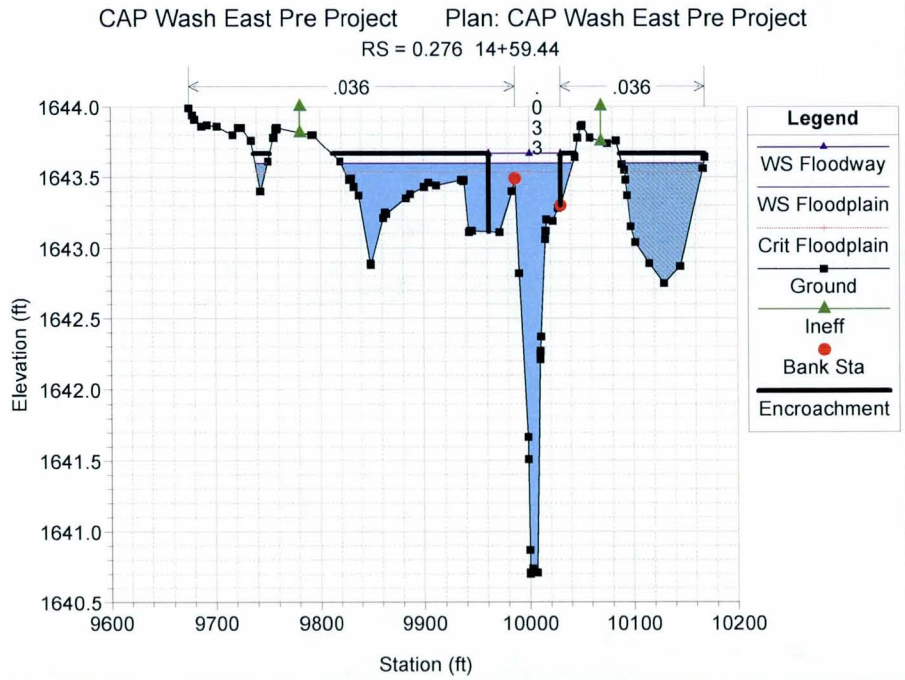
CAP Wash East Pre Project Plan: CAP Wash East Pre Project
RS = 0.276 14+59.44
.036
.033
.036
Elevation (ft)
Station (ft)
Legend
WS Floodway
WS Floodplain
Crit Floodplain
Ground
Ineff
Bank Sta
Encroachment

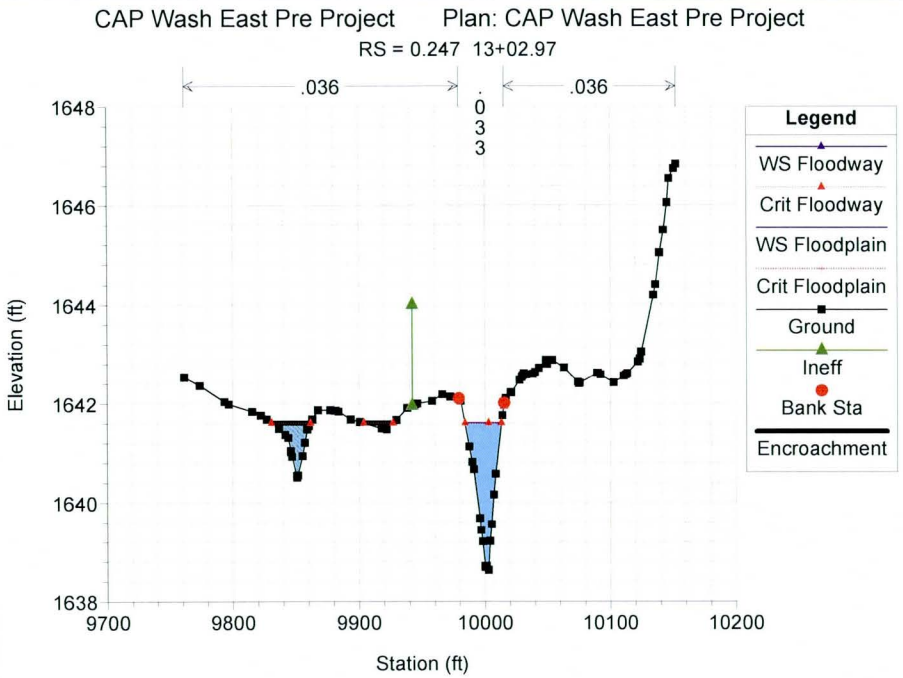
CAP Wash East Pre Project Plan: CAP Wash East Pre Project
RS = 0.247 13+02.97
.036
.033
.036
Legend
WS Floodway
Crit Floodway
WS Floodplain
Crit Floodplain
Ground
Ineff
Bank Sta
Encroachment
Elevation (ft)
Station (ft)

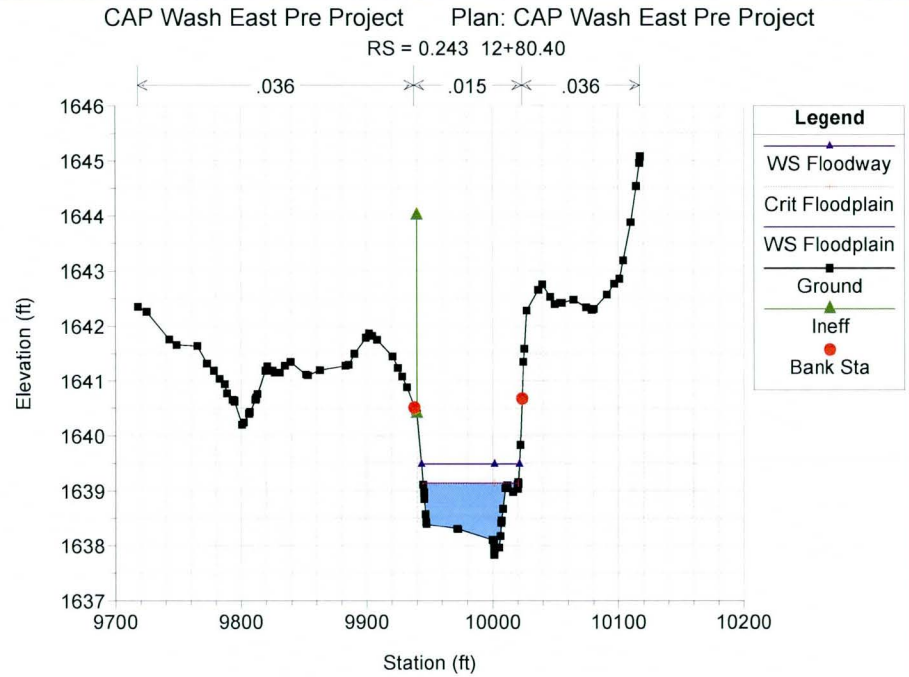
CAP Wash East Pre Project Plan: CAP Wash East Pre Project
RS = 0.243 12+80.40
.036
.015
.036
Legend
WS Floodway
Crit Floodplain
WS Floodplain
Ground
Ineff
Bank Sta
Elevation (ft)
Station (ft)

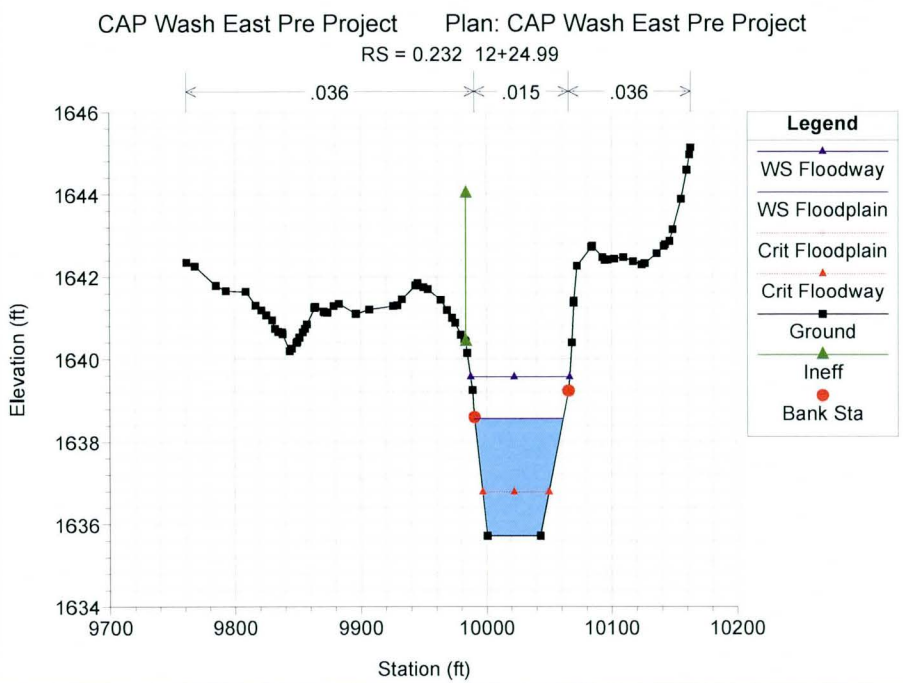
CAP Wash East Pre Project Plan: CAP Wash East Pre Project
RS = 0.232 12+24.99
.036
.015
.036
Legend
WS Floodway
WS Floodplain
Crit Floodplain
Crit Floodway
Ground
Ineff
Bank Sta
Elevation (ft)
Station (ft)

APPENDIX E.6

POST-PROJECT CONDITIONS HEC-RAS OUTPUT

HEC-RAS Version 4.1.0 Jan 2010
U.S. Army Corps of Engineers
Hydrologic Engineering Center
609 Second Street
Davis, California

```
X     X  XXXXXX    XXXX        XXXX       XX      XXXX
X     X  X        X    X       X   X     X  X    X
X     X  X        X            X   X    X    X   X
XXXXXXX  XXXX     X       XXX  XXXX     XXXXXX    XXXX
X     X  X        X            X  X     X    X        X
X     X  X        X    X       X   X    X    X        X
X     X  XXXXXX    XXXX        X    X   X    X   XXXXX
```

PROJECT DATA
Project Title: CAP Wash East LOMR
Project File : CAPWashEastPost.prj
Run Date and Time: 2/13/2014 2:50:10 PM

Project in English units

Project Description:
CAP WASH EAST FLOODPLAIN DELINEATION
LOMR POST PROJECT MODEL
COMPLETED AS
PART OF THE LOMOR FOR THE FOLLOWING PROJECTS:
SONORAN CROSSING

I-17 NORTHBOUND FRONTAGE ROAD
DIBBLE ENGINEERING
FEBRUARY,
2014

This model represents an update to the North Black Canyon Crossing CAP Wash-East Conditional Letter of Map Revision, dated December of 2011. This model is believed to be consistent with the CLOMR concept, updated for detailed design and construction.

Topographic mapping provided by by Kenney Aerial Mapping Inc. The flight date was August 18, 2011 at a map scale of 1 inch = 40 feet. This mapping is based on the Maricopa County Department of Transportation (MCDOT) Geodetic Densification and Cadastral Survey (GDACS), 1983 North American Datum (NAD), modified to ground horizontally; and the National Geodetic Vertical Datum of 1929 (NGVD 29), vertically.

Cross sections face
downstream

Starting water surface elvation derived from HY8 analysis of
downstream culvert (3 barrel 8'x5' RCBC)

Hydrologic values are based on FEMA
CLOMR dated October 17, 2008 FEMA Case No.: 09-09-0132R that updates the 1% annual chance flows for the CAP Wash-East. The CAP Wash-East October 17, 2008 CLOMR defines the 100-year peak discharge at Carefree Highway as 120 cfs, and 280 cfs at Interstate 17. A flow rate of 280cfs is used in this study.

PLAN DATA

Plan Title: CAP Wash East LOMR
Plan File : j:\2012\111204 Macerich NBCC\Post-Design\LOMR\CAP Wash East\CD Contents\Hydraulic Models\HEC-RAS\Post Project\CAPWashEastPost.p03

Geometry Title: CAP Wash East LOMR
Geometry File : j:\2012\111204 Macerich NBCC\Post-Design\LOMR\CAP Wash East\CD Contents\Hydraulic Models\HEC-RAS\Post Project\CAPWashEastPost.g03

Flow Title : CAP Wash East LOMR
Flow File : j:\2012\111204 Macerich NBCC\Post-Design\LOMR\CAP Wash East\CD Contents\Hydraulic Models\HEC-RAS\Post Project\CAPWashEastPost.f04

Plan Summary Information:

Number of:	Cross Sections	= 25	Multiple Openings	=	0
	Culverts	= 2	Inline Structures	=	0
	Bridges	= 0	Lateral Structures	=	0

Computational Information

Water surface calculation tolerance = 0.01
Critical depth calculation tolerance = 0.01
Maximum number of iterations = 20
Maximum difference tolerance = 0.3
Flow tolerance factor = 0.001

Computation Options

Critical depth computed only where necessary
Conveyance Calculation Method: At breaks in n values only
Friction Slope Method: Average Conveyance
Computational Flow Regime: Subcritical Flow

Encroachment Data

Equal Conveyance = True
Left Offset = 0
Right Offset = 0

River = CAP Wash East Reach = CAP Wash East

RS	Profile	Method	Value1	Value2
0.621	Floodway	1	9978.910	033.46
0.541	Floodway	1	9977.710	061.82
0.482	Floodway	1	9993.611	0051.39
0.471	Floodway	1	9977.621	0023.84
0.464	Floodway	1	9966.181	0021.33
0.460	Floodway	1	9956.591	0023.82
0.455	Floodway	1	9976.510	230.67
0.441	Floodway	1	9976.510	177.77
0.428	Floodway	1	9976.510	137.69
0.420	Floodway	1	9976.441	0084.31
0.410	Floodway	1	9979.06	10021.2
0.407	Floodway	1	9989.911	0010.18
0.4065	Floodway	1	9990.071	0010.14
0.4053	Floodway	1	999	010010.04
0.405	Floodway	1	9989.98	10010
0.401	Floodway	1	9992.981	0007.02
0.394	Floodway	1	9992.841	0006.88
0.392	Floodway	1	9994.841	0004.96
0.350	Floodway	1	9994.861	0004.99
0.309	Floodway	1	9994.861	0004.99
0.271	Floodway	1	9994.951	0004.99
0.236	Floodway	1	9994.79	10005
0.198	Floodway	1	9994.721	0004.76
0.192	Floodway	1	9994.731	0004.95
0.185	Floodway	1	9989.981	0019.63

FLOW DATA

Flow Title: CAP Wash East LOMR
Flow File : j:\2012\111204 Macerich NBCC\Post-Design\LOMR\CAP Wash East\CD Contents\Hydraulic Models\HEC-RAS\Post Project\CAPWashEastPost.f04

Flow Data (cfs)

River	Reach	RS	Floodplain	Floodway
CAP Wash East	CAP Wash East	0.621	280	280

Boundary Conditions

River	Reach	Profile	Upstream	Downstream
CAP Wash East	CAP Wash East	Floodplain	Normal S = 0.0035	Known WS = 1638.38
CAP Wash East	CAP Wash East	Floodway	Normal S = 0.0035	Known WS = 1638.38

Changes in WS and EG

River	Reach	RS	Profile	Type	Value
CAP Wash East	CAP Wash East	0.464	Floodway	K Loss	1
CAP Wash East	CAP Wash East	0.464	Floodplain	K Loss	1
CAP Wash East	CAP Wash East	0.460	Floodway	K Loss	1

CAP Wash East	CAP Wash East	0.460	Floodplain K Loss	1
CAP Wash East	CAP Wash East	0.455	Floodway K Loss	1
CAP Wash East	CAP Wash East	0.455	Floodplain K Loss	1
CAP Wash East	CAP Wash East	0.441	Floodway K Loss	1
CAP Wash East	CAP Wash East	0.441	Floodplain K Loss	1
CAP Wash East	CAP Wash East	0.405	Floodway Addtnl EG	.5
CAP Wash East	CAP Wash East	0.405	Floodplain Addtnl EG	.5

GEOMETRY DATA

Geometry Title: CAP Wash East LOMR
Geometry File : j:\2012\111204 Macerich NBCC\Post-Design\LOMR\CAP Wash East\CD Contents\Hydraulic Models\HEC-RAS\Post Project\CAPWashEastPost.g03

CROSS SECTION

RIVER: CAP Wash East
REACH: CAP Wash East RS: 0.621

INPUT
Description: 3277.99
3277.99
3277.99
Station Elevation Data num= 107

Sta	Elev	Sta	Elev	Sta	Elev	Sta	Elev	Sta	Elev
9742.3	1659.69	9752.38	1659.58	9755.35	1659.55	9756.43	1659.51	9758.2	1659.44
9761.44	1659.33	9789.14	1658.41	9789.25	1658.41	9789.44	1658.4	9789.71	1658.4
9802.1	1658.09	9810.71	1657.97	9824.74	1657.94	9826.51	1657.95	9827.33	1657.93
9827.82	1657.93	9828.25	1657.92	9829.34	1657.91	9832.19	1657.84	9836.98	1657.84
9853.55	1657.63	9870.93	1657.62	9874.22	1657.61	9874.67	1657.6	9877.48	1657.52
9882.03	1657.48	9885.05	1657.38	9889.21	1657.26	9892.5	1656.94	9894.65	1656.78
9897.72	1656.61	9898.34	1656.58	9900.31	1656.48	9901.67	1656.59	9904.9	1656.85
9906.75	1657.29	9907.44	1657.42	9911.28	1657.97	9915.78	1657.92	9916.24	1657.91
9921.83	1657.84	9922.16	1657.83	9922.5	1657.82	9922.78	1657.8	9927.31	1657.1
9929.07	1656.91	9937.2	1656.86	9938.53	1656.9	9939.45	1656.86	9942.45	1657.21
9944.31	1657.36	9947.24	1657.5	9947.91	1657.51	9956.69	1657.63	9970.71	1657.77
9975.99	1657.37	9978.9	1657.17	9979.95	1657.07	9980.86	1656.93	9982.38	1656.67
9985.44	1656.19	9986.14	1656.07	9992.55	1656.03	9996.15	1655.98	9997.03	1655.97
10000.01	1655.83	10004.28	1655.62	10005.3	1655.64	10010.05	1656.24	10015.15	1656.47
10018.33	1656.57	10021.92	1656.58	10023.08	1656.6	10027.01	1656.83	10027.14	1656.83
10027.79	1656.84	10028.95	1656.93	10031.61	1656.98	10035.86	1656.89	10037.56	1656.87
10040.25	1656.69	10045.5	1656.4	10053.24	1656.8	10054.85	1656.85	10057.71	1656.94
10059.79	1656.99	10067.91	1657.26	10070.4	1657.28	10071.45	1657.3	10072.12	1657.33
10073.59	1657.32	10085.58	1657.62	10093.01	1657.67	10100.95	1657.68	10104.39	1657.68
10108.15	1657.72	10119.78	1657.79	10125.97	1657.77	10133.5	1657.73	10152.09	1657.64
10152.7	1657.64	10170.45	1657.69	10174.4	1657.68	10174.2	1657.69	10175.3	1657.7
10181.39	1657.65	10184.81	1657.64						

Manning's n Values num= 3

Sta	n Val	Sta	n Val	Sta	n Val
9742.3	.036	9978.9	.033	10010.05	.036

Bank Sta: Left	Right	Lengths: Left	Channel	Right	Coeff Contr.	Expan.
9978.9	10010.05	430	422.02	420	.1	.3

CROSS SECTION

RIVER: CAP Wash East
REACH: CAP Wash East RS: 0.541

INPUT
Description: 2855.97
Station Elevation Data num= 147

Sta	Elev	Sta	Elev	Sta	Elev	Sta	Elev	Sta	Elev
9738.5	1656.2	9750.92	1655.97	9756.42	1655.85	9757.49	1655.83	9764.99	1655.72
9786.78	1655.41	9787.8	1655.39	9792.25	1655.34	9797.13	1655.29	9820.58	1655.14
9821.45	1655.13	9826.53	1655.12	9835.08	1655.13	9850.48	1655.13	9857.36	1655.03
9857.38	1655.02	9860.19	1654.63	9863.92	1654.55	9866.84	1654.83	9878.41	1654.93
9878.9	1654.95	9879.35	1654.92	9879.51	1654.91	9879.7	1654.9	9882.12	1654.8
9883.73	1654.74	9883.94	1654.74	9884.12	1654.74	9885	1654.77	9893.03	1654.49
9896.22	1654.26	9896.87	1654.23	9897.33	1654.21	9897.59	1654.2	9898.95	1654.09
9900.47	1654.17	9901.51	1654.21	9910.92	1654.46	9911.52	1654.33	9914.61	1653.63
9917.5	1652.96	9919.88	1652.76	9921.67	1652.62	9922.64	1652.54	9928.85	1652.49
9929.02	1652.49	9929.08	1652.49	9929.22	1652.48	9930.49	1652.64	9931.88	1652.84

```
 9933.01 1653.24 9934.02 1653.48 9936.83 1653.95 9940.36 1654.61 9943.04 1654.73
 9944.63 1654.93 9949.13 1655.16 9951.87 1655.26 9953.51 1655.07  9954.6 1654.98
 9956.06 1654.99 9957.46 1654.96 9961.55 1654.82 9967.72 1654.88 9967.87 1654.88
 9969.86  1654.6 9970.02 1654.61 9972.63 1654.61 9974.29 1654.61 9975.26 1654.61
  9977.7 1654.11 9981.33 1653.66 9983.62 1653.44 9984.52 1653.31 9985.07 1653.25
 9986.33 1653.45 9987.72 1653.64 9991.83 1654.26 9994.25 1654.67 9996.91 1655.17
 9997.42 1655.24 9999.05 1655.19 9999.97 1655.1210003.59 1654.8710007.92 1654.34
10013.36 1653.8510020.64 1654.2210021.98 1654.2910022.29 1654.3210034.43 1654.24
10035.68 1654.2310037.56 1654.2310038.14 1654.2110039.16 1654.1910040.66  1654.2
10043.47 1654.2210044.72 1654.23 10047.9  1654.510051.82 1654.7510052.23 1654.78
10052.88 1654.7410066.61 1653.8110066.79 1653.8310074.68 1654.5310077.85 1654.78
10079.33 1654.8810079.41 1654.8710079.79 1654.8610080.15 1654.8410084.17 1654.79
10090.86  1654.610101.89  1654.510103.72 1654.48 10115.8 1654.3810119.09 1654.36
10125.82 1654.3710140.37 1654.3110141.44 1654.3310143.36 1654.2910150.43 1654.28
10151.84 1654.3210155.19 1654.1410159.76  1653.910170.92 1653.5610171.02 1653.56
10176.62 1653.3910183.24 1653.6510185.52 1653.7610187.12 1653.7310187.49 1653.73
10189.65  1653.510191.16 1653.3210196.47 1652.7510200.13 1652.9510203.58 1653.12
10204.77 1653.1810210.45 1653.5510211.07  1653.610211.67 1653.6510214.67 1653.86
10215.54 1653.9310217.59 1654.06 10220.3 1654.2710227.65 1654.2710229.78 1654.27
 10230.9 1654.2710231.98 1654.28

Manning's n Values        num=       3
     Sta   n Val     Sta   n Val     Sta   n Val
  9738.5    .036  9977.7    .033 10047.9    .036

Bank Sta: Left   Right    Lengths: Left Channel   Right     Coeff Contr.   Expan.
        9977.7 10047.9              312  311.21     310              .1       .3

CROSS SECTION


RIVER: CAP Wash East
REACH: CAP Wash East      RS: 0.482

INPUT
Description: 2544.76
Station Elevation Data    num=     145
     Sta    Elev     Sta    Elev     Sta    Elev     Sta    Elev     Sta    Elev
    9755 1652.85 9777.39 1652.75 9787.37 1652.78 9791.42 1652.84  9794.1 1652.77
 9799.49  1652.4 9805.09 1652.41 9808.72 1652.52 9808.76 1652.52 9808.79 1652.52
 9814.64 1652.65 9816.83 1652.68 9821.17  1652.5 9822.14 1652.45 9823.18 1652.42
 9827.35 1652.24 9829.96 1652.13 9833.16 1651.96 9834.83 1651.92 9844.34 1651.61
 9848.56 1651.91 9853.26 1652.24 9855.08    1652 9857.09 1651.76  9858.5 1651.76
 9861.95 1651.79 9862.21  1651.8 9862.61 1651.82 9865.11 1651.76 9867.32  1651.9
 9868.33 1651.98 9868.93 1652.06 9872.88 1652.69  9880.2 1652.52 9884.68 1652.36
 9884.91 1652.36 9885.56 1652.36 9886.23 1652.36  9891.3 1652.36 9895.05 1652.38
 9897.13 1652.37  9917.7 1652.62 9919.88 1652.64 9920.23 1652.66 9920.49 1652.63
 9922.75 1652.54 9936.86 1652.15 9942.03  1652.9 9942.34 1652.97 9943.75 1653.15
 9948.24 1653.58 9951.87 1654.36 9952.02 1654.39 9952.41 1654.31  9962.2 1652.46
 9962.86  1652.3 9970.38 1651.15 9976.62 1651.73  9978.9 1651.86 9979.01 1651.85
  9983.2 1651.74  9991.5  1651.9  9993.6 1651.94 9993.611651.934 9994.16 1651.64
 9994.65 1651.17 9998.61 1649.22  9999.7  1649.410001.61 1649.72 10004.2 1650.03
10007.97 1651.1110008.99  1651.410011.82 1651.4910016.72 1651.6410016.731651.641
10021.51 1651.8910022.41 1651.8610026.92 1651.6810033.33 1651.4610034.91 1651.32
10037.55 1651.0310040.05 1651.2110042.26 1651.3810046.29 1651.4810047.26 1651.47
10060.84 1651.03 10063.8 1650.8610065.47 1650.7510067.01 1650.6510067.83  1650.7
10072.86 1651.15 10076.6 1651.13   10078 1651.1510079.58 1650.7910080.39 1650.66
10082.91 1650.7610083.73 1650.7510084.31 1650.8410084.82  1650.910085.16 1650.93
10085.89    165110086.23 1651.0110086.52 1650.9910086.86 1650.97 10087.8 1650.78
10088.42 1650.7810088.77 1650.7910088.95 1650.7810089.05 1650.7910090.85 1651.01
10101.97 1650.7710102.54  1650.710104.36 1650.5710105.49 1650.5310106.41 1650.43
10108.19 1650.4410112.48 1650.4910113.56 1650.4910114.96 1650.4910116.94 1650.48
10118.96 1650.4910119.95 1650.4910120.14 1650.4910120.98 1650.4810126.19 1650.78
10128.31 1650.9210137.87 1651.3110144.16 1651.4610146.48  1651.710152.85 1652.35
10155.33 1652.5210159.04 1652.4710162.21 1652.59 10162.8 1652.6410163.78 1652.62
10170.81 1651.9510171.41  1651.910175.15 1651.8810177.52 1651.9210183.95 1652.09
10188.15 1652.1810193.78 1652.1110195.84 1652.2510198.44 1652.58 10200.7 1652.56

Manning's n Values        num=       3
     Sta   n Val     Sta   n Val     Sta   n Val
    9755    .036 9993.61    .03310016.73    .036

Bank Sta: Left   Right    Lengths: Left Channel   Right     Coeff Contr.   Expan.
        9993.6110016.73            60.65   60.65   61.27              .1       .3
Ineffective Flow     num=       2
   Sta L   Sta R    Elev  Permanent
 10123.3 10200.7  1652.7       T
    9750 9952.02  1652.7       T
```

CROSS SECTION

RIVER: CAP Wash East
REACH: CAP Wash East RS: 0.471

INPUT
Description: 2484.11
Station Elevation Data num= 90

Sta	Elev	Sta	Elev	Sta	Elev	Sta	Elev	Sta	Elev
9812.71	1651.95	9813.82	1651.91	9814.09	1651.9	9815.03	1651.9	9815.77	1651.62
9828.81	1647.57	9842.75	1647.32	9842.92	1647.32	9843.18	1647.4	9851.71	1649.79
9857.18	1650.25	9865.83	1650.99	9870.29	1651.33	9888.89	1651.36	9890.13	1651.41
9891.02	1651.44	9893.86	1651.56	9895.72	1651.64	9901.44	1651.87	9902.81	1651.93
9912.15	1652.31	9914.23	1652.31	9915.35	1652.26	9916.33	1652.11	9917.49	1651.98
9929.24	1650.67	9933.49	1650.77	9936.91	1650.74	9937.85	1650.95	9941.96	1651.73
9944.45	1651.74	9946.94	1651.65	9947.07	1651.65	9948.37	1651.57	9953.13	1651.36
9955.53	1651.43	9958.42	1651.59	9962.97	1651.8	9963.7	1651.84	9965.4	1651.79
9967.66	1651.77	9969.48	1651.81	9972.55	1651.62	9973.67	1651.53	9975.19	1651.61
9975.71	1651.6	9977.46	1651.609	9977.62	1651.61	9985.1	1650.79	9988.2	1650.51
9990.91	1650.19	9995.1	1649.49	9995.57	1649.42	9995.61	1649.41	9995.64	1649.4
10000	1648.82	10000.97	1648.71	10004.32	1649.71	10005.08	1649.85	10005.92	1649.97
10009.34	1650.906	10009.5	1650.95	10010.47	1650.93	10011.75	1650.89	10013.08	1650.85
10016.35	1650.66	10017.58	1650.65	10022.08	1650.31	10022.14	1650.31	10022.23	1650.3
10028	1650.31	10029.58	1650.33	10033.69	1650.31	10035.71	1650.13	10036.49	1650.09
10041.65	1649.86	10042.08	1649.85	10043.77	1649.82	10045.35	1649.76	10045.95	1649.74
10052.01	1649.68	10057.14	1650.17	10062.51	1650.75	10063.92	1650.86	10066.37	1651.3
10069.45	1651.72	10074.75	1652.23	10077.08	1652.45	10079.41	1652.72	10081.27	1652.96

Manning's n Values num= 4

Sta	n Val	Sta	n Val	Sta	n Val	Sta	n Val
9812.71	.035	9870.29	.036	9977.62	.033	10009.5	.036

Bank Sta: Left	Right	Lengths: Left	Channel	Right	Coeff Contr.	Expan.
9977.62	10009.5	33.96	34.3	33.82	.3	.5

Ineffective Flow num= 2

Sta L	Sta R	Elev	Permanent
9816.47	9965	1652.5	T
10060.31	10081.27	1652.5	T

CROSS SECTION

RIVER: CAP Wash East
REACH: CAP Wash East RS: 0.464

INPUT
Description: 2449.81
Station Elevation Data num= 83

Sta	Elev	Sta	Elev	Sta	Elev	Sta	Elev	Sta	Elev
9896.51	1651.59	9898.43	1651.54	9908.12	1648.13	9912.03	1646.77	9912.3	1646.77
9926.95	1646.68	9927.57	1646.84	9935.51	1648.31	9939.54	1648.47	9949.17	1649.16
9955.23	1649.47	9977.17	1649.35	9982.57	1649.377	9989.3	1649.41	9991.18	1649.24
9997.34	1649.04	10000	1649	10000.2	1649.03	10000.33	1649.05	10003.43	1649.16
10006.18	1649.61	10006.91	1649.72	10008.11	1649.74	10013.06	1649.85	10016.45	1649.897
10016.65	1649.91	10020.82	1649.67	10022.14	1649.61	10022.69	1649.57	10022.95	1649.55
10023.2	1649.57	10025.03	1649.64	10038.17	1650.11	10039.54	1649.98	10040.37	1649.97
10041.13	1649.95	10041.65	1649.95	10043.01	1649.92	10043.57	1649.89	10045.63	1649.85
10053.55	1649.82	10059.51	1649.86	10065.86	1649.88	10074.59	1649.92	10078.19	1649.77
10079.89	1649.91	10084.69	1649.91	10093.49	1650.23	10095.86	1650.32	10098.81	1650.34
10106.9	1650.37	10120.11	1650.57	10121	1650.61	10129.63	1650.84	10132.18	1650.92
10139.22	1651.15	10148.43	1651.41	10149.33	1651.43	10151.1	1651.45	10155.7	1651.44
10163.37	1651.45	10163.86	1651.44	10164.17	1651.44	10165.04	1651.42	10173.99	1651.18
10176.23	1651.21	10180.35	1651.29	10185.52	1651.36	10194.22	1651.73	10195.22	1651.76
10196	1651.73	10196.28	1651.72	10198.83	1651.56	10201.11	1651.44	10202.81	1651.34
10203.73	1651.28	10204.82	1651.21	10205.69	1651.16	10206.36	1651.15	10207.44	1651.14
10211.55	1651.09	10213.55	1651.06	10222.72	1651				

Manning's n Values num= 4

Sta	n Val	Sta	n Val	Sta	n Val	Sta	n Val
9896.51	.035	9955.23	.036	9982.57	.033	10016.45	.036

Bank Sta: Left	Right	Lengths: Left	Channel	Right	Coeff Contr.	Expan.
9982.57	10016.45	45.1	19.61	18.2	.3	.5

Ineffective Flow num= 2

Sta L	Sta R	Elev	Permanent
9900.21	9969	1652	T
10039.9	10225	1652	T

```
CROSS SECTION


RIVER: CAP Wash East
REACH: CAP Wash East       RS: 0.460

INPUT
Description: 2430.20
Station Elevation Data     num=       68
     Sta    Elev     Sta    Elev     Sta    Elev     Sta    Elev     Sta    Elev
 9954.37 1651.29 9956.59 1651.29    9961 1649.89 9971.05 1646.82 9975.16 1646.81
 9984.69 1647.08  9995.4 1648.64   10000 1649.4710011.72 1649.6110012.02 1649.62
10014.68 1649.6410023.82 1649.7110027.97 1649.2310040.73 1649.51 10044.8 1649.36
10056.44 1649.36 10064.8 1649.3610068.24 1649.4210077.24 1649.5710082.52 1649.73
10082.79 1649.7410083.18 1649.73 10084.2 1649.7510098.84 1650.4610101.76 1650.58
10102.74 1650.6210109.86 1650.7410113.08 1650.7510117.37 1650.6910122.19 1650.71
10128.79 1650.6310132.38 1650.6510132.69 1650.6510133.07 1650.6410133.59 1650.64
10133.69 1650.6410133.99 1650.65 10134.5 1650.6310134.92 1650.6310135.71 1650.62
10137.98 1650.6110145.12 1650.6510147.16 1650.6210148.76  1650.710150.79 1650.81
10153.87 1650.9410158.33 1651.3310158.69 1651.3410158.76 1651.3510159.02 1651.36
10165.05 1651.4110165.58 1651.3910166.12 1651.3810166.38 1651.3710166.72 1651.36
10166.89 1651.3510167.51  1651.210167.85 1651.0710168.87  1651.110170.47 1651.13
10178.88 1651.2310192.49 1651.18 10199.4 1651.1410203.29 1651.0610206.46 1651.04
10207.34 1651.0310208.35 1651.0210224.65 1650.88

Manning's n Values         num=        3
     Sta   n Val     Sta   n Val     Sta   n Val
 9954.37    .035   10000    .03310023.82    .036

Bank Sta: Left   Right    Lengths: Left Channel   Right     Coeff Contr.   Expan.
        9956.5910023.82            17.1   27.95    15.5              .3       .5
Ineffective Flow     num=        1
   Sta L   Sta R    Elev  Permanent
   10046   10225 1651.49       T

CROSS SECTION


RIVER: CAP Wash East
REACH: CAP Wash East       RS: 0.455

INPUT
Description: 2402.25
Station Elevation Data     num=       69
     Sta    Elev     Sta    Elev     Sta    Elev     Sta    Elev     Sta    Elev
  9976.5 1651.29  9978.3 1651.27 9986.62 1648.59 9992.29 1646.85   10000 1646.84
10001.62 1646.8410006.46 1646.9710011.91 1647.77 10015.5 1648.4210027.02 1649.74
   10041 1649.9110052.27 1650.3910055.09 1650.3410055.99    165010059.34 1649.98
10060.73  1650.1 10061.1  1650.110061.47  1650.110062.27  1650.110062.95 1650.14
10067.22 1650.2710069.08 1650.3610069.97 1650.4210079.82 1650.8810080.62 1650.91
10081.09 1650.9610081.45 1650.9810081.78 1651.0210082.15 1651.0510084.51 1651.21
10091.38 1651.6510094.46 1651.8810094.71 1651.8710095.62 1651.9210095.66 1651.92
10095.94 1651.8810096.65 1651.8110097.84 1651.5410099.75 1651.3710100.94 1651.23
10101.99 1651.06   10106 1650.4710106.35  1650.510107.74 1650.4910122.23 1650.36
10127.63 1650.4210128.57 1650.3610129.75 1650.3610131.49 1650.3710133.15 1650.38
10135.24 1650.3810137.09 1650.3610148.22 1650.5110152.36 1650.6210153.39 1650.62
10158.54 1650.7610160.23 1650.7710162.07 1650.8410183.36 1651.0110183.71     1651
 10183.9    165110184.14    165110186.08 1651.0210188.23 1651.0110205.33 1650.89
 10214.8 1650.8210216.25 1650.8410222.96 1650.8610230.67 1650.84

Manning's n Values         num=        2
     Sta   n Val     Sta   n Val
  9976.5    .03510027.02    .036

Bank Sta: Left   Right    Lengths: Left Channel   Right     Coeff Contr.   Expan.
        9978.3   10041            72.13   72.13      49              .3       .5

CROSS SECTION


RIVER: CAP Wash East
REACH: CAP Wash East       RS: 0.441

INPUT
Description: 2330.11
Station Elevation Data     num=       30
     Sta    Elev     Sta    Elev     Sta    Elev     Sta    Elev     Sta    Elev
  9976.5 1650.91 9976.72 1650.91 9977.22 1650.68  9988.8 1645.97   10000 1645.94
 10005.2 1645.9310006.33 1645.95 10015.5 1648.9410023.01 1650.7410024.39 1651.07
```

```
 10027.3 1651.0810027.39 1651.0910027.45 1651.0910028.83 1651.12   10045 1651.51
10047.43 1651.12   10048 1651.0510052.75 1650.2310054.64  1650.2 10055.8  1650.2
10056.27 1650.1910057.05 1650.1810073.57 1650.2410086.59  1650.410103.67 1650.49
10118.21 1650.5210133.76 1650.7210152.03 1650.6710163.86 1650.8410177.77 1650.87

Manning's n Values        num=       2
     Sta   n Val     Sta   n Val
  9976.5    .03510024.39    .036

Bank Sta: Left   Right    Lengths: Left Channel   Right     Coeff Contr.   Expan.
       9976.7210024.39            68.26   68.26   68.26             .1       .3

CROSS SECTION


RIVER: CAP Wash East
REACH: CAP Wash East      RS: 0.428

INPUT
Description: 2261.86
Station Elevation Data    num=      35
     Sta    Elev     Sta    Elev     Sta    Elev     Sta    Elev     Sta    Elev
  9976.5 1650.42 9976.63 1650.42 9985.35 1646.39 9987.18 1645.78 10009.8 1646.21
 10015.5    164810020.72 1649.5410022.26 1650.0910026.12  1650.110033.66 1650.23
10039.97 1650.3910041.14 1650.2310042.13 1649.9410042.75 1649.9810048.25 1650.12
10049.87 1650.1810050.19 1650.1910052.45 1650.2410056.64 1650.1210057.68 1650.12
10058.51 1650.1110061.42 1650.0810062.17 1650.0910064.66 1650.0610066.97 1650.09
10069.42 1650.1210077.94 1650.3710091.03 1650.4910094.73 1650.5210120.19 1650.79
10122.67  1650.8   10124 1650.8210125.63 1650.8210131.11 1650.8610137.69  1650.9

Manning's n Values        num=       2
     Sta   n Val     Sta   n Val
  9976.5    .03510022.26    .036

Bank Sta: Left   Right    Lengths: Left Channel   Right     Coeff Contr.   Expan.
       9976.6310022.26            43.14   43.14   43.14             .1       .3

CROSS SECTION


RIVER: CAP Wash East
REACH: CAP Wash East      RS: 0.420

INPUT
Description: 2218.72
Station Elevation Data    num=      14
     Sta    Elev     Sta    Elev     Sta    Elev     Sta    Elev     Sta    Elev
 9976.44 1649.96 9976.56 1649.96 9978.92 1648.87 9987.48 1646.0410008.41 1646.16
 10012.7 1647.5110021.51  1650.510034.58 1650.4710036.97 1650.4210040.42 1650.35
 10054.8 1650.23   10072 1650.3310075.04 1650.3610084.31 1650.46

Manning's n Values        num=       2
     Sta   n Val     Sta   n Val
 9976.44    .03510021.51    .036

Bank Sta: Left   Right    Lengths: Left Channel   Right     Coeff Contr.   Expan.
       9976.5610021.51            52.25   52.25   52.25             .1       .3

CROSS SECTION


RIVER: CAP Wash East
REACH: CAP Wash East      RS: 0.410

INPUT
Description: 2166.46 Concrete Apron
Station Elevation Data    num=      12
     Sta    Elev     Sta    Elev     Sta    Elev     Sta    Elev     Sta    Elev
 9979.06 1650.72 9979.25 1650.06 9979.25 1650.05 9981.28  1649.3 9986.65 1647.29
 9989.89 1646.09   10000 1646.1210010.29 1646.1610015.28 1647.8810020.99 1649.85
10020.99 1649.86 10021.2 1650.68

Manning's n Values        num=       3
     Sta   n Val     Sta   n Val     Sta   n Val
 9979.06    .014 9979.06    .014 10021.2    .014

Bank Sta: Left   Right    Lengths: Left Channel   Right     Coeff Contr.   Expan.
       9979.06 10021.2            17.88   17.88   17.88             .3       .5
```

```
CROSS SECTION


RIVER: CAP Wash East
REACH: CAP Wash East      RS: 0.407

INPUT
Description: 2148.59 Crest of Drop Structure
Station Elevation Data    num=       5
     Sta    Elev     Sta    Elev     Sta    Elev     Sta    Elev     Sta    Elev
 9989.91 1650.56 9989.91 1646.01   10000 1646.0410010.18 1646.2210010.18 1650.51

Manning's n Values        num=       3
     Sta   n Val     Sta   n Val     Sta   n Val
 9989.91    .014 9989.91    .01410010.18    .014

Bank Sta: Left   Right    Lengths: Left Channel   Right     Coeff Contr.   Expan.
       9989.9110010.18             2.07    2.07    2.07             .3       .5

CROSS SECTION


RIVER: CAP Wash East
REACH: CAP Wash East      RS: 0.4065

INPUT
Description: 2146.53

Invert elevation manual input from As-Built Drawings
Station Elevation Data    num=       5
     Sta    Elev     Sta    Elev     Sta    Elev     Sta    Elev     Sta    Elev
 9990.07 1650.56 9990.07 1645.54   10000 1645.5410010.14 1645.5410010.14 1650.56

Manning's n Values        num=       3
     Sta   n Val     Sta   n Val     Sta   n Val
 9990.07    .014 9990.07    .01410010.14    .014

Bank Sta: Left   Right    Lengths: Left Channel   Right     Coeff Contr.   Expan.
       9990.0710010.14             6.34    6.34    6.34             .3       .5

CROSS SECTION


RIVER: CAP Wash East
REACH: CAP Wash East      RS: 0.4053

INPUT
Description: 2140.19 Toe of Drop Structure
Station Elevation Data    num=       5
     Sta    Elev     Sta    Elev     Sta    Elev     Sta    Elev     Sta    Elev
    9990 1650.54 9990.02 1639.77   10000 1639.7510010.02 1639.7310010.04 1650.57

Manning's n Values        num=       3
     Sta   n Val     Sta   n Val     Sta   n Val
    9990    .014    9990    .01410010.04    .014

Bank Sta: Left   Right    Lengths: Left Channel   Right     Coeff Contr.   Expan.
          999010010.04             2.9     2.9     2.9             .3       .5
Ineffective Flow     num=       2
   Sta L   Sta R    Elev  Permanent
    9990  9991.6 1650.16       T
 10008.410010.04 1650.16       T

CROSS SECTION


RIVER: CAP Wash East
REACH: CAP Wash East      RS: 0.405

INPUT
Description: Sta 21+37.29 (2) 54" RGRCP Culvert U/S
Station Elevation Data    num=       7
     Sta    Elev     Sta    Elev     Sta    Elev     Sta    Elev     Sta    Elev
 9989.98 1650.53 9989.98 1650.02 9990.03 1639.71   10000 1639.7210009.99 1639.73
   10010 1650.56   10010 1650.59

Manning's n Values        num=       3
     Sta   n Val     Sta   n Val     Sta   n Val
 9989.98    .014 9989.98    .014   10010    .014
```

```
Bank Sta: Left   Right    Lengths: Left Channel   Right     Coeff Contr.   Expan.
       9989.98   10010            21.88   21.88   21.88              .3       .5
Ineffective Flow     num=       3
   Sta L   Sta R    Elev  Permanent
    9990  9994.5    1650       T
 10005.5   10010    1650       T
    9999   10001    1650       T

CULVERT


RIVER: CAP Wash East
REACH: CAP Wash East      RS: 0.402

INPUT
Description:
Distance from Upstream XS =     .06
Deck/Roadway Width        =   21.81
Weir Coefficient          =     2.6
Upstream  Deck/Roadway Coordinates
    num=        2
     Sta Hi Cord Lo Cord     Sta Hi Cord Lo Cord
 9989.98 1650.53 1639.72   10010 1650.72 1639.72

Upstream Bridge Cross Section Data
Station Elevation Data    num=       7
     Sta    Elev     Sta    Elev     Sta    Elev     Sta    Elev     Sta    Elev
 9989.98 1650.53 9989.98 1650.02 9990.03 1639.71   10000 1639.7210009.99 1639.73
   10010 1650.56   10010 1650.59

Manning's n Values        num=       3
     Sta   n Val     Sta   n Val     Sta   n Val
 9989.98    .014 9989.98    .014   10010    .014

Bank Sta: Left   Right    Coeff Contr.   Expan.
       9989.98   10010             .3       .5
Ineffective Flow     num=       3
   Sta L   Sta R    Elev  Permanent
    9990  9994.5    1650       T
 10005.5   10010    1650       T
    9999   10001    1650       T

Downstream  Deck/Roadway Coordinates
    num=        2
     Sta Hi Cord Lo Cord     Sta Hi Cord Lo Cord
    9994 1650.45 1638.95   10006 1650.08 1638.95

Downstream Bridge Cross Section Data
Station Elevation Data    num=       5
     Sta    Elev     Sta    Elev     Sta    Elev     Sta    Elev     Sta    Elev
    9994 1650.45    9994 1638.95   10000 1638.95   10006 1638.95   10006 1650.08

Manning's n Values        num=       3
     Sta   n Val     Sta   n Val     Sta   n Val
    9994    .014    9994    .014   10006    .014

Bank Sta: Left   Right    Coeff Contr.   Expan.
          9994   10006             .3       .5
Ineffective Flow     num=       3
   Sta L   Sta R    Elev  Permanent
    9994  9994.5    1650       T
 10005.5   10006    1650       T
    9999   10001    1650       T

Upstream Embankment side slope              =       0 horiz. to 1.0 vertical
Downstream Embankment side slope            =       0 horiz. to 1.0 vertical
Maximum allowable submergence for weir flow =     .98
Elevation at which weir flow begins         = 1650.53
Energy head used in spillway design         =
Spillway height used in design              =
Weir crest shape                            = Broad Crested

Number of Culverts =  1

Culvert Name     Shape      Rise    Span
Culvert #1      Circular     4.5
FHWA Chart # 1 - Concrete Pipe Culvert
FHWA Scale # 1 - Square edge entrance with headwall
```

```
Solution Criteria = Inlet control
Culvert Upstrm Dist  Length    Top n  Bottom n  Depth Blocked  Entrance Loss Coef   Exit Loss Coef
                .06   21.82     .012     .012        0                  .6                 0
Number of Barrels =  2
Upstream   Elevation =  1639.78
Centerline Stations
    Sta.    Sta.
 9996.7510003.25
Downstream Elevation =  1638.9
Centerline Stations
    Sta.    Sta.
 9996.7510003.25

CROSS SECTION


RIVER: CAP Wash East
REACH: CAP Wash East      RS: 0.401

INPUT
Description: 2115.41(2) 54" RGRCP Culvert
Station Elevation Data    num=       5
     Sta    Elev     Sta    Elev     Sta    Elev     Sta    Elev     Sta    Elev
    9994 1650.45    9994 1638.95   10000 1638.95   10006 1638.95   10006 1650.08

Manning's n Values        num=       3
     Sta   n Val     Sta   n Val     Sta   n Val
    9994    .014    9994    .014   10006    .014

Bank Sta: Left   Right    Lengths: Left Channel   Right     Coeff Contr.   Expan.
          9994   10006             33.6    33.6    33.6              .3       .5
Ineffective Flow     num=       3
   Sta L   Sta R    Elev  Permanent
    9994  9994.5    1650       T
 10005.5   10006    1650       T
    9999   10001    1650       T

CULVERT


RIVER: CAP Wash East
REACH: CAP Wash East      RS: 0.397

INPUT
Description:
Distance from Upstream XS =     .01
Deck/Roadway Width        =   33.53
Weir Coefficient          =     2.6
Upstream  Deck/Roadway Coordinates
    num=       2
     Sta Hi Cord Lo Cord     Sta Hi Cord Lo Cord
    9994 1650.45 1638.95   10006 1650.08 1638.95

Upstream Bridge Cross Section Data
Station Elevation Data    num=       5
     Sta    Elev     Sta    Elev     Sta    Elev     Sta    Elev     Sta    Elev
    9994 1650.45    9994 1638.95   10000 1638.95   10006 1638.95   10006 1650.08

Manning's n Values        num=       3
     Sta   n Val     Sta   n Val     Sta   n Val
    9994    .014    9994    .014   10006    .014

Bank Sta: Left   Right    Coeff Contr.   Expan.
          9994   10006             .3       .5
Ineffective Flow     num=       3
   Sta L   Sta R    Elev  Permanent
    9994  9994.5    1650       T
 10005.5   10006    1650       T
    9999   10001    1650       T

Downstream  Deck/Roadway Coordinates
    num=       2
     Sta Hi Cord Lo Cord     Sta Hi Cord Lo Cord
 9992.84 1645.63 1638.7210006.88 1645.63 1638.72

Downstream Bridge Cross Section Data
Station Elevation Data    num=       8
     Sta    Elev     Sta    Elev     Sta    Elev     Sta    Elev     Sta    Elev
 9992.84 1645.63 9992.87 1638.89 9992.87 1638.88   10000  1638.810006.82 1638.72
```

```
10006.83 1638.7210006.83 1638.7310006.88 1645.63

Manning's n Values        num=       3
     Sta   n Val     Sta   n Val     Sta   n Val
 9992.84    .014 9992.84    .01410006.88    .014

Bank Sta: Left   Right    Coeff Contr.   Expan.
       9992.8410006.88            .3       .5
Ineffective Flow     num=       3
   Sta L   Sta R    Elev  Permanent
 9992.84  9994.5  1645.5       T
 10005.510006.88  1645.5       T
    9999   10001  1645.5       T

Upstream Embankment side slope              =       0 horiz. to 1.0 vertical
Downstream Embankment side slope            =       0 horiz. to 1.0 vertical
Maximum allowable submergence for weir flow =     .98
Elevation at which weir flow begins         =
Energy head used in spillway design         =
Spillway height used in design              =
Weir crest shape                            = Broad Crested

Number of Culverts =  1

Culvert Name     Shape      Rise    Span
Culvert #1      Circular     4.5
FHWA Chart # 1 - Concrete Pipe Culvert
FHWA Scale # 1 - Square edge entrance with headwall
Solution Criteria = Outlet control
Culvert Upstrm Dist  Length    Top n  Bottom n  Depth Blocked  Entrance Loss Coef   Exit Loss Coef
                .01   33.54     .012     .012        0                  .4                 1
Number of Barrels =  2
Upstream   Elevation =  1638.9
Centerline Stations
    Sta.    Sta.
 9996.7510003.25
Downstream Elevation =  1638.87
Centerline Stations
    Sta.    Sta.
 9996.7510003.25

CROSS SECTION


RIVER: CAP Wash East
REACH: CAP Wash East      RS: 0.394

INPUT
Description: 2081.01(2) 54" RGRCP Culvert D/S
Station Elevation Data    num=       8
     Sta    Elev     Sta    Elev     Sta    Elev     Sta    Elev     Sta    Elev
 9992.84 1645.63 9992.87 1638.89 9992.87 1638.88   10000  1638.810006.82 1638.72
10006.83 1638.7210006.83 1638.7310006.88 1645.63

Manning's n Values        num=       3
     Sta   n Val     Sta   n Val     Sta   n Val
 9992.84    .014 9992.84    .01410006.88    .014

Bank Sta: Left   Right    Lengths: Left Channel   Right     Coeff Contr.   Expan.
       9992.8410006.88            10.04   10.04   10.04            .3       .5
Ineffective Flow     num=       3
   Sta L   Sta R    Elev  Permanent
 9992.84  9994.5  1645.5       T
 10005.510006.88  1645.5       T
    9999   10001  1645.5       T

CROSS SECTION


RIVER: CAP Wash East
REACH: CAP Wash East      RS: 0.392

INPUT
Description: 2071.76
Station Elevation Data    num=       7
     Sta    Elev     Sta    Elev     Sta    Elev     Sta    Elev     Sta    Elev
 9994.84 1644.27 9994.84 1644.23 9994.86 1638.88 9994.96 1638.88   10000 1638.75
10004.93 1638.6210004.96 1644.24
```

```
Manning's n Values        num=       3
     Sta   n Val     Sta   n Val     Sta   n Val
 9994.84    .014 9994.84    .01410004.96    .014

Bank Sta: Left   Right    Lengths: Left Channel   Right     Coeff Contr.   Expan.
       9994.8410004.96            226.4   226.4   226.4             .1       .3

CROSS SECTION


RIVER: CAP Wash East
REACH: CAP Wash East      RS: 0.350

INPUT
Description: 1845.36
Station Elevation Data    num=       8
     Sta    Elev     Sta    Elev     Sta    Elev     Sta    Elev     Sta    Elev
 9994.86 1643.81 9994.88 1641.47 9994.92 1638.43 9999.24 1638.38   10000 1638.36
10004.92 1638.2110004.95  1641.410004.99 1643.78

Manning's n Values        num=       3
     Sta   n Val     Sta   n Val     Sta   n Val
 9994.86    .014 9994.86    .01410004.99    .014

Bank Sta: Left   Right    Lengths: Left Channel   Right     Coeff Contr.   Expan.
       9994.8610004.99           215.84  215.84  215.84             .1       .3

CROSS SECTION


RIVER: CAP Wash East
REACH: CAP Wash East      RS: 0.309

INPUT
Description: 1629.53
Station Elevation Data    num=       8
     Sta    Elev     Sta    Elev     Sta    Elev     Sta    Elev     Sta    Elev
 9994.86 1643.37 9994.89 1639.92 9994.92 1637.89   10000 1637.8910001.21 1637.89
10004.91 1637.8610004.94 1639.8810004.99 1643.32

Manning's n Values        num=       3
     Sta   n Val     Sta   n Val     Sta   n Val
 9994.86    .014 9994.86    .01410004.99    .014

Bank Sta: Left   Right    Lengths: Left Channel   Right     Coeff Contr.   Expan.
       9994.8610004.99           199.62  199.62  199.62             .1       .3

CROSS SECTION


RIVER: CAP Wash East
REACH: CAP Wash East      RS: 0.271

INPUT
Description: 1429.90
Station Elevation Data    num=       8
     Sta    Elev     Sta    Elev     Sta    Elev     Sta    Elev     Sta    Elev
 9994.95 1643.01 9994.97 1640.53 9994.99 1637.47   10000 1637.4610000.37 1637.46
10004.91 1637.4110004.93 1640.4610004.99 1642.97

Manning's n Values        num=       3
     Sta   n Val     Sta   n Val     Sta   n Val
 9994.95    .014 9994.95    .01410004.99    .014

Bank Sta: Left   Right    Lengths: Left Channel   Right     Coeff Contr.   Expan.
       9994.9510004.99           182.09  182.09  182.09             .1       .3

CROSS SECTION


RIVER: CAP Wash East
REACH: CAP Wash East      RS: 0.236

INPUT
Description: 1247.81
Station Elevation Data    num=       8
     Sta    Elev     Sta    Elev     Sta    Elev     Sta    Elev     Sta    Elev
 9994.79 1642.49  9994.8 1641.66 9994.83 1637.24   10000 1637.18 10003.4 1637.13
10004.94 1637.1210004.96 1637.98   10005 1642.58
```

```
Manning's n Values        num=       3
     Sta   n Val     Sta   n Val     Sta   n Val
 9994.79    .014 9994.79    .014   10005    .014

Bank Sta: Left   Right    Lengths: Left Channel   Right     Coeff Contr.   Expan.
       9994.79   10005              200     200     200             .1       .3

CROSS SECTION


RIVER: CAP Wash East
REACH: CAP Wash East      RS: 0.198

INPUT
Description: 1047.81
Station Elevation Data    num=       8
     Sta    Elev     Sta    Elev     Sta    Elev     Sta    Elev     Sta    Elev
 9994.72 1641.98 9994.73  1640.1 9994.78 1636.65   10000 1636.5510004.64 1636.45
10004.75 1636.4510004.75 1636.5110004.76 1642.06

Manning's n Values        num=       3
     Sta   n Val     Sta   n Val     Sta   n Val
 9994.72    .014 9994.72    .01410004.76    .014

Bank Sta: Left   Right    Lengths: Left Channel   Right     Coeff Contr.   Expan.
       9994.7210004.76            35.77   35.77   35.77             .1       .3

CROSS SECTION


RIVER: CAP Wash East
REACH: CAP Wash East      RS: 0.192

INPUT
Description: 1012.04
Station Elevation Data    num=       8
     Sta    Elev     Sta    Elev     Sta    Elev     Sta    Elev     Sta    Elev
 9994.73 1642.76 9994.74 1642.64 9994.78 1636.56 9995.78 1636.53   10000 1636.41
10004.92 1636.2710004.93 1639.2110004.95 1642.65

Manning's n Values        num=       3
     Sta   n Val     Sta   n Val     Sta   n Val
 9994.73    .014 9994.73    .01410004.95    .014

Bank Sta: Left   Right    Lengths: Left Channel   Right     Coeff Contr.   Expan.
       9994.7310004.95            36.19   36.19   36.19             .3       .5

CROSS SECTION


RIVER: CAP Wash East
REACH: CAP Wash East      RS: 0.185

INPUT
Description: 975.86
Station Elevation Data    num=       7
     Sta    Elev     Sta    Elev     Sta    Elev     Sta    Elev     Sta    Elev
 9989.98 1642.95 9989.98 1637.19 9989.98 1635.5310005.42  1635.410019.63 1634.91
10019.63 1642.7410019.63 1642.92

Manning's n Values        num=       3
     Sta   n Val     Sta   n Val     Sta   n Val
 9989.98    .014 9989.98    .01410019.63    .014

Bank Sta: Left   Right    Coeff Contr.   Expan.
       9989.9810019.63             .3       .5


SUMMARY OF MANNING'S N VALUES

River:CAP Wash East

      Reach          River Sta.       n1        n2        n3        n4

 CAP Wash East        0.621            .036      .033      .036
 CAP Wash East        0.541            .036      .033      .036
 CAP Wash East        0.482            .036      .033      .036
```

CAP Wash East	0.471	.035	.036	.033	.036
CAP Wash East	0.464	.035	.036	.033	.036
CAP Wash East	0.460	.035	.033	.036	
CAP Wash East	0.455	.035	.036		
CAP Wash East	0.441	.035	.036		
CAP Wash East	0.428	.035	.036		
CAP Wash East	0.420	.035	.036		
CAP Wash East	0.410	.014	.014	.014	
CAP Wash East	0.407	.014	.014	.014	
CAP Wash East	0.4065	.014	.014	.014	
CAP Wash East	0.4053	.014	.014	.014	
CAP Wash East	0.405	.014	.014	.014	
CAP Wash East	0.402	Culvert			
CAP Wash East	0.401	.014	.014	.014	
CAP Wash East	0.397	Culvert			
CAP Wash East	0.394	.014	.014	.014	
CAP Wash East	0.392	.014	.014	.014	
CAP Wash East	0.350	.014	.014	.014	
CAP Wash East	0.309	.014	.014	.014	
CAP Wash East	0.271	.014	.014	.014	
CAP Wash East	0.236	.014	.014	.014	
CAP Wash East	0.198	.014	.014	.014	
CAP Wash East	0.192	.014	.014	.014	
CAP Wash East	0.185	.014	.014	.014	

SUMMARY OF REACH LENGTHS

River: CAP Wash East

Reach	River Sta.	Left	Channel	Right
CAP Wash East	0.621	430	422.02	420
CAP Wash East	0.541	312	311.21	310
CAP Wash East	0.482	60.65	60.65	61.27
CAP Wash East	0.471	33.96	34.3	33.82
CAP Wash East	0.464	45.1	19.61	18.2
CAP Wash East	0.460	17.1	27.95	15.5
CAP Wash East	0.455	72.13	72.13	49
CAP Wash East	0.441	68.26	68.26	68.26
CAP Wash East	0.428	43.14	43.14	43.14
CAP Wash East	0.420	52.25	52.25	52.25
CAP Wash East	0.410	17.88	17.88	17.88
CAP Wash East	0.407	2.07	2.07	2.07
CAP Wash East	0.4065	6.34	6.34	6.34
CAP Wash East	0.4053	2.9	2.9	2.9
CAP Wash East	0.405	21.88	21.88	21.88
CAP Wash East	0.402	Culvert		
CAP Wash East	0.401	33.6	33.6	33.6
CAP Wash East	0.397	Culvert		
CAP Wash East	0.394	10.04	10.04	10.04
CAP Wash East	0.392	226.4	226.4	226.4
CAP Wash East	0.350	215.84	215.84	215.84
CAP Wash East	0.309	199.62	199.62	199.62
CAP Wash East	0.271	182.09	182.09	182.09
CAP Wash East	0.236	200	200	200
CAP Wash East	0.198	35.77	35.77	35.77
CAP Wash East	0.192	36.19	36.19	36.19
CAP Wash East	0.185			

SUMMARY OF CONTRACTION AND EXPANSION COEFFICIENTS
River: CAP Wash East

Reach	River Sta.	Contr.	Expan.
CAP Wash East	0.621	.1	.3
CAP Wash East	0.541	.1	.3
CAP Wash East	0.482	.1	.3
CAP Wash East	0.471	.3	.5
CAP Wash East	0.464	.3	.5
CAP Wash East	0.460	.3	.5
CAP Wash East	0.455	.3	.5
CAP Wash East	0.441	.1	.3

CAP Wash East	0.428		.1	.3
CAP Wash East	0.420		.1	.3
CAP Wash East	0.410		.3	.5
CAP Wash East	0.407		.3	.5
CAP Wash East	0.4065		.3	.5
CAP Wash East	0.4053		.3	.5
CAP Wash East	0.405		.3	.5
CAP Wash East	0.402	Culvert		
CAP Wash East	0.401		.3	.5
CAP Wash East	0.397	Culvert		
CAP Wash East	0.394		.3	.5
CAP Wash East	0.392		.1	.3
CAP Wash East	0.350		.1	.3
CAP Wash East	0.309		.1	.3
CAP Wash East	0.271		.1	.3
CAP Wash East	0.236		.1	.3
CAP Wash East	0.198		.1	.3
CAP Wash East	0.192		.3	.5
CAP Wash East	0.185		.3	.5

ERRORS WARNINGS AND NOTES
Errors Warnings and Notes for Plan : Post Project

River: CAP Wash East Reach: CAP Wash East RS: 0.621 Profile: Floodplain
Warning:Divided flow computed for this cross-section.
Warning:The energy loss was greater than 1.0 ft (0.3 m). between the current and previous cross section. This may indicate
the need for additional cross sections.
River: CAP Wash East Reach: CAP Wash East RS: 0.621 Profile: Floodway
Warning:The energy loss was greater than 1.0 ft (0.3 m). between the current and previous cross section. This may indicate
the need for additional cross sections.
Warning:The parabolic search method failed to converge on critical depth. The program will try the cross section
slice/secant method to find critical depth.
River: CAP Wash East Reach: CAP Wash East RS: 0.541 Profile: Floodplain
Warning:Divided flow computed for this cross-section.
Warning:The energy loss was greater than 1.0 ft (0.3 m). between the current and previous cross section. This may indicate
the need for additional cross sections.
River: CAP Wash East Reach: CAP Wash East RS: 0.541 Profile: Floodway
Warning:Divided flow computed for this cross-section.
Warning:The energy loss was greater than 1.0 ft (0.3 m). between the current and previous cross section. This may indicate
the need for additional cross sections.
River: CAP Wash East Reach: CAP Wash East RS: 0.482 Profile: Floodplain
Warning:Divided flow computed for this cross-section.
River: CAP Wash East Reach: CAP Wash East RS: 0.482 Profile: Floodway
Warning:The cross section had to be extended vertically during the critical depth calculations.
Warning:The parabolic search method failed to converge on critical depth. The program will try the cross section
slice/secant method to find critical depth.
River: CAP Wash East Reach: CAP Wash East RS: 0.471 Profile: Floodplain
Warning:Divided flow computed for this cross-section.
River: CAP Wash East Reach: CAP Wash East RS: 0.471 Profile: Floodway
Warning:The energy equation could not be balanced within the specified number of iterations. The program used critical depth
for the water surface and continued on with the calculations.
Warning:The energy loss was greater than 1.0 ft (0.3 m). between the current and previous cross section. This may indicate
the need for additional cross sections.
Warning:During the standard step iterations, when the assumed water surface was set equal to critical depth, the calculated
water surface came back below critical depth. This indicates that there is not a valid subcritical answer. The
program defaulted to critical depth.
River: CAP Wash East Reach: CAP Wash East RS: 0.464 Profile: Floodplain
Warning:The energy equation could not be balanced within the specified number of iterations. The program used critical depth
for the water surface and continued on with the calculations.
Warning:The conveyance ratio (upstream conveyance divided by downstream conveyance) is less than 0.7 or greater than 1.4.
This may indicate the need for additional cross sections.
Warning:During the standard step iterations, when the assumed water surface was set equal to critical depth, the calculated
water surface came back below critical depth. This indicates that there is not a valid

subcritical answer. The
program defaulted to critical depth.
Note: The user has entered an additional K headloss for this cross section.
River: CAP Wash East Reach: CAP Wash East RS: 0.464 Profile: Floodway
Warning:The energy equation could not be balanced within the specified number of iterations. The program used critical depth
for the water surface and continued on with the calculations.
Warning:The conveyance ratio (upstream conveyance divided by downstream conveyance) is less than 0.7 or greater than 1.4.
This may indicate the need for additional cross sections.
Warning:During the standard step iterations, when the assumed water surface was set equal to critical depth, the calculated
water surface came back below critical depth. This indicates that there is not a valid subcritical answer. The
program defaulted to critical depth.
Note: The user has entered an additional K headloss for this cross section.
River: CAP Wash East Reach: CAP Wash East RS: 0.460 Profile: Floodplain
Note: The user has entered an additional K headloss for this cross section.
River: CAP Wash East Reach: CAP Wash East RS: 0.460 Profile: Floodway
Note: The user has entered an additional K headloss for this cross section.
River: CAP Wash East Reach: CAP Wash East RS: 0.455 Profile: Floodplain
Warning:The conveyance ratio (upstream conveyance divided by downstream conveyance) is less than 0.7 or greater than 1.4.
This may indicate the need for additional cross sections.
Note: The user has entered an additional K headloss for this cross section.
River: CAP Wash East Reach: CAP Wash East RS: 0.455 Profile: Floodway
Warning:The conveyance ratio (upstream conveyance divided by downstream conveyance) is less than 0.7 or greater than 1.4.
This may indicate the need for additional cross sections.
Note: The user has entered an additional K headloss for this cross section.
River: CAP Wash East Reach: CAP Wash East RS: 0.441 Profile: Floodplain
Note: The user has entered an additional K headloss for this cross section.
River: CAP Wash East Reach: CAP Wash East RS: 0.441 Profile: Floodway
Note: The user has entered an additional K headloss for this cross section.
River: CAP Wash East Reach: CAP Wash East RS: 0.420 Profile: Floodplain
Warning:The conveyance ratio (upstream conveyance divided by downstream conveyance) is less than 0.7 or greater than 1.4.
This may indicate the need for additional cross sections.
River: CAP Wash East Reach: CAP Wash East RS: 0.420 Profile: Floodway
Warning:The conveyance ratio (upstream conveyance divided by downstream conveyance) is less than 0.7 or greater than 1.4.
This may indicate the need for additional cross sections.
River: CAP Wash East Reach: CAP Wash East RS: 0.410 Profile: Floodplain
Warning:The velocity head has changed by more than 0.5 ft (0.15 m). This may indicate the need for additional cross sections.
Warning:The conveyance ratio (upstream conveyance divided by downstream conveyance) is less than 0.7 or greater than 1.4.
This may indicate the need for additional cross sections.
River: CAP Wash East Reach: CAP Wash East RS: 0.410 Profile: Floodway
Warning:The velocity head has changed by more than 0.5 ft (0.15 m). This may indicate the need for additional cross sections.
Warning:The conveyance ratio (upstream conveyance divided by downstream conveyance) is less than 0.7 or greater than 1.4.
This may indicate the need for additional cross sections.
River: CAP Wash East Reach: CAP Wash East RS: 0.407 Profile: Floodplain
Warning:The energy equation could not be balanced within the specified number of iterations. The program used critical depth
for the water surface and continued on with the calculations.
Warning:During the standard step iterations, when the assumed water surface was set equal to critical depth, the calculated
water surface came back below critical depth. This indicates that there is not a valid subcritical answer. The
program defaulted to critical depth.
River: CAP Wash East Reach: CAP Wash East RS: 0.407 Profile: Floodway
Warning:The energy equation could not be balanced within the specified number of iterations. The program used critical depth
for the water surface and continued on with the calculations.
Warning:During the standard step iterations, when the assumed water surface was set equal to critical depth, the calculated
water surface came back below critical depth. This indicates that there is not a valid subcritical answer. The
program defaulted to critical depth.
River: CAP Wash East Reach: CAP Wash East RS: 0.4065 Profile: Floodplain
Warning:The energy equation could not be balanced within the specified number of iterations. The program used critical depth
for the water surface and continued on with the calculations.
Warning:The velocity head has changed by more than 0.5 ft (0.15 m). This may indicate the need for additional cross sections.
Warning:The conveyance ratio (upstream conveyance divided by downstream conveyance) is less than 0.7

or greater than 1.4.
This may indicate the need for additional cross sections.
Warning:The energy loss was greater than 1.0 ft (0.3 m). between the current and previous cross section. This may indicate
the need for additional cross sections.
Warning:During the standard step iterations, when the assumed water surface was set equal to critical depth, the calculated
water surface came back below critical depth. This indicates that there is not a valid subcritical answer. The
program defaulted to critical depth.
River: CAP Wash East Reach: CAP Wash East RS: 0.4065 Profile: Floodway
Warning:The energy equation could not be balanced within the specified number of iterations. The program used critical depth
for the water surface and continued on with the calculations.
Warning:The velocity head has changed by more than 0.5 ft (0.15 m). This may indicate the need for additional cross sections.
Warning:The conveyance ratio (upstream conveyance divided by downstream conveyance) is less than 0.7 or greater than 1.4.
This may indicate the need for additional cross sections.
Warning:The energy loss was greater than 1.0 ft (0.3 m). between the current and previous cross section. This may indicate
the need for additional cross sections.
Warning:During the standard step iterations, when the assumed water surface was set equal to critical depth, the calculated
water surface came back below critical depth. This indicates that there is not a valid subcritical answer. The
program defaulted to critical depth.
River: CAP Wash East Reach: CAP Wash East RS: 0.4053 Profile: Floodplain
Warning:The conveyance ratio (upstream conveyance divided by downstream conveyance) is less than 0.7 or greater than 1.4.
This may indicate the need for additional cross sections.
River: CAP Wash East Reach: CAP Wash East RS: 0.4053 Profile: Floodway
Warning:The conveyance ratio (upstream conveyance divided by downstream conveyance) is less than 0.7 or greater than 1.4.
This may indicate the need for additional cross sections.
River: CAP Wash East Reach: CAP Wash East RS: 0.405 Profile: Floodplain
Note: The user has entered an additional headloss for this cross section.
River: CAP Wash East Reach: CAP Wash East RS: 0.405 Profile: Floodway
Note: The user has entered an additional headloss for this cross section.
River: CAP Wash East Reach: CAP Wash East RS: 0.402 Profile: Floodplain
Note: The user has entered an additional headloss for this cross section.
River: CAP Wash East Reach: CAP Wash East RS: 0.402 Profile: Floodplain Culv: Culvert #1
Note: During the supercritical calculations a hydraulic jump occurred inside of the culvert.
River: CAP Wash East Reach: CAP Wash East RS: 0.402 Profile: Floodway
Note: The user has entered an additional headloss for this cross section.
River: CAP Wash East Reach: CAP Wash East RS: 0.402 Profile: Floodway Culv: Culvert #1
Note: During the supercritical calculations a hydraulic jump occurred inside of the culvert.
River: CAP Wash East Reach: CAP Wash East RS: 0.397 Profile: Floodplain Culv: Culvert #1
Note: The normal depth exceeds the height of the culvert. The program assumes that the normal depth is equal to the height
of the culvert.
River: CAP Wash East Reach: CAP Wash East RS: 0.397 Profile: Floodway Culv: Culvert #1
Note: The normal depth exceeds the height of the culvert. The program assumes that the normal depth is equal to the height
of the culvert.
River: CAP Wash East Reach: CAP Wash East RS: 0.198 Profile: Floodplain
Warning:The energy equation could not be balanced within the specified number of iterations. The program used critical depth
for the water surface and continued on with the calculations.
Warning:During the standard step iterations, when the assumed water surface was set equal to critical depth, the calculated
water surface came back below critical depth. This indicates that there is not a valid subcritical answer. The
program defaulted to critical depth.
River: CAP Wash East Reach: CAP Wash East RS: 0.198 Profile: Floodway
Warning:The energy equation could not be balanced within the specified number of iterations. The program used critical depth
for the water surface and continued on with the calculations.
Warning:During the standard step iterations, when the assumed water surface was set equal to critical depth, the calculated
water surface came back below critical depth. This indicates that there is not a valid subcritical answer. The
program defaulted to critical depth.
River: CAP Wash East Reach: CAP Wash East RS: 0.192 Profile: Floodplain
Warning:The energy equation could not be balanced within the specified number of iterations. The program used critical depth
for the water surface and continued on with the calculations.
Warning:The velocity head has changed by more than 0.5 ft (0.15 m). This may indicate the need for additional cross sections.

Warning:The conveyance ratio (upstream conveyance divided by downstream conveyance) is less than 0.7 or greater than 1.4.
This may indicate the need for additional cross sections.
Warning:The energy loss was greater than 1.0 ft (0.3 m). between the current and previous cross section. This may indicate
the need for additional cross sections.
Warning:During the standard step iterations, when the assumed water surface was set equal to critical depth, the calculated
water surface came back below critical depth. This indicates that there is not a valid subcritical answer. The
program defaulted to critical depth.

River: CAP Wash East Reach: CAP Wash East RS: 0.192 Profile: Floodway

Warning:The energy equation could not be balanced within the specified number of iterations. The program used critical depth
for the water surface and continued on with the calculations.
Warning:The velocity head has changed by more than 0.5 ft (0.15 m). This may indicate the need for additional cross sections.
Warning:The conveyance ratio (upstream conveyance divided by downstream conveyance) is less than 0.7 or greater than 1.4.
This may indicate the need for additional cross sections.
Warning:The energy loss was greater than 1.0 ft (0.3 m). between the current and previous cross section. This may indicate
the need for additional cross sections.
Warning:During the standard step iterations, when the assumed water surface was set equal to critical depth, the calculated
water surface came back below critical depth. This indicates that there is not a valid subcritical answer. The
program defaulted to critical depth.

HEC-RAS Plan: Post Project River: CAP Wash East Reach: CAP Wash East

Reach	River Sta	Profile	Q Total	Min Ch El	W.S. Elev	Crit W.S.	E.G. Elev	E.G. Slope	Vel Chnl	Flow Area	Top Width	Froude # Chl
			(cfs)	(ft)	(ft)	(ft)	(ft)	(ft/ft)	(ft/s)	(sq ft)	(ft)	
CAP Wash East	0.621	Floodplain	280.00	1655.62	1657.39		1657.57	0.005895	4.10	96.37	142.50	0.63
CAP Wash East	0.621	Floodway	280.00	1655.62	1657.70	1657.33	1657.93	0.004721	4.18	74.68	54.56	0.58
CAP Wash East	0.541	Floodplain	280.00	1653.25	1654.19	1654.09	1654.39	0.009849	2.22	81.90	127.83	0.66
CAP Wash East	0.541	Floodway	280.00	1653.25	1655.19	1654.97	1655.41	0.007810	3.85	75.61	82.13	0.69
CAP Wash East	0.482	Floodplain	280.00	1649.22	1651.68	1651.52	1651.83	0.006893	3.71	95.07	155.57	0.64
CAP Wash East	0.482	Floodway	280.00	1649.22	1652.19	1652.17	1652.62	0.010249	5.81	58.94	57.78	0.83
CAP Wash East	0.471	Floodplain	280.00	1648.70	1650.93	1650.85	1651.25	0.012960	5.26	63.25	137.00	0.90
CAP Wash East	0.471	Floodway	280.00	1648.70	1651.37	1651.37	1651.91	0.013087	6.15	49.80	44.04	0.94
CAP Wash East	0.464	Floodplain	280.00	1649.00	1650.34	1650.34	1650.75	0.015763	5.40	57.20	198.10	0.98
CAP Wash East	0.464	Floodway	280.00	1649.00	1650.40	1650.40	1650.89	0.016821	5.78	50.40	55.15	1.03
CAP Wash East	0.460	Floodplain	280.00	1646.81	1649.94		1650.06	0.001958	2.90	103.64	127.27	0.42
CAP Wash East	0.460	Floodway	280.00	1646.81	1649.94		1650.08	0.002180	3.06	91.64	62.97	0.45
CAP Wash East	0.455	Floodplain	280.00	1646.84	1649.63		1649.84	0.003561	3.69	75.97	42.69	0.49
CAP Wash East	0.455	Floodway	280.00	1646.84	1649.63		1649.84	0.003561	3.69	75.97	42.69	0.49
CAP Wash East	0.441	Floodplain	280.00	1645.93	1649.28		1649.43	0.001743	3.15	88.76	36.22	0.36
CAP Wash East	0.441	Floodway	280.00	1645.93	1649.28		1649.43	0.001743	3.15	88.76	36.22	0.36
CAP Wash East	0.428	Floodplain	280.00	1645.78	1649.02		1649.16	0.001604	2.98	93.86	39.29	0.34
CAP Wash East	0.428	Floodway	280.00	1645.78	1649.02		1649.16	0.001604	2.98	93.86	39.29	0.34
CAP Wash East	0.420	Floodplain	280.00	1646.04	1648.89		1649.07	0.002360	3.40	82.24	37.88	0.41
CAP Wash East	0.420	Floodway	280.00	1646.04	1648.89		1649.07	0.002360	3.40	82.24	37.88	0.41
CAP Wash East	0.410	Floodplain	280.00	1646.09	1648.80		1649.02	0.000479	3.76	74.53	35.32	0.46
CAP Wash East	0.410	Floodway	280.00	1646.09	1648.80		1649.02	0.000479	3.76	74.53	35.32	0.46
CAP Wash East	0.407	Floodplain	280.00	1646.01	1647.88	1647.88	1648.79	0.002938	7.66	36.56	20.27	1.00
CAP Wash East	0.407	Floodway	280.00	1646.01	1647.88	1647.88	1648.79	0.002938	7.66	36.56	20.27	1.00
CAP Wash East	0.4065	Floodplain	280.00	1645.54	1647.35	1647.35	1648.27	0.002962	7.69	36.41	20.07	1.01
CAP Wash East	0.4065	Floodway	280.00	1645.54	1647.35	1647.35	1648.27	0.002962	7.69	36.41	20.07	1.01
CAP Wash East	0.4053	Floodplain	280.00	1639.73	1646.28		1646.38	0.000047	2.55	109.62	20.02	0.18
CAP Wash East	0.4053	Floodway	280.00	1639.73	1646.28		1646.38	0.000047	2.55	109.62	20.02	0.18

HEC-RAS Plan: Post Project River: CAP Wash East Reach: CAP Wash East (Continued)

Reach	River Sta	Profile	Q Total	Min Ch El	W.S. Elev	Crit W.S.	E.G. Elev	E.G. Slope	Vel Chnl	Flow Area	Top Width	Froude # Chl
			(cfs)	(ft)	(ft)	(ft)	(ft)	(ft/ft)	(ft/s)	(sq ft)	(ft)	
CAP Wash East	0.405	Floodplain	280.00	1639.71	1645.89	1642.82	1646.29	0.000199	5.04	55.56	20.00	0.36
CAP Wash East	0.405	Floodway	280.00	1639.71	1645.89	1642.82	1646.29	0.000199	5.04	55.56	20.00	0.36
CAP Wash East	0.402		Culvert									
CAP Wash East	0.401	Floodplain	280.00	1638.95	1644.26	1642.05	1644.80	0.000329	5.86	47.81	12.00	0.45
CAP Wash East	0.401	Floodway	280.00	1638.95	1644.26	1642.05	1644.80	0.000329	5.86	47.81	12.00	0.45
CAP Wash East	0.397		Culvert									
CAP Wash East	0.394	Floodplain	280.00	1638.72	1642.24	1641.90	1643.51	0.001403	9.05	30.93	14.00	0.86
CAP Wash East	0.394	Floodway	280.00	1638.72	1642.24	1641.90	1643.51	0.001404	9.05	30.92	14.00	0.86
CAP Wash East	0.392	Floodplain	280.00	1638.62	1642.41		1643.30	0.001884	7.60	36.85	10.10	0.70
CAP Wash East	0.392	Floodway	280.00	1638.62	1642.41		1643.30	0.001885	7.60	36.85	10.10	0.70
CAP Wash East	0.350	Floodplain	280.00	1638.21	1641.89		1642.85	0.002074	7.87	35.57	10.08	0.74
CAP Wash East	0.350	Floodway	280.00	1638.21	1641.89		1642.85	0.002076	7.88	35.56	10.08	0.74
CAP Wash East	0.309	Floodplain	280.00	1637.86	1641.45		1642.40	0.002025	7.82	35.80	10.09	0.73
CAP Wash East	0.309	Floodway	280.00	1637.86	1641.45		1642.40	0.002031	7.83	35.77	10.09	0.73
CAP Wash East	0.271	Floodplain	280.00	1637.41	1641.01		1641.98	0.002098	7.91	35.42	9.98	0.74
CAP Wash East	0.271	Floodway	280.00	1637.41	1641.01		1641.98	0.002109	7.92	35.36	9.98	0.74
CAP Wash East	0.236	Floodplain	280.00	1637.12	1640.41	1640.04	1641.54	0.002599	8.53	32.82	10.17	0.84
CAP Wash East	0.236	Floodway	280.00	1637.12	1640.42	1640.04	1641.55	0.002581	8.51	32.89	10.17	0.83
CAP Wash East	0.198	Floodplain	280.00	1636.45	1639.46	1639.46	1640.90	0.003602	9.65	29.03	10.01	1.00
CAP Wash East	0.198	Floodway	280.00	1636.45	1639.46	1639.46	1640.90	0.003655	9.65	29.03	10.01	1.00
CAP Wash East	0.192	Floodplain	280.00	1636.27	1639.28	1639.28	1640.72	0.003651	9.64	29.04	10.17	1.01
CAP Wash East	0.192	Floodway	280.00	1636.27	1639.28	1639.28	1640.72	0.003651	9.64	29.04	10.17	1.01
CAP Wash East	0.185	Floodplain	280.00	1634.91	1638.38	1636.72	1638.53	0.000245	3.08	90.83	29.65	0.31
CAP Wash East	0.185	Floodway	280.00	1634.91	1638.38	1636.72	1638.53	0.000245	3.08	90.83	29.65	0.31

APPENDIX E.7

POST-PROJECT CONDITIONS HEC-RAS CROSS SECTION PLOTS

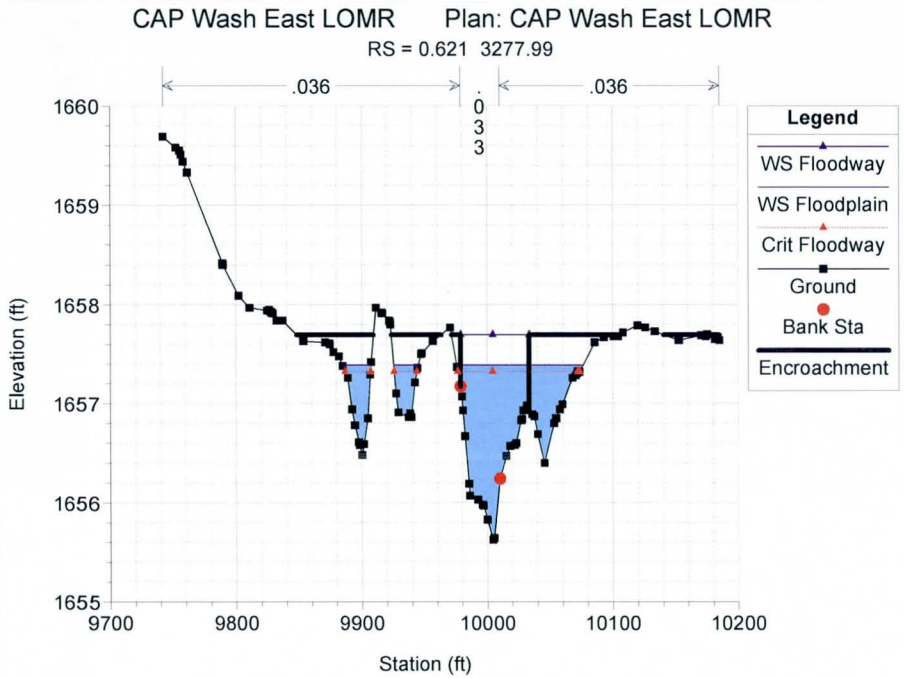
CAP Wash East LOMR Plan: CAP Wash East LOMR
RS = 0.621 3277.99
.036
.033
.036
Legend
WS Floodway
WS Floodplain
Crit Floodway
Ground
Bank Sta
Encroachment
Elevation (ft)
Station (ft)

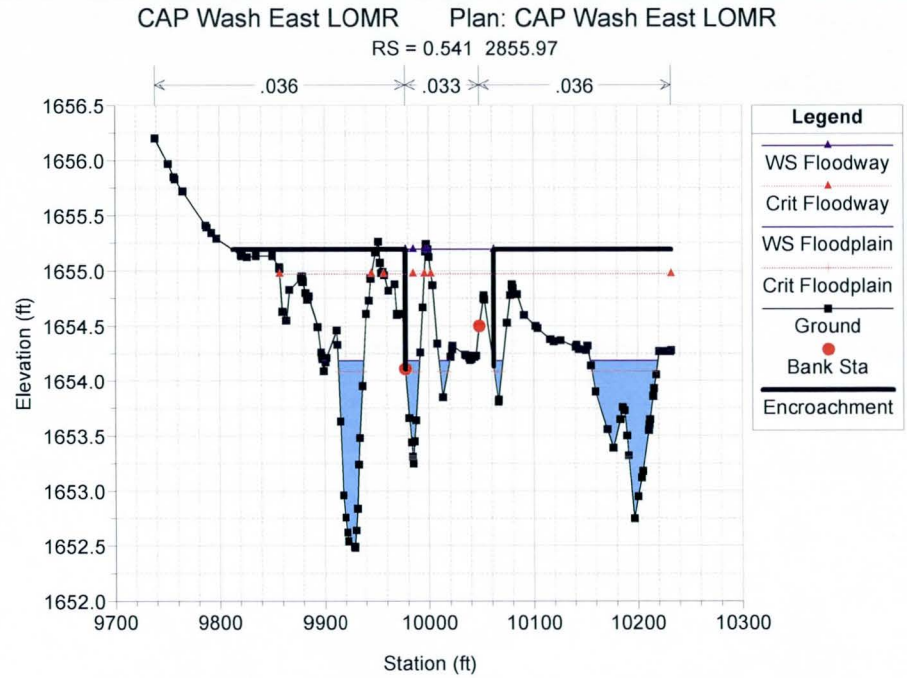
CAP Wash East LOMR Plan: CAP Wash East LOMR
RS = 0.541 2855.97
.036
.033
.036
Legend
WS Floodway
Crit Floodway
WS Floodplain
Crit Floodplain
Ground
Bank Sta
Encroachment
Elevation (ft)
Station (ft)

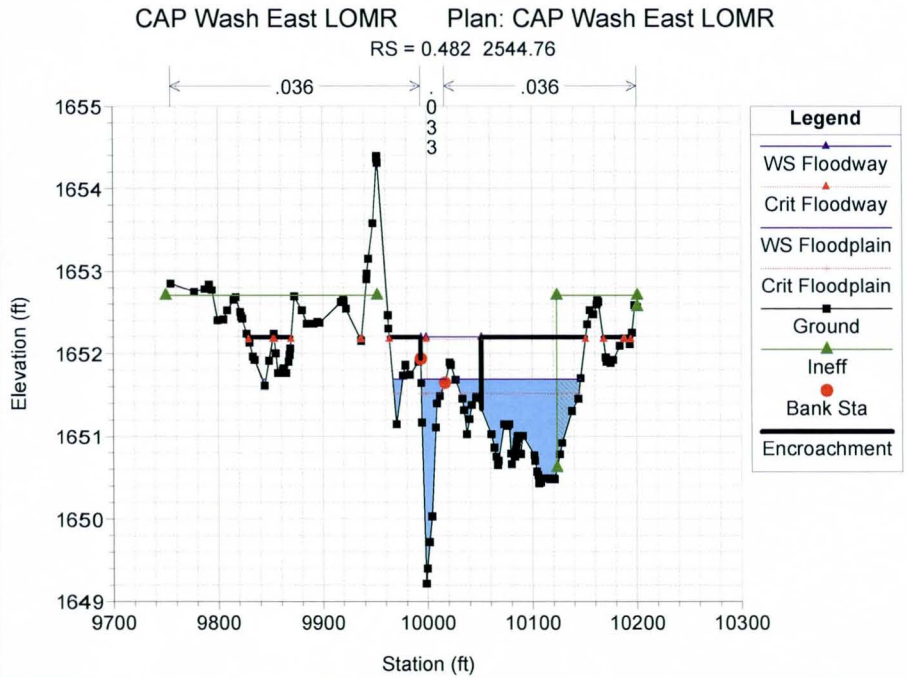
CAP Wash East LOMR Plan: CAP Wash East LOMR
RS = 0.482 2544.76
.036
.033
.036
Legend
WS Floodway
Crit Floodway
WS Floodplain
Crit Floodplain
Ground
Ineff
Bank Sta
Encroachment
Elevation (ft)
Station (ft)

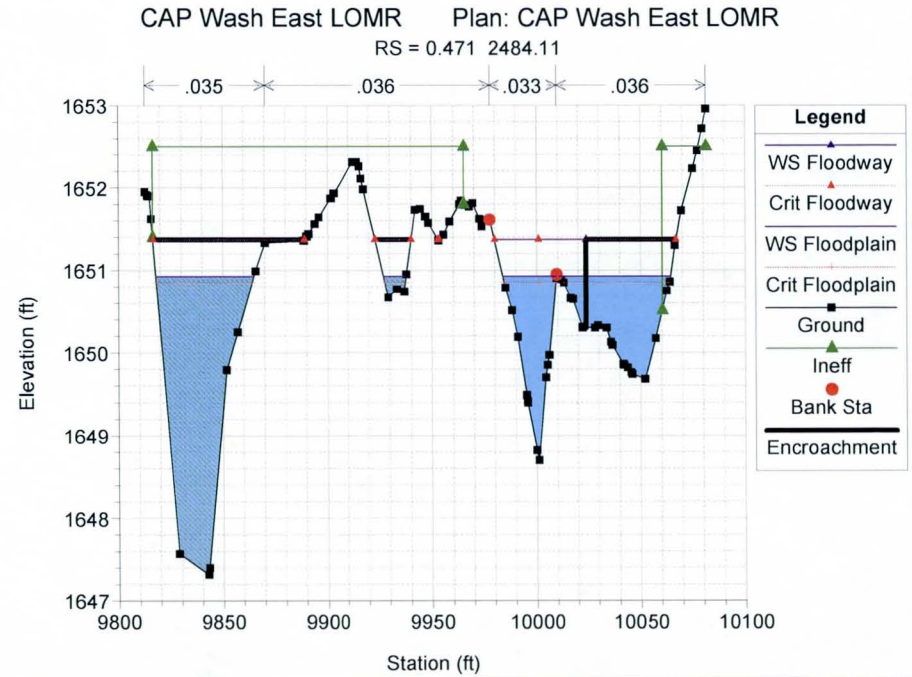
CAP Wash East LOMR Plan: CAP Wash East LOMR
RS = 0.471 2484.11
.035
.036
.033
.036
Legend
WS Floodway
Crit Floodway
WS Floodplain
Crit Floodplain
Ground
Ineff
Bank Sta
Encroachment
Elevation (ft)
Station (ft)

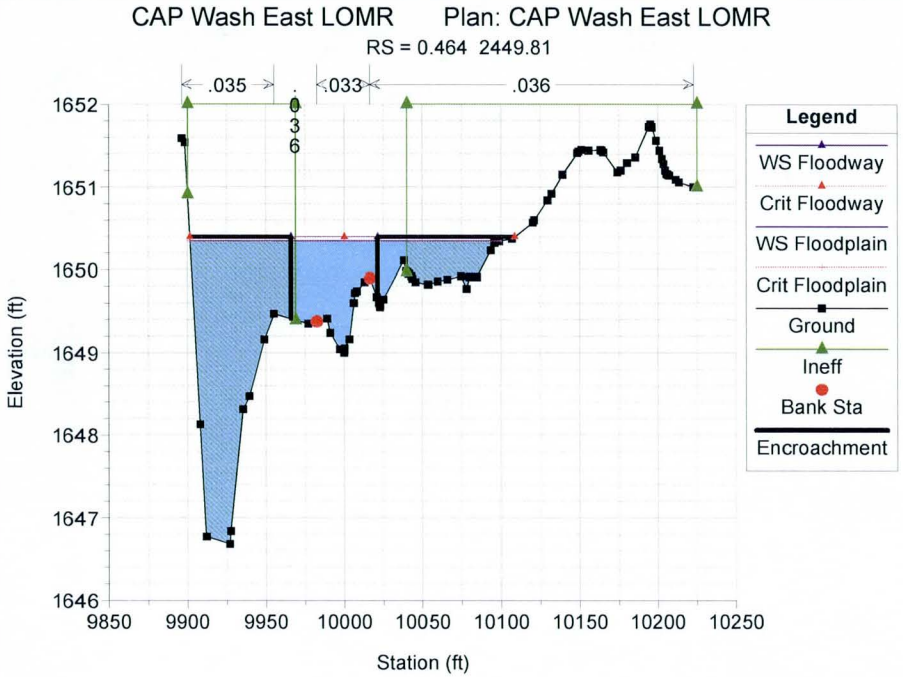
CAP Wash East LOMR Plan: CAP Wash East LOMR
RS = 0.464 2449.81
.035
.033
.036
.036
Legend
WS Floodway
Crit Floodway
WS Floodplain
Crit Floodplain
Ground
Ineff
Bank Sta
Encroachment
Elevation (ft)
Station (ft)

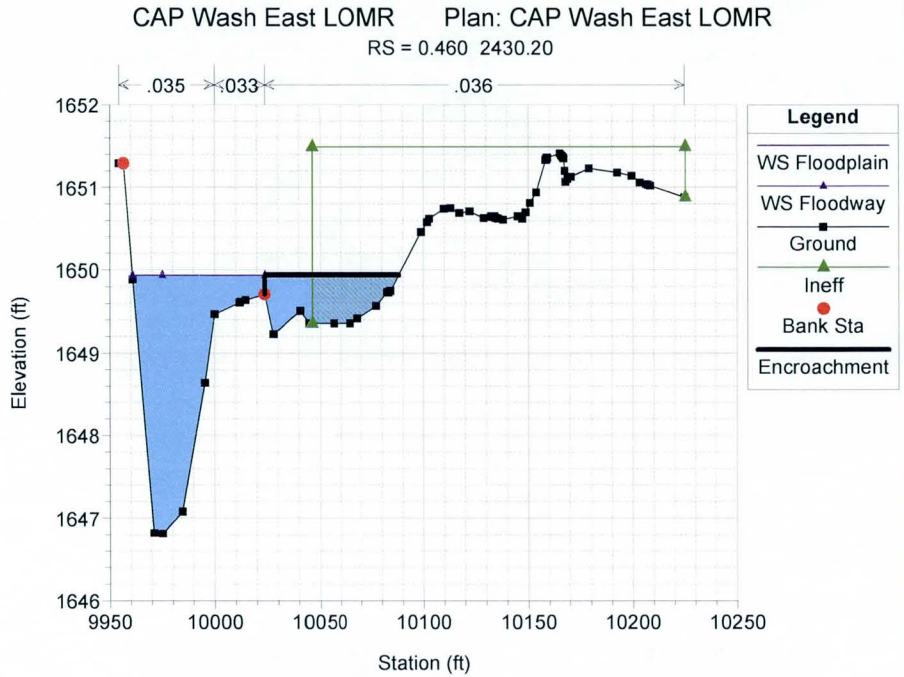
CAP Wash East LOMR Plan: CAP Wash East LOMR
RS = 0.460 2430.20
.035
.033
.036
Legend
WS Floodplain
WS Floodway
Ground
Ineff
Bank Sta
Encroachment
Elevation (ft)
Station (ft)

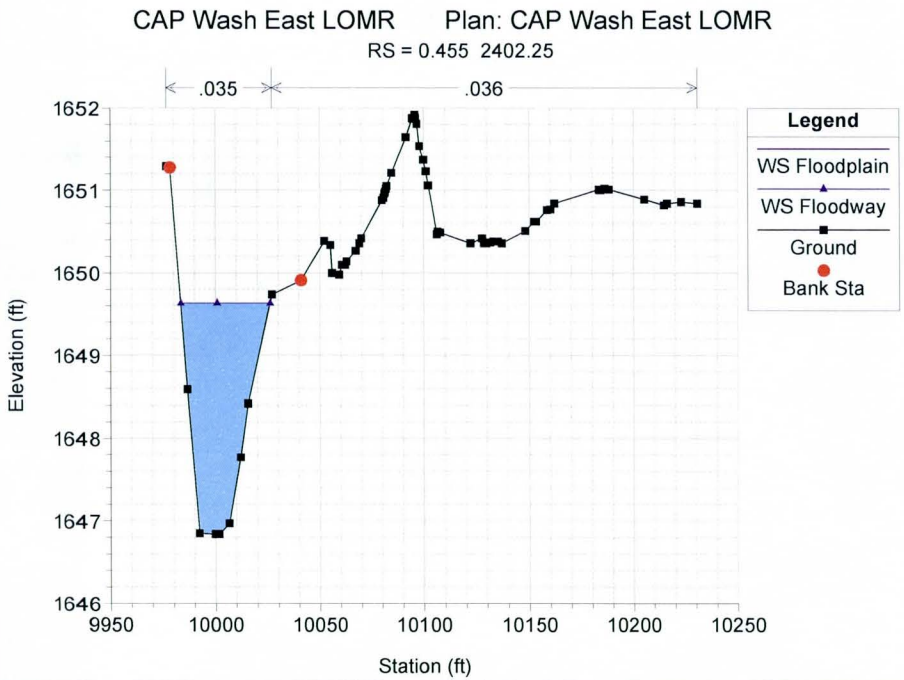
CAP Wash East LOMR Plan: CAP Wash East LOMR
RS = 0.455 2402.25
.035
.036
Legend
WS Floodplain
WS Floodway
Ground
Bank Sta
Elevation (ft)
Station (ft)

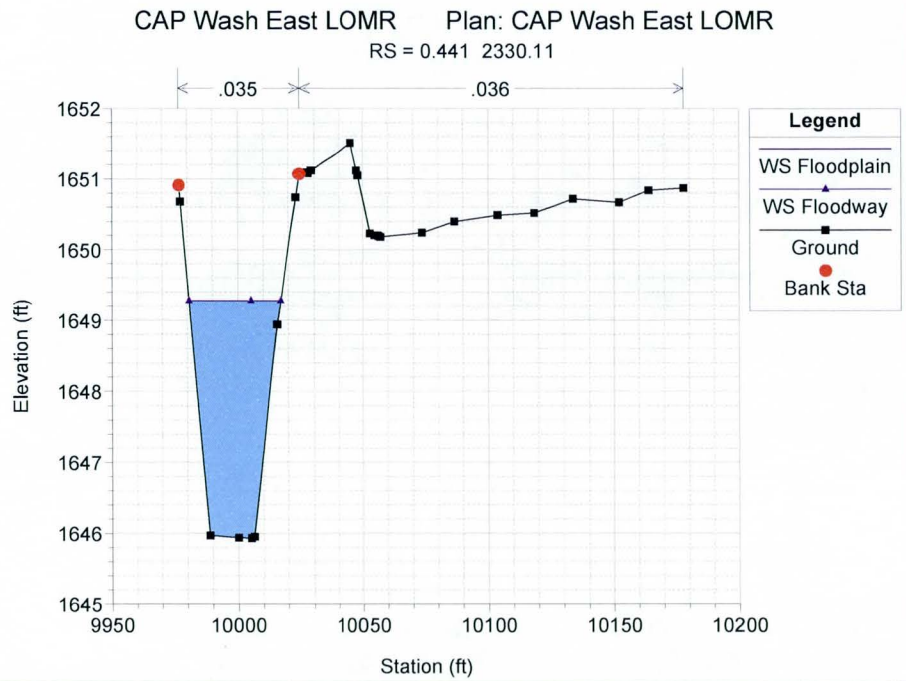
CAP Wash East LOMR Plan: CAP Wash East LOMR
RS = 0.441 2330.11
.035
.036
Legend
WS Floodplain
WS Floodway
Ground
Bank Sta
Elevation (ft)
Station (ft)

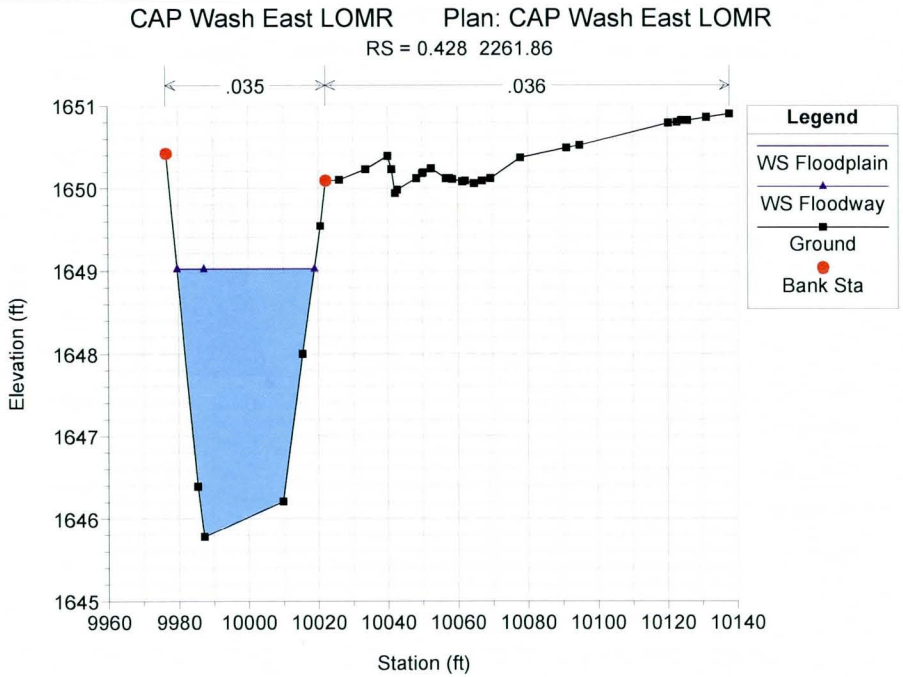
CAP Wash East LOMR Plan: CAP Wash East LOMR
RS = 0.428 2261.86
.035
.036
Legend
WS Floodplain
WS Floodway
Ground
Bank Sta
Elevation (ft)
Station (ft)

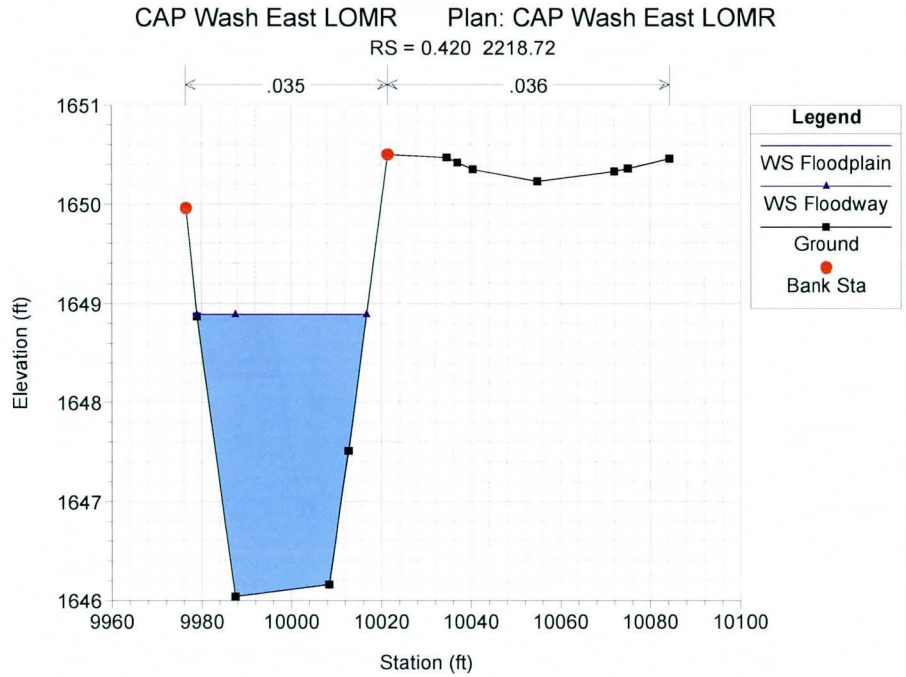
CAP Wash East LOMR Plan: CAP Wash East LOMR
RS = 0.420 2218.72
.035
.036
Legend
WS Floodplain
WS Floodway
Ground
Bank Sta
Elevation (ft)
Station (ft)

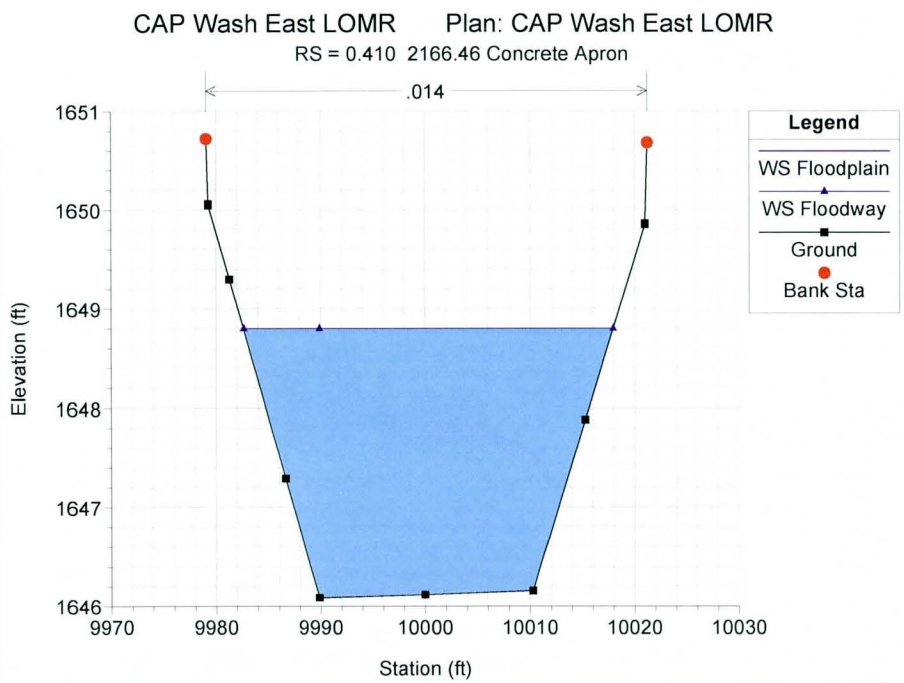
CAP Wash East LOMR Plan: CAP Wash East LOMR
RS = 0.410 2166.46 Concrete Apron
.014
Legend
WS Floodplain
WS Floodway
Ground
Bank Sta
Elevation (ft)
Station (ft)

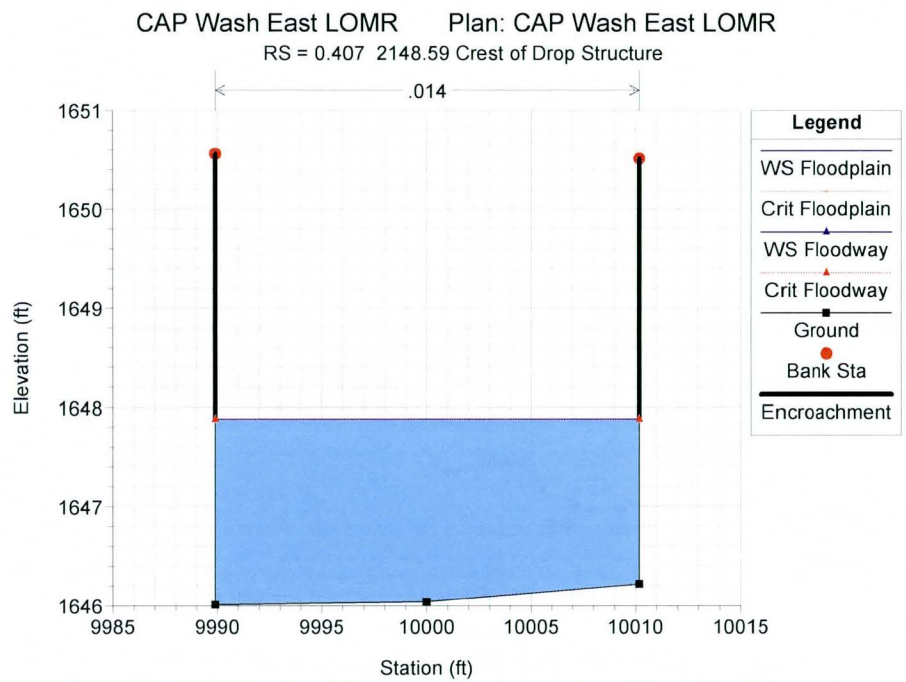
CAP Wash East LOMR Plan: CAP Wash East LOMR
RS = 0.407 2148.59 Crest of Drop Structure
.014
Legend
WS Floodplain
Crit Floodplain
WS Floodway
Crit Floodway
Ground
Bank Sta
Encroachment
Elevation (ft)
Station (ft)

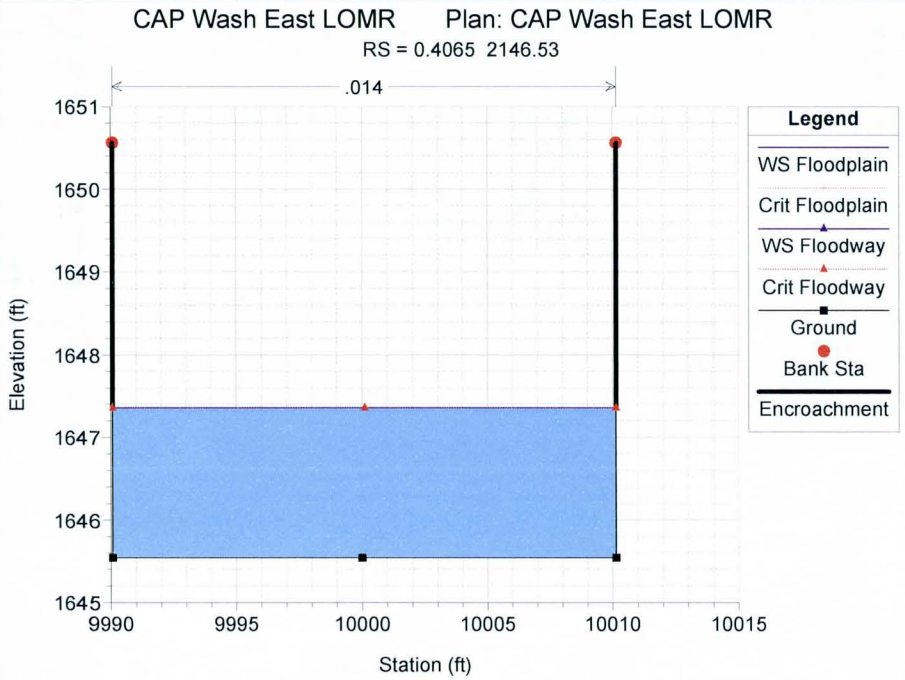
CAP Wash East LOMR Plan: CAP Wash East LOMR
RS = 0.4065 2146.53
.014
Legend
WS Floodplain
Crit Floodplain
WS Floodway
Crit Floodway
Ground
Bank Sta
Encroachment
Elevation (ft)
Station (ft)

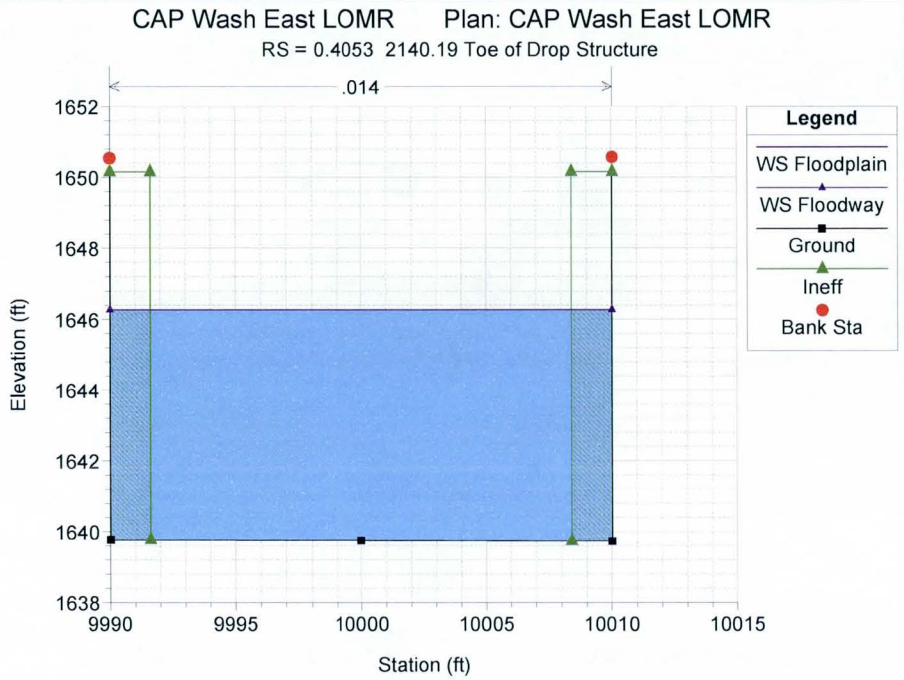
CAP Wash East LOMR Plan: CAP Wash East LOMR
RS = 0.4053 2140.19 Toe of Drop Structure
.014
Legend
WS Floodplain
WS Floodway
Ground
Ineff
Bank Sta
Elevation (ft)
Station (ft)

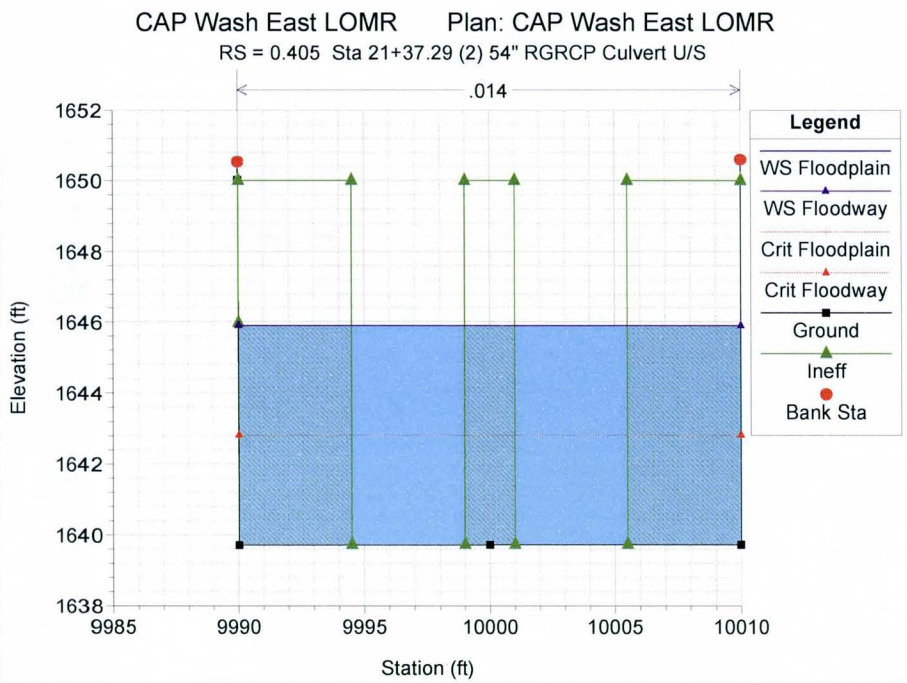
CAP Wash East LOMR Plan: CAP Wash East LOMR
RS = 0.405 Sta 21+37.29 (2) 54" RGRCP Culvert U/S
.014
Legend
WS Floodplain
WS Floodway
Crit Floodplain
Crit Floodway
Ground
Ineff
Bank Sta
Elevation (ft)
Station (ft)

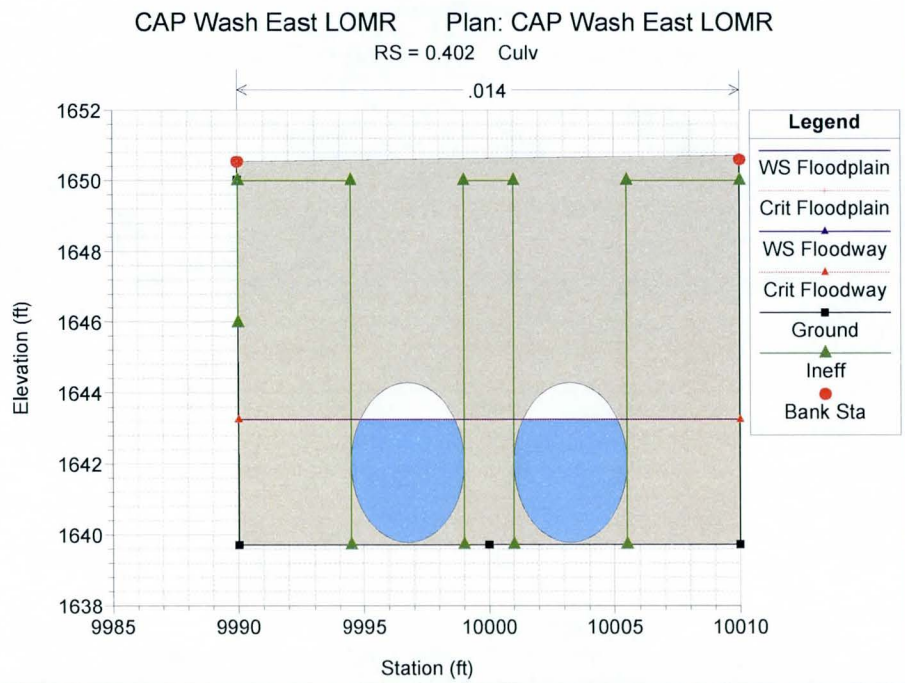
CAP Wash East LOMR Plan: CAP Wash East LOMR
RS = 0.402 Culv
.014
Legend
WS Floodplain
Crit Floodplain
WS Floodway
Crit Floodway
Ground
Ineff
Bank Sta
Elevation (ft)
Station (ft)

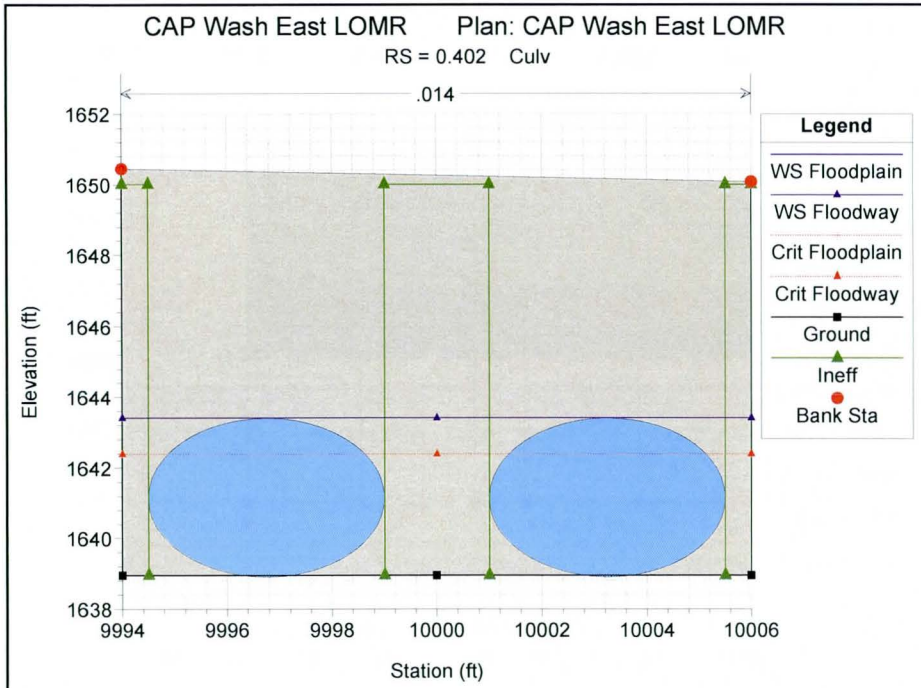
CAP Wash East LOMR Plan: CAP Wash East LOMR
RS = 0.402 Culv
.014
Elevation (ft)
Station (ft)
Legend
WS Floodplain
WS Floodway
Crit Floodplain
Crit Floodway
Ground
Ineff
Bank Sta

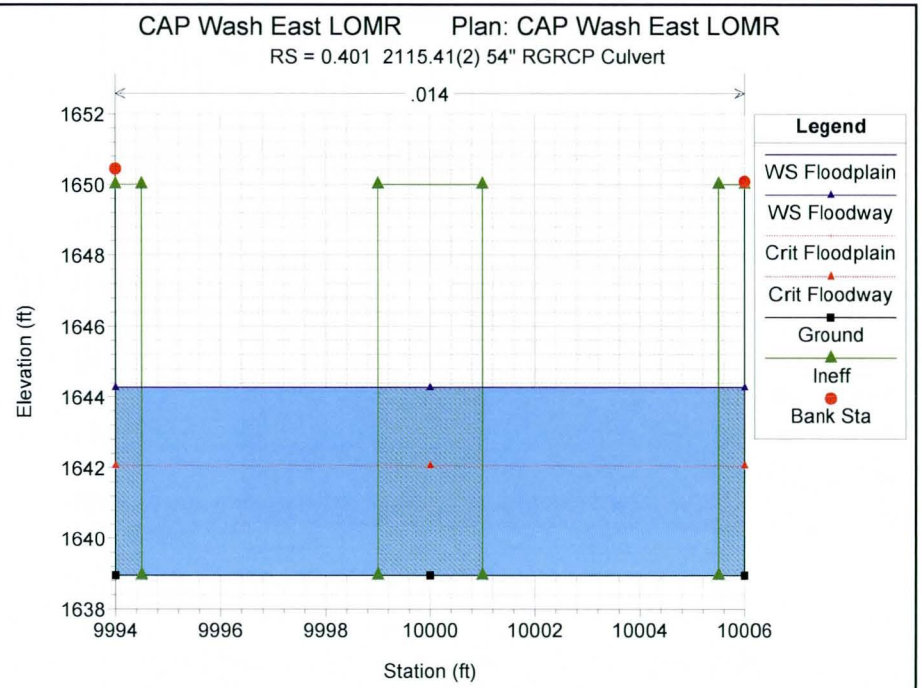
CAP Wash East LOMR Plan: CAP Wash East LOMR
RS = 0.401 2115.41(2) 54" RGRCP Culvert
.014
Elevation (ft)
Station (ft)
Legend
WS Floodplain
WS Floodway
Crit Floodplain
Crit Floodway
Ground
Ineff
Bank Sta

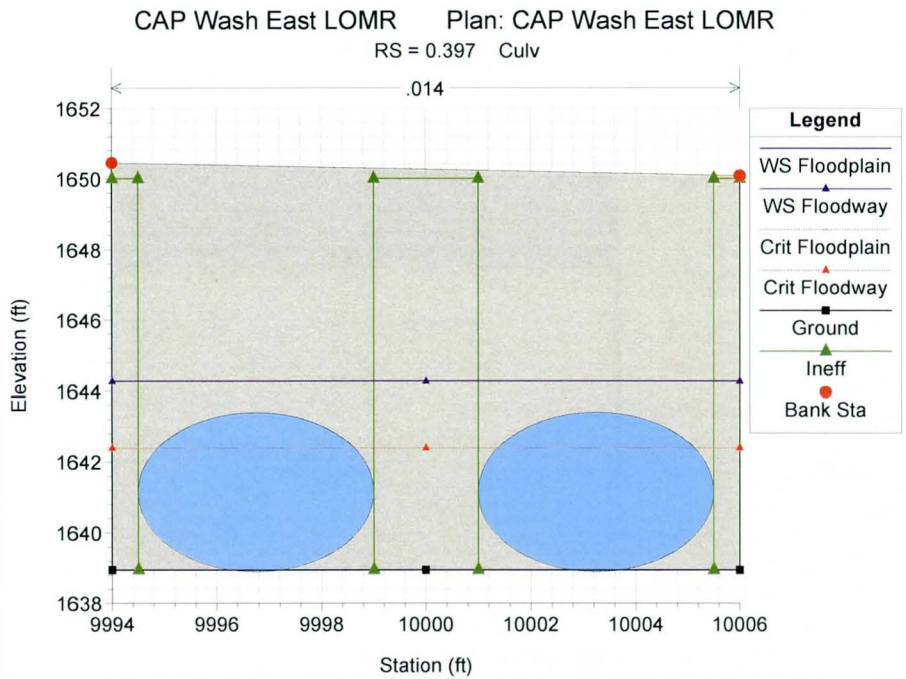
CAP Wash East LOMR Plan: CAP Wash East LOMR
RS = 0.397 Culv
.014
Elevation (ft)
Station (ft)
Legend
WS Floodplain
WS Floodway
Crit Floodplain
Crit Floodway
Ground
Ineff
Bank Sta

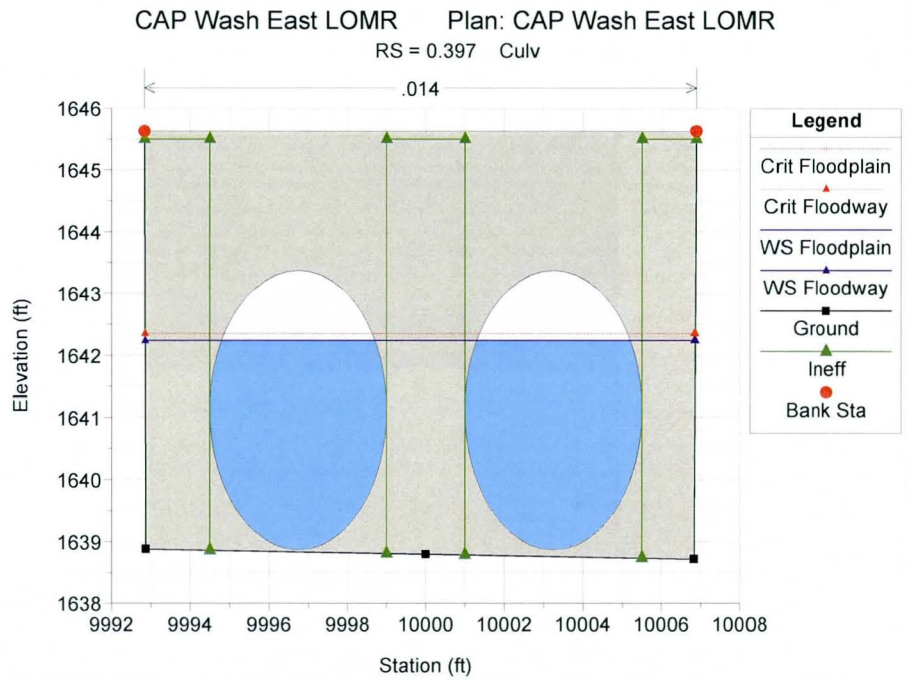
CAP Wash East LOMR Plan: CAP Wash East LOMR
RS = 0.397 Culv
.014
Elevation (ft)
Station (ft)
Legend
Crit Floodplain
Crit Floodway
WS Floodplain
WS Floodway
Ground
Ineff
Bank Sta

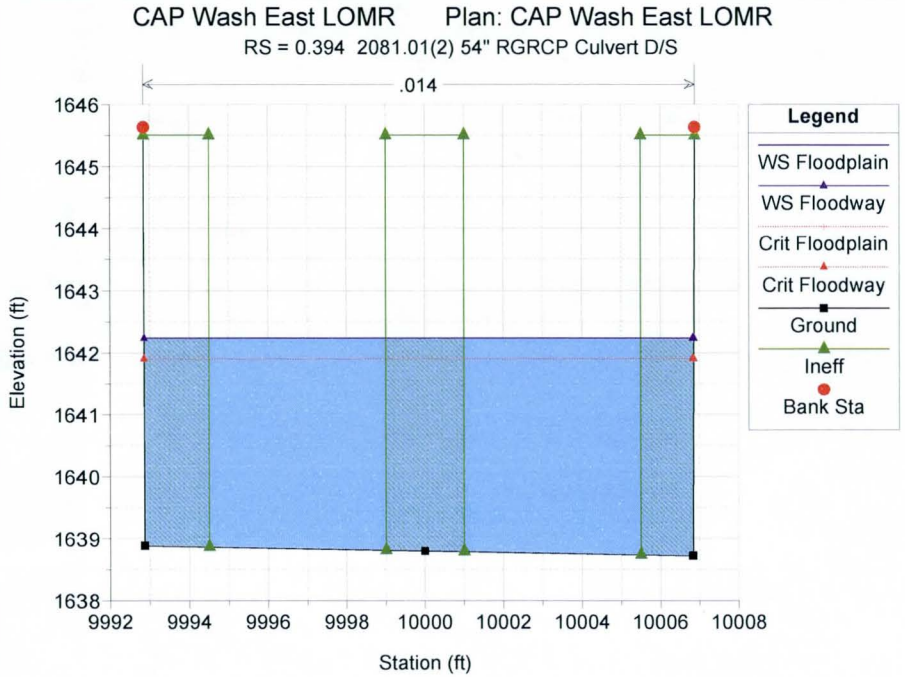
CAP Wash East LOMR Plan: CAP Wash East LOMR
RS = 0.394 2081.01(2) 54" RGRCP Culvert D/S
.014
Legend
WS Floodplain
WS Floodway
Crit Floodplain
Crit Floodway
Ground
Ineff
Bank Sta
Elevation (ft)
Station (ft)

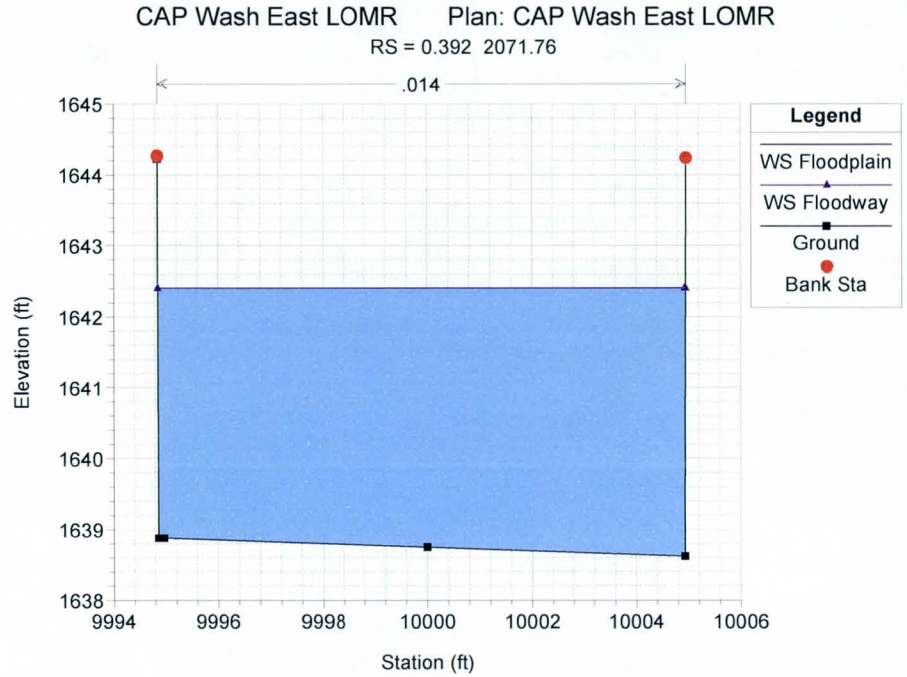
CAP Wash East LOMR Plan: CAP Wash East LOMR
RS = 0.392 2071.76
.014
Legend
WS Floodplain
WS Floodway
Ground
Bank Sta
Elevation (ft)
Station (ft)

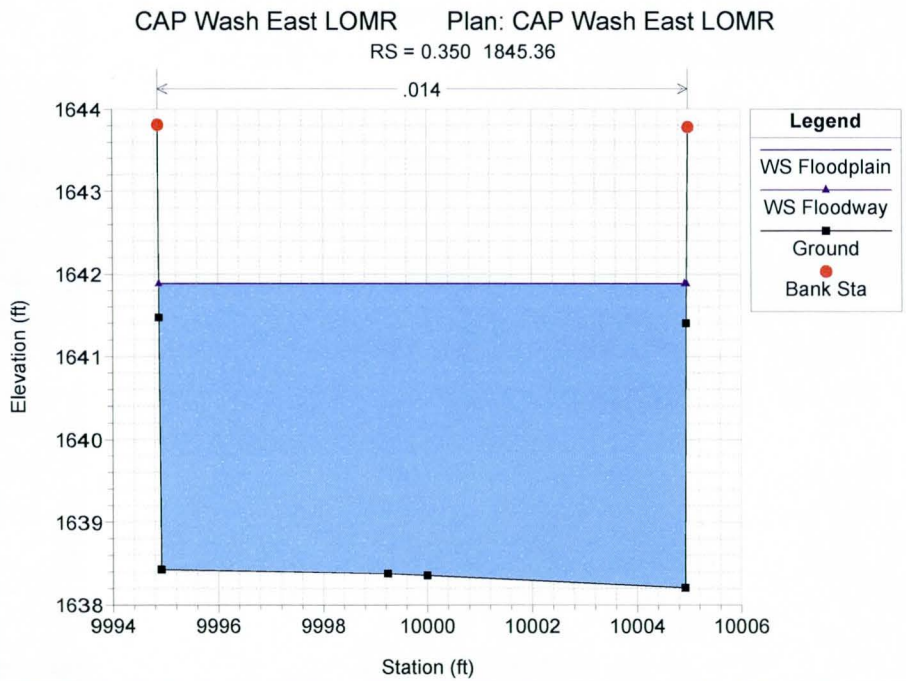
CAP Wash East LOMR Plan: CAP Wash East LOMR
RS = 0.350 1845.36
.014
Legend
WS Floodplain
WS Floodway
Ground
Bank Sta
Elevation (ft)
Station (ft)

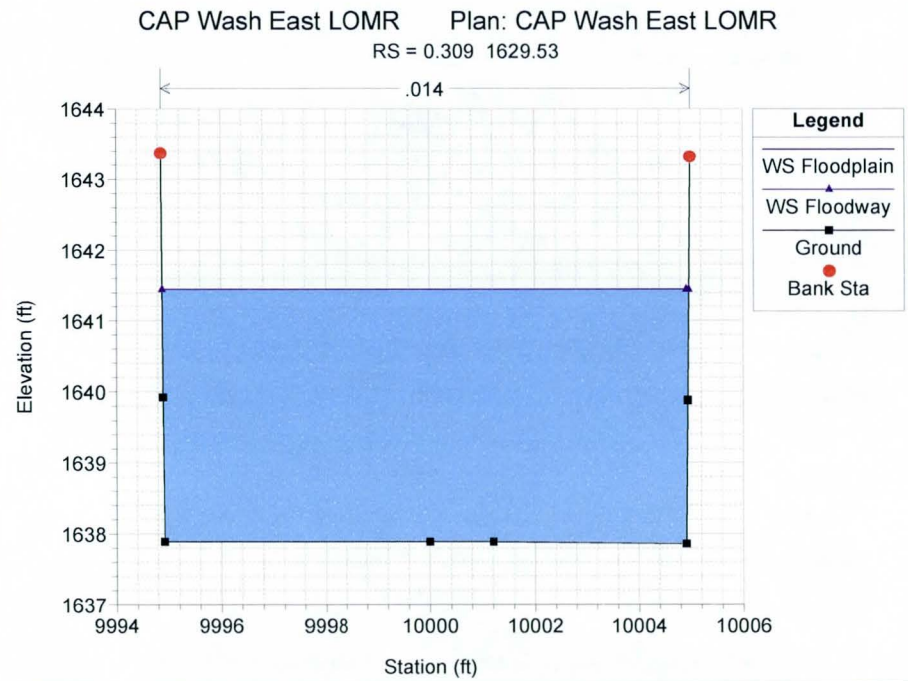
CAP Wash East LOMR Plan: CAP Wash East LOMR
RS = 0.309 1629.53
.014
Legend
WS Floodplain
WS Floodway
Ground
Bank Sta
Elevation (ft)
Station (ft)

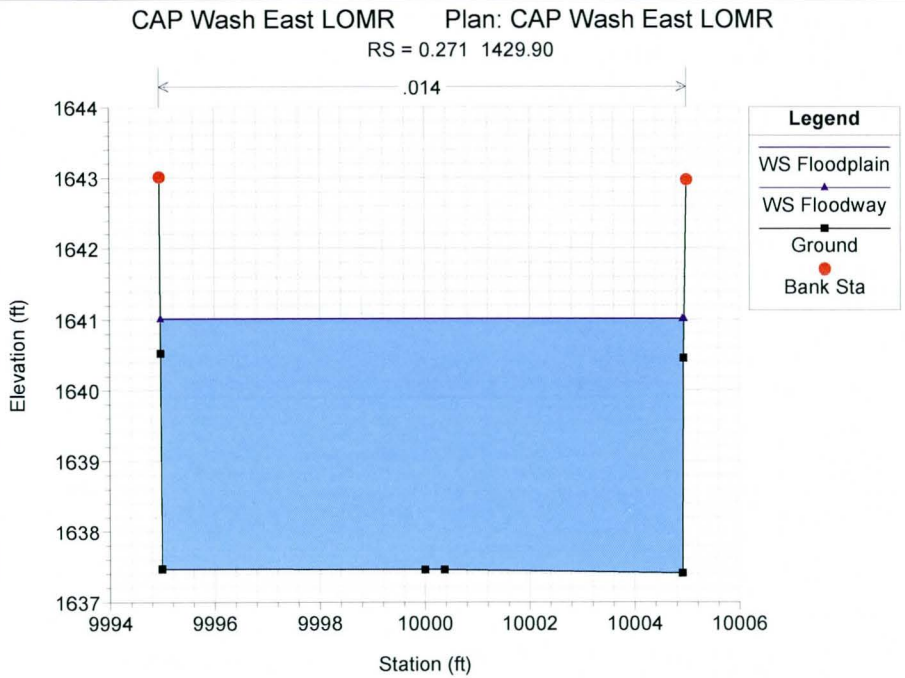
CAP Wash East LOMR Plan: CAP Wash East LOMR
RS = 0.271 1429.90
.014
Legend
WS Floodplain
WS Floodway
Ground
Bank Sta
Elevation (ft)
Station (ft)

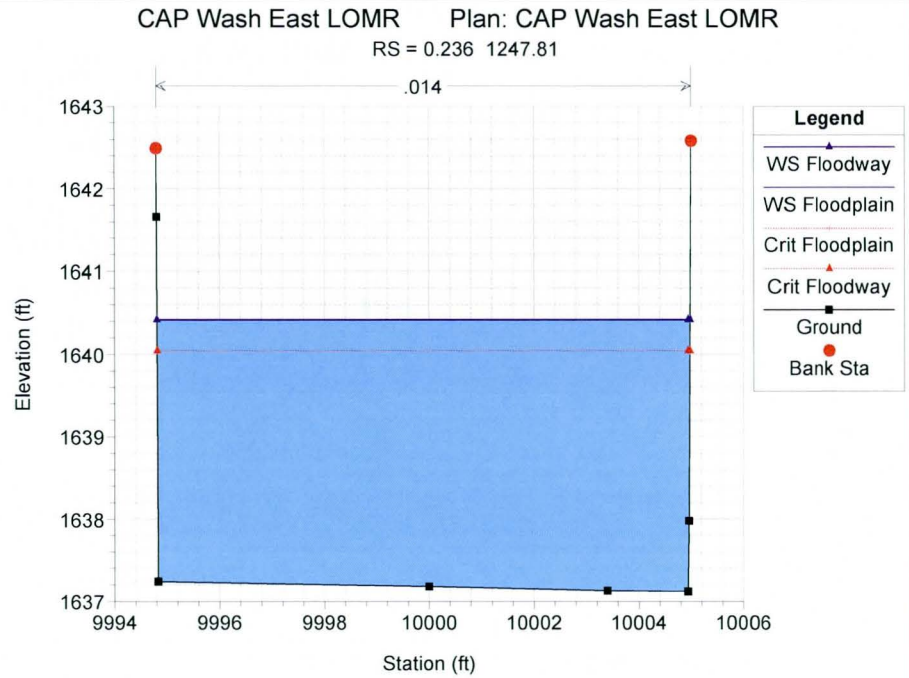
CAP Wash East LOMR Plan: CAP Wash East LOMR
RS = 0.236 1247.81
.014
Legend
WS Floodway
WS Floodplain
Crit Floodplain
Crit Floodway
Ground
Bank Sta
Elevation (ft)
Station (ft)

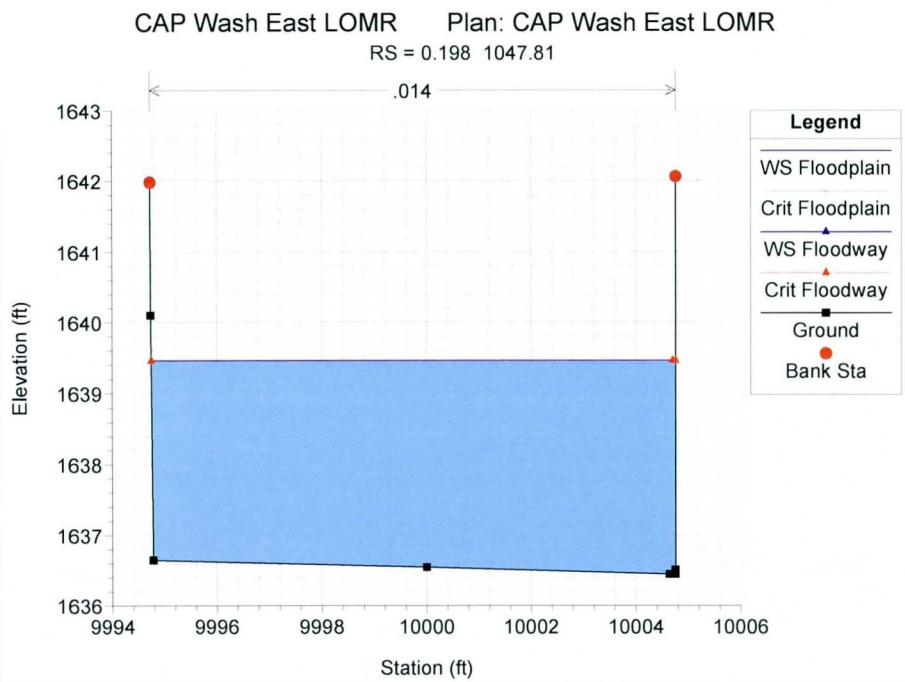
CAP Wash East LOMR Plan: CAP Wash East LOMR
RS = 0.198 1047.81
.014
Legend
WS Floodplain
Crit Floodplain
WS Floodway
Crit Floodway
Ground
Bank Sta
Elevation (ft)
Station (ft)

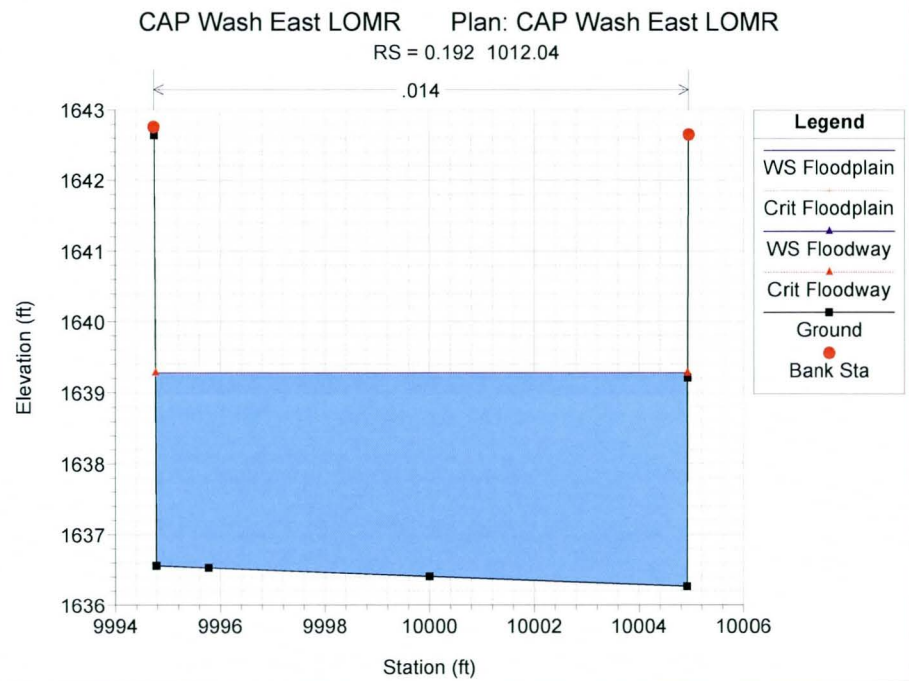
CAP Wash East LOMR Plan: CAP Wash East LOMR
RS = 0.192 1012.04
.014
Legend
WS Floodplain
Crit Floodplain
WS Floodway
Crit Floodway
Ground
Bank Sta
Elevation (ft)
Station (ft)

CAP Wash East LOMR Plan: CAP Wash East LOMR

RS = 0.185 975.86

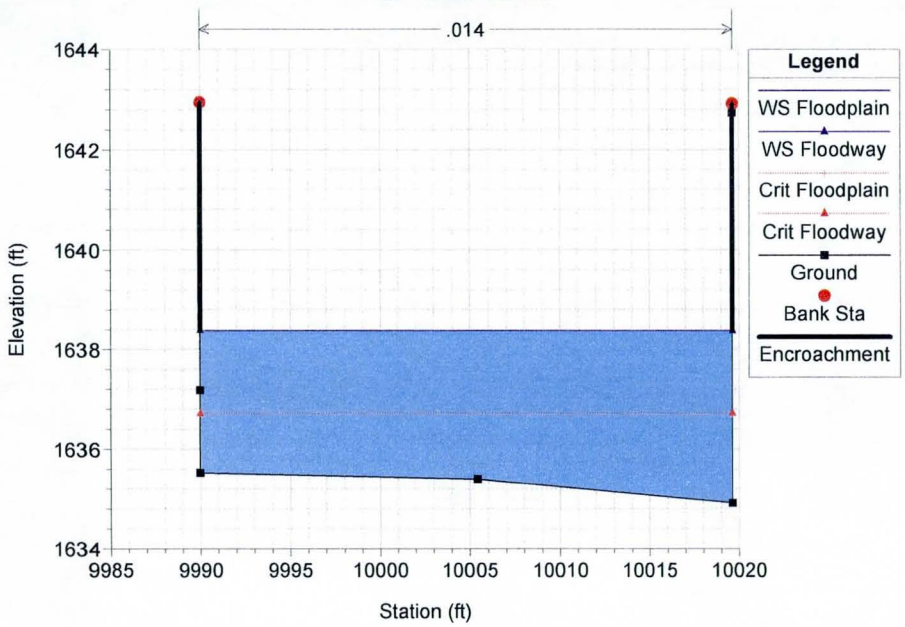

APPENDIX F

EROSION AND SEDIMENT TRANSPORT ANALYSIS SUPPORTING DOCUMENTATION (none)

APPENDIX G

REDUCED SIZE FLOODPLAIN WORK MAPS

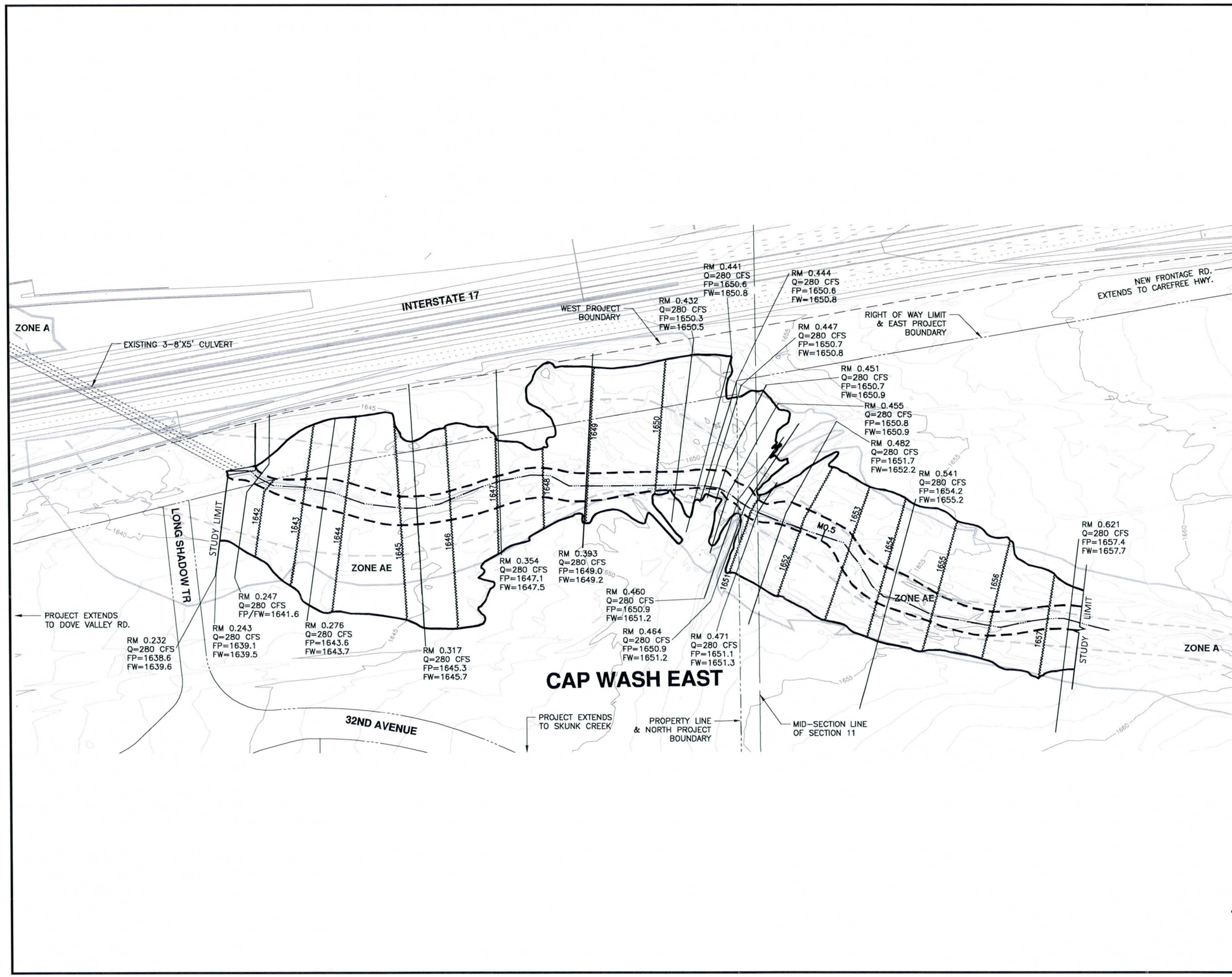

LEGEND

POST PROJECT:
- 100-YR FLOODPLAIN BOUNDARY
- FLOODWAY BOUNDARY

CURRENT EFFECTIVE:
- 100-YR FLOODPLAIN BOUNDARY
- FLOODWAY BOUNDARY

HYDRAULIC BASE LINE WITH RIVER MILE — M12.0 M13.0

CROSS SECTION — CROSS SECTION ROUTE AND DESIGNATION: RM 0.100; Q = CFS (100 YEAR DISCHARGE); FP= 1888.7 (FLOODPLAIN WATER SURFACE ELEVATION); FW= 1889.7 (FLOODWAY WATER SURFACE ELEVATION)

ELEVATION REFERENCE MARK — ERM XXX

BASE FLOOD ELEVATIONS — 1221

ZONE DESIGNATIONS — ZONE AE

SECTION LINE

RIGHT OF WAY LIMITS

PROPERTY BOUNDARY

PROJECT BOUNDARY

ELEVATION REFERENCE MARKS

NOTE: ALL ELEVATIONS ARE BASED ON NATIONAL GEODETIC VERTICAL DATUM OF 1929
CONVERSION FACTOR 1988 NAVD = 1929 NGVD + 1.96'

I.D. NUMBER	ELEVATION (FT)	DESCRIPTION/LOCATION
307	1631.35	BRASS CAP IN HANDHOLE SE CORNER SEC 11 T5N R3E AT INTERSECTION OF DOVE VALLEY ROAD AND NORTH VALLEY PARKWAY
306	1628.69	STONE IN HANDHOLE SW CORNER SEC 11 T5N R3E AT DOVE VALLEY AND APPROX 1800' WEST OF INTERSTATE 17
303	1681.88	BRASS CAP IN HANDHOLE N 1/4 CORNER SEC 11 T5N R3E AT CAREFREE HIGHWAY AND APPROX 2800' EAST OF INTERSTATE 17

-100' 0' 100' 200'
SCALE: 1"= 100 FEET
CONTOUR INTERVAL = 1 FEET

NO.	REVISION	BY	DATE
2			
1			

PRE PROJECT WORKMAP

CAP WASH EAST
SONORAN CROSSING

JULY 2014

Dibble Engineering

	BY	DATE
DESIGN	JEP	07/17/14
DESIGN CHK.	MRG	07/17/14
PLANS	JEP	07/17/14
PLANS CHK.	MRG	07/17/14

SHEET 1 OF 1

Registered Professional Engineer (Civil) 37878 JOSHUA E. PAPWORTH Date Signed 7/17/14 ARIZONA, U.S.A. Expires 09/30/14

FILE:J:\2012\111204 Macerich NBCC\CAD\Floodplain\CAP Wash East LOMR\CAP WASH EAST WORKMAP - PRE PROJECT.dwg DATE:Jul, 17 2014 TIME: 01:15 pm

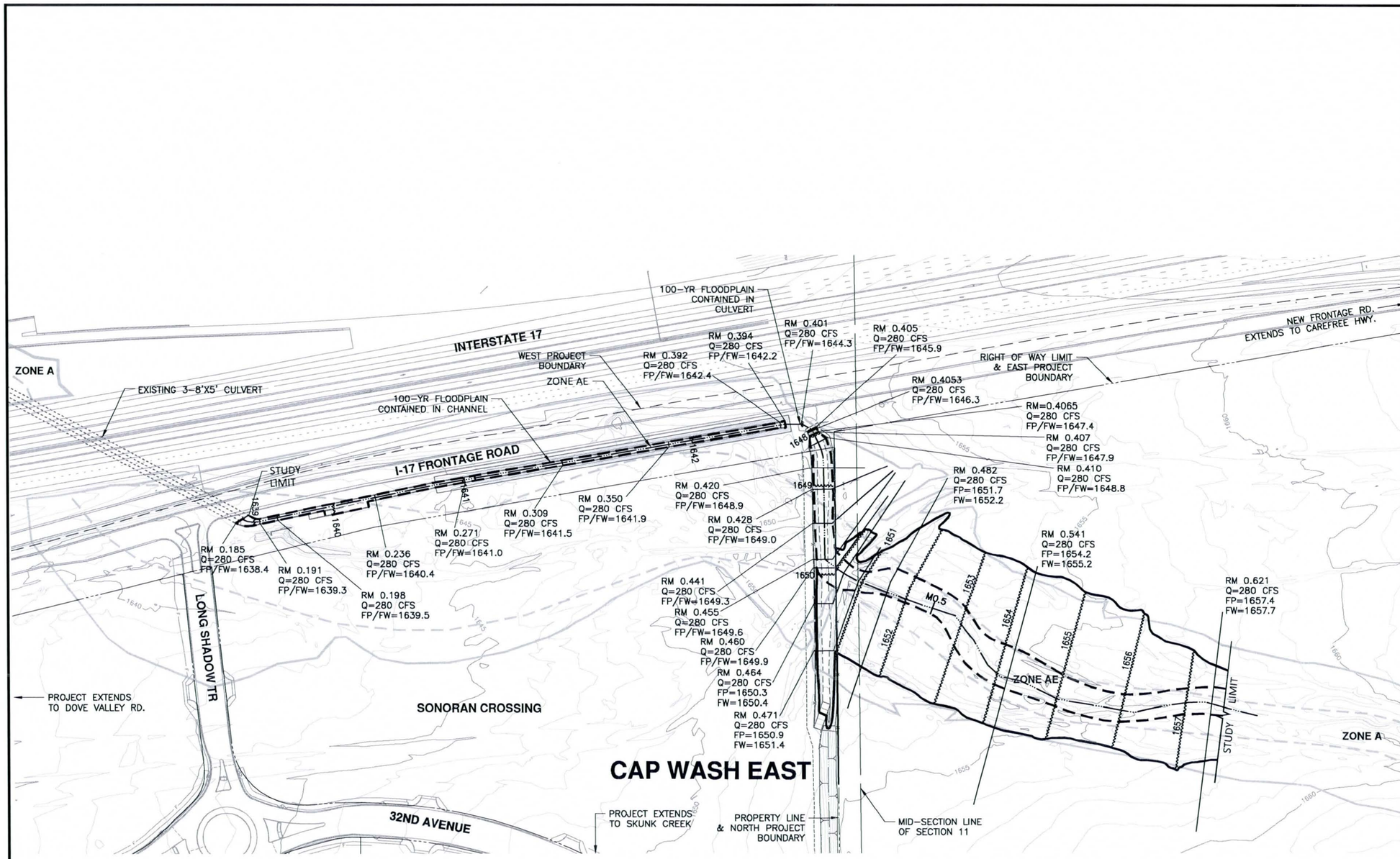

LEGEND

POST PROJECT:

- 100-YR FLOODPLAIN BOUNDARY
- FLOODWAY BOUNDARY

CURRENT EFFECTIVE:

- 100-YR FLOODPLAIN BOUNDARY
- FLOODWAY BOUNDARY

HYDRAULIC BASE LINE WITH RIVER MILE — M12.0 M13.0

CROSS SECTION — CROSS SECTION BASE LINE DESIGNATION — RM 0.100; Q = CFS (100 YEAR DISCHARGE); FP= 1888.7 (FLOODWAY WATER SURFACE ELEVATION); FW= 1889.7 (FLOODWAY WATER SURFACE ELEVATION)

ELEVATION REFERENCE MARK — ERM XXX

BASE FLOOD ELEVATIONS — 1221

ZONE DESIGNATIONS — ZONE AE

SECTION LINE

RIGHT OF WAY LIMITS

PROPERTY BOUNDARY

PROJECT BOUNDARY

ELEVATION REFERENCE MARKS

NOTE: ALL ELEVATIONS ARE BASED ON NATIONAL GEODETIC VERTICAL DATUM OF 1929
CONVERSION FACTOR 1988 NAVD = 1929 NGVD + 1.96'

I.D. NUMBER	ELEVATION (FT)	DESCRIPTION/LOCATION
307	1631.35	BRASS CAP IN HANDHOLE SE CORNER SEC 11 T5N R3E AT INTERSECTION OF DOVE VALLEY ROAD AND NORTH VALLEY PARKWAY
306	1628.69	STONE IN HANDHOLE SW CORNER SEC 11 T5N R3E AT DOVE VALLEY AND APPROX 1800' WEST OF INTERSTATE 17
303	1681.88	BRASS CAP IN HANDHOLE N 1/4 CORNER SEC 11 T5N R3E AT CAREFREE HIGHWAY AND APPROX 2800' EAST OF INTERSTATE 17

-100' 0' 100' 200'
SCALE: 1"= 100 FEET
CONTOUR INTERVAL = 1 FEET

NO.	REVISION	BY	DATE
2			
1			

LETTER OF MAP REVISION

CAP WASH EAST
SONORAN CROSSING

JULY 2014

Registered Professional Engineer (Civil) CERTIFICATE NO. 37878 JOSHUA E. PAPWORTH Date Signed 7/17/14 ARIZONA, U.S.A. Expires 06/30/14

Dibble Engineering

	BY	DATE
DESIGN	JEP	07/17/14
DESIGN CHK.	MRG	07/17/14
PLANS	JEP	07/17/14
PLANS CHK.	MRG	07/17/14

SHEET 1 OF 1

FILE:J:\2012\111204 Macerich NBCC\CAD\Floodplain\CAP Wash East LOMR\CAP WASH EAST WORKMAP - POST PROJECT.dwg DATE:Jul, 17 2014 TIME: 01:16 pm

U.S. DEPARTMENT OF HOMELAND SECURITY
FEDERAL EMERGENCY MANAGEMENT AGENCY

OVERVIEW & CONCURRENCE FORM

O.M.B No. 1660-0016
Expires February 28, 2014

PAPERWORK BURDEN DISCLOSURE NOTICE

Public reporting burden for this form is estimated to average 1 hours per response. The burden estimate includes the time for reviewing instructions, searching existing data sources, gathering and maintaining the needed data, and completing, reviewing, and submitting the form. You are not required to respond to this collection of information unless it displays a valid OMB control number. Send comments regarding the accuracy of the burden estimate and any suggestions for reducing this burden to: Information Collections Management, Department of Homeland Security, Federal Emergency Management Agency, 1800 South Bell Street, Arlington, VA 20958-3005, Paperwork Reduction Project (1660-0016). Submission of the form is required to obtain or retain benefits under the National Flood Insurance Program. **Please do not send your completed survey to the above address.**

PRIVACY ACT STATEMENT

AUTHORITY: The National Flood Insurance Act of 1968, Public Law 90-448, as amended by the Flood Disaster Protection Act of 1973, Public Law 93-234.

PRINCIPAL PURPOSE(S): This information is being collected for the purpose of determining an applicant's eligibility to request changes to National Flood Insurance Program (NFIP) Flood Insurance Rate Maps (FIRM).

ROUTINE USE(S): The information on this form may be disclosed as generally permitted under 5 U.S.C § 552a(b) of the Privacy Act of 1974, as amended. This includes using this information as necessary and authorized by the routine uses published in DHS/FEMA/NFIP/LOMA-1 National Flood Insurance Program (NFIP); Letter of Map Amendment (LOMA) February 15, 2006, 71 FR 7990.

DISCLOSURE: The disclosure of information on this form is voluntary; however, failure to provide the information requested may delay or prevent FEMA from processing a determination regarding a requested change to a (NFIP) Flood Insurance Rate Maps (FIRM).

A. REQUESTED RESPONSE FROM DHS-FEMA

This request is for a (check one):

☐ CLOMR: A letter from DHS-FEMA commenting on whether a proposed project, if built as proposed, would justify a map revision, or proposed hydrology changes (See 44 CFR Ch. 1, Parts 60, 65 & 72).

☒ LOMR: A letter from DHS-FEMA officially revising the current NFIP map to show the changes to floodplains, regulatory floodway or flood elevations. (See 44 CFR Ch. 1, Parts 60, 65 & 72)

B. OVERVIEW

1. The NFIP map panel(s) affected for all impacted communities is (are):

Community No.	Community Name	State	Map No.	Panel No.	Effective Date
Example: 480301	City of Katy	TX	48473C	0005D	02/08/83
480287	Harris County	TX	48201C	0220G	09/28/90
040051	City of Phoenix	AZ	04013C	0845L	10/16/13

2. a. Flooding Source: CAP Wash East

   b. Types of Flooding: ☒ Riverine ☐ Coastal ☐ Shallow Flooding (e.g., Zones AO and AH) ☐ Alluvial fan ☐ Lakes ☐ Other (Attach Description)

3. Project Name/Identifier: Sonoran Crossing - CAP Wash East

4. FEMA zone designations affected: A (choices: A, AH, AO, A1-A30, A99, AE, AR, V, V1-V30, VE, B, C, D, X)

5. Basis for Request and Type of Revision:

   a. The basis for this revision request is (check all that apply)

   ☒ Physical Change ☒ Improved Methodology/Data ☒ Regulatory Floodway Revision ☒ Base Map Changes
   ☐ Coastal Analysis ☒ Hydraulic Analysis ☐ Hydrologic Analysis ☐ Corrections
   ☐ Weir-Dam Changes ☐ Levee Certification ☐ Alluvial Fan Analysis ☐ Natural Changes
   ☒ New Topographic Data ☐ Other (Attach Description)

   Note: A photograph and narrative description of the area of concern is not required, but is very helpful during review.

b. The area of revision encompasses the following structures (check all that apply)

Structures: ☒ Channelization ☐ Levee/Floodwall ☒ Bridge/Culvert

☐ Dam ☐ Fill ☐ Other (Attach Description)

6. ☐ Documentation of ESA compliance is submitted (required to initiate CLOMR review). Please refer to the instructions for more information.

C. REVIEW FEE

Has the review fee for the appropriate request category been included? ☒ Yes Fee amount: $5,000

☐ No, Attach Explanation

Please see the DHS-FEMA Web site at http://www.fema.gov/plan/prevent/fhm/frm_fees.shtm **for Fee Amounts and Exemptions.**

D. SIGNATURE

All documents submitted in support of this request are correct to the best of my knowledge. I understand that any false statement may be punishable by fine or imprisonment under Title 18 of the United States Code, Section 1001.

Name: Josh Papworth, P.E., CFM	Company: Dibble Engineering	
Mailing Address: 7500 North Dreamy Draw Drive, Suite 200 Phoenix, Arizona 85020	Daytime Telephone No.: 6029571155	Fax No.: 6029572838
	E-Mail Address: Josh.Papworth@dibblecorp.com	
Signature of Requester (required):	Date: 7.15.14	

As the community official responsible for floodplain management, I hereby acknowledge that we have received and reviewed this Letter of Map Revision (LOMR) or conditional LOMR request. Based upon the community's review, we find the completed or proposed project meets or is designed to meet all of the community floodplain management requirements, including the requirements for when fill is placed in the regulatory floodway, and that all necessary Federal, State, and local permits have been, or in the case of a conditional LOMR, will be obtained. For Conditional LOMR requests, the applicant has documented Endangered Species Act (ESA) compliance to FEMA prior to FEMA's review of the Conditional LOMR application. For LOMR requests, I acknowledge that compliance with Sections 9 and 10 of the ESA has been achieved independently of FEMA's process. For actions authorized, funded, or being carried out by Federal or State agencies, documentation from the agency showing its compliance with Section 7(a)(2) of the ESA will be submitted. In addition, we have determined that the land and any existing or proposed structures to be removed from the SFHA are or will be reasonably safe from flooding as defined in 44CFR 65.2(c), and that we have available upon request by FEMA, all analyses and documentation used to make this determination.

Community Official's Name and Title: Hasan Mushtaq, P.E., Ph.D., CFM, Floodplain Manager	Community Name: City of Phoenix	
Mailing Address: City of Phoenix 200 West Washington St Phoenix, AZ 85003	Daytime Telephone No.: 602-262-4026	Fax No.: 602-262-7322
	E-Mail Address: hasan.mushtaq@phoenix.gov	
Community Official's Signature (required):	Date:	

CERTIFICATION BY REGISTERED PROFESSIONAL ENGINEER AND/OR LAND SURVEYOR

This certification is to be signed and sealed by a licensed land surveyor, registered professional engineer, or architect authorized by law to certify elevation information data, hydrologic and hydraulic analysis, and any other supporting information as per NFIP regulations paragraph 65.2(b) and as described in the MT-2 Forms Instructions. All documents submitted in support of this request are correct to the best of my knowledge. I understand that any false statement may be punishable by fine or imprisonment under Title 18 of the United States Code, Section 1001.

Certifier's Name: Josh Papworth, P.E., CFM	License No.: 37878	Expiration Date: 9/30/14
Company Name: Dibble Engineering	Telephone No.: 602-957-1155	Fax No.: 602-957-2838
Signature:	Date: 7.15.14	E-Mail Address: Josh.Papworth@dibblecorp.com

Ensure the forms that are appropriate to your revision request are included in your submittal.

Form Name and (Number)	Required if ...
☒ Riverine Hydrology and Hydraulics Form (Form 2)	New or revised discharges or water-surface elevations
☒ Riverine Structures Form (Form 3)	Channel is modified, addition/revision of bridge/culverts, addition/revision of levee/floodwall, addition/revision of dam
☐ Coastal Analysis Form (Form 4)	New or revised coastal elevations
☐ Coastal Structures Form (Form 5)	Addition/revision of coastal structure
☐ Alluvial Fan Flooding Form (Form 6)	Flood control measures on alluvial fans

Seal (Optional)

U.S. DEPARTMENT OF HOMELAND SECURITY
FEDERAL EMERGENCY MANAGEMENT AGENCY

RIVERINE HYDROLOGY & HYDRAULICS FORM

O.M.B No. 1660-0016
Expires February 28, 2014

PAPERWORK BURDEN DISCLOSURE NOTICE

Public reporting burden for this form is estimated to average 3.5 hours per response. The burden estimate includes the time for reviewing instructions, searching existing data sources, gathering and maintaining the needed data, and completing, reviewing, and submitting the form. You are not required to respond to this collection of information unless a valid OMB control number appears in the upper right corner of this form. Send comments regarding the accuracy of the burden estimate and any suggestions for reducing this burden to: Information Collections Management, Department of Homeland Security, Federal Emergency Management Agency, 1800 South Bell Street, Arlington VA 20958-3005, Paperwork Reduction Project (1660-0016). Submission of the form is required to obtain or retain benefits under the National Flood Insurance Program. **Please do not send your completed survey to the above address.**

PRIVACY ACT STATEMENT

AUTHORITY: The National Flood Insurance Act of 1968, Public Law 90-448, as amended by the Flood Disaster Protection Act of 1973, Public Law 93-234.

PRINCIPAL PURPOSE(S): This information is being collected for the purpose of determining an applicant's eligibility to request changes to National Flood Insurance Program (NFIP) Flood Insurance Rate Maps (FIRM).

ROUTINE USE(S): The information on this form may be disclosed as generally permitted under 5 U.S.C § 552a(b) of the Privacy Act of 1974, as amended. This includes using this information as necessary and authorized by the routine uses published in DHS/FEMA/NFIP/LOMA-1 National Flood Insurance Program (NFIP); Letter of Map Amendment (LOMA) February 15, 2006, 71 FR 7990.

DISCLOSURE: The disclosure of information on this form is voluntary; however, failure to provide the information requested may delay or prevent FEMA from processing a determination regarding a requested change to a NFIP Flood Insurance Rate Maps (FIRM).

Flooding Source: CAP Wash East

Note: Fill out one form for each flooding source studied

A. HYDROLOGY

1. Reason for New Hydrologic Analysis (check all that apply)

☐ Not revised (skip to section B) ☐ No existing analysis ☐ Improved data
☐ Alternative methodology ☐ Proposed Conditions (CLOMR) ☒ Changed physical condition of watershed

2. Comparison of Representative 1%-Annual-Chance Discharges

Location	Drainage Area (Sq. Mi.)	Effective/FIS (cfs)	Revised (cfs)
			Not Revised. See Explanation Attached.

3. Methodology for New Hydrologic Analysis (check all that apply)

☐ Statistical Analysis of Gage Records ☐ Precipitation/Runoff Model → Specify Model: _____
☐ Regional Regression Equations ☒ Other (please attach description)

Please enclose all relevant models in digital format, maps, computations (including computation of parameters), and documentation to support the new analysis.

4. Review/Approval of Analysis

If your community requires a regional, state, or federal agency to review the hydrologic analysis, please attach evidence of approval/review.

5. Impacts of Sediment Transport on Hydrology

Is the hydrology for the revised flooding source(s) affected by sediment transport? ☐ Yes ☒ No

If yes, then fill out Section F (Sediment Transport) of Form 3. If No, then attach your explanation..

B. HYDRAULICS

1. Reach to be Revised

	Description	Cross Section	Water-Surface Elevations (ft.) Effective	Proposed/Revised
Downstream Limit*	Interstate 17	0.232/0.185	1638.6	1638.4
Upstream Limit*	South of Carefree Hwy	0.621	1657.4	1657.4

*Proposed/Revised elevations must tie-into the Effective elevations within 0.5 foot at the downstream and upstream limits of revision.

2. Hydraulic Method/Model Used: HEC-RAS, Version 4.1.0

3. Pre-Submittal Review of Hydraulic Models*

DHS-FEMA has developed two review programs, CHECK-2 and CHECK-RAS, to aid in the review of HEC-2 and HEC-RAS hydraulic models, respectively. We recommend that you review your HEC-2 and HEC-RAS models with CHECK-2 and CHECK-RAS.

4.

Models Submitted	Natural Run		Floodway Run		Datum
Duplicate Effective Model*	File Name:	Plan Name:	File Name:	Plan Name:	
Corrected Effective Model*	File Name:	Plan Name:	File Name:	Plan Name:	
Existing or Pre-Project Conditions Model	File Name: CAPWashEastPre	Plan Name: Pre Project	File Name: CAPWashEastPre	Plan Name: Pre Project	NGVD 1929
Revised or Post-Project Conditions Model	File Name: CAPWashEastPost	Plan Name: Post Project	File Name: CAPWashEastPost	Plan Name: Post Project	NGVD 1929
Other - (attach description)	File Name:	Plan Name:	File Name:	Plan Name:	

* For details, refer to the corresponding section of the instructions.

☒ Digital Models Submitted? (Required)

C. MAPPING REQUIREMENTS

A **certified topographic work map** must be submitted showing the following information (where applicable): the boundaries of the effective, existing, and proposed conditions 1%-annual-chance floodplain (for approximate Zone A revisions) or the boundaries of the 1%- and 0.2%-annual-chance floodplains and regulatory floodway (for detailed Zone AE, AO, and AH revisions); location and alignment of all cross sections with stationing control indicated; stream, road, and other alignments (e.g., dams, levees, etc.); current community easements and boundaries; boundaries of the requester's property; certification of a registered professional engineer registered in the subject State; location and description of reference marks; and the referenced vertical datum (NGVD, NAVD, etc.).

☒ Digital Mapping (GIS/CADD) Data Submitted (preferred)

Topographic Information: One-foot interval contour mapping

Source: Cooper Aerial Mapping Co. & Dibble Engineering Date: Flight date 8-8-2011; As-built ground surv 12-2013

Accuracy: 1"=40'

Note that the boundaries of the existing or proposed conditions floodplains and regulatory floodway to be shown on the revised FIRM and/or FBFM must tie-in with the effective floodplain and regulatory floodway boundaries. Please attach **a copy of the effective FIRM and/or FBFM**, at the same scale as the original, annotated to show the boundaries of the revised 1%-and 0.2%-annual-chance floodplains and regulatory floodway that tie-in with the boundaries of the effective 1%-and 0.2%-annual-chance floodplain and regulatory floodway at the upstream and downstream limits of the area on revision.

☒ Annotated FIRM and/or FBFM (Required)

D. COMMON REGULATORY REQUIREMENTS*

1. For LOMR/CLOMR requests, do Base Flood Elevations (BFEs) increase? ☐ Yes ☒ No

   a. For CLOMR requests, if either of the following is true, please submit **evidence of compliance with Section 65.12 of the NFIP regulations**:

      - The proposed project encroaches upon a regulatory floodway and would result in increases above 0.00 foot compared to pre-project conditions.
      - The proposed project encroaches upon a SFHA with or without BFEs established and would result in increases above 1.00 foot compared to pre-project conditions.

   b. Does this LOMR request cause increase in the BFE and/or SFHA compared with the effective BFEs and/or SFHA? ☐ Yes ☒ No
      If Yes, please attach **proof of property owner notification and acceptance (if available)**. Elements of and examples of property owner notifications can be found in the MT-2 Form 2 Instructions.

2. Does the request involve the placement or proposed placement of fill? ☐ Yes ☒ No

   If Yes, the community must be able to certify that the area to be removed from the special flood hazard area, to include any structures or proposed structures, meets all of the standards of the local floodplain ordinances, and is reasonably safe from flooding in accordance with the NFIP regulations set forth at 44 CFR 60.3(A)(3), 65.5(a)(4), and 65.6(a)(14). Please see the MT-2 instructions for more information.

3. For LOMR requests, is the regulatory floodway being revised? ☐ Yes ☒ No

   If Yes, attach **evidence of regulatory floodway revision notification**. As per Paragraph 65.7(b)(1) of the NFIP Regulations, notification is required for requests involving revisions to the regulatory floodway. (Not required for revisions to approximate 1%-annual-chance floodplains [studied Zone A designation] unless a regulatory floodway is being established. Elements and examples of regulatory floodway revision notification can be found in the MT-2 Form 2 Instructions.)

4. For CLOMR requests, please submit documentation to FEMA and the community to show that you have complied with Sections 9 and 10 of the Endangered Species Act (ESA).

For actions authorized, funded, or being carried out by Federal or State agencies, please submit documentation from the agency showing its compliance with Section 7(a)(2) of the ESA. Please see the MT-2 instructions for more detail.

* Not inclusive of all applicable regulatory requirements. For details, see 44 CFR parts 60 and 65.

To Be Attached to MT-2 Form 2 for CAP Wash East

In response to Item A.1, A.2, and A.3

Item A.1 is marked as "Changed physical condition of watershed" to account for the physical change to the watershed represented by the CAP Wash East Channel. No new hydrology was developed for this project. FEMA approved 1%-annual–chance discharges are used in the floodplain delineation, as was the case of the CAP Wash East CLOMR. The 100-year peak discharge is 280 cfs at Interstate 17 with a drainage area of 0.34 square miles. Please refer to report Section 4.0 of this report for additional background information.

In response to Item B.4. Impacts of Sediment Transport on this study.

No sediment transport analysis was conducted for this study. The contributing watershed is mostly urbanized, and therefore, sediment load is expected to be small and not expected to impact hydraulic performance of the system. This is supported by field observation of the pre-project and post-project condition.

DEPARTMENT OF HOMELAND SECURITY
FEDERAL EMERGENCY MANAGEMENT AGENCY

RIVERINE STRUCTURES FORM

O.M.B. NO. 1660-0016
Expires February 28, 2014

PAPERWORK BURDEN DISCLOSURE NOTICE

Public reporting burden for this form is estimated to average 7 hours per response. The burden estimate includes the time for reviewing instructions, searching existing data sources, gathering and maintaining the needed data, and completing, reviewing, and submitting the form. You are not required to respond to this collection of information unless a valid OMB control number appears in the upper right corner of this form. Send comments regarding the accuracy of the burden estimate and any suggestions for reducing this burden to: Information Collections Management, Department of Homeland Security, Federal Emergency Management Agency, 1800 South Bell Street, Arlington, VA 20598-3005, Paperwork Reduction Project (1660-0016). Submission of the form is required to obtain or retain benefits under the National Flood Insurance Program. **Please do not send your completed survey to the above address.**

PRIVACY ACT STATEMENT

AUTHORITY: The National Flood Insurance Act of 1968, Public Law 90-448, as amended by the Flood Disaster Protection Act of 1973, Public Law 93-234.

PRINCIPAL PURPOSE(S): This information is being collected for the purpose of determining an applicant's eligibility to request changes to National Flood Insurance Program (NFIP) Flood Insurance Rate Maps (FIRM).

ROUTINE USE(S): The information on this form may be disclosed as generally permitted under 5 U.S.C § 552a(b) of the Privacy Act of 1974, as amended. This includes using this information as necessary and authorized by the routine uses published in DHS/FEMA/NFIP/LOMA-1 National Flood Insurance Program; Letter of Map Amendment (LOMA) February 15, 2006, 71 FR 7990.

DISCLOSURE: The disclosure of information on this form is voluntary; however, failure to provide the information requested may delay or prevent FEMA from processing a determination regarding a requested change to a NFIP Flood Insurance Rate Maps (FIRM).

Flooding Source: CAP Wash East

Note: Fill out one form for each flooding source studied.

A. GENERAL

Complete the appropriate section(s) for each Structure listed below:

Channelization.....complete Section B
Bridge/Culvert.....complete Section C
Dam.....complete Section D
Levee/Floodwall.....complete Section E
Sediment Transport.....complete Section F (if required)

Description Of Modeled Structure

1. Name of Structure: Frontage Road Channel

   Type (check one): ☒ Channelization ☐ Bridge/Culvert ☐ Levee/Floodwall ☐ Dam

   Location of Structure: Phoenix, AZ, between I-17 and Carefree Highway

   Downstream Limit/Cross Section: 0.184

   Upstream Limit/Cross Section: 0.471

2. Name of Structure: Frontage Road Culvert

   Type (check one): ☐ Channelization ☒ Bridge/Culvert ☐ Levee/Floodwall ☐ Dam

   Location of Structure: Phoenix, AZ, between I-17 and Carefree Highway

   Downstream Limit/Cross Section: 0.394

   Upstream Limit/Cross Section: 0.405

3. Name of Structure: _____

   Type (check one) ☐ Channelization ☐ Bridge/Culvert ☐ Levee/Floodwall ☐ Dam

   Location of Structure: _____

   Downstream Limit/Cross Section: _____

   Upstream Limit/Cross Section: _____

NOTE: FOR MORE STRUCTURES, ATTACH ADDITIONAL PAGES AS NEEDED.

B. CHANNELIZATION

Flooding Source: CAP Wash East

Name of Structure: Frontage Road Channel

1. Hydraulic Considerations

The channel was designed to carry 280 (cfs) and/or the 100-year flood.
The design elevation in the channel is based on (check one):

☒ Subcritical flow ☐ Critical flow ☐ Supercritical flow ☐ Energy grade line

If there is the potential for a hydraulic jump at the following locations, check all that apply and attach an explanation of how the hydraulic jump is controlled without affecting the stability of the channel.

☐ Inlet to channel ☒ Outlet of channel ☒ At Drop Structures ☐ At Transitions

☐ Other locations (specify): _____

2. Channel Design Plans

Attach the plans of the channelization certified by a registered professional engineer, as described in the instructions.

3. Accessory Structures

The channelization includes (check one):

☐ Levees [Attach Section E (Levee/Floodwall)] ☒ Drop structures ☐ Superelevated sections

☐ Transitions in cross sectional geometry ☐ Debris basin/detention basin [Attach Section D (Dam/Basin)] ☐ Energy dissipator

☐ Weir ☐ Other (Describe):

4. Sediment Transport Considerations

Are the hydraulics of the channel affected by sediment transport? ☐ Yes ☒ No

If yes, then fill out Section F (Sediment Transport) of Form 3. If No, then attach your explanation for why sediment transport was not considered.

C. BRIDGE/CULVERT

Flooding Source: CAP Wash East

Name of Structure: Frontage Road Culvert

1. This revision reflects (check one):

☒ Bridge/culvert not modeled in the FIS

☐ Modified bridge/culvert previously modeled in the FIS

☐ Revised analysis of bridge/culvert previously modeled in the FIS

2. Hydraulic model used to analyze the structure (e.g., HEC-2 with special bridge routine, WSPRO, HY8): HEC-RAS
If different than hydraulic analysis for the flooding source, justify why the hydraulic analysis used for the flooding source could not analyze the structures. Attach justification.

3. Attach plans of the structures certified by a registered professional engineer. The plan detail and information should include the following (check the information that has been provided):

☒ Dimensions (height, width, span, radius, length)

☒ Shape (culverts only)

☒ Material

☒ Beveling or Rounding

☒ Wing Wall Angle

☒ Skew Angle

☒ Distances Between Cross Sections

☒ Erosion Protection

☒ Low Chord Elevations – Upstream and Downstream

☒ Top of Road Elevations – Upstream and Downstream

☒ Structure Invert Elevations – Upstream and Downstream

☒ Stream Invert Elevations – Upstream and Downstream

☒ Cross-Section Locations

4. Sediment Transport Considerations

Are the hydraulics of the structure affected by sediment transport? ☐ Yes ☒ No

If Yes, then fill out Section F (Sediment Transport) of Form 3. If no, then attach an explanation.

D. DAM/BASIN

Flooding Source: _____
Name of Structure: _____

1. This request is for (check one): ☐ Existing dam/basin ☐ New dam/basin ☐ Modification of existing dam/basin

2. The dam/basin was designed by (check one): ☐ Federal agency ☐ State agency ☐ Private organization ☒ Local government agency

   Name of the agency or organization: _____

3. The Dam was permitted as (check one): ☐ Federal Dam ☐ State Dam

   Provide the permit or identification number (ID) for the dam and the appropriate permitting agency or organization

   Permit or ID number _____ Permitting Agency or Organization _____

   a. ☐ Local Government Dam ☐ Private Dam

   Provided related drawings, specification and supporting design information.

4. Does the project involve revised hydrology? ☐ Yes ☐ No

   If Yes, complete the Riverine Hydrology & Hydraulics Form (Form 2).

   Was the dam/basin designed using critical duration storm? (must account for the maximum volume of runoff)

   ☐ Yes, provide supporting documentation with your completed Form 2.

   ☐ No, provide a written explanation and justification for not using the critical duration storm.

5. Does the submittal include debris/sediment yield analysis? ☐ Yes ☐ No

   If Yes, then fill out Section F (Sediment Transport). If No, then attach your explanation for why debris/sediment analysis was not considered?

6. Does the Base Flood Elevation behind the dam/basin or downstream of the dam/basin change? ☐ Yes ☐ No

   If Yes, complete the Riverine Hydrology & Hydraulics Form (Form 2) and complete the table below.

FREQUENCY (% annual chance)	Stillwater Elevation Behind the Dam/Basin FIS	REVISED
10-year (10%)	_____	_____
50-year (2%)	_____	_____
100-year (1%)	_____	_____
500-year (0.2%)	_____	_____
Normal Pool Elevation	_____	_____

7. Please attach a copy of the formal Operation and Maintenance Plan

E. LEVEE/FLOODWALL

1. System Elements

a. This Levee/Floodwall analysis is based on (check one): ☐ upgrading of an existing levee/floodwall system ☐ a newly constructed levee/floodwall system ☐ reanalysis of an existing levee/floodwall system

b. Levee elements and locations are (check one):

☐ earthen embankment, dike, berm, etc. Station _____ to _____
☐ structural floodwall Station _____ to _____
☐ Other (describe): Station _____ to _____

c. Structural Type (check one): ☐ monolithic cast-in place reinforced concrete ☐ reinforced concrete masonry block ☐ sheet piling
☐ Other (describe): _____

d. Has this levee/floodwall system been certified by a Federal agency to provide protection from the base flood?

☐ Yes ☐ No

If Yes, by which agency? _____

e. Attach certified drawings containing the following information (indicate drawing sheet numbers):

1. Plan of the levee embankment and floodwall structures. Sheet Numbers: _____
2. A profile of the levee/floodwall system showing the Base Flood Elevation (BFE), levee and/or wall crest and foundation, and closure locations for the total levee system. Sheet Numbers: _____
3. A profile of the BFE, closure opening outlet and inlet invert elevations, type and size of opening, and kind of closure. Sheet Numbers: _____
4. A layout detail for the embankment protection measures. Sheet Numbers: _____
5. Location, layout, and size and shape of the levee embankment features, foundation treatment, Floodwall structure, closure structures, and pump stations. Sheet Numbers: _____

2. Freeboard

a. The minimum freeboard provided above the BFE is:

Riverine

3.0 feet or more at the downstream end and throughout ☐ Yes ☐ No

3.5 feet or more at the upstream end ☐ Yes ☐ No

4.0 feet within 100 feet upstream of all structures and/or constrictions ☐ Yes ☐ No

Coastal

1.0 foot above the height of the one percent wave associated with the 1%-annual-chance stillwater surge elevation or maximum wave runup (whichever is greater). ☐ Yes ☐ No

2.0 feet above the 1%-annual-chance stillwater surge elevation ☐ Yes ☐ No

Please note, occasionally exceptions are made to the minimum freeboard requirement. If an exception is requested, attach documentation addressing Paragraph 65.10(b)(1)(ii) of the NFIP Regulations.

If No is answered to any of the above, please attach an explanation.

b. Is there an indication from historical records that ice-jamming can affect the BFE? ☐ Yes ☐ No

If Yes, provide ice-jam analysis profile and evidence that the minimum freeboard discussed above still exists.

3. Closures

a. Openings through the levee system (check one): ☐ exists ☐ does not exist

If opening exists, list all closures:

Channel Station	Left or Right Bank	Opening Type	Highest Elevation for Opening Invert	Type of Closure Device

(Extend table on an added sheet as needed and reference)

Note: Geotechnical and geologic data

In addition to the required detailed analysis reports, data obtained during field and laboratory investigations and used in the design analysis for the following system features should be submitted in a tabulated summary form. (Reference U.S. Army Corps of Engineers [USACE] EM-1110-2-1906 Form 2086.)

4. Embankment Protection

a. The maximum levee slope land side is: _____

b. The maximum levee slope flood side is: _____

c. The range of velocities along the levee during the base flood is: _____ (min.) to _____ (max.)

d. Embankment material is protected by (describe what kind): _____

e. Riprap Design Parameters (check one): ☐ Velocity ☐ Tractive stress
Attach references

Reach		Sideslope	Flow Depth	Velocity	Curve or Straight	Stone Riprap			Depth of Toedown
						D_{100}	D_{50}	Thickness	
Sta	to								
Sta	to								
Sta	to								
Sta	to								
Sta	to								
Sta	to								

(Extend table on an added sheet as needed and reference each entry)

f. Is a bedding/filter analysis and design attached? ☐ Yes ☐ No

g. Describe the analysis used for other kinds of protection used (include copies of the design analysis):

Attach engineering analysis to support construction plans.

5. Embankment And Foundation Stability

a. Identify locations and describe the basis for selection of critical location for analysis:
_____

☐ Overall height: Sta.: _____, height _____ ft.

☐ Limiting foundation soil strength:

Strength ϕ = _____ degrees, c = _____ psf

Slope: SS = _____ (h) to _____ (v)

(Repeat as needed on an added sheet for additional locations)

b. Specify the embankment stability analysis methodology used (e.g., circular arc, sliding block, infinite slope, etc.):
_____

c. Summary of stability analysis results:

E. LEVEE/FLOODWALL (CONTINUED)

5. Embankment And Foundation Stability (continued)

Case	Loading Conditions	Critical Safety Factor	Criteria (Min.)
I	End of construction		1.3
II	Sudden drawdown		1.0
III	Critical flood stage		1.4
IV	Steady seepage at flood stage		1.4
VI	Earthquake (Case I)		1.0

(Reference: USACE EM-1110-2-1913 Table 6-1)

d. Was a seepage analysis for the embankment performed? ☐ Yes ☐ No

If Yes, describe methodology used:

e. Was a seepage analysis for the foundation performed? ☐ Yes ☐ No

f. Were uplift pressures at the embankment landside toe checked? ☐ Yes ☐ No

g. Were seepage exit gradients checked for piping potential? ☐ Yes ☐ No

h. The duration of the base flood hydrograph against the embankment is _____ hours.

Attach engineering analysis to support construction plans.

6. Floodwall And Foundation Stability

a. Describe analysis submittal based on Code (check one): ☐ UBC (1988) ☐ Other (specify): _____

b. Stability analysis submitted provides for: ☐ Overturning ☐ Sliding If not, explain: _____

c. Loading included in the analyses were: ☐ Lateral earth @ P_A = _____ psf; P_p = _____ psf

☐ Surcharge-Slope @ _____, ☐ surface _____ psf

☐ Wind @ P_w = _____ psf

☐ Seepage (Uplift); _____ ☐ Earthquake @ P_{eq} = _____ %g

☐ 1%-annual-chance significant wave height: _____ ft.

☐ 1%-annual-chance significant wave period: _____ sec.

d. Summary of Stability Analysis Results: Factors of Safety.
Itemize for each range in site layout dimension and loading condition limitation for each respective reach.

Loading Condition	Criteria (Min)		Sta	To	Sta	To
	Overturn	Sliding	Overturn	Sliding	Overturn	Sliding
Dead & Wind	1.5	1.5				
Dead & Soil	1.5	1.5				
Dead, Soil, Flood, & Impact	1.5	1.5				
Dead, Soil, & Seismic	1.3	1.3				

(Ref: FEMA 114 Sept 1986; USACE EM 1110-2-2502)
Note: (Extend table on an added sheet as needed and reference)

E. LEVEE/FLOODWALL (CONTINUED)

6. Floodwall And Foundation Stability (continued)

e. Foundation bearing strength for each soil type:

Bearing Pressure	Sustained Load (psf)	Short Term Load (psf)
Computed design maximum		
Maximum allowable		

f. Foundation scour protection ☐ is, ☐ is not provided. If provided, attach explanation and supporting documentation:

Attach engineering analysis to support construction plans.

7. Settlement

a. Has anticipated potential settlement been determined and incorporated into the specified construction elevations to maintain the established freeboard margin? ☐ Yes ☐ No

b. The computed range of settlement is _____ ft. to _____ ft.

c. Settlement of the levee crest is determined to be primarily from : ☐ Foundation consolidation ☐ Embankment compression ☐ Other (Describe): _____

d. Differential settlement of floodwalls ☐ has ☐ has not been accommodated in the structural design and construction.

Attach engineering analysis to support construction plans.

8. Interior Drainage

a. Specify size of each interior watershed:

Draining to pressure conduit: _____ acres
Draining to ponding area: _____ acres

b. Relationships Established

Ponding elevation vs. storage	☐ Yes	☐ No
Ponding elevation vs. gravity flow	☐ Yes	☐ No
Differential head vs. gravity flow	☐ Yes	☐ No

c. The river flow duration curve is enclosed: ☐ Yes ☐ No

d. Specify the discharge capacity of the head pressure conduit: _____ cfs

e. Which flooding conditions were analyzed?

• Gravity flow (Interior Watershed)	☐ Yes	☐ No
• Common storm (River Watershed)	☐ Yes	☐ No
• Historical ponding probability	☐ Yes	☐ No
• Coastal wave overtopping	☐ Yes	☐ No

If No for any of the above, attach explanation.

e. Interior drainage has been analyzed based on joint probability of interior and exterior flooding and the capacities of pumping and outlet facilities to provide the established level of flood protection. ☐ Yes ☐ No If No, attach explanation.

g. The rate of seepage through the levee system for the base flood is _____ cfs

h. The length of levee system used to drive this seepage rate in item g: _____ ft.

E. LEVEE/FLOODWALL (CONTINUED)

8. Interior Drainage (continued)

i. Will pumping plants be used for interior drainage? ☐ Yes ☐ No

If Yes, include the number of pumping plants: _____ For each pumping plant, list:

	Plant #1	Plant #2
The number of pumps		
The ponding storage capacity		
The maximum pumping rate		
The maximum pumping head		
The pumping starting elevation		
The pumping stopping elevation		
Is the discharge facility protected?		
Is there a flood warning plan?		
How much time is available between warning and flooding?		

Will the operation be automatic? ☐ Yes ☐ No

If the pumps are electric, are there backup power sources? ☐ Yes ☐ No

(Reference: USACE EM-1110-2-3101, 3102, 3103, 3104, and 3105)

Include a copy of supporting documentation of data and analysis. Provide a map showing the flooded area and maximum ponding elevations for all interior watersheds that result in flooding.

9. Other Design Criteria

a. The following items have been addressed as stated:

Liquefaction ☐ is ☐ is not a problem
Hydrocompaction ☐ is ☐ is not a problem
Heave differential movement due to soils of high shrink/swell ☐ is ☐ is not a problem

b. For each of these problems, state the basic facts and corrective action taken:

Attach supporting documentation

c. If the levee/floodwall is new or enlarged, will the structure adversely impact flood levels and/or flow velocities floodside of the structure?
☐ Yes ☐ No Attach supporting documentation

d. Sediment Transport Considerations:

Was sediment transport considered? ☐ Yes ☐ No
If Yes, then fill out Section F (Sediment Transport). If No, then attach your explanation for why sediment transport was not considered.

10. Operational Plan And Criteria

a. Are the planned/installed works in full compliance with Part 65.10 of the NFIP Regulations? ☐ Yes ☐ No

b. Does the operation plan incorporate all the provisions for closure devices as required in Paragraph 65.10(c)(1) of the NFIP regulations?
☐ Yes ☐ No

c. Does the operation plan incorporate all the provisions for interior drainage as required in Paragraph 65.10(c)(2) of the NFIP regulations?
☐ Yes ☐ No If the answer is No to any of the above, please attach supporting documentation.

E. LEVEE/FLOODWALL (CONTINUED)

11. Maintenance Plan

Please attach a copy of the fomal maintenance plan for the levee/floodwall

12. Operations and Maintenance Plan

Please attach a copy of the formal Operations and Maintenance Plan for the levee/floodwall.

CERTIFICATION OF THE LEVEE DOCUMENTION

This certification is to be signed and sealed by a licensed registered professional engineer authorized by law to certify elevation information data, hydrologic and hydraulic analysis, and any other supporting information as per NFIP regulations paragraph 65.10(e) and as described in the MT-2 Forms Instructions. All documents submitted in support of this request are correct to the best of my knowledge. I understand that any false statement may be punishable by fine or imprisonment under Title 18 of the United States Code, Section 1001.

Certifier's Name: _____ License No.: _____ Expiration Date: _____

Company Name: _____ Telephone No.: _____ Fax No.: _____

Signature: _____ Date: _____ E-Mail Address: _____

F. SEDIMENT TRANSPORT

Flooding Source: _____

Name of Structure: _____

If there is any indication from historical records that sediment transport (including scour and deposition) can affect the Base Flood Elevation (BFE); and/or based on the stream morphology, vegetative cover, development of the watershed and bank conditions, there is a potential for debris and sediment transport (including scour and deposition) to affect the BFEs, then provide the following information along with the supporting documentation:

Sediment load associated with the base flood discharge: Volume _____ acre-feet

Debris load associated with the base flood discharge: Volume _____ acre-feet

Sediment transport rate _____ (percent concentration by volume)

Method used to estimate sediment transport: _____

Most sediment transport formulas are intended for a range of hydraulic conditions and sediment sizes; attach a detailed explanation for using the selected method.

Method used to estimate scour and/or deposition: _____

Method used to revise hydraulic or hydrologic analysis (model) to account for sediment transport: _____

Please note that bulked flows are used to evaluate the performance of a structure during the base flood; however, FEMA does not map BFEs based on bulked flows.

If a sediment analysis has not been performed, an explanation as to why sediment transport (including scour and deposition) will not affect the BFEs or structures must be provided.

See explanation provided on the following sheet.

To Be Attached to MT-2 Form 3 for CAP Wash East

In response to Item B.1. Hydraulic Considerations

HEC-RAS results suggest that water passes through critical depth in the concrete channel near the inlets of both culvert inlets, and within the 2-54" pipe culvert. The culvert inlet headwall includes a drop structure. A hydraulic jump may form at these locations. In HEC-RAS, both a mixed profile and subcritical profile were evaluated and the subcritical run yielded the highest water surface elevations. Accordingly, only the subcritical flow regime was used to map floodplain elevations in the wash. The hydraulic jumps are contained within the concrete channel section and are not expected to affect channel stability.

In response to Item B.4. Sediment Transport Considerations

No sediment transport analysis was conducted for this study. The contributing watershed is mostly urbanized, and therefore, sediment load is expected to be small and not expected to impact hydraulic performance of the system. This is supported by field observation of the pre-project and post-project condition.

In response to Item C.4. Sediment Transport Considerations

No sediment transport analysis was conducted for this study. The contributing watershed is mostly urbanized, and therefore, sediment load is expected to be small and not expected to impact hydraulic performance of the system. This is supported by field observation of the pre-project and post-project condition.

FEDERAL EMERGENCY MANAGEMENT AGENCY

PAYMENT INFORMATION FORM

Community Name: City of Phoenix

Project Identifier: Sonoran Crossing - CAP Wash East

THIS FORM MUST BE MAILED, ALONG WITH THE APPROPRIATE FEE, TO THE ADDRESS BELOW OR FAXED TO THE FAX NUMBER BELOW.

Please make check or money order payable to the National Flood Insurance Program.

Type of Request:

☐ MT-1 application
☒ MT-2 application

LOMC Clearinghouse
847 South Pickett Street
Alexandria, VA 22304-4605
Attn.: LOMC Manager

☐ EDR application

FEMA Project Library
847 South Pickett Street
Alexandria, VA 22304-4605
FAX (703) 212-4090

Request No. (if known): _____ **Check No.:** 20419 **Amount:** $5,000

☐ INITIAL FEE* ☒ FINAL FEE ☐ FEE BALANCE** ☐ MASTER CARD ☐ VISA ☒ CHECK ☐ MONEY ORDER

*Note: Check only for EDR and/or Alluvial Fan requests (as appropriate).

****Note: Check only if submitting a corrected fee for an ongoing request.**

COMPLETE THIS SECTION *ONLY* IF PAYING BY CREDIT CARD

CARD NUMBER EXP. DATE

☐☐☐☐ – ☐☐☐☐ – ☐☐☐☐ – ☐☐☐☐ ☐☐ – ☐☐

1 2 3 4 5 6 7 8 9 10 11 12 13 14 15 16 Month Year

_____ Date

_____ Signature

NAME *(AS IT APPEARS ON CARD)*: _____
(please print or type)

ADDRESS: _____
(for your credit card receipt-please print or type) _____

DAYTIME PHONE: _____

APPENDIX H.2

ANNOTATED CURRENT EFFECTIVE FIRM PANELS

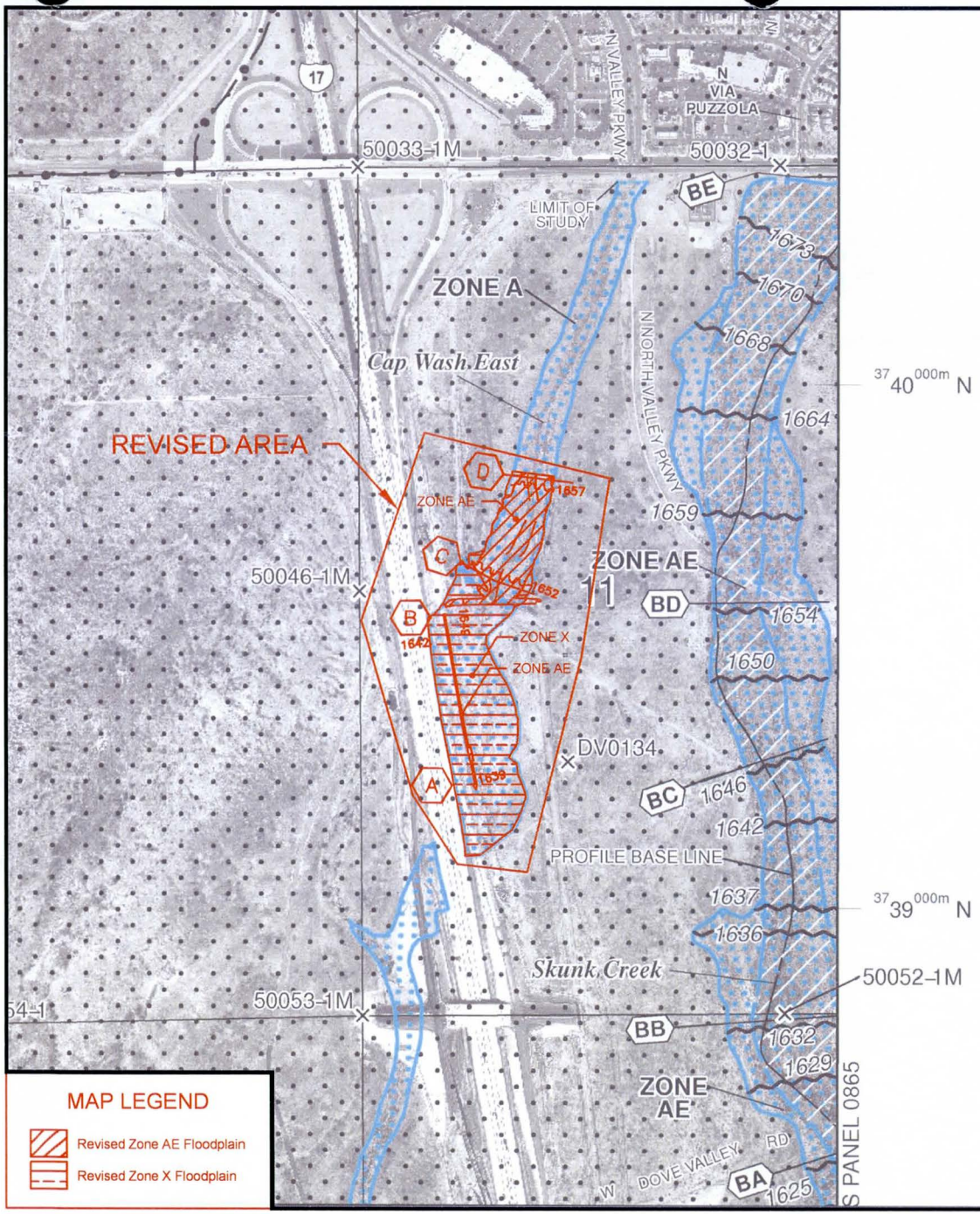

MAP SCALE 1" = 1000'

500 0 1000 2000 FEET

METE

NFIP

PANEL 0845L

NATIONAL FLOOD INSURANCE PROGRAM

FIRM

FLOOD INSURANCE RATE MAP

MARICOPA COUNTY, ARIZONA

AND INCORPORATED AREAS

PANEL 845 OF 4425

(SEE MAP INDEX FOR FIRM PANEL LAYOUT)

CONTAINS:

COMMUNITY	NUMBER	PANEL	SUFFIX
MARICOPA COUNTY	040037	0845	L
PHOENIX, CITY OF	040051	0845	L

ANNOTATED FIRM

Notice to User: The **Map Number** shown below should be used when placing map orders; the **Community Number** shown above should be used on insurance applications for the subject community.

MAP NUMBER
04013C0845L

MAP REVISED
OCTOBER 16, 2013

Federal Emergency Management Agency

This is an official copy of a portion of the above referenced flood map. It was extracted using F-MIT On-Line. This map does not reflect changes or amendments which may have been made subsequent to the date on the title block. For the latest product information about National Flood Insurance Program flood maps check the FEMA Flood Map Store at www.msc.fema.gov

APPENDIX H.3

FLOOD PROFILES

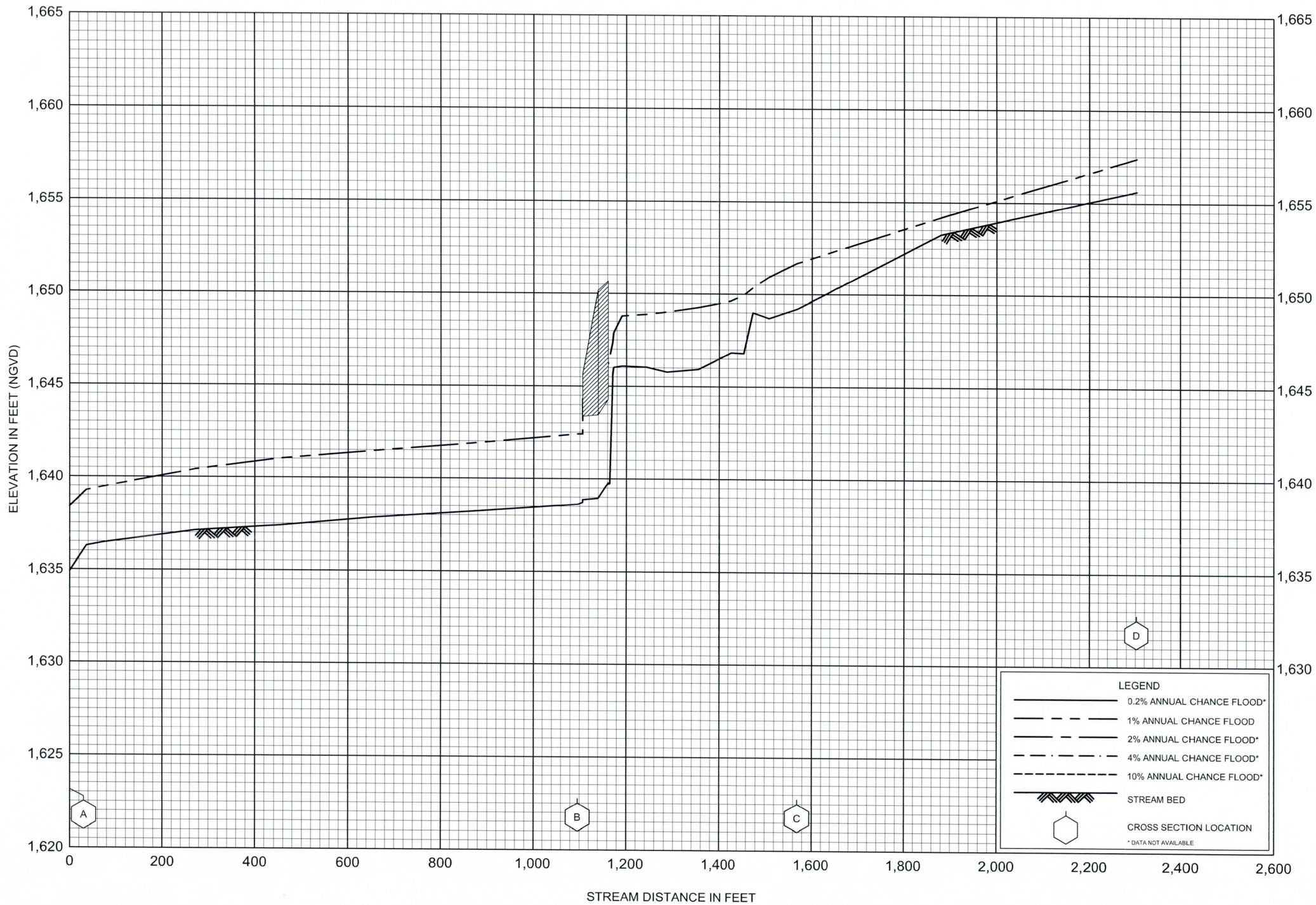

FLOOD PROFILES

CAP WASH EAST

FEDERAL EMERGENCY MANAGEMENT AGENCY

MARICOPA COUNTY, AZ

AND INCORPORATED AREAS

01P

APPENDIX I

AS-BUILT PLANS

MACERICH®

NORTH BLACK CANYON CROSSINGS
I-17 NORTHBOUND FRONTAGE ROAD

SONORAN BOULEVARD TO SR 74 (CAREFREE HIGHWAY)
PHOENIX-CORDES JCT. HIGHWAY
INTERSTATE 17

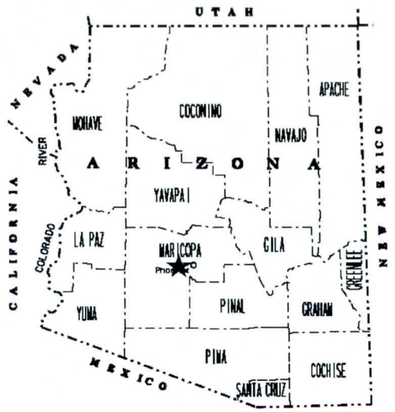

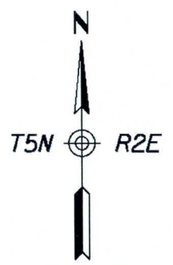

Section 11
MARICOPA COUNTY
ARIZONA

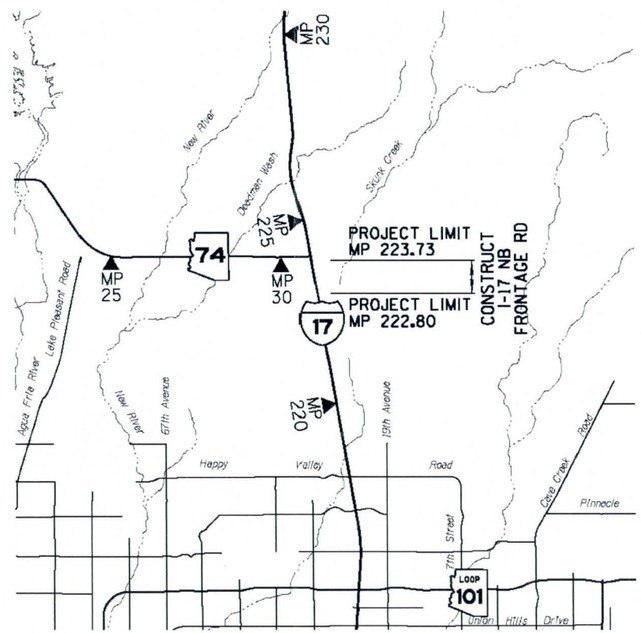

INDEX OF SHEETS

SHEET NO.	DWG. NO.	SHEET TITLE
1	N/A	Face Sheet
1A-1D	N/A	ADOT Standard Drawings
2	G-1.01	Design Data Sheet
3-4	G-1.02 - G-1.03	Typical Sections
5	G-2.01	Barrier Summary Sheet
6	G-2.02	Curb & Gutter Summary Sheet
7-7A	G-2.03 - G-2.04	New Pipe Summary Sheets
8-19	G-3.01 - G-3.12	Detail Sheets
20	C-1.01	Geometric Control Sheet
21-24	C-2.01 - C-2.04	NB Frontage Rd Plan & Profile Sheets
25-28	D-1.01 - D-1.04	Storm Drain Plan Sheets
29-32A	D-2.01 - D-2.05	Storm Drain Profile Sheets
33-34	D-3.01 - D-3.02	Culverts & Channel Plan & Profile Sheets
35	T-1.01	Traffic Control Notes & Quantities
36	T-1.02	Traffic Control Maintenance of Traffic
37	T-2.01	Signing & Pavement Marking Notes
38-39	T-2.02 - T-2.03	Sign Summary
40-46	T-3.01 - T-3.07	Signing & Pavement Marking Plans
47	T-4.01	Sign Formats
48-51	T-5.01 - T-5.04	Lighting Sheets
52-57	E-1.01 - E-1.06	SWPP Cover Sheet & Details
58-65	E-2.01 - E-2.08	SWPP Plan Sheets
66-68	SD-7.01	Retaining Wall Details

Constructed by:

Construction Company

Completion Date

Red-Lines by:

Construction Administrator Name & Company

Completion Date

As-Built by:

ADRIAN BURCHAM HUBBARD ENGINEERING

As-Built Designer Name & Company

09/10/2013

Completion Date

AS-BUILT CERTIFICATION

I HEREBY CERTIFY THAT THE "RECORD DRAWING" MEASUREMENTS AS SHOWN HEREON WERE MADE UNDER MY SUPERVISION, OR AS NOTED, AND ARE CORRECT TO THE BEST OF MY KNOWLEDGE AND BELIEF.

SIGNATURE	REGISTRATION NO.	DATE
	41282	09/10/13

HUBBARD ENGINEERING
1840 S. STAPLEY DR. SUITE# 137
MESA, AZ 85204
ENGINEERING FIRM

REGISTERED LAND SURVEYOR
41282
ADRIAN M. BURCHAM
09/10/13
ARIZONA U.S.A.

Dibble Engineering
7500 N. Dreamy Draw Drive
Suite 200
Phoenix, AZ 85020
P 602.957.1155

AS BUILT DATA	AS BUILT DATE	1 OF 68

ADOT STANDARD DRAWINGS
C STANDARDS

ISSUE OR REVISION DATE	STANDARD NO.	SUBJECT
		CONSTRUCTION
5/12	C-01.10 SH 1	SYMBOL LEGEND
5/12	C-01.10 SH 2	SYMBOL LEGEND
5/12	C-01.10 SH 3	SYMBOL LEGEND
5/12	C-01.10 SH 4	SYMBOL LEGEND
5/12	C-01.30 SH 1	GENERAL ABBREVIATIONS
5/12	C-01.30 SH 2	GENERAL ABBREVIATIONS
5/12	C-01.30 SH 3	GENERAL ABBREVIATIONS
5/12	C-02.10	SLOPES, RURAL DIVIDED HIGHWAYS
5/12	C-02.20	SLOPES, RURAL UNDIVIDED AND FRINGE-URBAN HIGHWAYS
5/12	C-02.30	SLOPES, MISCELLANEOUS ROADWAYS
5/12	C-03.10 SH 1	DITCHES, CHANNELS, DIKES AND BERMS, DITCHES AND CHANNELS
5/12	C-03.10 SH 2	DITCHES, CHANNELS, DIKES AND BERMS, DIKES
5/12	C-03.10 SH 3	DITCHES, CHANNELS, DIKES AND BERMS, DITCH DIKE
5/12	C-03.10 SH 4	DITCHES, CHANNELS, DIKES AND BERMS, PIPE BERMS
5/12	C-03.10 SH 5	DITCHES, CHANNELS, DIKES AND BERMS, HEADWALL BERMS
5/12	C-04.10 SH 1	SPILLWAY, EMBANKMENT SINGLE INLET
5/12	C-04.10 SH 2	SPILLWAY, EMBANKMENT DOUBLE INLET
5/12	C-04.20 SH 1	DOWNDRAIN, EMBANKMENT SINGLE INLET
5/12	C-04.20 SH 2	DOWNDRAIN, EMBANKMENT DOUBLE INLET
5/12	C-04.30	SPILLWAY LENGTH TABLE
5/12	C-04.40	DOWNDRAIN LENGTH TABLE
5/12	C-04.50	DOWNDRAIN ENERGY DISSIPATOR
5/12	C-05.10	CURB & GUTTER, CURB, GUTTER
5/12	C-05.12 SH 1	CURB & GUTTER TRANSITIONS
5/12	C-05.12 SH 2	CURB & GUTTER TRANSITIONS
5/12	C-05.12 SH 3	CURB AND GUTTER TRANSITIONS
5/12	C-05.20 SH 1	CONCRETE DRIVEWAYS & SIDEWALKS, DRIVEWAYS
5/12	C-05.20 SH 2	CONCRETE DRIVEWAYS & SIDEWALKS, SIDEWALKS
5/12	C-05.30 SH 1	SIDEWALK RAMP, TYPE A
5/12	C-05.30 SH 2	SIDEWALK RAMP, TYPE B
5/12	C-05.30 SH 3	SIDEWALK RAMP, TYPE C
5/12	C-05.30 SH 4	SIDEWALK RAMP, TYPE D
5/12	C-05.30 SH 5	SIDEWALK RAMP, TYPE E
5/12	C-05.30 SH 6	SIDEWALK RAMP, TYPE F
5/12	C-05.30 SH 7	SIDEWALK RAMP, DETECTABLE WARNING STRIP
5/12	C-05.40	MEDIAN PAVING AND NOSE TAPER
5/12	C-05.50	CONCRETE BUS BAY
5/12	C-06.10 SH 1	DRIVEWAY & TURNOUT LAYOUTS
5/12	C-06.10 SH 2	DRIVEWAY & TURNOUT LAYOUTS
5/12	C-07.01 SH 1	PCCP JOINTS
5/12	C-07.01 SH 2	PCCP JOINTS
5/12	C-07.02	LOAD TRANSFER DOWEL ASSEMBLY
5/12	C-07.03 SH 1	PCCP JOINT LOCATIONS, MAINLINE SKEWED JOINTS
5/12	C-07.03 SH 2	PCCP JOINT LOCATIONS, MAINLINE SKEWED JOINTS
5/12	C-07.03 SH 3	PCCP JOINT LOCATIONS, MAINLINE SKEWED JOINTS
5/12	C-07.03 SH 4	PCCP JOINT LOCATIONS, MAINLINE SKEWED JOINTS
5/12	C-07.03 SH 5	PCCP JOINT LOCATIONS, MAINLINE NON-SKEWED JOINTS
5/12	C-07.03 SH 6	PCCP JOINT LOCATIONS, MAINLINE NON-SKEWED JOINTS
5/12	C-07.03 SH 7	PCCP JOINT LOCATIONS, MAINLINE NON-SKEWED JOINTS
5/12	C-07.03 SH 8	PCCP JOINT LOCATIONS, MAINLINE NON-SKEWED JOINTS
5/12	C-07.04 SH 1	PCCP JOINT LOCATIONS, PARALLEL TYPE ENTRANCE RAMP WITH AUXILIARY LANE
5/12	C-07.04 SH 2	PCCP JOINT LOCATIONS, PARALLEL TYPE EXIT RAMP WITH AUXILIARY LANE
5/12	C-07.04 SH 3	PCCP JOINT LOCATIONS, TAPER TYPE ENTRANCE RAMP
5/12	C-07.04 SH 4	PCCP JOINT LOCATIONS, TAPER TYPE EXIT RAMP
5/12	C-07.04 SH 5	PCCP JOINT LOCATIONS, CROSSROAD AND RAMP TERMINI
5/12	C-07.06	TRENCH BACKFILL AND PAVEMENT REPLACEMENT
5/12	C-08.20	PAVED GORE AREA
5/12	C-10.00	GUARDRAIL MEASUREMENT LIMITS
5/12	C-10.01	GUARDRAIL INSTALLATION, TYPE A AND REFLECTOR TAB
5/12	C-10.02	GUARDRAIL INSTALLATION, TYPE B AND REFLECTOR TAB
5/12	C-10.03	W-BEAM GUARDRAIL, G4(1W) AND G4(2W), BLOCKED-OUT TIMBER POST
5/12	C-10.04	W-BEAM GUARDRAIL, G4(1S), BLOCKED-OUT STEEL POST
5/12	C-10.05 SH 1	W-BEAM GUARDRAIL, G4(MODIFIED) WITH FREEWAY CURB AND GUTTER
5/12	C-10.05 SH 2	W-BEAM GUARDRAIL, G4(MODIFIED) WITH FREEWAY CURB AND GUTTER
5/12	C-10.06 SH 1	W-BEAM GUARDRAIL, NESTED, TYPES 1 AND 2
5/12	C-10.06 SH 2	W-BEAM GUARDRAIL, NESTED, TYPE 3
5/12	C-10.07 SH 1	W-BEAM GUARDRAIL, BOLTED ANCHOR
5/12	C-10.07 SH 2	W-BEAM GUARDRAIL, BOLTED ANCHOR
5/12	C-10.08	W-BEAM GUARDRAIL, END ANCHOR
5/12	C-10.20	THRIE-BEAM GUARDRAIL, G9, BLOCKED-OUT STEEL POST
5/12	C-10.30 SH 1	GUARDRAIL TRANSITION, THRIE BEAM TO CONCRETE HALF BARRIER, 32" TYPE 'F'
5/12	C-10.30 SH 2	GUARDRAIL TRANSITION, THRIE BEAM TO CONCRETE HALF BARRIER, 32" TYPE 'F'
5/12	C-10.40	CONCRETE MEDIAN BARRIER, 32" TYPE 'F', CAST-IN-PLACE
5/12	C-10.41	CONCRETE MEDIAN BARRIER, 42" TYPE 'F', CAST-IN-PLACE
5/12	C-10.42 SH 1	GLARE SCREEN, CONCRETE MEDIAN BARRIER
5/12	C-10.42 SH 2	GLARE SCREEN, CONCRETE MEDIAN BARRIER
5/12	C-10.42 SH 3	GLARE SCREEN, CONCRETE MEDIAN BARRIER
5/12	C-10.50 SH 1	CONCRETE HALF BARRIER, 32" TYPE 'F', CAST-IN-PLACE
5/12	C-10.50 SH 2	CONCRETE HALF BARRIER, 32" TYPE 'F', PRECAST
5/12	C-10.51	CONCRETE HALF BARRIER, 32" TYPE 'F' WITH SIDEWALK
5/12	C-10.52	CONCRETE HALF BARRIER, 32" TYPE 'F' WITH GUTTER
5/12	C-10.53	CONCRETE HALF BARRIER, 42" TYPE 'F' WITH GUTTER
5/12	C-10.54 SH 1	CONCRETE HALF BARRIER, 32" TYPE 'F' AT PIERS, CAST-IN-PLACE
5/12	C-10.54 SH 2	CONCRETE HALF BARRIER, 32" TYPE 'F' AT PIERS, PRECAST
5/12	C-10.54 SH 3	CONCRETE HALF BARRIER, 32" TYPE 'F' AT PIERS, LAYOUT
5/12	C-10.55 SH 1	CONCRETE HALF BARRIER, 42" TYPE 'F' AT PIERS, CAST-IN-PLACE
5/12	C-10.55 SH 2	CONCRETE HALF BARRIER, 42" TYPE 'F' AT PIERS, PRECAST
5/12	C-10.55 SH 3	CONCRETE HALF BARRIER, 42" TYPE 'F' AT PIERS, LAYOUT
5/12	C-10.70 SH 1	CONCRETE HALF-BARRIER TRANSITION TO VERTICAL, 32" TYPE 'F' WITH CAISSONS
5/12	C-10.70 SH 2	CONCRETE HALF-BARRIER TRANSITION TO VERTICAL, 32" TYPE 'F' WITH CAISSONS
5/12	C-10.70 SH 3	CONCRETE HALF-BARRIER TRANSITION TO VERTICAL, 32" TYPE 'F' WITH CAISSONS
5/12	C-10.71 SH 1	CONCRETE HALF-BARRIER TRANSITION TO VERTICAL, 32" TYPE 'F' WITH CURB & GUTTER
5/12	C-10.71 SH 2	CONCRETE HALF-BARRIER TRANSITION TO VERTICAL, 32" TYPE 'F' WITH CURB & GUTTER
5/12	C-10.72 SH 1	CONCRETE HALF-BARRIER TRANSITION TO VERTICAL, 42" TO 32" TYPE 'F' WITH CAISSONS
5/12	C-10.72 SH 2	CONCRETE HALF-BARRIER TRANSITION TO VERTICAL, 42" TO 32" TYPE 'F' WITH CAISSONS
5/12	C-10.72 SH 3	CONCRETE HALF-BARRIER TRANSITION TO VERTICAL, 42" TO 32" TYPE 'F' WITH CAISSONS
5/12	C-10.73 SH 1	CONCRETE HALF-BARRIER TRANSITION TO VERTICAL, 42" TO 32" TYPE 'F' WITH GUTTER
5/12	C-10.73 SH 2	CONCRETE HALF-BARRIER TRANSITION TO VERTICAL, 42" TO 32" TYPE 'F' WITH GUTTER
5/12	C-10.74	CONCRETE HALF-BARRIER TRANSITION, 42" TO 32" TYPE 'F'
5/12	C-10.75 SH 1	CONCRETE HALF-BARRIER TRANSITION, TYPE 'F', TANGENT DEPARTURE TYPE 1
5/12	C-10.75 SH 2	CONCRETE HALF-BARRIER TRANSITION, TYPE 'F', TANGENT DEPARTURE TYPE 2
5/12	C-10.76	CONCRETE HALF-BARRIER TRANSITION, TYPE 'F' AT RADIUS, 32" TO 0"
5/12	C-10.77	CONCRETE HALF-BARRIER TRANSITION, END TERMINAL CURB AND GUTTER
5/12	C-11.10 SH 1	ROADWAY CATTLE GUARD
5/12	C-11.10 SH 2	ROADWAY CATTLE GUARD
5/12	C-11.10 SH 3	ROADWAY CATTLE GUARD
5/12	C-11.10 SH 4	ROADWAY CATTLE GUARD
5/12	C-11.20	CATTLE GUARD, DRAINAGE
5/12	C-12.10 SH 1	FENCE, WOVEN WIRE
5/12	C-12.10 SH 2	FENCE, BARBED WIRE
5/12	C-12.10 SH 3	FENCE, TYPES 1 AND 2 GATES, FLOOD GATE
5/12	C-12.10 SH 4	FENCE, FLOOD GATE INSTALLATION
5/12	C-12.10 SH 5	FENCE, MISCELLANEOUS DETAILS
5/12	C-12.20 SH 1	FENCE, CHAIN LINK, TYPE 1
5/12	C-12.20 SH 2	FENCE, CHAIN LINK, TYPE 2
5/12	C-12.20 SH 3	FENCE, CHAIN LINK, GATES
5/12	C-12.30 SH 1	FENCE, CHAIN LINK CABLE BARRIER
5/12	C-12.30 SH 2	FENCE, CHAIN LINK CABLE BARRIER
5/12	C-12.30 SH 3	FENCE, CHAIN LINK CABLE BARRIER
5/12	C-13.10 SH 1	PIPE CULVERT INSTALLATION
5/12	C-13.10 SH 2	PIPE CULVERT INSTALLATION
5/12	C-13.15	TYPICAL PIPE INSTALLATION
5/12	C-13.20	PIPE, REINFORCED CONCRETE END SECTION
5/12	C-13.25	PIPE, CORRUGATED METAL END SECTION
5/12	C-13.30	PIPE AND PIPE ARCH, CORRUGATED METAL, CONCRETE INVERT PAVING
5/12	C-13.55	PIPE, CATTLE-VEHICLE PASS, MITERED END TREATMENT
5/12	C-13.60	SLOTTED DRAIN DETAILS
5/12	C-13.65	SLOTTED DRAIN INSTALLATION DETAILS
5/12	C-13.70	STORM DRAIN CONNECTION DETAILS
5/12	C-13.75	STORM DRAIN OUTLET BARRIER GATE
5/12	C-13.76	STORM DRAIN OUTLET AND STORM DRAIN PLUG
5/12	C-13.80	PIPE COLLAR DETAILS
5/12	C-15.10	CATCH BASIN, TYPE 1
5/12	C-15.20 SH 1	CATCH BASIN, TYPE 3
5/12	C-15.20 SH 2	CATCH BASIN, TYPE 3
5/12	C-15.20 SH 3	CATCH BASIN, ACCESS FRAME AND COVER DETAILS
5/12	C-15.30	CATCH BASIN, TYPE 4
5/12	C-15.40 SH 1	CATCH BASIN, TYPE 5
5/12	C-15.40 SH 2	CATCH BASIN, TYPE 5
5/12	C-15.50	CATCH BASIN, FRAME AND GRATE
5/12	C-15.70 SH 1	CATCH BASIN, MISCELLANEOUS DETAILS
5/12	C-15.70 SH 2	CATCH BASIN, MISCELLANEOUS DETAILS
5/12	C-15.75	CATCH BASIN, DROP INLET
5/12	C-15.80	CATCH BASIN, FLUSH
5/12	C-15.81	CATCH BASIN, SIDE SLOPE
5/12	C-15.90	CATCH BASIN, MEDIAN DIKE, PRECAST
5/12	C-15.91 SH 1	FREEWAY CATCH BASIN DETAILS
5/12	C-15.91 SH 2	FREEWAY CATCH BASIN DETAILS
5/12	C-15.92 SH 1	CATCH BASIN WITH TYPE 'F' CONCRETE HALF BARRIER
5/12	C-15.92 SH 2	CATCH BASIN WITH TYPE 'F' CONCRETE HALF BARRIER
5/12	C-16.40	IRRIGATION SLEEVES
5/12	C-17.10	RAIL BANK PROTECTION FOR DRAINAGEWAYS, TYPES 1, 2 & 3
5/12	C-17.15	RAIL BANK PROTECTION AT ABUTMENTS, TYPES 4, 5 & 6
5/12	C-17.20	BANK PROTECTION FOR DRAINAGEWAYS, TYPES 7, 8 & 9
5/12	C-18.10 SH 1	MANHOLE, RISER DETAILS
5/12	C-18.10 SH 2	MANHOLE, BASE DETAILS, NORMAL INSTALLATION
5/12	C-18.10 SH 3	MANHOLE, FRAME AND COVER DETAILS
5/12	C-19.10 SH 1	FORD, CONCRETE WALLS
5/12	C-19.10 SH 2	FORD, TYPES 1 AND 2
5/12	C-21.10	SURVEY MONUMENT FRAME AND COVER
5/12	C-21.20	SURVEY MARKER

AS-BUILT CERTIFICATION

I HEREBY CERTIFY THAT THE "RECORD DRAWING" MEASUREMENTS AS SHOWN HEREON WERE MADE UNDER MY SUPERVISION, OR AS NOTED, AND ARE CORRECT TO THE BEST OF MY KNOWLEDGE AND BELIEF.

SIGNATURE	REGISTRATION NO.	DATE
	41282	09/10/13

HUBBARD ENGINEERING
1840 S. STAPLEY DR. SUITE# 137
MESA, AZ 85204
ENGINEERING FIRM

REGISTERED LAND SURVEYOR 41282 ADRIAN M. BURCHAM ARIZONA U.S.A.

ADOT STANDARD DRAWINGS REVISION DATES and STANDARD NO's REVIEW			
CONSTRUCTION Standards	NAME		DATE 9/24/12
PROJECT NO.		IA	OF
AS BUILT DATA	FEDERAL AID NO.	AS BUILT DATE	OF

REV.: 05/12

ADOT STANDARD DRAWINGS

TRAFFIC SIGNING & MARKING STANDARDS
EFFECTIVE AUGUST 2011

REVISION	STANDARD	SUBJECT: SIGNING & MARKING DETAILS
2/02	M-1	CURB MARKINGS FOR RAISED MEDIAN & ISLANDS
2/04	M-2 SHT 1	INTERSECTION STRIPING
2/02	M-2 SHT 2	INTERSECTION STRIPING
2/02	M-2 SHT 3	CENTERLINE & REVERSE CURVE DETAILS
2/02	M-3	STRIPING AND DELINEATION FOR FREEWAY TERMINALS
10/10	M-4	PASSING LANE STRIPING DETAILS
2/02	M-5	RAILROAD PAVEMENT MARKINGS
2/02	M-6	WORD MARKINGS
2/02	M-7	PAVEMENT LETTERS
2/02	M-8	PAVEMENT LETTERS
2/02	M-9	PAVEMENT NUMBERS
9/08	M-10 SHT 1	PAVEMENT MARKING SYMBOLS
9/08	M-10 SHT 2	PAVEMENT MARKING SYMBOLS
9/08	M-10 SHT 3	PAVEMENT MARKING SYMBOLS
3/05	M-11	TURN LANE PAVEMENT MARKINGS
10/10	M-12	FREEWAY PAVEMENT ARROWS
2/02	M-13	PREFERENTIAL LANE PAVEMENT MARKINGS
1/10	M-14	STRIPING AND DELINEATION FOR TRUCK ESCAPE RAMPS
1/10	M-15 SHT 1	PAVEMENT MARKING FOR FREEWAY ENTRANCE RAMP - TAPERED ACCELERATION LANE
1/10	M-15 SHT 2	PAVEMENT MARKING FOR FREEWAY ENTRANCE RAMP - PARALLEL ACCELERATION LANE
10/10	M-15 SHT 3	PAVEMENT MARKING FOR FREEWAY ENTRANCE RAMP - PARALLEL ACCELERATION LANE WITH HOV BYPASS
1/10	M-16 SHT 1	PAVEMENT MARKING FOR FREEWAY EXIT RAMPS - TAPERED DECELERATION LANE
1/10	M-16 SHT 2	PAVEMENT MARKING FOR FREEWAY EXIT RAMP - PARALLEL DECELERATION LANE
1/10	M-17	FREEWAY LANE DROP PAVEMENT MARKINGS
6/08	M-18	RECESSED PAVEMENT MARKER DETAILS
6/08	M-19 SHT 1	RAISED PAVEMENT MARKER PLAN LEGEND
6/08	M-19 SHT 2	NON-REFLECTIVE RAISED PAVEMENT MARKER DETAILS
6/08	M-19 SHT 3	RETRO-REFLECTIVE RAISED PAVEMENT MARKER DETAILS
6/08	M-19 SHT 4	RETRO-REFLECTIVE RAISED PAVEMENT MARKER DETAILS
6/08	M-19 SHT 5	PAVEMENT MARKING DETAILS FOR UNDIVIDED HIGHWAYS
6/08	M-19 SHT 6	SERIES 40 RETRO-REFLECTIVE RAISED PAVEMENT MARKERS (RRPM) FOR UNDIVIDED HIGHWAYS
6/08	M-19 SHT 7	SERIES 80 RETRO-REFLECTIVE RAISED PAVEMENT MARKERS (RRPM) FOR UNDIVIDED HIGHWAYS
6/08	M-19 SHT 8	TYPICAL MARKING DETAILS FOR EDGELINE PAVEMENT MARKERS
6/08	M-19 SHT 9	TYPICAL MARKING DETAILS FOR LANE DROP & INTERSECTION GUIDE STRIPING
6/08	M-19 SHT 10	PAVEMENT MARKING CROSS-SECTION DETAILS FOR HIGHWAYS
2/02	M-20 SHTS 1 & 2	CHIP SEAL MARKER USAGE FOR TEMPORARY MARKERS
10/10	M-21	TRANSVERSE RUMBLE STRIP DETAILS
9/08	M-22 SHT 1	CONTINUOUS LONGITUDINAL RUMBLE STRIP GROOVE, PATTERN & LOCATION DETAILS
9/08	M-22 SHT 2	LONGITUDINAL RUMBLE STRIP EXCEPTION DETAILS
12/08	M-23 SHTS 1 & 2	OBJECT MARKER DETAILS
5/03	M-24	OBJECT MARKER PLACEMENT DETAILS
8/11	M-26 SHT 1	DELINEATOR PLACEMENT AND SPACING
8/11	M-26 SHT 2	DELINEATOR PLACEMENT AND SPACING
10/10	M-27	DELINEATION DETAILS FOR MEDIAN CROSSOVERS
2/02	M-28	CURVE TREATMENT - CHEVRONS
9/06	M-29	OFF-MAINLINE REFERENCE MARKER LOCATION DETAIL
11/04	M-30	OFF-MAINLINE REFERENCE MARKER DETAILS
2/04	M-31	SNOW MARKER DETAILS
5/03	M-32	BRIDGE AND BARRIER MARKER DETAILS
5/03	M-33	BRIDGE & BARRIER MARKER PLACEMENT & INSTALLATION DETAILS
4/05	M-34	GUARDRAIL EXTRUDER TERMINAL DELINEATION DETAILS
2/02	M-35	OBJECT MARKER FOR SAND BARREL CRASH CUSHION
8/11	M-36	FLEXIBLE DELINEATOR ASSEMBLIES

AS-BUILT CERTIFICATION

I HEREBY CERTIFY THAT THE "RECORD DRAWING" MEASUREMENTS AS SHOWN HEREON WERE MADE UNDER MY SUPERVISION, OR AS NOTED, AND ARE CORRECT TO THE BEST OF MY KNOWLEDGE AND BELIEF.

SIGNATURE	REGISTRATION NO.	DATE
	41282	09/10/13

HUBBARD ENGINEERING
1840 S. STAPLEY DR. SUITE# 137
MESA, AZ 85204
ENGINEERING FIRM

REGISTERED LAND SURVEYOR — CERTIFICATE NO. 41282 — ADRIAN M. BURCHAM — ARIZONA U.S.A.

REVISION	STANDARD	SUBJECT: SIGNING & MARKING DETAILS
8/11	M-37	DELINEATORS IN-GROUND FOUNDATION DETAILS
1/10	M-38	SQUARE STEEL POST BREAK-AWAY DELINEATOR
8/04	S-1 SHT 1	SQUARE TUBE SIGN POST SELECTION CHARTS
5/06	S-1 SHT 2	PERFORATED SIGN POST FOUNDATION
5/03	S-1 SHT 3	PERFORATED SIGN POST FOUNDATION
10/10	S-2 SHT 1	S&W SHAPE POST SELECTION CHART (BREAKAWAY SIGN POST DESIGN)
10/10	S-2 SHT 2	S&W SHAPE POST SELECTION CHART (SPECIAL WIND REGIONS) (BREAKAWAY SIGN POST DESIGN)
10/10	S-3 SHT 1	OFFSETS, CLEARANCES, & MOUNTING DETAILS FOR GUIDE SIGNS & BREAKAWAY POST INSTALLATION
10/10	S-3 SHT 2	OFFSETS, CLEARANCES, & MOUNTING DETAILS FOR WARNING, REGULATORY & MARKER SIGN ON FREEWAYS
1/10	S-3 SHT 3	OFFSETS, CLEARANCES, & MOUNTING DETAILS FOR SIGNS ON NON-FREEWAYS RAMPS AND CROSSROADS
1/10	S-3 SHT 4	OFFSETS, CLEARANCES, & MOUNTING DETAILS FOR SQUARE TUBE POSTS
10/10	S-4	W SHAPE TENSION FUSE PLATE AND HINGE DETAILS
8/11	S-5	BREAKAWAY POST DETAILS FOR W SHAPE GUIDE SIGNS
8/11	S-6	BREAKAWAY POST DETAILS S4x7.7
6/06	S-7	AUXILIARY SIGN INSTALLATION DETAILS
8/06	S-8 SHT 1	ALUMINUM EXTRUSION SIGN PANEL DETAILS
8/11	S-8 SHT 2	ALUMINUM EXTRUSION EXIT PANEL DETAIL
8/06	S-8 SHT 3	ALUMINUM EXTRUSION PANEL INSTALLATION DETAIL ON BREAKAWAY POSTS
8/06	S-8 SHT 4	ALUMINUM EXTRUSION SIGN INSTALLATION DETAIL TO PERFORATED POSTS
2/02	S-9 SHTS 1, 2 & 3	SIGN INSTALLATION ON POLE
5/04	S-10 SHT 1	FREEWAY MILEPOST DETAILS
5/04	S-10 SHT 2	NON-FREEWAY MILEPOST DETAILS
7/04	S-11 SHT 1	TAPERED TUBE SIGN STRUCTURE
7/04	S-11 SHT 2	TAPERED TUBE SIGN STRUCTURE
7/04	S-11 SHT 3	TAPERED TUBE SIGN STRUCTURE
7/04	S-11 SHT 4	TAPERED TUBE SIGN STRUCTURE
2/08	S-12 SHT 1	ARROWS FOR USE ON FREEWAY MAINLINE AND OVERHEAD GUIDE SIGNS
2/08	S-12 SHT 2	ARROWS FOR USE ON GROUND MOUNT GUIDE SIGNS ON CONVENTIONAL ROADWAYS, RAMPS, AND CROSSROADS
2/08	S-13	SIGN IDENTIFICATION DETAILS
4/06	S-14 SHT 1	INSTALLATION OF ROTATING OPEN/CLOSED SIGN
4/06	S-14 SHT 2	INSTALLATION OF ROTATING OPEN/CLOSED SIGN
4/06	S-14 SHT 3	INSTALLATION OF ROTATING OPEN/CLOSED SIGN
4/07	S-15 SHT 1	DUDLEY FOLDING SIGN
4/07	S-15 SHT 2	DUDLEY FOLDING SIGN
2/02	C-1	SAND BARREL CRASH CUSHION
2/02	C-2	SAND BARREL CRASH CUSHION TYPICAL INSTALLATION
12/06	C-3 SHT 1	PRECAST CONCRETE BARRIER PIN AND LOOP ASSEMBLY NCHRP 350 APPROVED DESIGN
12/06	C-3 SHT 2	PRECAST CONCRETE BARRIER PIN AND LOOP ASSEMBLY NCHRP 350 APPROVED DESIGN
2/02	C-4 SHT 1	MEDIAN CROSSOVER
2/02	C-4 SHT 2	TYPICAL END TREATMENTS FOR DETOURS USING TEMPORARY CONCRETE BARRIER (TCB)
10/02	C-5 SHT 1	APPROACH PLATE AND TRANSITION SECTION FOR TEMPORARY CONCRETE BARRIER
10/02	C-5 SHT 2	APPROACH PLATE AND TRANSITION SECTION FOR TEMPORARY CONCRETE BARRIER

NO.	DESCRIPTION OF REVISION	DATE	MADE BY
1	REVISED M-26 SHT 1 & M-27 & REVISED M-26 SHT 2, REVISED M-31, S-5, S-6, S-8 SHT 2	10/10	L. LOPEZ
2	REVISED M-26, REVISED M-6, M-8, M-9, M-10 & M-15, M-17, ADDED SHT 2, S-1 SHT 1 AND SHT 2, S-4, S-5, S-6	8/11	L. LOPEZ

ADOT STANDARD DRAWINGS
REVISION DATES and STANDARD NO.'S REVIEW

SIGNING & MARKING STANDARDS		DATE 9/26/12	
PROJECT NO.		18	OF
AS BUILT DATA	FEDERAL AID NO.	AS BUILT DATE	OF

ADOT STANDARD DRAWINGS

TRAFFIC SIGNAL AND LIGHTING STANDARDS
(SHEET 1 OF 2)
EFFECTIVE JANUARY 2012

AS-BUILT CERTIFICATION

I HEREBY CERTIFY THAT THE "RECORD DRAWING" MEASUREMENTS AS SHOWN HEREON WERE MADE UNDER MY SUPERVISION, OR AS NOTED, AND ARE CORRECT TO THE BEST OF MY KNOWLEDGE AND BELIEF.

SIGNATURE	REGISTRATION NO.	DATE
	41282	09/10/13

HUBBARD ENGINEERING
1840 S. STAPLEY DR. SUITE# 137
MESA, AZ 85204
ENGINEERING FIRM

REGISTERED LAND SURVEYOR — CERTIFICATE NO. 41282 — ADRIAN M. BURCHAM — ARIZONA U.S.A.

REVISION DATE	STANDARD NUMBER		SUBJECT: TRAFFIC SIGNALS AND LIGHTING DETAILS
	T.S. 0		ABBREVIATIONS, SYMBOLS AND DEFINITIONS
03/10	0-1		STANDARD ABBREVIATIONS
03/10	0-2	SHT 1	PLAN SYMBOLS
03/10	0-2	SHT 2	PLAN SYMBOLS
03/10	0-2	SHT 3	PLAN SYMBOLS
03/10	0-3	SHT 1	STANDARD DEFINITIONS
03/10	0-3	SHT 2	STANDARD DEFINITIONS
03/10	0-4		REFERENCE DOCUMENTS AND GENERAL REQUIREMENTS
	T.S. 1		PULL BOXES
09/11	1-1	SHT 1	LIGHT DUTY - LIGHT WEIGHT NO. 5 AND NO. 7 PULL BOX
09/11	1-1	SHT 2	LIGHT DUTY - LIGHT WEIGHT NO. 5 AND NO. 7 SLOPE WALL BODY PULL BOX DETAILS
09/11	1-2		HEAVY DUTY NO. 5 AND NO. 7 STRAIGHT BODY WALL PULL BOX DETAILS
09/11	1-3		REPLACEMENT LID SIZING FOR EXISTING NO. 5 AND NO. 7 PULL BOXES
09/11	1-4	SHT 1	TYPICAL PULL BOX INSTALLATION AND WIRING DETAILS
09/11	1-4	SHT 2	TYPICAL PULL BOX INSTALLATION AND WIRING DETAILS
09/11	1-4	SHT 3	TYPICAL PULL BOX INSTALLATION DETAILS
09/11	1-5	SHT 1	ELECTRICAL CONDUIT COVER AND TRENCH REQUIREMENTS
09/11	1-5	SHT 2	CONDUIT EXPANSION COUPLINGS
09/11	1-6		CONDUCTOR REQUIREMENTS
03/10	1-7		TRAFFIC SIGNAL IMSA CABLE COLOR CODES
09/11	1-8	SHT 1	FRONT OF BARRIER JUNCTION BOX
09/11	1-8	SHT 2	BACK OF BARRIER JUNCTION BOX
09/11	1-9		TOP OF BARRIER JUNCTION BOX DETAILS
09/11	1-10		TOP OF BARRIER JUNCTION BOX DETAILS
09/11	1-11	SHT 1	HEAVY DUTY LIGHTING NO. 4 AND NO. 6 PULL BOX
09/11	1-11	SHT 2	HEAVY DUTY LIGHTING NO. 4 AND NO. 6 PULL BOX
09/11	1-11	SHT 3	HEAVY DUTY LIGHTING NO. 4 AND NO. 6 PULL BOX LID
09/11	1-11	SHT 4	HEAVY DUTY LIGHTING NO. 4 AND NO. 6 PULL BOX LID
	T.S. 2		FOUNDATIONS
03/10	2-1		FOUNDATION FOR TYPE II LOAD CENTER CABINET
03/10	2-2		FOUNDATION FOR TYPE IV LOAD CENTER CABINET
03/10	2-3		FOUNDATION FOR TYPE III CONTROL CABINET
03/10	2-4		FOUNDATION FOR TYPE IV AND V CONTROL CABINETS
03/10	2-5		FOUNDATION FOR TYPE 340 CONTROL CABINET
03/10	2-6		METER PEDESTAL CABINET FOUNDATION AND BASE
03/10	2-7		TRAFFIC SIGNAL UPS CABINET FOUNDATION DETAIL
	T.S. 3		CABINETS
03/10	3-0		NOTES FOR TYPE II AND IV LOAD CENTER CABINETS
03/10	3-1		TYPE II LOAD CENTER CABINET
03/10	3-2		TYPE IV LOAD CENTER CABINET
03/10	3-3		TYPE II OR IV LOAD CENTER CABINET WIRING DETAILS 240/480 3W W/DISCONNECT
03/10	3-4	SHT 1	PHOTO ELECTRIC CELL MOUNTING DETAILS
03/10	3-4	SHT 2	PHOTO ELECTRIC CELL MOUNTING DETAILS
03/10	3-5	SHT 1	TYPE I AND II METER PEDESTAL CABINET
03/10	3-5	SHT 2	METER PEDESTAL CABINET
03/10	3-6		TYPE III CONTROL CABINET
03/10	3-7		POLE MOUNTED TYPE III CONTROL CABINET
03/10	3-8	SHT 1	POLE MOUNT DETAILS FOR TYPE III CONTROL CABINET
03/10	3-8	SHT 2	POLE MOUNT DETAILS FOR TYPE III CONTROL CABINET
03/10	3-9	SHT 1	TYPE IV AND V CONTROL CABINET NOTES
03/10	3-9	SHT 2	TYPE IV CONTROL CABINET
03/10	3-9	SHT 3	TYPE V CONTROL CABINET
03/10	3-10		CABINET EXTENSION OR ELEVATOR BASE
03/10	3-11		CONTROL CABINET MOUNTED SERVICE ENCLOSURE
03/10	3-12	SHT 1	120/240 OR 240/480 VOLT, SINGLE PHASE UTILITY PULL SECTION AND SERVICE DISCONNECT DETAILS
03/10	3-12	SHT 2	120/240 OR 240/480 VOLT, SINGLE PHASE UTILITY PULL SECTION AND SERVICE DISCONNECT DETAILS
03/10	3-13	SHT 1	TRAFFIC SIGNALS AND LIGHTING MODEL 345 CABINET DETAILS
03/10	3-13	SHT 2	TRAFFIC SIGNALS AND LIGHTING MODEL 345 CABINET DETAILS
03/10	3-13	SHT 3	TRAFFIC SIGNALS AND LIGHTING MODEL 345 CABINET CAGE DETAILS

REVISION DATE	STANDARD NUMBER		SUBJECT: TRAFFIC SIGNALS AND LIGHTING DETAILS
	T.S. 4		POLES AND POSTS
03/10	4-1		TYPE "A" POLE
03/10	4-2		TYPE "E" POLE
03/10	4-3		TYPE "F" POLE
03/10	4-4		TYPE "G" POLE
03/10	4-5		ALUMINUM TYPE "G" POLE
03/10	4-6		ALUMINUM TYPE "H" POLE
03/10	4-7		ALUMINUM TYPE "I" POLE
03/10	4-8		TYPE "J" POLE
03/10	4-9		TYPE "K" POLE
03/10	4-10		TYPE "Q" POLE
03/10	4-11		TYPE "R" POLE
03/10	4-12		TYPE "S" POLE
03/10	4-13		ALUMINUM TYPE "S" POLE
03/10	4-14	SHT 1	TYPE "T" POLE
03/10	4-14	SHT 2	TYPE "S" AND "T" STEEL TWIN LUMINAIRE MOUNTING BRACKET AND EXTENSIONS
03/10	4-15		ALUMINUM TYPE "T" POLE
03/10	4-16		TYPE "U" POLE ELLIPTICAL BASE DETAILS
03/10	4-17	SHT 1	TYPE "U" POLE SQUARE BASE
03/10	4-17	SHT 2	TYPE "U" POLE ROUND POLE / SQUARE BASE
03/10	4-17	SHT 3	TYPE "U" POLE ROUND POLE / SQUARE BASE
03/10	4-17	SHT 4	TYPE "U" POLE ROUND POLE / SQUARE BASE
03/10	4-17	SHT 5	TYPE "U" POLE ROUND POLE / SQUARE BASE
03/10	4-17	SHT 6	TYPE "U" POLE ROUND POLE / SQUARE BASE
03/10	4-18		TYPE "V" POLE AND 60' OR 65' MAST ARM
03/10	4-19		TYPE "W" POLE AND 60' OR 65' MAST ARM
03/10	4-20		POLE HAND HOLE DETAIL
03/10	4-21		EQUIPMENT MOUNTING HEIGHT DETAILS
03/10	4-22		PEDESTRIAN PUSH BUTTON POST "TYPE PB POLE"
03/10	4-23		POLE FOUNDATION ANCHOR BOLTS
03/10	4-24		ADDITIONAL POLE FOUNDATION DETAILS
03/10	4-25	SHT 1	ALTERNATIVE POLE FOUNDATION FOR LOOSE SOIL CONDITIONS
03/10	4-25	SHT 2	ALTERNATIVE STEEL PIPE POLE FOUNDATION FOR SUITABLE SOIL CONDITIONS
03/10	4-26		STEEL MAST ARM DETAILS LUMINAIRE AND SIGNAL ARMS TO 20'
03/10	4-27		ALUMINUM TRUSS ARM DETAILS TYPE G, H, AND I POLES
03/10	4-28		SIGNAL MAST ARM CONNECTION DETAIL TYPE J AND Q POLES
03/10	4-29		SIGNAL MAST ARM CONNECTION DETAIL TYPE K AND R POLES
03/10	4-30		MAST ARM CONNECTION DETAIL TYPE V AND W POLES
03/10	4-31		SIGNAL MAST ARM TENON DETAIL
03/10	4-32		TYPICAL HIGHWAY LIGHTING OFFSETS IN CUT AND FILL SECTIONS
	T.S. 5		POLE BASES - SPECIAL
03/10	5-0		TYPE 2 AND 3 CAST ALUMINUM BREAK-AWAY BASES
03/10	5-1		TYPE 2 CAST ALUMINUM BREAK-AWAY BASE
03/10	5-2		TYPE 3 CAST ALUMINUM BREAK-AWAY BASE
03/10	5-3		INSTALLATION DETAILS FOR POLE FOUNDATIONS WITH TYPE 2 AND 3 BREAK-AWAY BASES
	T.S. 6		HIGHWAY TRAFFIC DATA DETECTORS
03/10	6-1		TYPE C VEHICLE DETECTOR LOOPS FOR TRAFFIC COUNTERS
03/10	6-2	SHT 1	TYPE SA AND SB SPEED/VEHICLE CLASSIFICATION SYSTEMS
03/10	6-2	SHT 2	TYPE SA SPEED/VEHICLE CLASSIFICATION SYSTEMS
03/10	6-2	SHT 3	TYPE SB SPEED/VEHICLE CLASSIFICATION SYSTEMS
03/10	6-3		PIEZOELECTRIC WEIGHT SENSOR AND LOOP LANE LAYOUT
03/10	6-4	SHT 1	DETECTOR LOOPS AND PIEZOELECTRIC SENSOR DETAILS
03/10	6-4	SHT 2	DETECTOR LOOPS AND PIEZOELECTRIC SENSOR DETAILS
03/10	6-4	SHT 3	DETAIL A PIEZOELECTRIC SENSOR DETAILS
03/10	6-4	SHT 4	DETAIL B DETECTOR LOOP DETAILS
03/10	6-4	SHT 5	DETECTOR LOOPS AND PIEZOELECTRIC SENSOR DETAILS
03/10	6-5		MICROLOOPS FOR SPEED/VEHICLE CLASSIFICATION
03/10	6-6		QUARTZ PIEZOELECTRIC WEIGHT SENSOR AND LOOP LANE LAYOUT
03/10	6-7		TRAFFIC DATA COLLECTION CABINET INSTALLATION DETAILS
03/10	6-8		TYPE MPD CABINET POLE, BASE AND FOUNDATION INSTALLATION DETAILS

NO.	DESCRIPTION OF REVISION	MADE BY	DATE
1	REVISED 1-1, 1-2, 1-3, 1-4, 1-5, 1-6, 1-8, 1-10. ADDED 1-10 (4 SYSTS).	L. LOPEZ	9/11
2	REVISED STANDARDS ON SHEET 2.	C. COLE	1/12

ADOT STANDARD DRAWINGS
REVISION DATES AND STANDARD NOTES REVIEW

TRAFFIC SIGNAL & LIGHTING STANDARDS	NAME	DATE 9/21/12
PROJECT NO.		IC-1 OF
AS BUILT DATA	FEDERAL AID NO. / AS BUILT DATE	OF

ADOT STANDARD DRAWINGS

TRAFFIC SIGNAL AND LIGHTING STANDARDS
(SHEET 2 OF 2)
EFFECTIVE JANUARY 2012

REVISION DATE	STANDARD NUMBER	SUBJECT: TRAFFIC SIGNALS AND LIGHTING DETAILS
	T.S. 7	**TRAFFIC SIGNAL DETECTORS**
03/10	7-1 SHT 1	LOOP DETECTOR LOCATION SAWCUT PATTERNS AND INSTALLATION DETAILS
03/10	7-1 SHT 2	SAW CUT AND CORING DETAILS
03/10	7-1 SHT 3	SAW CUT AND CORING DETAILS
03/10	7-1 SHT 4	TYPICAL DETECTOR LOOP LEAD-IN ROAD TO PULL BOX DETAIL
03/10	7-1 SHT 5	LOOP DETECTOR LOCATION AND INSTALLATION DETAILS
03/10	7-2	PRE-FORMED LOOP DETECTORS FOR RAMP METERING AND COUNTING
03/10	7-3	PRE-FORMED LOOP DETECTORS IN BRIDGE DECK
03/10	7-4	PRE-FORMED LOOP DETECTORS IN PCCP
03/10	7-5	TYPICAL PRE-FORMED LOOP DETECTOR STUB-OUT DETAIL
	T.S. 8	**SIGNAL ASSEMBLIES**
01/12	8-0	TRAFFIC SIGNAL REQUIREMENTS AND DETAILS
01/12	8-1	VEHICLE TRAFFIC SIGNAL FACE ASSEMBLY
01/12	8-2	VEHICLE TRAFFIC SIGNAL FACE ASSEMBLY
01/12	8-3	VEHICLE TRAFFIC SIGNAL FACE ASSEMBLY
03/10	8-4 SHT 1	12-INCH VEHICLE TRAFFIC SIGNAL HOUSING/SECTION
01/12	8-4 SHT 2	12-INCH VEHICLE TRAFFIC SIGNAL HOUSING/SECTION NOTES
01/12	8-4 SHT 3	VEHICLE TRAFFIC SIGNAL HOUSING/SECTION DETAILS
03/10	8-4 SHT 4	VISORS FOR 8-INCH AND 12-INCH VEHICLE TRAFFIC SIGNAL FACE ASSEMBLY'S
01/12	8-5	FLASHING BEACON SIGNAL FACE ASSEMBLY
01/12	8-6 SHT 1	LED LAMP FOR PROGRAMMED VISIBILITY SIGNAL
01/12	8-6 SHT 2	PEDESTRIAN SIGNAL ASSEMBLY REQUIREMENTS AND DETAILS
01/12	8-6 SHT 3	PEDESTRIAN SIGNAL ASSEMBLY HOUSING
	T.S. 9	**MOUNTING ASSEMBLIES - SIGNAL**
03/10	9-0 SHT 1	MOUNTING ASSEMBLY GENERAL REQUIREMENTS
03/10	9-0 SHT 2	MOUNTING ASSEMBLY GENERAL REQUIREMENTS
03/10	9-1	TYPE I AND II MOUNTING ASSEMBLIES
03/10	9-2	TYPE III AND IV MOUNTING ASSEMBLIES
03/10	9-3	TYPE V MOUNTING ASSEMBLY
03/10	9-4	TYPE VI MOUNTING ASSEMBLY
03/10	9-5	TYPE VII MOUNTING ASSEMBLY
03/10	9-6	TYPE VIII MOUNTING ASSEMBLY
03/10	9-7	TYPE IX MOUNTING ASSEMBLY
03/10	9-8	TYPE X MOUNTING ASSEMBLY
03/10	9-9	TYPE XI MOUNTING ASSEMBLY
	T.S. 10	**MOUNTING CASTINGS - SIGNAL**
03/10	10-1	MISCELLANEOUS SIGNAL MOUNTING PARTS
03/10	10-2	MAST ARM SIGNAL MOUNTING PLUMBIZER
03/10	10-3	SIGNAL MOUNTING POLE PLATE DETAILS
03/10	10-4	TERMINAL COMPARTMENT, SIDE MOUNTED AND POLE TOP MOUNTED
	T.S. 11	**PEDESTRIAN DETAILS**
03/10	11-1	TYPE I PEDESTRIAN PUSH BUTTON HOUSING ASSEMBLY
03/10	11-2	CAN STYLE PEDESTRIAN PUSH BUTTON
	T.S. 12	**FLASHERS**
03/10	12-1 SHT 1	ADVANCE WARNING FLASHER POLE DETAIL
03/10	12-1 SHT 2	ADVANCE WARNING FLASHER POLE SIGN MOUNTING DETAILS
03/10	12-1 SHT 3	ADVANCE WARNING FLASHER POLE DETAIL
	T.S. 13	**ILLUMINATION - SIGNS**
03/10	13-1	SIGN LIGHTING DETAIL FOR TUBULAR SIGN STRUCTURES
03/10	13-2	FUSE PANEL DETAILS FOR SIGN LIGHTING
03/10	13-3	PLACEMENT OF LIGHTING FIXTURES FOR OVERHEAD SIGNS
	T.S. 14	**ILLUMINATION - SPECIAL**
03/10	14-1 SHT 1	HIGH PRESSURE SODIUM (HPS) LAMPS
03/10	14-1 SHT 2	HIGH PRESSURE SODIUM (HPS) LAMPS
03/10	14-1 SHT 3	HIGH PRESSURE SODIUM (HPS) LAMPS
03/10	14-2	PEDESTRIAN BRIDGE LIGHTING DETAILS

REVISION DATE	STANDARD NUMBER	SUBJECT: SPAN WIRE SIGNALS AND LIGHTING DETAILS
	T.S. 15	**SERVICE**
01/12	15-0 SHT 1	GENERAL NOTES
01/12	15-0 SHT 2	GENERAL NOTES
01/12	15-0 SHT 3	GENERAL NOTES
01/12	15-1 SHT 1	STEEL POLE TYPICAL DETAILS
01/12	15-1 SHT 2	STEEL POLE FOUNDATION DETAILS
01/12	15-1 SHT 3	STEEL POLE ATTACHMENT DETAILS
01/12	15-1 SHT 4	WOOD POLE TYPICAL DETAILS
01/12	15-1 SHT 5	WOOD POLE TYPICAL DETAILS
01/12	15-1 SHT 6	TYPICAL DETAILS
01/12	15-2	HANGER AND BALANCE ADJUSTER TYPICAL DETAILS
01/12	15-3 SHT 1	SIGNAL ASSEMBLY DETAILS
01/12	15-3 SHT 2	CONDUCTOR ENTRANCE HEADS TYPE A, B AND C
01/12	15-3 SHT 3	ALUMINUM PIPE EXTENSION AND TYPICAL DETAILS
01/12	15-4 SHT 1	ADJUSTABLE SIGN HANGER TYPICAL DETAILS
01/12	15-4 SHT 2	ADJUSTABLE SIGN HANGER TYPICAL DETAILS
01/12	15-4 SHT 3	ADJUSTABLE SIGN HANGER TYPICAL DETAILS
01/12	15-5	ADJUSTABLE HANGER TOP AND EXTENSION DETAILS
01/12	15-6	SIGNAL TETHER CLAMP TYPICAL DETAILS
01/12	15-7	POLE BAND TYPICAL DETAILS
01/12	15-8	WEATHERHEAD TYPICAL DETAILS

AS-BUILT CERTIFICATION

I HEREBY CERTIFY THAT THE "RECORD DRAWING" MEASUREMENTS AS SHOWN HEREON WERE MADE UNDER MY SUPERVISION, OR AS NOTED, AND ARE CORRECT TO THE BEST OF MY KNOWLEDGE AND BELIEF.

SIGNATURE	REGISTRATION NO.	DATE
	41282	09/10/13

HUBBARD ENGINEERING
1840 S. STAPLEY DR. SUITE# 137
MESA, AZ 85204
ENGINEERING FIRM

REGISTERED LAND SURVEYOR 41282 ADRIAN M. BURCHAM ARIZONA U.S.A. 09-10-13

ADOT STANDARD DRAWINGS REVISION DATES AND STANDARD NO.'s REVIEW			
TRAFFIC SIGNAL AND LIGHTING STANDARDS	NAME		DATE 9/21/12
PROJECT NO.		IC-2	OF
AS BUILT DATA	FEDERAL AID NO.	AS BUILT DATE	OF

NO.	DESCRIPTION OF REVISION	MADE BY	DATE
	REVISED STANDARDS ON SHEET 1.	L. LOPEZ	9/11
	REVISED SERIES 8 AND 15.	C. COLE	1/12

F.H.W.A. REGION	STATE	PROJECT NO.	SHEET NO.	TOTAL SHEETS	AS BUILT
9	ARIZ.		1D		

ADOT STANDARD DRAWINGS

STRUCTURE DETAIL DRAWINGS

REVISION DATE	SD NUMBER	SUBJECT
RAILINGS		
6/12	SD 1.01	F-SHAPE BRIDGE CONCRETE BARRIER AND TRANSITION (34")
6/12	SD 1.02	F-SHAPE BRIDGE CONCRETE BARRIER AND TRANSITION (44")
6/12	SD 1.03	THRIE BEAM GUARD RAIL TRANSITION SYSTEM
3/09	SD 1.04	COMBINATION PEDESTRIAN-TRAFFIC BRIDGE RAILING
3/09	SD 1.05	PEDESTRIAN FENCE FOR BRIDGE RAILING SD1.04
6/09	SD 1.06 (1 OF 4)	TWO TUBE BRIDGE RAIL
6/09	SD 1.06 (2 OF 4)	TWO TUBE BRIDGE RAIL
6/09	SD 1.06 (3 OF 4)	TWO TUBE BRIDGE RAIL
6/09	SD 1.06 (4 OF 4)	TWO TUBE BRIDGE RAIL
4/10	SD 1.11	BARRIER JUNCTION BOX
APPROACHES		
12/07	SD 2.01	APPROACH SLAB DETAILS
12/07	SD 2.02	TYPE 1 ANCHOR SLAB DETAILS
12/07	SD 2.03	TYPE 2 ANCHOR SLAB DETAILS
9/09	SD 2.04	SLOPE PAVING DETAILS
DECK JOINTS		
6/09	SD 3.01	DECK JOINT ASSEMBLY - COMPRESSION SEAL
12/09	SD 3.02	DECK JOINT ASSEMBLY - STRIP SEAL
12/09	SD 3.03	DECK JOINT ASSEMBLY - RAISED STRIP SEAL
DRAINAGE STRUCTURES		
2/12	SD 6.01 (1 OF 5)	REINFORCED CONCRETE BOX CULVERTS - MISCELLANEOUS DETAILS
2/12	SD 6.01 (2 OF 5)	REINFORCED CONCRETE BOX CULVERTS - MISCELLANEOUS DETAILS
2/12	SD 6.01 (3 OF 5)	REINFORCED CONCRETE BOX CULVERTS - EXTENSION DETAILS
2/12	SD 6.01 (4 OF 5)	REINFORCED CONCRETE BOX CULVERTS - STRUCTURAL EXCAVATION & STRUCTURE BACKFILL
2/12	SD 6.01 (5 OF 5)	REINFORCED CONCRETE BOX CULVERTS - SINGLE BARREL (0'-30' FILLS)
2/12	SD 6.02 (1 OF 2)	REINFORCED CONCRETE BOX CULVERTS - DOUBLE BARREL (0'-15' FILLS)
2/12	SD 6.02 (2 OF 2)	REINFORCED CONCRETE BOX CULVERTS - DOUBLE BARREL (15'-30' FILLS)
2/12	SD 6.03 (1 OF 2)	REINFORCED CONCRETE BOX CULVERTS - TRIPLE BARREL (0'-15' FILLS)
2/12	SD 6.03 (2 OF 2)	REINFORCED CONCRETE BOX CULVERTS - TRIPLE BARREL (15'-30' FILLS)
2/12	SD 6.04 (1 OF 2)	REINFORCED CONCRETE BOX CULVERTS - FOUR BARREL (0'-15' FILLS)
2/12	SD 6.04 (2 OF 2)	REINFORCED CONCRETE BOX CULVERTS - FOUR BARREL (15'-30' FILLS)
2/12	SD 6.05 (1 OF 2)	REINFORCED CONCRETE BOX CULVERTS - FIVE BARREL (0'-15' FILLS)
2/12	SD 6.05 (2 OF 2)	REINFORCED CONCRETE BOX CULVERTS - FIVE BARREL (15'-30' FILLS)
2/12	SD 6.06 (1 OF 2)	REINFORCED CONCRETE BOX CULVERTS - SIX BARREL (0'-15' FILLS)
2/12	SD 6.06 (2 OF 2)	REINFORCED CONCRETE BOX CULVERTS - SIX BARREL (15'-30' FILLS)
2/12	SD 6.07	REINFORCED CONCRETE BOX CULVERTS - 16'x 14' EQUIPMENT PASS (0'-20' FILLS)
2/12	SD 6.08 (1 OF 8)	REINFORCED CONCRETE BOX CULVERTS - OUTLET WINGS - SKEW 0° to 20° - CULVERT HEIGHT 5' to 7'
2/12	SD 6.08 (2 OF 8)	REINFORCED CONCRETE BOX CULVERTS - OUTLET WINGS - SKEW 0° to 20° - CULVERT HEIGHT 8' to 12'
2/12	SD 6.08 (3 OF 8)	REINFORCED CONCRETE BOX CULVERTS - INLET WINGS - SKEW 0° to 20° - CULVERT HEIGHT 5' to 7'
2/12	SD 6.08 (4 OF 8)	REINFORCED CONCRETE BOX CULVERTS - INLET WINGS - SKEW 0° to 20° - CULVERT HEIGHT 8' to 12'
2/12	SD 6.08 (5 OF 8)	REINFORCED CONCRETE BOX CULVERTS - OUTLET WINGS - SKEW 25° to 45° - CULVERT HEIGHT 5' to 7'
2/12	SD 6.08 (6 OF 8)	REINFORCED CONCRETE BOX CULVERTS - OUTLET WINGS - SKEW 25° to 45° - CULVERT HEIGHT 8' to 12'
2/12	SD 6.08 (7 OF 8)	REINFORCED CONCRETE BOX CULVERTS - INLET WINGS - SKEW 25° to 45° - CULVERT HEIGHT 5' to 7'
2/12	SD 6.08 (8 OF 8)	REINFORCED CONCRETE BOX CULVERTS - INLET WINGS - SKEW 25° to 45° - CULVERT HEIGHT 8' to 12'
2/12	SD 6.09 (1 OF 3)	REINFORCED CONCRETE BOX CULVERTS - HEADWALL QUANTITIES - 2 :1 SLOPE
2/12	SD 6.09 (2 OF 3)	REINFORCED CONCRETE BOX CULVERTS - HEADWALL QUANTITIES - 4 :1 SLOPE
2/12	SD 6.09 (3 OF 3)	REINFORCED CONCRETE BOX CULVERTS - HEADWALL QUANTITIES - 6 :1 SLOPE
2/12	SD 6.10 (1 OF 2)	REINFORCED CONCRETE BOX CULVERTS - INLET OR OUTLET - LEVEL WINGS - CULVERT HEIGHT 5' to 7'
2/12	SD 6.10 (2 OF 2)	REINFORCED CONCRETE BOX CULVERTS - INLET OR OUTLET - LEVEL WINGS - CULVERT HEIGHT 8' to 12'
2/12	SD 6.11 (1 OF 4)	REINFORCED CONCRETE BOX CULVERTS - OUTLET APRON DETAILS
2/12	SD 6.11 (2 OF 4)	REINFORCED CONCRETE BOX CULVERTS - OUTLET APRON - DIMENSIONS & QUANTITIES (2 :1 SLOPE)
2/12	SD 6.11 (3 OF 4)	REINFORCED CONCRETE BOX CULVERTS - OUTLET APRON - DIMENSIONS & QUANTITIES (4 :1 SLOPE)
2/12	SD 6.11 (4 OF 4)	REINFORCED CONCRETE BOX CULVERTS - OUTLET APRON - DIMENSIONS & QUANTITIES (6 :1 SLOPE)
7/12	SD 6.30 (1 OF 5)	PIPE CULVERT HEADWALLS - MISCELLANEOUS DETAILS
7/12	SD 6.30 (2 OF 5)	PIPE CULVERT HEADWALLS - INLET AND OUTLET - 18" to 42" PIPES
7/12	SD 6.30 (3 OF 5)	PIPE CULVERT HEADWALLS - RIGHT ANGLE INLET AND OUTLET - 48" to 84" PIPES
7/12	SD 6.30 (4 OF 5)	PIPE CULVERT HEADWALLS - SKEWED INLET AND OUTLET - 48" to 84" PIPES
7/12	SD 6.30 (5 OF 5)	PIPE CULVERT HEADWALLS - MULTI-PIPE - 48" to 84" PIPES
7/12	SD 6.31 (1 OF 8)	PIPE CULVERT HEADWALLS - RIGHT ANGLE INLET
7/12	SD 6.31 (2 OF 8)	PIPE CULVERT HEADWALLS - RIGHT ANGLE INLET - 2 :1 SLOPE
7/12	SD 6.31 (3 OF 8)	PIPE CULVERT HEADWALLS - RIGHT ANGLE INLET - 4 :1 SLOPE
7/12	SD 6.31 (4 OF 8)	PIPE CULVERT HEADWALLS - RIGHT ANGLE INLET - 6 :1 SLOPE
7/12	SD 6.31 (5 OF 8)	PIPE CULVERT HEADWALLS - RIGHT ANGLE OUTLET
7/12	SD 6.31 (6 OF 8)	PIPE CULVERT HEADWALLS - RIGHT ANGLE OUTLET - 2 :1 SLOPE
7/12	SD 6.31 (7 OF 8)	PIPE CULVERT HEADWALLS - RIGHT ANGLE OUTLET - 4 :1 SLOPE
7/12	SD 6.31 (8 OF 8)	PIPE CULVERT HEADWALLS - RIGHT ANGLE OUTLET - 6 :1 SLOPE

STRUCTURE DETAIL DRAWINGS

REVISION DATE	SD NUMBER	SUBJECT
DRAINAGE STRUCTURES (Continued)		
7/12	SD 6.32 (1 OF 8)	PIPE CULVERT HEADWALLS - 15° SKEW INLET
7/12	SD 6.32 (2 OF 8)	PIPE CULVERT HEADWALLS - 15° SKEW INLET - 2 :1 SLOPE
7/12	SD 6.32 (3 OF 8)	PIPE CULVERT HEADWALLS - 15° SKEW INLET - 4 :1 SLOPE
7/12	SD 6.32 (4 OF 8)	PIPE CULVERT HEADWALLS - 15° SKEW INLET - 6 :1 SLOPE
7/12	SD 6.32 (5 OF 8)	PIPE CULVERT HEADWALLS - 15° SKEW OUTLET
7/12	SD 6.32 (6 OF 8)	PIPE CULVERT HEADWALLS - 15° SKEW OUTLET - 2 :1 SLOPE
7/12	SD 6.32 (7 OF 8)	PIPE CULVERT HEADWALLS - 15° SKEW OUTLET - 4 :1 SLOPE
7/12	SD 6.32 (8 OF 8)	PIPE CULVERT HEADWALLS - 15° SKEW OUTLET - 6 :1 SLOPE
7/12	SD 6.33 (1 OF 8)	PIPE CULVERT HEADWALLS - 30° SKEW INLET
7/12	SD 6.33 (2 OF 8)	PIPE CULVERT HEADWALLS - 30° SKEW INLET - 2 :1 SLOPE
7/12	SD 6.33 (3 OF 8)	PIPE CULVERT HEADWALLS - 30° SKEW INLET - 4 :1 SLOPE
7/12	SD 6.33 (4 OF 8)	PIPE CULVERT HEADWALLS - 30° SKEW INLET - 6 :1 SLOPE
7/12	SD 6.33 (5 OF 8)	PIPE CULVERT HEADWALLS - 30° SKEW OUTLET
7/12	SD 6.33 (6 OF 8)	PIPE CULVERT HEADWALLS - 30° SKEW OUTLET - 2 :1 SLOPE
7/12	SD 6.33 (7 OF 8)	PIPE CULVERT HEADWALLS - 30° SKEW OUTLET - 4 :1 SLOPE
7/12	SD 6.33 (8 OF 8)	PIPE CULVERT HEADWALLS - 30° SKEW OUTLET - 6 :1 SLOPE
7/12	SD 6.34 (1 OF 8)	PIPE CULVERT HEADWALLS - 45° SKEW INLET
7/12	SD 6.34 (2 OF 8)	PIPE CULVERT HEADWALLS - 45° SKEW INLET - 2 :1 SLOPE
7/12	SD 6.34 (3 OF 8)	PIPE CULVERT HEADWALLS - 45° SKEW INLET - 4 :1 SLOPE
7/12	SD 6.34 (4 OF 8)	PIPE CULVERT HEADWALLS - 45° SKEW INLET - 6 :1 SLOPE
7/12	SD 6.34 (5 OF 8)	PIPE CULVERT HEADWALLS - 45° SKEW OUTLET
7/12	SD 6.34 (6 OF 8)	PIPE CULVERT HEADWALLS - 45° SKEW OUTLET - 2 :1 SLOPE
7/12	SD 6.34 (7 OF 8)	PIPE CULVERT HEADWALLS - 45° SKEW OUTLET - 4 :1 SLOPE
7/12	SD 6.34 (8 OF 8)	PIPE CULVERT HEADWALLS - 45° SKEW OUTLET - 6 :1 SLOPE
7/12	SD 6.35 (1 OF 2)	PIPE CULVERT HEADWALLS - MULTI-PIPE WITHOUT APRON
7/12	SD 6.35 (2 OF 2)	PIPE CULVERT HEADWALLS - MULTI-PIPE WITH OUTLET APRON
7/12	SD 6.36 (1 OF 4)	PIPE CULVERT HEADWALLS - OUTLET APRONS
7/12	SD 6.36 (2 OF 4)	PIPE CULVERT HEADWALLS - OUTLET APRON STEEL LIST - 2 :1 SLOPE
7/12	SD 6.36 (3 OF 4)	PIPE CULVERT HEADWALLS - OUTLET APRON STEEL LIST - 4 :1 SLOPE
7/12	SD 6.36 (4 OF 4)	PIPE CULVERT HEADWALLS - OUTLET APRON STEEL LIST - 6 :1 SLOPE
RETAINING WALLS		
9/10	SD 7.01 (1 OF 5)	RETAINING WALL (REINFORCED CONCRETE CANTILEVER)
9/10	SD 7.01 (2 OF 5)	RETAINING WALL (REINFORCED CONCRETE CANTILEVER)
9/10	SD 7.01 (3 OF 5)	RETAINING WALL (REINFORCED CONCRETE CANTILEVER)
9/10	SD 7.01 (4 OF 5)	RETAINING WALL (REINFORCED CONCRETE CANTILEVER)
9/10	SD 7.01 (5 OF 5)	RETAINING WALL (REINFORCED CONCRETE CANTILEVER)
9/10	SD 7.02 (1 OF 2)	RETAINING WALL (MASONRY CANTILEVER)
9/10	SD 7.02 (2 OF 2)	RETAINING WALL (MASONRY CANTILEVER)
SOUND BARRIER WALLS		
4/10	SD 8.01	SOUND BARRIER WALL (CONCRETE)
4/10	SD 8.02 (1 OF 2)	SOUND BARRIER WALL (MASONRY)
4/10	SD 8.02 (2 OF 2)	SOUND BARRIER WALL (MASONRY)
TRAFFIC STRUCTURES		
11/04	SD 9.01 (1 OF 5)	MEDIAN SIGN STRUCTURE (TWO SIDED) - ELEVATION & NOTES
4/00	SD 9.01 (2 OF 5)	MEDIAN SIGN STRUCTURE (TWO SIDED) - FOUNDATION DETAILS
4/00	SD 9.01 (3 OF 5)	MEDIAN SIGN STRUCTURE (TWO SIDED) - TYPE A SIGN MOUNT ASSEMBLY
4/00	SD 9.01 (4 OF 5)	MEDIAN SIGN STRUCTURE (TWO SIDED) - TYPE B SIGN MOUNT ASSEMBLY
4/00	SD 9.01 (5 OF 5)	MEDIAN SIGN STRUCTURE (TWO SIDED) - LIGHT SUPPORT AND MISC. DETAILS
11/04	SD 9.02 (1 OF 5)	MEDIAN SIGN STRUCTURE (ONE SIDED) - ELEVATION & NOTES
5/00	SD 9.02 (2 OF 5)	MEDIAN SIGN STRUCTURE (ONE SIDED) - FOUNDATION DETAILS
5/00	SD 9.02 (3 OF 5)	MEDIAN SIGN STRUCTURE (ONE SIDED) - TYPE A SIGN MOUNT ASSEMBLY
5/00	SD 9.02 (4 OF 5)	MEDIAN SIGN STRUCTURE (ONE SIDED) - TYPE B SIGN MOUNT ASSEMBLY
5/00	SD 9.02 (5 OF 5)	MEDIAN SIGN STRUCTURE (ONE SIDED) - LIGHT SUPPORT AND MISC. DETAILS
3/11	SD 9.10 (1 OF 5)	TUBULAR SIGN STRUCTURES - TUBULAR CANTILEVER - GENERAL PLAN
3/11	SD 9.10 (2 OF 5)	TUBULAR SIGN STRUCTURES - TUBULAR CANTILEVER - FOUNDATION DETAILS
3/11	SD 9.10 (3 OF 5)	TUBULAR SIGN STRUCTURES - TUBULAR CANTILEVER - POST AND MAST ARM DETAILS
3/11	SD 9.10 (4 OF 5)	TUBULAR SIGN STRUCTURES - TUBULAR CANTILEVER - SIGN SUPPORT DETAILS
3/11	SD 9.10 (5 OF 5)	TUBULAR SIGN STRUCTURES - TUBULAR CANTILEVER - LIGHT SUPPORT DETAILS
3/11	SD 9.20 (1 OF 5)	TUBULAR SIGN STRUCTURES - TUBULAR FRAME - GENERAL PLAN
3/11	SD 9.20 (2 OF 5)	TUBULAR SIGN STRUCTURES - TUBULAR FRAME - FOUNDATION DETAILS
3/11	SD 9.20 (3 OF 5)	TUBULAR SIGN STRUCTURES - TUBULAR FRAME - POST AND MAST ARM DETAILS
3/11	SD 9.20 (4 OF 5)	TUBULAR SIGN STRUCTURES - TUBULAR FRAME - SIGN SUPPORT DETAILS
3/11	SD 9.20 (5 OF 5)	TUBULAR SIGN STRUCTURES - TUBULAR FRAME - LIGHT SUPPORT AND MISC. DETAILS
8/02	SD 9.50 (1 OF 5)	VARIABLE MESSAGE SIGN - TUBULAR FRAME - PLAN & ELEVATION
8/02	SD 9.50 (2 OF 5)	VARIABLE MESSAGE SIGN - TUBULAR FRAME - MOUNTING DETAILS
8/02	SD 9.50 (3 OF 5)	VARIABLE MESSAGE SIGN - TUBULAR FRAME - MOUNTING & SIGN BRACKET DETAILS
7/00	SD 9.50 (4 OF 5)	VARIABLE MESSAGE SIGN - CATWALK - HANDRAIL DETAILS
7/00	SD 9.50 (5 OF 5)	VARIABLE MESSAGE SIGN - CATWALK - MISCELLANEOUS DETAILS
8/02	SD 9.51	DUAL VARIABLE MESSAGE SIGN - TUBULAR FRAME
5/07	SD 9.52 (1 of 5)	DYNAMIC MESSAGE SIGN - TUBULAR FRAME - PLAN & ELEVATION
5/07	SD 9.52 (2 of 5)	DYNAMIC MESSAGE SIGN - TUBULAR FRAME - MOUNTING DETAILS
5/07	SD 9.52 (3 of 5)	DYNAMIC MESSAGE SIGN - TUBULAR FRAME - MOUNTING DETAILS
5/07	SD 9.52 (4 of 5)	DYNAMIC MESSAGE SIGN - CATWALK - HANDRAIL DETAILS
5/07	SD 9.52 (5 of 5)	DYNAMIC MESSAGE SIGN - CATWALK - MISCELLANEOUS DETAILS

AS-BUILT CERTIFICATION

I HEREBY CERTIFY THAT THE "RECORD DRAWING" MEASUREMENTS AS SHOWN HEREON WERE MADE UNDER MY SUPERVISION, OR AS NOTED, AND ARE CORRECT TO THE BEST OF MY KNOWLEDGE AND BELIEF.

SIGNATURE | 41282 REGISTRATION NO. | 09/10/13 DATE

HUBBARD ENGINEERING
1840 S. STAPLEY DR. SUITE# 137
MESA, AZ 85204
ENGINEERING FIRM

REGISTERED PROFESSIONAL ENGINEER (CIVIL) 41282 ADRIAN M. BURCHAM Date Signed 09-10-13 ARIZONA U.S.A.

REV.: 7 / 12

9/21/2012 J:\2012\111204 Macarich NBCC\CAD\USTN\hl204_1d.dgn

TRACS NO.

ADOT STANDARD DRAWINGS REVISION DATES and STANDARD NO.'s REVIEW		
STRUCTURES Standards	NAME	DATE 9/12/12

OF

MIDPOINT OF PROJECT

Central Zone
State Plane Coordinates

X=634,150
Y=1,015,460

DESIGN DATA

2030 ADT NB Frontage Rd = 6,500
2040 ADT Long Shadow Trail = 3,720

Min Design Speed
NB Frontage Road = 50 mph
Long Shadow Trail = 35 mph

LENGTH OF PROJECT

NB Frontage Road
Sta 116+01.30 to 159+33.07 = 4,331.77'
Gross & Net Length = 4,331.77' = 0.82 Miles

I-17 Mile Post 222.80 to 223.73

EARTHWORK QUANTITIES

Excavations	
◧ Roadway Excavation	3,268 CY
Shrink	233 CY
◧ Over-ex & Recompact	5,966 CY
Shrink	CY
◧ Channel Excavation	6,483 CY
Shrink	648 CY
◧ Structural Excavation	1,298 CY
Shrink	130 CY
Pipe Excavation	2,055 CY
Shrink	205 CY
Available for Embankments	11,906 CY
Embankments	
Embankment (Including Ground Compaction)	8,987 CY
Embankment (Over-ex Shrink)	597 CY
◧ Structural Backfill	633 CY
Pipe Backfill	696 CY
Total Embankments	10,726 CY
Waste	1180 CY

◧ Indicates Pay Item

Note:
See Dwg. No's G-1.02 and G-1.03 and Special Provision Section 203 for overexcavation requirements.

SOIL VALUES

Station	pH	Resistivity (ohm-cm)
110+05	7.5	821
159+15	7.7	1163

EARTHWORK FACTORS

Station	Shrink/Swell	Ground Compaction
116+01 to 159+33	10% Shrink*	0.20'*

Note:
* Values based on Final Pavement Design & Materials Design Report by Ninyo and Moore, 6/7/2012.

GENERAL NOTES

This Project has been designed using the following Arizona Department of Transportation Standard Specifications and Standard Drawings:

2008 Standard Specifications for Road and Bridge Construction, and current revisions to the same as shown in the Special Provisions.

2012 Construction Standard Drawings, and current revisions to same.

A Policy on Geometric Design of Highways and Streets (AASHTO) 2011 Edition.

ADOT Roadway Design Section, Roadway Design Guidelines, 2012 Edition.

The project roadway shall be striped by the contractor in accordance with the current edition of the Signing and Marking Standard Drawings (M&S Series) and striping plans, Federal Highways Administration's Manual on Uniform Traffic Control Devices - 2009 and Arizona Supplements.

The contractor shall remove all structures and obstructions within the project Right-of-Way unless otherwise specified.

The average project elevation is 1650'.

Bench markers will be furnished by the State and shall be placed by the contractor: Std C-21.20.

All tapers, radii and dimensions are to front face of curb unless otherwise noted.

Where only the horizontal location of an existing utility is shown, the location is approximate. Where both the horizontal and vertical location of an existing utility is shown, the location has been verified by field survey methods. The contractor shall comply with all current Blue Stake laws and Section 107.15 of the Specifications.

For R/W information not shown, see Right-of-Way Project No. I 017-A-702 TRACS No. 017 MA 215 H5162 01R.

Delineators, object markers and mile post markers shall be removed and reset as required.

Slope rounding shall be applied per Std C-02 series unless otherwise noted.

Pavement lift thickness is nominal.

This project includes signing and striping beyond project limits.

AS-BUILT CERTIFICATION

I HEREBY CERTIFY THAT THE "RECORD DRAWING" MEASUREMENTS AS SHOWN HEREON WERE MADE UNDER MY SUPERVISION, OR AS NOTED, AND ARE CORRECT TO THE BEST OF MY KNOWLEDGE AND BELIEF.

SIGNATURE	REGISTRATION NO.	DATE
	41282	09/10/13

HUBBARD ENGINEERING
1840 S. STAPLEY DR. SUITE# 137
MESA, AZ 85204
ENGINEERING FIRM

REGISTERED LAND SURVEYOR
CERTIFICATE NO.
41282
ADRIAN M. BURCHAM
Date Signed 9/10/13
ARIZONA U.S.A.

	NAME	DATE
DESIGN	P. Balch	9/12
DRAWN	C. Fowler	9/12
CHECKED	R. Hansman	9/12

MACERICH®

Dibble Engineering
7500 N. Dreamy Draw Drive
Suite 200
Phoenix, AZ 85020
P 602.957.1155

DESIGN DATA SHEET

REGISTERED PROFESSIONAL ENGINEER
(CIVIL)
12257
ROBERT J. HANSMAN JR.
Date Signed 9/10/12
ARIZONA U.S.A.

ROUTE: I-17

PROJECT NAME: I-17 NORTHBOUND FRONTAGE ROAD
SONORAN BOULEVARD TO SR 74

DWG No. G-1.01

___ OF ___

To Accompany Change Order No.

SHEET NO.	TOTAL SHEETS	AS BUILT
3	68	

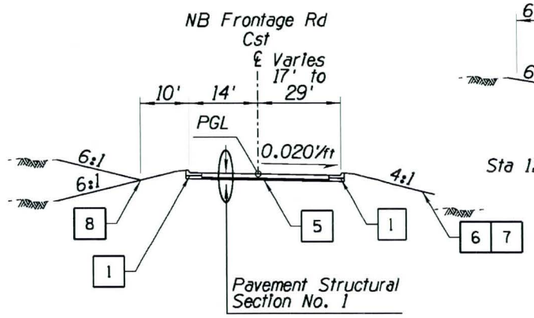

TYPICAL SECTION
NB Frontage Road
Sta 116+01.30 to 124+07.05
Sta 135+98.04 to 154+37.88

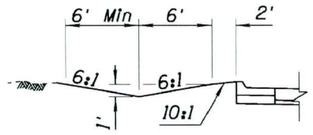

Sta 127+50.00 to 131+44.00

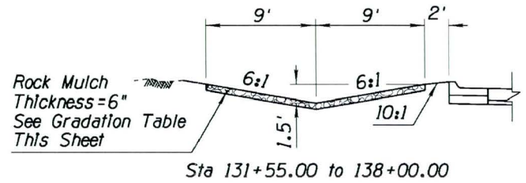

Sta 131+55.00 to 138+00.00

ROADSIDE DITCHES
NB Frontage Road
Sta 127+50.00 to 138+00.00

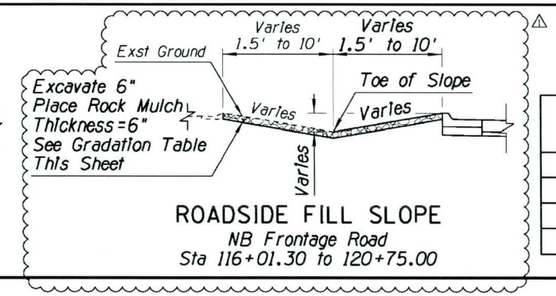

ROADSIDE FILL SLOPE
NB Frontage Road
Sta 116+01.30 to 120+75.00

DESIGN GRADATIONS FOR ROCK MULCH	
% PASSING	SIEVE SIZE
100	2 Inch
50-75	1 Inch
10-20	0.5 Inch

1. See Edge Treatment Details, View A This Sheet
2. See Edge Treatment Details, View B This Sheet
3. See Channel Plans
4. Maintenance Road, See Detail A
5. See Overexcavation Limits This Sheet
6. Sta 122+75.00 to 124+80.00, See Detail L
7. Sta 135+64.00 to 136+43.00, See Detail M
8. Sta 127+50.00 to 138+00.00, See Roadside Ditch Detail This Sheet

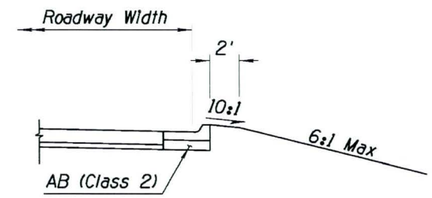

VIEW A
LOW OR HIGH SIDE
TYPE D-1 OR D-3 CURB

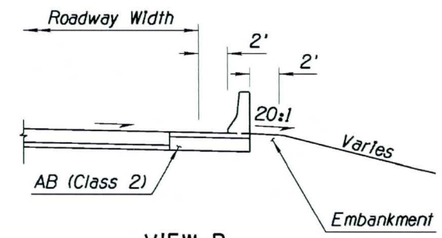

VIEW B
LOW SIDE
CONCRETE HALF BARRIER

EDGE TREATMENT DETAILS

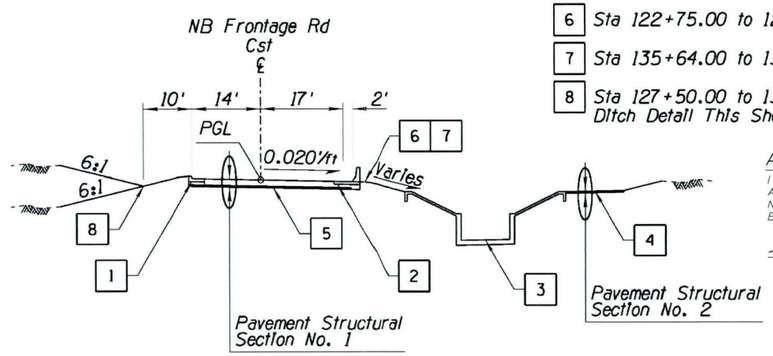

TYPICAL SECTION
NB Frontage Road
Sta 124+07.05 to 135+98.04

AS-BUILT CERTIFICATION

I HEREBY CERTIFY THAT THE "RECORD DRAWING" MEASUREMENTS AS SHOWN HEREON WERE MADE UNDER MY SUPERVISION, OR AS NOTED, AND ARE CORRECT TO THE BEST OF MY KNOWLEDGE AND BELIEF.

SIGNATURE	REGISTRATION NO.	DATE
	41282	09/10/13

HUBBARD ENGINEERING
1840 S. STAPLEY DR. SUITE# 137
MESA, AZ 85204
ENGINEERING FIRM

REGISTERED LAND SURVEYOR 41282 ADRIAN M. BURCHAM ARIZONA U.S.A. Date Signed 09/10/13 Expires 03/31/14

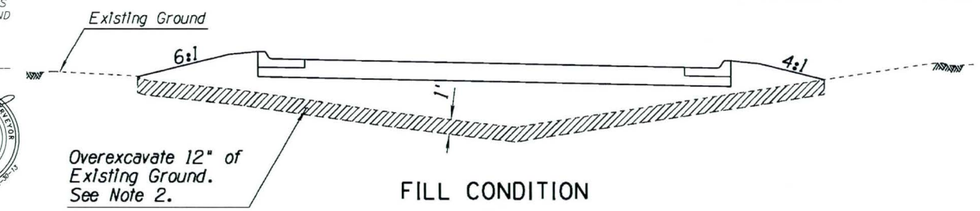

FILL CONDITION

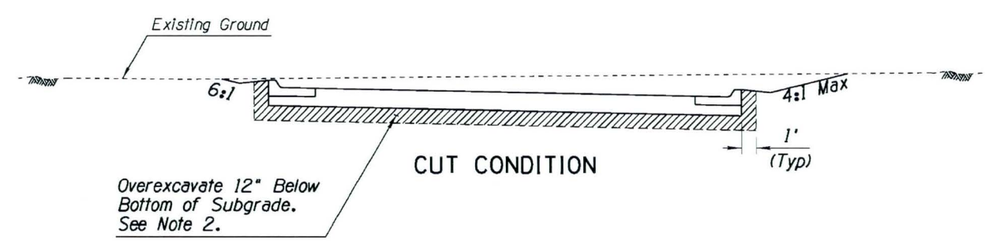

CUT CONDITION

OVEREXCAVATION LIMITS
NB Frontage Road
Sta 116+00.00 to 159+33.07

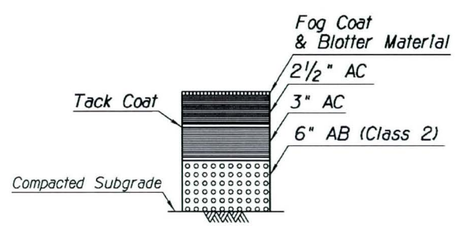

Total Thickness = 11.5"

SECTION NO. 1
(NB FRONTAGE ROAD)

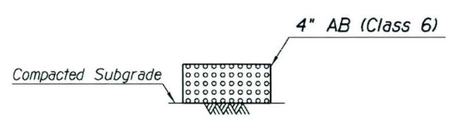

Total Thickness = 4"

SECTION NO. 2
(MAINTENANCE ROAD)

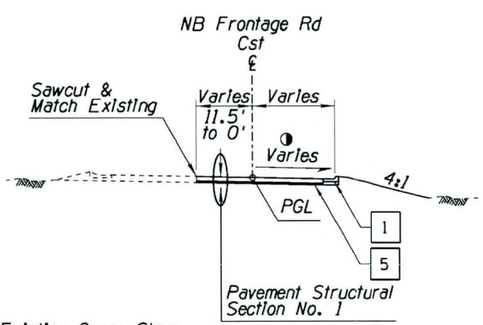

Notes:
◑ Match Existing Cross Slope

TYPICAL SECTION
NB Frontage Road
Sta 154+37.88 to 159+33.07

Notes:
1. Payment for Overexcavation work Is Included In Roadway Excavation.
2. Backfill and compact with suitable material that conforms to the requirements of Section 202-3.01 of the Standard Specifications.

	NAME	DATE
DESIGN	P. Balch	9/12
DRAWN	C. Fowler	9/12
CHECKED	R. Hansman	9/12

Dibble Engineering
7500 N. Dreamy Draw Drive
Suite 200
Phoenix, AZ 85020
P 602.957.1155

MACERICH®

DESIGN SHEET
TYPICAL SECTIONS
FRONTAGE ROAD

Registered Professional Engineer (Civil) 22871 ROBERT J. HANSMAN JR. Date Signed 09/10/13 ARIZONA, U.S.A. Expires 03/31/14

ROUTE	PROJECT NAME
I-17	I-17 NORTHBOUND FRONTAGE ROAD SONORAN BOULEVARD TO SR 74

DWG No. G-1.02
___ OF ___

NO	DESCRIPTION OF REVISIONS	MADE BY	DATE
1	ASLD COMMENT REVISIONS	J. Papworth	12/7/12

SURVEY NO. FINISHED PLANS REVISIONS LOCATION DATE

ccccccSYSTIMEcccccc cccccUGNcSPECIFICATIONcccccc

SHEET NO.	TOTAL SHEETS	AS BUILT
4	68	

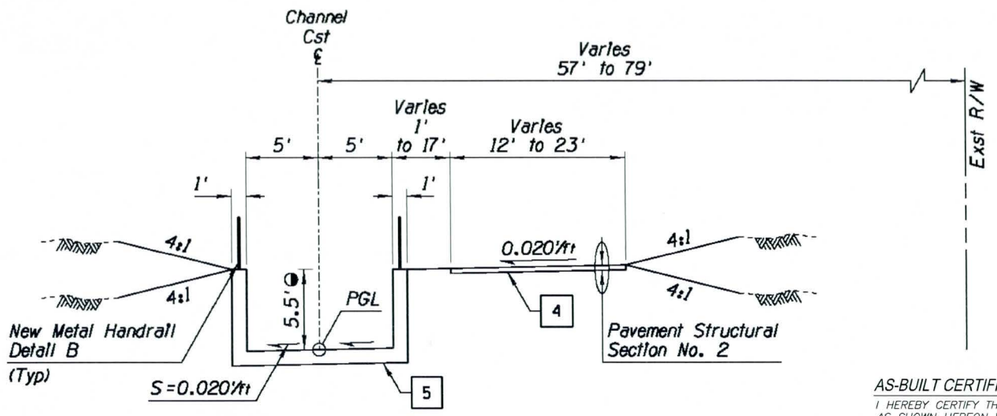

CHANNEL TYPICAL SECTION

Sta 9+72.15 to 10+10.59 (Refer to Detail D)
Sta 10+10.59 to 11+10.00
Sta 12+30.00 to 13+69.07

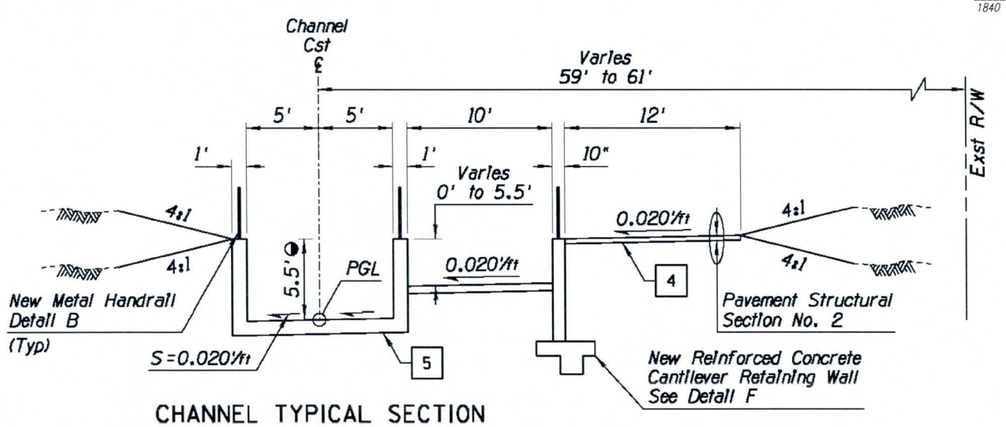

CHANNEL TYPICAL SECTION

Sta 11+10.00 to 11+80.00

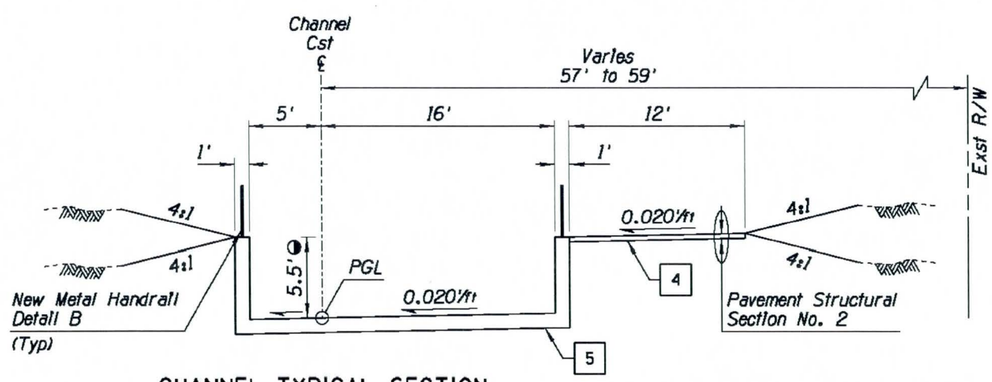

CHANNEL TYPICAL SECTION

Sta 11+80.00 to 12+30.00

AS-BUILT CERTIFICATION

I HEREBY CERTIFY THAT THE "RECORD DRAWING" MEASUREMENTS AS SHOWN HEREON WERE MADE UNDER MY SUPERVISION, OR AS NOTED, AND ARE CORRECT TO THE BEST OF MY KNOWLEDGE AND BELIEF.

SIGNATURE	REGISTRATION NO.	DATE
	41282	09/10/13

HUBBARD ENGINEERING
1840 S. STAPLEY DR. SUITE# 137
MESA, AZ 85204
ENGINEERING FIRM

REGISTERED LAND SURVEYOR — CERTIFICATE NO. 41282 — ADRIAN M. BURCHAM — DATE SIGNED 09/10/13 — ARIZONA U.S.A.

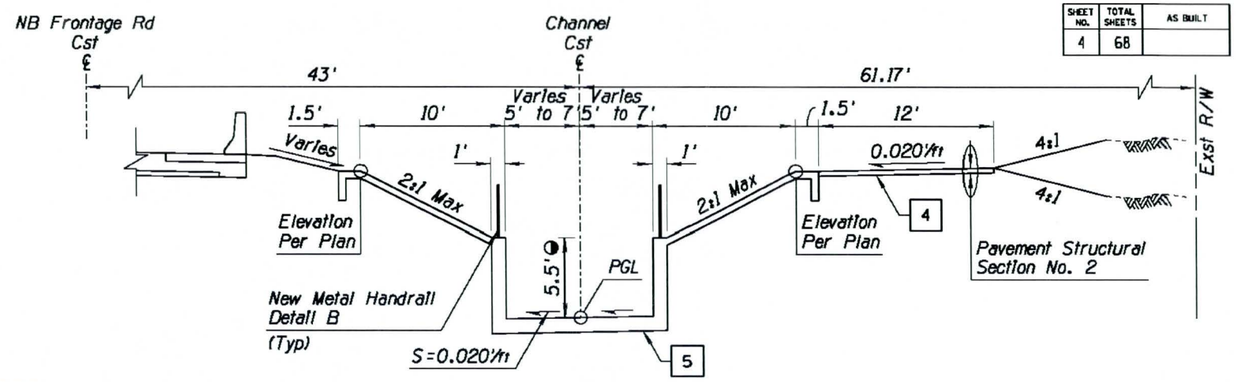

CHANNEL TYPICAL SECTION

Sta 13+69.07 to 20+80.35

4 Maintenance Road, See Detail A

5 See Overexcavation Limits This Sheet

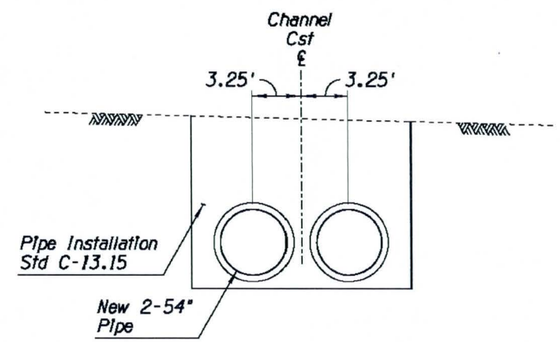

CULVERT TYPICAL SECTION

Sta 20+80.35 to 21+79.73

NOTES

◑ Bottom of channel is 5.5' from the top of channel at the Channel Cst ℄.

Storm Drain stationing is along the centerline of the twin storm drain pipes and along the horizontal axis.

For reinforcement and details of the concrete channel, refer to Details D, E and F.

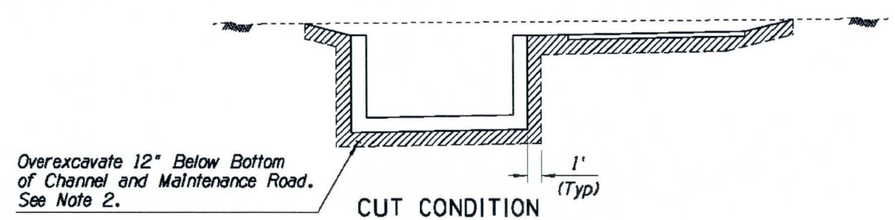

CUT CONDITION

OVEREXCAVATION LIMITS

Channel

Sta 9+72.15 to 20+80.35

Notes:

1. Payment for Overexcavation work is included in Drainage Excavation.

2. Backfill and compact with suitable material that conforms to the requirements of Section 202-3.01 of the Standard Specifications.

	NAME	DATE
DESIGN	J. Papworth	9/12
DRAWN	C. Fowler	9/12
CHECKED	R. Hansman	9/12

Dibble Engineering — 7500 N. Dreamy Draw Drive, Suite 200, Phoenix, AZ 85020, P 602.957.1155

MACERICH®

DESIGN SHEET
TYPICAL SECTIONS
CHANNEL & CULVERT

ROUTE: I-17

PROJECT NAME: I-17 NORTHBOUND FRONTAGE ROAD SONORAN BOULEVARD TO SR 74

DWG No. C-1.03

___ OF ___

9/28/2012 J:\2012\111204 Macerich NBCC\CAD\USTN\h1204ds03.dgn

SURVEY NO. | FINISHED PLANS- | REVISIONS- | LOCATION- | DATE-

SHEET NO.	TOTAL SHEETS	AS BUILT
5	68	

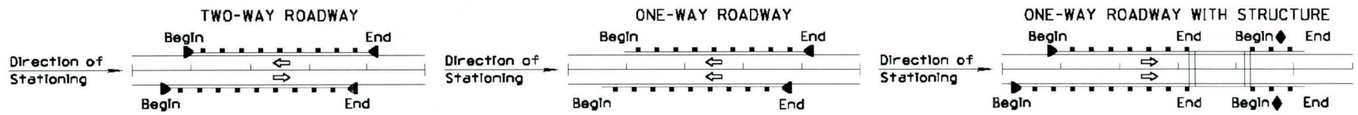

| LOCATION | | BARRIER | | |

SHEET NO.	TOTAL SHEETS	AS BUILT
6	68	

DESCRIPTION			CURB					CURB & GUTTER														SIDEWALK								
								TRANSITIONS							Lin Ft (0.0)															
								Each																						
Location	Plan Reference Number	Type A, h=6" (Lin Ft) Std C-05.10	Type A1, h=6" (Lin Ft) Std C-05.10	Type G, h=6" (Lin Ft) Std C-05.10	Median Nose Taper ◧ Std C-05.40 (EA)	Median Paving (Stamped Concrete) Std C-05.40 (Sq Yd)	Detail G MAG 220 Type A to Type D-1	Type 3 Std C-05.12	Type 6 Std C-05.12	MAG Std Det 221	Detail G MAG 220 Type C to Type D-1	Curb Termination Std C-05.10	Type D-1, h=6" Std C-05.10	Type D-3, h=6" Std C-05.10	Vertical Curb & Gutter, h=6" MAG Std Det 220-1, Type A	Roll Curb, h=4" MAG Std Det 220-1, Type C	Roll Curb, h=6" Detail G	Concrete Driveway (Sq Ft) Std C-05.20	Sidewalk Ramp Type A (Each) Std C-05.30	Sidewalk Ramp Type B (Each) Std C-05.30	Sidewalk Ramp Type C (Each) Std C-05.30	Detectable Warning Strip Detail X	Sidewalk Ramp See Remarks Std C-05.30	Sidewalk (Sq Ft) Std C-05.20	Curb Wall (Lin Ft) Detail X	REMARKS
Sta 116+23.00 to 122+76.67 Rt	100						1							655.9																Gutter Width = 2.5'
Sta 10+36.39 to 11+08.60 Rt	101															98.4														
Sta 10+26.82 to 10+75.00 Lt	102									1						48.6														
Sta 10+75.00 to 10+95.00 Lt	103																20.0													
Sta 10+95.00 to 11+01.12 Lt	104									1						6.1														
Sta 136+00.00 to 136+23.00 Rt	106											1		23.0																Gutter Width = 2.5'
Sta 136+23.00 to 136+43.00 Rt	107																	20.0												Gutter Width = 2.5'
Sta 136+43.00 to 159+33.07 Rt	108											1		2278.3																Gutter Width = 2.5'
Sta 115+99.83 to 154+36.71 Lt	200							2							3837.0															Gutter Width = 2.5'
Sta 10+13.24 to 11+04.86 Rt	300				1	218										231.0														
Sheet Total					1	218	1	2		2	2		2957.2	3837.0	384.1	20.0	20.0													

AS-BUILT CERTIFICATION

I HEREBY CERTIFY THAT THE "RECORD DRAWING" MEASUREMENTS AS SHOWN HEREON WERE MADE UNDER MY SUPERVISION, OR AS NOTED, AND ARE CORRECT TO THE BEST OF MY KNOWLEDGE AND BELIEF.

SIGNATURE	REGISTRATION NO.	DATE
	41282	09/10/13

HUBBARD ENGINEERING
1840 S. STAPLEY DR. SUITE# 137
MESA, AZ 85204
ENGINEERING FIRM

REGISTERED LAND SURVEYOR 41282 ADRIAN M. BURCHAM ARIZONA U.S.A. 09/10/13

◧ MEDIAN NOSE TAPERS ARE NOT PAID FOR SEPARATELY, WILL BE INCLUDED IN CONCRETE MEDIAN PAVING QUANTITIES AND BID ITEM.

	NAME	DATE
DESIGN	P. Balch	9/12
DRAWN	C. Fowler	9/12
CHECKED	R. Hansman	9/12

Dibble Engineering — 7500 N. Dreamy Draw Drive, Suite 200, Phoenix, AZ 85020, P 602.957.1155

MACERICH®

CURB & GUTTER SUMMARY SHEET

REGISTERED PROFESSIONAL ENGINEER 12671 ROBERT J. HANSMAN JR. ARIZONA U.S.A. 09/10/13

ROUTE: I-17

PROJECT NAME: I-17 NORTHBOUND FRONTAGE ROAD SONORAN BOULEVARD TO SR 74

DWG No. C-2.02

___ OF ___

DATE- | LOCATION- | REVISIONS- | FINISHED PLANS- | SURVEY NO.

9/28/2012 J:\2012\111204 Macerich NBCC\CAD\USTN\h1204sg01.dgn

To Accompany Change Order No.

NOTE:
THE ZEROS IN PARENTHESES (0, 0.0 & 0.000) INDICATE THE DIMENSIONAL PRECISION FOR THAT COLUMN

NOTE:
FOR PIPE CULVERT PLACEMENT SEE STANDARD DRAWINGS C-13.10 AND C-13.15

NOTE:
PIPE OPTIONS SELECTED ARE THOSE REQUIRED TO MEET MINIMUM SERVICE LIFE.
ALLOWABLE PIPE OPTIONS ARE INDICATED WITH THE LETTER 'X' IN THE SPACE. BLANK SPACES ARE NOT ALLOWABLE ALTERNATES.

CSP - CORRUGATED STEEL PIPE
CAP - CORRUGATED ALUMINUM PIPE
RCP - REINFORCED CONCRETE PIPE
NRCP - NON-REINFORCED CONCRETE PIPE
NRCIPCP - NON-REINFORCED CAST-IN-PLACE CONCRETE PIPE
CHDPEPP - CORRUGATED HIGH-DENSITY POLYETHYLENE PLASTIC PIPE

SHEET NO.	TOTAL SHEETS	AS BUILT
7	68	

Station	Plan Reference Number	Controlling Fill Height Range	Size, Corrugated (In.)	Size, Smooth (In.)	Length (0) (Ft.)	Skew (0) (Degree)	Corrugation	Wall Thickness (0.000)	Zinc	Bituminous Coated Zinc	Aluminum	Bituminous Coated Aluminum	Corrugation	Wall Thickness (0.000)	Uncoated	Bituminous Coated	Class - Non-Trench	Class - Trench	Class	Minimum Wall Thickness (0)	AASHTO M-294 Type C	AASHTO M-294 Type S	C-13.20 & C-13.25	Detail	Size, (In) Manhole	Standard or Detail	S-Single / D-Double	Location	H (0.0)	L Wing (0.0)	L 18" Slotted Drain (0)	L 24" Slotted Drain (0)	Type	Elevation (0.00)	Grate Depth (Ft.)	Grate L (0.0) (Ft.)	Inlet Depression C-15.70	Pipe Excavation (0)	Pipe Backfill (0) C-13.15	Drainage Excavation (0)	Berm/Dike Embankment (0)	REMARKS
Sta 115+98, 13.70' RT	197	1		24	221											III		3							-			△1	4.5													Tie into existing CB197 - Detail H
Sta 118+20, 14.50' RT	198	1		24	228												III	3							C-15.20	S			5.0	3.5					1	14.0						
Sta 120+51, 16.46' RT	199	1		24	324												III	3							C-15.80	S			4.8	3.5					1	14.0						
Sta 120+50, 23.10' LT	205	1		24	41												III	3							C-15.80	S			3.9					164~~1.00~~ 0.55AB								△
Sta 10+73, 28.50' LT	200	2		24	60												II	1							P1569-1	S		△1	5.0	17.0					1	24.5						COP CB Type M-1 - 17' Wing
Sta 10+55, 28.50' RT	201	3		24	31												II	1							P1569-1	D			5.0	10.0					1	27.5						COP CB Type M-2 - (2)10' Wing
Sta 123+75, 30.50' RT	202	3		24	37												II	2						48	C-18.10				6.4													Outlet Sta 9+20 Detail H
Sta 124+85, 16.50' RT	203	1		24	18												III	3							C-15.92	S			4.0		10	△			1	21.0	△					Outlet Sta 10+13 Detail I
Sta 124+85, 21.20' LT	204	1		24	37												III	3							C-15.80	S			4.0					164~~4.25~~ 3.93AB								
Sta 131+50, 16.50' RT	206	1		24	18												III	3							C-15.92	S		△1	4.9		10				1	21.0						Outlet Sta 16+76 Detail I
Sta 131+50, 24.20' LT	207	2		24	40												II	1							C-15.80	S			4.0					164~~6.05~~ 8.11AB								
Sta 136+11, 18.88' RT	208A	2		36	30												II	1							C-13.80			△1														Outlet into MH308
Sta 136+15, 14.50' RT	208	2		36	4												II	1							C-15.20	S			7.5	7.5					1	18.0						See Detail C
Sta 140+30, 22.50' RT	209	3		36	413												II	2						48	C-18.10			△1	5.3													
Sta 140+30, 45.00' LT	210	2		24	65												II	1							C-15.80	S			3.0				△1	1655.~~70~~ .86AB								△1 Grate 1' Below Grade, Apron at 4:1
Sta 144+66, 18.84' RT	211A	3		36	433												II	1							C-13.80			△1														
Sta 144+70, 14.50' RT	211	3		36	4												II	1							C-15.20	S			6.7	7.5					1	18.0						See Detail C
Sta 147+09, 22.50' RT	212	2		36	238												II	1						48	C-18.10				6.9													
Sta 147+89, 26.32' LT	216	2		24	91												III	3						△1				△1														Tie into exist 24" culvert upstrm
Sta 149+85, 14.50' RT	213	2		24	271												II	1							C-15.20	S			5.6	11.5					1	22.0						
Sta 153+10, 18.00' LT	214	2		24	322												II	1						48	C-18.10			△1	6.5													
Sta 155+63, 22.50' RT	215	2		24	255	△											II	1						48	C-18.10				6.8													Tie into exist 24" culvert upstrm
Sta 155+81, 33.70' RT	217	1		24	16												III	3							C-15.80				4.0					166~~3.70~~ 4.90AB								Rotate CB for 22.5Deg pipe angle
	△				△																																					△
Sta 125+07, 68.51' RT	303	2		30	20												III	2	3						SD6.30-2																	3 pipes, Outlet Sta 10+36; Detail I
Sta 21+12.34, 3.25' RT	304	3		54	31	△2											IV		5.5					48	C-18.10				12.5	△2												Two pipe culvert
Sta 21+22.16, 3.25' RT △2	305	3		54	9												IV		5.5						C-13.80																	Two pipe culvert
Sheet Total																															20											

FILL HEIGHT RANGE TABLE (Ft.)													
RANGE NO.		1	2	3	4	5	6	7	8	9	10	11	12
FILL	>	1	3	5	8	11	15	20	25	30	40	55	70
HEIGHT (Ft.)	≤	3	5	8	11	15	20	25	30	40	55	70	90

SHOULD FIELD CONDITIONS VARY FROM THE RANGE INDICATED, CONTACT DESIGN FOR RE-EVALUATION OF PIPE DESIGN REQUIREMENTS.

PIPE CORRUGATION			
A	2⅔x½	D	6x2
B	3x1	E	3x1 or 9x2½
C	9x2½		

AS-BUILT CERTIFICATION

I HEREBY CERTIFY THAT THE "RECORD DRAWING" MEASUREMENTS AS SHOWN HEREON WERE MADE UNDER MY SUPERVISION, OR AS NOTED, AND ARE CORRECT TO THE BEST OF MY KNOWLEDGE AND BELIEF.

SIGNATURE — REGISTRATION NO. 41282 — DATE 09/10/13

HUBBARD ENGINEERING
1840 S. STAPLEY DR. SUITE# 137
MESA, AZ 85204
ENGINEERING FIRM

REGISTERED LAND SURVEYOR 41282 ADRIAN M. BURCHAM ARIZONA U.S.A.

	NAME	DATE
DESIGN	A. Cox	4/13
DRAWN	C. Fowler	4/13
CHECKED	R. Hansman	4/13

Dibble Engineering — 7500 N. Dreamy Draw Drive, Suite 200, Phoenix, AZ 85020, P 602.957.1155

MACERICH®

NEW PIPE SUMMARY SHEET

ROUTE: I-17

PROJECT NAME: I-17 NORTHBOUND FRONTAGE ROAD SONORAN BOULEVARD TO SR 74

Registered Professional Engineer (Civil) — 22871 ROBERT J. HANSMAN JR. — Date Signed 03/30/10 — ARIZONA, U.S.A.

DWG No. G-2.03

___ OF ___

NO	DESCRIPTION OF REVISIONS	MADE BY	DATE
	CHANNEL CROSSING AT APS DUCT BANK	J. Papworth	3/28/13
	ASLD COMMENT REVISIONS	J. Papworth	12/7/12

REV. DATE: 05/03/2010

SURVEY NO. — FINISHED PLANS — REVISIONS — LOCATION — DATE

4/3/2013 J:\2012\111204 Macerich NBCC\CAD\USTN\h1204sp01.dgn

To Accompany Change Order No.

NOTE:
THE ZEROS IN PARENTHESES (0, 0.0 & 0.000) INDICATE THE DIMENSIONAL PRECISION FOR THAT COLUMN

NOTE:
FOR PIPE CULVERT PLACEMENT SEE STANDARD DRAWINGS C-13.10 AND C-13.15

NOTE:
PIPE OPTIONS SELECTED ARE THOSE REQUIRED TO MEET MINIMUM SERVICE LIFE.
ALLOWABLE PIPE OPTIONS ARE INDICATED WITH THE LETTER 'X' IN THE SPACE. BLANK SPACES ARE NOT ALLOWABLE ALTERNATES.

CSP - CORRUGATED STEEL PIPE
CAP - CORRUGATED ALUMINUM PIPE
RCP - REINFORCED CONCRETE PIPE
NRCP - NON-REINFORCED CONCRETE PIPE
NRCIPCP - NON-REINFORCED CAST-IN-PLACE CONCRETE PIPE
CHDPEPP - CORRUGATED HIGH-DENSITY POLYETHYLENE PLASTIC PIPE

SHEET NO.	TOTAL SHEETS	AS BUILT
7A	68	

Station	Plan Reference Number	◒ Controlling Fill Height Range	Size, Corrugated (In.)	Size, Smooth (In.)	Length (0) (Ft.)	Skew (0) (Degree)	◪ Corrugation	Wall Thickness (0.000) (In.)	CSP Coating: Zinc	CSP Coating: Bituminous Coated Zinc	CSP Coating: Aluminum	CAP Coating: Bituminous Coated Aluminum	◪ Corrugation	Wall Thickness (0.000) (In.)	RCP: Uncoated	RCP: Bituminous Coated	NRCP: Class - Non-Trench	NRCIPCP: Class - Trench	CHDPEPP: Class	Minimum Wall Thickness (0) (In.)	AASHTO M-294 Type C	AASHTO M-294 Type S	C-13.20 & C-13.25	End Section Detail	Size, (In) Manhole	Standard or Detail	S-Single / D-Double	Location	H (0.0)	L Wing (0.0)	L 18° Slotted Drain (0)	L 24° Slotted Drain (0)	Type	Elevation (0.00)	Grate Depth (Ft.)	Inlet Depression C-15.70 L (0.0) (Ft.)	Pipe Excavation (0) (Cubic Yard)	Pipe Backfill (0) C-13.15 (Cubic Yard)	Drainage Excavation (0) (Cubic Yard)	Berm/Dike Embankment (0) (Cubic Yard)	REMARKS
Sta 21+37.19, 3.25' RT	306	3		54	13													IV	5.5																						See Detail 0 ⚠
Sta 21+14.66 3.25' RT ⚠	307	3		54	35 ⚠													IV	5.5					48	C-18.10			12.5 ⚠												Two pipe culvert
Sta 21+22.16, 3.25' LT	308	3		54	9													IV	5.5						C-13.80															Two pipe culvert
Sta 21+37.19, 3.25' LT	309	3		54	18													IV	5.5																						See Detail 0
Sheet Total																																									

FILL HEIGHT RANGE TABLE (Ft.)													
RANGE NO.		1	2	3	4	5	6	7	8	9	10	11	12
FILL	>	1	3	5	8	11	15	20	25	30	40	55	70
HEIGHT (Ft.)	≤	3	5	8	11	15	20	25	30	40	55	70	90

◒ SHOULD FIELD CONDITIONS VARY FROM THE RANGE INDICATED, CONTACT DESIGN FOR RE-EVALUATION OF PIPE DESIGN REQUIREMENTS.

◪ PIPE CORRUGATION			
A	2⅔x½	D	6x2
B	3x1	E	3x1 or 9x2½
C	9x2½		

AS-BUILT CERTIFICATION

I HEREBY CERTIFY THAT THE "RECORD DRAWING" MEASUREMENTS AS SHOWN HEREON WERE MADE UNDER MY SUPERVISION, OR AS NOTED, AND ARE CORRECT TO THE BEST OF MY KNOWLEDGE AND BELIEF.

SIGNATURE — 41282 REGISTRATION NO. — 09/10/13 DATE

HUBBARD ENGINEERING
1840 S. STAPLEY DR. SUITE# 137
MESA, AZ 85204
ENGINEERING FIRM

REGISTERED PROFESSIONAL ENGINEER (CIVIL) 41282 ADRIAN M. BURCHAM Date Signed 09/10/13 ARIZONA U.S.A. Expires 6/30/14

	NAME	DATE
DESIGN	A. Cox	4/13
DRAWN	C. Fowler	4/13
CHECKED	R. Hansman	4/13

Dibble Engineering — 7500 N. Dreamy Draw Drive, Suite 200, Phoenix, AZ 85020, P 602.957.1155

MACERICH®

NEW PIPE SUMMARY SHEET

REGISTERED PROFESSIONAL ENGINEER (CIVIL) 22871 ROBERT J. HANSMAN JR. Date Signed 4/5/13 ARIZONA U.S.A. Expires 03/31/15

ROUTE: I-17

PROJECT NAME: I-17 NORTHBOUND FRONTAGE ROAD SONORAN BOULEVARD TO SR 74

DWG No. G-2.04

___ OF ___

NO	DESCRIPTION OF REVISIONS	MADE BY	DATE
1	CHANNEL CROSSING AT APS DUCT BANK	J. Reyworth	3/28/13
2	ASBUILT COMMENT REVISIONS	J. Reyworth	12/7/12

REV. DATE: 05/03/2010

SURVEY NO. — FINISHED PLANS — REVISIONS — LOCATION — DATE

4/3/2013 J:\2012\111204 Macerich NBCC\CAD\USTN\h1204sp02.dgn

SHEET NO.	TOTAL SHEETS	AS BUILT
8	68	

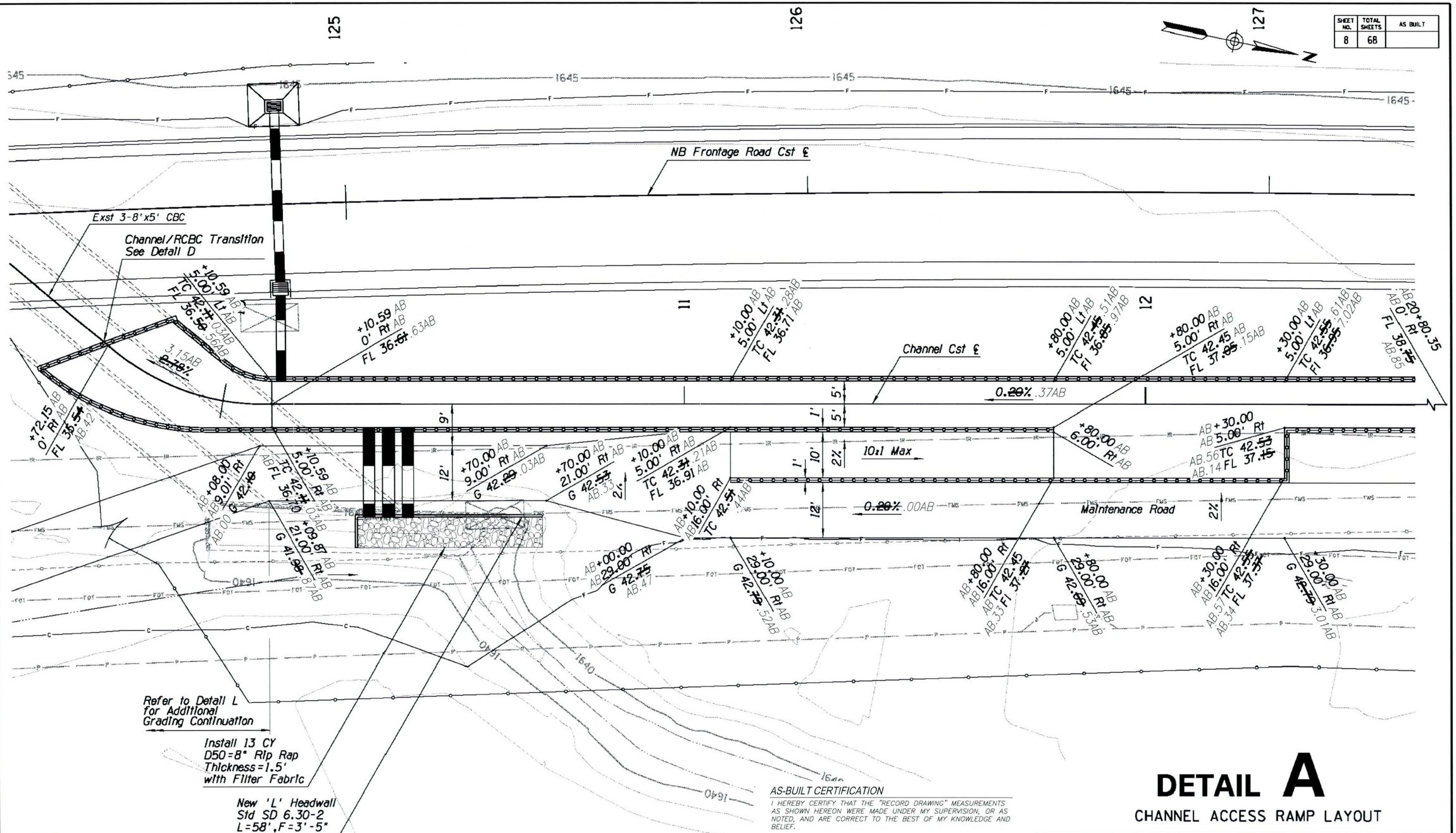

NOTES:
For Channel Cst ℄ Geometrics, See Dwg. No. D-3.02.

All dimensions shown are measured in the horizontal plane.

All Stations and Offsets are referenced from the channel Cst ℄.

Base Elevation = 1600

LEGEND
TC Top of Channel
FL Flow Line
G Ground

AS-BUILT CERTIFICATION

I HEREBY CERTIFY THAT THE "RECORD DRAWING" MEASUREMENTS AS SHOWN HEREON WERE MADE UNDER MY SUPERVISION, OR AS NOTED, AND ARE CORRECT TO THE BEST OF MY KNOWLEDGE AND BELIEF.

SIGNATURE	REGISTRATION NO.	DATE
	41282	09/10/13

HUBBARD ENGINEERING
1840 S. STAPLEY DR. SUITE# 137
MESA, AZ 85204
ENGINEERING FIRM

REGISTERED LAND SURVEYOR 41282 ADRIAN M. BURCHAM ARIZONA U.S.A.

DETAIL A

CHANNEL ACCESS RAMP LAYOUT

	NAME	DATE
DESIGN	J. Papworth	9/12
DRAWN	C. Fowler	9/12
CHECKED	R. Hansman	9/12

Dibble Engineering
7500 N. Dreamy Draw Drive
Suite 200
Phoenix, AZ 85020
P 602.957.1155

MACERICH®

DETAIL SHEET
DETAIL A

REGISTERED PROFESSIONAL ENGINEER (CIVIL) 72871 ROBERT J. HANSMAN JR. ARIZONA, U.S.A.

ROUTE: I-17

PROJECT NAME: I-17 NORTHBOUND FRONTAGE ROAD
SONORAN BOULEVARD TO SR 74

DWG No. G-3.01

___ OF ___

9/28/2012 J:\2012\111204 Macerich NBCC\CAD\USTN\h1204dtA.dgn

SHEET NO.	TOTAL SHEETS	AS BUILT
9	68	

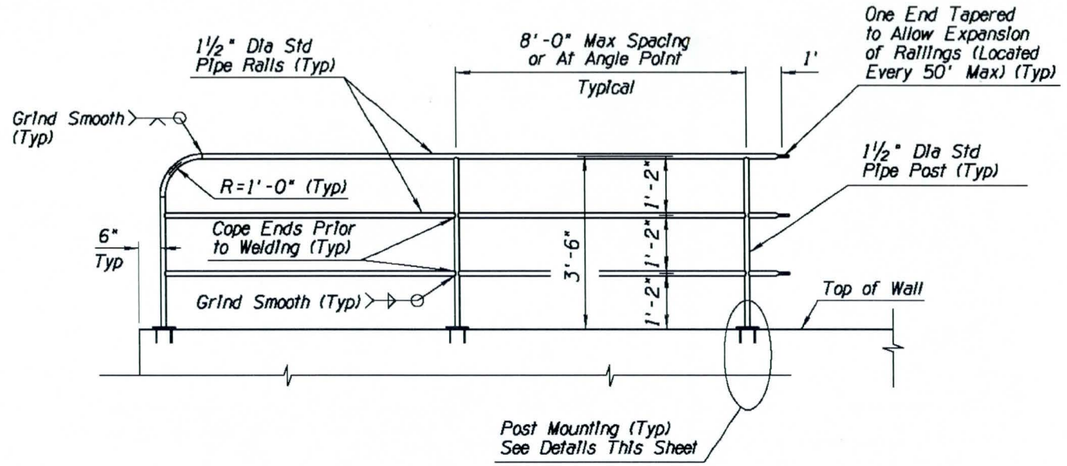

ELEVATION
NTS

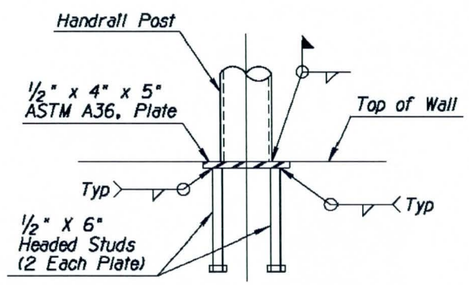

MOUNTING DETAIL OPTION 1
ANCHOR PLATE DETAIL
NTS

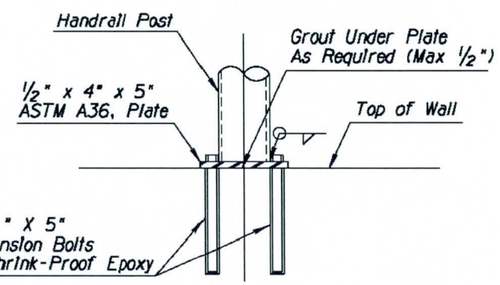

MOUNTING DETAIL OPTION 2
EXPANSION BOLT DETAIL
NTS

NOTES:

1. All welding shall be in accordance with the American Welding Society (AWS) D1.1 using E70xx Electrodes.
2. Posts shall be installed vertically. Railings shall be installed so that they are parallel to the top of wall.
3. Post and Rails shall be 1½" Diameter schedule 40 Hot-Dipped Galvanized Steel Pipe ASTM A53, Grade A (2.72 #/LF, 1.9" O.D.). Galvanizing shall be done in Accordance with ADOT Specification Section 604-3.05.
4. Color shall be Approved by the Engineer. Paint Shall Comply with ADOT Specification Section 610-3.05 and Section 1002, Unless Specifically Approved Otherwise by the Engineer.

DETAIL B
HANDRAIL

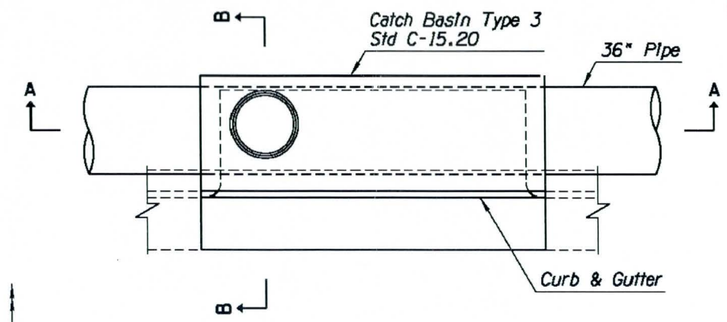

PLAN

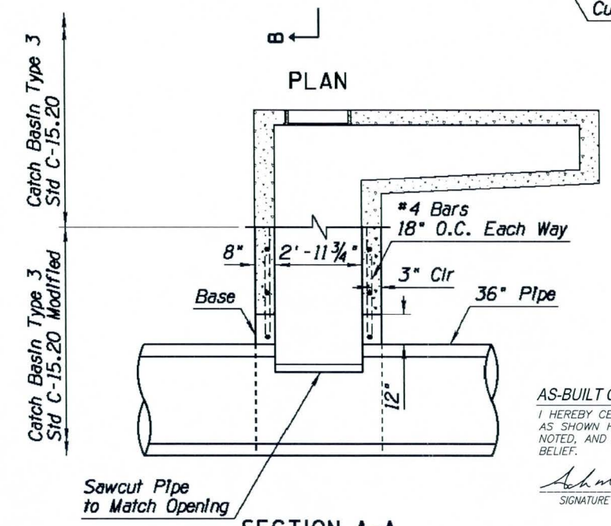

SECTION A-A

AS-BUILT CERTIFICATION

I HEREBY CERTIFY THAT THE "RECORD DRAWING" MEASUREMENTS AS SHOWN HEREON WERE MADE UNDER MY SUPERVISION, OR AS NOTED, AND ARE CORRECT TO THE BEST OF MY KNOWLEDGE AND BELIEF.

SIGNATURE	REGISTRATION NO.	DATE
	41282	09/10/13

HUBBARD ENGINEERING
1840 S. STAPLEY DR. SUITE# 137
MESA, AZ 85204
ENGINEERING FIRM

REGISTERED LAND SURVEYOR
CERTIFICATE NO.
41282
ADRIAN M.
BURCHAM
Date Signed 09/10/13
ARIZONA U.S.A.

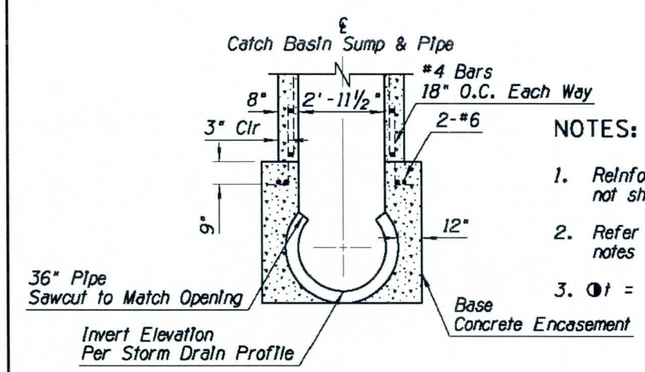

SECTION B-B

NOTES:

1. Reinforcement for non-modified C-15.20 not shown for clarity.
2. Refer to Std C-15.20 for reinforcement, notes and dimensions not shown.
3. ◑t = 8"

DETAIL C
CATCH BASIN TYPE 3
STD C-15.20 MODIFIED

	NAME	DATE
DESIGN	P. Balch	9/12
DRAWN	C. Fowler	9/12
CHECKED	R. Hansman	9/12

MACERICH®

Dibble Engineering
7500 N. Dreamy Draw Drive
Suite 200
Phoenix, AZ 85020
P 602.957.1155

DETAIL SHEET
DETAILS B & C

REGISTERED PROFESSIONAL ENGINEER
CERTIFICATE NO.
22671
ROBERT J.
HANSMAN JR.
Date Signed 09/09/13
ARIZONA U.S.A.

ROUTE: I-17

PROJECT NAME: I-17 NORTHBOUND FRONTAGE ROAD
SONORAN BOULEVARD TO SR 74

DWG No. C-3.02

___ OF ___

9/28/2012 J:\2012\111204 Macerich NBCC\CAD\USTN\h1204dtB_C.dgn

DATE- LOCATION- REVISIONS- FINISHED PLANS- SURVEY NO.

SHEET NO.	TOTAL SHEETS	AS BUILT
10	68	

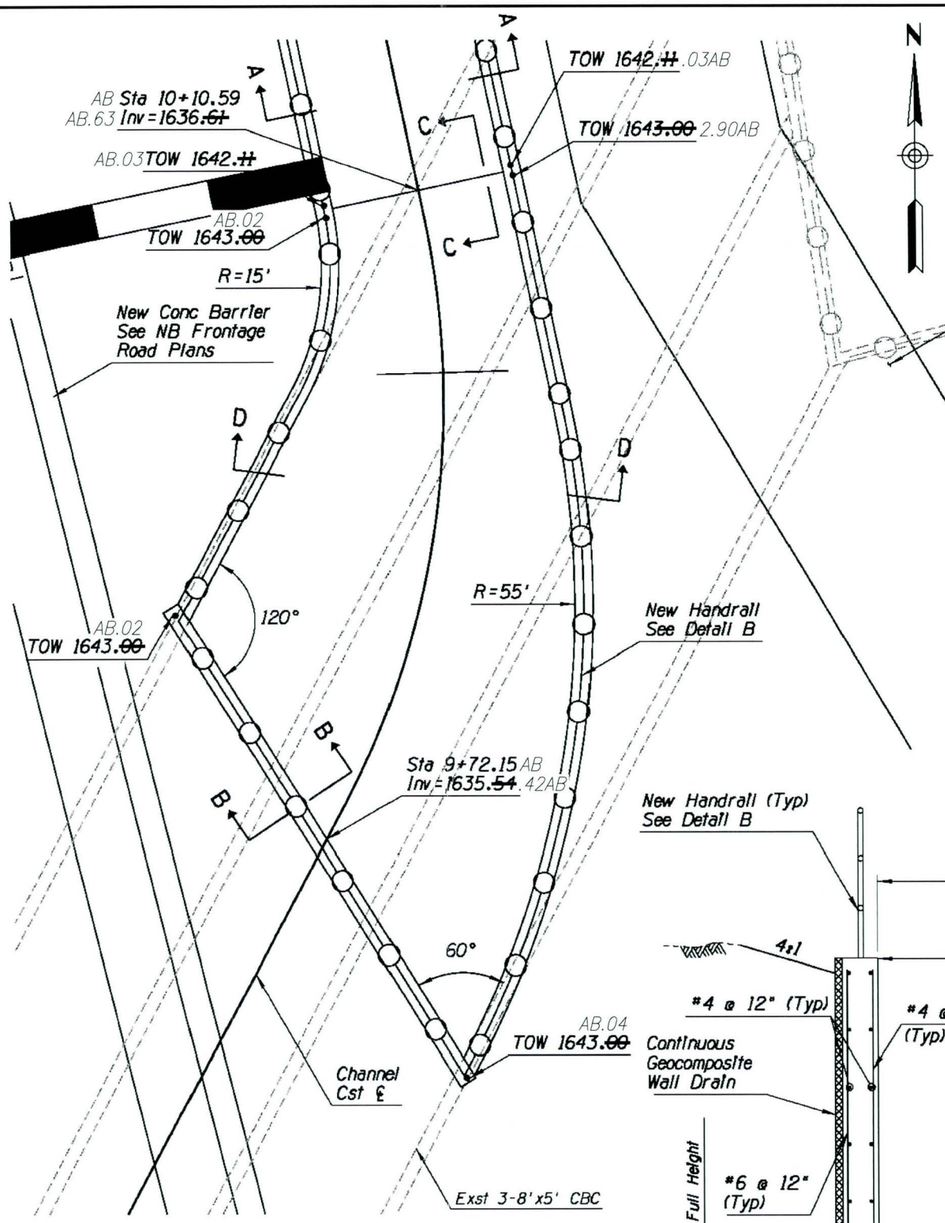

PLAN

AS-BUILT CERTIFICATION

I HEREBY CERTIFY THAT THE "RECORD DRAWING" MEASUREMENTS AS SHOWN HEREON WERE MADE UNDER MY SUPERVISION, OR AS NOTED, AND ARE CORRECT TO THE BEST OF MY KNOWLEDGE AND BELIEF.

SIGNATURE	REGISTRATION NO.	DATE
	41282	09/10/13

HUBBARD ENGINEERING
1840 S. STAPLEY DR. SUITE# 137
MESA, AZ 85204
ENGINEERING FIRM

REGISTERED LAND SURVEYOR 41282 ADRIAN M. BURCHAM ARIZONA U.S.A.

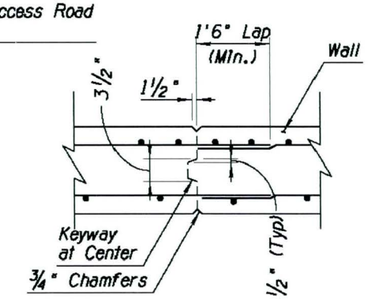

ALTERNATE CONSTRUCTION JOINT DETAIL

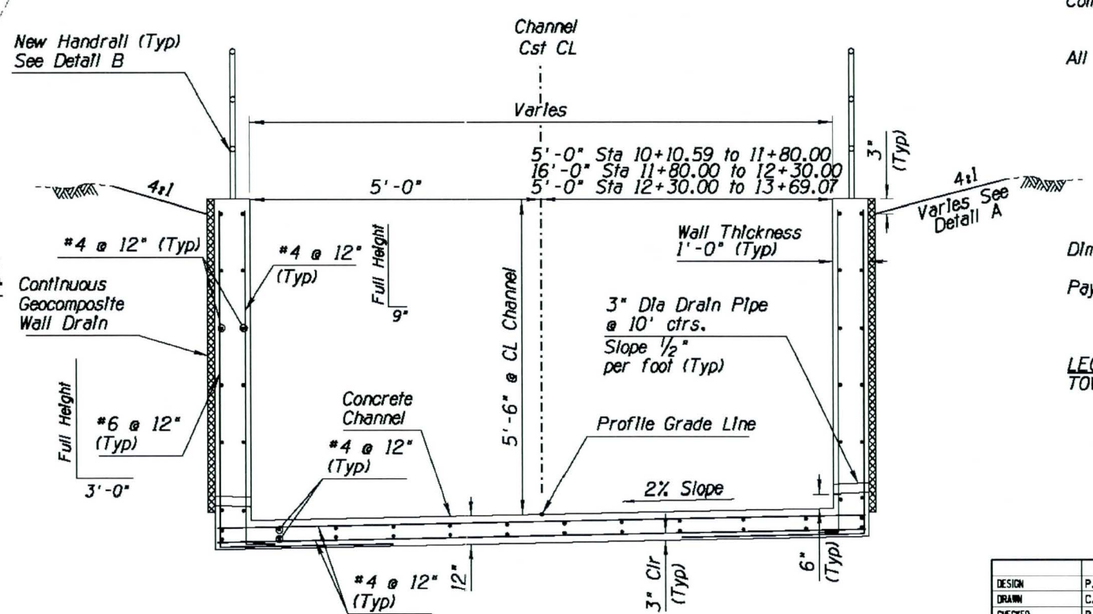

SECTION A-A
CONCRETE CHANNEL TYPICAL SECTION
Sta 10+10.59 to 13+69.07

GENERAL NOTES:

Construction Specification - Arizona Department of Transportation Standard Specifications for Road and Bridge Construction, latest Edition.

Design Specifications - AASHTO LRFD Bridge Design Specifications, 5th Edition 2010.

Loading Class - HL-93.

Design:
Soil weight = 120 p.c.f.

All Concrete shall be Class "S" (f'c = 3,000 psi).

Reinforcing steel shall conform to ASTM Specification A615. All reinforcing shall be furnished as Grade 60.

All bends and hooks shall meet the requirements of AASHTO LRFD Article 5.10. All bend dimensions for reinforcing steel shall be out-to-out of bars. All placement dimensions for reinforcing steel shall be to center of bars unless noted otherwise.

All reinforcing steel shall have 2 inch clear cover unless noted otherwise.

Chamfer all exposed corners 3/4" unless noted otherwise.

Compact backfill for footing and wing base minimum 95 percent of ASTM D698 maximum dry density.

All structures shall have formed Construction Joints in the walls (optional in floor slab) and spaced not more than 30'-0" apart or as shown in Project Plans. Joints shall be perpendicular to the centerline of the structure. Reinforcing steel shall project 1'-6" thru the joint. The joint shall be made with a 1/4" plywood bulkhead which shall be left in place or the alternate joint detail shown this sheet may be used.

Dimensions shall not be scaled from drawings.

Pay Item quantities of concrete and reinforcing steel include all labor and materials for walls, footing, headwalls, aprons, edge beam and cutoff wall.

LEGEND
TOW Top of Wall

DETAIL D

CHANNEL/RCBC TRANSITION
SHEET 1 of 2

	NAME	DATE
DESIGN	P. Balch	9/12
DRAWN	C. Fowler	9/12
CHECKED	R. Hansman	9/12

MACERICH®

Dibble Engineering
7500 N. Dreamy Draw Drive
Suite 200
Phoenix, AZ 85020
P 602.957.1155

DETAIL SHEET
DETAIL D

REGISTERED PROFESSIONAL ENGINEER (CIVIL) 20940 OSCAR A. OLIDEN ARIZONA, U.S.A. Date of Signature 12/31/12

ROUTE	PROJECT NAME
I-17	I-17 NORTHBOUND FRONTAGE ROAD SONORAN BOULEVARD TO SR 74

DWG No. C-3.03

___ OF ___

SURVEY NO. | FINISHED PLANS | REVISIONS | LOCATION | DATE

9/28/2012 J:\2012\111204 Macerich NBCC\CAD\USTN\h1204dtD1.dgn

SHEET NO.	TOTAL SHEETS	AS BUILT
11	68	

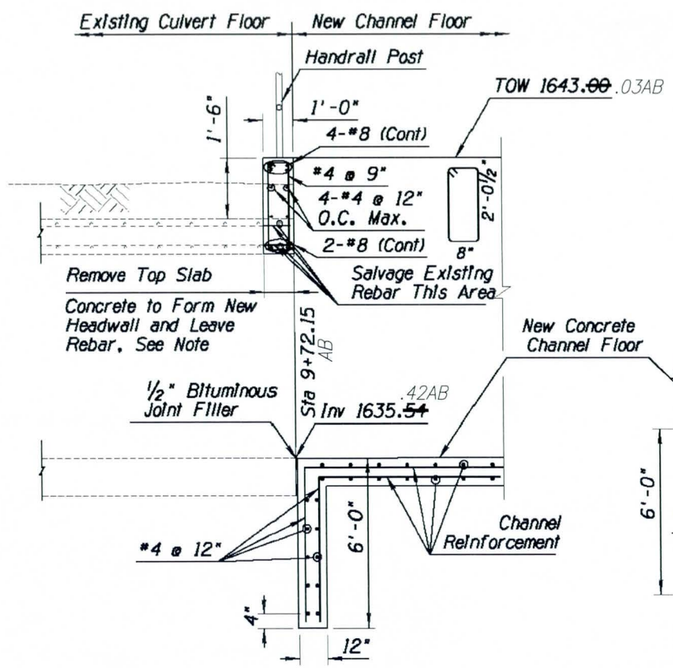

SECTION B-B
HEADWALL AND CUTOFF WALL SECTION
NTS

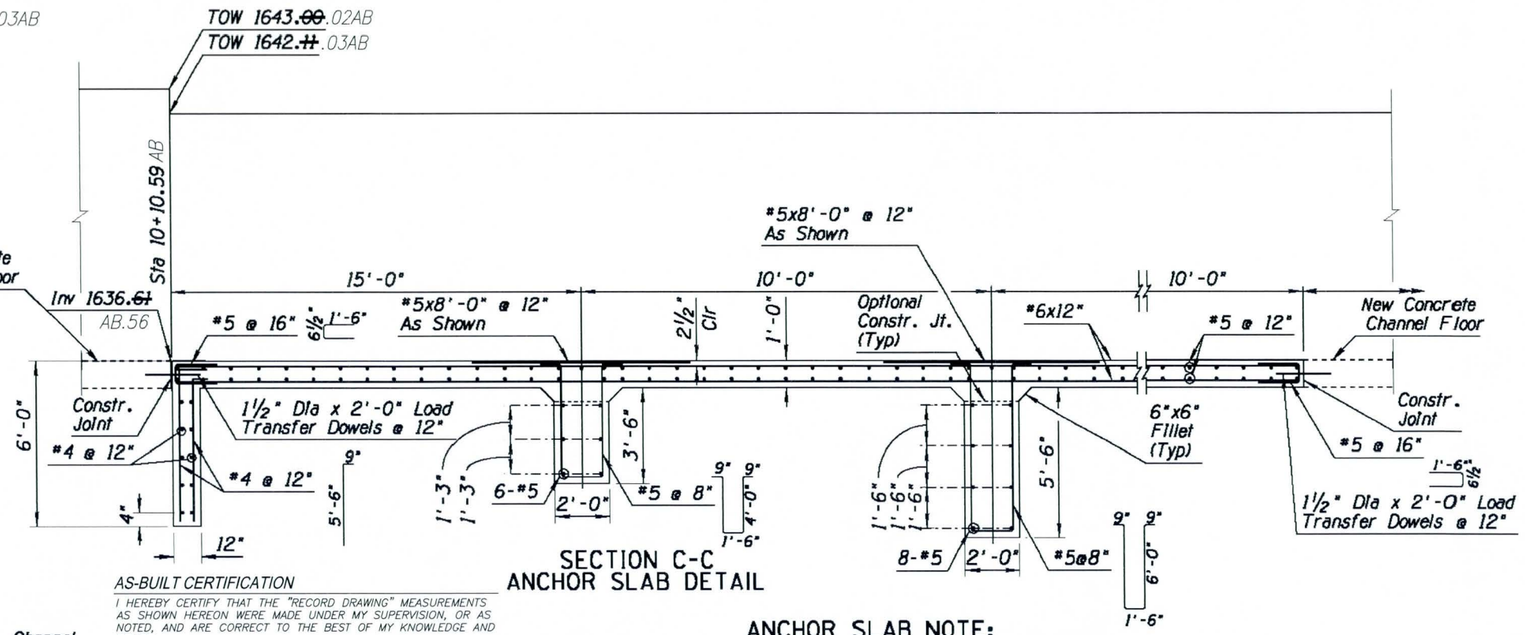

SECTION C-C
ANCHOR SLAB DETAIL

AS-BUILT CERTIFICATION

I HEREBY CERTIFY THAT THE "RECORD DRAWING" MEASUREMENTS AS SHOWN HEREON WERE MADE UNDER MY SUPERVISION, OR AS NOTED, AND ARE CORRECT TO THE BEST OF MY KNOWLEDGE AND BELIEF.

SIGNATURE	REGISTRATION NO.	DATE
	41282	09/10/13

HUBBARD ENGINEERING
1840 S. STAPLEY DR. SUITE# 137
MESA, AZ 85204
ENGINEERING FIRM

REGISTERED LAND SURVEYOR CERTIFICATE NO. 41282 ADRIAN M. BURCHAM EXPIRES 12/31/13 ARIZONA U.S.A.

ANCHOR SLAB NOTE:

1. Anchor Lugs Shall be Cast In Precompacted Embankment or Cast In Forms and Soil Compacted to Embankment Requirements Around Lugs Prior to Casting the Anchor Slab.
2. Anchor Slab Shall be Built Prior to Concrete Channel

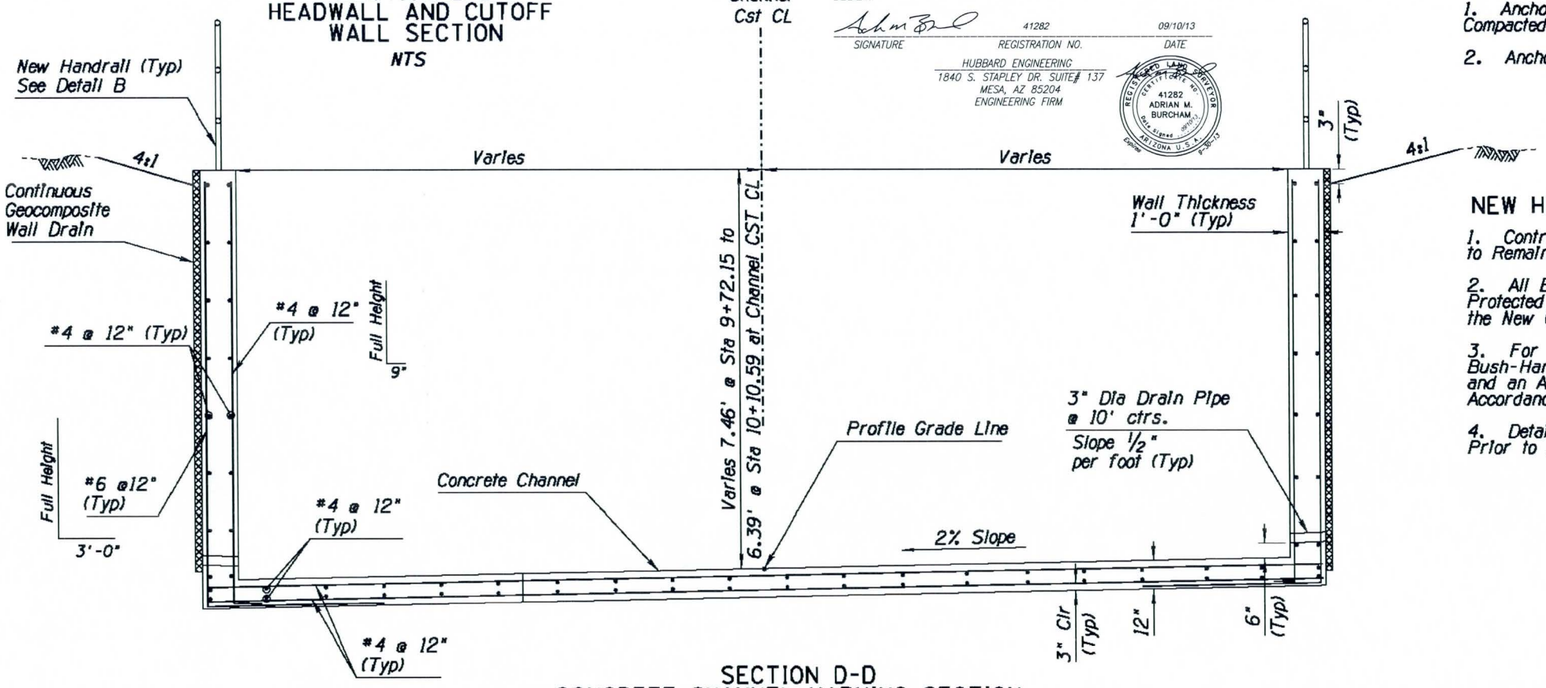

SECTION D-D
CONCRETE CHANNEL VARYING SECTION
Sta 9+72.15 to 10+10.59

NEW HEADWALL NOTE

1. Contractor Shall Take all Necessary Measures to Protect the Reinforcing Which Is to Remain After the Removal of Top Slab.
2. All Existing Reinforcing that Is to be Incorporated Into the New Work Shall be Protected and Free of All Loose and Deleterious Materials Prior to the Placement of the New Concrete.
3. For New Concrete Bonded to Existing Concrete, the Existing Surface Shall be Bush-Hammered to a Rough Finish of Approximately 1/4" Amplitude, Shall be Cleaned and an Approved Epoxy Bonding Agent Shall be applied Prior to Placing Concrete In Accordance with the Recommendations of the Approved Manufacturer.
4. Details of the Epoxy System Shall be Submitted to the Engineer for Approval Prior to Installation.

DETAIL D

CHANNEL/RCBC TRANSITION
SHEET 2 of 2

	NAME	DATE
DESIGN	P. Balch	9/12
DRAWN	C. Fowler	9/12
CHECKED	R. Hansman	9/12

MACERICH®

Dibble Engineering
7500 N. Dreamy Draw Drive, Suite 200, Phoenix, AZ 85020, P 602.957.1155

DETAIL SHEET
DEAIL D

REGISTERED PROFESSIONAL ENGINEER (CIVIL) CERTIFICATE NO. 20940 OSCAR A. OLIDEN ARIZONA U.S.A. EXPIRES 12/31/13

ROUTE: I-17

PROJECT NAME: I-17 NORTHBOUND FRONTAGE ROAD SONORAN BOULEVARD TO SR 74

DWG No. G-3.04

___ OF ___

9/28/2012 J:\2012\111204 Macerich NBCC\CAD\USTN\h1204dtD2.dgn

SHEET NO.	TOTAL SHEETS	AS BUILT
12	68	

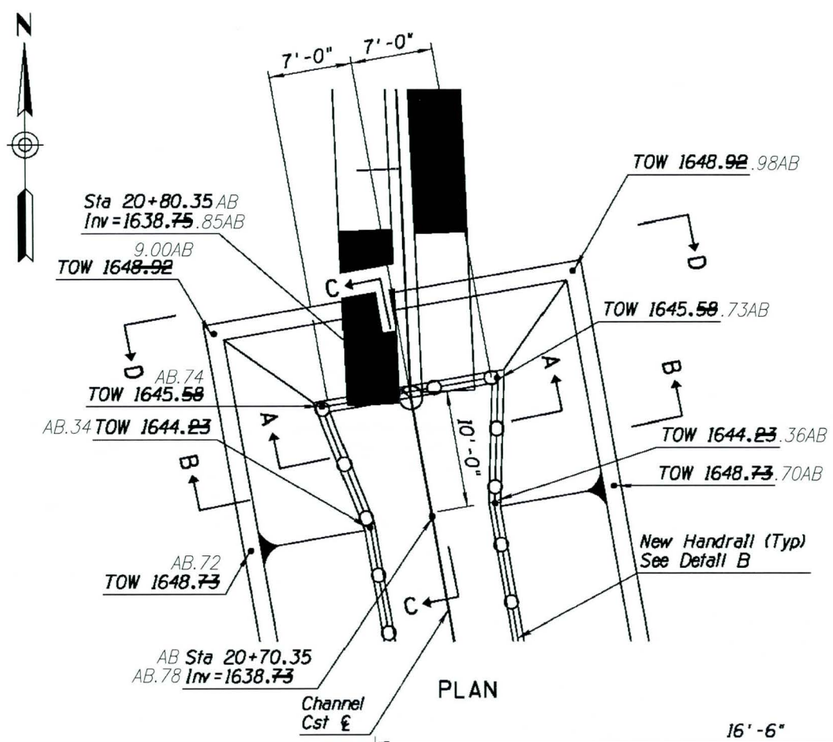

PLAN

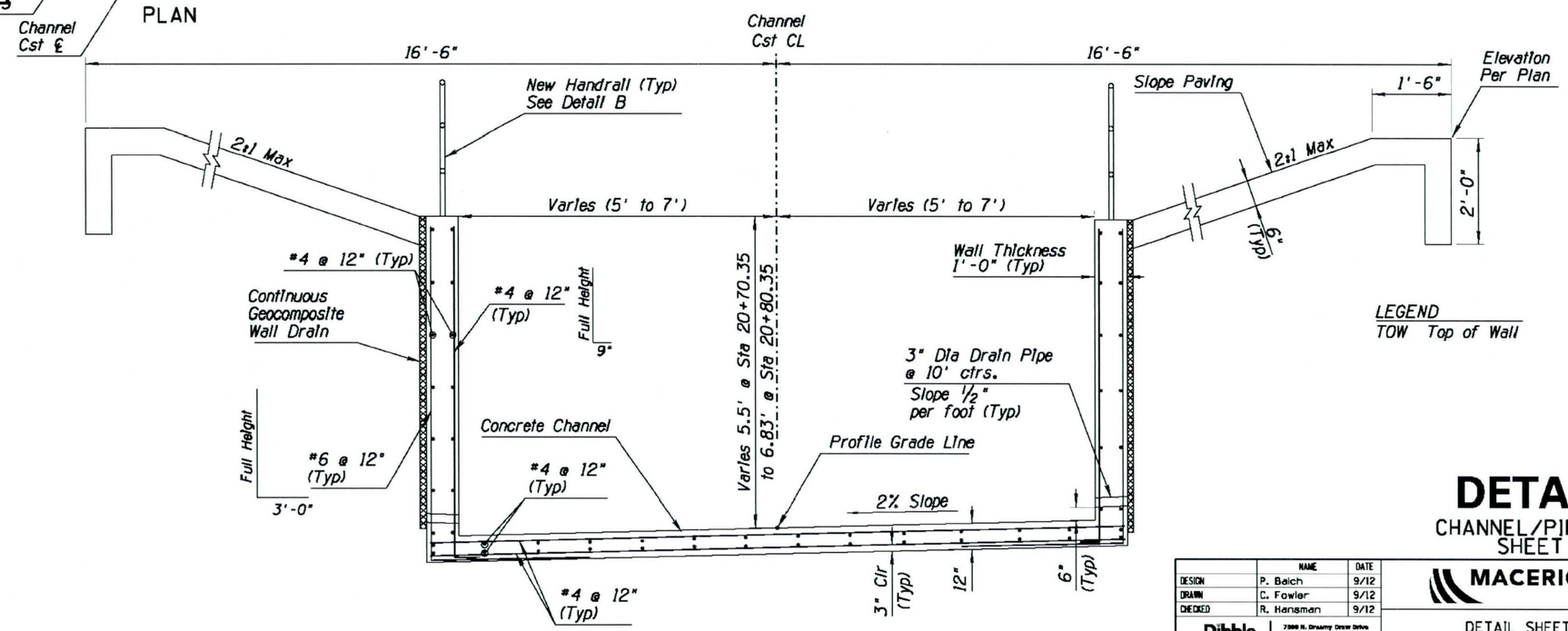

SECTION B-B
CONCRETE CHANNEL VARYING SECTION
Sta 13+69.07 to 20+80.35

AS-BUILT CERTIFICATION

I HEREBY CERTIFY THAT THE "RECORD DRAWING" MEASUREMENTS AS SHOWN HEREON WERE MADE UNDER MY SUPERVISION, OR AS NOTED, AND ARE CORRECT TO THE BEST OF MY KNOWLEDGE AND BELIEF.

SIGNATURE	REGISTRATION NO.	DATE
	41282	09/10/13

HUBBARD ENGINEERING
1840 S. STAPLEY DR. SUITE# 137
MESA, AZ 85204
ENGINEERING FIRM

REGISTERED LAND SURVEYOR 41282 ADRIAN M. BURCHAM Date Signed 9-10-13 ARIZONA U.S.A. Expires 12/31/13

Notes:
1. For Section A-A See Detail D (Sheet 1 of 2)
2. For Section C-C and D-D See Detail E (Sheet 2 of 2)
3. For Typical Slope Paving See Detail E (Sheet 2 of 2)

LEGEND
TOW Top of Wall

DETAIL E
CHANNEL/PIPE HEADWALL
SHEET 1 of 2

	NAME	DATE
DESIGN	P. Balch	9/12
DRAWN	C. Fowler	9/12
CHECKED	R. Hansman	9/12

MACERICH®

Dibble Engineering
7500 N. Dreamy Draw Drive
Suite 200
Phoenix, AZ 85020
P 602.957.1155

DETAIL SHEET
DETAIL E

REGISTERED PROFESSIONAL ENGINEER (CIVIL) 20940 OSCAR A. OLIDEN ARIZONA, U.S.A. Expires 12/31/13

ROUTE: I-17

PROJECT NAME: I-17 NORTHBOUND FRONTAGE ROAD
SONORAN BOULEVARD TO SR 74

DWG No. C-3.05
___ OF ___

SURVEY NO. | FINISHED PLANS | REVISIONS | LOCATION | DATE

9/28/2012 J:\2012\111204 Macerich NBCC\CAD\USTN\h1204dtE1.dgn

SHEET NO.	TOTAL SHEETS	AS BUILT
13	68	

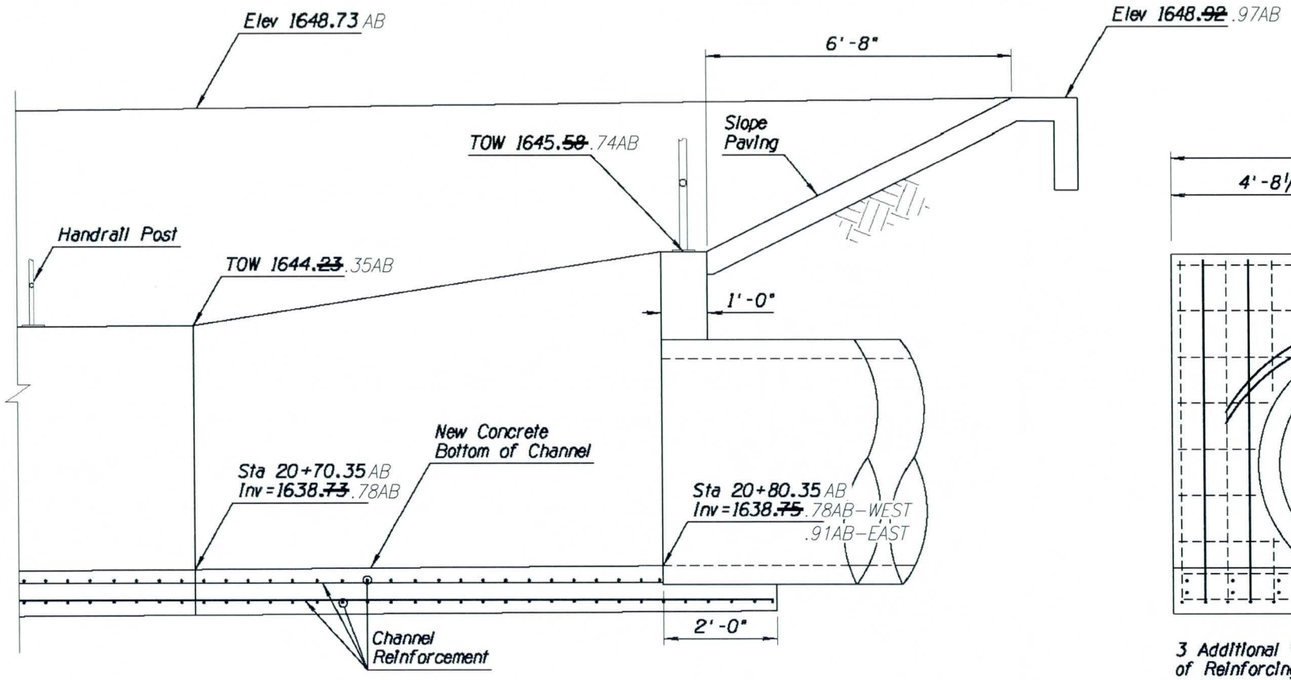

SECTION C-C
CHANNEL TRANSITION
TO DOUBLE 54" RGRCP
NTS

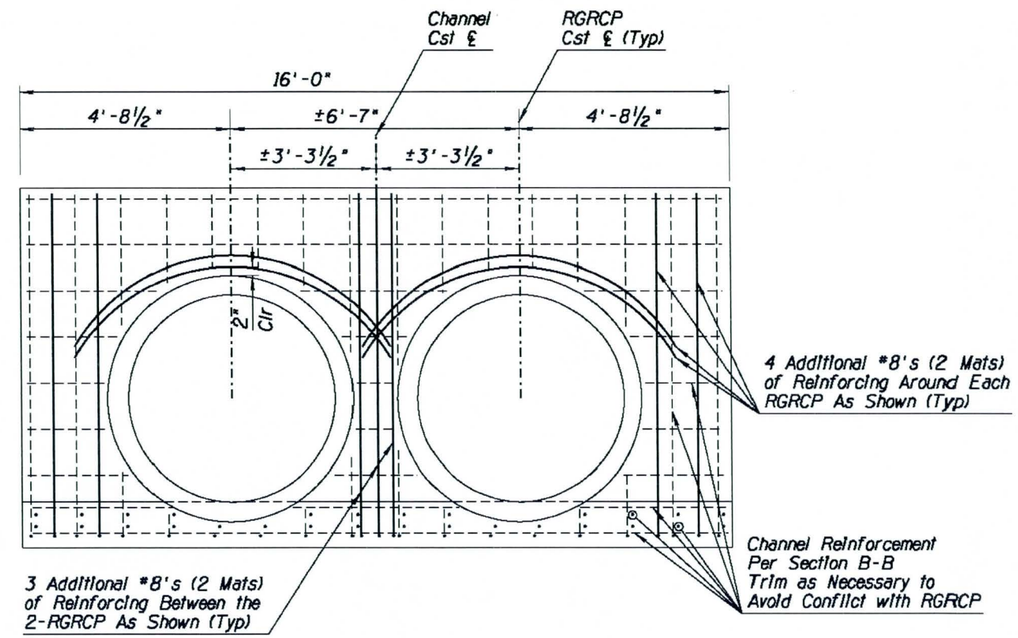

SECTION D-D
HEADWALL
DOUBLE 54" RGRCP
NTS

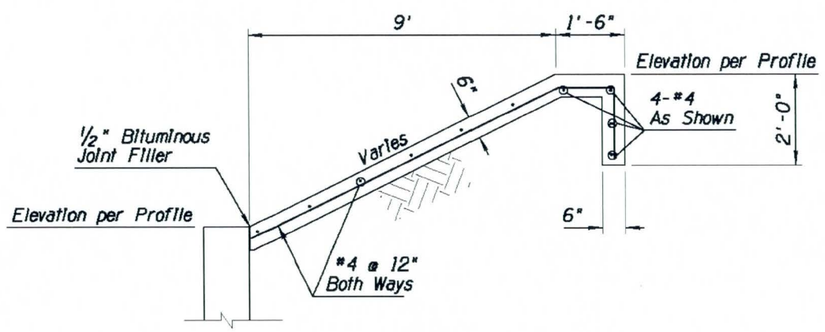

TYPICAL
SLOPE PAVING

AS-BUILT CERTIFICATION

I HEREBY CERTIFY THAT THE "RECORD DRAWING" MEASUREMENTS AS SHOWN HEREON WERE MADE UNDER MY SUPERVISION, OR AS NOTED, AND ARE CORRECT TO THE BEST OF MY KNOWLEDGE AND BELIEF.

SIGNATURE	REGISTRATION NO.	DATE
	41282	09/10/13

HUBBARD ENGINEERING
1840 S. STAPLEY DR. SUITE# 137
MESA, AZ 85204
ENGINEERING FIRM

REGISTERED LAND SURVEYOR 41282 ADRIAN M. BURCHAM ARIZONA U.S.A.

DETAIL E

CHANNEL/PIPE HEADWALL
SHEET 2 of 2

	NAME	DATE
DESIGN	P. Balch	9/12
DRAWN	C. Fowler	9/12
CHECKED	R. Hansman	9/12

MACERICH®

Dibble Engineering
7500 N. Dreamy Draw Drive
Suite 200
Phoenix, AZ 85020
P 602.687.1186

DETAIL SHEET
DETAIL E

REGISTERED PROFESSIONAL ENGINEER (CIVIL) CERTIFICATE NO. 20940 OSCAR A. OLIDEN ARIZONA, U.S.A. Expires 12/31/13

ROUTE: I-17

PROJECT NAME: I-17 NORTHBOUND FRONTAGE ROAD
SONORAN BOULEVARD TO SR 74

DWG No. C-3.06

____ OF ____

DATE- | LOCATION- | REVISIONS- | FINISHED PLANS- | SURVEY NO.

9/28/2012 J:\2012\111204 Macerich NBCC\CAD\USTN\h1204dtE2.dgn

SHEET NO.	TOTAL SHEETS	AS BUILT
14	68	

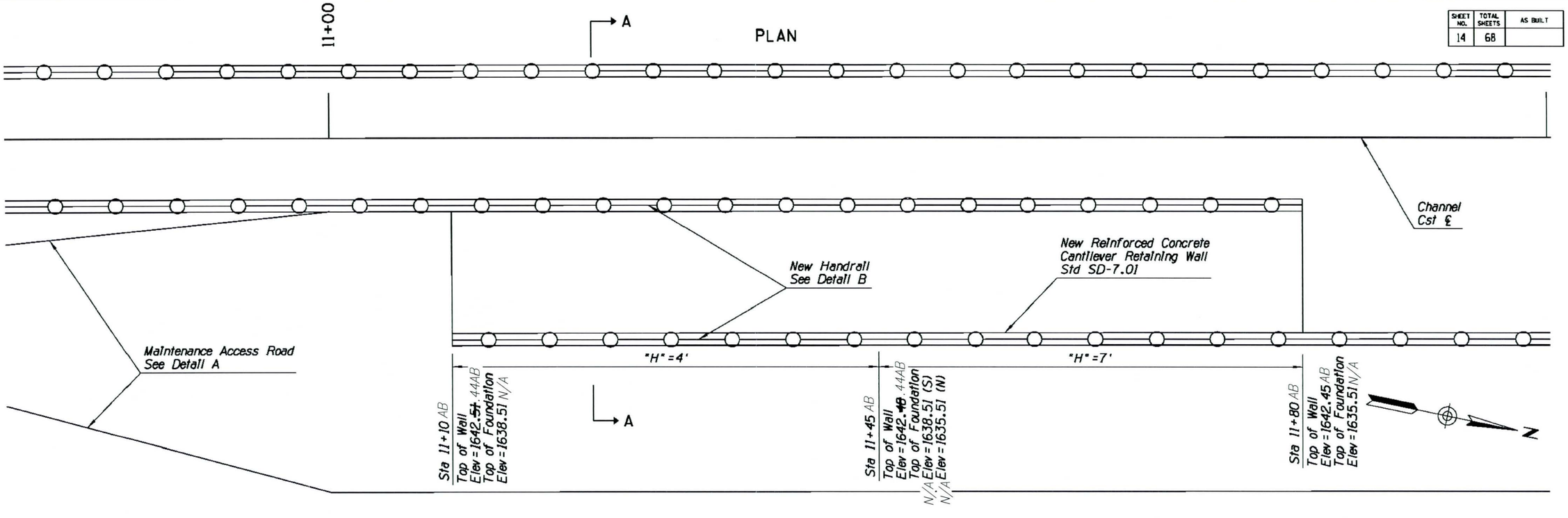

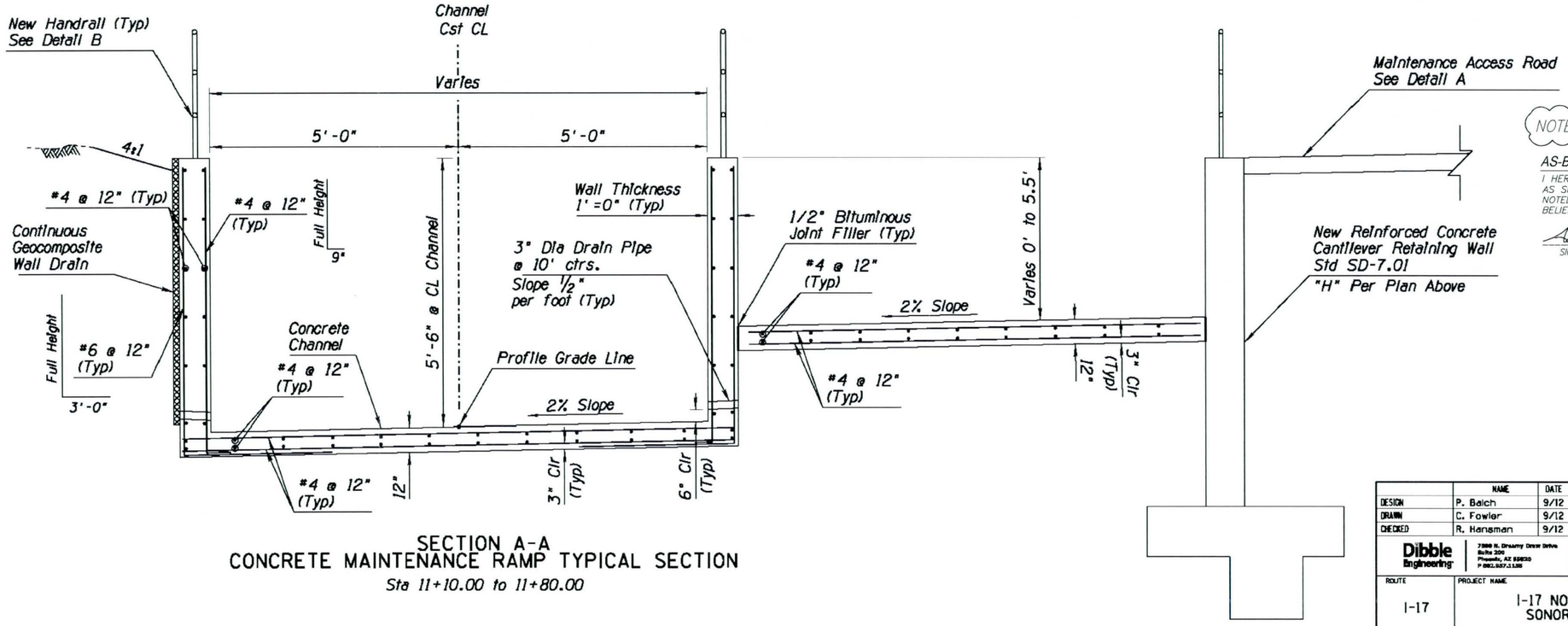

SECTION A-A
CONCRETE MAINTENANCE RAMP TYPICAL SECTION
Sta 11+10.00 to 11+80.00

GENERAL NOTES:

NOTE: N/A = BURIED AT TIME OF SURVEY.

AS-BUILT CERTIFICATION

I HEREBY CERTIFY THAT THE "RECORD DRAWING" MEASUREMENTS AS SHOWN HEREON WERE MADE UNDER MY SUPERVISION, OR AS NOTED, AND ARE CORRECT TO THE BEST OF MY KNOWLEDGE AND BELIEF.

SIGNATURE	REGISTRATION NO.	DATE
	41282	09/10/13

HUBBARD ENGINEERING
1840 S. STAPLEY DR. SUITE# 137
MESA, AZ 85204
ENGINEERING FIRM

REGISTERED LAND SURVEYOR 41282 ADRIAN M. BURCHAM ARIZONA U.S.A. Date Signed 9-10-13 Expires 12-31-13

DETAIL F

CHANNEL MAINTENANCE RAMP

	NAME	DATE
DESIGN	P. Balch	9/12
DRAWN	C. Fowler	9/12
CHECKED	R. Hansman	9/12

Dibble Engineering
7500 N. Dreamy Draw Drive
Suite 200
Phoenix, AZ 85020
P 602.337.1100

MACERICH®

DETAIL SHEET
DETAIL F

REGISTERED PROFESSIONAL ENGINEER (CIVIL) 12267 ROBERT J. HANSMAN Jr. ARIZONA, U.S.A. Date Signed 9-10-13 Expires 12-31-13

ROUTE	PROJECT NAME
I-17	I-17 NORTHBOUND FRONTAGE ROAD SONORAN BOULEVARD TO SR 74

DWG No. C-3.07

___ OF ___

SURVEY NO. | FINISHED PLANS | REVISIONS | LOCATION | DATE

9/28/2012 J:\2012\111204 Macerich NBCC\CAD\USTN\h1204df.dgn

SHEET NO.	TOTAL SHEETS	AS BUILT
15	68	

AS-BUILT CERTIFICATION

I HEREBY CERTIFY THAT THE "RECORD DRAWING" MEASUREMENTS AS SHOWN HEREON WERE MADE UNDER MY SUPERVISION, OR AS NOTED, AND ARE CORRECT TO THE BEST OF MY KNOWLEDGE AND BELIEF.

SIGNATURE — 41282 REGISTRATION NO. — 09/10/13 DATE

HUBBARD ENGINEERING
1840 S. STAPLEY DR. SUITE 137
MESA, AZ 85204
ENGINEERING FIRM

REGISTERED LAND SURVEYOR — 41282 ADRIAN M. BURCHAM — ARIZONA U.S.A.

GENERAL NOTES
CURB & GUTTER

1. Curb & Gutter may be constructed by the use of forms or the concrete may be extruded.
2. When the pavement section slopes away from the gutter, the slope of the gutter shall match the pavement cross slope. Therefore, the gutter depression is not applicable.
3. Two inch deep contraction joints shall be placed in the curb and the gutter at locations which match the joints in adjacent PCCP and at approximate 15' centers when adjacent to AC pavement. Joints shall be either hand tooled or sawn.
4. Expansion joints shall be located at tangent points in curb return, at structures and a maximum 60' intervals. The 1/2" joint filler shall extend the full depth of the concrete.
5. Concrete shall be finished with a steel trowel followed by brushing with a fine brush along the length of the curb and gutter.
6. All exposed edges and hand-tooled joints shall be finished with a tool having a 1/4" radius, or as noted on the plans.
7. Place AB under single curb, valley gutter and curb & gutter when shown on plans.

◧ Curb Radius when shown on plans

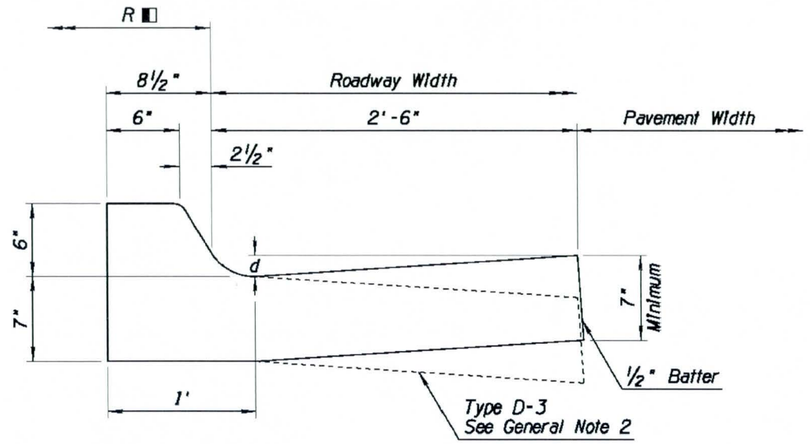

CURB & GUTTER
TYPE D-1 & D-3

Curb & Gutter Type	Gutter Depression d (in)
D-1	1 3/4
D-3	N/A

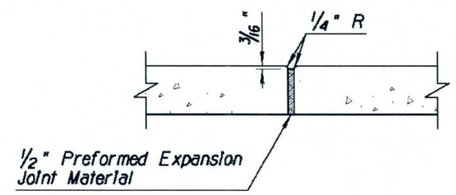

EXPANSION JOINT DETAIL

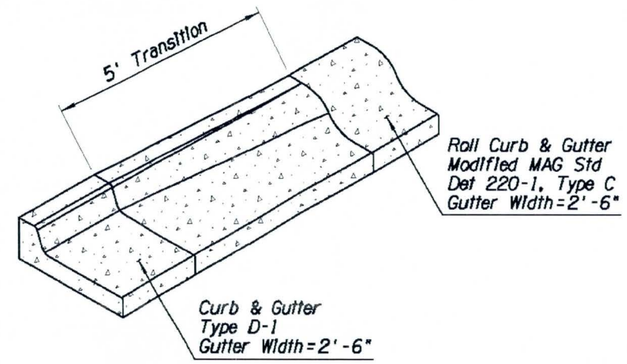

CURB & GUTTER TRANSITION
TYPE D-1 TO MODIFIED MAG STD
DET 220-1, TYPE C

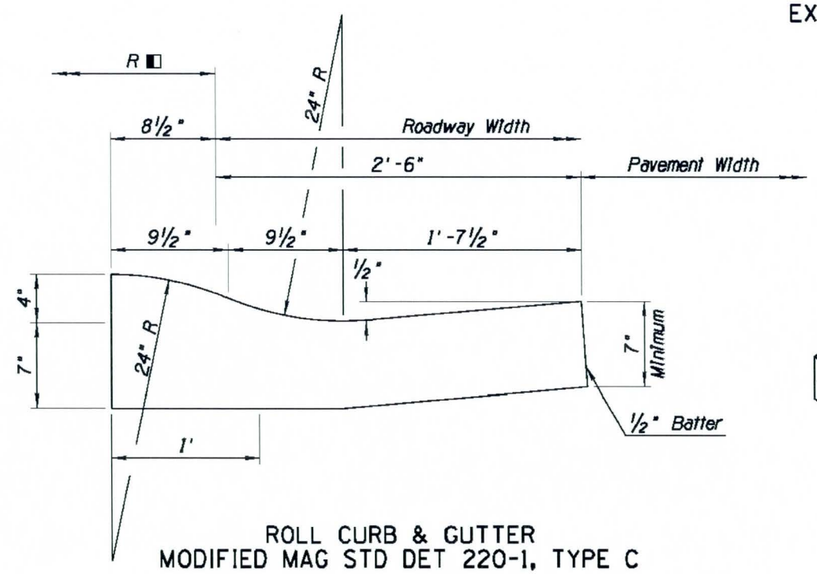

ROLL CURB & GUTTER
MODIFIED MAG STD DET 220-1, TYPE C

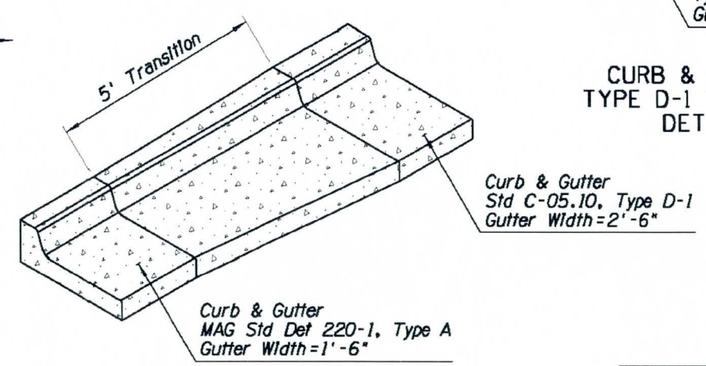

CURB & GUTTER TRANSITION
MAG STD DET 220-1, TYPE A
TO TYPE D-1

DETAIL G
CURB & GUTTER DETAILS

	NAME	DATE
DESIGN	P. Balch	9/12
DRAWN	C. Fowler	9/12
CHECKED	R. Hansman	9/12

Dibble Engineering — 7500 N. Dreamy Draw Drive, Suite 200, Phoenix, AZ 85020, P (602) 957-1155

MACERICH®

DETAIL SHEET
DETAIL G

ROUTE: I-17

PROJECT NAME: I-17 NORTHBOUND FRONTAGE ROAD
SONORAN BOULEVARD TO SR 74

REGISTERED PROFESSIONAL ENGINEER — 22871 ROBERT J. HANSMAN JR. — ARIZONA, U.S.A. — Expires 03/31/13

DWG No. C-3.08

___ OF ___

SURVEY NO. | FINISHED PLANS | REVISIONS | LOCATION | DATE

9/28/2012 J:\2012\111204 Macerich NBCC\CAD\USTN\h1204dtG.dgn

SHEET NO.	TOTAL SHEETS	AS BUILT
16	68	

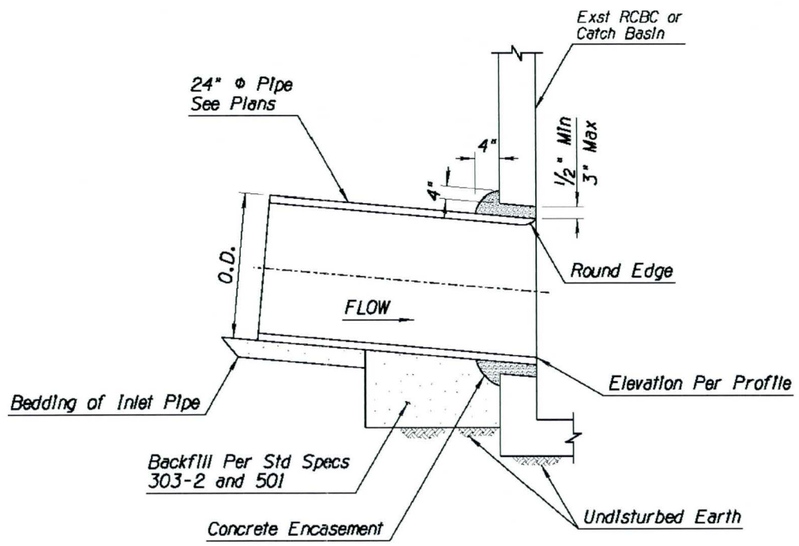

SECTION
NTS

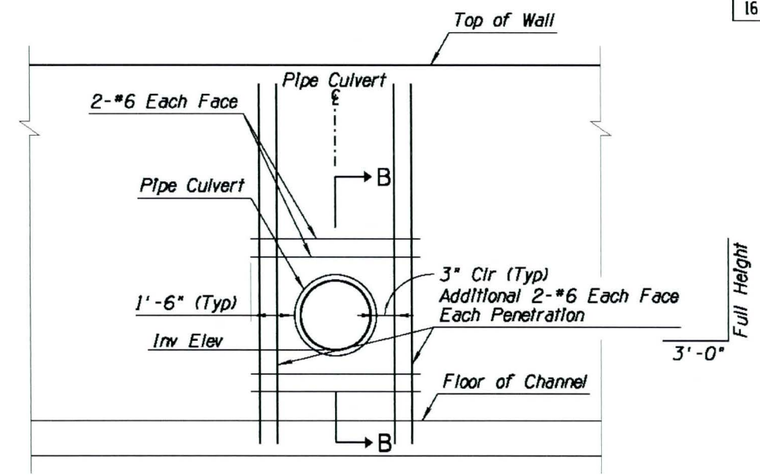

ELEVATION OF PIPE PENETRATION
NTS

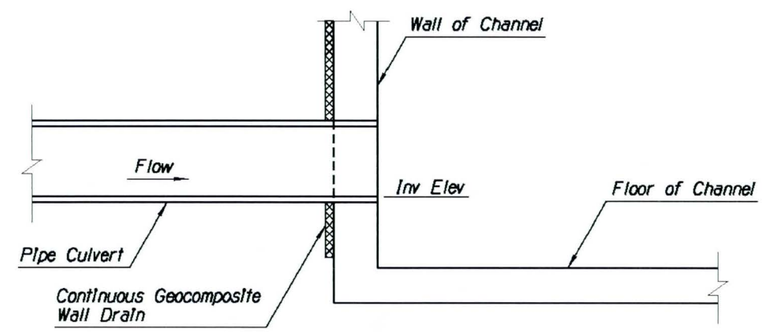

SECTION B-B
NTS

NOTES:

1. Sawcut or Hammer New Opening = O.D. Plus 6" Max.
2. All Concrete Shall be Class B.

DETAIL H

PIPE CONNECTION TO EXISTING
REINFORCED CONCRETE BOX CULVERT

DETAIL I

PIPE PENETRATION DETAIL

AS-BUILT CERTIFICATION

I HEREBY CERTIFY THAT THE "RECORD DRAWING" MEASUREMENTS AS SHOWN HEREON WERE MADE UNDER MY SUPERVISION, OR AS NOTED, AND ARE CORRECT TO THE BEST OF MY KNOWLEDGE AND BELIEF.

SIGNATURE	REGISTRATION NO.	DATE
	41282	09/10/13

HUBBARD ENGINEERING
1840 S. STAPLEY DR. SUITE# 137
MESA, AZ 85204
ENGINEERING FIRM

REGISTERED LAND SURVEYOR 41282 ADRIAN M. BURCHAM ARIZONA U.S.A.

	NAME	DATE
DESIGN	P. Balch	9/12
DRAWN	C. Fowler	9/12
CHECKED	R. Hansman	9/12

MACERICH®

Dibble Engineering
7500 N. Dreamy Draw Drive
Su ite 200
Phoenix, AZ 85020
P 602.957.1188

DETAIL SHEET
DETAIL H

ROUTE: I-17

PROJECT NAME: I-17 NORTHBOUND FRONTAGE ROAD
SONORAN BOULEVARD TO SR 74

REGISTERED PROFESSIONAL ENGINEER 12971 ROBERT J. HANSMAN Jr. ARIZONA U.S.A. Expires 06 03/30/13

DWG No. C-3.09

___ OF ___

SURVEY NO. | FINISHED PLANS- | REVISIONS- | LOCATION- | DATE-

9/28/2012 J:\2012\111204 Macerich NBCC\CAD\USTN\h1204dtH_I.dgn

SHEET NO.	TOTAL SHEETS	AS BUILT
17	68	

NOTES:

1. Base elevation = 1600.00
2. All elevations are given at 25' Intervals unless otherwise noted.
3. All elevations are at edge of pavement or lip of gutter.

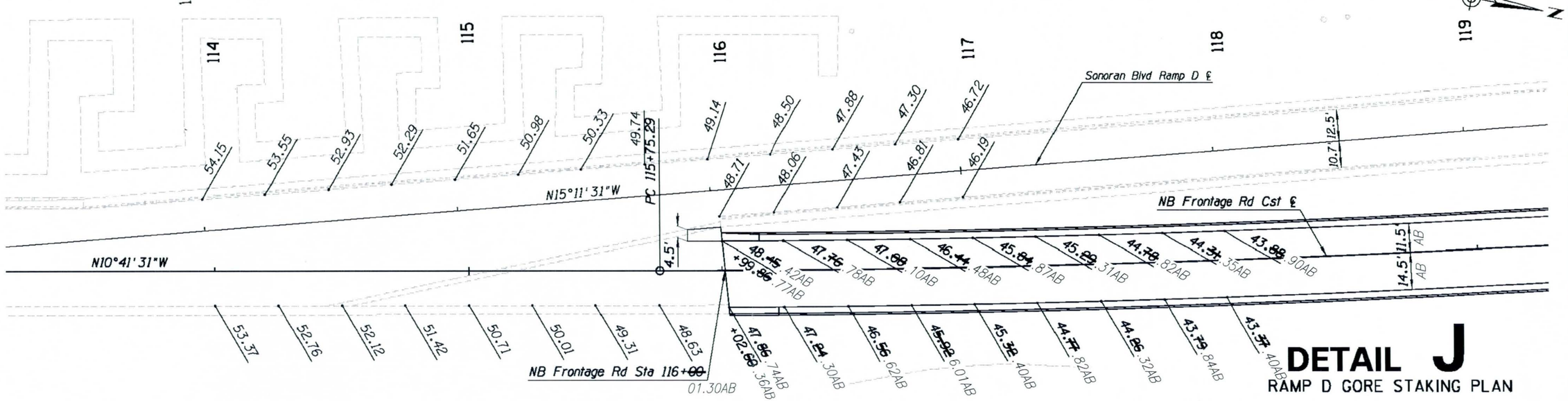

DETAIL J

RAMP D GORE STAKING PLAN

AS-BUILT CERTIFICATION

I HEREBY CERTIFY THAT THE "RECORD DRAWING" MEASUREMENTS AS SHOWN HEREON WERE MADE UNDER MY SUPERVISION, OR AS NOTED, AND ARE CORRECT TO THE BEST OF MY KNOWLEDGE AND BELIEF.

SIGNATURE	REGISTRATION NO.	DATE
	41282	09/10/13

HUBBARD ENGINEERING
1840 S. STAPLEY DR. SUITE# 137
MESA, AZ 85204
ENGINEERING FIRM

REGISTERED LAND SURVEYOR 41282 ADRIAN M. BURCHAM ARIZONA U.S.A.

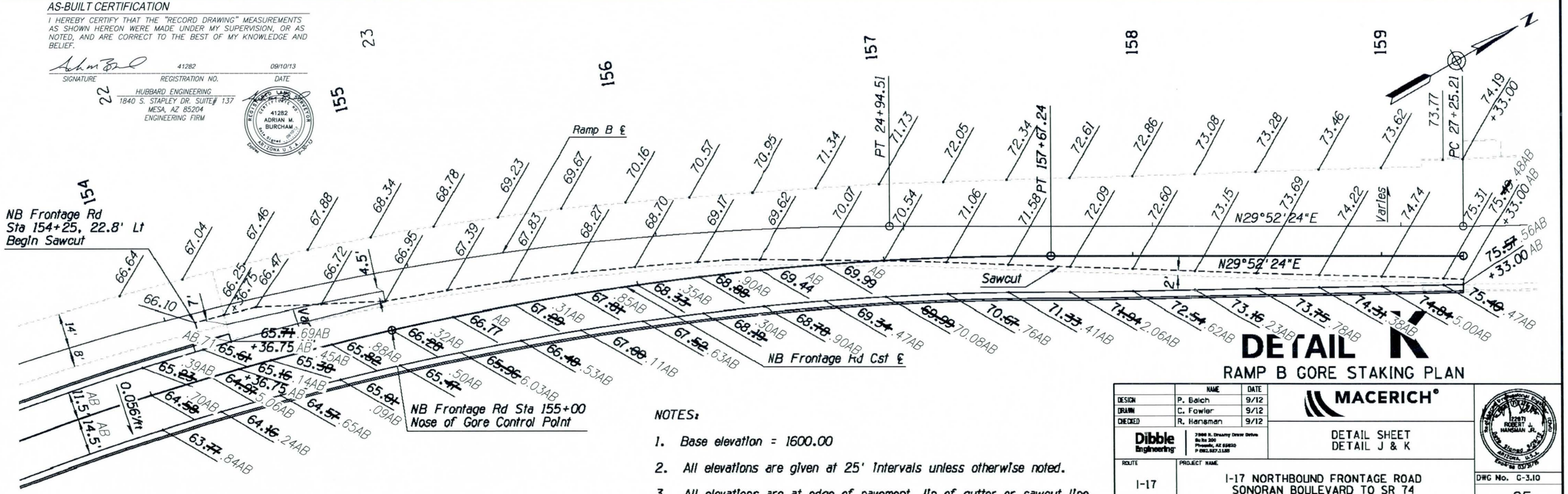

DETAIL K

RAMP B GORE STAKING PLAN

NOTES:

1. Base elevation = 1600.00
2. All elevations are given at 25' Intervals unless otherwise noted.
3. All elevations are at edge of pavement, lip of gutter or sawcut line.

	NAME	DATE
DESIGN	P. Balch	9/12
DRAWN	C. Fowler	9/12
CHECKED	R. Hansman	9/12

MACERICH®

Dibble Engineering
7500 N. Dreamy Draw Drive
Ste No 200
Phoenix, AZ 85020
P 602.337.1100

DETAIL SHEET
DETAIL J & K

ROUTE: I-17

PROJECT NAME: I-17 NORTHBOUND FRONTAGE ROAD SONORAN BOULEVARD TO SR 74

REGISTERED PROFESSIONAL ENGINEER (CIVIL) (22871) ROBERT J. HANSMAN JR. ARIZONA U.S.A. Expires 03/31/14

DWG No. C-3.10

___ OF ___

SURVEY NO. | FINISHED PLANS | REVISIONS | LOCATION | DATE

9/28/2012 J:\2012\111204 Macerich NBCC\CAD\USTN\h1204dtJ_K.dgn

SHEET NO.	TOTAL SHEETS	AS BUILT
18	68	

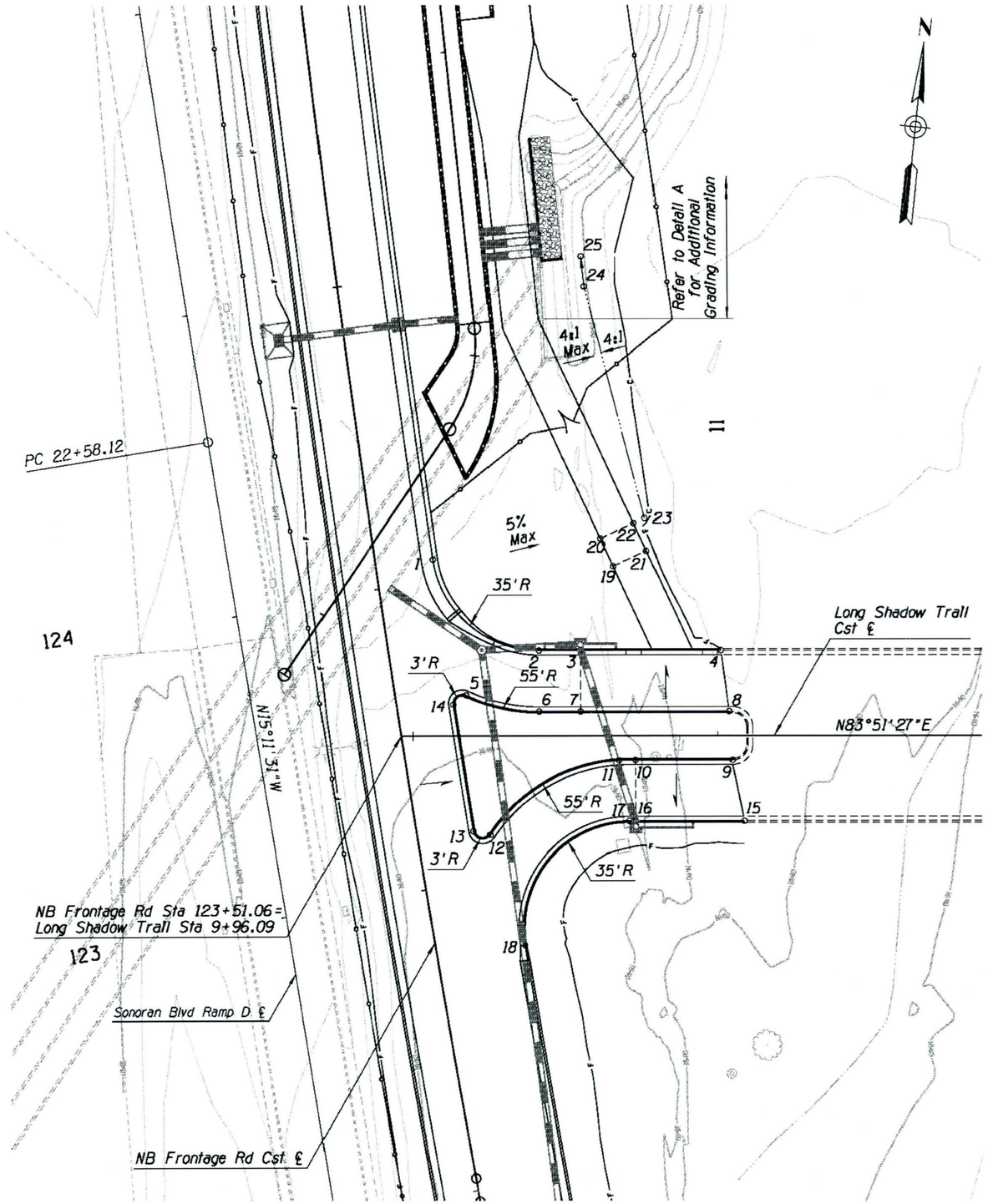

POINT	STATION	OFFSET	ELEVATION	
1	10+06.73 AB	58.06' Lt AB	1643.~~17~~	.27AB
2	10+41.38 AB	28.00' Lt AB	1641.~~45~~	.55AB
3	10+55.00 AB	28.00' Lt AB	16~~40.98~~	1.13AB
4	11+01.12 AB	28.00' Lt AB	1641.~~21~~	.25AB
5	10+17.51 AB	13.45' Lt AB	1642.~~77~~	.79AB
6	10+41.39 AB	8.00' Lt AB	1641.~~90~~	.89AB
7	10+41.39 AB	8.00' Lt AB	1641.~~43~~	.48AB
8	11+03.59 AB	9.50' Lt AB	1641.~~67~~	.72AB
9	11+04.86 AB	8.00' Rt AB	1641.~~67~~	.70AB
10	10+73.00 AB	8.00' Rt AB	1641.~~52~~	.53AB
11	10+70.91 AB	8.00' Rt AB	1641.~~56~~	.60AB
12	10+25.14 AB	32.51' Rt AB	1642.~~51~~	.59AB
13	10+19.68 AB	31.31' Rt AB	1642.~~66~~	.75AB
14	10+13.24 AB	10.30' Lt AB	1642.~~91~~	.97AB
15	11+08.60 AB	28.00' Rt AB	1641.~~24~~	.32AB
16	10+73.00 AB	28.00' Rt AB	164~~1.07~~	0.99AB
17	10+70.92 AB	28.00' Rt AB	1641.~~11~~	.16AB
18	10+36.39 AB	68.72' Rt AB	1642.~~21~~	.24AB
19	10+65.84 AB	55.75' Lt AB	1641.~~32~~	.08AB
20	10+61.66 AB	64.83' Lt AB	164~~1.12~~	0.94AB
21	10+76.74 AB	60.77' Lt AB	1641.~~20~~	.14AB
22	10+72.56 AB	69.85' Lt AB	164~~1.00~~	0.90AB
23	10+76.19 AB	71.53' Lt AB	1640.~~00~~	.55AB
24	10+56.74 AB	147.59' Lt AB	16~~38.61~~	40.48AB
25	10+55.77 AB	157.54' Lt AB	163~~8.50~~	9.69AB

NOTES:

1. All stations and offsets are referenced from the Long Shadow Trail Cst ℄.
2. Stations, offsets, elevations and dimensions are to the face of curb.

AS-BUILT CERTIFICATION

I HEREBY CERTIFY THAT THE "RECORD DRAWING" MEASUREMENTS AS SHOWN HEREON WERE MADE UNDER MY SUPERVISION, OR AS NOTED, AND ARE CORRECT TO THE BEST OF MY KNOWLEDGE AND BELIEF.

SIGNATURE	REGISTRATION NO.	DATE
	41282	09/10/13

HUBBARD ENGINEERING
1840 S. STAPLEY DR. SUITE 137
MESA, AZ 85204
ENGINEERING FIRM

REGISTERED LAND SURVEYOR 41282 ADRIAN M. BURCHAM ARIZONA U.S.A.

DETAIL L

LONG SHADOW TRAIL STAKING PLAN

	NAME	DATE
DESIGN	P. Balch	9/12
DRAWN	C. Fowler	9/12
CHECKED	R. Hansman	9/12

Dibble Engineering — 7500 N. Dreamy Draw Drive, Suite 200, Phoenix, AZ 85020, P 602.957.1155

MACERICH®

DETAIL SHEET
DETAIL L

REGISTERED PROFESSIONAL ENGINEER (CIVIL) 22671 ROBERT HANSMAN JR. ARIZONA, U.S.A. Expires 06/30/14

ROUTE: I-17

PROJECT NAME: I-17 NORTHBOUND FRONTAGE ROAD SONORAN BOULEVARD TO SR 74

DWG No. C-3.11

___ OF ___

SURVEY NO. | FINISHED PLANS | REVISIONS | LOCATION | DATE

9/28/2012 J:\2012\111204 Macerich NBCC\CAD\USTN\h1204dtL.dgn

To Accompany Change Order No.

NO	DESCRIPTION OF REVISIONS	MADE BY	DATE
	CHANNEL CROSSING OF THE APS DUCT BANK	J. Ropworth	4/2/13

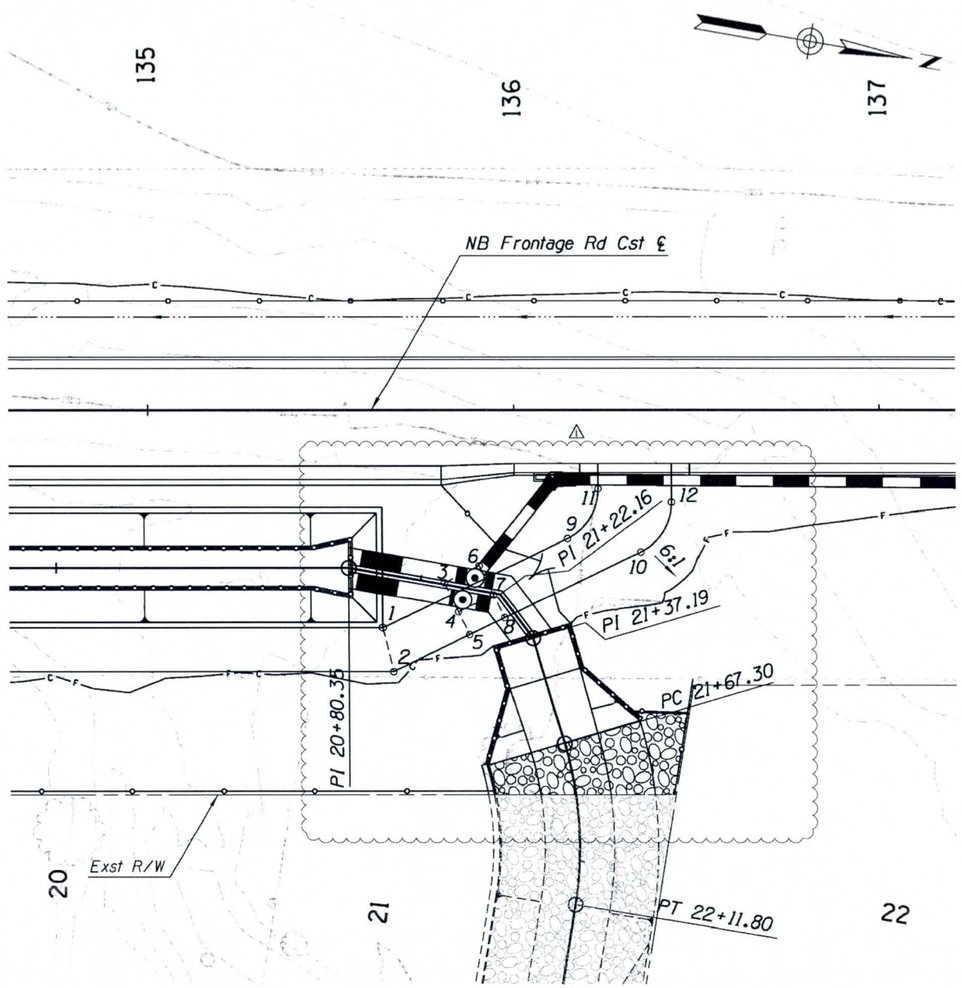

POINT	STATION	OFFSET	ELEVATION
1	AB 135+64.~~01~~.44	59.~~43~~' Rt .76AB	1648.~~92~~.98AB
2	AB 135+66.76	71.43' Rt AB	1648.~~68~~ 9.50AB
3	AB 135+80.~~25~~.61	~~47.06~~' Rt 5.76AB	1651.~~25~~.04AB
4	AB 135+84.~~62~~.38	55.~~09~~' Rt 3.51AB	1651.25 AB
5	AB 135+87.~~64~~.99	61.~~34~~' Rt .10AB	1651.~~11~~.04AB
6	AB 135+90.~~37~~1.40	42.~~42~~' Rt 0.60AB	1651.~~25~~.54AB
7	AB 135+94.~~25~~5.12	~~50.45~~' Rt 48.23AB	1651.~~25~~.51AB
8	AB 135+97.~~28~~8.86	56.~~69~~' Rt 5.95	1651.~~11~~ .49AB
9	AB 136+14.52	35.~~04~~' Rt .11AB	1652.~~43~~.30AB
10	AB 136+34.52	38.71' Rt AB	1652.~~55~~.70AB
11	AB 136+23.00	21.53' Rt AB	1653.22 AB
12	AB 136+43.00	25.20' Rt AB	1653.36 AB

NOTE:

1. Station and offsets are referenced from the NB Frontage Rd Cst ℄.

DETAIL M

NORTH CHANNEL GRADING DETAIL

AS-BUILT CERTIFICATION

I HEREBY CERTIFY THAT THE "RECORD DRAWING" MEASUREMENTS AS SHOWN HEREON WERE MADE UNDER MY SUPERVISION, OR AS NOTED, AND ARE CORRECT TO THE BEST OF MY KNOWLEDGE AND BELIEF.

SIGNATURE	REGISTRATION NO.	DATE
	41282	09/10/13

HUBBARD ENGINEERING
1840 S. STAPLEY DR. SUITE# 137
MESA, AZ 85204
ENGINEERING FIRM

REGISTERED LAND SURVEYOR 41282 ADRIAN M. BURCHAM ARIZONA U.S.A.

SHEET NO.	TOTAL SHEETS	AS BUILT
19	68	

GENERAL NOTES:

Construction Specification - Arizona Department of Transportation Standard Specifications for Road and Bridge Construction, latest Edition.

Design Specifications - AASHTO LRFD Bridge Design Specifications, 6th Edition 2012.

This barrier has been successfully crash tested and is structurally evaluated as meeting the requirements of NCHRP Report 350 Test Level 4.

All Concrete shall be Class "S" (f'c = 4000 psi).

Reinforcing steel shall conform to ASTM Specification A615. All reinforcing shall be furnished as Grade 60. All reinforcing shall be epoxy coated at locations above EL.4000 ft.

All bends and hooks shall meet the requirements of AASHTO LRFD Article 5.10. All bend dimensions for reinforcing steel shall be out-to-out of bars. All placement dimensions for reinforcing steel shall be to center of bars unless noted otherwise.

All reinforcing steel shall have 2 inch clear cover unless noted otherwise.

Anchorage bars are included in the pay item for barrier (Item No. 6011140).

Dimensions shall not be scaled from drawings.

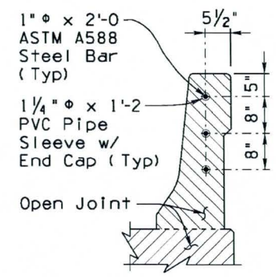

OPEN JOINT DETAIL
At Expansion Joints

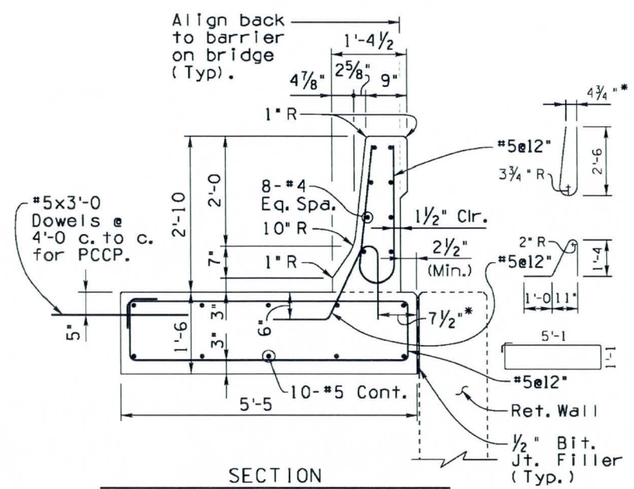

SECTION
Continuous Barrier With Footing

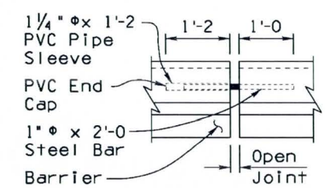

JOINT BAR DETAIL

DETAIL N

F-SHAPE CONCRETE BARRIER (32") NOMINAL

	NAME	DATE
DESIGN	P. Balch	4/13
DRAWN	C. Fowler	4/13
CHECKED	R. Hansman	4/13

MACERICH®

Dibble Engineering
7500 N. Dreamy Draw Drive
Suite 200
Phoenix, AZ 85020
P 602.957.1153

DETAIL SHEET
DETAIL M & N

REGISTERED PROFESSIONAL ENGINEER (CIVIL) 22871 ROBERT J. HANSMAN JR. ARIZONA U.S.A. Date Signed 4/2/13 Expires 03/31/15

ROUTE: I-17

PROJECT NAME: I-17 NORTHBOUND FRONTAGE ROAD SONORAN BOULEVARD TO SR 74

DWG No. G-3.12

___ OF ___

SURVEY NO. | FINISHED PLANS | REVISIONS | LOCATION | DATE

4/3/2013 J:\2012\111204 Macerich NBCC\CAD\USTN\h1204dtM.dgn

To Accompany Change Order No.

SHEET NO.	TOTAL SHEETS	AS BUILT
19A	68	

NO	DESCRIPTION OF REVISIONS	MADE BY	DATE
1	CHANNEL CROSSING OF APS DUCT BANK	J. Papworth	4/22/2013

DATE:
LOCATION:
REVISIONS:
FINISHED PLANS:
SURVEY NO.

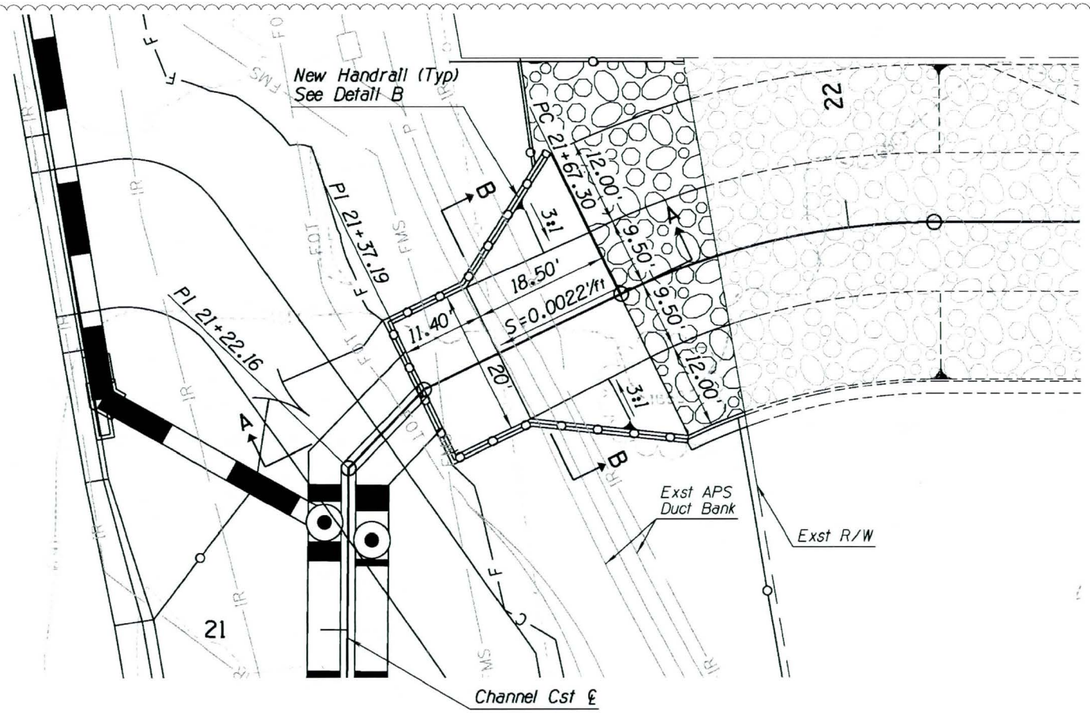

PLAN VIEW

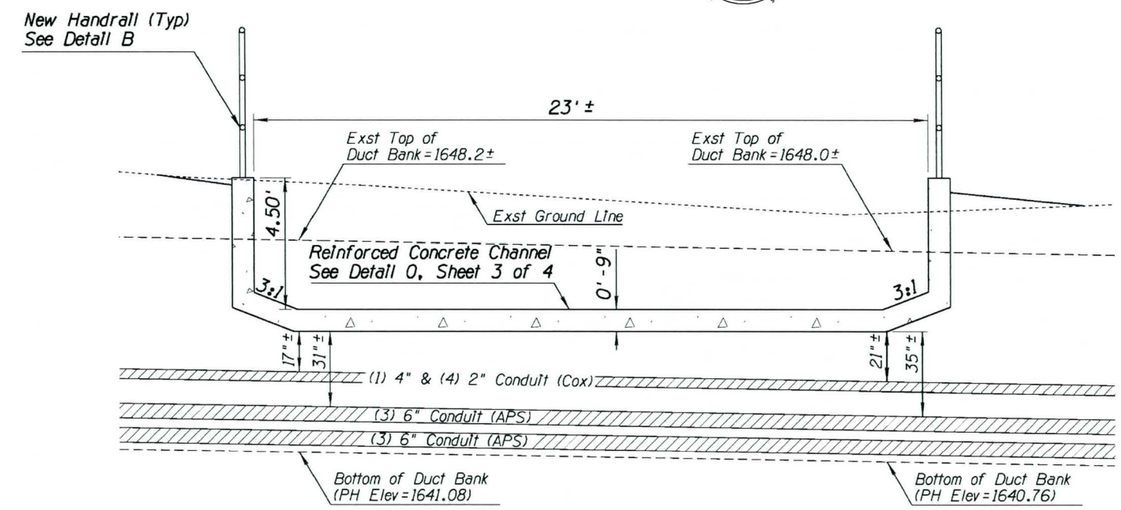

SECTION B-B

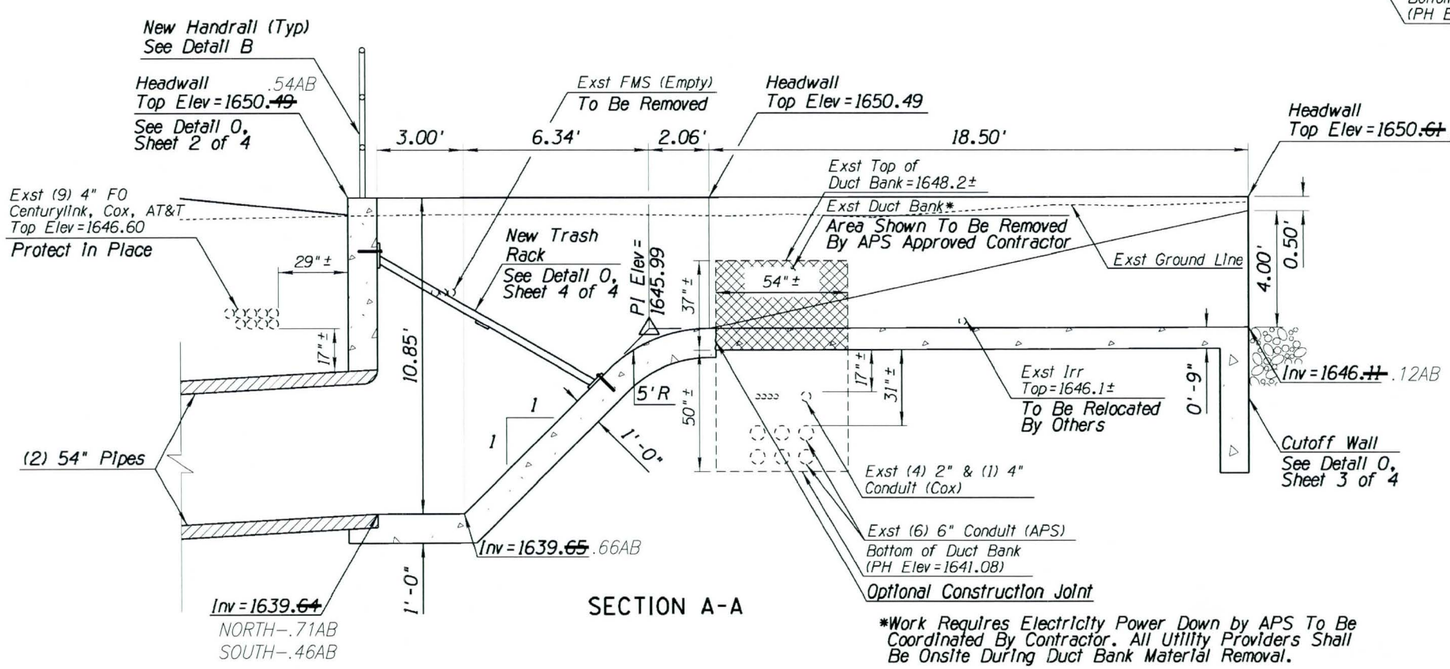

SECTION A-A

*Work Requires Electricity Power Down by APS To Be Coordinated By Contractor. All Utility Providers Shall Be Onsite During Duct Bank Material Removal.

AS-BUILT CERTIFICATION

I HEREBY CERTIFY THAT THE "RECORD DRAWING" MEASUREMENTS AS SHOWN HEREON WERE MADE UNDER MY SUPERVISION, OR AS NOTED, AND ARE CORRECT TO THE BEST OF MY KNOWLEDGE AND BELIEF.

SIGNATURE	REGISTRATION NO.	DATE
	41282	09/10/13

HUBBARD ENGINEERING
1840 S. STAPLEY DR. SUITE# 137
MESA, AZ 85204
ENGINEERING FIRM

REGISTERED LAND SURVEYOR
CERTIFICATE NO.
41282
ADRIAN W.
BURCHAM
ARIZONA U.S.A.
EXPIRES 06/30/14

NOTES:

1. For General Notes see Detail D, Dwg G-3.03
2. All structural steel shall be in accordance with ASTM A36.
3. Rack bars shall be equally spaced.
4. Trash rack assembly shall be fastened to the concrete by means of a bolt system, so at a later time it can be removed simply by removing the bolts.
5. All welding shall be in accordance with Std Spec 604-3.06.
6. The completed trash rack assembly shall be given two shop coats of Number 1 paint, see Std Spec 610.

DETAIL O

PIPE/CHANNEL HEADWALL
SHEET 1 OF 4

	NAME	DATE
DESIGN	P. Balch	4/13
DRAWN	C. Fowler	4/13
CHECKED	R. Hansman	4/13

Dibble Engineering
7500 N. Dreamy Draw Drive
Suite 200
Phoenix, AZ 85020
P 602.957.1155

MACERICH®

DETAIL SHEET
DETAIL O

REGISTERED PROFESSIONAL ENGINEER (CIVIL)
22871
ROBERT J. HANSMAN JR.
ARIZONA, U.S.A.
Expires 03/31/15

ROUTE: I-17

PROJECT NAME: I-17 NORTHBOUND FRONTAGE ROAD
SONORAN BOULEVARD TO SR 74

DWG No. G-3.12A

OF

4/3/2013 J:\2012\111204 Macerich NBCC\CAD\USTN\h1204dt0.dgn

To Accompany Change Order No.

SHEET NO.	TOTAL SHEETS	AS BUILT
19B	68	

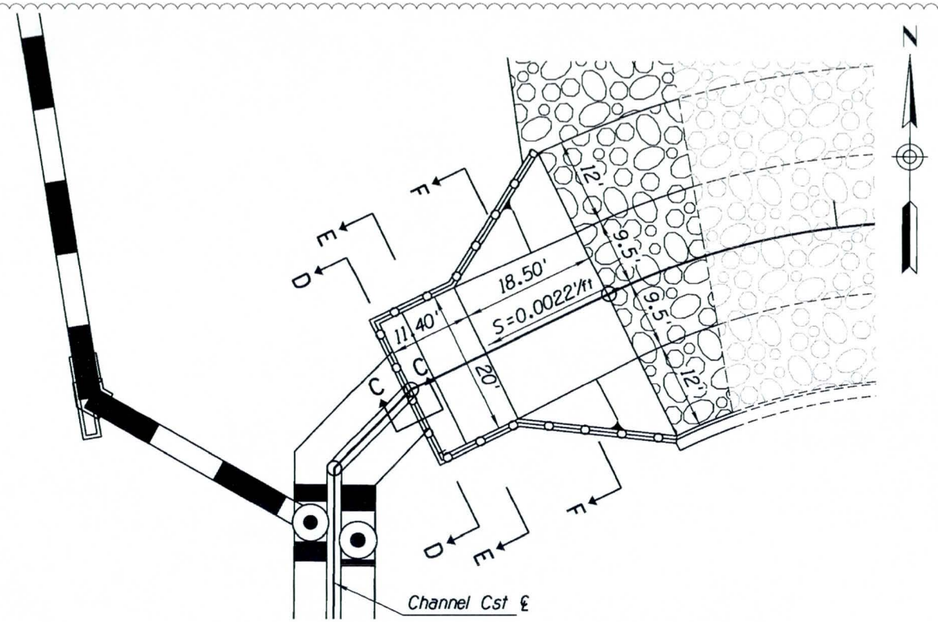

PLAN

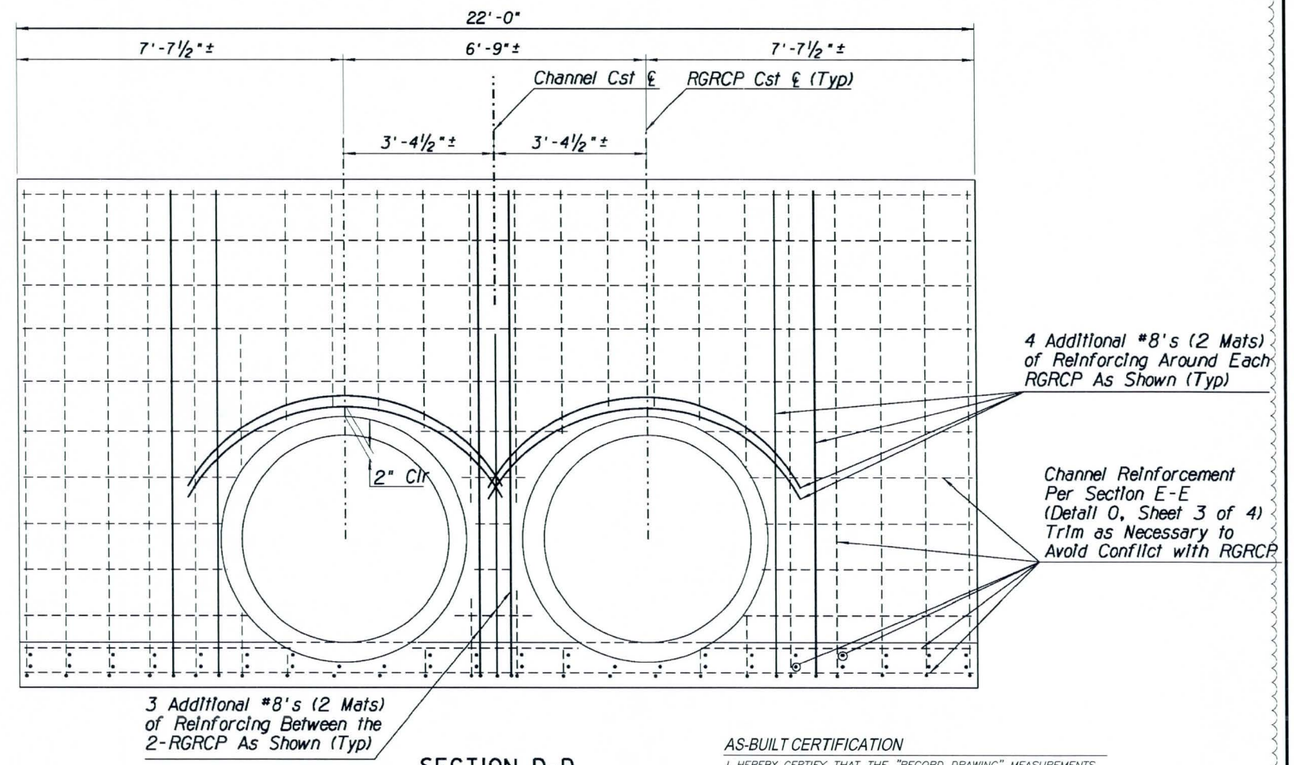

SECTION D-D
HEADWALL
DOUBLE 54" RGRCP
NTS

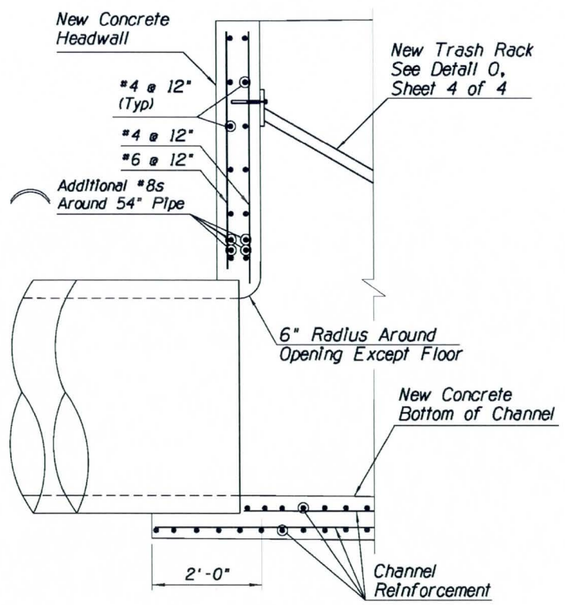

SECTION C-C
CHANNEL TRANSITION
TO DOUBLE 54" RGRCP
NTS

NOTES:

1. Handrail not shown for clarity.

AS-BUILT CERTIFICATION

I HEREBY CERTIFY THAT THE "RECORD DRAWING" MEASUREMENTS AS SHOWN HEREON WERE MADE UNDER MY SUPERVISION, OR AS NOTED, AND ARE CORRECT TO THE BEST OF MY KNOWLEDGE AND BELIEF.

SIGNATURE	REGISTRATION NO.	DATE
	41282	09/10/13

HUBBARD ENGINEERING
1840 S. STAPLEY DR. SUITE 137
MESA, AZ 85204
ENGINEERING FIRM

REGISTERED LAND SURVEYOR 41282 ADRIAN M. BURCHAM ARIZONA U.S.A. 4-30-13

DETAIL O

PIPE/CHANNEL HEADWALL
SHEET 2 of 4

	NAME	DATE
DESIGN	O. Olden	4/13
DRAWN	C. Fowler	4/13
CHECKED	R. Hansman	4/13

Dibble Engineering — 7500 N. Dreamy Draw Drive, Suite 200, Phoenix, AZ 85020, P 602.957.1155

MACERICH®

DETAIL SHEET
DETAIL O

REGISTERED PROFESSIONAL ENGINEER (CIVIL) 20940 OSCAR A. OLIDEN ARIZONA, U.S.A. 12/31/14

ROUTE: I-17

PROJECT NAME: I-17 NORTHBOUND FRONTAGE ROAD SONORAN BOULEVARD TO SR 74

DWG No. G-3.12B

___ OF ___

MADE BY	DATE	DESCRIPTION OF REVISIONS	NO
J. Rosworth	4/2/2013	CHANNEL CROSSING OF APS DUCT BANK	1

SURVEY NO. | FINISHED PLANS | REVISIONS | LOCATION | DATE

4/3/2013 J:\2012\111204 Macerich NBCC\CAD\USTN\h1204dt01.dgn

To Accompany Change Order No.

SHEET NO.	TOTAL SHEETS	AS BUILT
19C	68	

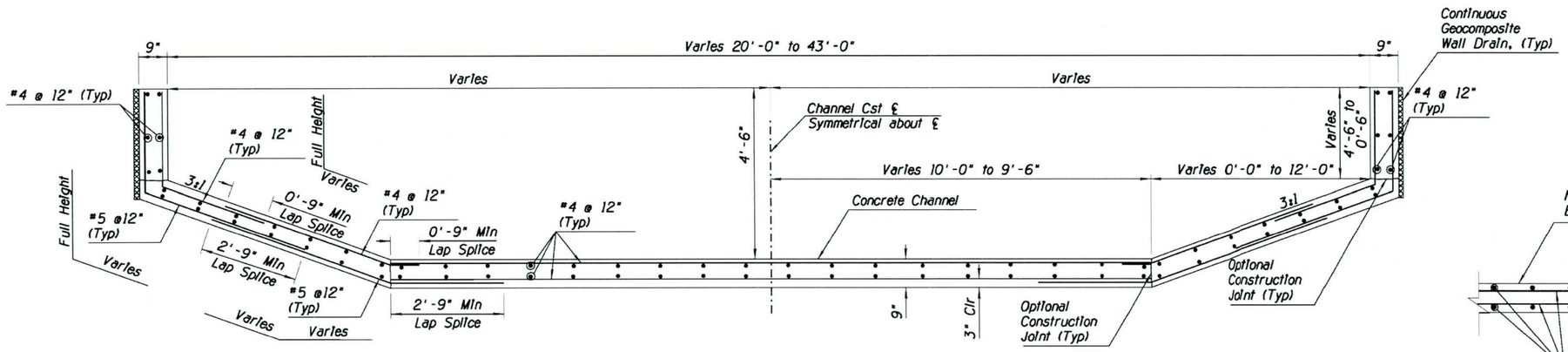

SECTION F-F
CONCRETE CHANNEL
TRAPEZOIDAL SECTION
Sta 21+48.59 to 21+67.09

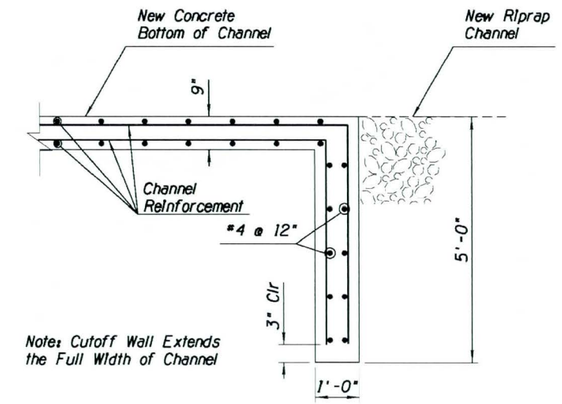

END OF CHANNEL
CUTOFF WALL

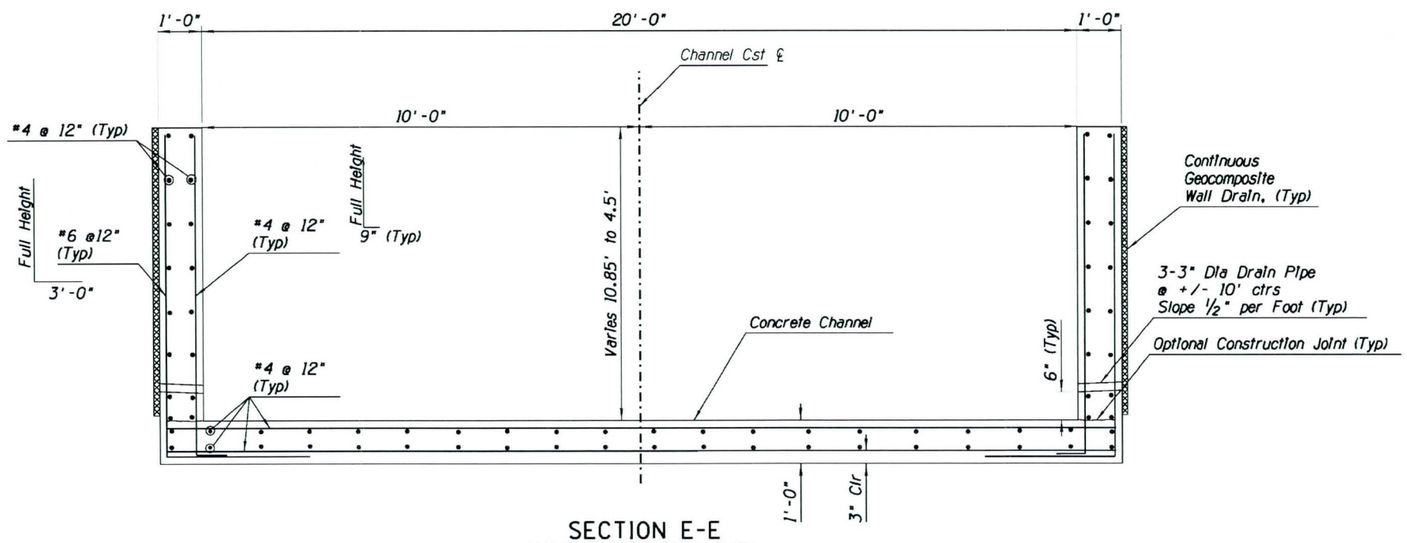

SECTION E-E
CONCRETE CHANNEL
CONSTANT SECTION
Sta 21+37.19 to 21+48.59

NOTES:

1. Handrail not shown for clarity.

AS-BUILT CERTIFICATION

I HEREBY CERTIFY THAT THE "RECORD DRAWING" MEASUREMENTS AS SHOWN HEREON WERE MADE UNDER MY SUPERVISION, OR AS NOTED, AND ARE CORRECT TO THE BEST OF MY KNOWLEDGE AND BELIEF.

SIGNATURE	REGISTRATION NO.	DATE
	41282	09/10/13

HUBBARD ENGINEERING
1840 S. STAPLEY DR. SUITE # 137
MESA, AZ 85204
ENGINEERING FIRM

REGISTERED LAND SURVEYOR
41282
ADRIAN M. BURCHAM
Date Signed 09/10/13
ARIZONA U.S.A.
Expires 12/31/13

DETAIL O

PIPE/CHANNEL HEADWALL
SHEET 3 of 4

	NAME	DATE
DESIGN	O. Olden	4/13
DRAWN	C. Fowler	4/13
CHECKED	R. Hansman	4/13

Dibble Engineering
7500 N. Dreamy Draw Drive
Suite 200
Phoenix, AZ 85020
P 602.957.1155

MACERICH®

DETAIL SHEET
DETAIL O

Registered Professional Engineer (Civil)
CERTIFICATE NO.
20940
OSCAR A. OLIDEN
Date Signed 09/09/13
ARIZONA, U.S.A.
Expires 12/31/13

ROUTE: I-17

PROJECT NAME: I-17 NORTHBOUND FRONTAGE ROAD
SONORAN BOULEVARD TO SR 74

DWG No. G-3.12C

___ OF ___

NO	DESCRIPTION OF REVISIONS	MADE BY	DATE
1	CHANNEL CROSSING OF APS DUCT BANK	J. Papworth	4/2/2013

SURVEY NO. | FINISHED PLANS | REVISIONS | LOCATION | DATE

4/3/2013 J:\2012\111204 Macerich NBCC\CAD\USTN\h1204dt02.dgn

To Accompany Change Order No.

SHEET NO.	TOTAL SHEETS	AS BUILT
19D	68	

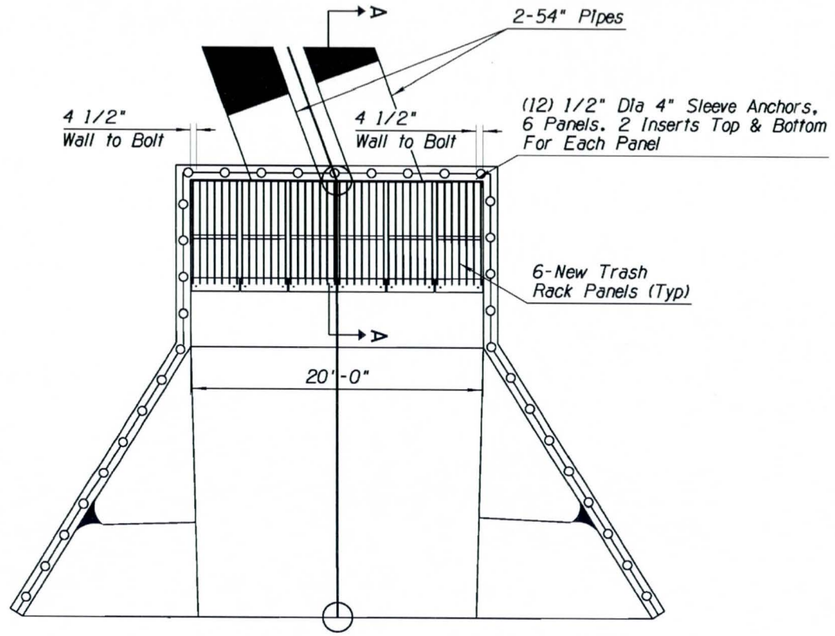

INLET PLAN
PIPE/CHANNEL HEADWALL

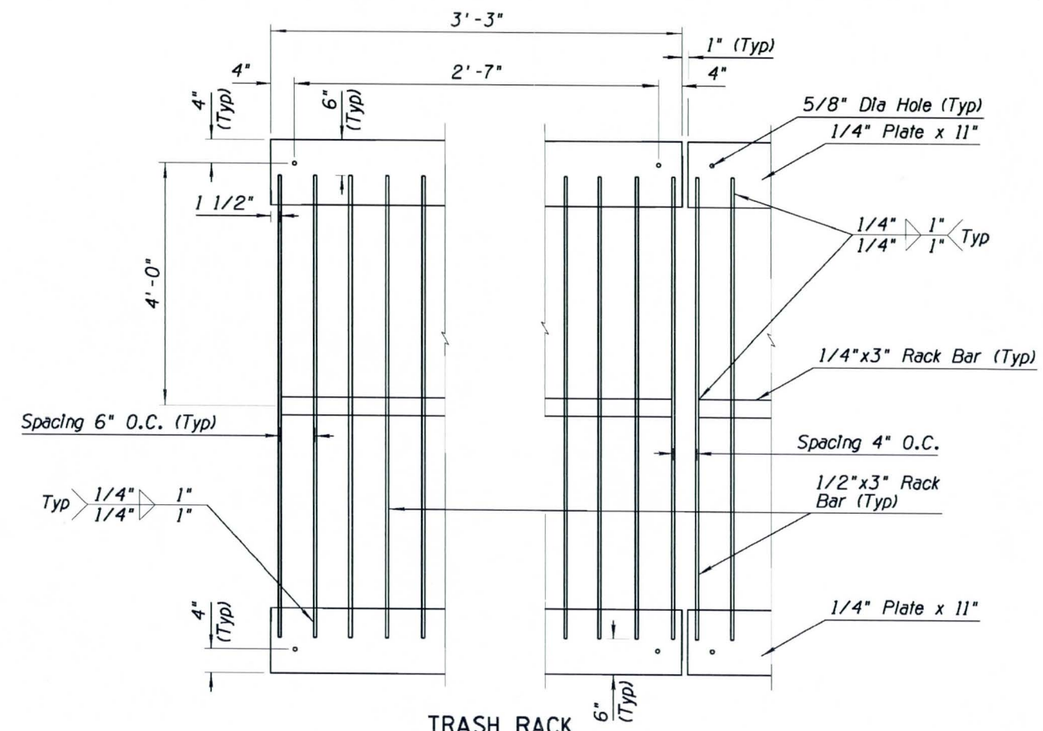

TRASH RACK
ELEVATION

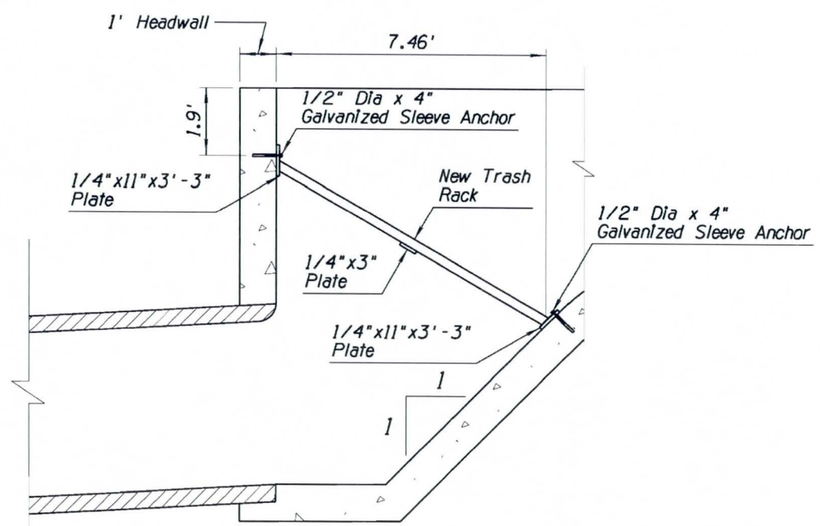

SECTION A-A
TRASH RACK

NOTES:

1. Handrail not shown for clarity.

AS-BUILT CERTIFICATION

I HEREBY CERTIFY THAT THE "RECORD DRAWING" MEASUREMENTS AS SHOWN HEREON WERE MADE UNDER MY SUPERVISION, OR AS NOTED, AND ARE CORRECT TO THE BEST OF MY KNOWLEDGE AND BELIEF.

SIGNATURE	REGISTRATION NO.	DATE
	41282	09/10/13

HUBBARD ENGINEERING
1840 S. STAPLEY DR. SUITE# 137
MESA, AZ 85204
ENGINEERING FIRM

REGISTERED LAND SURVEYOR 41282 ADRIAN M. BURCHAM Date Signed 09/10/13 ARIZONA U.S.A. Expires 12/31/13

DETAIL O

PIPE/CHANNEL HEADWALL
SHEET 4 of 4

	NAME	DATE
DESIGN	O. Olden	4/13
DRAWN	C. Fowler	4/13
CHECKED	R. Hansman	4/13

Dibble Engineering
7500 N. Dreamy Draw Drive
Suite 200
Phoenix, AZ 85020
P 602.957.1155

MACERICH®

DETAIL SHEET
DETAIL O

Registered Professional Engineer (Civil) CERTIFICATE NO. 20940 OSCAR A. OLIDEN Date Signed 09/09/13 ARIZONA, U.S.A. Expires 12/31/13

ROUTE: I-17

PROJECT NAME: I-17 NORTHBOUND FRONTAGE ROAD SONORAN BOULEVARD TO SR 74

DWG No. G-3.12D

___ OF ___

NO	DESCRIPTION OF REVISIONS	MADE BY	DATE
	CHANNEL CROSSING OF APS DUCT BANK	J. Paworth	4/2/2013

SURVEY NO. | FINISHED PLANS | REVISIONS | LOCATION | DATE

4/3/2013 J:\2012\111204 Macerich NBCC\CAD\USTN\h1204dt03.dgn

SHEET NO.	TOTAL SHEETS	AS BUILT
20	68	

RIGHT-OF-WAY CONTROL DATA

POINT NO	COORDINATES		DESCRIPTION
	NORTHING	EASTING	
200	1012827.452	635127.047	Not Found
201	1012892.925	635126.541	Not Found
202	1012953.581	634819.649	3" ACF stamped ADOT ROW 2011 I-017-A-702 21046
203	1013174.738	634745.949	Not Found
204	1014432.338	634438.263	Not Found
205	1015354.639	634277.527	3" ACF stamped ADOT ROW 2011 I-017-A-702 13043
206	1015354.357	634247.128	3" ACF stamped ADOT ROW 2011 I-017-A-702 13044
207	1016754.385	634003.135	3" ACF stamped ADOT ROW 2011 I-017-A-702 4196
208	1017102.815	634017.472	3" BCF set in concrete stamped Arizona Highway Department 1964
209	1017812.992	634594.033	3" BCF set in concrete stamped Arizona Highway Department
210	1017952.466	634591.466	3" ACF stamped ADOT ROW 2011 I-017-A-702 1301

SECTIONAL CONTROL DATA

POINT NO	COORDINATES		ELEVATION	DESCRIPTION
	NORTHING	EASTING		
304	1015394.370	633706.386	1653.11	2" ACF marked T5N R2E 1/4 S10/S11 2001
305	1012762.054	636371.436	1629.58	3" BCF marked T5N R2E 1/4 S11 1/4 S14 2001
306	1012741.673	633726.204	1628.69	Stone

PROJECT CONTROL DATA

POINT NO	COORDINATES		ELEVATION	DESCRIPTION
	NORTHING	EASTING		
92	1014239.670	634472.814	1641.86	Set CP
93	1014040.426	634490.807	1640.60	Set CP
94	1013607.357	634477.831	1643.66	Set CP
95	1013217.357	634635.396	1651.45	Set CP
96	1012839.952	634668.030	1659.25	Set CP
197	1017584.437	634273.888	1671.99	Set CP
198	1017290.601	634003.499	1669.82	Set CP
199	1016796.681	633929.581	1661.12	Set CP

LEGEND

- Project Control Point
- Right-of-Way Monument

NOTES

Arizona Central Zone
State Plane Coordinates
Modified to ground at Point No 305,
using a G.A.F.of 1.0001686744

Horizontal Datum=NAD 83 (Epoch 2007)
Vertical Datum=City of Phoenix (NGVD 29)
Units=International Feet
Geoid Model=Geoid 09

All coordinates are ground coordinates.

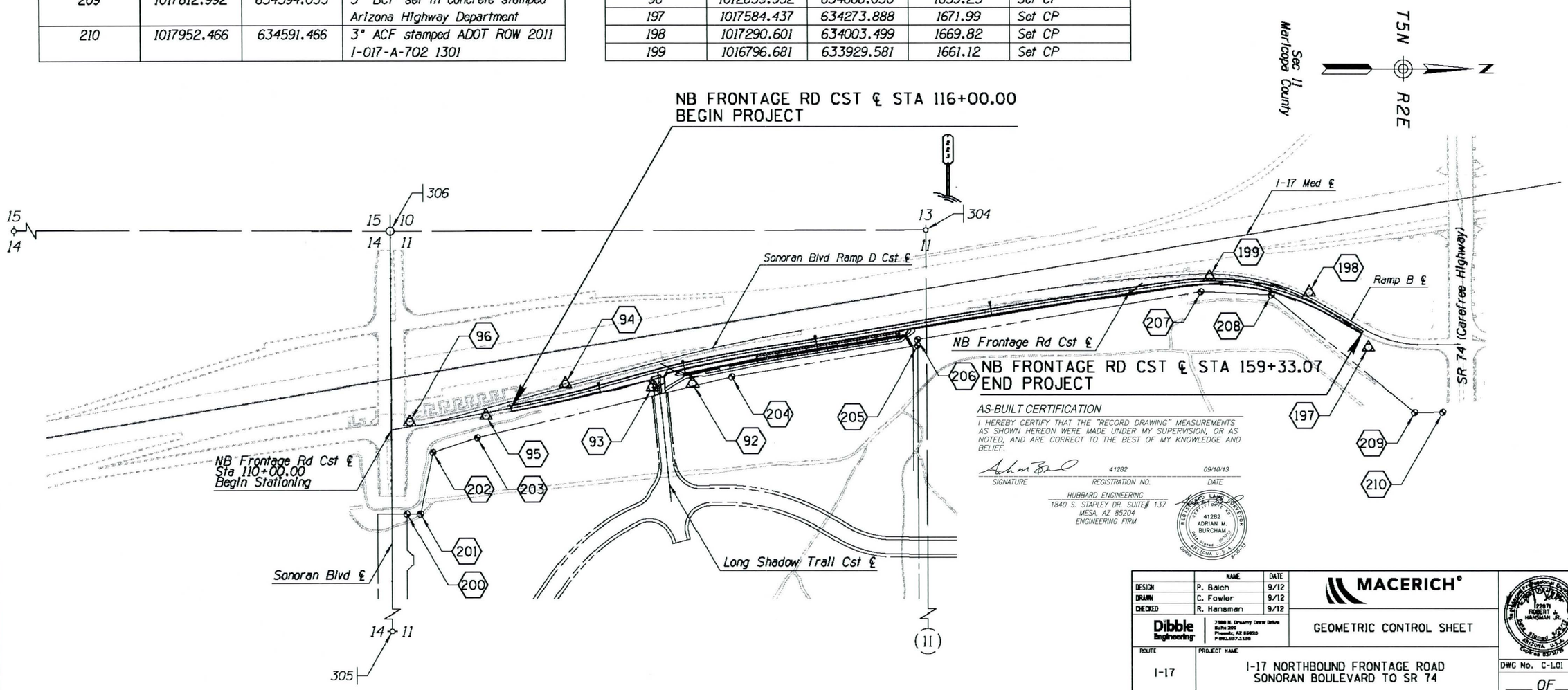

AS-BUILT CERTIFICATION

I HEREBY CERTIFY THAT THE "RECORD DRAWING" MEASUREMENTS AS SHOWN HEREON WERE MADE UNDER MY SUPERVISION, OR AS NOTED, AND ARE CORRECT TO THE BEST OF MY KNOWLEDGE AND BELIEF.

SIGNATURE	REGISTRATION NO.	DATE
	41282	09/10/13

HUBBARD ENGINEERING
1840 S. STAPLEY DR. SUITE# 137
MESA, AZ 85204
ENGINEERING FIRM

REGISTERED LAND SURVEYOR 41282 ADRIAN M. BURCHAM ARIZONA U.S.A.

	NAME	DATE
DESIGN	P. Balch	9/12
DRAWN	C. Fowler	9/12
CHECKED	R. Hansman	9/12

MACERICH®

Dibble Engineering
7500 N. Dreamy Draw Drive
Suite 200
Phoenix, AZ 85020
P 602.957.1155

GEOMETRIC CONTROL SHEET

REGISTERED PROFESSIONAL ENGINEER (CIVIL) 22871 ROBERT J. HANSMAN Jr. ARIZONA, U.S.A.

ROUTE: I-17

PROJECT NAME: I-17 NORTHBOUND FRONTAGE ROAD
SONORAN BOULEVARD TO SR 74

DWG No. C-1.01

___ OF ___

SURVEY NO. | FINISHED PLANS- | REVISIONS- | LOCATION- | DATE-

9/28/2012 J:\2012\111204 Macerich NBCC\CAD\USTN\h1204g01.dgn

SHEET NO.	TOTAL SHEETS	AS BUILT
21	68	

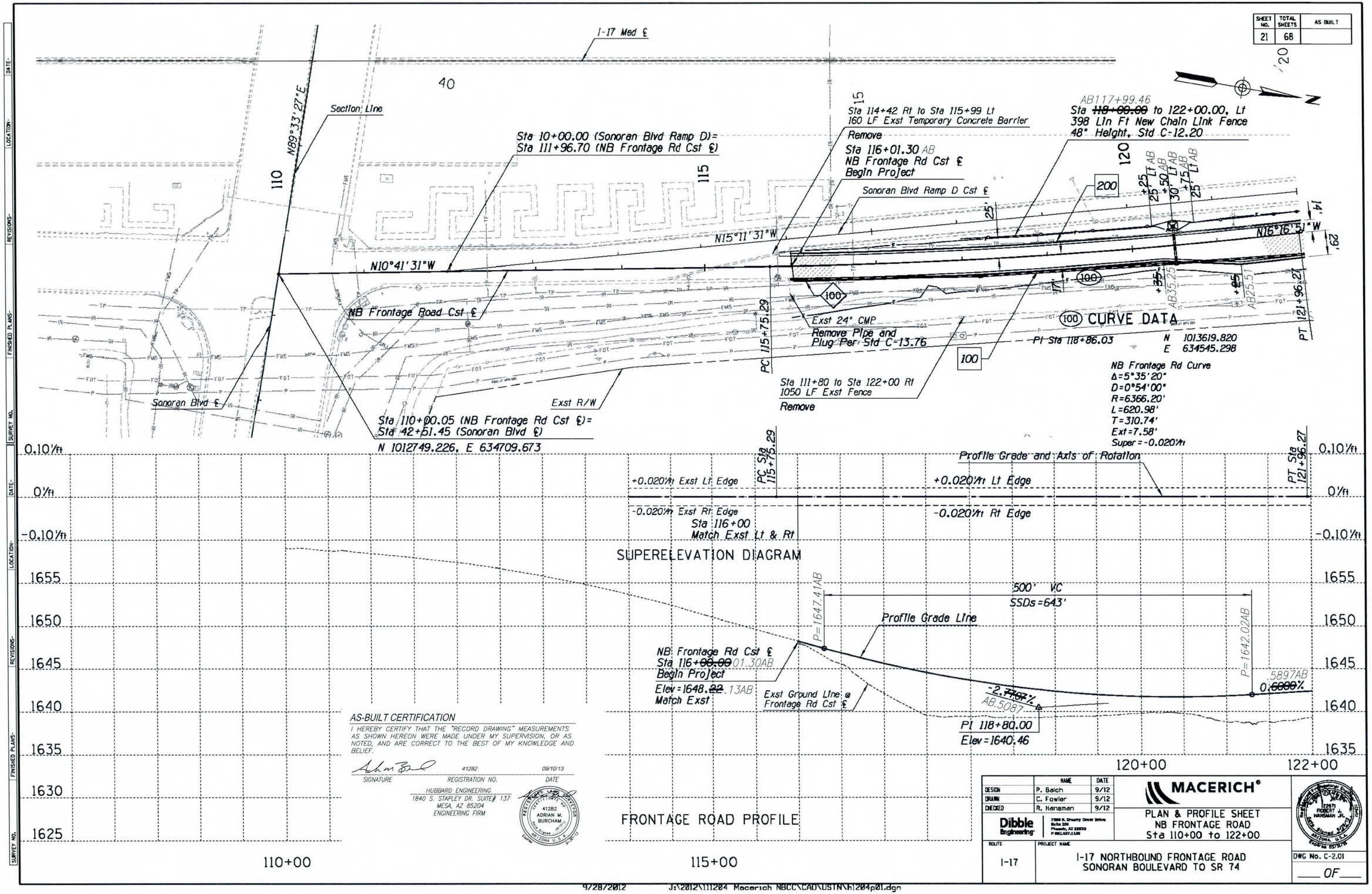

AS-BUILT CERTIFICATION

I HEREBY CERTIFY THAT THE "RECORD DRAWING" MEASUREMENTS AS SHOWN HEREON WERE MADE UNDER MY SUPERVISION, OR AS NOTED, AND ARE CORRECT TO THE BEST OF MY KNOWLEDGE AND BELIEF.

SIGNATURE	REGISTRATION NO.	DATE
	41282	09/10/13

HUBBARD ENGINEERING
1840 S. STAPLEY DR. SUITE# 137
MESA, AZ 85204
ENGINEERING FIRM

REGISTERED LAND SURVEYOR — 41282 — ADRIAN M. BURCHAM — ARIZONA U.S.A.

	NAME	DATE
DESIGN	P. Balch	9/12
DRAWN	C. Fowler	9/12
CHECKED	R. Hansman	9/12

MACERICH®

Dibble Engineering — 7500 N. Dreamy Draw Drive, Suite 200, Phoenix, AZ 85020, P 602.687.1100

PLAN & PROFILE SHEET
NB FRONTAGE ROAD
Sta 110+00 to 122+00

REGISTERED PROFESSIONAL ENGINEER — 22671 — ROBERT J. HANSMAN JR. — ARIZONA U.S.A.

ROUTE	PROJECT NAME
I-17	I-17 NORTHBOUND FRONTAGE ROAD SONORAN BOULEVARD TO SR 74

DWG No. C-2.01

____ OF ____

9/28/2012 J:\2012\111204 Macerich NBCC\CAD\USTN\h1204p01.dgn

SHEET NO.	TOTAL SHEETS	AS BUILT
22	68	

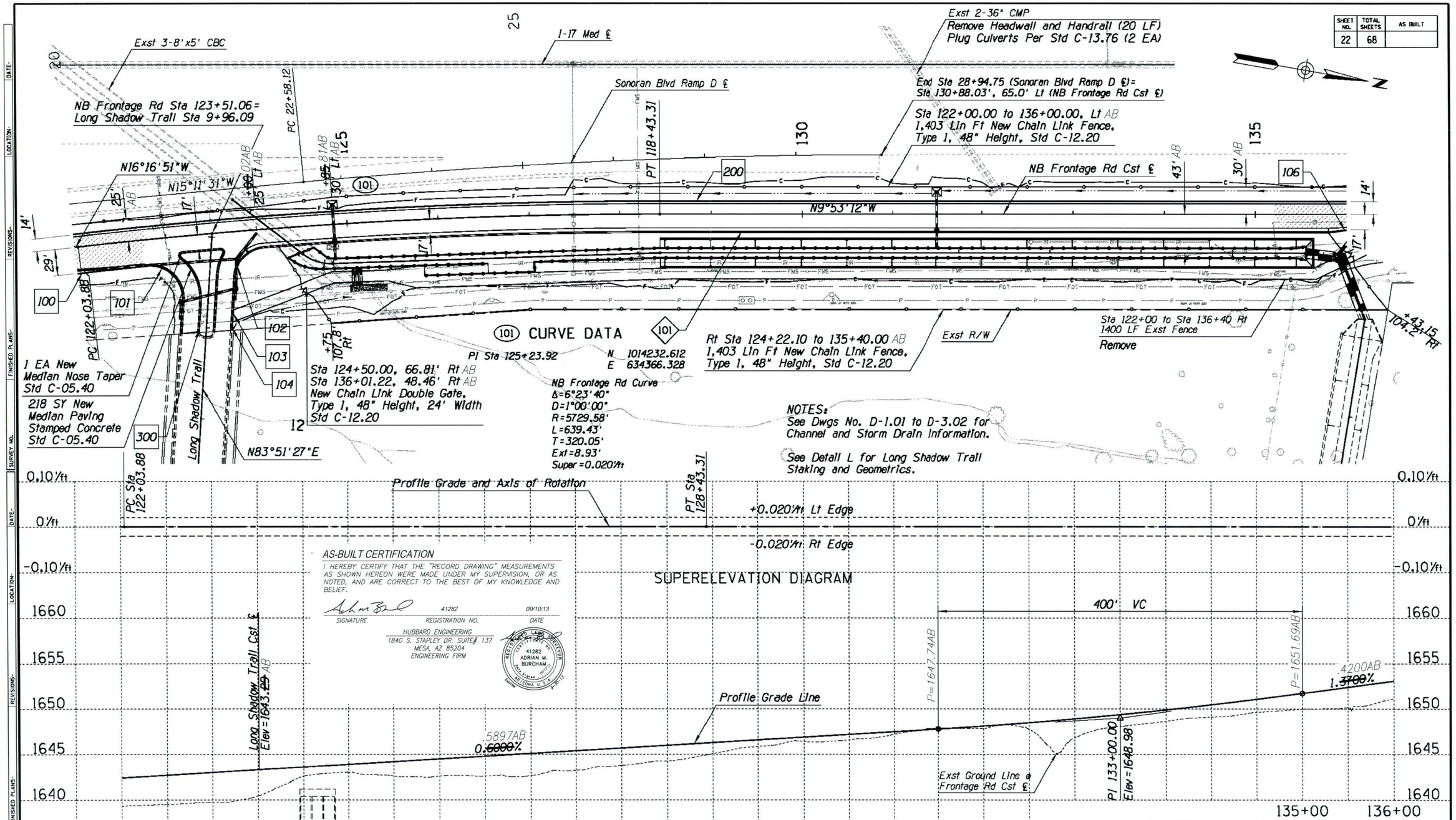

	NAME	DATE
DESIGN	P. Balch	9/12
DRAWN	C. Fowler	9/12
CHECKED	R. Hansman	9/12

Dibble Engineering
7500 N. Dreamy Draw Drive
Suite 200
Phoenix, AZ 85020
P 602.957.1188

MACERICH®

PLAN & PROFILE SHEET
NB FRONTAGE ROAD
Sta 122+00 to 136+00

12271
ROBERT J. HANSMAN JR.
ARIZONA, U.S.A.

ROUTE: I-17

PROJECT NAME: I-17 NORTHBOUND FRONTAGE ROAD
SONORAN BOULEVARD TO SR 74

DWG No. C-2.02

___ OF ___

9/28/2012 J:\2012\111204 Macerich NBCC\CAD\USTN\h1204p02.dgn

SHEET NO.	TOTAL SHEETS	AS BUILT
23	68	

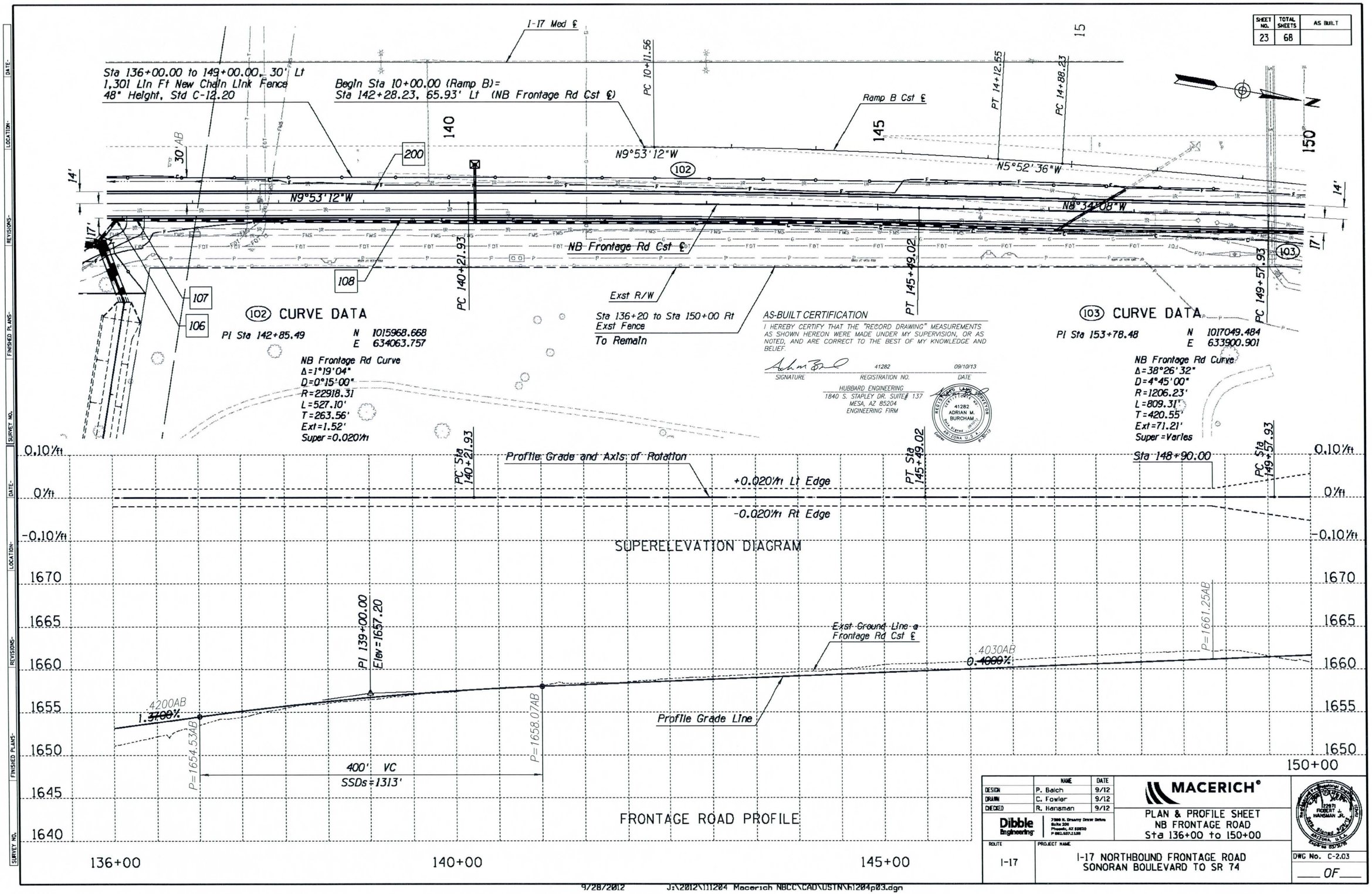

	NAME	DATE
DESIGN	P. Balch	9/12
DRAWN	C. Fowler	9/12
CHECKED	R. Hansman	9/12

Dibble Engineering
7500 N. Dreamy Draw Drive
Suite 200
Phoenix, AZ 85020
P 602.687.1186

MACERICH®

PLAN & PROFILE SHEET
NB FRONTAGE ROAD
Sta 136+00 to 150+00

REGISTERED PROFESSIONAL ENGINEER
72671
ROBERT J. HANSMAN JR.
ARIZONA U.S.A.
EXPIRES 06/30/13

ROUTE: I-17

PROJECT NAME: I-17 NORTHBOUND FRONTAGE ROAD
SONORAN BOULEVARD TO SR 74

DWG No. C-2.03

___ OF ___

9/28/2012 J:\2012\111204 Macerich NBCC\CAD\USTN\h1204p03.dgn

DATE- LOCATION- REVISIONS- FINISHED PLANS- SURVEY NO.

SHEET NO.	TOTAL SHEETS	AS BUILT
24	68	

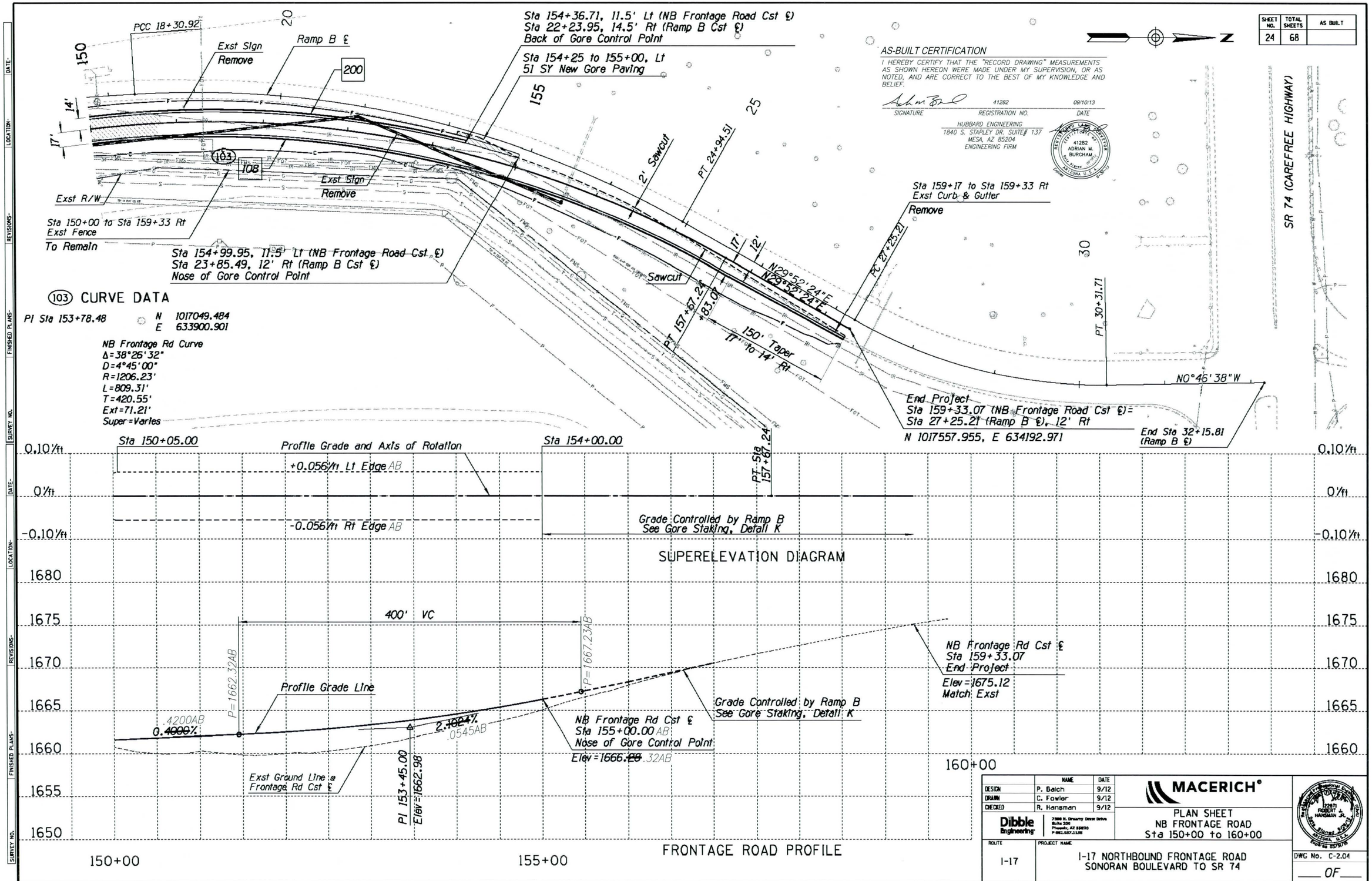

AS-BUILT CERTIFICATION

I HEREBY CERTIFY THAT THE "RECORD DRAWING" MEASUREMENTS AS SHOWN HEREON WERE MADE UNDER MY SUPERVISION, OR AS NOTED, AND ARE CORRECT TO THE BEST OF MY KNOWLEDGE AND BELIEF.

SIGNATURE	REGISTRATION NO.	DATE
	41282	09/10/13

HUBBARD ENGINEERING
1840 S. STAPLEY DR. SUITE# 137
MESA, AZ 85204
ENGINEERING FIRM

REGISTERED LAND SURVEYOR 41282 ADRIAN M. BURCHAM ARIZONA U.S.A.

(103) CURVE DATA

PI Sta 153+78.48 N 1017049.484 E 633900.901

NB Frontage Rd Curve
Δ=38°26'32"
D=4°45'00"
R=1206.23'
L=809.31'
T=420.55'
Ext=71.21'
Super=Varies

	NAME	DATE
DESIGN	P. Balch	9/12
DRAWN	C. Fowler	9/12
CHECKED	R. Hansman	9/12

Dibble Engineering
7500 N. Dreamy Draw Drive
Suite 200
Phoenix, AZ 85020
P 602.957.1155

MACERICH®

PLAN SHEET
NB FRONTAGE ROAD
Sta 150+00 to 160+00

REGISTERED PROFESSIONAL ENGINEER (CIVIL) 12671 ROBERT J. HANSMAN JR. ARIZONA, U.S.A. EXPIRES 12/31/13

ROUTE	PROJECT NAME
I-17	I-17 NORTHBOUND FRONTAGE ROAD SONORAN BOULEVARD TO SR 74

DWG No. C-2.04

___ OF ___

9/28/2012 J:\2012\111204 Macerich NBCC\CAD\USTN\h1204p04.dgn

SHEET NO.	TOTAL SHEETS	AS BUILT
25	68	

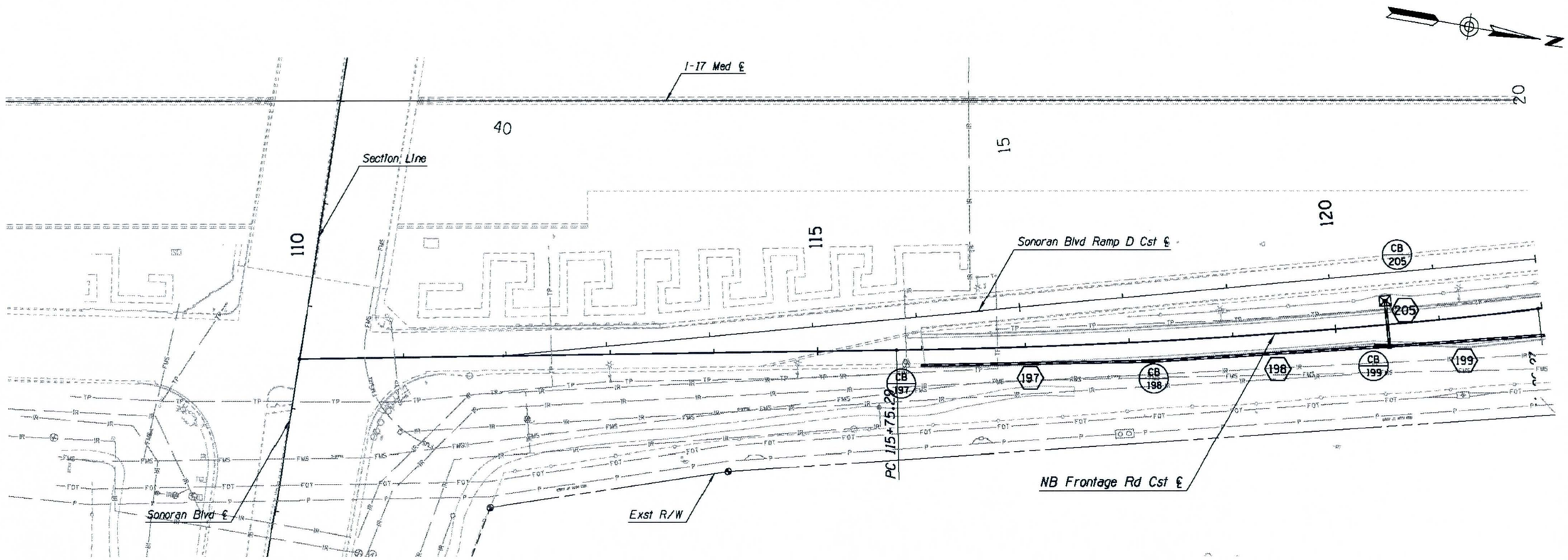

AS-BUILT CERTIFICATION

I HEREBY CERTIFY THAT THE "RECORD DRAWING" MEASUREMENTS AS SHOWN HEREON WERE MADE UNDER MY SUPERVISION, OR AS NOTED, AND ARE CORRECT TO THE BEST OF MY KNOWLEDGE AND BELIEF.

SIGNATURE	REGISTRATION NO.	DATE
	41282	09/10/13

HUBBARD ENGINEERING
1840 S. STAPLEY DR. SUITE# 137
MESA, AZ 85204
ENGINEERING FIRM

REGISTERED LAND SURVEYOR
41282
ADRIAN M. BURCHAM
Date Signed 09/10/13
ARIZONA U.S.A.

	NAME	DATE
DESIGN	A. Cox	9/12
DRAWN	C. Fowler	9/12
CHECKED	R. Hansman	9/12

MACERICH®

Dibble Engineering
7500 N. Dreamy Draw Drive
Suite 200
Phoenix, AZ 85020
P 602.687.1100

STORM DRAIN PLAN SHEET
NB FRONTAGE ROAD

REGISTERED PROFESSIONAL ENGINEER
72671
ROBERT J. HANSMAN JR.
Date Signed 09/10/13
ARIZONA U.S.A.

ROUTE	PROJECT NAME
I-17	I-17 NORTHBOUND FRONTAGE ROAD SONORAN BOULEVARD TO SR 74

DWG No. D-1.01

___ OF ___

SURVEY NO. | FINISHED PLANS- | REVISIONS- | LOCATION- | DATE-

9/28/2012 J:\2012\111204 Macerich NBCC\CAD\USTN\h1204sda.dgn

To Accompany Change Order No.

SHEET NO.	TOTAL SHEETS	AS BUILT
26	68	

NO	DESCRIPTION OF REVISIONS	MADE BY	DATE
	CHANNEL CROSSING AT APS DUCT BANK	L. Papworth	3/28/13
	ASLD COMMENT REVISIONS	L. Papworth	12/7/12

SURVEY NO. | FINISHED PLANS | REVISIONS | LOCATION | DATE

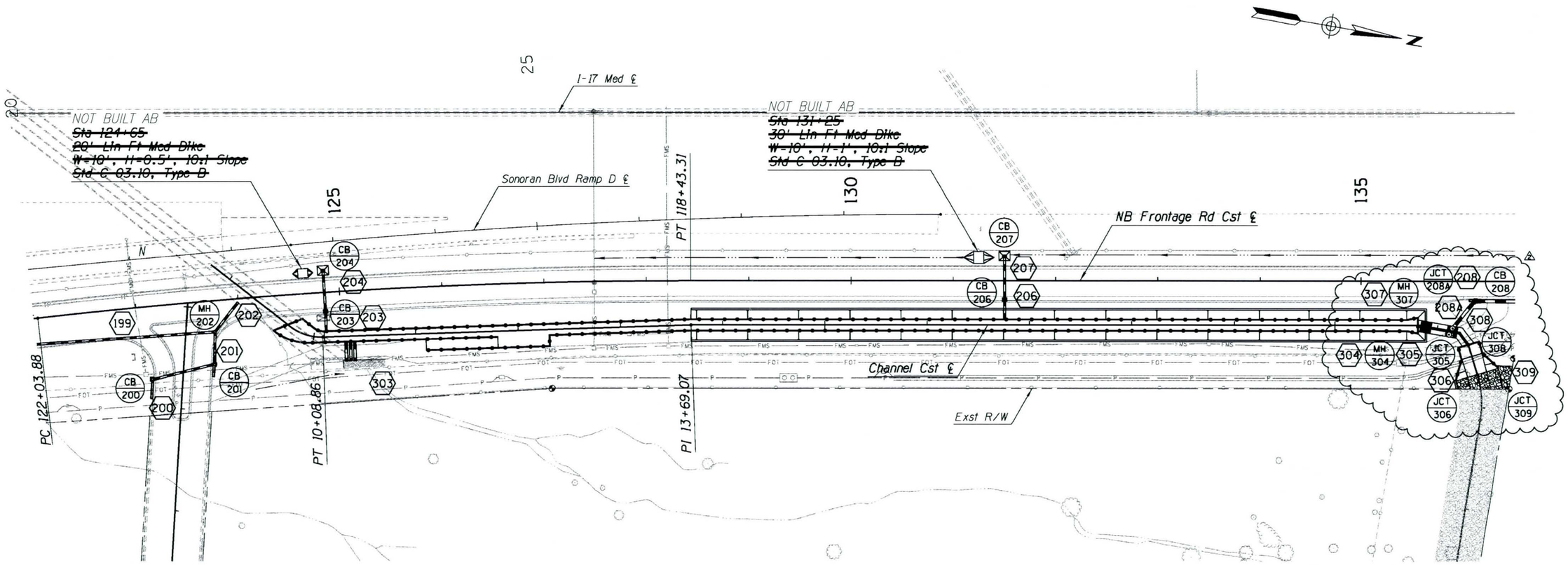

AS-BUILT CERTIFICATION

I HEREBY CERTIFY THAT THE "RECORD DRAWING" MEASUREMENTS AS SHOWN HEREON WERE MADE UNDER MY SUPERVISION, OR AS NOTED, AND ARE CORRECT TO THE BEST OF MY KNOWLEDGE AND BELIEF.

SIGNATURE	REGISTRATION NO.	DATE
	41282	09/10/13

HUBBARD ENGINEERING
1840 S. STAPLEY DR. SUITE# 137
MESA, AZ 85204
ENGINEERING FIRM

REGISTERED LAND SURVEYOR — 41282 ADRIAN M. BURCHAM — ARIZONA U.S.A.

	NAME	DATE
DESIGN	A. Cox	4/13
DRAWN	C. Fowler	4/13
CHECKED	R. Hansman	4/13

Dibble Engineering — 7500 N. Dreamy Draw Drive, Suite 200, Phoenix, AZ 85020, P 602.957.1155

MACERICH®

STORM DRAIN PLAN SHEET
NB FRONTAGE ROAD

REGISTERED PROFESSIONAL ENGINEER (CIVIL) — 22871 ROBERT J. HANSMAN JR. — Date Signed 4/3/13 — ARIZONA, U.S.A. — Expires 03/31/15

ROUTE: I-17

PROJECT NAME: I-17 NORTHBOUND FRONTAGE ROAD
SONORAN BOULEVARD TO SR 74

DWG No. D-1.02

___ OF ___

4/3/2013 J:\2012\111204 Macerich NBCC\CAD\USTN\h1204sdb.dgn

SHEET NO.	TOTAL SHEETS	AS BUILT
27	68	

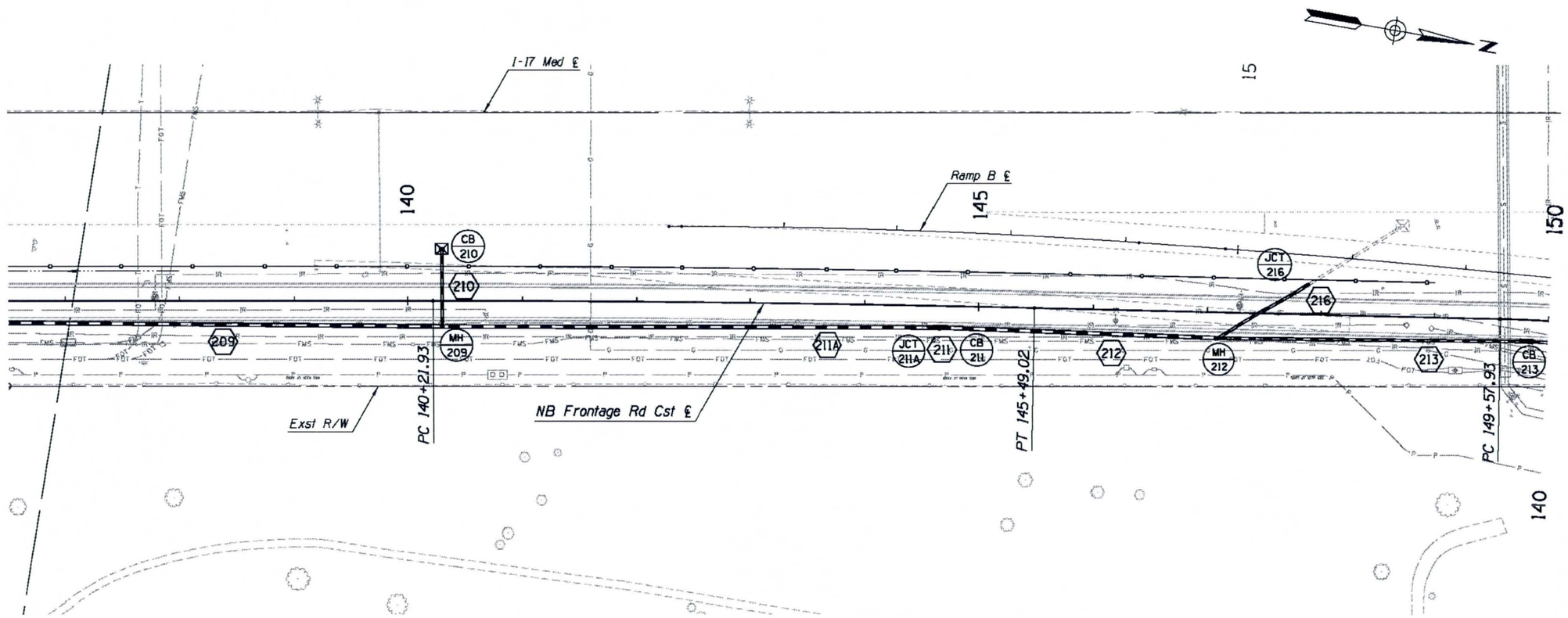

AS-BUILT CERTIFICATION

I HEREBY CERTIFY THAT THE "RECORD DRAWING" MEASUREMENTS AS SHOWN HEREON WERE MADE UNDER MY SUPERVISION, OR AS NOTED, AND ARE CORRECT TO THE BEST OF MY KNOWLEDGE AND BELIEF.

SIGNATURE	REGISTRATION NO.	DATE
	41282	09/10/13

HUBBARD ENGINEERING
1840 S. STAPLEY DR. SUITE# 137
MESA, AZ 85204
ENGINEERING FIRM

REGISTERED LAND SURVEYOR
CERTIFICATE NO.
41282
ADRIAN M. BURCHAM
Date Signed 09/10/13
ARIZONA U.S.A.

	NAME	DATE
DESIGN	A. Cox	9/12
DRAWN	C. Fowler	9/12
CHECKED	R. Hansman	9/12

MACERICH®

Dibble Engineering
7500 N. Dreamy Draw Drive
Suite 200
Phoenix, AZ 85020
P 602.507.1105

STORM DRAIN PLAN SHEET
NB FRONTAGE ROAD

REGISTERED PROFESSIONAL ENGINEER
CERTIFICATE NO.
72971
ROBERT L. HANSMAN JR.
Date Signed 09/10/13
ARIZONA U.S.A.

ROUTE	PROJECT NAME
I-17	I-17 NORTHBOUND FRONTAGE ROAD SONORAN BOULEVARD TO SR 74

DWG No. D-1.03

____ OF ____

SURVEY NO. | FINISHED PLANS- | REVISIONS- | LOCATION- | DATE-

9/28/2012 J:\2012\111204 Macerich NBCC\CAD\USTN\h1204sdc.dgn

To Accompany Change Order No.

SHEET NO.	TOTAL SHEETS	AS BUILT
28	68	

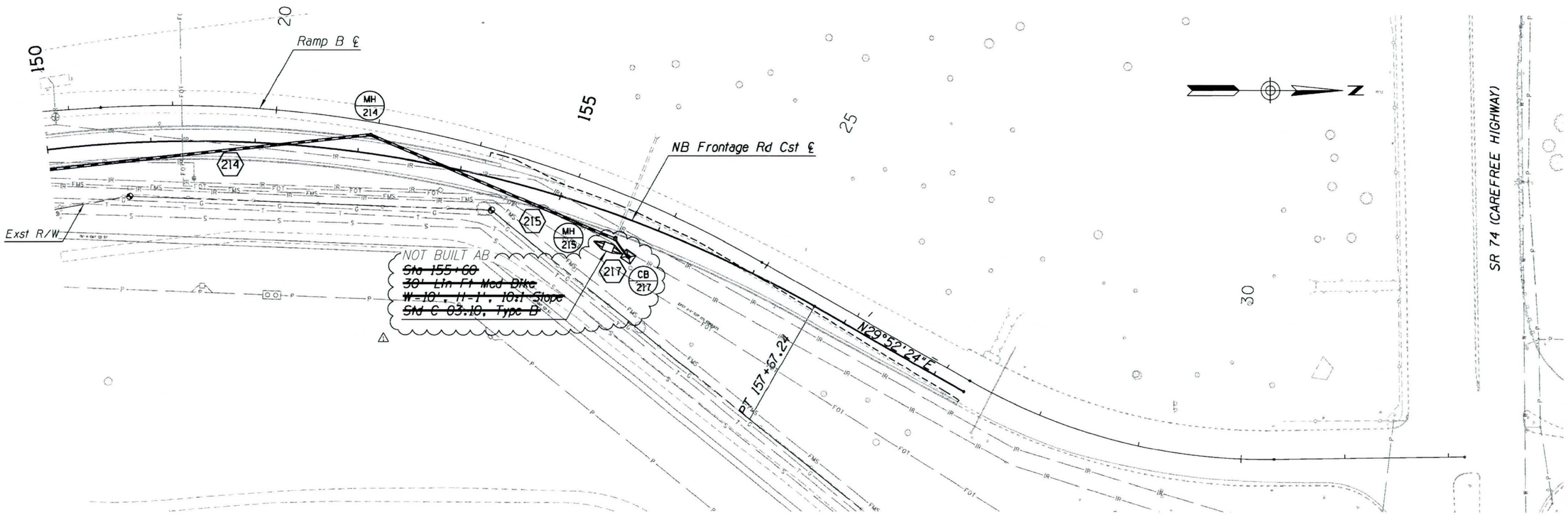

AS-BUILT CERTIFICATION

I HEREBY CERTIFY THAT THE "RECORD DRAWING" MEASUREMENTS AS SHOWN HEREON WERE MADE UNDER MY SUPERVISION, OR AS NOTED, AND ARE CORRECT TO THE BEST OF MY KNOWLEDGE AND BELIEF.

SIGNATURE	REGISTRATION NO.	DATE
	41282	09/10/13

HUBBARD ENGINEERING
1840 S. STAPLEY DR. SUITE# 137
MESA, AZ 85204
ENGINEERING FIRM

REGISTERED LAND SURVEYOR
CERTIFICATE NO.
41282
ADRIAN M. BURCHAM
Date Signed 09/10/13
ARIZONA U.S.A.
Expires

	NAME	DATE
DESIGN	A. Cox	9/12
DRAWN	C. Fowler	9/12
CHECKED	R. Hansman	9/12

Dibble Engineering
7500 N. Dreamy Draw Drive
Suite 200
Phoenix, AZ 85020
P 602.957.1155

MACERICH®

STORM DRAIN PLAN SHEET
NB FRONTAGE ROAD

Registered Professional Engineer (CIVIL)
CERTIFICATE NO.
22871
ROBERT J. HANSMAN JR.
Date Signed 12/07/12
ARIZONA, U.S.A.
Expires 03/31/13

ROUTE: I-17

PROJECT NAME: I-17 NORTHBOUND FRONTAGE ROAD
SONORAN BOULEVARD TO SR 74

DWG No. D-1.04

___ OF ___

NO	DESCRIPTION OF REVISIONS	MADE BY	DATE
	ASLD COMMENT REVISIONS	J. Papworth	12/7/12

SURVEY NO. | FINISHED PLANS | REVISIONS | LOCATION | DATE

ccccc SYSTIME ccccc ccccc DGN c SPECIFICATION ccccc

SHEET NO.	TOTAL SHEETS	AS BUILT
29	68	

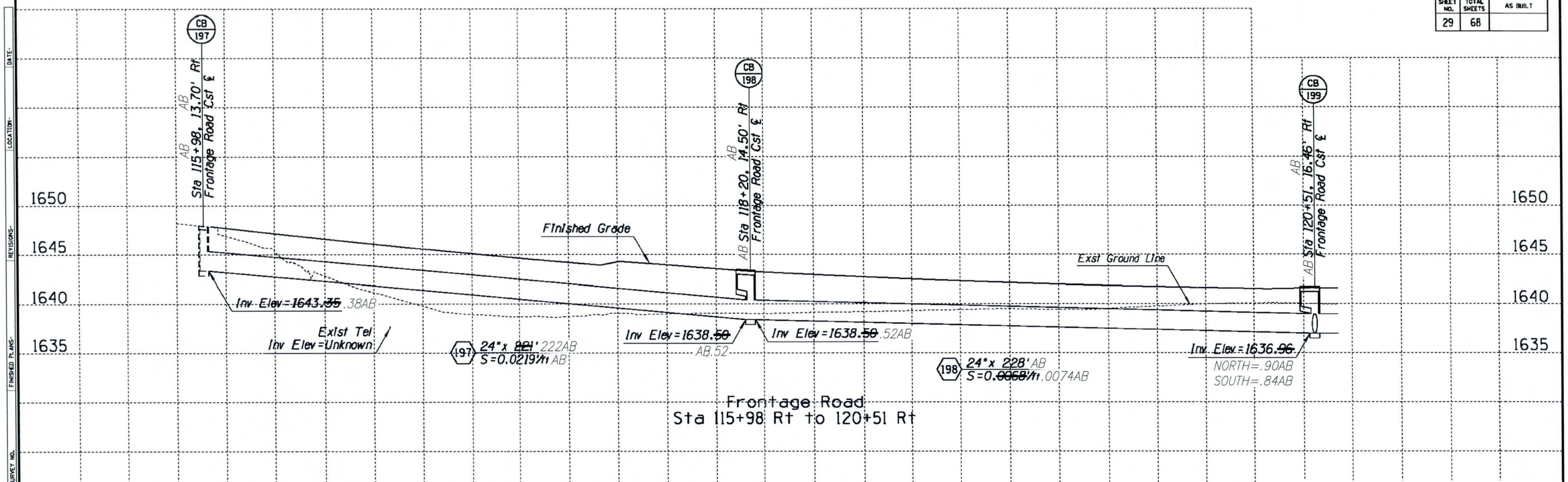

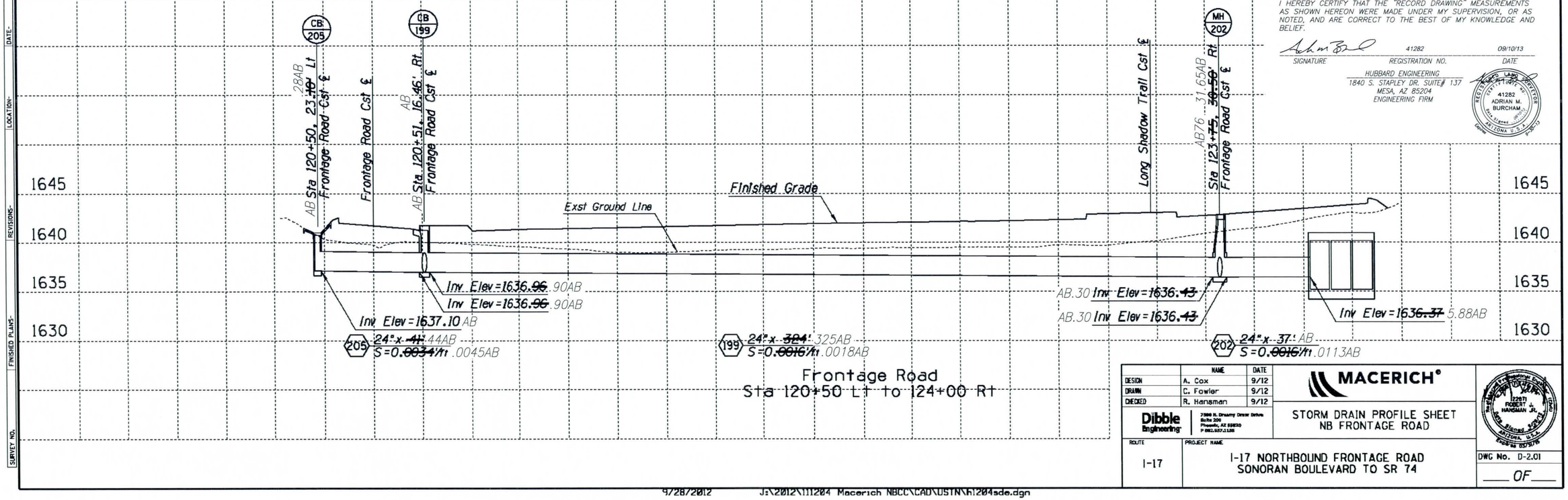

AS-BUILT CERTIFICATION

I HEREBY CERTIFY THAT THE "RECORD DRAWING" MEASUREMENTS AS SHOWN HEREON WERE MADE UNDER MY SUPERVISION, OR AS NOTED, AND ARE CORRECT TO THE BEST OF MY KNOWLEDGE AND BELIEF.

SIGNATURE	REGISTRATION NO.	DATE
	41282	09/10/13

HUBBARD ENGINEERING
1840 S. STAPLEY DR. SUITE# 137
MESA, AZ 85204
ENGINEERING FIRM

REGISTERED LAND SURVEYOR 41282 ADRIAN M. BURCHAM ARIZONA U.S.A.

	NAME	DATE
DESIGN	A. Cox	9/12
DRAWN	C. Fowler	9/12
CHECKED	R. Hansman	9/12

MACERICH®

Dibble Engineering
7500 N. Dreamy Draw Drive
Suite 200
Phoenix, AZ 85020
P 602.957.1155

STORM DRAIN PROFILE SHEET
NB FRONTAGE ROAD

REGISTERED PROFESSIONAL ENGINEER (CIVIL) 12267 ROBERT J. HANSMAN JR. ARIZONA U.S.A.

ROUTE	PROJECT NAME
I-17	I-17 NORTHBOUND FRONTAGE ROAD SONORAN BOULEVARD TO SR 74

DWG No. D-2.01

___ OF ___

DATE: LOCATION: REVISIONS: FINISHED PLANS: SURVEY NO.

9/28/2012 J:\2012\111204 Macerich NBCC\CAD\USTN\h1204sde.dgn

To Accompany Change Order No.

NO	DESCRIPTION OF REVISIONS	MADE BY	DATE
1	CHANNEL CROSSING AT APS DUCT BANK	J. Papworth	3/28/13
2	ASLD COMMENT REVISIONS	J. Papworth	12/7/12

SHEET NO.	TOTAL SHEETS	AS BUILT
30	68	

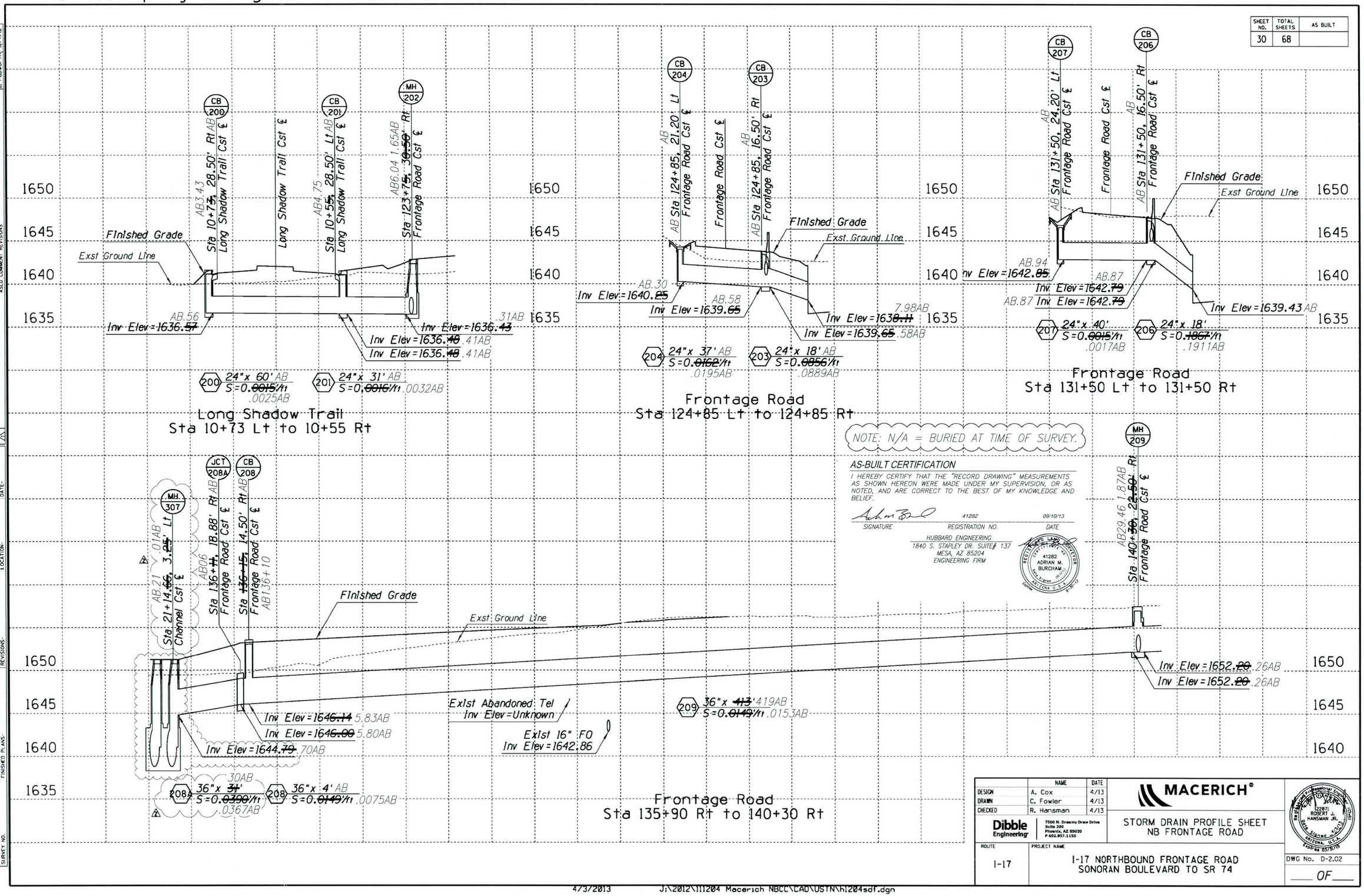

	NAME	DATE
DESIGN	A. Cox	4/13
DRAWN	C. Fowler	4/13
CHECKED	R. Hansman	4/13

Dibble Engineering
7500 N. Dreamy Draw Drive
Suite 200
Phoenix, AZ 85020
P 602.957.1155

MACERICH®

STORM DRAIN PROFILE SHEET
NB FRONTAGE ROAD

22871
ROBERT J. HANSMAN JR.
ARIZONA, U.S.A.
Expires 03/31/15

ROUTE: I-17

PROJECT NAME: I-17 NORTHBOUND FRONTAGE ROAD
SONORAN BOULEVARD TO SR 74

DWG No. D-2.02

___ OF ___

SURVEY NO. | FINISHED PLANS | REVISIONS | LOCATION | DATE

4/3/2013 J:\2012\111204 Macerich NBCC\CAD\USTN\h1204sdf.dgn

To Accompany Change Order No.

SHEET NO.	TOTAL SHEETS	AS BUILT
31	68	

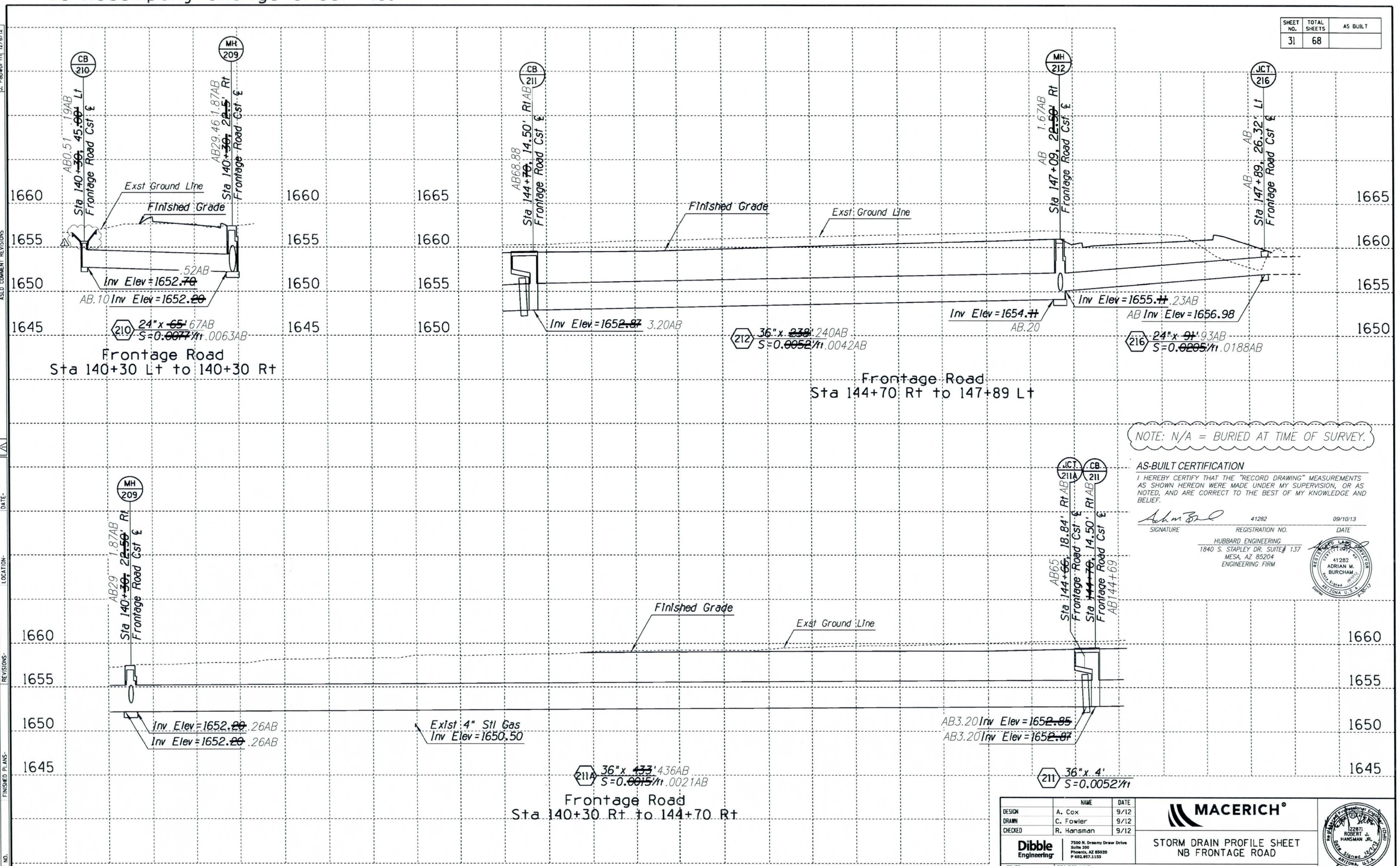

NOTE: N/A = BURIED AT TIME OF SURVEY.

AS-BUILT CERTIFICATION

I HEREBY CERTIFY THAT THE "RECORD DRAWING" MEASUREMENTS AS SHOWN HEREON WERE MADE UNDER MY SUPERVISION, OR AS NOTED, AND ARE CORRECT TO THE BEST OF MY KNOWLEDGE AND BELIEF.

SIGNATURE — 41282 REGISTRATION NO. — 09/10/13 DATE

HUBBARD ENGINEERING
1840 S. STAPLEY DR. SUITE# 137
MESA, AZ 85204
ENGINEERING FIRM

REGISTERED LAND SURVEYOR — 41282 ADRIAN M. BURCHAM — ARIZONA U.S.A.

	NAME	DATE
DESIGN	A. Cox	9/12
DRAWN	C. Fowler	9/12
CHECKED	R. Hansman	9/12

MACERICH®

Dibble Engineering — 7500 N. Dreamy Draw Drive, Suite 200, Phoenix, AZ 85020, P 602.957.1155

STORM DRAIN PROFILE SHEET
NB FRONTAGE ROAD

REGISTERED PROFESSIONAL ENGINEER (CIVIL) — (22871) ROBERT J. HANSMAN JR. — ARIZONA, U.S.A. — Expires 03/31/15

ROUTE: I-17

PROJECT NAME: I-17 NORTHBOUND FRONTAGE ROAD
SONORAN BOULEVARD TO SR 74

DWG No. D-2.03

___ OF ___

NO	DESCRIPTION OF REVISIONS	MADE BY	DATE
	ASLD COMMENT REVISIONS	J. Pearson	12/6/12

SURVEY NO. — FINISHED PLANS — REVISIONS — LOCATION — DATE

SHEET NO.	TOTAL SHEETS	AS BUILT
32	68	

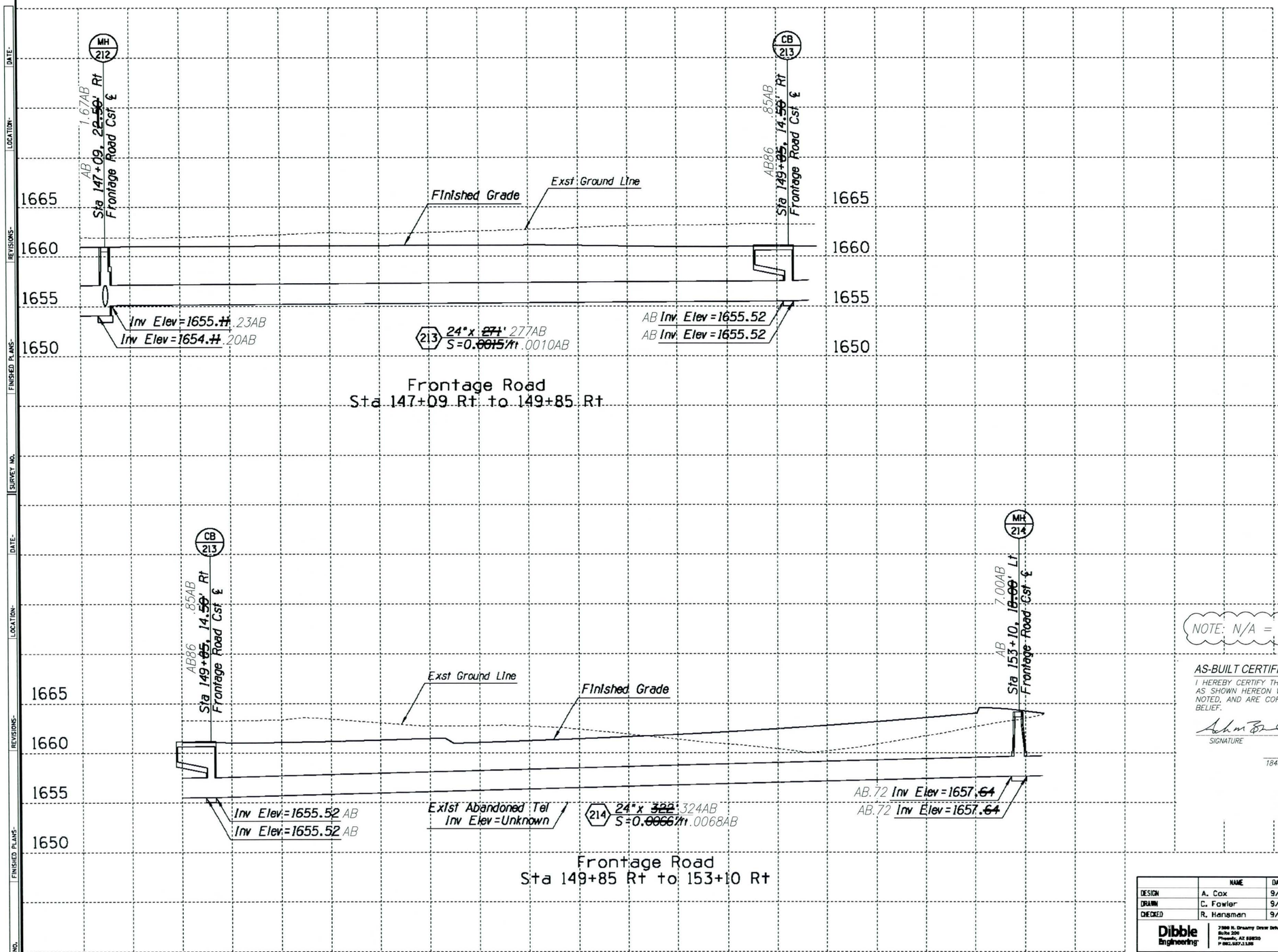

NOTE: N/A = BURIED AT TIME OF SURVEY.

AS-BUILT CERTIFICATION

I HEREBY CERTIFY THAT THE "RECORD DRAWING" MEASUREMENTS AS SHOWN HEREON WERE MADE UNDER MY SUPERVISION, OR AS NOTED, AND ARE CORRECT TO THE BEST OF MY KNOWLEDGE AND BELIEF.

SIGNATURE	REGISTRATION NO.	DATE
	41282	09/10/13

HUBBARD ENGINEERING
1840 S. STAPLEY DR. SUITE 137
MESA, AZ 85204
ENGINEERING FIRM

REGISTERED LAND SURVEYOR 41282 ADRIAN M. BURCHAM ARIZONA U.S.A.

	NAME	DATE
DESIGN	A. Cox	9/12
DRAWN	C. Fowler	9/12
CHECKED	R. Hansman	9/12

MACERICH®

Dibble Engineering
7500 N. Dreamy Draw Drive
Suite 200
Phoenix, AZ 85020
P 602.957.1155

STORM DRAIN PROFILE SHEET
NB FRONTAGE ROAD

REGISTERED PROFESSIONAL ENGINEER (CIVIL) 22871 ROBERT J. HANSMAN JR. ARIZONA U.S.A.

ROUTE: I-17

PROJECT NAME: I-17 NORTHBOUND FRONTAGE ROAD
SONORAN BOULEVARD TO SR 74

DWG No. D-2.04

____ OF ____

SURVEY NO. | FINISHED PLANS | REVISIONS | LOCATION | DATE

9/28/2012 J:\2012\111204 Macerich NBCC\CAD\USTN\h1204sdh.dgn

To Accompany Change Order No.

NO	DESCRIPTION OF REVISIONS	MADE BY	DATE
	CHANNEL CROSSING AT APS DUCT BANK	J. Papworth	3/28/13
	ASLD COMMENT REVISIONS	J. Papworth	12/7/12

NOTE: N/A = BURIED AT TIME OF SURVEY.

AS-BUILT CERTIFICATION

I HEREBY CERTIFY THAT THE "RECORD DRAWING" MEASUREMENTS AS SHOWN HEREON WERE MADE UNDER MY SUPERVISION, OR AS NOTED, AND ARE CORRECT TO THE BEST OF MY KNOWLEDGE AND BELIEF.

SIGNATURE	REGISTRATION NO.	DATE
	41282	09/10/13

HUBBARD ENGINEERING
1840 S. STAPLEY DR. SUITE# 137
MESA, AZ 85204
ENGINEERING FIRM

REGISTERED LAND SURVEYOR 41282 ADRIAN M. BURCHAM ARIZONA U.S.A.

SHEET NO.	TOTAL SHEETS	AS BUILT
32A	68	

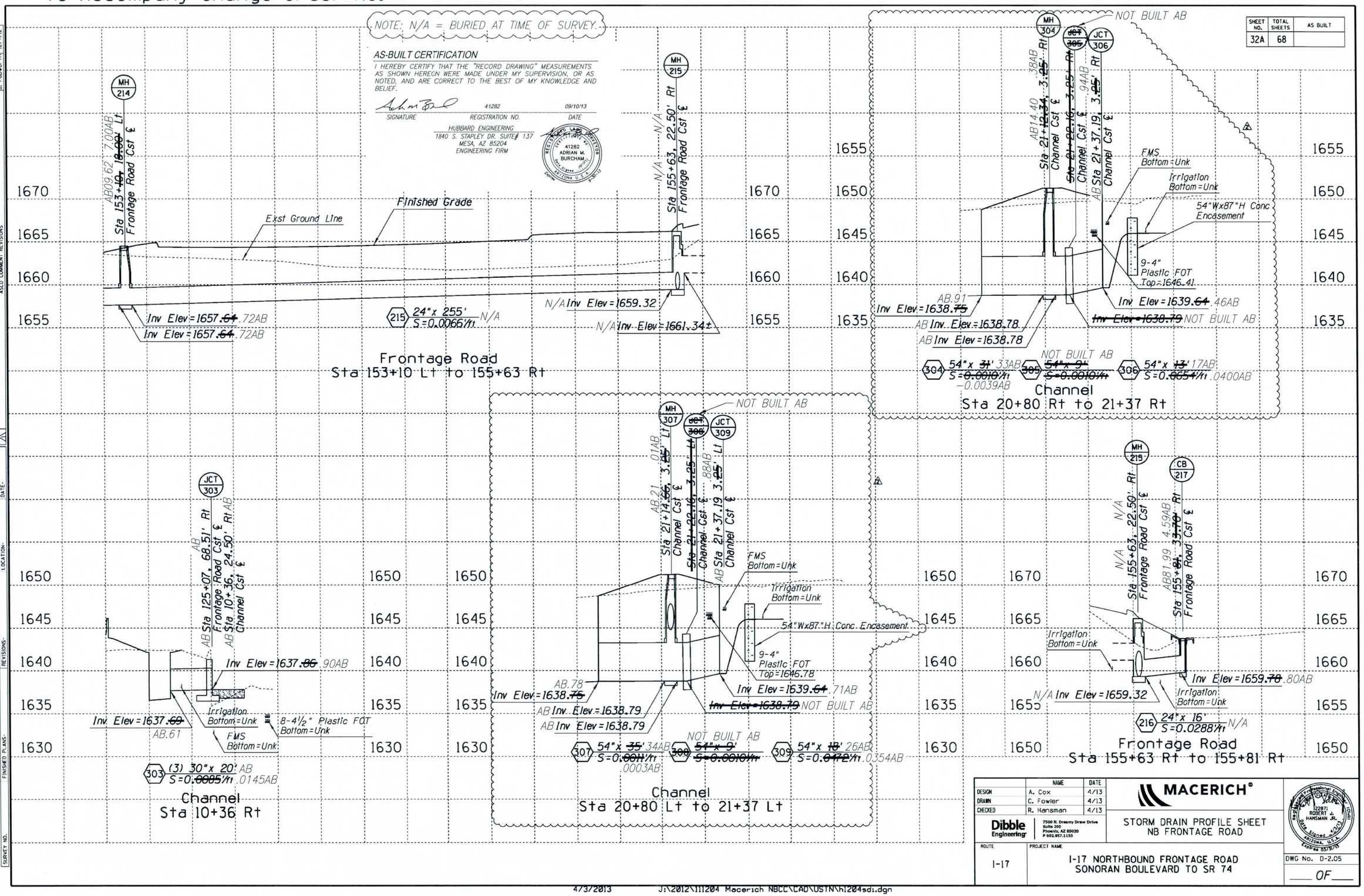

	NAME	DATE
DESIGN	A. Cox	4/13
DRAWN	C. Fowler	4/13
CHECKED	R. Hansman	4/13

Dibble Engineering
7500 N. Dreamy Draw Drive
Suite 200
Phoenix, AZ 85020
P 602.957.1155

MACERICH®

STORM DRAIN PROFILE SHEET
NB FRONTAGE ROAD

REGISTERED PROFESSIONAL ENGINEER (CIVIL) 22871 ROBERT J. HANSMAN JR. ARIZONA, U.S.A. Expires 03/31/15

ROUTE: I-17

PROJECT NAME: I-17 NORTHBOUND FRONTAGE ROAD
SONORAN BOULEVARD TO SR 74

DWG No. D-2.05

___ OF ___

LOCATION- DATE- REVISIONS- FINISHED PLANS- SURVEY NO.

To Accompany Change Order No.

SHEET NO.	TOTAL SHEETS	AS BUILT
33	68	

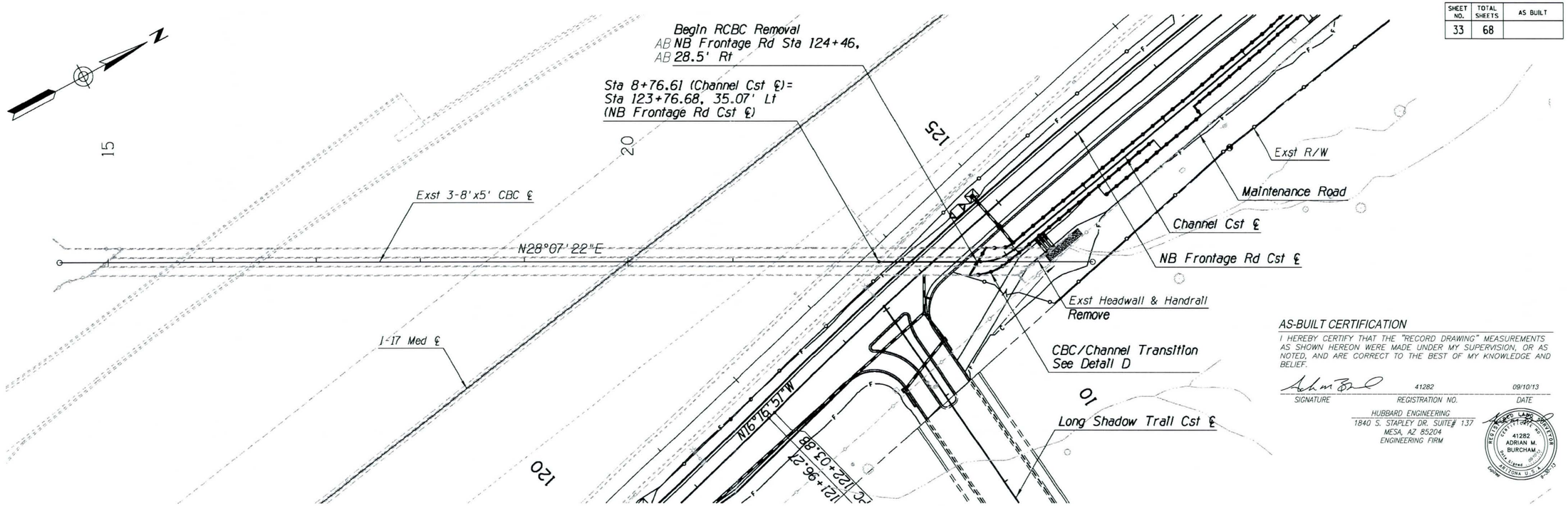

AS-BUILT CERTIFICATION

I HEREBY CERTIFY THAT THE "RECORD DRAWING" MEASUREMENTS AS SHOWN HEREON WERE MADE UNDER MY SUPERVISION, OR AS NOTED, AND ARE CORRECT TO THE BEST OF MY KNOWLEDGE AND BELIEF.

SIGNATURE	REGISTRATION NO.	DATE
	41282	09/10/13

HUBBARD ENGINEERING
1840 S. STAPLEY DR. SUITE# 137
MESA, AZ 85204
ENGINEERING FIRM

REGISTERED LAND SURVEYOR 41282 ADRIAN M. BURCHAM ARIZONA U.S.A.

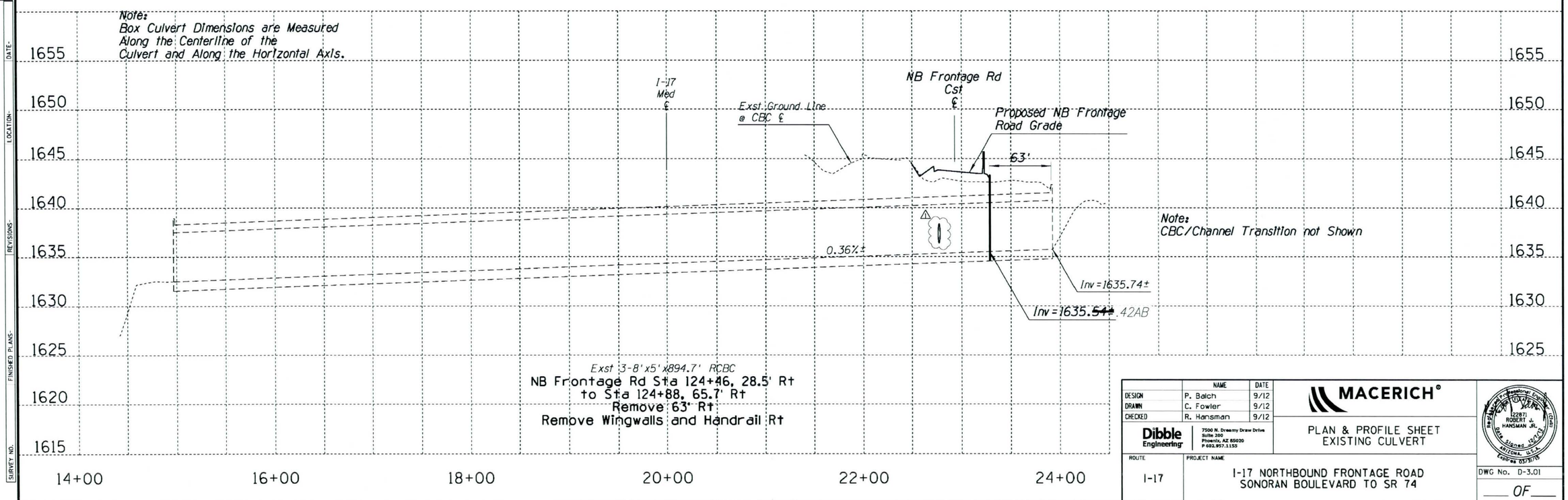

	NAME	DATE
DESIGN	P. Balch	9/12
DRAWN	C. Fowler	9/12
CHECKED	R. Hansman	9/12

MACERICH®

Dibble Engineering
7500 N. Dreamy Draw Drive
Suite 200
Phoenix, AZ 85020
P 602.957.1155

PLAN & PROFILE SHEET
EXISTING CULVERT

ROUTE: I-17

PROJECT NAME: I-17 NORTHBOUND FRONTAGE ROAD
SONORAN BOULEVARD TO SR 74

Registered Professional Engineer (Civil) 22871 ROBERT J. HANSMAN JR. Date Signed 12/14/12 ARIZONA, U.S.A. Expires 03/31/13

DWG No. D-3.01

OF

NO	DESCRIPTION OF REVISIONS	MADE BY	DATE
1	ASLD COMMENT REVISIONS	J. Papworth	12/7/12

SURVEY NO. | FINISHED PLANS | REVISIONS | LOCATION | DATE

ccccc SYSTIME ccccc ccccc DGN SPECIFICATION ccccc

To Accompany Change Order No.

SHEET NO.	TOTAL SHEETS	AS BUILT
34	68	

Sta 8+76.61 (Channel Cst ℄)=
Sta 123+76.68, 35.07' Lt
(NB Frontage Rd Cst ℄)
N 1014083.166, E 634376.172

I-17 Med ℄

(200) CURVE DATA
PI Sta 9+92.21 N 1014185.115 E 634430.660
Channel Curve
Δ=39°51'40"
D=114°35'30"
R=50.00'
L=34.79'
T=18.13'
Ext=3.19'

(201) CURVE DATA
PI Sta 21+89.93 N 1015332.287 E 634289.325
Channel Curve
Δ=25°45'09"
D=57°51'04"
R=99.04'
L=44.52'
T=22.64'
Ext=2.55'

Exst 3-8'x5' CBC
To Remain

CBC/Channel Transition
See Detail D

Sonoran Blvd Ramp D ℄

Exst 2-36" CMP
See Dwg No. C-2.02

NB Frontage Rd Cst ℄

N28°07'22"E

N9°53'12"W

N0°06'50"E
41.81'

N43°43'12"E
15.03'

AB-NOT BUILT ~~PI 21+22.16~~

PI 21+37.19 N63°43'12"E
30.11'
PC 21+67.30

N11°44'18"W

Channel Cst ℄

N9°53'10"W

Channel/Pipe Headwall
See Detail O

Slope Paving
See Detail E

Exst R/W

New Handrail
See Detail B

Channel/Pipe Headwall
See Detail E

PT 22+11.80
N 1015332.495
E 634311.955

PT 10+08.86

PI 13+69.07

PT 18+43.31

PI 20+80.35

Maintenance Road

Maintenance Access Road
See Detail A

Channel Access Ramp
See Details A and F

N89°28'21"E

Long Shadow Trail Cst ℄

North Channel Grading
See Detail M

Pipe/Channel Headwall
Transition, See Detail O

PI 21+46.53 AB
Elev=~~1645.99~~ 6.04AB
PI 21+67.09 AB
Elev=1646.~~03~~ .07AB

PI 13+80.00 AB
Elev=1644.~~79~~ .68AB

PI 14+34.96 AB
Elev=1645.~~97~~ .72AB

PI 20+70.35 AB
Elev=1648.73 AB

PI 20+88.02 AB
Elev=1648.~~92~~ .98AB

AB.0141
S=~~0.0109~~/ft

Channel/Pipe Headwall
Transition
See Detail E

Top of Slope Paving
Lt & Rt

.0047AB
S=0.~~0044~~/ft

Elev=1645.~~50~~
AB.74

.0021AB
S=0.~~0055~~/ft

Elev 1643.~~00~~ .02AB
Elev 1642.~~11~~ .03AB

S=0.0204/ft

Top of Channel Lt & Rt

Elev=1644.~~23~~
AB.34

.0015AB
S=0.~~0022~~/ft

CHANNEL CST ℄
STA 21+81.56 AB
END CHANNEL/CULVERT ◑
ELEV=1646.11 AB

Profile Grade Line

PI 10+10.59 AB
Elev=1636.~~61~~ .63AB

.0021AB
S=0.~~0020~~/ft

AB PI 20+80.35
AB.85 Elev=1638.~~75~~

MH 304 MH 307
JCT 305 JCT 308

PI 21+40.19 AB
Elev=1639.~~65~~ .66AB
PI 21+37.19 AB
Elev=1639.~~64~~ .46AB

Anchor Slab
See Detail D

S=0.~~0278~~/ft .0315AB
CHANNEL CST ℄ STA 9+72.15 AB
BEGIN CHANNEL
ELEV=1635.~~54~~ .42AB

1655 1650 1645 1640 1635 1630 1625

10+00 15+00 20+00 23+00

1	Line Not Potholed	Irrigation	Bottom=Unk	
2	Line Not Potholed	FMS	Bottom=Unk	
3	Pothole #3	Fiber Optic/Telephone	Top=1646.41	9-4" Plastic Conduit
4	Pothole #4	Electric	Bottom=1641.08	54"Wx87"H Concrete Encasement

◑ Refer to "On-Site Grading & Drainage Plan for Sonoran Crossing" COP KIVA No. 11-3686 for Continuation.

AS-BUILT CERTIFICATION

I HEREBY CERTIFY THAT THE "RECORD DRAWING" MEASUREMENTS AS SHOWN HEREON WERE MADE UNDER MY SUPERVISION, OR AS NOTED, AND ARE CORRECT TO THE BEST OF MY KNOWLEDGE AND BELIEF.

SIGNATURE — 41282 REGISTRATION NO. — 09/10/13 DATE

HUBBARD ENGINEERING
1840 S. STAPLEY DR. SUITE 137
MESA, AZ 85204
ENGINEERING FIRM

REGISTERED LAND SURVEYOR 41282 ADRIAN M. BURCHAM ARIZONA U.S.A.

	NAME	DATE
DESIGN	P. Balch	4/13
DRAWN	C. Fowler	4/13
CHECKED	R. Hansman	4/13

Dibble Engineering — 7500 N. Dreamy Draw Drive, Suite 200, Phoenix, AZ 85020, P 602.957.1155

MACERICH®

PLAN & PROFILE SHEET
FRONTAGE ROAD CHANNEL
STA 9+72.15 TO 23+00.00

REGISTERED PROFESSIONAL ENGINEER (CIVIL) 12287 ROBERT J. HANSMAN JR. Date Signed 4-2-13 ARIZONA U.S.A. Expires 03/31/15

ROUTE: I-17

PROJECT NAME: I-17 NORTHBOUND FRONTAGE ROAD SONORAN BOULEVARD TO SR 74

DWG No. D-3.02

___ OF ___

NO.	DESCRIPTION OF REVISIONS	DATE	MADE BY
1	CHANNEL CROSSING OF APS DUCT BANK	4/2/2013	J. Papworth
2	ASLD COMMENT REVISIONS	12/7/12	J. Papworth

DATE- LOCATION- REVISIONS- FINISHED PLANS- SURVEY NO.

4/3/2013 J:\2012\111204 Macerich NBCC\CAD\USTN\d1204d02.dgn

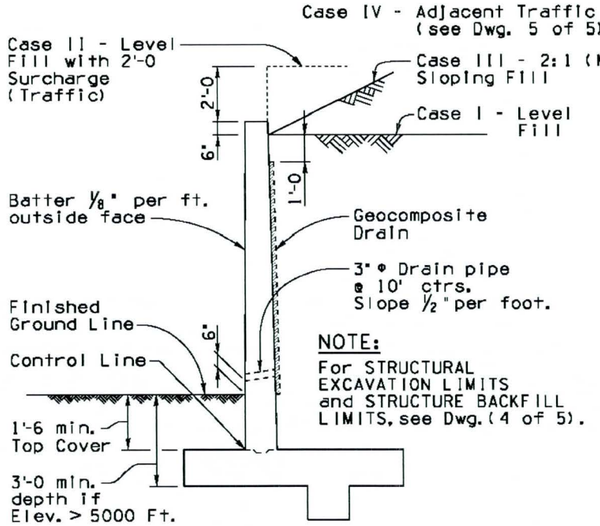

NOTE:
For STRUCTURAL EXCAVATION LIMITS and STRUCTURE BACKFILL LIMITS, see Dwg. (4 of 5).

TYPICAL SECTION
(Case I, II & III)

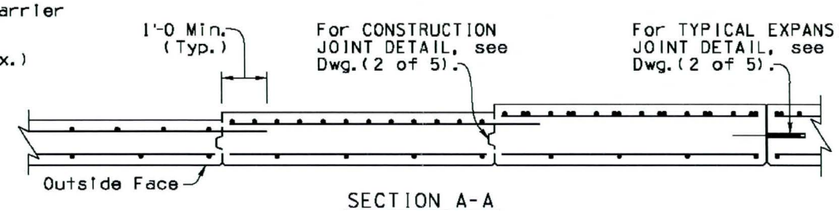

SECTION A-A

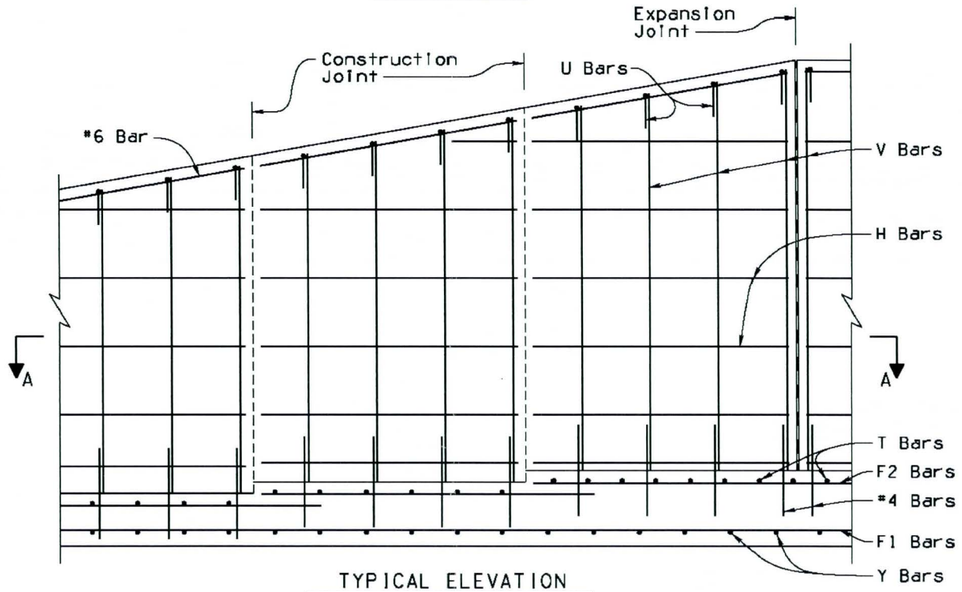

TYPICAL ELEVATION
(Outside Face Reinforcing)

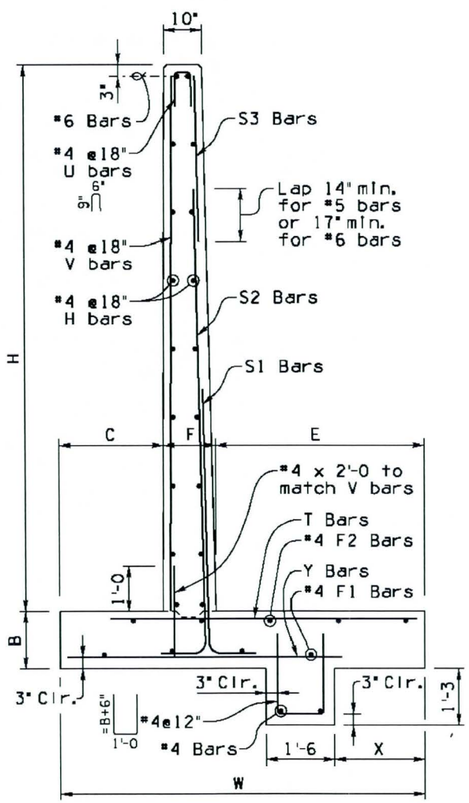

TYPICAL WALL DETAILS

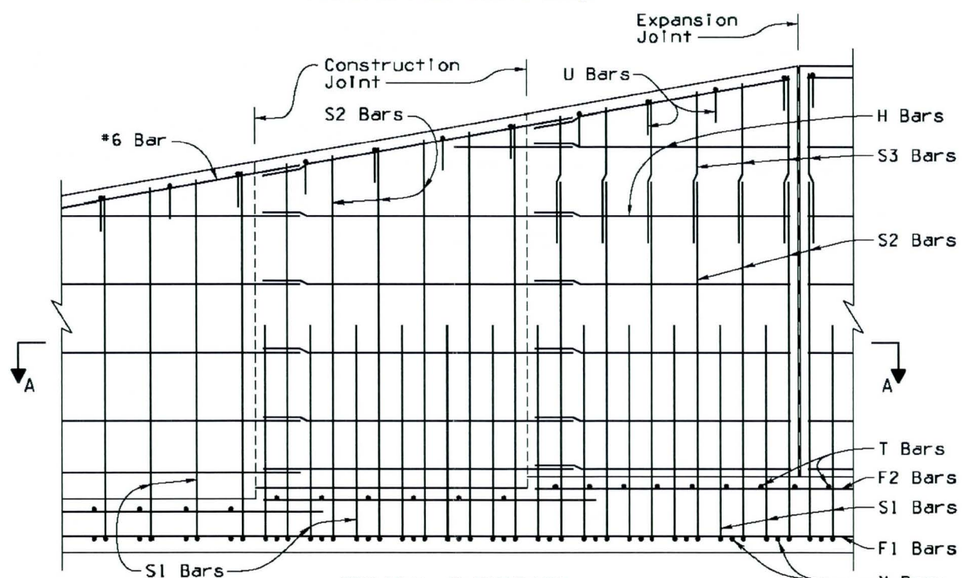

TYPICAL ELEVATION
(Inside Face Reinforcing)

GENERAL NOTES:

Construction Specification - Arizona Department of Transportation Standard Specifications for Road and Bridge Construction, latest Edition.

Design Specifications - AASHTO LRFD Bridge Design Specifications, 5th Edition 2010.

Design:
Soil weight = 120 p.c.f.
Backfill angle of internal friction = 33°
Existing ground angle of internal friction = 30°

All Concrete shall be Class "S" (f'c = 3000 psi).

Reinforcing steel shall conform to ASTM Specification A615. All reinforcing shall be furnished as Grade 60.

All bends and hooks shall meet the requirements of AASHTO LRFD Article 5.10. All bend dimensions for reinforcing steel shall be out-to-out of bars. All placement dimensions for reinforcing steel shall be to center of bars unless noted otherwise.

All reinforcing steel shall have 2 inch clear cover unless noted otherwise.

Chamfer all exposed corners 3/4" unless noted otherwise.

Compact backfill for footing and wall base minimum 95 percent of ASTM D698 maximum dry density.

See Project Plans for wall layout, top of footing and finished grade elevations, footing step and wall joint locations. Construction Joints shall match the locations of contraction joints. See Project Plans for wall surface treatment. Increase the wall thickness at the face for the depth of surface treatment.

Dimensions shall not be scaled from drawings.

Pay item is measured as wall height H times length of wall, and pay item includes all labor and materials for excavation, backfill, drainage, concrete footing and wall with reinforcements.

Item No. 9140178 RETAINING WALL (REINFORCED CONCRETE CANTILEVER)
Measure: Square Foot

AS-BUILT CERTIFICATION

I HEREBY CERTIFY THAT THE "RECORD DRAWING" MEASUREMENTS AS SHOWN HEREON WERE MADE UNDER MY SUPERVISION, OR AS NOTED, AND ARE CORRECT TO THE BEST OF MY KNOWLEDGE AND BELIEF.

SIGNATURE	REGISTRATION NO.	DATE
	41282	09/10/13

HUBBARD ENGINEERING
1840 S. STAPLEY DR. SUITE# 137
MESA, AZ 85204
ENGINEERING FIRM

REGISTERED LAND SURVEYOR
41282
ADRIAN M. BURCHAM
ARIZONA U.S.A.
EXPIRES 9-30-13

NOTE:
For Retaining Wall Dimensions, Quantities and additional Details, see SD 7.01 (2 to 5).

Note to Designer:
The information presented in this Standard Detail has been prepared in accordance with recognized engineering principles and is for general use. It should not be used for specific application without competent professional examination and verification of its suitability and applicability by a licensed professional engineer. Contents within the inner border line shall not be altered.

NO	DESCRIPTION OF REVISIONS	MADE BY	DATE
1	Original Issue	SAUK.	9-10
2			
3			
4			

DESIGN APPROVED: Shafi U. Hasan	ARIZONA DEPARTMENT OF TRANSPORTATION INTERMODAL TRANSPORTATION DIVISION BRIDGE GROUP STRUCTURE DETAIL
APPROVED FOR DISTRIBUTION: Jean A. Nehme	RETAINING WALL (REINFORCED CONCRETE CANTILEVER)
ROUTE / PROJECT NO. / FA NO.	DRAWING NO. SD 7.01 (1 of 5)
LOCATION	SHEET NO. 66 OF 68

CASE I - LEVEL FILL

Dimensions							Steel List																			Press.*
							S1			S2			S3			H	V	Y			F1	T				F2	
H	W	B	C	F	E	X	Bar Size	Spacing	Length	Bar Size	Spacing	Length	Bar Size	Spacing	Length	Number ⊕	Length	Bar Size	Spacing	Length	Number ⊕	Bar Size	Spacing	Length	Number ⊕	F.A.S.B. Lbs./Sq.Ft.
4'	3'-0	1'-0	10"	10"	1'-4	8"	5	12"	5'-6							4	3'-9	5	12"	2'-3	2	5	12"	2'-3	3	1200
5'	3'-6	1'-0	1'-0	10"	1'-8	9"	5	12"	6'-6							6	4'-9	5	12"	2'-9	2	5	12"	2'-9	3	1300
6'	4'-0	1'-0	1'-2	10"	2'-0	10"	5	12"	7'-6							6	5'-9	5	12"	3'-3	2	5	12"	3'-0	3	1400
7'	4'-6	1'-0	1'-4	10"	2'-4	11"	5	12"	8'-6							8	6'-9	5	12"	3'-6	3	5	12"	3'-3	3	1600
8'	5'-0	1'-2	1'-6	10"	2'-8	1'-0	5	12"	9'-9							10	7'-9	5	12"	4'-0	3	5	12"	3'-9	3	1800
9'	5'-6	1'-2	1'-9	1'-0	2'-9	1'-2	5	12"	10'-9							10	8'-9	5	12"	4'-3	3	5	12"	3'-9	3	1900
10'	6'-0	1'-2	1'-9	1'-0	3'-3	1'-4	6	12"	11'-9							12	9'-9	5	12"	4'-9	3	5	12"	4'-3	4	2100
11'	6'-6	1'-2	2'-0	1'-0	3'-6	1'-6	5	12"	4'-3	5	12"	12'-9				14	10'-9	5	12"	5'-0	4	5	12"	4'-6	4	2300
12'	7'-0	1'-3	2'-0	1'-0	4'-0	1'-8	6	12"	5'-3	5	12"	13'-9				14	11'-9	5	12"	5'-3	4	6	12"	5'-3	5	2500
13'	7'-6	1'-3	2'-3	1'-0	4'-3	1'-10	7	12"	6'-6	5	12"	14'-9				16	12'-9	5	12"	5'-9	4	6	9"	5'-6	5	2700
14'	8'-0	1'-3	2'-3	1'-2	4'-7	2'-0	7	12"	7'-0	5	12"	15'-9				18	13'-9	5	12"	6'-0	4	7	12"	7'-0	5	2900
15'	8'-6	1'-3	2'-6	1'-3	4'-9	2'-2	7	12"	8'-0	5	12"	16'-9				18	14'-9	6	12"	6'-3	5	7	12"	7'-3	5	3000
16'	9'-0	1'-4	2'-6	1'-4	5'-2	2'-4	7	12"	7'-3	6	12"	8'-9	5	12'	10'-9	20	15'-9	6	12"	6'-9	5	8	12"	8'-6	6	3300
17'	9'-6	1'-4	2'-9	1'-5	5'-4	2'-6	7	12"	6'-0	7	12"	9'-9	5	12'	10'-9	22	16'-9	6	9"	7'-0	5	8	12"	8'-6	6	3400
18'	10'-0	1'-5	2'-9	1'-6	5'-9	2'-8	7	12"	7'-0	7	12"	10'-6	5	12'	11'-0	22	17'-9	6	9"	7'-3	5	7	8"	8'-3	6	3700
19'	10'-6	1'-6	3'-0	1'-7	5'-11	2'-10	8	12"	8'-0	7	12"	10'-3	6	12'	12'-9	24	18'-9	6	9"	7'-9	6	8	9"	9'-3	7	3900
20'	11'-0	1'-6	3'-0	1'-8	6'-4	3'-0	8	12"	7'-6	8	12"	11'-6	6	12'	12'-9	26	19'-9	6	8"	8'-0	6	8	8"	9'-6	7	4100
21'	11'-6	1'-7	3'-3	1'-9	6'-6	3'-2	8	12"	8'-3	8	12"	12'-6	6	12'	12'-9	26	20'-9	7	12"	8'-3	6	9	9"	10'-6	7	4300
22'	12'-0	1'-8	3'-3	1'-10	6'-11	3'-4	9	12"	9'-6	8	12"	13'-6	6	12'	13'-0	28	21'-9	7	12"	8'-9	6	9	9"	11'-0	7	4600
23'	12'-6	1'-9	3'-6	2'-0	7'-0	3'-6	10	12"	12'-3	7	12"	14'-0	6	12'	13'-3	30	22'-9	8	12"	9'-0	6	8	6"	10'-3	7	4700
24'	13'-0	1'-10	3'-6	2'-2	7'-4	3'-8	9	12"	9'-3	9	12"	15'-6	6	12'	13'-3	30	23'-9	8	12"	9'-3	7	8	6"	10'-6	8	5000
25'	13'-6	2'-0	3'-9	2'-4	7'-5	3'-10	9	12"	10'-3	9	12"	16'-6	6	12'	13'-6	32	24'-9	8	12"	9'-9	7	8	6"	10'-9	8	5300
26'	14'-0	2'-3	3'-9	2'-6	7'-9	4'-0	10	12"	13'-0	8	12"	17'-6	6	12'	13'-9	34	25'-9	8	12"	10'-0	7	8	6"	11'-0	8	5700
27'	14'-6	2'-6	4'-0	2'-8	7'-10	4'-2	10	12"	12'-3	9	12"	18'-6	6	12'	14'-3	34	26'-9	8	12"	10'-3	7	8	6"	11'-0	8	6000
28'	15'-0	2'-9	4'-0	2'-10	8'-2	4'-4	10	12"	13'-3	9	12"	19'-9	6	12'	14'-3	36	27'-9	8	12"	10'-9	7	8	6"	11'-6	8	6400
29'	15'-6	3'-0	4'-3	3'-0	8'-3	4'-6	10	12"	12'-0	10	12"	21'-0	6	12'	14'-3	38	28'-9	8	12"	11'-0	7	8	6"	11'-6	9	6700
30'	16'-0	3'-3	4'-3	3'-2	8'-7	4'-8	10	12"	13'-0	10	12"	22'-3	6	12'	14'-3	38	29'-9	8	12"	11'-3	8	8	6"	11'-9	9	7100

⊕ Total number of bars in cross section. * Factored Average Soil Bearing Pressure (psf).

QUANTITIES

CASE I			
H	Concrete C.Y./Ln.Ft.	Steel Lbs./Ln.Ft.	Steel (Horiz. Lap) Lbs./Splice
4'	.30	27	10
5'	.35	31	12
6'	.40	33	12
7'	.45	37	14
8'	.53	41	15
9'	.61	43	15
10'	.67	53	17
11'	.72	56	19
12'	.80	65	20
13'	.86	77	21
14'	.96	85	22
15'	1.04	92	23
16'	1.16	109	25
17'	1.25	119	26
18'	1.37	126	26
19'	1.50	152	29
20'	1.61	170	30
21'	1.75	184	30
22'	1.90	202	32
23'	2.09	229	33
24'	2.29	235	34
25'	2.54	247	36
26'	2.84	263	37
27'	3.16	279	37
28'	3.50	293	38
29'	3.85	315	40
30'	4.22	328	41

NOTE:

Quantities are shown for information purposes only. The pay item is measured per square foot of wall.

Quantities are for one L.F. of wall except for horizontal steel lap splices and footing steps.

Steel quantities for horizontal lap splices shall be added for wall segments greater than 30 feet, and add a splice for each additional wall segment greater than 30 feet. Horizontal splices shall occur at construction or contraction joints (1'-0 splices).

Steel and concrete quantities for footing steps shall be added to those shown in the table.

AS-BUILT CERTIFICATION

I HEREBY CERTIFY THAT THE "RECORD DRAWING" MEASUREMENTS AS SHOWN HEREON WERE MADE UNDER MY SUPERVISION, OR AS NOTED, AND ARE CORRECT TO THE BEST OF MY KNOWLEDGE AND BELIEF.

SIGNATURE	REGISTRATION NO.	DATE
	41282	09/10/13

HUBBARD ENGINEERING
1840 S. STAPLEY DR. SUITE# 137
MESA, AZ 85204
ENGINEERING FIRM

REGISTERED PROFESSIONAL ENGINEER (CIVIL) CERTIFICATE NO. 41282 ADRIAN M. BURCHAM EXPIRES 06/30/14 ARIZONA U.S.A.

Bar Size	Dimension A	Dimension D
5	1'-0	3¾"
6	1'-0	4½"
7	1'-2	5¼"
8	1'-4	6"
9	1'-8	9"
10	1'-10	10"
11	2'-0	11"

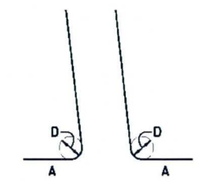

S2 BAR S1 BAR

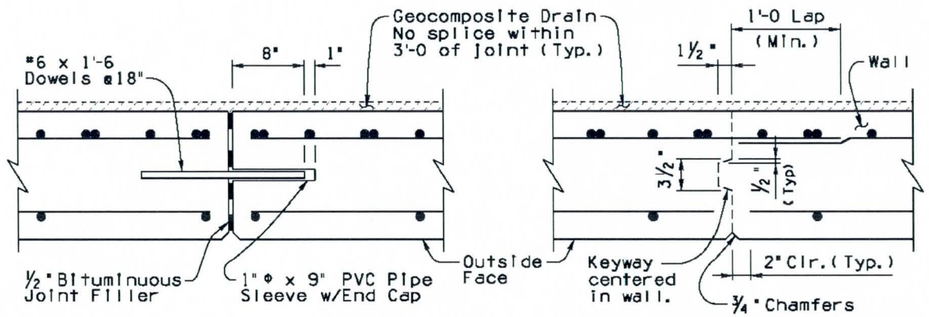

TYPICAL EXPANSION JOINT DETAIL

CONSTRUCTION JOINT DETAIL

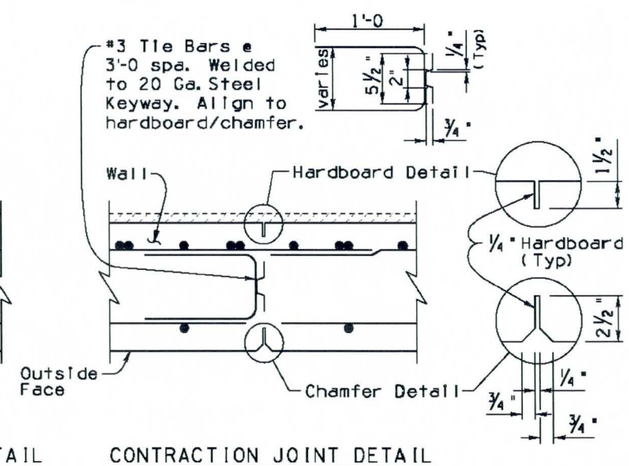

CONTRACTION JOINT DETAIL

JOINT NOTE:

All retaining walls shall have construction joints or contraction joints spaced at not more than 30'-0 apart or as shown. Contraction joints may be substituted for construction joints for wall pours longer than 30'-0.

Expansion joints shall be provided at intervals not exceeding 90'-0.

Footings may be continuous with no joints (except at footing step locations).

NOTE:

For General Notes, Typical Elevations, Sections, and Details see SD 7.01 (1, 3 and 4).

Note to Designer:
The information presented in this Standard Detail has been prepared in accordance with recognized engineering principles and is for general use. It should not be used for specific application without competent professional examination and verification of its suitability and applicability by a licensed professional engineer. Contents within the inner border line shall not be altered.

NO	DESCRIPTION OF REVISIONS	MADE BY	DATE
1	Original Issue	SAUH.	9-10
2			
3			
4			

DESIGN APPROVED: Shafiq U. Hasan

APPROVED FOR DISTRIBUTION: Jean A. Nehme

ARIZONA DEPARTMENT OF TRANSPORTATION
INTERMODAL TRANSPORTATION DIVISION
BRIDGE GROUP STRUCTURE DETAIL

RETAINING WALL
(REINFORCED CONCRETE CANTILEVER)

ROUTE | PROJECT NO. | FA NO. | DRAWING NO. SD 7.01 (2 of 5)

LOCATION | SHEET NO. 67 OF 68

CASE II-LEVEL FILL WITH 2' SURCHARGE (TRAFFIC)

Dimensions							Steel List																			
							S1			S2			S3			H	V	Y			F1	T			F2	
H	W	B	C	F	E	X	Bar Size	Spacing	Length	Bar Size	Spacing	Length	Bar Size	Spacing	Length	Number ⌖	Length	Bar Size	Spacing	Length	Number ⌖	Bar Size	Spacing	Length	Number ⌖	F. A. S. B. Press.* Lbs./Sq. Ft.
4'	3'-6	1'-0	1'-0	10"	1'-8	1'-0	5	12"	5'-6							4	3'-9	5	12"	2'-6	2	5	12"	2'-6	3	1700
5'	4'-0	1'-0	1'-2	10"	2'-0	1'-0	5	12"	6'-6							6	4'-9	5	12"	3'-0	2	5	12"	2'-9	3	1800
6'	4'-6	1'-0	1'-4	10"	2'-4	1'-2	5	12"	7'-6							6	5'-9	5	12"	3'-3	3	5	12"	3'-3	3	2000
7'	5'-1	1'-2	1'-6	10"	2'-9	1'-4	6	12"	8'-9							8	6'-9	5	12"	3'-9	3	5	12"	3'-6	3	2300
8'	5'-8	1'-2	1'-8	10"	3'-2	1'-6	6	9"	9'-9							10	7'-9	5	12"	4'-3	3	5	12"	4'-0	3	2400
9'	6'-3	1'-2	1'-10	1'-0	3'-5	1'-8	6	9"	10'-9							10	8'-9	5	12"	4'-6	3	5	12"	4'-6	4	2500
10'	6'-10	1'-3	2'-0	1'-0	3'-10	1'-9	7	12"	12'-0							12	9'-9	5	12"	5'-0	4	6	12"	5'-0	4	2700
11'	7'-6	1'-3	2'-3	1'-0	4'-3	1'-10	6	12"	4'-9	6	12"	12'-9				14	10'-9	5	12"	5'-9	4	7	12"	5'-6	5	2800
12'	8'-0	1'-3	2'-3	1'-2	4'-7	2'-0	6	12"	5'-0	6	12"	13'-9				14	11'-9	5	12"	6'-0	4	7	12"	6'-9	5	2900
13'	8'-6	1'-3	2'-6	1'-3	4'-9	2'-2	7	12"	7'-6	5	12"	14'-9				16	12'-9	6	12"	6'-0	4	8	12"	7'-0	5	3200
14'	9'-0	1'-3	2'-6	1'-4	5'-2	2'-4	7	12"	7'-3	6	12"	15'-9				18	13'-9	6	12"	6'-9	5	8	12"	8'-3	6	3400
15'	9'-6	1'-4	2'-9	1'-5	5'-4	2'-6	8	12"	8'-9	6	12"	17'-0				18	14'-9	6	9"	7'-0	5	8	12"	8'-3	6	3600
16'	10'-0	1'-5	2'-9	1'-6	5'-9	2'-8	7	12"	7'-0	7	12"	9'-0	6	12"	10'-9	20	15'-9	6	8"	7'-3	5	7	8"	8'-0	6	3900
17'	10'-6	1'-6	3'-0	1'-7	5'-11	2'-10	8	12"	8'-0	7	12"	9'-0	6	12"	10'-9	22	16'-9	6	8"	7'-9	5	7	8"	8'-3	6	4000
18'	11'-0	1'-7	3'-0	1'-8	6'-4	3'-0	7	10"	7'-6	7	10"	10'-0	6	10"	11'-9	22	17'-9	7	12"	8'-0	6	9	10"	10'-0	7	4300
19'	11'-6	1'-8	3'-3	1'-9	6'-6	3'-2	8	12"	8'-0	8	12"	12'-6	6	12"	10'-9	24	18'-9	7	12"	8'-3	6	8	8"	9'-6	7	4500
20'	12'-0	1'-9	3'-3	1'-10	6'-11	3'-4	9	12"	9'-6	8	12"	13'-3	6	12"	11'-0	26	19'-9	7	12"	8'-9	6	9	9"	10'-9	7	4800
21'	12'-6	1'-10	3'-6	1'-11	7'-1	3'-6	8	10"	9'-0	8	10"	14'-3	6	10"	11'-3	26	20'-9	7	10"	9'-0	6	10	10"	11'-9	7	5000
22'	13'-0	1'-11	3'-6	2'-0	7'-6	3'-8	9	12"	10'-0	9	12"	15'-9	6	12"	11'-0	28	21'-9	8	12"	9'-3	6	8	6"	10'-6	7	5300
23'	13'-6	2'-0	3'-9	2'-2	7'-7	3'-10	10	12"	12'-9	8	12"	16'-3	6	12"	11'-3	30	22'-9	8	12"	9'-9	7	8	6"	10'-6	7	5500
24'	14'-0	2'-2	3'-9	2'-4	7'-11	4'-0	10	12"	11'-6	9	12"	17'-9	6	12"	11'-3	30	23'-9	8	12"	10'-0	7	8	6"	11'-0	8	5800
25'	14'-6	2'-4	4'-0	2'-6	8'-0	4'-2	10	12"	12'-6	9	12"	19'-0	6	12"	11'-3	32	24'-9	8	12"	10'-3	7	8	6"	11'-0	8	6100
26'	15'-0	2'-6	4'-0	2'-8	8'-4	4'-4	9	10"	11'-6	9	10"	18'-6	6	10"	13'-0	34	25'-9	8	12"	10'-9	7	10	9"	13'-0	9	6400
27'	15'-6	2'-9	4'-3	2'-10	8'-5	4'-6	10	12"	12'-3	10	12"	21'-3	6	12"	11'-9	34	26'-9	8	12"	11'-0	8	10	9"	13'-3	9	6700
28'	16'-0	3'-0	4'-3	3'-0	8'-9	4'-8	10	12"	13'-3	10	12"	22'-0	6	12"	12'-3	36	27'-9	8	12"	11'-3	8	10	9"	13'-6	9	7200
29'	16'-6	3'-3	4'-6	3'-3	8'-9	4'-10	11	12"	16'-3	9	12"	23'-0	6	12"	12'-3	38	28'-9	8	12"	11'-9	8	10	9"	13'-6	9	7500
30'	17'-0	3'-6	4'-6	3'-6	9'-0	5'-0	11	12"	15'-9	10	12"	24'-0	6	12"	12'-9	38	29'-9	8	12"	12'-0	8	10	9"	13'-9	10	7900

⌖ Total number of bars in cross section. * Factored Average Soil Bearing Pressure (psf).

QUANTITIES

CASE II			
H	Concrete C.Y./Ln.Ft.	Steel Lbs./Ln.Ft.	Steel (Horiz. Lap) Lbs./Splice
4'	.32	27	10
5'	.37	31	12
6'	.42	34	12
7'	.51	42	14
8'	.56	51	15
9'	.65	55	16
10'	.73	64	18
11'	.79	73	20
12'	.88	78	20
13'	.96	86	21
14'	1.05	105	24
15'	1.16	120	24
16'	1.29	127	25
17'	1.41	138	26
18'	1.55	162	28
19'	1.69	169	29
20'	1.83	195	30
21'	1.99	223	30
22'	2.15	232	32
23'	2.35	247	34
24'	2.60	263	34
25'	2.87	274	36
26'	3.14	305	38
27'	3.48	324	38
28'	3.83	337	40
29'	4.25	353	41
30'	4.68	380	42

NOTE:

Quantities are shown for information purposes only. The pay item is measured per square foot of wall.

Quantities are for one L.F. of wall except for horizontal steel lap splices and footing steps.

Steel quantities for horizontal lap splices shall be added for wall segments greater than 30 feet, and add a splice for each additional wall segment greater than 30 feet. Horizontal splices shall occur at construction or contraction joints (1'-0 splices).

Steel and concrete quantities for footing steps shall be added to those shown in the table.

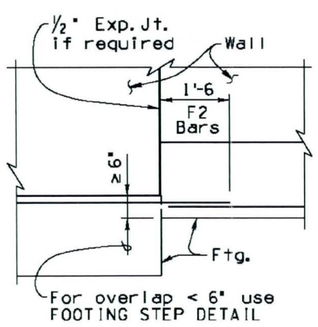

FOOTING DETAIL

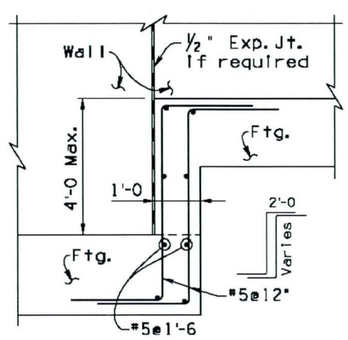

FOOTING STEP DETAIL

Note to Designer:
The information presented in this Standard Detail has been prepared in accordance with recognized engineering principles and is for general use. It should not be used for specific application without competent professional examination and verification of its suitability and applicability by a licensed professional engineer. Contents within the inner border line shall not be altered.

NO	DESCRIPTION OF REVISIONS	MADE BY	DATE
1	Original Issue	S.J.U.	9-10
2			
3			
4			

AS-BUILT CERTIFICATION

I HEREBY CERTIFY THAT THE "RECORD DRAWING" MEASUREMENTS AS SHOWN HEREON WERE MADE UNDER MY SUPERVISION, OR AS NOTED, AND ARE CORRECT TO THE BEST OF MY KNOWLEDGE AND BELIEF.

SIGNATURE | 41282 REGISTRATION NO. | 09/10/13 DATE

HUBBARD ENGINEERING
1840 S. STAPLEY DR. SUITE# 137
MESA, AZ 85204
ENGINEERING FIRM

REGISTERED PROFESSIONAL ENGINEER (CIVIL) CERTIFICATE NO. 41282 ADRIAN M. BURCHAM Date Signed 09/10/13 ARIZONA U.S.A. 9-30-12

NOTE:

For General Notes, Typical Elevations, Sections and Details see SD 7.01 (1, 2, and 4).

DESIGN APPROVED: Shafi U. Hasan

APPROVED FOR DISTRIBUTION: Tean A. Nehme

ARIZONA DEPARTMENT OF TRANSPORTATION
INTERMODAL TRANSPORTATION DIVISION
BRIDGE GROUP STRUCTURE DETAIL

RETAINING WALL
(REINFORCED CONCRETE CANTILEVER)

ROUTE	PROJECT NO.	FA NO.	DRAWING NO.
			SD 7.01 (3 of 5)
LOCATION			SHEET NO. 68 OF 68

ON-SITE GRADING & DRAINAGE PLAN
FOR
SONORAN CROSSING
PHOENIX, ARIZONA 85085
A PORTION OF SECTION 11, TOWNSHIP 5N, RANGE 2E

AS BUILT DATE

Dibble Engineering

DIBBLE PROJECT NO 111204

40925 MICHAEL R. GLEASON — Registered Professional Engineer (Civil) — Certificate No. — Date Signed 8/17/12 — ARIZONA U.S.A. — Expires 06/30/13

40925 MICHAEL R. GLEASON — Registered Professional Engineer (Civil) — Certificate No. — Date Signed 1/14/13 — ARIZONA U.S.A. — Expires 06/30/13

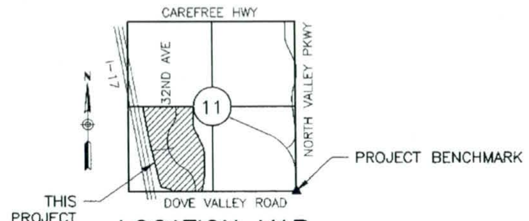

LOCATION MAP

T5N-R2E-SEC 11
COP 1/4 SECTION 57-21
NTS

ON-SITE QUANTITIES

2"DG/6"ABC (ACCESS ROAD)	1,838 SY
9"PCCP/4"ABC (ACCESS RAMP)	880 SF
EARTHEN DITCH – TYPE A	1,004 LF
EARTHEN DITCH – TYPE B	66 LF
EARTHEN DITCH – TYPE C	384 LF
EARTHEN DITCH – TYPE D	444 LF
EARTHEN BERM	514 LF
RIPRAP LINED CHANNEL	468 LF
RIPRAP W/ GEOSYNTHETIC EROSION CONTROL, D50=9"	256 CY
RIPRAP W/ GEOSYNTHETIC EROSION CONTROL, D50=12"	82 CY
CONCRETE HEADWALL MAG STD DET 501-1, TYPE U	1 EA
CONCRETE HEADWALL, SPECIAL DETAIL	1 EA
TRASH RACK ACCESS BARRIER, SPECIAL DETAIL	1 EA
FLAP GATE, WATERMAN MODEL F-10	1 EA
STEEL HAND RAIL, P-1173	102 LF
42" RGRCP CLASS IV STORM DRAIN	108 LF
54" RGRCP CLASS V STORM DRAIN	26 LF
PIPE PLUG	1 EA
CONCRETE EQUIPMENT PAD	200 SF
4 WIRE FENCE W/ POSTS	850 LF
4 WIRE FLOOD GATE	232 LF
(1) 18' ACCESS GATE	1 EA

PROJECT INFORMATION

ENGINEER: DIBBLE ENGINEERING
7500 NORTH DREAMY DRAW DRIVE, SUITE 200
PHOENIX, ARIZONA 85020
PHONE: 602.957.1155
FAX: 602.957.2838
CONTACT: MIKE GLEASON, P.E.

OWNER: WESTCOR / BLACK CANYON MOTORPLEX, LLC
11411 NORTH TATUM BOULEVARD
PHOENIX, AZ 85028
PHONE: 602.953-6210
CONTACT: EDWIN PURUHITO

SITE ACREAGE

NET = 77.71 AC
GROSS = 105.73 AC
DISTURBED AREA = 10.3 AC

EARTHWORK

CUT 13,500 CY
FILL 10,100 CY
NET 3,400 CY (EXPORT)

NOTE: ESTIMATED EARTHWORK CALCULATED BASED ON ONE-FOOT AERIAL CONTOUR MAPPING. 10% FILL SHRINK ASSUMED. ACTUAL EARTHWORK MAY VARY.

PROJECT BENCHMARK

▲ FOUND CITY OF PHOENIX BRASS CAP IN HAND HOLE (BCHH) AT THE INTERSECTION OF DOVE VALLEY ALIGNMENT AND NORTH VALLEY PARKWAY, HAVING AN ELEVATION OF 1631.349, CITY OF PHOENIX DATUM.

AS-BUILT CERTIFICATION

I HEREBY CERTIFY THAT THE "RECORD DRAWING" MEASUREMENTS AS SHOWN HEREON WERE MADE UNDER MY SUPERVISION OR AS NOTED AND ARE CORRECT TO THE BEST OF MY KNOWLEDGE AND BELIEF.

ADRIAN BURCHAM — REGISTERED ENGINEER/LAND SURVEYOR — *10-23-13* DATE

41282 — REGISTRATION NUMBER

SHEET INDEX

C1.0	COVER
C2.1	KEYMAP & CONTROL PLAN
C3.1-C3.6	GRADING & DRAINAGE PLAN
C4.1	CONCRETE CHANNEL PLAN & PROFILE
C5.1-C5.4	DETAILS

LEGEND

EXST	NEW
BENCHMARK	BACKFLOW PREVENTION DEVICE
BRASS CAP FLUSH	DRYWELL
BRASS CAP IN HANDHOLE	FIRE HYDRANT
BACKFLOW PREVENTION DEVICE	GATE
CACTUS	HEADWALL
DRYWELL	MANHOLE
FIRE HYDRANT	METER
FIRE DEPT CONNECTION	PIPE PLUG
GATE	PULLBOX
GRATE	RIPRAP
GUY WIRE	SIGN
HEADWALL	STREET LIGHT
MANHOLE (TYPE NOTED)	UTILITY POLE
METER (TYPE NOTED)	VALVE
PEDESTAL (TYPE NOTED)	BUILDING SETBACK
PULLBOX (TYPE NOTED)	CENTERLINE
RIPRAP	EASEMENT
SIGN	RIGHT-OF-WAY
STREET LIGHT	CHANNEL
TREE	FENCE WOOD
UTILITY POLE	FENCE WIRE
VALVE (TYPE NOTED)	FENCE CHAINLINK
EASEMENT	FLOWLINE
PROPERTY LINE	MASONRY WALL/RETAINING WALL
RIGHT-OF-WAY	MAJOR CONTOUR
FENCE WIRE	MINOR CONTOUR
FENCE CHAINLINK	STORM DRAIN
FLOWLINE	UTILITY LINE (TYPE NOTED)
MASONRY WALL/RETAINING WALL	FLOW DIRECTION
MAJOR CONTOUR	FILL SLOPE LIMITS
MINOR CONTOUR	CUT SLOPE LIMITS
UTILITY LINE (TYPE NOTED)	
EXST BUILDING	

FIRST FLUSH RETENTION TABLE

BASIN	CONTRIBUTING AREA (SF)	REQUIRED VOLUME CALCULATION (CF)	VOLUME PROVIDED(CF)	TYPE
A	156,816	156,816 X (0.50/12)=~~6,534~~ 7,793AB	~~8,072~~ 10,884AB	TEMPORARY
B	235,224	235,224 X (0.50/12)=~~9,801~~ 15,880AB	~~13,868~~ 23,375AB	TEMPORARY
C	191,664	191,664 X (0.50/12)=~~7,986~~ 10,252AB	~~9,296~~ 13,763AB	TEMPORARY
D	1,080,288	1,080,288 X (0.50/12)=~~45,012~~ 57,766AB	~~74,612~~ 76,804AB	TEMPORARY
E	19,731	19,731 X (0.50/12)=823AB	~~1,055~~ 1,113AB	PERMANENT

VOLUME = (P/12)A
P = 0.50 (INCHES) (FIRST FLUSH)
A = DRAINAGE AREA (SF)

REFER TO ON-SITE DRAINAGE REPORT FOR ADDITIONAL DRAINAGE DESIGN INFORMATION

DRAINAGE NOTES:

- A PORTION OF THIS SITE IS WITHIN A FLOOD ZONE (TYPE A AND AE).
- OFFSITE FLOWS AFFECT THIS SITE.
- RETENTION ON THIS SITE IS PROVIDED FOR THE 10-YEAR STORM EVENT.
- EXTREME STORM OUTFALLS THIS SITE IN MULTIPLE LOCATIONS / ELEVATIONS.

AS-BUILT CERTIFICATION

I HEREBY CERTIFY THAT THE "RECORD DRAWING" MEASUREMENTS AS SHOWN HEREON WERE MADE UNDER MY SUPERVISION, OR AS NOTED, AND ARE CORRECT TO THE BEST OF MY KNOWLEDGE AND BELIEF.

SIGNATURE	REGISTRATION NO.	DATE
[signature]	41282	10/23/13

HUBBARD ENGINEERING
1840 S. STAPLEY DR. SUITE# 137
MESA, AZ 85204
ENGINEERING FIRM

REGISTERED LAND SURVEYOR — CERTIFICATE NO. 41282 ADRIAN M. BURCHAM — Date Signed 10/23/13 — ARIZONA U.S.A. — Expires 9-30-16

(1)

City of Phoenix
These plans have been approved by the Development Services Department for The issuance of the following permit(s):
Grading TDO Ph. 1 Date 2-15-2013
SWMP ___ Ph. ___ Date ___
Paving ___ Ph. ___ Date ___
Concrete ___ Ph. ___ Date ___
Drain. Fac. ___ Ph. ___ Date ___
Water ___ Ph. ___ Date ___
Wastewater ___ Ph. ___ Date ___
Misc

ENGINEER'S NOTES

1. CONTRACTOR SHALL REFER TO LANDSCAPE SALVAGE PLAN FOR ALL VEGETATION TO BE REMOVED / SALVAGED.
2. ADOT DETAILS SHALL BE CONSTRUCTED PER ADOT STANDARD SPECIFICATIONS.
3. CONTRACTOR SHALL COMPLY WITH CWA SECTION 404 NATIONWIDE PERMIT REQUIREMENTS FOR LINEAR TRANSPORTATION PROJECTS AND UNDERGROUND UTILITIES.

GRADING & DRAINAGE NOTES (CITY OF PHOENIX, 2011)

1. A GRADING PERMIT IS REQUIRED UNDER CHAPTER 32A OF THE PHOENIX CITY CODE.
2. WHEN HAUL PERMITS ARE REQUIRED, THEY MUST BE OBTAINED PRIOR TO OR CONCURRENTLY WITH THE GRADING AND DRAINAGE PERMIT.
3. EXCAVATING CONTRACTOR MUST GIVE LOCATION FOR WASTING EXCESS EXCAVATION AND A LETTER FROM OWNER GIVING PERMISSION FOR DUMPING PRIOR TO STARTING ON-SITE CONSTRUCTION. IF EXCESS EXCAVATION EXCEEDS 100 CUBIC YARDS, THE DISPOSAL SITE WILL ALSO REQUIRE A GRADING AND DRAINAGE PERMIT.
4. PLANNING AND DEVELOPMENT DEPARTMENT FIELD INSPECTION GROUP SHALL BE NOTIFIED 48 HOURS BEFORE ANY ON-SITE AND/OR OFF-SITE CONSTRUCTION BEGINS, TELEPHONE (602) 262-7811.
5. STAKING FINISH FLOOR ELEVATIONS IS THE RESPONSIBILITY OF THE OWNER AND HIS ENGINEER. THE OWNER'S ENGINEER SHALL SUBMIT THREE SEALED COPIES OF THIS GRADING AND DRAINAGE PLAN DESIGNATED AS "RECORD DRAWING" (BEARING AN ORIGINAL SIGNATURE) PRIOR TO THE REQUEST FOR FINAL INSPECTION.
6. PAD CERTIFICATIONS WILL BE REQUIRED ON ALL LOTS WITHIN THE SUBDIVISION AND SUBMITTED TO THE CIVIL/SITE INSPECTOR PRIOR TO ANY CONCRETE CONSTRUCTED IN THE RIGHT-OF-WAY. PAD CERTIFICATION CAN BE SUBMITTED TO THE CIVIL/SITE INSPECTOR BY EITHER SUBMITTING ONE APPROVED BLACK-LINE AS-BUILT GRADING AND DRAINAGE PLAN OR IN LETTER FORMAT SHOWING THE DESIGN AND AS-BUILT PAD ELEVATIONS AS SHOWN ON THE APPROVED GRADING AND DRAINAGE PLAN. IT IS REQUIRED THAT THE AS-BUILT PLAN AND LETTER BE SEALED BY A CIVIL ENGINEER OR LAND SURVEYOR REGISTERED IN THE STATE OF ARIZONA.
7. A SEPARATE PERMIT IS NECESSARY FOR ANY OFFSITE CONSTRUCTION.
8. AN APPROVED GRADING AND DRAINAGE PLAN SHALL BE ON THE JOB SITE AT ALL TIMES. DEVIATIONS FROM THE PLAN MUST BE PRECEDED BY AN APPROVED PLAN REVISION.
9. GRADING AND DRAINAGE PLAN APPROVAL INCLUDES THE CONSTRUCTION OF ALL SURFACE IMPROVEMENTS SHOWN ON THE APPROVED PLAN, INCLUDING, BUT NOT LIMITED TO, RETENTION AREAS, SEDIMENTATION BASINS, AND/OR OTHER DRAINAGE FACILITIES, DRAINAGE PATTERNS, WALLS, CURBS, ASPHALT PAVEMENT, AND BUILDING FLOOR ELEVATION.
10. GRADES SHOWN IN RETENTION BASINS ARE DESIGN FINISHED GRADES. SHOULD THE CONTRACTOR OR ANY SUBCONTRACTOR PLAN TO PLACE SPOIL DIRT FROM FOOTINGS, UTILITY TRENCHES, LANDSCAPING, SWIMMING POOLS, ETC. IN THE BASINS, THE BASINS SHOULD BE SUFFICIENTLY OVER-EXCAVATED DURING THE ROUGH GRADING OPERATION TO ALLOW FOR THE PLACEMENT OF THE FILL OR LANDSCAPING MATERIALS.
11. CONTRACTOR IS RESPONSIBLE FOR LOCATING AND CONFIRMING DEPTHS OF ALL THE EXISTING UTILITY LINES WITHIN PROPOSED RETENTION BASIN AREAS. IF THE BASIN CANNOT BE CONSTRUCTED PER PLAN BECAUSE OF CONFLICTS, THE CONTRACTOR SHOULD DISCUSS MODIFICATION OF BASIN CONFIGURATION WITH THE CITY INSPECTOR TO DETERMINE IF A PLAN REVISION OR A FIELD CHANGE IS REQUIRED.
12. ALL DRAINAGE PROTECTIVE DEVICES SUCH AS SWALES, INTERCEPTOR DITCHES, PIPES, PROTECTIVE BERMS, BARRIER WALLS, CONCRETE CHANNELS, OR OTHER MEASURES DESIGNED TO PROTECT ADJACENT BUILDINGS OR PROPERTY FROM STORM RUNOFF MUST BE COMPLETED PRIOR TO BUILDING CONSTRUCTION.
13. PER SECTION 6.8.7 OF THE STORM WATER POLICIES AND STANDARDS, SIDE SLOPES OF STORM WATER STORAGE FACILITIES SHALL BE NO STEEPER THAN 5:1 FOR IRRIGATED GRASS AREAS AND 3:1 FOR LANDSCAPE AREAS. SLOPE STABILIZATION MEASURES ARE REQUIRED FOR ALL SLOPES GREATER THAN 5:1. THE SLOPE STABILIZATION MEASURES MUST BE READILY MAINTAINABLE USING COMMON MAINTENANCE EQUIPMENT AND BE DESIGNED WITH CONSIDERATION TO AESTHETICS. THE SLOPE STABILIZATION MEASURES SHALL BE CONSISTENT WITH COMMONLY USED ENGINEERING PRACTICES. UN-STABILIZED DECOMPOSED GRANITE IS NOT ALLOWED ON SLOPES GREATER THAN 5:1.
14. RETAINING WALLS 3'4" OR LESS MEASURED FROM THE TOP OF THE FOOTING TO THE TOP OF THE RETAINING WALL THAT SUPPORT A SURCHARGE ARE TO BE REVIEWED AND PERMITTED BY THE CIVIL PLAN REVIEW STAFF AND INSPECTED BY THE CIVIL INSPECTION STAFF. RETAINING WALL OVER 3'4" ON NON-HILLSIDE RESIDENTIAL ZONING DISTRICTS REQUIRE A USE PERMIT. WALLS OVER 3'4" WILL BE REVIEWED, PERMITTED, AND INSPECTED BY THE BUILDING SAFETY BRANCH OF THE PLANNING AND DEVELOPMENT DEPARTMENT UNDER SEPARATE SUBMITTAL BY THE APPLICANT.
15. ALL RAMPS MUST MEET ADA ACCESSIBILITY GUIDELINES (ADAAG) STANDARDS AND CITY OF PHOENIX SUPPLEMENT TO M.A.G. UNIFORM STANDARD SPECIFICATIONS AND DETAILS; 2% MAX CROSS SLOPES AND12:1 MAX LONGITUDINAL SLOPES.
16. CERTIFICATE OF OCCUPANCY (C OF O) AND/OR FINAL ELECTRICAL CLEARANCE FOR ANY BUILDING IS DENIED UNTIL ALL GRADING AND DRAINAGE IMPROVEMENTS ARE COMPLETED.
17. EXISTING OR NEWLY DAMAGED AND/OR DISPLACED CONCRETE CURB, GUTTER, SIDEWALK, OR DRIVEWAY SLAB THAT IS WITHIN THE RIGHT-OF-WAY SHALL BE REPAIRED OR REPLACED, AS NOTED BY CITY INSPECTORS, BEFORE FINAL ACCEPTANCE OF THE WORK.
18. THE ENGINEERING DESIGN ON THESE PLANS IS ONLY APPROVED BY THE CITY IN SCOPE AND NOT IN DETAIL. CONSTRUCTION QUANTITIES ON THESE PLANS ARE NOT VERIFIED BY THE CITY. APPROVAL OF THESE PLANS ARE FOR PERMIT PURPOSES ONLY AND SHALL NOT PREVENT THE CITY FROM REQUIRING CORRECTION OF ERRORS IN THE PLANS WHERE SUCH ERRORS ARE SUBSEQUENTLY FOUND TO BE IN VIOLATION OF ANY LAW, ORDINANCE, HEALTH, SAFETY, OR OTHER DESIGN ISSUES.
19. THE CITY OF PHOENIX POLICE DEPARTMENT ENFORCES LAWS REGULATING THE OPERATION OF COMMERCIAL VEHICLES. THIS INCLUDES ENFORCEMENT OF FEDERAL, STATE, COUNTY AND LOCAL LAWS AND ORDINANCES. QUESTIONS REGARDING COMMERCIAL VEHICLE ENFORCEMENT MAY BE DIRECTED TO THE COMMERCIAL VEHICLE ENFORCEMENT SUPERVISOR AT (602) 495-7813 (TRAFFIC BUREAU SOUTH) OR (602) 495-6784 (TRAFFIC BUREAU NORTH)
20. PLAN APPROVAL IS VALID FOR 180 DAYS. PRIOR TO PLAN APPROVAL EXPIRATION, ALL ASSOCIATED PERMITS SHALL BE PURCHASED OR THE PLANS SHALL BE RESUBMITTED FOR EXTENSION OF PLAN APPROVAL. THE EXPIRATION, EXTENSION, AND REINSTATEMENT OF CIVIL ENGINEERING PLANS AND PERMITS SHALL FOLLOW THE SAME GUIDELINES AS THOSE INDICATED IN THE PHOENIX BUILDING CONSTRUCTION CODE ADMINISTRATIVE PROVISIONS SECTION 105.3 FOR BUILDING PERMITS.
21. THE OWNER/DEVELOPER SHALL BE RESPONSIBLE FOR REGISTERING THE DRY WELLS SHOWN ON THE GRADING AND DRAINAGE PLAN WITH THE ARIZONA DEPARTMENT OF ENVIRONMENTAL QUALITY (A.D.E.Q.). FOR INFORMATION ABOUT SPECIFIC REQUIREMENTS, CONTACT THE WATER PERMITS UNIT AT (602) 771-4686.
22. DRY WELLS MUST BE DRILLED A MINIMUM OF 10 FEET INTO PERMEABLE POROUS STRATA OR PERCOLATION TESTS WILL BE REQUIRED. THE GRADING AND DRAINAGE INSPECTOR MUST BE PRESENT BEFORE BACKFILL OR WELL PIPES ARE PLACED WITHIN ANY DRY WELLS.
23. THE OWNER/DEVELOPER IS RESPONSIBLE FOR INSTALLING ADDITIONAL DRYWELL(S) SHOULD THE ON-SITE RETENTION FAIL TO DRAIN WITHIN 36 HOURS.

NOTE: BEFORE GRADING IN AREAS CONTAINING NATIVE DESERT VEGETATION, THE CONTRACTOR MUST OBTAIN A PERMIT FROM ARIZONA DEPARTMENT OF AGRICULTURE. FOR INFORMATION, PHONE (602) 364-0935.

KIVA: 11-3686
SDEV: 1100351
CSPR: 1201762
QS: 57-21

City of Phoenix
These plans have been approved by the Development Services Department for The issuance of the following permit(s):
Grading TDO Ph. 1 Date 9-10-12
SWMP ___ Ph. ___ Date ___
Paving ___ Ph. ___ Date ___
Concrete ___ Ph. ___ Date ___
Drain. Fac. ___ Ph. ___ Date ___
Water ___ Ph. ___ Date ___
Wastewater ___ Ph. ___ Date ___
Misc

CALL TWO WORKING DAYS BEFORE YOU DIG
(602) 263-1100
1-800-STAKE-IT
(OUTSIDE MARICOPA COUNTY)

	REVISION	BY	
1	MODIFIED LIFT STATION GRADING, LAYOUT AND DRIVEWAY	SAK	01/14/2013

SONORAN CROSSING

COVER

DRN: KEB DATE: 6/12	DES: KEB DATE: 6/12	CK: MRG DATE: 6/12	DRAWING	SHEET
SCALE: AS NOTED			C1.0	1 OF 13

\\DIBBLECORP.COM\PHXDFS\JOBS\2012\111204 MACERICH NBCC\CAD\C1_0 COVR.DWG Jan. 14, 2013 1:01 PM

AS BUILT DATE

Dibble Engineering

DIBBLE PROJECT NO- H1204

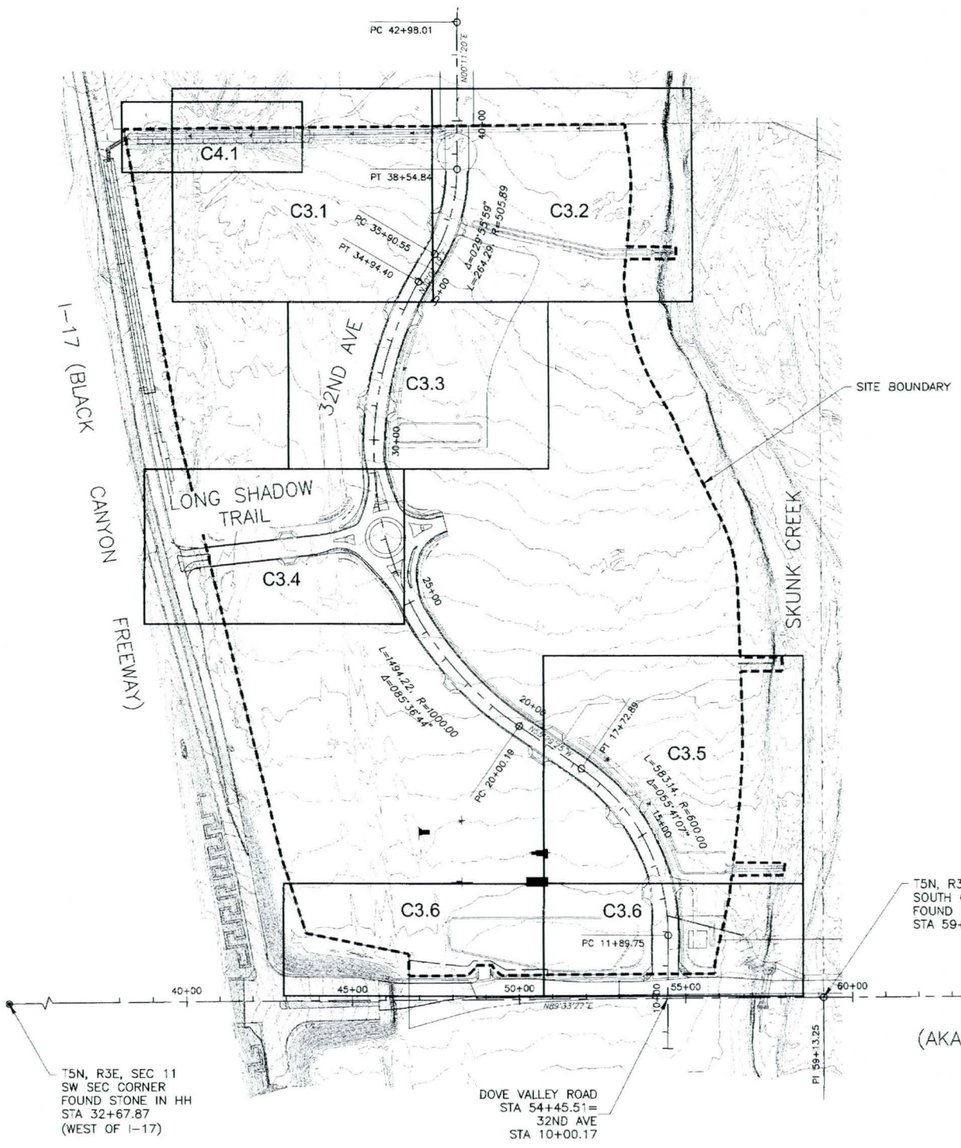

REFER TO THE FOLLOWING PACKAGES FOR ADDITIONAL INFORMATION AND COORDINATION:

1. OFF-SITE PAVING PLAN
2. OFF-SITE SEWER PLAN
3. ON-SITE SEWER LIFT STATION & FORCE MAIN PLAN
4. OFF-SITE WATER MAIN PLAN
5. LANDSCAPE SALVAGE PLAN
6. STREET LIGHT PLAN

N

0' 100' 200' 400'

SCALE: 1"=200'

CALL TWO WORKING DAYS BEFORE YOU DIG
(602) 263-1100
1-800-STAKE-IT
(OUTSIDE MARICOPA COUNTY)

AS-BUILT CERTIFICATION

I HEREBY CERTIFY THAT THE "RECORD DRAWING" MEASUREMENTS AS SHOWN HEREON WERE MADE UNDER MY SUPERVISION, OR AS NOTED, AND ARE CORRECT TO THE BEST OF MY KNOWLEDGE AND BELIEF.

SIGNATURE	REGISTRATION NO.	DATE
	41282	10/23/13

HUBBARD ENGINEERING
1840 S. STAPLEY DR. SUITE 137
MESA, AZ 85204
ENGINEERING FIRM

REGISTERED LAND SURVEYOR
CERTIFICATE NO.
41282
ADRIAN M. BURCHAM
ARIZONA U.S.A.
EXPIRES 6/30/14

1	REVISION	BY

SONORAN CROSSING

KEY MAP & CONTROL PLAN

DRN: KEB	DES: KEB	CK: MRG	DRAWING	SHEET
DATE: 6/12	DATE: 6/12	DATE: 6/12		
SCALE: 1"=200'			C2.1	2 OF 13

\\DIBBLECORP\COMMON\H\H1204 MACEROI NARCO\CAD\C2.1 KEYMAP.DWG Aug 7, 2012 5:17 PM

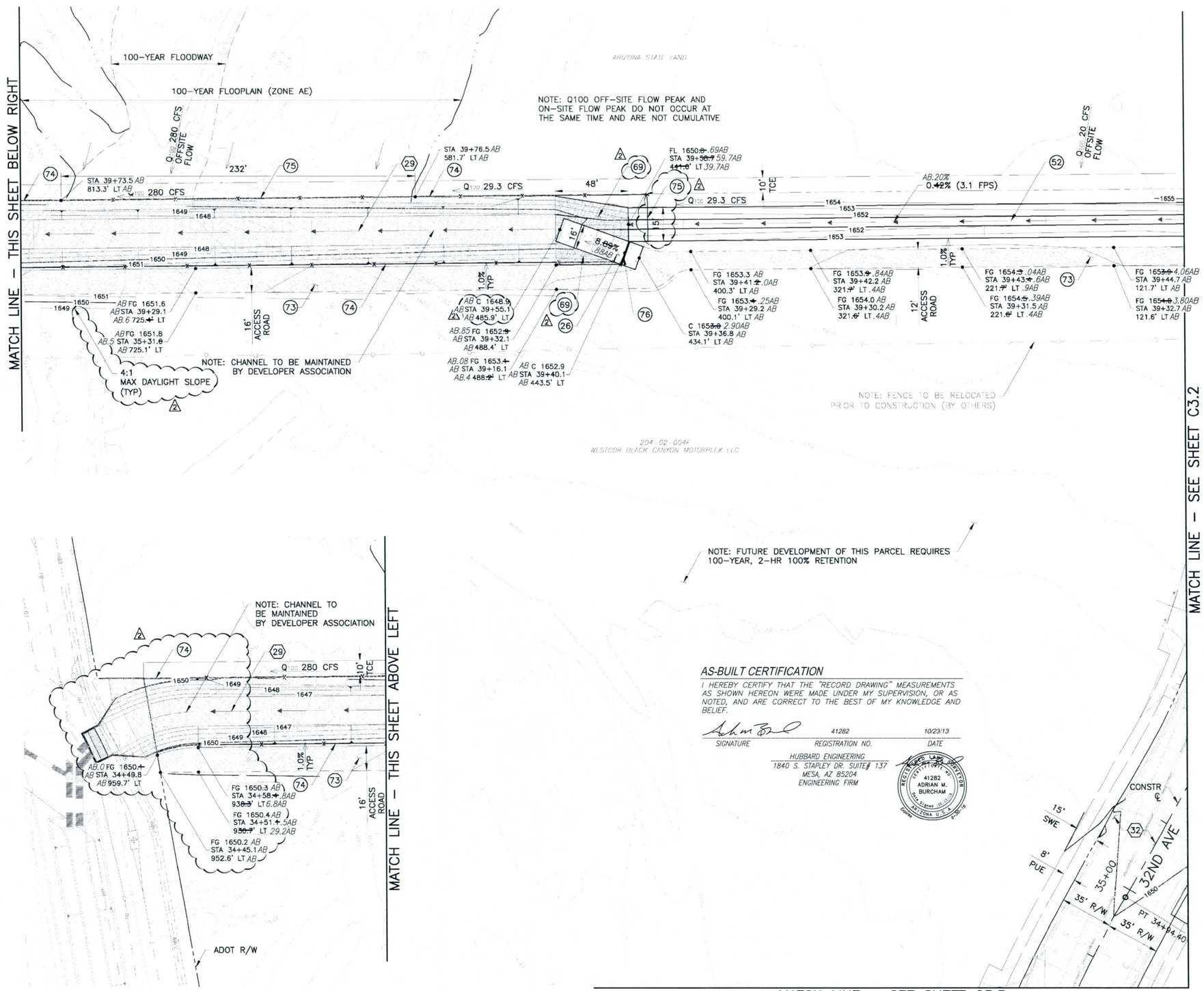

NOTE: FUTURE DEVELOPMENT OF THIS PARCEL REQUIRES 100-YEAR, 2-HR 100% RETENTION

MATCH LINE – SEE SHEET C3.3

AS-BUILT CERTIFICATION

I HEREBY CERTIFY THAT THE "RECORD DRAWING" MEASUREMENTS AS SHOWN HEREON WERE MADE UNDER MY SUPERVISION, OR AS NOTED, AND ARE CORRECT TO THE BEST OF MY KNOWLEDGE AND BELIEF.

SIGNATURE	REGISTRATION NO.	DATE
	41282	10/23/13

HUBBARD ENGINEERING
1840 S. STAPLEY DR. SUITE# 137
MESA, AZ 85204
ENGINEERING FIRM

REGISTERED LAND SURVEYOR 41282 ADRIAN M. BURCHAM ARIZONA U.S.A. Expires 06/30/14

AS BUILT DATE

Dibble Engineering

DIBBLE PROJECT NO 111204

40925 MICHAEL R. GLEASON Reg. Stamp 8/17/11 ARIZONA U.S.A. Expires 06/30/13

40925 MICHAEL R. GLEASON Reg. Stamp 4/13/11 ARIZONA U.S.A. Expires 06/30/13

REMOVAL NOTES

CONSTRUCTION NOTES

26	CONCRETE ACCESS RAMP PAVING 9"PCCP/4"ABC/NATIVE COMPACTED TO 95%	880 SF
52	EARTHEN DITCH TYPE C DET 3, SHEET C5.1	366 LF
△2 69	DUMPED RIPRAP W/EROSION CONTROL GEOSYNTHETIC (NPI) DEPTH=24", D50=6", GEOMETRY PER PLAN	82 CY
73	DECOMPOSED GRANITE ACCESS ROAD 2"DG(1/4" MINUS) ON 6"ABC	1,492 SY
74	4 WIRE FENCE W/ POSTS ADOT STD DET C-12.10, TYPE 1 MOD NO BARB, SEE SHEET C5.2	910 LF
75	4 WIRE FENCE FLOOD GATE ADOT STD DET C-12.10, LENGTH PER PLAN SEE SHEET C5.2	232 LF
76	16' ACCESS GATE ADOT STD DET C-12.10, TYPE 1 (DOUBLE) SEE SHEET C5.2	1 EA

NOTE: ELEVATIONS AND CONTOURS ARE TO FINISH GRADE. CONTRACTOR SHALL OVER EXCAVATE AS REQUIRED FOR SURFACE MATERIALS (ABC, PAVEMENT, RIPRAP, ETC) TO MEET FINISH GRADE.

REFERENCE NOTES

29 REFER TO SHEET C4.1 FOR CHANNEL CONSTRUCTION

32 REFER TO OFF-SITE ROADWAY PLAN FOR ROADWAY CONSTRUCTION

0' 15' 30' 60'
SCALE: 1"=30'

CALL TWO WORKING DAYS BEFORE YOU DIG (602) 263-1100 1-800-STAKE-IT (OUTSIDE MARICOPA COUNTY)

2	APS / CHANNEL CONFLICT REVISIONS	KEB	04/03/2013
△	REVISION	BY	

SONORAN CROSSING

GRADING & DRAINAGE PLAN

DRN: KEB	DES: KEB	CK: MRG	DRAWING	SHEET
DATE: 6/12	DATE: 6/12	DATE: 6/12		
SCALE: AS NOTED			C3.1	3 OF 13

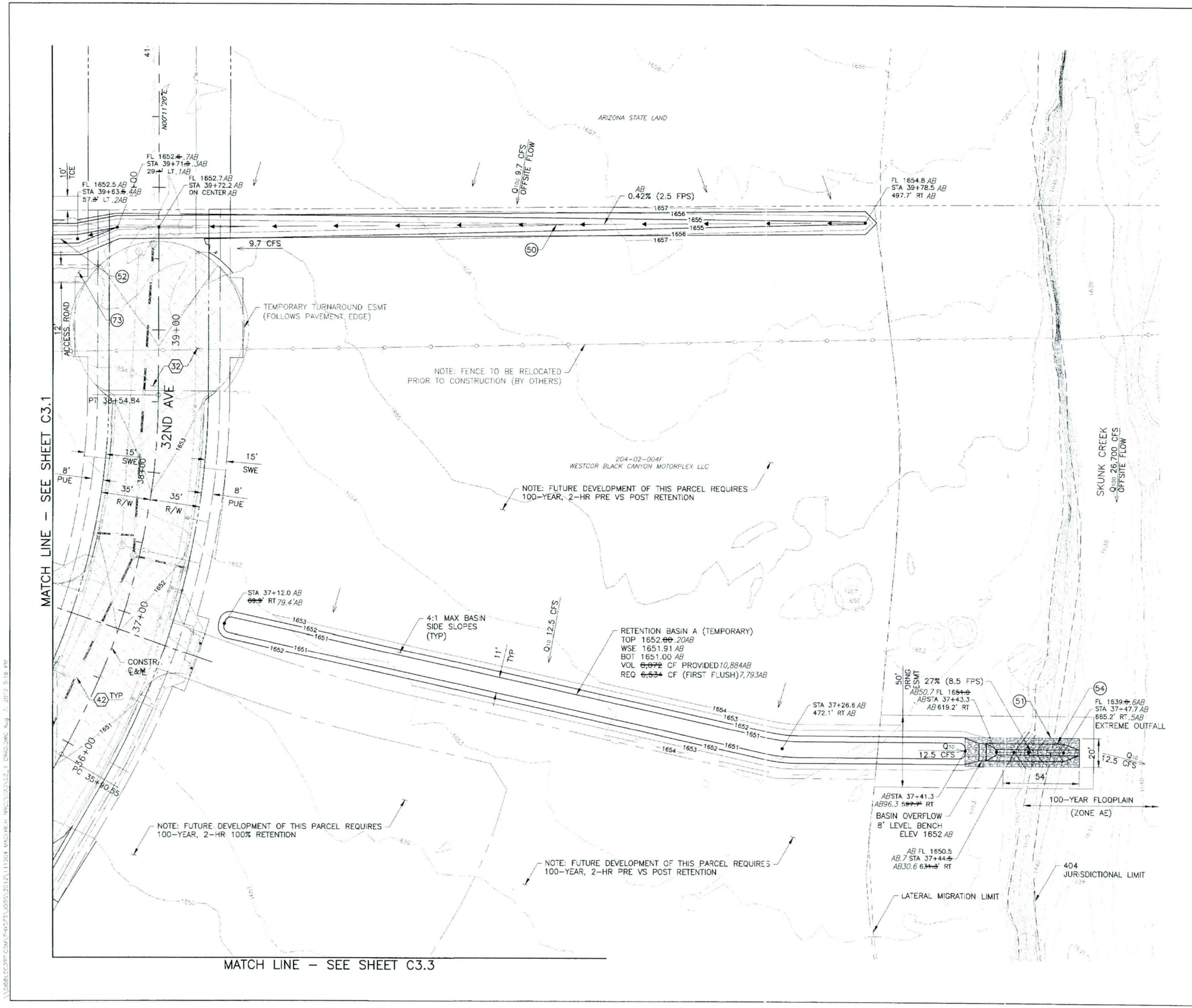

AS BUILT DATE

Dibble Engineering

DIBBLE PROJECT NO 111204

40925 MICHAEL R. GLEASON ARIZONA U.S.A. Expires 06/30/13

REMOVAL NOTES

AS-BUILT CERTIFICATION

I HEREBY CERTIFY THAT THE "RECORD DRAWING" MEASUREMENTS AS SHOWN HEREON WERE MADE UNDER MY SUPERVISION, OR AS NOTED, AND ARE CORRECT TO THE BEST OF MY KNOWLEDGE AND BELIEF.

SIGNATURE	REGISTRATION NO.	DATE
	41282	10/23/13

HUBBARD ENGINEERING
1840 S. STAPLEY DR. SUITE# 137
MESA, AZ 85204
ENGINEERING FIRM

41282 ADRIAN M. BURCHAM ARIZONA U.S.A. Expires 9-30-14

CONSTRUCTION NOTES

50	EARTHEN DITCH TYPE A DET 1, SHEET C5.1	557 LF
51	EARTHEN DITCH TYPE B DET 2, SHEET C5.1	66 LF
52	EARTHEN DITCH TYPE C DET 3, SHEET C5.1	18 LF
54	DUMPED RIPRAP W/EROSION CONTROL GEOSYNTHETIC (NPI) DEPTH=18", D50=9", GEOMETRY PER PLAN	90 CY
73	DECOMPOSED GRANITE ACCESS ROAD 2"DG(1/4" MINUS) ON 6"ABC	39 SY

NOTE: ELEVATIONS AND CONTOURS ARE TO FINISH GRADE. CONTRACTOR SHALL OVER EXCAVATE AS REQUIRED FOR SURFACE MATERIALS (ABC, PAVEMENT, RIPRAP, ETC) TO MEET FINISH GRADE.

REFERENCE NOTES

32 REFER TO OFF-SITE ROADWAY PLAN FOR ROADWAY CONSTRUCTION

42 NEW STORM DRAIN / CULVERT
REFER TO OFF-SITE PAVING PLAN FOR CONSTRUCTION

0' 15' 30' 60'
SCALE: 1"=30'

CALL TWO WORKING DAYS BEFORE YOU DIG
(602) 263-1100
1-800-STAKE-IT
(OUTSIDE MARICOPA COUNTY)

REVISION	BY

SONORAN CROSSING

GRADING & DRAINAGE PLAN

DRN: KEB	DES: KEB	CK: MRG	DRAWING	SHEET
DATE: 6/12	DATE: 6/12	DATE: 6/12		
SCALE: AS NOTED			C3.2	4 OF 13

\\DIBBLECORP.COM\FILES\JOBS\2012\111204 MACHLER RANCH\CIVIL\DWG\C3.1 GRADING Aug 7, 2013 5:18 PM

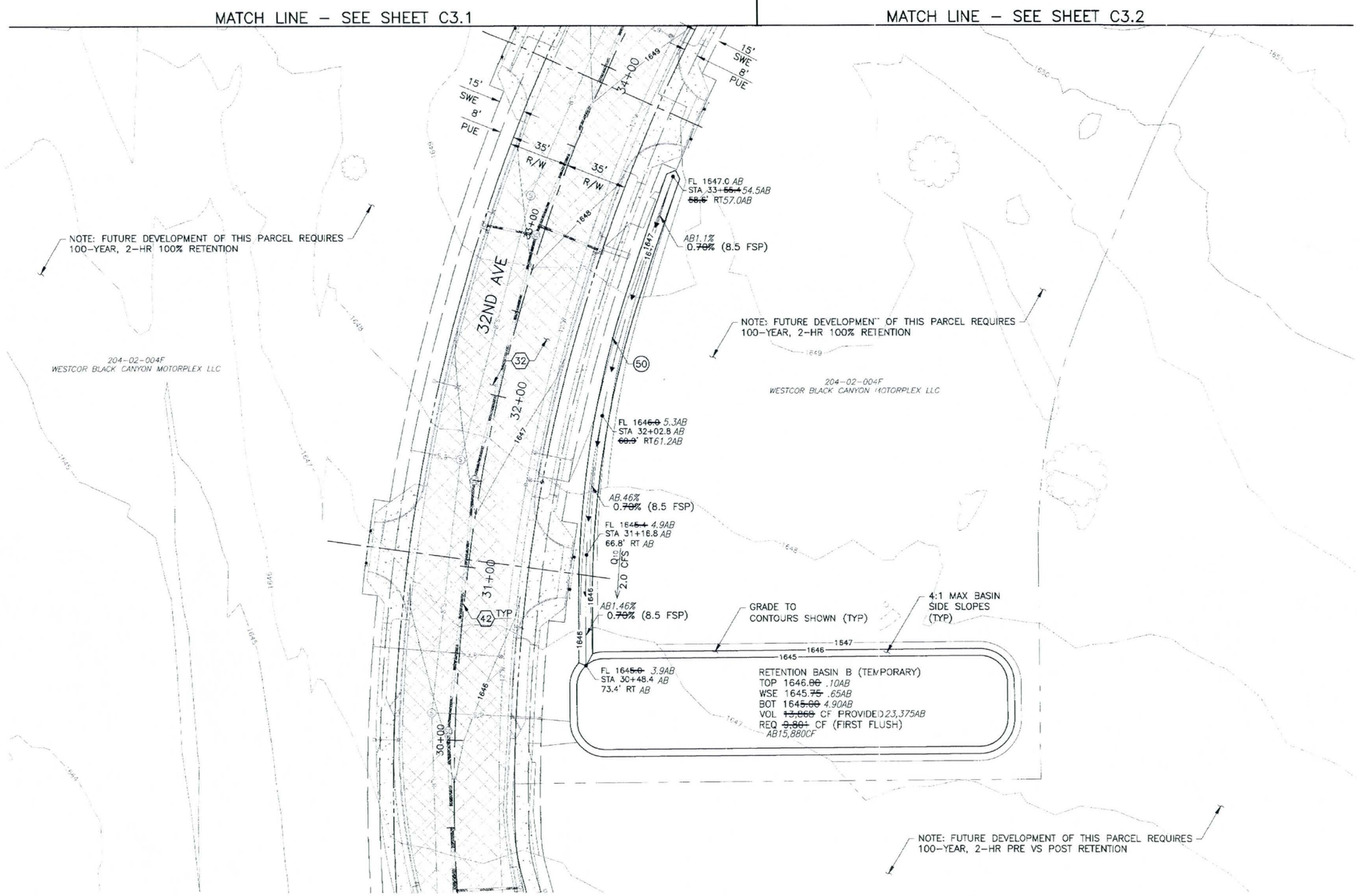

AS BUILT DATE

Dibble Engineering

DIBBLE PROJECT NO 111204

40925 MICHAEL R. GLEASON ARIZONA U.S.A. Expires 06/30/13

REMOVAL NOTES

CONSTRUCTION NOTES

(50) EARTHEN DITCH TYPE A — 293 LF
DET 1, SHEET C5.1

AS-BUILT CERTIFICATION

I HEREBY CERTIFY THAT THE "RECORD DRAWING" MEASUREMENTS AS SHOWN HEREON WERE MADE UNDER MY SUPERVISION, OR AS NOTED, AND ARE CORRECT TO THE BEST OF MY KNOWLEDGE AND BELIEF.

SIGNATURE	REGISTRATION NO.	DATE
	41282	10/23/13

HUBBARD ENGINEERING
1840 S. STAPLEY DR. SUITE# 137
MESA, AZ 85204
ENGINEERING FIRM

REGISTERED LAND SURVEYOR 41282 ADRIAN M. BURCHAM ARIZONA U.S.A. Expires 9/30/14

NOTE: ELEVATIONS AND CONTOURS ARE TO FINISH GRADE. CONTRACTOR SHALL OVER EXCAVATE AS REQUIRED FOR SURFACE MATERIALS (ABC, PAVEMENT, RIPRAP, ETC) TO MEET FINISH GRADE.

REFERENCE NOTES

(32) REFER TO OFF-SITE ROADWAY PLAN FOR ROADWAY CONSTRUCTION

(42) NEW STORM DRAIN / CULVERT REFER TO OFF-SITE PAVING PLAN FOR CONSTRUCTION

N

0' 15' 30' 60'
SCALE: 1"=30'

CALL TWO WORKING DAYS BEFORE YOU DIG
(602) 263-1100
1-800-STAKE-IT
(OUTSIDE MARICOPA COUNTY)

REVISION	BY

SONORAN CROSSING

GRADING & DRAINAGE PLAN

DRN: KEB	DES: KEB	CK: MRG	DRAWING	SHEET
DATE: 6/12	DATE: 6/12	DATE: 6/12		
SCALE: AS NOTED			C3.3	5 OF 13

\\DIBBLECORP\CONA\PHX\75\L0B3\2012\111204 MACERICH NBCC\CADD\C3.3 - GRAD.DWG Aug 7, 2012 5:18 PM

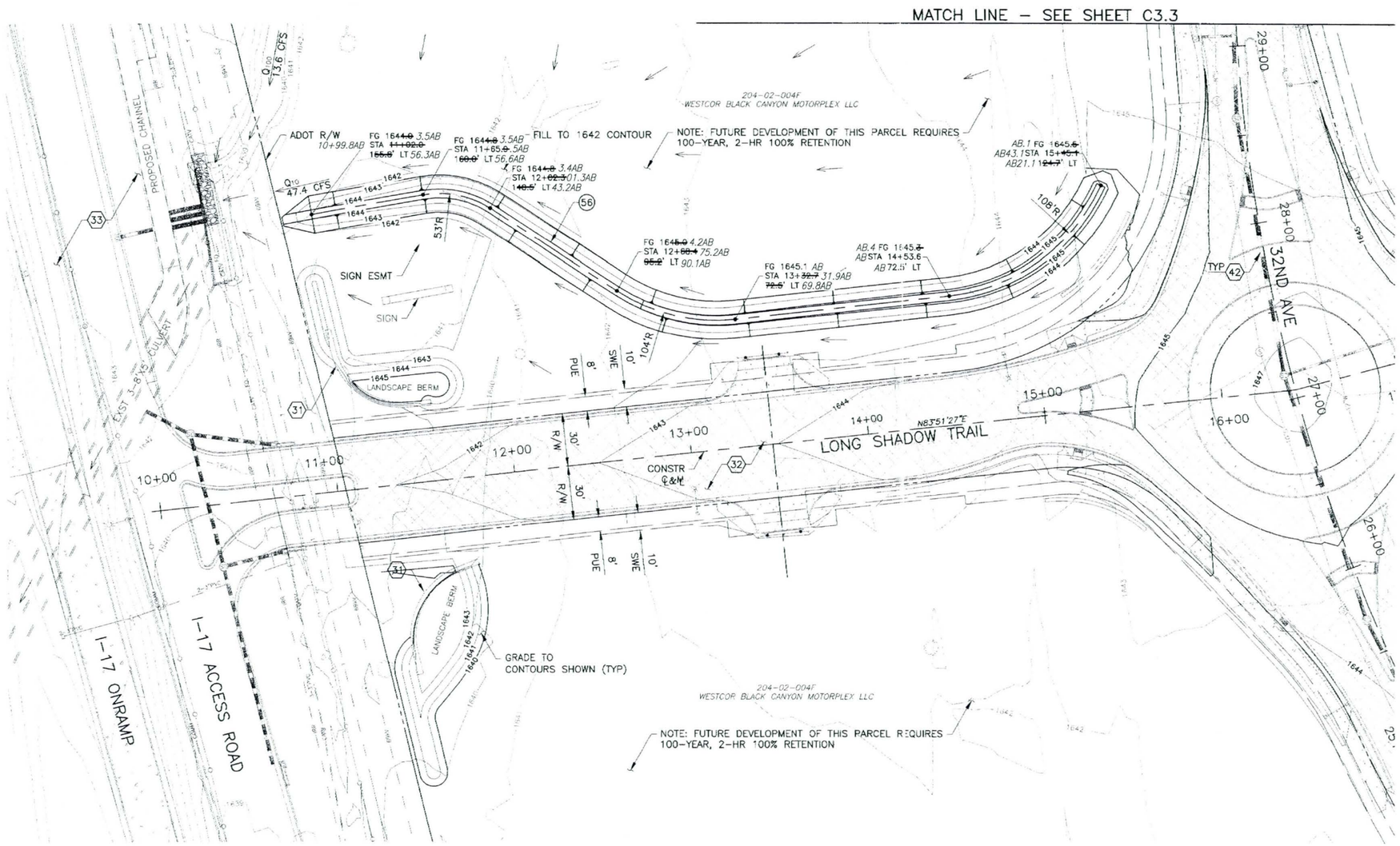

AS BUILT DATE

Dibble Engineering

DIBBLE PROJECT NO 111204

40925 MICHAEL R. GLEASON REGISTERED PROFESSIONAL ENGINEER ARIZONA U.S.A. Expires 06/30/13

REMOVAL NOTES

CONSTRUCTION NOTES

(56) EARTHEN BERM — 514 LF
DET 5, SHEET C5.1

AS-BUILT CERTIFICATION

I HEREBY CERTIFY THAT THE "RECORD DRAWING" MEASUREMENTS AS SHOWN HEREON WERE MADE UNDER MY SUPERVISION, OR AS NOTED, AND ARE CORRECT TO THE BEST OF MY KNOWLEDGE AND BELIEF.

SIGNATURE	REGISTRATION NO.	DATE
	41282	10/23/13

HUBBARD ENGINEERING
1840 S. STAPLEY DR. SUITE# 137
MESA, AZ 85204
ENGINEERING FIRM

REGISTERED LAND SURVEYOR 41282 ADRIAN M. BURCHAM ARIZONA U.S.A. Expires 3-30-14

NOTE: ELEVATIONS AND CONTOURS ARE TO FINISH GRADE. CONTRACTOR SHALL OVER EXCAVATE AS REQUIRED FOR SURFACE MATERIALS (ABC, PAVEMENT, RIPRAP, ETC) TO MEET FINISH GRADE.

REFERENCE NOTES

(31) REFER TO LANDSCAPE PLANS FOR MONUMENT SIGNS
(32) REFER TO OFF-SITE ROADWAY PLAN FOR ROADWAY CONSTRUCTION
(33) REFER TO ADOT PLANS FOR IMPROVMENTS IN ADOT R/W
(42) NEW STORM DRAIN / CULVERT REFER TO OFF-SITE PAVING PLAN FOR CONSTRUCTION

N

0' 15' 30' 60'
SCALE: 1"=30'

CALL TWO WORKING DAYS BEFORE YOU DIG (602) 263-1100 1-800-STAKE-IT (OUTSIDE MARICOPA COUNTY)

REVISION	BY

SONORAN CROSSING

GRADING & DRAINAGE PLAN

DRN: KEB	DES: KEB	CK: MRG	DRAWING	SHEET
DATE: 6/12	DATE: 6/12	DATE: 6/12		
SCALE: AS NOTED			C3.4	6 OF 13

\\DIBBLECORP.COM\PHXDFS\JOBS\2012\111204 MAREFIELD NBK\CAD\C3.1 GRAD.DWG Aug 7, 2012 5:18 PM

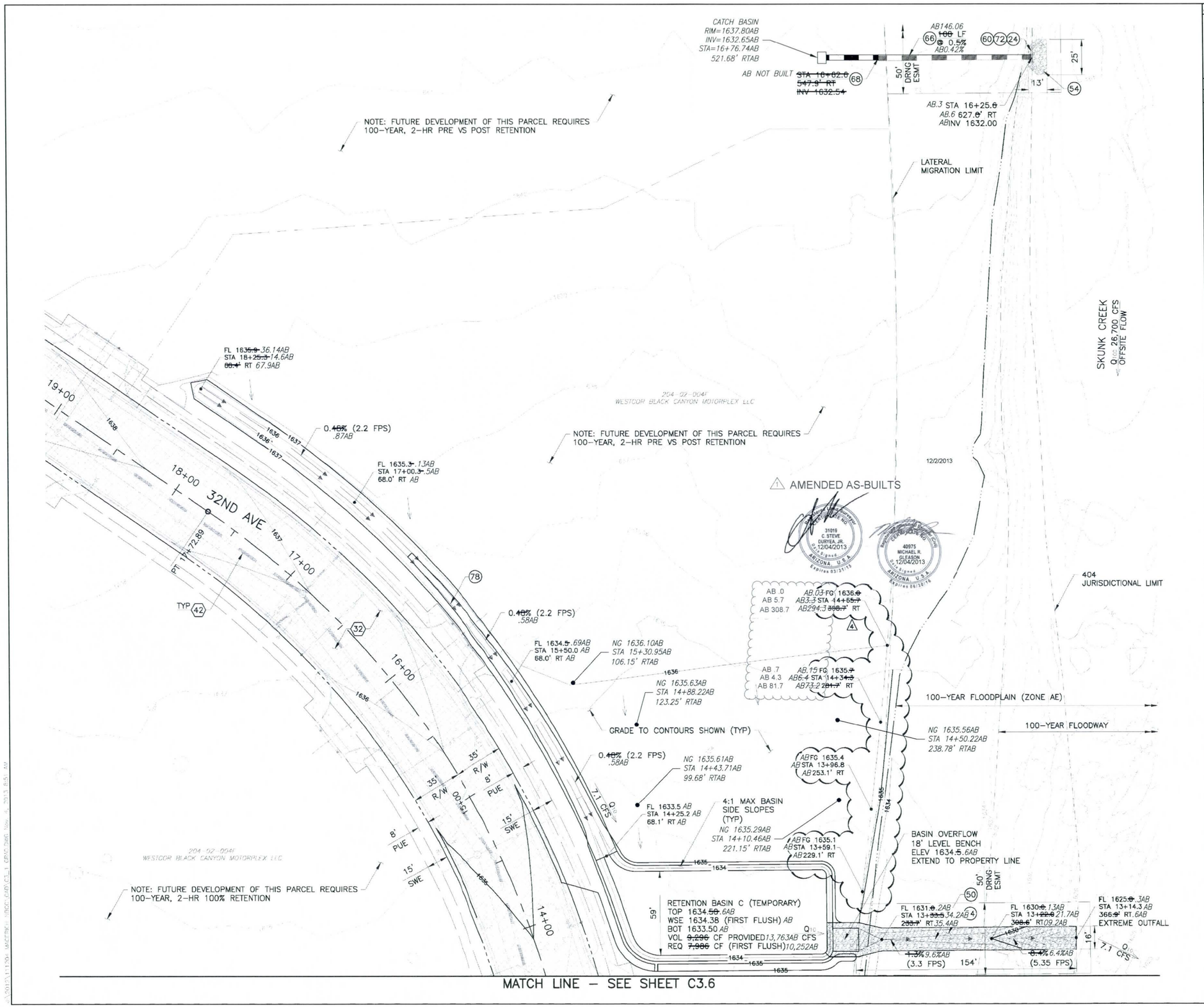

AS BUILT DATE

Dibble Engineering

DIBBLE PROJECT NO 111204

REMOVAL NOTES

CONSTRUCTION NOTES

(24)	STEEL HANDRAIL COP STD DET P-1173	24 LF
(50)	EARTHEN DITCH TYPE A DET 1, SHEET C5.1	154 LF
(54)	DUMPED RIPRAP W/EROSION CONTROL GEOSYNTHETIC (NPI) DEPTH=18", D50=9", GEOMETRY PER PLAN	166 CY
(60)	CONCRETE HEADWALL MAG STD DET 501-1, TYPE U	1 EA
(66)	42" STORM DRAIN, RGRCP CLASS IV	108 LF
(68)	PIPE PLUG	1 EA
(72)	FLAP GATE WATERMAN MODEL F-10 OR APPROVED EQUAL	1 EA
(78)	EARTHEN DITCH TYPE D DET 4, SHEET C5.1	444 LF

NOTE: ELEVATIONS AND CONTOURS ARE TO FINISH GRADE. CONTRACTOR SHALL OVER EXCAVATE AS REQUIRED FOR SURFACE MATERIALS (ABC, PAVEMENT, RIPRAP, ETC) TO MEET FINISH GRADE.

REFERENCE NOTES

(32) REFER TO OFF-SITE ROADWAY PLAN FOR ROADWAY CONSTRUCTION

(42) NEW STORM DRAIN / CULVERT REFER TO OFF-SITE PAVING PLAN FOR CONSTRUCTION

0' 15' 30' 60'
SCALE: 1"=30'

CALL TWO WORKING DAYS BEFORE YOU DIG
(602) 263-1100
1-800-STAKE-IT
(OUTSIDE MARICOPA COUNTY)

4	SUPPLEMENTAL SPOT ELEVATIONS AT PROPERTY LINE	KEB	11/04/2013
	REVISION	BY	

SONORAN CROSSING

GRADING & DRAINAGE PLAN

DRN: KEB	DES: KEB	CK: MRG	DRAWING	SHEET
DATE: 11/04	DATE: 11/04	DATE: 11/04		
SCALE: AS NOTED			C3.5	7 OF 13

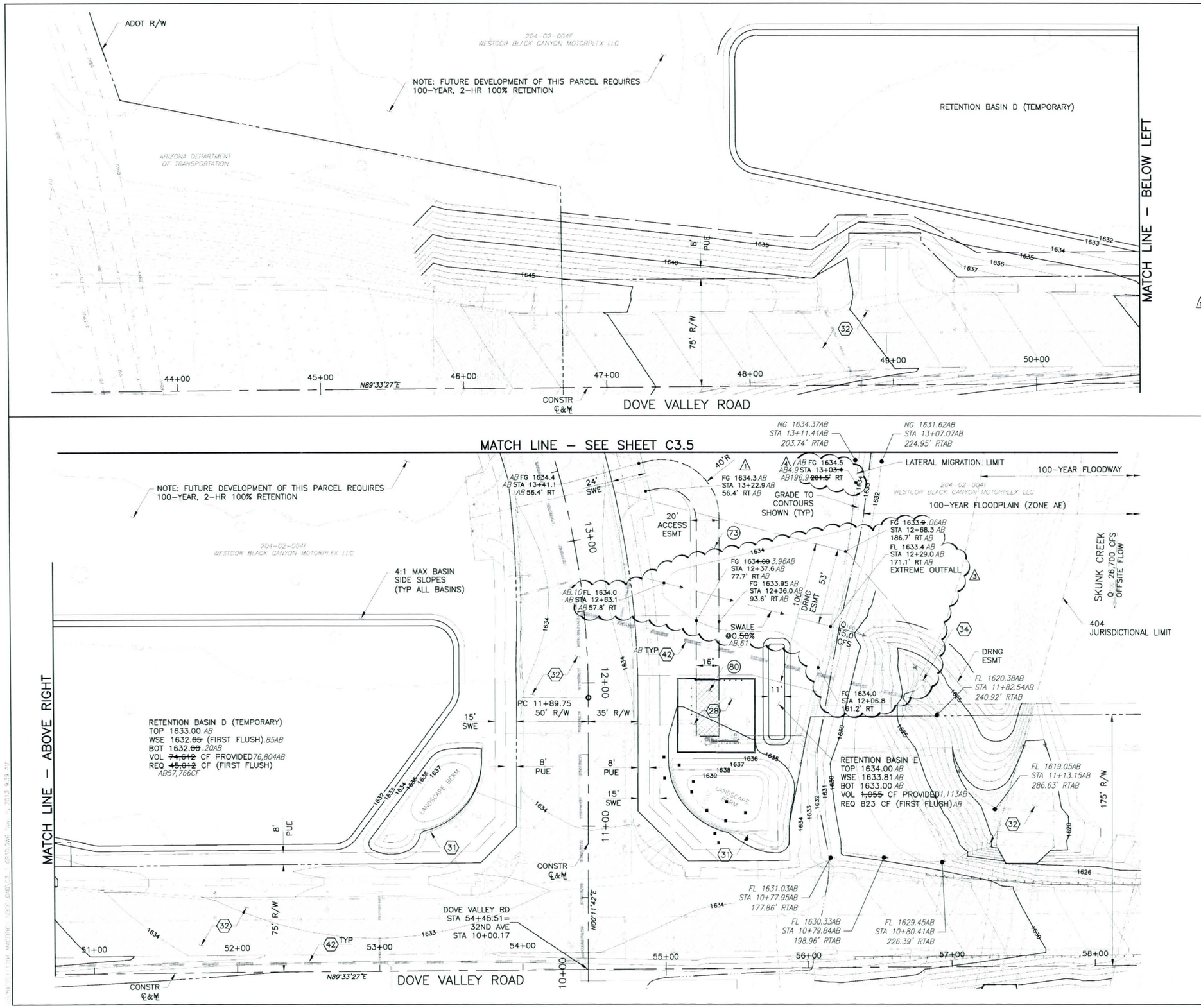

AS BUILT DATE

Dibble Engineering

DIBBLE PROJECT NO 111204

REMOVAL NOTES

CONSTRUCTION NOTES

73	DECOMPOSED GRANITE ACCESS ROAD 2"DG(1/4" MINUS) ON 6"ABC	330 SY
80	PAVEMENT SECTION 3 4"AC/7"ABC (SEE SHEET CR2.2)	72 SY

NOTE: ELEVATIONS AND CONTOURS ARE TO FINISH GRADE. CONTRACTOR SHALL OVER EXCAVATE AS REQUIRED FOR SURFACE MATERIALS (ABC, PAVEMENT, RIPRAP, ETC) TO MEET FINISH GRADE.

REFERENCE NOTES

- 28 SEE DET 8, SHEET C5.1 FOR LIFT STATION YARD GRADING
- 31 REFER TO LANDSCAPE PLANS FOR MONUMENT SIGNS
- 32 REFER TO OFF-SITE ROADWAY PLAN FOR ROADWAY CONSTRUCTION
- 34 REFER TO ROADWAY PLANS FOR OUTLET CHANNEL & RIPRAP CONSTRUCTION
- 42 NEW STORM DRAIN / CULVERT REFER TO OFF-SITE PAVING PLAN FOR CONSTRUCTION

0' 15' 30' 60'
SCALE: 1"=30'

CALL TWO WORKING DAYS BEFORE YOU DIG (602) 263-1100 1-800-STAKE-IT (OUTSIDE MARICOPA COUNTY)

1	REVISED LIFT STATION GRADING, LAYOUT AND DRIVEWAY	SAK	01/14/2013
3	REVISED SWALE AT EXTREME STORM OUTFALL	KEB	11/04/2013
4	SUPPLEMENTAL SPOT ELEVATIONS AT PROPERTY LINE	KEB	11/04/2013
△	REVISION	BY	

SONORAN CROSSING

GRADING & DRAINAGE PLAN

DRN: KEB	DES: KEB	CK: MRG	DRAWING	SHEET
DATE: 11/04	DATE: 11/04	DATE: 11/04		
SCALE: AS NOTED			C3.6	8 OF 13

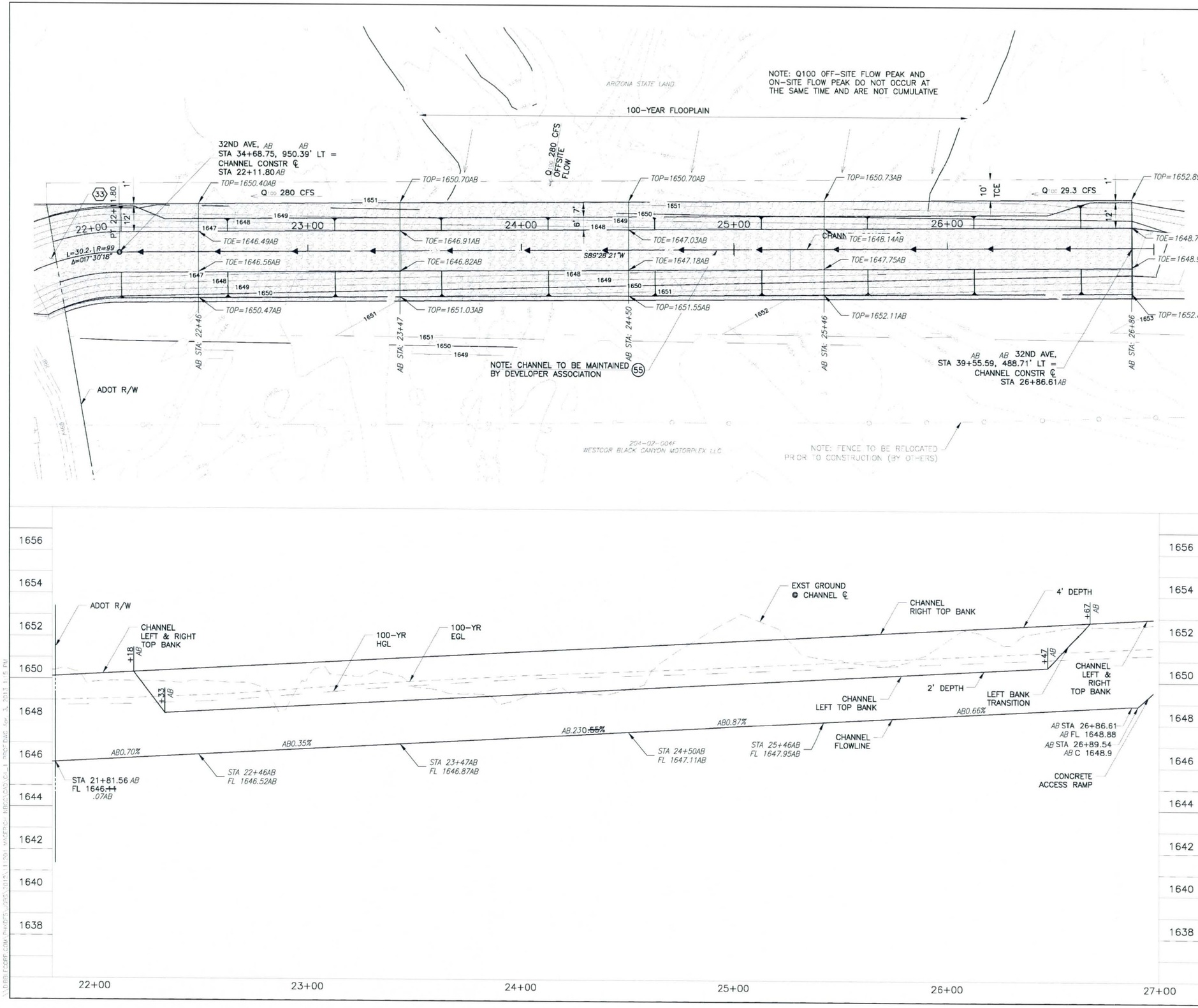

AS BUILT DATE

Dibble Engineering

DIBBLE PROJECT NO 111204

REMOVAL NOTES

CONSTRUCTION NOTES

(55) RIPRAP LINED CHANNEL — 505 LF
DET 6, SHEET C5.1

AS-BUILT CERTIFICATION

I HEREBY CERTIFY THAT THE "RECORD DRAWING" MEASUREMENTS AS SHOWN HEREON WERE MADE UNDER MY SUPERVISION, OR AS NOTED, AND ARE CORRECT TO THE BEST OF MY KNOWLEDGE AND BELIEF.

SIGNATURE	REGISTRATION NO.	DATE
	41282	11/13/13

HUBBARD ENGINEERING
1840 S. STAPLEY DR. SUITE# 137
MESA, AZ 85204
ENGINEERING FIRM

REFERENCE NOTES

(33) REFER TO ADOT PLANS FOR CHANNEL CONTINUATION AND IMPROVMENTS IN ADOT R/W

SCALE: 1"=20'

CALL TWO WORKING DAYS BEFORE YOU DIG
(602) 263-1100
1-800-STAKE-IT
(OUTSIDE MARICOPA COUNTY)

2	APS / CHANNEL CONFLICT REVISIONS	KEB	04/03/2013
△	REVISION	BY	

SONORAN CROSSING

CHANNEL PLAN & PROFILE

DRN: KEB DATE: 6/12	DES: KEB DATE: 6/12	CK: MRG DATE: 6/12	DRAWING	SHEET
SCALE: AS NOTED			C4.1	9 OF 13

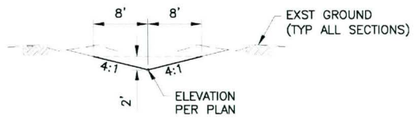

1 EARTHEN DITCH – TYPE A
NO SCALE

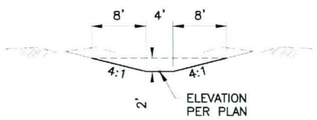

2 EARTHEN DITCH – TYPE B
NO SCALE

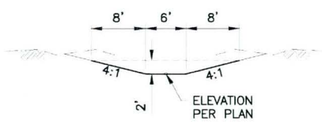

3 EARTHEN DITCH – TYPE C
NO SCALE

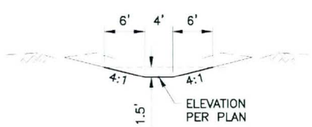

4 EARTHEN DITCH – TYPE D
NO SCALE

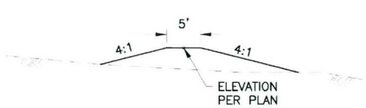

5 EARTHEN BERM
NO SCALE

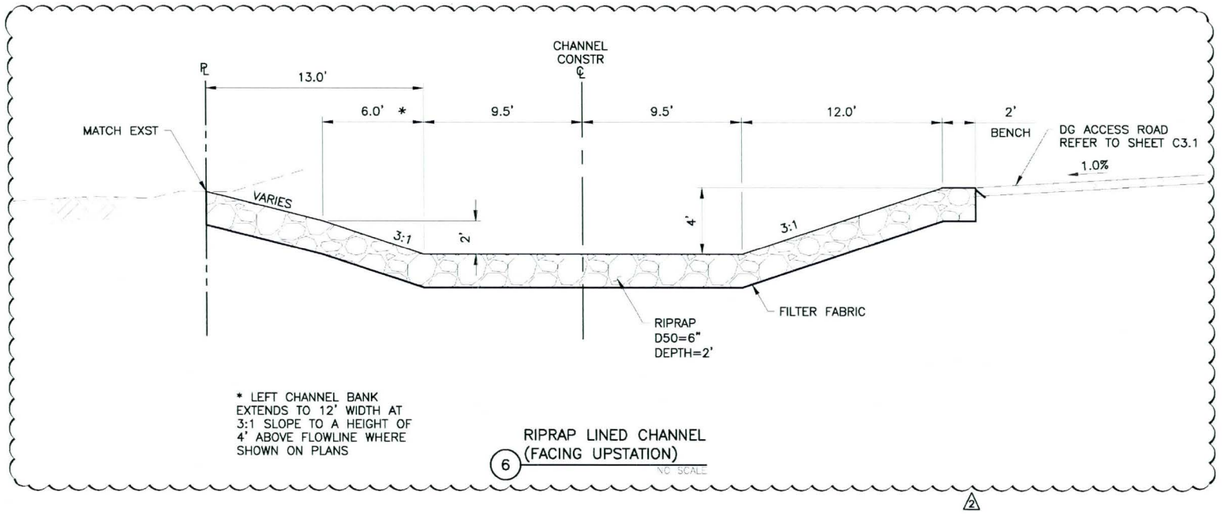

6 RIPRAP LINED CHANNEL
(FACING UPSTATION)
NO SCALE

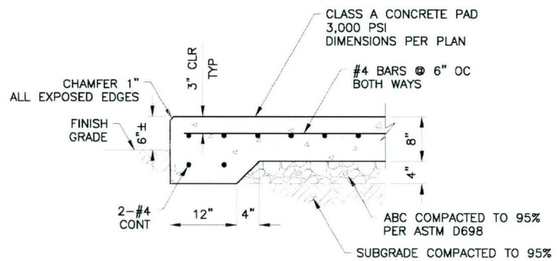

7 EQUIPMENT PAD
NO SCALE

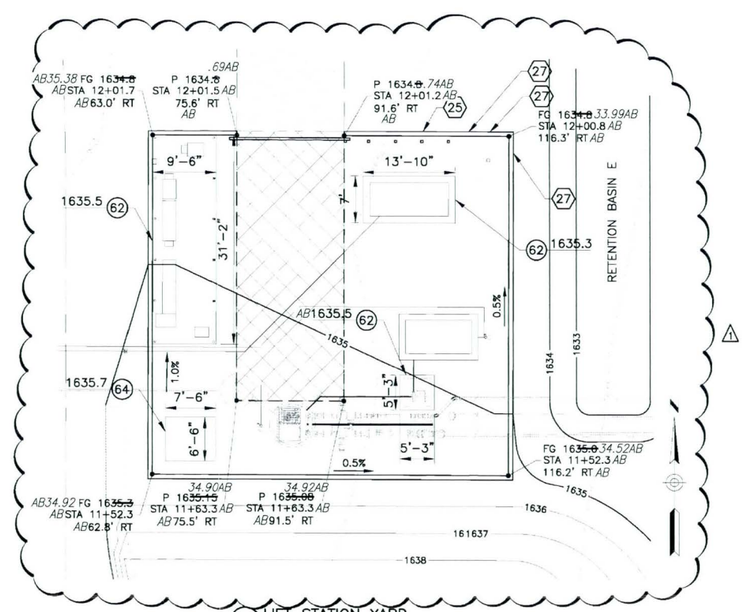

8 LIFT STATION YARD
SCALE: 1" = 10'

AS BUILT DATE

Dibble Engineering

DIBBLE PROJECT NO 111204

REMOVAL NOTES

CONSTRUCTION NOTES

62	CONCRETE EQUIPMENT PAD DET 7, THIS SHEET ELEVATION PER PLAN	420 SF
64	CONCRETE EQUIPMENT PAD PER APS REQUIREMENTS ELEVATION PER PLAN	49 SF

REFERENCE NOTES

25 REFER TO LIFT STATION PLANS FOR LIFT STATION WALLS, GATES & EQUIPMENT

27 DRAINAGE OPENING THROUGH WALL
REFER TO LIFT STATION PLANS

AS-BUILT CERTIFICATION

I HEREBY CERTIFY THAT THE "RECORD DRAWING" MEASUREMENTS AS SHOWN HEREON WERE MADE UNDER MY SUPERVISION, OR AS NOTED, AND ARE CORRECT TO THE BEST OF MY KNOWLEDGE AND BELIEF.

SIGNATURE	REGISTRATION NO.	DATE
	41282	10/23/13

HUBBARD ENGINEERING
1840 S. STAPLEY DR. SUITE# 137
MESA, AZ 85204
ENGINEERING FIRM

41282
ADRIAN M. BURCHAM
ARIZONA U.S.A.

CALL TWO WORKING DAYS BEFORE YOU DIG
(602) 263-1100
1-800-STAKE-IT
(OUTSIDE MARICOPA COUNTY)

1	MODIFIED LIFT STATION LAYOUT, GRADING AND DRIVEWAY	SAK	01/14/2013
2	APS / CHANNEL CONFLICT REVISIONS	KEB	04/03/2013
△	REVISION	BY	

SONORAN CROSSING

DETAILS

DRN: KEB	DES: KEB	CK: MRG	DRAWING	SHEET
DATE: 6/12	DATE: 6/12	DATE: 6/12		
SCALE: AS NOTED			C5.1	10 OF 13

NO.	DESCRIPTION OF REVISIONS	MADE BY	DATE
1	REVISED STD DWG	PMD	1/94
2	REVISED GENERAL NOTE 1	RLF	1/05
3			
4			

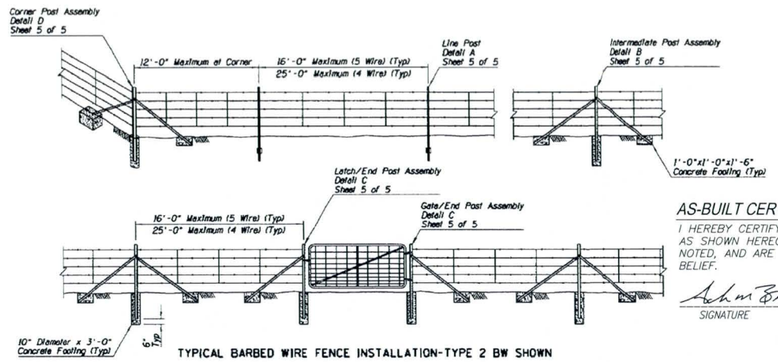

TYPICAL BARBED WIRE FENCE INSTALLATION-TYPE 2 BW SHOWN

GENERAL NOTES

1. Intermediate Post Assemblies shall be located as shown and at intervals not to exceed 650', or midway between all braced posts.
2. For game fence the bottom wire shall be barbless.
3. The stays on game fence shall have their ends turned up to prevent injuries to game.

AS-BUILT CERTIFICATION

I HEREBY CERTIFY THAT THE "RECORD DRAWING" MEASUREMENTS AS SHOWN HEREON WERE MADE UNDER MY SUPERVISION, OR AS NOTED, AND ARE CORRECT TO THE BEST OF MY KNOWLEDGE AND BELIEF.

SIGNATURE	REGISTRATION NO.	DATE
	41282	10/23/13

HUBBARD ENGINEERING
1840 S. STAPLEY DR. SUITE# 137
MESA, AZ 85204
ENGINEERING FIRM

REGISTERED LAND SURVEYOR
CERTIFICATE NO.
41282
ADRIAN M.
BURCHAM
Date Signed 10/23/13
ARIZONA U.S.A.
Expires 3/31/15

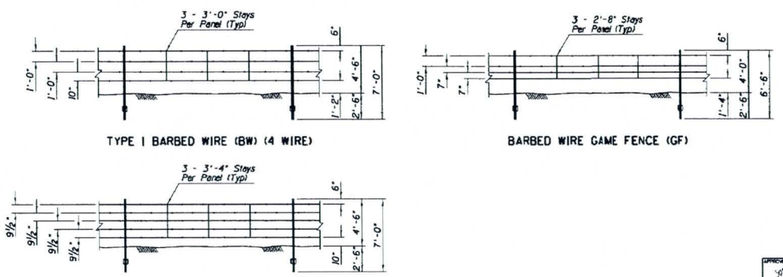

TYPE 1 BARBED WIRE (BW) (4 WIRE)

BARBED WIRE GAME FENCE (GF)

TYPE 2 BARBED WIRE (BW) (5 WIRE)

APPROVED FOR DESIGN	STATE OF ARIZONA DEPARTMENT OF TRANSPORTATION ROADWAY STANDARD DRAWINGS	REV. 5/07
APPROVED FOR DISTRIBUTION	① FENCE BARBED WIRE	DRAWING NO. C-12.10 Sheet 2 of 5

NO.	DESCRIPTION OF REVISIONS	MADE BY	DATE
1	REVISED STD DWG	PMD	1/94
2	ADDED DIMENSION	RLF	5/04
3			
4			

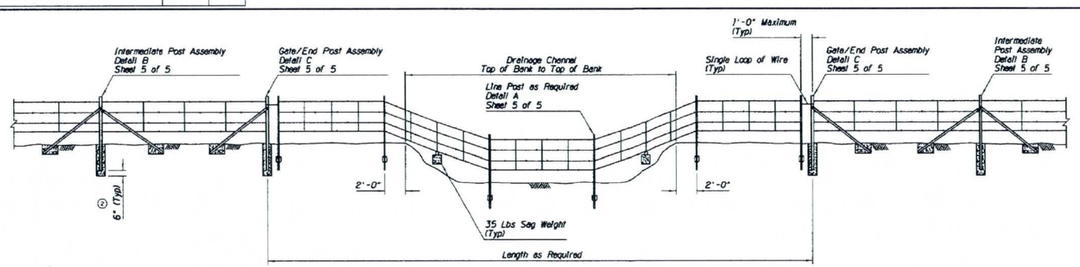

FLOOD GATE

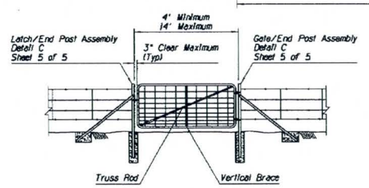

TYPE 1 SINGLE GATE

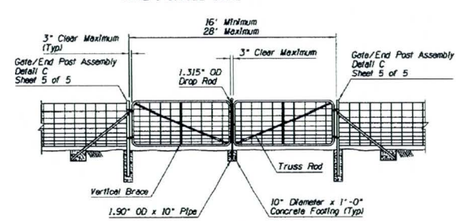

TYPE 1 DOUBLE GATE

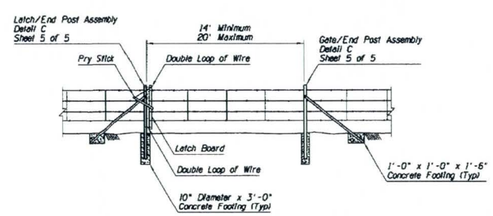

TYPE 2 GATE

APPROVED FOR DESIGN	STATE OF ARIZONA DEPARTMENT OF TRANSPORTATION ROADWAY STANDARD DRAWINGS	REV. 5/07
APPROVED FOR DISTRIBUTION	① FENCE TYPE 1 AND 2 GATES FLOOD GATE	DRAWING NO. C-12.10 Sheet 3 of 5

AS BUILT DATE

Dibble Engineering

DIBBLE PROJECT NO 111204

40925
MICHAEL R. GLEASON
Date Signed 6/13/13
ARIZONA U.S.A.
Expires 06/30/15

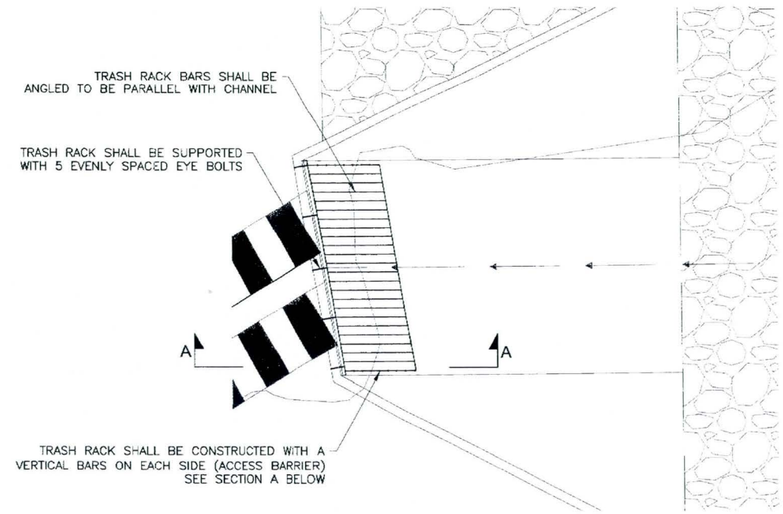

PLAN VIEW

PIPE SIZE	NO. OF BARS	LENGTH OF BARS	DIMENSIONS		
			X	Y	Z
DUAL 54"	49	7'-4½"	15'-4"	16'-0"	5'-6"

NOTE: SEE MAG STD DET 501-1 & 2

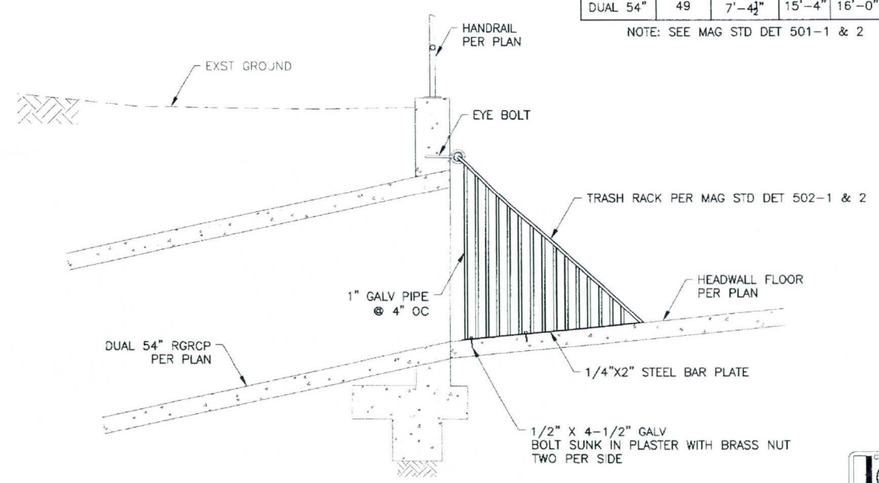

SECTION A-A

1 TRASH RACK
MAG STD DET 502-1 & 2 MOD
SCALE: NTS

CALL TWO WORKING DAYS BEFORE YOU DIG
(602) 263-1100
1-800-STAKE-IT
(OUTSIDE MARICOPA COUNTY)

△	REVISION	BY

SONORAN CROSSING

DETAILS

DRN: KEB	DES: KEB	CK: MRG	DRAWING	SHEET
DATE: 6/12	DATE: 6/12	DATE: 6/12		
SCALE: AS NOTED			C5.2	11 OF 13

\\DIBBLECORP.COM\PHX\R\JOBS\2012\111204 MACFARCH NBCO\CAD\C5_1 DETL DWG Aug 2012 3:21 PM

AS BUILT DATE

Dibble Engineering

DIBBLE PROJECT NO 111204

Expires 12/31/2012

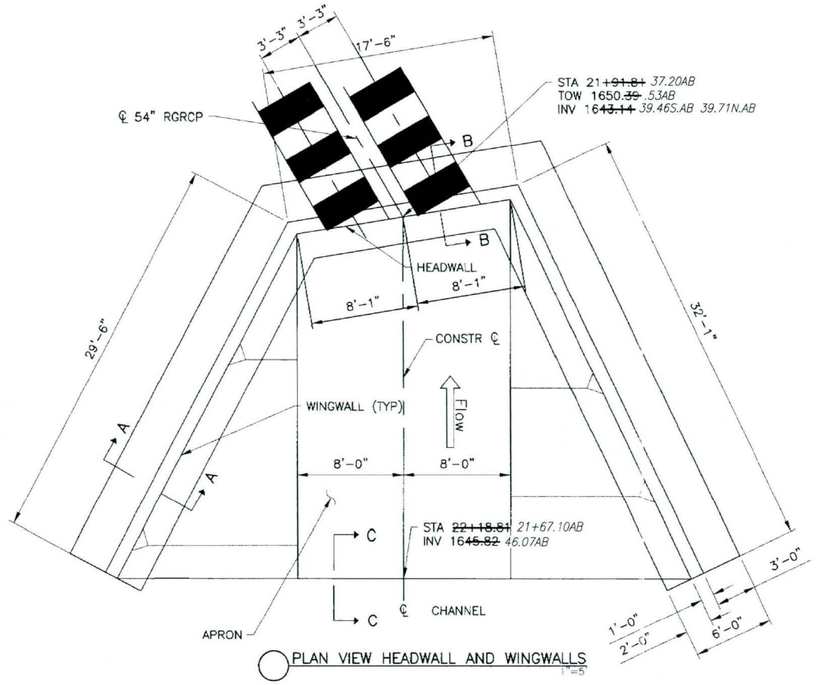

PLAN VIEW HEADWALL AND WINGWALLS
1"=5

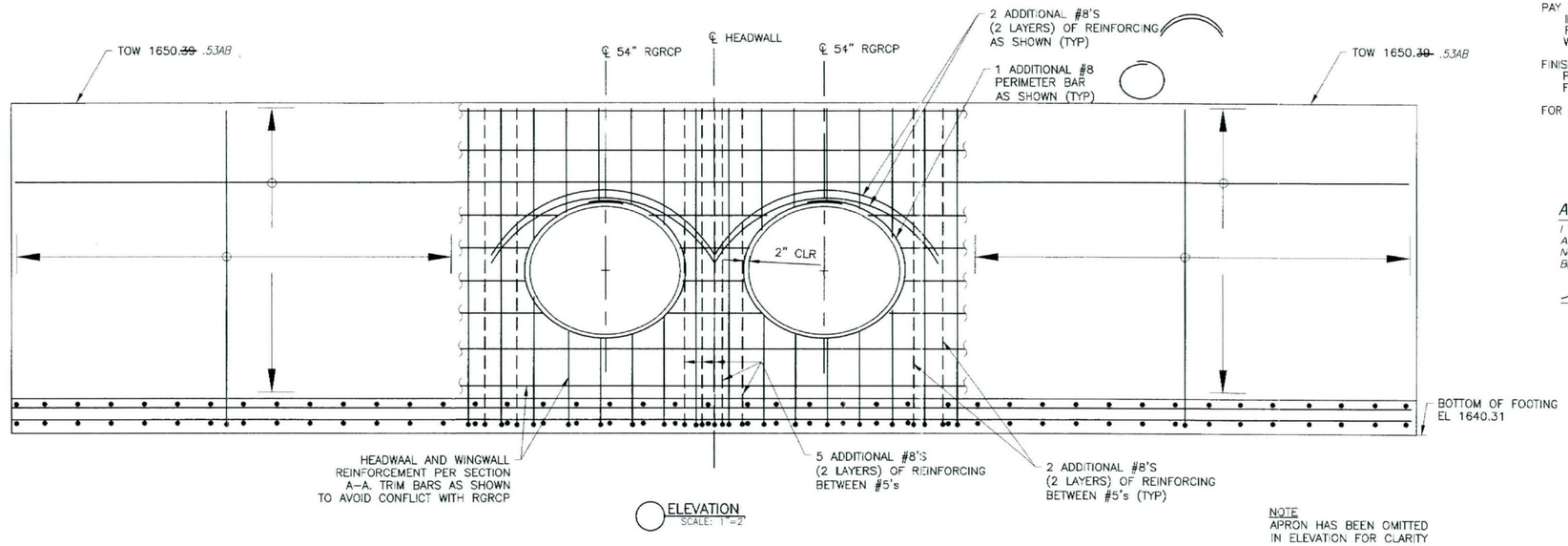

ELEVATION
SCALE: 1"=2

NOTE
APRON HAS BEEN OMITTED
IN ELEVATION FOR CLARITY

HEADWALL 2-54" PIPE
1 OF 2

GENERAL NOTES

CONSTRUCTION SPECIFICATION – ARIZONA DEPARTMENT OF TRANSPORTATION STANDARD SPECIFICATIONS FOR ROAD AND BRIDGE CONSTRUCTION, LATEST EDITION.

DESIGN SPECIFICATIONS – AASHTO LRFD BRIDGE DESIGN SPECIFICATIONS, 5TH EDITION 2010.

LOADING CLASS – HL-93.

DESIGN:
SOIL WEIGHT = 120 p.c.f.

ALL CONCRETE SHALL BE CLASS "S" (f'c = 3,000 psi).

REINFORCING STEEL SHALL CONFORM TO ASTM SPECIFICATION A615. ALL REINFORCING SHALL BE FURNISHED AS GRADE 60.

ALL BENDS AND HOOKS SHALL MEET THE REQUIREMENTS OF AASHTO LRFD ARTICLE 5.10. ALL BEND DIMENSIONS FOR REINFORCING STEEL SHALL BE OUT-TO-OUT OF BARS. ALL PLACEMENT DIMENSIONS FOR REINFORCING STEEL SHALL BE TO CENTER OF BARS UNLESS NOTED OTHERWISE.

ALL REINFORCING STEEL SHALL HAVE 2 INCH CLEAR COVER UNLESS NOTED OTHERWISE.

CHAMFER ALL EXPOSED CORNERS 3/4" UNLESS NOTED OTHERWISE.

COMPACT BACKFILL FOR FOOTING AND WING BASE MINIMUM 95 PERCENT OF ASTM D698 MAXIMUM DRY DENSITY.

ALL STRUCTURES SHALL HAVE FORMED CONSTRUCTION JOINTS IN THE WALLS (OPTIONAL IN FLOOR SLAB) AND SPACED NOT MORE THAN 35'-0" APART OR AS SHOWN IN PROJECT PLANS. JOINTS SHALL BE PERPENDICULAR TO THE CENTERLINE OF THE STRUCTURE. REINFORCING STEEL SHALL PROJECT 1'-6" THRU THE JOINT. THE JOINT SHALL BE MADE WITH A 1/4" PLYWOOD BULKHEAD WHICH SHALL BE LEFT IN PLACE.

DIMENSIONS SHALL NOT BE SCALED FROM DRAWINGS.

PAY ITEM QUANTITIES OF CONCRETE AND REINFORCING STEEL INCLUDE ALL LABOR AND MATERIALS FOR WALLS, FOOTING, HEADWALLS, APRONS, EDGE BEAM AND CUTOFF WALL.

FINISHED CHANNEL BOTTOM AND SIDES SHALL BE GROOVED PER SECTION 402-5 OF ADOT STANDARD SPECIFICATION FOR ROAD AND BRIDGE CONSTRUCTION, 2008 ED. (NPI).

FOR SECTIONS SEE SHEET C5.4

AS-BUILT CERTIFICATION

I HEREBY CERTIFY THAT THE "RECORD DRAWING" MEASUREMENTS AS SHOWN HEREON WERE MADE UNDER MY SUPERVISION, OR AS NOTED, AND ARE CORRECT TO THE BEST OF MY KNOWLEDGE AND BELIEF.

SIGNATURE	REGISTRATION NO.	DATE
	41282	10/23/13

HUBBARD ENGINEERING
1840 S. STAPLEY DR. SUITE# 137
MESA, AZ 85204
ENGINEERING FIRM

REGISTERED LAND SURVEYOR
41282
ADRIAN M. BURCHAM
Date Signed 10/23/13
ARIZONA U.S.A.
Expires 12/31/14

CALL TWO WORKING DAYS BEFORE YOU DIG
(602) 263-1100
1-800-STAKE-IT
(OUTSIDE MARICOPA COUNTY)

△	REVISION	BY

SONORAN CROSSING

DETAILS

DRN: KEB	DES: KEB	CK: MRG	DRAWING	SHEET
DATE: 6/12	DATE: 6/12	DATE: 6/12		
SCALE: AS NOTED			C5.3	12 OF 13

\\DIBBLECORP.COM\PHXDFS\JOBS\2012\111204 MACERICH NBCS\CADD\C5.3 HEADWALL STRUCTURE.DWG Aug 7, 2012 5:27 PM

AS BUILT DATE

Dibble Engineering

DIBBLE PROJECT NO 111204

Expires 12/31/2012

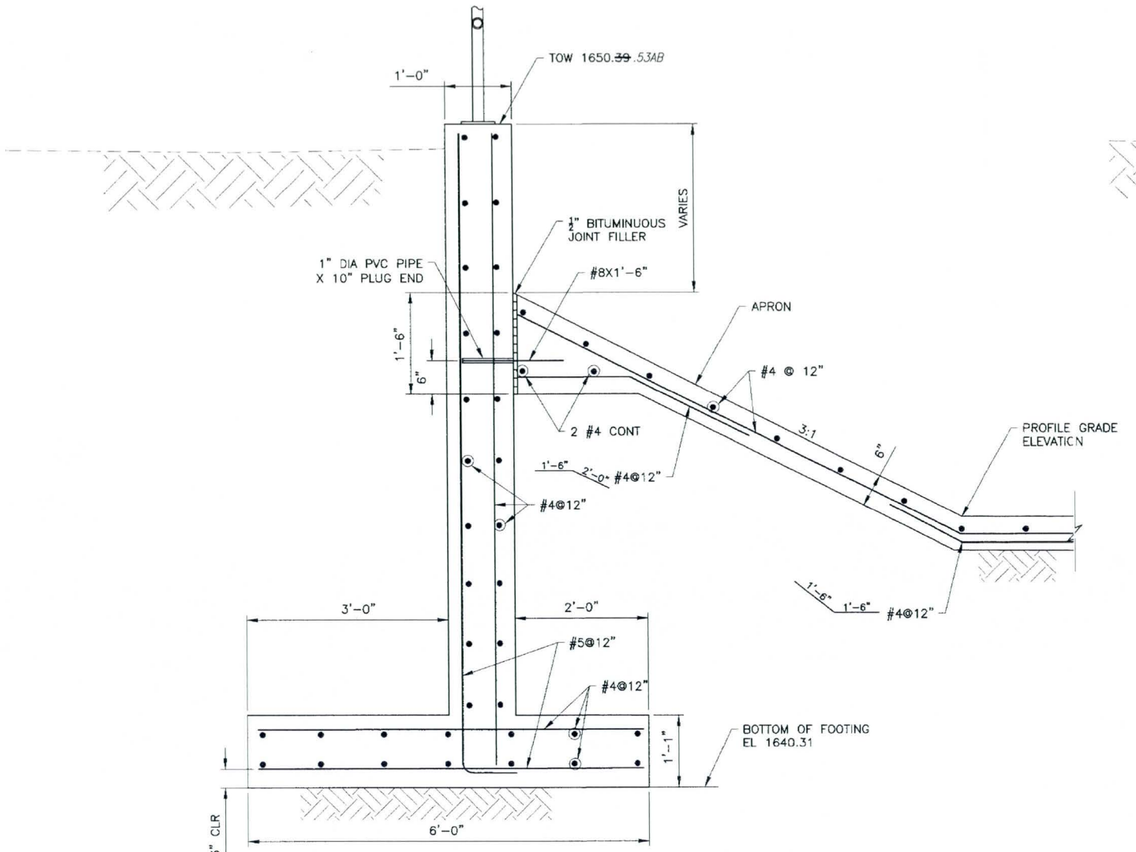

A SECTION
1" = 1'

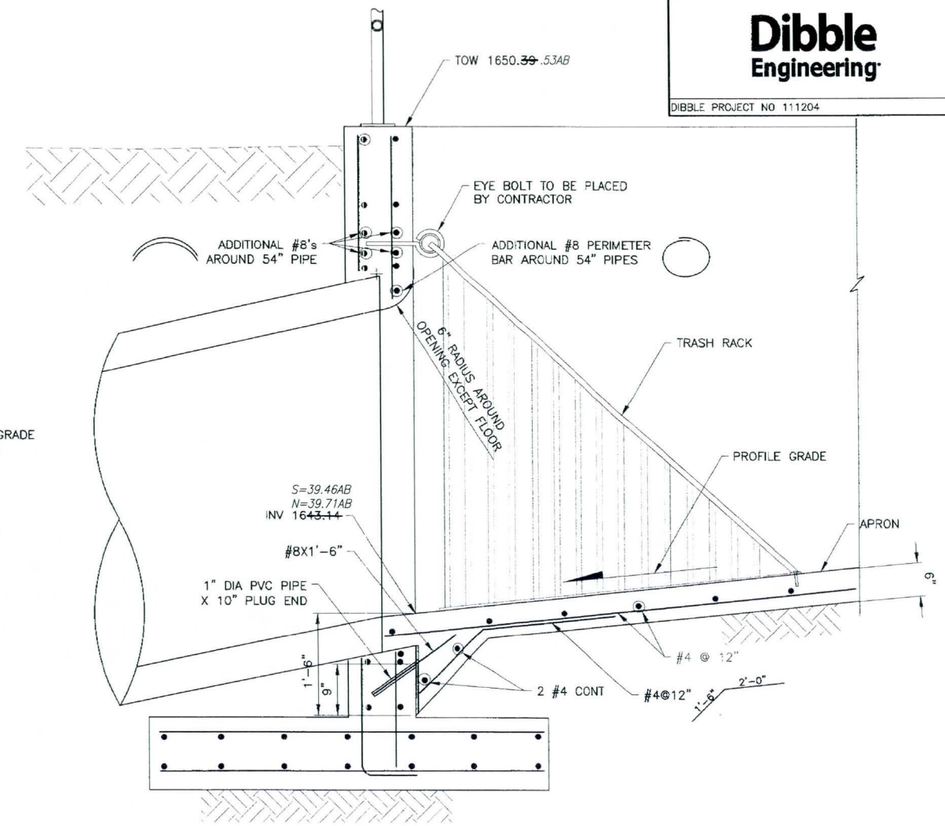

B SECTION
1" = 1'

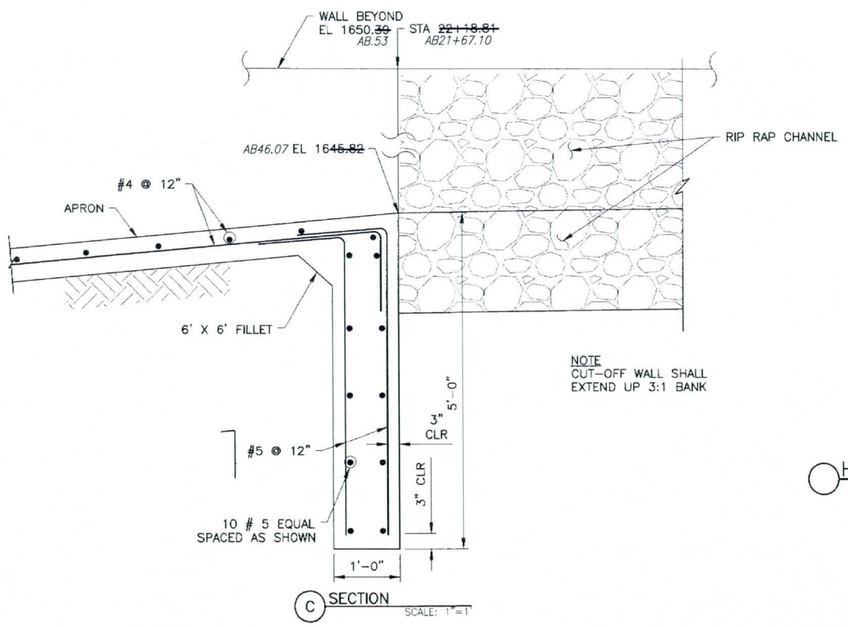

NOTE
CUT-OFF WALL SHALL EXTEND UP 3:1 BANK

C SECTION
SCALE: 1"=1'

HEADWALL 2-54" PIPE
2 OF 2

AS-BUILT CERTIFICATION

I HEREBY CERTIFY THAT THE "RECORD DRAWING" MEASUREMENTS AS SHOWN HEREON WERE MADE UNDER MY SUPERVISION, OR AS NOTED, AND ARE CORRECT TO THE BEST OF MY KNOWLEDGE AND BELIEF.

SIGNATURE	REGISTRATION NO.	DATE
	41282	10/23/13

HUBBARD ENGINEERING
1840 S. STAPLEY DR. SUITE# 137
MESA, AZ 85204
ENGINEERING FIRM

REGISTERED LAND SURVEYOR 41282 ADRIAN M. BURCHAM Exp. 12/31/13 ARIZONA U.S.A.

CALL TWO WORKING DAYS BEFORE YOU DIG
(602) 263-1100
1-800-STAKE-IT
(OUTSIDE MARICOPA COUNTY)

△	REVISION	BY

SONORAN CROSSING

DETAILS

DRN: KEB	DES: KEB	CK: MRG	DRAWING	SHEET
DATE: 6/12	DATE: 6/12	DATE: 6/12		
SCALE: AS NOTED			C5.4	13 OF 13

\\DIBBLE\CORP\COMPROPS\JOBS\2012\111204 MAGEREON NORTH\CAD\C5_3 HEADWALL STRUCTURE.DWG Aug 7, 2012 8:22 PM

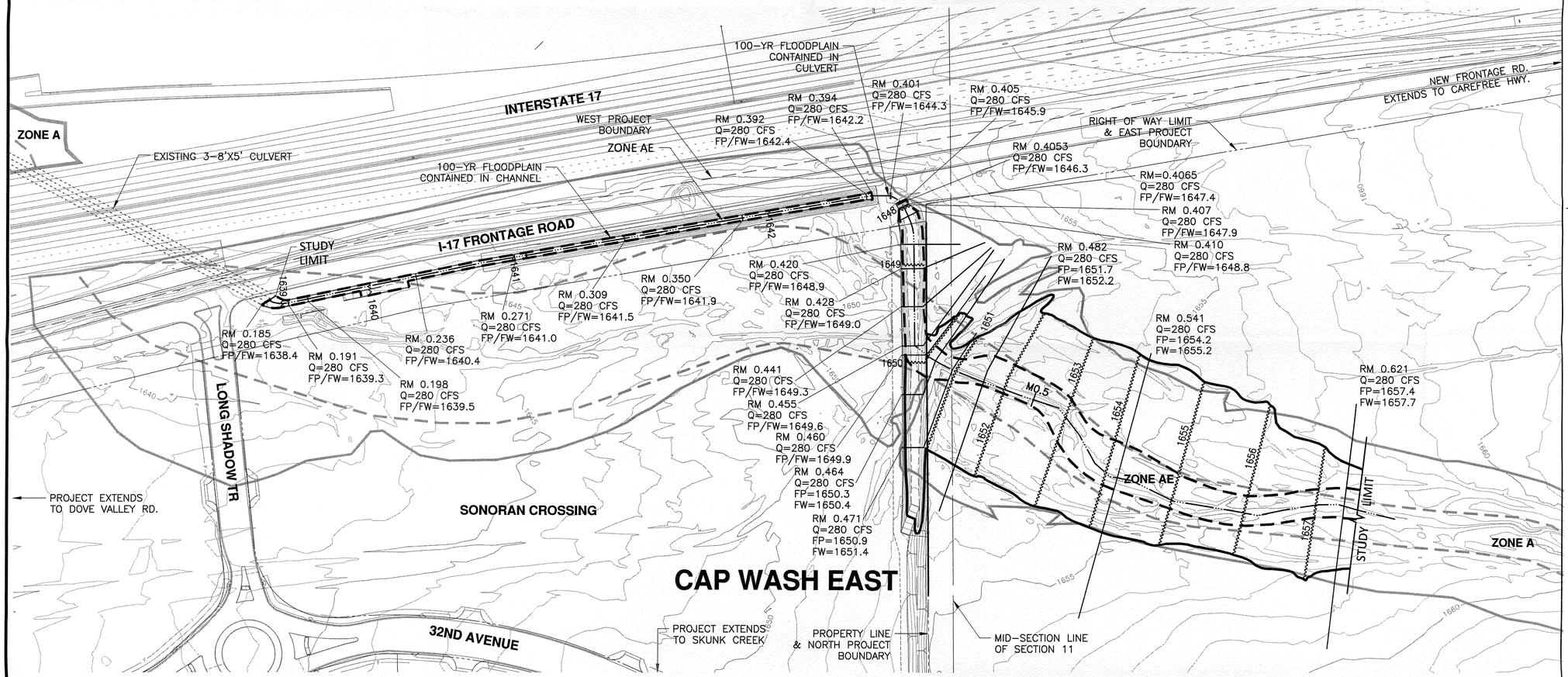

LEGEND

POST PROJECT:

- 100-YR FLOODPLAIN BOUNDARY
- FLOODWAY BOUNDARY

CURRENT EFFECTIVE:

- 100-YR FLOODPLAIN BOUNDARY
- FLOODWAY BOUNDARY

HYDRAULIC BASE LINE WITH RIVER MILE — M12.0 M13.0

CROSS SECTION — CROSS SECTION RIVER MILE DESIGNATION: RM 0.100; Q = CFS (100 YEAR DISCHARGE); FP= 1888.7 (FLOODPLAIN WATER SURFACE ELEVATION); FW= 1889.7 (FLOODWAY WATER SURFACE ELEVATION)

ELEVATION REFERENCE MARK — ERM XXX

BASE FLOOD ELEVATIONS — 1221

ZONE DESIGNATIONS — ZONE AE

SECTION LINE

RIGHT OF WAY LIMITS

PROPERTY BOUNDARY

PROJECT BOUNDARY

ELEVATION REFERENCE MARKS

NOTE: ALL ELEVATIONS ARE BASED ON NATIONAL GEODETIC VERTICAL DATUM OF 1929
CONVERSION FACTOR 1988 NAVD = 1929 NGVD + 1.96'

I.D. NUMBER	ELEVATION (FT)	DESCRIPTION/LOCATION
307	1631.35	BRASS CAP IN HANDHOLE SE CORNER SEC 11 T5N R3E AT INTERSECTION OF DOVE VALLEY ROAD AND NORTH VALLEY PARKWAY
306	1628.69	STONE IN HANDHOLE SW CORNER SEC 11 T5N R3E AT DOVE VALLEY AND APPROX 1800' WEST OF INTERSTATE 17
303	1681.88	BRASS CAP IN HANDHOLE N 1/4 CORNER SEC 11 T5N R3E AT CAREFREE HIGHWAY AND APPROX 2800' EAST OF INTERSTATE 17

-100' 0' 100' 200'
SCALE: 1"= 100 FEET
CONTOUR INTERVAL = 1 FEET

NO.	REVISION	BY	DATE
2			
1			

LETTER OF MAP REVISION

CAP WASH EAST
SONORAN CROSSING

JULY 2014

Registered Professional Engineer (Civil) 37878 JOSHUA E. PAPWORTH Date Signed 7/17/14 ARIZONA U.S.A. Expires 09/30/14

Dibble Engineering

	BY	DATE
DESIGN	JEP	07/17/14
DESIGN CHK.	MRG	07/17/14
PLANS	JEP	07/17/14
PLANS CHK.	MRG	07/17/14

SHEET 1 OF 1

FILE:J:\2012\111204 Macerich NBCC\CAD\Floodplain\CAP Wash East LOMR\CAP WASH EAST WORKMAP - POST PROJECT.dwg DATE:Jul, 17 2014 TIME: 12:52 pm