PRELIMINARY REPORT
INDIAN SHCOOL ROAD BRIDGE AT
THE AGUA FRIA RIVER
REHABILITATION AND STABILIZATION
OF CHANNEL

prc

PRC Toups

A Planning Research Company

18.0-00-0-01/81

PRELIMINARY REPORT
INDIAN SHCOOL ROAD BRIDGE AT
THE AGUA FRIA RIVER
REHABILITATION AND STABILIZATION
OF CHANNEL

JANUARY, 1981

Prepared for:

MARICOPA COUNTY HIGHWAY DEPARTMENT
3325 West Durango Street
Phoenix, Arizona 85009

Prepared by:

PRC TOUPS
4131 North 24th Street
Suite 110
Phoenix, Arizona 85016
(602) 954-9191

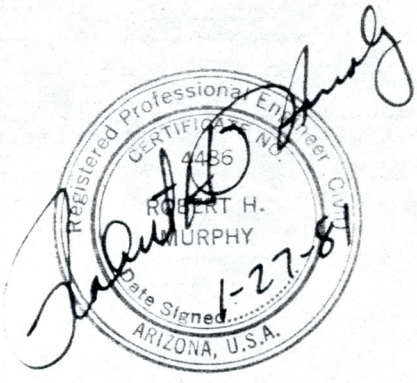

PRC Toups

prc

William R. Mills, Jr., P.E., President; David M. Wood, Executive Vice President; Robert Murphy, P.E., Vice President;
John Stansel, A.I.A., Associate Vice President; Woodrow C. Scoutten, Jr., P.E., Associate Vice President

January 27, 1981

Samer and Lahlum, Inc.
4250 North 19th Avenue
Phoenix, Arizona 85015

Attn: Mr. Jim Samer, P.E.

Gentlemen:

Enclosed please find 10 copies of our preliminary report on "Indian School Road Bridge at the Agua Fria River Rehabilitation and Stabilization of Channel".

As indicated in the report a combination of several stability measures including channelization both upstream and downstream of the bridge, upstream spur dike at the east abutment, diversion dike and loose rip-rap blanket around existing bridge pier foundation have been recommended. We estimate that these measures will cost 2.36 million dollars excluding the cost of pile foundation for the new piers.

Please note that an additional hydraulic analysis requested by the Maricopa County Highway Department which includes the dike improvements, with the excavation of channelization measures, has been included in this report.

It is belived that the design presented in this report is conservative. Some cost reduction seems feasible if precise scour estimates can be done. Such precise scour estimates would be possible through the use of a physical model. It is highly recommended that, for the cost-effectiveness reasons, a physical model study be carried out.

We appreciate this opportunity to work with you and look forward to final design of the stability measures recommended in this report.

Respectfully submitted,

PRC TOUPS

Ashok Patel

Ashok Patel, P.E.
Project Engineer

AP/sla

enclosure

A Planning Research Company
4131 North 24th Street, Phoenix, Arizona 85016
Telephone (602) 954-9191

TABLE OF CONTENTS

	PAGE
SCOPE	1
AGUA FRIA RIVER FLOOD HISTORY	1
FLOOD DAMAGE BACKGROUND	1
HYDROLOGY	3
BRIDGE PROTECTION MEASURES	3
Channelization	3
Spur Dike	4
Pier Scour Protection - Loose Riprap	5
Pier Scour Protection - Cutoff Wall	5
Diversion Dike	6
Levee 1	6
OPERATION AND MAINTENANCE	7
CONSTRUCTION COST ESTIMATES	8
CONCLUSIONS AND RECOMMENDATIONS	10
REFERENCES	13

APPENDIX - HEC-2 COMPUTER PRINTOUTS

TABLES

Table 1 - Detailed Preliminary Cost Estimates for Bridge Protection Measures

Table 2 - Preliminary Construction Cost Estimates for Recommended Bridge Protection Measures

PHOTOGRAPHS

Photos 1 & 2 - Aerial Photo of Indian School Bridge at Agua Fria River

Photos 3, 4 & 5 - Indian School Bridge During & After Flood

TABLE OF CONTENTS (cont'd)

FIGURES

Figure 1 - Location Map for Soil Test Holes in June, 1980

Figure 2 - Cross-section of Indian School Bridge

Figure 3 - Water Surface Profiles of Agua Fria River at Indian School Road Bridge

PLATES

Plate 1 - Channelization and Dike - Typical Section

Plate 2 - Spur Dike - Typical Section

Plate 3 - Pier Scour Protection - Loose Riprap - Typical Section

Plate 4 - Pier Scour Protection - Cutoff Wall - Typical Section

Plate 5 - Diversion Dike - Typical Section

Plate 6 - Levee 1 - Typical Section

MAPS

Map No. 1 - Indian School Road Bridge at Agua Fria River (in pocket)

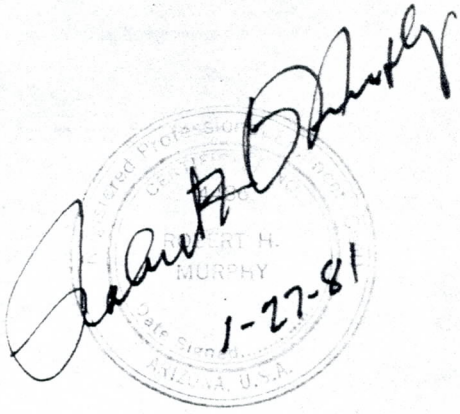

THE INDIAN SCHOOL ROAD BRIDGE AT THE AGUA FRIA RIVER
REHABILITATION AND STABILIZATION OF CHANNEL

SCOPE:

The purpose of this report is to present findings of a preliminary hydraulic and stability analysis of the Agua Fria River Channel at the Indian School Road Bridge. A conceptual design for scour protection measures including an upstream spur dike, river channelization both upstream and downstream, and downstream grade control structures have been investigated. The scope of this report is to provide sufficient detail to allow a preliminary design and recommendation of the needed flood control improvements at the bridge to minimize or prevent future flood damages.

AGUA FRIA RIVER FLOOD HISTORY:

The maximum release of 66,600 cfs from Lake Pleasant on February 20, 1980 was the largest since the dam was built in 1927. The previous maximum release was 59,900 cfs on December 19, 1978. Although the flow from the 1980 release was greater than that in 1978, flood stages and extent of inundated areas was greater in places in 1978 because of vegetation and other obstructions in the channel. In addition to the releases on December 19, 1978, and February 20, 1980, flow was released from the reservoir in 1941, 1966, 1968, and spring of 1978.

Records of stage and discharge for the Agua Fria River are available from 1910 but are intermittent and sketchy prior to 1933. The maximum discharge of about 105,000 cfs occurred in January, 1916 and November, 1919 and is the greatest on record. Records indicate that 11 floods having discharges ranging from 25,000 to 80,000 cfs occurred between 1889 and 1927 (U.S. Army Corps of Engineers, 1968 and Reference 7).

FLOOD DAMAGE BACKGROUND:

The bridge structure is located approximately 15 miles west of downtown Phoenix, Arizona on Indian School Road at the Agua Fria River. The 18-span reinforced concrete structure is 1,623 feet long and 90 feet wide.

FLOOD DAMAGE BACKGROUND: (cont'd)

The bridge is supported by pointed-nose wall piers on spread footings with spill-through abutments on pile footings. The wall piers are constructed at an eleven degree skew angle to a direction perpendicular to the bridge centerline.

The bridge was severely damaged by floodwaters on February 20, 1980 (see photos 1, 3, 4, & 5). The U.S. Geological Survey has estimated the flood peak at 42,000 cfs at the stream gage station at Highway 80 downstream of the Indian School Road Bridge. That figure is substantially lower than the 66,600 cfs generally reported as the peak discharge upstream at the dam. The difference could be due to such factors as errors in the stream gage readings, storage in the channel, transmission losses, etc. More credence is placed in the 66,600 cfs figure as the peak discharge on February 20, 1980. Of a total of 17 bridge piers, four piers (numbers 13 through 16, see Figures 1 & 2) were damaged to various degrees, ranging from being completely washed out to a small amount of settlement.

The results of a field inspection, analysis of flood photographs and the geotechnical investigation report indicate that the failure of the piers was caused by two conditions. The first condition involves an earthfill dike immediately downstream from the bridge which appears to have caused flood flows to constrict near the east end of the bridge, consequently increasing velocity, turbulence and scour. The second and more important condition contributing to failure involved the direction of stream flow during the flooding event near the east end of the bridge (see photos 1 & 2). The extreme angle of the flow lines compared to the longitudinal axis of the piers substantially increased velocities, turbulence and scour at the piers.

The laboratory investigation by Larsen (Reference 5) found that the angle between the axis of the pier and the direction of the stream current is more important than any other geometric detail of solid piers in relation to the magnitude of scour. The scour depth will increase in direct proportion to the skew of the current. In the February flood event,

FLOOD DAMAGE BACKGROUND: (cont'd)

for instance, the Indian School Road Bridge piers were skewed approximately 28 degrees to the direction of the current, which means that the scour depth during the flooding event could have been as high as two to four times the normal scour (unskewed condition) around the piers.

HYDROLOGY:

The Corps of Engineers (COE) had established a discharge-frequency relationship on the Agua Fria River in their report published in October, 1974 (Reference 6). The COE, however, is presently re-evaluating the discharge values based on more recent hydrologic data and the new discharge values will not be published in time for inclusion in this study. For the purpose of this report, therefore, the discharge value of 100,000 cfs has been used as recommended by the Maricopa County Highway Department.

BRIDGE PROTECTION MEASURES:

An investigation was made into various counter-measures to the hydraulic problems occurring at the Indian School Road Bridge at the Agua Fria River. The investigation involved studying case histories and design criteria for various counter-measures to determine their applicability to the hydraulic problems at the Indian School Road Bridge. Aerial photos of recent flooding, field investigations and HEC-2 water surface profile computations of the Agua Fira River were also studied to determine hydraulic problems between the river and the bridge. A description of possible counter-measures, their function and their applicability to the hydraulic problems at the bridge follows:

Channelization

Analysis of the existing condition of the Agua Fria River near Indian School Road by the HEC-2 computer program indicates that, for the design discharge of 100,000 cfs, the water surface elevation will be well above the low chord of the Indian School Road Bridge (see Figure 3 for the Water Surface Profile and the Appendix for HEC-2 Computer Printouts). Due to a dike built into the west side of the channel below the bridge, the total area of the bridge is not completely effective in passing flood flows. Up to approximately 57,000 cfs, only the eastern 55 percent of the bridge is effective in passing flood flows. Above 57,000 cfs

Channelization (cont'd)

the total width of the bridge begins to convey flood flows, but the lower portion of the western 45 percent of the bridge width is ineffective due to backwater from the dike. Because of the dike, flows are concentrated on the eastern side of the bridge, resulting in higher velocities and greater scour potential.

By channelizing or removing the dike below the Indian School Road Bridge, flows will be allowed to spread out and the entire bridge can become effective in conveying the flood flows. Preliminary analysis by HEC-2 indicates that 100,000 cfs can be conveyed under the bridge at an elevation 2 to 3 feet below the low chord of the bridge (see Figure 2 for Water Surface Profiles and the Appendis for HEC-2 Computer Printouts). Additional excavation would be made upstream of the bridge to encourage the flow to spread out to the west side of the bridge. The scouring potential at the bridge would be reduced because the depth of flow through the bridge would be reduced. See Map 1 and Plate 1 for the location and a typical section of the channelization concept.

Spur Dike

According to Reference 1, spur dikes are guide banks placed at or near the ends of approach embankments to guide the stream through the bridge opening. When constructed properly, spur dikes are also used to protect the highway embankment and reduce or eliminate local scour at the embankment and adjacent piers. The effectiveness of spur dikes is a function of river geometry, quantity of flow on the floodplain and size of the bridge opening.

The recommended shape of a spur dike is a quarter ellipse with a major to minor axis ratio of 2.5. The major axis should be approximately parallel to the main flow direction. For skewed crossings, the spur dike should be placed at an angle with respect to the embankment with the view of streamlining the flow through the bridge opening.

During the flood of February, 1980, flood flows entered the Indian School Road Bridge at its east side at an extreme skew resulting in erosion and scour near the east abutment and several adjacent piers. A spur dike

Spur Dike (cont'd)

at the upstream side of the east abutment would align the flow with the bridge opening, thereby reducing scour producing turbulence and eddy currents near the abutment and adjacent piers. See Map 1 and Plate 2 for the location and a typical section of the spur dike.

Pier Scour Protection - Loose Riprap

Scour calculations show that for flows approaching the piers with only a small skew of 3 degrees local scour due to the pier shape could reach 9 feet. In addition to the local scour, general scour of 2.5 feet has been calculated. Therefore, the total calculated scour is 11.5 feet for the channelized condition which assumes little skew or aggravating circumstances such as debris lodging on the piers. The minimum depth of cover over some of the spread pier footings is 17 feet at present. Considering that it is possible that additional scour beyond the predicted 11.5 feet could occur due to aggravating circumstances such as some additional skew in the approach flow or debris lodging on the piers, it is proposed that some pier scour protection be provided.

A popular form of pier protection used in similar cases as found in Reference 4 is dumped rock riprap placed around the piers. The rock riprap reduces the depth of scour around the pier by increasing the diameter of the bed material being scoured. Loose riprap also has the advantage of filling in adjacent scour holes as they develop. See Map 1 and Plate 3 for the location and a typical section of the loose riprap pier protection.

Pier Scour Protection - Cutoff Wall

Another form of pier protection used in some other cases as found in Reference 4 is a cutoff wall. The cutoff wall controls the depth of scour at piers by maintaining the channel bed invert elevation. A disadvantage of the cutoff wall is that it is less flexible in a scouring situation. Head-cutting scour downstream of the cutoff wall can damage or threaten the cutoff wall, thereby endangering the piers upstream. See Map 1 and Plate 4 for the location and a typical section of the cutoff wall pier protection.

Diversion Dike

The Agua Fria River has meandered to the east side of its previous channel upstream of the Indian School Road Bridge. A significant portion of the flow must approach the bridge at a skew. The proposed spur dike will align flood flows at the east abutment and adjacent piers.

However, it is felt that the spur dike alone would not completely align flood flows at the central piers due to the relative width of the bridge compared to the length of the spur dike. The spur dike could be lengthened beyond the conservative design length of 400 feet, but some disadvantages would result, such as a possible stagnant pond behind the spur dike or a ponding of water up to and above the road elevation behind the spur dike.

The proposed diversion dike would encourage a more uniform flow distribution at the bridge by aligning the flow farther upstream in the channel than the spur dike. The need for the spur dike at the east abutment would not be eliminated by the proposed diversion dike, but its size and amount of armor could be reduced due to the reduction of overbank flow being diverted by the spur dike. See Map 1 and Plate 5 for the location and typical sections of the diversion dike.

Levee 1

A levee (Levee 1) has been suggested by the Maricopa County Flood Control District to begin from the west abutment of the Indian School Road Bridge and proceed upstream in a northerly direction for approximately 1,300 feet where it would connect to a proposed levee to be constructed by a gravel mining operation. See Map 1 and Plate 6 for the location and a typical section of Levee 1 and for the location of the levee proposed by the gravel mining operation.

Levee 1 is not an essential structure to controlling the Agua Fria River at the bridge, but it would perform a function. By encouraging the flood flows to flow more uniformly beneath the bridge through implementation of the improvements described above, an increase in flow at the west abutment would result. A small spur dike might then be needed to align any overbank flow entering at the west abutment. Levee 1, thus,

Levee 1 (cont'd)

would eliminate the possible need for a spur dike at the west abutment. An evaluation during final design should be made to determine the relative merits of Levee 1 versus a small spur dike to protect the west abutment and, at the same time, eliminate inundation in the area.

The construction of Levee 1 would need to be coordinated with the proposed levee of the gravel mining operation. The gravel operation's proposed levee would need to be constructed prior to that of Levee 1 in order to prevent the possibility of flood flows inundating the area behind Levee 1. Water ponding behind Levee 1 would rise and flow over Indian School Road to the west of the bridge. By incorporating the construction of Levee 1 with the construction of the gravel operation's levee, the need for the east/west leg of the gravel operation's levee at the south end of the property is eliminated since Levee 1 will prevent flow from inundating the area south of the gravel operation's property. See Map 1 and Plate 6 for the location and typical sections of Levee 1.

OPERATION AND MAINTENANCE:

The flood control alternatives evaluated in this study would operate automatically during the flooding conditions, and, therefore, require no manual input other than periodic inspection and maintenance. It must be recognized, however, that any flood control improvement creates some risk if not inspected periodically or maintained properly. A brief description of anticipated individual maintenance items are listed below:

1. Periodic Inspection: In order to determine the need for specific maintenance items, routine inspections should be conducted on a yearly basis and after any significant flooding, earthquakes and other occurrences which might adversely affect the flood control improvements.

2. Dike and Bank Protection/Repair: In order to maintain the structural integrity of the dikes, it is anticipated that some repairs will be required after periods of significant flooding.

OPERATION AND MAINTENANCE: (cont'd)

This would include replacement of earthfill along eroded sections of the dike and repairs to the damaged sections of rock riprap. In addition, replacement of lost or damaged areas of riprap protection at the piers may be required following significant floods.

3. Channel Maintenance/Repair: The proposed channel improvements were modeled based on a uniform and unobstructed cross-section. Periodic maintenance or repair may be required to insure that the channel remains unobstructed by debris or vegetation and that low flow channels cut by low discharge floods do not grow to the point where the improvements are threatened.

CONSTRUCTION COST ESTIMATES:

To help evaluate the optimum protection measures for the Indian School Road Bridge, preliminary estimates of construction costs for each of the measures described above were prepared. Table 1 illustrates those estimates in detail which are expressed in 1980 dollars. A summary of total costs for each measure is shown below:

MEASURE	ESTIMATED COST
Channelization	$ 1,256,376
Spur Dike	$ 191,895
Loose Riprap at Piers	$ 317,522
Cutoff Wall at Piers	$ 258,400
Diversion Dike	$ 282,026

TABLE 1

DETAILED PRELIMINARY CONSTRUCTION COST ESTIMATE FOR

BRIDGE PROTECTION MEASURES

INDIAN SCHOOL BRIDGE AT THE AGUA FRIA RIVER*

BRIDGE PROTECTION MEASURES	ITEM / UNIT PRICE	RIPRAP $25.00/C.Y.	MASS EXCAVATION $1.50/C.Y.	LOCAL EXCAVATION $2.00/C.Y.	COMPACTED FILL $1.00/C.Y.	FILTER FABRIC $1.00/S.Y.	FILTER FABRIC CUSHION $1.00/C.Y.	CONCRETE $200.00/C.Y.	GABIONS $115.00/C.Y.	TOTAL COST
CHANNELIZATION	QUANTITY	9,963	510,940		219,970	17,185	3,736			
	COST	$249,075	$766,410		$219,970	$17,185	$3,736			$1,256,376
SPUR DIKE	QUANTITY	3,129		3,774	7,933	3,668	2,751		798	
	COST	$78,225		$7,548	$7,933	$3,668	$2,751		$91,770	$ 181,895
PIER SCOUR PROTECTION - LOOSE RIPRAP (17 piers considered)	QUANTITY	11,426		25,925	5,955					
	COST	$285,650		$25,925	$5,955					$ 317,522
PIER SCOUR PROTECTION - CUTOFF WALL (slurry assisted construction)	QUANTITY							1,292		
	COST							$258,400		$ 258,400
DIVERSION DIKE	QUANTITY	8,950		7,292	19,647	13,740	10,305			
	COST	$223,750		$14,584	$19,647	$13,740	$10,305			$ 282,026

* ESTIMATE IS BASED ON 1980 DOLLARS AND DOES NOT INCLUDE OPERATION AND MAINTENANCE COSTS OR CONTINGENCIES.

CONCLUSIONS AND RECOMMENDATIONS:

As a result of this study it is concluded that:

1. The Indian School Road Bridge was severely damaged by the flood on February 20, 1980 because of two major factors. The first factor is due to excessive constriction of the flood flows near the east end of the bridge caused by the earthfill dike immediately downstream from the bridge encroaching into the west side of the channel. The second factor is due to the extreme angle at which the stream flow during the flooding event was directed toward the piers near the east end of the bridge because the flow was forced to turn west as it approached Indian School Road.

2. For the remaining undamaged piers of the bridge, if the present condition continues, potential for flood damage is extremely high due to local scour around the piers, general scour due to construction downstream and long-term degradation of the channel.

3. Based on the hydraulic and scour analysis, some counter-measures for hydraulic problems at the bridge are required. These measures include upstream and downstream channelization including removal of the existing downstream dike, an upstream spur dike at the east abutment, a diversion dike, a downstream cutoff wall, and loose riprap around the pier foundations.

4. Within the scope of this study and with the amount of data available, potential scour depths were estimated. These scour depths were then utilized in the design of counter-measures. The results of the calculations show an expected local scour at the piers of 9 feet and a general scour depth of 2.5 feet for a total of 11.5 feet.

CONCLUSIONS AND RECOMMENDATIONS: (cont'd)

The following are recommendations based on the findings of this study:

1. To stabilize the bridge foundations against scour, the stability measures described in this report consisting of upstream and downstream channelization including removal of the existing dike, an upstream spur dike at the east abutment, a diversion dike, and a loose riprap blanket around the existing bridge pier foundations should be provided at the Indian School Bridge. Preliminary construction cost estimates for the recommended bridge protection measures are presented in Table 2.

2. New bridge piers should be constructed on pile foundations utilizing H-piles, concrete cassions, etc.

3. The stability improvement measures recommended above are designed based on an estimated potential scour depth and are believed to be conservative. It is felt that the criteria for final design of the improvements should remain conservative due to the complexity of scour and other long-term phenomenon which are difficult to estimate and are compounded by conditions such as the downstream dike, the sand and gravel operation, the skewed direction of flow and the elevated RID canal flume. It is believed that the conservative design could be made more cost-effective through cost reductions gained by more precise scour and long-term degradation estimation. It is, therefore, recommended that for final design, a physical hydraulic model study be carried out to more accurately estimate scour potential and the design criteria for the needed flood control improvements.

TABLE 2

PRELIMINARY CONSTRUCTION COST ESTIMATES FOR
RECOMMENDED BRIDGE PROTECTION MEASURES
INDIAN SCHOOL BRIDGE AT THE AGUA FRIA RIVER*

BRIDGE PROTECTION MEASURES	ESTIMATED COST
Channelization	$ 1,256,000
Spur Dike	$ 192,000
Pier Scour Protection Loose Riprap (17 Piers Considered)	$ 318,000
Diversion Dike	$ 282,000
SUBTOTAL	$ 2,048,000
+ 15% CONTINGENCY	$ 307,000
GRAND TOTAL	$ 2,355,000

* Estimate is based on 1980 dollars and does not include operation and maintenance costs.

REFERENCES

1. U.S. Department of Transportation, Federal Highway Administration, "Highways in the River Environment, Hydraulic and Environmental Design Considerations", Training and Design Manual, May, 1975.

2. U.S. Department of Transportation, Federal Highway Administration, "Hydraulics of Bridge Waterways", Hydraulic Design Series No. 1, 1973.

3. U.S. Department of Commerce, Federal Highway Administration, "Counter-measures for Hydraulic Problems at Bridges", Volume 1, Analysis and Assessment, by U.S.G.S., Menlo Park, California, September, 1978.

4. U.S. Department of Commerce, Federal Highway Administration, "Counter-measures for Hydraulic Problems at Bridges", Volume II, Case Histories for Sites 1-283, by U.S.G.S., Menlo Park, California, September, 1978.

5. U.S. Army Corps of Engineers, the Hydrology Engineering Center, "Sediment Transport", Volume 12, June, 1977.

6. U.S. Army Corps of Engineers, Los Angeles District, "New River and Phoenix City Streams, Arizona, Design Memorandum No. 2, Hydrology, Part 1", October, 1974.

7. U.S.G.S., Department of the Interior, "Flood of February, 1980 Along the Agua Fria River, Maricopa County, Arizona", Open-File Report 80-767, by B.W. Thompson, June, 1980.

8. "Geotechnical Investigation Report, Indian School Road Bridge at the Agua Fria River, Maricopa County, Arizona", Sergent, Hauskins & Beckwith, Phoenix, Arizona, September 24, 1980.

9. State of California, Department of Transportation, "Bank and Shore Protection in California Highway Practice", November, 1970.

10. U.S. Department of Transportation, Federal Highway Administration, HEC No. 11, "Use of Riprap for Bank Protection", June, 1967.

11. U.S. Department of Transportation, Federal Highway Administration, HEC No. 15, "Design of Stable Channels with Flexible Linings", October, 1975.

12. U.S. Army Corps of Engineers, the Hydrologic Engineering Center, "Water Surface Profiles", HEC-2, August, 1979.

APPENDIX

TABLE OF CONTENTS

HEC-2 COMPUTER PRINTOUTS

I. Agua Fria River - Discharge of 100,000 cfs for Present Condition

II. Agua Fria River - Discharge of 100,000 cfs for Present Condition with Encroachment for Proposed Spur Dike and Diversion Dike

III. Agua Fria River - Discharge of 100,000 cfs for Proposed Channelization excluding Spur Dike and Diversion Dike

APPENDIX

HEC-2 COMPUTER PRINTOUTS

1. AGUA FRIA RIVER - DISCHARGE OF 100,000 CFS FOR PRESENT CONDITION

```
**********************************************************
  HEC2 RELEASE DATED NOV 76 UPDATED APRI 1980
  ERROR CORR -  01.02.03.04
  MODIFICATION -  50.51.52.53.54
**********************************************************

C
T1      FOR SAMER AND LARSUM,INC.              BY PRC TOUPS,PHOENIX,AZ. PH. 954-9191
T2      PROFILE 1 - Q = 100,000 CFS
T3      AGUA FRIA RIVER AT INDIAN SCHOOL ROAD        SEPTEMBER,1980  NO.1095-600

J1  ICHECK     INQ       NINV      IDIR      STRT      METRIC    HVINS     Q         WSEL      FQ

      -1.        6.        0.        0.    .002900     0.00      0.0       0.    1002.000    0.000

J2  NPROF      IPLOT     PREVS     XSECV     XSECH     FN        ALLDC     IBW       CHNIM     ITRACE

    -1.000     0.000     0.000     0.000     0.000     0.000     0.000     0.000     0.000     15.000

J3  VARIABLE CODES FOR SUMMARY PRINTOUT

    38.000    39.000     1.000    42.000     8.000    13.000    55.000    14.000    26.000    53.000


    54.000    10.000    11.000     0.000     0.000     0.000     0.000     0.000     0.000     0.000

NC      .040      .030      .025      .100      .300     0.000     0.000     0.000     0.000     0.000
QT     5.000 42000.000 55000.000 56500.000 85000.000 100000.000     0.000     0.000     0.000     0.000

       CROSS SECTION STATIONING FROM LEFT TO RIGHT LOOKING DOWNSREAM WITH

       REFERENCE LINE AT STATION 10000.

       CROSS SECTION NUMBERS ARE IN RIVER MILES ABOVE THE CONFLUENCE OF THE

       GILA RIVER. THE STATIONING FOR THIS STUDY WAS MATCHED AT THE INDIAN

       SCHOOL BRIDGE WITH STATIONING FROM A PREVIOUS FLOOD INSURANCE STUDY.

       STARTING WATER SURFACE ELEVATIONS ARE BASED ON THE SLOPE AREA METHOD.

X1      7.982    29.000  9585.000 10430.000     0.000     0.000     0.000     0.000     0.000     0.000
GR   1010.000  8925.000  1000.000  8972.000   991.000  9005.000   991.000  9330.000   998.000  9580.000
GR   1000.000  9585.000  1000.000  9605.000   994.000  9620.000   992.000  9628.000   990.400  9635.000
GR    990.400  9648.000   992.000  9655.000   994.000  9664.000   996.000  9714.000   996.600  9830.000
GR    996.000  9942.000   995.000 10000.000   995.000 10050.000   996.000 10070.000   998.000 10100.000
GR    999.000 10170.000   999.000 10220.000   998.000 10270.000   996.000 10370.000   996.000 10384.000
GR    998.000 10390.000  1002.000 10400.000  1006.000 10425.000  1007.000 10430.000     0.000     0.000
```

X1	8.067	19.000	9680.000	10390.000	450.000	450.000	450.000	0.000	0.000	0.000
GR	1010.000	9065.000	1000.000	9078.000	992.000	9098.000	992.000	9395.000	996.000	9666.000
GR	1000.000	9680.000	992.000	9695.000	991.700	9700.000	991.700	9730.000	992.000	9735.000
GR	992.000	9798.000	994.000	9840.000	996.000	9960.000	998.000	10050.000	998.000	10232.000
GR	996.600	10260.000	998.000	10285.000	1000.000	10365.000	1009.000	10390.000	0.000	0.000
X1	8.152	19.000	9780.000	10350.000	450.000	450.000	450.000	0.000	0.000	0.000
GR	997.000	9565.000	994.000	9585.000	994.000	9600.000	994.000	9765.000	998.000	9770.000
GR	1000.000	9780.000	994.000	9790.000	993.000	9800.000	993.000	9830.000	994.000	9960.000
GR	995.000	10030.000	994.000	10130.000	993.900	10150.000	994.000	10190.000	996.000	10200.000
GR	998.000	10250.000	1000.000	10295.000	1002.000	10330.000	1010.000	10350.000	0.000	0.000
NC	.045	.045	.025	.100	.300	0.000	0.000	0.000	0.000	0.000

ROOSEVELT IRRIGATION DISTRICT AQUADUCT.

X1	8.189	54.000	9765.000	10355.000	193.000	193.000	193.000	0.000	0.000	0.000
GR	1010.000	9617.000	1007.500	9618.000	1006.800	9688.000	1010.000	9689.000	1010.000	9691.000
GR	1006.800	9692.000	1006.000	9762.000	1010.000	9763.000	1010.000	9763.500	1010.000	9764.000
GR	1010.000	9765.000	1006.000	9766.000	1004.000	9795.000	1002.000	9800.000	995.000	9815.000
GR	995.000	9836.000	1010.000	9837.000	1010.000	9839.000	995.000	9840.000	994.000	9910.000
GR	1010.000	9911.000	1010.000	9912.000	994.000	9914.000	994.000	9984.000	1010.000	9985.000
GR	1010.000	9987.000	994.000	9988.000	994.000	10058.000	1010.000	10059.000	1010.000	10061.000
GR	994.000	10062.000	994.500	10132.000	1010.000	10133.000	1010.000	10135.000	994.500	10136.000
GR	995.000	10206.000	1010.000	10207.000	1010.000	10209.000	995.000	10210.000	996.000	10220.000
GR	998.000	10235.000	1000.000	10258.000	1002.000	10265.000	1002.500	10280.000	1010.000	10281.000
GR	1010.000	10283.000	1002.500	10284.000	1004.500	10354.000	1010.000	10355.000	1010.000	10356.000
GR	1010.000	10357.000	1004.500	10358.000	1003.500	10428.000	1010.000	10429.000	0.000	0.000
X1	8.192	0.000	0.000	0.000	16.000	16.000	16.000	0.000	.050	0.000
NH	3.000	.050	9824.000	.025	10300.000	.050	10520.000	0.000	0.000	0.000
ET	0.000	7.100	7.100	7.100	0.000	0.000	9824.000	10300.000	0.000	0.000
X1	8.228	17.000	9960.000	10000.000	191.000	191.000	191.000	0.000	0.000	0.000
GR	1008.000	9625.000	1010.000	9780.000	1008.000	9785.000	1008.000	9810.000	1010.000	9820.000
GR	1010.200	9824.000	998.000	9840.000	996.000	9960.000	994.800	10000.000	994.800	10170.000
GR	996.000	10213.000	1000.000	10230.000	1002.000	10240.000	1008.000	10275.000	1010.000	10300.000
GR	1004.500	10320.000	1004.500	10520.000	0.000	0.000	0.000	0.000	0.000	0.000
NH	3.000	.050	9808.000	.025	10275.000	.050	10745.000	0.000	0.000	0.000
ET	0.000	7.100	7.100	7.100	0.000	0.000	9808.000	10275.000	0.000	0.000
X1	8.323	18.000	9970.000	10030.000	500.000	500.000	500.000	0.000	0.000	0.000
GR	1010.000	9630.000	1010.000	9700.000	1010.000	9740.000	1010.000	9780.000	1014.000	9804.000
GR	1016.000	9808.000	1010.000	9818.000	1004.000	9830.000	1002.000	9850.000	1000.000	9860.000
GR	998.000	9932.000	997.200	9970.000	997.200	10030.000	998.000	10230.000	1010.000	10255.000
GR	1010.000	10275.000	1007.000	10300.000	1007.000	10745.000	0.000	0.000	0.000	0.000
NH	3.000	.050	9855.000	.025	10375.000	.050	10970.000	0.000	0.000	0.000
ET	0.000	7.100	7.100	7.100	0.000	0.000	9855.000	10375.000	0.000	0.000

X1	8.417	19.000	9990.000	10045.000	500.000	500.000	500.000	0.000	0.000	0.000
GR	1009.000	9630.000	1009.000	9700.000	1009.000	9750.000	1009.000	9830.000	1010.000	9835.000
GR	1012.000	9855.000	1000.000	9884.000	999.000	9920.000	999.000	9960.000	998.400	9990.000
GR	998.400	10010.000	999.000	10045.000	999.500	10200.000	1000.000	10300.000	1010.000	10325.000
GR	1012.000	10375.000	1009.500	10400.000	1009.500	10490.000	1022.000	10970.000	0.000	0.000
NH	2.000	.025	10545.000	.050	11250.000	0.000	0.000	0.000	0.000	0.000
ET	0.000	7.100	7.100	7.100	0.000	0.000	9640.000	10545.000	0.000	0.000

X1	8.540	15.000	10000.000	10050.000	650.000	650.000	650.000	0.000	0.000	0.000
GR	1013.000	9640.000	1010.000	9650.000	1002.000	9662.000	1000.600	9790.000	1000.000	9935.000
GR	999.000	10000.000	999.000	10050.000	1000.000	10120.000	1000.000	10250.000	1002.000	10425.000
GR	1004.000	10510.000	1016.000	10545.000	1012.000	10600.000	1012.000	11210.000	1016.000	11250.000
NC	.022	.022	.022	.300	.500	0.000	0.000	0.000	0.000	0.000

INDIAN SCHOOL BRIDGE.

X1	8.615	4.000	9720.000	11320.000	3950.000	320.000	395.000	0.000	0.000	0.000
X3	10.000	0.000	0.000	0.000	0.000	0.000	0.000	1015.000	1015.000	0.000
GR	1015.000	9720.000	999.700	10178.000	999.700	10863.000	1015.000	11320.000	0.000	0.000
SR	1.050	1.290	2.800	0.000	685.000	1.000	17250.000	30.300	999.900	999.700

X1	8.630	0.000	0.000	0.000	80.000	80.000	80.000	0.000	0.000	0.000
X2	0.000	0.000	1.000	1015.000	1015.600	0.000	0.000	0.000	0.000	0.000
X3	10.000	0.000	0.000	0.000	0.000	0.000	0.000	1015.600	1015.600	0.000
BT	20.000	3800.000	1020.000	0.000	5000.000	1018.000	0.000	5510.000	1017.400	0.000
BT	5850.000	1017.000	0.000	6050.000	1016.000	0.000	6130.000	1015.600	0.000	6190.000
BT	1016.000	0.000	6700.000	1017.000	0.000	8550.000	1017.000	0.000	8900.000	1018.000
BT	0.000	9640.000	1020.000	0.000	9700.000	1020.400	0.000	9750.000	1022.400	0.000
BT	11350.000	1022.400	0.000	11600.000	1020.000	0.000	11750.000	1018.000	0.000	12150.000
BT	1016.000	0.000	12320.000	1016.000	0.000	13180.000	1018.000	0.000	13550.000	1020.000
BT	0.000	0.000	0.000	0.000	0.000	0.000	0.000	0.000	0.000	0.000
NH	3.000	.030	9450.000	.025	10710.000	.030	11895.000	0.000	0.000	0.000
ET	0.000	0.000	0.000	0.000	0.000	9.100	0.000	0.000	9450.000	11550.000

X1	8.687	25.000	9870.000	10090.000	300.000	380.000	300.000	0.000	0.000	0.000
GR	1004.000	9450.000	1004.000	9785.000	1006.000	9795.000	1006.000	9800.000	1004.000	9805.000
GR	1004.000	9870.000	1006.000	10090.000	1006.400	10200.000	1006.000	10295.000	1004.000	10455.000
GR	1004.000	10515.000	1006.000	10555.000	1008.000	10560.000	1010.000	10650.000	1011.000	10710.000
GR	1012.000	10930.000	1010.000	10990.000	1008.000	11020.000	1008.000	11055.000	1010.000	11085.000
GR	1009.500	11290.000	1008.000	11345.000	1007.000	11390.000	1010.000	11440.000	1010.000	11895.000
NH	3.000	.030	9220.000	.025	10535.000	.030	11900.000	0.000	0.000	0.000
ET	0.000	7.100	7.100	7.100	0.000	0.000	8890.000	10775.000	0.000	0.000

X1	8.791	36.000	9900.000	10000.000	550.000	580.000	550.000	0.000	0.000	0.000
GR	1009.500	8890.000	1008.000	8970.000	1006.700	9070.000	1006.000	9170.000	1004.500	9220.000
GR	1004.500	9250.000	1006.000	9295.000	1007.000	9400.000	1006.000	9470.000	1005.000	9490.000
GR	1006.000	9520.000	1008.000	9700.000	1010.000	9705.000	1005.000	9725.000	1005.000	9740.000
GR	1008.000	9755.000	1008.000	9790.000	1007.400	9840.000	1008.000	9900.000	1009.000	10000.000
GR	1008.000	10165.000	1008.000	10275.000	1006.000	10310.000	1006.000	10335.000	1008.000	10535.000
GR	1010.000	10770.000	1012.000	10775.000	1012.000	11010.000	1011.000	11050.000	1011.000	11250.000
GR	1010.000	11340.000	1009.000	11370.000	1009.000	11420.000	1010.000	11445.000	1011.000	11540.000
GR	1011.500	11900.000	0.000	0.000	0.000	0.000	0.000	0.000	0.000	0.000
NH	3.000	.030	9280.000	.025	11030.000	.030	11800.000	0.000	0.000	0.000
FT	0.000	7.100	7.100	7.100	0.000	0.000	8220.000	11030.000	0.000	0.000

X1	8.943	39.000	9960.000	10160.000	800.000	770.000	800.000	0.000	0.000	0.000
GR	1016.200	8220.000	1014.600	8270.000	1014.000	8515.000	1012.000	8570.000	1010.000	8630.000
GR	1009.000	8700.000	1010.000	8820.000	1012.000	8930.000	1010.000	8980.000	1009.000	9010.000
GR	1009.000	9060.000	1010.000	9100.000	1011.000	9200.000	1011.000	9280.000	1010.000	9355.000
GR	1010.000	9460.000	1008.000	9605.000	1008.000	9760.000	1010.000	9780.000	1008.000	9860.000
GR	1006.600	9900.000	1008.000	9940.000	1010.000	9960.000	1012.000	10160.000	1012.000	10290.000
GR	1010.000	10535.000	1009.000	10650.000	1010.000	10800.000	1012.000	10835.000	1014.000	11030.000
GR	1012.000	11470.000	1012.000	11490.000	1014.400	11550.000	1012.000	11620.000	1010.000	11655.000
GR	1009.500	11670.000	1010.000	11690.000	1014.000	11714.000	1014.800	11800.000	0.000	0.000
NH	3.000	.030	9675.000	.025	11260.000	.030	12115.000	0.000	0.000	0.000
FT	0.000	7.100	7.100	7.100	0.000	0.000	8350.000	11260.000	0.000	0.000

X1	9.076	41.000	9780.000	10000.000	700.000	700.000	700.000	0.000	0.000	0.000
GR	1017.500	8350.000	1016.000	8395.000	1012.000	8416.000	1011.000	8480.000	1012.000	8540.000
GR	1014.000	8690.000	1014.500	8760.000	1014.000	8840.000	1013.000	8890.000	1014.000	8940.000
GR	1014.000	9120.000	1015.000	9190.000	1014.000	9260.000	1012.000	9365.000	1011.000	9410.000
GR	1011.000	9635.000	1012.000	9675.000	1012.000	9780.000	1011.000	10000.000	1010.400	10175.000
GR	1010.000	10330.000	1009.400	10450.000	1010.000	10475.000	1014.000	10490.000	1015.500	10600.000
GR	1014.000	10700.000	1012.000	10795.000	1012.000	10825.000	1013.500	10950.000	1012.000	11060.000
GR	1012.000	11090.000	1014.000	11105.000	1015.500	11260.000	1016.000	11400.000	1016.000	11500.000
GR	1014.000	11740.000	1014.000	11805.000	1010.000	11815.000	1010.000	11840.000	1016.000	11865.000
GR	1017.000	12115.000	0.000	0.000	0.000	0.000	0.000	0.000	0.000	0.000
EJ	0.000	0.000	0.000	0.000	0.000	0.000	0.000	0.000	0.000	0.000

SECNO	DEPTH	CWSEL	CRIWS	WSELK	EG	HV	HL	OLOSS	BANK ELEV
Q	QLOB	QCH	QROB	ALOB	ACH	AROB	VOL	TWA	LEFT/RIGHT
TIME	VLOB	VCH	VROB	XNL	XNCH	XNR	WTN	ELMIN	SSTA
SLOPE	XLOBL	XLCH	XLOBR	ITRIAL	IDC	ICONT	CORAR	TOPWID	ENDST

*PROF 1

CCHV= .100 CEHV= .300
*SECNO 7.982
CROSS SECTION STATIONING FROM LEFT TO RIGHT LOOKING DOWNSREAM WITH

REFERENCE LINE AT STATION 10000.

CROSS SECTION NUMBERS ARE IN RIVER MILES ABOVE THE CONFLUENCE OF THE

GILA RIVER. THE STATIONING FOR THIS STUDY WAS MATCHED AT THE INDIAN

SCHOOL BRIDGE WITH STATIONING FROM A PREVIOUS FLOOD INSURANCE STUDY.

STARTING WATER SURFACE ELEVATIONS ARE BASED ON THE SLOPE AREA METHOD.

7.98	11.80	1002.20	0.00	1002.00	1003.65	1.44	0.00	0.00	1000.00
100000.	53351.	46649.	0.	5816.	4597.	0.	0.	0.	1007.00
0.00	9.17	10.15	0.00	.040	.025	.030	0.000	990.40	8961.64
.002924	0.	0.	0.	0	0	3	0.00	1439.64	10401.28

FLOW DISTRIBUTION FOR SECNO= 7.98 CWSEL= 1002.20

STA=	8962.	8972.	9005.	9330.	9580.	9585.	10430.
PER Q=	.0	1.5	36.6	15.1	.1	46.6	
AREA=	11.4	221.2	3641.4	1926.1	16.0	4597.2	
VEL=	2.1	7.0	10.1	7.8	4.2	10.1	

*SECNO 8.067

8.07	11.78	1003.48	0.00	0.00	1004.75	1.27	1.09	.02	1000.00
100000.	49540.	50460.	0.	6211.	5044.	0.	112.	14.	1009.00
.01	7.98	10.00	0.00	.040	.025	.030	.025	991.70	9073.48
.002026	450.	450.	450.	2	0	0	0.00	1301.18	10374.66

FLOW DISTRIBUTION FOR SECNO= 8.07 CWSEL= 1003.48

STA=	9073.	9078.	9098.	9395.	9666.	9680.	10390.
PER Q=	.0	.9	29.0	19.2	.4	50.5	
AREA=	7.9	149.5	3408.5	2568.1	76.7	5043.7	
VEL=	2.1	6.1	8.5	7.5	5.1	10.0	

SECNO	DEPTH	CWSEL	CRIWS	WSELK	EG	HV	HL	OLOSS	BANK ELEV
Q	QLOB	QCH	QROB	ALOB	ACH	AROB	VOL	TWA	LEFT/RIGHT
TIME	VLOB	VCH	VROB	XNL	XNCH	XNR	WTN	ELMIN	SSTA
SLOPE	XLOBL	XLCH	XLOBR	ITRIAL	IDC	ICONT	CORAR	TOPWID	ENDST

*SECNO 8.152
3280 CROSS SECTION 8.15 EXTENDED 6.24 FEET

3301 HV CHANGED MORE THAN HVINS

7185 MINIMUM SPECIFIC ENERGY
3720 CRITICAL DEPTH ASSUMED

8.15	10.24	1003.24	1003.24	0.00	1007.43	4.19	1.41	.87	1000.00
100000.	22073.	77927.	0.	1896.	4441.	0.	203.	25.	1010.00
.02	11.64	17.55	0.00	.040	.025	.030	.025	993.00	9565.00
.005449	450.	450.	450.	5	11	0	0.00	768.10	10333.10

FLOW DISTRIBUTION FOR SECNO= 8.15 CWSEL= 1003.24

STA=	9565.	9585.	9600.	9765.	9770.	9780.	10350.
PER Q=	1.4	1.7	18.4	.3	.3	77.9	
AREA=	154.8	138.6	1524.4	36.2	42.4	4441.2	
VEL=	8.9	12.1	12.1	8.7	7.1	17.5	

CCHV= .100 CEHV= .300
*SECNO 8.189

3265 DIVIDED FLOW

3685 20 TRIALS ATTEMPTED WSEL,CWSEL
3693 PROBABLE MINIMUM SPECIFIC ENERGY
3720 CRITICAL DEPTH ASSUMED
POOSEVELT IRRIGATION DISTRICT AQUADUCT.

8.19	12.84	1006.84	1006.84	0.00	1011.50	4.66	1.06	.14	1010.00
100000.	44.	98979.	977.	31.	5689.	200.	230.	28.	1010.00
.02	1.41	17.40	4.88	.045	.025	.045	.025	994.00	9683.85
.005486	193.	193.	193.	20	11	0	0.00	717.49	10428.51

FLOW DISTRIBUTION FOR SECNO= 8.19 CWSEL= 1006.84

STA=	9684.	9762.	10355.	10428.	10429.
PER Q=	.0	99.0	1.0	.0	
AREA=	30.9	5688.7	199.4	.9	
VEL=	1.4	17.4	4.9	1.0	

SECNO	DEPTH	CWSEL	CRIWS	WSELK	EG	HV	HL	OLOSS	BANK ELEV
Q	QLOB	QCH	QROB	ALOB	ACH	AROB	VOL	TWA	LEFT/RIGHT
TIME	VLOB	VCH	VROB	XNL	XNCH	XNR	WTN	ELMIN	SSTA
SLOPE	XLOBL	XLCH	XLOBR	ITRIAL	IDC	ICONT	COPAR	TOPWID	ENDST

*SECNO 8.192

3265 DIVIDED FLOW

3301 HV CHANGED MORE THAN HVINS

8.19	13.91	1007.96	0.00	0.00	1011.67	3.70	.07	.10	1010.05
100000.	385.	98197.	1418.	161.	6305.	277.	232.	28.	1010.05
.02	2.40	15.57	5.12	.045	.025	.045	.025	994.05	9617.83
.003954	16.	16.	16.	8	0	0	0.00	786.46	10428.68

FLOW DISTRIBUTION FOR SECNO= 8.19 CWSEL= 1007.96

STA=	9618.	9688.	9762.	9762.	10355.	10428.	10429.
PER Q=	.1	.3	.0	98.2	1.4	.0	
AREA=	53.7	106.6	.5	6305.3	275.3	1.5	
VEL=	1.7	2.7	.8	15.6	5.1	1.0	

1490 NH CARD USED
*SECNO 8.228

3265 DIVIDED FLOW

3280 CROSS SECTION 8.23 EXTENDED 4.03 FEET

7185 MINIMUM SPECIFIC ENERGY
3720 CRITICAL DEPTH ASSUMED

8.23	13.73	1008.53	1008.53	0.00	1012.72	4.19	.69	.15	996.00
100000.	24895.	10025.	65080.	1481.	525.	4113.	260.	32.	994.80
.03	16.81	19.09	15.82	.025	.025	.026	.025	994.80	9625.00
.003332	191.	191.	191.	3	5	0	0.00	740.04	10520.00

FLOW DISTRIBUTION FOR SECNO= 8.23 CWSEL= 1008.53

STA=	9625.	9960.	10000.	10170.	10213.	10240.	10520.
PER Q=	24.9	10.0	45.9	10.8	3.9	4.5	
AREA=	1481.3	525.2	2333.9	564.5	254.3	960.6	
VEL=	16.8	19.1	19.7	19.1	15.2	4.7	

SECNO	DEPTH	CWSEL	CRIWS	WSELK	EG	HV	HL	OLOSS	BANK ELEV
Q	QLOB	QCH	QROB	ALOB	ACH	AROB	VOL	TWA	LEFT/RIGHT
TIME	VLOB	VCH	VROB	XNL	XNCH	XNR	WTN	ELMIN	SSTA
SLOPE	XLOBL	XLCH	XLOBR	ITRIAL	IDC	ICONT	CORAR	TOPWID	ENDST

1490 NH CARD USED
*SECNO 8.323

3265 DIVIDED FLOW

3280 CROSS SECTION 8.32 EXTENDED 4.75 FEET

3301 HV CHANGED MORE THAN HVINS

8.32	14.56	1011.76	1010.81	0.00	1014.25	2.49	1.36	.17	997.20
100000.	27616.	14727.	57657.	2070.	873.	5255.	343.	42.	997.20
.04	13.34	16.87	10.97	.025	.025	.029	.025	997.20	9630.00
.002266	500.	500.	500.	12	6	0	0.00	1090.43	10745.00

FLOW DISTRIBUTION FOR SECNO= 8.32 CWSEL= 1011.76

STA=	9630.	9850.	9932.	9970.	10030.	10230.	10745.
PER Q=	3.1	15.6	8.9	14.7	46.9	10.8	
AREA=	506.5	1025.6	537.8	873.1	2830.3	2424.5	
VEL=	6.1	15.2	16.6	16.9	16.6	4.5	

1490 NH CARD USED
*SECNO 8.417
3280 CROSS SECTION 8.42 EXTENDED 3.52 FEET

3301 HV CHANGED MORE THAN HVINS

8.42	14.12	1012.52	0.00	0.00	1015.62	3.10	1.19	.18	998.40
100000.	28262.	13168.	58570.	2364.	766.	4091.	431.	54.	999.00
.05	11.96	17.18	14.32	.027	.025	.026	.025	998.40	9630.00
.002493	500.	500.	500.	3	0	0	0.00	976.10	10606.10

FLOW DISTRIBUTION FOR SECNO= 8.42 CWSEL= 1012.52

STA=	9630.	9884.	9920.	9960.	9990.	10045.	10200.	10300.	10490.	10606.
PER Q=	4.4	7.7	9.1	7.1	13.2	34.2	20.7	3.3	.3	
AREA=	939.4	468.8	540.9	414.7	766.3	2057.4	1277.3	580.7	175.5	
VEL=	4.6	16.4	16.8	17.1	17.2	16.6	16.2	5.6	2.0	

SECNO	DEPTH	CWSEL	CRIWS	WSELK	EG	HV	HL	OLOSS	BANK ELEV
Q	QLOB	QCH	QROB	ALOB	ACH	AROB	VOL	TWA	LEFT/RIGHT
TIME	VLOB	VCH	VROB	XNL	XNCH	XNR	WTN	ELMIN	SSTA
SLOPE	XLOBL	XLCH	XLOBR	ITRIAL	IDC	ICONT	CORAR	TOPWID	ENDST

1490 NH CARD USED
*SECNO 8.540

3265 DIVIDED FLOW

3280 CROSS SECTION 8.54 EXTENDED 2.73 FEET

3301 HV CHANGED MORE THAN HVINS

8.54	16.74	1015.74	0.00	0.00	1016.40	.67	.54	.24	999.00
100000.	38903.	6623.	54474.	5300.	837.	9488.	602.	73.	999.00
.08	7.34	7.92	5.74	.025	.025	.027	.025	999.00	9640.00
.000414	650.	650.	650.	3	0	0	0.00	1602.93	11247.35

FLOW DISTRIBUTION FOR SECNO= 8.54 CWSEL= 1015.74

STA=	9640.	9790.	9935.	10000.	10050.	10120.	10250.	10425.	10510.	11210.	11247.
PER Q=	13.9	16.8	8.2	6.6	8.8	15.5	18.7	7.1	4.2	.1	
AREA=	2006.8	2238.0	1055.3	836.7	1136.4	2045.5	2578.6	1082.5	2575.0	69.7	
VEL=	6.9	7.5	7.8	7.9	7.8	7.6	7.3	6.6	1.6	.9	

CCHV= .300 CEHV= .500
*SECNO 8.615
3280 CROSS SECTION 8.62 EXTENDED 1.39 FEET

INDIAN SCHOOL BRIDGE.

8.62	16.68	1016.38	0.00	0.00	1016.78	.40	.30	.08	1015.00
100000.	0.	100000.	0.	0.	19698.	0.	970.	102.	1015.00
.14	0.00	5.08	0.00	.022	.022	.022	.020	999.70	9720.00
.000199	3950.	395.	320.	2	0	0	0.00	1600.00	11320.00

FLOW DISTRIBUTION FOR SECNO= 8.62 CWSEL= 1016.38

STA=	9720.	11320.
PER Q=	100.0	
AREA=	19698.1	
VEL=	5.1	

SECNO	DEPTH	CWSEL	CRIWS	WSELK	EG	HV	HL	OLOSS	BANK ELEV
Q	QLOB	QCH	QROB	ALOB	ACH	AROB	VOL	TWA	LEFT/RIGHT
TIME	VLOB	VCH	VROB	XNL	XNCH	XNR	WTN	FLMIN	SSTA
SLOPE	XLOPL	XLCH	XLCBR	ITRIAL	IDC	ICONT	CORAR	TOPWID	ENDST

SPECIAL BRIDGE

SB	XK	XKOR	COEQ	RDLEN	BWC	BWP	BAREA	SS	ELCHU	ELCHD
	1.05	1.29	2.80	0.00	685.00	1.00	17250.00	30.30	999.90	999.70

*SECNO 8.630
3280 CROSS SECTION 8.63 EXTENDED 1.63 FEET

PRESSURE AND WEIR FLOW

EGPRS	EGLWC	H3	QWEIR	QPR	BAREA	TRAPEZOID AREA	ELLC	ELTRD
1017.05	1016.78	.00	2389.	97200.	17250.	17237.	1015.00	1015.60

8.63	16.93	1016.63	0.00	0.00	1017.02	.38	.24	0.00	1015.00
100000.	0.	100000.	0.	0.	20092.	0.	1006.	104.	1015.00
.14	0.00	4.98	0.00	.022	.022	.022	.021	999.70	9720.00
.000187	80.	80.	80.	2	0	3	0.00	1600.00	11320.00

FLOW DISTRIBUTION FOR SECNO= 8.63 CWSEL= 1016.63

STA= 9720. 11320.
PER Q= 100.0
AREA= 20091.9
VEL= 5.0

1490 NH CARD USED
*SECNO 8.687
3280 CROSS SECTION 8.69 EXTENDED 6.69 FEET

3470 ENCROACHMENT STATIONS= 9450.0 11550.0 TYPE= 1 TARGET= 2100.000

8.69	12.70	1016.70	0.00	0.00	1017.11	.42	.08	.02	1004.00
100000.	31613.	14856.	53531.	5307.	2573.	12036.	1155.	119.	1006.00
.16	5.96	5.77	4.45	.025	.025	.027	.021	1004.00	9450.00
.000355	300.	300.	380.	0	0	0	0.00	2100.00	11550.00

FLOW DISTRIBUTION FOR SECNO= 8.69 CWSEL= 1016.70

SECNO	DEPTH	CWSEL	CRIWS	WSELK	EG	HV	HL	OLOSS	BANK ELEV
Q	QLOB	QCH	QROB	ALOB	ACH	AROB	VOL	TWA	LEFT/RIGHT
TIME	VLOB	VCH	VROB	XNL	XNCH	XNR	WTN	ELMIN	SSTA
SLOPE	XLOBL	XLCH	XLOBR	ITRIAL	IDC	ICONT	CORAR	TOPWID	ENDST

STA=	9450.	9785.	9870.	10090.	10200.	10295.	10455.	10515.	10650.	10930.	11055.	11290.	11390.
PER Q=	25.3	6.3	14.9	6.2	5.4	10.8	4.6	6.0	4.6	3.1	5.7	3.3	
AREA=	4252.7	1054.1	2572.8	1154.4	997.0	1871.2	761.7	1208.8	1514.5	876.8	1654.5	850.7	
VEL=	5.9	6.0	5.8	5.4	5.4	5.8	6.1	4.9	3.0	3.5	3.4	3.9	
STA=	11390.	11550.											
PER Q=	3.9												
AREA=	1146.2												
VEL=	3.4												

1490 NH CARD USED
*SECNO 8.791
3280 CROSS SECTION 8.79 EXTENDED 7.58 FEET

8.79	12.58	1017.08	0.00	0.00	1017.34	.26	.18	.05	1008.00
100000.	47485.	3665.	48850.	10382.	858.	13762.	1448.	152.	1009.00
.20	4.57	4.27	3.55	.026	.025	.028	.021	1004.50	8890.00
.000294	550.	550.	580.	2	0	0	0.00	3010.00	11900.00

FLOW DISTRIBUTION FOR SECNO= 8.79 CWSEL= 1017.08

STA=	8890.	9070.	9170.	9250.	9400.	9470.	9520.	9700.	9790.	9900.	10000.	10165.	10275.
PER Q=	6.0	4.4	4.7	8.3	3.6	3.0	8.6	4.2	4.7	3.7	6.0	4.4	
AREA=	1639.7	1073.2	969.0	1643.5	740.7	579.1	1814.7	889.8	1032.0	858.2	1416.0	999.0	
VEL=	3.6	4.1	4.8	5.0	4.9	5.2	4.8	4.7	4.5	4.3	4.3	4.4	
STA=	10275.	10335.	10535.	10770.	11010.	11250.	11420.	11900.					
PER Q=	3.1	9.6	6.5	3.1	4.0	3.9	8.2						
AREA=	629.9	2016.3	1899.2	1224.6	1439.6	1223.9	2914.1						
VEL=	4.9	4.8	3.4	2.5	2.8	3.2	2.8						

1490 NH CARD USED
*SECNO 8.943
3280 CROSS SECTION 8.94 EXTENDED 2.55 FEET

8.94	10.75	1017.35	0.00	0.00	1017.68	.33	.31	.03	1010.00
100000.	57360.	5994.	36646.	11877.	1269.	8826.	1871.	211.	1012.00
.24	4.83	4.72	4.15	.027	.025	.026	.021	1006.60	8220.00
.000537	800.	800.	770.	1	0	0	0.00	3580.00	11800.00

FLOW DISTRIBUTION FOR SECNO= 8.94 CWSEL= 1017.35

SECNO	DEPTH	CWSEL	CRIWS	WSELK	EG	HV	HL	OLOSS	BANK ELEV
0	QLOB	QCH	QROB	ALOB	ACH	AROB	VOL	TWA	LEFT/RIGHT
TIME	VLOB	VCH	VROB	XNL	XNCH	XNR	WTN	ELMIN	SSTA
SLOPE	XLOBL	XLCH	XLOBR	ITRIAL	IDC	ICONT	CORAR	TOPWID	ENDST

STA=	8220.	8630.	8820.	8980.	9060.	9200.	9355.	9460.	9605.	9760.	9860.	9940.	9960.
PER Q=	4.2	6.8	4.0	3.0	4.3	4.5	4.0	6.9	8.9	4.7	5.2	.9	
AREA=	1463.3	1490.7	1015.3	652.7	998.4	1021.1	771.3	1210.1	1448.6	834.6	803.7	166.9	
VEL=	2.9	4.5	3.9	4.7	4.3	4.5	5.2	5.7	6.1	5.7	6.4	5.7	
STA=	9960.	10160.	10535.	10650.	10800.	11030.	11470.	11670.	11800.				
PER Q=	6.0	10.3	4.9	6.4	4.2	5.8	3.4	1.7					
AREA=	1269.1	2249.7	902.3	1176.9	1069.5	1912.1	981.9	533.5					
VEL=	4.7	4.6	5.4	5.4	3.9	3.1	3.4	3.2					

1490 NH CARD USED
*SECNO 9.076
3280 CROSS SECTION 9.08 EXTENDED .79 FEET

9.08	8.39	1017.79	0.00	0.00	1018.33	.54	.54	.11	1012.00
100000.	36259.	9741.	54000.	6901.	1384.	8921.	2186.	270.	1011.00
.28	5.25	7.04	6.05	.029	.025	.026	.021	1009.40	8350.00
.001208	700.	700.	700.	2	0	0	0.00	3765.00	12115.00

FLOW DISTRIBUTION FOR SECNO= 9.08 CWSEL= 1017.79

STA=	8350.	8540.	8690.	8890.	9120.	9365.	9635.	9780.	10000.	10175.	10330.	10450.	10600.
PER Q=	5.0	3.5	3.1	3.8	4.2	11.1	5.5	9.7	9.5	9.4	8.1	3.7	
AREA=	906.4	718.5	745.5	896.7	963.6	1810.8	859.6	1383.8	1240.8	1176.5	970.8	623.5	
VEL=	5.5	4.9	4.2	4.3	4.4	6.1	6.4	7.0	7.6	8.0	8.3	5.9	
STA=	10600.	10795.	10950.	11060.	11260.	11740.	11865.	12115.					
PER Q=	4.0	5.0	3.4	3.6	3.5	3.2	.7						
AREA=	759.1	803.7	554.4	716.8	1134.2	618.8	322.5						
VEL=	5.3	6.2	6.1	5.0	3.1	5.2	2.0						

****
HEC2 RELEASE DATED NOV 76 UPDATED APRI 1980
ERROR CORR - 01.02.03.04
MODIFICATION - 50.51.52.53.54
****

NOTE- ASTERISK (*) AT LEFT OF CROSS-SECTION NUMBER INDICATES MESSAGE IN SUMMARY OF ERRORS LIST

AGUA FRIA RIVER AT INDIA

SUMMARY PRINTOUT

	SECNO	XLCH	CWSEL	ELMIN	DEPTH	QLOB	VLOB	QCH	VCH	SSTA	ENDST	HV	HL
	7.982	0.00	1002.20	990.40	11.80	53351.04	9.17	46648.96	10.15	8961.64	10401.28	1.44	0.00
	8.067	450.00	1003.48	991.70	11.78	49540.12	7.98	50459.87	10.00	9073.48	10374.66	1.27	1.09
*	8.152	450.00	1003.24	993.00	10.24	22073.30	11.64	77926.70	17.55	9565.00	10333.10	4.19	1.41
*	8.189	193.00	1006.84	994.00	12.84	43.83	1.41	98978.98	17.40	9683.85	10428.51	4.66	1.06
	8.192	16.00	1007.96	994.05	13.91	385.46	2.40	98196.93	15.57	9617.83	10428.68	3.70	.07
*	8.228	191.00	1008.53	994.80	13.73	24894.99	16.81	10025.40	19.09	9625.00	10520.00	4.19	.69
	8.323	500.00	1011.76	997.20	14.56	27616.42	13.34	14726.89	16.87	9630.00	10745.00	2.49	1.36
	8.417	500.00	1012.52	998.40	14.12	28261.89	11.96	13167.90	17.18	9630.00	10606.10	3.10	1.19
	8.540	650.00	1015.74	999.00	16.74	38903.06	7.34	6623.10	7.92	9640.00	11247.35	.67	.54
	8.615	395.00	1016.38	999.70	16.68	0.00	0.00	100000.00	5.08	9720.00	11320.00	.40	.30
	8.630	80.00	1016.63	999.70	16.93	0.00	0.00	100000.00	4.98	9720.00	11320.00	.38	.24
	8.687	300.00	1016.70	1004.00	12.70	31613.09	5.96	14855.82	5.77	9450.00	11550.00	.42	.08
	8.791	550.00	1017.08	1004.50	12.58	47484.52	4.57	3665.06	4.27	8890.00	11900.00	.26	.18
	8.943	800.00	1017.35	1006.60	10.75	57359.55	4.83	5994.47	4.72	8220.00	11800.00	.33	.31
	9.076	700.00	1017.79	1009.40	8.39	36259.26	5.25	9741.09	7.04	8350.00	12115.00	.54	.54

SUMMARY OF ERRORS

CAUTION SECNO= 8.152 PROFILE= 1 CRITICAL DEPTH ASSUMED
CAUTION SECNO= 8.152 PROFILE= 1 MINIMUM SPECIFIC ENERGY

CAUTION SECNO= 8.189 PROFILE= 1 CRITICAL DEPTH ASSUMED
CAUTION SECNO= 8.189 PROFILE= 1 PROBABLE MINIMUM SPECIFIC ENERGY
CAUTION SECNO= 8.189 PROFILE= 1 20 TRIALS ATTEMPTED TO BALANCE WSEL

CAUTION SECNO= 8.228 PROFILE= 1 CRITICAL DEPTH ASSUMED
CAUTION SECNO= 8.228 PROFILE= 1 MINIMUM SPECIFIC ENERGY

APPENDIX

HEC-2 COMPUTER PRINTOUTS

II. AGUA FRIA RIVER - DISCHARGE OF
100,000 CFS FOR PRESENT CONDITIONS
WITH ENCROACHMENTS FOR
PROPOSED SPUR DIKE AND DIVERSION DIKE

```
**********************************************************
  HEC2 RELEASE DATED NOV 76 UPDATED APRI 1980
  ERROR CORR -  01.02.03.04
  MODIFICATION -  50,51,52,53,54
**********************************************************

C
T1      FOR SAMER AND LAHLUM,INC.              BY PRC TOUPS,PHOEINIX,AZ. PH. 954-9191
T2      PROFILE 1 - Q = 100,000 CFS
T3      AGUA FRIA RIVER AT INDIAN SCHOOL ROAD        SEPTEMBER,1980  NO.1095-600

J1  ICHECK     INQ       NINV      IDIR      STRT      METRIC    HVINS     Q         WSEL      FQ
       -1.       6.        0.        0.   .002900        0.00      0.0        0.  1002.000   0.000

J2  NPROF      IPLOT     PRFVS     XSECV     XSECH     FN        ALLDC     IBW       CHNIM     ITRACE
    -1.000     0.000     0.000     0.000     0.000     0.000     0.000     0.000     0.000     15.000

J3  VARIABLE CODES FOR SUMMARY PRINTOUT

    38.000    39.000     1.000    42.000     8.000    13.000    55.000    14.000    26.000    53.000

    54.000    10.000    11.000     0.000     0.000     0.000     0.000     0.000     0.000     0.000

NC      .040      .030      .025      .100      .300     0.000     0.000     0.000     0.000     0.000
QT     5.000 42000.000 55000.000 56500.000 85000.000 100000.000     0.000     0.000     0.000     0.000

       CROSS SECTION STATIONING FROM LEFT TO RIGHT LOOKING DOWNSREAM WITH

       REFERENCE LINE AT STATION 10000.

       CROSS SECTION NUMBERS ARE IN RIVER MILES ABOVE THE CONFLUENCE OF THE

       GILA RIVER. THE STATIONING FOR THIS STUDY WAS MATCHED AT THE INDIAN

       SCHOOL BRIDGE WITH STATIONING FROM A PREVIOUS FLOOD INSURANCE STUDY.

       STARTING WATER SURFACE ELEVATIONS ARE BASED ON THE SLOPE AREA METHOD.

X1      7.982    29.000  9585.000 10430.000     0.000     0.000     0.000     0.000     0.000     0.000
GR   1010.000  8925.000  1000.000  8972.000   991.000  9005.000   991.000  9330.000   998.000  9580.000
GR   1000.000  9585.000  1000.000  9605.000   994.000  9620.000   992.000  9628.000   990.400  9635.000
GR    990.400  9648.000   992.000  9655.000   994.000  9664.000   996.000  9714.000   996.600  9830.000
GR    996.000  9942.000   995.000 10000.000   995.000 10050.000   996.000 10070.000   998.000 10100.000
GP    999.000 10170.000   999.000 10220.000   998.000 10270.000   996.000 10370.000   996.000 10384.000
GP    998.000 10390.000  1002.000 10400.000  1006.000 10425.000  1007.000 10430.000     0.000     0.000
```

X1	8.067	19.000	9680.000	10390.000	450.000	450.000	450.000	0.000	0.000	0.000
GR	1010.000	9065.000	1000.000	9078.000	992.000	9098.000	992.000	9395.000	996.000	9666.000
GR	1000.000	9680.000	992.000	9695.000	991.700	9700.000	991.700	9730.000	992.000	9735.000
GR	992.000	9798.000	994.000	9840.000	996.000	9960.000	998.000	10050.000	998.000	10232.000
GR	996.600	10260.000	998.000	10285.000	1000.000	10365.000	1009.000	10390.000	0.000	0.000
X1	8.152	19.000	9780.000	10350.000	450.000	450.000	450.000	0.000	0.000	0.000
GR	997.000	9565.000	994.000	9585.000	994.000	9600.000	994.000	9765.000	998.000	9770.000
GR	1000.000	9780.000	994.000	9790.000	993.000	9800.000	993.000	9830.000	994.000	9960.000
GR	995.000	10030.000	994.000	10130.000	993.900	10150.000	994.000	10190.000	996.000	10200.000
GR	998.000	10250.000	1000.000	10295.000	1002.000	10330.000	1010.000	10350.000	0.000	0.000
NC	.045	.045	.025	.100	.300	0.000	0.000	0.000	0.000	0.000

ROOSEVELT IRRIGATION DISTRICT AQUADUCT.

X1	8.189	54.000	9765.000	10355.000	193.000	193.000	193.000	0.000	0.000	0.000
GR	1010.000	9617.000	1007.500	9618.000	1006.800	9688.000	1010.000	9689.000	1010.000	9691.000
GR	1006.800	9692.000	1006.000	9762.000	1010.000	9763.000	1010.000	9763.500	1010.000	9764.000
GR	1010.000	9765.000	1006.000	9766.000	1004.000	9795.000	1002.000	9800.000	995.000	9815.000
GR	995.000	9836.000	1010.000	9837.000	1010.000	9839.000	995.000	9840.000	994.000	9910.000
GR	1010.000	9911.000	1010.000	9912.000	994.000	9914.000	994.000	9984.000	1010.000	9985.000
GR	1010.000	9987.000	994.000	9988.000	994.000	10058.000	1010.000	10059.000	1010.000	10061.000
GR	994.000	10062.000	994.500	10132.000	1010.000	10133.000	1010.000	10135.000	994.500	10136.000
GR	995.000	10206.000	1010.000	10207.000	1010.000	10209.000	995.000	10210.000	996.000	10220.000
GR	998.000	10235.000	1000.000	10258.000	1002.000	10265.000	1002.500	10280.000	1010.000	10281.000
GR	1010.000	10283.000	1002.500	10284.000	1004.500	10354.000	1010.000	10355.000	1010.000	10356.000
GR	1010.000	10357.000	1004.500	10358.000	1003.500	10428.000	1010.000	10429.000	0.000	0.000
X1	8.192	0.000	0.000	0.000	16.000	16.000	16.000	0.000	.050	0.000
NH	3.000	.050	9824.000	.025	10300.000	.050	10520.000	0.000	0.000	0.000
ET	0.000	7.100	7.100	7.100	0.000	0.000	9824.000	10300.000	0.000	0.000
X1	8.228	17.000	9960.000	10000.000	191.000	191.000	191.000	0.000	0.000	0.000
GR	1008.000	9625.000	1010.000	9780.000	1008.000	9785.000	1008.000	9810.000	1010.000	9820.000
GR	1010.200	9824.000	998.000	9840.000	996.000	9960.000	994.800	10000.000	994.800	10170.000
GR	996.000	10213.000	1000.000	10230.000	1002.000	10240.000	1008.000	10275.000	1010.000	10300.000
GR	1004.500	10320.000	1004.500	10520.000	0.000	0.000	0.000	0.000	0.000	0.000
NH	3.000	.050	9808.000	.025	10275.000	.050	10745.000	0.000	0.000	0.000
ET	0.000	7.100	7.100	7.100	0.000	0.000	9808.000	10275.000	0.000	0.000
X1	8.323	18.000	9970.000	10030.000	500.000	500.000	500.000	0.000	0.000	0.000
GR	1010.000	9630.000	1010.000	9700.000	1010.000	9740.000	1010.000	9780.000	1014.000	9804.000
GR	1016.000	9808.000	1010.000	9818.000	1004.000	9830.000	1002.000	9850.000	1000.000	9860.000
GR	998.000	9932.000	997.200	9970.000	997.200	10030.000	998.000	10230.000	1010.000	10255.000
GR	1010.000	10275.000	1007.000	10300.000	1007.000	10745.000	0.000	0.000	0.000	0.000
NH	3.000	.050	9855.000	.025	10375.000	.050	10970.000	0.000	0.000	0.000
ET	0.000	7.100	7.100	7.100	0.000	0.000	9855.000	10375.000	0.000	0.000

X1	8.417	19.000	9990.000	10045.000	500.000	500.000	500.000	0.000	0.000	0.000
GR	1009.000	9630.000	1009.000	9700.000	1009.000	9750.000	1009.000	9830.000	1010.000	9835.000
GR	1012.000	9855.000	1000.000	9884.000	999.000	9920.000	999.000	9960.000	998.400	9990.000
GR	998.400	10010.000	999.000	10045.000	999.500	10200.000	1000.000	10300.000	1010.000	10325.000
GR	1012.000	10375.000	1009.500	10400.000	1009.500	10490.000	1022.000	10970.000	0.000	0.000
NH	2.000	.025	10545.000	.050	11250.000	0.000	0.000	0.000	0.000	0.000
ET	0.000	7.100	7.100	7.100	0.000	0.000	9640.000	10545.000	0.000	0.000

X1	8.540	15.000	10000.000	10050.000	650.000	650.000	650.000	0.000	0.000	0.000
GR	1013.000	9640.000	1010.000	9650.000	1002.000	9662.000	1000.600	9790.000	1000.000	9935.000
GR	999.000	10000.000	999.000	10050.000	1000.000	10120.000	1000.000	10250.000	1002.000	10425.000
GR	1004.000	10510.000	1016.000	10545.000	1012.000	10600.000	1012.000	11210.000	1016.000	11250.000
NC	.022	.022	.022	.300	.500	0.000	0.000	0.000	0.000	0.000

INDIAN SCHOOL BRIDGE. LOW CHORD ELEVATION = 1015.

X1	8.615	4.000	9720.000	11320.000	3950.000	320.000	395.000	0.000	0.000	0.000
X3	10.000	0.000	0.000	0.000	0.000	0.000	0.000	1015.000	1015.000	0.000
GR	1015.000	9720.000	999.700	10178.000	999.700	10863.000	1015.000	11320.000	0.000	0.000
SR	1.050	1.290	2.800	0.000	685.000	1.000	17250.000	30.300	999.900	999.700

X1	8.630	0.000	0.000	0.000	80.000	80.000	80.000	0.000	0.000	0.000
X2	0.000	0.000	1.000	1015.000	1015.600	0.000	0.000	0.000	0.000	0.000
X3	10.000	0.000	0.000	0.000	0.000	0.000	0.000	1015.600	1015.600	0.000
BT	20.000	3800.000	1020.000	0.000	5000.000	1018.000	0.000	5510.000	1017.400	0.000
BT	5850.000	1017.000	0.000	6050.000	1016.000	0.000	6130.000	1015.600	0.000	6190.000
BT	1016.000	0.000	6700.000	1017.000	0.000	8550.000	1017.000	0.000	8900.000	1018.000
BT	0.000	9640.000	1020.000	0.000	9700.000	1020.400	0.000	9750.000	1022.400	0.000
BT	11350.000	1022.400	0.000	11600.000	1020.000	0.000	11750.000	1018.000	0.000	12150.000
BT	1016.000	0.000	12320.000	1016.000	0.000	13180.000	1018.000	0.000	13550.000	1020.000
BT	0.000	0.000	0.000	0.000	0.000	0.000	0.000	0.000	0.000	0.000
NH	3.000	.030	9450.000	.025	10710.000	.030	11895.000	0.000	0.000	0.000
ET	0.000	0.000	0.000	0.000	0.000	9.100	0.000	0.000	9730.000	11530.000

X1	8.687	25.000	9870.000	10090.000	300.000	380.000	300.000	0.000	0.000	0.000
GR	1004.000	9450.000	1004.000	9785.000	1006.000	9795.000	1006.000	9800.000	1004.000	9805.000
GR	1004.000	9870.000	1006.000	10090.000	1006.400	10200.000	1006.000	10295.000	1004.000	10455.000
GR	1004.000	10515.000	1006.000	10555.000	1008.000	10560.000	1010.000	10650.000	1011.000	10710.000
GR	1012.000	10930.000	1010.000	10990.000	1008.000	11020.000	1008.000	11055.000	1010.000	11085.000
GR	1009.500	11290.000	1008.000	11345.000	1007.000	11390.000	1010.000	11440.000	1010.000	11895.000
NH	3.000	.030	9220.000	.025	10535.000	.030	11900.000	0.000	0.000	0.000
ET	0.000	0.000	0.000	0.000	0.000	9.100	0.000	0.000	9300.000	11900.000

X1	8.791	36.000	9900.000	10000.000	550.000	580.000	550.000	0.000	0.000	0.000
GR	1009.500	8890.000	1008.000	8970.000	1006.700	9070.000	1006.000	9170.000	1004.500	9220.000
GR	1004.500	9250.000	1006.000	9295.000	1007.000	9400.000	1006.000	9470.000	1005.000	9490.000
GR	1006.000	9520.000	1008.000	9700.000	1010.000	9705.000	1005.000	9725.000	1005.000	9740.000
GR	1008.000	9755.000	1008.000	9790.000	1007.400	9840.000	1008.000	9900.000	1009.000	10000.000
GR	1008.000	10165.000	1008.000	10275.000	1006.000	10310.000	1006.000	10335.000	1008.000	10535.000
GR	1010.000	10770.000	1012.000	10775.000	1012.000	11010.000	1011.000	11050.000	1011.000	11250.000
GR	1010.000	11340.000	1009.000	11370.000	1009.000	11420.000	1010.000	11445.000	1011.000	11540.000
GR	1011.500	11900.000	0.000	0.000	0.000	0.000	0.000	0.000	0.000	0.000
NH	3.000	.030	9280.000	.025	11030.000	.030	11800.000	0.000	0.000	0.000
ET	0.000	0.000	0.000	0.000	0.000	9.100	0.000	0.000	9700.000	11800.000

X1	8.943	39.000	9960.000	10160.000	800.000	770.000	800.000	0.000	0.000	0.000
GR	1016.200	8220.000	1014.600	8270.000	1014.000	8515.000	1012.000	8570.000	1010.000	8630.000
GR	1009.000	8700.000	1010.000	8820.000	1012.000	8930.000	1010.000	8980.000	1009.000	9010.000
GR	1009.000	9060.000	1010.000	9100.000	1011.000	9200.000	1011.000	9280.000	1010.000	9355.000
GR	1010.000	9460.000	1008.000	9605.000	1008.000	9760.000	1010.000	9780.000	1008.000	9860.000
GR	1006.600	9900.000	1008.000	9940.000	1010.000	9960.000	1012.000	10160.000	1012.000	10290.000
GR	1010.000	10535.000	1009.000	10650.000	1010.000	10800.000	1012.000	10835.000	1014.000	11030.000
GR	1012.000	11470.000	1012.000	11490.000	1014.400	11550.000	1012.000	11620.000	1010.000	11655.000
GR	1009.500	11670.000	1010.000	11690.000	1014.000	11714.000	1014.800	11800.000	0.000	0.000
NH	3.000	.030	9675.000	.025	11260.000	.030	12115.000	0.000	0.000	0.000
ET	0.000	0.000	0.000	0.000	0.000	9.100	0.000	0.000	8850.000	12115.000

X1	9.076	41.000	9780.000	10000.000	700.000	700.000	700.000	0.000	0.000	0.000
GR	1017.500	8350.000	1016.000	8395.000	1012.000	8416.000	1011.000	8480.000	1012.000	8540.000
GR	1014.000	8690.000	1014.500	8760.000	1014.000	8840.000	1013.000	8890.000	1014.000	8940.000
GR	1014.000	9120.000	1015.000	9190.000	1014.000	9260.000	1012.000	9365.000	1011.000	9410.000
GR	1011.000	9635.000	1012.000	9675.000	1012.000	9780.000	1011.000	10000.000	1010.400	10175.000
GR	1010.000	10330.000	1009.400	10450.000	1010.000	10475.000	1014.000	10490.000	1015.500	10600.000
GR	1014.000	10700.000	1012.000	10795.000	1012.000	10825.000	1013.500	10950.000	1012.000	11060.000
GR	1012.000	11090.000	1014.000	11105.000	1015.500	11260.000	1016.000	11400.000	1016.000	11500.000
GR	1014.000	11740.000	1014.000	11805.000	1010.000	11815.000	1010.000	11840.000	1016.000	11865.000
GR	1017.000	12115.000	0.000	0.000	0.000	0.000	0.000	0.000	0.000	0.000
EJ	0.000	0.000	0.000	0.000	0.000	0.000	0.000	0.000	0.000	0.000

SECNO	DEPTH	CWSEL	CRIWS	WSELK	EG	HV	HL	OLOSS	BANK ELEV
Q	QLOB	QCH	QROB	ALOB	ACH	AROB	VOL	TWA	LEFT/RIGHT
TIME	VLOB	VCH	VROB	XNL	XNCH	XNR	WTN	ELMIN	SSTA
SLOPE	XLOBL	XLCH	XLOBR	ITRIAL	INC	ICONT	CORAR	TOPWID	ENDST

*PROF 1

CCHV= .100 CEHV= .300

*SECNO 7.982

CROSS SECTION STATIONING FROM LEFT TO RIGHT LOOKING DOWNSREAM WITH

REFERENCE LINE AT STATION 10000.

CROSS SECTION NUMBERS ARE IN RIVER MILES ABOVE THE CONFLUENCE OF THE

GILA RIVER. THE STATIONING FOR THIS STUDY WAS MATCHED AT THE INDIAN

SCHOOL BRIDGE WITH STATIONING FROM A PREVIOUS FLOOD INSURANCE STUDY.

STARTING WATER SURFACE ELEVATIONS ARE BASED ON THE SLOPE AREA METHOD.

7.98	11.80	1002.20	0.00	1002.00	1003.65	1.44	0.00	0.00	1000.00
100000.	53351.	46649.	0.	5816.	4597.	0.	0.	0.	1007.00
0.00	9.17	10.15	0.00	.040	.025	.030	0.000	990.40	8961.64
.002924	0.	0.	0.	0	0	3	0.00	1439.64	10401.28

FLOW DISTRIBUTION FOR SECNO= 7.98 CWSEL= 1002.20

STA=	8962.	8972.	9005.	9330.	9580.	9585.	10430.
PER Q=	.0	1.5	36.6	15.1	.1	46.6	
AREA=	11.4	221.2	3641.4	1926.1	16.0	4597.2	
VEL=	2.1	7.0	10.1	7.8	4.2	10.1	

*SECNO 8.067

8.07	11.78	1003.48	0.00	0.00	1004.75	1.27	1.09	.02	1000.00
100000.	49540.	50460.	0.	6211.	5044.	0.	112.	14.	1009.00
.01	7.98	10.00	0.00	.040	.025	.030	.025	991.70	9073.48
.002026	450.	450.	450.	2	0	0	0.00	1301.18	10374.66

FLOW DISTRIBUTION FOR SECNO= 8.07 CWSEL= 1003.48

STA=	9073.	9078.	9098.	9395.	9666.	9680.	10390.
PER Q=	.0	.9	29.0	19.2	.4	50.5	
AREA=	7.9	149.5	3408.5	2568.1	76.7	5043.7	
VEL=	2.1	6.1	8.5	7.5	5.1	10.0	

SECNO	DEPTH	CWSEL	CRIWS	WSELK	EG	HV	HL	OLOSS	BANK ELEV
Q	QLOB	QCH	QROB	ALOB	ACH	AROB	VOL	TWA	LEFT/RIGHT
TIME	VLOB	VCH	VROB	XNL	XNCH	XNR	WTN	ELMIN	SSTA
SLOPE	XLOBL	XLCH	XLOBR	ITRIAL	IDC	ICONT	CORAR	TOPWID	ENDST

*SECNO 8.152
3280 CROSS SECTION 8.15 EXTENDED 6.24 FEET

3301 HV CHANGED MORE THAN HVINS

7185 MINIMUM SPECIFIC ENERGY
3720 CRITICAL DEPTH ASSUMED

8.15	10.24	1003.24	1003.24	0.00	1007.43	4.19	1.41	.87	1000.00
100000.	22073.	77927.	0.	1896.	4441.	0.	203.	25.	1010.00
.02	11.64	17.55	0.00	.040	.025	.030	.025	993.00	9565.00
.005449	450.	450.	450.	5	11	0	0.00	768.10	10333.10

FLOW DISTRIBUTION FOR SECNO= 8.15 CWSEL= 1003.24

STA=	9565.	9585.	9600.	9765.	9770.	9780.	10350.
PER Q=	1.4	1.7	18.4	.3	.3	77.9	
AREA=	154.8	138.6	1524.4	36.2	42.4	4441.2	
VEL=	8.9	12.1	12.1	8.7	7.1	17.5	

CCHV= .100 CEHV= .300
*SECNO 8.189

3265 DIVIDED FLOW

3685 20 TRIALS ATTEMPTED WSEL,CWSEL
3693 PROBABLE MINIMUM SPECIFIC ENERGY
3720 CRITICAL DEPTH ASSUMED
ROOSEVELT IRRIGATION DISTRICT AQUADUCT.

8.19	12.84	1006.84	1006.84	0.00	1011.50	4.66	1.06	.14	1010.00
100000.	44.	98979.	977.	31.	5689.	200.	230.	28.	1010.00
.02	1.41	17.40	4.88	.045	.025	.045	.025	994.00	9683.85
.005486	193.	193.	193.	20	11	0	0.00	717.49	10428.51

FLOW DISTRIBUTION FOR SECNO= 8.19 CWSEL= 1006.84

STA=	9684.	9762.	10355.	10428.	10429.
PER Q=	.0	99.0	1.0	.0	
AREA=	30.9	5688.7	199.4	.9	
VEL=	1.4	17.4	4.9	1.0	

```
   SECNO     DEPTH     CWSEL     CRIWS     WSELK     EG        HV        HL        OLOSS    BANK ELEV
   Q         QLOB      QCH       QROB      ALOB      ACH       AROB      VOL       TWA    LEFT/RIGHT
   TIME      VLOB      VCH       VROB      XNL       XNCH      XNR       WTN       ELMIN       SSTA
   SLOPE     XLOBL     XLCH      XLOBR     ITRIAL    IDC       ICONT     CORAR     TOPWID      ENDST

*SECNO 8.192

3265 DIVIDED FLOW


3301 HV CHANGED MORE THAN HVINS

     8.19     13.91   1007.96      0.00      0.00   1011.67      3.70       .07       .10   1010.05
  100000.      385.     98197.     1418.      161.     6305.      277.      232.       28.    1010.05
     .02      2.40     15.57      5.12       .045      .025      .045      .025    994.05    9617.83
 .003954       16.       16.       16.          8         0         0      0.00    786.46   10428.68

FLOW DISTRIBUTION FOR SECNO=       8.19          CWSEL=    1007.96

STA=     9618.     9688.     9762.     9762.    10355.    10426.    10429.
 PER Q=      .1        .3        .0      98.2       1.4        .0
  AREA=     53.7     106.6        .5    6305.3     275.3       1.5
   VEL=      1.7       2.7        .8      15.6       5.1       1.0

1490 NH CARD USED
*SECNO 8.228

3265 DIVIDED FLOW

3280 CROSS SECTION       8.23 EXTENDED       4.03 FEET

7185 MINIMUM SPECIFIC ENERGY
3720 CRITICAL DEPTH ASSUMED
     8.23     13.73   1008.53   1008.53      0.00   1012.72      4.19       .69       .15    996.00
  100000.    24895.    10025.    65080.     1481.      525.     4113.      260.       32.     994.80
     .03     16.81     19.09     15.82       .025      .025      .026      .025    994.80    9625.00
 .003332       191.      191.      191.          3         5         0      0.00    740.04   10520.00

FLOW DISTRIBUTION FOR SECNO=       8.23          CWSEL=    1008.53

STA=     9625.     9960.    10000.    10170.    10213.    10240.    10520.
 PER Q=     24.9      10.0      45.9      10.8       3.9       4.5
  AREA=   1481.3     525.2    2333.9     564.5     254.3     960.6
   VEL=     16.8      19.1      19.7      19.1      15.2       4.7
```

SECNO	DEPTH	CWSEL	CRIWS	WSELK	EG	HV	HL	OLOSS	BANK ELEV
Q	QLOB	QCH	QROB	ALOB	ACH	AROB	VOL	TWA	LEFT/RIGHT
TIME	VLOB	VCH	VROB	XNL	XNCH	XNR	WTN	ELMIN	SSTA
SLOPE	XLOBL	XLCH	XLOBR	ITRIAL	IDC	ICONT	CORAR	TOPWID	ENDST

1490 NH CARD USED
*SECNO 8.323

3265 DIVIDED FLOW

3280 CROSS SECTION 8.32 EXTENDED 4.75 FEET

3301 HV CHANGED MORE THAN HVINS

8.32	14.56	1011.76	1010.81	0.00	1014.25	2.49	1.36	.17	997.20
100000.	27616.	14727.	57657.	2070.	873.	5255.	343.	42.	997.20
.04	13.34	16.87	10.97	.025	.025	.029	.025	997.20	9630.00
.002266	500.	500.	500.	12	6	0	0.00	1090.43	10745.00

FLOW DISTRIBUTION FOR SECNO= 8.32 CWSEL= 1011.76

STA=	9630.	9850.	9932.	9970.	10030.	10230.	10745.
PER Q=	3.1	15.6	8.9	14.7	46.9	10.8	
AREA=	506.5	1025.6	537.8	873.1	2830.3	2424.5	
VEL=	6.1	15.2	16.6	16.9	16.6	4.5	

1490 NH CARD USED
*SECNO 8.417
3280 CROSS SECTION 8.42 EXTENDED 3.52 FEET

3301 HV CHANGED MORE THAN HVINS

8.42	14.12	1012.52	0.00	0.00	1015.62	3.10	1.19	.18	998.40
100000.	28262.	13168.	58570.	2364.	766.	4091.	431.	54.	999.00
.05	11.96	17.18	14.32	.027	.025	.026	.025	998.40	9630.00
.002493	500.	500.	500.	3	0	0	0.00	976.10	10606.10

FLOW DISTRIBUTION FOR SECNO= 8.42 CWSEL= 1012.52

STA=	9630.	9884.	9920.	9960.	9990.	10045.	10200.	10300.	10490.	10606.
PER Q=	4.4	7.7	9.1	7.1	13.2	34.2	20.7	3.3	.3	
AREA=	939.4	468.8	540.9	414.7	766.3	2057.4	1277.3	580.7	175.5	
VEL=	4.6	16.4	16.8	17.1	17.2	16.6	16.2	5.6	2.0	

SECNO	DEPTH	CWSEL	CRIWS	WSELK	EG	HV	HL	OLOSS	BANK ELEV
Q	QLOB	QCH	QROB	ALOB	ACH	AROB	VOL	TWA	LEFT/RIGHT
TIME	VLOB	VCH	VROB	XNL	XNCH	XNR	WTN	ELMIN	SSTA
SLOPE	XLOBL	XLCH	XLOBR	ITRIAL	IDC	ICONT	CORAR	TOPWID	ENDST

1490 NH CARD USED
*SECNO 8.540

3265 DIVIDED FLOW

3280 CROSS SECTION 8.54 EXTENDED 2.73 FEET

3301 HV CHANGED MORE THAN HVINS

8.54	16.74	1015.74	0.00	0.00	1016.40	.67	.54	.24	999.00
100000.	38903.	6623.	54474.	5300.	837.	9488.	602.	73.	999.00
.08	7.34	7.92	5.74	.025	.025	.027	.025	999.00	9640.00
.000414	650.	650.	650.	3	0	0	0.00	1602.93	11247.35

FLOW DISTRIBUTION FOR SECNO= 8.54 CWSEL= 1015.74

STA=	9540.	9790.	9935.	10000.	10050.	10120.	10250.	10425.	10510.	11210.	11247.
PER Q=	13.9	16.8	8.2	6.6	8.8	15.5	18.7	7.1	4.2	.1	
AREA=	2006.8	2238.0	1055.3	836.7	1136.4	2045.5	2578.6	1082.5	2575.0	69.7	
VEL=	6.9	7.5	7.8	7.9	7.8	7.6	7.3	6.6	1.6	.9	

CCHV= .300 CEHV= .500
*SECNO 8.615
3280 CROSS SECTION 8.62 EXTENDED 1.39 FEET

INDIAN SCHOOL BRIDGE.

8.62	16.68	1016.38	0.00	0.00	1016.78	.40	.30	.08	1015.00
100000.	0.	100000.	0.	0.	19698.	0.	970.	102.	1015.00
.14	0.00	5.08	0.00	.022	.022	.022	.020	999.70	9720.00
.000199	3950.	395.	320.	2	0	0	0.00	1600.00	11320.00

FLOW DISTRIBUTION FOR SECNO= 8.62 CWSEL= 1016.38

STA=	9720.	11320.
PER Q=	100.0	
AREA=	19698.1	
VEL=	5.1	

SECNO	DEPTH	CWSEL	CRIWS	WSELK	EG	HV	HL	OLOSS	BANK ELEV
Q	QLOB	QCH	QROB	ALOB	ACH	AROB	VOL	TWA	LEFT/RIGHT
TIME	VLOB	VCH	VROB	XNL	XNCH	XNR	WTN	ELMIN	SSTA
SLOPE	XLOBL	XLCH	XLOBR	ITRIAL	IDC	ICONT	CORAR	TOPWID	ENDST

SPECIAL BRIDGE

SR	XK	XKOR	COEQ	RDLEN	BWC	BWP	BAREA	SS	ELCHU	ELCHD
	1.05	1.29	2.80	0.00	685.00	1.00	17250.00	30.30	999.90	999.70

*SECNO 8.630
3280 CROSS SECTION 8.63 EXTENDED 1.63 FEET

PRESSURE AND WEIR FLOW

EGPRS	EGLWC	H3	QWEIR	QPR	BAREA	TRAPEZOID AREA	ELLC	ELTRD
1017.05	1016.78	.00	2389.	97200.	17250.	17237.	1015.00	1015.60

8.63	16.93	1016.63	0.00	0.00	1017.02	.38	.24	0.00	1015.00
100000.	0.	100000.	0.	0.	20092.	0.	1006.	104.	1015.00
.14	0.00	4.98	0.00	.022	.022	.022	.021	999.70	9720.00
.000187	80.	80.	80.	2	0	3	0.00	1600.00	11320.00

FLOW DISTRIBUTION FOR SECNO= 8.63 CWSEL= 1016.63

STA= 9720. 11320.
PER Q= 100.0
AREA= 20091.9
VEL= 5.0

1490 NH CARD USED
*SECNO 8.687
3280 CROSS SECTION 8.69 EXTENDED 6.61 FEET

3470 ENCROACHMENT STATIONS= 9730.0 11530.0 TYPE= 1 TARGET= 1800.000

8.69	12.61	1016.61	0.00	0.00	1017.24	.63	.10	.12	1004.00
100000.	12897.	19101.	68002.	1741.	2554.	11781.	1142.	118.	1006.00
.15	7.41	7.48	5.77	.025	.025	.027	.020	1004.00	9730.00
.000602	300.	300.	380.	2	0	0	0.00	1800.00	11530.00

FLOW DISTRIBUTION FOR SECNO= 8.69 CWSEL= 1016.61

```
   SECNO     DEPTH     CWSEL     CRIWS     WSELK     EG        HV        HL        OLOSS   BANK ELEV
   Q         QLOB      QCH       QROB      ALOB      ACH       AROB      VOL       TWA   LEFT/RIGHT
   TIME      VLOB      VCH       VROB      XNL       XNCH      XNR       WTN       ELMIN      SSTA
   SLOPE     XLOBL     XLCH      XLOBR     ITRIAL    IDC       ICONT     CORAR     TOPWID     ENDST

STA=    9730.     9785.     9870.    10090.    10200.    10295.    10455.    10515.    10555.    10650.    10930.    11055.    11290.
  PER Q=     4.8       8.1      19.1       8.0       6.9      13.9       6.0       3.5       4.2       5.8       3.9       7.2
   AREA=   693.6    1046.9    2554.4    1145.2     989.1    1857.8     756.7     464.4     733.1    1491.1     866.4    1634.9
    VEL=     6.9       7.8       7.5       7.0       7.0       7.5       7.9       7.5       5.7       3.9       4.5       4.4
STA=   11290.    11390.    11530.
  PER Q=     4.3       4.4
   AREA=   842.4    1000.5
    VEL=     5.0       4.4

1490 NH CARD USED
*SECNO 8.791
3280 CROSS SECTION       8.79 EXTENDED       5.73 FEET

3470 ENCROACHMENT STATIONS=     9300.0    11900.0  TYPE=      1  TARGET=     2600.000
     8.79     12.23  1017.23      0.00      0.00  1017.60       .37       .28       .08  1008.00
 100000.     35362.     4496.    60142.     6203.      873.    14050.     1386.      146.  1009.00
     .19      5.70      5.15      4.28      .025      .025      .028      .021  1005.00  9300.00
 .000417      550.      550.      580.         2         0         0      0.00  2600.00 11900.00

FLOW DISTRIBUTION FOR SECNO=      8.79          CWSEL=   1017.23

STA=    9300.     9400.     9470.     9520.     9700.     9755.     9840.     9900.    10000.    10165.    10275.    10335.    10535.
  PER Q=     5.9       4.4       3.7      10.5       3.4       4.3       3.1       4.5       7.4       5.4       3.8      11.7
   AREA=  1070.9     751.3     586.6    1841.9     580.3     799.8     572.0     873.3    1440.9    1015.6     639.0    2046.6
    VEL=     5.5       5.9       6.3       5.7       5.8       5.4       5.5       5.1       5.1       5.3       5.9       5.7
STA=   10535.    10770.    11010.    11250.    11370.    11540.    11900.
  PER Q=     8.0       3.9       5.0       3.1       4.8       7.1
   AREA=  1934.7    1260.9    1475.9     837.9    1244.6    2153.8
    VEL=     4.1       3.1       3.4       3.7       3.8       3.3

1490 NH CARD USED
*SECNO 8.943
3280 CROSS SECTION       8.94 EXTENDED       2.67 FEET

3301 HV CHANGED MORE THAN HVINS

3470 ENCROACHMENT STATIONS=     9700.0    11800.0  TYPE=      1  TARGET=     2100.000
     8.94     10.87  1017.47      0.00      0.00  1018.50      1.03       .57       .33  1010.00
 100000.     24391.    10597.    65012.     2399.     1294.     9032.     1688.      188.  1012.00
     .21     10.17      8.19      7.20      .025      .025      .027      .021  1006.60  9700.00
 .001573      800.      800.      770.         2         0         0      0.00  2100.00 11800.00
```

SECNO	DEPTH	CWSEL	CRIWS	WSELK	EG	HV	HL	OLOSS	BANK ELEV
Q	QLOB	QCH	QROB	ALOB	ACH	AROB	VOL	TWA	LEFT/RIGHT
TIME	VLOB	VCH	VROB	XNL	XNCH	XNR	WTN	ELMIN	SSTA
SLOPE	XLOBL	XLCH	XLOBR	ITRIAL	IDC	ICONT	CORAR	TOPWID	ENDST

FLOW DISTRIBUTION FOR SECNO= 8.94 CWSEL= 1017.47

STA=	9700.	9760.	9860.	9900.	9940.	9960.	10160.	10290.	10535.	10650.	10800.	11030.	11470.
PER Q=	5.4	8.3	4.5	4.5	1.7	10.6	5.2	13.0	8.6	11.3	7.4	10.5	
AREA=	568.3	847.1	406.9	406.9	169.4	1294.3	711.3	1585.5	916.7	1195.7	1098.4	1967.4	
VEL=	9.6	9.8	11.1	11.1	9.8	8.2	7.3	8.2	9.4	9.4	6.8	5.3	

STA=	11470.	11620.	11690.	11800.
PER Q=	3.5	3.6	1.9	
AREA=	664.7	496.7	395.4	
VEL=	5.3	7.3	4.7	

1490 NH CARD USED
*SECNO 9.076
3280 CROSS SECTION 9.08 EXTENDED 1.98 FEET

3301 HV CHANGED MORE THAN HVINS

3470 ENCROACHMENT STATIONS= 8850.0 12115.0 TYPE= 1 TARGET= 3265.000

9.08	9.57	1018.97	0.00	0.00	1019.42	.44	.74	.18	1012.00
100000.	28394.	10360.	61246.	5815.	1646.	11442.	1943.	231.	1011.00
.25	4.88	6.29	5.35	.029	.025	.026	.021	1009.40	8850.00
.000766	700.	700.	700.	2	0	0	0.00	3265.00	12115.00

FLOW DISTRIBUTION FOR SECNO= 9.08 CWSEL= 1018.97

STA=	8850.	9120.	9365.	9635.	9780.	10000.	10175.	10330.	10450.	10600.	10795.	10950.	11060.
PER Q=	5.6	5.2	11.6	6.0	10.4	9.8	9.5	8.1	4.3	4.9	5.6	3.8	
AREA=	1394.1	1255.6	2132.6	1032.4	1646.0	1449.4	1361.2	1113.8	802.3	991.5	988.5	685.5	
VEL=	4.0	4.1	5.4	5.8	6.3	6.7	7.0	7.3	5.4	4.9	5.7	5.6	

STA=	11060.	11260.	11740.	11865.	12115.
PER Q=	4.6	5.5	3.6	1.6	
AREA=	955.2	1706.4	767.8	620.5	
VEL=	4.8	3.2	4.7	2.5	

****
HEC2 RELEASE DATED NOV 76 UPDATED APRI 1980
ERROR CORR - 01,02,03,04
MODIFICATION - 50,51,52,53,54
****

NOTE- ASTERISK (*) AT LEFT OF CROSS-SECTION NUMBER INDICATES MESSAGE IN SUMMARY OF ERRORS LIST

AGUA FRIA RIVER AT INDIA

SUMMARY PRINTOUT

	SECNO	XLCH	CWSEL	ELMIN	DEPTH	QLOB	VLOB	QCH	VCH	SSTA	ENDST	HV	HL
	7.982	0.00	1002.20	990.40	11.80	53351.04	9.17	46648.96	10.15	8961.64	10401.28	1.44	0.00
	8.067	450.00	1003.48	991.70	11.78	49540.12	7.98	50459.87	10.00	9073.48	10374.66	1.27	1.09
*	8.152	450.00	1003.24	993.00	10.24	22073.30	11.64	77926.70	17.55	9565.00	10333.10	4.19	1.41
*	8.189	193.00	1006.84	994.00	12.84	43.83	1.41	98978.98	17.40	9683.85	10428.51	4.66	1.06
	8.192	16.00	1007.96	994.05	13.91	385.46	2.40	98196.93	15.57	9617.83	10428.68	3.70	.07
*	8.228	191.00	1008.53	994.80	13.73	24894.99	16.81	10025.40	19.09	9625.00	10520.00	4.19	.69
	8.323	500.00	1011.76	997.20	14.56	27616.42	13.34	14726.89	16.87	9630.00	10745.00	2.49	1.36
	8.417	500.00	1012.52	998.40	14.12	28261.89	11.96	13167.90	17.18	9630.00	10606.10	3.10	1.19
	8.540	650.00	1015.74	999.00	16.74	38903.06	7.34	6623.10	7.92	9640.00	11247.35	.67	.54
	8.615	395.00	1016.38	999.70	16.68	0.00	0.00	100000.00	5.08	9720.00	11320.00	.40	.30
	8.630	80.00	1016.63	999.70	16.93	0.00	0.00	100000.00	4.98	9720.00	11320.00	.38	.24
	8.687	300.00	1016.61	1004.00	12.61	12896.52	7.41	19101.43	7.48	9730.00	11530.00	.63	.10
	8.791	550.00	1017.23	1005.00	12.23	35361.78	5.70	4496.20	5.15	9300.00	11900.00	.37	.28
	8.943	800.00	1017.47	1006.60	10.87	24391.31	10.17	10597.09	8.19	9700.00	11800.00	1.03	.57
	9.076	700.00	1018.97	1009.40	9.57	28394.16	4.88	10359.74	6.29	8850.00	12115.00	.44	.74

SUMMARY OF ERRORS

CAUTION SECNO= 8.152 PROFILE= 1 CRITICAL DEPTH ASSUMED
CAUTION SECNO= 8.152 PROFILE= 1 MINIMUM SPECIFIC ENERGY

CAUTION SECNO= 8.189 PROFILE= 1 CRITICAL DEPTH ASSUMED
CAUTION SECNO= 8.189 PROFILE= 1 PROBABLE MINIMUM SPECIFIC ENERGY
CAUTION SECNO= 8.189 PROFILE= 1 20 TRIALS ATTEMPTED TO BALANCE WSEL

CAUTION SECNO= 8.228 PROFILE= 1 CRITICAL DEPTH ASSUMED
CAUTION SECNO= 8.228 PROFILE= 1 MINIMUM SPECIFIC ENERGY

APPENDIX

HEC-2 COMPUTER PRINTOUTS

III. AGUA FRIA RIVER - DISCHARGE OF 100,000 CFS FOR PROPOSED CHANNELIZATION, EXCLUDING SPUR DIKE AND DIVERSION DIKE

```
**********************************************************
  HEC2 RELEASE DATED NOV 76 UPDATED APRI 1980
  ERROR CORR -  01.02.03.04
  MODIFICATION -  50.51.52.53.54
**********************************************************

C
T1      FOR SAMER AND LAHLUM, INC.              BY PRC TOUPS, PHOENIX, AZ. PH. 954-9191
T2      PROFILE 1 - Q = 100,000 CFS
T3      AGUA FRIA RIVER AT INDIAN SCHOOL ROAD          SEPTEMBER, 1980  NO.1095-600

J1  ICHECK     INQ       NINV      IDIR      STRT      METRIC    HVINS     Q         WSEL      FQ
      -1.       6.        0.        0.    .002900      0.00      0.0       0.   1002.000    0.000

J2  NPROF      IPLOT     PRFVS     XSECV     XSECH     FN        ALLOC     IBW       CHNIM     ITRACE
    -1.000     0.000     0.000     0.000     0.000     0.000     0.000     0.000     0.000     15.000

J3  VARIABLE CODES FOR SUMMARY PRINTOUT

    38.000    39.000     1.000    42.000     8.000    13.000    55.000    14.000    26.000    53.000

    54.000    10.000    11.000     0.000     0.000     0.000     0.000     0.000     0.000     0.000

NC      .040      .030      .025      .100      .300     0.000     0.000     0.000     0.000     0.000
QT     5.000  42000.000 55000.000 56500.000 85000.000 100000.000    0.000     0.000     0.000     0.000

       CROSS SECTION STATIONING FROM LEFT TO RIGHT LOOKING DOWNSREAM WITH

       REFERENCE LINE AT STATION 10000.

       CROSS SECTION NUMBERS ARE IN RIVER MILES ABOVE THE CONFLUENCE OF THE

       GILA RIVER. THE STATIONING FOR THIS STUDY WAS MATCHED AT THE INDIAN

       SCHOOL BRIDGE WITH STATIONING FROM A PREVIOUS FLOOD INSURANCE STUDY.

       STARTING WATER SURFACE ELEVATIONS ARE BASED ON THE SLOPE AREA METHOD.

X1      7.982    29.000  9585.000 10430.000     0.000     0.000     0.000     0.000     0.000     0.000
GR   1010.000  8925.000  1000.000  8972.000   991.000  9005.000   991.000  9330.000   998.000  9580.000
GR   1000.000  9585.000  1000.000  9605.000   994.000  9620.000   992.000  9628.000   990.400  9635.000
GR    990.400  9648.000   992.000  9655.000   994.000  9664.000   996.000  9714.000   996.600  9830.000
GR    996.000  9942.000   995.000 10000.000   995.000 10050.000   996.000 10070.000   998.000 10100.000
GR    999.000 10170.000   999.000 10220.000   998.000 10270.000   996.000 10370.000   996.000 10384.000
GR    998.000 10390.000  1002.000 10400.000  1006.000 10425.000  1007.000 10430.000     0.000     0.000
```

X1	8.067	19.000	9680.000	10390.000	450.000	450.000	450.000	0.000	0.000	0.000
GR	1010.000	9065.000	1000.000	9078.000	992.000	9098.000	992.000	9395.000	996.000	9666.000
GR	1000.000	9680.000	992.000	9695.000	991.700	9700.000	991.700	9730.000	992.000	9735.000
GR	992.000	9798.000	994.000	9840.000	996.000	9960.000	998.000	10050.000	998.000	10232.000
GR	996.600	10260.000	998.000	10285.000	1000.000	10365.000	1009.000	10390.000	0.000	0.000
X1	8.152	19.000	9780.000	10350.000	450.000	450.000	450.000	0.000	0.000	0.000
GR	997.000	9565.000	994.000	9585.000	994.000	9600.000	994.000	9765.000	998.000	9770.000
GR	1000.000	9780.000	994.000	9790.000	993.000	9800.000	993.000	9830.000	994.000	9960.000
GR	995.000	10030.000	994.000	10130.000	993.900	10150.000	994.000	10190.000	996.000	10200.000
GR	998.000	10250.000	1000.000	10295.000	1002.000	10330.000	1010.000	10350.000	0.000	0.000
NC	.045	.045	.025	.100	.300	0.000	0.000	0.000	0.000	0.000

ROOSEVELT IRRIGATION DISTRICT AQUADUCT.

X1	8.189	54.000	9765.000	10355.000	193.000	193.000	193.000	0.000	0.000	0.000
GR	1010.000	9617.000	1007.500	9618.000	1006.800	9688.000	1010.000	9689.000	1010.000	9691.000
GR	1006.800	9692.000	1006.000	9762.000	1010.000	9763.000	1010.000	9763.500	1010.000	9764.000
GR	1010.000	9765.000	1006.000	9766.000	1004.000	9795.000	1002.000	9800.000	995.000	9815.000
GR	995.000	9836.000	1010.000	9837.000	1010.000	9839.000	995.000	9840.000	994.000	9910.000
GR	1010.000	9911.000	1010.000	9912.000	994.000	9914.000	994.000	9984.000	1010.000	9985.000
GR	1010.000	9987.000	994.000	9988.000	994.000	10058.000	1010.000	10059.000	1010.000	10061.000
GR	994.000	10062.000	994.500	10132.000	1010.000	10133.000	1010.000	10135.000	994.500	10136.000
GR	995.000	10206.000	1010.000	10207.000	1010.000	10209.000	995.000	10210.000	996.000	10220.000
GR	998.000	10235.000	1000.000	10258.000	1002.000	10265.000	1002.500	10280.000	1010.000	10281.000
GR	1010.000	10283.000	1002.500	10284.000	1004.500	10354.000	1010.000	10355.000	1010.000	10356.000
GR	1010.000	10357.000	1004.500	10358.000	1003.500	10428.000	1010.000	10429.000	0.000	0.000
X1	8.192	0.000	0.000	0.000	16.000	16.000	16.000	0.000	.050	0.000
NC	.025	.025	.025	.100	.300	0.000	0.000	0.000	0.000	0.000
FT	0.000	7.100	7.100	7.100	0.000	0.000	9824.000	10300.000	0.000	0.000
FT	0.000	0.000	0.000	0.000	0.000	9.100	0.000	0.000	9820.000	10410.000
X1	8.228	17.000	9960.000	10000.000	191.000	191.000	191.000	0.000	0.000	0.000
CI	10115.000	994.800	0.000	2.000	2.000	530.000	0.000	0.000	0.000	0.000
GR	1008.000	9625.000	1010.000	9780.000	1008.000	9785.000	1008.000	9810.000	1010.000	9820.000
GR	1010.200	9824.000	998.000	9840.000	996.000	9960.000	994.800	10000.000	994.800	10170.000
GR	996.000	10213.000	1000.000	10230.000	1002.000	10240.000	1008.000	10275.000	1010.000	10300.000
GR	1004.500	10320.000	1004.500	10520.000	0.000	0.000	0.000	0.000	0.000	0.000
ET	0.000	7.100	7.100	7.100	0.000	0.000	9808.000	10275.000	0.000	0.000
ET	0.000	0.000	0.000	0.000	0.000	9.100	0.000	0.000	9820.000	10685.000
X1	8.323	18.000	9970.000	10030.000	500.000	500.000	500.000	0.000	0.000	0.000
CI	10255.000	997.200	0.000	2.000	2.000	790.000	0.000	0.000	0.000	0.000
GR	1010.000	9630.000	1010.000	9700.000	1010.000	9740.000	1010.000	9780.000	1014.000	9804.000
GR	1016.000	9808.000	1010.000	9818.000	1004.000	9830.000	1002.000	9850.000	1000.000	9860.000
GR	998.000	9932.000	997.200	9970.000	997.200	10030.000	998.000	10230.000	1010.000	10255.000

GR	1010.000	10275.000	1007.000	10300.000	1007.000	10745.000	0.000	0.000	0.000	0.000
ET	0.000	7.100	7.100	7.100	0.000	0.000	9855.000	10375.000	0.000	0.000
ET	0.000	0.000	0.000	0.000	0.000	9.100	0.000	0.000	9790.000	10920.000
X1	8.417	19.000	9990.000	10045.000	500.000	500.000	500.000	0.000	0.000	0.000
CI	10355.000	998.400	0.000	2.000	2.000	1060.000	0.000	0.000	0.000	0.000
GR	1009.000	9630.000	1009.000	9700.000	1009.000	9750.000	1009.000	9830.000	1010.000	9835.000
GR	1012.000	9855.000	1000.000	9884.000	999.000	9920.000	999.000	9960.000	998.400	9990.000
GR	998.400	10010.000	999.000	10045.000	999.500	10200.000	1000.000	10300.000	1010.000	10325.000
GR	1012.000	10375.000	1009.500	10400.000	1009.500	10490.000	1022.000	10970.000	0.000	0.000
ET	0.000	7.100	7.100	7.100	0.000	0.000	9640.000	10545.000	0.000	0.000
ET	0.000	0.000	0.000	0.000	0.000	9.100	0.000	0.000	9747.000	11245.000
X1	8.540	15.000	10000.000	10050.000	650.000	650.000	650.000	0.000	0.000	0.000
CI	10480.000	999.000	0.000	2.000	2.000	1470.000	0.000	0.000	0.000	0.000
GR	1013.000	9640.000	1010.000	9650.000	1002.000	9662.000	1000.600	9790.000	1000.000	9935.000
GR	999.000	10000.000	999.000	10050.000	1000.000	10120.000	1000.000	10250.000	1002.000	10425.000
GR	1004.000	10510.000	1016.000	10545.000	1012.000	10600.000	1012.000	11210.000	1016.000	11250.000
NC	.022	.022	.022	.300	.500	0.000	0.000	0.000	0.000	0.000
ET	0.000	7.100	7.100	7.100	0.000	0.000	9720.000	10698.000	0.000	0.000

INDIAN SCHOOL BRIDGE.

X1	8.615	75.000	9980.000	10068.000	395.000	320.000	395.000	0.000	0.000	0.000
CI	0.000	0.000	0.000	0.000	0.000	.010	0.000	0.000	0.000	0.000
GR	1015.000	9720.000	1004.000	9735.000	1003.000	9798.000	1015.000	9798.000	1015.000	9800.000
GR	1003.000	9800.000	1001.000	9850.000	1001.000	9888.000	1015.000	9888.000	1015.000	9890.000
GR	1001.000	9890.000	1000.800	9978.000	1015.000	9978.000	1015.000	9980.000	1000.800	9980.000
GR	1000.000	10068.000	1015.000	10068.000	1015.000	10070.000	1000.000	10070.000	999.700	10158.000
GR	1015.000	10158.000	1015.000	10160.000	999.700	10160.000	999.700	10248.000	1015.000	10248.000
GR	1015.000	10250.000	999.700	10250.000	1000.400	10338.000	1015.000	10338.000	1015.000	10340.000
GR	1000.400	10340.000	1002.400	10428.000	1015.000	10428.000	1015.000	10430.000	1002.400	10430.000
GR	1003.000	10518.000	1015.000	10520.000	1003.000	10520.000	1004.500	10608.000	1015.000	10608.000
GR	1015.000	10610.000	1004.500	10610.000	1006.500	10698.000	1015.000	10698.000	1015.000	10700.000
GR	1006.500	10700.000	1007.000	10788.000	1015.000	10788.000	1015.000	10790.000	1007.000	10790.000
GR	1006.100	10878.000	1015.000	10878.000	1015.000	10880.000	1006.100	10880.000	1005.300	10930.000
GR	1006.000	10968.000	1015.000	10968.000	1015.000	10970.000	1006.000	10970.000	1006.200	11058.000
GR	1015.000	11058.000	1015.000	11060.000	1006.200	11060.000	1008.000	11148.000	1015.000	11148.000
GR	1015.000	11150.000	1008.000	11150.000	1008.000	11220.000	1006.000	11238.000	1015.000	11238.000
GR	1015.000	11240.000	1006.000	11240.000	1005.500	11265.000	1008.000	11305.000	1015.000	11320.000
NC	.022	.022	.022	.100	.300	0.000	0.000	0.000	0.000	0.000
ET	0.000	7.100	7.100	7.100	0.000	0.000	9720.000	10698.000	0.000	0.000
X1	8.630	0.000	0.000	0.000	80.000	80.000	80.000	0.000	.200	0.000
NC	.025	.025	.025	.300	.500	0.000	0.000	0.000	0.000	0.000
FT	0.000	7.100	7.100	7.100	0.000	0.000	9450.000	10710.000	0.000	0.000
ET	0.000	0.000	0.000	0.000	7.100	7.100	9600.000	11610.000	0.000	0.000

X1	8.687	25.000	9870.000	10090.000	300.000	380.000	300.000	0.000	0.000	0.000
CI	10522.000	1004.000	0.000	2.000	2.000	1580.000	0.000	0.000	0.000	0.000
GR	1004.000	9450.000	1004.000	9785.000	1006.000	9795.000	1006.000	9800.000	1004.000	9805.000
GR	1004.000	9870.000	1006.000	10090.000	1006.400	10200.000	1006.000	10295.000	1004.000	10455.000
GR	1004.000	10515.000	1006.000	10555.000	1008.000	10560.000	1010.000	10650.000	1011.000	10710.000
GR	1012.000	10930.000	1010.000	10990.000	1008.000	11020.000	1008.000	11055.000	1010.000	11085.000
GR	1009.500	11290.000	1008.000	11345.000	1007.000	11390.000	1010.000	11440.000	1010.000	11895.000
NH	3.000	.030	9220.000	.025	11340.000	.030	11900.000	0.000	0.000	0.000
ET	0.000	7.100	7.100	7.100	0.000	0.000	8890.000	10775.000	0.000	0.000

X1	8.791	36.000	9900.000	10000.000	550.000	580.000	550.000	0.000	0.000	0.000
CI	10550.000	1004.500	0.000	2.000	2.000	1575.000	0.000	0.000	0.000	0.000
GR	1009.500	8890.000	1008.000	8970.000	1006.700	9070.000	1006.000	9170.000	1004.500	9220.000
GR	1004.500	9250.000	1006.000	9295.000	1007.000	9400.000	1006.000	9470.000	1005.000	9490.000
GR	1006.000	9520.000	1008.000	9700.000	1010.000	9705.000	1005.000	9725.000	1005.000	9740.000
GR	1008.000	9755.000	1008.000	9790.000	1007.400	9840.000	1008.000	9900.000	1009.000	10000.000
GR	1008.000	10165.000	1008.000	10275.000	1006.000	10310.000	1006.000	10335.000	1008.000	10535.000
GR	1010.000	10770.000	1012.000	10775.000	1012.000	11010.000	1011.000	11050.000	1011.000	11250.000
GR	1010.000	11340.000	1009.000	11370.000	1009.000	11420.000	1010.000	11445.000	1011.000	11540.000
GR	1011.500	11900.000	0.000	0.000	0.000	0.000	0.000	0.000	0.000	0.000
NH	3.000	.030	9280.000	.025	11030.000	.030	11800.000	0.000	0.000	0.000
ET	0.000	7.100	7.100	7.100	0.000	0.000	8220.000	11030.000	0.000	0.000

X1	8.943	39.000	9960.000	10160.000	800.000	770.000	800.000	0.000	0.000	0.000
CI	0.000	0.000	0.000	0.000	0.000	.010	0.000	0.000	0.000	0.000
GR	1016.200	8220.000	1014.600	8270.000	1014.000	8515.000	1012.000	8570.000	1010.000	8630.000
GR	1009.000	8700.000	1010.000	8820.000	1012.000	8930.000	1010.000	8980.000	1009.000	9010.000
GR	1009.000	9060.000	1010.000	9100.000	1011.000	9200.000	1011.000	9280.000	1010.000	9355.000
GR	1010.000	9460.000	1008.000	9605.000	1008.000	9760.000	1010.000	9780.000	1008.000	9860.000
GR	1006.600	9900.000	1008.000	9940.000	1010.000	9960.000	1012.000	10160.000	1012.000	10290.000
GR	1010.000	10535.000	1009.000	10650.000	1010.000	10800.000	1012.000	10835.000	1014.000	11030.000
GR	1012.000	11470.000	1012.000	11490.000	1014.400	11550.000	1012.000	11620.000	1010.000	11655.000
GR	1009.500	11670.000	1010.000	11690.000	1014.000	11714.000	1014.800	11800.000	0.000	0.000
NH	3.000	.030	9675.000	.025	11260.000	.030	12115.000	0.000	0.000	0.000
ET	0.000	7.100	7.100	7.100	0.000	0.000	8350.000	11260.000	0.000	0.000

X1	9.076	41.000	9780.000	10000.000	700.000	700.000	700.000	0.000	0.000	0.000
GR	1017.500	8350.000	1016.000	8395.000	1012.000	8416.000	1011.000	8480.000	1012.000	8540.000
GR	1014.000	8690.000	1014.500	8760.000	1014.000	8840.000	1013.000	8890.000	1014.000	8940.000
GR	1014.000	9120.000	1015.000	9190.000	1014.000	9260.000	1012.000	9365.000	1011.000	9410.000
GR	1011.000	9635.000	1012.000	9675.000	1012.000	9780.000	1011.000	10000.000	1010.400	10175.000
GR	1010.000	10330.000	1009.400	10450.000	1010.000	10475.000	1014.000	10490.000	1015.500	10600.000
GR	1014.000	10700.000	1012.000	10795.000	1012.000	10825.000	1013.500	10950.000	1012.000	11060.000
GR	1012.000	11090.000	1014.000	11105.000	1015.500	11260.000	1016.000	11400.000	1016.000	11500.000
GR	1014.000	11740.000	1014.000	11805.000	1010.000	11815.000	1010.000	11840.000	1016.000	11865.000
GR	1017.000	12115.000	0.000	0.000	0.000	0.000	0.000	0.000	0.000	0.000
FJ	0.000	0.000	0.000	0.000	0.000	0.000	0.000	0.000	0.000	0.000

SECNO	DEPTH	CWSEL	CRIWS	WSELK	EG	HV	HL	OLOSS	BANK ELEV
Q	QLOB	QCH	QROB	ALOB	ACH	AROB	VOL	TWA	LEFT/RIGHT
TIME	VLOB	VCH	VROB	XNL	XNCH	XNR	WTN	ELMIN	SSTA
SLOPE	XLOBL	XLCH	XLOBR	ITRIAL	IOC	ICONT	CORAR	TOPWID	ENDST
7.98	11.80	1002.20	0.00	1002.00	1003.65	1.44	0.00	0.00	1000.00
100000.	53351.	46649.	0.	5816.	4597.	0.	0.	0.	1007.00
0.00	9.17	10.15	0.00	.040	.025	.030	0.000	990.40	8961.64
.002924	0.	0.	0.	0	0	3	0.00	1439.64	10401.28

*PROF 1

CCHV= .100 CEHV= .300

*SECNO 7.982

CROSS SECTION STATIONING FROM LEFT TO RIGHT LOOKING DOWNSTREAM WITH

REFERENCE LINE AT STATION 10000.

CROSS SECTION NUMBERS ARE IN RIVER MILES ABOVE THE CONFLUENCE OF THE

GILA RIVER. THE STATIONING FOR THIS STUDY WAS MATCHED AT THE INDIAN

SCHOOL BRIDGE WITH STATIONING FROM A PREVIOUS FLOOD INSURANCE STUDY.

STARTING WATER SURFACE ELEVATIONS ARE BASED ON THE SLOPE AREA METHOD.

FLOW DISTRIBUTION FOR SECNO= 7.98 CWSEL= 1002.20

STA=	8962.	8972.	9005.	9330.	9580.	9585.	10430.
PER Q=	.0	1.5	36.6	15.1	.1	46.6	
AREA=	11.4	221.2	3641.4	1926.1	16.0	4597.2	
VEL=	2.1	7.0	10.1	7.8	4.2	10.1	

*SECNO 8.067

8.07	11.78	1003.48	0.00	0.00	1004.75	1.27	1.09	.02	1000.00
100000.	49540.	50460.	0.	6211.	5044.	0.	112.	14.	1009.00
.01	7.98	10.00	0.00	.040	.025	.030	.025	991.70	9073.48
.002026	450.	450.	450.	2	0	0	0.00	1301.18	10374.66

FLOW DISTRIBUTION FOR SECNO= 8.07 CWSEL= 1003.48

STA=	9073.	9078.	9098.	9395.	9666.	9680.	10390.
PER Q=	.0	.9	29.0	19.2	.4	50.5	
AREA=	7.9	149.5	3408.5	2568.1	76.7	5043.7	
VEL=	2.1	6.1	8.5	7.5	5.1	10.0	

SECNO	DEPTH	CWSEL	CRIWS	WSELK	EG	HV	HL	OLOSS	BANK ELEV
Q	QLOB	QCH	QROB	ALOB	ACH	AROB	VOL	TWA	LEFT/RIGHT
TIME	VLOB	VCH	VROB	XNL	XNCH	XNR	WTN	ELMIN	SSTA
SLOPE	XLOBL	XLCH	XLOBR	ITRIAL	IDC	ICONT	CORAR	TOPWID	ENDST

*SECNO 8.152
3280 CROSS SECTION 8.15 EXTENDED 6.24 FEET

3301 HV CHANGED MORE THAN HVINS

7185 MINIMUM SPECIFIC ENERGY
3720 CRITICAL DEPTH ASSUMED

8.15	10.24	1003.24	1003.24	0.00	1007.43	4.19	1.41	.87	1000.00
100000.	22073.	77927.	0.	1896.	4441.	0.	203.	25.	1010.00
.02	11.64	17.55	0.00	.040	.025	.030	.025	993.00	9565.00
.005449	450.	450.	450.	5	11	0	0.00	768.10	10333.10

FLOW DISTRIBUTION FOR SECNO= 8.15 CWSEL= 1003.24

STA=	9565.	9585.	9600.	9765.	9770.	9780.	10350.
PER Q=	1.4	1.7	18.4	.3	.3	77.9	
AREA=	154.8	138.6	1524.4	36.2	42.4	4441.2	
VEL=	8.9	12.1	12.1	8.7	7.1	17.5	

CCHV= .100 CEHV= .300
*SECNO 8.189

3265 DIVIDED FLOW

3685 20 TRIALS ATTEMPTED WSEL,CWSEL
3693 PROBABLE MINIMUM SPECIFIC ENERGY
3720 CRITICAL DEPTH ASSUMED
ROOSEVELT IRRIGATION DISTRICT AQUADUCT.

8.19	12.84	1006.84	1006.84	0.00	1011.50	4.66	1.06	.14	1010.00
100000.	44.	98979.	977.	31.	5689.	200.	230.	28.	1010.00
.02	1.41	17.40	4.88	.045	.025	.045	.025	994.00	9683.85
.005486	193.	193.	193.	20	11	0	0.00	717.49	10428.51

FLOW DISTRIBUTION FOR SECNO= 8.19 CWSEL= 1006.84

STA=	9684.	9762.	10355.	10428.	10429.
PER Q=	.0	99.0	1.0	.0	
AREA=	30.9	5688.7	199.4	.9	
VEL=	1.4	17.4	4.9	1.0	

SECNO	DEPTH	CWSEL	CRIWS	WSELK	EG	HV	HL	OLOSS	BANK ELEV
Q	QLOB	QCH	QROB	ALOB	ACH	AROB	VOL	TWA	LEFT/RIGHT
TIME	VLOB	VCH	VROB	XNL	XNCH	XNR	WTN	ELMIN	SSTA
SLOPE	XLOBL	XLCH	XLOBR	ITRIAL	IDC	ICONT	CORAR	TOPWID	ENDST

*SECNO 8.192

3265 DIVIDED FLOW

3301 HV CHANGED MORE THAN HVINS

8.19	13.91	1007.96	0.00	0.00	1011.67	3.70	.07	.10	1010.05
100000.	385.	98197.	1418.	161.	6305.	277.	232.	28.	1010.05
.02	2.40	15.57	5.12	.045	.025	.045	.025	994.05	9617.83
.003954	16.	16.	16.	8	0	0	0.00	786.46	10428.68

FLOW DISTRIBUTION FOR SECNO= 8.19 CWSEL= 1007.96

STA=	9618.	9688.	9762.	9762.	10355.	10428.	10429.
PER Q=	.1	.3	.0	98.2	1.4	.0	
AREA=	53.7	106.6	.5	6305.3	275.3	1.5	
VEL=	1.7	2.7	.8	15.6	5.1	1.0	

CCHV= .100 CEHV= .300
*SECNO 8.228
CHIMP CLSTA= 10115.00 CELCH= 994.80 BW= 530.00 STCHL= 9843.72 STCHR= 10399.40
3280 CROSS SECTION 8.23 EXTENDED 5.54 FEET

3301 HV CHANGED MORE THAN HVINS

3470 ENCROACHMENT STATIONS= 9820.0 10410.0 TYPE= 1 TARGET= 590.000

8.23	15.24	1010.04	0.00	0.00	1012.18	2.14	.35	.16	997.94
100000.	1128.	98600.	272.	156.	8363.	59.	266.	31.	1004.50
.03	7.24	11.79	4.63	.025	.025	.025	.025	994.80	9819.53
.001066	191.	191.	191.	3	0	0	0.00	590.94	10410.47

FLOW DISTRIBUTION FOR SECNO= 8.23 CWSEL= 1010.04

STA=	9820.	9833.	9840.	9844.	10399.	10410.
PER Q=	.2	.5	.5	98.6	.3	
AREA=	46.3	64.6	44.9	8363.2	58.7	
VEL=	4.1	7.4	10.2	11.8	4.6	

```
   SECNO     DEPTH     CWSEL     CRIWS     WSELK     EG        HV        HL        OLOSS     BANK ELEV
   O         QLOB      QCH       QROB      ALOB      ACH       AROB      VOL       TWA     LEFT/RIGHT
   TIME      VLOB      VCH       VROB      XNL       XNCH      XNR       WTN       ELMIN       SSTA
   SLOPE     XLOBL     XLCH      XLOBR     ITRIAL    IDC       ICONT     CORAR     TOPWID      ENDST


*SECNO 8.323
CHIMP CLSTA=  10255.00 CELCH=    997.20 RW=    790.00 STCHL=   9850.67 STCHR=  10669.60
3280 CROSS SECTION      8.32 EXTENDED      4.57 FEET


3301 HV CHANGED MORE THAN HVINS


3470 ENCROACHMENT STATIONS=    9820.0    10685.0  TYPE=     1  TARGET=     865.000
     8.32     14.37  1011.57      0.00      0.00  1012.67     1.10      .39       .10  1001.87
   100000.    1249.    9851.5     235.      229.    11650.     70.      384.       40.   1007.00
      .05      5.47     8.46      3.34      .025      .025     .025      .025   997.20  9820.00
  .000590     500.     500.      500.         2         0        0      0.00   865.00 10685.00


FLOW DISTRIBUTION FOR SECNO=      8.32          CWSEL=   1011.57

STA=    9820.    9830.    9850.    9851.   10670.   10685.
  PER Q=     .2      1.0       .0     98.5       .2
   AREA=    50.7    171.4      6.4  11649.6     70.4
    VEL=     3.4      6.0      6.5      8.5      3.3

*SECNO 8.417

1740 CHIMP TEMPLATE DOES NOT INTERSECT CROSS SECTION. STMAX SET EQUAL TO ********
CHIMP CLSTA=  10355.00 CELCH=    998.40 RW=   1060.00 STCHL=   9803.80 STCHR= 208888.20

3470 ENCROACHMENT STATIONS=    9790.0    10920.0  TYPE=     1  TARGET=    1130.000
     8.42     13.86  1012.26      0.00      0.00  1012.95      .68      .24       .04  1009.00
   100000.     101.    9889.       0.        45.    15071.      0.      539.       51.  100000.00
      .07      2.23     6.63      0.00      .025      .025     .025      .025   998.40  9790.00
  .000386     500.     500.      500.         2         0        0      0.00  1122.73 10912.73


FLOW DISTRIBUTION FOR SECNO=      8.42          CWSEL=   1012.26

STA=    9790.    9804.  208888.
  PER Q=     .1     99.9
   AREA=    45.1  15071.1
    VEL=     2.2      6.6

*SECNO 8.540
```

SECNO	DEPTH	CWSEL	CRIWS	WSELK	EG	HV	HL	OLOSS	BANK ELEV
Q	QLOB	QCH	QROB	ALOB	ACH	AROH	VOL	TWA	LEFT/RIGHT
TIME	VLOB	VCH	VROB	XNL	XNCH	XNR	WTN	ELMIN	SSTA
SLOPE	XLOBL	XLCH	XLOBR	ITRIAL	IDC	ICONT	CORAR	TOPWID	ENDST

1740 CHIMP TEMPLATE DOES NOT INTERSECT CROSS SECTION, STMAX SET EQUAL TO ********
CHIMP CLSTA= 10480.00 CELCH= 999.00 BW= 1470.00 STCHL=-188257.00 STCHR= 209217.00

3470 ENCROACHMENT STATIONS= 9747.0 11245.0 TYPE= 1 TARGET= 1498.000

8.54	13.79	1012.79	0.00	0.00	1013.16	.36	.18	.03100000.00	
100000.	0.	100000.	0.	0.	20657.	0.	806.	71.	100000.00
.10	0.00	4.84	0.00	.025	.025	.025	.025	999.00	9717.43
.000207	650.	650.	650.	2	0	0	0.00	1525.16	11242.59

FLOW DISTRIBUTION FOR SECNO= 8.54 CWSEL= 1012.79

STA= 9717. 209217.
PER Q= 100.0
AREA= 20657.2
VEL= 4.8

CCHV= .300 CEHV= .500
*SECNO 8.615

3265 DIVIDED FLOW

INDIAN SCHOOL BRIDGE.

8.62	13.01	1012.71	0.00	0.00	1013.50	.79	.13	.21	1015.00
100000.	20031.	8713.	71256.	2651.	1083.	10323.	954.	84.	1015.00
.12	7.56	8.04	6.90	.022	.022	.022	.025	999.70	9723.13
.000694	395.	395.	320.	2	0	0	0.00	1559.58	11315.09

FLOW DISTRIBUTION FOR SECNO= 8.62 CWSEL= 1012.71

STA=	9723.	9798.	9850.	9888.	9978.	10068.	10158.	10248.	10338.	10428.	10518.	10608.	10698.
PER Q=	4.3	4.1	3.4	8.2	8.7	9.3	9.5	9.1	7.7	6.8	5.4	3.8	
AREA=	631.7	535.4	444.9	1039.0	1083.0	1131.4	1144.6	1113.8	995.0	880.6	796.1	634.2	
VEL=	6.9	7.7	7.7	7.9	8.0	8.2	8.3	8.2	7.7	7.7	6.7	6.0	

STA=	10698.	10878.	10968.	11058.	11220.	11315.
PER Q=	5.8	3.7	3.3	4.1	2.9	
AREA=	1066.0	618.5	581.4	822.9	538.7	
VEL=	5.4	5.9	5.7	5.0	5.4	

SECNO	DEPTH	CWSEL	CRIWS	WSELK	EG	HV	HL	OLOSS	BANK ELEV
Q	QLOB	QCH	QROB	ALOB	ACH	AROB	VOL	TWA	LEFT/RIGHT
TIME	VLOB	VCH	VROB	XNL	XNCH	XNR	WTN	ELMIN	SSTA
SLOPE	XLOBL	XLCH	XLOBR	ITRIAL	IDC	ICONT	CORAR	TOPWID	ENDST

CCHV= .100 CEHV= .300
*SECNO 8.630

3265 DIVIDED FLOW

8.63	12.84	1012.74	0.00	0.00	1013.57	.82	.06	.01	1015.20
100000.	20097.	8770.	71133.	2610.	1069.	10123.	980.	87.	1015.20
.12	7.70	8.21	7.03	.022	.022	.022	.025	999.90	9723.35
.000732	80.	80.	80.	0	0	0	0.00	1558.97	11314.73

FLOW DISTRIBUTION FOR SECNO= 8.63 CWSEL= 1012.74

STA=	9723.	9798.	9850.	9888.	9978.	10068.	10158.	10248.	10338.	10428.	10518.	10608.	10698.
PER Q=	4.3	4.1	3.4	8.2	8.8	9.4	9.5	9.2	7.7	6.8	5.3	3.8	
AREA=	619.5	527.1	438.6	1024.6	1068.6	1117.0	1130.2	1099.4	980.6	866.2	781.4	619.8	
VEL=	7.0	7.8	7.8	8.0	8.2	8.4	8.4	8.3	7.8	7.8	6.8	6.1	

STA=	10698.	10878.	10968.	11058.	11220.	11315.
PER Q=	5.7	3.6	3.3	4.0	2.8	
AREA=	1037.1	604.1	567.0	797.0	523.4	
VEL=	5.5	6.0	5.8	5.1	5.4	

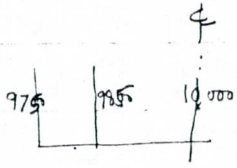

CCHV= .300 CEHV= .500
*SECNO 8.687
CHIMP CLSTA= 10522.00 CFLCH= 1004.00 RW= 1580.00 STCHL= 9731.98 STCHR= 11321.29
3280 CROSS SECTION 8.69 EXTENDED 3.31 FEET

3470 ENCROACHMENT STATIONS= 9600.0 11610.0 TYPE= 1 TARGET= 2010.000

8.69	9.31	1013.31	0.00	0.00	1013.85	.54	.20	.08	1004.01
100000.	7049.	88726.	4226.	1228.	14779.	1184.	1097.	100.	1008.65
.14	5.74	6.00	3.57	.025	.025	.025	.025	1004.00	9600.00
.000522	300.	300.	380.	2	0	0	0.00	2010.00	11610.00

FLOW DISTRIBUTION FOR SECNO= 8.69 CWSEL= 1013.31

STA=	9600.	9732.	11321.	11345.	11390.	11440.	11610.
PER Q=	7.0	88.7	.5	1.1	.9	1.7	
AREA=	1227.8	14779.3	118.3	261.6	240.6	563.2	
VEL=	5.7	6.0	4.0	4.4	3.9	3.0	

```
   SECNO     DEPTH     CWSEL     CRIWS     WSELK     EG        HV        HL        OLOSS    BANK ELEV
   Q         QLOB      QCH       QROB      ALOB      ACH       AROB      VOL       TWA    LEFT/RIGHT
   TIME      VLOB      VCH       VROB      XNL       XNCH      XNR       WTN       ELMIN       SSTA
   SLOPE     XLOBL     XLCH      XLOBR     ITRIAL    IDC       ICONT     CORAR     TOPWID      ENDST


1490 NH CARD USED
*SECNO 8.791
CHIMP CLSTA=  10550.00 CELCH=   1004.50 BW=   1575.00 STCHL=   9755.50 STCHR=  11347.97
3280 CROSS SECTION      8.79 EXTENDED      4.32 FEET

     8.79      9.32  1013.82      0.00      0.00  1014.15       .33       .23       .06  1008.00
   100000.    24361.   72248.    3391.     6214.   14804.    1688.     1350.      132.   1009.73
      .17      3.92     4.88      2.01      .027      .030      .030      .025  1004.50   8890.00
  .000347      550.     550.      580.         2         0         0      0.00  3010.00  11900.00

FLOW DISTRIBUTION FOR SECNO=      8.79          CWSEL=   1013.82

STA=    8890.    9070.    9220.    9295.    9400.    9520.    9700.    9756.   11348.   11900.
  PER Q=     3.1      4.3      3.2      3.2      4.0      4.9      1.6     72.2      3.4
   AREA=  1052.8   1175.4    664.8    768.7    928.5   1227.8    395.6  14804.0   1688.3
    VEL=     3.0      3.7      4.7      4.2      4.3      4.0      4.1      4.9      2.0

1490 NH CARD USED
*SECNO 8.943

3265 DIVIDED FLOW


3301 HV CHANGED MORE THAN HVINS

7185 MINIMUM SPECIFIC ENERGY
3720 CRITICAL DEPTH ASSUMED
     8.94      7.33  1013.93  1013.93      0.00  1015.57      1.64       .70       .65  1010.00
   100000.    67234.   5154.   27613.    6097.     586.     3271.     1648.      188.   1012.00
      .19     11.03     8.80     8.44      .027      .025      .026      .025  1006.60   8516.93
  .005223      800.     800.      770.         3        15         0      0.00  3148.87  11713.58

FLOW DISTRIBUTION FOR SECNO=      8.94          CWSEL=   1013.93

STA=    8517.    8700.    8820.    8980.    9060.    9200.    9355.    9460.    9605.    9760.    9860.    9900.    9940.
  PER Q=     4.5      5.1      3.4      3.8      4.5      4.2      4.4      8.9     12.9      6.1      4.0      4.0
   AREA=   537.1    531.6    468.8    379.4    520.2    491.6    412.6    714.8    919.1    493.0    265.2    265.2
    VEL=     8.3      9.7      7.3     10.1      8.7      8.6     10.7     12.4     14.1     12.4     15.2     15.2
STA=    9940.    9960.   10160.   10535.   10650.   10800.   11470.   11714.
  PER Q=     1.2      5.2      8.0      5.9      7.7      3.1      2.9
   AREA=    98.6    585.9    968.7    509.4    664.5    693.7    434.6
    VEL=    12.4      8.8      8.2     11.6     11.6      4.5      6.7
```

SECNO	DEPTH	CWSEL	CRIWS	WSELK	EG	HV	HL	OLOSS	BANK ELEV
Q	QLOB	QCH	QROB	ALOB	ACH	AROB	VOL	TWA	LEFT/RIGHT
TIME	VLOB	VCH	VROB	XNL	XNCH	XNR	WTN	ELMIN	SSTA
SLOPE	XLOBL	XLCH	XLOBR	ITRIAL	IDC	ICONT	CORAR	TOPWID	ENDST

1490 NH CARD USED
*SECNO 9.076
3280 CROSS SECTION 9.08 EXTENDED .15 FEET

3301 HV CHANGED MORE THAN HVINS

9.08	7.75	1017.15	0.00	0.00	1017.88	.73	2.04	.27	1012.00
100000.	36061.	10103.	53836.	5985.	1243.	7563.	1847.	244.	1011.00
.22	6.03	8.13	7.12	.029	.025	.026	.025	1009.40	8360.55
.001860	700.	700.	700.	2	0	0	0.00	3754.45	12115.00

FLOW DISTRIBUTION FOR SECNO= 9.08 CWSEL= 1017.15

STA=	8361.	8540.	8690.	8940.	9190.	9365.	9635.	9780.	10000.	10175.	10330.	10450.	10600.
PER Q=	5.1	3.4	3.7	3.4	3.2	11.6	5.7	10.1	10.0	10.1	8.7	3.6	
AREA=	786.3	622.2	799.6	752.1	620.9	1637.5	766.5	1242.6	1128.4	1077.0	893.8	527.2	
VEL=	6.5	5.5	4.7	4.5	5.1	7.1	7.4	8.1	8.9	9.3	9.8	6.8	

STA=	10600.	10795.	10950.	11060.	11260.	11805.	12115.
PER Q=	3.7	5.0	3.3	3.3	3.6	2.5	
AREA=	633.9	704.2	483.8	588.4	1030.8	495.9	
VEL=	5.9	7.0	6.9	5.6	3.5	5.1	

****
HEC2 RELEASE DATED NOV 76 UPDATED APRI 1980
ERROR CORR - 01,02,03,04
MODIFICATION - 50,51,52,53,54
****

NOTE- ASTERISK (*) AT LEFT OF CROSS-SECTION NUMBER INDICATES MESSAGE IN SUMMARY OF ERRORS LIST

AGUA FRIA RIVER AT INDIA

SUMMARY PRINTOUT

	SECNO	XLCH	CWSEL	ELMIN	DEPTH	QLOB	VLOB	QCH	VCH	SSTA	ENDST	HV	HL
	7.982	0.00	1002.20	990.40	11.80	53351.04	9.17	46648.96	10.15	8961.64	10401.28	1.44	0.00
	8.067	450.00	1003.48	991.70	11.78	49540.12	7.98	50459.87	10.00	9073.48	10374.66	1.27	1.09
*	8.152	450.00	1003.24	993.00	10.24	22073.30	11.64	77926.70	17.55	9565.00	10333.10	4.19	1.41
*	8.189	193.00	1006.84	994.00	12.84	43.83	1.41	98978.98	17.40	9683.85	10428.51	4.66	1.06
	8.192	16.00	1007.96	994.05	13.91	385.46	2.40	98196.93	15.57	9617.83	10428.68	3.70	.07
	8.228	191.00	1010.04	994.80	15.24	1128.19	7.24	98599.69	11.79	9819.53	10410.47	2.14	.35
	8.323	500.00	1011.57	997.20	14.37	1249.37	5.47	98515.30	8.46	9820.00	10685.00	1.10	.39
	8.417	500.00	1012.26	998.40	13.86	100.54	2.23	99899.46	6.63	9790.00	10912.73	.68	.24
	8.540	650.00	1012.79	999.00	13.79	0.00	0.00	100000.00	4.84	9717.43	11242.59	.36	.18
	8.615	395.00	1012.71	999.70	13.01	20031.44	7.56	8712.78	8.04	9723.13	11315.09	.79	.13
	8.630	80.00	1012.74	999.90	12.84	20097.45	7.70	8769.68	8.21	9723.35	11314.73	.82	.06
	8.687	300.00	1013.31	1004.00	9.31	7048.63	5.74	88725.51	6.00	9600.00	11610.00	.54	.20
	8.791	550.00	1013.82	1004.50	9.32	24361.39	3.92	72247.85	4.88	8890.00	11900.00	.33	.23
*	8.943	800.00	1013.93	1006.60	7.33	67233.67	11.03	5153.57	8.80	8516.93	11713.58	1.64	.70
	9.076	700.00	1017.15	1009.40	7.75	36060.82	6.03	10103.14	8.13	8360.55	12115.00	.73	2.04

SUMMARY OF ERRORS

CAUTION SECNO= 8.152 PROFILE= 1 CRITICAL DEPTH ASSUMED
CAUTION SECNO= 8.152 PROFILE= 1 MINIMUM SPECIFIC ENERGY

CAUTION SECNO= 8.189 PROFILE= 1 CRITICAL DEPTH ASSUMED
CAUTION SECNO= 8.189 PROFILE= 1 PROBABLE MINIMUM SPECIFIC ENERGY
CAUTION SECNO= 8.189 PROFILE= 1 20 TRIALS ATTEMPTED TO BALANCE WSEL

CAUTION SECNO= 8.943 PROFILE= 1 CRITICAL DEPTH ASSUMED
CAUTION SECNO= 8.943 PROFILE= 1 MINIMUM SPECIFIC ENERGY

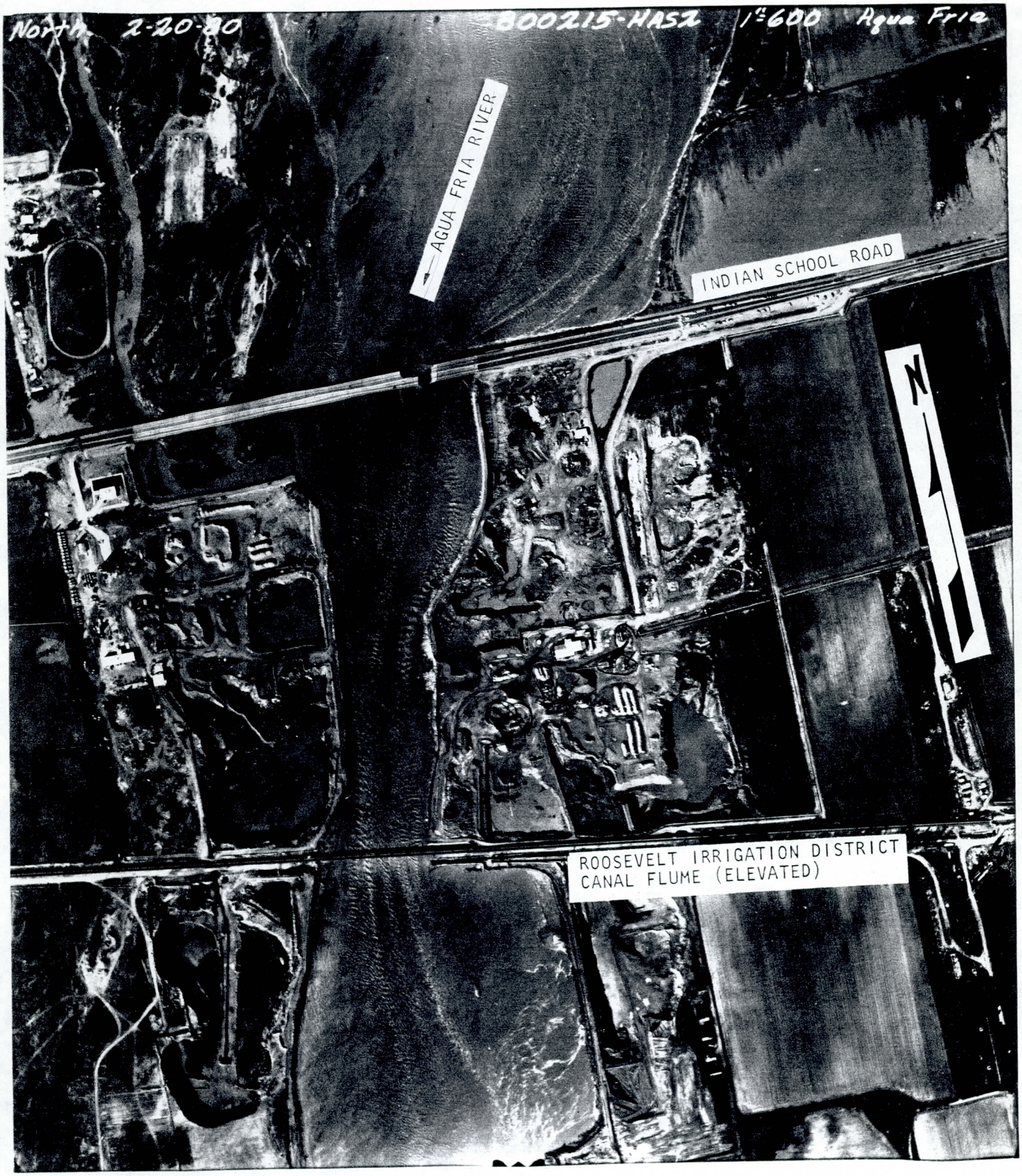

INDIAN SCHOOL BRIDGE AT AGUA FRIA RIVER
(February 20, 1980 - shortly after bridge failure)

SCALE: 1" = 620'

PHOTO 1

INDIAN SCHOOL BRIDGE AT AGUA FRIA RIVER
(February 20, 1980 - shortly before bridge failure)

SCALE: 1" = 990'

PHOTO 2

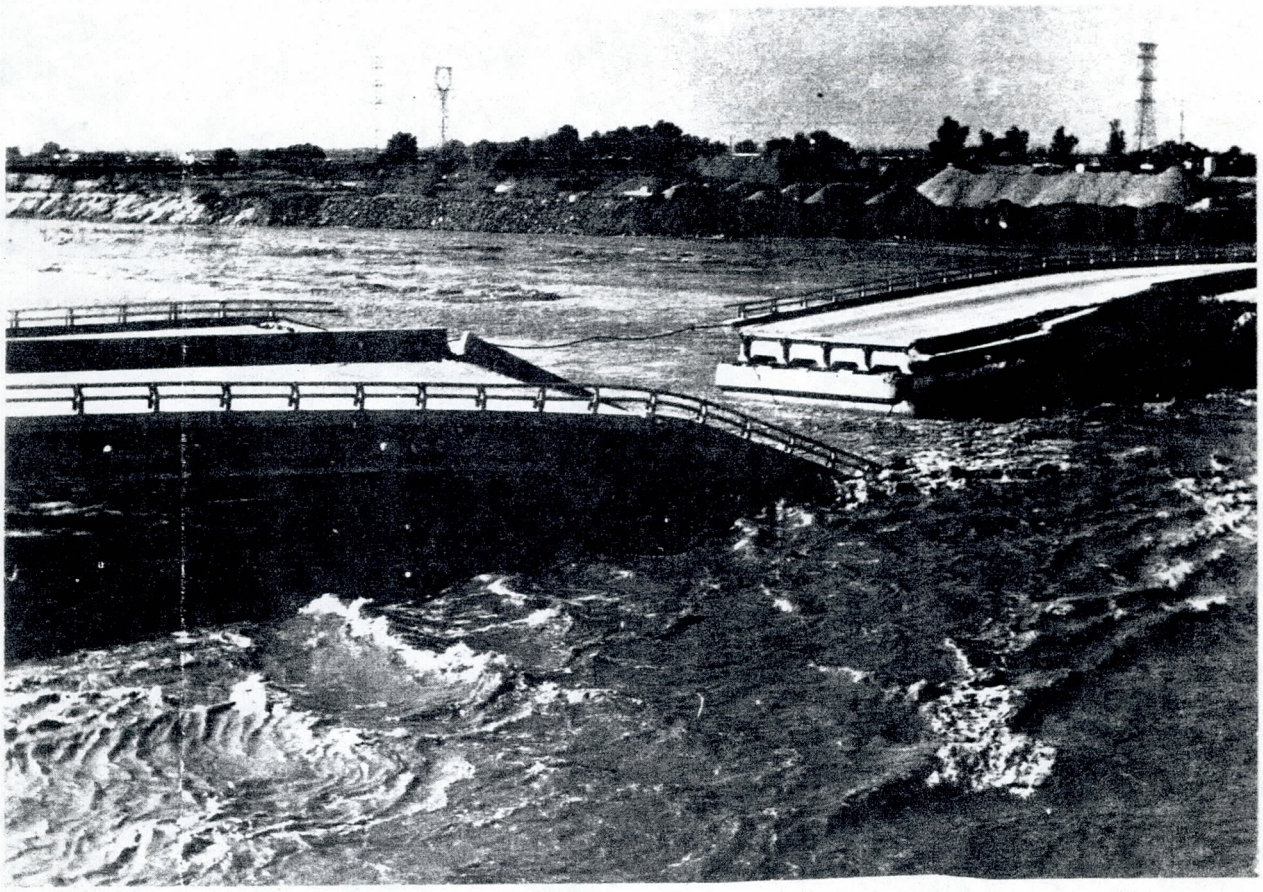

PHOTO 3 - INDIAN SCHOOL BRIDGE AT AGUA FRIA RIVER
(Looking downstream at failed section) from Reference 7

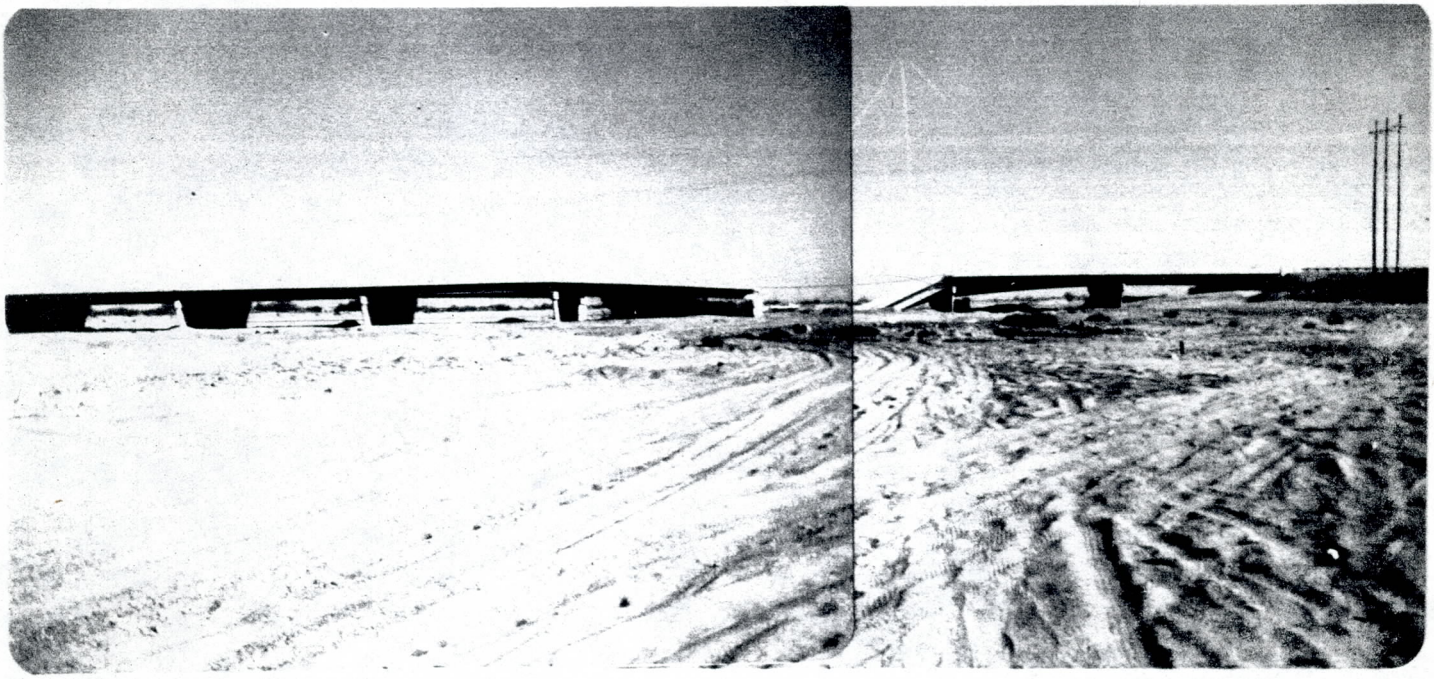

PHOTO 4 - INDIAN SCHOOL BRIDGE AT AGUA FRIA RIVER
(Looking upstream at failed section)

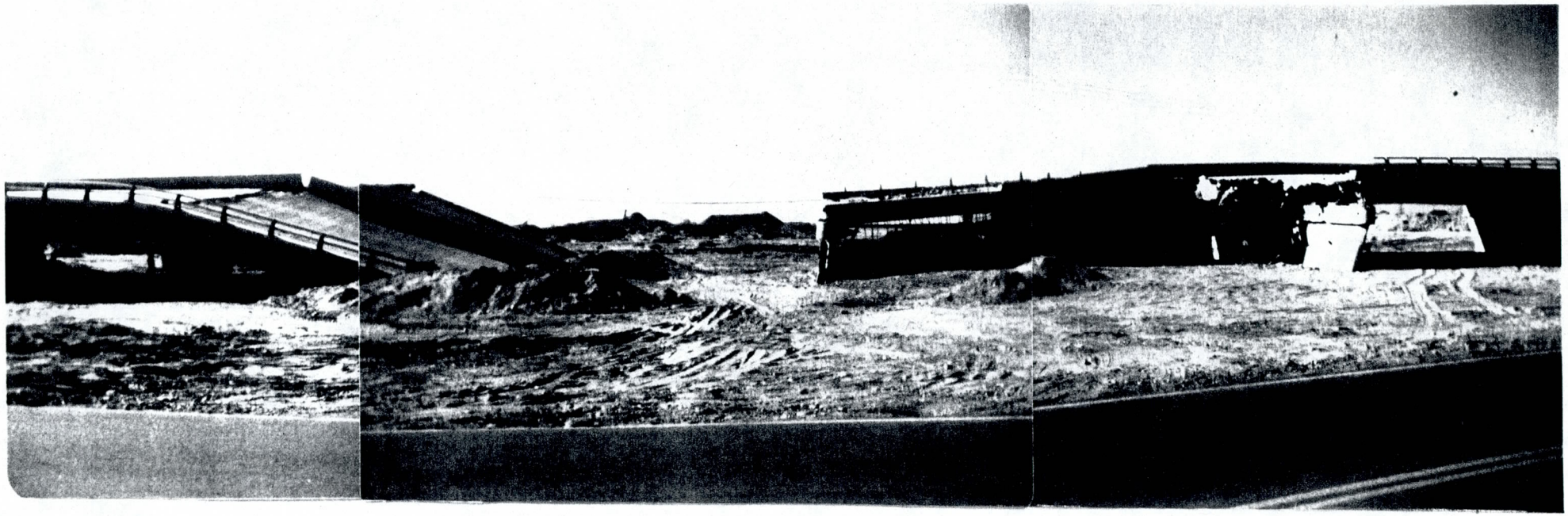

INDIAN SCHOOL BRIDGE AT AGUA FRIA RIVER
(Looking downstream at failed section)

PHOTO 5

SITE PLAN

SHOWING LOCATIONS OF TEST BORINGS

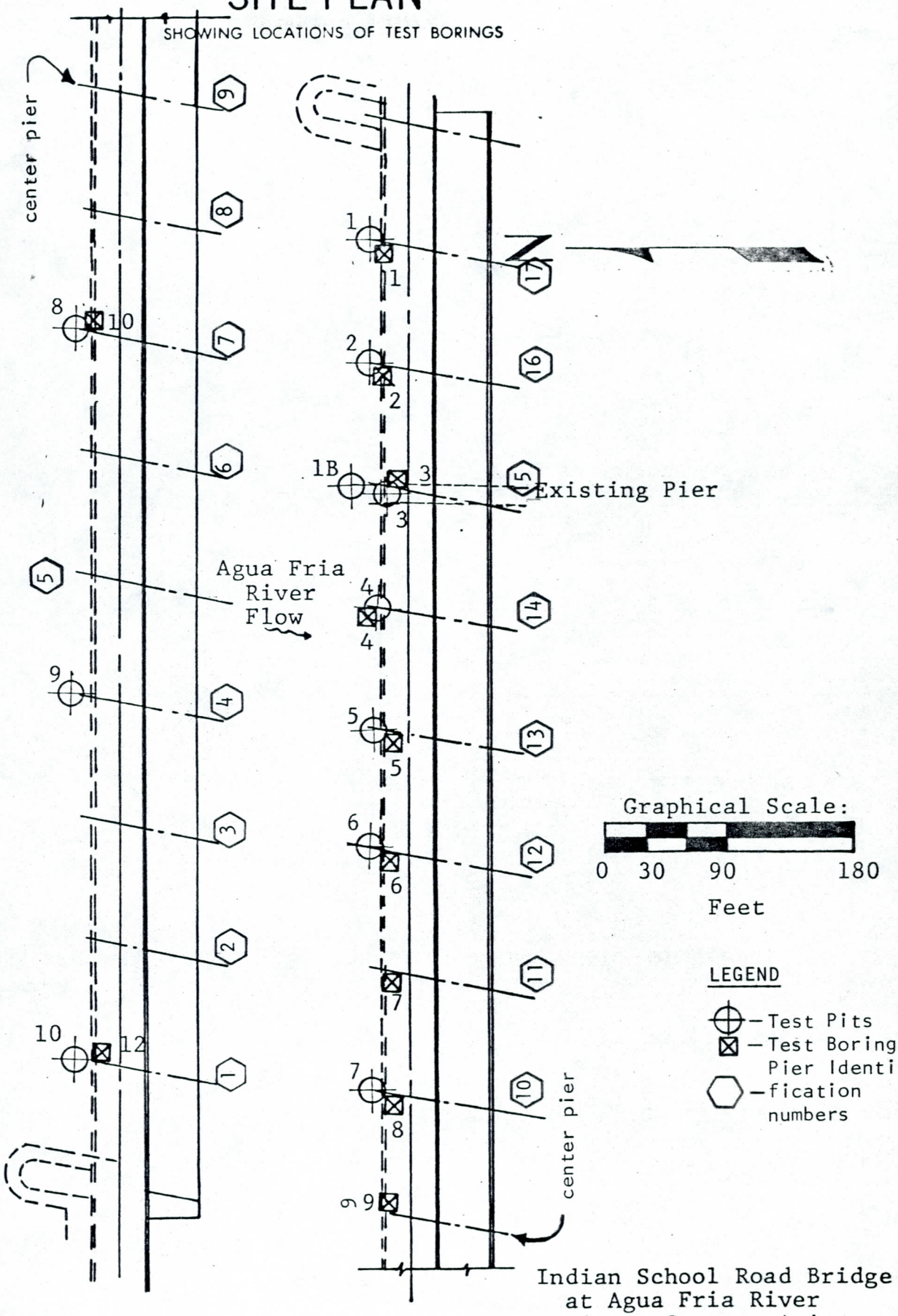

Reference Drawing: "Location Plan" by Hoffman-Miller Engineers, Phoenix, Arizona, Sheet 1 of 20, dated December, 1976

Indian School Road Bridge
at Agua Fria River
Maricopa County, Arizona

LOCATION MAP OF SOIL TESTS
(6/80-Reference 8)

FIGURE 1

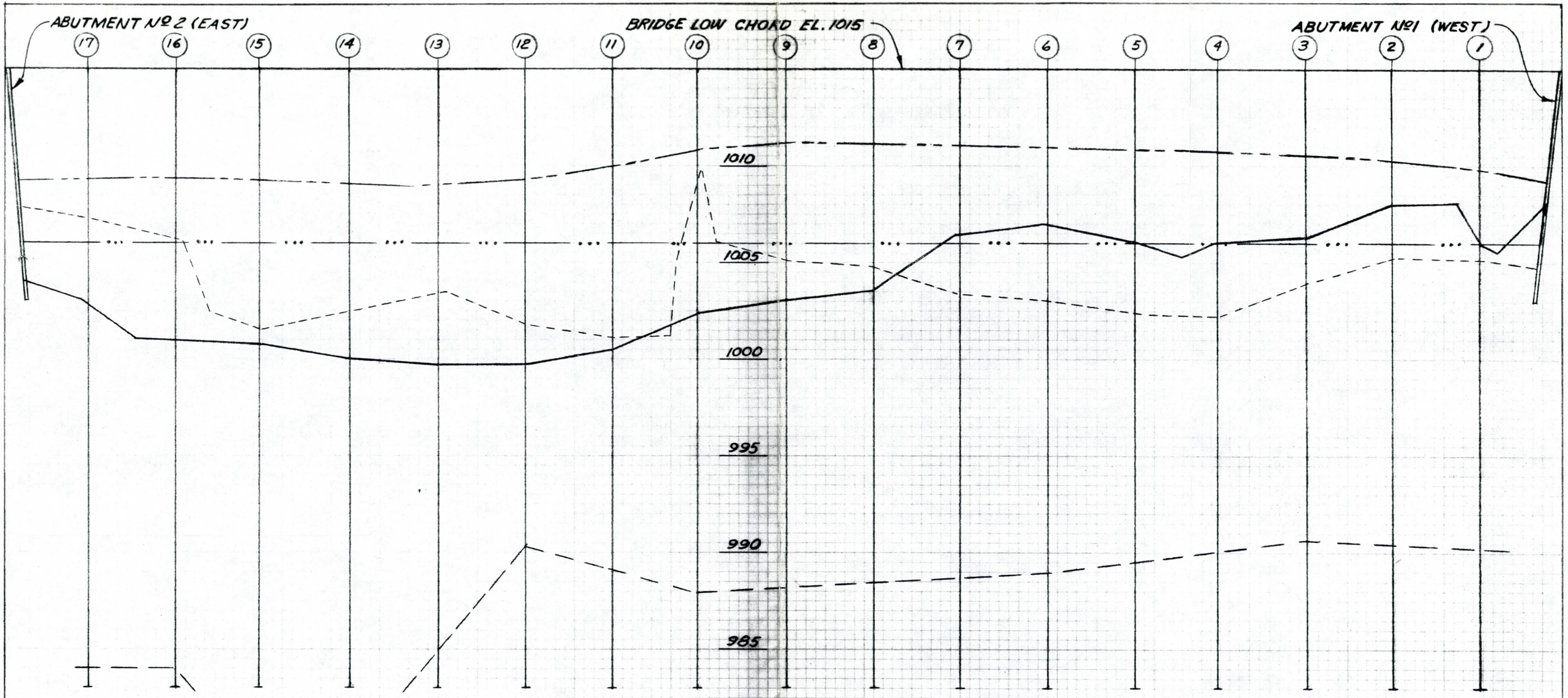

LEGEND	
○	Pier Identification Numbers
— - - —	Existing Grade from Design Plans, dated 2/25/69
- - - - -	Existing Grade from Design Plans, dated 3/22/77
———	Existing Grade from Mapping Dated 2/80
—··· —	Channel Excavation from Design Plans, dated 2/25/69
— —	Scour Depth as Based on Soil Test Data (Sergent, Hauskins & Beckwith 6/80) See Figure 1 for location of soil tests.

INDIAN SCHOOL ROAD BRIDGE
CROSS-SECTION AT AGUA FRIA RIVER

Section Taken Left to Right, Looking Downstream - 11/80
Scale: 1" = 100' Horizontal, 1" = 5' Vertical

PRC TOUPS, PHOENIX, ARIZONA

FIGURE 2

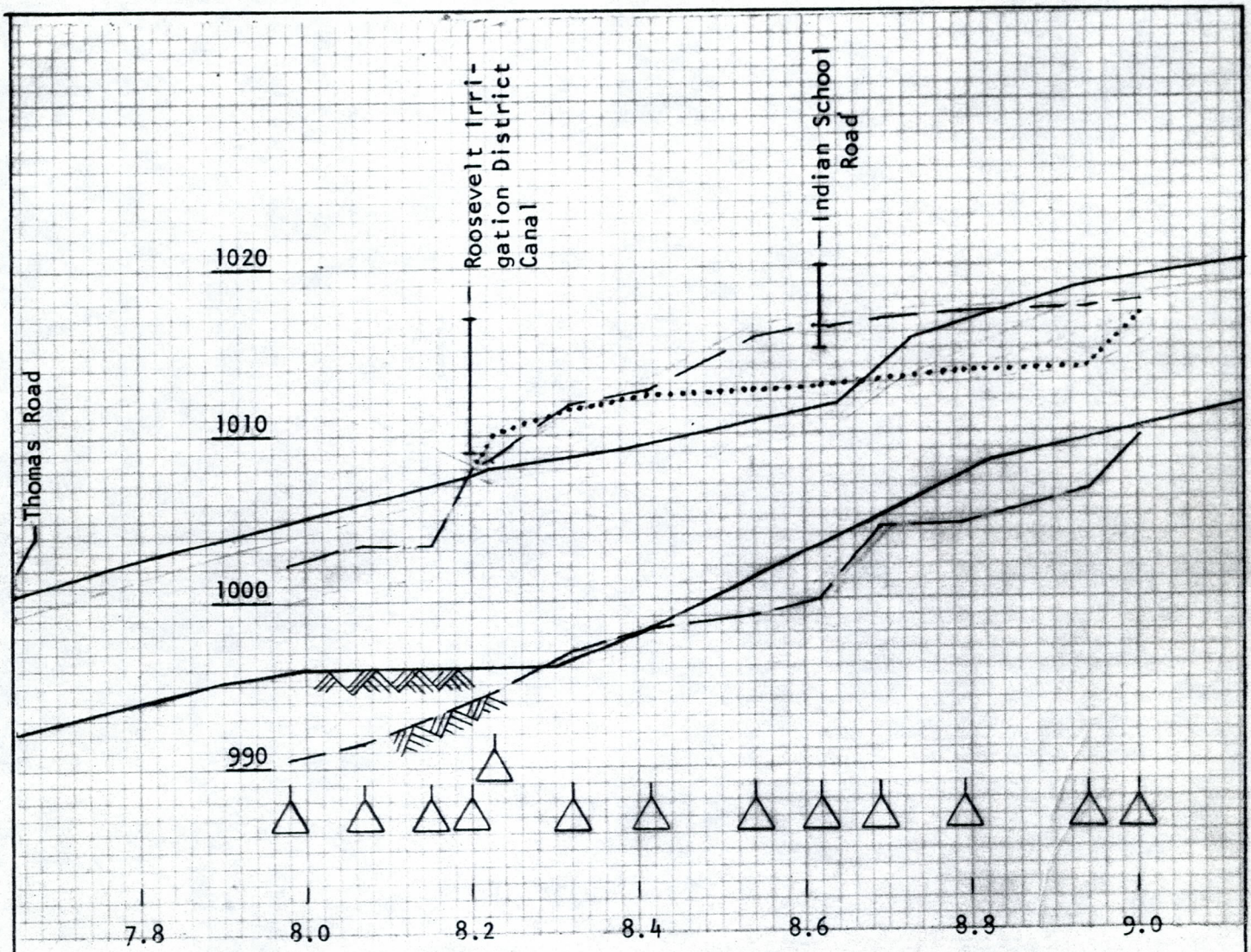

LEGEND	
△	Cross Section Locations [2]
— — —	100,000 cfs Profile - for Existing Condition [2]
.....	100,000 cfs Profile - for Channelized Condition [2] (excluding spur and diversion dike)
———	500-year flood [1] (approx. 95,000 cfs)
———	Stream Bed [1]
———	Stream Bed [2]

NOTES:

[1] Flood Insurance Study, Unincorporated Areas of Maricopa County, Arizona, by U.S. Corps of Engineers, March, 1973.

[2] HEC-2 Computations performed October, 1980 by PRC Toups using mapping dated 2/80, Scale: 1" = 100'.

WATER SURFACE PROFILES

AGUA FRIA RIVER

NEAR INDIAN SCHOOL ROAD

PRC TOUPS, PHOENIX, ARIZONA

FIGURE 3

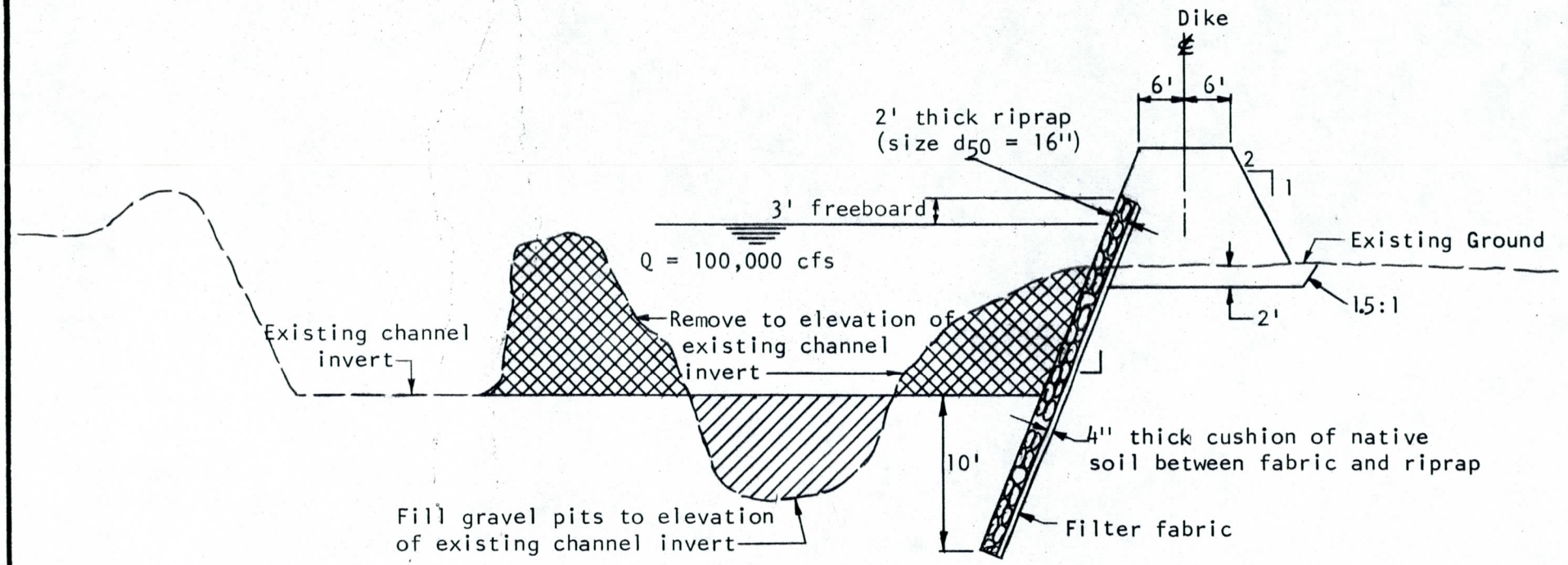

NOTE: The dike shown in conjunction with the channelization is proposed to extend from the Roosevelt Irrigation District Canal upstream to the Indian School Road Bridge. The channelization continues upstream of the bridge to the limits as shown on Map 1.

SECTION A-A
CHANNELIZATION AND
DIKE
PLATE 1

SECTION A-A

TYPICAL CHANNEL SECTION
(looking downstream)

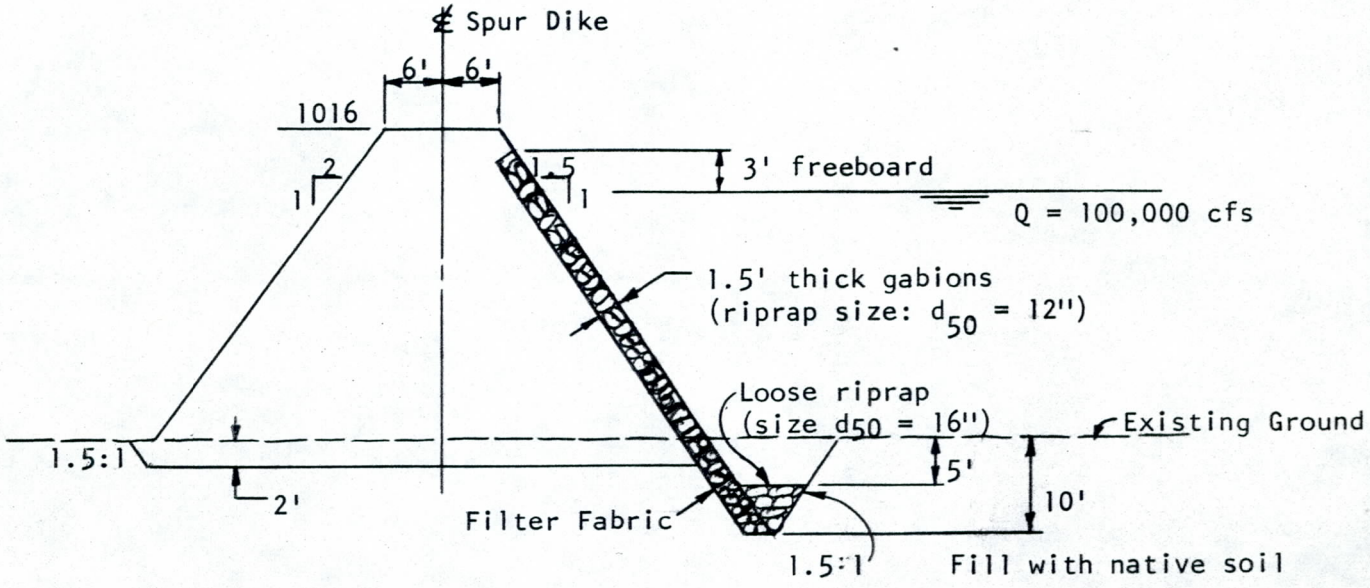

SECTION B-B

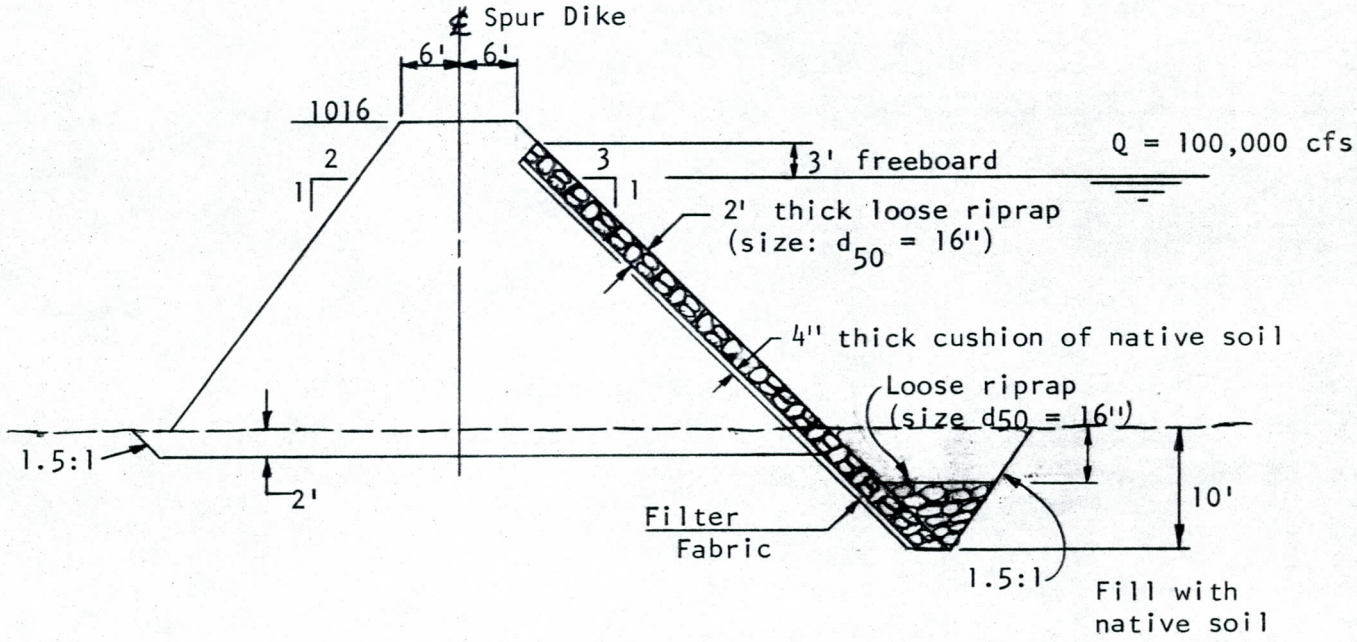

SECTION C-C

NOTES:
1. Stationing of spur dike starts at intersection of dike centerline and the north side of Indian School Road Bridge and continues in a northerly direction.
2. The dike shall be constructed as shown in Section B-B from Sta. 0+00 to 2+10± with a transition, in slope only, from Sta. 2+10± to 3+10±. From Sta. 3+10± to 4+10± (end) the dike shall be constructed as shown in Section C-C.

SPUR DIKE
PLATE 2

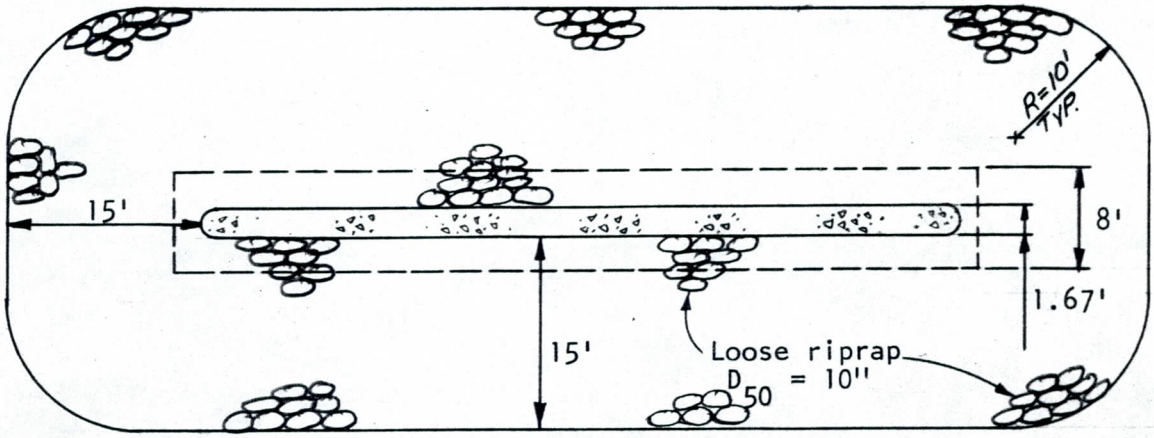

PLAN

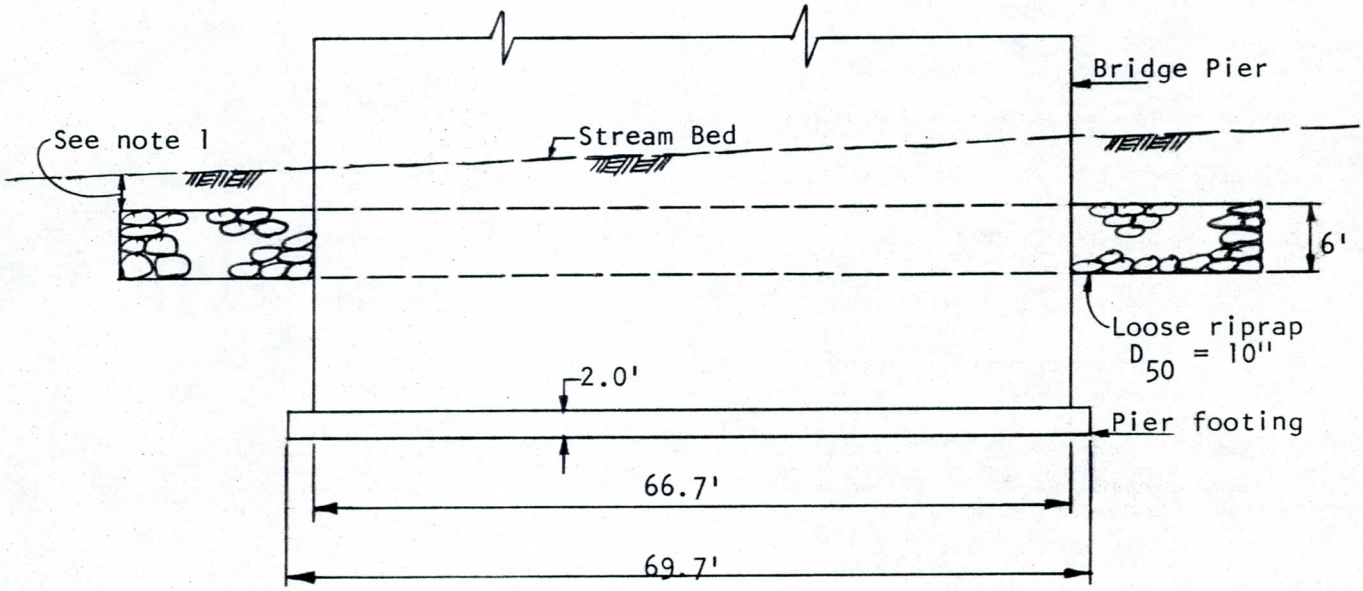

ELEVATION

NOTE: 1. Top of riprap to have minimum 2' cover

PIER SCOUR PROTECTION
(LOOSE RIPRAP)
PLATE 3

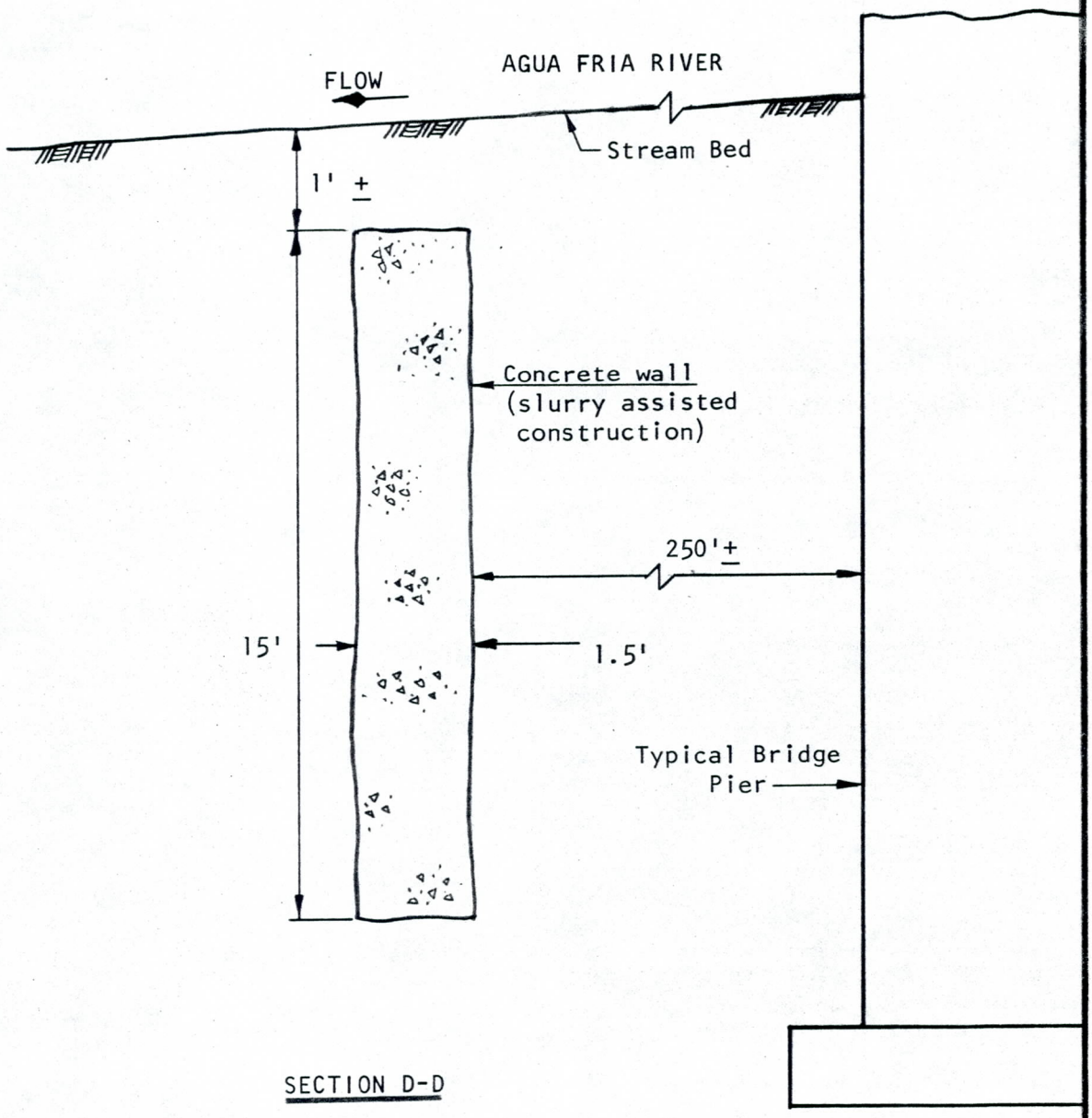

SECTION D-D

PIER SCOUR PROTECTION
CUTOFF WALL
PLATE 4

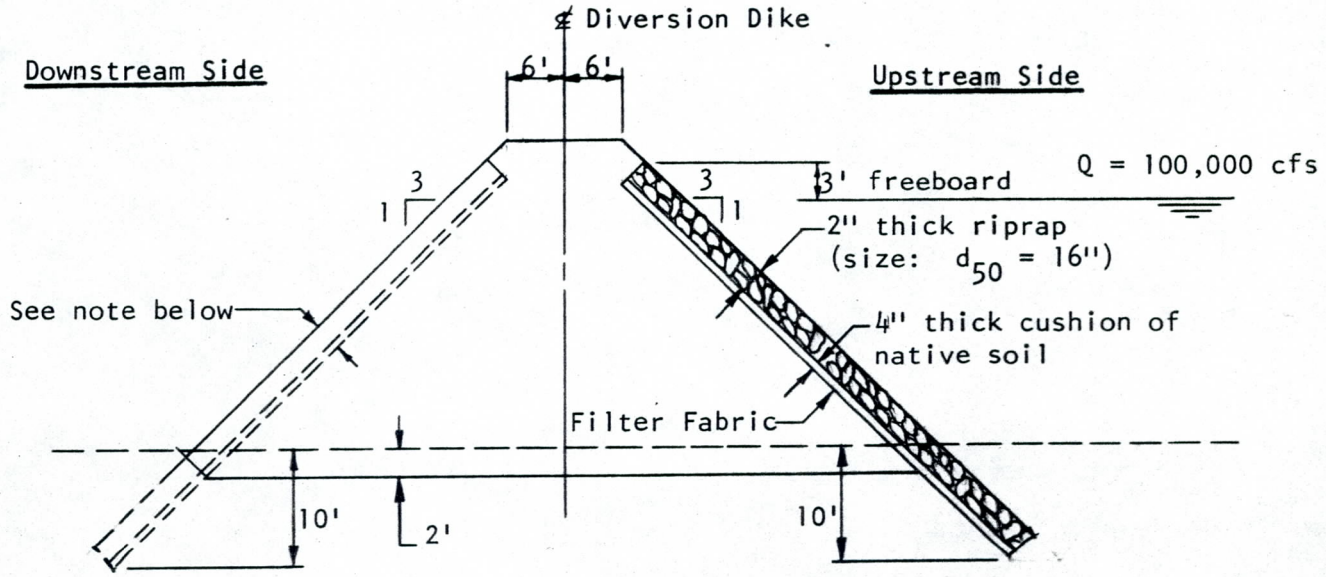

SECTION E-E

NOTE: 2' thick riprap, cushion and filter fabric to extend full length of dike on the upstream side and to the limits indicated around the east end of dike as shown on Map 1.

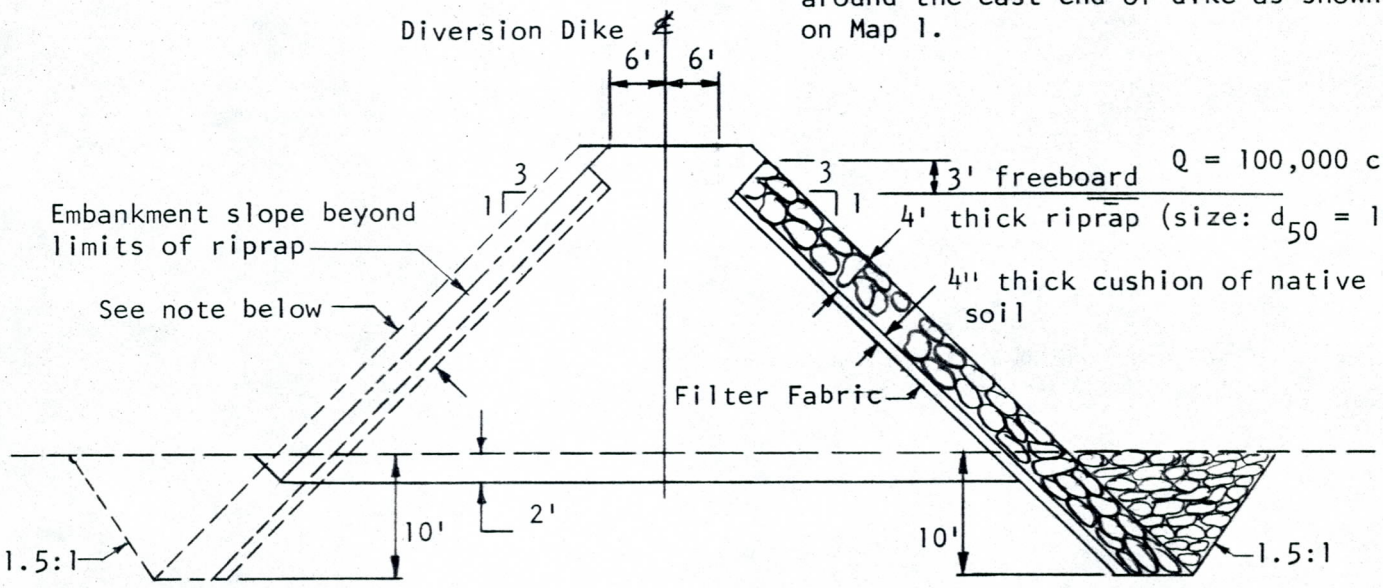

SECTION F-F

NOTE: 4' thick riprap, cushion and filter fabric to extend to limits around west end of dike as shown on Map 1.

DIVERSION DIKE

PLATE 5

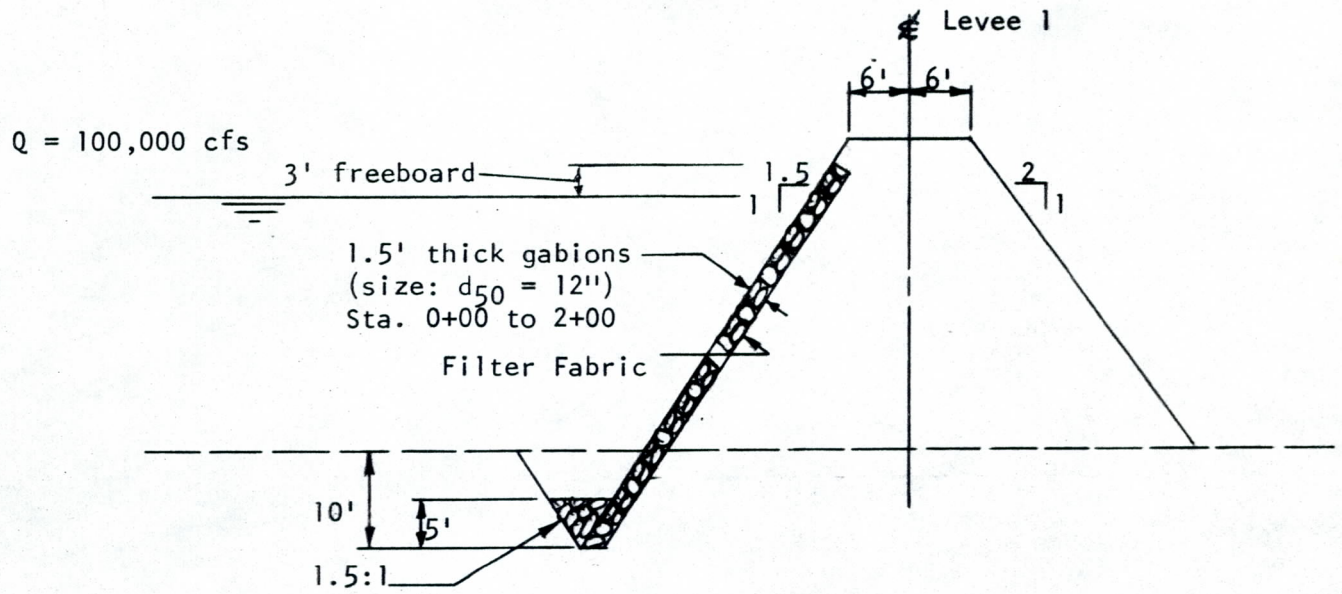

SECTION G-G

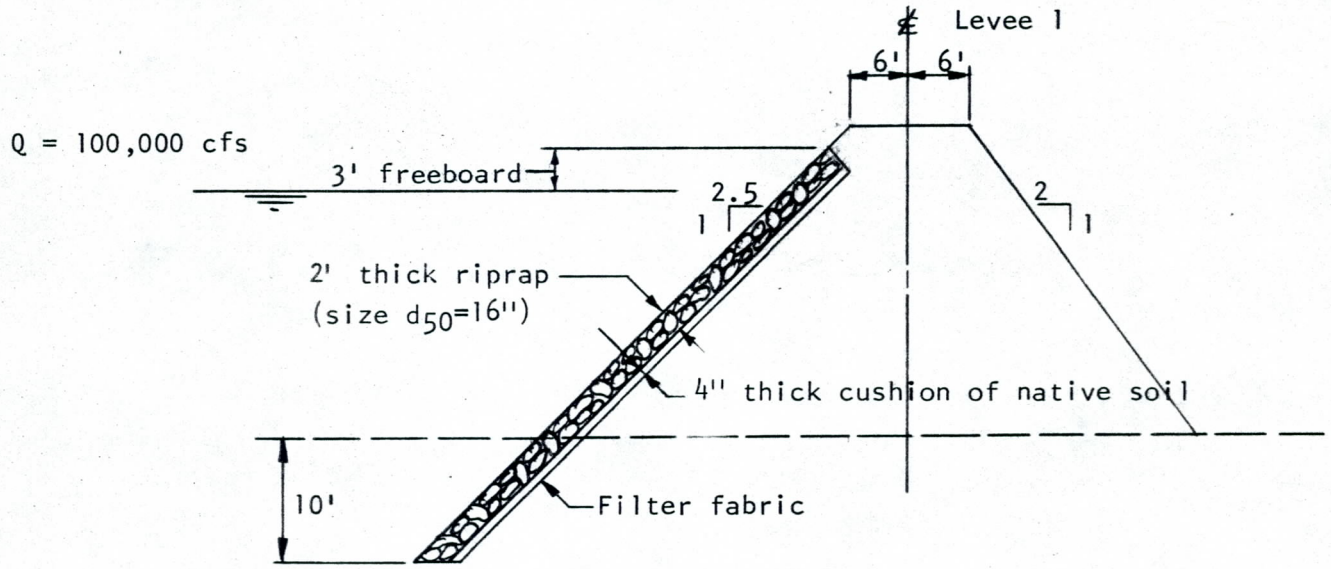

SECTION H-H

NOTES:
1. Levee stationing increases upstream (north) with Sta. 0+00 at intersection of levee with north side of Indian School Road Bridge.
2. Slope transition (1.5:1 to 2.5:1) occurs from Sta. 1+50 to Sta. 2+50.

LEVEE 1

PLATE 6

E9500 E10000 E10500 E11000 E11500 E12000 E12500 E13000

℄ PROPOSED LEVEE
(BY GRAVEL MINING OPERATOR)

A-4
1014.07

A-5
1016.09

SECTION 9.076

℄ DIVERSION LEVEE
(SEE PLATE 5 FOR DETAILS)

BEGIN 4' RIPRAP

BEGIN 2' RIPRAP

125'

25'

50'

SECTION 8.943

TRANSITION-
CHANNEL TO
NATURAL GROUND

REFERENCE LINE

℄ LEVEE I
(SEE PLATE 5 FOR DETAILS)

1008.75

CHANNEL EXCAVATION LIMITS
(SEE PLATE 1 FOR DETAILS)

SECTION 8.791

SLOPE TRANSITION
STA. 2+50
STA. 1+50
2.5:1
1.5:1
1 SIDE SLOPE

RIVER

SLOPE TRANSITION
STA. 3+10
STA. 2+10

℄ SPUR DIKE
(SEE PLATE 2 FOR DETAILS)

SECTION 8.687

PIER SCOUR PROTECTION
SEE PLATE 3 FOR DETAILS

INDIAN SCHOOL ROAD BRIDGE

B-4
1020.63

SECTION 8.630

SECTION 8.615

B-5
1017.00

CUTOFF WALL (OPTIONAL)
(SEE PLATE 4 FOR DETAILS)

SECTION 8.54

REFERENCE LINE

CHANNEL EXCAVATION LIMITS
(SEE PLATE 1 FOR DETAILS)

N.L.
±983.6

SECTION 8.417

AGUA FRIA

SECTION 8.323

N.L.
±979.0

SECTION 8.228

TRANISTION-
CHANNEL TO
NATURAL GROUND

SECTION 8.192

SECTION 8.189

ROOSEVELT IRRIGATION CANAL

1005.75

SECTION 8.152

N.L.
±976.2

SECTION 8.067

995.82

SECTION 7.982

FIELD CROP

W.L.
±974.6

MAPPING SOURCE: AERIAL MAPPING CO.
DATE: AUGUST 1980

SCALE: 1"=100'

N

C-5-10.0.25

FLOOD CONTROL EVALUATION JAN. 1980

INDIAN SCHOOL ROAD BRIDGE AT AGUA FRIA RIVER

PRC TOUPS 4131 N 24 ST. PHX., AZ.	MAP NO. 1	JOB NO. 1095-600
		FILE NO. RT-602