OLIVE AVENUE CROSSING OF THE AGUA FRIA RIVER
MARICOPA COUNTY, ARIZONA

HYDRAULIC REPORT

VOLUME I

Erikson & Salmon, Inc.
consulting civil engineers

A109.924

Property of
Flood Control District of MC Library
Please Return to
2801 W. Durango
Phoenix, AZ 85009

OLIVE AVENUE CROSSING OF THE AGUA FRIA RIVER
MARICOPA COUNTY, ARIZONA

HYDRAULIC REPORT

VOLUME I

Prepared For

HOFFMAN-MILLER ENGINEERS, INC.

Prepared By

ERIKSON & SALMON, INC.
4022 East Broadway Road, Suite 122
Phoenix, Arizona 85040

Registered Professional Engineer (Civil)
ROLF ERIKSON
ARIZONA U.S.A.

February 4, 1985
(Revised April 9, 1985)

Erikson & Salmon, Inc.
consulting civil engineers

Rolf Erikson, P.E.
Michael D. Salmon, P.E.

April 9, 1985

Hoffman-Miller Engineers, Inc.
3737 East Indian School Road
Phoenix, Arizona 85018

Attn: Mr. Lloyd Miller

Re: Olive Avenue Crossing of the Agua Fria River
Hydraulic Report

Dear Mr. Miller:

We are transmitting herewith, in two volumes, the hydraulic report for the above-referenced project.

Sincerely yours,

Rolf Erikson, P.E.
ERIKSON & SALMON, INC.

RE:is

4022 EAST BROADWAY ROAD / SUITE 122 / PHOENIX, ARIZONA 85040 / PHONE (602) 437-0330

TABLE OF CONTENTS

VOLUME I

PAGE

LOCATION KEY MAP

I. SITE LOCATION.....1
II. EXISTING CONDITIONS AND HISTORICAL BACKGROUND.....1
III. STUDY PARAMETERS AND PROCEDURES.....2
IV. HYDRAULIC RESULTS.....2
V. ESTIMATED EROSION AND SCOUR.....3
VI. RECOMMENDATIONS.....4

APPENDIX:

CONVEYANCE AT BRIDGE SITE
CONVEYANCE GRAPH AT BRIDGE SITE
ESTIMATES OF FLOW OBSTRUCTED BY ROADWAY EMBANKMENTS
SCOUR ESTIMATES (CONTRACTION, ABUTMENT, AND PIERS)
COMPUTATIONS FOR SPUR DYKE GEOMETRICS AND RIPRAP SIZING (WITH SKETCH)
SUMMARIES OF WATER SURFACE COMPUTATIONS (EXISTING AND 1964 CONDITIONS)

BIBLIOGRAPHY

VOLUME II

MAP OF HYDRAULIC ANALYSIS AREA

WATER SURFACE COMPUTATIONS:
100-Year Flood Existing Conditions without Bridge
Recommended Bridge (1500 Feet) - 100-Year Flood Existing Conditions
100-Year Flood, 1964 Conditions Without Bridge
Recommended Bridge (1500 Feet) - 100-Year Flood, 1964 Conditions

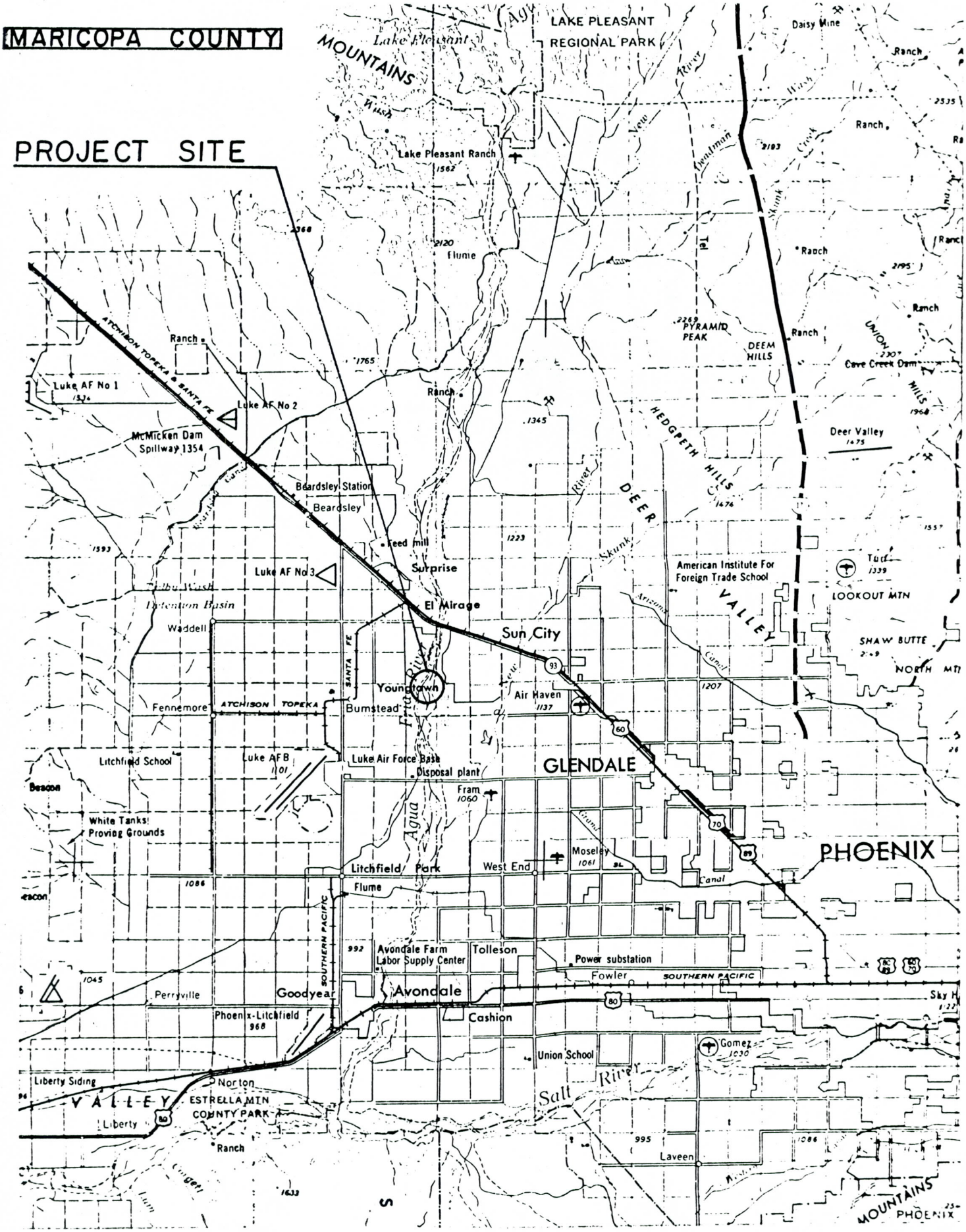

LOCATION KEY MAP

OLIVE AVENUE CROSSING OF THE AGUA FRIA RIVER
HYDRAULIC REPORT

I. SITE LOCATION

The existing crossing of the Agua Fria River is located approximately 3 miles south of the crossing of the river by Grand Avenue (U.S. Highway 60/70/89) and by the Atchison, Topeka and Santa Fe Railroad at the border of Sections 25 and 36 in T3N, R1W. Olive Avenue is a part of the Maricopa County Highway System and begins at the Beardsley Canal 9 miles west of the River crossing, extending 15 miles easterly of the Agua Fria River to the base of the Phoenix Mountains near 15th Street; and it is also known as Dunlap Avenue between 51st Avenue and 15th Street over its most easterly 7 miles, which lies within the City of Phoenix.

II. EXISTING CONDITIONS AND HISTORICAL BACKGROUND

Currently, the Agua Fria River crosses Olive Avenue in a 3300-foot floodplain marked by a very distinct ridge on its easterly border which, currently, is the westerly limit of the residential expansion adjacent to the City of Glendale. The westerly bank of the River is a somewhat less pronounced ridge, which still supports farming operations and is also being used for sand and gravel extraction operations.

The principal development in the Agua Fria River floodplain likewise consists of agricultural activities and sand and gravel pit operations.

The Agua Fria River drains an area 2,340 square miles, most of which is in Yavapai County, Arizona. Prior to the construction in 1927 of Waddell Dam 20 miles upstream from the Olive Avenue crossing, some 24 flooding events, with up to 105,000 cfs discharge, were reported since 1889. Since the completion of the Dam, the severity of flooding downstream has considerably abated; nevertheless, the area is still within the reach of large discharges in the future.

Presently, Olive Avenue, through the Agua Fria River floodplain, is a 28-foot-wide asphalt paved surface, constructed as a ford section, which periodically is inundated and washed out by minor River flooding (most recently during 1980).

As a consequence of the continued roadway washouts and envisioned future heavier traffic volumes on Olive Avenue, on July 11, 1984, the Maricopa County Highway Department entered into a contract with the firm of Hoffman-Miller Engineers, Inc. of Phoenix, Arizona, to provide engineering plans for a bridge at the Agua Fria River crossing.

As a subconsultant to the aforementioned company, this firm (Erikson & Salmon, Inc.) was retained to provide the necessary hydraulic computations, recommendations on bridge length, configuration of dyking and rechanneliza-

tion in the River, scour estimates, and construction drawings for a detour road through the River floodplain to be incorporated in the bridge drawings. In turn, this firm retained Aerial Mapping, Inc. of Phoenix, Arizona, to provide aerial pre-marking work, survey control, aerial photography, floodplain contour mapping, and digitized cross-sections of the River.

III. STUDY PARAMETERS AND PROCEDURES

COE printout 199,000

The principal project requirement was that the bridge structure pass the 100-year frequency flooding event without overtopping of either the bridge or the approach roadways. The exact rate of this discharge has been subject to recent reevaluation, owing to recent flooding events, and as a consequence, a very recent estimate - 102,000 cfs - was adopted for the bridge design. This figure was developed on a pro-rata basis from U.S. Army Corps of Engineers computations indicating 115,000 cfs at Bell Road (5½ miles upstream from Olive Avenue) and 95,000 cfs at the confluence with New River (4 miles downstream from the roadway crossing).

As another parameter, the height of backwater that could be developed by the bridge was limited to one foot (in accordance with FEMA regulations as cited in the FHWA manual, "Guideline for Hydraulic Design of Highway and Bridge Encroachments in the Floodplain Consistent with the National Flood Insurance Program").

On the basis of aerial photos taken on July 20, 1984, by the aforementioned Aerial Mapping Company, 51 cross-sections (approximately 500 feet on centers and extending about two miles downstream and two miles upstream) were delineated and digitized by the aerial mapping for use in the hydraulic water surface computations.

In addition, an independent set of 20 cross-sections were developed from a 1964 contour map, included in item 11 of the bibliography, from a point 1 mile downstream to another ½ mile upstream from Olive Avenue. These backwater computations, as described later in this report and included in the appendix, volume 2, were performed in accordance with HEC-2 procedures, as described in items 6 and 7 in the bibliography. The calculations were run on an IBM Personal Computer, using Klagge, Stevens & Associates, Inc.'s ARK-2 software program (modeled directly from the Army Corps of Engineers' HEC-2 program).

Procedures utilized in developing spur dyke geometrics, estimating erosion and scour, and sizing of dumped rock riprap are detailed in section V of this report.

IV. HYDRAULIC RESULTS

During the process of selecting a bridge length for this project, two lengths were initially considered - 1250 and 1500 feet - of which, either one (the former with minor rechannelization) would satisfy the criteria of only a one-foot rise in the backwater. In addition, neither of the two bridge lengths would result in excessive stream flow velocities (i.e., over 10 feet per second) between the abutments during peak flows. Further

investigation of the two bridge lengths ascertained that in neither case could contraction scour be anticipated at the bridge crossing. The causes for this anomaly were obviously the various sand and gravel pit operations deepening the existing River channel at the bridge site below its natural elevation. It was therefore decided to use stream cross-sections developed from the contour map of 1964 (at which time, the effects of the material extraction were still minimal) in order to determine the bridge length and height plus the elevation of the approach fills. On the latter basis, the 1500-foot bridge was adopted for design, since it best met the requirement of only a one-foot rise in the backwater under the existing conditions and by considering also contraction scour under 1964 conditions.

V. ESTIMATING EROSION AND SCOUR

The changes in the riverbed which could affect the bridge at this site are the usual three types of interrelated phenomena, namely:

A. Degradation or aggradation of the stream channel over a long period of time, due to changes in controls such as dams, material extraction operations, sediment content, and river geomorphology

B. General scour due to contraction caused by increased velocities across the entire contracted width

C. Local Scour caused by obstruction to the stream by both the abutments and the piers

The foregoing effects can be considered as generally additive in that local scour will occur concurrently with contraction scour and at the same time in which general degradation or aggradation is taking place.

Estimation of phenomenon A, above, through mathematical process, besides being a very complex task, would be very difficult to accurately formulate, due to lack of quality in the required input data, in particular, the amount of material that will be extracted in the future by the sand and gravel operations. The most practical expedient, from a bridge design standpoint, was to estimate the possible extreme conditions which changes in the Agua Fria riverbed could conceivably create in the future.

At the upper extreme of the possibilities, the sand and gravel extraction operations might be discontinued, and/or their effects could be negated by large amounts of material transported by unexpectedly high volume stream flows in the future. The 1964 riverbed condition was selected as probably being representative of this condition and thus, was used solely to determine the bridge length and height as well as the elevations of the approach fills (as cited earlier), but not the scour computations.

At the lower (and more probable) extreme of possibilities, the sand and gravel operations in the riverbed will continue in the future and be expanded northerly, and continued replacement of the removed material by sedimentation will not occur due to the effect of Waddell Dam upstream. Under these conditions, the lowest material pit elevation (1026), just south of Northern Avenue (1 mile to the south), can be expected to encroach northerly at the natural River slope (0.0023'/') and achieve an eventual elevation of 1040

in the vicinity of the Olive Avenue Bridge crossing. Under these conditions, there would be no general scour (also known as contraction scour), according to the procedures given in items 2 and 5 of the bibliography, but some abutment scour and pier scour could still occur.

Abutment scour was computed on the basis of the equation by E.M. Laursen, as set forth in items 3 and 5 of the bibliography. However, these formulas were developed on the basis of a vertical face abutment, not a spill-through type, as planned on this project. The effect of the latter type abutment on the scour depth apparently has been the subject of controversy among the various researchers. On page 15 of item 7 in the bibliography, it is stated, "The equation could be easily modified by reducing the effective Q_c (i.e., overbank flow that mixes with the flow approaching the bridge within its influence zone) for spill-through abutments, but there is no experimental basis for such a modification". However, item 2 on pages VI-35 and VI-36 gives a completely different version. In this research by M.K. Liu (1961) and M.D. Gill (1972), it was shown that "If the embankment (i.e., of a spill-through abutment) terminates at a vertical wall and has a vertical wall on the upstream side, then the scour hole depth in sand nearly doubles". Inasmuch as the abutments on this project, if subjected to the most severe scour (i.e., with the approach embankments completely eroded), would act more like piers - rather than a vertical-face abutment - it was judged that the formula of Liu (equation 6.5.6 on page VI-35 of item 2 in the bibliography) was more suited to this project. On this basis, the local scour at the right (east) abutment was computed to be 30.4 feet, and that adjacent to the left (west) abutment, as negligible. (See the Appendix.) As a means of controlling this scour, a spur dyke is recommended, and the dumped-rock riprap sizing and gradation for these were developed in accordance with Chapter VI and pages VIII-61 through VIII-65 of item 2 in the bibliography.

In the estimation of pier scour, some 20 different formulas and procedures are possible, as presented in references 2, 3, 4, 5, and 6 in the bibliography. However, two formulas (which usually produce the higher values) do not take into account pier size, and a third ignores pier size, shape, and alignment. Yet others are not applicable, as they were developed experimentally from conditions in which the stream flow Froude numbers were quite different from those on this project. Therefore, in accordance with the conclusion reached on pages 28 and 32 of reference 4 of the bibliography, the formula of Laursen and Toch was adopted, since it envelopes the various experimentally-observed scour depths. The depth produced by this formula was modified in accordance with the procedures on pages VI-37 to VI-39 of reference 2, using a 30° skewed flow direction. This angle was considered possible due to the physical features of the site - particularly at the most easterly abutments. On this project, use of these procedures produced a pier scour depth of 29.0 feet. (See the appendix.)

VI. RECOMMENDATIONS

For the reason cited earlier in section IV of this report, a 1500-foot, twelve-span structure is recommended for the site. The westerly abutment should be set at roadway station 118+80, which approximates the west bank of the River floodplain. In consideration of the possibility of aggrada-

tion at the bridge site, the lowest girder elevation of the proposed bridge should be around elevation 1086.00, and the lowest finished grade of the approach roadway should be about elevation 1088.50.

For the purposes of designing the pier drilled caissons, the maximum potential scour depth is at elevation 1011 (i.e., the possible degradation elevation of 1040 less 29 feet of local pier scour). For the purposes of designing the drilled caissons for the abutments, the maximum potential scour depth is 1009.6 (i.e., the possible degradation elevation of 1040, less 30.4 feet of local abutment scour). Inasmuch as the abutment loads will be about one-half those of the piers, it appears probable (assuming a common length for all drilled caissons) that the pier design criteria above will control. In the event that the design of the abutment caissons becomes critical, it should be kept in mind that the 30.4-foot potential local abutment scour represents the maximum experimental scour on a sand bottom, a far more erodible condition than actually exists at the bridge site.

The spur dykes recommended for this project should be 50 feet (left) and 250 feet (right) in length. These are the minimum lengths recommended in Figure 30, page 54, of item 1 in the bibliography. The former will roughly fit the configuration of the west bank of the River, while the latter, besides extending upstream for 250 feet, in accordance with the accepted practice for design of bridges in floodplain contractions on the Salt and Agua Fria Rivers, should also extend downstream for the same distance.

BRIDGE SITE CONVEYANCE (SECTION 33.1)

100-yr Flood Existing Conditions

Sub Section (ft.)	a (SQ.FT.)	Σa (SQ.FT.)	P (Ft.)	r=a/p (Ft.)	$K=\left(\frac{1.486}{n}\right)(ar^{2/3})$	ΣK	$q=\frac{Qk}{\Sigma K}$ (CFS)	V=q/a (F.p.s.)	qV^2
2011.3 – 2051.1	—	—	—	—	—	—			
2051.1 – 2092.2	209.59	209.59	40.808	5.136	26,489.41	26,489.41	745.5+	3.56	9,432
2092.2 – 2268.3	2129.05	2,338.64	176.124	12.088	476,118.11	502,607.52	13,399.6+	6.29	530,767
2268.3 – 2528.0	3165.74	5,504.38	259.714	12.189	711,890.58	1,214,498.10	20,035.1-	6.33	802,461
2528.0 – 2682.0	1669.36	7,173.74	154.000	10.840	347,152.49	1,561,650.59	9,770.1-	5.85	334,655
2682.0 – 2973.7	3162.03	10,335.77	291.706	10.890	657,560.92	2,219,211.51	18,505.9-	5.85	633,868
2973.7 – 3252.0	2905.45	13,241.22	278.301	10.440	589,246.40	2,808,457.91	16,583.4	5.71	540,249
3252.0 – 3349.9	1134.66	14,375.88	97.949	11.584	246,638.44	3,055,096.35	6,941.3	6.12	259,771
3349.9 – 3409.5	589.44	14,965.32	59.953	9.832	114,853.92	3,169,950.27	3,232.4	5.48	97,207
3409.5 – 3510.3	613.87	15,579.19	100.806	6.090	86,913.96	3,256,864.23	2446.1	3.98	38,839
3510.3 – 3633.8	548.34	16,127.53	123.520	4.439	62,884.47	3,319,748.70	1769.8	3.23	18,436
3633.8 – 3797.0	634.85	16,762.38	163.204	3.890	66,667.42	3,386,416.12	1876.3-	2.96	16,389
3797.0 – 3939.0	538.18	17,300.56	142.006	3.790	55,542.53	3,441,958.65	1563.2-	2.90	13,188
3939.0 – 4107.9	454.39	17,754.90	168.902	2.690	37,310.42	3,479,269.07	1050.0-	2.31	5,608
4107.9 – 4307.3	406.78	18,161.68	199.400	2.040	27,779.58	3,507,048.65	781.8+	3.69	10,667
4307.3 – 4427.3	178.80	18,340.48	120.002	1.490	9,903.09	3,516,951.74	278.7+	1.56	677
4427.3 – 4706.9	374.66	18,715.14	279.600	1.340	19,334.32	3,536,286.06	544.1+	1.45	1,148
4706.9 – 4946.8	321.47	19,036.61	239.900	1.340	16,589.07	3,552,875.13	466.9-	1.45	985
4946.8 – 5169.7	376.70	19,413.31	222.903	1.690	22,691.78	3,575,566.91	638.6	1.70	1835
5169.7 – 5398.2	591.82	20,005.13	228.501	2.259	47,388.02	3,622,954.93	1333.7-	2.25	6773
5398.2 – 5435.1	24.53	20,029.66	16.947	1.448	1,333.06	3,624,287.99	37.5	1.53	57
							102,000		3,323,012

$n = 0.035$ $\qquad \frac{1.486}{n} = 42.46$

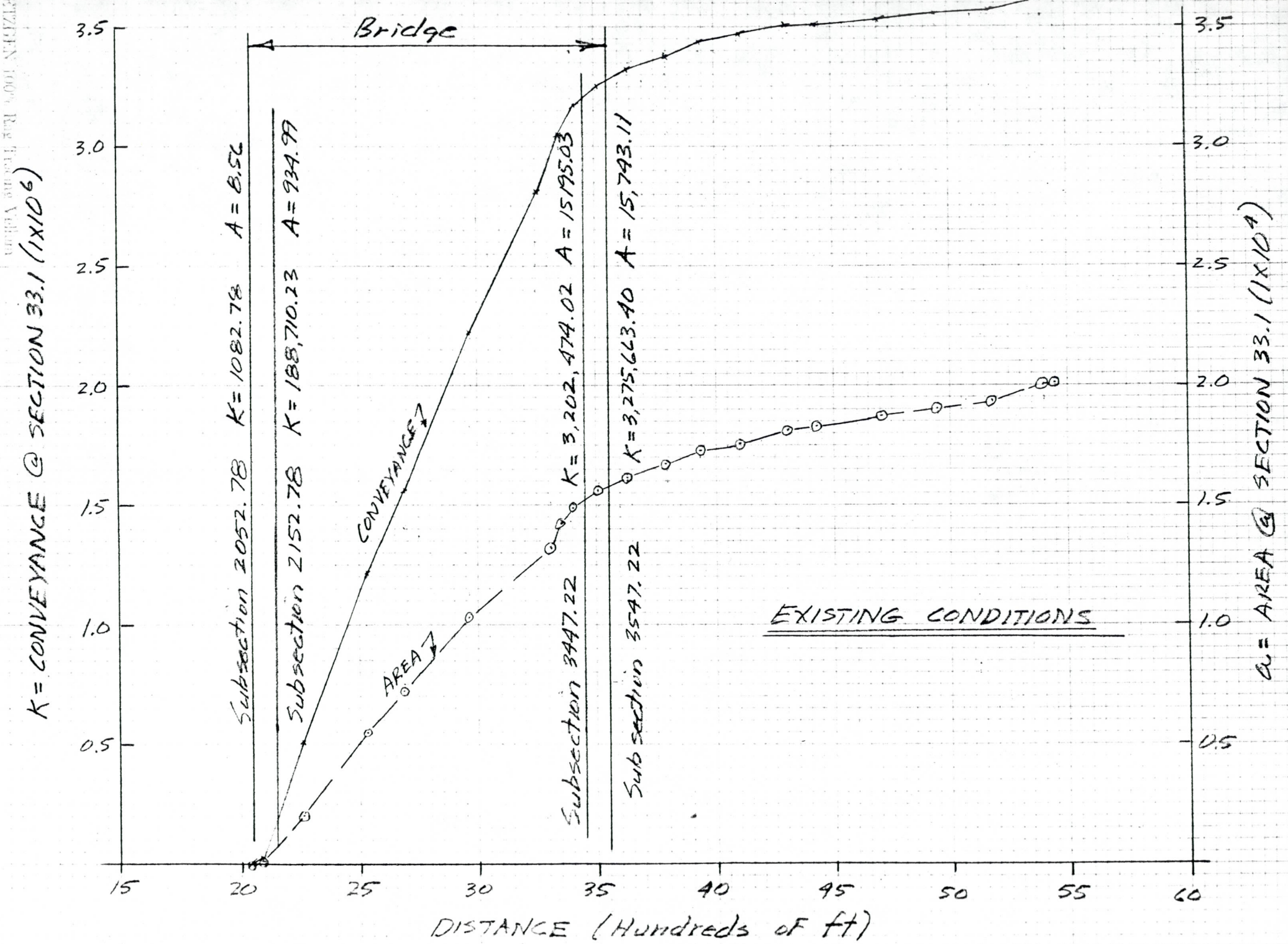
Bridge
Subsection 2052.78 K= 1082.78 A = 8.56
Subsection 2152.78 K= 188,710.23 A= 934.99
Subsection 3447.22 K= 3,202,474.02 A= 15195.03
Subsection 3547.22 K= 3,275,663.40 A= 15,793.11
CONVEYANCE
AREA
EXISTING CONDITIONS
K = CONVEYANCE @ SECTION 33.1 (1x10^6)
A = AREA @ SECTION 33.1 (1x10^4)
DISTANCE (Hundreds of ft)
3.5
3.0
2.5
2.0
1.5
1.0
0.5
15
20
25
30
35
40
45
50
55
60

ESTIMATES OF FLOW OBSTRUCTED BY ROADWAY EMBANKMENTS

Conveyance & Area to Subsection 2052.78

$K = 1082.78$ $\quad A = 8.56$

Conveyance & Area to Subsection 2152.78

$K = 188,710.23$ $\quad A = 934.99$

$$Q_f = \frac{1082.78}{3,624,287.99} \times 102,000 = 30 \text{ CFS}$$

$$Q_{100} = \frac{188,710.23 - 1082.78}{3,624,287.99} \times 102,000 = 5280 \text{ CFS}$$

Conveyance & Area to Subsection 3447.22

$K = 3,202,474.02$ $\quad A = 15,195.03$

Conveyance & Area to Subsection 3547.22

$K = 3,275,663.40$ $\quad A = 15,743.11$

$$Q_f = \frac{3,624,287.99 - 3,275,663.40}{3,624,287.99} \times 102,000 = 9811 \text{ CFS}$$

$$Q_{100} = \frac{3,275,663.40 - 3,202,474.02}{3,624,287.99} \times 102,000 = 2060 \text{ CFS}$$

Bridge opening ratio: (existing conditions) $M = \dfrac{3,275,663.40 - 1082.78}{3,624,287.99} = 0.90$

DIETZGEN 100% Rag Tracing Vellum

CONTRACTION SCOUR - Existing Conditions

HEC-2 Data For section 33.1: $Q = 102{,}000$ CFS

B_1 = Top Width = 3363.29

Area = 20038

$$\bar{d}_1 = \frac{20{,}038}{3363.29} = 5.96 \text{ (average depth)}$$

Average channel Elevation = 1081.54 - 5.96 = 1075.58

From page 14 (Formula 2-20) of reference 3, and page 32 (Formula C-2) of reference 5:

$$\frac{y_2}{y_1} = \left(\frac{Q_f}{Q_c}\right)^{6/7}\left(\frac{B_1}{B_2}\right)^{\frac{6(2+a)}{7(3+a)}}\left(\frac{n_2}{n_1}\right)^{\frac{6a}{7(3+a)}}$$

$Q_f = Q_c$ $\quad n_2 = n_1$ $\quad B_1 = 3363.29$ $\quad$ Let $a = 0.25$

$B_2 = 1486.73$ = Top width, section 33.0

$$\frac{y_2}{y_1} = \left(\frac{3363.29}{1478.70}\right)^{\frac{6(2.25)}{7(3.25)}} = 1.62$$

$y_2 = 1.62 \times 5.96 = 9.68$

Elevation scour Line = 1082.17 - 9.68 = 1072.49

HEC-2 Data For section 33.0 = $Q = 102{,}000$ CFS

$B_2 = 1478.70$

Area = 15988

$$\bar{d}_2 = \frac{15{,}988}{1478.70} = 10.81$$

Average channel Elevation = 1082.17 - 10.81 = 1071.36

1071.36 < 1072.49 ∴ no contraction scour and silting may occur

$$\text{Froude No. exist channel} = \frac{6.34}{\sqrt{32.2 \times 10.81}} = 0.340$$

DIETZGEN 1005 Rag Tracing Vellum

BRIDGE SITE CONVEYANCE (SECTION 33.1)

100-yr Flood 1964 Conditions

Sub Section (ft.)	a (SQ. FT.)	Σa (SQ. FT.)	P (Ft.)	r = a/P (Ft.)	$K=\left(\frac{1.486}{n}\right)(ar^{2/3})$	ΣK	$q=\frac{Qk}{\Sigma K}$ (CFS)	V = q/a (F.p.s)	q V²
1975.1-2011.3	3.97	3.97	6.248	0.636	124.71	124.71	4.9-	1.23	7
2011.3-2051.1	55.72	59.69	39.801	1.400	2,940.58	3,085.29	115.8-	2.07	500
2051.1-2055.0	9.75	69.44	4.383	2.225	705.42	3,790.71	27.6-	2.83	221
2055.0-2250.0	1170.00	1239.44	195.064	5.998	163,986.83	167,777.54	6,415.4-	5.48	192,885
2250.0-2355.0	975.00	2,214.44	100.031	9.747	188,886.68	356,664.22	7,389.6-	7.58	424,476
2355.0-2500.0	1462.50	3,376.94	150.021	9.749	283,362.81	640,027.03	11,085.6+	7.58	636,921
2500.0-3050.0	4675.00	8,351.94	550.000	8.500	826,694.40	1,466,721.43	32,741.7+	6.92	1,547,837
3050.0-3100.0	300.00	8,651.94	50.249	5.970	41,917.86	1,508,639.29	1,639.9-	5.47	49,002
3100.0-36338	2348.72	11,000.66	533.803	4.400	267,761.92	1,776,401.21	10,475.3-	4.46	208,371
36338-3797.0	954.72	11,955.38	163.203	5.850	131,600.47	1,908,001.68	5,148.4+	5.39	149,715
3797.0-3939.0	816.50	12,771.88	142.006	5.750	111,260.26	2,019,261.84	4,352.7-	5.33	123,698
3939.0-4107.9	785.39	13 557.27	168.902	4.650	92,896.19	2,112,158.03	3,634.3-	4.63	77,820
4107.9-4307.3	797.60	14,354.87	199.400	4.000	85,331.36	2,197,748.39	3,338.3	4.19	58,480
4307.3-4427.3	414.00	14,768.87	120.002	3.450	40,132.13	2,237,621.52	1,570.0+	3.79	5,454
4427.3-4706.9	922.68	15,691.55	279.600	3.300	86,831.55	2,324,453.07	3,397.0-	3.68	46,095
4706.9-4946.8	791.67	16,483.22	239.900	3.300	74,502.44	2,398,955.51	2,914.7-	3.68	39,509
4946.8-5169.7	813.59	17,296.81	222.903	3.650	81,886.46	2,480,841.97	3,203.5-	3.94	49,666
5169.7-5398.2	1039.68	18,336.49	228.501	4.550	121,205.21	2,602,047.18	4,741.7+	4.56	98,629
53982-5435.1	68.15	18,404.64	28.295	2.413	5,205.31	2,607,252.59	203.6-	2.99	1817
							102,000		3,711,553

$n = 0.035$ $\qquad \frac{1.486}{n} = 42.46$

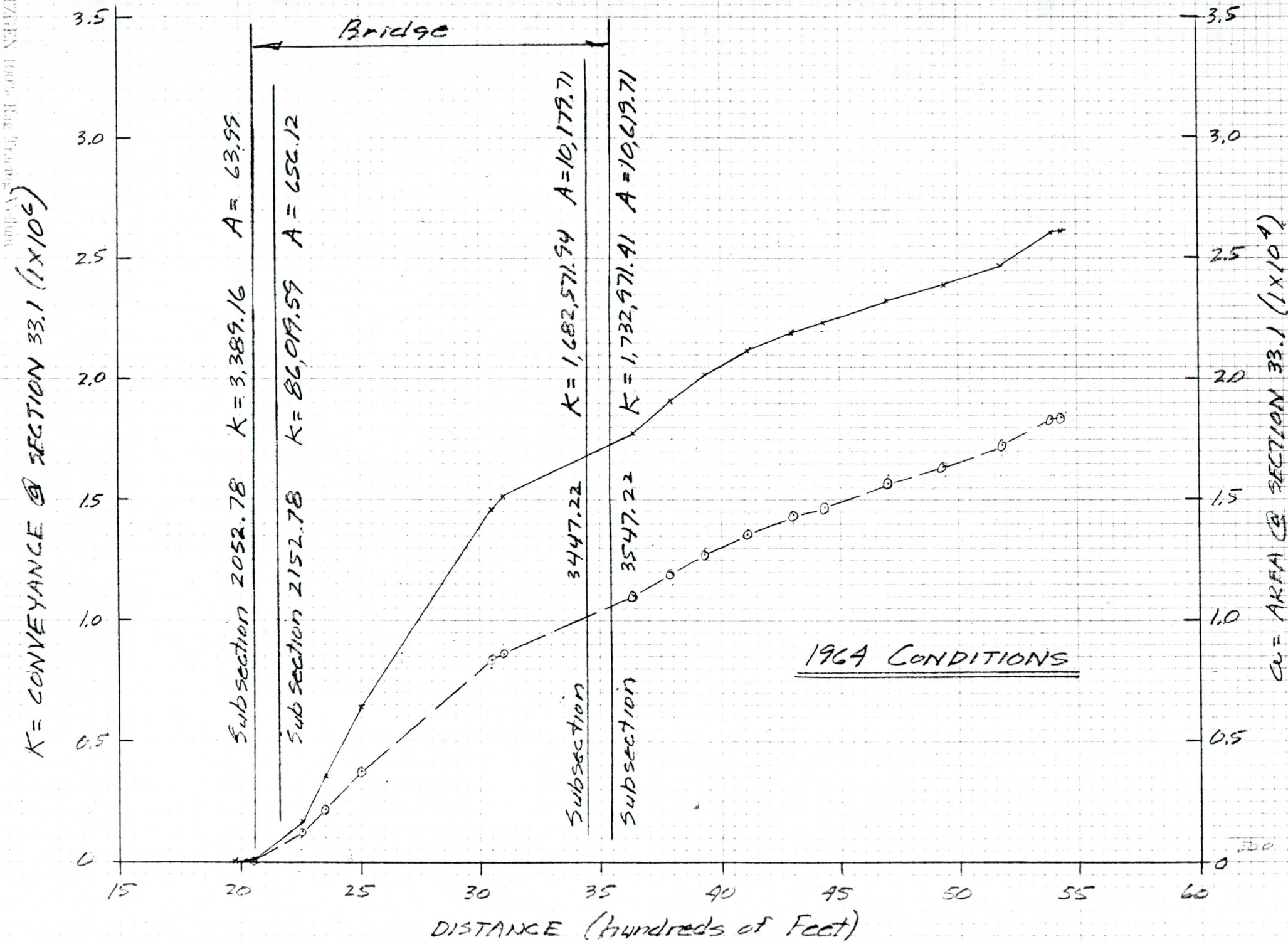
Bridge
Subsection 2052.78 K = 3,389.16 A = 63.55
Subsection 2152.78 K = 86,049.55 A = 652.12
Subsection 3447.22 K = 1,682,571.94 A = 10,179.71
Subsection 3547.22 K = 1,732,971.41 A = 10,619.71
1964 CONDITIONS
K = CONVEYANCE @ SECTION 33.1 (1x10^6)
a = AREA @ SECTION 33.1 (1x10^2)
DISTANCE (hundreds of Feet)
0
0.5
1.0
1.5
2.0
2.5
3.0
3.5
15
20
25
30
35
40
45
50
55
60

ESTIMATES OF FLOW OBSTRUCTED BY ROADWAY EMBANKMENTS

1964 Conditions

Conveyance & Area to Subsection 2052.78

$K = 3389.16$ $A = 63.99$

Conveyance & Area to Subsection 2152.78

$K = 86,019.59$ $A = 656.12$

Conveyance & Area to Subsection 3447.22

$K = 1,682,571.94$ $A = 10,179.71$

Conveyance & Area to Subsection 3547.22

$K = 1,732,971.41$ $A = 10,619.71$

$$Q_f = \frac{2,607,252.59 - 1,732,971.41}{2,607,252.59} \times 102,000 = 34,203 \text{ cfs}$$

$$Q_{100} = \frac{1,732,971.41 - 1,682,571.94}{2,607,252.59} \times 102,000 = 1972 \text{ cfs}$$

Bridge opening ratio: $M = \frac{1,732,971.41 - 3389.16}{2,607,252.59} = 0.66$
(1964 conditions)

DIETZGEN 1076 Rag Tracing Vellum

CONTRACTION SCOUR - 1964 Conditions

HEC-2 Data For SECTION 33.1: $Q = 102{,}000$ CFS

B_1 = Top width = 3420.80

Area = 18,395

$$\bar{d} = \frac{18{,}395}{3420.80} = 5.38 \quad \text{(average depth)}$$

Average channel elevation = 1083.50 - 5.38 = 1078.12

From page 14 (Formula 2-20) of reference 3, and page 32 (Formula C-2) of reference 5:

$$\frac{y_2}{y_1} = \left(\frac{Q_f}{Q_c}\right)^{6/7} \left(\frac{B_1}{B_2}\right)^{\frac{6(2+a)}{7(3+a)}} \left(\frac{n_2}{n_1}\right)^{\frac{6a}{7(3+a)}}$$

$Q_f = Q_c$ $\quad n_2 = n_1$ $\quad B_1 = 3420.80$ $\quad$ Let $a = 0.25$

$B_2 = 1486.26$ = Top width section 33.0

$$\frac{y_2}{y_1} = \left(\frac{3420.80}{1486.26}\right)^{\frac{6(2.25)}{7(3.25)}} = 1.63$$

$y_2 = 1.63 \times 5.38 = 8.79'$

Elevation scour line = 1084.06 - 8.79 = 1075.27

HEC-2 Data For section 33.0: $Q = 102{,}000$ CFS

$B_2 = 1486.26$

Area = 11233

$$\bar{d}_2 = \frac{11{,}233}{1496.26} = 7.51$$

Average channel elevation = 1084.06 - 7.51 = 1076.55

1076.55 > 1075.27 ∴ contraction scour will occur and 1964 conditions are closer to regime depth.

DIETZGEN 100% Rag Tracing Vellum

ABUTMENT SCOUR

Rt. effective embankment Length:

$$a = \frac{9811}{6.34 \times 10.82} = 143.0 \text{ feet}$$

From pages VI-35 and VI of reference 2:

$$a/y_1 = \frac{143.0}{10.82} = 13.2 < 25 \therefore \text{ EQUATION 6.5.6 is used}$$

$$\frac{y_s}{y_1} = 1.1\left(\frac{a}{y_1}\right)^{0.4} F_{r_1}^{0.33}$$

$$\frac{y_s}{y_1} = 1.1\left(\frac{143.0}{10.82}\right)^{0.4} 0.340^{0.33} = 2.16$$

$$y_s = 2.16 \times 10.82 = 23.40 \text{ Ft. (equilibrium scour)}$$

$$d_s = 1.30 \times 23.40 = 30.4 \text{ Ft (maximum scour Rt. Abutment)}$$

There is essentially no Left embankment restriction and therefore, no Left embankment scour.

PIER SCOUR

From page 19 (Equation 2-29 of reference 3)

$$D/b = 1.5\left(\frac{H}{b}\right)^{0.3}$$

$$D/b = 1.5\left(\frac{10.82}{6}\right)^{0.3} = 1.79$$

$$D = 1.79 \times 6 = 10.74 \text{ Ft.}$$

From page VI-39 of reference 2:

correction for cylindrical piers = 0.9

From page VI-40 of reference 2:

$$\ell/a = \frac{58}{6} = 9.67 \qquad \text{Assume } 30^\circ \text{ Skewed Flow direction}$$

Correction factor for skewed direction = 3.0

d_s = maximum pier scour = $10.74 \times 0.9 \times 3.0 =$ <u>29 Ft.</u>

DIETZGEN 100% Rag Tracing Vellum

SPUR DYKE GEOMETRICS

Lt. Abutment

From pages 51 to 56 of reference 1)

Spur dyke ratio = $\frac{Q_f}{Q_{100}} = \frac{30}{5280} = 0.006$

V_{n_2} = 6.75 F.p.s. = average velocity through bridge, section 32.95 of HEC-2 computations.

From Figure 30 of reference 1)

L_s = 50 feet

Rt. Abutment

Spur dyke ratio = $\frac{9811}{2060} = 4.76$

From Figure 30 of reference 1)

L_s = 250 Ft.

Horizontal geometrics

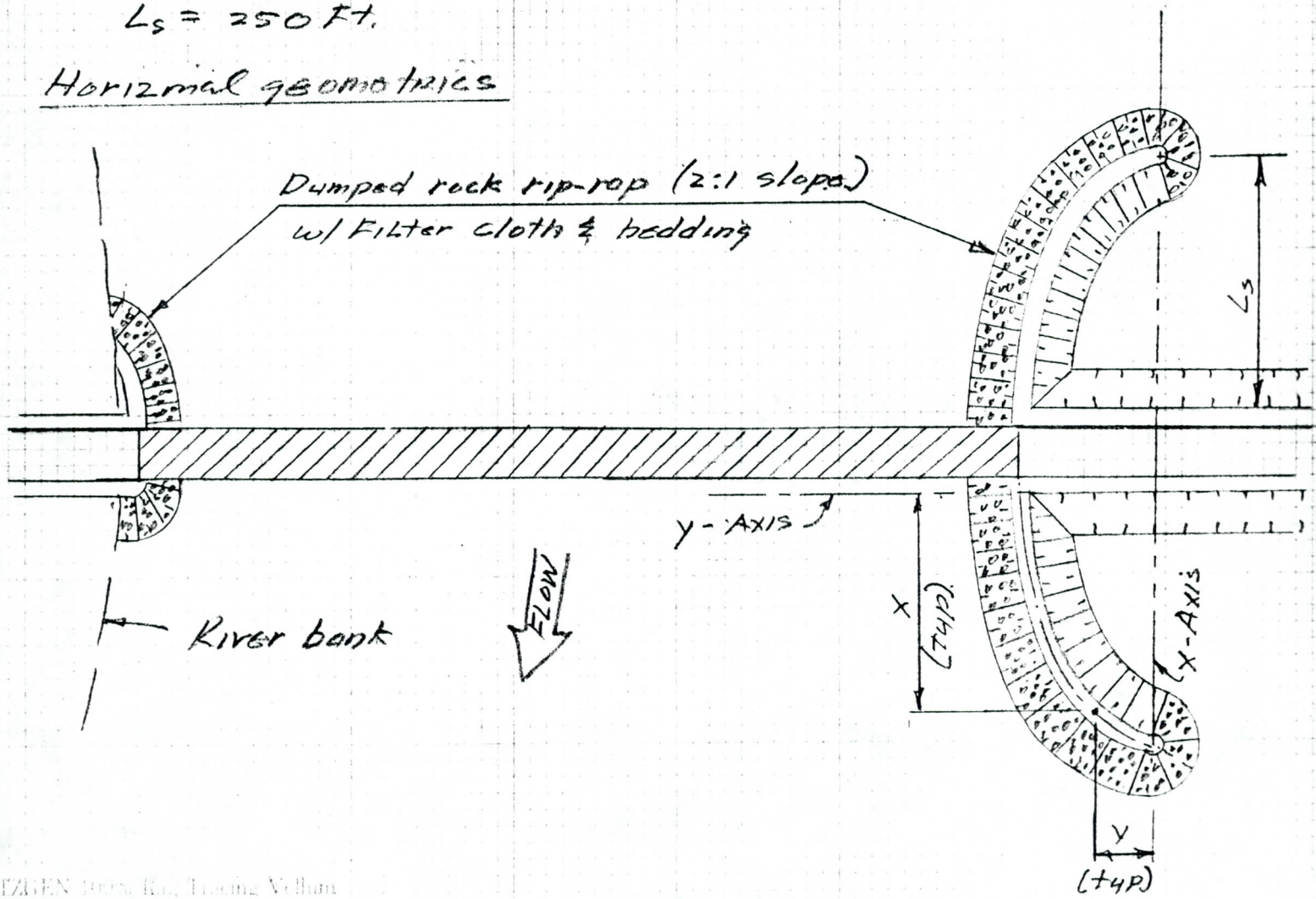

DIETZGEN 1005 Ref. Tracing Vellum

Rt. (Eastorly) spur dykes:

$L_s = A = 250$ feet

$A = 2.5B \quad B = 0.4A = 0.4 \times 250 = 100$ feet

x	$x/A = \cos\phi$	ϕ	$\sin\phi$	$y = B\sin\phi$
250	1.0000000	0	0	0
240	0.9600000	16.26	0.2800000	28.00
225	0.9000000	25.84	0.4358899	43.59
200	0.8000000	36.87	0.6000000	60.00
175	0.7000000	45.57	0.7141428	71.41
150	0.6000000	53.13	0.8000000	80.00
125	0.5000000	60.00	0.8660254	86.60
100	0.4000000	66.42	0.9165151	91.65
50	0.2000000	78.46	0.9797959	97.98
0	0	90.00	1.0000000	100.00

Lt. (Westorly) spur dyke:

$L_s = A = 50$ feet

$A = 2.5B \quad B = 0.4A = 0.4 \times 50 = 20$ feet

x	$x/A = \cos\phi$	ϕ	$\sin\phi$	$y = B\sin\phi$
50	1.0000000	0	0	0
40	0.8000000	36.87	0.6000000	12.00
30	0.6000000	53.13	0.8000000	16.00
20	0.4000000	66.42	0.9165151	18.33
10	0.2000000	78.46	0.9797959	19.60
0	0	90.00	1.0000000	20.00

DIETZGEN 100% Rag Tracing Vellum

RIPRAP SIZING

From pages VIII-62 to VIII of reference 2:

Anticipated mean size of riprap is 12"

From Figure 3.7.3 of reference 2: $\phi = 42°$

Friction slope

$$S_f = \frac{V^2 n^2}{1.486^2 \times R^{4/3}} = \frac{6.34^2 \times 0.035^2}{1.486^2 \times 10.82^{4/3}} = \frac{0.0492396}{2.2082 \times 23.931}$$

$$S_f = 0.000932$$

Average shear stress

$$\tau_0 = \gamma y_0 S_f = 62.5 \times 10.82 \times 0.000932 = 0.63 \text{ psf}$$

Stability number

Assume rock has specific weight (S_s) of 2.50

$$h = \left[\frac{S_m^2 - (S.F.)^2}{(S.F.)\, S_m^2}\right] \cos\theta \qquad \theta = 26.5° \text{ (2:1 slope)}$$

$$S_m = \frac{\tan\phi}{\tan\theta} = \frac{0.900404}{0.500000} = 1.80$$

$$h = \left[\frac{1.80^2 - 1.50^2}{(1.5)(1.8)^2}\right] 0.8944272 = 0.182$$

Effective Rock size:

$$D = \frac{21\, \tau_0}{(S_0 - 1)\, \gamma n} = \frac{21 \times 0.63}{(2.5-1)\, 62.5 \times 0.182} = 0.78 \text{ Ft or } 9\tfrac{1}{2} \text{ in.}$$

12.0625

Average rock size: (From Figure 6.4.3, reference 2)

$$D_{50} = \frac{D}{1.25} = \frac{9.5}{1.25} = 7.6 \text{ inches}$$

DIETZGEN 1005 Red Tracing Vellum

Check sizing of riprap in scour pool

Average velocity in scour pool (Rt. Abutment)

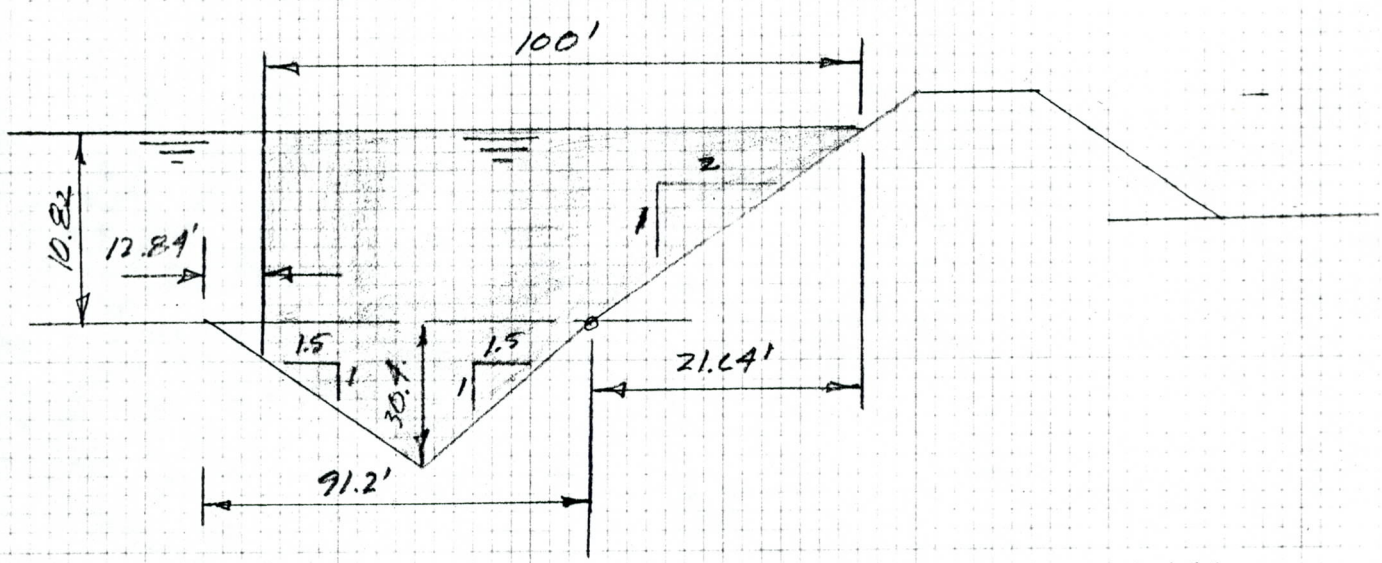

$$\text{Flow area: } \Sigma A = (100-10.82)\,10.82 + \underbrace{\frac{91.2 \times 30.4}{2}}_{1366.24} - \underbrace{\left(\frac{12.84 \times 8.56}{2}\right)}_{54.96}$$

$$\Sigma A = 2296.21$$

$$\Sigma Q = Q_f + Q_{100} = 9811 + 2060 = 11871 \text{ cfs}$$

$$V = \frac{11,871}{2296.21} = 5.16 \text{ f.p.s.}$$

$$Y_o/D = \frac{30.5}{0.78} = 39.1$$

Find depth-averaged velocity ratio:

$$\frac{V_R}{V} = \frac{3.4}{\ln\left(12.3\,\frac{Y_o}{D}\right)} = \frac{3.4}{6.176} = 0.551$$

Average shear stress in scour pool:

$$\tau_o \cong \frac{1}{0.551} \times 0.63 = 1.14 \text{ psf}$$

Stability number w/ shear stress = 1.14 psf

$$\eta = \frac{21\,\tau_o}{(S_s-1)\,\gamma D} = \frac{21 \times 1.14}{(2.5-1)\,62.5\,(0.78)} = 0.327$$

DIETZGEN 100% Rag Tracing Vellum

Safety factor in scour pool

$$S.F. = \frac{S_m}{2}\left[(\varepsilon^2+4)^{1/2} - \varepsilon\right]$$

where $\varepsilon = S_m \eta \sec\theta$

$$\varepsilon = 1.8 \times 0.327 \times 1.1174003 = 0.657$$

$$S.F. = \frac{1.8}{2}\left[(0.657^2+4)^{1/2} - 0.657\right]$$

$S.F. = 0.9\ (1.448) = 1.30 < 1.50$ ∴ riprap size is inadequate

Riprap size for 1.5 safety factor in scour pool

$\eta = 0.182$ (see previous pages)

$$D = \frac{2\tau_o}{(S_o-1)\gamma\eta} = \frac{2 \times 1.14}{(2.5-1)(62.4)(0.182)} = 1.40 \text{ feet or } 17 \text{ inches}$$

$$D_{50} = \frac{17}{1.25} = 13.6 \text{ inches} \quad (\text{use } 15 \text{ inches})$$

$$D_{100} = 2\,D_{50} = 2 \times 15 = 30 \text{ inches}$$

Use gradation as shown in figure 6.4.3 of reference 2:

Use Filter cloth with 6" bedding material per pages 394 and 395 of Reference 9:

DIETZGEN 1005 Red Tracing Vellum

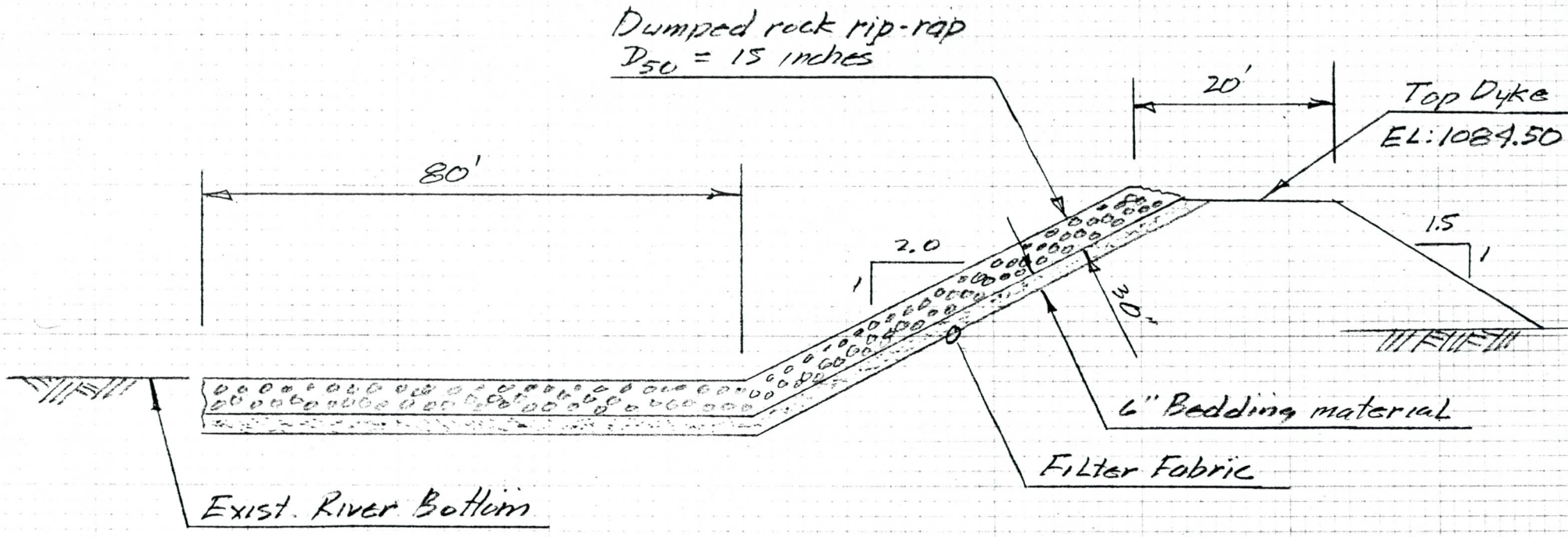

SPUR DYKE X-SECTION

SUMMARIES OF WATER SURFACE COMPUTATIONS (EXISTING AND 1964 CONDITIONS)

Section	Existing Conditions W/O Bridge	Existing Conditions W/Bridge	1964 Conditions W/O Bridge	1964 Conditions W/Bridge
10	1061.50	1061.50		
11	1062.29	1062.29		
12	1062.30	1062.30		
13	1062.32	1062.32		
14	1062.34	1062.34		
15	1062.40	1062.40		
16	1062.35	1062.35		
17	1062.45	1062.45		
18	1062.47	1062.47		
19	1062.48	1062.48		
20	1062.48	1062.48		
21	1062.49	1062.49		
22	1061.95*	1061.95*	1067.50	1067.50
23	1066.57	1066.57	1071.04	1071.04
24	1068.64	1068.64	1072.11	1072.09
25	1069.18	1069.19	1072.69	1072.73
26	1069.93	1069.96	1074.75	1074.73
27	1070.84	1071.01	1076.32	1076.17
28	1072.60*	1072.08*	1077.76	1077.70
29	1075.03	1074.98	1079.50	1079.99
30	1075.46	1075.24*	1080.38	1081.23
31	1079.11	1079.13	1081.09	1082.32
32	1080.61	1081.38	1082.20	1083.26
32.9	1081.35	1081.99	1083.37	1084.16
32.95	(Bridge)	1082.07	(Bridge)	1084.30
33.0	1081.63	1082.17	-	1084.06
33.1	1081.54	1082.28	1083.50	1084.19
34	1082.17	(N/A)	1084.28	(N/A)
35	1083.27	(N/A)	1084.81	(N/A)
36	1084.21	1084.21	1085.27	1087.53⊕
37	1085.35	1085.35	1086.39	1087.86⊕
38	1087.33	1087.33	1087.35	1088.21⊕
39	1089.56	1089.56		
40	1090.64	1090.64		
41	1091.22	1091.22		
42	1091.86	1091.86		
43	1093.28	1093.28		
44	1094.33	1094.33		
45	1095.97	1095.97		
46	1097.31	1097.31		
47	1099.69	1099.69		
48	1101.68	1101.68		
49	1104.38*	1104.38*		
50	1107.37	1107.37		
51	1107.99	1107.99		
52	1108.91	1108.91		
53	1109.92	1109.92		
54	1110.72	1110.72		
55	1111.77	1111.77		
56	1112.87	1112.87		
57	1113.93	1113.93		

*Critical

N/A Not Applicable (Varied Flow - i.e., Within 1500' Upstream Influence Zone of Bridge)

⊕Includes No Contraction Scour

BIBLIOGRAPHY

1. U.S. Department of Transportation, Federal Highway Administration, Hydraulic Design Series, No. 1, "Hydraulics of Bridge Waterways", Washington, D.C., March, 1978

2. U.S. Department of Transportation, Federal Highway Administration, Training and Design Manual, "Highways in the River Environment Hydraulic and Environmental Design Considerations", Washington, D.C., May 1975

3. U.S. Department of Transportation, Federal Highway Administration, Offices of Research & Development, "Scour Around Bridge Piers", (Report No. FHWA-RD-79-103), Washington, D.C., February 1980, Final Report

4. U.S. Department of Transportation, Federal Highway Administration, Offices of Research & Development, "Scour Around Circular Bridge Piers at High Froude Numbers", (Report No. FHWA-RD-79-109), Washington, D.C., April 1979, Final Report

5. Highway Research Board, Division of Research, National Research Council, National Academy of Sciences-National Academy of Engineering, "Scour at Bridge Waterways", (National Cooperative Highway Research Program, Synthesis of Highway Practice 5), Washington, D.C., 1970

6. Hydrologic Engineering Center, U.S. Army Corps of Engineers, "Generalized Computer Program 723-X6-L202A, HEC-2, Water Surface Profiles, User's Manual", Davis, California, March 1982

7. Hydrologic Engineering Center, U.S. Army Corps of Engineers, "Training Document Application of HEC-2 Bridge Routines", Davis, California, June 1974

8. Department of the Army, Corps of Engineers, Office of the Chief of Engineers, "Engineering and Design - Hydraulic Design of Flood Control Channels", Washington, D.C., July 1, 1971

9. State of Arizona, Department of Transportation, Highways Division, "Standard Specifications for Road and Bridge Construction", Edition of 1982

10. U.S. Department of Transportation, Federal Highway Administration, Bureau of Public Roads, "Use of Riprap for Bank Protection", Hydraulic Engineering Circular No. 11, Washington, D.C., June 1967

11. Department of Army, Corps of Engineers, "Flood Plain Information, Agua Fria River, Maricopa County, Arizona", Los Angeles District, California, March 1968

ENGINEERING DIVISION

LETTER OF TRANSMITTAL

MARICOPA COUNTY HIGHWAY DEPARTMENT
3325 W. DURANGO ST.
PHOENIX, AZ. 85009

DATE: APRIL 12, 1985
ATTENTION: SCOTT BUCHANAN
RE: PROJECT NO. 68274
OLIVE AVE. BRIDGE -
AGUA FRIA RIVER

TO FLOOD CONTROL DISTRICT

GENTLEMEN:

WE ARE SENDING YOU

☒ Attached ☐ Under separate cover via _____ the following items:

☐ Copy of letter ☐ Prints ☐ Plans ☐ Examples ☐ Change order

☐ _____

ITEM	DATE	COPIES	DESCRIPTION
1	4-9-85	1	HYDRAULIC REPORT - VOL. I
2	-	1	DO - COMPUTER PRINTOUT

THESE ARE TRANSMITTED as checked below:

☒ For your use ☐ Accepted as submitted ☐ Resubmit _____ copies for approval

☐ As requested ☐ Accepted as noted ☐ Submit _____ copies for distribution

☐ For review and comment ☐ Returned for corrections ☐ Return _____ corrected prints

☐ _____

REMARKS _____

COPY TO ☒ Central Files

☒ Design Supervisor

☐ _____

PREPARED BY P. EPSTEIN

PHONE 233-8625

If enclosures are not as noted, kindly notify us at once.

—Phil Epstein—
Hwy

FLOOD CONTROL DISTRICT of Maricopa County

Interoffice Memorandum

CMT. NO.

SUBJECT:

☐ FILE
☐ DESTROY

TO:

FROM: {OLIVE AVE}

DATE:

	WSEL (nat)	(enc)
84 study	1078.19	1078.95
75 study	1081.61	1082.55

Q=99000

	w/out bridge	w/ brige
(2 miles dwnstr 2 miles upstrm) existing	1081.63	1082.17
(1 mile dwnstrm to ½ mi upstrm) 1964	1083.50	1084.06

Q= 102,000 from 2 miles upstrm to 2 mi dwnstrm existing
" 1 mi dwnstrm to ½ mi upstrm - 1964

find out datum

insert bridge into COE Agua Fria run.

6900-003
11/78