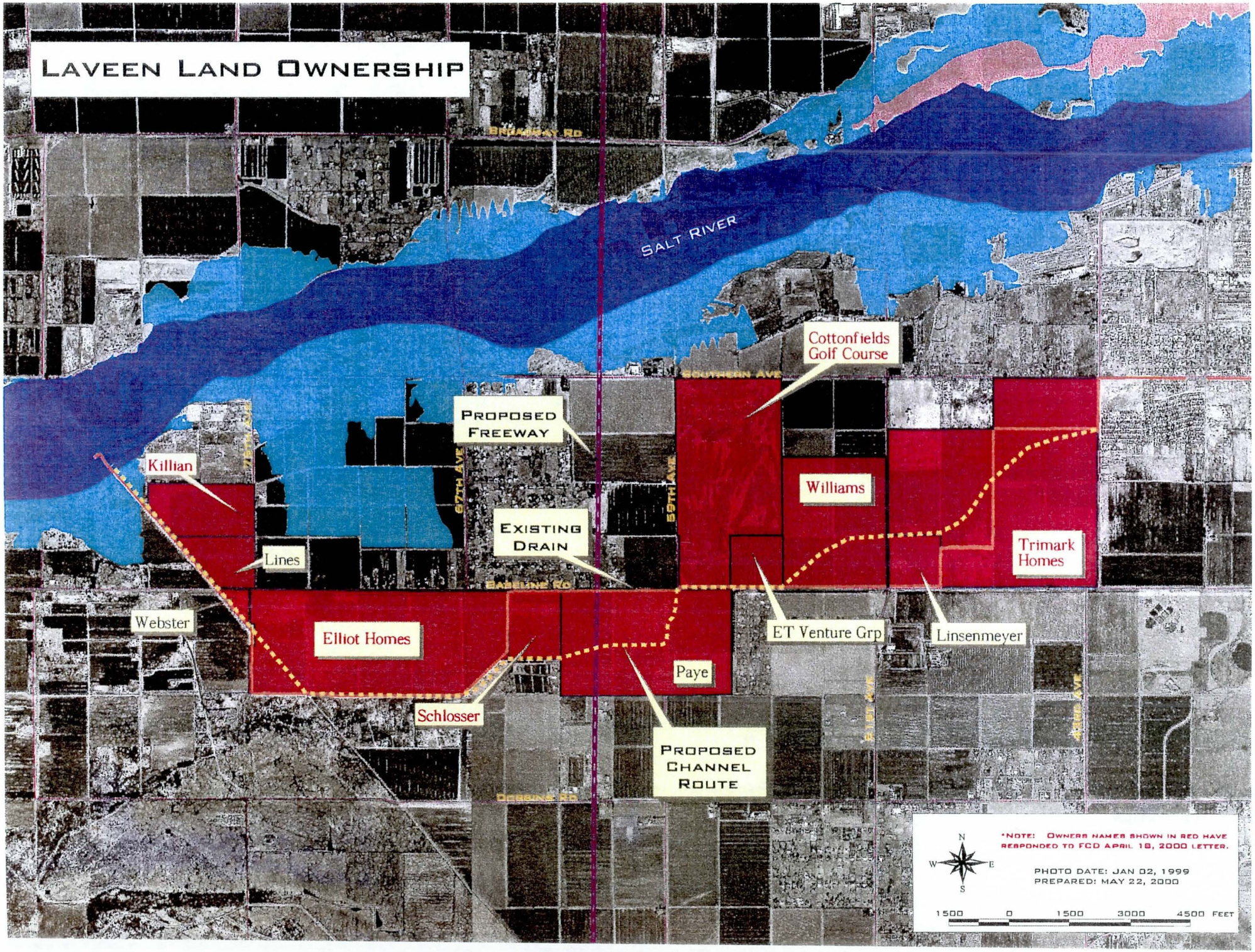
LAVEEN LAND OWNERSHIP
BROADWAY RD
SALT RIVER
SOUTHERN AVE
Cottonfields Golf Course
PROPOSED FREEWAY
Killian
67TH AVE
59TH AVE
Williams
EXISTING DRAIN
Lines
Trimark Homes
BASELINE RD
Webster
Elliot Homes
ET Venture Grp
Linsenmeyer
Paye
Schlosser
PROPOSED CHANNEL ROUTE
DOBBINS RD
*NOTE: OWNERS NAMES SHOWN IN RED HAVE RESPONDED TO FCD APRIL 18, 2000 LETTER.
N
W
E
S
PHOTO DATE: JAN 02, 1999
PREPARED: MAY 22, 2000
1500 0 1500 3000 4500 FEET

FLOOD CONTROL DISTRICT OF MARICOPA COUNTY

PROJECT LACC PAGE ____ OF ____

DETAIL Retaining Walls COMPUTED KVH DATE 5/02

CHECKED BY ____ DATE ____

Type. I

Ht = 16'

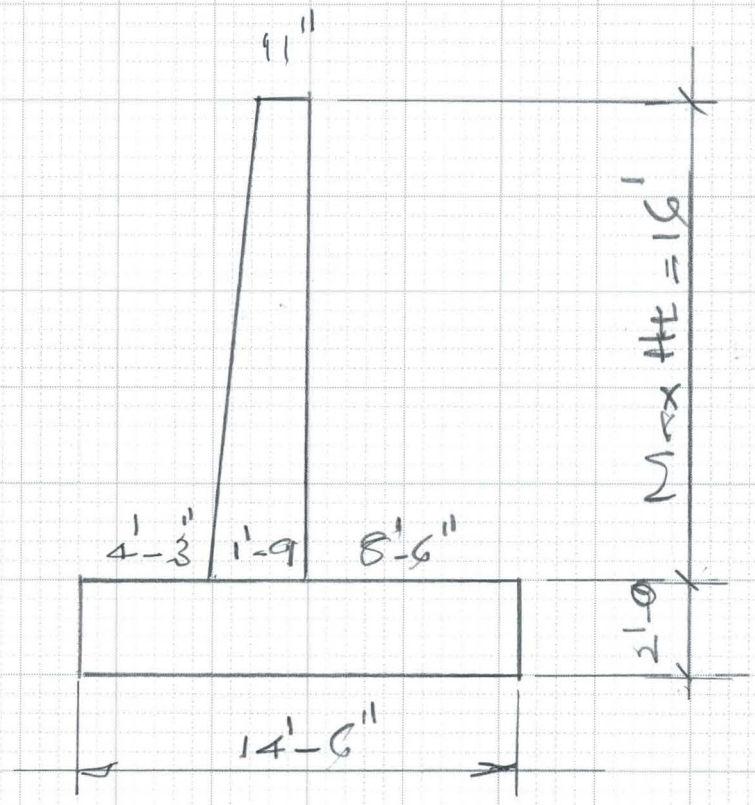

Type. II

Ht = 14'

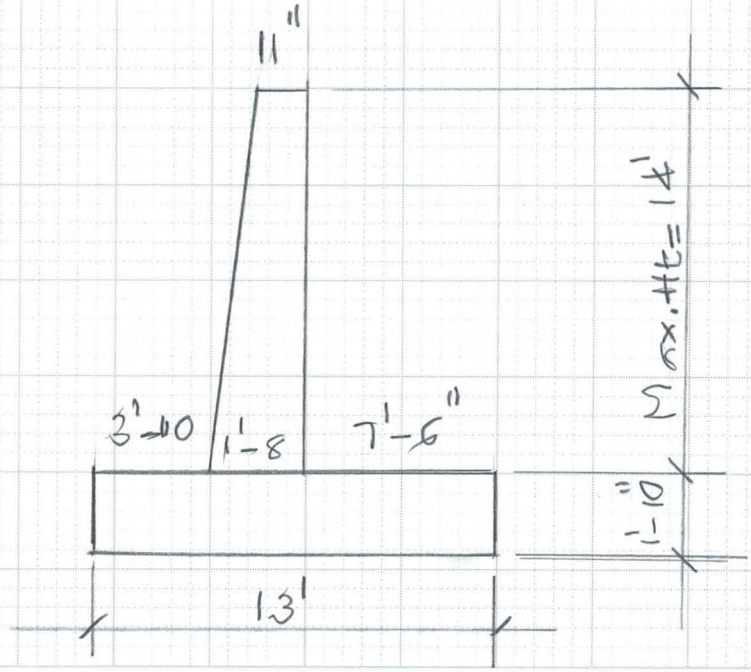

6910-153 4-90

FLOOD CONTROL DISTRICT OF MARICOPA COUNTY

PROJECT ↳ ACC PAGE ____ OF ____

DETAIL Retaining walls. COMPUTED KVH DATE 5/02

CHECKED BY ____ DATE ____

Type III
Ht = 12'

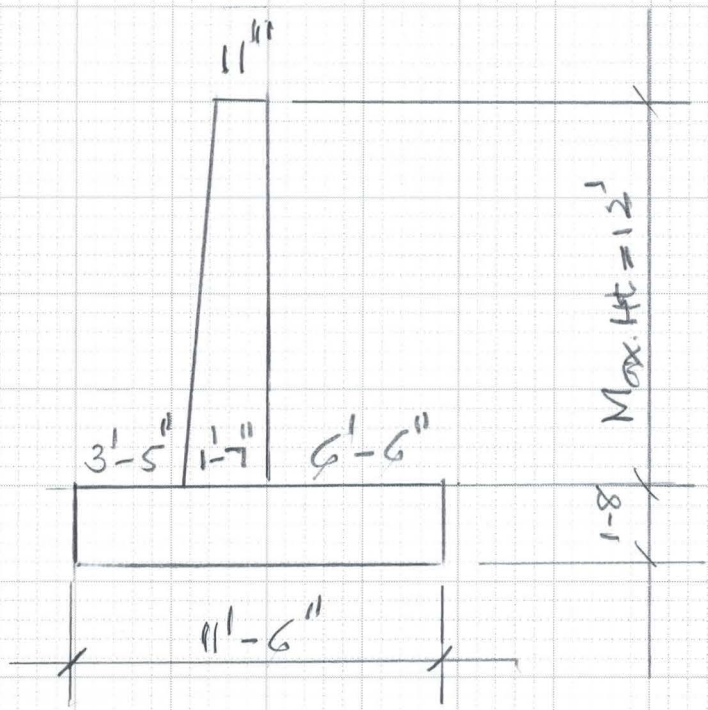

Type IV
Ht = 10'

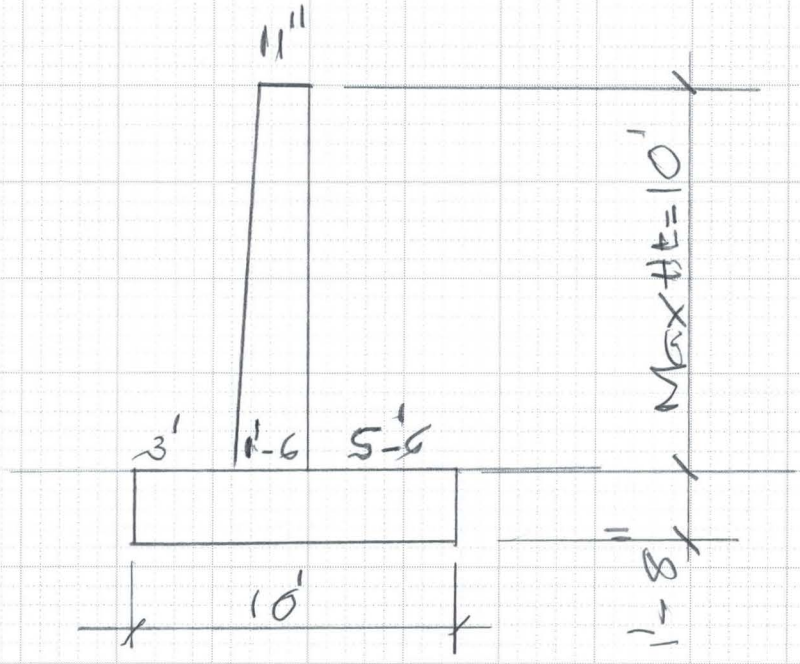

6910-153 4-90

FLOOD CONTROL DISTRICT OF MARICOPA COUNTY

PROJECT LACC PAGE ___ OF ___

DETAIL Retaining walls COMPUTED KWH DATE 5/02

CHECKED BY ___ DATE ___

Type V

5'-0
1-4½
6-4½

8-12
6-4½
2-7½

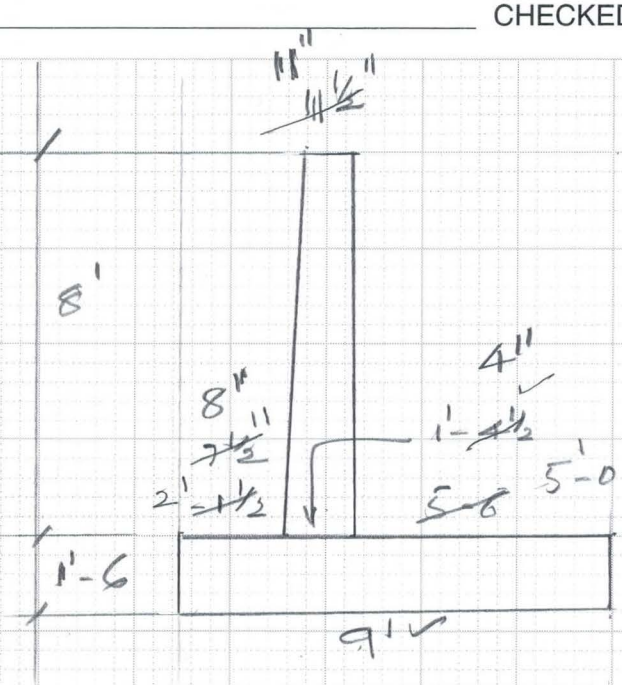

H = 8'

Type VI

4-0
1-2½
5-2½

2'-6
5-2½
2-3½

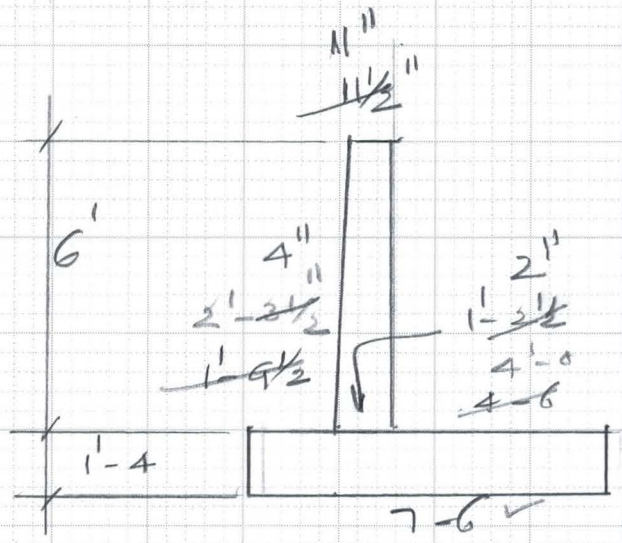

H = 6'

Type VII

3-6
1-6½
4-6½
1-11½

3-0
1-0½
4-½
1-11½
6'-0

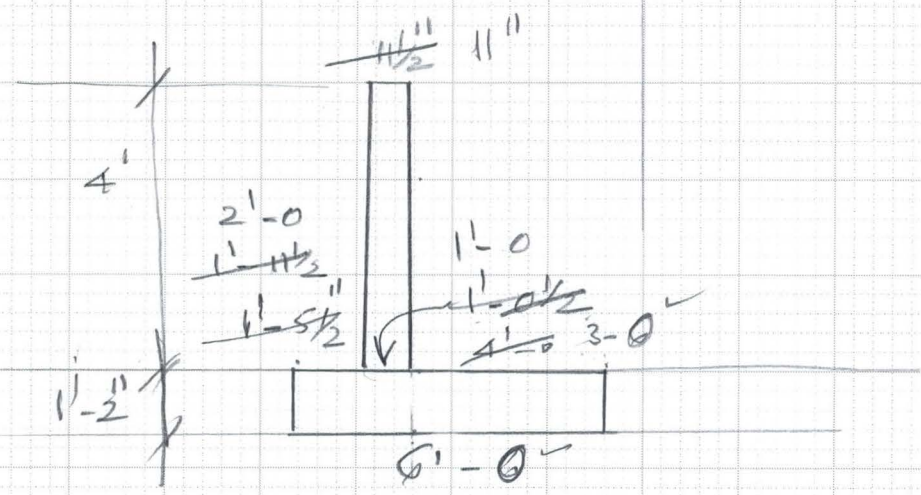

6910-153 4-90

FLOOD CONTROL DISTRICT OF MARICOPA COUNTY

PROJECT LACC PAGE ____ OF ____

DETAIL Retaining Walls COMPUTED KVH DATE 4/02

CHECKED BY ____ DATE ____

Wall Type	Wall Sect. & Dimensions			
	H(Max)	B	W	
Type I	16'	2'-0	14'-6"	
II	14'	1'-10"	13'-0	
III	12'	1'-8"	11'-6"	
IV	10'	1'-8"	10'-0"	
V	8'	1-6"	9'-0"	
VI	6'	1-4"	7'-6"	
VII	4'	1-2"	~~6'-6"~~	6'-0

6910-153 4-90

FLOOD CONTROL DISTRICT OF MARICOPA COUNTY

PROJECT LACC PAGE ___ OF ___

DETAIL Retaining walls COMPUTED KVH DATE 3/02

@ Power poles. CHECKED BY ___ DATE ___

Ht = 16'

Loading on Retaining walls (AASHTO)

$P_N \frac{H}{Q_P} = 0.78$, $Q_P = 40^K$ (Crane)

1) $H = 10'$ $P_N = \frac{40^K \times 0.78}{10} = 3.12^K/ft$

2) $H = 12'$ $P_N = \frac{40 \times 0.78}{12} = 2.6^K$

3) $H = 14'$ $P_N = \frac{40 \times 0.78}{14} = 2.22^K$

4) $H = 16'$ $P_N = \frac{40 \times 0.78}{16} = 1.95^K$

5) $H = 8'$ $P_N = \frac{40 \times 0.78}{8} = 3.9^K$

6) $H = 6$ $P_N = \frac{40 \times 0.78}{6} = 5.2^K$

7) $H = 4'$ $P_N = \frac{40 \times 0.78}{4} = 7.8^K$

Acting @ 0.59 H,

	H
5.9'	10'
7.1'	12
8.3'	14
9.44	16

8' — 4.7'

6' — 3.5'

6910-153 4-90

FLOOD CONTROL DISTRICT OF MARICOPA COUNTY

PROJECT LAGG PAGE ___ OF ___

DETAIL Retaining wall 16' High COMPUTED KVH DATE 3/02

CHECKED BY ___ DATE ___

Type. 1 (Ht = 16')

$0.59 \times 16' = 9.44'$

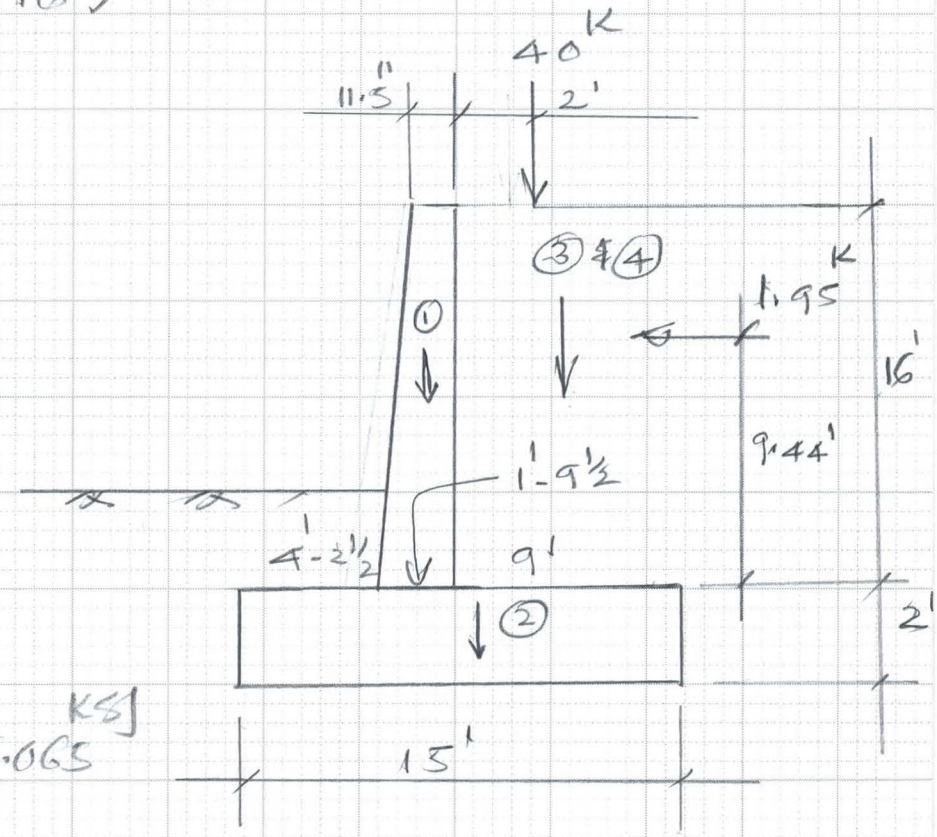

$P = 40^K$

$\left(\frac{40}{18 \times 34}\right) = 0.065^{KSI}$

$W_1 = \left(\frac{0.958 + 1.792}{2}\right) 16 \times 0.15 = 3.3^K$

$W_2 = 2 \times 15 \times 0.15 = 4.5$

$W_3 = 9 \times 16 \times 0.12 = 17.28$

W_4 (Crane) $= 0.065 \times 9 = 0.59$

$W = 25.67^K$

6910-153 4-90

FLOOD CONTROL DISTRICT OF MARICOPA COUNTY

PROJECT LACC PAGE ___ OF ___

DETAIL Retaining walls COMPUTED KVH DATE 3/02

16' wall CHECKED BY ___ DATE ___

Type 1 Ht = 16'

$M_{Res.} = 3.3(4.21+1.38) + (4.5 \times 7.5) + 17.28(15-4.5) + 0.59 \times (10.5)$

$= (18.45 + 33.75 + 181.4 + 6.2) = 239.9^{k\text{-}ft}$

$M_{O.T.}$: Soil pr $= (0.12 \times 0.33 \times 18) = 0.713^{ksf}$

$P_{soil} = \frac{0.713}{2} \times 18 = 6.42^{k}$

$P_{crane} = 1.95^{k}$

$M_{OT} = (6.42 \times \frac{18}{3}) + 1.95(9.44+2)$

$= (38.5 + 22.31) = 60.8^{k\text{-}ft}$

$FS = \frac{239.9}{60.8} = 3.9$ OK

$X_R = (239.9 - 60.8)/25.67 = 6.98'$

$e = (7.5 - 6.98) = 0.52$ $\frac{b}{6} = 2.5$

$p_{r\,max\,or\,min} = \frac{25.67}{15}\left(1 \pm \frac{6 \times 0.52}{15}\right)$

$= 1.71(1 \pm 0.21)$

$p_{r\,max} = 2.1$, $< 3.0^{ksf}$

$p_{min} = 1.35^{ksf}$

Since the magnitude of horiz. force and location varies for different methods (AASHTO & Boussinesq) Good to have same factor of Safety

6910-153 4-90

FLOOD CONTROL DISTRICT OF MARICOPA COUNTY

PROJECT LAGG PAGE ___ OF ___

DETAIL Retaining Walls COMPUTED KVH DATE 3/02

16' wall CHECKED BY ___ DATE ___

Type 1 (Wall Ht = 16')

Wall Steel:

Soil pr $= (0.12 \times 0.33 \times 16) = 0.634^{ksf}$

$P_{soil} = \frac{0.634}{2} \times 16 = 5.1^{K}$

$P_{crane} = 1.95^{K}$

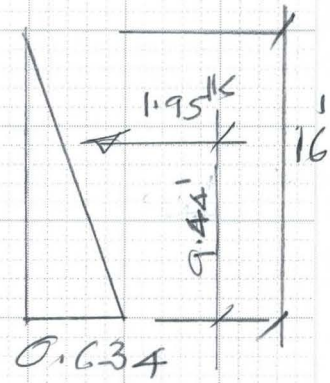

$M = (5.1 \times \frac{16}{3}) + (1.95 \times 9.44)$

$= (27.2 + 18.4) = 45.6^{k'}$

$d_{eff} = (1' - 9\tfrac{1}{2}) - 1\tfrac{1}{2} - 2 - 0.5 = 17.5''$

form liner

$A_s = \frac{45.6 \times 12}{24 \times 0.88 \times 17.5}$

$= 1.5 \text{ in}^2$

#8 @ 6" = 1.58

#9 @ 6" = 2.00

Use #9 @ 6", as the Horz. force varies for different Methods

Check wall Shear:

$V = (5.1 + 1.95)^{K} = 7.05^{K}$

$b = 12 \quad d = 17.5 \qquad v = \frac{7.05}{12 \times 17.5} = 33.6 \text{ psi}$

$v(\text{allow}) = 0.95\sqrt{3000} = 52 \therefore \text{OK}$

6910-153 4-90

FLOOD CONTROL DISTRICT OF MARICOPA COUNTY

PROJECT LACC PAGE ___ OF ___

DETAIL Retaining walls COMPUTED KVH DATE 3/02

16' wall CHECKED BY ___ DATE ___

Check Heel

$M = (17.28 \times 4.5) + (0.59 \times 4.5) + (9 \times 2 \times 0.15 \times 4.5) - (1.35 \times 9 \times 4.5)$

$= (77.8 + 2.7 + 12.2 - 54.7)$

$= 38$ kft

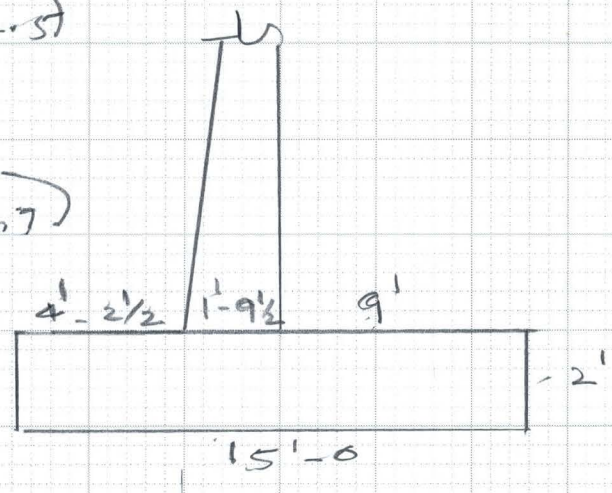

$d_{eff} = (24 - 3 - 0.5)$

$= 20.5''$

$A_s = \frac{38 \times 12}{24 \times 0.88 \times 20.5}$

$= 1.1$ in^2

#9 @ 6"

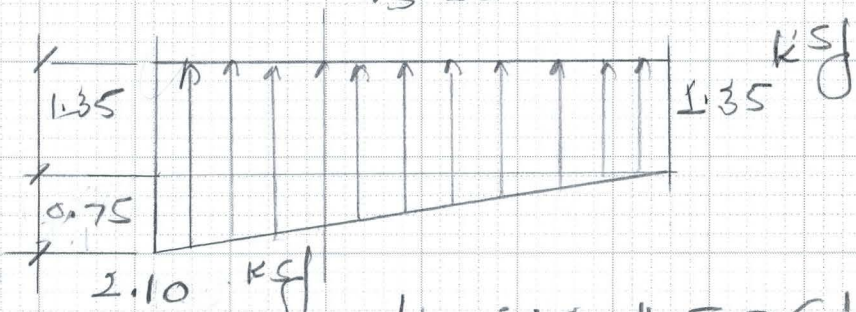

As the footing pr. may vary, provide #8 @ 6" or the same as the wall to take care of this variation in pressure.

Check Toe

$M = \left(2.1 \times 4.21 \times \frac{4.21}{2}\right) = 18.6$ kft

Min. Steel, Turn the wall steel into the toe

FLOOD CONTROL DISTRICT OF MARICOPA COUNTY

PROJECT LAGG PAGE ___ OF ___

DETAIL Retaining wall COMPUTED KVH DATE 3/0

16' wall CHECKED BY ___ DATE ___

Type. 1 (Ht = 16')

$0.59 \times 16' = 9.44'$

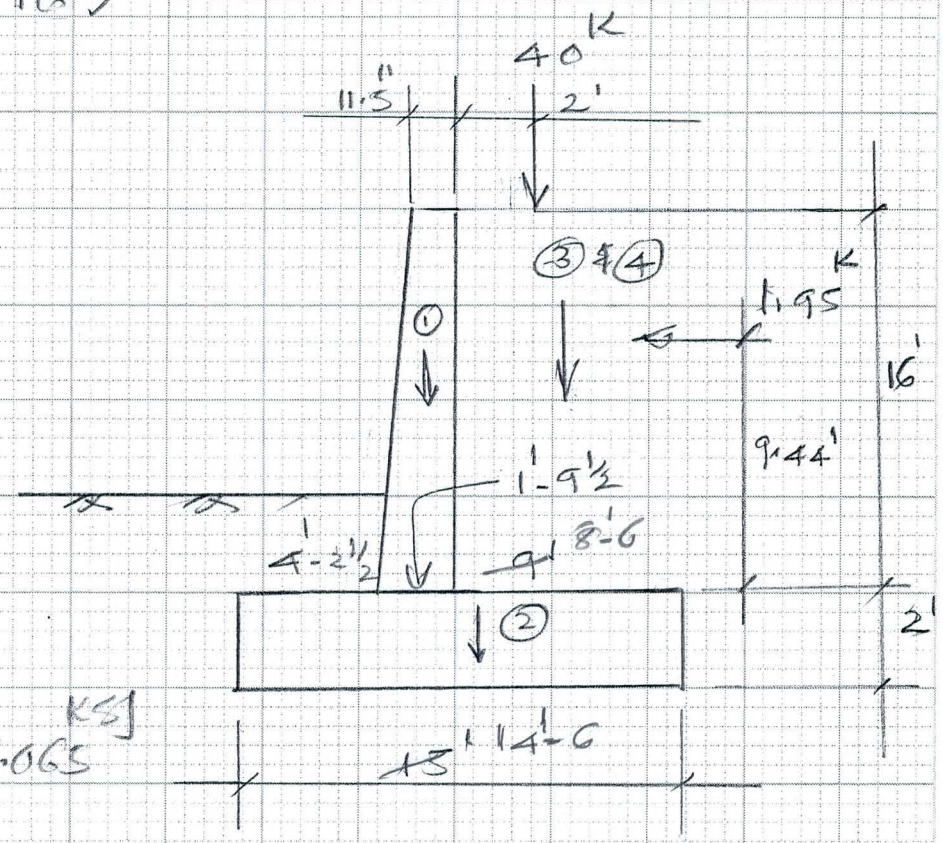

$P = 40^K$

$\left(\frac{40}{18 \times 34}\right) = 0.065^{KSI}$

$W_1 = \frac{(0.958 + 1.792)}{2} 16 \times 0.15 = 3.3^K$

$W_2 = 2 \times \cancel{15}\,14.5 \times 0.15 = \cancel{4.5}\,4.35$

$W_3 = \cancel{9}\,8.5 \times 16 \times 0.12 = \cancel{17.28}\,16.32$

W_4 (Grame) $= 0.065 \times \cancel{9}\,8.5 = \cancel{0.59}\,0.55$

$W = \cancel{25.67}\,24.52^K$

6910-153 4-90

FLOOD CONTROL DISTRICT OF MARICOPA COUNTY

PROJECT LACC PAGE ___ OF ___

DETAIL Retaining walls COMPUTED KVH DATE 3/02

16' wall CHECKED BY ___ DATE ___

Check Heel

$M = (17.28 \times 4.5) + (0.59 \times 4.5) + (9 \times 2 \times 0.15 \times 4.5) - (1.35 \times 9 \times 4.5)$

$= (77.8 + 2.7 + 12.2 - 54.7)$

$= 38$ Kft

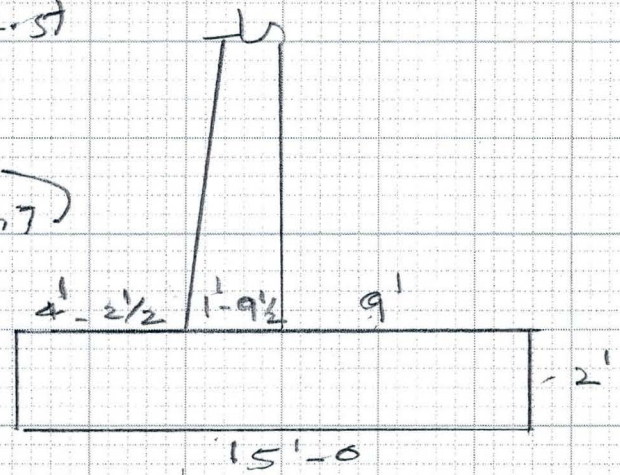

$d_{eff} = (24 - 3 - 0.5)$

$= 20.5''$

$A_s = \frac{38 \times 12}{24 \times 0.88 \times 20.5}$

$= 1.1 \text{ in}^2$

#7 @ 6"

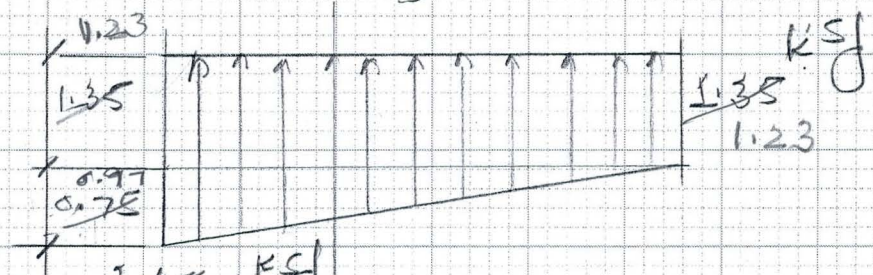

As the footing pr. may vary, provide #8 @ 6" or the same as the wall to take care of the variation in pressure.

Check Toe

$M = \left(2.1 \times 4.21 \times \frac{4.21}{2}\right) = 18.6$ Kft

Min. Steel, Turn the wall Steel into the Toe

6910-153 4-90

FLOOD CONTROL DISTRICT OF MARICOPA COUNTY

PROJECT LACC PAGE ___ OF ___

DETAIL Retaining walls COMPUTED KVH DATE 3/02

16' wall CHECKED BY ___ DATE ___

Type 1 Ht = 16'

$M_{Res.} = 3.3(4.21 + 1.38) + (\cancel{4.5}\,4.35 \times \cancel{7.5}\,7.25) + \cancel{17.25}\,16.32\,(\cancel{15 - 4.5}\,14.5 - 4.25)$

$+ \cancel{0.59}\,0.55 \times (\cancel{10.5}\,10.25)$

$= (18.45 + \cancel{33.75}\,31.5 + \cancel{181.4}\,167.3 + \cancel{6.2}\,5.6) = \cancel{239.9}\,222.9$ kft

M_{OT}: Soil pr $= (0.12 \times 0.33 \times 18) = 0.713$ ksf

$P_{soil} = \frac{0.713}{2} \times 18 = 6.42^k$

$P_{crane} = 1.95^k$

$M_{OT} = (6.42 \times \frac{18}{3}) + 1.95(9.44 + 2)$

$= (38.5 + 22.31) = 60.8$ kft

$FS = \frac{\cancel{239.9}\,222.9}{60.8} = \cancel{3.9}\,3.7$ OK

$X_R = (\cancel{239.9}\,222.9 - 60.8) / \cancel{25.67}\,24.52 = \cancel{6.98}\,6.61'$

$e = (\cancel{7.5}\,7.25 - \cancel{6.98}\,6.61) = \cancel{0.52}\,0.64$ $\quad \frac{b}{6} = \cancel{2.5}\,2.42$

$p_{r\,max/min} = \frac{\cancel{25.67}\,24.52}{\cancel{15}\,14.5}\left(1 \pm \frac{6 \times \cancel{0.52}\,0.64}{\cancel{15}\,14.5}\right)$

$= \cancel{1.71}\,1.69\,(1 \pm \cancel{0.21}\,0.27)$

$p_{r\,max} = \cancel{2.1}\,2.2$, < 3.0 ksf

$p_{min} = \cancel{1.35}\,1.23$ ksf

Since the magnitude of horiz. force and location varies for different methods (AASHTO & Boussinesq) Good to have some factor of safety

6910-153 4-90

FLOOD CONTROL DISTRICT OF MARICOPA COUNTY

PROJECT LAGG PAGE ___ OF ___

DETAIL Retaining Walls COMPUTED KVH DATE 3/02

16' wall CHECKED BY ___ DATE ___

Type 1 (Wall Ht = 16')

Wall Steel:

Soil pr $= (0.12 \times 0.33 \times 16) = 0.634^{ksf}$

$P_{soil} = \frac{0.634}{2} \times 16 = 5.1^{K}$

$P_{crane} = 1.95^{K}$

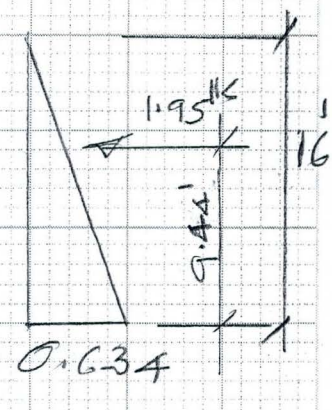

$M = (5.1 \times \frac{16}{3}) + (1.95 \times 9.44)$

$= (27.2 + 18.4) = 45.6^{K'}$

$d_{eff} = (1' - 9\tfrac{1}{2}) - 1\tfrac{1}{2} - 2 - 0.5 = 17.5''$

form liner

$A_s = \frac{45.6 \times 12}{24 \times 0.88 \times 17.5}$

$= 1.5 \text{ in}^2$

#8 @ 6" = 1.58

#9 @ 6" = 2.00

Use #9 @ 6", as the Horz. force varies for different Methods

Check wall Shear:

$V = (5.1 + 1.95)^{K} = 7.05^{K}$

$b = 12 \quad d = 17.5 \qquad v = \frac{7.05}{12 \times 17.5} = 33.6 \text{ psi}$

$v_{(allow)} = 0.95\sqrt{3000} = 52 \therefore$ ok

6910-153 4-90

FLOOD CONTROL DISTRICT OF MARICOPA COUNTY

PROJECT LACC PAGE ___ OF ___

DETAIL Retaining walls COMPUTED KVH DATE 5/02

12' wall CHECKED BY ___ DATE ___

Type. 3 (Ht = 12')

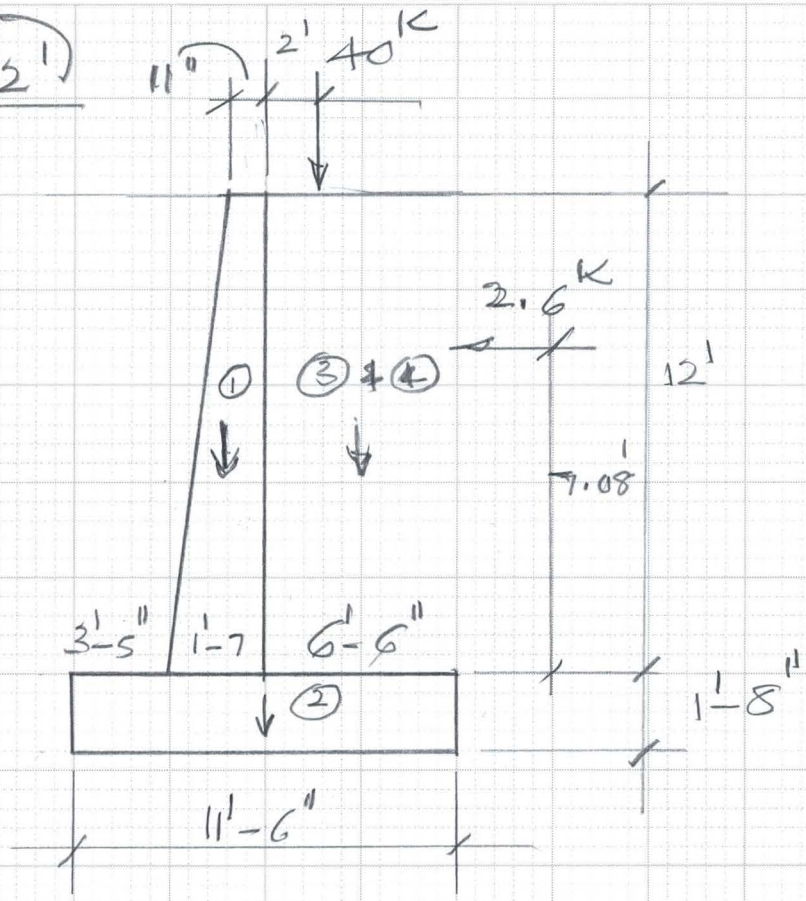

$0.59 \times 12 = 7.08'$

$P = \left(\frac{40^K}{14 \times 26}\right)$

$= 0.11$ ksf

$W_1 = (0.917 + 1.58)/2 \times 12 \times 0.15 = 2.25^K$

$W_2 = 1.67 \times 11.5 \times 0.15 = 2.88$

$W_3 = 6.5 \times 12 \times 0.12 = 9.36$

W_4 (Crane) $= (0.11 \times 6.5) = 0.72$

$W = 15.21^K$

FLOOD CONTROL DISTRICT OF MARICOPA COUNTY

PROJECT LACC PAGE ___ OF ___

DETAIL Retaining wall COMPUTED KVH DATE 5/02

12' High CHECKED BY ___ DATE ___

12' High wall (Type 3)

$M_{BCS} = 2.25(3.42 + 1.25) + (2.88 \times \frac{11.5}{2}) + 9.36(5 + 3.25) + (0.72 \times 8.25)$

$= (10.51 + 16.56 + 77.22 + 5.94) = 110.23^{K\text{-}ft}$

$M_{O.T}$: $Soil.pr = (0.12 \times 0.33 \times 13.67) = 0.541^{ksf}$

$P_{soil} = (\frac{0.541}{2}) 13.67 = 3.7^{K}$

$P_{crane} = 2.6^{K}$

$M_{O.T} = (3.7 \times \frac{13.67}{3}) + 2.6(3.08 + 1.67)$

$= (16.9 + 22.8) = 39.7$

$FS = \frac{110.23}{39.7} = 2.8$ ∴ ok

$XR = \frac{(110.2 - 39.7)}{15.21} = 4.62'$

$e = (\frac{11.5}{2} - 4.62) = 1.13'$

$\frac{b}{6} = \frac{11.5}{6} = 1.92$, $e < \frac{b}{6}$

∴ Resultant within Mid Third

P_r Max or Min $= \frac{15.21}{11.5}(1 \pm \frac{6 \times 1.13}{11.5})$

$1.32(1 \pm 0.59)$

$P_r max = 2.1^{ksf} < 3^{ksf}$

$P_r min = 0.54$

Better to have same F.S as the Horz. Force and Location varies for different methods.

6910-153 4-90

FLOOD CONTROL DISTRICT OF MARICOPA COUNTY

PROJECT LACC PAGE ___ OF ___

DETAIL Retaining Wall 12' High COMPUTED KVH DATE 5/02

CHECKED BY ___ DATE ___

Wall Ht = 12' (Type c.3)

Check Wall Steel:

Soil pr = (0.12 x 0.33 x 12) = 0.475 ksf

$P_{soil} = \left(\frac{0.475}{2} \times 12\right) = 2.85^{K}$

$M_{wall} = \left(2.85 \times \frac{12}{3}\right) + (2.6 \times 7.08)$

$= (11.4 + 18.4) = 29.8$ kft

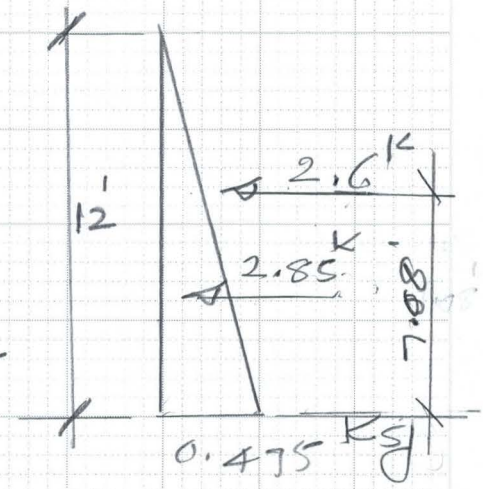

$d_{eff} = (1'-7) - 1\frac{1}{2} - 2 - 0.5 = 15''$

form. Lin

$A_s = \frac{29.8 \times 12}{24 \times 0.88 \times 15} = 1.13 \text{ in}^2$

#7 @ 6", $A_s = 1.2$

Check wall Shear:

$V = (2.85 + 2.6) = 5.45^{K}$

b = 12, d = 15"

$v = \frac{5.45}{12 \times 15} = 30.2$ psi

$v_{(allow)} = 0.95\sqrt{3000}$

$= 52$ psi > 30.2 ∴ OK

6910-153 4-90

FLOOD CONTROL DISTRICT OF MARICOPA COUNTY

PROJECT LACC PAGE ___ OF ___

DETAIL Retaining wall 12' High COMPUTED KVH DATE 5/02

CHECKED BY ___ DATE ___

Footing Design:

$\frac{1.56}{11.5} = \frac{x_1}{6.5}$, $x_1 = 0.88$ ksf

$\frac{1.56}{11.5} = \frac{x_2}{8.08}$, $x_2 = 1.1$

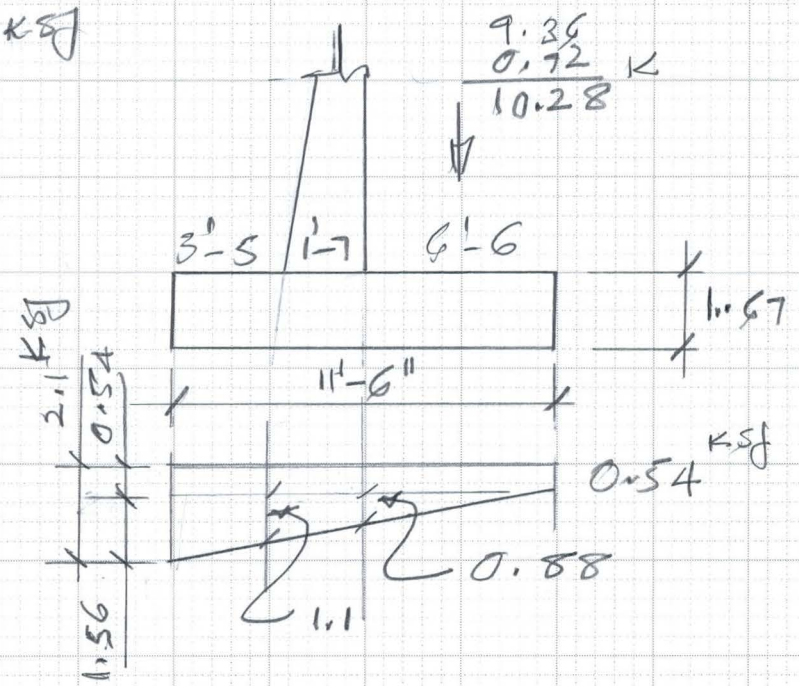

Check Heel:

Ftg. wt: $(6.5 \times 1.67)\,0.15 = 1.63^K$

Ftg. pr: $(0.54 \times 6.5) = 3.51^K$

$\left(\frac{0.88}{2} \times 6.5\right) = 2.86$

$M_{Heel} = (10.28 \times 3.25) + (1.63 \times 3.25) - (3.51 \times 3.25) - (2.86 \times 2.17)$

$= (33.4 + 5.3 - 11.4 - 6.2) = 21.1$ K'

$d_{eff} = (1.8) - 2 - 0.5 = 17.5''$ $\quad A_s = \frac{21.1 \times 12}{24 \times 0.88 \times 17.5}$

$= 0.69\ in^2$

Match wall Steel #7 @ 6" used for wall

Check Toe:

$P = \left(\frac{2.1 + 1.64}{2}\right) 3.42 = 6.4^K$

$P_2 = (3.42 \times 1.67)\,0.15 = 0.86^K$

$A_s = \frac{9.47 \times 12}{24 \times 0.88 \times 16.5}$

$= 0.33$ Min. Steel

$M_{Toe} = \left(6.4 \times \frac{3.42}{2}\right) - \left(0.86 \times \frac{3.42}{2}\right)$

$= (10.94 - 1.47) = 9.47$

$d_{eff} = (20 - 3 - 0.5) = 16.5''$

Bend wall Steel into the footing.

6910-153 4-90

FLOOD CONTROL DISTRICT OF MARICOPA COUNTY

PROJECT LACC PAGE ____ OF ____

DETAIL Retaining Wall COMPUTED KVH DATE 3/02

8' wall CHECKED BY ____ DATE ____

Type 5

Ht = 8'

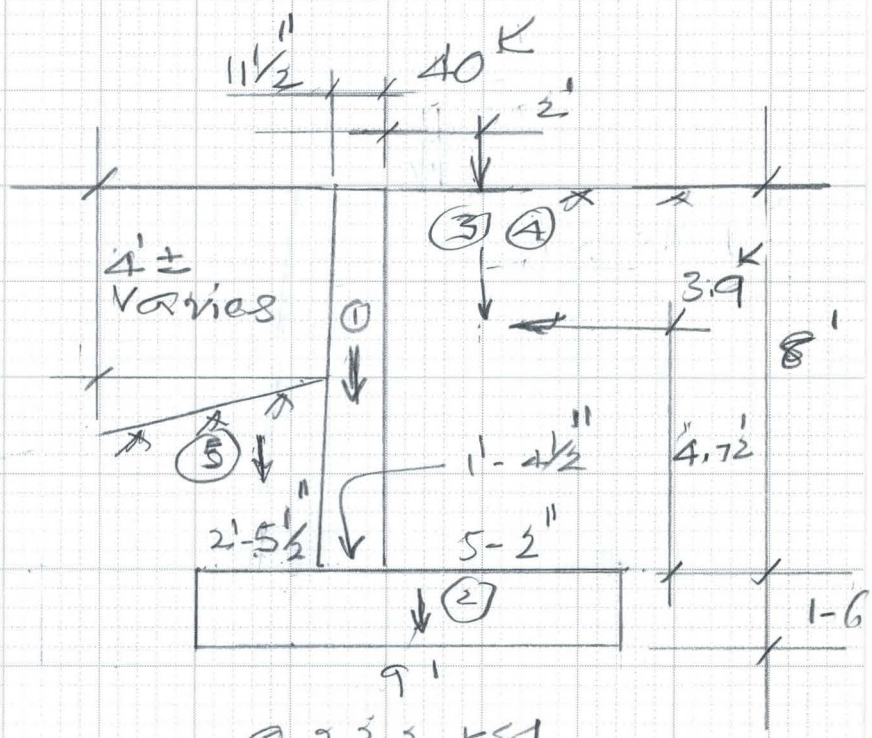

$P = 40^K$ $\quad \frac{40}{10 \times 18'} = 0.222$ KSF

$W_1 = \left(\frac{11.5 + 16\frac{1}{2}}{12 \times 2}\right) 8 \times 0.15 = 1.4^{K/ft}$

$W_2 = 9 \times 1.5 \times 0.15 = 2.03$

$W_3 = 5.17 \times 8 \times 0.12 = 4.96$

W_4 (Crane) $= 0.222 \times 5.17 = 1.15$

W_5 (Soil on Toe) $= 2.46 \times 4 \times 0.12 = 1.18$

$W = 10.72^K$

6910-153 4-90

FLOOD CONTROL DISTRICT OF MARICOPA COUNTY

PROJECT LACC PAGE ___ OF ___

DETAIL Retaining wall COMPUTED KVH DATE 3/02

8' wall CHECKED BY ___ DATE ___

Tgt C-5 (Contd)

$M_{Res.} = 1.4(2.46 + 1.17) + (2.03 \times 4.5) + 4.96\left(9 - \frac{5.17}{2}\right) + 1.15\left(9 - \frac{5.17}{2}\right) + 1.18(1.23)$ kft

$= 5.08 + 9.14 + 31.82 + 7.38 + 1.41 = 54.83$

$M_{O.T}$: Soil pr $= (0.12 \times 0.33 \times 9.5) = 0.376$ ksf

$P = \frac{0.376}{2} \times 9.5 = 1.79$ K

$P_{Grane} = 3.9$ K

$M_{O.T} = \left(1.79 \times \frac{9.5}{3}\right) + 3.9(4.72 + 1.5)$

$= (5.7 + 24.3) = 30$ kft

$F.S = \frac{54.83}{30.0} = 1.8$

$x_R = (54.83 - 30.0) / 10.72 = 2.3'$

$e = \left(\frac{9}{2} - 2.3\right) = 2.2'$

$\frac{b}{6} = \frac{9}{6} = 1.5'$ $e > \frac{b}{6}$ ∴ Triang. Dist

$m = 2.3'$ $p_t = \frac{2R}{3m} = \frac{2 \times 10.72}{3 \times 2.3} = 3.11$ ksf

Allowable Bearing pr $= 3$ ksf $\cong 3.11$

$\left(\frac{111}{3000}\right) \cong 4\%$ over Stress

Taking into account Soil pr from Toe side:

$0.12 \times 0.33 \times 3.5 = 0.14$ ksf

$P = \frac{0.14}{2} \times 3.5 = 0.25$ K

M_{Res} (additional)

$= \frac{0.25 \times 3.5}{3} =$

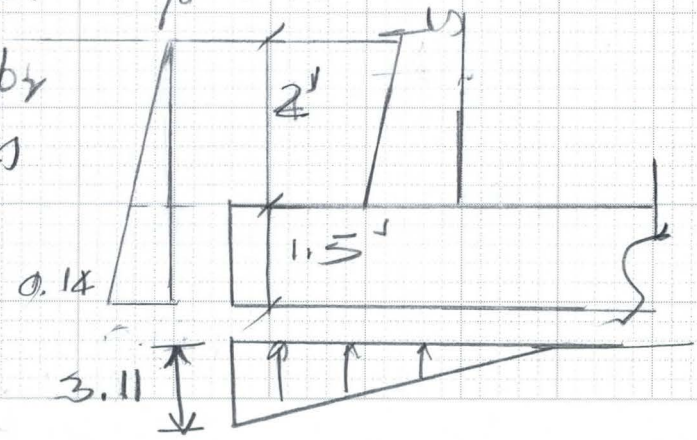

6910-153 4-90

FLOOD CONTROL DISTRICT OF MARICOPA COUNTY

PROJECT LAC G PAGE ___ OF ___

DETAIL Ret Grity wall COMPUTED KVH DATE 3/02

8' Wall CHECKED BY ___ DATE ___

Type 5 (wall Ht = 8')

Wall Steel:

Soil pr = 0.12 x 0.33 x 6 = 0.238 ksf

P. Soil = $\frac{0.238}{2}$ x 8 = 0.95 K

P Grang = 3.9 K

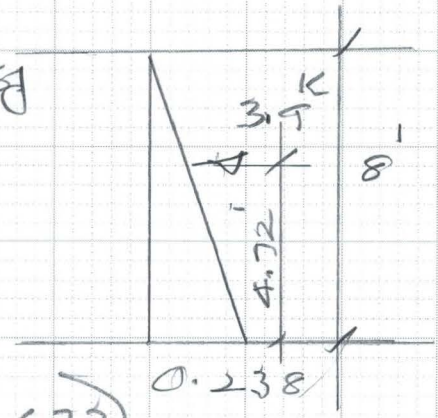

M wall = $\left(0.95 \times \frac{8}{3}\right) + (3.9 \times 4.72)$

= (2.5 + 18.4) = 20.9 k'

d eff = ~~(16.5 - 2 - 0.5) = 14"~~

16.5 - 1.5 - 2 - 0.5 = 12.5

form L

$A_s = \frac{20.9 \times 12}{24 \times 0.88 \times 12.5}$

= ~~0.85~~ 0.95

use #6 @ 6" A_s = 0.88

Sliding:

PH = (1.8 + 3.9) = 5.7 K

N = 10.72, μ = 0.4, Force = (0.4 x 10.72) = 4.3

F.S = $\frac{4.3}{5.7}$ = 0.75

Check 20' Strip:

Distribution width

PH = (1.8 x 20) + (3.9 x 4) = 51.6 K 51.6

Res Force = (10.72 x 20) 0.4 = 85.8

F.S = 85.8/51.6 = 1.7 ∴ ok

Check wall Shear:

V = (3.9 + 0.95) = 4.85 K $v = \frac{4.85}{12.5 \times 12}$ = 32 psi

$v_{allow} = 0.95\sqrt{3000}$ = 52 psi

∴ ok

6910-153 4-90

FLOOD CONTROL DISTRICT OF MARICOPA COUNTY

PROJECT LACC PAGE ___ OF ___

DETAIL Retaining Walls COMPUTED KVH DATE 3/02

8' wall CHECKED BY ___ DATE ___

Check Heel

$$M = \left(4.96 \times \frac{5.17}{2}\right) + \left(1.15 \times \frac{5.17}{2}\right) + (5.17 \times 1.5)(0.15 \times \frac{5.17}{2}$$

$$= (15.8 + 3.0) = 18.8$$

$$d_{eff} = (18 - 2 - 0.5) = 15.5''$$

$$A_s = \frac{18.8 \times 12}{24 \times 0.88 \times 15.5}$$

$$= 0.69$$

Use #6 @ 6"

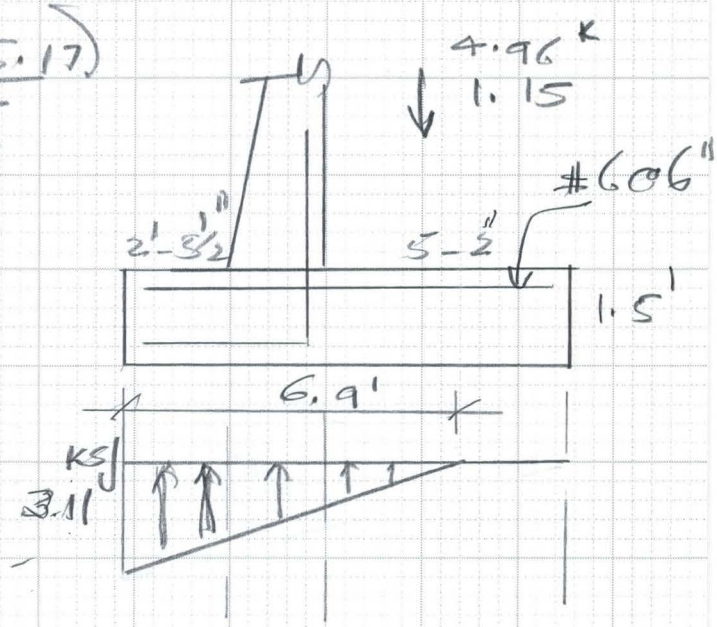

Check Toe

$$M = \left(3.11 \times 2.46 \times \frac{2.46}{2}\right) = 9.4^{k\text{-}ft}$$ ∴ Min. Steel

6910-153 4-90

FLOOD CONTROL DISTRICT OF MARICOPA COUNTY

PROJECT LACC PAGE ____ OF ____

DETAIL Retaining Wall COMPUTED KVH DATE 3/0

8' Wall CHECKED BY ____ DATE ____

Type 5

Ht = 8'

0.59 × 8 = 4.72'

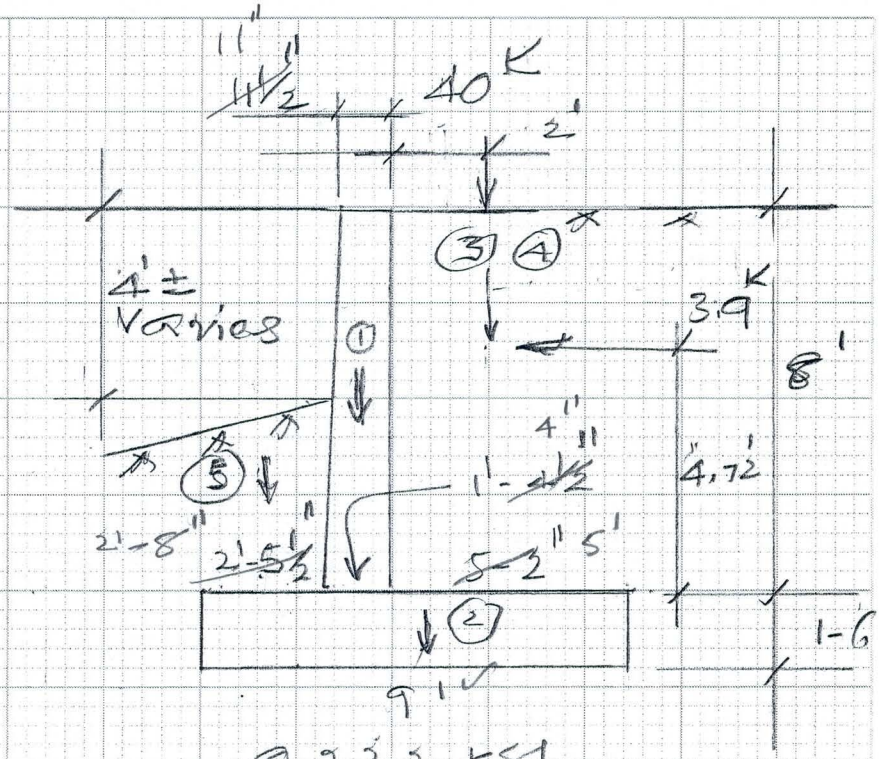

P = 40K

$\frac{40}{10 \times 18'} = 0.222$ ksf

$W_1 = \left(\frac{11.5 + 16}{12 \times 2}\right) 8 \times 0.15 = 1.35$ K/ft

$W_2 = 9 \times 1.5 \times 0.15 = 2.03$

$W_3 = 5.0 \times 8 \times 0.12 = 4.80$

W_4 (Crane) $= 0.222 \times 5.0 = 1.11$

W_5 (Soil on Toe) $= 2.67 \times 4 \times 0.12 = 1.28$

W = 10.57 K

FLOOD CONTROL DISTRICT OF MARICOPA COUNTY

PROJECT LACC PAGE ___ OF ___

DETAIL Retaining wall COMPUTED KVH DATE 3/02

8' wall CHECKED BY ___ DATE ___

Tgt C-5 (Contd)

$M_{Res.} = 1.4(2.67 + 1.12) + (2.03 \times 4.5) + 4.80(9 - \frac{5.0}{2}) + 1.15(9 - \frac{5.17}{2}) + 1.28(1.34)$ 54.66 Kft

$= 5.12 + 9.14 + 31.20 + 7.48 + 1.72 = 54.66$

M o.T: Soil pr $= (0.12 \times 0.33 \times 9.5) = 0.376$ ksf

$P = \frac{0.376}{2} \times 9.5 = 1.79^K$

$P_{Surc} = 3.9^K$

$M_{o.T} = (1.79 \times \frac{9.5}{3}) + 3.9(4.72 + 1.5)$

$= (5.7 + 24.3) = 30$ Kft

$F.S = \frac{54.66}{30.0} = 1.8$

$x_R = (54.66 - 30.0) / 10.72 = 2.3'$

$e = (\frac{9}{2} - 2.3) = 2.2'$

$\frac{b}{6} = \frac{9}{6} = 1.5'$ $e > \frac{b}{6}$ ∴ Triang. Dis

$m = 2.3'$ $p_t = \frac{2R}{3m} = \frac{2 \times 10.57}{3 \times 2.3} = 3.11$ ksf

Allowable Bearing pr $= 3$ ksf $\cong 3.11$

$(\frac{111}{3000}) \cong 4\%$ over Stress

Taking into account Soil pr

Dam Toe Side:

$0.12 \times 0.33 \times 3.5 = 0.14$ ksf

$P = \frac{0.14}{2} \times 3.5 = 0.25^K$

M_{Res} (additional)

$= 0.25 \times \frac{3.5}{3} =$

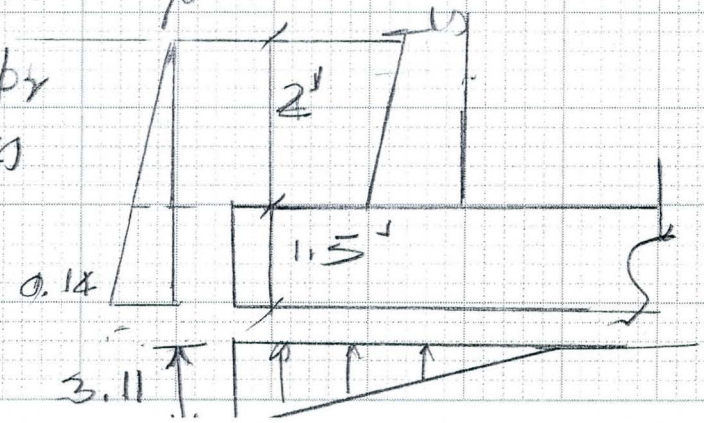

6010.153 4.00

FLOOD CONTROL DISTRICT OF MARICOPA COUNTY

PROJECT LAG G PAGE ___ OF ___

DETAIL Retaining wall COMPUTED KVH DATE 3/02

8' wall CHECKED BY ___ DATE ___

Type 5 (wall HT = 8')

Wall Steel:

Soil pr = 0.12 × 0.33 × 6 = 0.238 ksf

P. Soil = $\frac{0.238}{2}$ × 8 = 0.95 K

P Grang = 3.9 K

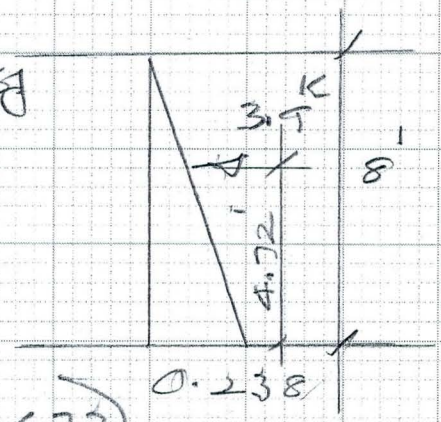

M wall = (0.95 × $\frac{8}{3}$) + (3.9 × 4.72)

= (2.5 + 18.4) = 20.9 K'

d eff = ~~(16.5 − 3 − 0.5) = 14"~~ ✓

16.5 − 1.5 − 2 − 0.5 = 12.5

formula

16 − 1 − 2 − 0.5 =

A_s = $\frac{20.9 \times 12}{\cancel{24} \times 0.88 \times \cancel{14}\ 12.5}$

= ~~0.65~~ 0.95

use #6 @ 6" A_s = 0.88

Sliding:

PH = (1.8 + 3.9) = 5.7 K

N = ~~10.72~~ 10.57, μ = 0.4, Fres = (0.4 × ~~10.72~~ 10.57) = ~~4.3~~ 4.2

F.S = $\frac{\cancel{4.3}\ 4.2}{5.7}$ = 0.75 ✓

Check 20' Strip:

PH = (1.8 × 20) + (3.9 × 4) = 51.6 K

Distribution width

51.6

Res Force = (~~10.72~~ 10.57 × 20) 0.4 = 85.8

F.S = 85.8/51.6 = 1.7 ∴ OK

Check wall Shear:

V = (3.9 + 0.95) = 4.85 K

v = $\frac{4.85}{12.5 \times 12}$ = 32 psi

v_{allow} = 0.95 $\sqrt{3000}$ = 52 psi

∴ OK

FLOOD CONTROL DISTRICT OF MARICOPA COUNTY

PROJECT LACC PAGE ___ OF ___

DETAIL Retaining Wall COMPUTED KVH DATE 3/02

8' Wall CHECKED BY ___ DATE ___

Check Heel

$$M = \left(4.80 \times \frac{5.17}{2}\right) + \left(1.15 \times \frac{5.17}{2}\right) + \left(5.17 \times 1.5\right) 0.15 \times \frac{5.17}{2}$$

$$= (14.8 + 2.8) = 17.6$$

$$d_{eff} = (18 - 2 - 0.5) = 15.5''$$

$$A_s = \frac{17.6 \times 12}{24 \times 0.88 \times 15.5} = 0.65$$

Use #6 @ 6"

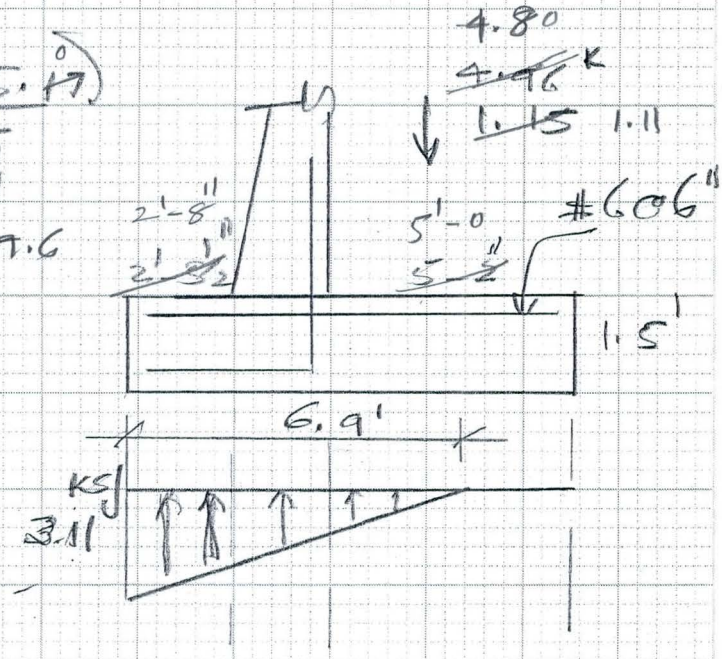

Check Toe

$$M = \left(3.11 \times 2.67 \times \frac{2.67}{2}\right) = 11.1 \text{ kft}$$ ∴ Min. Steel

FLOOD CONTROL DISTRICT OF MARICOPA COUNTY

PROJECT LACC PAGE ____ OF ____

DETAIL Retaining walls 6' High COMPUTED KVH DATE 3/02

CHECKED BY ____ DATE ____

Type .6 Wall (Ht = 6')

$0.59 \times 6 = 3.54'$

Assume Horz. Force 5.2^K

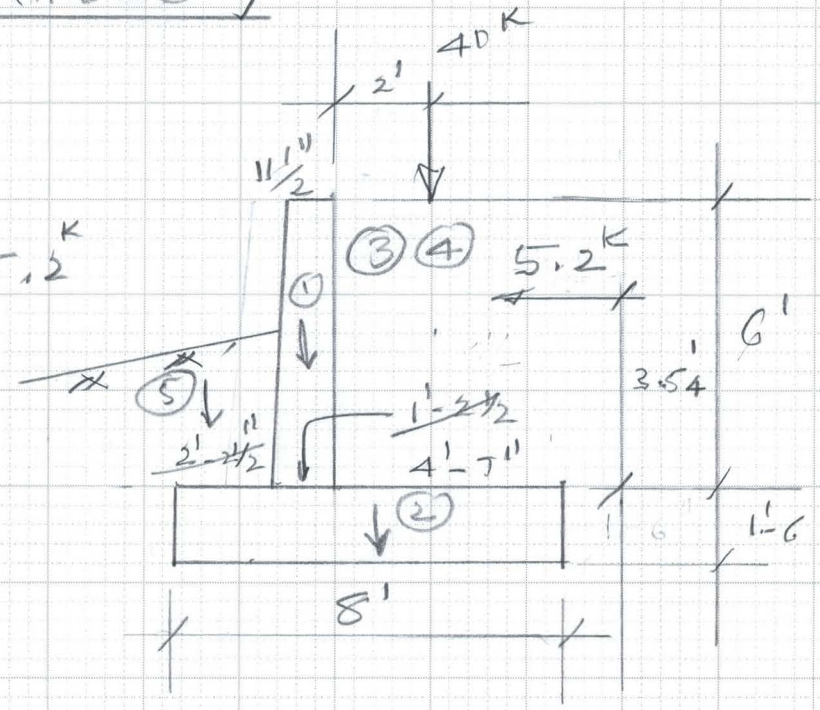

P = 40K - Crane

$\frac{40}{8 \times 14} = 0.357^{KSF}$

$W_1 = \left(\frac{11.5 + 14.5}{2 \times 12}\right) \times 6 \times 0.15 = 0.98^{K/FL}$

$W_2 = 8 \times 1.5 \times 0.15 = 1.8$

$W_3 = 4.58 \times 6 \times 0.12 = 3.3$

W_4 (Crane) $= 0.357 \times 4.58 = 1.64$

W_5 Soil on Toe $(2.21 \times 4 \times 0.12) = 1.07$

$W = 8.79^K$

(2)

FLOOD CONTROL DISTRICT OF MARICOPA COUNTY

PROJECT LACC PAGE ___ OF ___

DETAIL Retaining walls COMPUTED KVH DATE 3/02

6' wall CHECKED BY ___ DATE ___

Typ Ø.6 wall Ht = 6'

$M_{Res} = 0.98\left[2.21 + \frac{(0.96 + 1.21)}{2}\right] + (1.8 \times 4) + 3.3\left(8 - \frac{4.58}{2}\right) + (4.64 \times 5.71) + (1.07 \times 1.11)$ (1.09) K-ft

$= (3.23 + 7.2 + 18.84 + 9.36 + 1.19 + 5.5) = 45.3$

M.O.T: Soil pr $= (0.12 \times 0.33 \times 7.5) = 0.297$ ksf

$P_{soil} = \frac{0.297}{2} \times 7.5 = 1.12^{K}$

$P_{Crane} = 5.2^{K}$

$M_{OT} = \left(1.12 \times \frac{7.5}{3}\right) + 5.2(3.54 + 1.5)$

$= (2.8 + 26.2) = 29$ K-ft

$FS = \frac{45.3}{29} = 1.6$

$x_R = (45.3 - 29)/8.79 = 1.85'$

$e = \left(\frac{8}{2} - 1.85\right) = 2.15'$ $\frac{b}{6} = \frac{8}{6} = 1.33'$

$e = 2.15 >$

$m = 1.85'$ $p_t = \frac{2R}{3m} = \frac{2 \times 8.79}{3 \times 1.85} = 3.16$ ksf

$\frac{160}{3000} = 5.3\%$ over stress > 3 ksf ∴ ok

As the horiz. force used in calculation could vary for different methods ~~computation~~, some factor of safety is recommended.

6910-153 4-90

FLOOD CONTROL DISTRICT OF MARICOPA COUNTY

PROJECT LACC PAGE ___ OF ___
DETAIL Retaining wall COMPUTED KVH DATE 3/02
6' wall CHECKED BY ___ DATE ___

Type. 6 (Ht = 6')

Wall Stem

Soil pr = (0.12 x 0.33 x 6) = 0.238

$P_{soil} = \frac{0.238}{2}(6) = 0.714^K$

$P_{crane} = 5.2^K$

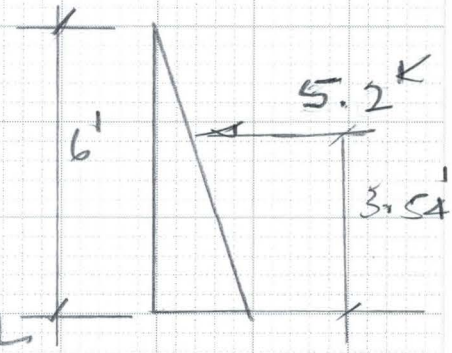

$M_{wall} = (0.714 \times \frac{6}{3}) + (5.2 \times 3.54)$

$= (1.43 + 18.4) = 19.83^{K'}$

$d_{eff} = (14.5 - 2 - 0.5 - 1.5) = 10.5''$

form liner

$A_s = \frac{10.63 \times 12}{24 \times 0.88 \times 10.5}$

$= 0.58$

Use # 5 @ 6"

Check Sliding:

$P_H = (1.12 + 2.6) = 3.72^K$

$W = 8.79^K$

Check 10' Strip:

Distribution width

$P_H = (1.12 \times 10) + (2.6 \times 4) = (11.2 + 10.4) = 21.6^K$

Res. force $= 8.79 \times 10 \times 0.4^{\mu} = 35.2^K$

$F.S = \frac{35.2}{21.6} = 1.6$ ∴ OK

Wall Shear:

$V = (0.714 + 2.6) = 3.31^K$

$d_{eff} = 10.5$

$v = \frac{3.31}{12 \times 10.5}$

$= 26.3$ psi

Allow $v = 0.95\sqrt{3000} = 52$ psi ∴ OK

FLOOD CONTROL DISTRICT OF MARICOPA COUNTY

PROJECT LA CC PAGE ___ OF ___

DETAIL Retaining wall 6' High COMPUTED KVH DATE 3/02

CHECKED BY ___ DATE ___

Type .6 Wall (Ht = 6')

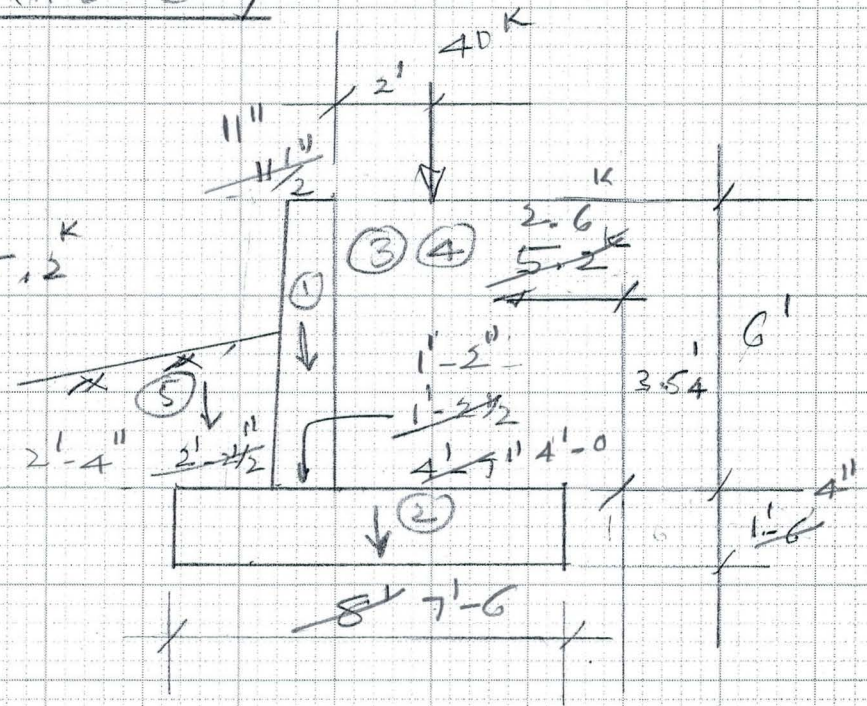

$0.59 \times 6 = 3.54'$

Assume Horz. Force 5.2K

Distributed over 2'

P_H (Grand) $= \frac{5.2}{2} = 2.6^K$

$P = 40^K$ - Crane

$\frac{40}{8 \times 14} = 0.357^{KSF}$

$W_1 = \frac{(11.5 + 14.5)}{2} \times 6 \times 0.15$ (11", 14") $= 0.94$ ~~0.98~~ K/ft

$W_2 = 7.5 \times 1.5 \times 0.15$ (8, 1.33) $= 1.8$ ~~1.5~~

$W_3 = 4.58 \times 6 \times 0.12$ (4.0) $= 3.3$ ~~2.88~~

W_4 (Crane) $= 0.357 \times 4.58$ (4.0) $= 1.64$ ~~1.43~~

W_5 Soil on Toe $(2.21 \times 4 \times 0.12)$ (2.33) $= 1.07$ ~~1.12~~

$W = 8.79^K$ ~~7.87~~

FLOOD CONTROL DISTRICT OF MARICOPA COUNTY

PROJECT: LACC — PAGE ___ OF ___

DETAIL: Retaining walls 6' High — COMPUTED: KVH — DATE: 3/02

CHECKED BY ___ — DATE ___

Typ. C.G wall Ht = 6'

$M_{Res} = 0.98\left[2.33 + (0.96 + 1.21)\right] + (1.5 \times 4) + 3.3(8 - 4.58)$

$+ (1.64 \times 5.71) + (1.07 \times 11)$

$= 3.3(3.26 + 2.2 + 18.84 + 9.36 + 1.19) = 45.3$ kft

M.O.T: Soil pr $= (0.12 \times 0.33 \times 7.5) = 0.297$ ksf

$P_{soil} = \frac{0.297}{2} \times 7.5 = 1.12$ k

$P_{frame} = 5.2$ k

$M_{OT} = (1.12 \times \frac{7.5}{3}) + 5.2(3.54 + 1.5)$

$= (2.8 + 26.2) = 29$ kft

$FS = \frac{45.3}{29} = 1.6$

$x_R = (45.3 - 29)/8.79 = 1.85$

$e = (\frac{8}{2} - 1.85) = 2.15$ $\frac{b}{6} = \frac{8}{6} = 1.33$

$e = 2.15 > 1.25$

$m = 1.85'$ $p_t = \frac{2R}{3m} = \frac{2 \times 8.79}{3 \times 1.85} = 3.16$ ksf

$\frac{160}{3000} = 5.3\%$ over Stream < 3 ksf ∴ ok

As the horiz. force used in Calculations could vary for different methods ~~Computations~~, some factor of safety is recommended.

6910-153 4-90

FLOOD CONTROL DISTRICT OF MARICOPA COUNTY

PROJECT LACC PAGE ___ OF ___

DETAIL Retaining wall COMPUTED KVH DATE 3/02

6' wall CHECKED BY ___ DATE ___

Type. 6 (Ht = 6')

Wall Stem

Soil pr = (0.12 × 0.33 × 6) = 0.238

$P_{soil} = \frac{0.238}{2}(6) = 0.714^K$

$P_{crane} = 5.2^K/2 = 2.6^K$

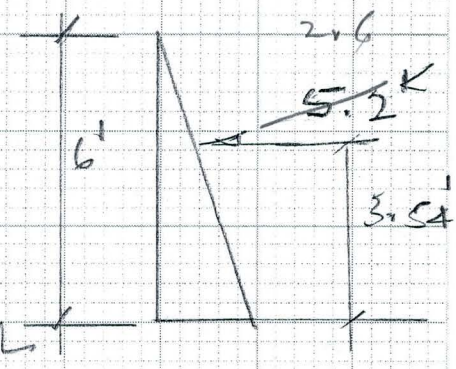

$M_{wall} = (0.714 \times \frac{6}{3}) + (5.2 \times 3.54)$

$= (1.43 + 18.4) = 19.63^{K'}$

$d_{req} = (14.5 - 2 - 0.5 - 1.5) = 10.5''$

form liner

$A_s = \frac{19.63 \times 12}{24 \times 0.88 \times 10.5}$

$= 0.58$

use # 5 @ 6"

Check Sliding:

$P_H = (1.12 + 2.6) = 3.72^K$

$W = 8.79^K$

Check 10' Strip:

Distribution width

$P_H = (1.12 \times 10) + (2.6 \times 4) = (11.2 + 10.4) = 21.6^K$

Res. force $= 8.79 \times 10 \times 0.4 = 35.2^K$

$F.S = \frac{35.2}{21.6} = 1.6$ ∴ OK

Wall Shear:

$V = (0.714 + 2.6) = 3.31^K$

$d_{req} = 10.5$

$v = \frac{3.31}{12 \times 10.5}$

$= 26.3$ psi

Allow $v = 0.95\sqrt{3000} = 52$ psi ∴ OK

6910-153 4-90

DiLEO Engineering
Structural & Civil

ANDREW G. DILEO, P.E.
AZ Structural 14423
AZ Civil 9912
AZ R.L.S. 16523
Calif. R.C.E. 23810
Nev. Civil 9544
New Mexico P.E. 11878

2432 W. Peoria • Suite 1200 • Phoenix, Arizona 85029 • (602) 395-0756 • FAX (602) 395-1150

FAX COVER SHEET

DATE: APRIL 15
TO: KUMAR HANUMIAH
FAX NUMBER: 506-4601
NUMBER OF SHEETS (plus Cover Sheet): 12

RETAINING WALL CALCS
AND DETAILS

DiLEO Engineering
Structural & Civil
2432 W. Peoria • Phoenix, AZ 85029-4727
(602) 395-0756

JOB NO. 9601 SHT. 1 OF
DESC. BY
DATE

VERTICAL PRESSURE DISTRIBUTION FOR 40K OUTRIGGER

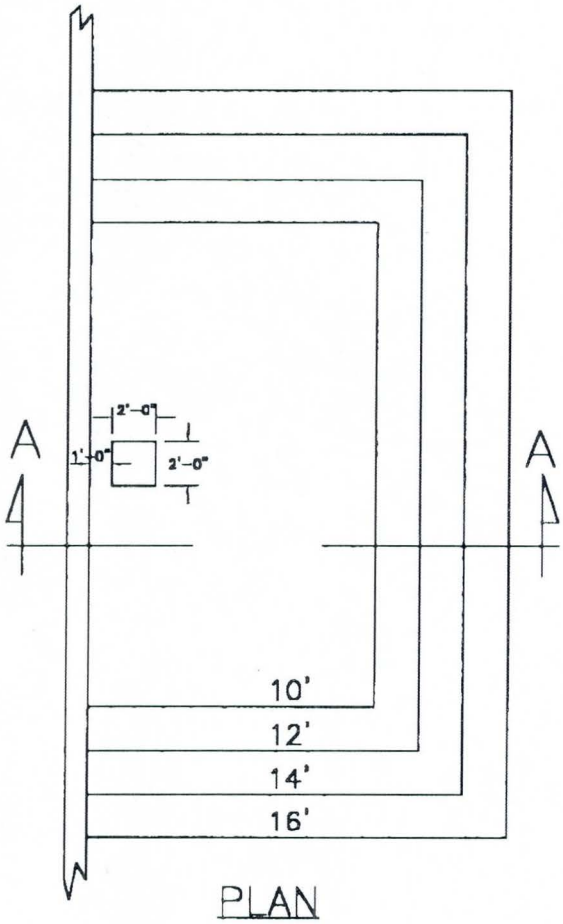

PLAN

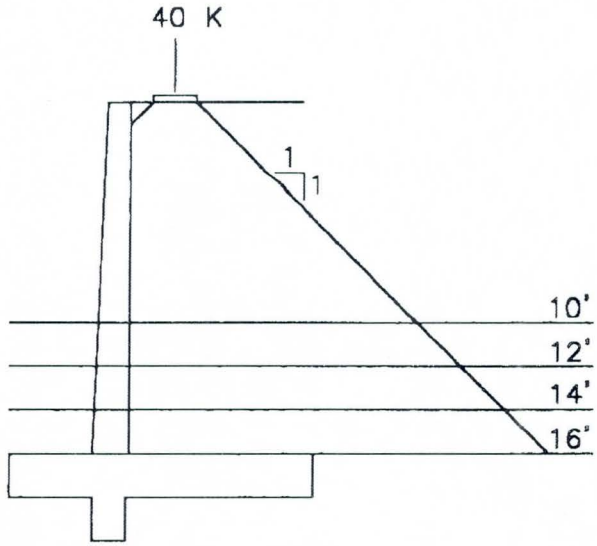

SECTION A-A

Vertical Pressure on Footing:

@ 10'= 40/(13x22)=0.140 KSF

@ 12'= 40/(15x26)=0.103 KSF

@ 14'= 40/(17x30)=0.078 KSF

@ 16'= 40/(19x34)=0.062 KSF

Registered Professional Engineer (Structural)
CERTIFICATE NO. 14423
ANDREW G. DILEO
Date Signed 4-15-02
ARIZONA, U.S.A.

(2)

File: C9601A, Disk 35

Lateral Loading to 16 Foot High Wall

Outrigger Lateral Load	Equiv. Fluid Pressure	Moment Arm @Wall	Moment @ Wall	Moment Arm @ Footing	Moment @ Footing
39	35	15	1,110	17	1,258
127	70	14	2,758	16	3,152
207	105	13	4,056	15	4,680
249	140	12	4,668	14	5,446
250	175	11	4,675	13	5,525
227	210	10	4,370	12	5,244
193	245	9	3,942	11	4,818
159	280	8	3,512	10	4,390
128	315	7	3,101	9	3,987
103	350	6	2,718	8	3,624
82	385	5	2,335	7	3,269
66	420	4	1,944	6	2,916
53	455	3	1,524	5	2,540
43	490	2	1,066	4	2,132
35	525	1	560	3	1,680
1,961	4,200		42,339		54,661

Lateral Loading to 14 Foot High Wall

Outrigger Lateral Load	Equiv. Fluid Pressure	Moment Arm @Wall	Moment @ Wall	Moment Arm @ Footing	Moment @ Footing
39	35	13	962	14.67	1,086
127	70	12	2,364	13.67	2,693
207	105	11	3,432	12.67	3,953
249	140	10	3,890	11.67	4,540
250	175	9	3,825	10.67	4,535
227	210	8	3,496	9.67	4,226
193	245	7	3,066	8.67	3,797
159	280	6	2,634	7.67	3,367
128	315	5	2,215	6.67	2,955
103	350	4	1,812	5.67	2,569
82	385	3	1,401	4.67	2,181
66	420	2	972	3.67	1,784
53	455	1	508	2.67	1,356
1,883	3,185		30,577		39,041

3

Lateral Loading to 12 Foot High Wall

Outrigger Lateral Load	Equiv. Fluid Pressure	Moment Arm @Wall	Moment @ Wall	Moment Arm @ Footing	Moment @ Footing
39	35	11	814	12.33	912
127	70	10	1,970	11.33	2,232
207	105	9	2,808	10.33	3,223
249	140	8	3,112	9.33	3,629
250	175	7	2,975	8.33	3,540
227	210	6	2,622	7.33	3,203
193	245	5	2,190	6.33	2,773
159	280	4	1,756	5.33	2,340
128	315	3	1,329	4.33	1,918
103	350	2	906	3.33	1,508
82	385	1	467	2.33	1,088
1,764	2,310		20,949		26,367

Lateral Loading to 10 Foot High Wall

Outrigger Lateral Load	Equiv. Fluid Pressure	Moment Arm @Wall	Moment @ Wall	Moment Arm @ Footing	Moment @ Footing
39	35	9	666	10.25	759
127	70	8	1,576	9.25	1,822
207	105	7	2,184	8.25	2,574
249	140	6	2,334	7.25	2,820
250	175	5	2,125	6.25	2,656
227	210	4	1,748	5.25	2,294
193	245	3	1,314	4.25	1,862
159	280	2	878	3.25	1,427
128	315	1	443	2.25	997
1,579	1,575		13,268		17,211

4

DiLeo Engineering,
2432 West Peoria Ave. Suite 1200
Phoenix, AZ 85029

10 Foot Retaining Wall

Weights:

Soil	120 pcf x	10 Ft Depth	5.09 Ft Width =	6,108
Outrigger	140 psf x		5.09 Ft Width =	713
Wall1	150 pcf x	1 Ft Thick	10 Ft High =	1,500
Wall2	150 pcf x .5x	0.41 Ft Thick	10 Ft High =	308
Footing	150 pcf x	1.66 Ft Thick	9 Ft Long =	2,241
			Total	10,869 LBS

Sum Moments @ 'A' to determine Resultant Location

Wall1	1,500 Lbs x	3.41		5,115
Wall2	308 Lbs x	2.78		855
Footing	2,241 Lbs x	4.5		10,085
Soil & Outrigger	6,821 Lbs x	6.47		44,129
Lateral Loads				-17,211
			Total	42,973 Ft Lbs

Resultant Location from 'A' $\frac{42,973}{10,869}$ = 3.95365 Ft

Safety Factor Against Overturning: 3.49681

Safety Factor Against Sliding: 1.37845 <1.5 Needs a key

Key:

Passive pressure needed: 383.36 Lbs.
Depth of Key needed: 1.75125 Ft.

Soil Stresses:

Footing Area: 9 Sq Ft
Section Modulus: 13.5 Ft^3
Footing Eccentricity 0.54635 Ft
Vertical Loads: 10,869

Max. Soil Pressure 1647.55
Min. Soil Pressure: 767.802

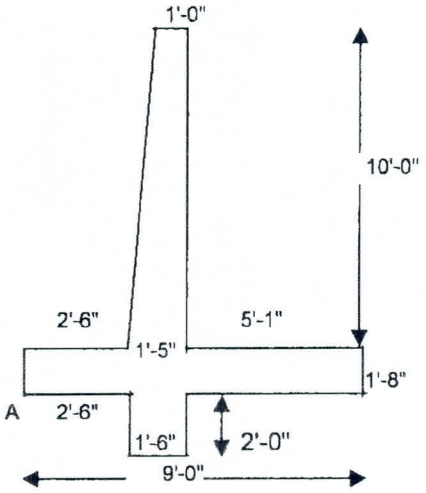

5

DiLeo Engineering,
2432 West Peoria Ave. Suite 1200
Phoenix, AZ 85029

12 Foot Retaining Wall

Weights:

Soil	120 pcf x	12 Ft Depth	6 Ft Width =	8,640
Outrigger	103 psf x		6 Ft Width =	618
Wall1	150 pcf x	1 Ft Thick	12 Ft High =	1,800
Wall2	150 pcf x .5x	0.5 Ft Thick	12 Ft High =	450
Footing	150 pcf x	1.66 Ft Thick	10.5 Ft Long =	2,615
			Total	14,123 LBS

Sum Moments @ 'A' to determine Resultant Location

Wall1	1,800 Lbs x	4	7,200
Wall2	450 Lbs x	3.34	1,503
Footing	2,615 Lbs x	5.25	13,726
Soil & Outrigger	9,258 Lbs x	7.5	69,435
Lateral Loads			-26,367
		Total	65,497 Ft Lbs

Resultant Location from 'A' $\frac{65,497}{14,123}$ = 4.63779 Ft

Safety Factor Against Overturning: 3.48406

Safety Factor Against Sliding: 1.3866 <1.5 Needs a key

Key:

Passive pressure needed: 462 Lbs.
Depth of Key needed: 1.9225 Ft.

Soil Stresses:

Footing Area: 10.5 Sq Ft
Section Modulus: 18.375 Ft^3
Footing Eccentricity 0.61221 Ft
Vertical Loads: 14,123

Max. Soil Pressure 1815.53 PSF
Min. Soil Pressure: 874.469

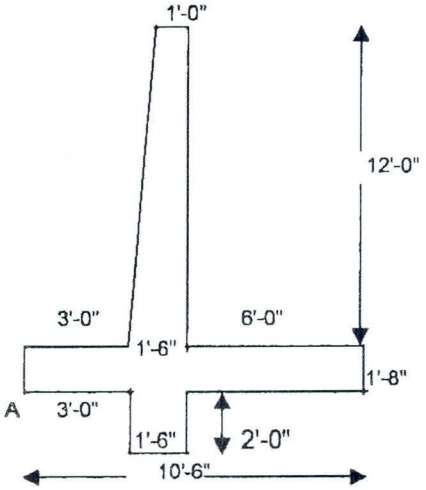

6

DiLeo Engineering,
2432 West Peoria Ave. Suite 1200
Phoenix, AZ 85029

14 Foot Retaining Wall

Weights:

Soil	120 pcf x	14 Ft Depth	7 Ft Width =	11,760
Outrigger	78 psf x		7 Ft Width =	546
Wall1	150 pcf x	1 Ft Thick	14 Ft High =	2,100
Wall2	150 pcf x .5x	0.59 Ft Thick	14 Ft High =	620
Footing	150 pcf x	1.66 Ft Thick	12 Ft Long =	2,988
			Total	18,014 LBS

Sum Moments @ 'A' to determine Resultant Location

Wall1	2,100 Lbs x	4.5	9,450
Wall2	620 Lbs x	3.81	2,360
Footing	2,988 Lbs x	6	17,928
Soil & Outrigger	12,306 Lbs x	8.5	104,601
Lateral Loads			-39,041
		Total	95,298 Ft Lbs

Resultant Location from 'A' $\frac{95,298}{18,014}$ = 5.29038 Ft

Safety Factor Against Overturning: 3.44098

Safety Factor Against Sliding: 1.42174 <1.5 Needs a key

Key:

Passive pressure needed: 396.6 Lbs.
Depth of Key needed: 1.78124 Ft.

Soil Stresses:

Footing Area: 12 Sq Ft
Section Modulus: 24 Ft^3
Footing Eccentricity 0.70962 Ft
Vertical Loads: 18,014

Max. Soil Pressure 2033.74 PSF
Min. Soil Pressure: 968.512

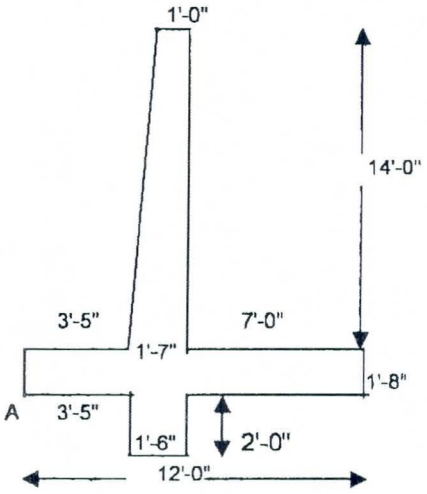

DiLeo Engineering,
2432 West Peoria Ave. Suite 1200
Phoenix, AZ 85029

7

16 Foot Retaining Wall

Weights:

Soil	120 pcf x	16 Ft Depth	8.33 Ft Width =	15,994
Outrigger	62 psf x		8.33 Ft Width =	516
Wall1	150 pcf x	1 Ft Thick	16 Ft High =	2,400
Wall2	150 pcf x .5x	0.67 Ft Thick	16 Ft High =	804
Footing	150 pcf x	2 Ft Thick	14 Ft Long =	4,200
			Total	23,914 LBS

Sum Moments @ 'A' to determine Resultant Location

Wall1	2,400 Lbs x	5.17		12,408
Wall2	804 Lbs x	4.42		3,554
Footing	4,200 Lbs x	7		29,400
Soil & Outrigger	16,510 Lbs x	9.83		162,294
Lateral Loads				-54,661
			Total	152,995 Ft Lbs

Resultant Location from 'A' $\frac{152,995}{23,914}$ = 6.39768 Ft

Safety Factor Against Overturning: 3.79897

Safety Factor Against Sliding: 1.55261 >1.5 OK

Key:

Passive pressure needed: 0 Lbs.
Depth of Key needed: 0 Ft.

Soil Stresses:

Footing Area:	14	Sq Ft
Section Modulus:	32.6667	Ft^3
Footing Eccentricity	0.60232	Ft
Vertical Loads:	23,914	
Max. Soil Pressure	2149.08	PSF
Min. Soil Pressure:	1267.21	

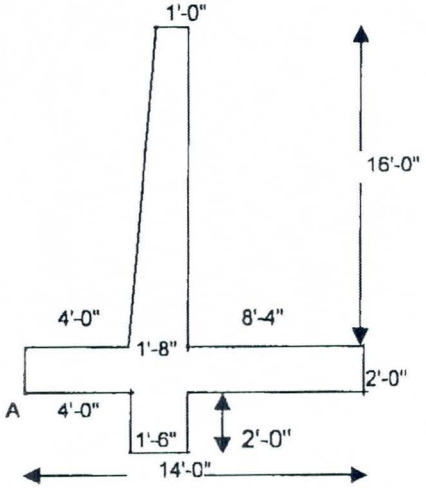

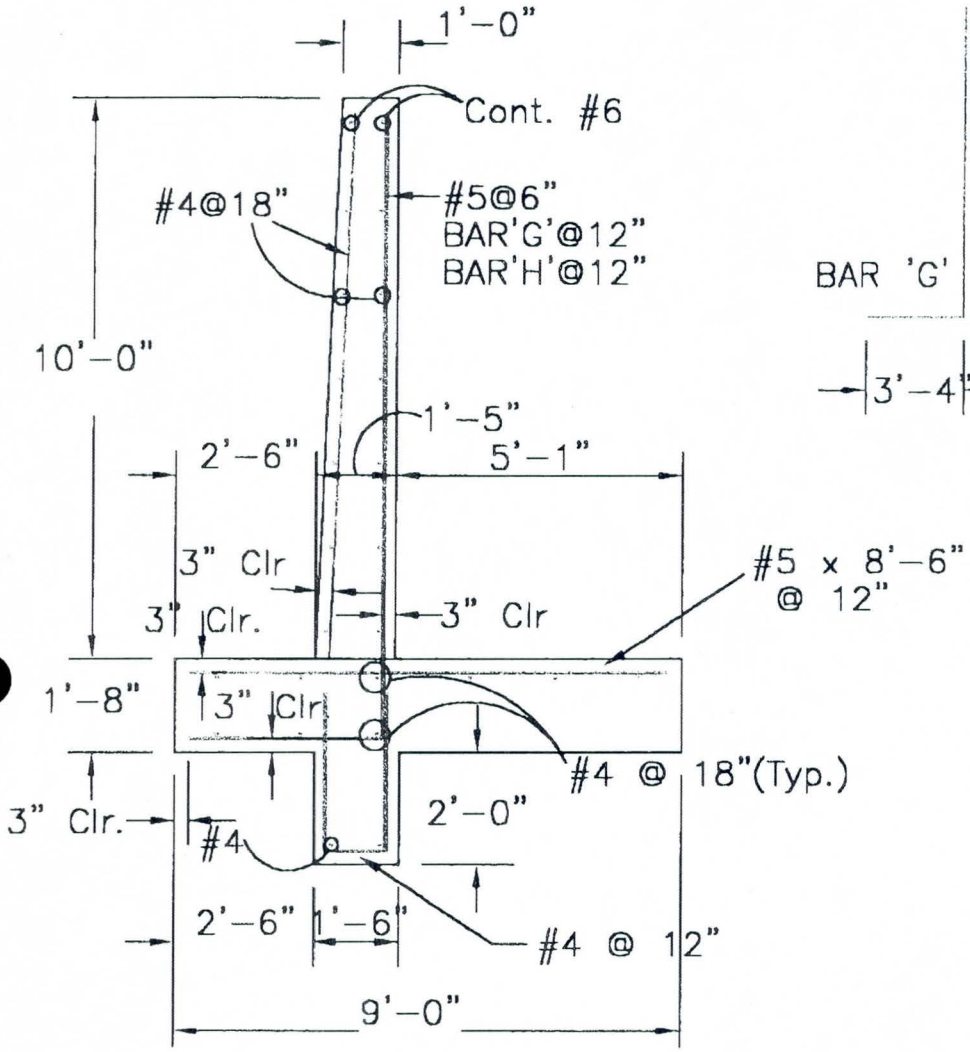

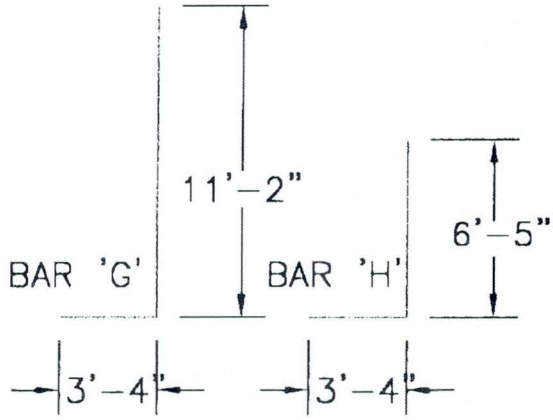

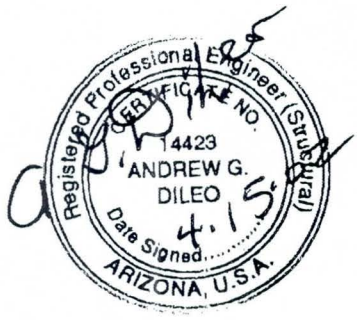

10' Retaining Wall

PCN 117.08.31	CONTRACT 2000C041 Assignment No. 2	File: D9601A, Disk #104	Sht 1 of 4
FLOOD CONTROL DISTRICT of Maricopa County 2801 West Durango St. Phoenix, Arizona 85009 (602) 506-4601	DiLEO Engineering Structural & Civil 2432 West Peoria Ave., Phoenix, AZ. 85029 (602) 395-0756	Retaining Walls to Protect SRP Power Poles	

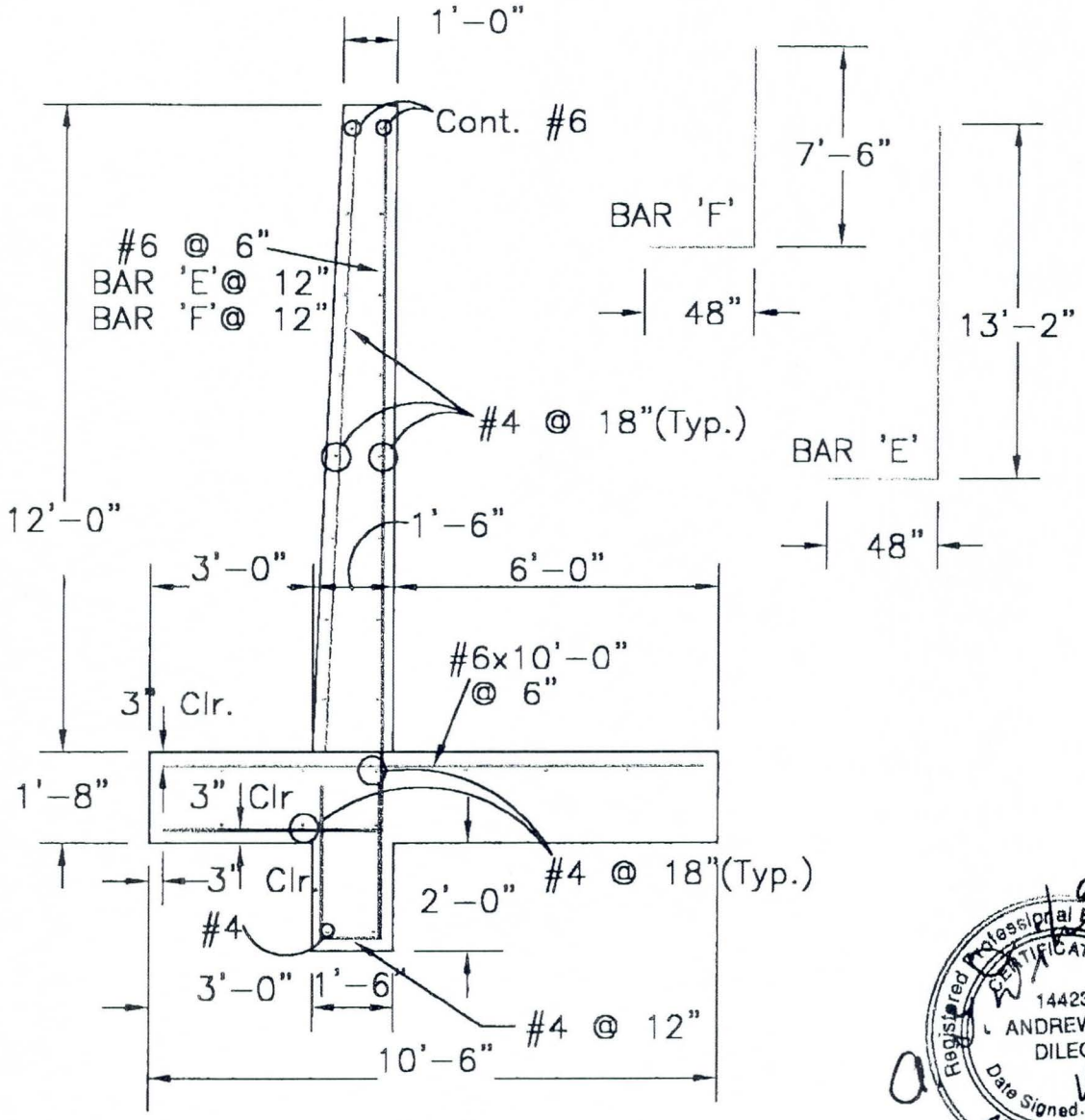

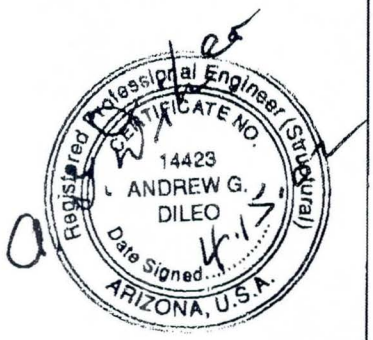

12' Retaining Wall

PCN 117.08.31	CONTRACT 2000C041 Assignment No. 2	File: D9601A, Disk #104	Sht 2 of 4
FLOOD CONTROL DISTRICT of Maricopa County 2801 West Durango St. Phoenix, Arizona 85009 (602) 506-4601	DiLEO Engineering Structural & Civil 2432 West Peoria Ave., Phoenix, AZ. 85029 (602) 395-0756	Retaining Walls to Protect SRP Power Poles	

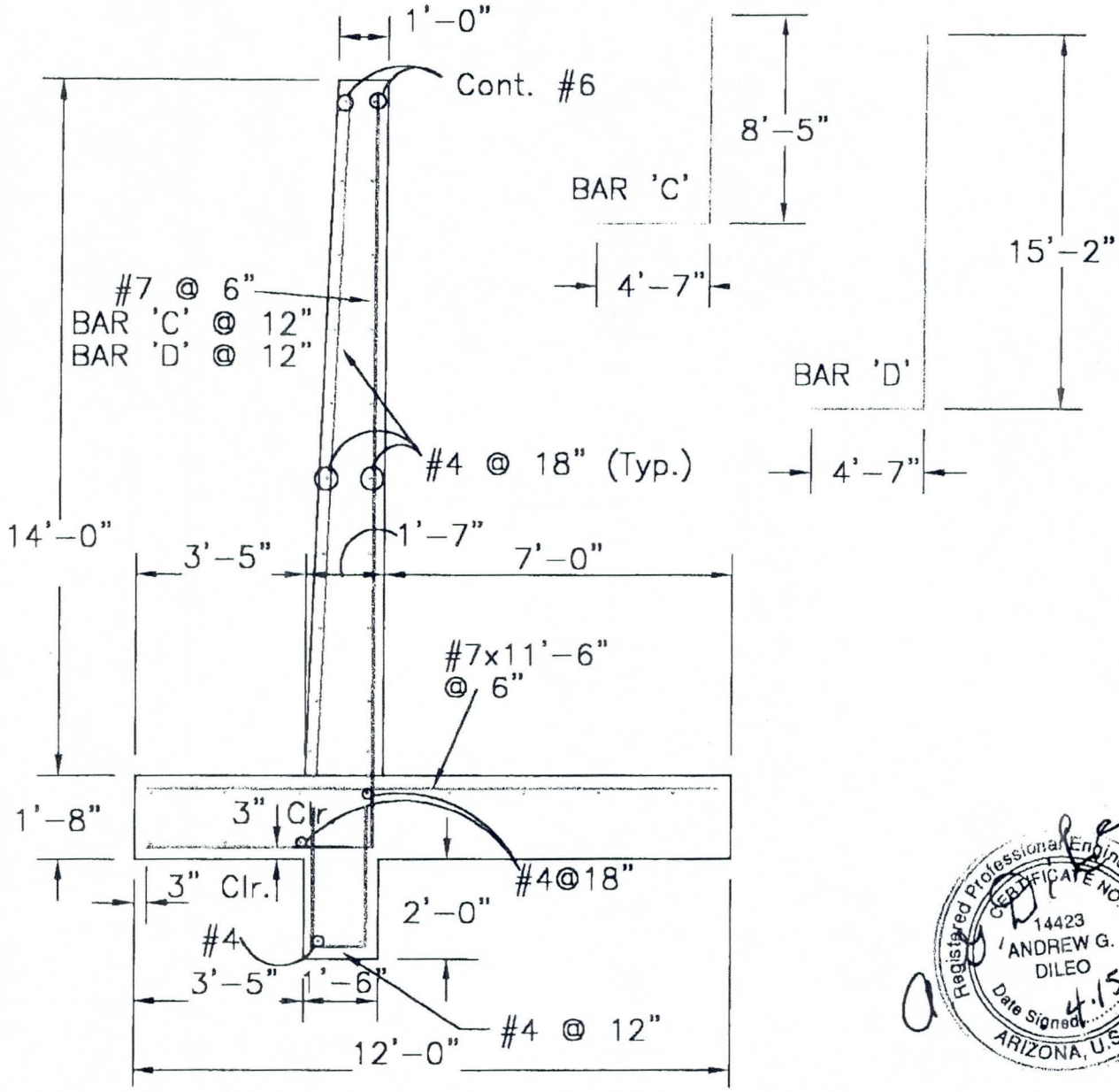

Registered Professional Engineer (Structural)
CERTIFICATE NO.
14423
ANDREW G.
DILEO
Date Signed 4.15.02
ARIZONA, U.S.A.

14' Retaining Wall

PCN 117.08.31	CONTRACT 2000C041 Assignment No. 2	File: D9601A, Disk #104	Sht 3 of 4
FLOOD CONTROL DISTRICT of Maricopa County 2801 West Durango St. Phoenix, Arizona 85009 (602) 506-4601	DiLEO Engineering Structural & Civil 2432 West Peoria Ave., Phoenix, AZ. 85029 (602) 395-0756	Retaining Walls to Protect SRP Power Poles	

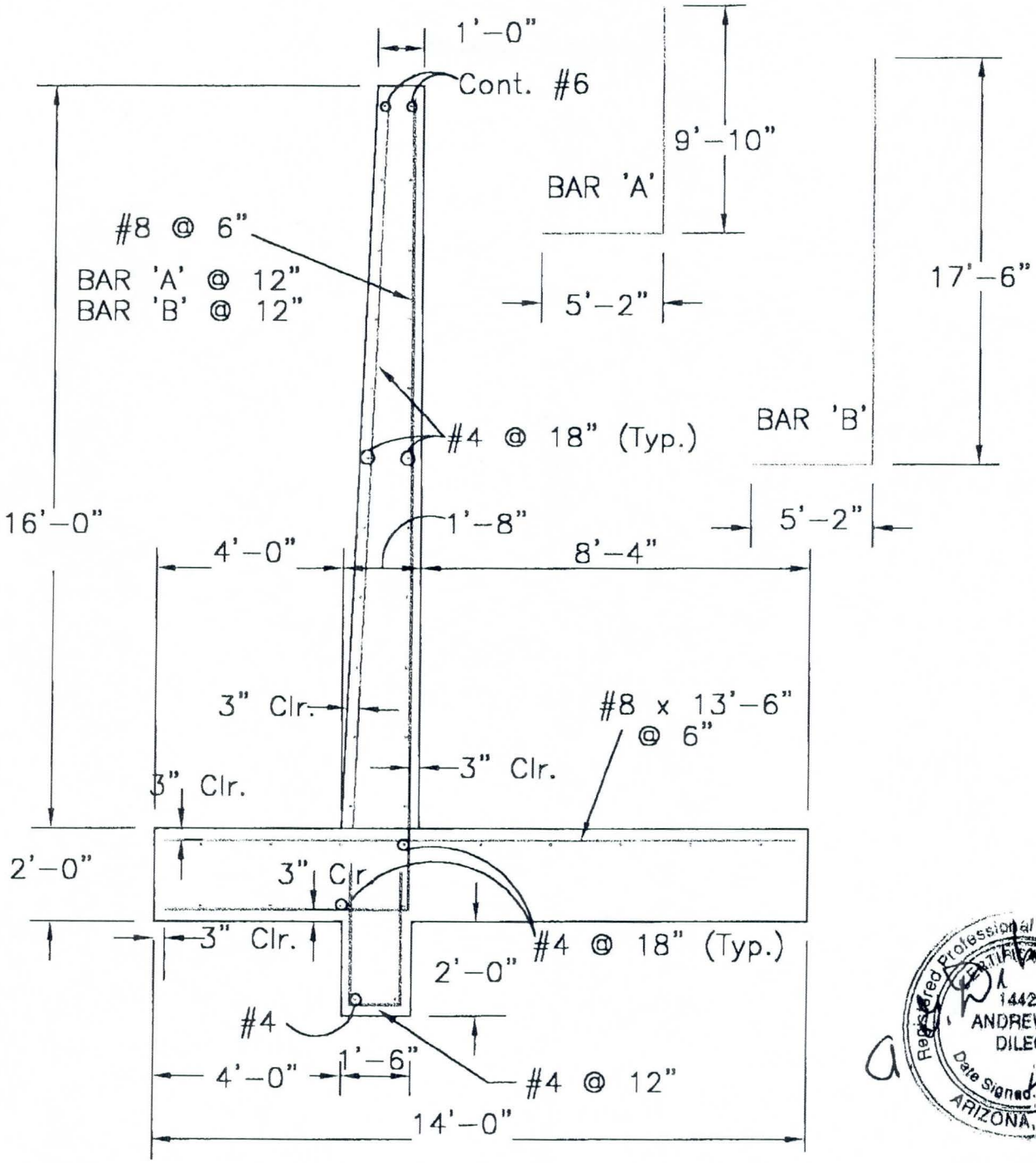

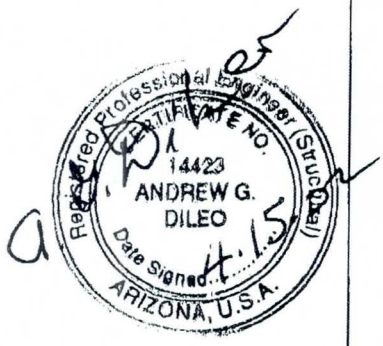

16' Retaining Wall

PCN 117.08.31	CONTRACT 2000C041 Assignment No. 2	File: D9601A, Disk #104	Sht 4 of 4
FLOOD CONTROL DISTRICT of Maricopa County 2801 West Durango St. Phoenix, Arizona 85009 (602) 506-4601	DiLEO Engineering Structural & Civil 2432 West Peoria Ave., Phoenix, AZ. 85029 (602) 395-0756	Retaining Walls to Protect SRP Power Poles	

FLOOD CONTROL DISTRICT OF MARICOPA COUNTY

PROJECT LACC PAGE ___ OF ___

DETAIL Retaining wall COMPUTED KVH DATE 4/02

CHECKED BY ___ DATE ___

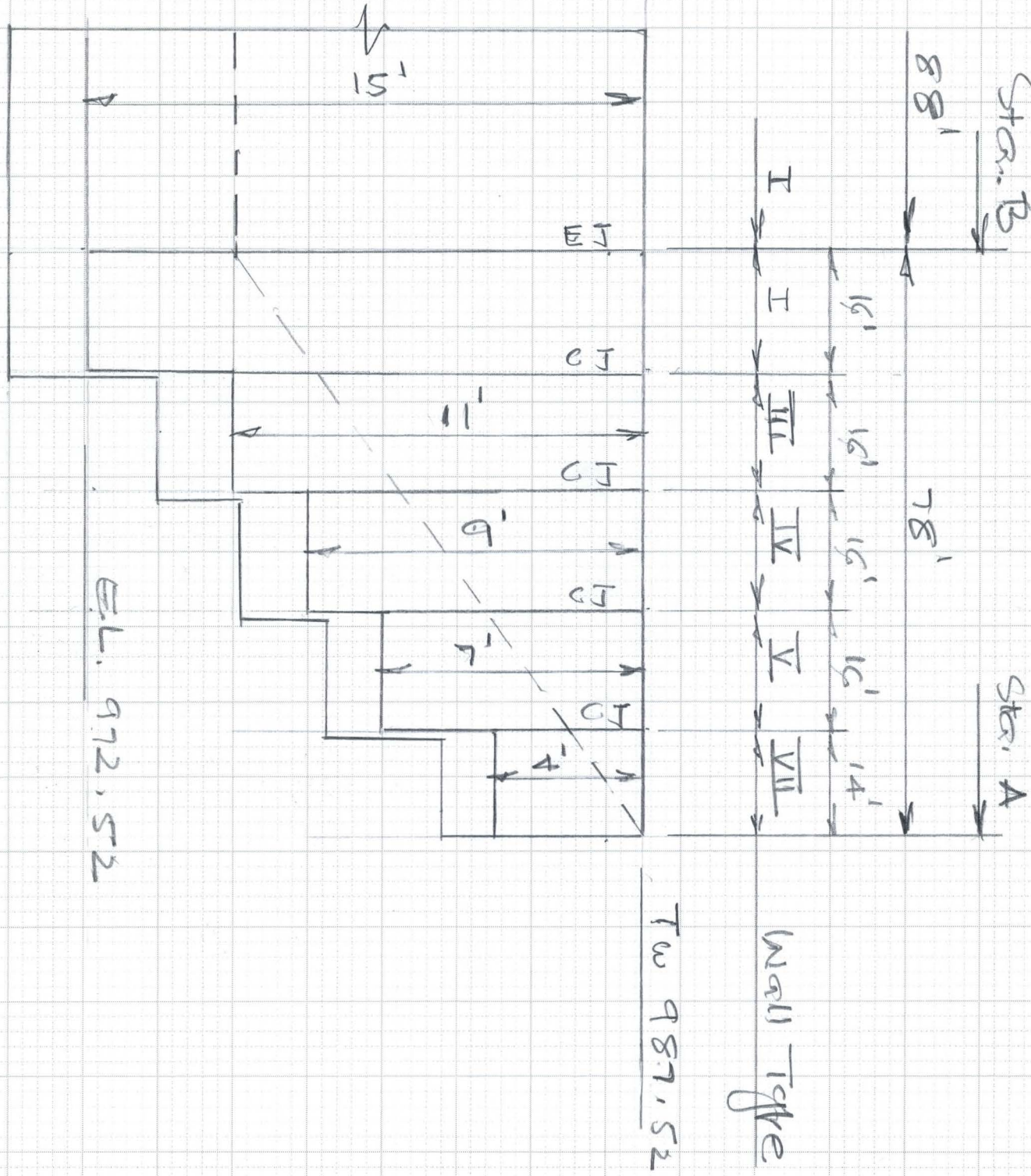

6910-153 4-90

FLOOD CONTROL DISTRICT OF MARICOPA COUNTY

PROJECT LACC PAGE ___ OF ___

DETAIL Retaining Wall 8 COMPUTED KVH DATE 4/02

CHECKED BY ___ DATE ___

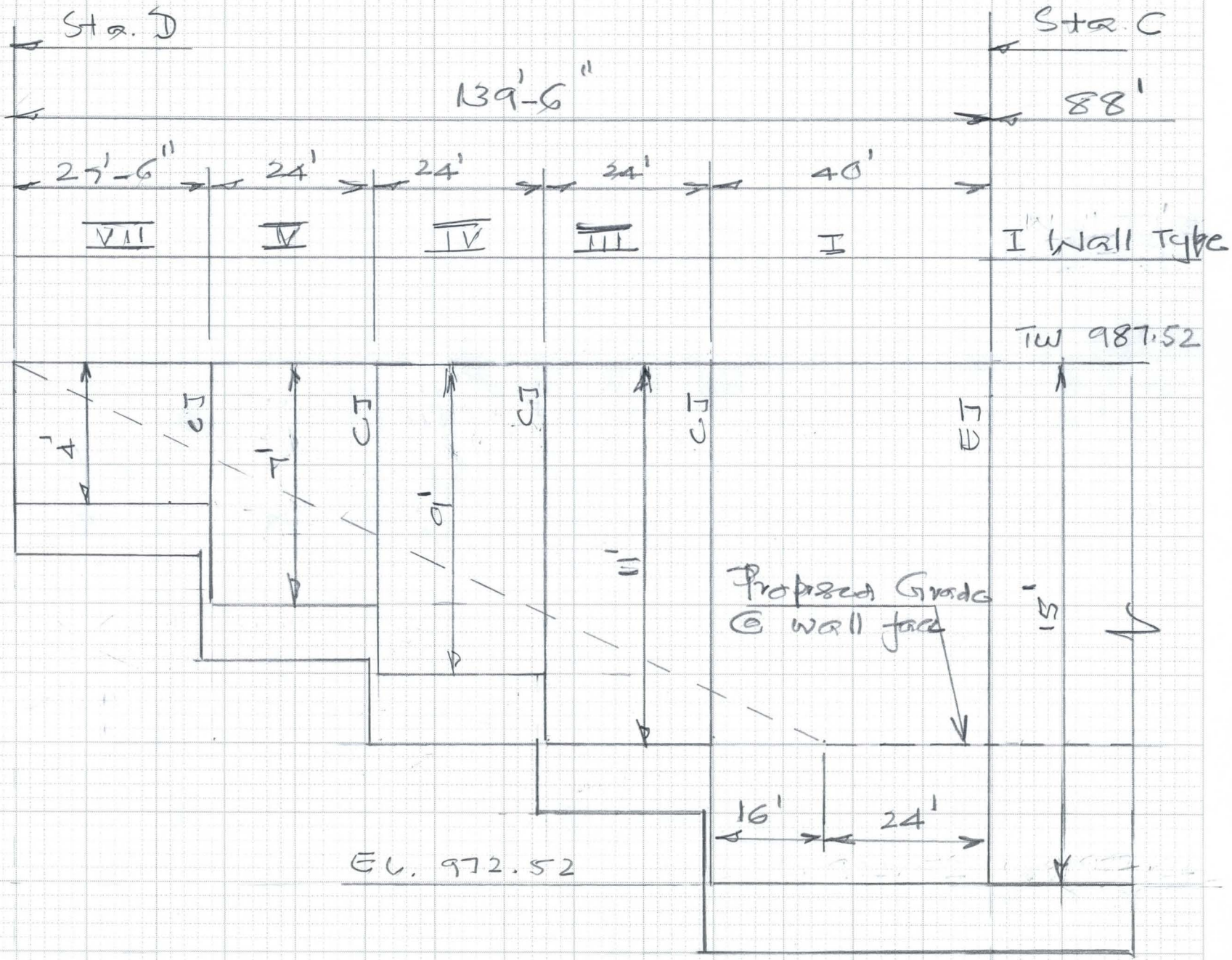

Wall 6

NTS

6910-153 4-90

FLOOD CONTROL DISTRICT OF MARICOPA COUNTY

PROJECT Latec PAGE 1 OF

DETAIL Retaining Wall COMPUTED KVH DATE 3/02

CHECKED BY DATE

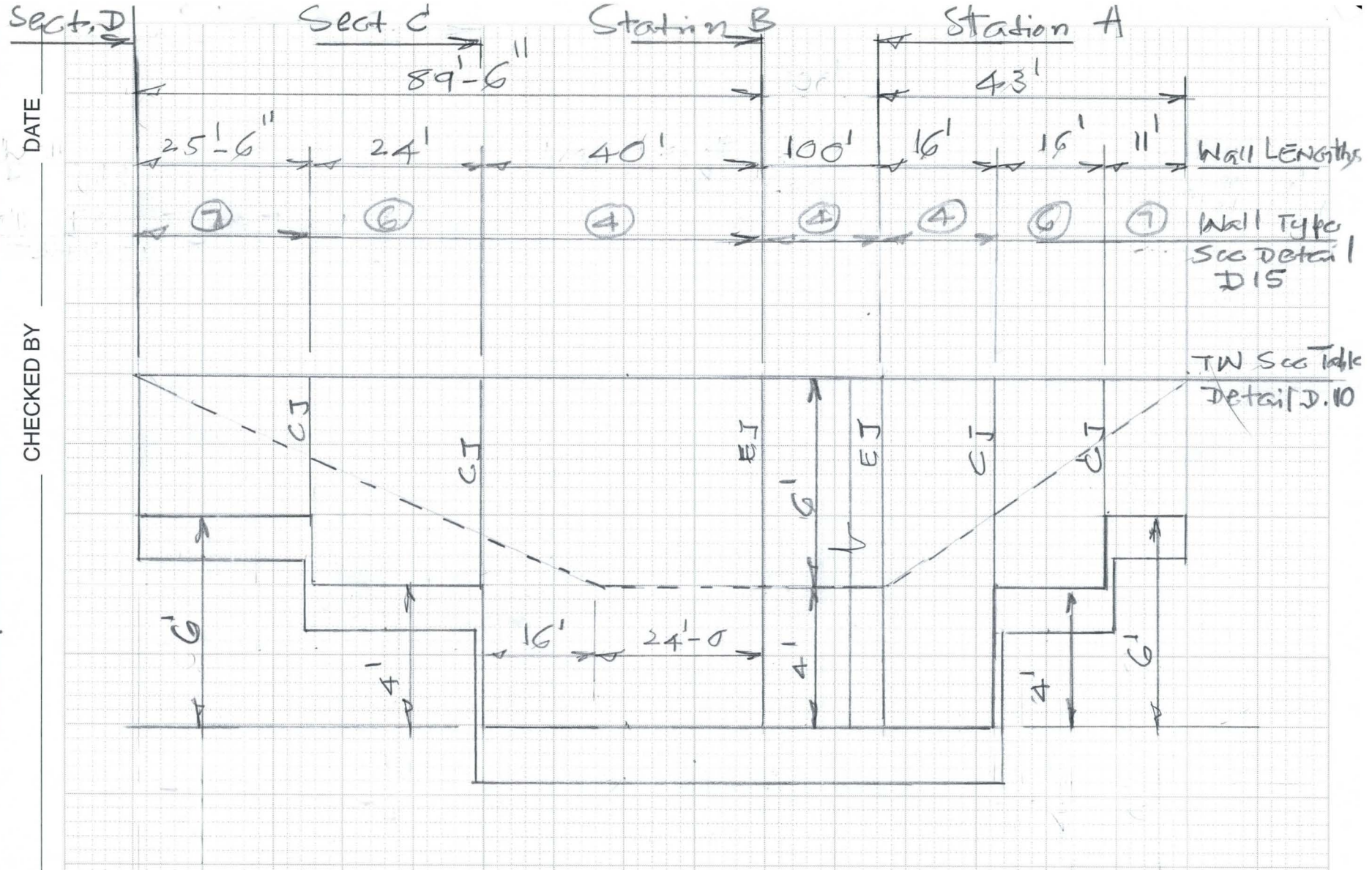

Wall 1 & Wall 2

NTS

1" = 20'

1" = 4

6910-153 4-90

FLOOD CONTROL DISTRICT OF MARICOPA COUNTY

PROJECT LAGC PAGE 2 OF

DETAIL Retaining walls COMPUTED KVH DATE 3/02

CHECKED BY DATE

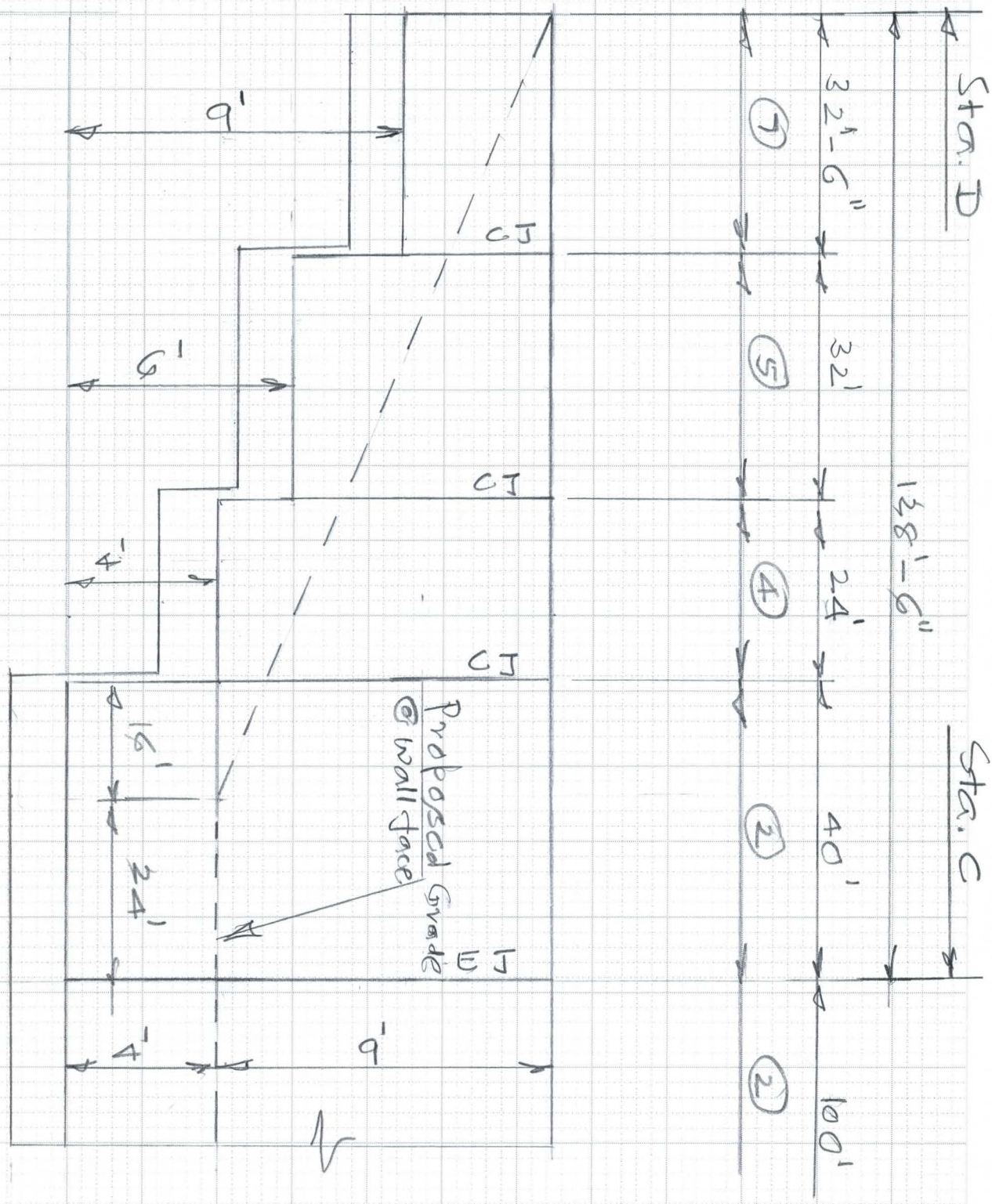

6910-153 4-90

FLOOD CONTROL DISTRICT OF MARICOPA COUNTY

PROJECT LACC PAGE 3 OF

DETAIL Retaining wall COMPUTED KVH DATE 3/03

CHECKED BY DATE

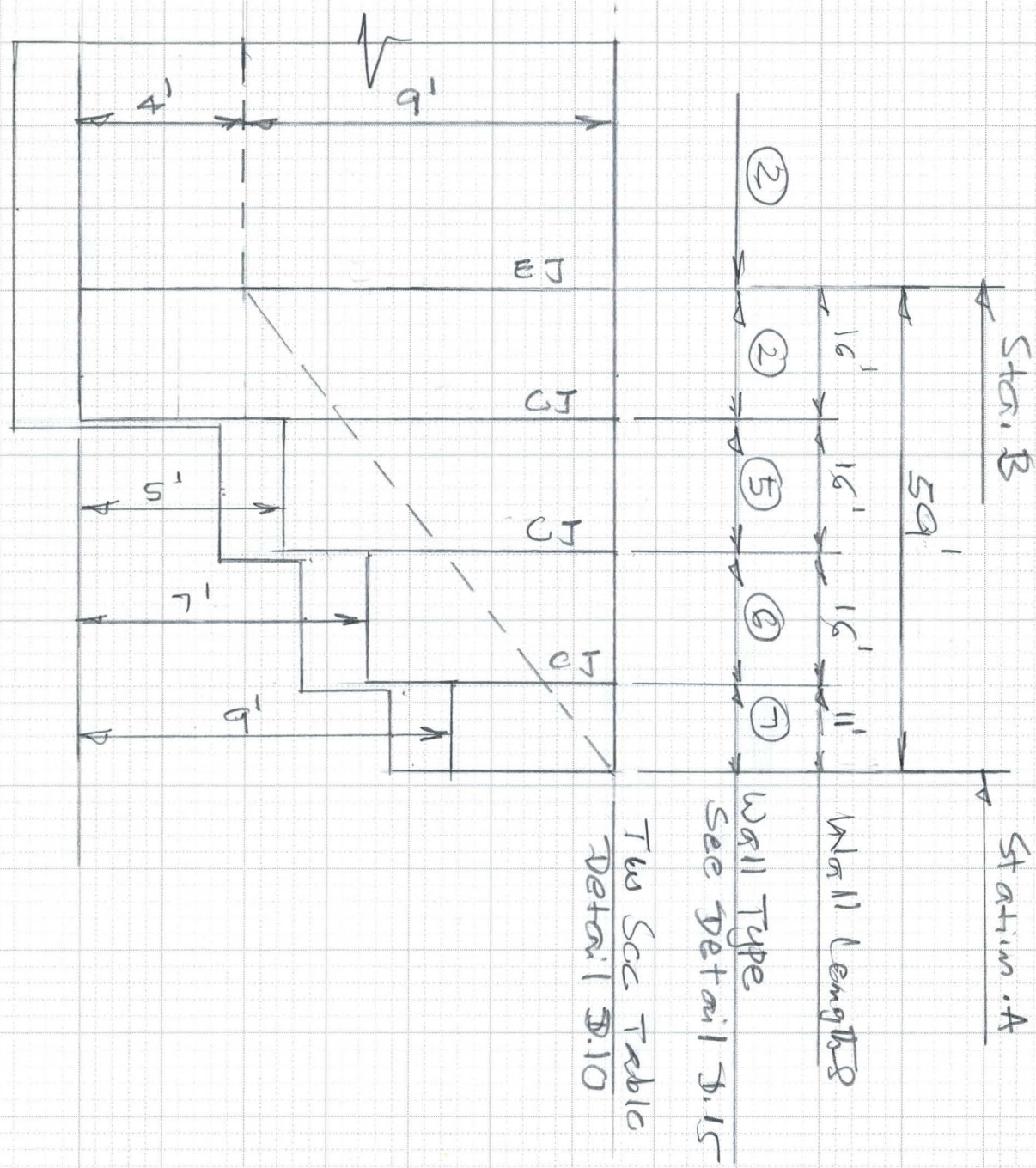

6910-153 4-90

FLOOD CONTROL DISTRICT OF MARICOPA COUNTY

PROJECT LAGC PAGE 2 OF 4

DETAIL Retaining walls COMPUTED KVH DATE 3/02

CHECKED BY _____ DATE _____

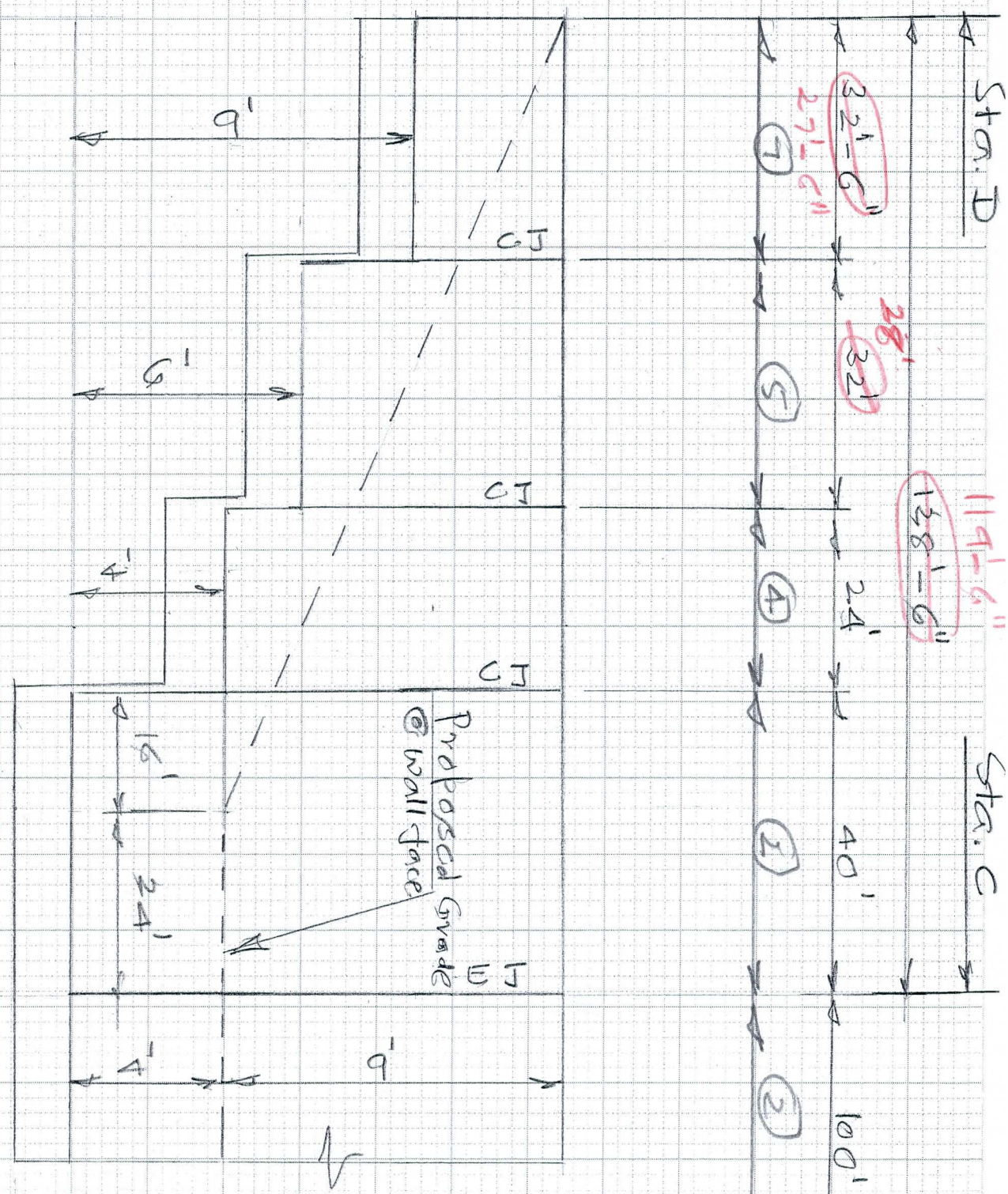

6910-153 4-90

FLOOD CONTROL DISTRICT OF MARICOPA COUNTY

PROJECT LACC PAGE ~~3~~ 5 OF

DETAIL Retaining wall COMPUTED KVH DATE 3/a

CHECKED BY DATE

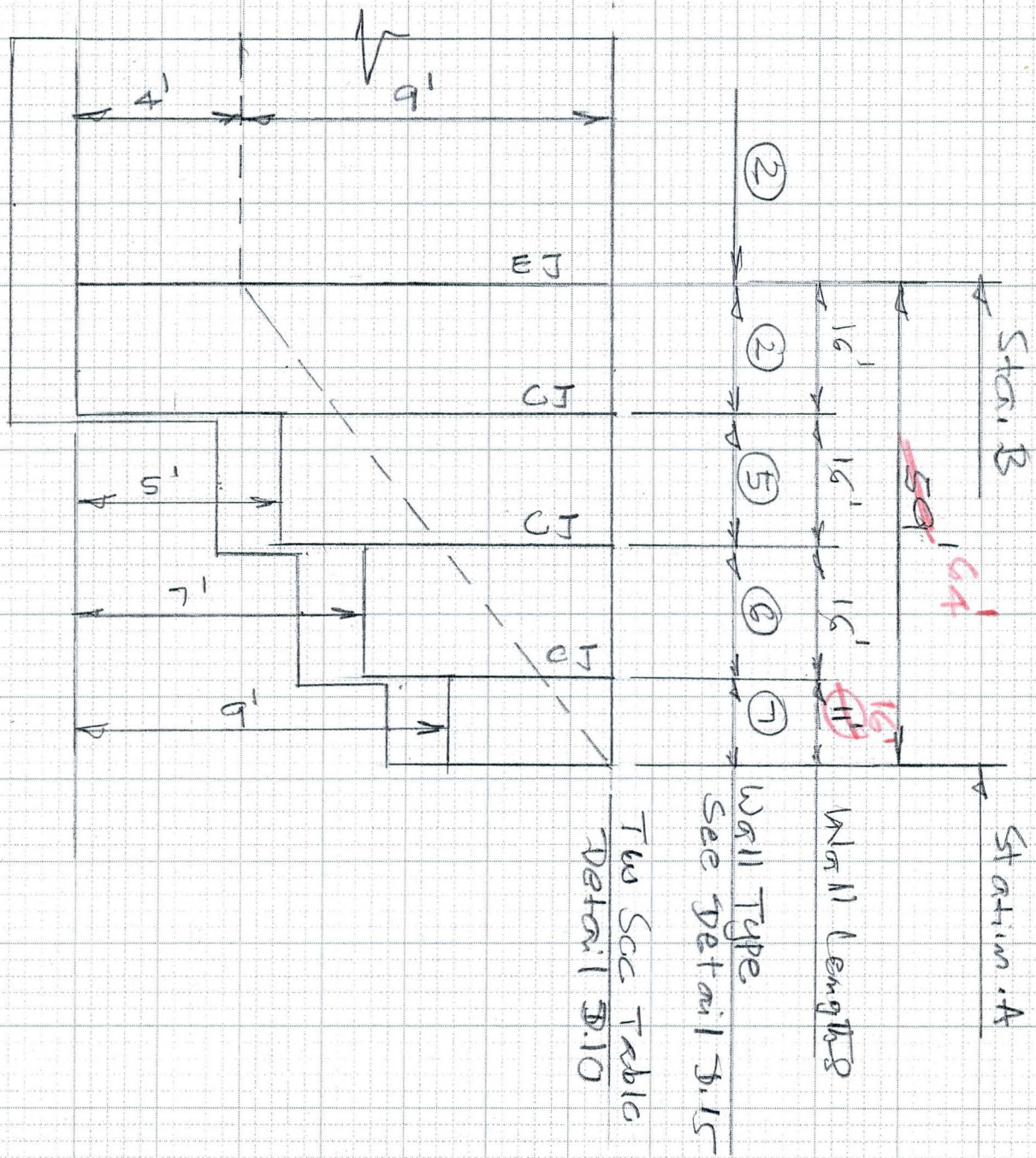

Wall ~~3~~ 4
NTS

6910-153 4-90

FLOOD CONTROL DISTRICT OF MARICOPA COUNTY

PROJECT LACC PAGE ____ OF ____

DETAIL Retaining Wall COMPUTED KRH DATE 4/02

CHECKED BY ____ DATE ____

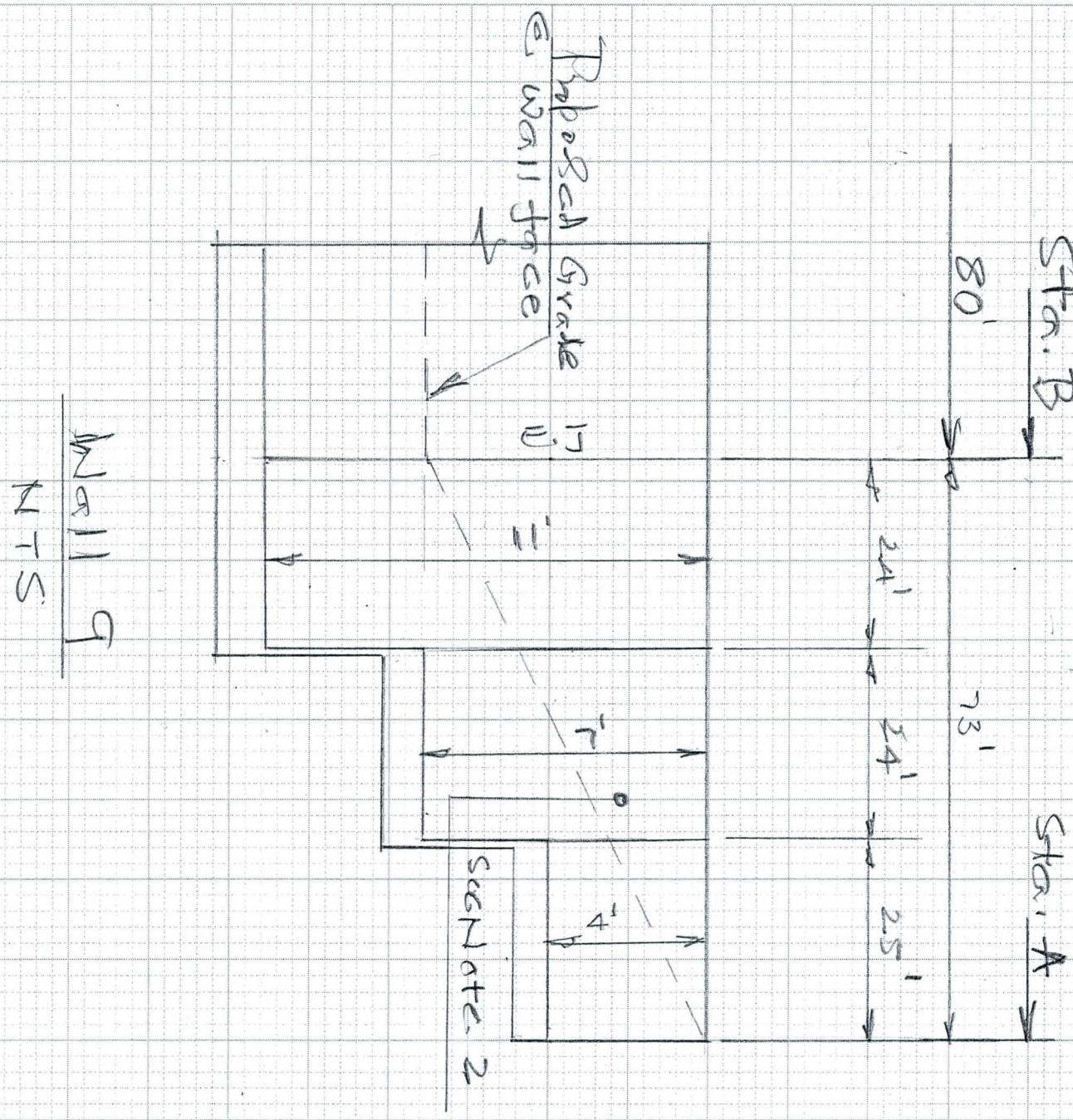

6910-153 4-90

FLOOD CONTROL DISTRICT OF MARICOPA COUNTY

PROJECT LACC PAGE ____ OF ____

DETAIL Retaining Wall COMPUTED KVH DATE 4/02

CHECKED BY ____ DATE ____

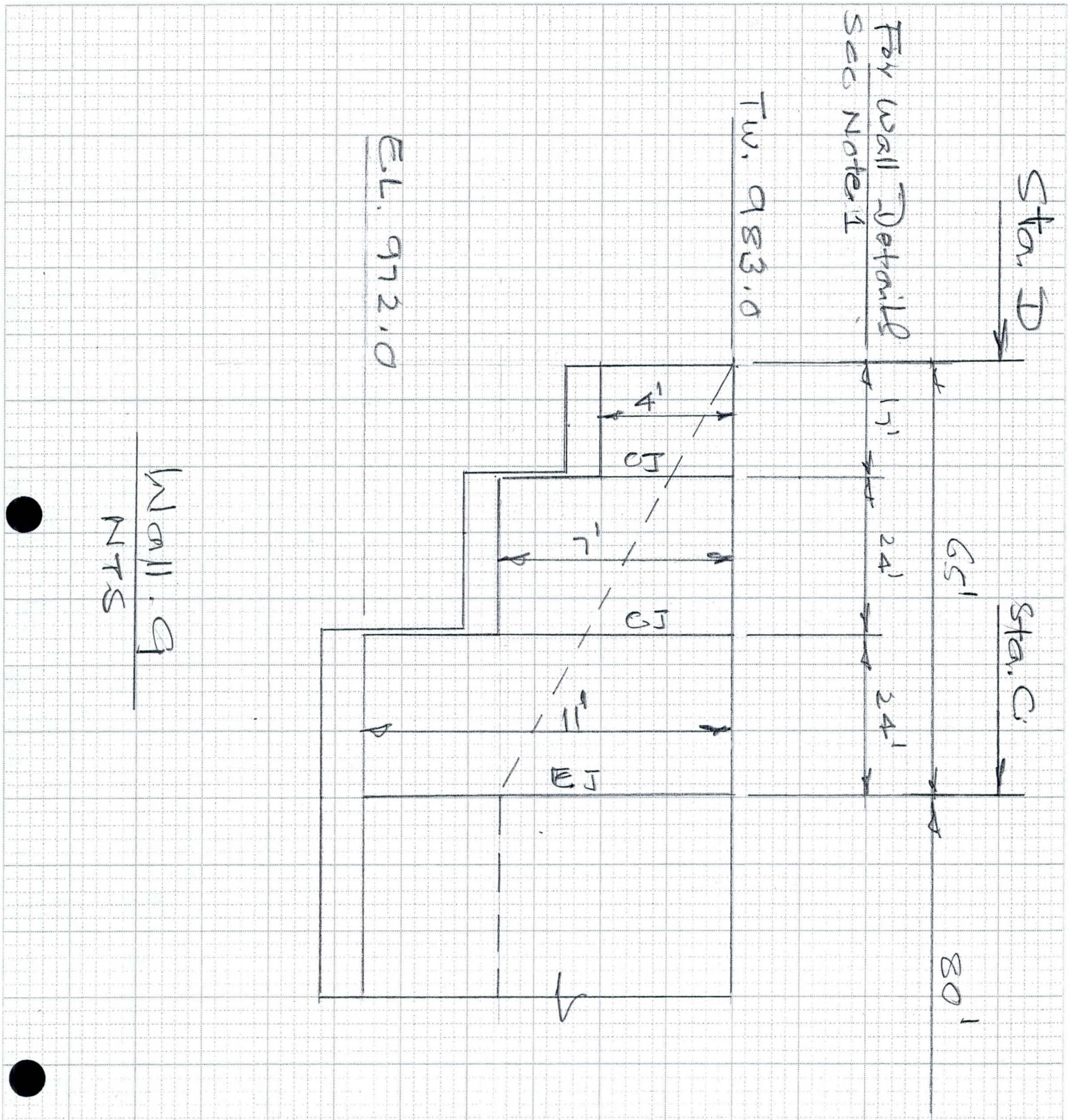

6910-153 4-90

FLOOD CONTROL DISTRICT OF MARICOPA COUNTY

PROJECT LACC PAGE ___ OF ___

DETAIL Retaining Wall COMPUTED KVH DATE 4/02

CHECKED BY ___ DATE ___

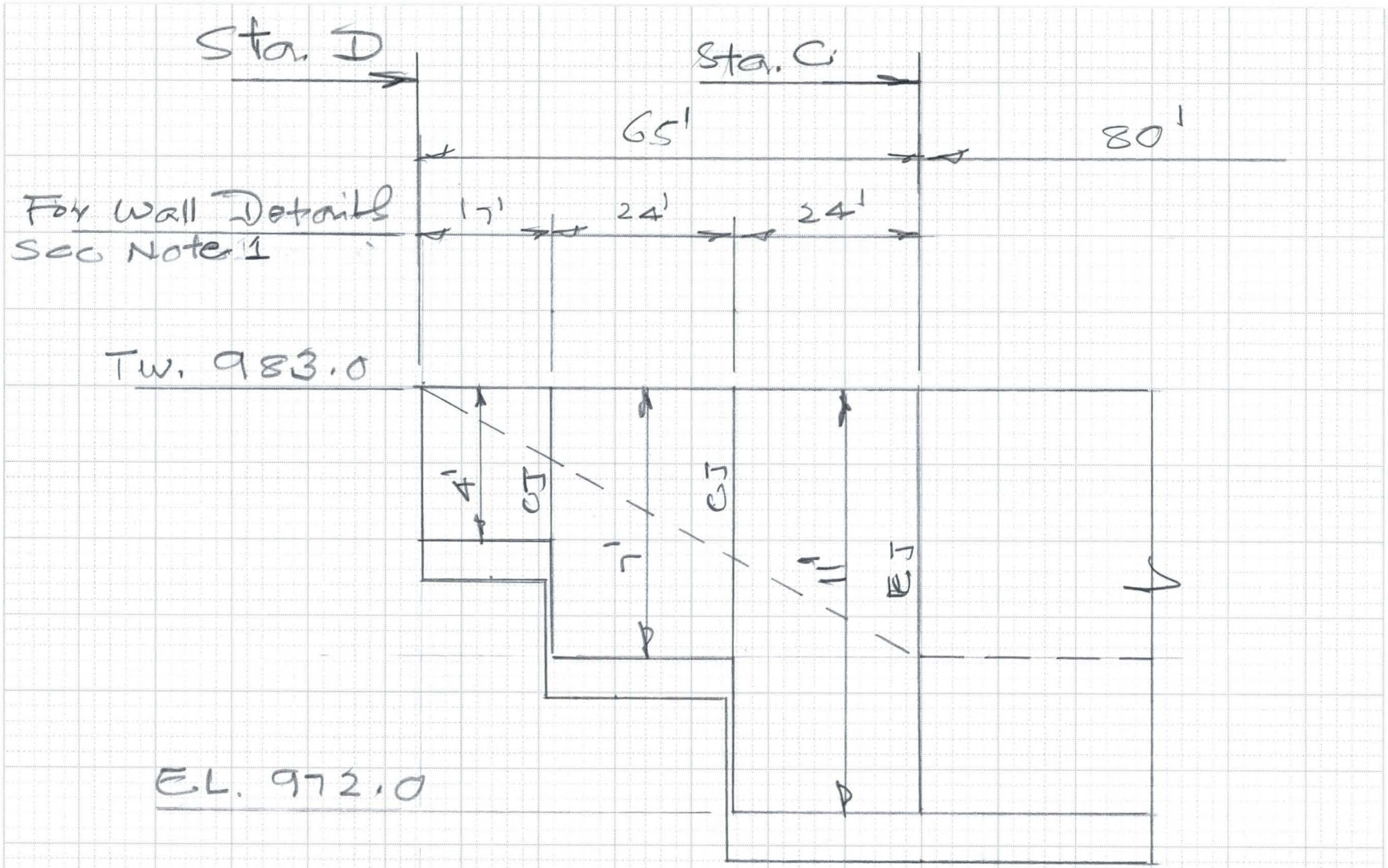

Wall. 9

NTS

6910-153 4-90

FLOOD CONTROL DISTRICT OF MARICOPA COUNTY

PROJECT LACC PAGE ___ OF ___

DETAIL Retaining wall COMPUTED KVH DATE 4/02

CHECKED BY ___ DATE ___

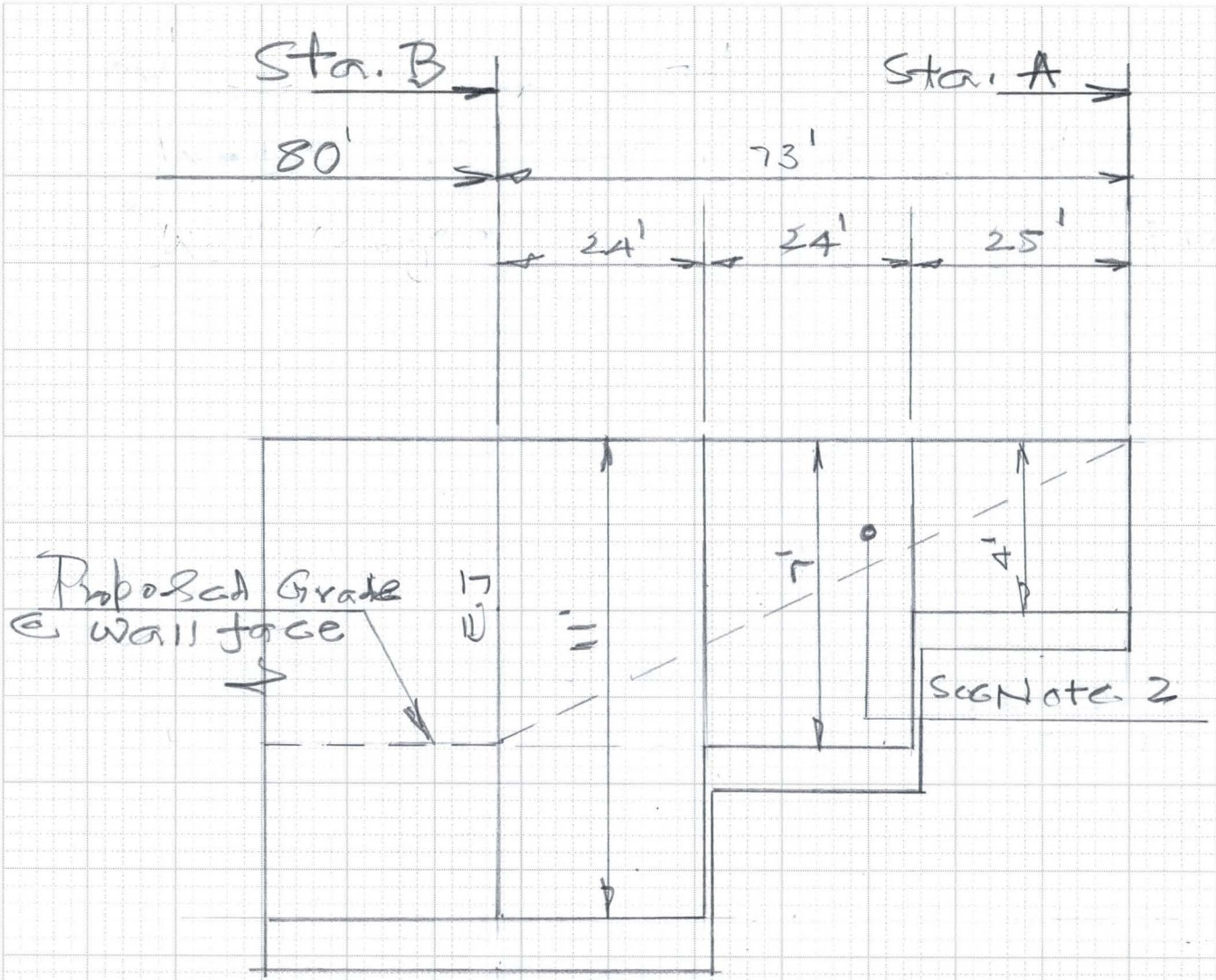

Wall 9

NTS

6910-153 4-90

FLOOD CONTROL DISTRICT OF MARICOPA COUNTY

TOP SECRET
FLOOD CONTROL DISTRICT OF MARICOPA COUNTY

PROJECT LACC PAGE ___ OF ___

DETAIL Retaining Walls COMPUTED KVH DATE 4/02

CHECKED BY ___ DATE ___

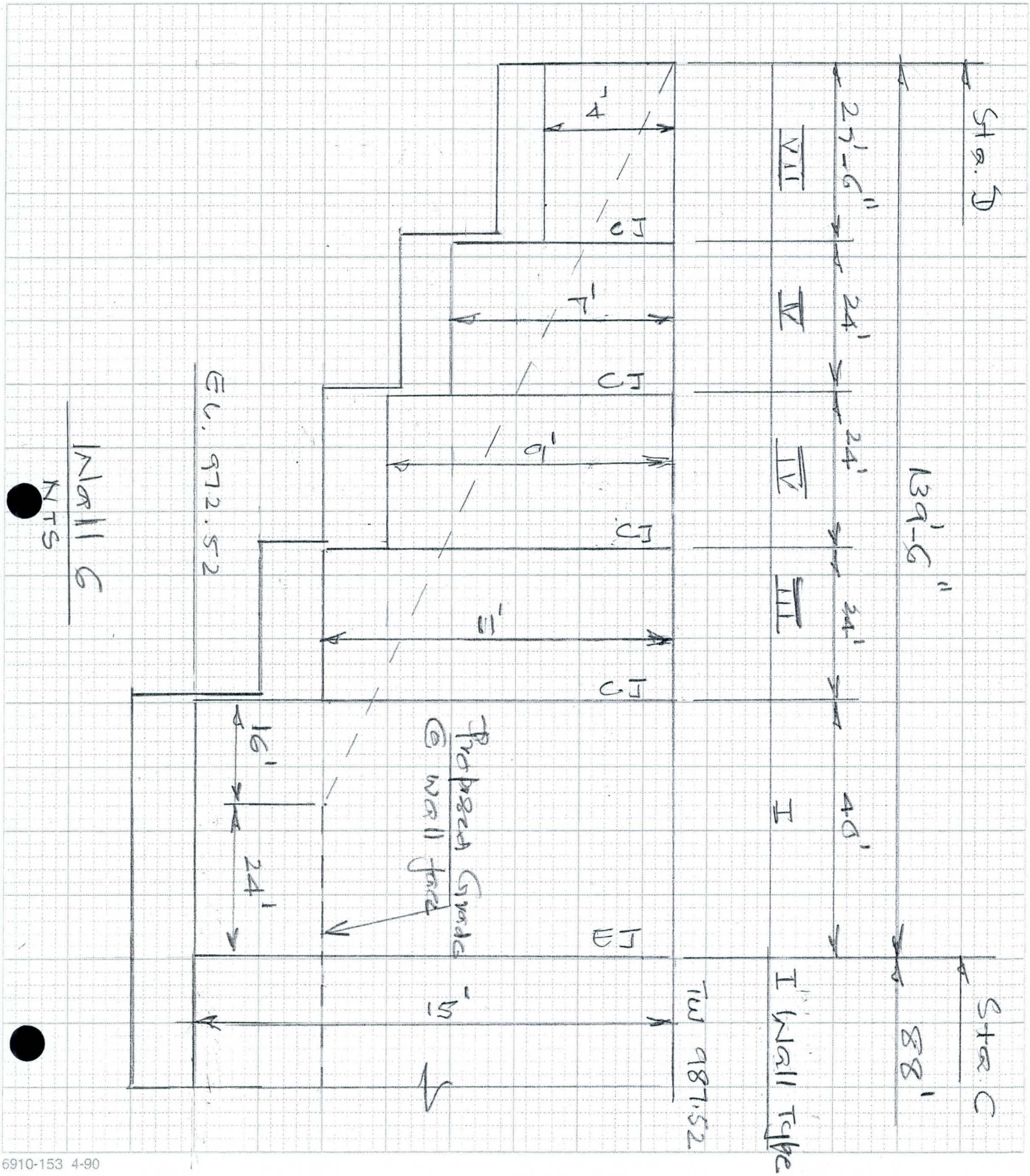

6910-153 4-90

FLOOD CONTROL DISTRICT OF MARICOPA COUNTY

TOP SECRET

PROJECT LACC PAGE ___ OF ___

DETAIL Retaining wall COMPUTED KVH DATE 4/02

CHECKED BY ___ DATE ___

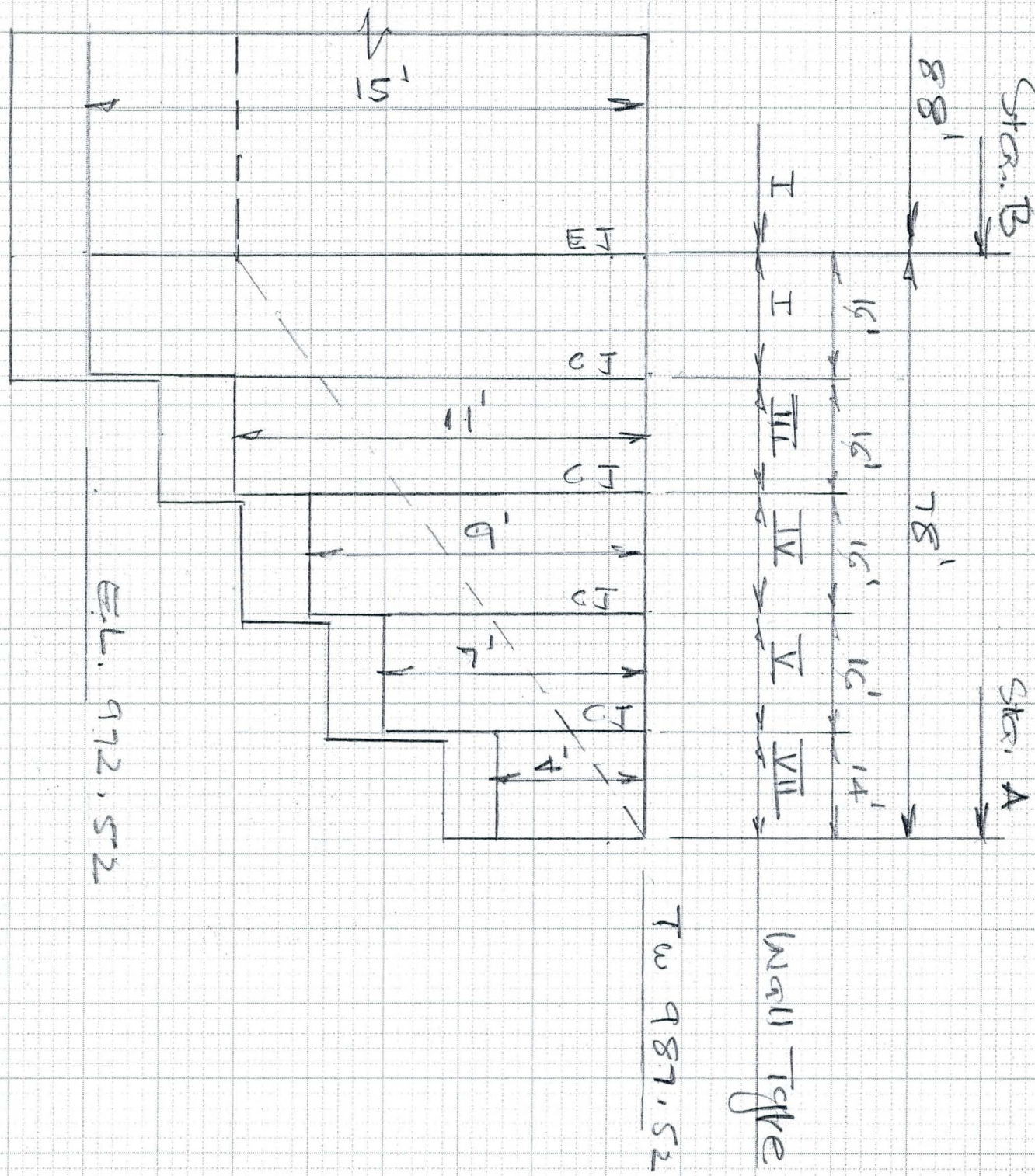

6910-153 4-90

FLOOD CONTROL DISTRICT OF MARICOPA COUNTY

PROJECT LACO PAGE ____ OF ____

DETAIL Retaining walls COMPUTED KVH DATE 4/02

CHECKED BY ____ DATE ____

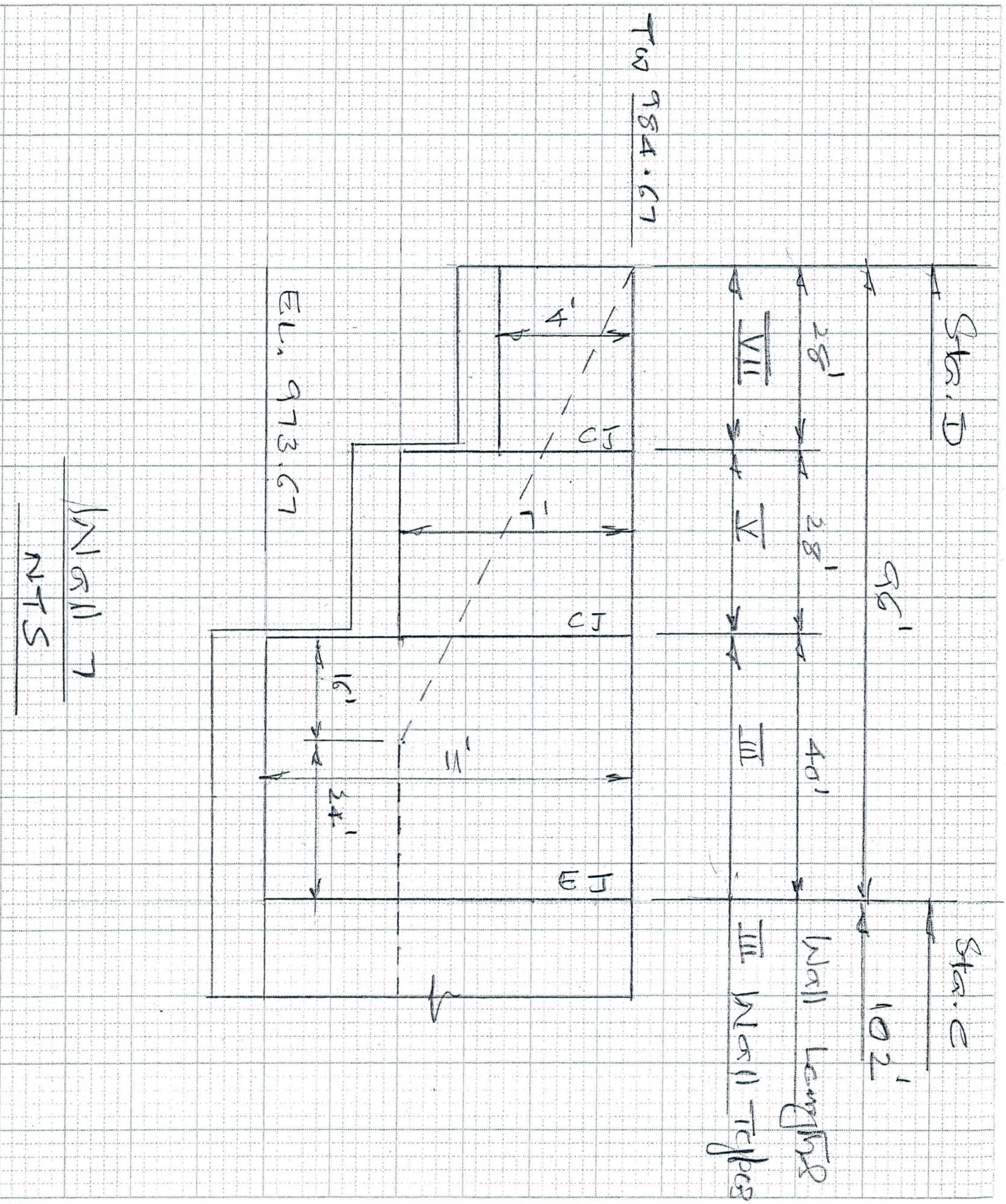

3910-153 4-90

FLOOD CONTROL DISTRICT OF MARICOPA COUNTY

PROJECT LACC PAGE ___ OF ___

DETAIL Retaining walls COMPUTED KVH DATE 4/02

CHECKED BY ___ DATE ___

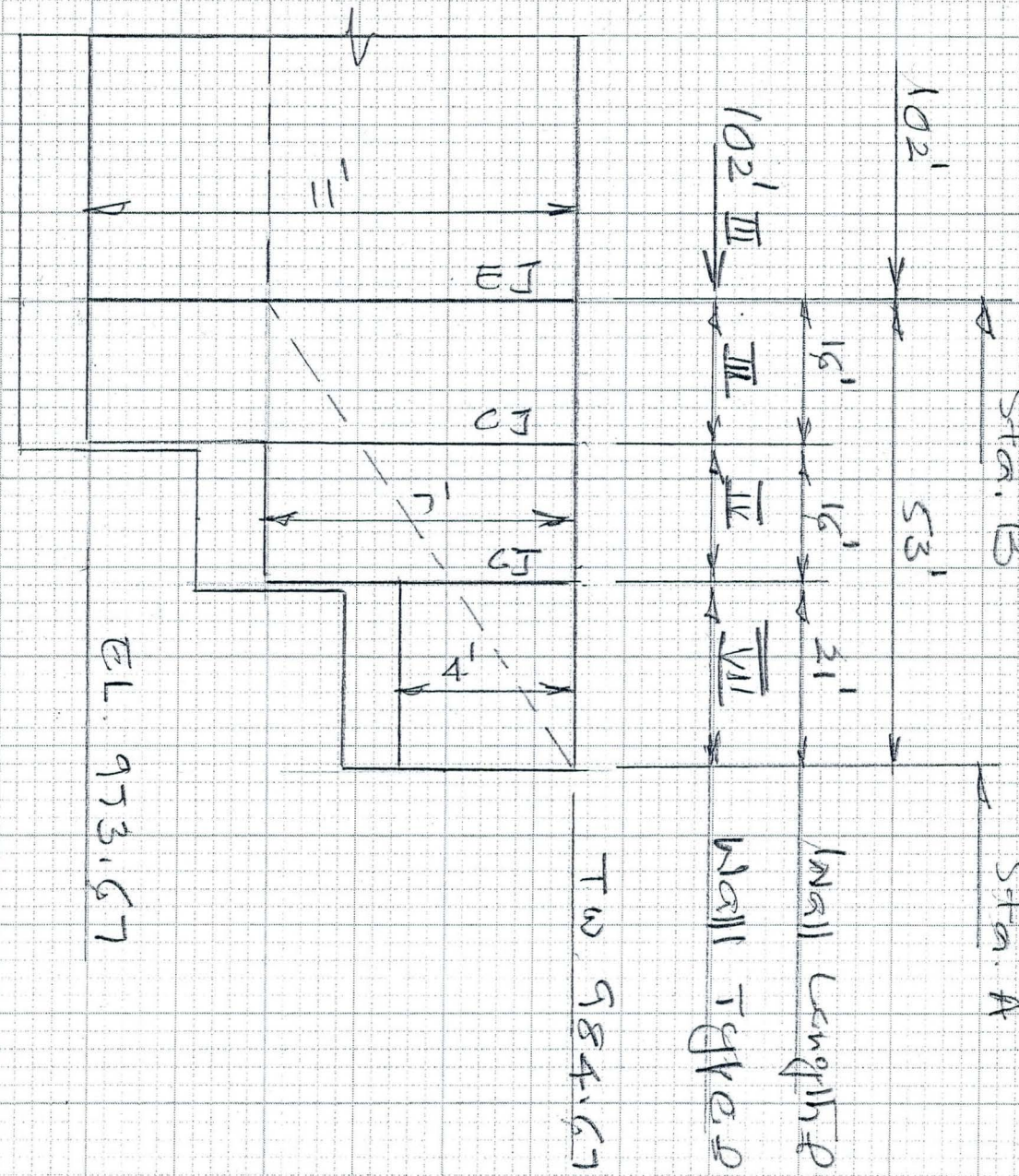

6910-153 4-90

FLOOD CONTROL DISTRICT OF MARICOPA COUNTY

PROJECT LACC PAGE ___ OF ___

DETAIL Retaining walls COMPUTED KVH DATE 4/02

CHECKED BY ___ DATE ___

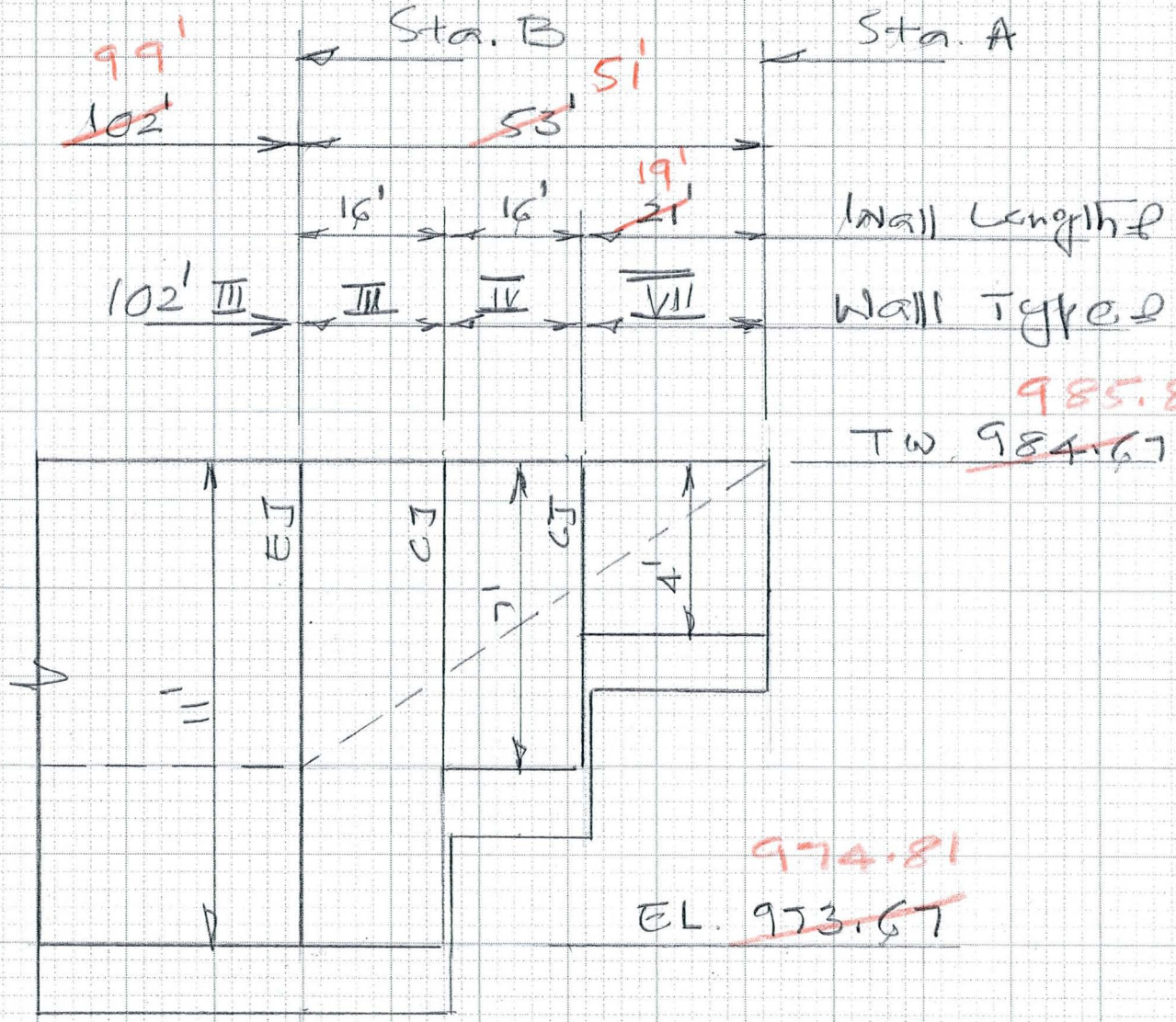

Wall 8

NTS

FLOOD CONTROL DISTRICT OF MARICOPA COUNTY

PROJECT LACC PAGE ____ OF ____

DETAIL Retaining walls COMPUTED KVH DATE 4/02

CHECKED BY ____ DATE ____

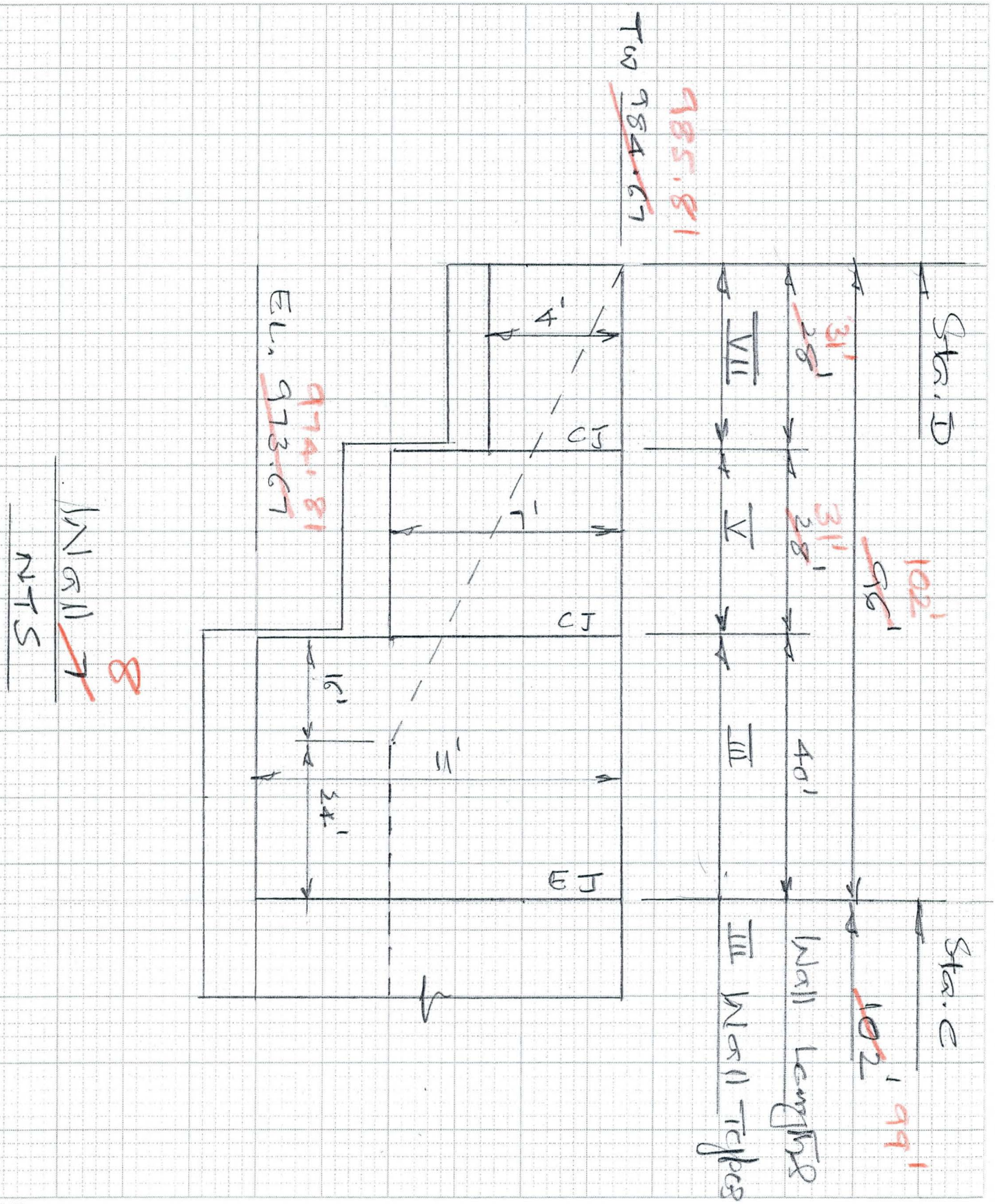

6910-153 4-90

FLOOD CONTROL DISTRICT OF MARICOPA COUNTY

PROJECT LAOC PAGE 1 OF

DETAIL Retaining walls COMPUTED KVH DATE 3/02

CHECKED BY DATE

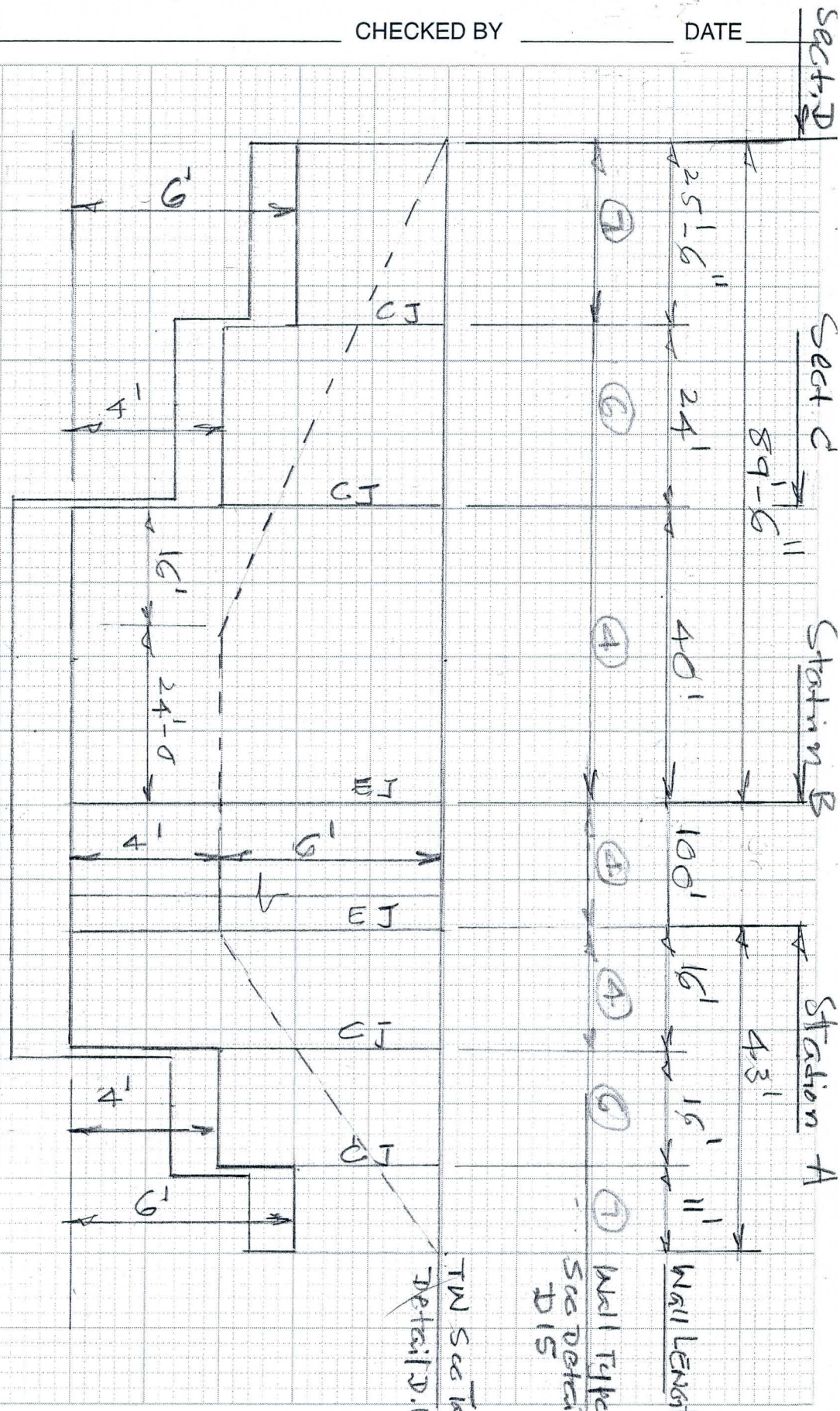

6910-153 4-90

FLOOD CONTROL DISTRICT OF MARICOPA COUNTY

PROJECT LAGC PAGE 2 OF

DETAIL Retaining walls COMPUTED KVH DATE 3/02

CHECKED BY DATE

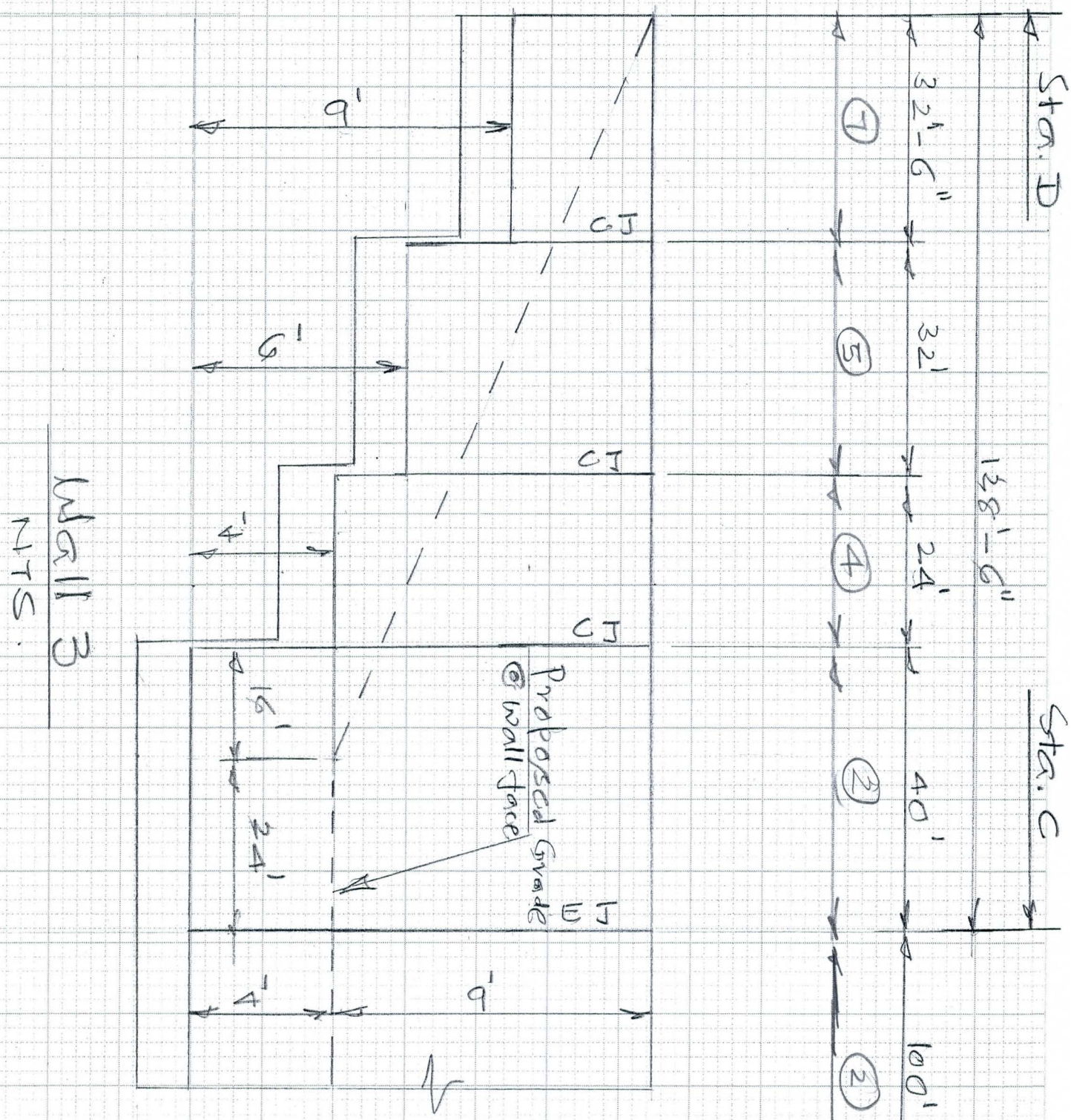

6910-153 4-90

FLOOD CONTROL DISTRICT OF MARICOPA COUNTY

PROJECT LACC PAGE 3 OF

DETAIL Retaining wall COMPUTED KVH DATE 3/03

CHECKED BY DATE

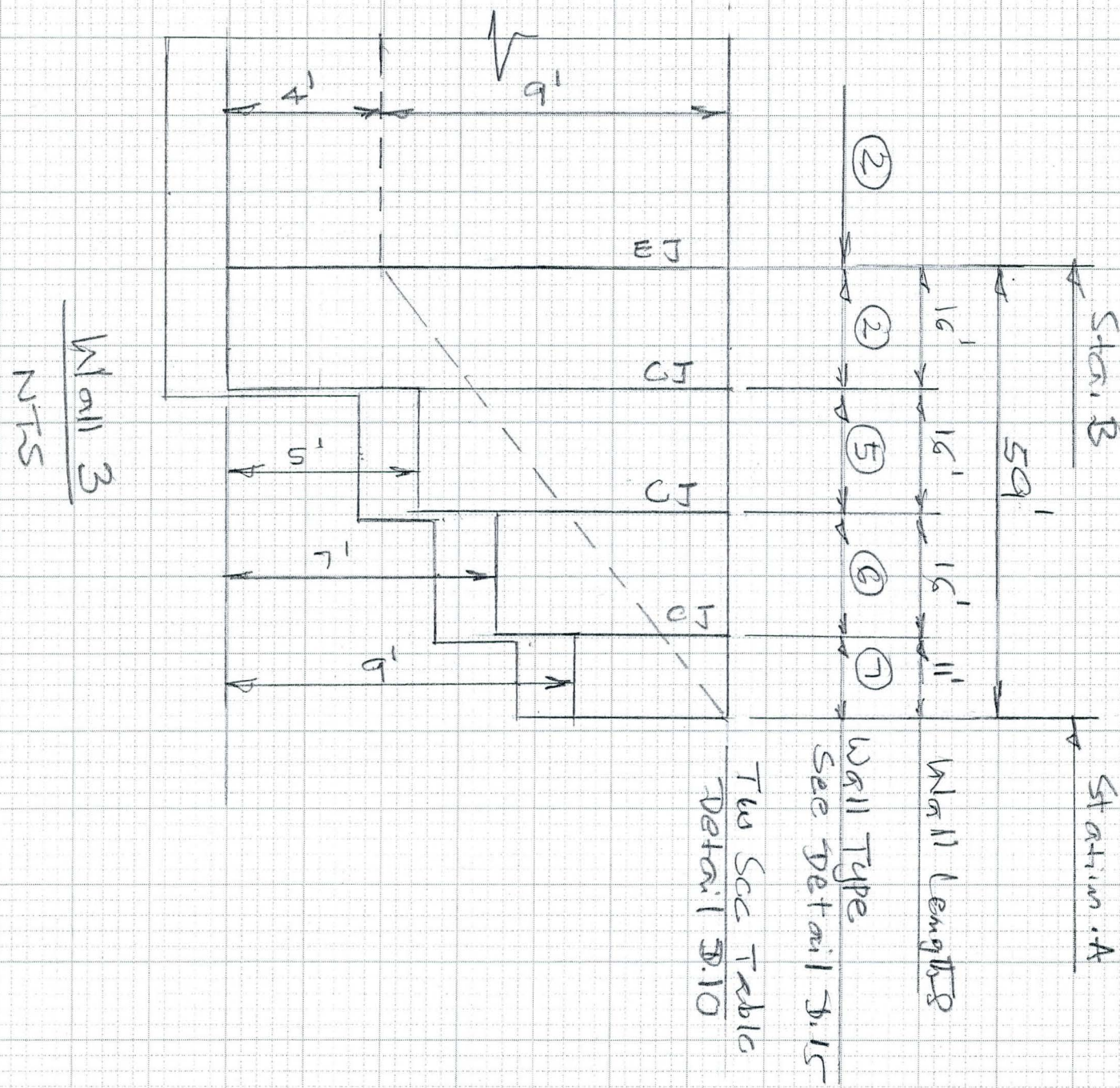

6910-153 4-90

FLOOD CONTROL DISTRICT OF MARICOPA COUNTY

PROJECT LAGC PAGE ~~2~~ 4 OF

DETAIL Retaining walls COMPUTED KVH DATE 3/0

CHECKED BY DATE

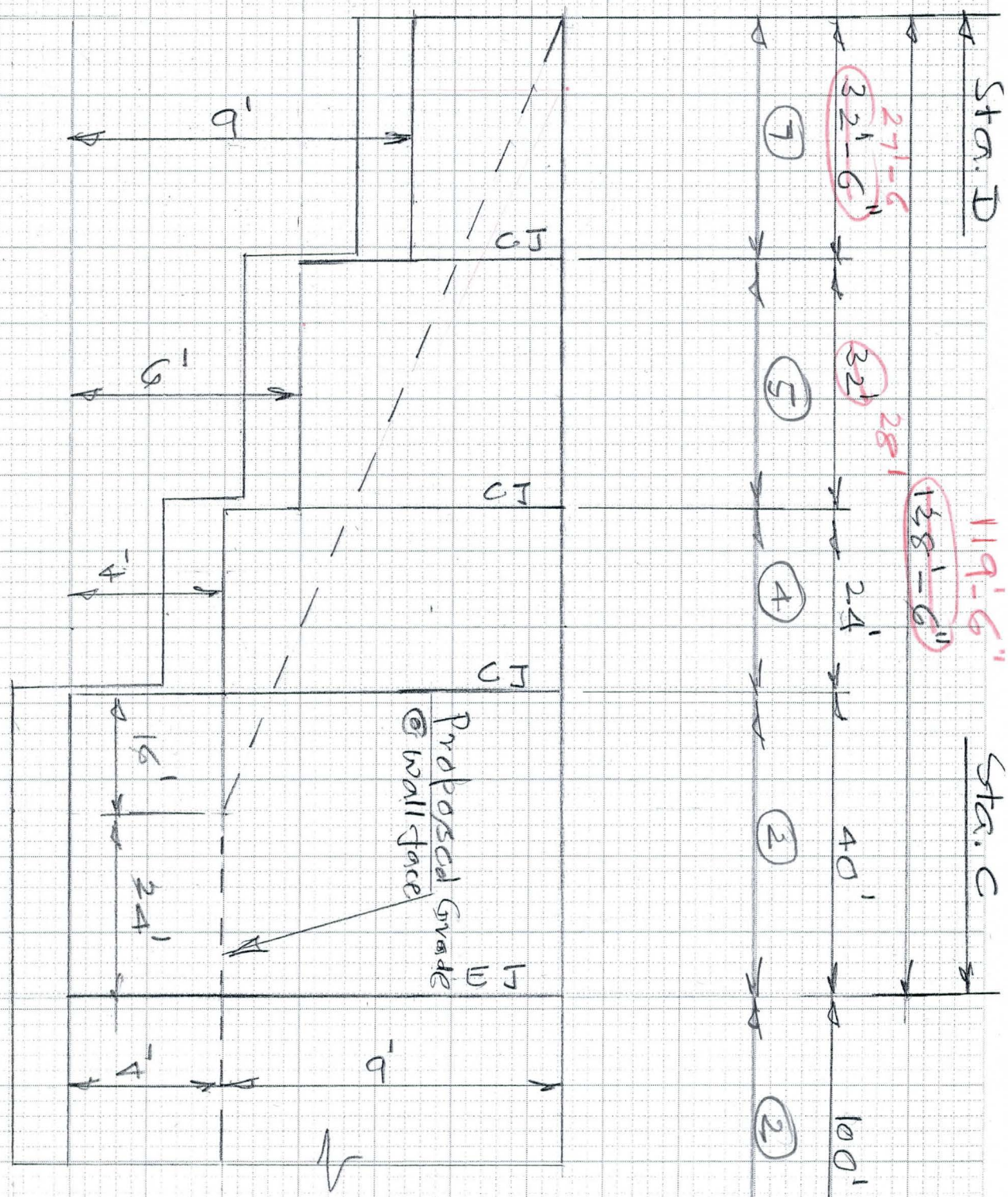

6910-153 4-90

FLOOD CONTROL DISTRICT OF MARICOPA COUNTY

PROJECT LACC PAGE ~~3~~ 5 OF

DETAIL Retaining wall COMPUTED KVH DATE 3/a

CHECKED BY DATE

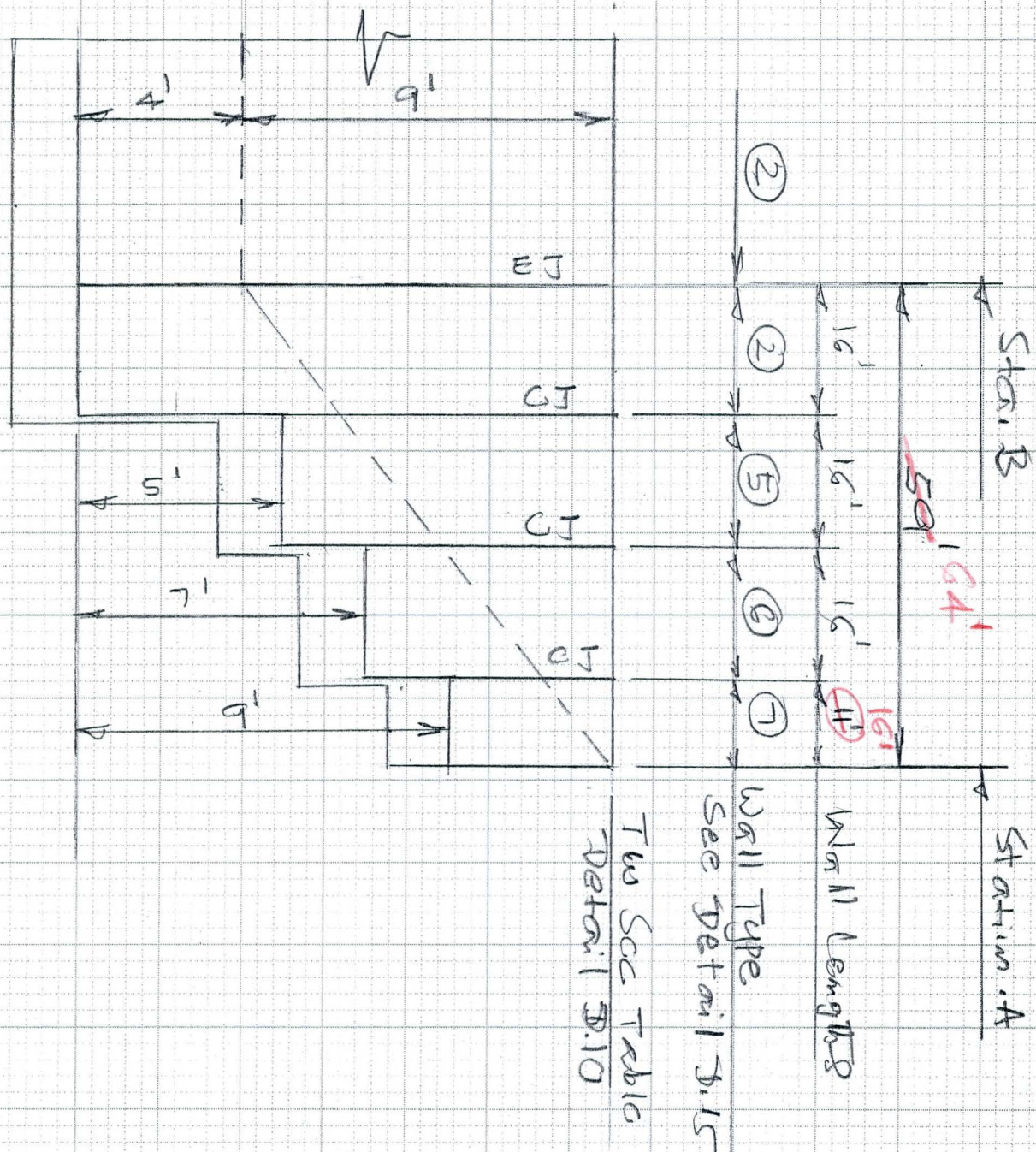

Wall 3/4
NTS

6910-153 4-90

FLOOD CONTROL DISTRICT OF MARICOPA COUNTY

TOP SECRET
FLOOD CONTROL DISTRICT OF MARICOPA COUNTY

PROJECT LACC PAGE ___ OF ___

DETAIL Retaining walls COMPUTED KVH DATE 4/02

CHECKED BY ___ DATE ___

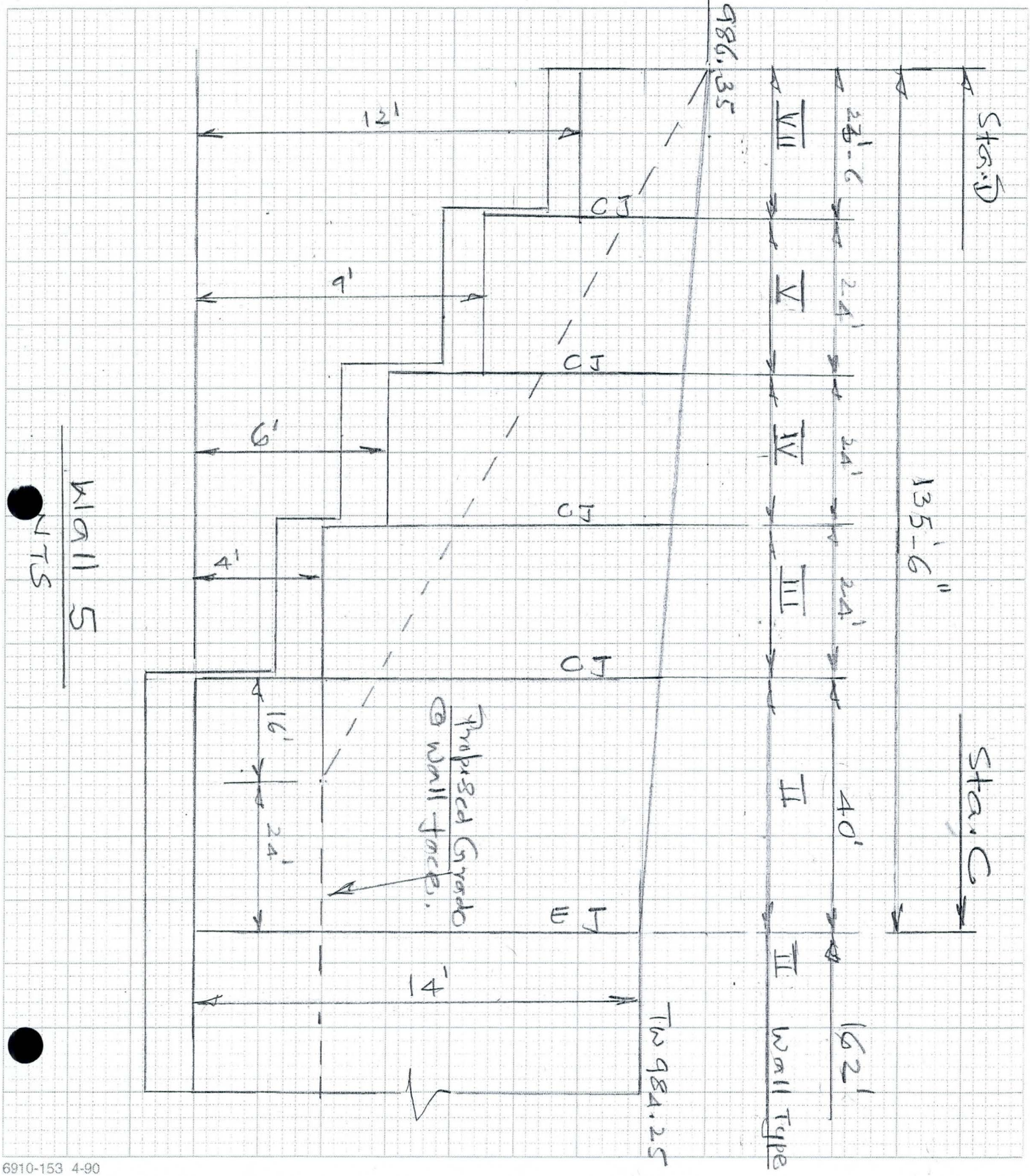

6910-153 4-90

FLOOD CONTROL DISTRICT OF MARICOPA COUNTY

PROJECT LACC PAGE ____ OF ____

DETAIL Wing Walls COMPUTED KVH DATE 4/01

CHECKED BY ____ DATE ____

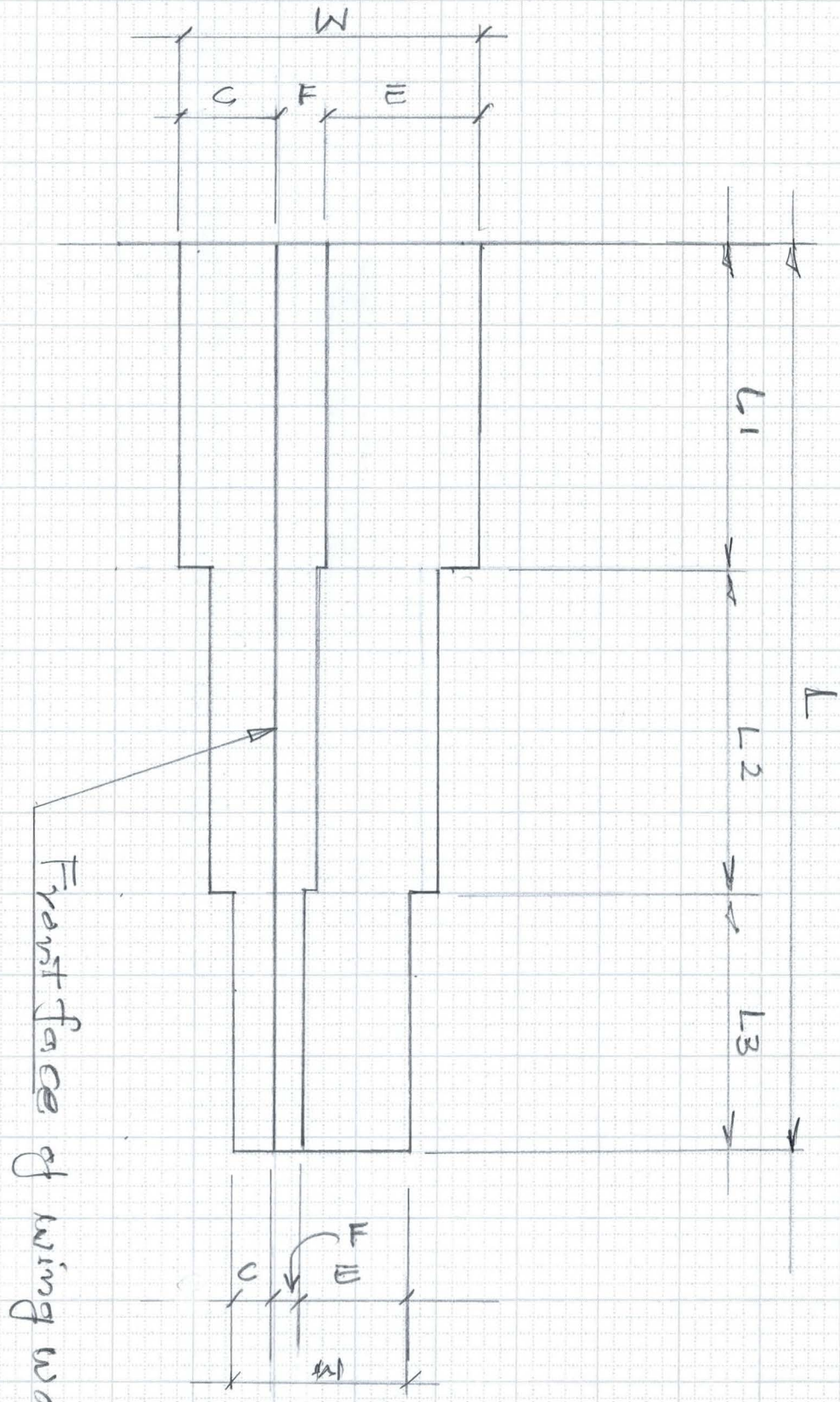

Typical Wing Wall Plan

Transfer face of wing wall

FLOOD CONTROL DISTRICT OF MARICOPA COUNTY

PROJECT LACC PAGE ___ OF ___

DETAIL Wing Wall 8 COMPUTED KVH DATE 4/01

CHECKED BY ___ DATE ___

Box Culvert wing wall

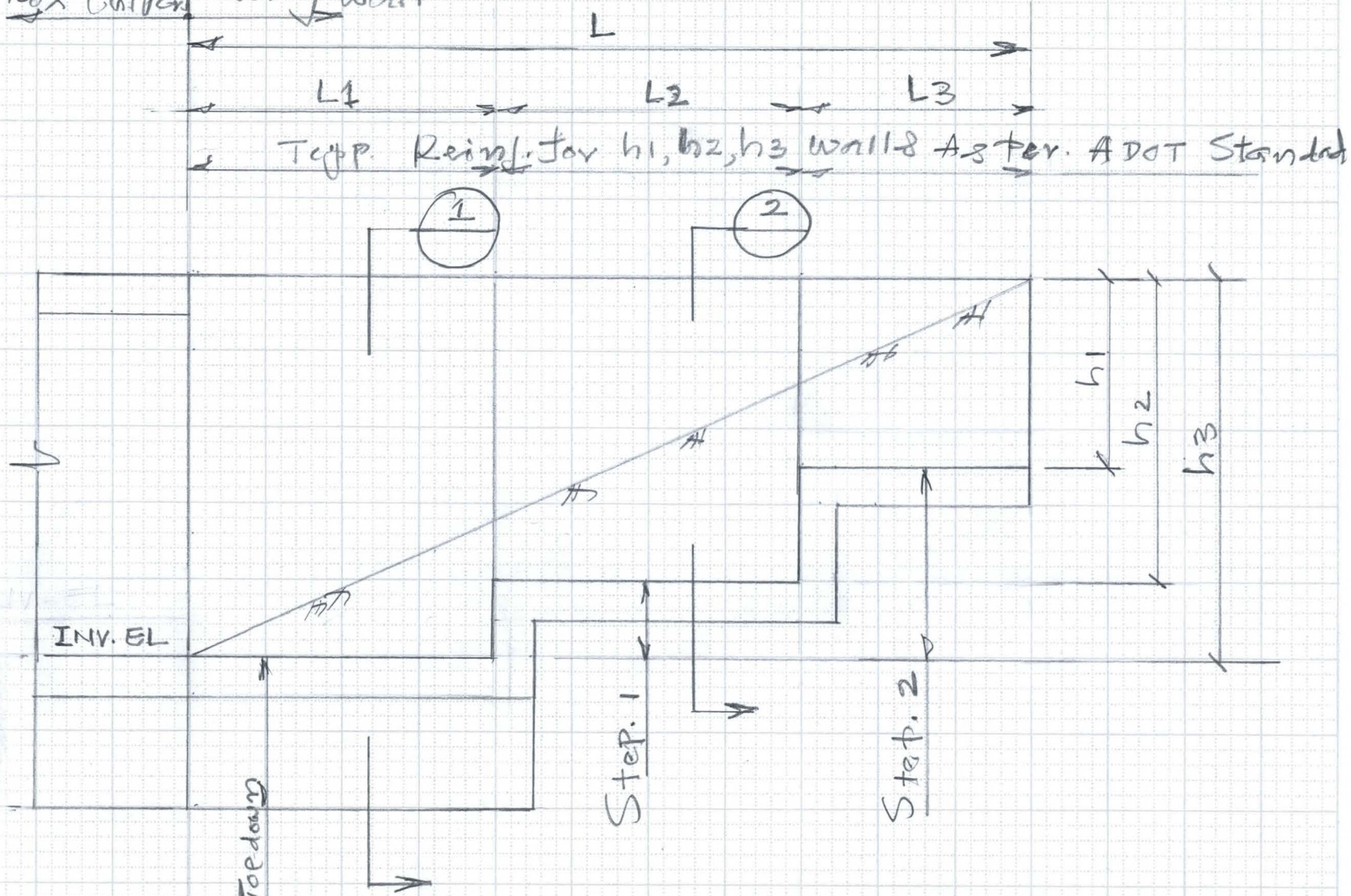

Typical Wing Wall Elevation

FLOOD CONTROL DISTRICT OF MARICOPA COUNTY

6910-153 4-90

FLOOD CONTROL DISTRICT OF MARICOPA COUNTY

PROJECT LACG PAGE ____ OF ____

DETAIL Wing Walls. COMPUTED KVH DATE 4/01

CHECKED BY ____ DATE ____

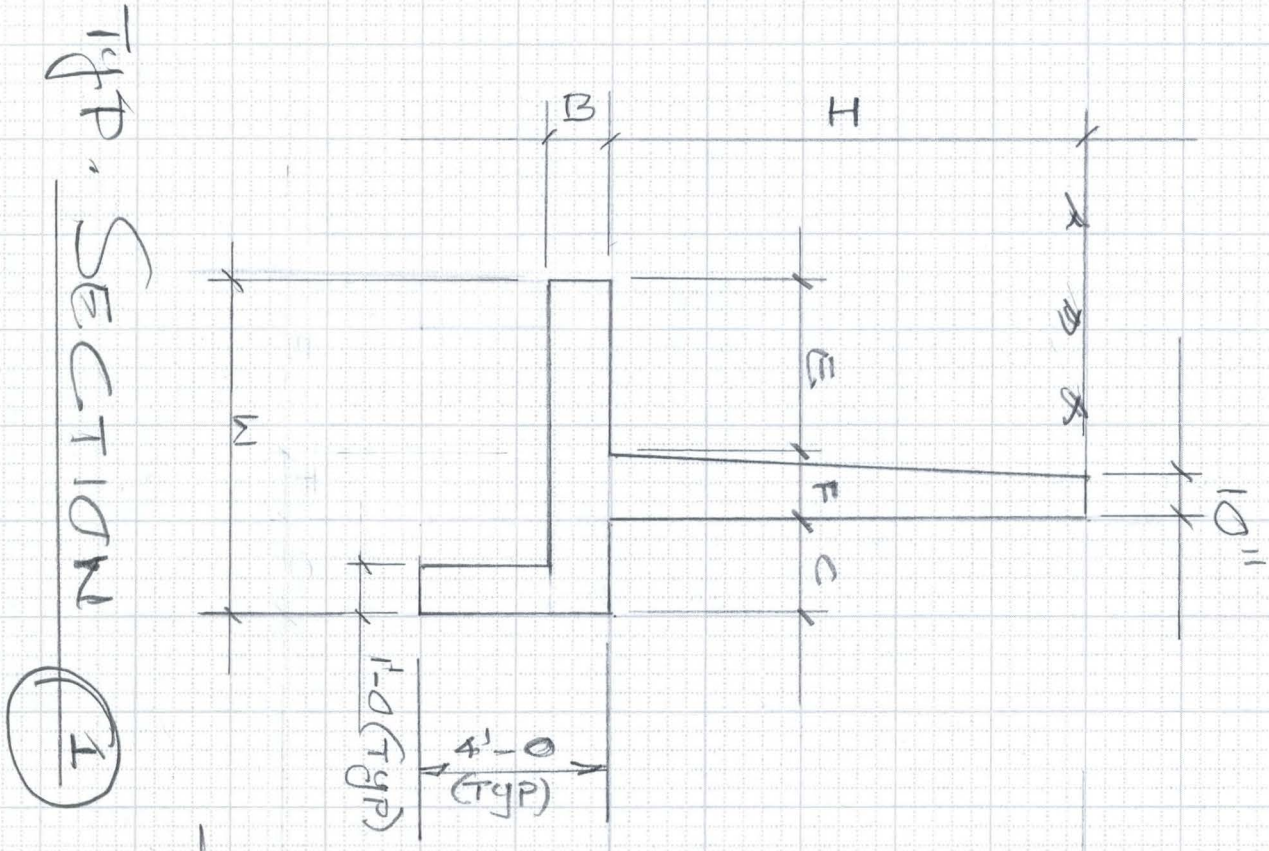

B
H
E
F
C
D
10"
1'-0" (TYP)
4'-0 (TYP)

TYP. SECTION

1

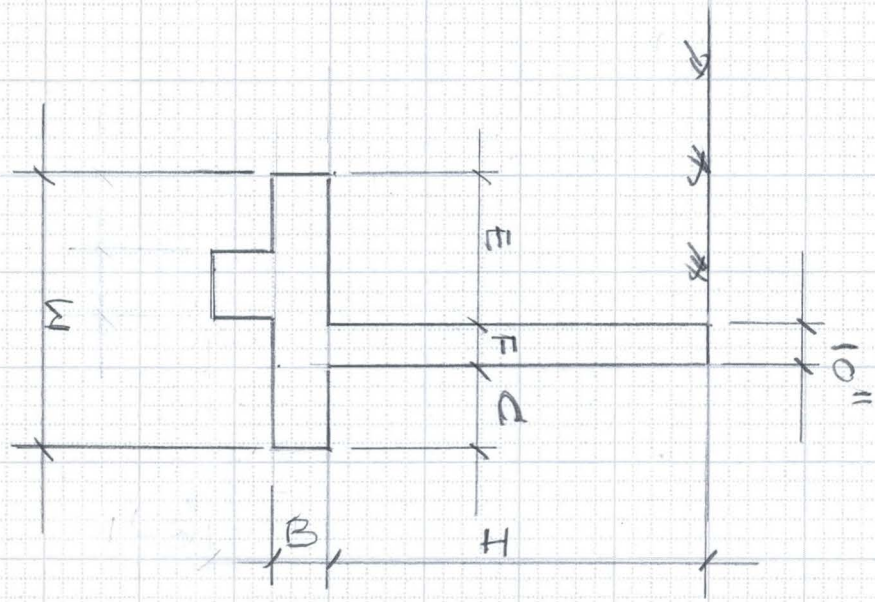

E
F
D
10"
B
H

TYP. SECTION

2

FLOOD CONTROL DISTRICT OF MARICOPA COUNTY

PROJECT LACG PAGE ____ OF ____

DETAIL Wall Loading COMPUTED KVH DATE 3/01

CHECKED BY ____ DATE ____

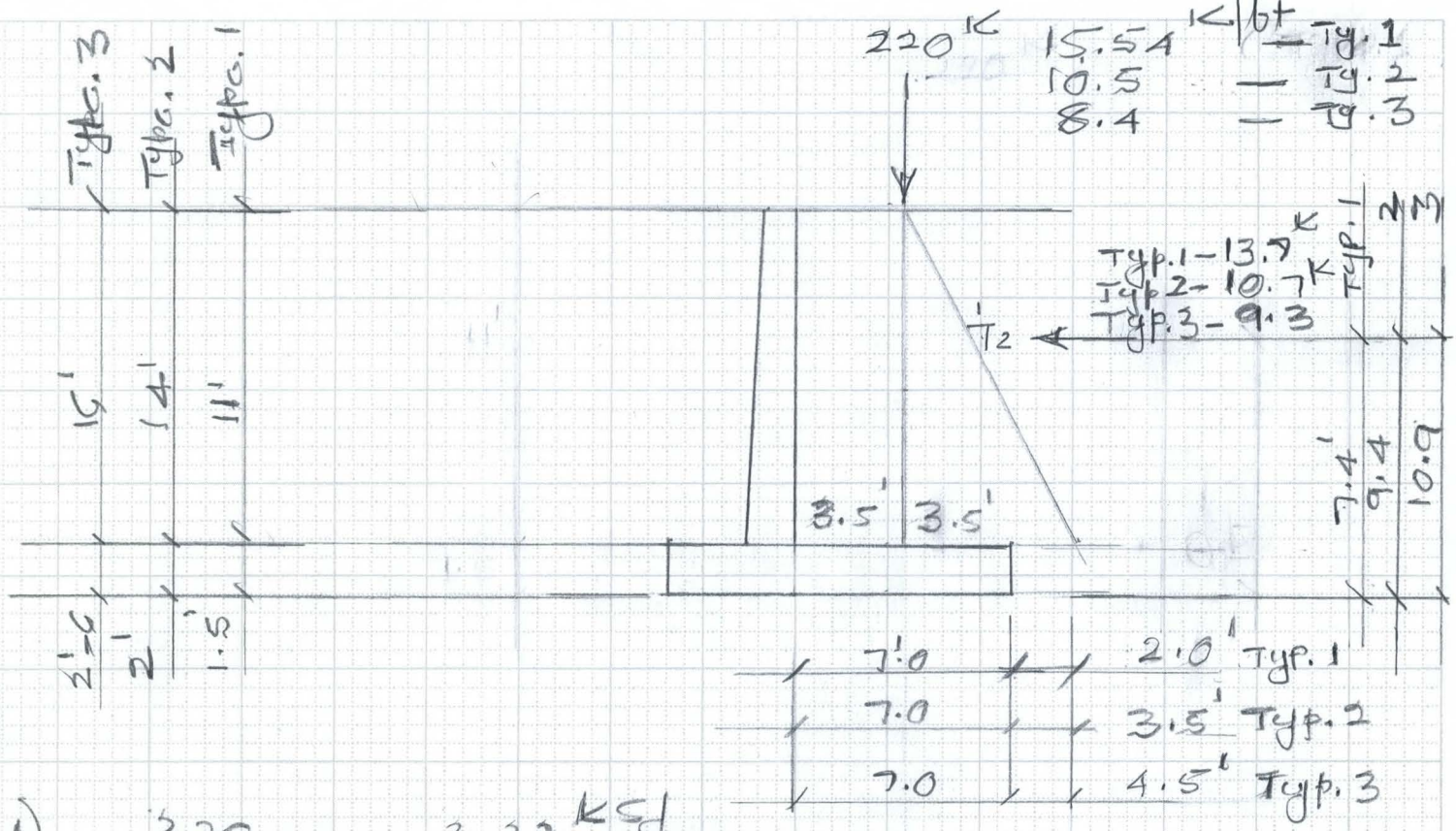

1) $\frac{220}{9 \times 11} = 2.22^{ksf}$

Load/ft on the Heel = $2.22 \times 7 = 15.54^{K/ft}$

$P_N = 13.7$

2) $\frac{220}{14 \times 10.5} = 1.5^{ksf}$

Per ft on the Heel = $1.5 \times 7 = 10.5^{K/ft}$

$P_N = 10.7$

3) $\frac{220}{11.5 \times 16} = 1.2^{ksf}$

Per ft on the Heel = $1.2 \times 7 = 8.4^{K/ft}$

$P_N = 9.3$

6910-153 4-90

FLOOD CONTROL DISTRICT OF MARICOPA COUNTY

PROJECT LACC PAGE ____ OF ____

DETAIL Wall Loading COMPUTED KVH DATE 3/01

CHECKED BY ____ DATE ____

AASHTO 5.5.2

$Q_p = 110^T = 220^K$

1) $H = (14 + 1.5) = 15.5$ (2.0, 16.0)

1) $Z = mH$

$1.0' = m \times 16.0$

$m = 0.064$

say 0.1

use value of 0.2, Fig 5.5.2c

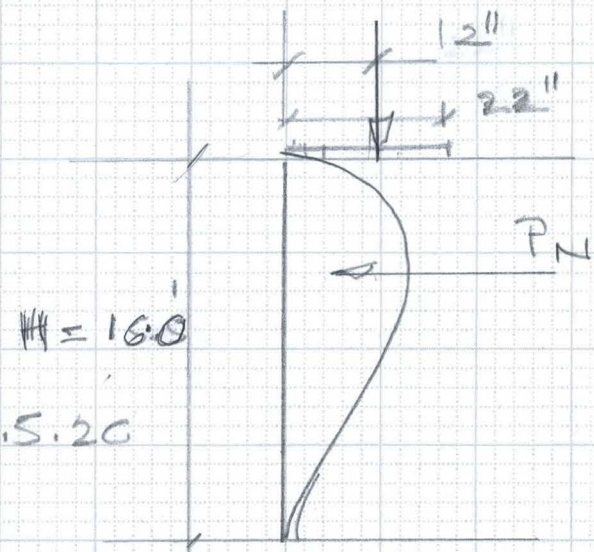

$P_N\left(\frac{H}{Q_p}\right) = 0.78$

$P_N\left(\frac{16.0}{220}\right) = 0.78$, $\boxed{P_N = 10.7^K}$

acting at $0.59H = 0.59 \times 16.0$

$R' = 9.4'$ from Bottom

2) $Ht = (11 + 1.5) = 12.5'$

$Z = mH$, $1.0 = m \times 12.5$, $m = 0.08$

use value of 0.2

$P_N\left(\frac{H}{Q_p}\right) = 0.78$

$P_N\left(\frac{12.5}{220}\right) = 0.78$, $\boxed{P_N = 13.7^K}$

$R' = 0.59H = 0.59 \times 12.5 = 7.4'$

7.4' from Bottom

3) $Ht = (16 + 2.5) = 18.5'$

$Z = mH$, $1.0 = m \times 18.5$, $m = 0.057$, use min val. 0.2

$P_N\left(\frac{H}{Q_p}\right) = 0.78$, $P_N\left(\frac{18.5}{220}\right) = 0.78$, $\boxed{P_N = 9.3^K}$

$R' = 0.59H = 0.59 \times 18.5 = 10.9'$ from Bottom

FLOOD CONTROL DISTRICT OF MARICOPA COUNTY

PROJECT LACC PAGE ____ OF ____

DETAIL Wall Loading COMPUTED KVH DATE 3/

CHECKED BY ____ DATE ____

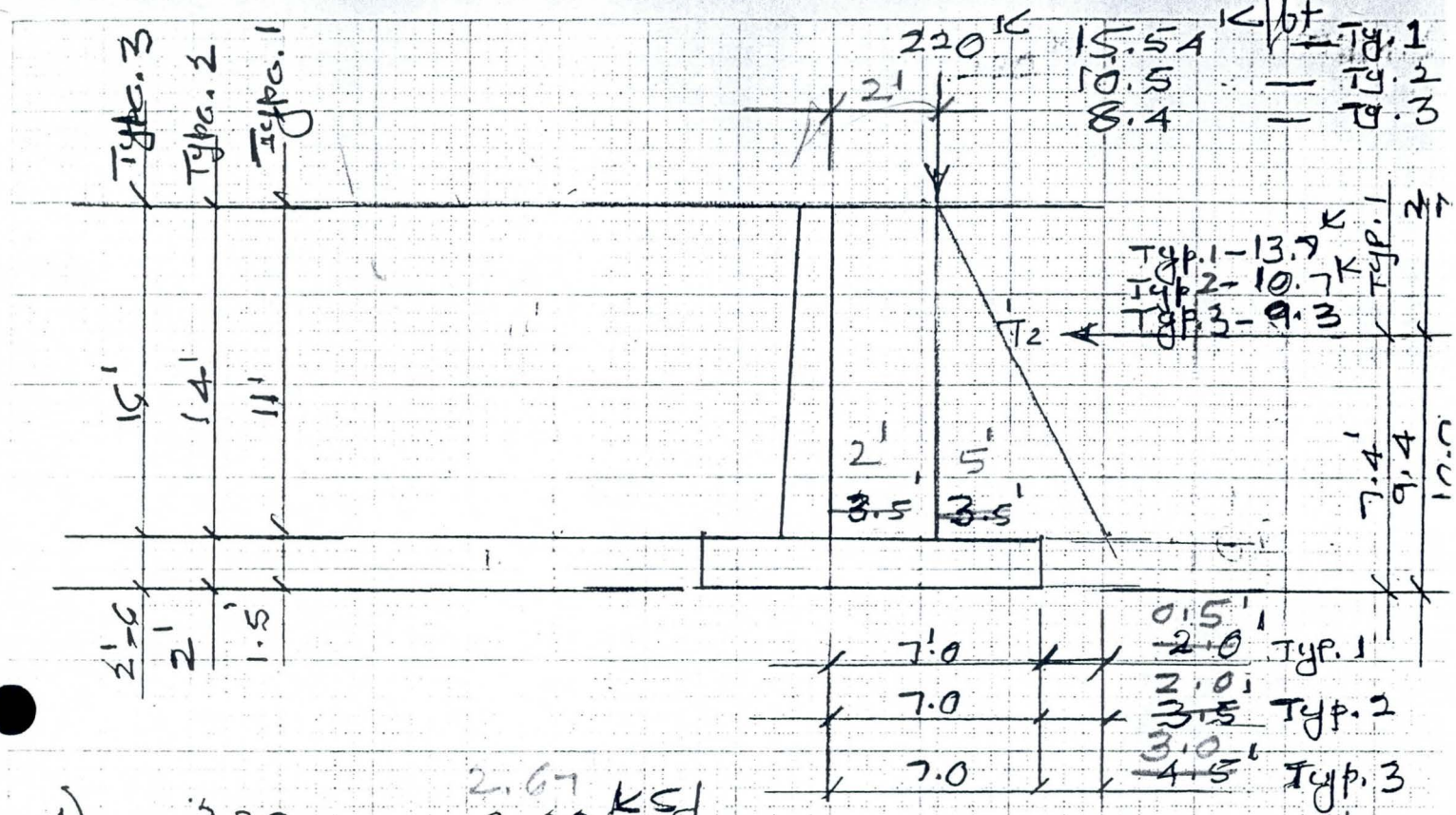

1) $\frac{220}{7.5 \cdot 9 \times 11} = 2.22$ ksf (2.67)

Load 1 ft on the heel = 2.22 × 7 = 15.54 (18.7) K/ft

$P_N = \frac{13.7}{2}$ (6.8) K

2) $\frac{220}{14 \times 10.5} = 1.5$ ksf (1.75)

Per ft on the heel = 1.5 × 7 = 10.5 (12.3) K/ft

$P_N = \frac{10.7}{2}$ (5.4) K

3) $\frac{220}{10 \cdot 11.5 \times 16} = 1.2$ ksf (1.38)

Per ft on the heel = 1.2 × 7 = 8.4 (9.7) K/ft

$P_N = \frac{9.3}{2}$ (4.7) K

FLOOD CONTROL DISTRICT OF MARICOPA COUNTY

PROJECT LACC PAGE ____ OF ____

DETAIL Wall Loading COMPUTED KVH DATE 3/c

CHECKED BY ____ DATE ____

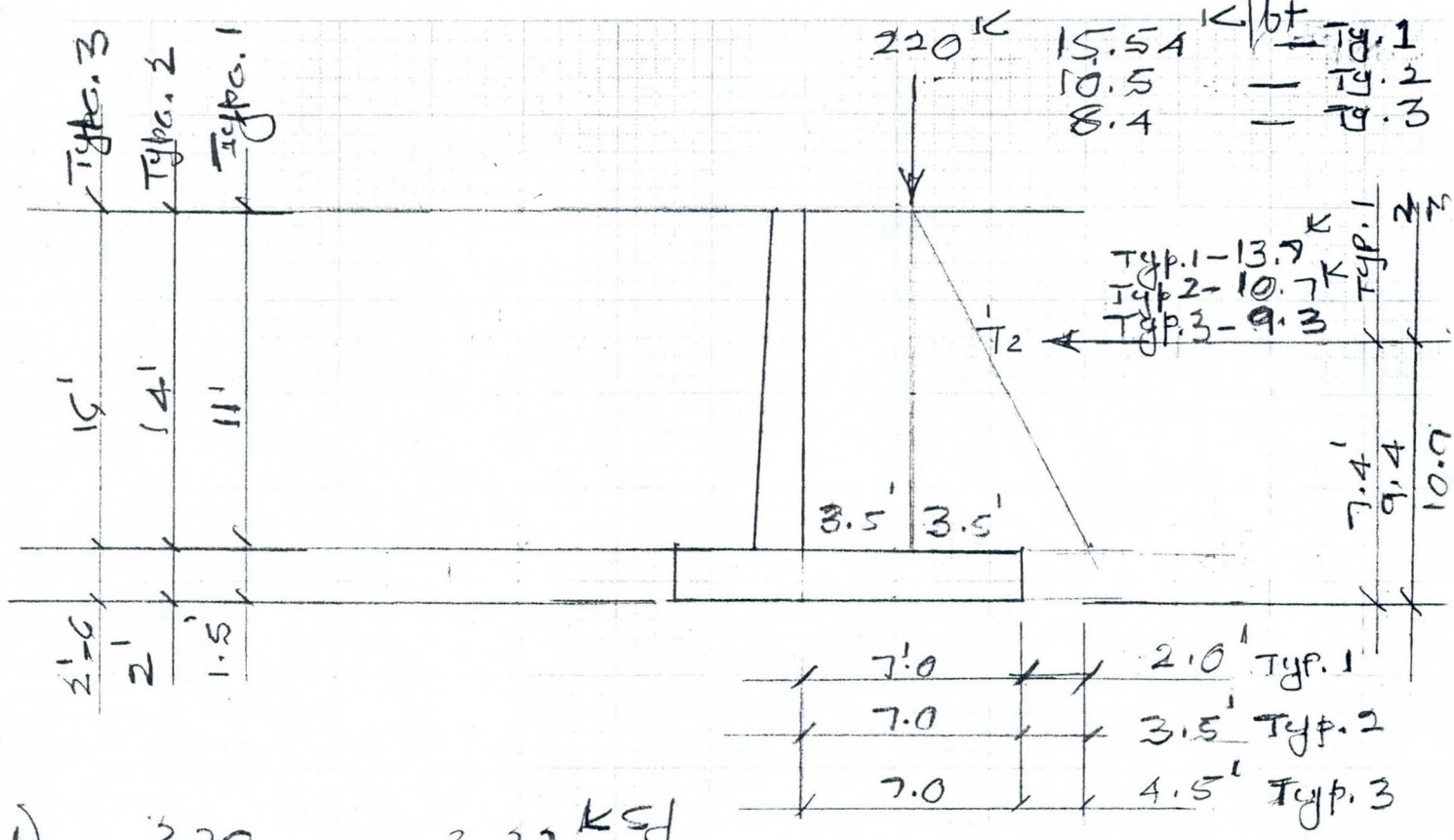

1) $\frac{220}{9 \times 11} = 2.22^{ksf}$

Load 1 ft on the heel = $2.22 \times 7 = 15.54^{K/ft}$

$P_N = 13.7$

2) $\frac{220}{14 \times 10.5} = 1.5^{ksf}$

For ft on the heel = $1.5 \times 7 = 10.5^{K/ft}$

$P_N = 10.7$

3) $\frac{220}{11.5 \times 16} = 1.2^{ksf}$

Per. ft on the heel = $1.2 \times 7 = 8.4^{K/ft}$

$P_N = 9.3$

FLOOD CONTROL DISTRICT OF MARICOPA COUNTY

PROJECT LAGC PAGE ____ OF ____

DETAIL Wall Types. COMPUTED KVH DATE 3/01

CHECKED BY ____ DATE ____

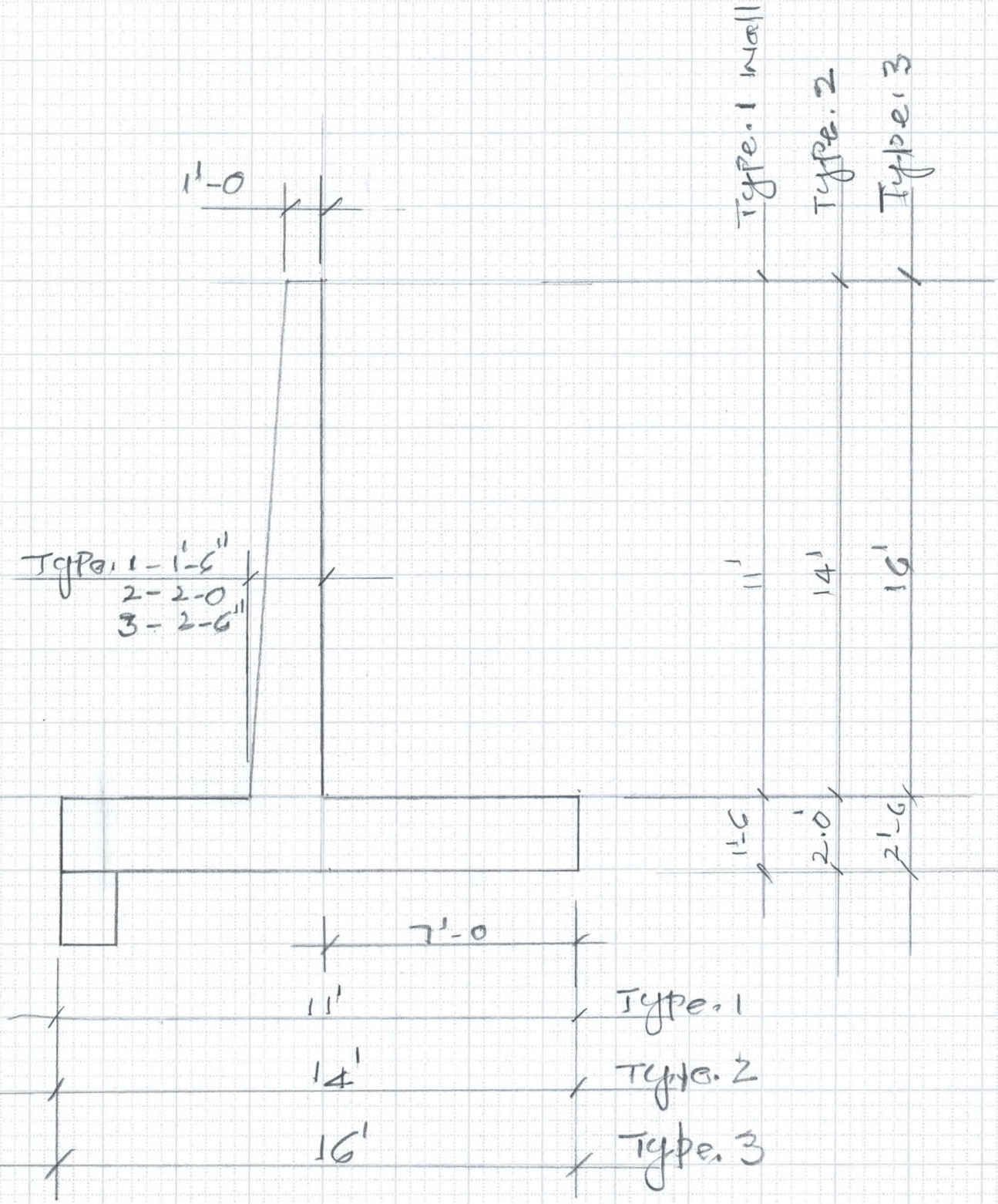

6910-153 4-90

Ninyo & Moore
Geotechnical and Environmental Sciences Consultants

September 24, 2001
Project No. 600220001

Mr. Warren Rosebraugh, P.E.
Flood Control District of Maricopa County
2801 West Durango Street
Phoenix, Arizona 85009-6399

Subject: Preliminary Foundation Recommendations
Laveen Area Conveyance Channel
Maricopa County, Arizona
FCD Project No. 1170831
Contract FCD 2001C004
Assignment No. 1

Dear Mr. Rosebraugh:

Based on our recent conversations, we understand that you would like us to provide preliminary foundation recommendations for the above-mentioned project. These foundations will be used to support the new retaining walls that will be located adjacent to the SRP power poles, and could extend 12 to 18 feet below the ground surface.

We recommend utilizing continuous footings for this project, with a width of 12 or more inches. Continuous footings should be reinforced with two or more No. 4 reinforcement bars, one placed near the top and one placed near the bottom of the footings, and further detailed in accordance with the recommendations of the structural engineer. Footings may be designed using an allowable bearing capacity of up to 3,000 pounds per square foot (psf) for static conditions.

Total and differential settlement of up to about one inch and one-half inch, respectively, may occur. Distortions of no more than about 1 inch (vertical) over 20 feet (horizontal) are possible.

Foundations that are subject to lateral loadings may be designed using an ultimate coefficient of friction of 0.4 (total frictional resistance equals the coefficient of friction multiplied by the dead load). An ultimate passive resistance value of 250 pounds per square foot per foot of depth can be used. The ultimate lateral resistance can be taken as the sum of the frictional resistance and passive resistance, provided that the passive resistance does not exceed two-thirds of the total allowable resistance. The passive resistance may be increased by one-third when considering loads of short duration such as wind or seismic forces. The foundations should preferably be proportioned such that the resultant force from lateral loadings falls within the kern (i.e., middle one-third).

Is was a pleasure working with you on this phase of the project. Should you have any questions related to this letter, please contact the undersigned at your convenience.

Sincerely,
NINYO & MOORE

Steven D. Nowaczyk

Steven D. Nowaczyk, P.E.
Senior Project Engineer

BASEH.CDR

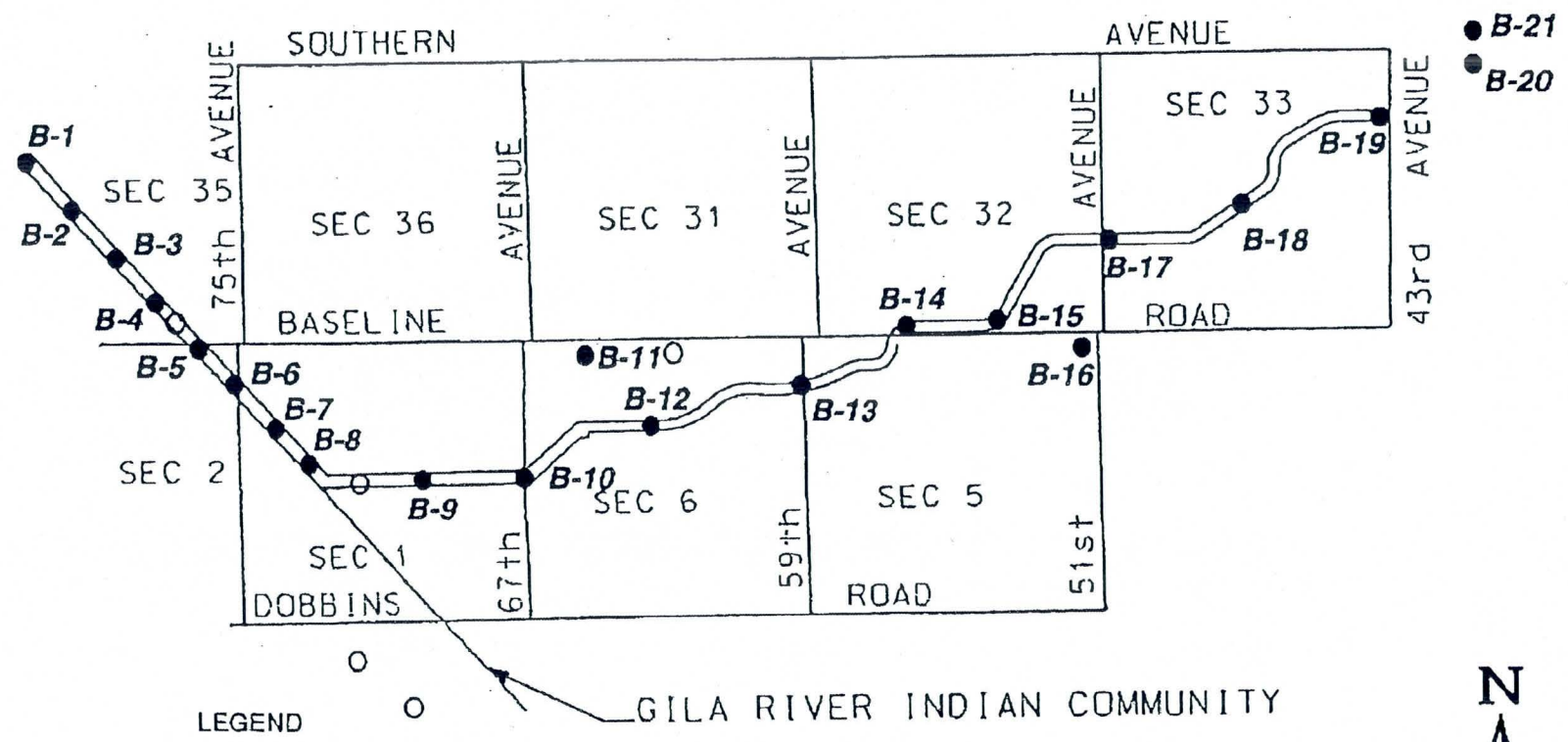

LEGEND

B-21 Approximate location of soil boring

S-5 Approximate location of sediment sample

1 0 1 2
scale miles

Ninyo & Moore

BORING LOCATION MAP

FLOOD CONTROL DISTRICT OF MARICOPA CO.
LAVEEN AREA CONVEYANCE CHANNEL
MARICOPA COUNTY, ARIZONA

PROJECT NO.	DATE	FIGURE
600220001	8/01	2

REFERENCE: SKY III CORPORATION, 1998.

BASEH.CDR

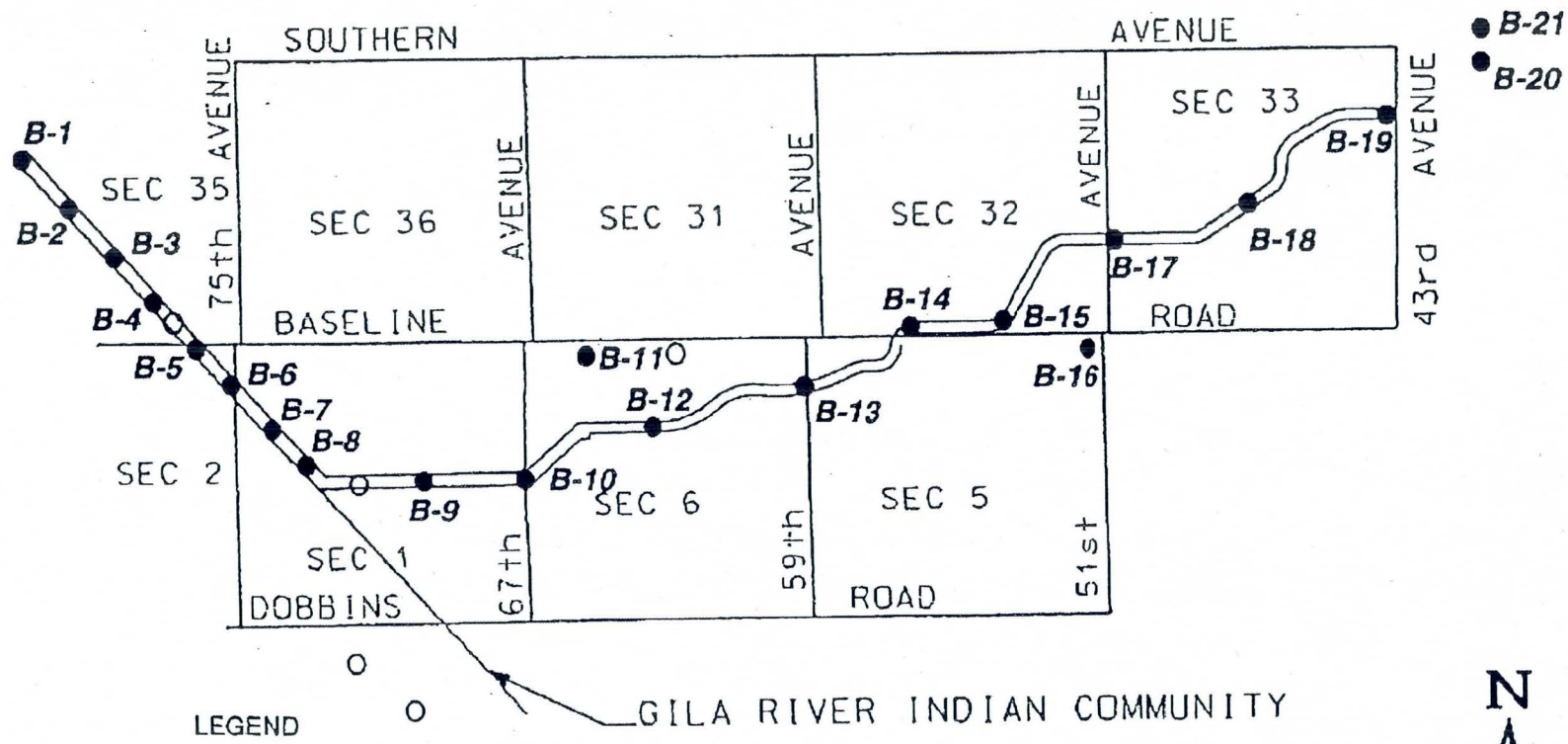

LEGEND

B-21 Approximate location of soil boring

S-5 Approximate location of sediment sample

1 0 1 2
scale miles

Ninyo & Moore

BORING LOCATION MAP

FLOOD CONTROL DISTRICT OF MARICOPA CO.
LAVEEN AREA CONVEYANCE CHANNEL
MARICOPA COUNTY, ARIZONA

PROJECT NO.	DATE	FIGURE
600220001	8/01	2

REFERENCE: SKY III CORPORATION, 1998.

Kumar Hanumaiah - FCDX

To: dileo@quik.com
Cc: Michael Lopez - FCDX; Kumar Hanumaiah - FCDX
Subject: Retaining walls

The following are the preliminary review comments for the Retaining walls to protect SRP power poles of Laveen Area Conveyance Channel (LACC)

1. Proposed dimensions of walls and footings are o.k. Minor changes in dimensions may be required to keep the footing pressure within the allowable bearing pressure of 3000 psf. as recommended by Geo.tech.

2. At present the crane load on the Heel is distributed at 1 Horz. to 2 Vert. Let us call this as case 1, which gives max. load for the design of heel slab.

   Also an other case, let us call this as case 2, when the crane load distribution on the Heel is at 1 Horz. to 1 Vert. as per the usual AASHTO distribution, gives much less downward load on the heel. This loading case may be critical to check for sliding and we might end up with an 18"x18" key at the base slab.

3. Bar "B" vertical leg of 17'-0" appears to be too high and hard to keep in place after the base slab is poured. Splices are recommended for bars with high vertical legs.

   Minimum vertical reinforcing #4@18" shown at the front face of the wall. Recommend dowels into the base slab to match with the wall steel of #4@18".

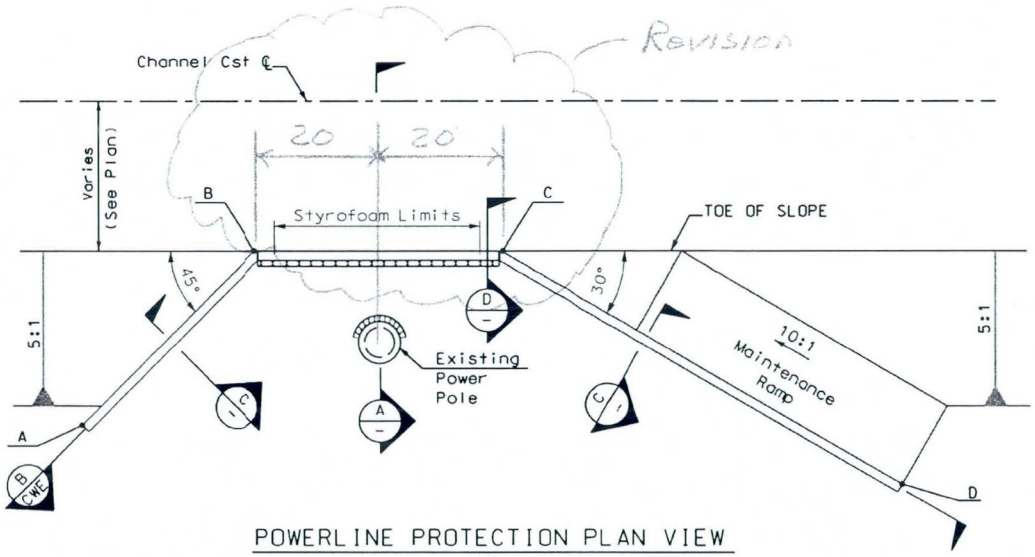

POWERLINE PROTECTION PLAN VIEW
NTS

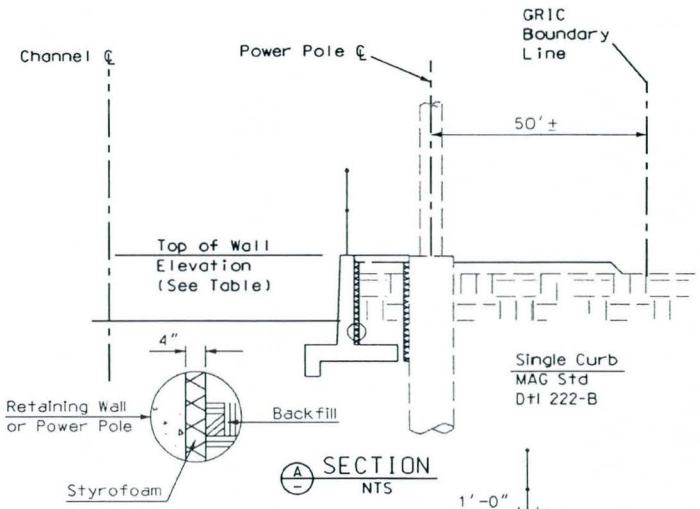

SECTION A
NTS

WALL NO.	WALL SECTION D DIMENSION (ft)					
	B	C	E	F	H	W

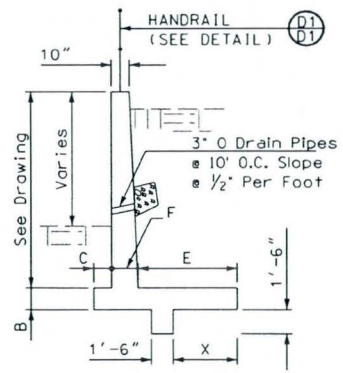

For steel reinforcement & wall dimensions see ADOT Standard Drawings B.18.10, B.18.20 for Case II cantilever retaining walls on spreading footings.

SECTION C
NTS

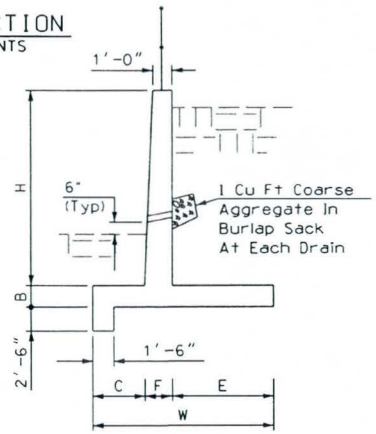

SECTION D
NTS

WALL NO.	STATION OFFSET				
	A	B	C	D	ELEVATION

* See Drawing __ For Elevation

60% SUBMITTAL

FLOOD CONTROL DISTRICT OF MARICOPA COUNTY
ENGINEERING DIVISION

LAVEEN AREA CONVEYANCE CHANNEL
FCD PROJECT NO. 1170831
FCD CONTRACT NO.

PRELIMINARY NOT FOR CONSTRUCTION		BY	DATE
	DESIGNED	SKH, KVH	07/01
	DRAWN	FC	07/01
	CHECKED	MAL	

DRAWING NO.	POWER POLE PROTECTION	SHEET OF
PWR		

FLOOD CONTROL DISTRICT OF MARICOPA COUNTY

Project: Laveen Area Conveyance Channel *Page 1*

Computed By: SKH **Checked By: KVH**

Typical Cantilever Retaining Wall

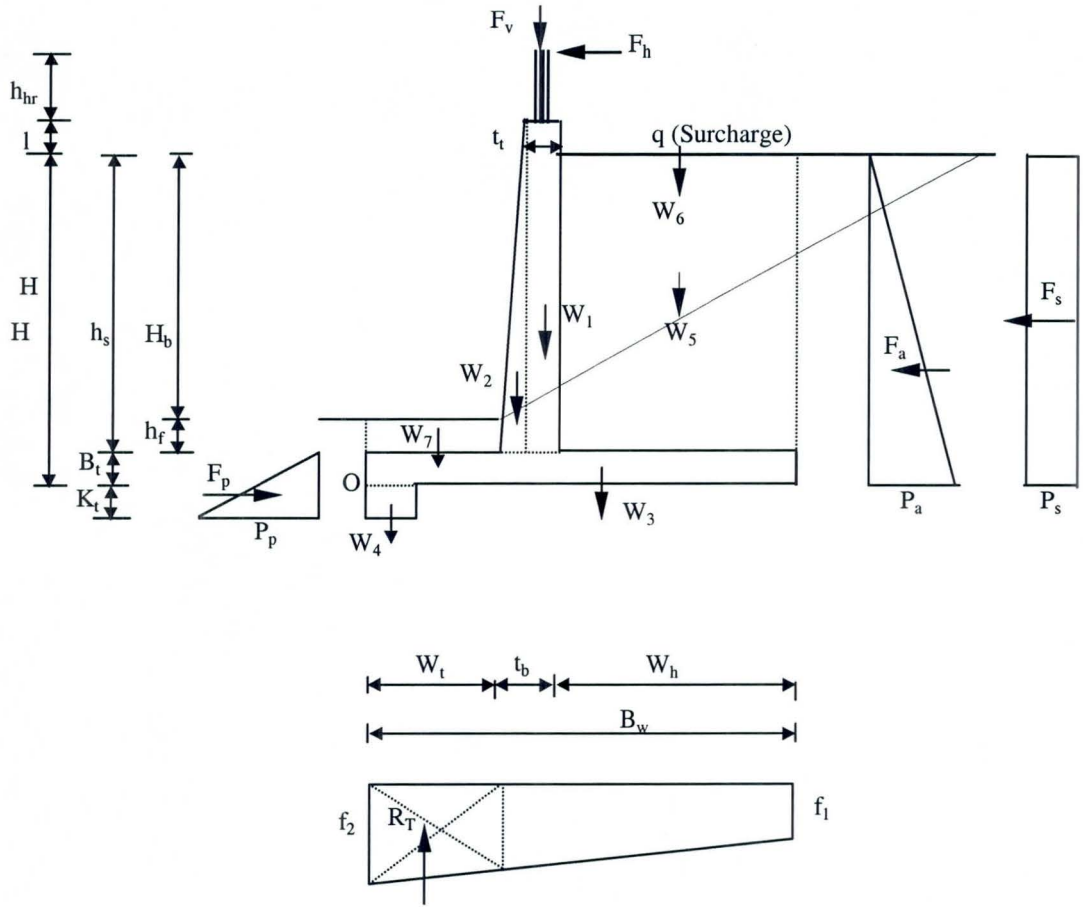

(Not To Scale)

FLOOD CONTROL DISTRICT OF MARICOPA COUNTY

Project: **Laveen Area Conveyance Channel** *Page 2*

Computed By: **SKH** **Checked By:** **KVH**

DESIGN OF CANTILEVER RETAINING WALL

(Wall # 6 - Pole # 121)

Soil Properties:

Cohesion (undrained shear strength c)	=	0.00	LB/FT^2
Angle of Internal Friction (Phi)	=	30	Degrees
Soil Specific Weight (gamma)	=	120	PCF
Soil Specific Weight (gamma) beneath water table	=	135	PCF
Allowable Soil Pressure	=	3500	PSF
Active Soil Pressure Coeff. (K_a)	=	0.33	
Passive Soil Pressure Coeff. (K_p)	=	3.00	
Adhesion (c_A)	=	0.00	LB/FT^2
Angle of External Friction (delta)	=	25.00	Degrees
Coefficient of friction tan(delta)	=	0.47	For sandy soil with silt

Concrete & Steel Properties:

Concrete Specific Weight	=	150	PCf
Concrete Compressive Strength (f_c')	=	3,000	PSI
Steel Yield Strength (f_y)	=	60,000	PSI

Loads:

Vertical Force (F_v)	=	0	LB/FT
Vehicle Impact (F_h)	=	0	LB
Equivalent Height of the Surcharge	=	0.00	FT
Surcharge Uniform Force (q)	=	0	LB/FT^2
Truck Axial Load (T_l)	=	220,000	LB
A flag (1 if Truck load exists, 0 otherwise)	=	1	
Truck Concentrated Load is Distributed Over		1.00	FT

Dimensions:

Difference Between Bed and Bank (h_b)	=	6.00	FT
Depth from Bed to the top of footing (h_f)	=	4.00	FT
Height of Stem (h_s)	=	16.00	FT
Base Thickness (B_t)	=	2.75	FT
Total Height (H)	=	18.75	FT
Footing Base Width (B_w)	=	17.00	FT
Height of Wall Above Grade (l)	=	0.25	FT
Wall Thickness at the Top (t_t)	=	1.00	FT
Wall Thickness at the Bottom (t_b)	=	2.75	FT
Key Width (K_w)	=	1.00	FT
Key Thickness (K_t)	=	2.50	FT
Width of the Toe (W_t)	=	5.25	FT
Width of the Heel (W_h)	=	9.00	FT
Distance from Key to the Toe	=	0.00	FT
Height of of water table (h_{gw})	=	0.00	FT
Height of the handrail (h_{hr})	=	0.00	FT
Distances of Truck Loads from Wall	=	1 and	36 FT

FLOOD CONTROL DISTRICT OF MARICOPA COUNTY

Project: **Laveen Area Conveyance Channel** *Page 3*

Computed By: **SKH** **Checked By:** **KVH**

A flag (1 if Passive Pressure is considered, 0 otherwise) 0

A flag (1 if Soil Weight above Toe is considered, 0 otherwise) 0

Sliding Forces			**Overturning moments (OTM)**			
Design Impact Force (I) =	0	LB	O.T.M. (I)	=	0	FT.LBS
Active Earth Pressure (F_a) =	7,031	LB	O.T.M. (F_a)	=	43,945	FT.LBS
Water Pressure (F_w) =	0	LB	O.T.M. (F_w)	=	0	FT.LBS
Surcharge (F_s) =	0	LB	O.T.M. (F_s)	=	0	FT.LBS
Pressure of Truck (F_{Tl}) =	9,200	LB	O.T.M. (F_{Tl})	=	101,244	FT.LBS
	---				---	
Sum of Sliding Forces =	**16,231**	LB	Sum of O.T.M.	=	**145,189**	FT.LBS

Vertical / Resisting Forces			**Moments due to Vertical/ResistingForces**			
W1 (Wall rectangle part) =	2,438	LB	M_1 =	=	18,281	FT.LBS
W2 (Wall triangle part) =	2,133	LB	M_2 =	=	13,686	FT.LBS
W3 (Footing) =	7,013	LB	M_3 =	=	59,606	FT.LBS
W4 (Key) =	375	LB	M_4 =	=	188	FT.LBS
W5 (Soil) =	17,280	LB	M_5 =	=	216,000	FT.LBS
W6 (Surcharge) =	0	LB	M_6 =	=	0	FT.LBS
W7 (soil above the toe) =	0	LB	M_7 =	=	0	FT.LBS
Fv (Axial Load) =	0	LB	M_{fv} =	=	0	FT.LBS
Water above the heal =	0	LB		=	0	FT.LBS
Truck Loads (T_l) =	6,346	LB	M_{Tl} =	=	79,327	FT.LBS
Passive Pressure (F_p) =	0	LB	$M_{passive\ pressure}$ =	=	0	FT.LBS
	---				---	
Sum of Vertical Loads (SV) =	**35,584**	LB	Sum of Resisting Moments =		**387,087**	FT.LBS

Factor of Safety Against Overturning

F.S. = Resisting Moment / Overturning Moment = **2.67** > 2.0 O.K.

Check of Soil Stresses

Net Moment (NM) = Resistance Moment - O.T.M.	=	241,898	FT.LBS
Location of Resultant Force from Point O (X_r) = NM / SV	=	6.80	FT
Eccentricity (E_c) = $B_w/2 - X_r$	=	1.70	FT
Middle 1/3 of the Footing base = Bw/3	=	5.67	FT
Eccentric Moment (EM) = SV * Ec	=	60,566	FT.LBS
Footing Section Modulus (SM) = $B_w^2/6$	=	48.17	FT^3
Toe Stress (f_2) = SV/Bw + EM/SM	=	**3,351**	PSF
Heel Stress (f_1) = SV/Bw - EM/SM	=	**836**	PSF

O.K. Eccentricity is Less than Bw/6. No Soil Negative Stress at the Heel

O.K. Soil Stresses have not been exceeded

O.K. Soil Stresses have not been exceeded

Factor of Safety Against Sliding

The Retaining Wall has a Key and Passive Pressure is ignored

* Case 1: Retaining Wall with the Key

Upward Soil Pressure Force at the Toe (R_T)	=	15,552	LB
Sum of Vertical forces on the Heel (H_F)	=	20,032	LB
Passive force on the key	=	4,961	LB

Sliding Resistance = R_T*tan(phi) + H_F*Friction Coeff. + C_A*B_w + Passive Force

= 23,281 LB

F.S. Against Sliding = Sliding Resistance / Sliding Forces

= **1.43** < 1.5 Unaccebtable

** Case 2: Retaining Wall without the Key

Sliding Resistance = Sum of vertical loads * Friction Coeff. + C_A*B_w + Passive Force

= 16,593 LB

F.S. Against Sliding = Sliding Resistance / Sliding Forces

= **1.02** < 1.5 Unaccebtable

RC Design using Working Stress Method

Design of Stem

Required reinforcement Due to Flexure:

Thickness of the Stem at the interface with the footing (t_b)	=	2.75	FT
Assumed section depth (d) = t_b - 2" (cover) - o.5" (half bar diameter) =		30.50	IN
Moment at the bottom of the stem (M_{stem})	=	103,383	FT.LB
Allowable concrete strength f_c = 0.4 $f_{c'}$	=	1200	PSI
Allowable steel strength fs	=	24000	PSI
Modular ratio (n) = 9	Coeffiecient k =	0.310	
Coeffieient a = 1.79	Coefficient j =	0.897	
Coeffieient K = 166.9			
Required section depth (d_r) = Sqrt [M_{stem} / (b*K)]	=	24.89	IN **OK**
A_s required per foot of wall width	=	1.89	$inch^2$

Preferred rfmt. spacing = 6 IN — Use Bar Size # **9**

Check of Shear at the critical Section of the Stem:

Allowable stresses in concrete = 0.95*sqrt($f_{c'}$) = 52.0 PSI

V_{stem} = Shear at 30.50 inch from the footing surface

= 12,823 LB

Stem depth d' = 2.26 FT

Rfmt. Concrete Shear Stress = **39** PSI < Allowable

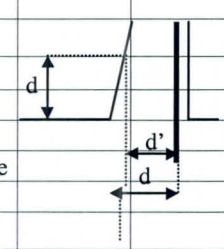

Allowable Shear Strength is Geater than the Actual Shear O.K.

Check of Development Length of the Stem According to ACI 318.12.2.2:

Vertical Bars (Alpha) =	1.00	Uncoated (Beta) =	1.00		
Normal weight Concrete (Lamda)	=	1.00			
Development Length (l_d)	=	[d_b*f_y*alpha*beta*lamda] / [20*sqrt(f_c')]			inch
	=	**41.1**	inch	>	B_t

Therefore, hooks should be used on the ends of the stem bars

Check of Required Temperature Reinforcement for the Stem:

$A_{s,temp}$ = 0.0018 * b * t_{stem}	=	0.49	$inch^2$
Two third of temp. rfmt. to be put on the front face of the stem	=	0.32	$inch^2$
One third of temp. rfmt. to be put on the back face of the stem	=	0.16	$inch^2$

Design of Footing (Heel):

Disregard soil pressure under the heel

Uniform load above the heel ($w_{,h}$) = soil load + own weight of heel + surcharge + truck

= 3,038 LB/FT

Required reinforcement Due to Flexure:

Distance from vertical stem rfmt. to the heel edge = W_h + cover + d_b /2 =		9.21	FT	
M_{heel}	=	76,964	FT.LB	
Heel depth (d_h) = Heel thickness - 2 inch (cover) - d_b/2 =		2.54	FT	
Required section depth (d_r) = Sqrt [M_{heel} / (b*K)]	=	21.47	IN	OK
A_s required per foot of wall width	=	1.41	$inch^2$	
Preferred rfmt. spacing = 6 IN	Use Bar Size #		8	

Check of Shear at the critical Section of the Heel:

Allowable stresses in concrete = 0.95*sqrt($f_{c'}$) =	=	52.03	PSI
V_{heel} = Shear at stem face	=	13,826	LB
Rfmt. Concrete Shear Stress = **38** PSI	<	Allowable	

Allowable Shear Strength is Geater than the Actual Shear O.K.

Check of Required Temperature Reinforcement for the Heel:

$A_{s,temp}$ = 0.0018 * b * t_{heel}	=	0.7128	$inch^2$
Half of temp. rfmt. to be put on each face of the footing	=	0.36	$inch^2$

Project: Laveen Area Conveyance Channel *Page 6*

Computed By: SKH **Checked By: KVH**

Design of Footing (Toe):

Disregard passive soil pressure

Load above the toe = upward soil pressure - own weight of toe

Required reinforcement Due to Flexure:

Upward soil stress at the face of the wall	=	2,574	LB/FT^2
M_{toe}	=	36,923	FT.LB
Toe depth (d_t) = Toe thickness - 3 inch (cover) - $d_b/2$	=	2.46	FT
Required section depth (d_r) = Sqrt [M_{toe} / (b*K)]	=	14.87	IN **OK**
A_s required steel per foot of wall width	=	0.70	$inch^2$
Cracked stress (f_{cr}) = 7.5. Sqrt. ($f_{c'}$)	=	410.79	PSI
Cracked Moment (M_{cr}) = f_{cr} * I/y = fcr * [b*t^3/12]/[t/2]	=	74,559	FT.LB
A_s (cracked section) = $M_{cr}/[f_s*j*d]$	=	1.41	$inch^2$

The minimum rfmt. requirement for the cracked section can be waived if the actual rfmt.
is at least one-third greater than thatrequired by analysis,

i.e., the rfmt. Used per foot long of the wall	=	0.93	$inch^2$

Preferred rfmt. spacing = 9 IN Use Bar Size # 8

Check of Shear at the critical Section of the Toe:

Allowable stresses in concrete = 0.95*sqrt($f_{c'}$)	=	52.03	PSI
V_{toe} = Toe Shear at stem face	=	15,139	LB

Rfmt. Concrete Shear Stress = **43** PSI < Allowable

Allowable Shear Strength is Geater than the Actual Shear O.K.

Check of Required Temperature Reinforcement for the Toe:

$A_{s,temp}$ = 0.0018 * b * t_{toe}	=	0.7128	$inch^2$
Half of temp. rfmt. to be put on each face of the footing	=	0.36	$inch^2$

FLOOD CONTROL DISTRICT OF MARICOPA COUNTY

Project: Laveen Area Conveyance Channel *Page 7*
Computed By: SKH **Checked By: KVH**

Reinforcement Details
Wall # 1 & 2 (at Poles # 126 & 125)

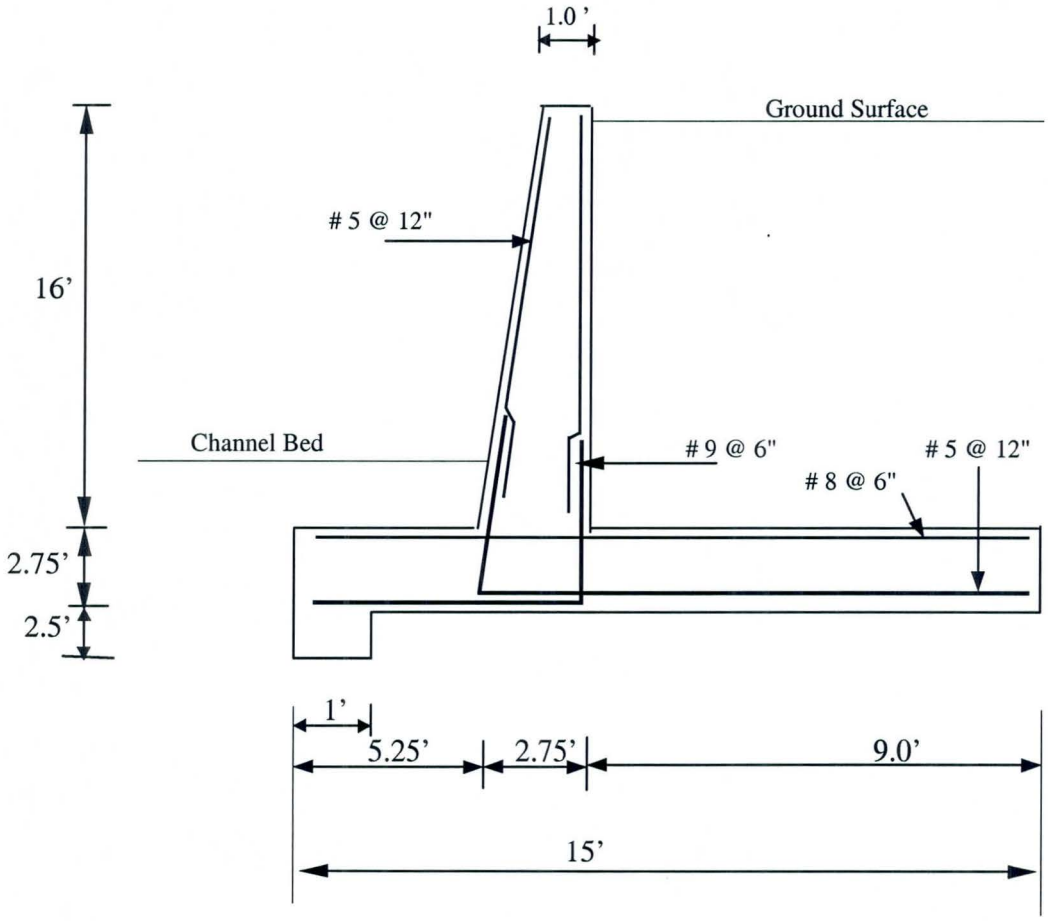

(Not To Scale)

FLOOD CONTROL DISTRICT OF MARICOPA COUNTY

PROJECT LACC PAGE 3 OF 5

DETAIL Retaining Wall COMPUTED KVH DATE 6/01

@ power poles CHECKED BY _____ DATE _____

Type 3:

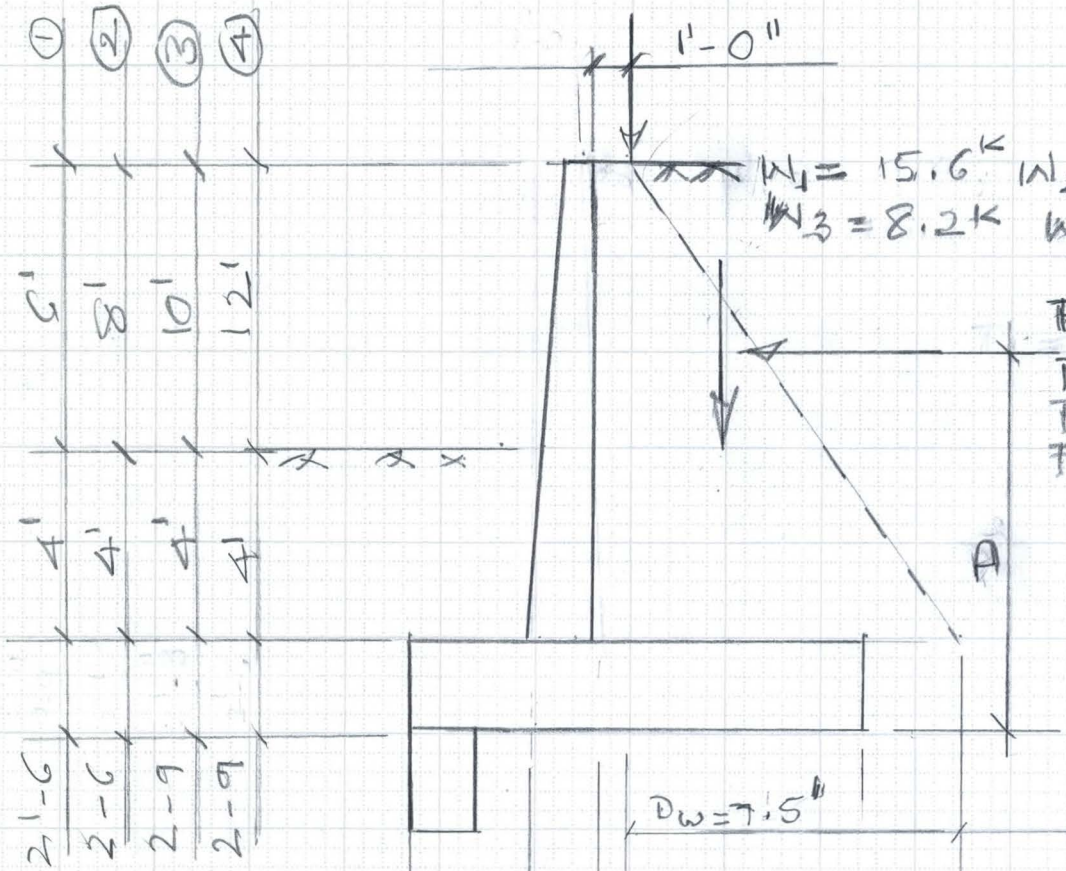

Dw = 7.5"			Type 1 Ht = 10'
9'			Type 2 Ht = 12'
10.5'			Type 3 Ht = 14'
12'			Type 4 Ht = 16'

3'-6"	2'-6"	9'	W = 15'-0 (1)
4'-0	2'-6	9'	W = 15'-6" (2)
4'-3	2'-9	9'	W = 16'-0 (3)
5'-3	2'-9	9'	W = 17'-0 (4)

FLOOD CONTROL DISTRICT OF MARICOPA COUNTY

PROJECT LACC PAGE 4 OF 5

DETAIL Retaining Wall COMPUTED KVH DATE 6/01

@ power poles CHECKED BY _____ DATE _____

AASHTO 5-5-2

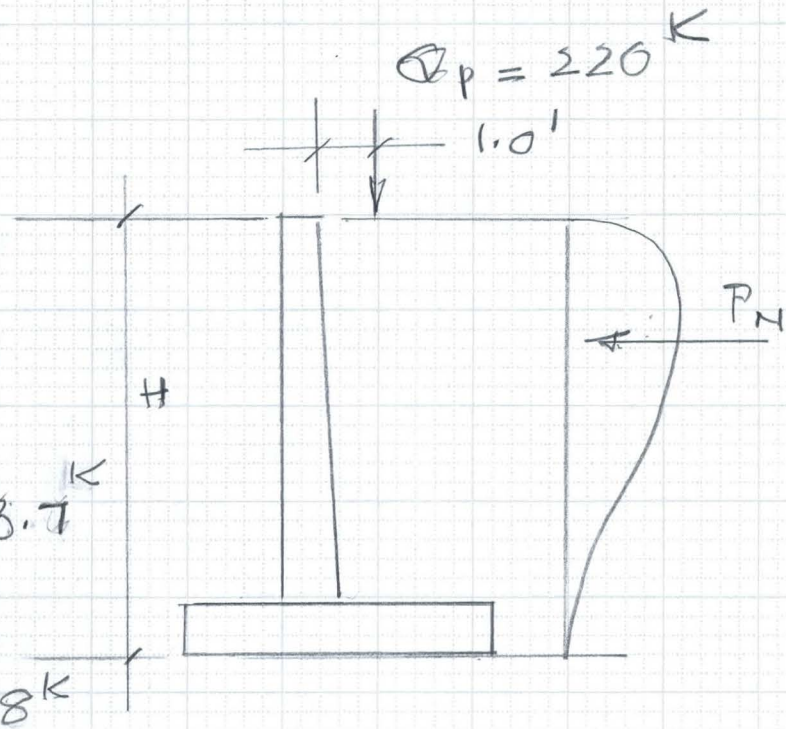

1) $H = (10 + 2.5) = 12.5$

$Z = mH$

$1.0 = m \times 12.5$

$m = 0.1$

use min. value of 0.2

$P_N \frac{H}{Q_p} = 0.78$

$P_N = \frac{220 \times 0.78}{12.5} = 13.7^K$

2) $H = (12 + 2.5) = 14.5'$

$P_N = \frac{220 \times 0.78}{14.5} = 11.8^K$

3) $H = (14 + 2.75) = 16.75$

$P_N = \frac{220 \times 0.78}{16.75} = 10.2^K$

4) $H = (16 + 2.75) = 18.75$

$P_N = \frac{220 \times 0.78}{18.75} = 9.2^K$

1) P_N acting at $(0.59H) = 0.59 \times 12.5 = 7.4'$ $P_N = 13.7^K$

2) — " — — " — $0.59 \times 14.5 = 8.6'$ $P_N = 11.8$

3) — " — $0.59 \times 16.75 = 9.9'$ $P_N = 10.2$

4) — " — $0.59 \times 18.75 = 11.2'$ $P_N = 9.2$

FLOOD CONTROL DISTRICT OF MARICOPA COUNTY

PROJECT LAGG PAGE 5 OF 5

DETAIL Retaining wall COMPUTED KVH DATE 6/01

@ power poles CHECKED BY _____ DATE _____

1) $Ht = 10'$

$D_W = 3/4 \times 10 = (7.5+1)$ $D_L = 1.5(10) = 15'$

$W = \frac{220}{8.5 \times 15} = 1.73^{ksf}$

Hook Length $h_L = 9'$, $W_h = 1.73 \times 9 = 15.6^K$

2) $Ht = 12'$

$D_W = \frac{3}{4} \times 12 = (9'+1)$ $D_L = 1.5(12) = 18'$

$W = (220/10 \times 18) = 1.22^{ksf}$

$h_L = 9.0$ $W_h = 1.22 \times 9.0 = 11.0^K$

3) $Ht = 14'$

$D_W = \frac{3}{4}(14) = (10.5+1)$ $D_L = 1.5(14) = 21'$

$W = (220/11.5 \times 21) = 0.91^{ksf}$

$h_L = 9.0$ $W_h = (0.91 \times 9.0) = 8.2^K$

4) $Ht = 16'$

$D_W = \frac{3}{4}(16) = (12+1)$ $D_L = 1.5(16) = 24'$

$W = (220/13 \times 24) = 0.71^{ksf}$

$h_L = 9.0$, $W_h = (0.71 \times 9') = 6.4^K$

Sam Hanna - FCDX

From: wgphilli@srpnet.com
Sent: Thursday, March 08, 2001 1:15 PM
To: Bobbie Ohler - FCDX; Sam Hanna - FCDX
Cc: Tim Phillips - FCDX
Subject: LACC - 60 Ton Crane - Assembled Loads

Here are the live travelling loads for our heaviest assembled crane. Disassembled, the crane is heavier than HS20 and needs a permit to travel. Our heaviest disassembled crane is 45,000# rear and 33,000# front, with slightly different axle spacings than given here.

As for the outrigger loading, the outriggers are 22" X 22" square. Worst case would be a maximum of 110 Tons on one outrigger. Say 450 psi on the 22" X 22" outrigger. These loads are normally spread further when we put a 5' diameter wood pad under the outrigger, but we can't count on that happening. You might think about pouring a concrete pad (or something like that)adjacent to the wall that will spread these loads a bunch. Just a thought.
Hope this is what you needed... Call if questions.

Bill Phillips
SRP - Transmission Line Design
P.O. Box 52025 Mail Sta. XCT315
Phoenix, AZ 85072-2025
(602) 236-8092 FAX (602) 914-8726

*** Forwarding note from BJBAZARD--PABVMSYS 05/13/96 17:45 ***
To: WGPHILLI--PABVMSYS

FROM: Bryan Bazard, Transportation Services, TSC402, ext. 8353
SUBJECT: 60 Ton Crane - Assembled Loads
Bill, I stand corrected. The Lorain Crane #7245 is heavier. It rides on four axles. All tires are 14.00-20 size highway tread. The front axles have two tires per axle (one on each side), the rear axles have four tires per axle. The axle spacing from the front axle (axle 1) is: axle 1 to axle 2 is 4'4"; axle 2 to axle 3 is 14'1/2"; axle 3 to axle 4 is 4'8". There is 2 ways to travel with the boom installed, either with the boom facing forwards or rearwards, which changes the loadings. With the boom facing forwards the front 2 axles share a load of 17,000 lbs. or 8,500 lbs each and the rear axles share 80,000 lbs or 40,000 lbs each. With the boom facing rearwards, the counterweight is between the axles. With the boom facing rearwards, the front axles share 36,000 lbs. or 18,000 lbs each and the rear axles share 61,000 lbs. or 30,500 lbs each. These weights are with the crane in its' standard condition, 40 feet of boom, total weight of 97,000 lbs. If you need more info. give me a call.

*** Forwarding note from WGPHILLI--PABVMSYS 05/13/96 11:17 ***
To: BJBAZARD--PABVMSYS

FROM: Bill Phillips, Power System Design - TLD
Ext. 8092 - XCT315
SUBJECT: 60 Ton Crane - Assembled Loads
Thanks for the efforts on this.
Do you think you can have the loading info by Wed. or Thursday??

*** Forwarding note from CJKISSEL--PABVMSYS 05/13/96 10:22 ***

To: WGPHILLI--PABVMSYS

FROM: Joe Kissel,Water Engineering,Phone:X-4619(Page No.6668)
Mail Station SSW303
Work Hours: 7:00 AM TO 4:30 PM (Payday Fridays off)
SUBJECT: 60 Ton Crane - Assembled Loads
I HAVE MEETING WITH ADOT FRIDAY....PLEASE HAVE DATA BY THURSDAY...
THANKS

*** Reply to note of 05/10/96 17:30
To: CJKISSEL--PABVMSYS
cc: REKONDZI--PABVMSYS RELARCHI--PABVMSYS
GMBASTIA--PABVMSYS

FROM: Bill Phillips, Power System Design - TLD
Ext. 8092 - XCT315
SUBJECT: 60 Ton Crane - Assembled Loads

Sorry bout this: Brian Bazard called me about noon today to say that they only
have the street legal weights, but he is working with the manufacturer to
get the assembled loads. Should have them early next week.
Is this OK for your design schedule ??
Again, my apologies. I meant to get right on this after our ADOT mtg....

*** Forwarding note from WGPHILLI--PABVMSYS 05/09/96 09:14 ***
To: BJBAZARD--PABVMSYS
cc: REKONDZI--PABVMSYS CJKISSEL--PABVMSYS

FROM: Bill Phillips, Power System Design - TLD
Ext. 8092 - XCT315
SUBJECT: 60 Ton Crane - Assembled Loads

As we just discussed: the water group is designing a flume/bridge for the
Western Canal crossing over the future Price Freeway. We would like the
bridge designed such that we can drive over it with the heaviest equipment
which Power or Water C&M uses, WITHOUT disassembling the equipment. I think
the 60 Ton Lorrain Crane is the heaviest, WITH counterweight and max boom.
Do you know of anything heavier?

Could you get me the fully assembled loadings? Total weight and weight per
axle. Also vehicle specs such as # of axles, axle spacing, # of tires
per axle and tire sizes so the WUA Engineer can design the bridge. If he
needs any other info, I'll have him get with you later.

Oh, and by the way, could I get this info by tommorrow noon?? If this is
not possible (or reasonable), please just let me know by noon tommorrow.
I sure do appreciate your help on this.

FLOOD CONTROL DISTRICT OF MARICOPA COUNTY

Project: Laveen Area Conveyance Channel *Page 1*

Computed By: SKH **Checked By: KVH**

Typical Cantilever Retaining Wall

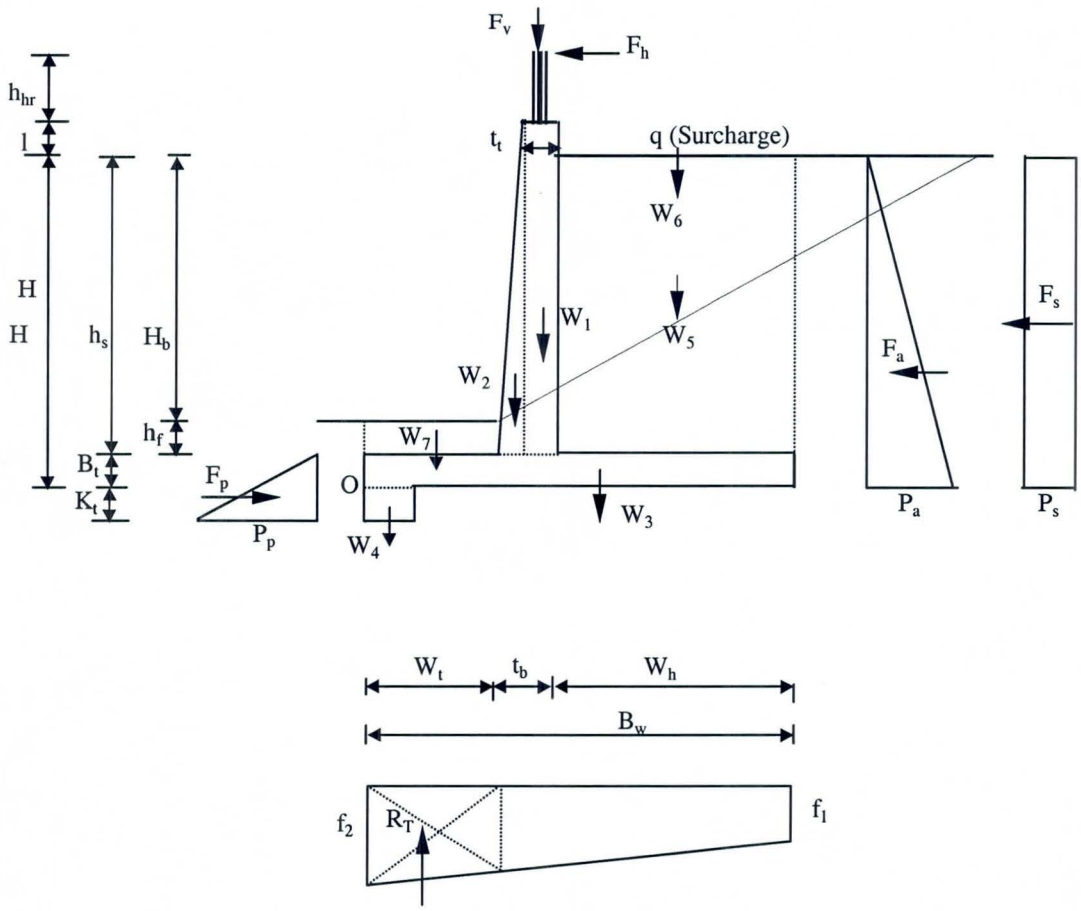

(Not To Scale)

FLOOD CONTROL DISTRICT OF MARICOPA COUNTY

Project: **Laveen Area Conveyance Channel** *Page 2*

Computed By: **SKH** **Checked By:** **KVH**

DESIGN OF CANTILEVER RETAINING WALL

(Walls # 1&2 - Poles # 126&125)

Soil Properties:

Cohesion (undrained shear strength c)	=	0.00	LB/FT^2
Angle of Internal Friction (Phi)	=	30	Degrees
Soil Specific Weight (gamma)	=	120	PCF
Soil Specific Weight (gamma) beneath water table	=	135	PCF
Allowable Soil Pressure	=	3500	PSF
Active Soil Pressure Coeff. (K_a)	=	0.33	
Passive Soil Pressure Coeff. (K_p)	=	3.00	
Adhesion (c_A)	=	0.00	LB/FT^2
Angle of External Friction (delta)	=	25.00	Degrees
Coefficient of friction tan(delta)	=	0.47	For sandy soil with silt

Concrete & Steel Properties:

Concrete Specific Weight	=	150	PCf
Concrete Compressive Strength (f_c')	=	3,000	PSI
Steel Yield Strength (f_y)	=	60,000	PSI

Loads:

Vertical Force (F_v)	=	0	LB/FT
Vehicle Impact (F_h)	=	0	LB
Equivalent Height of the Surcharge	=	0.00	FT
Surcharge Uniform Force (q)	=	0	LB/FT^2
Truck Axial Load (T_l)	=	220,000	LB
A flag (1 if Truck load exists, 0 otherwise)	=	1	
Truck Concentrated Load is Distributed Over		1.00	FT

Dimensions:

Difference Between Bed and Bank (h_b)	=	6.00	FT
Depth from Bed to the top of footing (h_f)	=	4.00	FT
Height of Stem (h_s)	=	10.00	FT
Base Thickness (B_t)	=	2.50	FT
Total Height (H)	=	12.50	FT
Footing Base Width (B_w)	=	15.00	FT
Height of Wall Above Grade (l)	=	0.25	FT
Wall Thickness at the Top (t_t)	=	1.00	FT
Wall Thickness at the Bottom (t_b)	=	2.50	FT
Key Width (K_w)	=	1.00	FT
Key Thickness (K_t)	=	2.50	FT
Width of the Toe (W_t)	=	3.50	FT
Width of the Heel (W_h)	=	9.00	FT
Distance from Key to the Toe	=	0.00	FT
Height of of water table (h_{gw})	=	0.00	FT
Height of the handrail (h_{hr})	=	0.00	FT
Distances of Truck Loads from Wall	=	1 and 36	FT

FLOOD CONTROL DISTRICT OF MARICOPA COUNTY

Project: **Laveen Area Conveyance Channel** *Page 3*

Computed By: **SKH** **Checked By:** **KVH**

A flag (1 if Passive Pressure is considered, 0 otherwise)				0			
A flag (1 if Soil Weight above Toe is considered, 0 otherwise)				0			
Sliding Forces				**Overturning moments (OTM)**			
Design Impact Force (I) =	0	LB	O.T.M. (I)		=	0	FT.LBS
Active Earth Pressure (F_a) =	3,125	LB	O.T.M. (F_a)		=	13,021	FT.LBS
Water Pressure (F_w) =	0	LB	O.T.M. (F_w)		=	0	FT.LBS
Surcharge (F_s) =	0	LB	O.T.M. (F_s)		=	0	FT.LBS
Pressure of Truck (F_{T1}) =	13,700	LB	O.T.M. (F_{T1})		=	101,244	FT.LBS
	---					---	
Sum of Sliding Forces =	**16,825**	LB	Sum of O.T.M.		=	**114,265**	FT.LBS
Vertical / Resisting Forces			**Moments due to Vertical/ResistingForces**				
W1 (Wall rectangle part) =	1,538	LB	M_1 =		=	8,456	FT.LBS
W2 (Wall triangle part) =	1,153	LB	M_2 =		=	5,189	FT.LBS
W3 (Footing) =	5,625	LB	M_3 =		=	42,188	FT.LBS
W4 (Key) =	375	LB	M_4 =		=	188	FT.LBS
W5 (Soil) =	10,800	LB	M_5 =		=	113,400	FT.LBS
W6 (Surcharge) =	0	LB	M_6 =		=	0	FT.LBS
W7 (soil above the toe) =	0	LB	M_7 =		=	0	FT.LBS
Fv (Axial Load) =	0	LB	M_{fv} =		=	0	FT.LBS
Water above the heal =	0	LB			=	0	FT.LBS
Truck Loads (T_l) =	15,529	LB	M_{Tl} =		=	163,059	FT.LBS
Passive Pressure (F_p) =	0	LB	$M_{passive\ pressure}$ =		=	0	FT.LBS
	---					---	
Sum of Vertical Loads (SV) =	**35,020**	LB	Sum of Resisting Moments =			**332,479**	FT.LBS

Factor of Safety Against Overturning

F.S. =	Resisting Moment / Overturning Moment	=	**2.91**	> 2.0	O.K.

Check of Soil Stresses

Net Moment (NM) = Resistance Moment - O.T.M.	=	218,214	FT.LBS	
Location of Resultant Force from Point O (X_r) = NM / SV =		6.23	FT	
Eccentricity (E_c) = $B_w/2 - X_r$	=	1.27	FT	
Middle 1/3 of the Footing base = Bw/3	=	5.00	FT	
Eccentric Moment (EM) = SV * Ec	=	44,436	FT.LBS	
Footing Section Modulus (SM) = $B_w^2/6$	=	37.50	FT^3	
Toe Stress (f_2) = SV/Bw + EM/SM	=	**3,520**	PSF	
Heel Stress (f_1) = SV/Bw - EM/SM	=	**1,150**	PSF	

O.K. Eccentricity is Less than Bw/6. No Soil Negative Stress at the Heel

Stop .. Soil Stresses have been exceeded

Stop .. Soil Stresses have been exceeded

FLOOD CONTROL DISTRICT OF MARICOPA COUNTY

Project: **Laveen Area Conveyance Channel** *Page 4*

Computed By: **SKH** **Checked By:** **KVH**

Factor of Safety Against Sliding

The Retaining Wall has a Key and Passive Pressure is ignored

* Case 1: Retaining Wall with the Key

Upward Soil Pressure Force at the Toe (R_T)	=	11,351	LB
Sum of Vertical forces on the Heel (H_F)	=	23,669	LB
Passive force on the key	=	4,500	LB

Sliding Resistance = R_T*tan(phi) + H_F*Friction Coeff. + C_A*B_w + Passive Force

= 22,091 LB

F.S. Against Sliding = Sliding Resistance / Sliding Forces

= 1.31 < 1.5 Unaccebtable

** Case 2: Retaining Wall without the Key

Sliding Resistance = Sum of vertical loads * Friction Coeff. + C_A*B_w + Passive Force

= 16,330 LB

F.S. Against Sliding = Sliding Resistance / Sliding Forces

= 0.97 < 1.5 Unaccebtable

RC Design using Working Stress Method

Design of Stem

Required reinforcement Due to Flexure:

Thickness of the Stem at the interface with the footing (t_b)	=	2.50	FT
Assumed section depth (d) = t_b - 2" (cover) - o.5" (half bar diameter) =		27.50	IN
Moment at the bottom of the stem (M_{stem})	=	73,591	FT.LB
Allowable concrete strength $f_c = 0.4\ f_{c'}$	=	1200	PSI
Allowable steel strength fs	=	24000	PSI
Modular ratio (n) = 9	Coeffiecient k =	0.310	
Coeffieient a = 1.79	Coefficient j =	0.897	
Coeffieient K = 166.9			
Required section depth (d_r) = Sqrt [M_{stem} / (b*K)]	=	21.00	IN OK
A_s required per foot of wall width	=	1.49	$inch^2$
Preferred rfmt. spacing = 6 IN	Use Bar Size #	8	

Check of Shear at the critical Section of the Stem:

Allowable stresses in concrete = 0.95*sqrt($f_{c'}$) = 52.0 PSI

V_{stem} = Shear at 27.50 inch from the footing surface

= 14,888 LB

Stem depth d' = 1.95 FT

Rfmt. Concrete Shear Stress = **53** PSI < Allowable

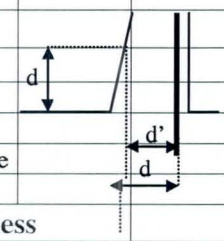

Allowable Shear Strength is less than the Actual Shear .. Increase Thickness

Check of Development Length of the Stem According to ACI 318.12.2.2:

Vertical Bars (Alpha) =	1.00		Uncoated (Beta) =	1.00	
Normal weight Concrete (Lamda)	=	1.00			
Development Length (l_d)	=	[d_b*f_y*alpha*beta*lamda] / [20*sqrt(f_c')]			inch
	=	**41.1**	inch >	B_t	

Therefore, hooks should be used on the ends of the stem bars

Check of Required Temperature Reinforcement for the Stem:

$A_{s,temp}$ = 0.0018 * b * t_{stem}	=	0.45	$inch^2$
Two third of temp. rfmt. to be put on the front face of the stem	=	0.30	$inch^2$
One third of temp. rfmt. to be put on the back face of the stem	=	0.15	$inch^2$

Design of Footing (Heel):

Disregard soil pressure under the heel

Uniform load above the heel ($w_{,h}$) = soil load + own weight of heel + surcharge + truck

= 3,300 LB/FT

Required reinforcement Due to Flexure:

Distance from vertical stem rfmt. to the heel edge = W_h + cover + d_b /2 =		9.21	FT	
M_{heel}	=	74,170	FT.LB	
Heel depth (d_h) = Heel thickness - 2 inch (cover) - d_b/2 =		2.29	FT	
Required section depth (d_r) = Sqrt [M_{heel} / (b*K)]	=	21.08	IN	OK
A_s required per foot of wall width	=	1.50	$inch^2$	
Preferred rfmt. spacing = 6 IN	Use Bar Size #	8		

Check of Shear at the critical Section of the Heel:

Allowable stresses in concrete = 0.95*sqrt(f_c) =	=	52.03	PSI
V_{heel} = Shear at stem face	=	12,958	LB
Rfmt. Concrete Shear Stress = **39** PSI	<	Allowable	

Allowable Shear Strength is Geater than the Actual Shear O.K.

Check of Required Temperature Reinforcement for the Heel:

$A_{s,temp}$ = 0.0018 * b * t_{heel}	=	0.6480	$inch^2$
Half of temp. rfmt. to be put on each face of the footing	=	0.32	$inch^2$

Project: **Laveen Area Conveyance Channel** *Page 6*

Computed By: **SKH** **Checked By:** **KVH**

Design of Footing (Toe):

Disregard passive soil pressure

Load above the toe = upward soil pressure - own weight of toe

Required reinforcement Due to Flexure:

Upward soil stress at the face of the wall	=	2,967	LB/FT^2
M_{toe}	=	18,132	FT.LB
Toe depth (d_t) = Toe thickness - 3 inch (cover) - $d_b/2$	=	2.21	FT
Required section depth (d_r) = Sqrt [M_{toe} / (b*K)]	=	10.42	IN
A_s required steel per foot of wall width	=	0.38	$inch^2$
Cracked stress (f_{cr}) = 7.5. Sqrt. ($f_{c'}$)	=	410.79	PSI
Cracked Moment (M_{cr}) = f_{cr} * I/y = fcr * [b*t^3/12]/[t/2]	=	61,619	FT.LB
A_s (cracked section) = M_{cr}/[f_s*j*d]	=	1.30	$inch^2$

OK

The minimum rfmt. requirement for the cracked section can be waived if the actual rfmt. is at least one-third greater than thatrequired by analysis,

i.e., the rfmt. Used per foot long of the wall	=	0.51	$inch^2$

Preferred rfmt. spacing = 9 IN Use Bar Size # 6

Check of Shear at the critical Section of the Toe:

Allowable stresses in concrete = 0.95*sqrt($f_{c'}$)	=	52.03	PSI
V_{toe} = Toe Shear at stem face	=	10,976	LB

Rfmt. Concrete Shear Stress = **35** PSI < Allowable

Allowable Shear Strength is Geater than the Actual Shear O.K.

Check of Required Temperature Reinforcement for the Toe:

$A_{s,temp}$ = 0.0018 * b * t_{toe}	=	0.6480	$inch^2$
Half of temp. rfmt. to be put on each face of the footing	=	0.32	$inch^2$

FLOOD CONTROL DISTRICT OF MARICOPA COUNTY

Project: Laveen Area Conveyance Channel *Page 7*
Computed By: SKH **Checked By: KVH**

Reinforcement Details
Wall # 1 & 2 (at Poles # 126 & 125)

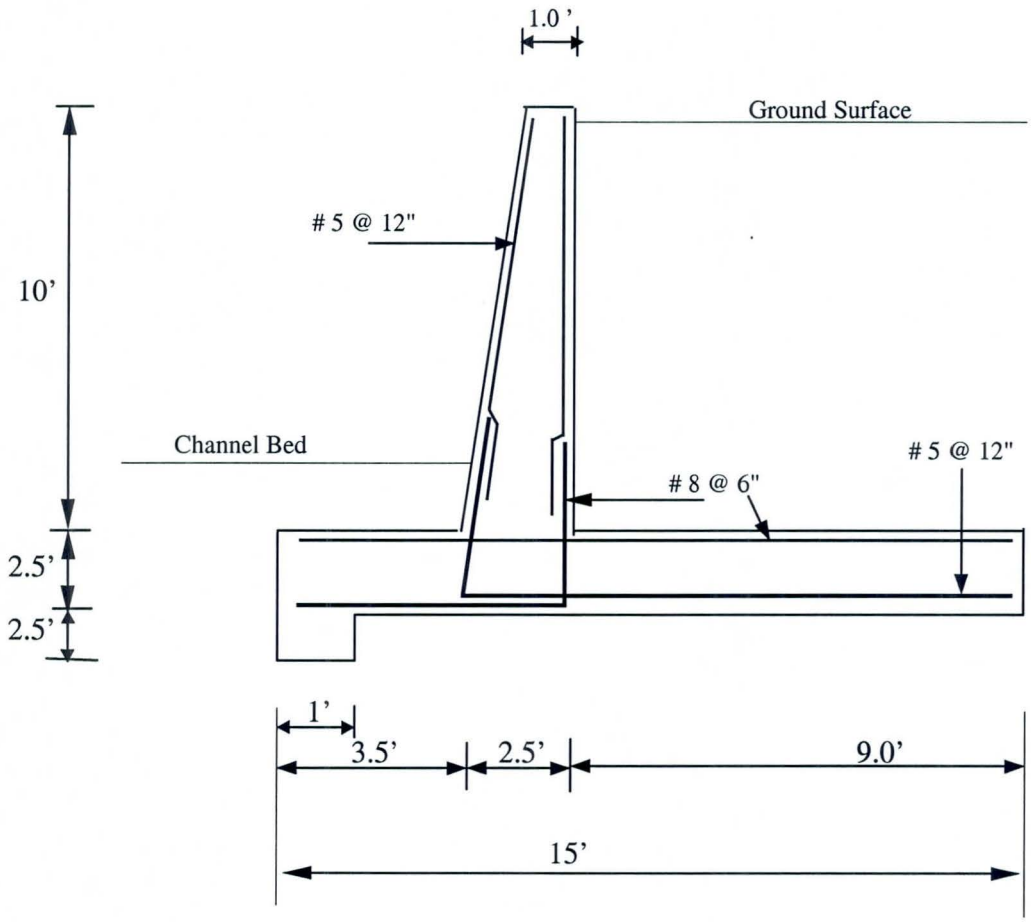

(Not To Scale)

FLOOD CONTROL DISTRICT OF MARICOPA COUNTY

PROJECT LACC PAGE ____ OF ____

DETAIL 16' wall @ Power poles COMPUTED KVH DATE 5/01

CHECKED BY ____ DATE ____

Type c. 3 (Ht = 16')

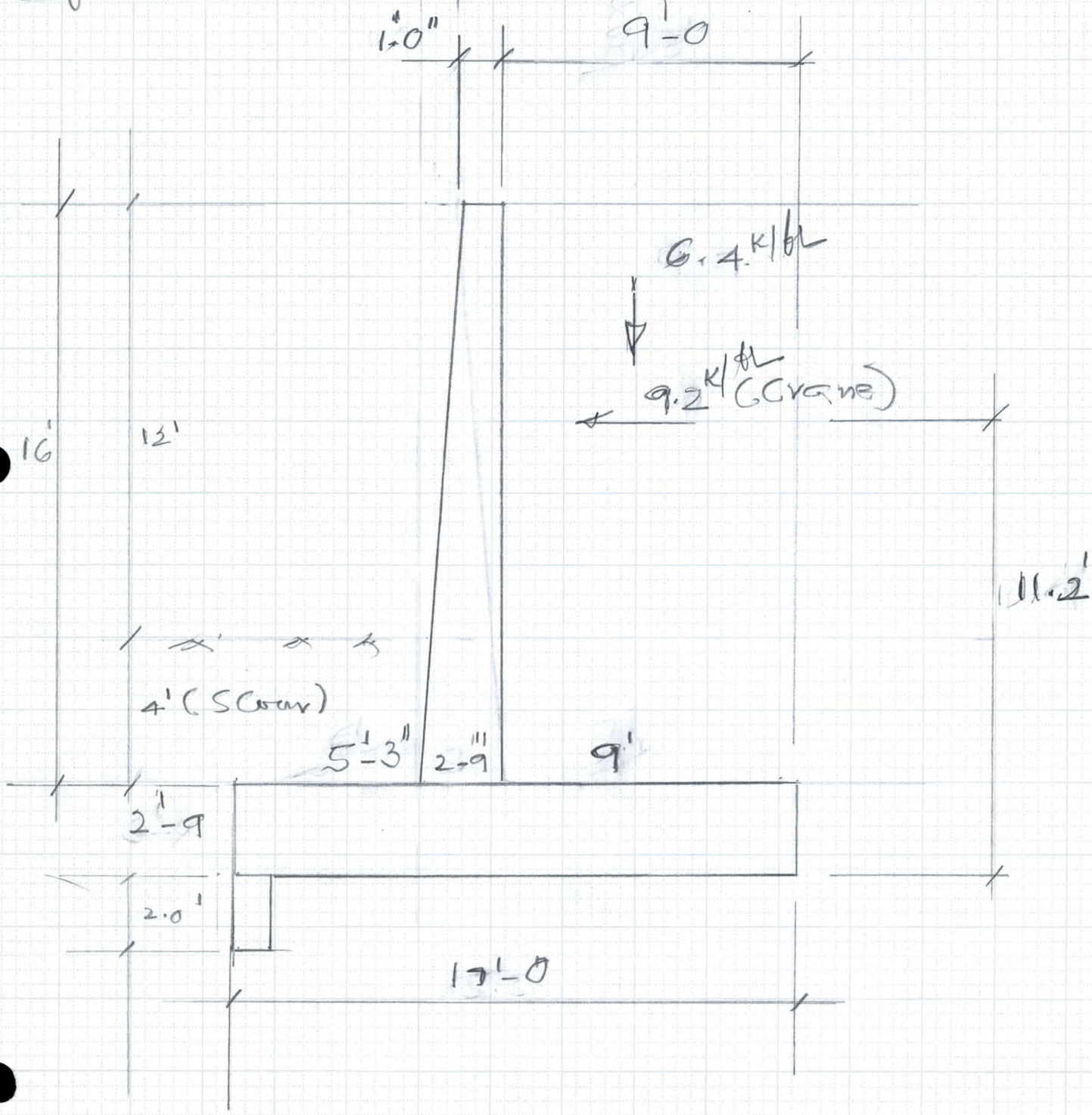

FLOOD CONTROL DISTRICT OF MARICOPA COUNTY

PROJECT LACC PAGE ____ OF ____

DETAIL 16' Wall @ Power poles COMPUTED KVH DATE 6/01

CHECKED BY ____ DATE ____

Typic. 4: Wall Ht = 16'

Wall: $W_1 = (1.0 \times 16 \times .15) = 2.4^K$

$W_2 = \frac{1.75}{2} \times 16 \times 0.15 = 2.1$

Ftg: $W_3 = (17 \times 2.75)\, 0.15 = 7.0$

Soil $W_4 = (9 \times 16 \times 0.12) = 17.3$

W_5 (Crane) $= 6.4$

35.2^K

M_{STB}: $(2.4 \times 7.5) + (2.1 \times 6.4) + (7 \times 8.5) + (17.3 + 6.4)\, 12.5$

$= (18 + 13.4 + 57.5 + 296.3) = 387.2^{K'L}$

Soil-pr:

Ht = 18.75'

P_v (Soil) $= (0.12 \times 0.33 \times 18.75) = 0.743^{KSF}$

$P = \left(\frac{0.743}{2} \times 18.75\right) = 6.97^K$

$M_{O.T} = \left(6.97 \times \frac{18.75}{3}\right) + (9.2 \times 11.1)$

$= (43.6 + 102.1) = 145.7^{K'L}$

$F.S = \frac{387.2}{145.7} = 2.7$

Sliding

$P_H = (6.97 + 9.2) = 16.2^K$

Resisting force $= (35.2)\, 0.5 = 17.6^K$

Coeff

$F.S = \frac{17.6}{16.2} = 1.1$

∴ Key is required

6910-153 4-90

FLOOD CONTROL DISTRICT OF MARICOPA COUNTY

PROJECT LACC PAGE ____ OF ____

DETAIL 16' wall @ power poles COMPUTED KVH DATE 5/01

CHECKED BY ____ DATE ____

Type-3 Wall Ht = 16' (Contd)

Additional Resistance with Key

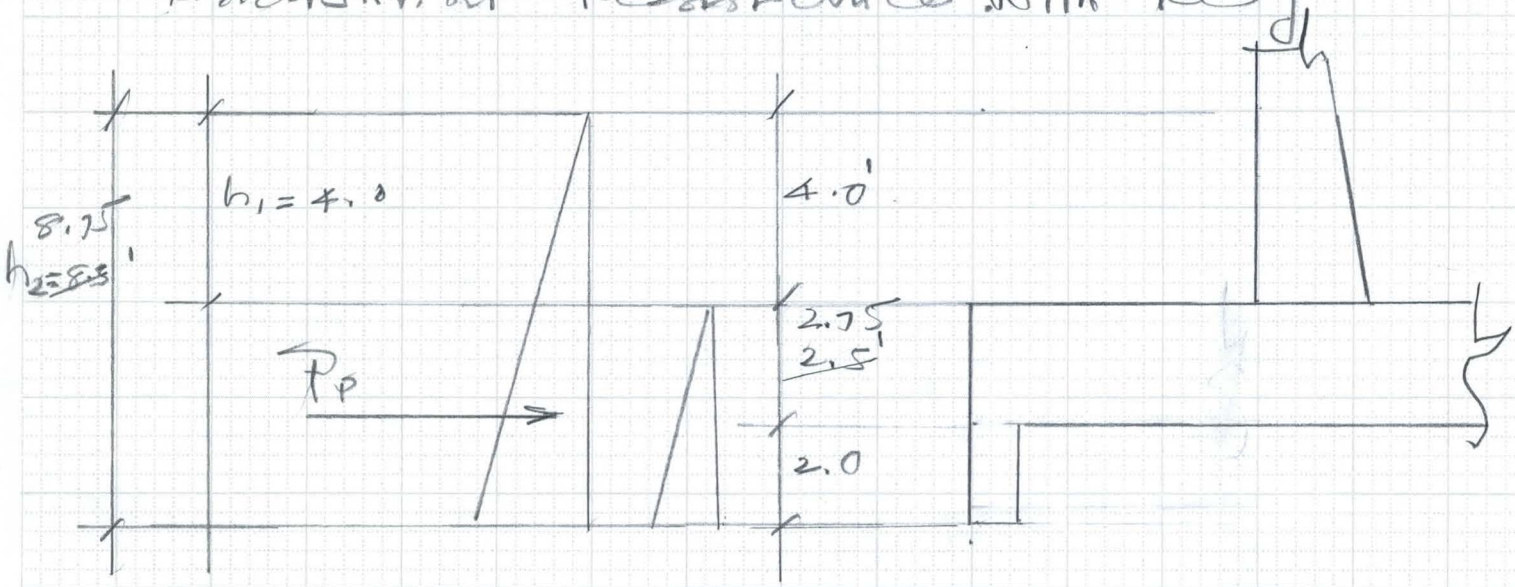

Case 1 $h_1 = 4.$ $h_2 = \cancel{8.5}\ 8.75$

$$P_p = \frac{1}{2} C_p w (h_2^2 - h_1^2)$$

$$= \frac{1}{2} \times 3 \times 0.12 (\cancel{8.5}\ 8.75^2 - 4.0^2)$$

$$= 10.9^K$$

Case 2 $h_1 = 0$, $h_2 = \cancel{4.5}\ 4.75$

$$P_p = \frac{1}{2} \times 3 \times 0.12 (\cancel{4.5}\ 4.75^2) = \cancel{3.7}\ 4.1^{KK}$$

Sliding Check (with Key):

a) $F.S = (17.6 + 10.9)/16.2 = 1.8$

b) $F.S = (17.6 + 4.1)/16.2 = 1.3$

Close to 1.5 ok

6910-153 4-90

FLOOD CONTROL DISTRICT OF MARICOPA COUNTY

PROJECT: LAGC — PAGE ____ OF ____

DETAIL: 16' wall @ power poles — COMPUTED: KVH — DATE: 5/01

CHECKED BY ____ — DATE ____

Stem Check:

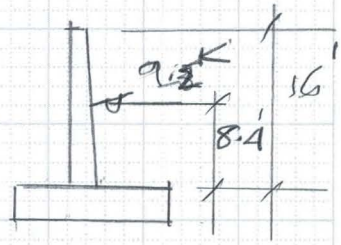

$Ht = 16'$, $\gamma = 0.12 \times 0.33 \times 16$
$= 0.634$ KSf

$P_{soil} = \frac{0.634}{2} \times 16 = 5.1^K$

P_H (Grang) $= 9.2^K$ acting at 8.4'

$M_{stem} = (5.1 \times 16/3) + (9.2 \times 8.4)$ K'
$= (27.2 + 78.1) = 105.3$

$d_{eff} = (36'' - 2 - 0.5) = 27.5''$ (33)

$A_s = \frac{105.3 \times 12}{2.4 \times 0.88 \times 27.5} = 2.2 \text{ in}^2$ (1.96)

9@6" $A_s = 2.0$

$M_{stem} = (5.1 \times \frac{16}{3}) + (\frac{9.3}{2} \times 8.4)$ K'
$= (27.2 + 39.1) = 66.3$

$A_s = \frac{66.3 \times 12}{24 \times 0.88 \times 27.5} = 1.4 \text{ in}^2$

#8@6" $= 1.58 \text{ in}^2$

Check Sliding using half $\frac{9.3}{2} = 4.7^K$

$P_h = (6.8 + 4.7) = 11.5^K$

Resisting force $= (24.1 + 9.7)0.5 = 16.9$

$F.S. = \frac{16.9}{11.5} = 1.5$

FLOOD CONTROL DISTRICT OF MARICOPA COUNTY

PROJECT LACC PAGE ____ OF ____

DETAIL 16' Wall @ Power poles COMPUTED KVH DATE 6/01

CHECKED BY ____ DATE ____

Shear Check:

$P = 16.2^K$

$b = 12, \quad d = (33 - 2 - 0.5) = 30.5$

$$v = \left(\frac{16.2 \times 1000}{12 \times 30.5}\right)$$

$$= 44.3 \text{ psi}$$

$$v(\text{Allow}) = 0.95\sqrt{3000}$$

$$= 52 \text{ psi} \quad \therefore \text{ok}$$

FLOOD CONTROL DISTRICT OF MARICOPA COUNTY

PROJECT LACC PAGE ____ OF ____

DETAIL 16' wall @ Power poles COMPUTED KVH DATE 6/01

CHECKED BY ____ DATE ____

footing:

Total $W = 35.2^K$

$M_{STB} = 387.2$, $M_{OT} = 145.7$

$x_R = (387.2 - 145.7)/35.2 = 6.86'$

$e = \left(\frac{17}{2} - 6.86\right) = 1.64 \quad \frac{b}{6} = \frac{17}{6} = 2.83 \therefore OK$

$$p_{r\,Max/Min} = \frac{35.2}{17 \times 1}\left(1 \pm \frac{6 \times 1.64}{17}\right)$$

$$= 2.07\,(1 \pm 0.58)$$

$p_r(max) = 3.3\ KSf$, $p_r(min) = 0.87\ KSf$

$\left(\frac{9}{17} \times 2.43\right) = 1.29^{KSf}$

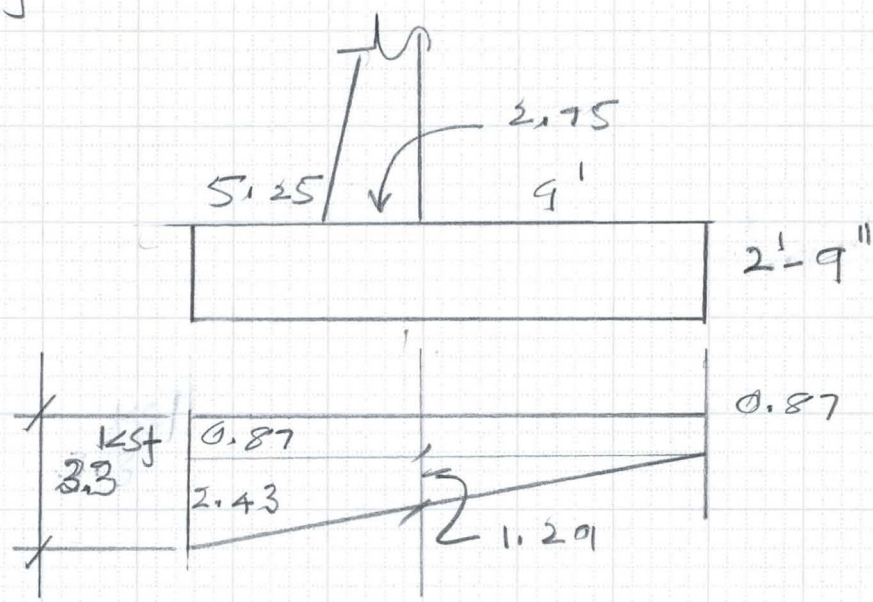

FLOOD CONTROL DISTRICT OF MARICOPA COUNTY

PROJECT LACC PAGE ____ OF ____

DETAIL 16' Wall @ Low or Pool COMPUTED KVH DATE 6/01

CHECKED BY ____ DATE ____

Heel Design:

wt. of soil = 17.3 K

wt. crane = 6.4

wt of. Conc = 2.75 × 9 × 0.15 = 3.71 K

Soil pr: ↑ (0.87 × 9) = 7.83 K

$\left(\frac{1.29}{2} \times 9\right)$ = 5.81 K

$M = (17.3 + 6.4 + 3.71)\frac{9}{2} - (7.83 \times 4.5) - 5.81\left(\frac{1}{3} \times 9\right)$

$= (123.3 - 35.2 - 17.4) = 70.7$ K-ft

deff = (33 − 2 − 0.5) = 30.5"

$A_s = \frac{70.7 \times 12}{24 \times 0.88 \times 30.5}$

= 1.31

Use #8 @ 6", A_s = 1.58 in² 1.2

Shear Check:

V = (17.3 + 6.4 + 3.71) − 7.83 − 5.81 = 13.77 K

$v = \frac{13.77 \times 1000}{12 \times 30.5}$ = 37.6 psi ∴ ok

Toe Design

$M = 3.3 \times \frac{5.25^2}{2} - (5.25 \times 2.75)\, 0.15 \times \frac{5.25}{2}$

= (45.5 − 5.7) = 39.8

deff = (33 − 3 − 0.5) = 29.5"

$A_s = \frac{39.8 \times 12}{24 \times 0.88 \times 29.5}$

= 0.77

Use #6 @ 6", A_s = 0.88

6910-153 4-90

FLOOD CONTROL DISTRICT OF MARICOPA COUNTY

PROJECT LACC PAGE ____ OF ____

DETAIL Retaining wall 10' COMPUTED KUH DATE 5/01

@ power poles CHECKED BY ____ DATE ____

Ht = 10'

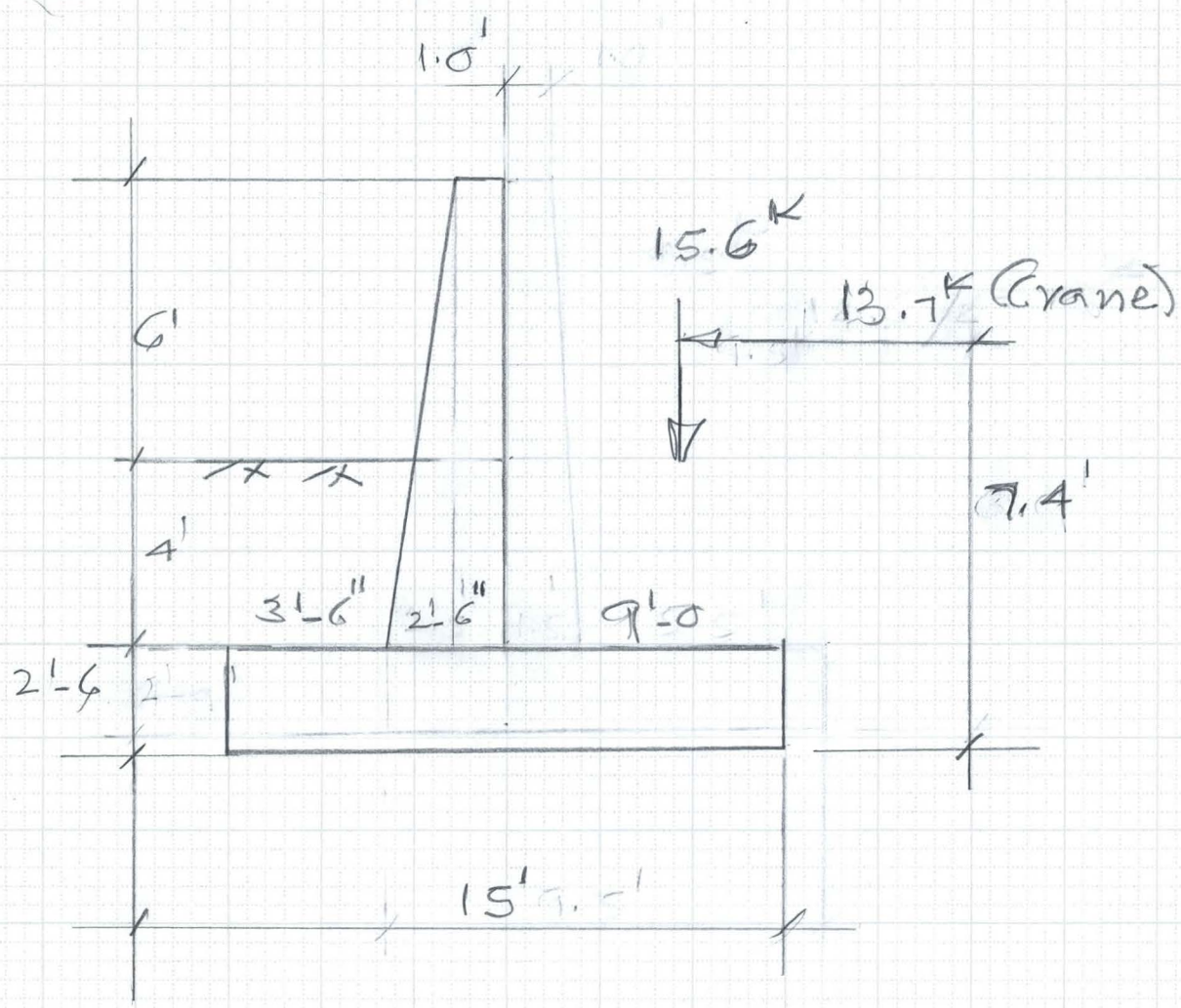

6910-153 4-90

FLOOD CONTROL DISTRICT OF MARICOPA COUNTY

PROJECT LACC PAGE ____ OF ____

DETAIL 10' Wall @ Power pole COMPUTED KWH DATE 6/01

CHECKED BY ____ DATE ____

Wall Ht = 10'

$W_1 = \frac{1.5}{2} \times 10 \times 0.15 = 1.1^K$

$W_2 = 1.0 \times 10 \times 0.15 = 1.5$

W_3 (fdtng) $= 2.5 \times 15 \times 0.15 = 5.63$

W_4 (Soil) $= 9.0 \times 10 \times 0.12 = 10.8$

W_5 (Ground) $= 15.6$

$W = 33.63^K$

$M_{STB} = (1.1 \times 4.49) + (1.5 \times 5.5) + (5.63 \times 7.5) + (10.8 \times 10.5) + (15.6 \times 10.5)$

$= (4.9 + 8.3 + 42.2 + 113.4 + 163.8) = 332.6^{K'L}$

Soil pr:

$pr = (0.12 \times 0.33 \times 12.5) = 0.495^{K/f}$

$P = \frac{0.495}{2} \times 12.5 = 3.09^K \approx 3.1^K$

$M_{O.T} = (3.09 \times \frac{12.5}{3}) + (13.7 \times 7.4)$

$= (12.9 + 101.4) = 114.3$

$F.S = 332.6 / 114.3 = 2.9$

Check Sliding

$P_H = (3.1 + 13.7) = 16.8^K$

Resisting Force $= (33.63 \times 0.5) = 16.82$ (Coeff)

$F.S = \frac{16.82}{16.8} = 1.0 < 1.5$

∴ Requires Key

6910-153 4-90

FLOOD CONTROL DISTRICT OF MARICOPA COUNTY

PROJECT LACC PAGE ____ OF ____

DETAIL Retaining Wall COMPUTED KVH DATE 5/01

@ power poles CHECKED BY ____ DATE ____

Check Sliding:

$P_H = (2.73 + 7.3) = 10.03^K$

Resisting force $= (20.78 \times 0.5) = 10.4^K$

(coeff. friction)

$F.S = \frac{10.4}{10.03} = 1.04$ Not good

Check with Key:

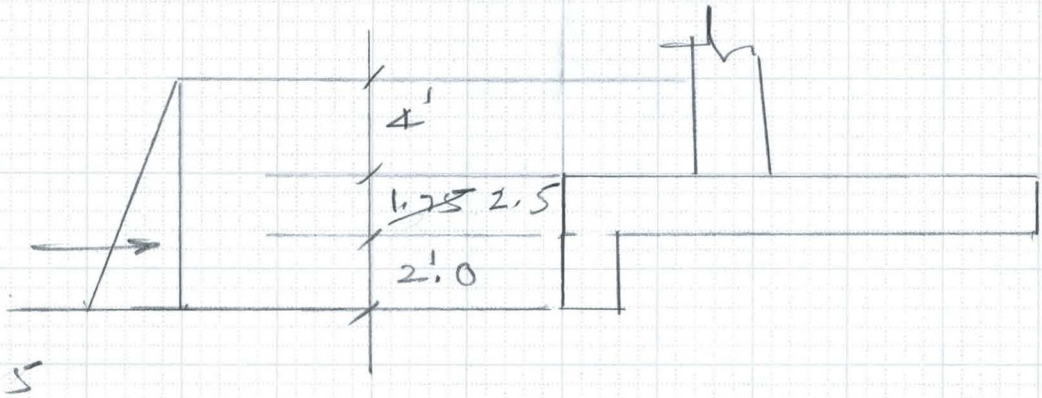

$\therefore h_2 = \cancel{7.75}\ 8.5$, $h_1 = 4.0$

$P_p = \frac{C_p}{2} w (h_2^2 - h_1^2) = \frac{1}{2} \times 3.0 (\cancel{7.75}\ 8.5^2 - 4^2) 0.12$

$= 10.1^K$

Resisting force $= (16.82 + 10.1) = 26.92^K$

$F.S = \frac{26.92}{16.8} = 1.6$

If $h_1 = 0$ $h_2 = 4.5$

$P_p = \frac{1}{2} \times 3.0 \times 4.5^2 \times 0.12 = 3.7^K$

Resisting force $= (16.82 + 3.7) = 20.5$

$F.S = \frac{20.5}{16.8} = 1.2$ Close Enough.

6910-153 4-90

FLOOD CONTROL DISTRICT OF MARICOPA COUNTY

PROJECT LACC PAGE ____ OF ____
DETAIL Retaining Wall 10' @ Power Poles COMPUTED KVH DATE 6/01
CHECKED BY ____ DATE ____

Wall Ht = 10' (Contd)

Stem Check:

Ht = 10', pr = 0.12 × 0.33 × 10 = 0.396 ksf

$P = \frac{0.396}{2} \times 10 = 1.98^{K}$

$P_{crane} = 13.7^{K}$

$M = (1.98 \times \frac{10}{3}) + (13.7 \times 4.9)$

$= (6.6 + 67.1) = 73.7^{K\text{-}ft}$

$d_{eff} = (30 - 2 - 0.5) = 27.5''$

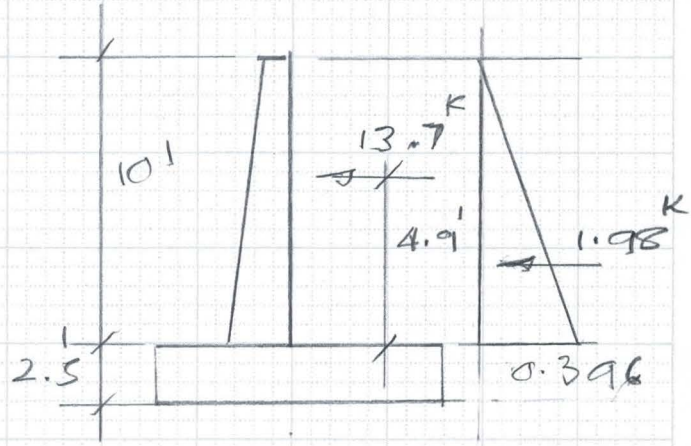

$A_s = \frac{73.7 \times 12}{24 \times 0.88 \times 27.5}$

$= 1.52 \text{ in}^2$ USE #8 @ 6'' $A_s = 1.58$

Shear Check:

$V = (1.98 + 13.7) = 15.68^{K}$

$b = 12$, $d = 27.5''$ $v = \frac{15.68}{12 \times 27.5}$

$= 47.5$ psi

$v_{(Allow)} = 0.95\sqrt{3000} = 52$ psi

∴ OK

FLOOD CONTROL DISTRICT OF MARICOPA COUNTY

PROJECT LACC PAGE ____ OF ____

DETAIL 10' Walls @ Power Poles COMPUTED KVH DATE 6/01

CHECKED BY ____ DATE ____

Check Ftg. pressure:

$W = 33.63^K$

$M_{STB} = 332.6 \quad M_{O.T} = 114.3$

$x_R = (332.6 - 114.3)/33.63 = 6.49'$

$e = (\frac{15}{2} - 6.49) = 1.01'$

$p_r = \frac{33.63}{15 \times 1}\left(1 \pm \frac{6 \times 1.01}{15}\right) = 2.24(1 \pm 0.404)$

$p_r(max) = 3.1$ ksf $\quad p_r(min) = 1.33$ ksf

$p_r = 1.77 \times \frac{9}{16} = 1.0$ ksf

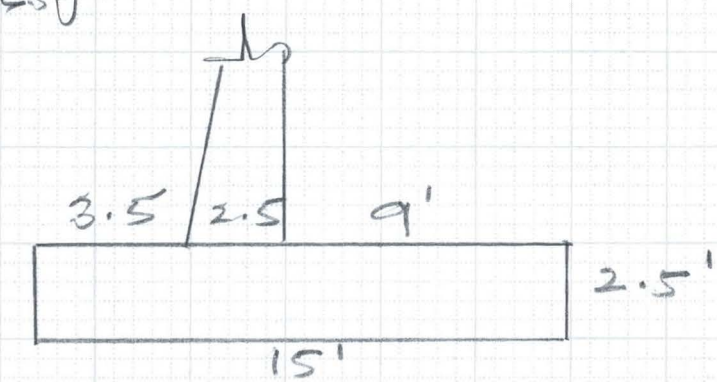

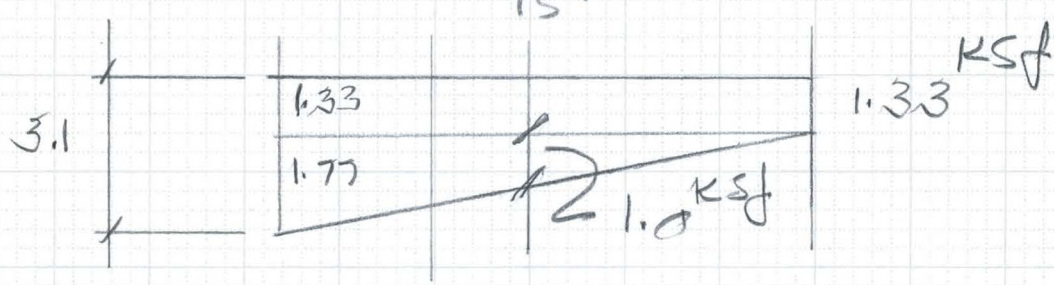

FLOOD CONTROL DISTRICT OF MARICOPA COUNTY

PROJECT LACC PAGE ____ OF ____

DETAIL 10' wall @ power poles COMPUTED KVH DATE 6/01

CHECKED BY ____ DATE ____

Heel Design:

Soil wt. = 10.8 K

Crane wt. = 15.6

Conc. ftg = (2.5 x 9 x 0.15) = 3.38 K

Soil pr (↑) (4.33 x 9) = 11.97 K

$\left(\frac{1.0}{2} \times 9\right) = 4.5$

$M = (10.8 + 15.6 + 3.38)\,4.5 - (11.97 \times 4.5) - (4.5 \times 3)$

$= (134.0 - 53.9 - 13.5) = 66.6$ Kft

$d_{eff} = (30 - 3 - 0.5) = 27.5''$ $\quad A_s = \frac{66.6 \times 12}{24 \times 0.88 \times 27.5}$

$= 1.4$

Shear Check:

use #8 @ 6" = 1.58

$V = (10.8 + 15.6 + 3.4) - 11.97 - 4.5 = 13.33$

$v = \frac{(13.33 \times 1000)}{12 \times 27.5} = 40.3$ psi

< 52 psi (Allow)

Toe Design

$M = \left(3.1 \times \frac{3.5^2}{2}\right) - (2.5 \times 3.5)\,0.15 \times \frac{3.5}{2}$

$= (19 - 2.3) = 16.7$

$d_{eff} = (30 - 3 - 0.5)$

$= 26.5''$

$A_s = \frac{16.7 \times 12}{24 \times 0.88 \times 26.5}$

$= 0.36$

Min. Steel.

FLOOD CONTROL DISTRICT OF MARICOPA COUNTY

PROJECT LACC PAGE ____ OF ____

DETAIL 10' Wall @ power poles COMPUTED KVH DATE 6/01

CHECKED BY ____ DATE ____

Check Sliding:

Av. pr = (3.1 + 1.33)/2 = 2.22 ksf

Using Passive Soil Res. of ~~200~~ 360 psf (120 × 3) (K_p)

Req'd Depth of Soil

$= \frac{2520}{120} = 18.5'$

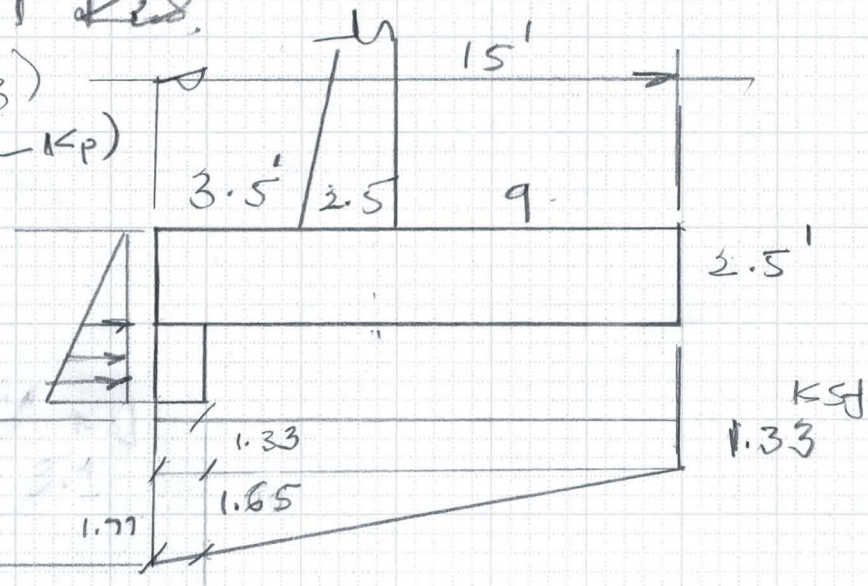

(P_p) Passive Res.

$= \cancel{200}\ 360 \times 18.5$

$= \cancel{3700}\ 6660$ psf

W = 33.63 K

Sliding force = 16.8 K

(3.1 − 1.33) = 1.77 ksf

$1.77 \times \frac{14}{15} = 1.65$

Frictional Res = 33.63 × 0.35 = 11.8 K

Additional Passive Res. Reqd

= (16.8 − 11.8) = 5 K

Depth of Key:

$\frac{1}{2}(\cancel{3700}\ 6660)\,h^2 = 5000$, $h = \cancel{1.64}\ 1.23'$

Load under footing

$(1.33 \times 14) + (\frac{1.65}{2} \times 14) = (18.6 + 11.6) = 30.2$ K

Load under Key $= (2.98 \times 1) + (\frac{0.12}{2} \times 1) = 3.04$ K

6910-153 4-90

FLOOD CONTROL DISTRICT OF MARICOPA COUNTY

PROJECT: L-A CC — PAGE ____ OF ____

DETAIL: 10' wall @ power poles — COMPUTED: KVH — DATE: 6/01

CHECKED BY ____ — DATE ____

$w = (K_p \times 120) = (3 \times 120) = 360$

$P_p = \frac{1}{2} w d^2 = \frac{1}{2}(360)4.5^2 = 3645$

$\frac{1}{2}(360)2.5^2 = 1125$

$(3645 - 1125) = 2520$

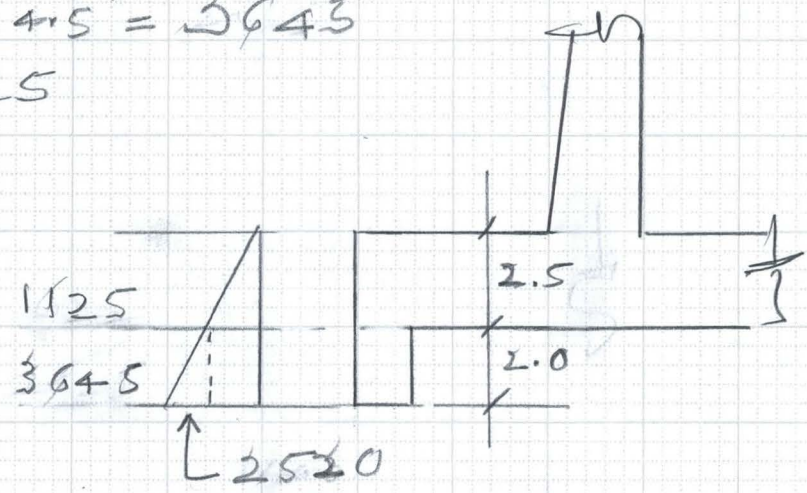

Passive Res of Key

$P_p = (1125 \times 2) + \frac{2520}{2} \times 2 = (2250 + 2520) = 4.77$

Frictional Res. $= (0.52 \times 30.2) + (0.35 \times 3.04)$

$= (16.1 + 1.1) = 17.2$

Total Resistance $= (17.2 + 4.77) = 21.97$

> 16.8

$F.S = 21.97/16.8 = 1.31$

Considering the full 4.5' as the Depth of Passive Res.

$P_p = 2.52$ ksf $\quad P_p = \left(\frac{2.52}{2} \times 4.5\right) = 5.67$

Frictional Res $= (17.2 + 5.7) = 22.9^{K}$

$F.S = \frac{22.9}{16.8} = 1.4$

Close Enough to 1.5

6910-153 4-90

FLOOD CONTROL DISTRICT OF MARICOPA COUNTY

PROJECT _____ PAGE ____ OF ____

DETAIL _____ COMPUTED _____ DATE ____

_____ CHECKED BY _____ DATE ____

$$K = \frac{f_c}{2} j k$$

$$k = \frac{f_c}{f_s/n + f_c}, \quad f_c = 3000, \; f_s = 24 \quad n = 9$$

$$= \left(\frac{1.2}{\frac{24}{9} + 1.2}\right) = 0.31, \quad j = \left(1 - \frac{k}{3}\right) = \left(1 - \frac{0.31}{3}\right) = 0.89$$

$$K = \frac{1.2}{2} \times 0.89 \times 0.31 = 0.165 = 165 \text{ KSI}$$

$$d_{req'd} = \sqrt{\frac{M}{Rb}} = \sqrt{\frac{73.7 \times 12}{0.165 \times 12}} = 21.1'' < 27.5''$$

$$A_s = \frac{73.7 \times 12}{24 \times 0.88 \times 27.5} = 1.523$$

$$\# 8 @ 6'' \quad A_s = 1.58$$

$$A_s = \frac{M}{f_s j d}$$

6910-153 4-90

FLOOD CONTROL DISTRICT OF MARICOPA COUNTY

PROJECT LACC PAGE 2 OF 5

DETAIL Retaining Walls COMPUTED KVH DATE 6/01

@ Power Poles CHECKED BY _____ DATE _____

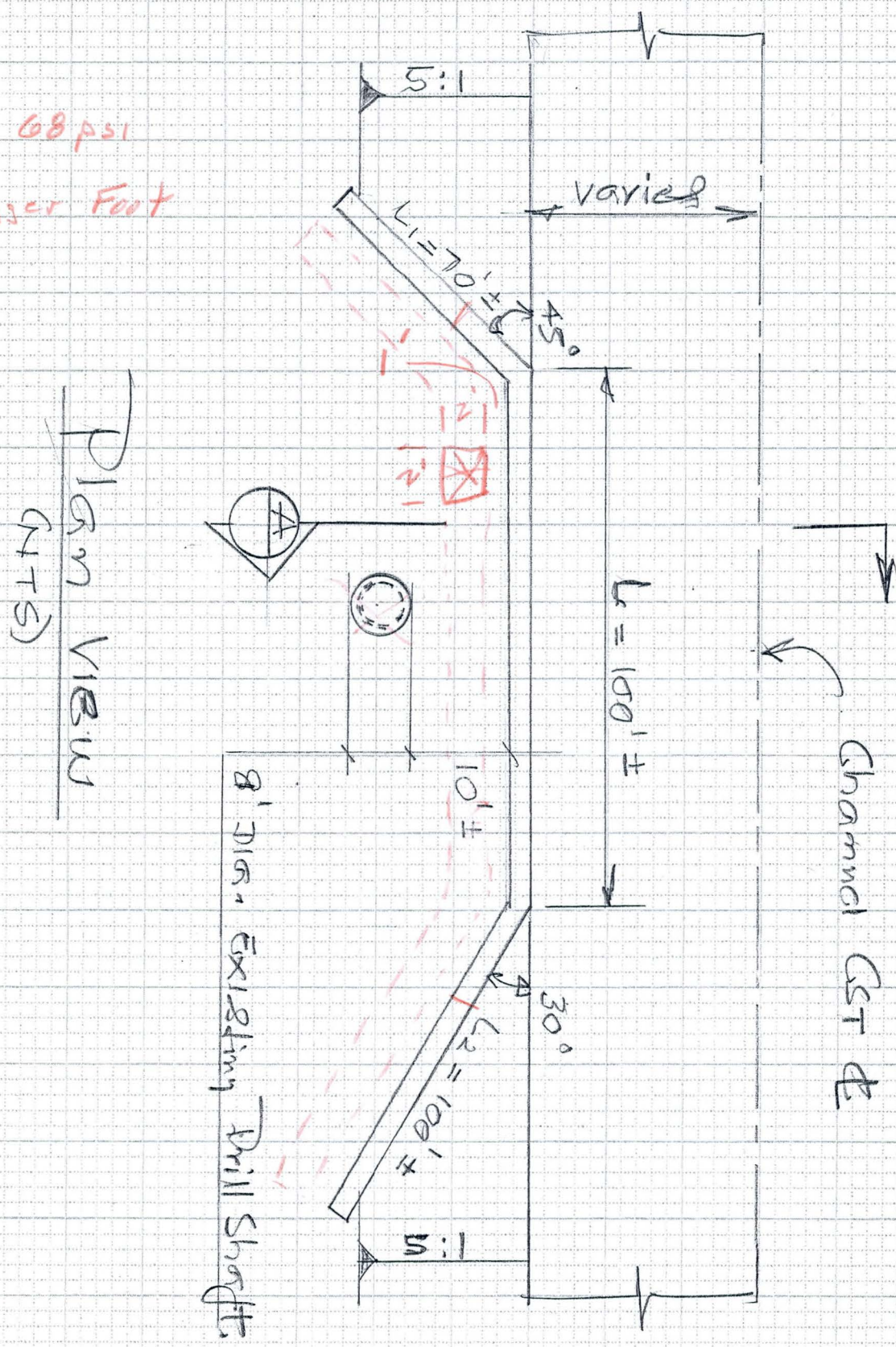

FLOOD CONTROL DISTRICT OF MARICOPA COUNTY

PROJECT LACC PAGE 2 OF 5

DETAIL Retaining Walls COMPUTED KVH DATE 6/01

@ Power Poles CHECKED BY _____ DATE _____

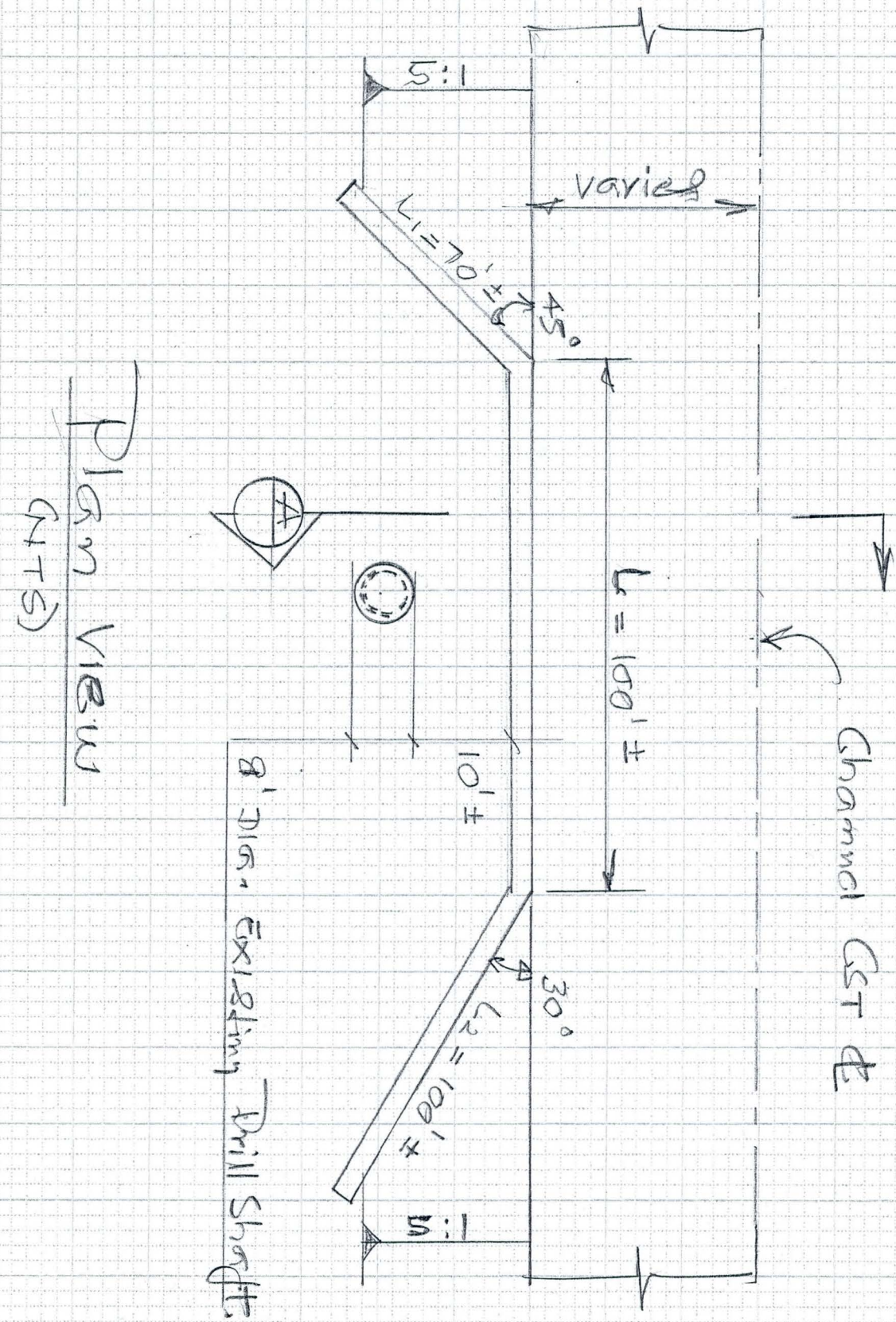

FLOOD CONTROL DISTRICT OF MARICOPA COUNTY

PROJECT LACC PAGE ____ OF ____

DETAIL Load @ power poles COMPUTED KVH DATE 7/01

CHECKED BY ____ DATE ____

Modified Boussinesq. Equation

$$\sigma_n = \left(\frac{0.48\, Q\, x^2 z}{R^5}\right)$$

$X = 1.0,\ Y = 0$ Z Varies

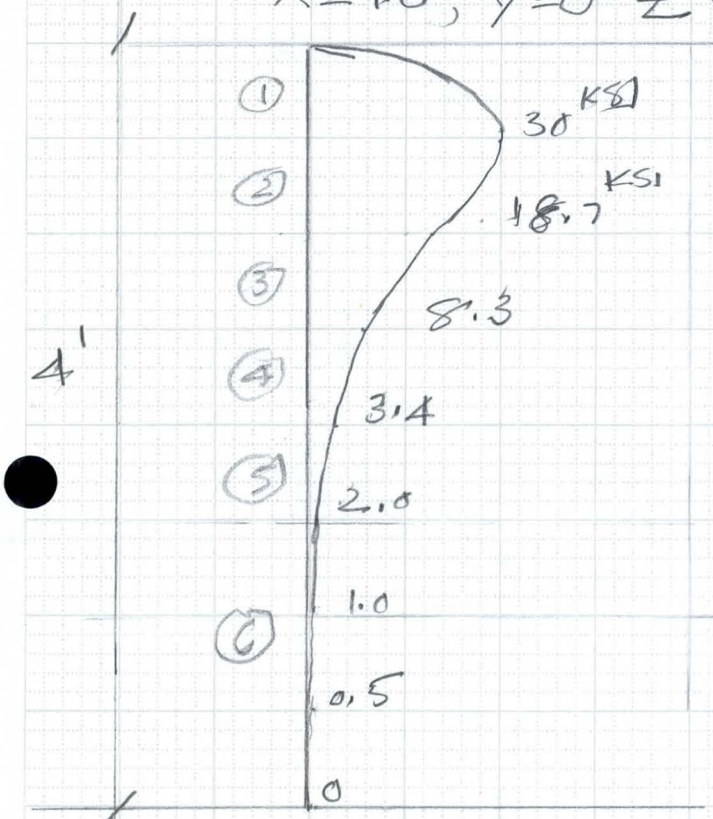

$X = 1,\ Y = 1$, Z Varies

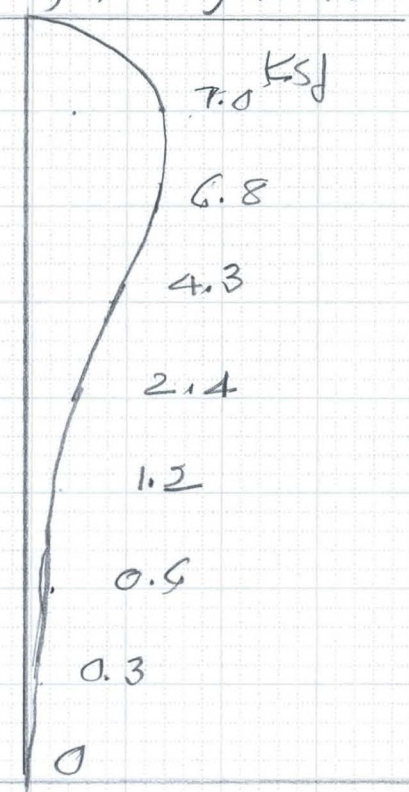

$P_1 = \left(\frac{0+30}{2}\right)0.5 = 7.5^K$

$P_2 = \left(\frac{30+18.7}{2}\right)0.5 = 12.2$

$P_3 = \left(\frac{18.7+8.3}{2}\right)0.5 = 6.8$

$P_4 = \left(\frac{8.3+3.4}{2}\right)0.5 = 2.9$

$P_5 = \left(\frac{3.4+2}{2}\right)0.5 = 1.4$

$P_6 = \left(\frac{2+0}{2}\right)1.5 = 1.5$

$P_H = 32.3^K$

$P_1 = \frac{7}{2} \times 0.5 = 1.8$

$P_2 = \left(\frac{7+6.8}{2}\right)0.5 = 3.5$

$P_3 = \left(\frac{6.8+4.3}{2}\right)0.5 = 2.8$

$P_4 = \left(\frac{4.3+2.4}{2}\right)0.5 = 1.8$

$P_5 = \left(\frac{2.4+1.2}{2}\right)0.5 = 0.9$

$P_6 = \left(\frac{1.2+0}{2}\right)1.5 = 0.9$

$P_H = 11.7^K$

$P_{AV}(P_{Grift}) = \left(\frac{32.3+11.7}{2}\right) = 22^K$

(6)

FLOOD CONTROL DISTRICT OF MARICOPA COUNTY

PROJECT Ladd PAGE ____ OF ____

DETAIL Load @ power pole COMPUTED KVH DATE 7/01

CHECKED BY ____ DATE ____

Resultant from top:

$(0.5 \times 0.25) + (12.2 \times 0.75) + (6.8 \times 1.25) + (2.7 \times 1.75)$
$+ 1.4(2.25) + (1.5 \times 3.25) = 32.3(X_R)$

$32.3(X_R) = 32.63$, $X_R = 1.01'$ from top

$(1.8 \times 0.25) + (3.5 \times 0.75) + (2.8 \times 1.25) + (1.8 \times 1.75)$
$+ (0.9 \times 2.25) + (0.9 \times 3.25) = 11.7(X_R)$

$11.7 X_R = 14.68$, $X_R = 1.25'$ from top

use AV. $X_R = \frac{(1.01 + 1.25)}{2} = 1.13'$ from top

6910-153 4-90

FLOOD CONTROL DISTRICT OF MARICOPA COUNTY

PROJECT LACC PAGE ____ OF ____

DETAIL Load Distribution @ power bldg COMPUTED KVH DATE 7/01

CHECKED BY ____ DATE ____

1) Equation from Sowers & Boussinesq Analysis

$$\sigma_h = \frac{0.48\,Q\,x\,z}{R^5} \qquad (1.12)^5 = 1.762$$

a) $x = 1,\ z = 0.5\ \ y = 0,\ \ R = \sqrt{1^2 + 0^2 + 0.5^2} = 1.12$

$(1.12)^5 = 1.762$

$$\sigma_h = \frac{0.48 \times 220 \times 1^2 \times 0.5}{(1.12)^5} = \cancel{52.8}\ 29.9\ \text{ksf}$$

$x = 1,\ z = 0.5,\ y = 1,\ \ R = \sqrt{1^2 + 1^2 + 0.5^2} = 1.5$

$(1.5)^5 = 7.594$

$$\sigma_h = \frac{0.48 \times 220 \times 1^2 \times 0.5}{7.594} = 6.95\ \text{ksf}$$

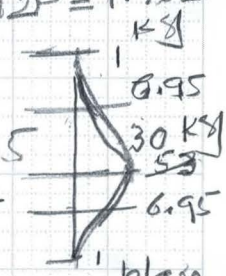

$x = 1,\ z = 0.5,\ y = 2,\ \ R = \sqrt{1^2 + 2^2 + 0.5^2} = 2.291$

$R^5 = 63.11$

$$\sigma_h = \frac{0.48 \times 220 \times 1^2 \times 0.5}{63.11} = 1^{k}$$

b) $x = 1,\ z = 1.0\ \ y = 0\ \ R = \sqrt{1^2 + 0^2 + 1^2} = 1.414$

$R^5 = 5.652$

$$\sigma_h = \frac{0.48 \times 220 \times 1^2 \times 1.0}{5.652} = 18.7\ \text{ksf}$$

$x = 1,\ z = 1.0,\ y = 1.0,\ R = \sqrt{1^2 + 1^2 + 1^2} = 1.732$

$(1.732)^5 = 15.59$

$$\sigma_h = \frac{0.48 \times 220 \times 1^2 \times 1.0}{15.59} = 6.8\ \text{ksf}$$

$x = 1,\ z = 1.0,\ y = 2,\ R = \sqrt{1^2 + 2^2 + 1^2} = 2.449$

$(2.449)^5 = 88.09$

$$\sigma_h = \frac{0.48 \times 220 \times 1^2 \times 1}{88.09} = 1.2\ \text{ksf}$$

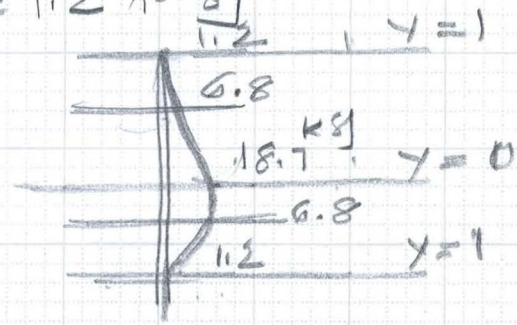

FLOOD CONTROL DISTRICT OF MARICOPA COUNTY

PROJECT LACC PAGE ____ OF ____

DETAIL Load Distribution COMPUTED KWH DATE 7/01

@ power poles CHECKED BY ____ DATE ____

c) $x = 1,\ z = 1.5\ \ y = 0,\ R = \sqrt{1^2 + 0^2 + 1.5^2} = 1.803$

$(1.803)^5 = 19.05$

$\sigma_h = \dfrac{0.48 \times 220 \times 1^2 \times 1.5}{19.05} = 8.3$ ksf

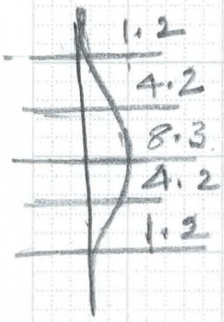

$x = 1,\ z = 1.5,\ y = 1,\ R = \sqrt{1^2 + 1^2 + 1.5^2} = 2.061$

$(2.061)^5 = 37.19$

$\sigma_h = \dfrac{0.48 \times 220 \times 1^2 \times 1.5}{37.19} = 4.3$ ksf

$x = 1,\ z = 1.5,\ y = 2.0\ \ R = \sqrt{1^2 + 2^2 + 1.5^2} = 2.693$

$(2.693)^5 = 141.6$

$\sigma_h = \dfrac{0.48 \times 220 \times 1^2 \times 1.5}{141.6} = 1.2$ ksf

d) $x = 1,\ y = 0,\ z = 2.0\ \ R = \sqrt{1^2 + 0^2 + 2^2} = 2.236$

$(2.236)^5 = 55.9$

$\sigma_h = \dfrac{0.48 \times 220 \times 1^2 \times 2.0}{55.9} = 3.8$ ksf

$x = 1,\ y = 1,\ z = 2.0\ \ R = \sqrt{1^2 + 1^2 + 2^2} = 2.45$

$(2.45)^5 = 88.3$

$\sigma_h = \dfrac{0.48 \times 220 \times 1^2 \times 2.0}{88.3} = 2.4$ ksf

$x = 1,\ y = 2,\ z = 2\ \ R = \sqrt{1^2 + 2^2 + 2^2} = 3.0$

$(3)^5 = 243$

$\sigma_h = \dfrac{0.48 \times 220 \times 1^2 \times 2}{243} = 1$ ksf

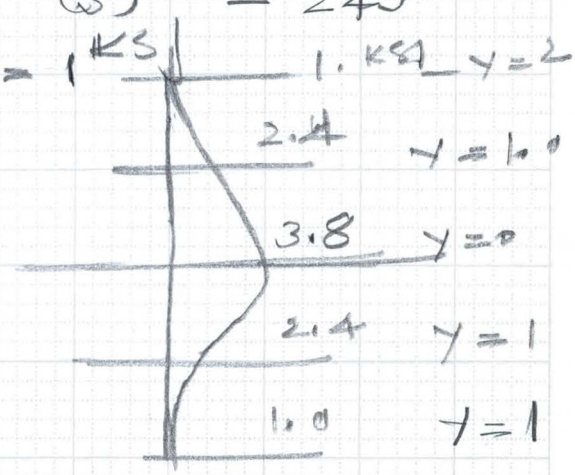

FLOOD CONTROL DISTRICT OF MARICOPA COUNTY

PROJECT LACC PAGE ____ OF ____

DETAIL Load Distribution COMPUTED KVH DATE 7/01

@ Power poles CHECKED BY ____ DATE ____

$x = 2, \quad z = 0.5 \quad y = 0 \quad R = \sqrt{2^2 + 0^2 + 0.5^2} = 2.06$

$(2.06)^5 = 37.1$

$\sigma_h = \dfrac{0.48 \times 220 \times 2^2 \times 0.5}{37.1} = 5.7^{Kg}$

$x = 1, \quad z = 0.25, \quad y = 0 \quad R = \sqrt{1^2 + 0^2 + 0.25^2}$

$(1.03)^5 = 1.159$

$\sigma_h = \dfrac{0.48 \times 220 \times 1^2 \times 0.25}{1.159} = 22.7$ Kg

FLOOD CONTROL DISTRICT OF MARICOPA COUNTY

PROJECT LACG PAGE ____ OF ____

DETAIL Load Distribution COMPUTED KVH DATE 7/01

@ power poles CHECKED BY ____ DATE ____

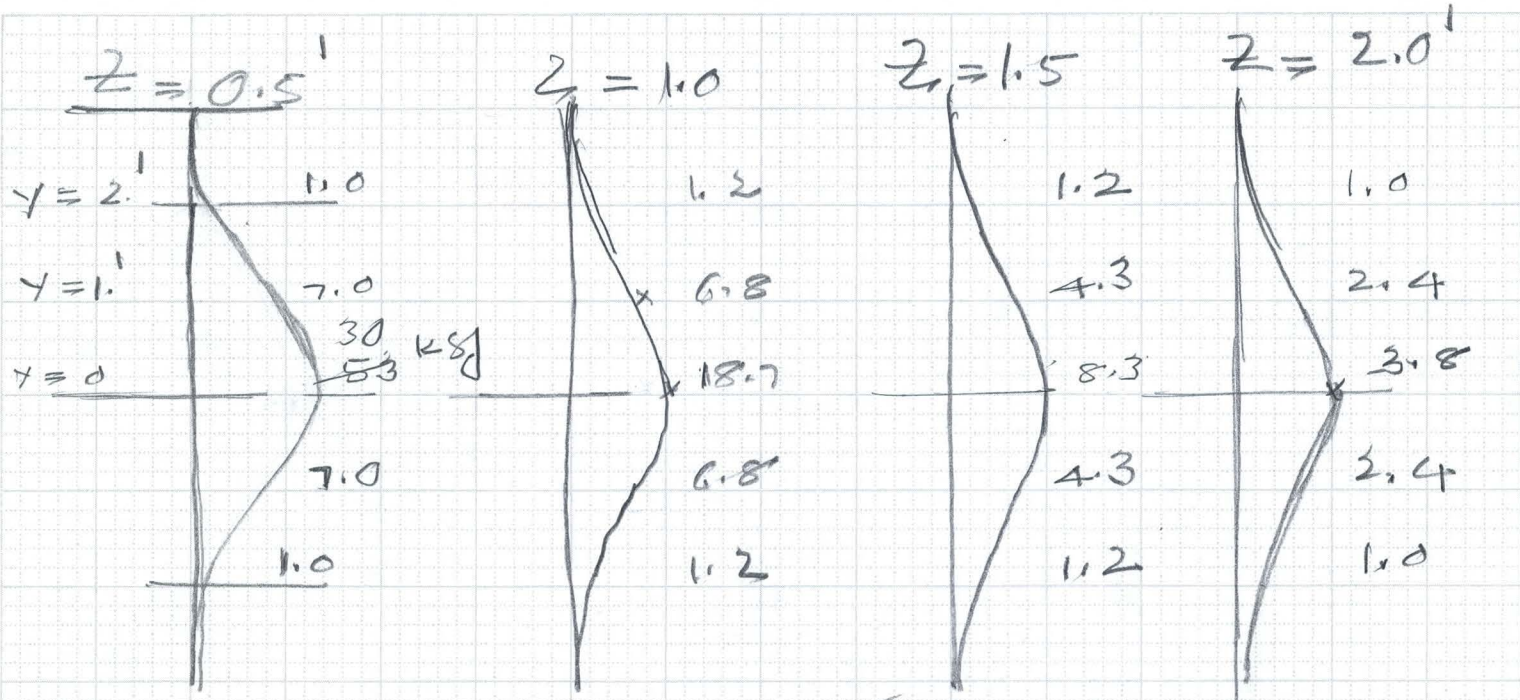

Horizontal Distribution

Plan view

$(53+7+7)/3 = 22$ ksf

$(18.7+6.8+6.8)/3 = 11$

$(8.3+4.3+4.3)/3 = 6$

$(3.8+2.4+2.4)/3 = 3$

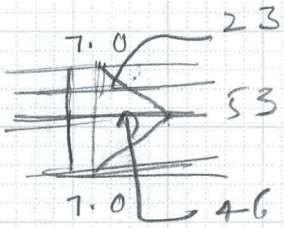

$53 - 7 = 46$

$AV = \frac{53+30+30}{3} = 38$

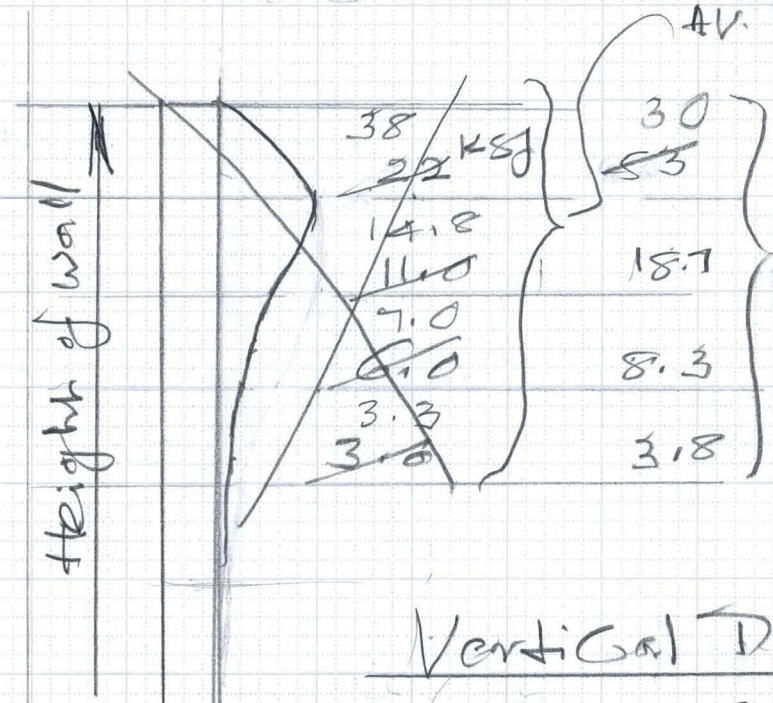

Vertical Distr^n

$\frac{6+30}{2} \times 0.5 = 7.5$

$(30+18.7)/2 \; 0.5 = 12.2$

$(18.7+8.3)/2 \; 0.5 = 6.8$

$(8.3+3.8)/2 \times 0.5 = 3.1$

1.5 / 31.1 K

FLOOD CONTROL DISTRICT OF MARICOPA COUNTY

PROJECT LA GC PAGE ____ OF ____

DETAIL Load Distribution @ power poles COMPUTED KUH DATE 7/01

CHECKED BY ____ DATE ____

This is Boussinesq Analysis
Gives Same Results as AASHTO

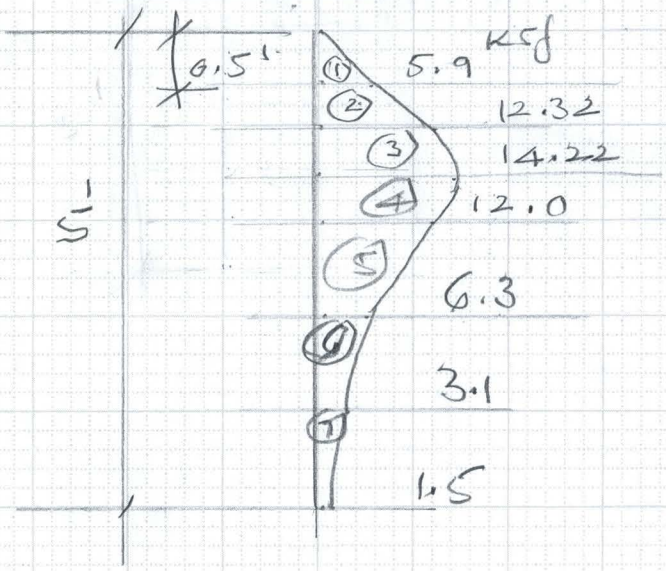

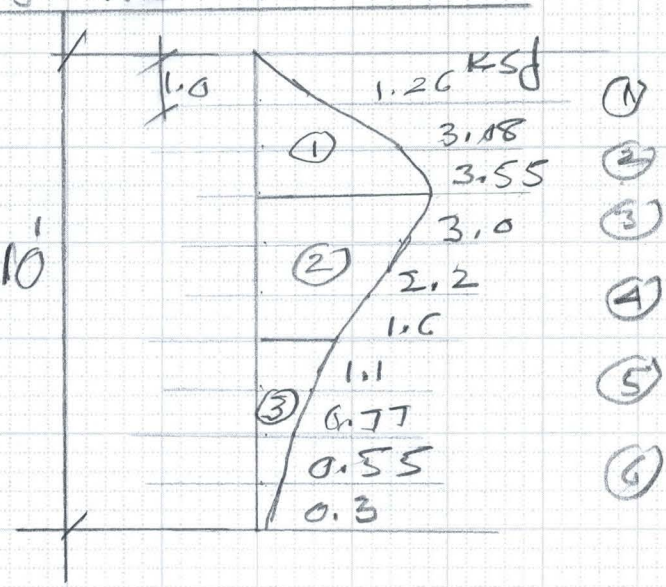

$P_1 = \frac{5.9}{2} \times 0.5 = 1.48^K$

$P_2 = \left(\frac{5.9+12.32}{2}\right) 0.5 = 4.56$

$P_3 = 6.54$

$P_4 = 6.56$

$P_5 = 9.15$

$P_6 = 4.7$

$P_7 = 2.3$

35.4^K

$P_1 = \left(\frac{0+3.55}{2}\right) 3 = 5.3^K$

$P_2 = \left(\frac{3.55+1.6}{2}\right) 3 = 7.73$

$P_3 = \left(\frac{1.6+0.3}{2}\right) 4 = 3.8$

16.83^K

$P_1 = \left(\frac{0+3.08}{2}\right) 2 = 3.08^K$

$P_2 = \left(\frac{3.08+3.55}{2}\right) 1 = 3.31$

$P_3 = \left(\frac{3.55+3}{2}\right) 1 = 3.28$

$P_4 = \left(\frac{3+1.6}{2}\right) 1 = 2.3$

$P_5 = \left(\frac{1.6+0.77}{2}\right) 1 = 1.2$

$P_6 = \left(\frac{0.77+0.3}{2}\right) 1 = 0.54$

13.71^K

Change to 16.83

FLOOD CONTROL DISTRICT OF MARICOPA COUNTY

PROJECT LA CG PAGE ____ OF ____

DETAIL Gross Distribution COMPUTED KVH DATE 7/01

@ power poles CHECKED BY ____ DATE ____

$H = 5'$

$$\sigma_h = \frac{V\,(0.28)\,n^2}{H^2\,(0.16+n^2)^3}$$

$x = 1, \quad n = \frac{1}{5} = 0.2 < 0.4$

$$\underbrace{\frac{230 \times 0.28}{5^2}}_{2.464}\left[\frac{(n^2)}{(0.16+n^2)^3}\right]$$

$2 = n\,H, \quad n = \frac{1}{5} = 0.2, \quad \frac{0.2^2}{(0.16+0.2^2)^3} = 12.32$ [K8] (σ_h)

0.008

$n = \frac{0.5}{5} = 0.1, \quad \frac{0.1^2}{(0.16+0.1^2)^3} = 2.39$

0.00491

$\sigma_{h\,0.5'} = (2.464)\,2.39 = 5.89$ [K8]

$\sigma_{1.0'} = (2.464)\,5 = 12.32$

$n = \frac{1.5}{5} = 0.3 \quad \frac{0.3^2}{(0.16+0.3^2)^3} = 5.77$

0.0156

$\sigma_{1.5} = 2.464\,(5.77) = 14.22$ [K8]

$n = \frac{2}{5} = 0.4 \quad \frac{0.4^2}{(0.16+0.4^2)^3} = 4.88$

0.033

$\sigma_{2.0'} = 2.464\,(4.88) = 12.0$ [K8]

$n = \frac{3}{5} = 0.6 \quad \frac{0.6^2}{(0.16+0.6^2)^3} = 2.56$

$0.141 \quad \sigma_{3.0'} = 2.464\,(2.56) = 6.3$ [K8]

$n = \frac{4}{5} = 0.8 \quad \frac{0.8^2}{(0.16+0.8^2)^3} = 1.25$

$\sigma_{4.0'} = 2.464\,(1.25) = 3.1$ [K8]

$n = \frac{5}{5} = 1.0 \quad \frac{1^2}{(0.16+1^2)^3} = 0.64$

$\sigma_{5.0} = 2.464\,(0.64) = 1.5$ [K8]

FLOOD CONTROL DISTRICT OF MARICOPA COUNTY

PROJECT LACC PAGE ____ OF ____

DETAIL Load Distribution @ power poles COMPUTED KVH DATE 7/01

CHECKED BY ____ DATE ____

Eqn from Bowles

$$\sigma_h = \frac{V}{H^2} \frac{(0.28)\,n^2}{(0.16 + n^2)^3}$$

$H = 10$

$2 = nH$, $1 = n(10)$ $n = \frac{1}{10} = 0.1$

$$\sigma_h = \frac{220}{10^2} \frac{(0.28)\,0.1^2}{(0.16 + 0.1^2)^3} = 1.26 \text{ ksf}$$

0.00491

$n = \frac{2}{10} = 0.2$, $\sigma_h = \frac{220\,(0.28)\,0.2^2}{10^2\,(\underbrace{0.16 + 0.2^2}_{0.08})^3} = 3.08$ ksf

$n = \frac{3}{10} = 0.3$ $\sigma_h = \frac{220 \times 0.28 \times 0.3^2}{10^2\,(\underbrace{0.16 + 0.3^2}_{0.0156})^3} = 3.55$

$n = \frac{4}{10} = 0.4$ $\sigma_h = \frac{220 \times 0.28 \times 0.4^2}{10^2\,(\underbrace{0.16 + 0.4^2}_{0.0328})^3} = 3.0$ ksf

$n = \frac{5}{10} = 0.5$ $\sigma_h = \frac{220 \times 0.28 \times 0.5^2}{10^2\,(0.16 + 0.5^2)^3} = 2.2$ ksf

0.0659

$n = \frac{6}{10} = 0.6$ $\sigma_h = \frac{220 \times 0.28 \times 0.6^2}{10^2\,(0.16 + 0.6^2)^3} = 1.6$ ksf

0.141

$n = \frac{7}{10} = 0.7$ $\sigma_h \left(\frac{\text{—}\,\text{''}\,\times 0.7^2}{10^2\,(0.16 + 0.7^2)^3}\right) = 1.1$ ksf

$n = 0.8$

0.275

$\sigma_h = \frac{(\text{—}\,\text{''}\,\times 0.8^2)}{10^2\,(0.16 + 0.8^2)^3} = 0.77$ ksf

0.512

$n = 0.9$

$\sigma_h = \frac{(\text{—}\,\text{''}\,\text{—}\,0.9^2)}{10^2\,(0.16 + 0.9^2)^3} = 0.55$ ksf

0.712

FLOOD CONTROL DISTRICT OF MARICOPA COUNTY

PROJECT LACC PAGE ____ OF ____

DETAIL Load Distribution COMPUTED KVH DATE 7/01

@ Power poles CHECKED BY ____ DATE ____

$H = 15'$

$$\sigma_h = \frac{V(0.28)n^2}{H^2(0.16+n^2)^3}$$

$x = 1$, $m = \frac{1}{15} = 0.067 < 0.4$

$\frac{220(0.28)}{15^2} = 0.274$, $\frac{0.033^2}{(0.16+0.033^2)^3} = 0.261$

$x = nH$, $n = \frac{0.5'}{15} = 0.033$,

$\sigma_{0.5'} = 0.271 \times 0.261 = 0.071$ KSI

$n = \frac{1}{15} = 0.066$ $\frac{0.066^2}{(0.16+0.066^2)^3}$

$\sigma_1 = 0.981 \times 0.274 = 0.27$ KSI

$n = \frac{2}{15} = 0.133$

$\frac{0.133^2}{(0.16+0.133^2)^3} = 3.153$

$\sigma_{2'} = (0.274 \times 3.153) = 0.864$ KSI

$n = \frac{3}{15} = 0.2$ $\frac{0.2^2}{(0.16+0.2^2)^3} = 5$

$\sigma_{3'} = (0.274 \times 5) = 1.37$

$n = \frac{4}{15} = 0.267$

$\frac{0.267^2}{(0.16+0.267^2)^3} = 5.76$

$\sigma_4 = (5.76 \times 0.274) = 1.58$

$n = \frac{5}{15} = 0.333$

$\frac{0.333^2}{(0.16+0.333^2)^3} = 5.58$

$\sigma_5 = (0.274 \times 5.58) = 1.53$

$n = \frac{6}{15} = \cancel{0.375}$ 0.4 $\frac{0.375^2}{(0.16+0.375^2)^3} = \cancel{5.18}$ 4.88

$\sigma_6 = (\cancel{5.18} \times 0.274) = \cancel{1.42}$ 1.34

$n = \frac{8}{15} = \cancel{0.5}$ 0.533 $\frac{0.533^2}{(0.16+0.533^2)^3} = \cancel{3.63}$ 3.24

$\sigma_8 = \cancel{3.63} \times 0.274 = \cancel{1.0}$ 0.89

$n = \frac{12}{15} = \cancel{0.75}$ 0.8 $\frac{0.75^2}{(0.16+0.75^2)^3} = \cancel{1.49}$ 0.8 1.25

$\sigma_{12} = \cancel{1.49} \times 0.274 = \cancel{0.41}$ 0.34

FLOOD CONTROL DISTRICT OF MARICOPA COUNTY

PROJECT _____ PAGE ____ OF ____

DETAIL _____ COMPUTED _____ DATE ____

_____ CHECKED BY _____ DATE ____

Ht = 15'

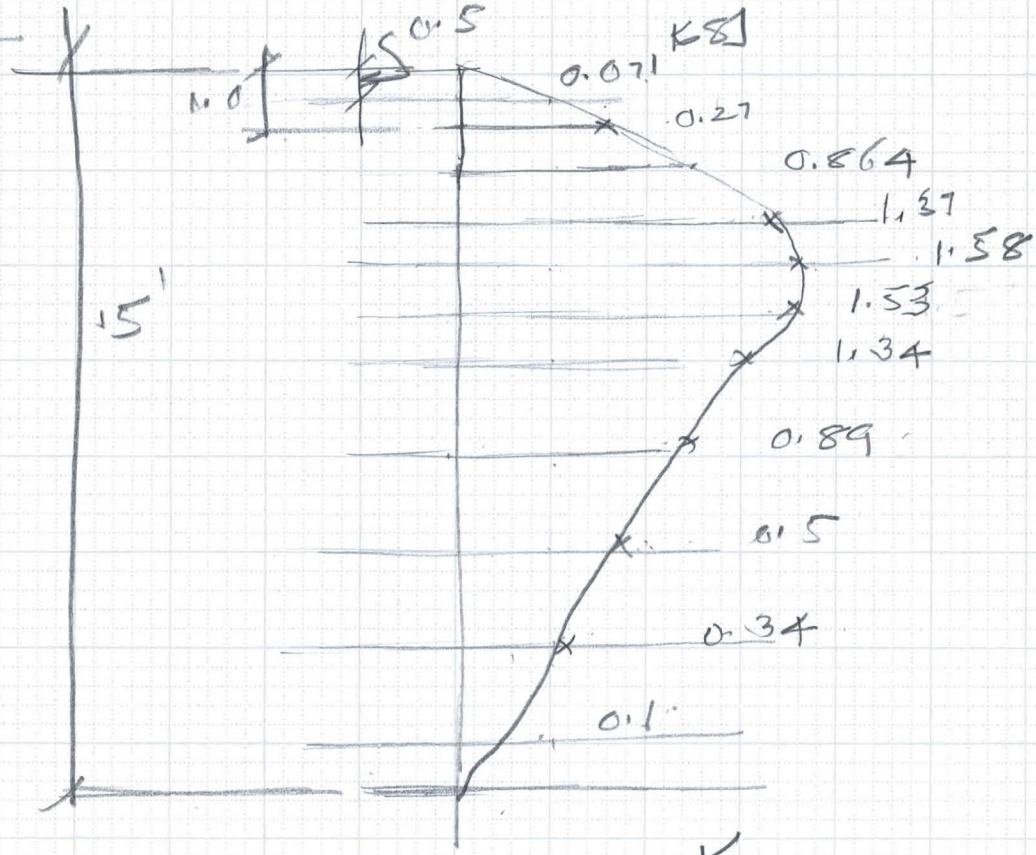

$P_1 = \frac{(0.1+0.071)}{2}\,0.5$	= 0.02 K
$P_2 = \frac{(0.071+0.27)}{2}\,0.5$	= 0.09
$P_3 = (0.27+0.864)/2 \times 1$	= 0.57
$(0.864+1.37)/2\ 1$	= 1.12
$\frac{(1.37+1.58)}{2}$	= 1.48
$(1.58+1.53)/2 \times 1$	= 1.56
$(1.53+1.34)/2 \times 1$	= 1.44
$(1.34+0.89)/2 \times 2$	= 2.23
$(0.89+0.5)/2 \times 2$	= 1.39
$(0.5+0.34)/2 \times 2$	= 0.84
$(0.34+0.34)/2 \times 2$	= 0.68
0.05×1	= 0.05
	11.5 K

6910-153 4-90

SOIL ENGINEERING

THIRD EDITION

Merlin G. Spangler
Richard L. Handy
Iowa State University

INTEXT EDUCATIONAL PUBLISHERS, New York

1973

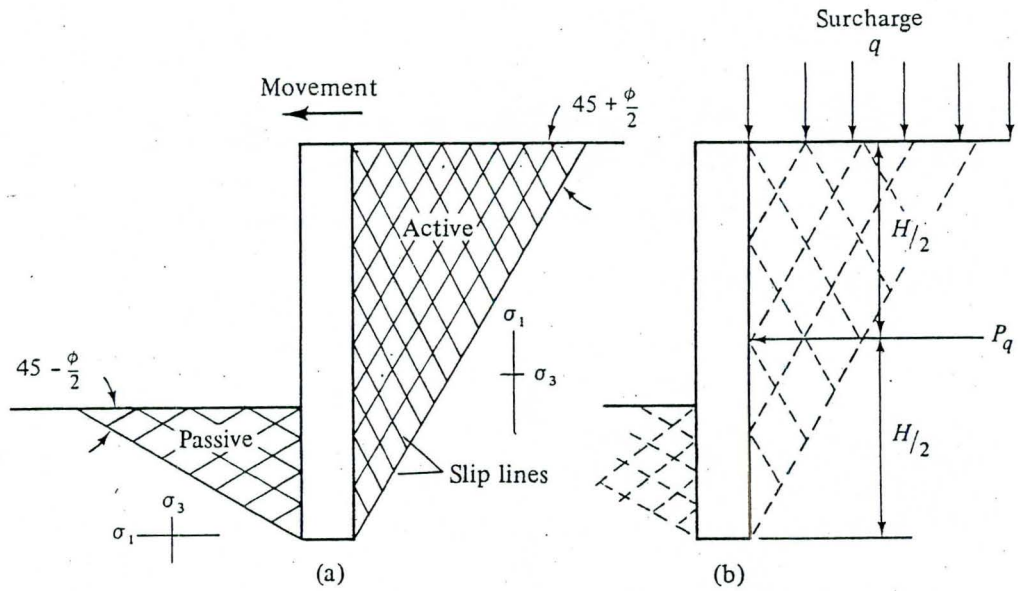

Fig. 22-13. Zones of plastic behavior.

which, comparing to Eq. (22-21), is the reciprocal of K.

If the wall is vertical, the respective σ_h points in Fig. 22-12 are origins of planes. Thus in the active case the slip planes are $45° + (\phi/2)$ with horizontal, which is identical to the angle obtained from the wedge analysis, Eq. (22-8). In the passive case the angle is $45° - (\phi/2)$, identical to that obtained in Eq. (22-17).

The Mohr circle representation is important because it shows that soil in either the active or passive states is on the verge of failure throughout the sliding wedges, as shown in Fig. 22-13(a). The wedges have a theoretically infinite number of parallel slip planes. If there is no volume change such a condition is referred to as an *ideal plastic state*. In contrast to an ideal elastic state, in a plastic state stress is not proportional to strain, but is such as to give a constant stress ratio equal to K. The stress ratio cannot exceed K because the soil would fail first; whereas if the stress ratio is less than K, the soil is no longer at failure, i.e., is no longer plastic.

22.20. EFFECT OF SURCHARGE LOADS. Retaining walls often are called upon to support surface loads on soil behind the wall in addition to forces induced by the weight of the soil itself. Experimental data indicate that pressures from soil resting against retaining walls are in close accord with those predicted from plastic theory. This is not true, however, for surcharge loads placed on top of the soil behind the wall. One reason may be that such loads are usually applied later, after the soil has had the opportunity to regain cohesion and is no longer in a state of incipient shear.

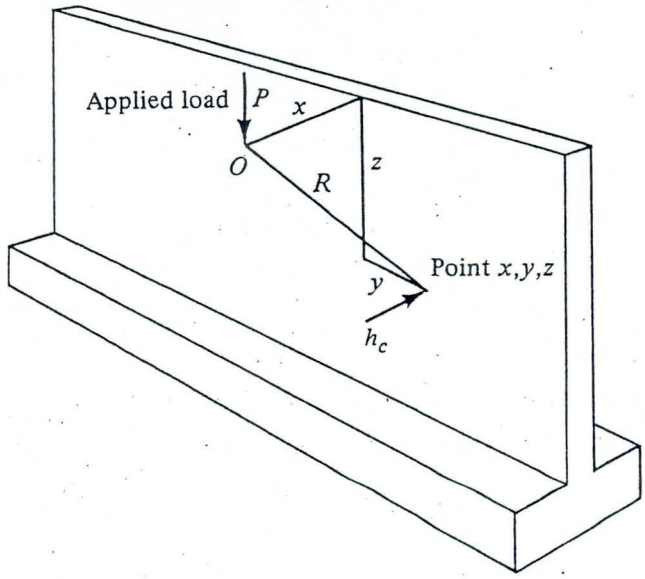

Fig. 22-14. Concentrated load on a surface of backfill at distance x from back of retaining wall.

Nevertheless plastic analysis is quite simple for surcharge loads extending from the face of the wall beyond the limit of the sliding wedge, as shown in Fig. 22-13(b). In this case if the soil behaves plastically the horizontal pressure is qK, where q is the vertical surcharge pressure. Since pressure qK is assumed to act upon the full height of the wall, the resultant is

$$P_q = qHK \tag{22-22}$$

acting at the mid-height of the wall. This is added to P or P_p from the weight of the soil, Eq. (22-9) or (22-18), whichever applies. As previously discussed, P or P_p act at the one-third height of the wall.

A much closer approximation to the actual stresses is obtained by assuming the soil behaves elastically—that is, stress is proportional to strain and the soil is no longer in plastic failure. Then the magnitude and distribution of lateral pressures against a retaining wall caused by surcharge loads applied at or near the surface of the backfill may be estimated by means of formulas which are modifications of the Boussinesq solution for distribution of stresses in an elastic medium due to a concentrated surface load. Experimental evidence indicates that the unit pressure on a relatively rigid concrete retaining wall due to a truck-wheel load applied at the surface of the backfill, as indicated in Fig. 22-14, may be computed by the formula

$$h_c = P\frac{x^2 z}{R^5} \tag{22-23}$$

in which

h_c = horizontal unit pressure at any point on the wall, in pounds per square foot;
P = applied truck-wheel load, in pounds;
x = horizontal distance from wall to load, in feet;
y = lateral distance from point to load, in feet;
z = vertical distance from point to load, in feet; and
$R = \sqrt{x^2 + y^2 + z^2}$.

Equation (22-23) gives a value of h_c which is approximately twice the pressure indicated by the classical Boussinesq formula, or Eq. (17-4). This increase in pressure is caused by the fact that a concrete retaining wall is

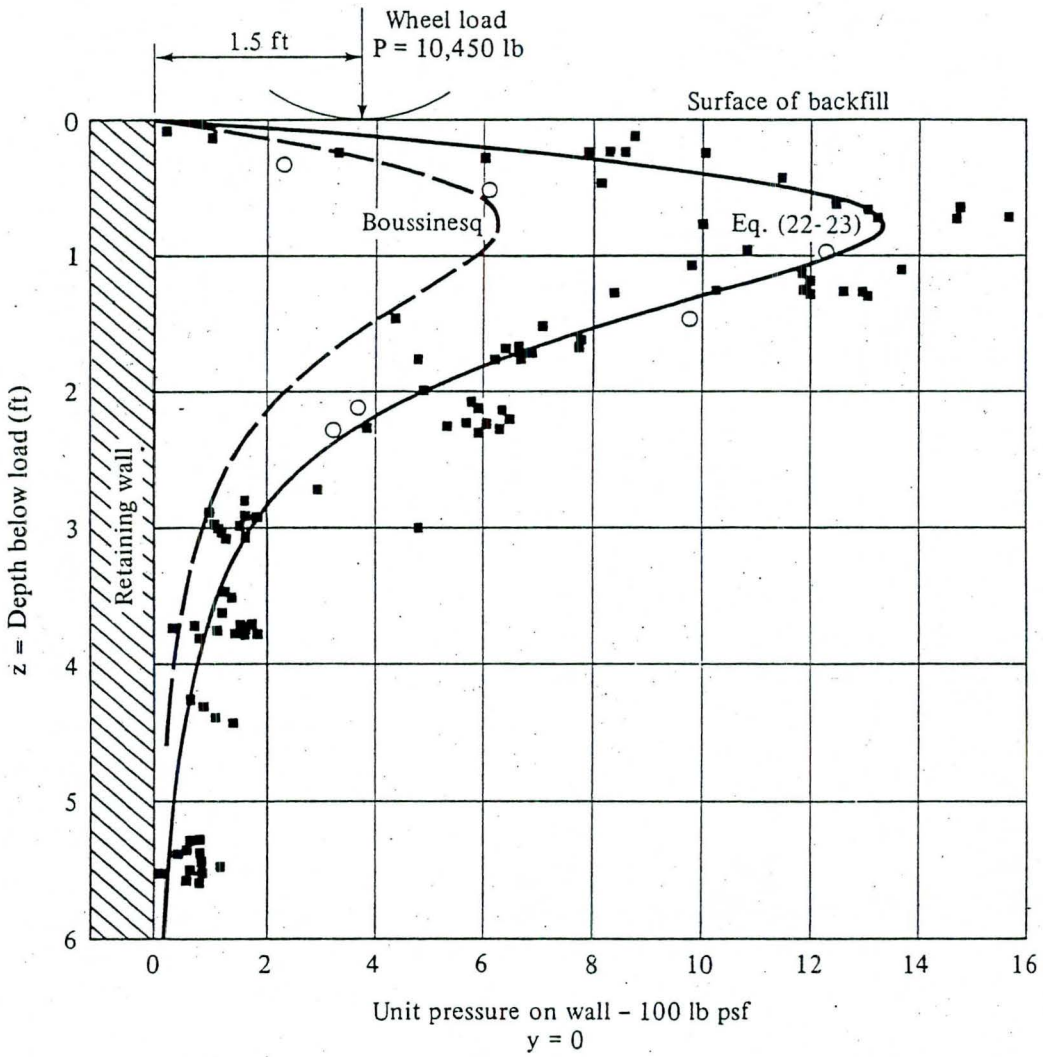

Fig. 22-15. Measured pressures on retaining wall caused by wheel load on backfill surface. Key: ■, Spangler (*4*); ○, Gerber (*2*).

very rigid in comparison with a vertical plane through the soil that would be considered if the backfill were continuous and not interrupted by a rigid wall. If the retaining structure is quite yielding (as yielding as the soil itself would be if a wall were not present), the pressure on the wall would be equal to the Boussinesq value or approximately one-half that indicated by Eq. (22-23). If the wall is of intermediate stiffness, then the pressure will be somewhere between these two limits. A comparison of experimental data with these two relationships is shown in Fig. 22-15, which supports use of the upper limit.

Experimental evidence also indicates that it is feasible to integrate Eq. (22-23) in the x direction and y direction between appropriate limits to obtain the lateral pressure at a point on a wall caused by a surcharge load which is uniformly distributed on a narrow strip or over an area on the backfill surface.

22.21. PARALLEL LINE OR NARROW STRIP LOAD OF FINITE LENGTH. If the surcharge load is applied uniformly along a narrow strip or line which is parallel to the retaining wall and of finite length, as indicated in Fig. 22-16, the expression in Eq. (22-23) may be integrated in the y direction. The horizontal unit pressure at a point at one end of the load, as in Fig. 22-16(a), may be found as follows:

$$h_s = p_s \int_0^{y_1} \frac{x^2 z}{R^5}\, dy \tag{22-24}$$

$$\boxed{h_s = p_s \frac{x^2 z}{3R_1^4}\left[\frac{R_1^2 y_1}{(R_1^2 + y_1^2)^{1.5}} + \frac{2y_1}{(R_1^2 + y_1^2)^{0.5}}\right]} \tag{22-25}$$

in which

h_s = horizontal unit pressure on the wall at any depth z opposite one end of a parallel strip load on the backfill surface;
p_s = load per unit length of strip;
x = distance from wall to strip load;
y_1 = length of strip load;
R_1 = $\sqrt{x^2 + z^2}$; and
3 = approximation for π.

Maximum pressures on the wall due to a strip load of finite length will occur at points directly opposite the center of the length. In Fig. 22-16(b), $y_1 = y_1'$. To calculate these maximum pressures, let y_1 in Eq. (22-25) equal one-half the length of the strip load, and multiply the result

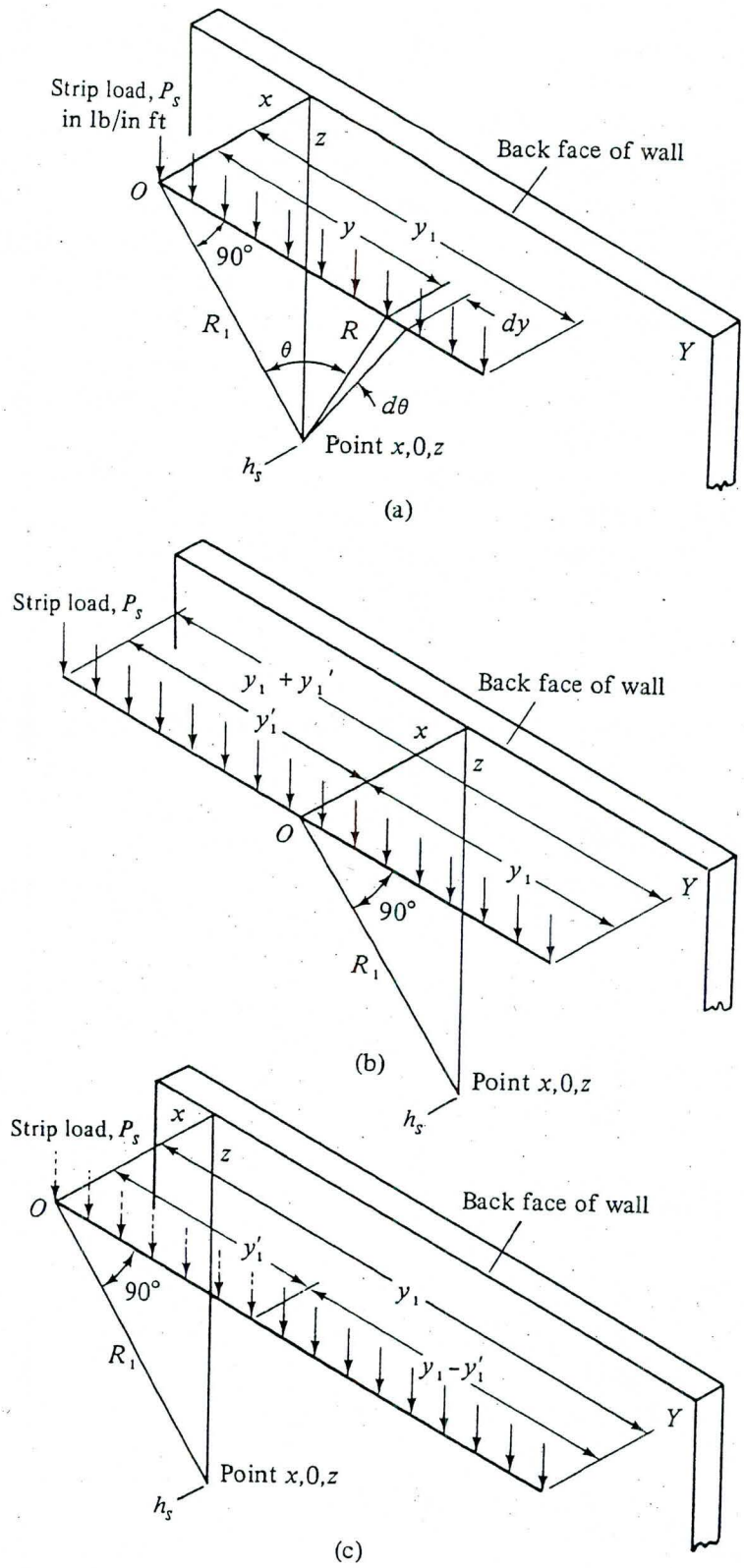

Fig. 22-16. Strip load of finite length parallel to wall. (a) Point at end of load; (b) intermediate point; (c) point beyond end of load.

by 2. Pressure at a point which is not opposite the center of the length may be calculated in two steps. First, let y_1 equal the distance from the point to one end of the load; then let y_1' equal the distance to the other end. The results of these calculations should be added together to obtain the pressure due to the complete strip load.

Similarly, for a point on the wall which lies beyond the end of the strip load, as in Fig. 22-16(c), imagine that the load is extended to a point opposite the point in question. Calculate the pressure due to the total strip load, including the imaginary extension. Next, calculate the pressure due to that extension alone, and subtract this value from the total-load pressure.

EXAMPLE 22-1. It is desired to estimate the horizontal pressure on a retaining wall at a depth of 3 ft, caused by a strip load of 2000 lb per lin/ft which is 8 ft long and which rests on the backfill along a line 2 ft back of the wall. The pressure is desired (a) opposite the center of the load; (b) opposite a point within the load and 2 ft from one end; (c) opposite an end of the load; and (d) opposite a point 2 ft beyond one end of the load.

SOLUTION. (a) By Eq. (22-25) in which $p_s = 2000$, $x = 2$, $z = 3$, $R_1^2 = 13$, $R_1^4 = 169$, and $y_1 = 4$, we obtain

$$h_s = 2000 \times \frac{4 \times 3}{3 \times 169}\left[\frac{13 \times 4}{(13 + 16)^{1.5}} + \frac{2 \times 4}{(13 + 16)^{0.5}}\right] = 86.2 \text{ psf}$$

The required pressure is $2 \times 86.2 = 172.4$ psf

(b) In this case, $y_1 = 6$ and $y_1' = 2$. The partial pressures are as follows:

$$\text{for} \quad y_1 = 6, \qquad h_s = 92.0 \text{ psf}$$
$$\text{for} \quad y_1 = 2, \qquad h_s = 63.6 \text{ psf}$$

The total pressure is $92.0 + 63.6 = 155.6$ psf

(c) When $y_1 = 8$, $h_s = 93.6$ psf.

(d) Here, let $y_1 = 10$ and $y_1' = 2$. The corresponding pressures are

$$\text{for} \quad y_1 = 10, \qquad h_s = 94.4 \text{ psf}$$
$$\text{for} \quad y_1 = 2, \qquad h_s = 63.6 \text{ psf}$$

The desired pressure is

$$94.4 - 63.6 = 30.8 \text{ psf}$$

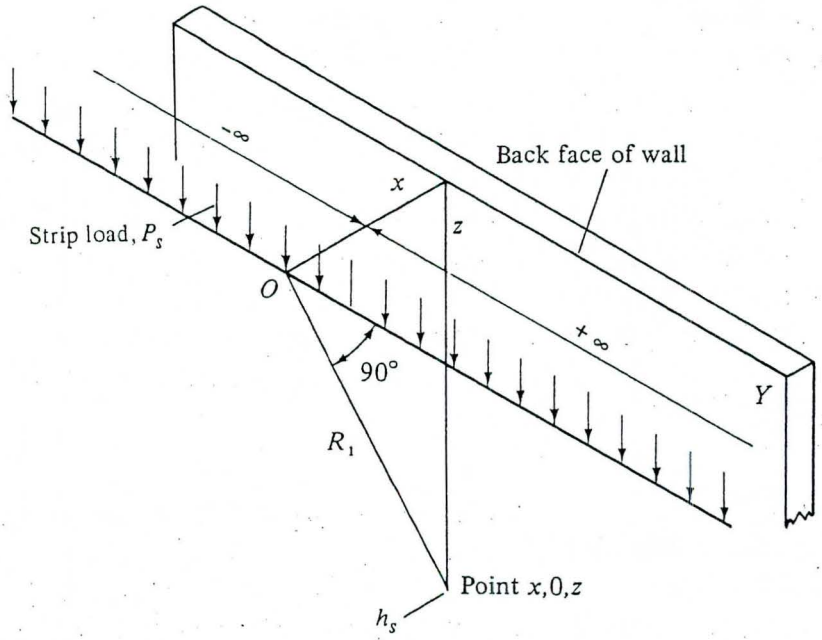

Fig. 22-17. Strip load of infinite length parallel to wall.

22.22. PARALLEL STRIP LOAD OF INFINITE LENGTH. If a parallel strip load is very long, it may be considered to extend from any point on the wall to $+\infty$ and $-\infty$, as illustrated in Fig. 22-17. For this case, the horizontal pressure at the point may be found by the relationship

$$h_s = p_s \int_{-\infty}^{+\infty} \frac{x^2 z}{R^5}\, dy \tag{22-26}$$

which yields

$$h_s = \frac{4 p_s}{3} \frac{x^2 z}{R_1^4} \tag{22-27}$$

The letters have the same meanings as in Eq. (22-25).

22.23. AREA LOAD OF FINITE LENGTH. If a surcharge load is applied to a backfill uniformly over a rectangular area whose sides are parallel and perpendicular to the back face of the retaining wall, as shown in Fig. 22-18, the horizontal unit pressure at a point may be found by integrating the expression in Eq. (22-23) opposite an end of the loaded area, as in Fig. 22-18(a), in both the x direction and the y direction. For a point

$$h_a = p_a \int_{x_1}^{x_2} \int_{0}^{y_1} \frac{x^2 z}{R^5}\, dy\, dx \tag{22-28}$$

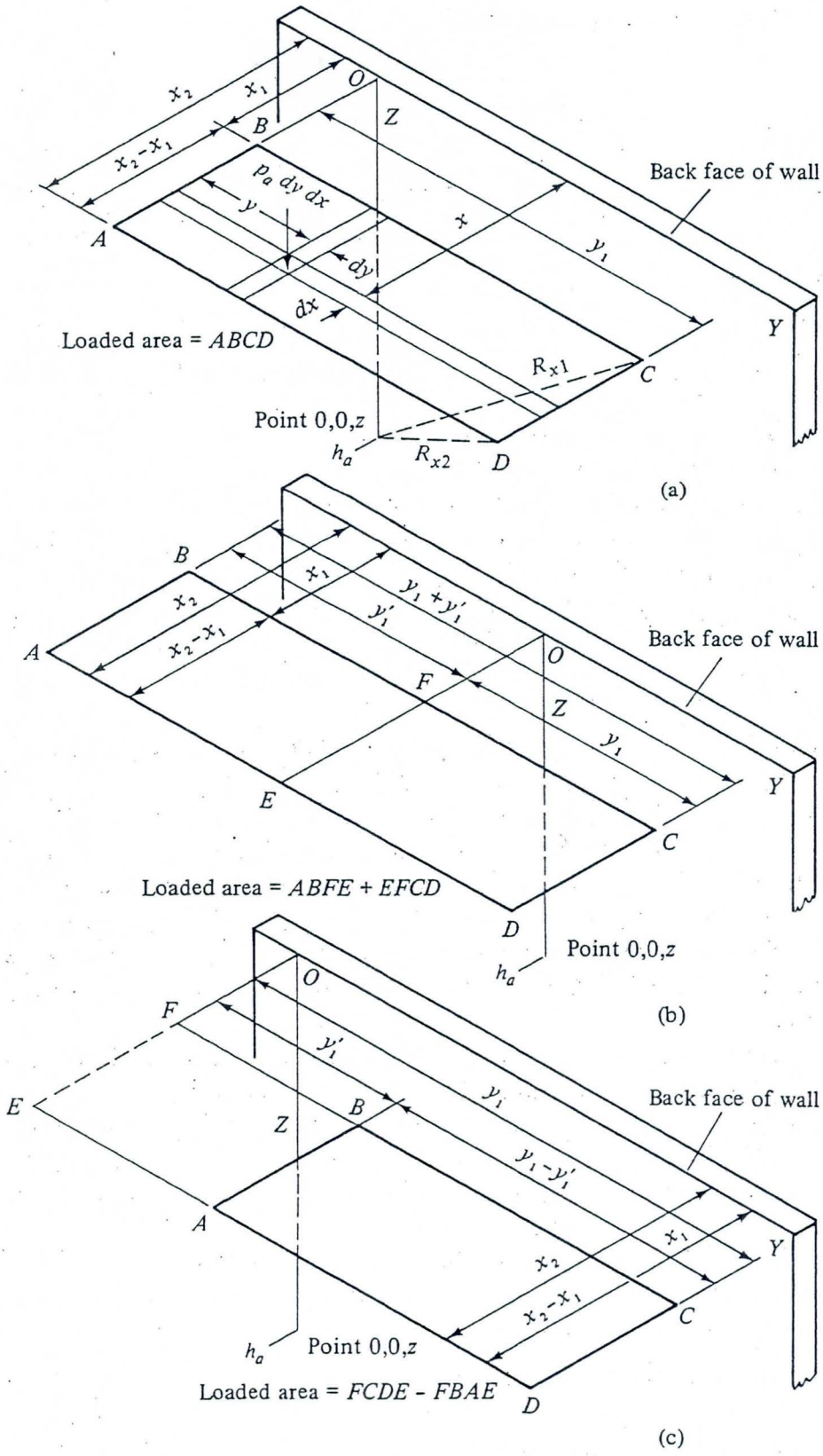

Fig. 22-18. Area load of finite length. (a) Point at end of load; (b) intermediate point; (c) point beyond end of load.

or

$$h_a = \frac{p_a}{3}\left[\arctan\frac{x_2 y_1}{zR_{x2}} - \frac{x_2 y_1 z}{(x_2^2 + z^2)R_{x2}} - \arctan\frac{x_1 y_1}{zR_{x1}} + \frac{x_1 y_1 z}{(x_1^2 + z^2)R_{x1}}\right] \tag{22-29}$$

in which

h_a = horizontal unit pressure on a retaining wall at any depth z opposite one end of a uniformly distributed area load on the backfill surface;
p_a = surcharge load per unit area;
x_1 = distance from wall to near side of load;
x_2 = distance from wall to far side of load;
$x_2 - x_1$ = width of load in direction normal to wall;
y_1 = length of loaded area;
$R_{x1} = \sqrt{(x_1^2 + y_1^2 + z^2)}$;
$R_{x2} = \sqrt{(x_2^2 + y_1^2 + z^2)}$; and
3 = approximation for π.

Again, as in the case of a parallel strip load, maximum pressures on the wall will occur at points opposite the center of an area load of finite length. In Fig. 22-18(b), $y_1 = y_1'$. To calculate these maximum pressures, let y_1 in Eq. (22-29) equal one-half the length of the area load, and multiply the result by 2. Pressure at a point which is not opposite the center of the load may be calculated in two steps. First let y_1 equal the distance from the point to one end of the load; then let y_1' equal the distance to the other end. These results should be added together to obtain the pressure due to the whole area load.

Similarly, for a point on the wall which lies beyond the end of the area load, as in Fig. 22-18(c), imagine that the load is extended to a point opposite the point in question. Calculate the pressure due to the total area load, including the imaginary extension. Next, calculate the pressure due to the extension alone, and subtract this value from the total-load pressure.

EXAMPLE 22-2. Assume that a railroad track rests on the backfill behing a retaining wall 20 ft high and the distance from the wall to the center of track is 8 ft. Other data are

γ = unit weight of soil = 120 pcf;
ϕ = friction angle of soil = 30°;
length of railroad ties = 8 ft;
loads from Cooper's E-72 locomotive: four driver axles at 5 ft centers, each weighing 72,000 lb;

impact = 75%; and
weight of track structure = 200 plf.

It is required to estimate the total lateral pressure on the wall due to both the soil backfill and the railroad traffic and to determine the position of the line of action of the resultant pressure.

SOLUTION. The earth pressure at the base of the wall is found by Eq. (22-1). From Table 22-2, $K = 0.33$. Hence,

$$p = 120 \times 20 \times 0.33 = 800 \text{ psf}$$

The distribution of the earth pressure is represented in Fig. 22-19 by line A.

To find the track load, assume that the rails and the ties distribute the weight of a locomotive in such a manner that it may be considered as a uniform load over an area equal to the length of ties multiplied by the length occupied by the driver axles. This area is $8 \times 20 = 160$ sq ft. The total load on it is as follows:

Drivers, $4 \times 72{,}000$	= 288,000 lb
Impact, $0.75 \times 288{,}000$	= 216,000 lb
Track, 20×200	= 4,000 lb
Total	= 508,000 lb

The load per unit area is $508{,}000 \div 160 = 3180$ psf.

In Eq. (22-29), $p_a = 3180$, $x_1 = 4$, $x_2 = 12$, and $y_1 = 10$. The values of the horizontal pressures at various depths due to the track and traffic loads are listed in Table 22-6. Thus, the pressure at a depth of 4 ft is found as follows:

$$z = 4, \qquad R_{x1} = 11.48, \qquad \text{and} \qquad R_{x2} = 16.12$$

$$h_a = \frac{3180}{3}\left[\arctan\frac{12 \times 10}{4 \times 16.2} - \frac{12 \times 10 \times 4}{(144 + 16)16.12} - \arctan\frac{4 \times 10}{4 \times 11.48} + \frac{4 \times 10 \times 4}{(16 + 16)11.48}\right]$$

$$= 1060[1.077 - 0.186 - 0.716 + 0.436] = 647.7 \text{ psf}$$

$$2 \times 647.7 = 1295 \text{ psf}$$

The distribution of the pressure due to the track and traffic loads is represented in Fig. 22-19 by curve B.

To obtain the total pressure, add the earth pressure to the track-load pressure. The results are shown in Table 22-6 and are plotted in Fig. 22-19 as curve C. The area enclosed by curve C is the total pressure on the wall

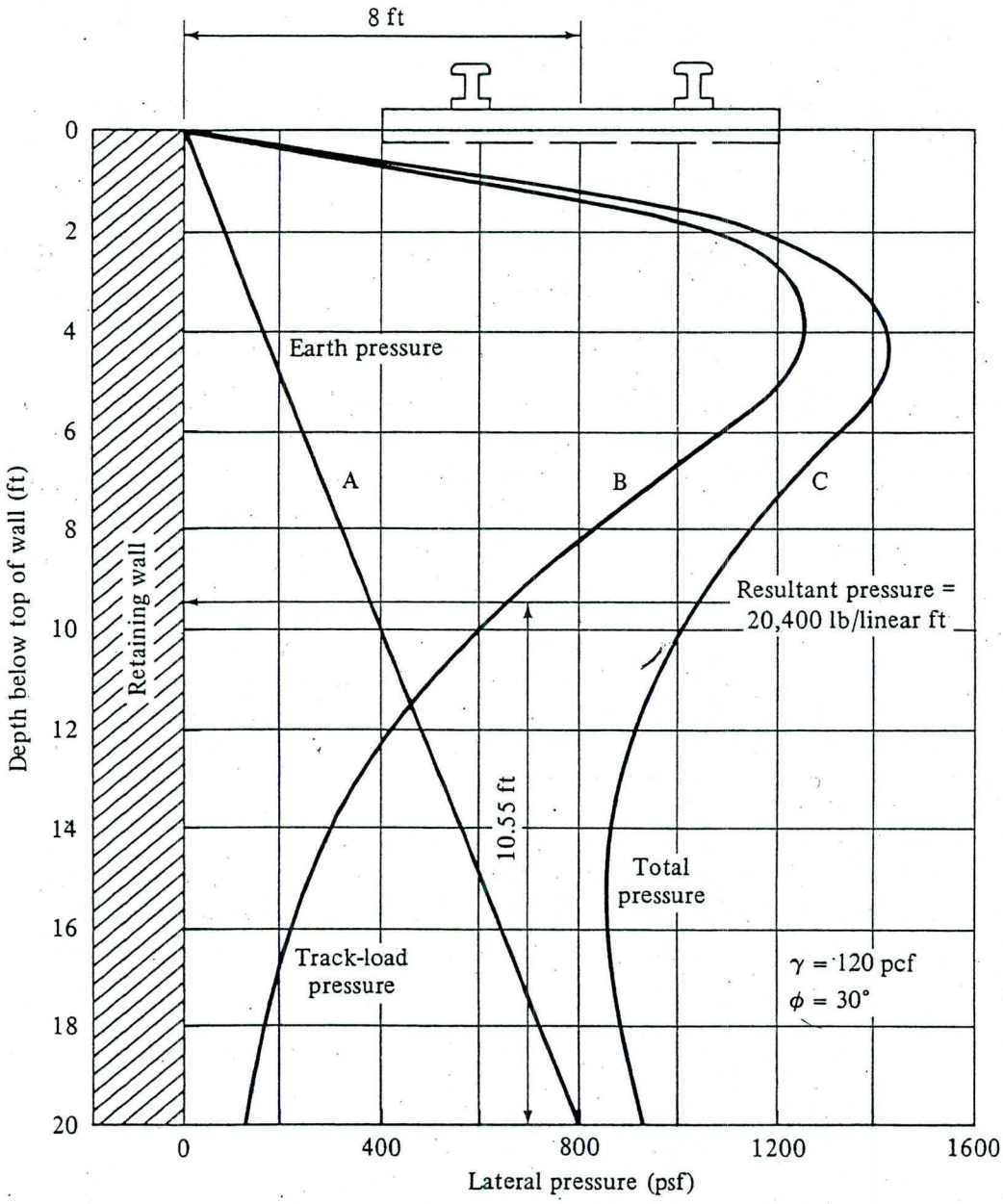

Fig. 22.19. Pressures in Example 22-2.

per foot of length. The resultant pressure on the wall acts through the centroid of this area.

22.24. AREA LOAD OF INFINITE LENGTH. If the area load is very long in the direction parallel to the wall, it may be considered to extend from any point on the wall to $+\infty$ and $-\infty$, as illustrated in Fig. 22-20. The horizontal pressure at a point due to this type of load may be calculated by integrating the expression in Eq. (22-27) in the x direction between the limits

FLOOD CONTROL DISTRICT OF MARICOPA COUNTY

PROJECT Laveen PAGE ____ OF ____

DETAIL Retaining wall @ power poles COMPUTED KNH DATE 7/01

CHECKED BY ____ DATE ____

Check Stresses

$b = 12, \quad d = (30 - 2 - 0.5) = 27.5''$

$M_{storm} = 73.7$ k/ft

$A_s = 1.58 \qquad f_s = \dfrac{73.7 \times 12}{1.58 \times 0.88 \times 27.5}$

$= 23.1$ ksi < 24 ksi OK

$f_c = \dfrac{2M}{jKbd^2}$

$\rho = \dfrac{A_s}{bd} = \dfrac{1.58}{12 \times 27.5} = 0.0048$

$K = \sqrt{2\rho n + (\rho n)^2} - \rho n, \quad n = 9, \quad f_c = 3000$

$\rho n = 0.0048 \times 9 = 0.0432,$

$K = \sqrt{(2 \times 0.0432) + (0.0432)^2} - 0.0432$

$= (0.297 - 0.0432) = 0.254$

$j = \left(1 - \dfrac{0.254}{3}\right) = 0.915$

$f_c = \dfrac{2 \times 73.7 \times 12}{0.915 \times 0.254 \times 12 \times 27.5^2}$

$= 0.838$ ksi $= 838$ psi

$< 0.4 \times 3000 = 1200$ psi

6910-153 4-90

FLOOD CONTROL DISTRICT OF MARICOPA COUNTY

PROJECT LACC PAGE ____ OF ____

DETAIL Retaining wall COMPUTED KWH DATE 7/01

@ power poles CHECKED BY ____ DATE ____

Check Stresses

$$\frac{f_s}{n} = \frac{24000}{9} = 2666$$

$$x = \frac{d}{1 + \frac{f_s}{n f_c}} = \left(\frac{27.5}{1 + \frac{24}{9 \times 1.2}}\right)$$

$$= 8.53$$

2.22

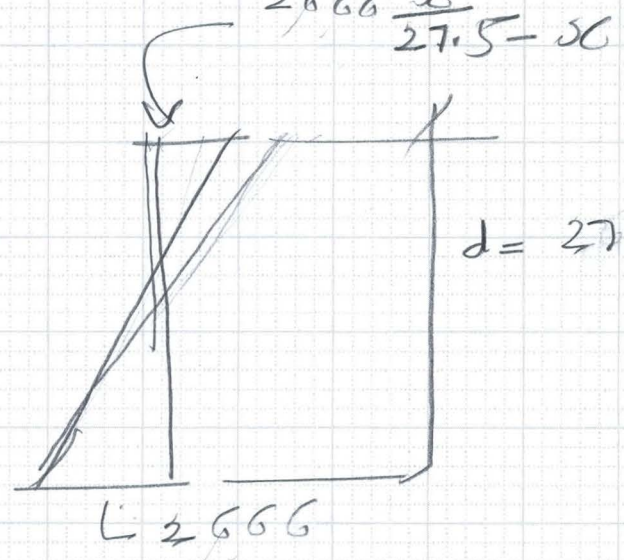

$$(73.7 \times 12) = \frac{1}{2} \frac{2666\,x}{27.5 - x} (12x)\left(27.5 - \frac{x}{3}\right)$$

$$884.4 = \frac{1.333\,x}{27.5 - x} (12x)(27.5 - 0.333\,x)$$

$$24321 - 8841.4\,x = 439.9\,x^2 - 5.33\,x^3 = 0$$

$$x^3 + 82.5\,x^2 = -165.9\,x + 4563$$

$$x^3 + 82.5\,x^2 + 165.9\,x = 4563 =$$

$$544.4 = \frac{2666\,x}{2(27.5 - x)} (12x)(27.5 - 0.333x)$$

$$46442 - 16880\,x = 880\,x^2 - 10.7\,x^3$$

$$10.7\,x^3 - 880\,x^2 - 16880\,x + 46442 = 0$$

$$x^3 - 82.2\,x^2 - 157\,x + 4340 = 0$$

Try $x = 7$ $\quad 343 - 4028 - 1099 + 4340$

$4683 - 5125$

$x = 6.5$, $\quad 274 - 3473 - 1020 + 4340 = 0$

$= 121$

6.3, $\quad 250 - 3262 - 989 + 4340$

6910-153 4-90

FLOOD CONTROL DISTRICT OF MARICOPA COUNTY

PROJECT LACC PAGE ____ OF ____

DETAIL Retaining walls COMPUTED KVH DATE 7/01

@ power poles CHECKED BY ____ DATE ____

Check Stresses

$x = 6.6''$

$f_c(\text{tna}) \quad f_c = \left(\frac{2.66(6.6)}{27.5 - 6.6}\right) = \cancel{8.44}$ or

6.6 841

844 psi

Actual $C = \left(\frac{0.844}{2} \times 12 \times 6.6\right) = 33.4^K$

$M = 33.4\left(27.5 - \frac{6.6}{3}\right) = 845$ kin

$= 70.4$ k ft

$A_s = \frac{M}{f_s\, jd}$,

$M = 1.58 \times 24 \times 0.89 \times 27.5$

$= 77.34$

Cracked Section:

$M_{cr} = f_{cr} S$, $f_{cr} = 7.5\sqrt{f'c}$

$= 7.5\sqrt{3000} = 411$

$b = 12 \quad d = 30 \quad I = 12 \times 30^3/12 = 27000$

$M_{cr} = \left(411 \times \frac{27000}{15}\right) = 739800$ in lbs

$= 61.7$ k ft

$A_{s_{cr}} = \frac{61.7 \times 12}{24 \times 0.89 \times 27.5} = 1.26 \text{ in}^2$

6910-153 4-90

FLOOD CONTROL DISTRICT OF MARICOPA COUNTY

PROJECT LACC PAGE ____ OF ____

DETAIL Retaining Wall COMPUTED KrH DATE 3/01

CHECKED BY ____ DATE ____

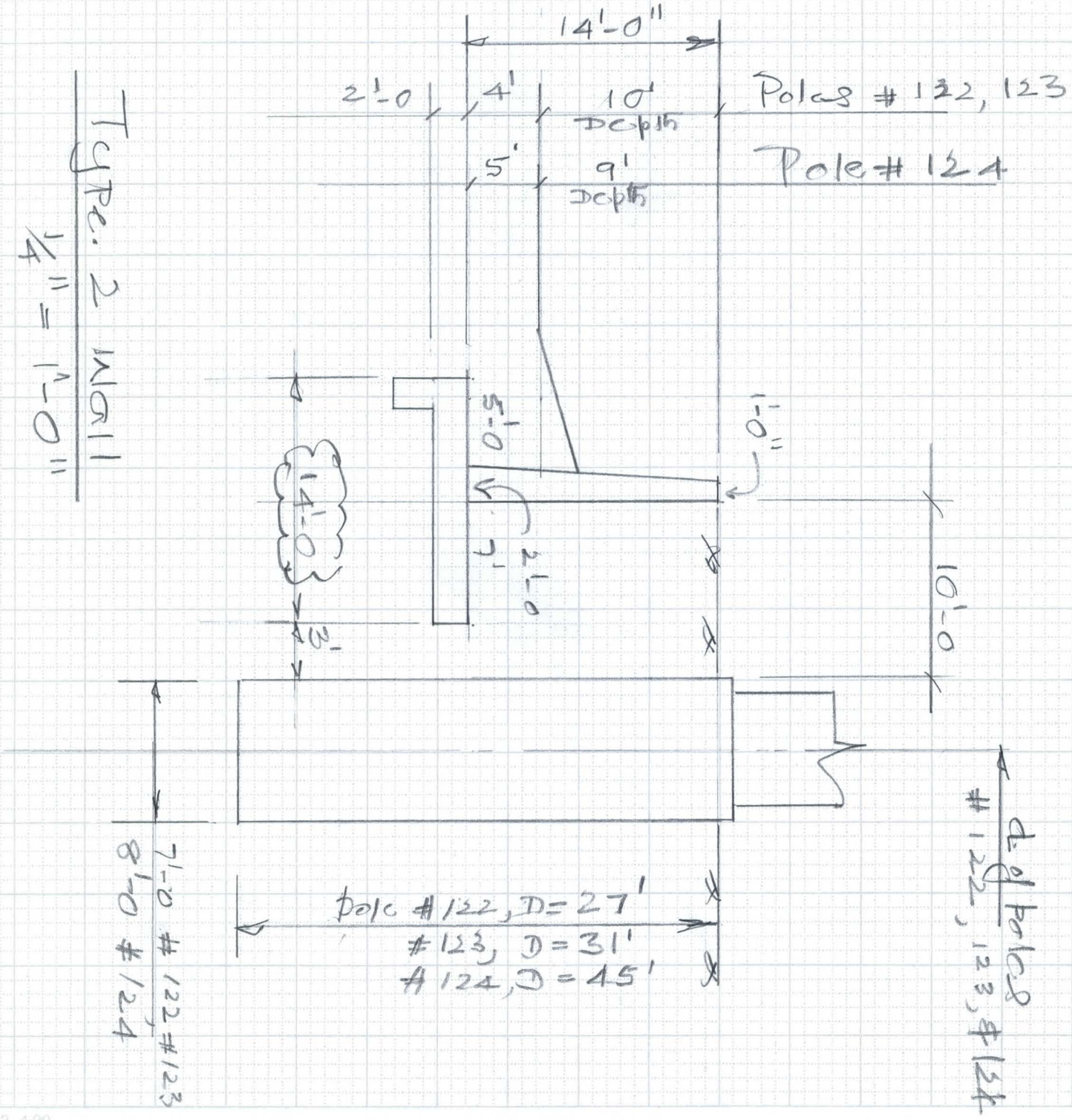

6910-153 4-90

FLOOD CONTROL DISTRICT OF MARICOPA COUNTY

PROJECT LACC PAGE ____ OF ____

DETAIL Retaining Wall COMPUTED KVH DATE 3/01

CHECKED BY ____ DATE ____

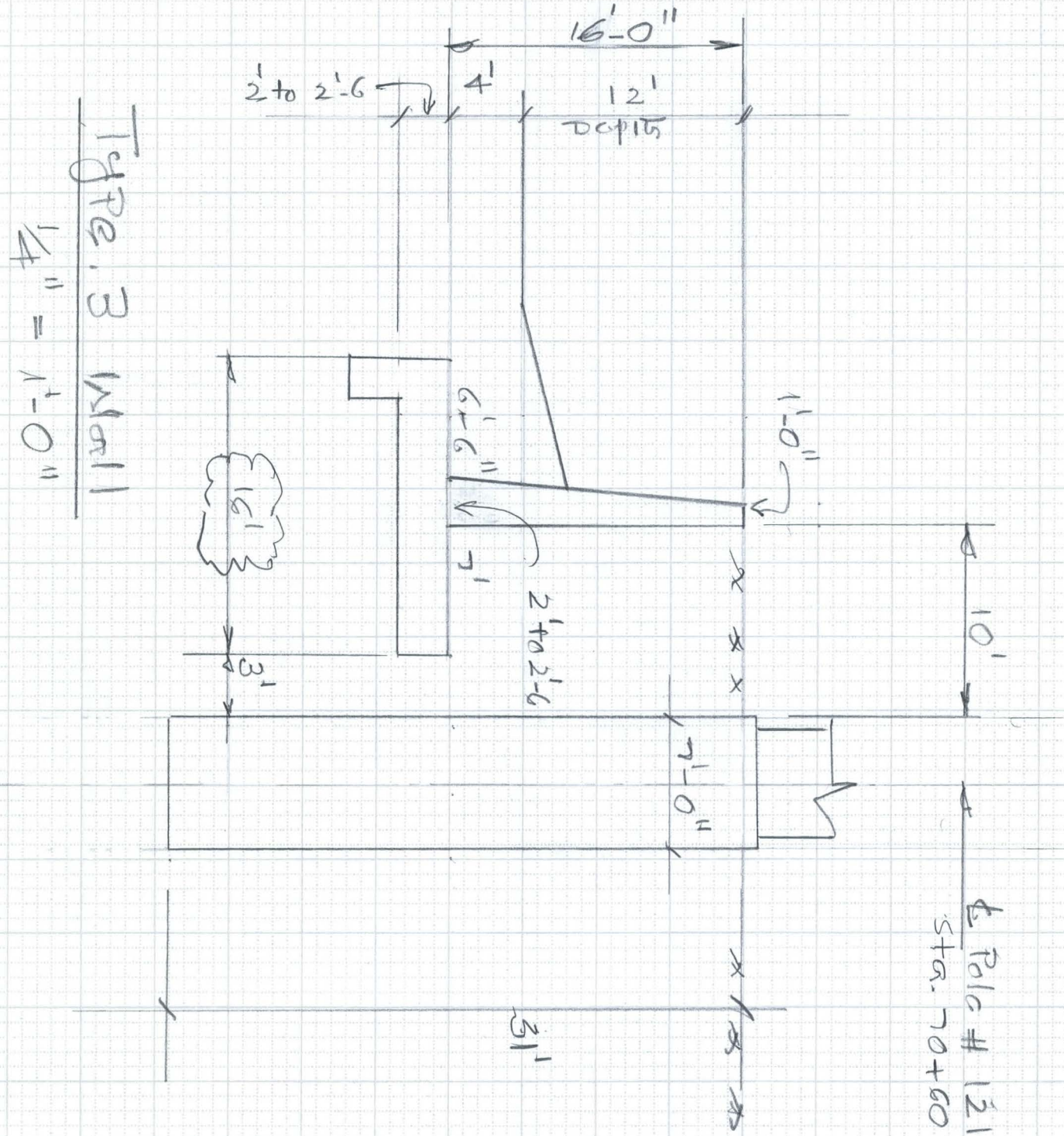

Plate 3 Wall

0" = 1'-0" = 1/4"

6910-153 4-90

FLOOD CONTROL DISTRICT OF MARICOPA COUNTY

PROJECT LACC PAGE ___ OF ___

DETAIL Elevations COMPUTED 12/14 DATE 3/21/01

CHECKED BY ___ DATE ___

Elevations

Sta	Inv.	Top of Wall	Exist Ground	Top of pole	Shaft Depth	Depth below Exist GR	Shaft DIA.
19+10 #126	6.0 970.33	976.33	2.7 978.03	980.73	48'	45'	8'
29+60 #125	6.0 971.49	977.49	3.8 979.27	982.57	48'	45'	8'
40+10 #124	10.01 972.64	982.65	2.7 983.58	986.28	48'	45'	8'
50+60 #123	10.01 973.80	983.81	3.1 983.49	986.59	33'	31'	7'
60+91 #122	10.01 974.93	984.94	1.1 984.65	985.75	28'	27'	7'
70+60 #121	12.01 976.00	988.01	1.2 986.58	987.78	33'	31'	7'
81+90 #120	7.01 977.24	984.25	2.0 984.85	986.85	22'	21'	7'
92+60 #119	7.01 978.42	985.43	2.3 984.57	986.87	22'	21'	7'

FLOOD CONTROL DISTRICT OF MARICOPA COUNTY

6910-158 4-90

FLOOD CONTROL DISTRICT OF MARICOPA COUNTY

PROJECT Lavego PAGE ____ OF ____

DETAIL Elevations COMPUTED KVH DATE 3/21/01

CHECKED BY ____ DATE ____

	Inv	Top of Wall
1) Sta. 92+60 #119		
(978.68 − 977.58) = 1.1 for 1000'		
$\frac{760}{1000} \times 1.1 = 0.84$		7.01'
(977.58 + 0.84) = 978.42 (Inv)	978.42	985.43
Ch1. Depth = 7.01, Top of wall = +7.01		
2) Sta. 81+90 #120		7.01'
(77.58 − 76.48) = $1.1 \times \frac{690}{1000}$ = (0.76 + 76.48)	977.24	984.25
3) Sta 70+60 #121		12.01
(76.48 − 75.38) = $\frac{1.1 \times 560}{1000}$ = (0.62 + 75.38)	976.00	988.01
4) Sta 60+91 #122		10.01
(75.38 − 74.28) = $\frac{1.1 \times 591}{1000}$ = (0.65 + 74.28)	974.93	984.94
5) Sta 50+60 #123		10.01
(74.28 − 73.18) = $\frac{1.1 \times 560}{1000}$ = (0.62 + 73.18)	973.80	983.81
6) Sta. 40+10 #124		10.01
(73.18 − 72.08) = $\frac{1.1 \times 510}{1000}$ = (0.56 + 72.08)	972.64	982.65
7) Sta. 29+60 #125		6.00
(72.09 − 70.98) = $\frac{1.1 \times 460}{1000}$ = (0.51 + 70.98)	971.49	977.49
8) Sta 19+10 #126		6.00
(70.98 − 69.88) = $\frac{1.1 \times 410}{1000}$ = (0.45 + 69.88)	970.33	976.33

6910-153 4-90

FLOOD CONTROL DISTRICT OF MARICOPA COUNTY

PROJECT LACC PAGE ____ OF ____

DETAIL Crane Loading COMPUTED KVH DATE 6/01

CHECKED BY ____ DATE ____

Crane Loading

Lorane Crane

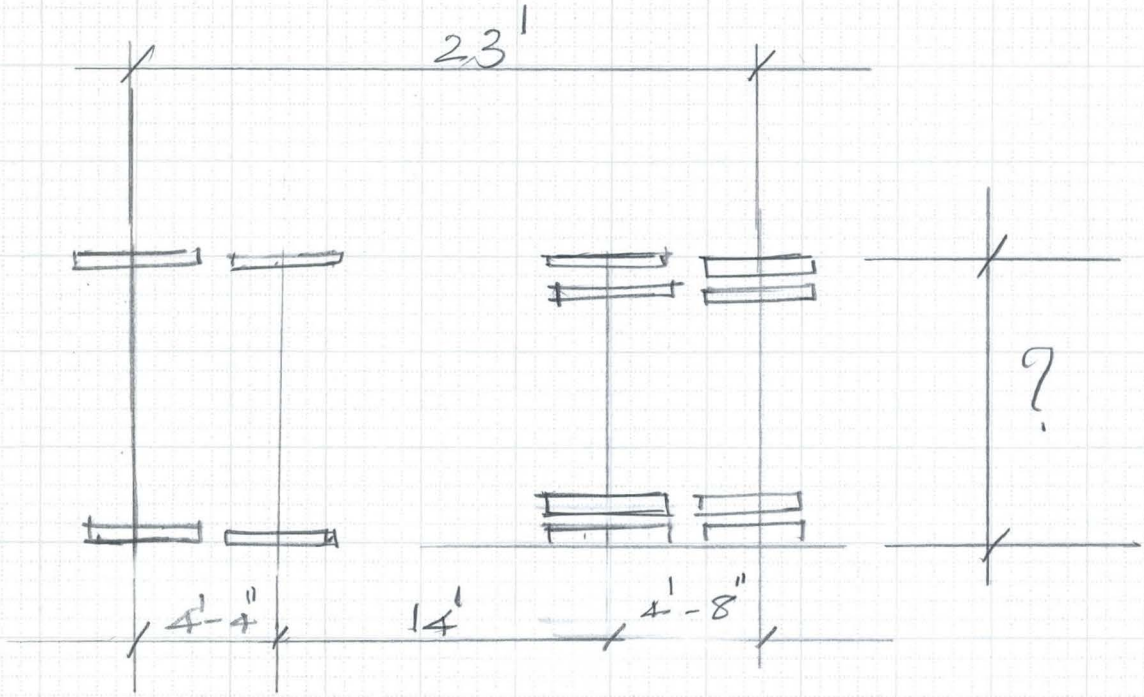

Axle Load.	8.5^K	8.5^K	40^K	40^K	Total 97^K
wheel L	4.25^K	4.25	10^K	10^K	
Axle L:	18^K	18^K	30.5^K	30.5^K	Tot. 97^K
wheel L	9^K	9^K	7.625^K	7.625^K	

Total Crane wt = 97^K Say 100^K or 50^T

6910-153 4-90

FLOOD CONTROL DISTRICT OF MARICOPA COUNTY

PROJECT _____ PAGE ____ OF ____

DETAIL _____ COMPUTED _____ DATE ____

_____ CHECKED BY _____ DATE ____

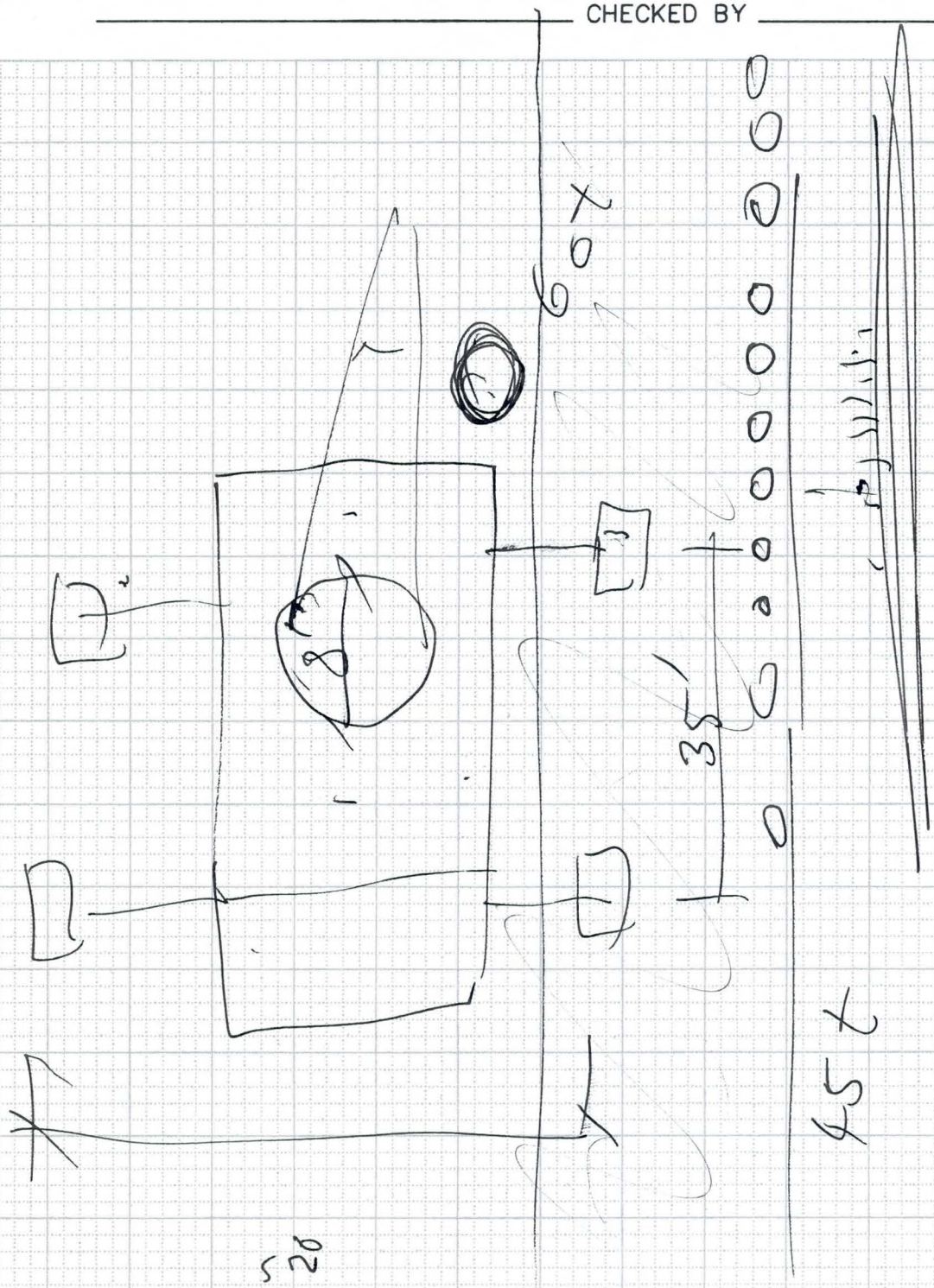

6910-153 4-90

Kumar Hanumaiah - FCDX
From: Sam Hanna - FCDX
Sent: Thursday, March 08, 2001 2:26 PM
To: Michael Lopez - FCDX; Kumar Hanumaiah - FCDX
Subject: FW: LACC - 60 Ton Crane - Assembled Loads

FYI

-----Original Message-----

From: wgphilli@srpnet.com [mailto:wgphilli@srpnet.com]
Sent: Thursday, March 08, 2001 1:15 PM
To: Bobbie Ohler - FCDX; Sam Hanna - FCDX
Cc: Tim Phillips - FCDX
Subject: LACC - 60 Ton Crane - Assembled Loads

Here are the live travelling loads for our heaviest assembled crane.

Disassembled, the crane is heavier than HS20 and needs a permit to travel. Our heaviest disassembled crane is 45,000# rear and 33,000# front, with slightly different axle spacings than given here.

As for the outrigger loading, the outriggers are 22" X 22" square. Worst case would be a maximum of 110 Tons on one outrigger. Say 450 psi on the 22" X 22" outrigger. These loads are normally spread further when we put a 5' diameter wood pad under the outrigger, but we can't count on that happening. You might think about pouring a concrete pad (or something like that)adjacent to the wall that will spread these loads a bunch. Just a thought.

Hope this is what you needed... Call if questions.

Bill Phillips

SRP - Transmission Line Design
P.O. Box 52025 Mail Sta. XCT315
Phoenix, AZ 85072-2025
(602) 236-8092 FAX (602) 914-8726

*** Forwarding note from BJBAZARD—PABVMSYS 05/13/96 17:45 ***

To: WGPHILLI—PABVMSYS
FROM: Bryan Bazard, Transportation Services, TSC402, ext. 8353
SUBJECT: 60 Ton Crane - Assembled Loads

Bill, I stand corrected. The Lorain Crane #7245 is heavier. It rides on four axles. All tires are 14.00-20 size highway tread. The front axles have two tires per axle (one on each side), the rear axles have four tires per axle. The axle spacing from the front axle (axle 1) is: axle 1 to axle 2 is 4'4"; axle 2 to axle 3 is 14'1/2"; axle 3 to axle 4 is 4'8". There is 2 ways to travel with the boom installed, either with the boom facing forwards or rearwards, which changes the loadings. With the boom facing forwards the front 2 axles share a load of 17,000 lbs. or 8,500 lbs each and the rear axles share 80,000 lbs or 40,000 lbs each. With the boom facing rearwards, the counterweight is between the axles. With the boom facing rearwards, the front axles share 36,000 lbs. or 18,000 lbs each and the rear axles share 61,000 lbs. or 30,500 lbs each. These weights are with the crane in its' standard condition, 40 feet of boom, total weight of 97,000 lbs. If you need more info. give me a call.

*** Forwarding note from WGPHILLI—PABVMSYS 05/13/96 11:17 ***

To: BJBAZARD—PABVMSYS

LACC Meeting Summary – SRP Power – 5-14-01

Attendees: Bill Phillips, Peter Kanderas, Mike Lopez, Jeff Riddle, Sam Hanna, Tim Phillips, Bobbie Ohler

We discussed SRP Power's comments and concerns with LACC design, per Bill Phillips' email dated May 7, 2001.

We first discussed SRP's requirements for construction of our retaining walls at the eight 500kV powerpoles along the west side of the LACC. SRP has determined that three of the poles will require anchoring, two will have a construction time restraint, and retaining wall construction at the other three poles will not require any special consideration. There should be no problem with anchoring the poles, because there is sufficient room to drill through gaps in the existing anchor bolts. SRP will design and construct the anchoring system, to be reimbursed by the Project Partners. Tim suggested that this should be included in the IGA. SRP will tell us what soil borings are needed and what lab tests are required for their design, so we can obtain this data through our geotech on-call.

We discussed the three poles that will require a construction time restraint (to limit exposure to wind forces during excavation), and determined it may be preferable to anchor these poles also. We discussed the three poles that require no special consideration, and SRP suggested that we glue styrofoam to the poles to act as a "stress absorber", so that the pole's lateral load will not be transferred to the retaining wall. If the poles are anchored, the anchor system will serve to keep the lateral load off the retaining wall, and it may be a preferable design to the styrofoam. Therefore, Peter will provide us cost estimates for anchoring each pole, so we can determine which poles should be anchored. We may decide to anchor all eight of the poles.

Peter informed us that the footings can be within 6 inches of the powerpole, or styrofoam of the powerpole. Peter will also get us deflection data. He said it is typically 4 to 5 % of the pier diameter.

SRP said they will start an internal job number for this project, to track their costs. Tim told them that at this point we do not definitely know we have a Project, and if the Project does not come about we would have no way of repaying them. Bill acknowledged this. When SRP provides their cost estimate, Tim will add the cost to the budget.

Peter committed to the following action items:

- Inform us where soil borings should be taken, and what lab tests are required, for SRP's retaining wall design – end of this week
- Provide cost estimates for anchoring the eight powerpoles – within a couple weeks
- Provide deflection data for each of the powerpoles

- Design/anchor poles if requested by the District – this work will require 3 to 4 months.

Tim's action items:

- Add design/anchoring to IGA
- Add money to budget

We next discussed Pole #27 (230 kV) at Baseline and 57th Avenue. This pole is close to our box culvert construction. We informed Peter that the equestrian cell will be constructed on the south side of the box culvert, not next to the powerpole. Peter said this would make a big difference, and may be sufficient, provided we require that our contractor keep his excavation a certain distance away from the powerpole. Bill told us that they are more concerned about the wingwall construction than the culvert construction, since the windwall excavation would be parallel to the powerlines. Mike told Peter that we will be constructing a 4-foot deep cut-off wall at the downstream side of the box culvert, and Peter was concerned that this could cause a problem at the powerpole. We told him that we can extend the box culvert if necessary, to move the cut-off wall and wingwall away from the powerpole. Peter will review the plans again, and let us know what SRP's requirements are.

Peter's action item:

- Review plans and provide SRP's restriction for excavation distance from the powerpole. Provide SRP's requirment for extending box culvert, or guying pole, if either is necessary.

We discussed SRP's access road along the 500 kV powerpoles and out to Tower #127 in the Salt River. Bill suggested that we extend the retaining walls, so that the ramps do not act as a constriction. He requested that the access road be 30 feet wide. We will probably need to provide some sort of channel crossing so that SRP can access the Tower #127, and so that SRP will have a way to turn around after driving along the west bank.

District action item:

- Develop and propose a plan to allow SRP access to Tower #127 and to allow SRP a turnaround area for the west bank. Review west bank of channel and determine if there is any way to widen the access road to 30 feet where it is currently less.

FLOOD CONTROL DISTRICT OF MARICOPA COUNTY

PROJECT LACC PAGE ____ OF ____

DETAIL Retaining Wall COMPUTED KVH DATE 3/01

CHECKED BY ____ DATE ____

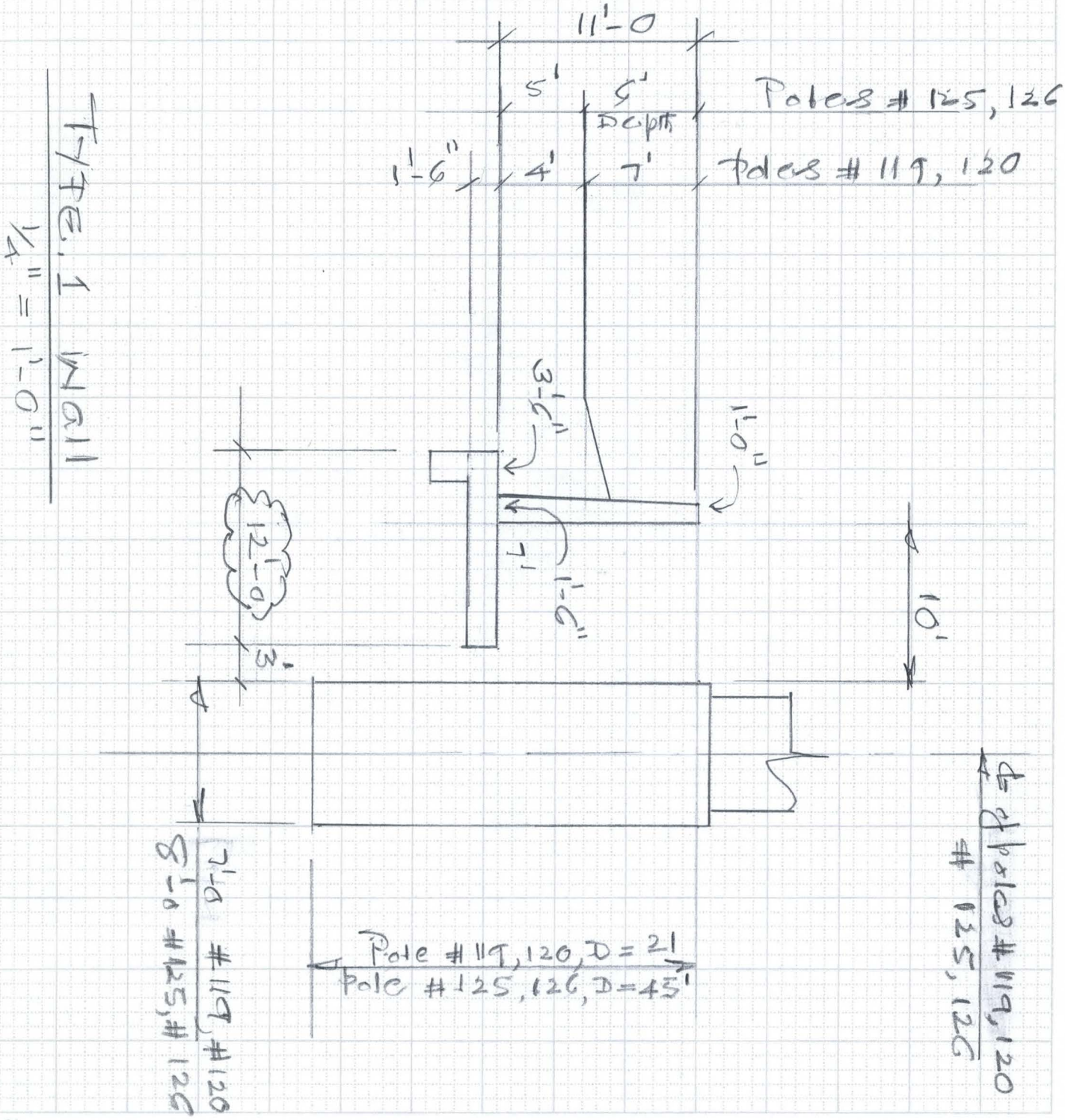

6910-153 4-90

Ninyo & Moore
Geotechnical and Environmental Sciences Consultants

September 24, 2001
Project No. 600220001

Mr. Warren Rosebraugh, P.E.
Flood Control District of Maricopa County
2801 West Durango Street
Phoenix, Arizona 85009-6399

Subject: Preliminary Foundation Recommendations
Laveen Area Conveyance Channel
Maricopa County, Arizona
FCD Project No. 1170831
Contract FCD 2001C004
Assignment No. 1

Dear Mr. Rosebraugh:

Based on our recent conversations, we understand that you would like us to provide preliminary foundation recommendations for the above-mentioned project. These foundations will be used to support the new retaining walls that will be located adjacent to the SRP power poles, and could extend 12 to 18 feet below the ground surface.

We recommend utilizing continuous footings for this project, with a width of 12 or more inches. Continuous footings should be reinforced with two or more No. 4 reinforcement bars, one placed near the top and one placed near the bottom of the footings, and further detailed in accordance with the recommendations of the structural engineer. Footings may be designed using an allowable bearing capacity of up to 3,000 pounds per square foot (psf) for static conditions.

Total and differential settlement of up to about one inch and one-half inch, respectively, may occur. Distortions of no more than about 1 inch (vertical) over 20 feet (horizontal) are possible.

Foundations that are subject to lateral loadings may be designed using an ultimate coefficient of friction of 0.4 (total frictional resistance equals the coefficient of friction multiplied by the dead load). An ultimate passive resistance value of 250 pounds per square foot per foot of depth can be used. The ultimate lateral resistance can be taken as the sum of the frictional resistance and passive resistance, provided that the passive resistance does not exceed two-thirds of the total allowable resistance. The passive resistance may be increased by one-third when considering loads of short duration such as wind or seismic forces. The foundations should preferably be proportioned such that the resultant force from lateral loadings falls within the kern (i.e., middle one-third).

Is was a pleasure working with you on this phase of the project. Should you have any questions related to this letter, please contact the undersigned at your convenience.

Sincerely,
NINYO & MOORE

Steven D. Nowaczyk

Steven D. Nowaczyk, P.E.
Senior Project Engineer

SCOPE OF WORK
MISCELLANEOUS STRUCTURAL REVIEW
LAVEEN AREA CONVEYANCE CHANNEL (LACC)
ON-CALL ENGINEERING CONTRACT FCD

Assignment No. 2

FCD PROJECT NO. 2000C041

SEPT 19, 2001

A. Description

Enclosed are plan and section of Retaining walls of varying heights from 10' to 16'as shown on section-A. Face of retaining walls are about 10' from the face of drilled shafts of the existing 500 kv power poles located just east of existing Maricopa drain near 75th Avenue and Salt River of Gila River Indian Reservation. The typical plan view shows the proposed retaining wall and the location of the power pole.

B. Tasks

SRP will be using a 40 kips capacity crane to service these power poles and SRP is indicating,the maximum weight on the out rigger could be 40 kips and placed as close as 1' from the face of the wall. **Provide recommendations, computations and design sketches for Retaining walls of 10',12',14' and 16' heights with the outrigger load of 40 kips and with the regular soil backfill for walls.**

This job consists of multiple tasks and will be forwarding you more of box culverts and retaining wall designs for your review and recommendations in the near future.

C. Schedule

Consultant shall complete all work by 12-30-2001

D. Fees

Consultant shall provide estimated costs for approval by the District. Notice to proceed will then be issued for this task.

FLOOD CONTROL DISTRICT OF MARICOPA COUNTY

PROJECT LACG PAGE 1 OF 2

DETAIL Retaining Walls COMPUTED KVH DATE 9/01

@ Power Road CHECKED BY _____ DATE _____

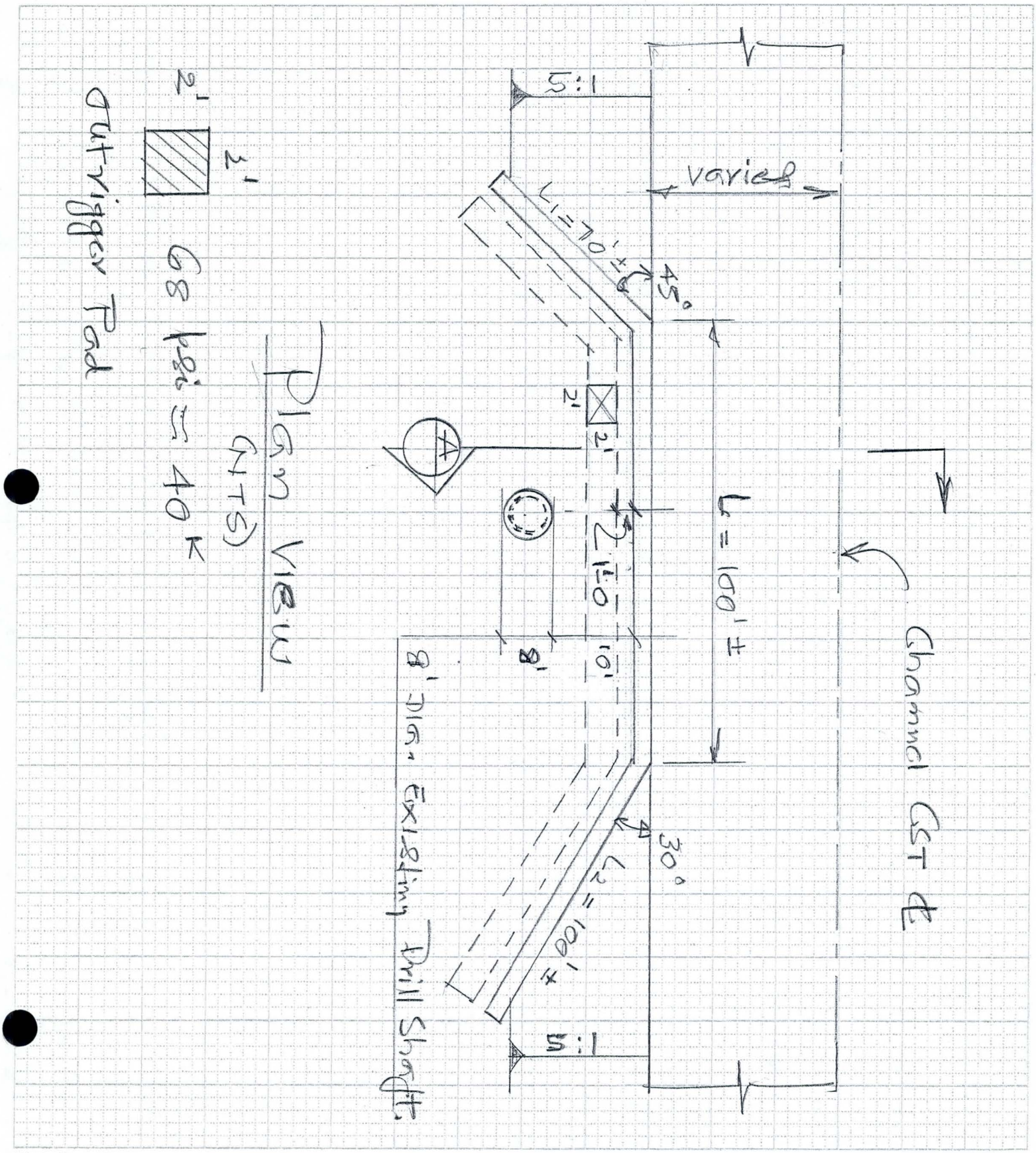

FLOOD CONTROL DISTRICT OF MARICOPA COUNTY

PROJECT LACC PAGE 2 OF 2

DETAIL Ret. wall @ Power poles COMPUTED KWH DATE 9/01

CHECKED BY _____ DATE _____

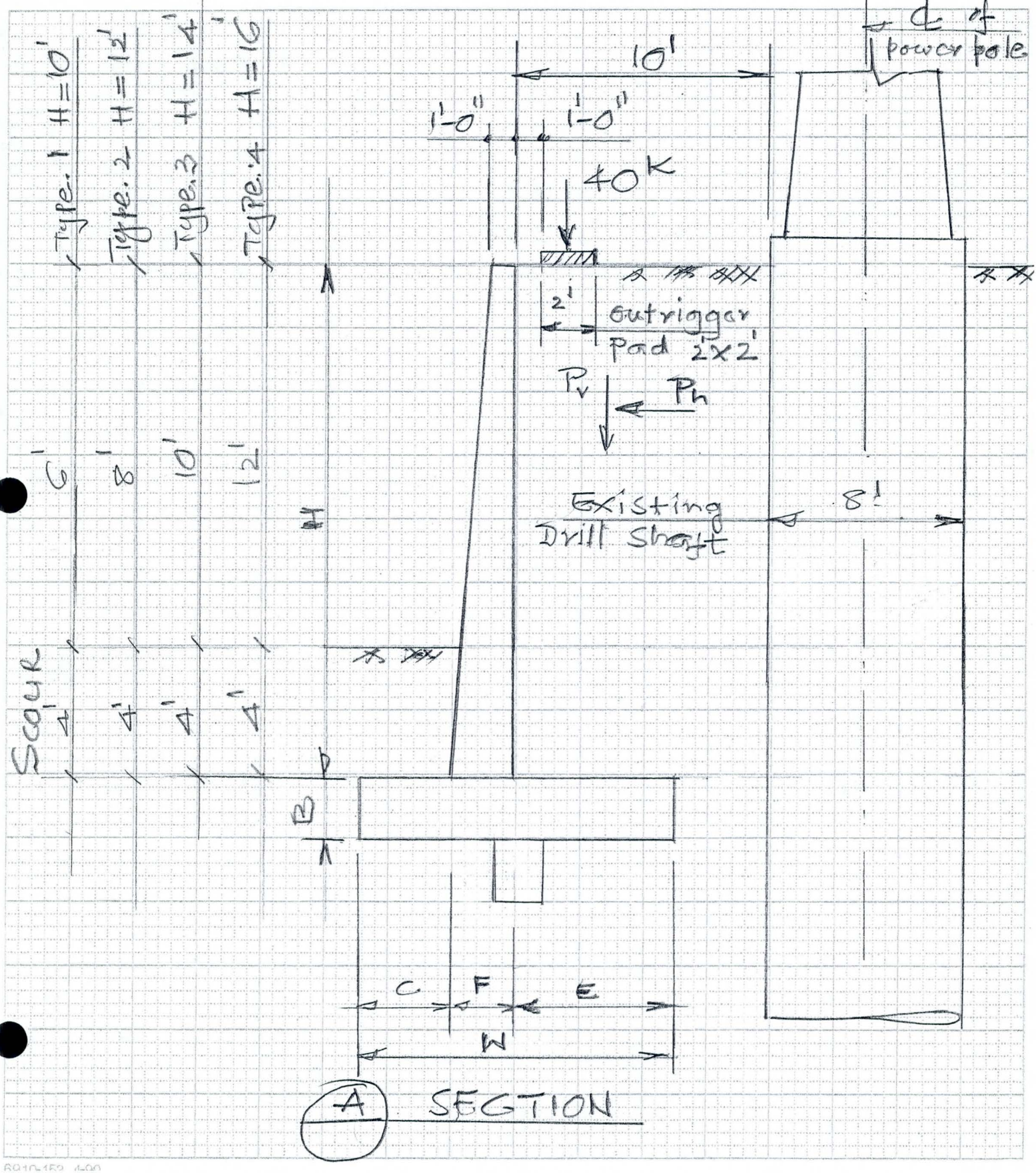

10.2. Slopes and Earthwork Factors

The earthwork factors given below are based on comparisons between the in-place density and Proctor tests performed in our laboratory. The slope factors are based on the soil type anticipated within the channel excavation

Table 5 – Recommended Earthwork Parameters

Approximate Location	Estimated Earthwork Factor	Steepest Recommended Cut Slope (H:V)
Station 10+00 to 60+00	+/- 10% Shrink	1:1
Station 60+00 to 300+00	+/- 15% Shrink	1:1
Station 300+00 to 318+37	+/- 20% Shrink	1:1
Jack-and-Bore Operation	+/- 15% Shrink	1:1

Draft

The shrink factors listed in the table above represent an average of the material observed with varying consistencies and contains scattered hard zones that resulted in auger refusal during our field work. Potential bidders should consider this in preparing estimates and should review the available data to make their own conclusions regarding excavation conditions.

Fill sections, if any, constructed with materials from areas of on-site excavation should be constructed with slopes no steeper than 2:1 (H:V).

10.3. Box Culverts

Box culverts will be used at six locations along the project alignment. Based on conversations with your office, we understand that the scour depth associated with these culverts will be about 4 feet below the bottom of the culvert. Consequently, the base of the box culverts will also be about 4 feet below the bottom of the culverts. Based on the soil boring information and the proposed depth of the culverts, we recommend that an allowable bearing capacity of up to 3,000 pounds per square foot (psf) be used for static conditions.

10.6. Retaining Walls

Retaining wall foundations, if any, should be founded in the manner described in Section 10.3. Retaining walls that are not restrained from movement at the top and have a level backfill behind the wall may be designed using an "active" equivalent fluid unit weight of 35 pounds per cubic foot (pcf). This value assumes compaction within about 5 feet of the wall will be accomplished with relatively light compaction equipment and that very low to low expansive backfill will be placed behind the wall. This value also assumes that the retaining walls will have a height less than 12 feet. Retaining walls should also be designed to resist a surcharge pressure of 0.35q. The value for "q" represents the pressure induced by adjacent light loads, uniform slab, or traffic loads plus any adjacent footing loads. Measures should be taken so that moisture does not build up behind retaining walls. Retaining walls should be provided with a drain, as shown on Figure 6. Back drainage measures should include free-draining backfill material and perforated drainpipes. Drainpipes should outlet away from structures, and retaining walls should be waterproofed in accordance with the recommendations of the project civil engineer or architect. To reduce the potential for water- and sulfate/salt-related damage to the retaining walls, particular care should be taken in selection of the appropriate type of waterproofing material to be utilized and in the application of this material.

Draft

For passive resistance to lateral loads, we recommend that an equivalent fluid weight of 250 pcf be used up to a value of 3,000 psf. This value assumes that the ground is horizontal for a distance of 10 feet or more behind the wall or three times the height generating the passive pressure, whichever is greater. We recommend that the upper 12 inches of soil not protected by pavement or a concrete slab be neglected when calculating passive resistance. For frictional resistance to lateral loads, we recommend that a coefficient of friction of 0.4 be used between soil and concrete. If passive and frictional resistances are to be used in combination, we recommend that the friction coefficient be reduced by two-thirds. The passive resistance values may be increased by one-third when considering loads of short duration such as wind or seismic forces.

FLOOD CONTROL DISTRICT OF MARICOPA COUNTY

PROJECT LACC PAGE 2 OF 2

DETAIL Ret. wall @ Power poles COMPUTED KWH DATE 9/01

CHECKED BY _____ DATE _____

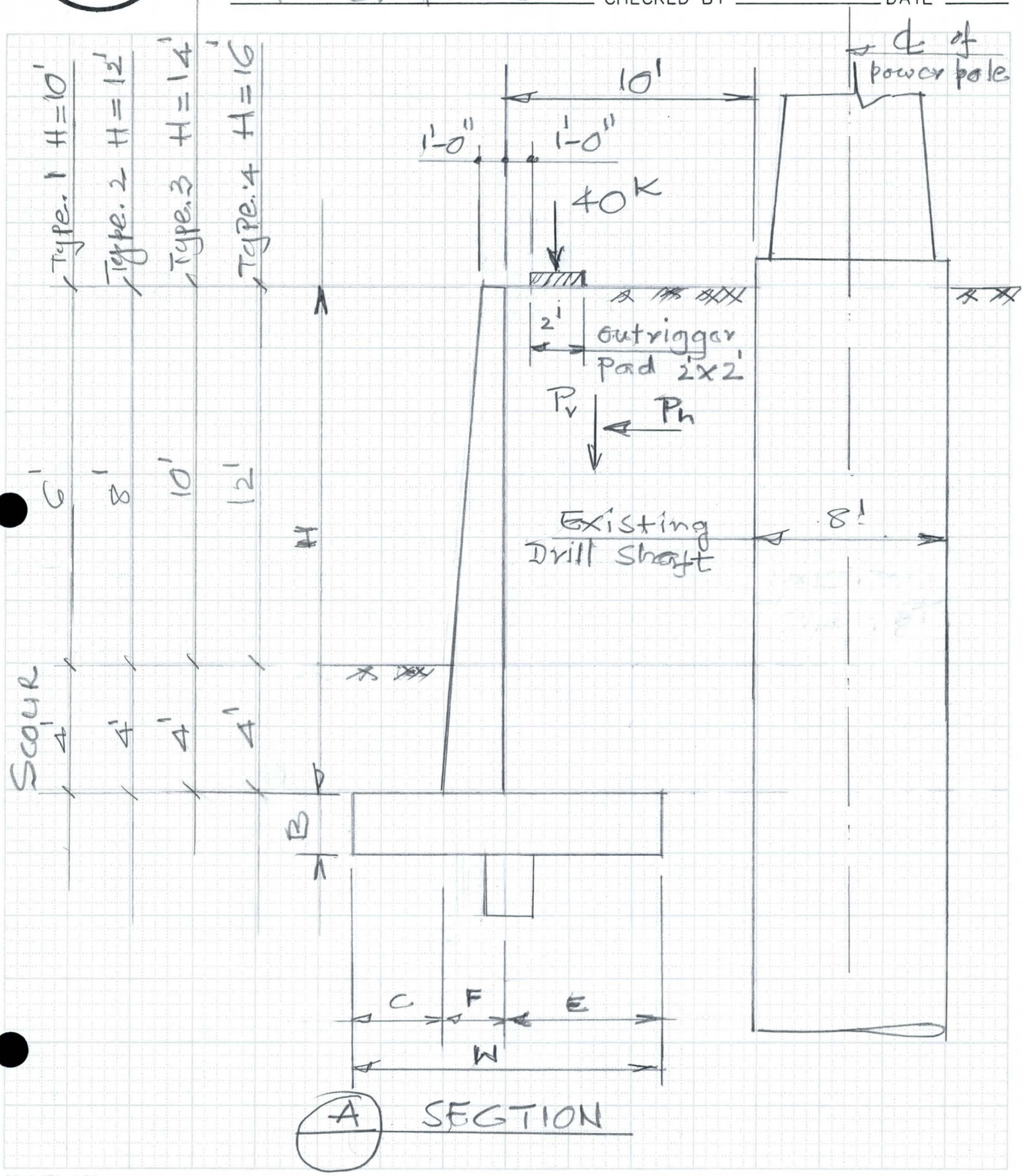

6910-153 4-90

FLOOD CONTROL DISTRICT OF MARICOPA COUNTY

PROJECT LACC PAGE 1 OF 2

DETAIL Retaining Wall COMPUTED KVH DATE 9/01

Q Power Poles CHECKED BY _____ DATE _____

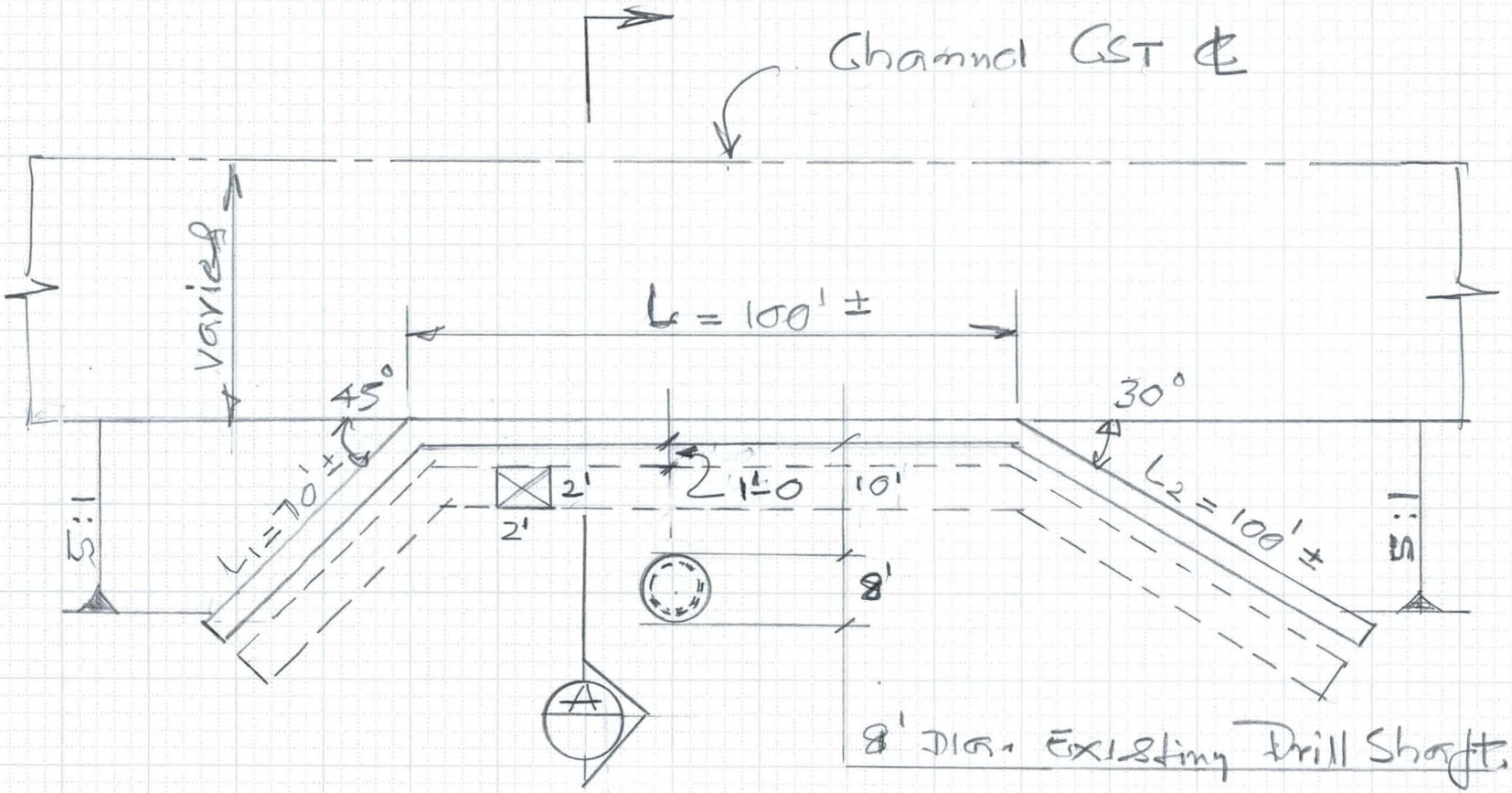

Plan View
(NTS)

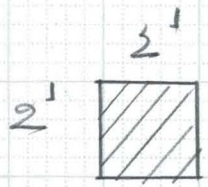

68 psi ≈ 40K

Outrigger Pad

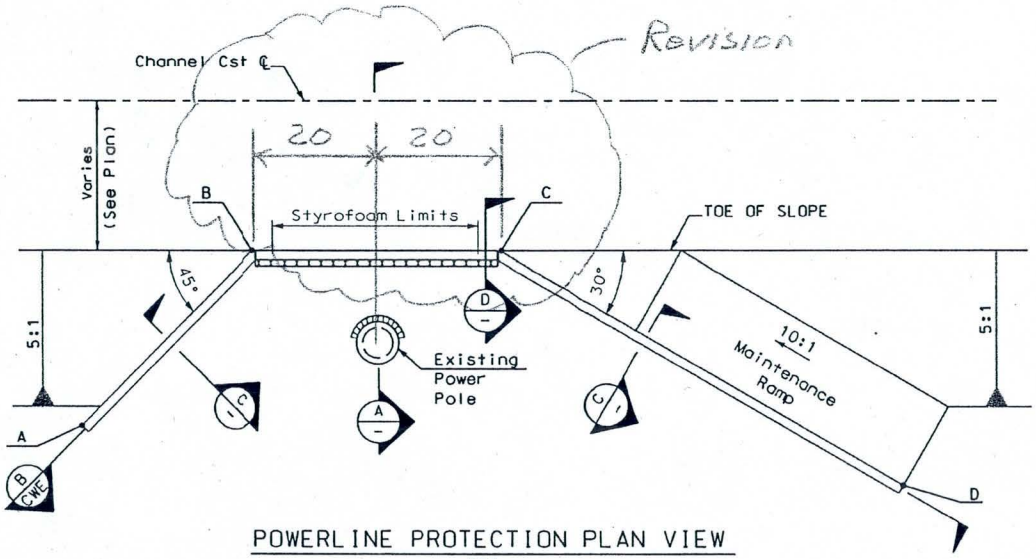

POWERLINE PROTECTION PLAN VIEW

NTS

WALL NO.	WALL SECTION D DIMENSION (ft)					
	B	C	E	F	H	W

WALL NO.	STATION OFFSET				
	A	B	C	D	ELEVATION

* See Drawing __ For Elevation

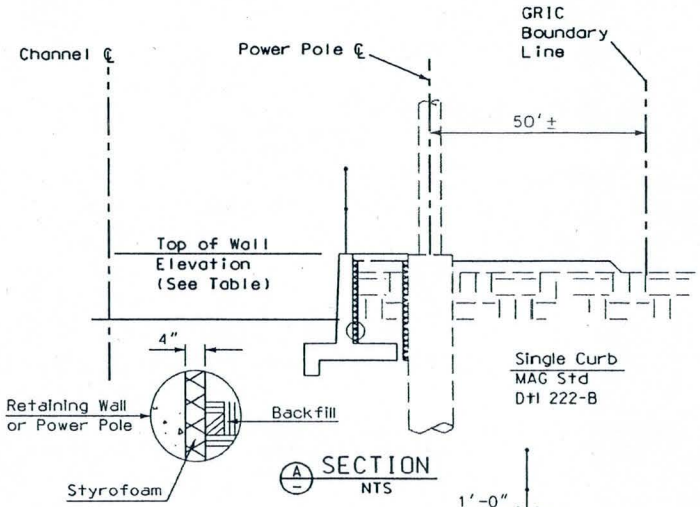

A SECTION
NTS

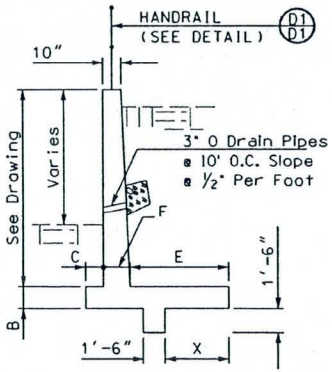

For steel reinforcement & wall dimensions see ADOT Standard Drawings B.18.10, B.18.20 for Case II cantilever retaining walls on spreading footings.

C SECTION
NTS

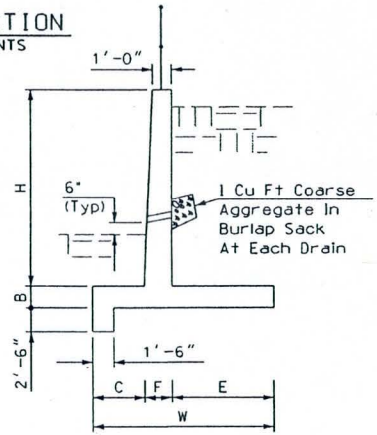

D SECTION
NTS

60% SUBMITTAL

FLOOD CONTROL DISTRICT OF MARICOPA COUNTY
ENGINEERING DIVISION

LAVEEN AREA CONVEYANCE CHANNEL
FCD PROJECT NO. 1170831
FCD CONTRACT NO.

PRELIMINARY NOT FOR CONSTRUCTION		BY	DATE
	DESIGNED	SKH, KVH	07/01
	DRAWN	FC	07/01
	CHECKED	MAL	
DRAWING NO. PWR	POWER POLE PROTECTION		SHEET OF

FLOOD CONTROL DISTRICT OF MARICOPA COUNTY

PROJECT LACC PAGE ___ OF ___

DETAIL Drain Detail COMPUTED KVH DATE 1/02

CHECKED BY ___ DATE ___

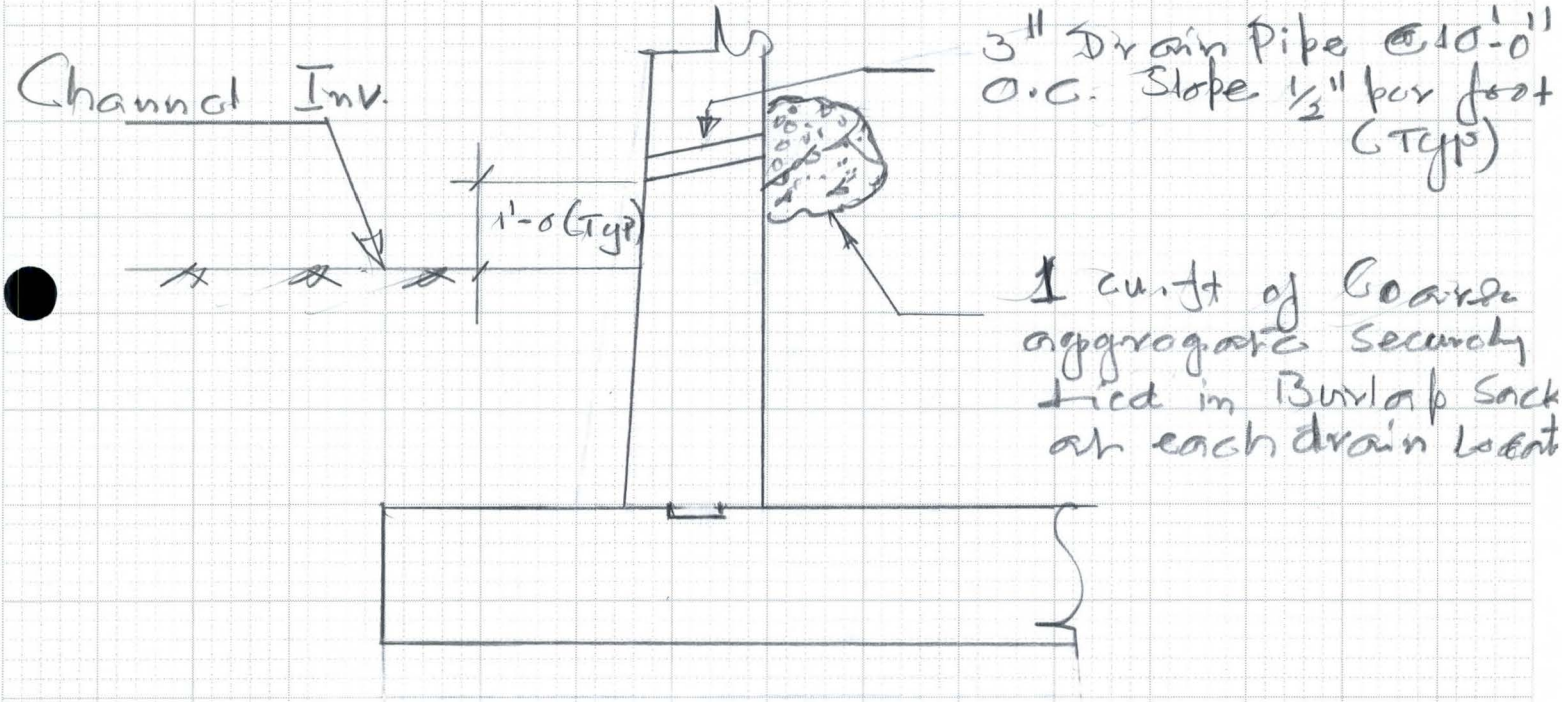

Drain Detail

NTS

6910-153 4-90

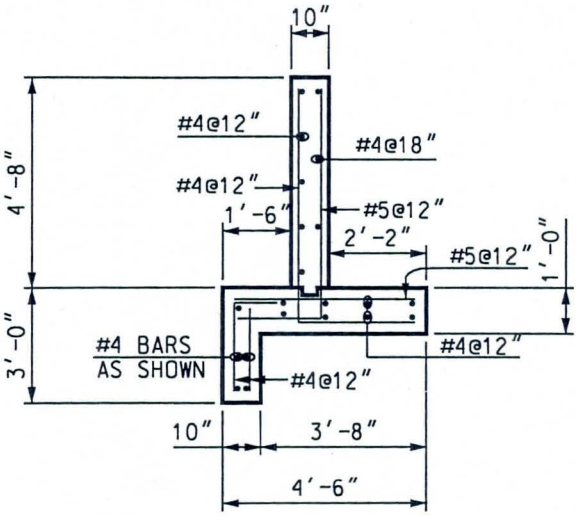

A/7 WING WALL SECTION
SCALE: 1/2" = 1'-0"

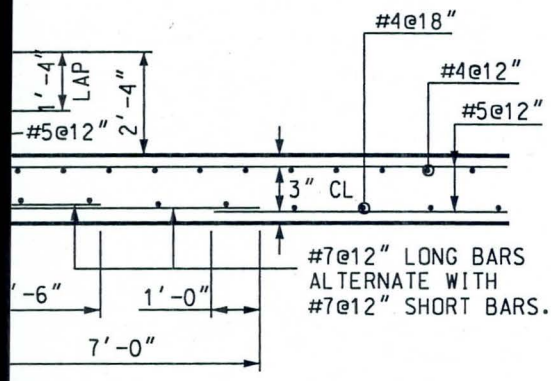

WA SECTION
CALE: 1/2" = 1'-0"

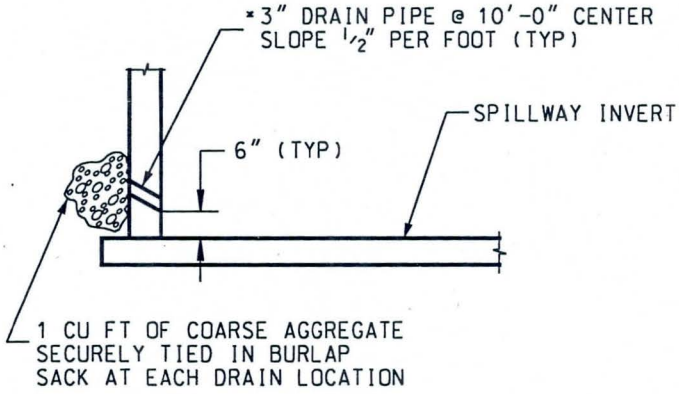

DRAIN DETAIL
NTS

* NO DRAIN PIPES IN SOUTHWALL BEYOND STA. 1+55.

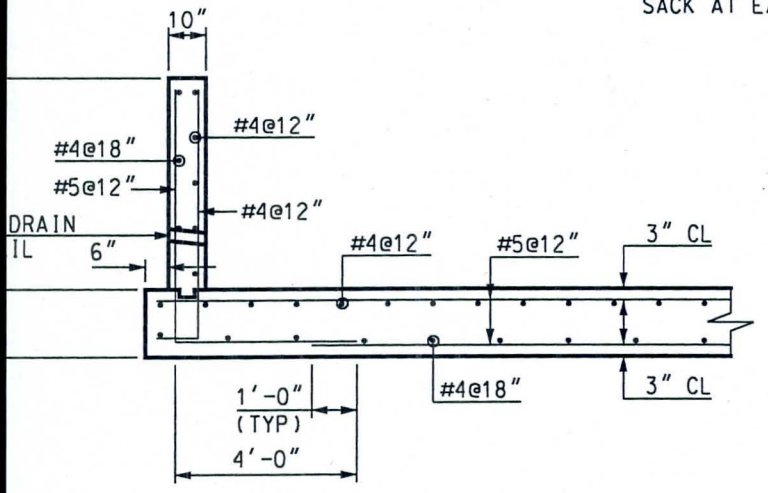

B/7 WALL SECTION
SCALE: 1/2" = 1'-0"

NO.	REVISION	BY	DATE
3			
2			
1			

FLOOD CONTROL DISTRICT OF MARICOPA COUNTY
ENGINEERING DIVISION

TATUM WASH DETENTION BASIN
FCD PROJECT NO. 580040

Registered Professional Engineer (Civil) CERTIFICATE NO. 18600 KUMAR V. HANUMAIAH Date Signed ARIZONA, U.S.A.

	BY	DATE
DESIGNED	KVH	08/19/97
DRAWN	FC	08/19/97
CHECKED	MAL	08/19/97

SPILLWAY WALL DETAIL

SHEET 8 OF 13

TRACS NO.

FLOOD CONTROL DISTRICT OF MARICOPA COUNTY

PROJECT LACC PAGE ___ OF ___

DETAIL Detail COMPUTED KVH DATE 1/02

CHECKED BY ___ DATE ___

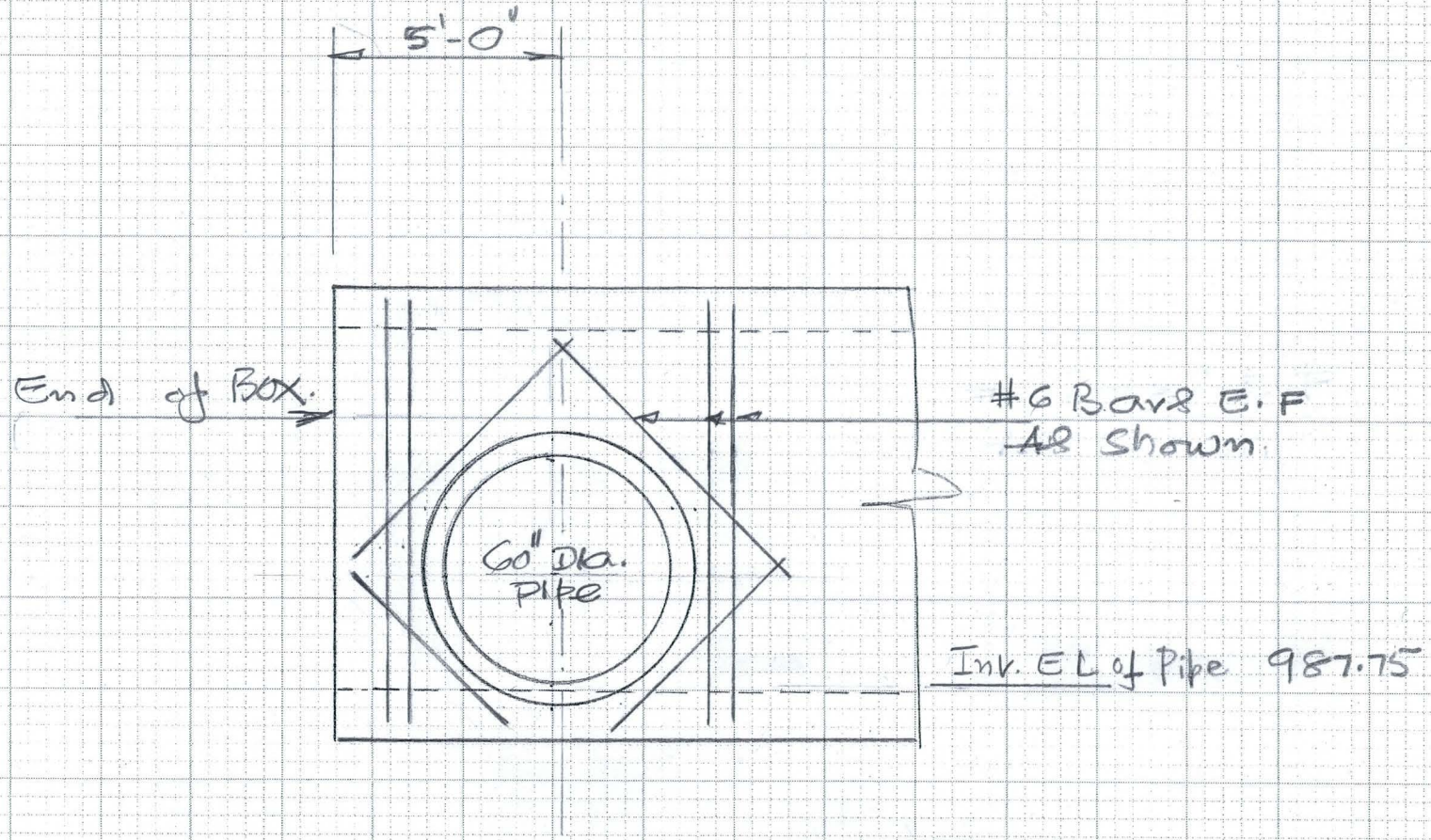

Additional Reinf. around 60" Dia pipe & Culvert wall

Scale: 1/4" = 1'-0

6910-153 4-90

FLOOD CONTROL DISTRICT OF MARICOPA COUNTY

PROJECT Lacc PAGE ___ OF ___

DETAIL Detail COMPUTED KVH DATE Jan/02

CHECKED BY ___ DATE ___

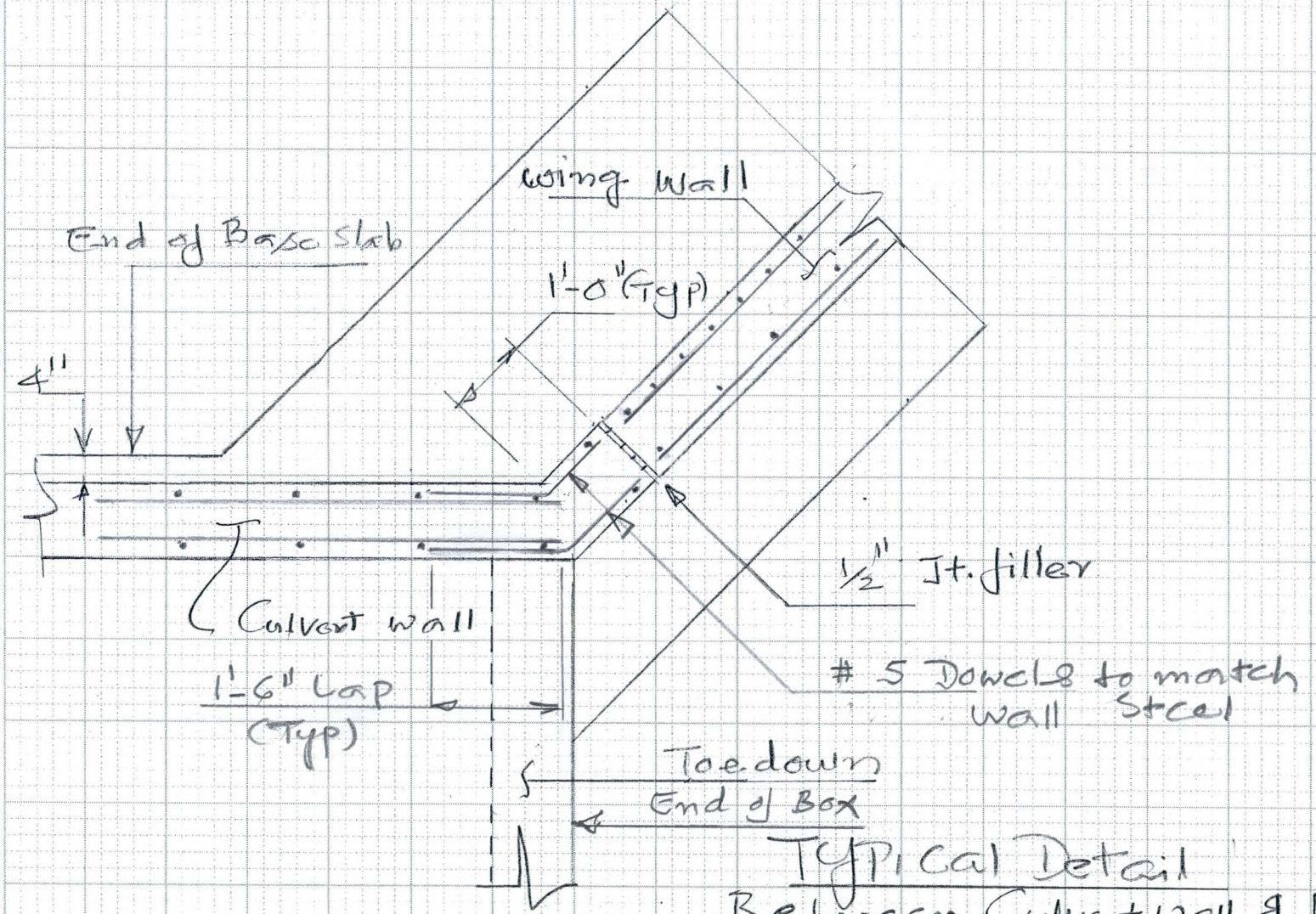

Typical Detail
Between Culvert wall & Wingwall

6910-153 4-90

FLOOD CONTROL DISTRICT OF MARICOPA COUNTY

PROJECT LACC PAGE ___ OF ___

DETAIL Detail COMPUTED Kurt DATE Jan/02

CHECKED BY ___ DATE ___

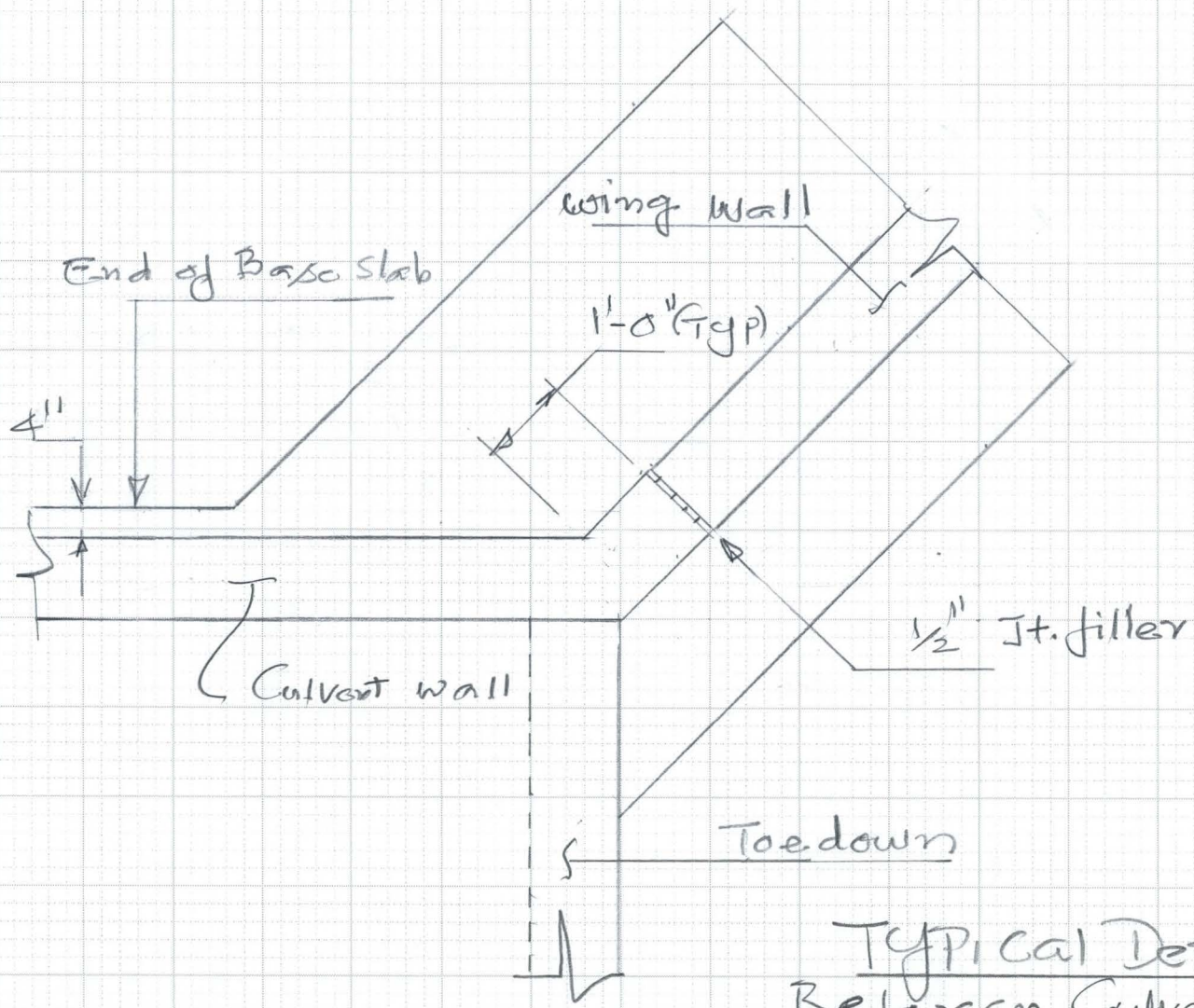

Typical Detail
Between Culvert Wall & Wingwall

6910-153 4-90

FLOOD CONTROL DISTRICT OF MARICOPA COUNTY

PROJECT LACC PAGE ___ OF ___

DETAIL Junction Boxes COMPUTED KVH DATE 2/02

CHECKED BY ___ DATE ___

Junction Boxes:

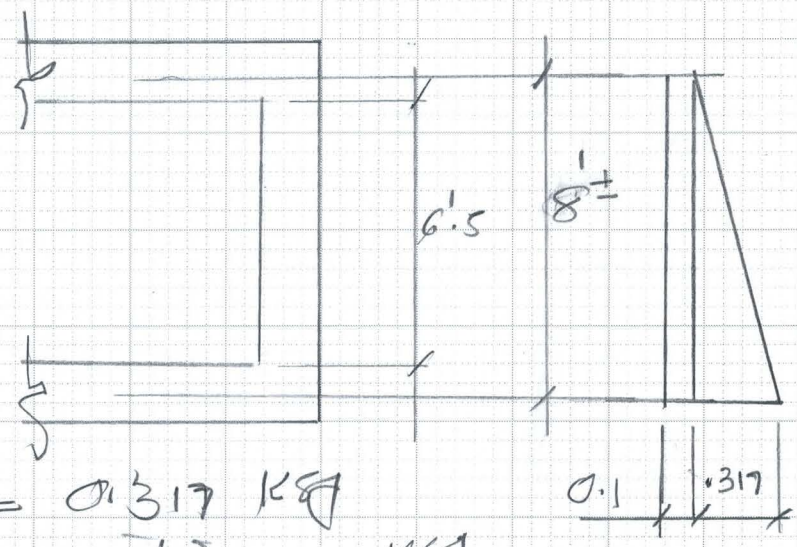

$P_{r_{soil}} = 0.12 \times 0.33 \times 8 = 0.317$ KSF

P_r (S.Ch) $= (0.12 \times 0.33 \times 2') \approx 0.1$ KSF

$P_1 = \frac{0.317}{2} \times 8 = 1.27^K$

$P_2 = 0.1 \times 8 = 0.8^K$

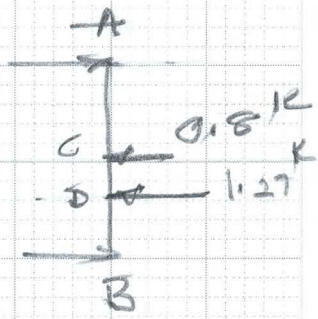

$R_B = \left(\frac{1.27 \times 5.33}{8} + \frac{0.8}{2}\right) = (0.85 + 0.4)$
$= 1.25$

$M_C = (1.25 \times 4) - 1.27(4 - 2.67)$
$= (5.0 - 1.6) = 3.4$ K'

$d_{eff} = (12 - 2 - 0.5) = 9.5''$

$A_s = \frac{3.4 \times 12}{24 \times 0.88 \times 9.5}$
$= 0.20$

Use #5 @ 12" Min

6910-153 4-90

FLOOD CONTROL DISTRICT OF MARICOPA COUNTY

PROJECT LACC PAGE ___ OF ___

DETAIL Junction Boxes COMPUTED KVH DATE 2/02

CHECKED BY ___ DATE ___

Check Top Slab:

(a) $M = \left(\frac{S+2}{32}\right) 16 \times 1.3 = \left(\frac{4+2}{32}\right) 16 \times 1.3 = 3.9^{k\text{-}ft}$

Impact

(b) $M = (900 \times 4) = 3.6^{k\text{-}ft}$

(c) $E = 4 + (0.06 \times 4) = 4.24'$

$\left(\frac{16^{k} \times 1.3}{4.24}\right) = 4.9^{k}$

$M = \left(4.9 \times \frac{4}{4}\right) = 4.9^{k\text{-}ft}$

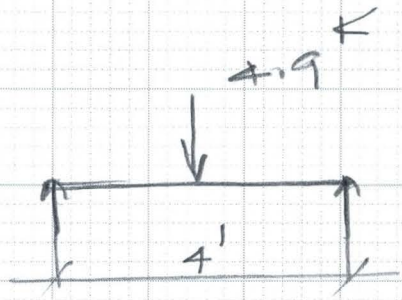

$d_{cg} = (12 - 2 - 0.5) = 9.5''$

$A_s = \frac{4.9 \times 12}{24 \times 0.88 \times 9.5}$

$= 0.29 \text{ in}^2$

The load on the top slab could be double, with the load transferred from grates. ∴ use #5 @ 6" at the bottom

6910-153 4-90

FLOOD CONTROL DISTRICT OF MARICOPA COUNTY

PROJECT LACC PAGE ___ OF ___

DETAIL Junction Boxes COMPUTED KVH DATE 2/02

CHECKED BY ___ DATE ___

Check Beam Spanning on 60" Dia. pipes.

Span = 8.5'

$M_s = \frac{PL}{4} = \frac{16 \times 8.5}{4}$

$= 34^{k'}$

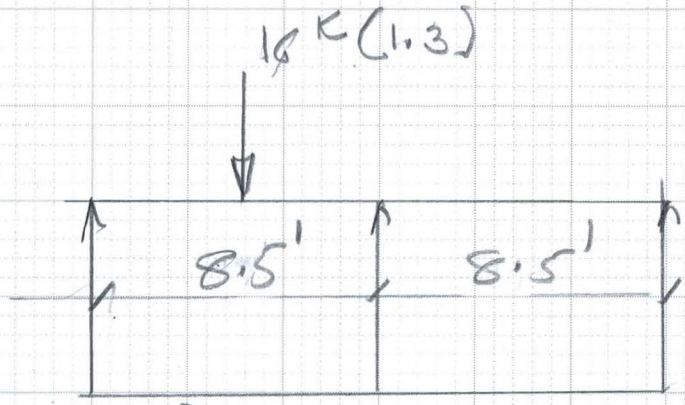

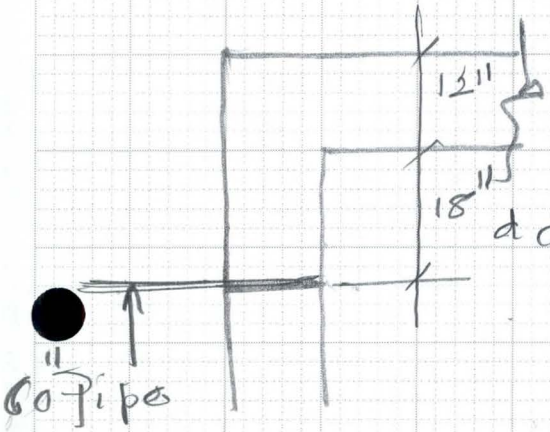

$d_{eff} = (30 - 2 - 0.5) = 27.5''$

$A_s = \frac{34 \times 12}{24 \times 0.88 \times 27.5}$

$= 0.7 \text{ in}^2$

Use 2 #6 Cont. over pipes

FLOOD CONTROL DISTRICT OF MARICOPA COUNTY

PROJECT LACC PAGE ___ OF ___

DETAIL Junction Box COMPUTED KVH DATE 5/02

CHECKED BY ___ DATE ___

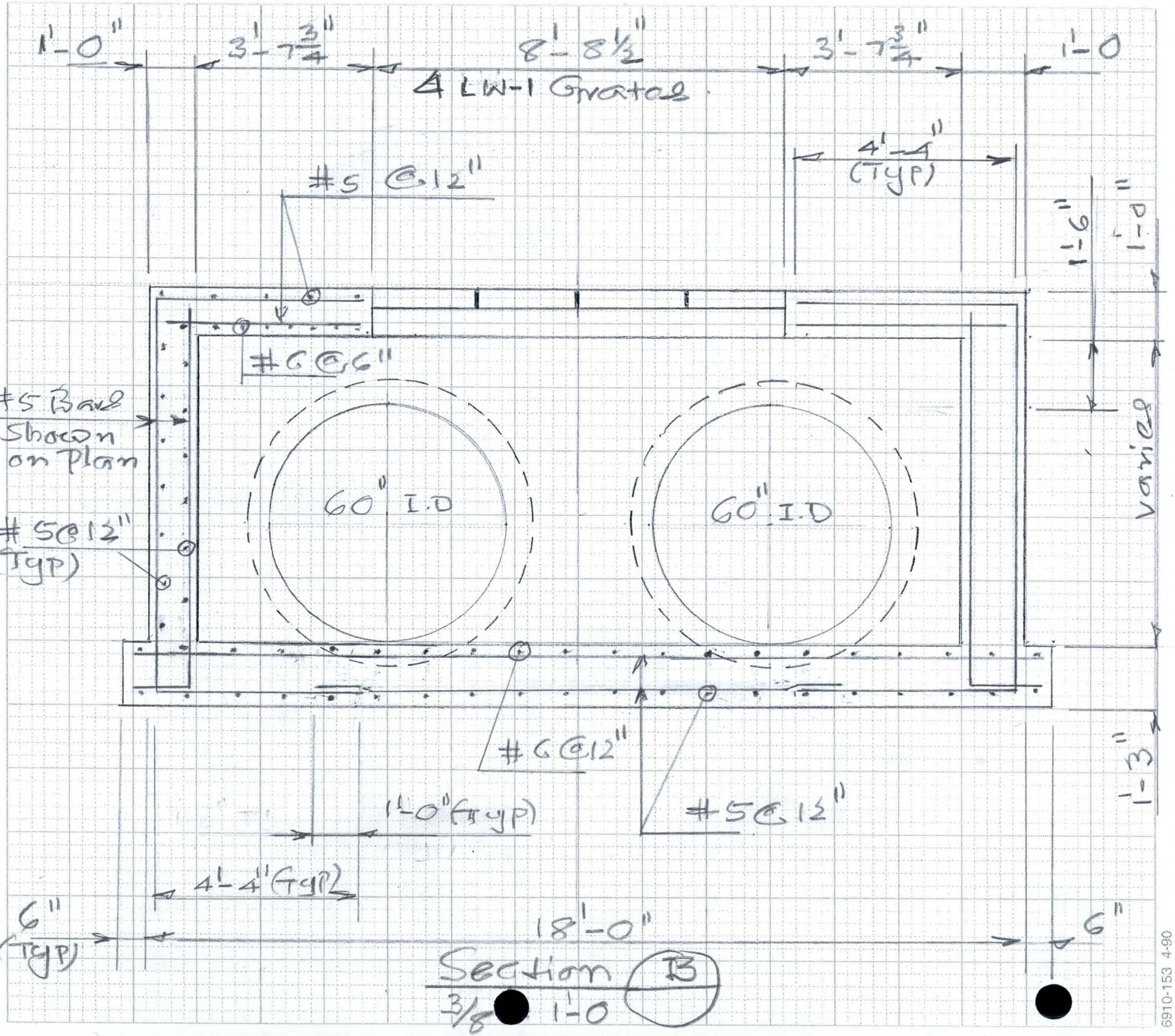

6910-153 4-90

FLOOD CONTROL DISTRICT OF MARICOPA COUNTY

PROJECT LACG PAGE ___ OF ___

DETAIL Junction Str. COMPUTED KVH DATE 2/02

CHECKED BY ___ DATE ___

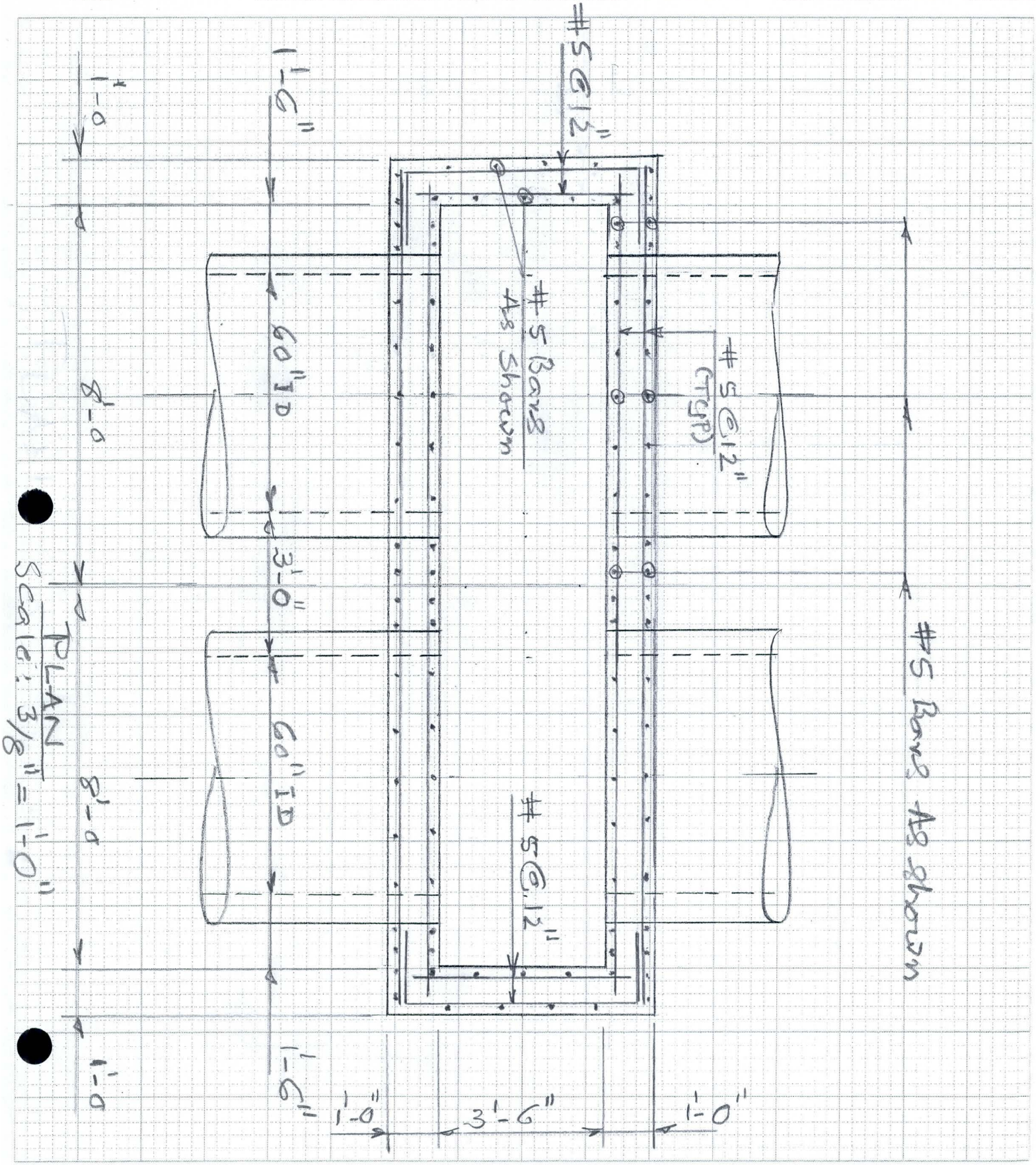

6910-153 4-90

FLOOD CONTROL DISTRICT OF MARICOPA COUNTY

PROJECT LACG PAGE ___ OF ___

DETAIL Junction Str COMPUTED KVH DATE 2/02

CHECKED BY ___ DATE ___

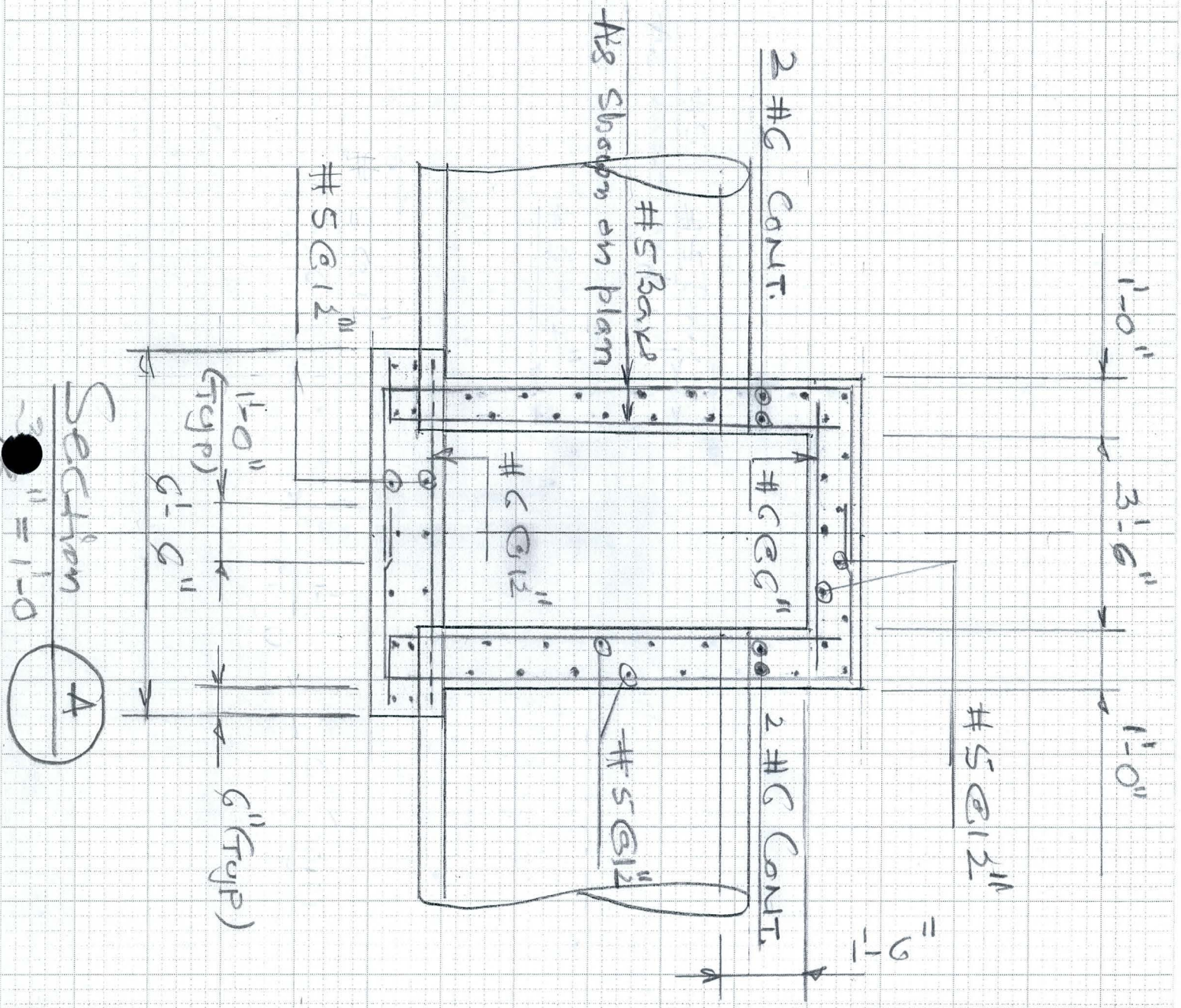

6910-153 4-90

FLOOD CONTROL DISTRICT OF MARICOPA COUNTY

PROJECT LACC PAGE ___ OF ___

DETAIL Retaining Wall COMPUTED KVH DATE ___

#1d CHECKED BY ___ DATE ___

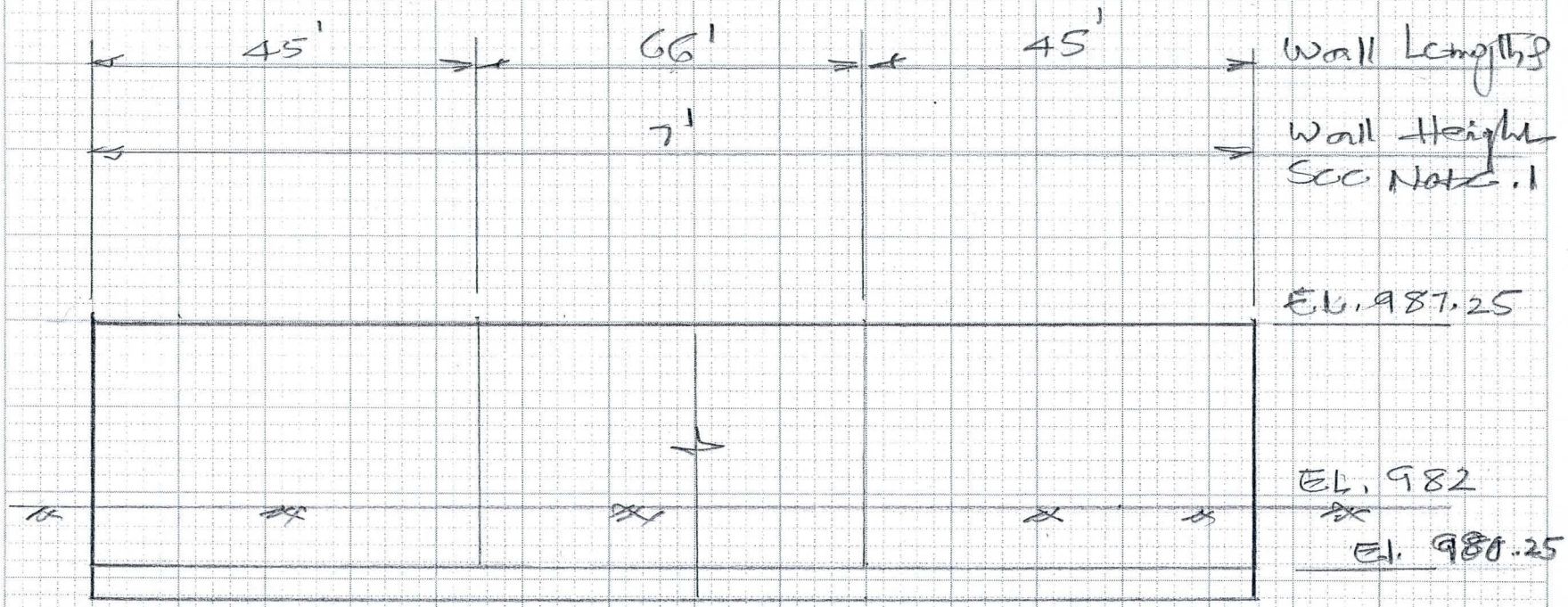

A Elevation

1" = 20
1" = 5

6910-153 4-90

FLOOD CONTROL DISTRICT OF MARICOPA COUNTY

PROJECT LACC PAGE ____ OF ____

DETAIL Retaining wall #10 COMPUTED KVH DATE 4/17

CHECKED BY ____ DATE ____

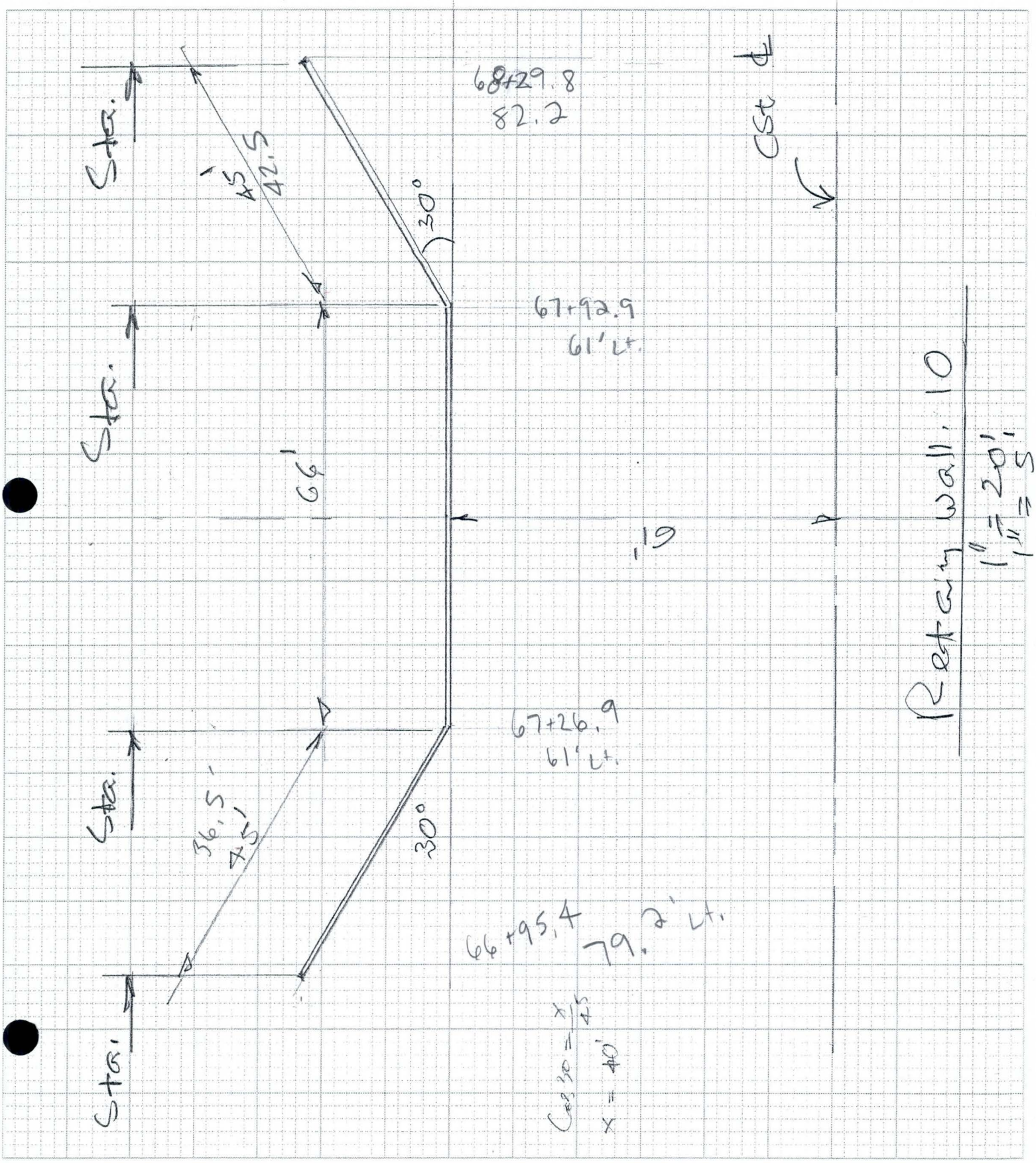

6910-153 4-90

FLOOD CONTROL DISTRICT OF MARICOPA COUNTY

PROJECT LACC PAGE ___ OF ___

DETAIL Retaining walls COMPUTED KVH DATE 4/02

CHECKED BY ___ DATE ___

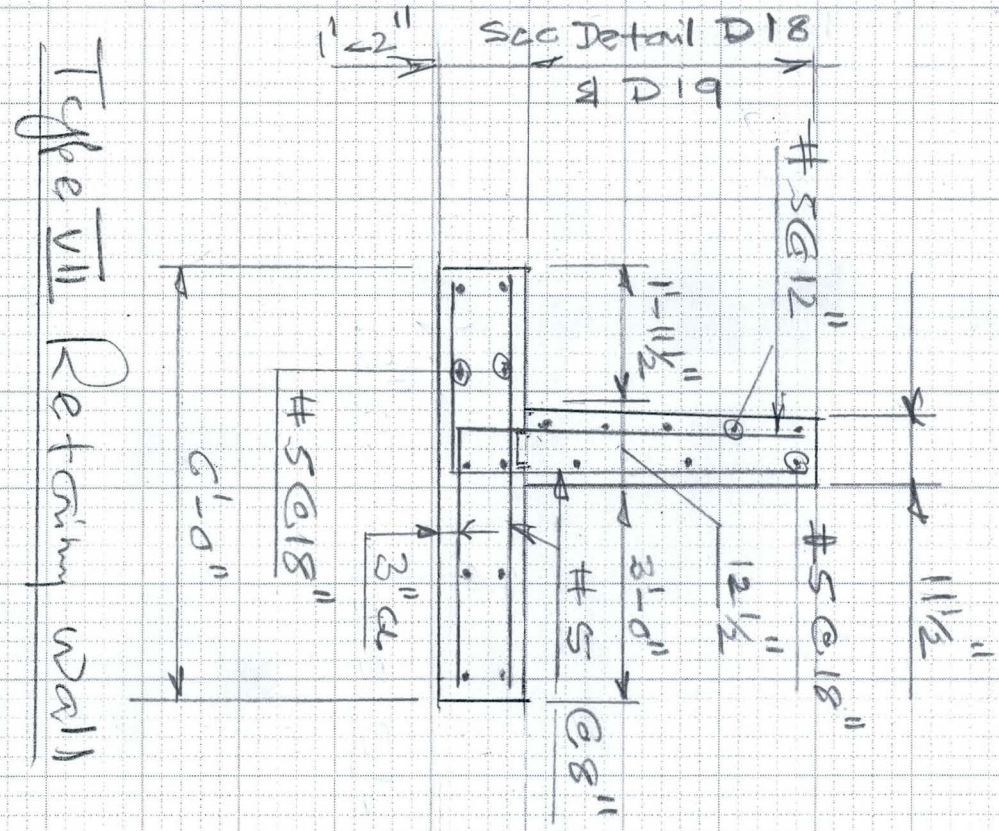

Type VII Retaining Wall

NTS

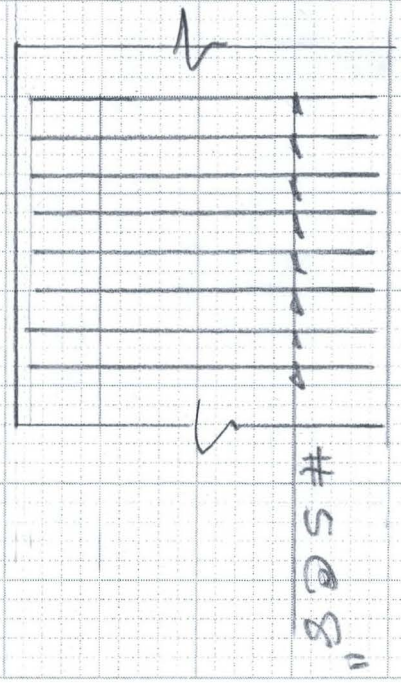

Typical Wall Elevation

NTS

FLOOD CONTROL DISTRICT OF MARICOPA COUNTY

PROJECT LACC PAGE ___ OF ___

DETAIL Retaining walls COMPUTED KWH DATE 4/02

CHECKED BY ___ DATE ___

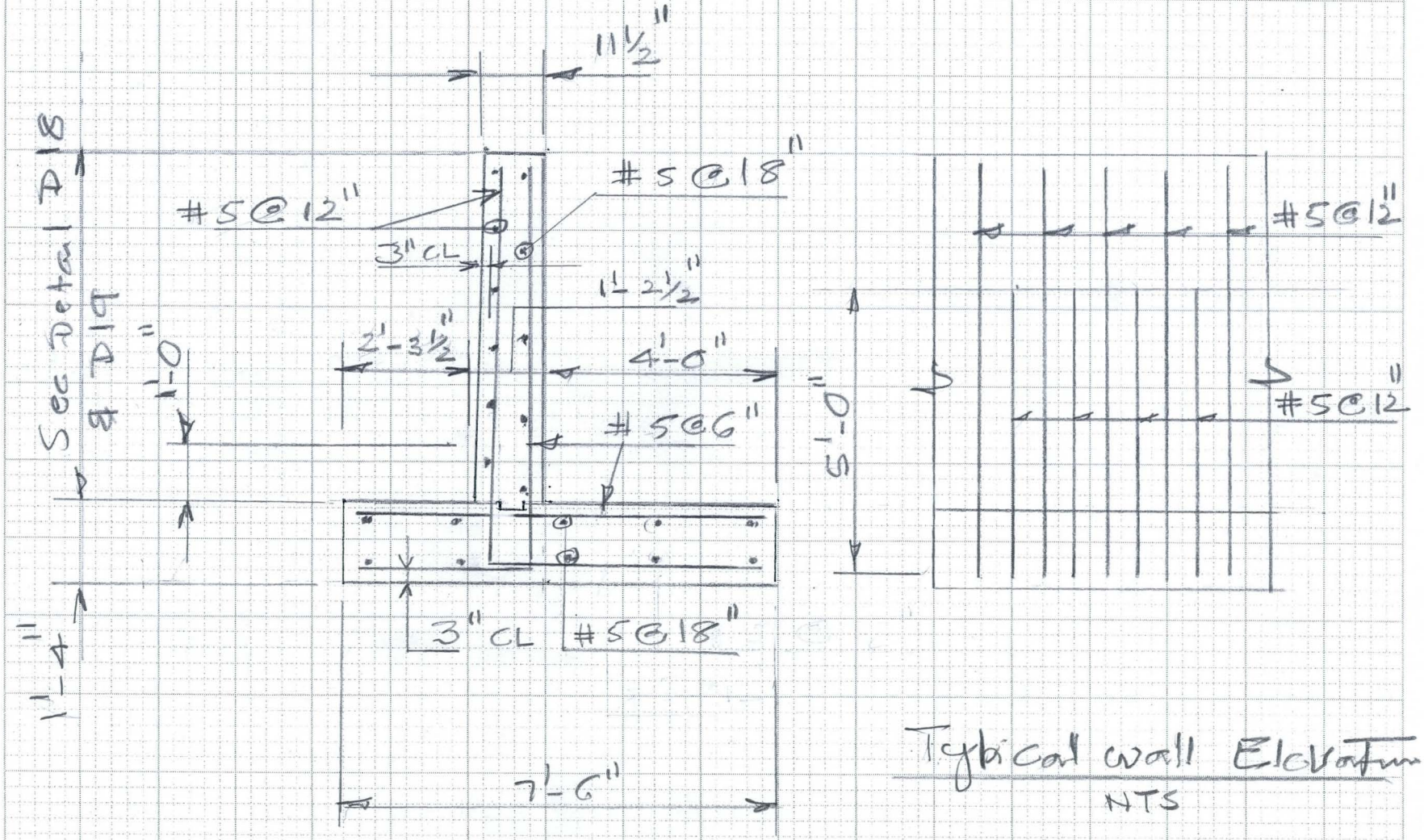

Typical wall Elevation
NTS

Type VI Retaining Wall
NTS

FLOOD CONTROL DISTRICT OF MARICOPA COUNTY

PROJECT LACC PAGE ___ OF ___

DETAIL Retaining walls COMPUTED KVH DATE 4/02

CHECKED BY ___ DATE ___

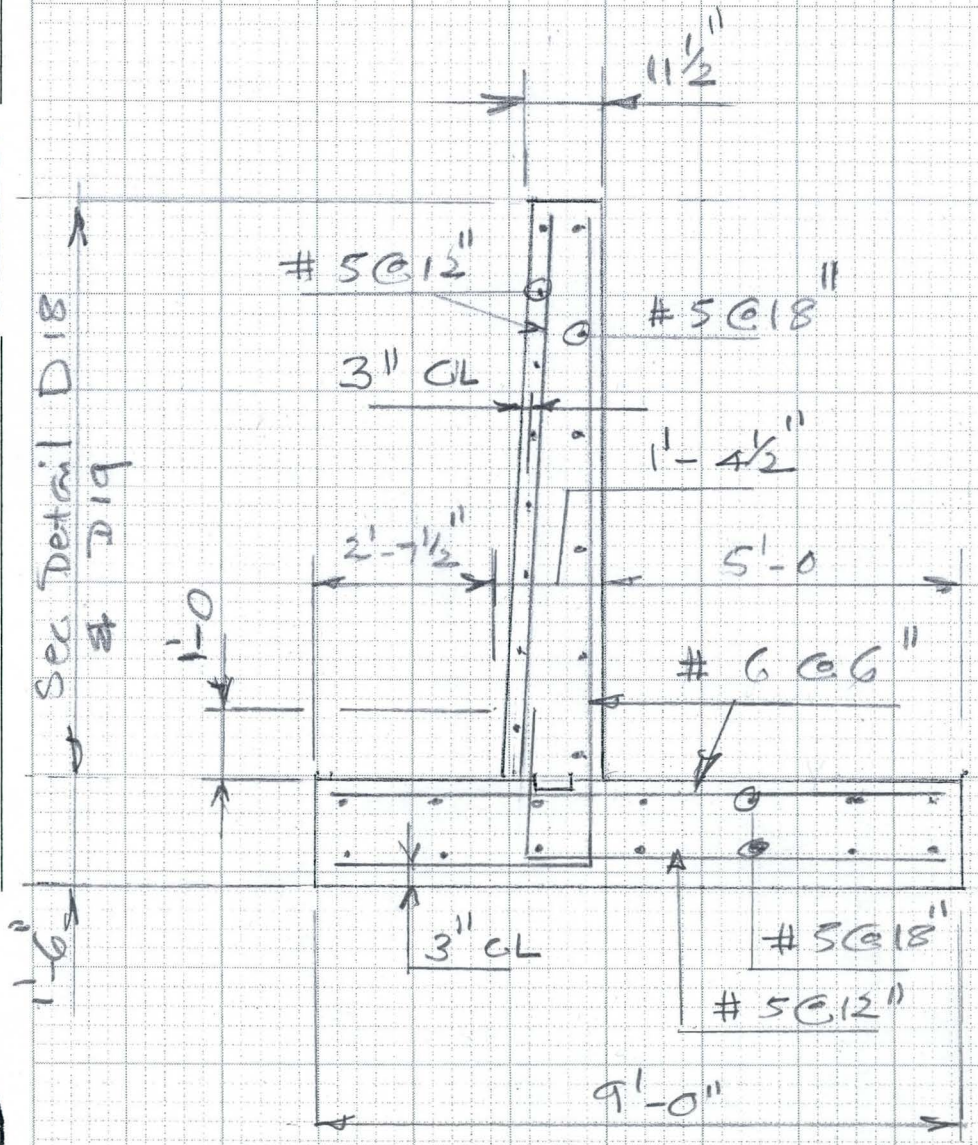

Type V Retaining Wall
NTS

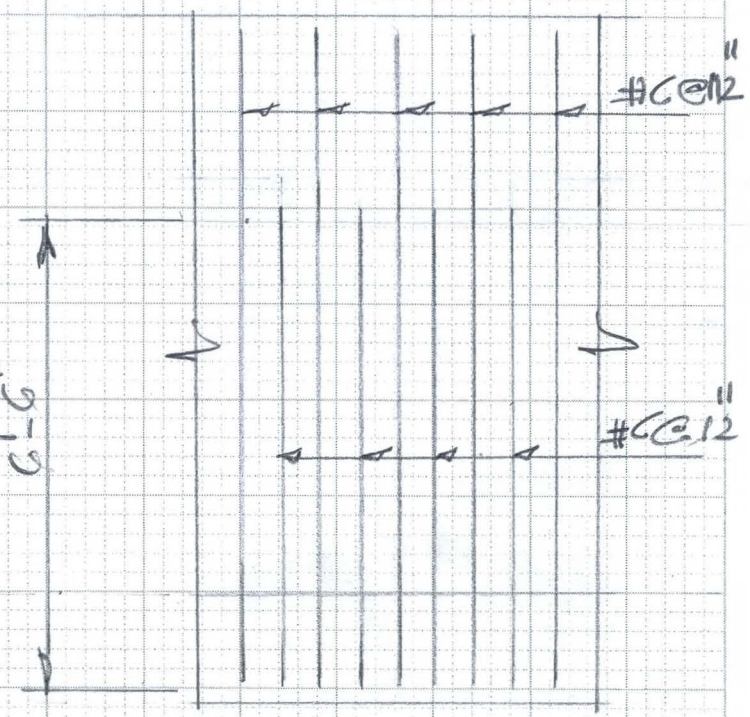

Typical Wall Elevation
NTS

FLOOD CONTROL DISTRICT OF MARICOPA COUNTY

PROJECT LACC PAGE ___ OF ___

DETAIL Retaining wall COMPUTED KVH DATE 4/02

CHECKED BY ___ DATE ___

Wall Ht	Wall Type
16'	Type I
14'	II
12'	III
10'	IV
8'	V
6'	VI
4'	VII

6910-153 4-90

FLOOD CONTROL DISTRICT OF MARICOPA COUNTY

PROJECT LACC PAGE ____ OF ____

DETAIL Retaining walls COMPUTED KVH DATE 4/02

CHECKED BY ____ DATE ____

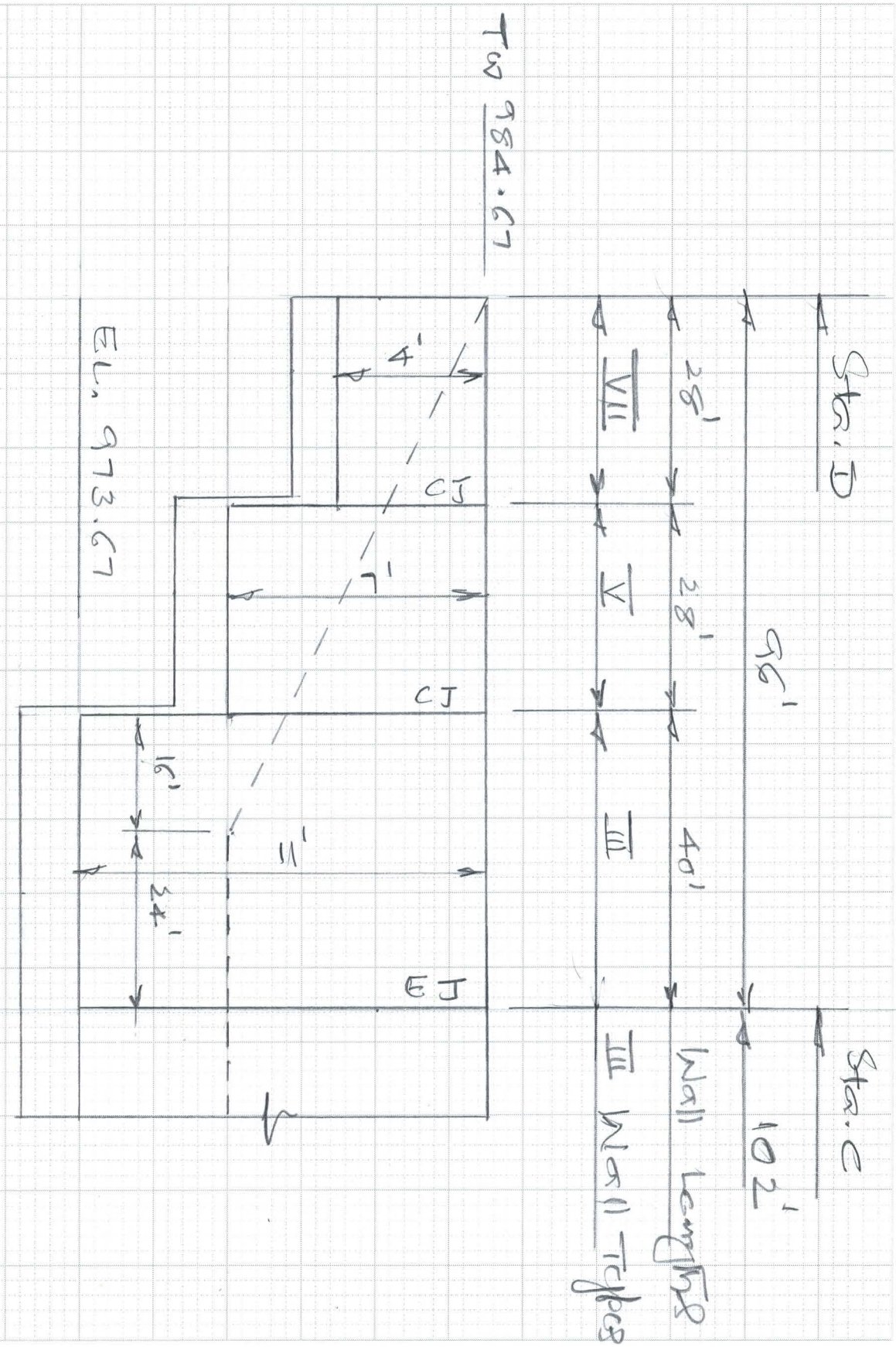

6910-153 4-90

FLOOD CONTROL DISTRICT OF MARICOPA COUNTY

PROJECT LACC PAGE ___ OF ___

DETAIL Retaining walls COMPUTED KVH DATE 4/02

CHECKED BY ___ DATE ___

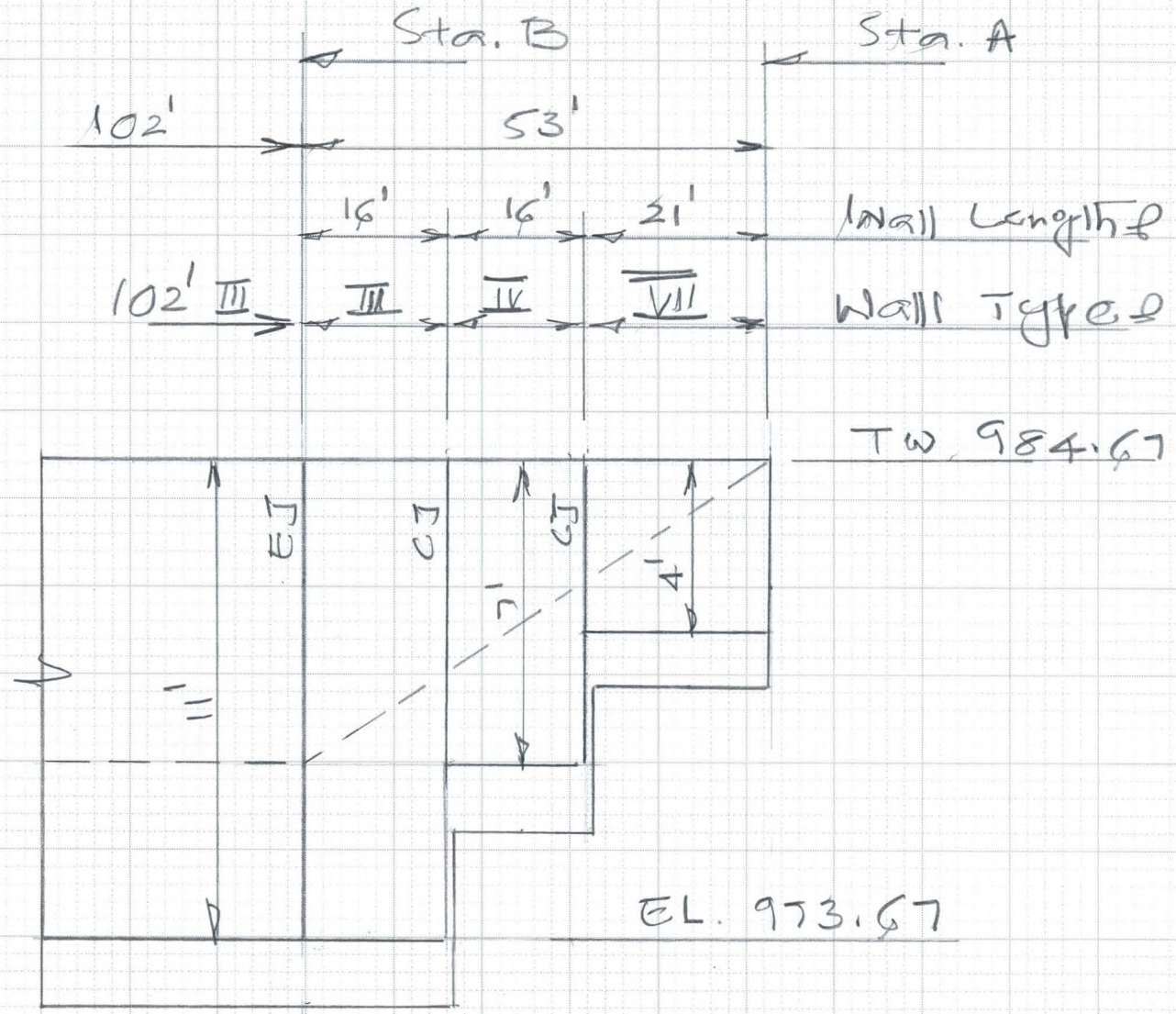

Wall 7

NTS

6910-153 4-90

FLOOD CONTROL DISTRICT OF MARICOPA COUNTY

PROJECT LACC PAGE ____ OF ____

DETAIL Retaining walls COMPUTED KVH DATE 4/02

CHECKED BY ____ DATE ____

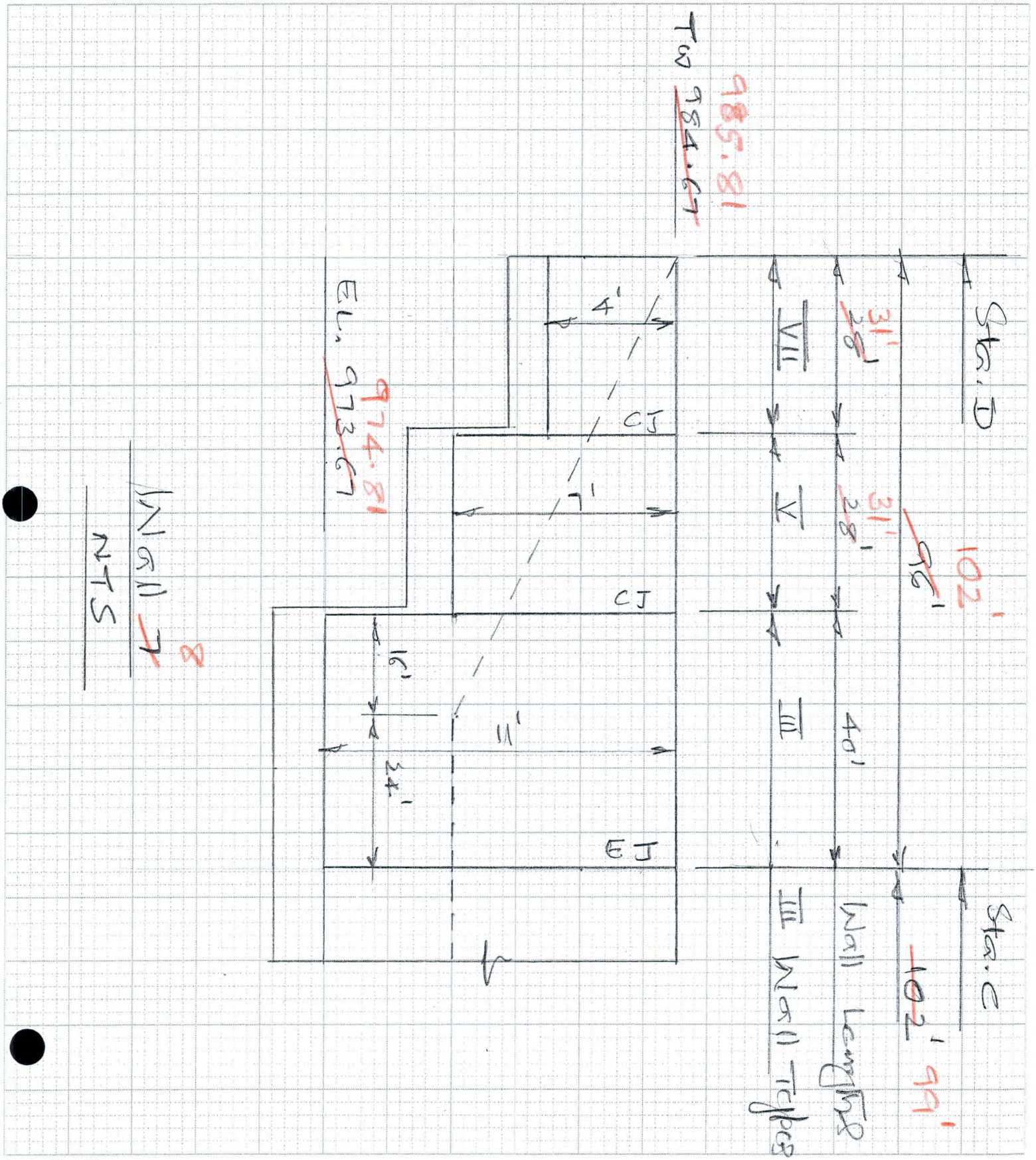

6910-153 4-90

FLOOD CONTROL DISTRICT OF MARICOPA COUNTY

PROJECT LACC PAGE ___ OF ___

DETAIL Retaining walls COMPUTED KVH DATE 4/02

CHECKED BY ___ DATE ___

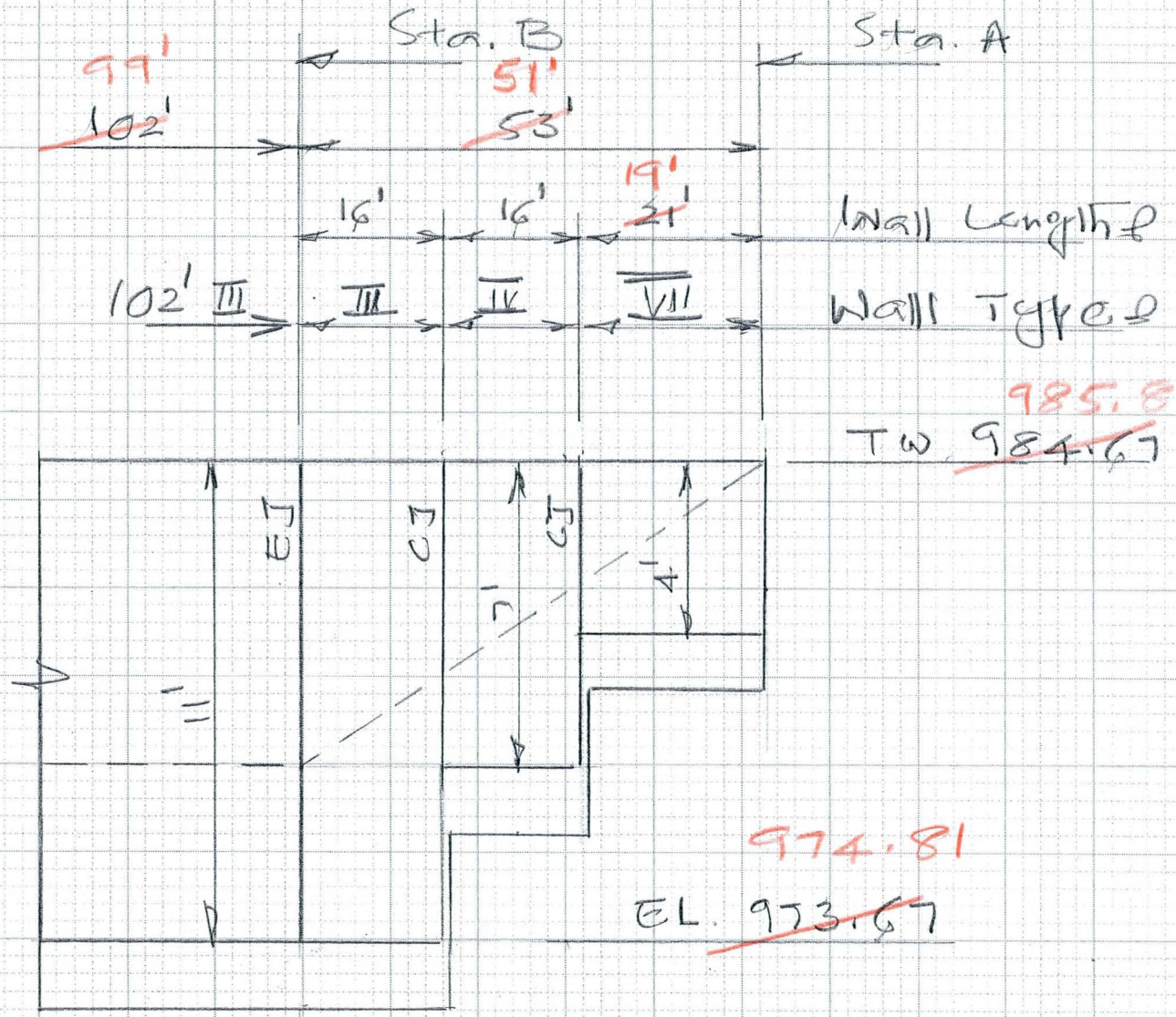

Wall ~~7~~ 8

NTS

6910-153 4-90

Ninyo & Moore Transmittal

5035 South 33rd Street, Phoenix AZ 85040 ◆ Phone 602/243-1600 ◆ Fax 602/243-2699 ◆ www.ninyoandmoore.com

To:	Mike Lopez	**Date:**	August 27, 2001
Firm:	Flood Control District of Maricopa County	**Fax No:**	506-4601
Address:	Phoenix	**Telephone No:**	506-1501
From:	Bob McMichael	**Total Pages Including Transmittal:**	5
Subject:	Laveen Area Conveyance Channel	**Project No:**	600220001

☒ **Urgent** ☐ **For Approval** ☐ **For Your Use** ☐ **Please Reply** ☐ **As Requested**

Original Document: ☐ **Will Not Follow** ☒ **Will Follow** ☐ **By U.S. Mail** ☐ **By Other**

Mike-

Attached is the site plan and logs of borings B-20 and B-21 for the subject project. I wanted to discuss the jack-and-bore with you and will call you later this morning.

Regards,
Bob

- **Geotechnical Engineering**
- **Engineering Geology**
- **Materials Testing and Inspection**
- **Construction Management**
- **Engineering Design**
- **Environmental Engineering**
- **Environmental Site Assessments**
- **Regulatory Compliance and Permitting**
- **Water Quality and Resource Evaluations**
- **Hazardous Waste Management**
- **Soil and Groundwater Remediation**
- **Asbestos and Lead-Based Paint Surveys**
- **Geophysical Studies**
- **Mineral Resource Evaluations**
- **Value Engineering**
- **Forensic Studies**
- **Expert Witness Testimony**

BASEH.CDR

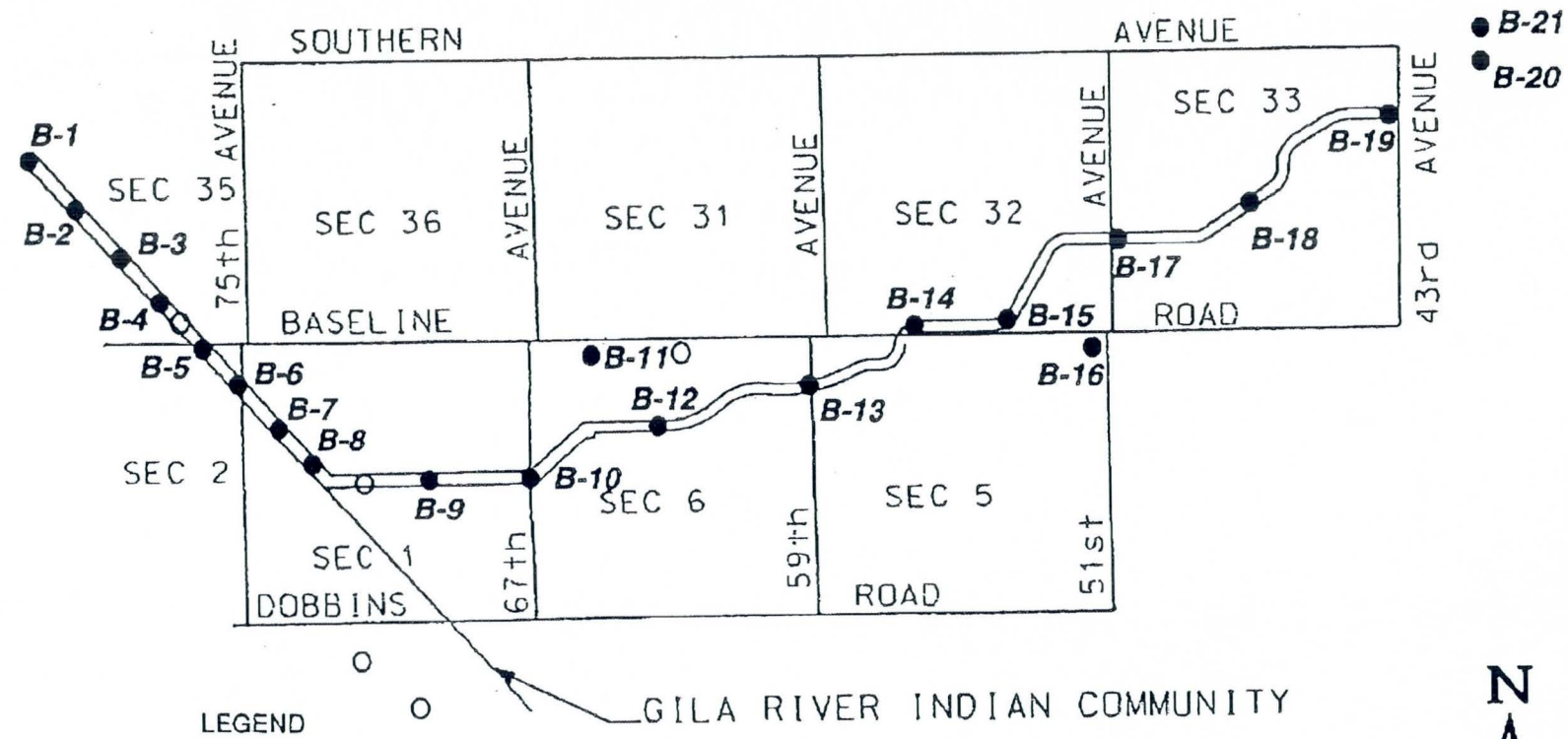

LEGEND

B-21 Approximate location of soil boring

S-5 Approximate location of sediment sample

1 0 1 2
scale miles

Ninyo & Moore

BORING LOCATION MAP

FLOOD CONTROL DISTRICT OF MARICOPA CO.
LAVEEN AREA CONVEYANCE CHANNEL
MARICOPA COUNTY, ARIZONA

PROJECT NO.	DATE	FIGURE
600220001	8/01	2

REFERENCE: SKY III CORPORATION, 1998

DATE DRILLED 6/22/01 BORING NO. B-20
GROUND ELEVATION -- SHEET 1 OF 2
METHOD OF DRILLING CME 75, 6.5" Hollow-Stem Auger
BASELINE STATION = NA LATERAL OFFSET = NA
SAMPLED BY EMS LOGGED BY EMS REVIEWED BY LLG

DEPTH (feet)	SAMPLES (Bulk / Driven)	BLOWS/FOOT	MOISTURE (%)	DRY DENSITY (PCF)	SYMBOL	CLASSIFICATION U.S.C.S.	DESCRIPTION/INTERPRETATION
0						CL	ALLUVIUM: Dark brown, damp, stiff to very stiff, fine sandy CLAY.
		20	12.3	99.5			
5		13	17.1				Stiff; scattered caliche nodules.
		19	12.3	96.6		SM	Brown, damp, loose, silty fine SAND.
10		8	16.5				
		27	3.4			GW-GM	Brown, damp, medium dense, sandy GRAVEL with silt.
15							
20							

Ninyo & Moore

BORING LOG

Flood Control District of Maricopa County
Laveen Area Conveyance Channel

PROJECT NO.	DATE	FIGURE
600220001	8/2001	A-24

DATE DRILLED 6/22/01 BORING NO. B-20

GROUND ELEVATION -- SHEET 2 OF 2

METHOD OF DRILLING CME 75, 6.5" Hollow-Stem Auger

BASELINE STATION = NA LATERAL OFFSET = NA

SAMPLED BY EMS LOGGED BY EMS REVIEWED BY LLG

DEPTH (feet)	SAMPLES Bulk	SAMPLES Driven	BLOWS/FOOT	MOISTURE (%)	DRY DENSITY (PCF)	SYMBOL	CLASSIFICATION U.S.C.S.	DESCRIPTION/INTERPRETATION
20		✓	50/4"				GP	ALLUVIUM: (continued) Brown, damp, very dense, sandy GRAVEL.
								Total Depth = 20.3' (Refusal) Groundwater not encountered. Backfilled on 6/22/01.
25								
30								
35								
40								

Ninyo & Moore

BORING LOG

Flood Control District of Maricopa County
Laveen Area Conveyance Channel

PROJECT NO.	DATE	FIGURE
600220001	8/2001	A-25

DATE DRILLED 6/28/01 BORING NO. B-21

GROUND ELEVATION -- SHEET 1 OF 1

METHOD OF DRILLING CME 75, 6.5" Hollow-Stem Auger

BASELINE STATION = NA LATERAL OFFSET = NA

SAMPLED BY EMS LOGGED BY EMS REVIEWED BY LLG

DEPTH (feet)	SAMPLE: Bulk	SAMPLE: Driven	BLOWS/FOOT	MOISTURE (%)	DRY DENSITY (PCF)	SYMBOL	CLASSIFICATION U.S.C.S.	DESCRIPTION/INTERPRETATION
0	■						CL	ALLUVIUM: Brown, damp, very stiff, silty CLAY; few fine to coarse sand.
	■		35	16.2	106.7			
5	■		21	11.7	97.0		SM	Brown, damp, loose to medium dense, silty fine SAND; few coarse sand.
		▼	16	12.5				Medium dense.
10	■		26	15.7	100.4		ML	Brown, damp, medium dense, fine sandy SILT; few gravel.
							GC	Brown, damp, medium dense, clayey GRAVEL; little fine to coarse sand.
15		▼	85/11"	2.0			GP	Brown, damp, dense, sandy GRAVEL; trace silt.
								Total Depth = 17.5' (Refusal) Groundwater not encountered. Backfilled on 6/28/01.
20								

Ninyo & Moore

BORING LOG

Flood Control District of Maricopa County
Laveen Area Conveyance Channel

PROJECT NO.	DATE	FIGURE
600220001	8/2001	A-26

Ninyo & Moore Transmittal

5035 South 33rd Street, Phoenix AZ 85040 ◆ Phone 602/243-1600 ◆ Fax 602/243-2699 ◆ www.ninyoandmoore.com

To:	Warren Rosebraugh & Michael Lopez	**Date:**	July 19, 2001
Firm:	FCDMC	**Fax No:**	602-506-4601
Address:		**Telephone No:**	
From:	Steve Nowaczyk	**Total Pages Including Transmittal:**	2
Subject:	Laveen Area Conveyance Channel	**Project No:**	600220001

☐ **Urgent**	☐ **For Approval**	☒ **For Your Use**	☐ **Please Reply**	☐ **As Requested**
Original Document:	☒ **Will Not Follow**	☐ **Will Follow**	☒ **By U.S. Mail**	☐ **By Other**

Gentlemen,

Here are our revised lateral pressure calculations for the Laveen project. This analysis assumed that the outrigger pad was 2.5 feet away from the back of the wall, the Poisson's ratio of the soil is 0.35 and the retaining wall is non-yielding. Please let me know if you have any questions.

Steve

- Geotechnical Engineering
- Engineering Geology
- Materials Testing and Inspection
- Construction Management
- Engineering Design
- Environmental Engineering
- Environmental Site Assessments
- Regulatory Compliance and Permitting
- Water Quality and Resource Evaluations
- Hazardous Waste Management
- Soil and Groundwater Remediation
- Asbestos and Lead-Based Paint Surveys
- Geophysical Studies
- Mineral Resource Evaluations
- Value Engineering
- Forensic Studies
- Expert Witness Testimony

DATE DRILLED 6/13/01 BORING NO. B-1

GROUND ELEVATION -- SHEET 1 OF 1

METHOD OF DRILLING CME 75, 6.5" Hollow-Stem Auger

BASELINE STATION = 19+20 LATERAL OFFSET = 150' Rt.

SAMPLED BY EMS LOGGED BY EMS REVIEWED BY LLG

DEPTH (feet)	SAMPLES Bulk	SAMPLES Driven	BLOWS/FOOT	MOISTURE (%)	DRY DENSITY (PCF)	SYMBOL	CLASSIFICATION U.S.C.S.	DESCRIPTION/INTERPRETATION
0							GM	ALLUVIUM: Brown, damp, medium dense, silty GRAVEL; little fine to coarse sand and rounded cobbles.
			29	0.5				
5			22					
							SP	Brown, damp, medium dense, gravelly fine to coarse SAND; few rounded cobbles.
			29	1.1	125.6			
10			29	1.5				
								Total Depth = 11.5' Groundwater not encountered. Backfilled on 6/13/01.
15								
20								

Ninyo & Moore

BORING LOG

Flood Control District of Maricopa County
Laveen Area Conveyance Channel

PROJECT NO.	DATE	FIGURE
600220001	8/2001	A-1

DATE DRILLED 6/13/01 BORING NO. B-2

GROUND ELEVATION -- SHEET 1 OF 1

METHOD OF DRILLING CME 75, 6.5" Hollow-Stem Auger

BASELINE STATION = 29+70 LATERAL OFFSET = 130' Rt.

SAMPLED BY EMS LOGGED BY EMS REVIEWED BY LLG

DEPTH (feet)	SAMPLES	BLOWS/FOOT	MOISTURE (%)	DRY DENSITY (PCF)	SYMBOL	CLASSIFICATION U.S.C.S.	DESCRIPTION/INTERPRETATION
0						SP	ALLUVIUM: Brown, damp, medium dense, fine SAND.
	Driven	15	10.5				
5		17	4.0	112.0		GP-GM	Brown, damp, loose, sandy GRAVEL with silt.
		23	4.5			SP	Brown, moist, medium dense, fine to coarse SAND; little gravel.
10		20	3.0	103.2			Loose.
15		10	7.2				
							Total Depth = 16.5' Groundwater not encountered, backfilled on 6/13/01.
20							

Ninyo & Moore

BORING LOG

Flood Control District of Maricopa County
Laveen Area Conveyance Channel

PROJECT NO.	DATE	FIGURE
600220001	8/2001	A-2

DRILLED 6/13/01 BORING NO. B-3

ND ELEVATION -- SHEET 1 OF 1

METHOD OF DRILLING CME 75, 6.5" Hollow-Stem Auger

BASELINE STATION = 40+00 LATERAL OFFSET = 145' Rt.

SAMPLED BY EMS LOGGED BY EMS REVIEWED BY LLG

OWS/FOOT	MOISTURE	DRY DENSITY	SYMBOL	CLASSIFICATION U.S.C	DESCRIPTION/INTERPRETATION
				ML	ALLUVIUM: Brown, damp, loose, fine sandy SILT.
7	10.0				
4	14.5	82.2			Very loose.
3	10.2				
				CL/SC	Brown, moist, firm, fine sandy CLAY to loose, clayey fine SAND.
9	17.0	91.3			
				SC	Brown, moist, loose, clayey fine to medium SAND.
8	15.5				
					Total Depth = 13.0' Groundwater not encountered. Backfilled on 6/13/01.

Vinyo & Moore

BORING LOG

Flood Control District of Maricopa County
Laveen Area Conveyance Channel

PROJECT NO.	DATE	FIGURE
600220001	8/2001	A-3

APPENDIX B

DATE DRILLED 6/13/01 BORING NO. B-4

GROUND ELEVATION -- SHEET 1 OF 1

METHOD OF DRILLING CME 75, 6.5" Hollow-Stem Auger

BASELINE STATION = 50+80 LATERAL OFFSET = 145' Rt.

SAMPLED BY EMS LOGGED BY EMS REVIEWED BY LLG

BLOWS/FOOT	MOISTURE (%)	DRY DENSITY (PCF)	SYMBOL	CLASSIFICATION U.S.C.S.	DESCRIPTION/INTERPRETATION
				CL	ALLUVIUM: Brown, damp, firm, silty CLAY; little fine sand.
13	14.0	92.0			
4	16.8				
				SM	Brown, moist, loose, silty fine SAND.
14	7.7	94.4			
14	15.4	92.7			
				SP	Brown, moist, medium dense, fine to medium SAND.
13	2.6				
					Total Depth = 13.0' Groundwater not encountered. Backfilled on 6/13/01.

Ninyo & Moore

BORING LOG

Flood Control District of Maricopa County
Laveen Area Conveyance Channel

PROJECT NO.	DATE	FIGURE
600220001	8/2001	A-4

DATE DRILLED 6/13/01 BORING NO. B-5

GROUND ELEVATION -- SHEET 1 OF 2

METHOD OF DRILLING CME 75, 6.5" Hollow-Stem Auger

BASELINE STATION = 60+00 LATERAL OFFSET = 145' Rt.

SAMPLED BY EMS LOGGED BY EMS REVIEWED BY LLG

BLOWS/FOOT	MOISTURE (%)	DRY DENSITY (PCF)	SYMBOL	CLASSIFICATION U.S.C.S.	DESCRIPTION/INTERPRETATION
				CL	ALLUVIUM: Brown, damp, firm, silty CLAY; few fine to coarse sand.
6	12.8	95.2			
6	12.1	90.6			Some fine sand; few gravel.
				ML	Brown, damp, sitff, clayey SILT; some fine sand; few gravel.
12	11.2	88.9			
21	14.5	90.9			Very stiff.
					Few rounded cobbles.
20					

Ninyo & Moore

BORING LOG

Flood Control District of Maricopa County
Laveen Area Conveyance Channel

PROJECT NO.	DATE	FIGURE
600220001	8/2001	A-5

DATE DRILLED 6/13/01 BORING NO. B-6

GROUND ELEVATION -- SHEET 2 OF 2

METHOD OF DRILLING CME 75, 6.5" Hollow-Stem Auger

BASELINE STATION = 70+70 LATERAL OFFSET = 140' Rt.

SAMPLED BY EMS LOGGED BY EMS REVIEWED BY LLG

BLOWS/FOOT	MOISTURE (%)	DRY DENSITY (PCF)	SYMBOL	CLASSIFICATION U.S.C.S.	DESCRIPTION/INTERPRETATION
28	2.6	99.5		SP	ALLUVIUM: (continued) Brown, moist, medium dense, fine to medium SAND; trace silt.
96/9"	19.7			SC	Brown, moist to wet, very dense, clayey fine to coarse SAND; few gravel.
54	▼			GP	Brown, wet, medium dense, sandy GRAVEL; trace clay.
					Total Depth = 31.5' Groundwater encountered at 30'. Backfilled on 6/13/01.

Vinyo & Moore

BORING LOG

Flood Control District of Maricopa County
Laveen Area Conveyance Channel

PROJECT NO.	DATE	FIGURE
600220001	8/2001	A-8

APPENDIX B

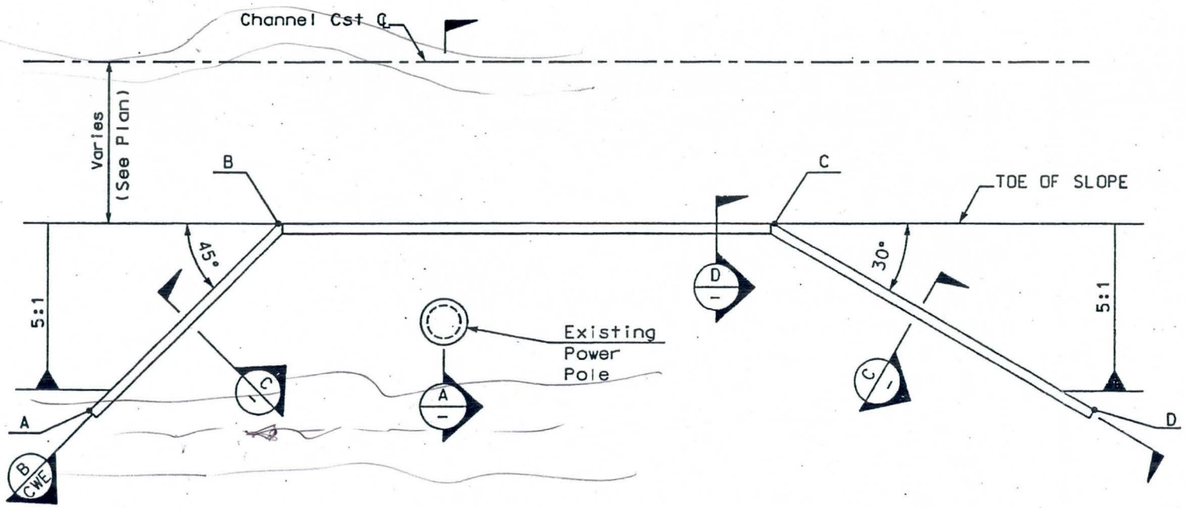

POWERLINE PROTECTION PLAN VIEW
NTS

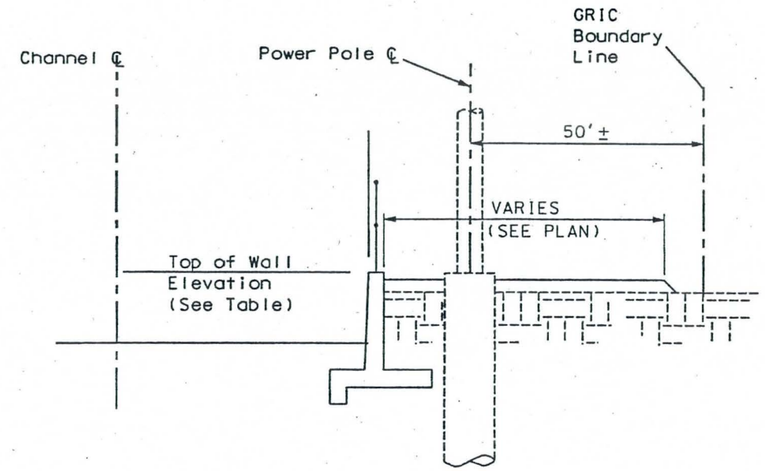

A/– SECTION
NTS

WALL NO.	WALL SECTION D DIMENSION (ft)					
	B	C	E	F	H	W
1.2	2.25	5.25	7.75	2.50	10.00	15.50
3	2.50	5.50	8.50	2.50	13.00	16.50
4.5	2.50	5.50	8.50	2.50	14.00	16.50
6	3.00	7.00	8.75	2.25	16.00	18.00
7.8	2.25	5.25	8.50	2.50	11.00	16.00

— 10' — B1 = 20, B2 = 20 & 10
— 14' — B3 = 8, B4 = 13, B5 = 20
— 16 — B6 = 18 & 28
— 12' — B7 = ? B8 = 13 & 39

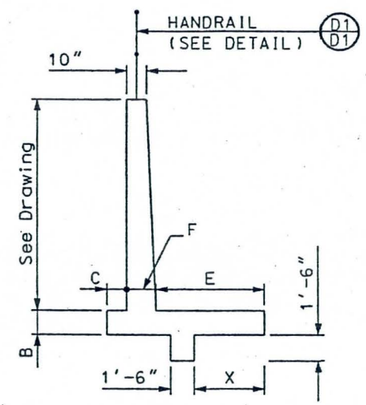

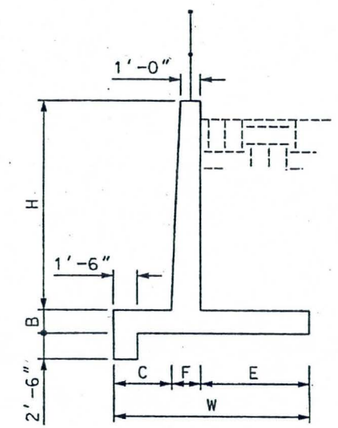

D/– SECTION
NTS

WALL NO.	STATION OFFSET				
	A	B	C	D	ELEVATION
1	18+44.6, 75.4' RT	18+75, 45' RT	19+75, 45' RT	20+27.4, 85.7' RT	976.75
2	28+94.6, 75.4' RT	29+25, 45' RT	30+25, 45' RT	30+77.4, 73.3' RT	977.87
3	39+32.4, 88.2' RT	39+75, 47.7' RT	40+75, 35.5' RT	41+60, 80.2' RT	982.06
4	49+79.6, 80.4' RT	50+25, 35' RT	51+25, 35' RT	52+03.4, 80.3' RT	983.20
5	NA	59+92.73, 35' RT	61+55, 35' RT	62+70.2, 101.5' RT	*
6	70+29.7, 90.4' RT	70+85, 35' RT	71+85, 35' RT	72+80.7, 90.3' RT	987.48
7	81+16.6, 73.4' RT	81+55, 35' RT	82+55, 35' RT	83+18.4, 71.6' RT	984.62
8	91+93.7, 65.4' RT	92+24, 35' RT	93+24, 35.6' RT	93+71.5, 72.2' RT	985.78

* See Drawing __ For Elevation

For steel reinforcement & wall dimensions see ADOT Standard Drawings B.18.10, B.18.20 for Case II cantilever retaining walls on spreading footings.

C/– SECTION
NTS

60% SUBMITTAL

FLOOD CONTROL DISTRICT OF MARICOPA COUNTY
ENGINEERING DIVISION

LAVEEN AREA CONVEYANCE CHANNEL
FCD PROJECT NO. 1170831
FCD CONTRACT NO.

PRELIMINARY NOT FOR CONSTRUCTION		BY	DATE
	DESIGNED	SKH, KVH	05/01
	DRAWN	FC	05/01
	CHECKED		

DRAWING NO. PWR	POWER POLE PROTECTION	SHEET OF

_:\Dgn\PP-40\PwrProt_typ.dgn Jun. 01, 2001 15:39:36

FLOOD CONTROL DISTRICT OF MARICOPA COUNTY

PROJECT LACC PAGE 2 OF 2

DETAIL Ret. wall @ Power poles COMPUTED KWH DATE 9/01

CHECKED BY _____ DATE _____

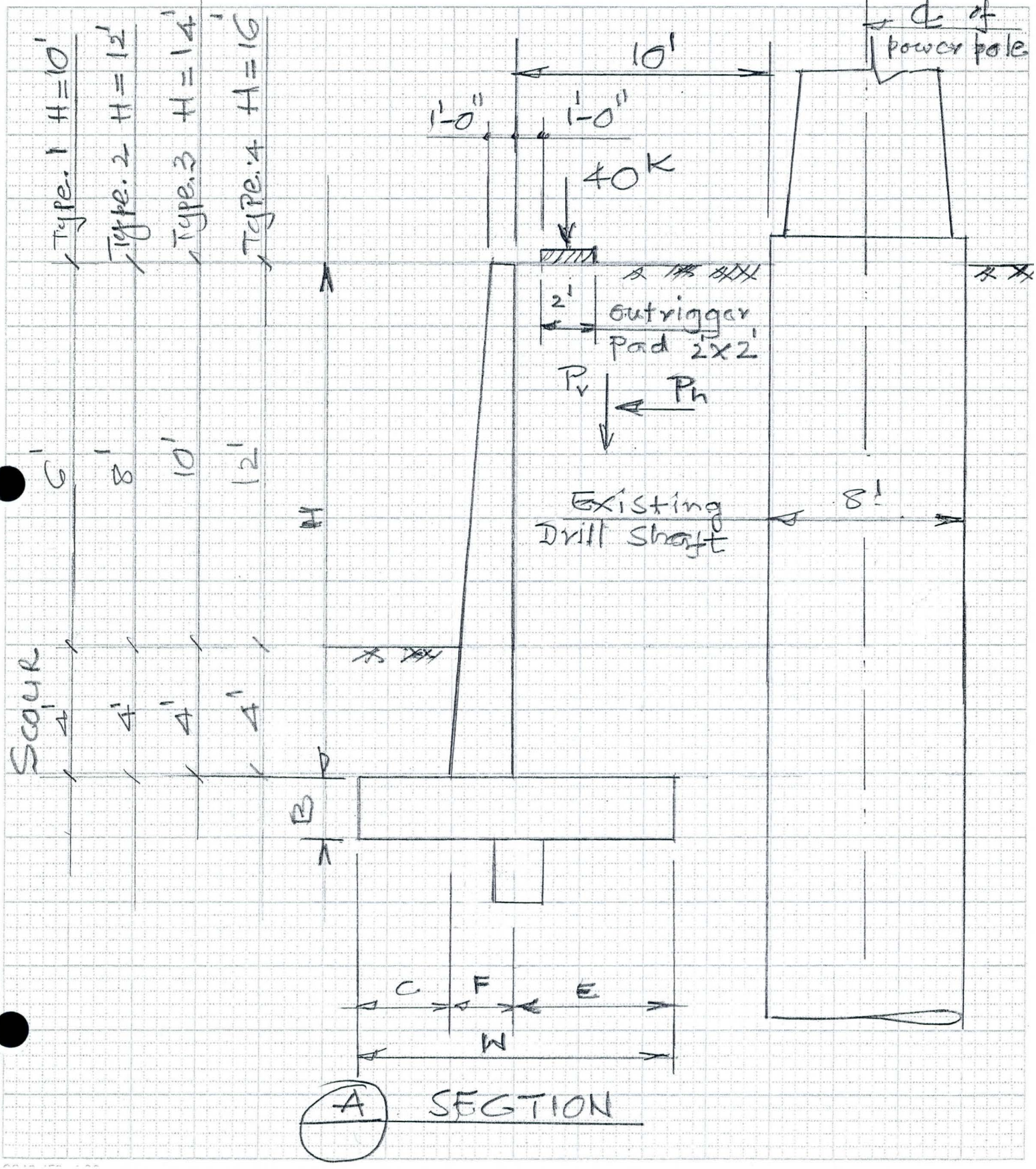

FLOOD CONTROL DISTRICT OF MARICOPA COUNTY

PROJECT LACC PAGE 1 OF 2

DETAIL Retaining Wall COMPUTED KVH DATE 9/01

@ Power Poles CHECKED BY _____ DATE _____

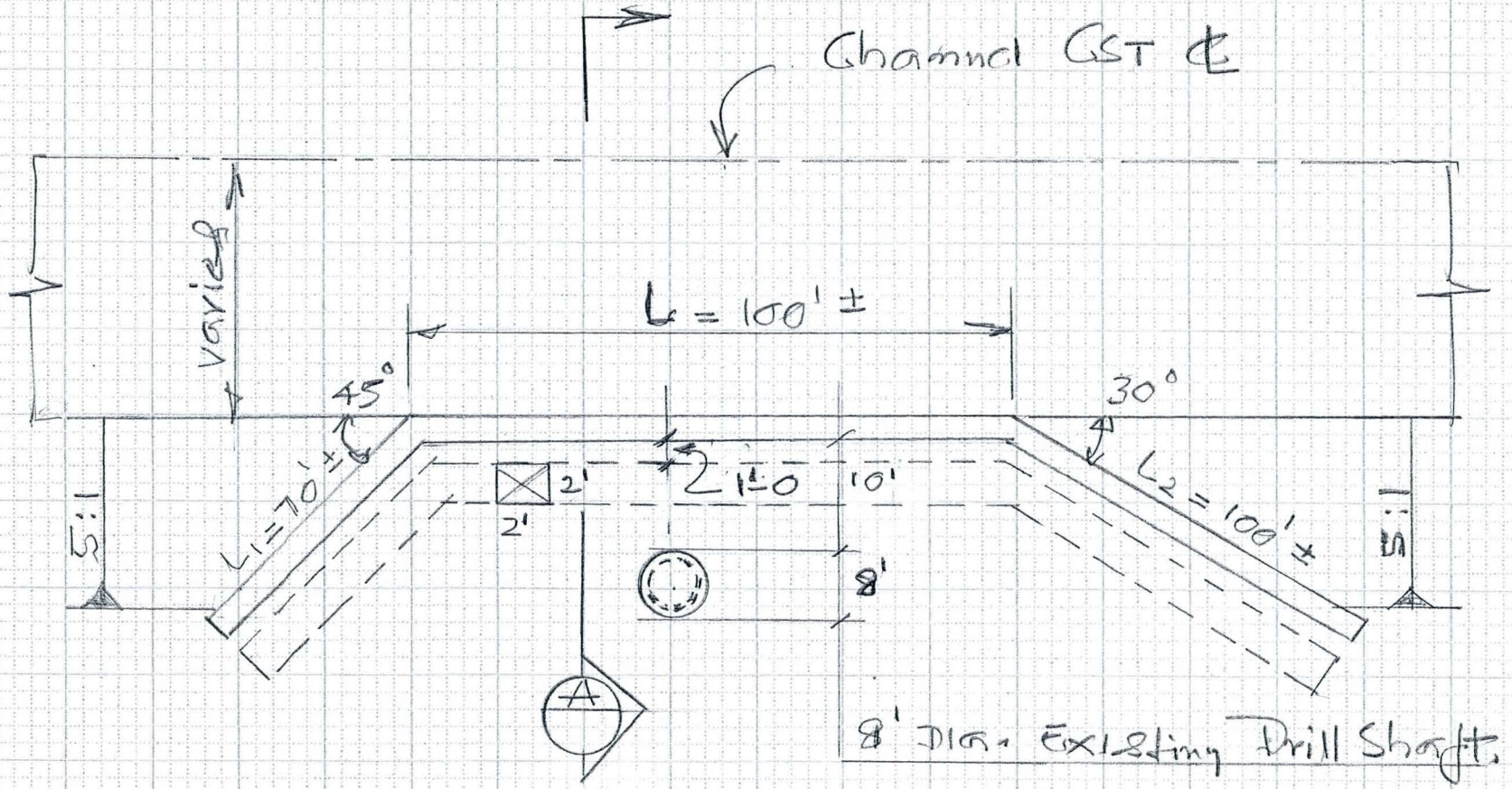

Plan View
(NTS)

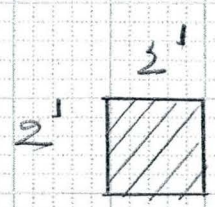

68 psi ≈ 40K

Outrigger Pad

FLOOD CONTROL DISTRICT OF MARICOPA COUNTY

PROJECT LACC PAGE ____ OF ____

DETAIL Crane Loading COMPUTED KVH DATE 9/01

CHECKED BY ____ DATE ____

Crane Loading

Lorame Crane

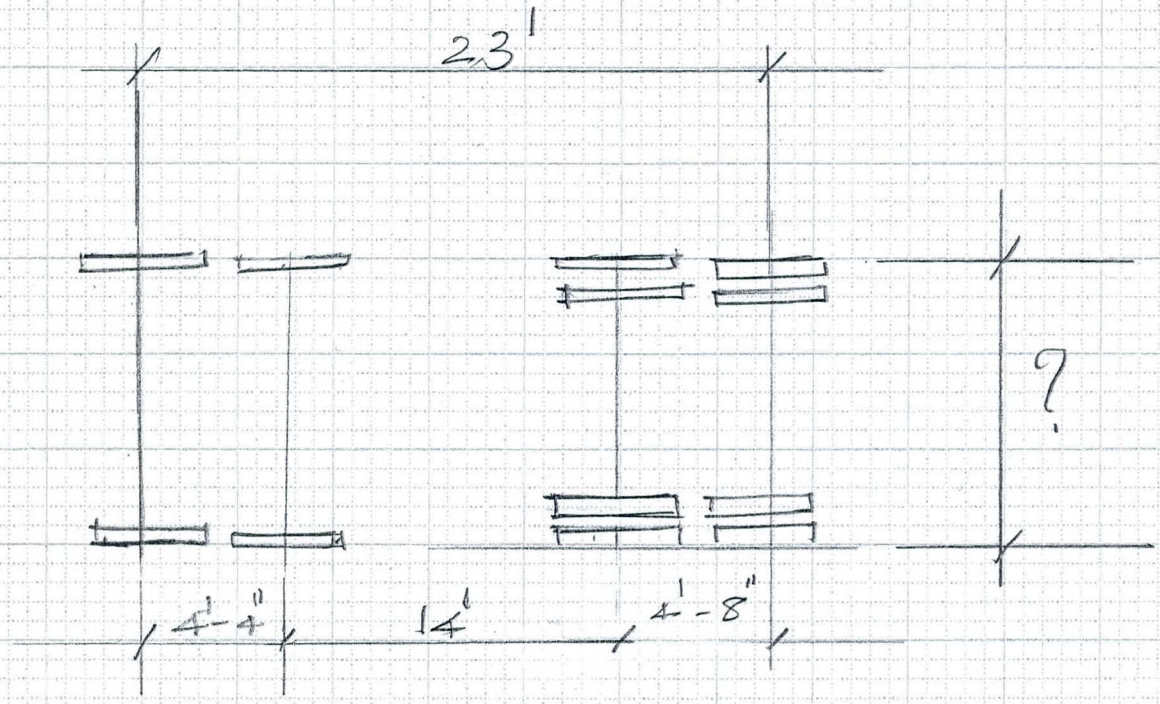

Axle Load	8.5K	8.5K	40K	40K	Total 97K
wheel L	4.25K	4.25	10K	10K	
Axle L.	18K	18K	30.5K	30.5K	Tot. 97K
wheel L	9K	9K	7.625K	7.625K	

Total Crane wt = 97K Say 100K or 50T

8910-153 4-90

FLOOD CONTROL DISTRICT OF MARICOPA COUNTY

PROJECT LACG PAGE ____ OF ____

DETAIL 5' DIA. PIPES COMPUTED KVH DATE 10/01

CHECKED BY ____ DATE ____

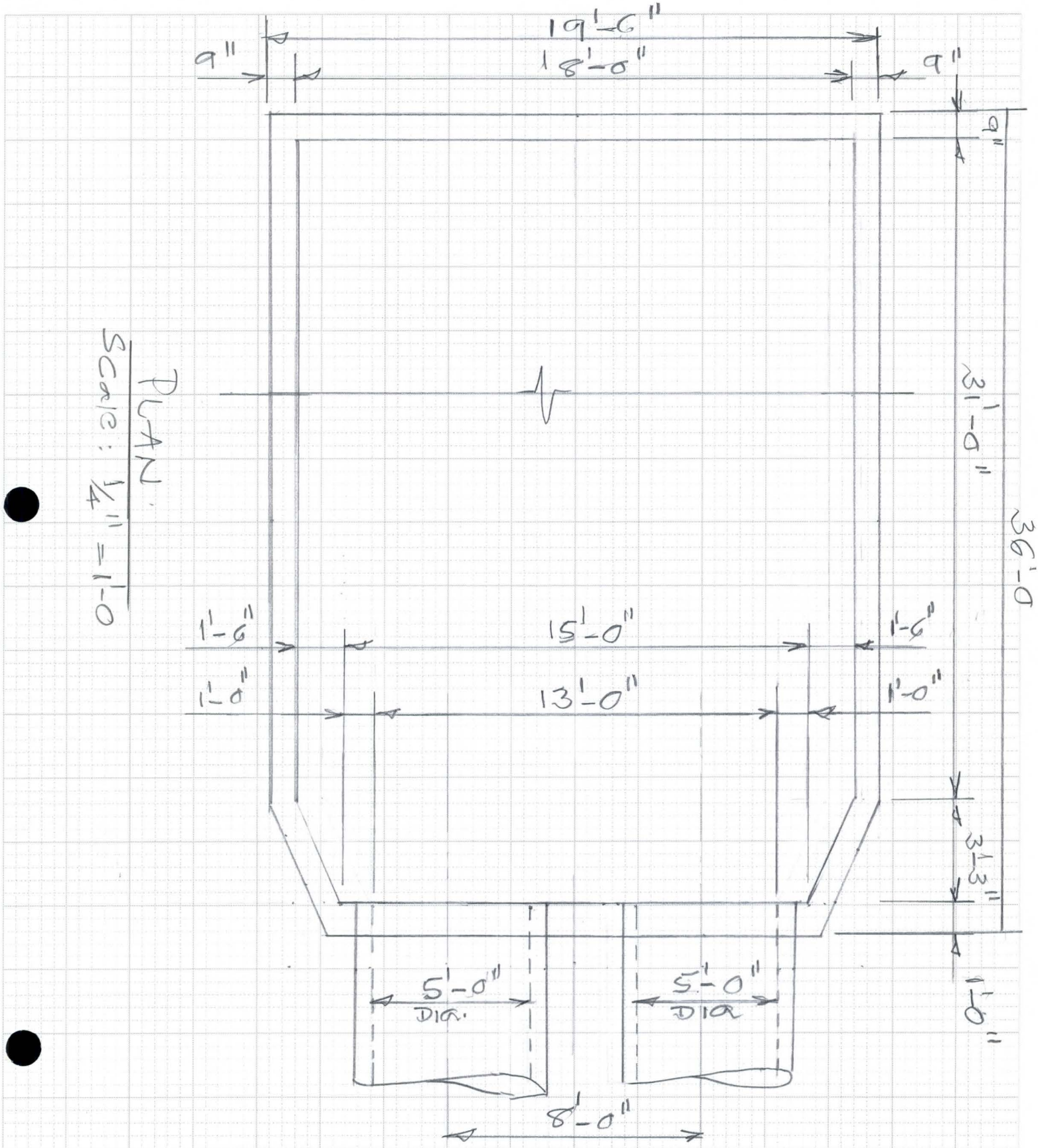

6910-153 4-90

FLOOD CONTROL DISTRICT OF MARICOPA COUNTY

PROJECT LACC PAGE ___ OF ___

DETAIL 2'-6" ϕ pipe COMPUTED KRH DATE 10/01

CHECKED BY ___ DATE ___

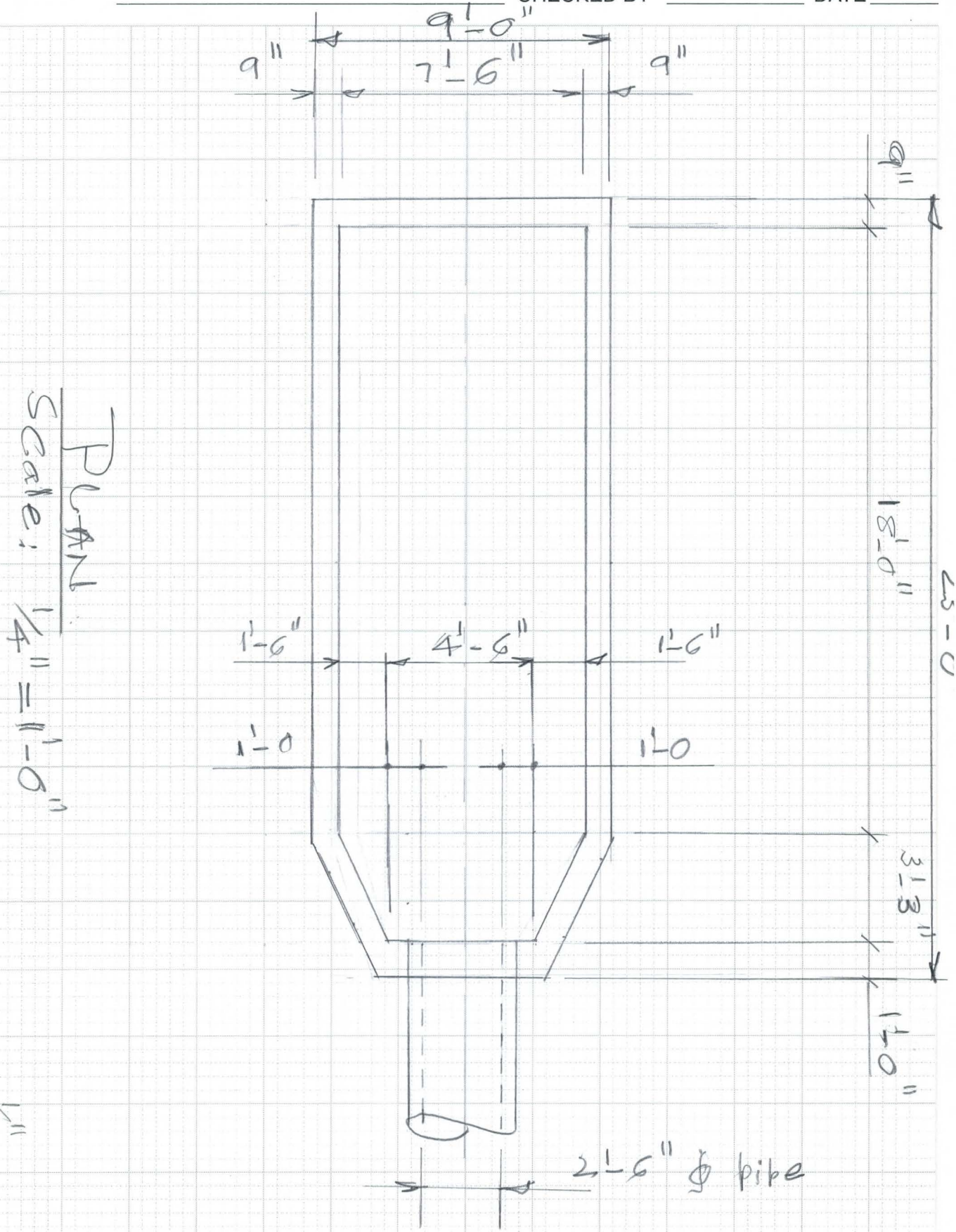

6910-153 4-90

FLOOD CONTROL DISTRICT OF MARICOPA COUNTY

PROJECT LACC PAGE ____ OF ____

DETAIL Walls for Pipes 2'-6"ϕ & 5'-0"ϕ COMPUTED KVH DATE 10/0

CHECKED BY ____ DATE ____

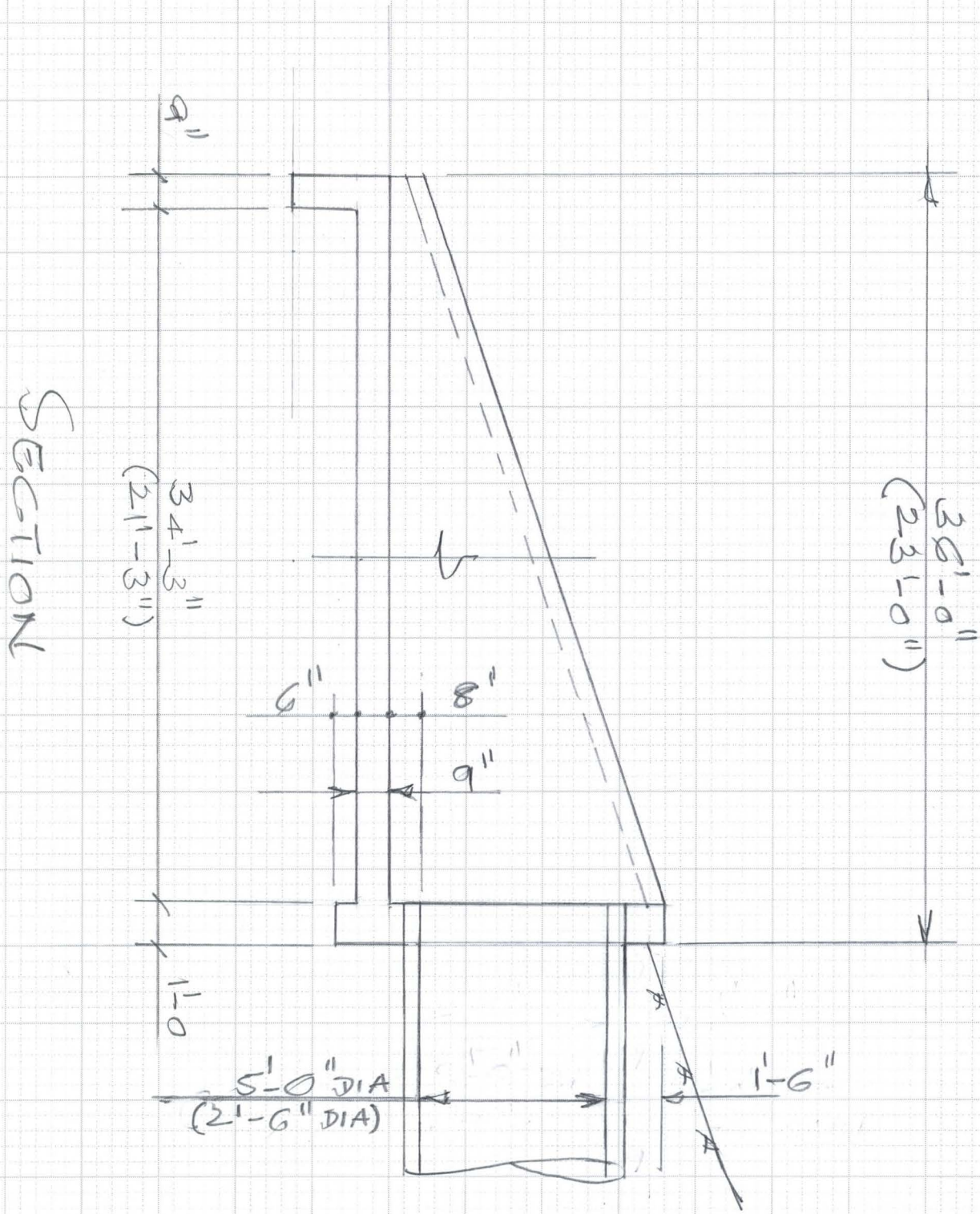

6910-153 4-90

FLOOD CONTROL DISTRICT OF MARICOPA COUNTY

PROJECT LACC PAGE ____ OF ____

DETAIL Walls for COMPUTED KVH DATE 10/0

Pipes 2'-6" ϕ - 5' ϕ CHECKED BY ____ DATE ____

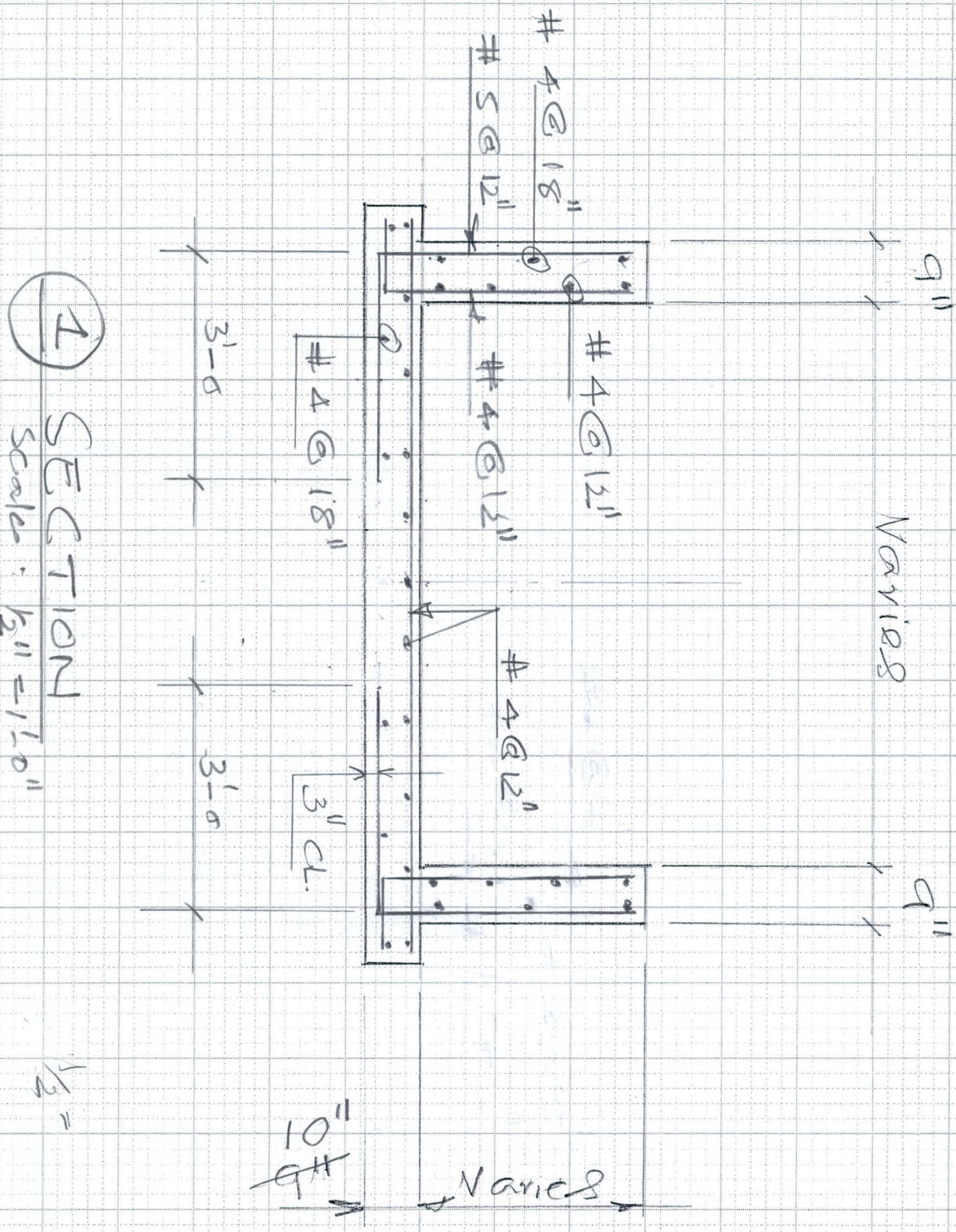

1 SECTION
Scale: 1/2" = 1'-0"

6910-153 4-90

FLOOD CONTROL DISTRICT OF MARICOPA COUNTY

PROJECT LACC PAGE ____ OF ____

DETAIL Inlets for Pipes 2'-6" ϕ & 5' ϕ COMPUTED KVH DATE 10/01

CHECKED BY ____ DATE ____

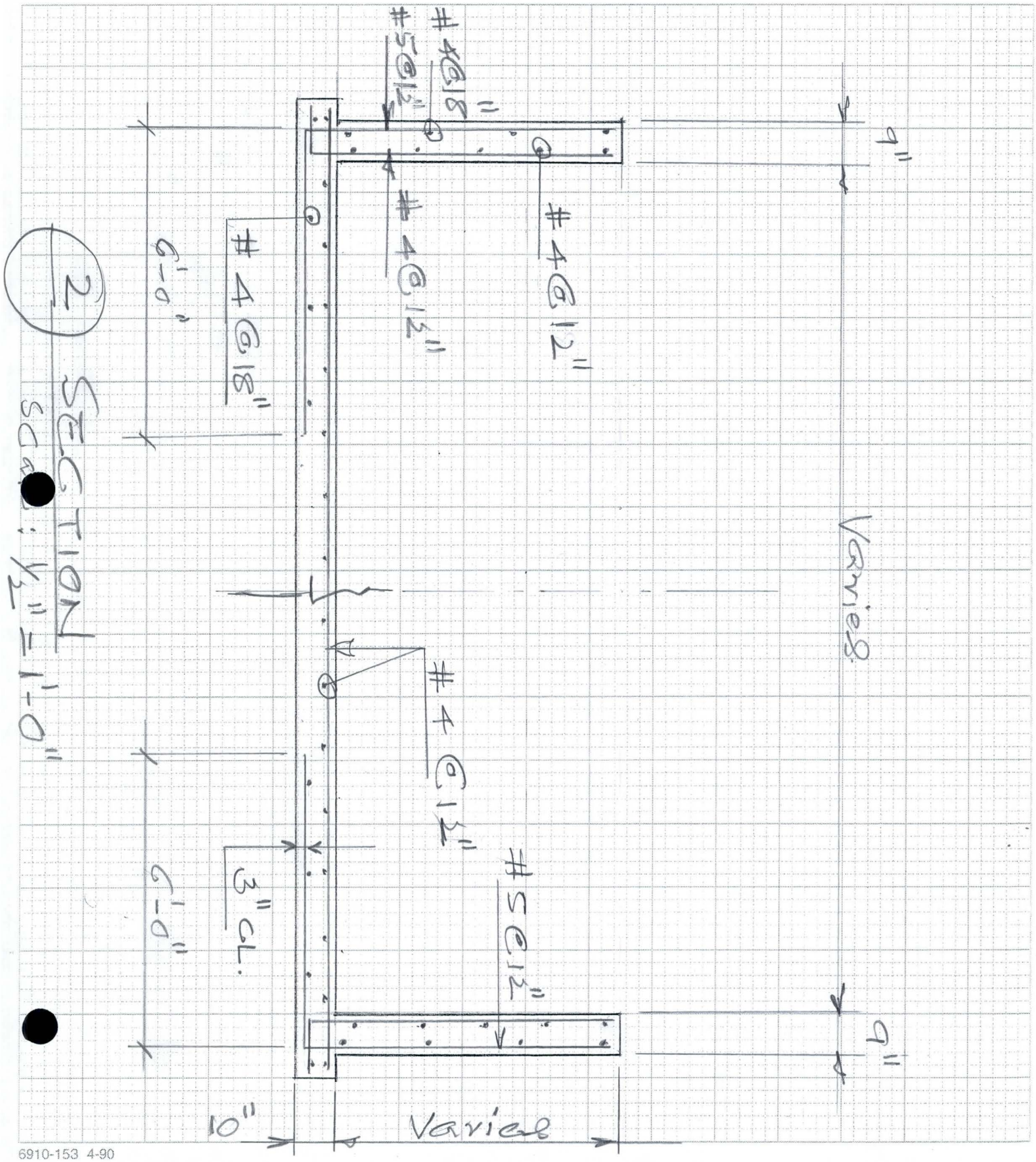

6910-153 4-90

FLOOD CONTROL DISTRICT OF MARICOPA COUNTY

PROJECT LACC PAGE ____ OF ____

DETAIL Walls for Pipes 2'-6" ϕ & 5'-0" ϕ COMPUTED KVH DATE 10/0

CHECKED BY ____ DATE ____

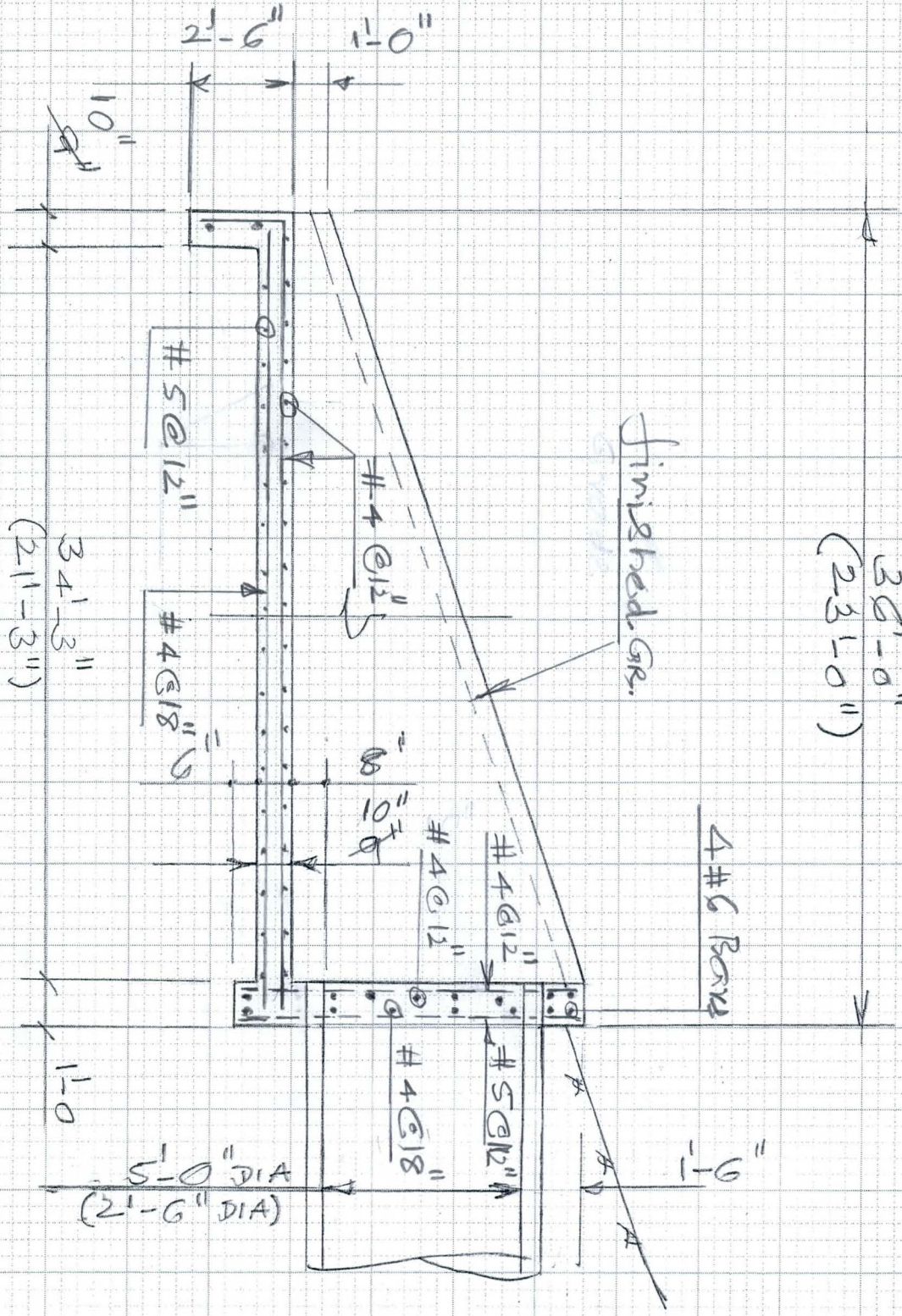

3 4 SECTION

Scale: 1/4" = 1'-0"

6910-153 4-90

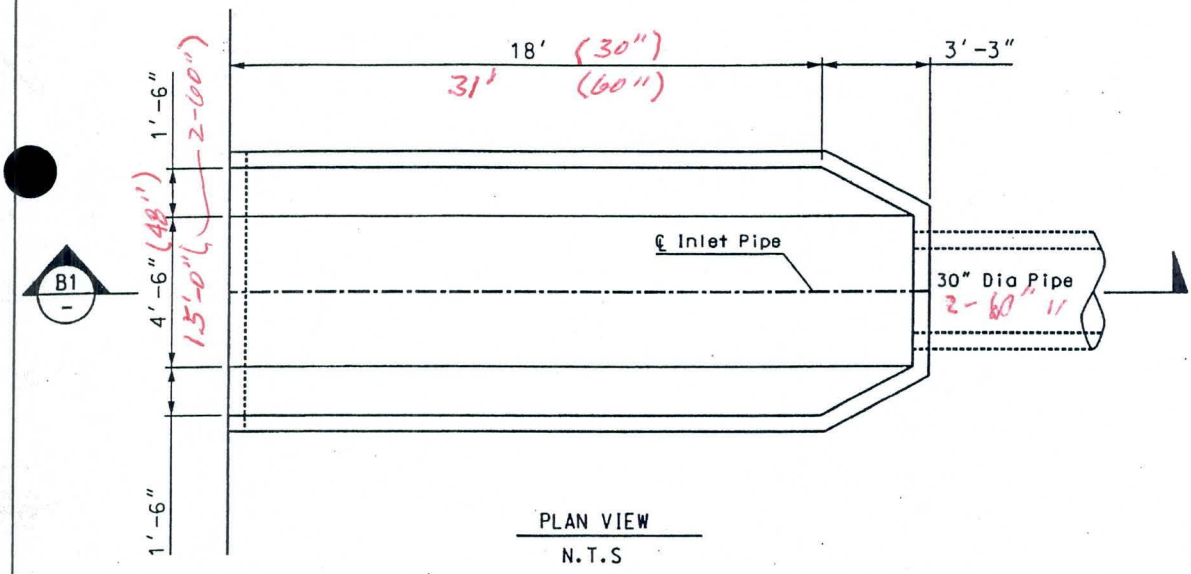

PLAN VIEW
N.T.S

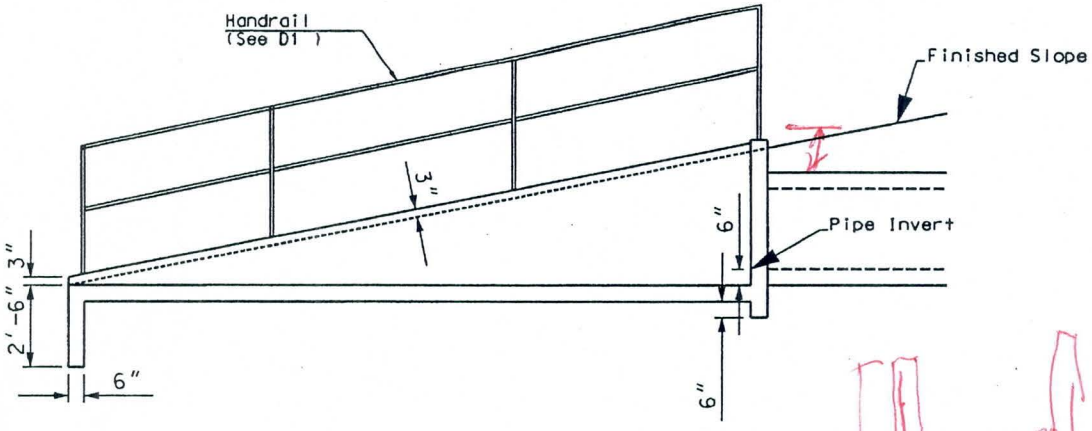

B1 / - SECTION
N.T.S

SIDE OUTLET DETAIL
N.T.S.

60% SUBMITTAL

FLOOD CONTROL DISTRICT OF MARICOPA COUNTY
ENGINEERING DIVISION

LAVEEN AREA CONVEYANCE CHANNEL
FCD PROJECT NO. 1170831
FCD CONTRACT NO.

PRELIMINARY NOT FOR CONSTRUCTION		BY	DATE
	DESIGNED	MAL	05/01
	DRAWN	FC	05/01
	CHECKED		

DRAWING NO. D1	DETAIL D1-D3	SHEET OF

DETAIL D3

FLOOD CONTROL DISTRICT OF MARICOPA COUNTY

PROJECT LACC PAGE ___ OF ___

DETAIL Walls for piles COMPUTED KVH DATE 10/01

2'-6" @ & 5' ϕ CHECKED BY ___ DATE ___

Wall Ht (max) = 7'-2"

At 2/3 = 2/3 (6'-2) + 1 ≈ 5'

use 5' wall Ht for design.

$p_{v_1} = 0.12 \times 0.33 \times 5 = 0.20$ ksf

Surc Ch = 2', $p_{v_2} = 0.12 \times 0.33 \times 2 \approx 0.1$

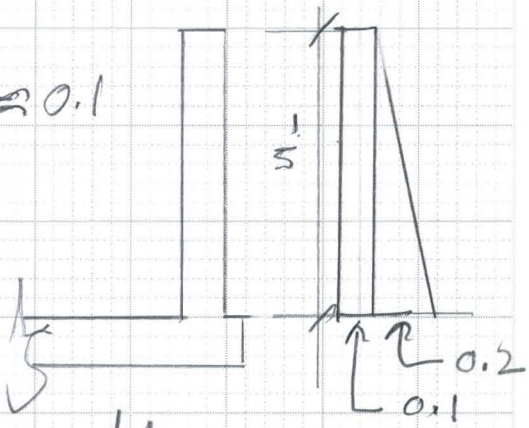

$P_1 = \frac{0.2}{2} \times 5 = 0.5^k$

$P_2 = 0.1 \times 5 = 0.5^k$

$M_{stem} = (0.5 \times \frac{5}{3}) + 0.5 \times \frac{5}{2}$

$= (0.83 + 1.25) = 2.08$ kft

using $d_{eff} = (9 - 2 - 0.5) = 6.5''$

$A_s = \frac{2.08 \times 12}{2.4 \times 0.88 \times 6.5}$

$= 0.18$ in

use min # 5 @ 12" Bar for

FLOOD CONTROL DISTRICT OF MARICOPA COUNTY

PROJECT LACC PAGE ____ OF ____

DETAIL Box Culverts COMPUTED KVH DATE 7/01

Box #1 CHECKED BY ____ DATE ____

Box #1

Top of wall = 984.34
Top of Box 982.84
1.50

Inv 974.84 (South)
Box Ht 7.0
Top Slab 11" 0.92
~~982.84~~ 982.76 Top of Box

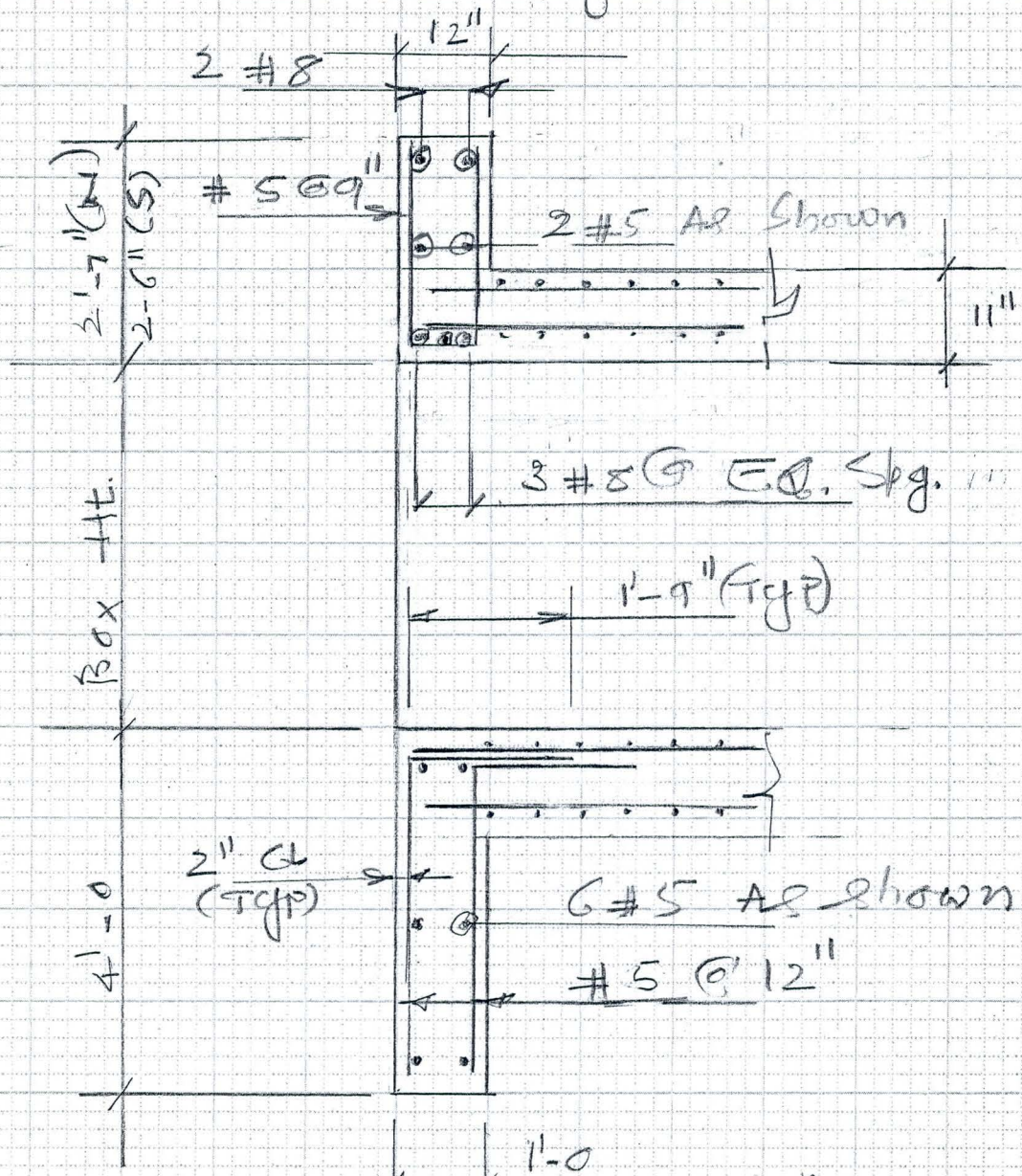

(4) Section Box-1

FLOOD CONTROL DISTRICT OF MARICOPA COUNTY

PROJECT LACC PAGE ___ OF ___

DETAIL Box #5 COMPUTED KVH DATE 7/01

CHECKED BY ___ DATE ___

Box #5

T/W = 1009.85
1008.71
1.14' = 1'-2" D.S.
1'-0 U.S

Inv 1001.99
Box Ht. 6.00
Slab 11" 0.92
Top of Slab 1008.71

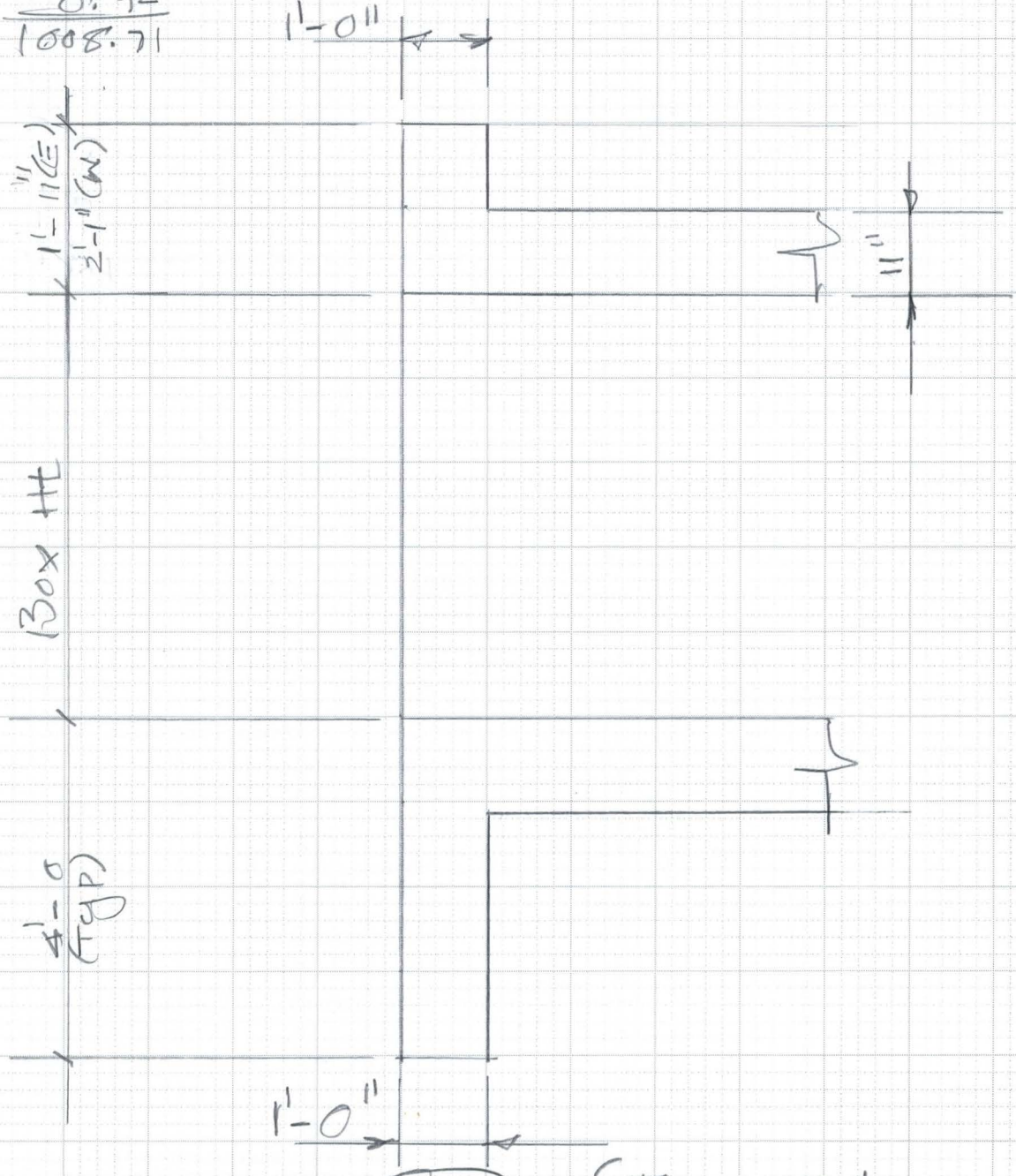

4 SECTION
Box-5

6910-153 4-90

FLOOD CONTROL DISTRICT OF MARICOPA COUNTY

PROJECT LAGC PAGE ____ OF ____

DETAIL Temp. Stool COMPUTED KVH DATE 2/02

CHECKED BY ____ DATE ____

1) wall $t = 1'-8''$

Reinf @ 0.3% $= 0.003 \times 12'' \times 20'' = 0.72 \text{ in}^2$

Av. $t = (1.67 + 1)/2 = 1.34' = 16''$

$0.003 \times 12 \times 16 = 0.58$

#5 @ 12 = 0.31

#5 @ 18" or #4 @ 12 = 0.2

0.51

2) $t = (12 + 18)/2 = 15''$

$0.003 \times 15 \times 12 = 0.54$

6910-153 4-90

FLOOD CONTROL DISTRICT OF MARICOPA COUNTY

PROJECT LACC PAGE ___ OF ___

DETAIL Grate Bars COMPUTED KVH DATE 1/02

CHECKED BY ___ DATE ___

Check Grate Bar Spacing

AASHTO. Sect. 3.30

Tire Contact Area = 0.01P

P = wheel load = 16000 lbs

A = 0.01 x 16000, A = 160 Sq in.

$\frac{L}{W} = \frac{1}{2.5}$ W = 2.5 L, 160 = L x W = $\frac{W}{2.5}$ x W

(160 x 2.5) = W^2, W = 20"

No. of Bars @ 2½" o.c. = $\frac{20}{2.5}$ = 8 Bars

Load per Bar = $\frac{16^K}{8}$ = 2^K

Clear Sp = 3.5'

C/c of Bearing Bars = 3.75'

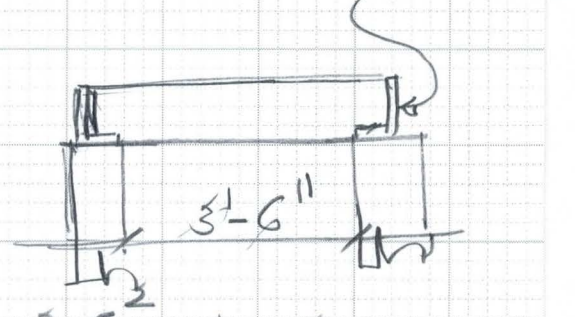

M = $\frac{PL}{4}$ = $\frac{2 \times 3.75}{4}$ = 1.88 KFL

M = f S,

Bars ½" x 3½, S = $\frac{bd^2}{6}$ = $\frac{0.5 \times 3.5}{6}$ = 1.02

(1.88 x 12) = f x 1.02, f = 22.1 Ksi < 24 Ksi

6910-153 4-90

FLOOD CONTROL DISTRICT OF MARICOPA COUNTY

PROJECT LACC Grate Detail
DETAIL
PAGE KVH OF
DATE
DATE
COMPUTED
CHECKED BY

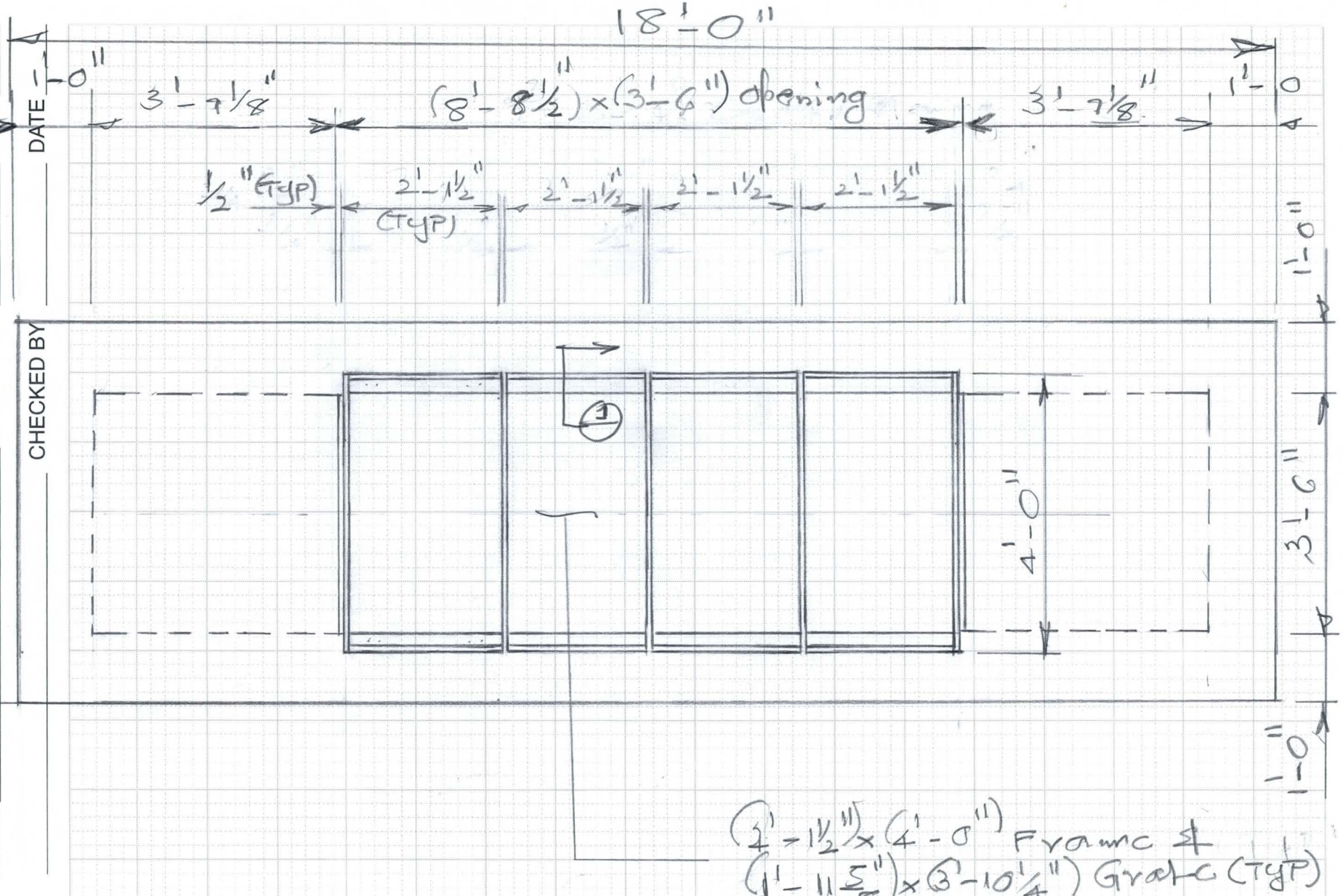

PLAN of Grates
Scale: 1/2" = 1'-0"

6910-153 4-90

FLOOD CONTROL DISTRICT OF MARICOPA COUNTY

PROJECT LACC PAGE ____ OF ____

DETAIL Junction Box COMPUTED KVH DATE 1/02

CHECKED BY ____ DATE ____

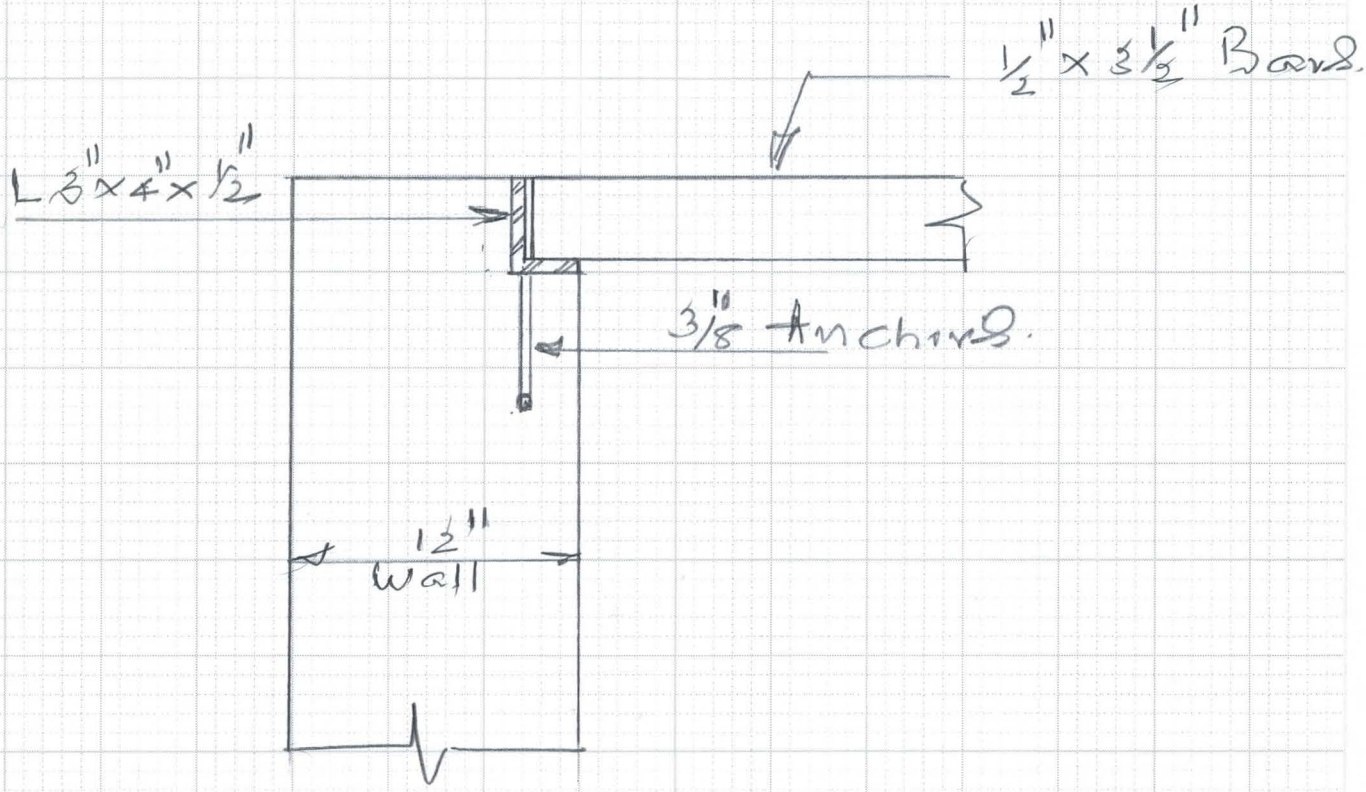

SECTION 1

Scale: 1 1/2" = 1'-0

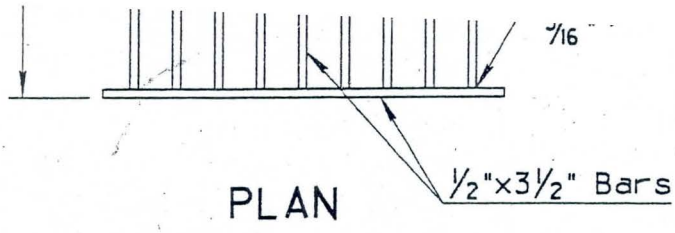

PLAN

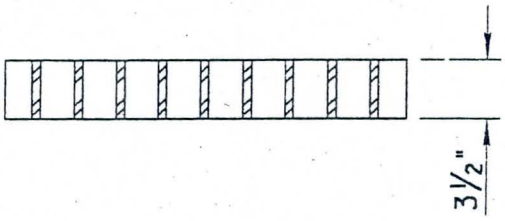

SECTION
GRATES TYPE LW-1 AND LW-2

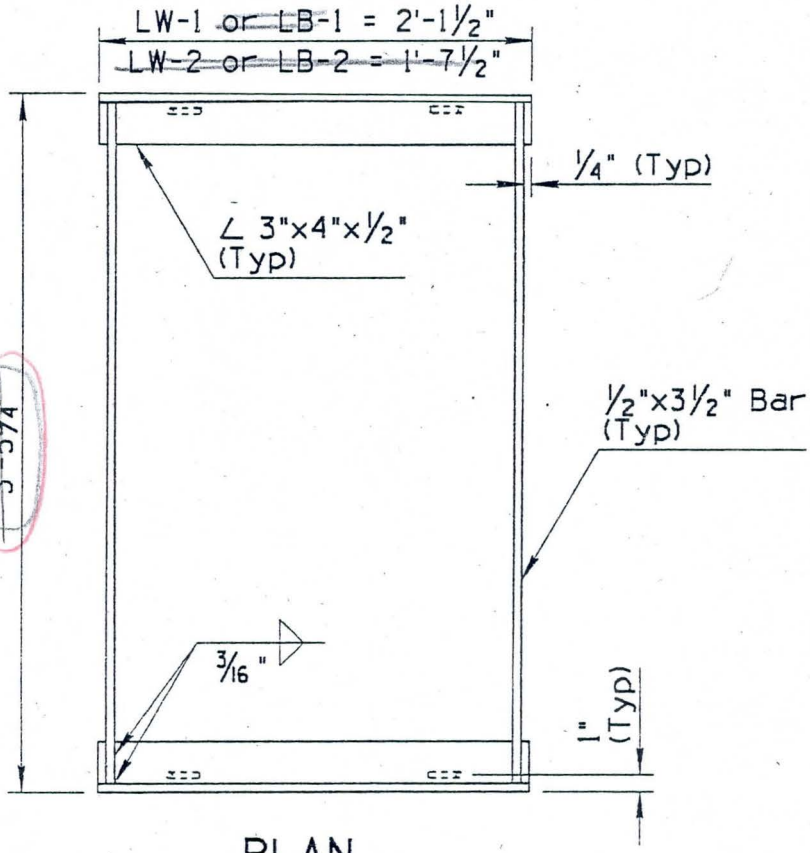

PLAN

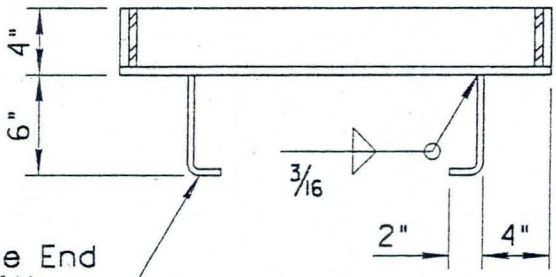

3/8" Anchors.
Delete on One End
When Used with
I-beam Support

SECTION
FRAME

GR

3 1/2"

1/2"Φ Roc
Threade

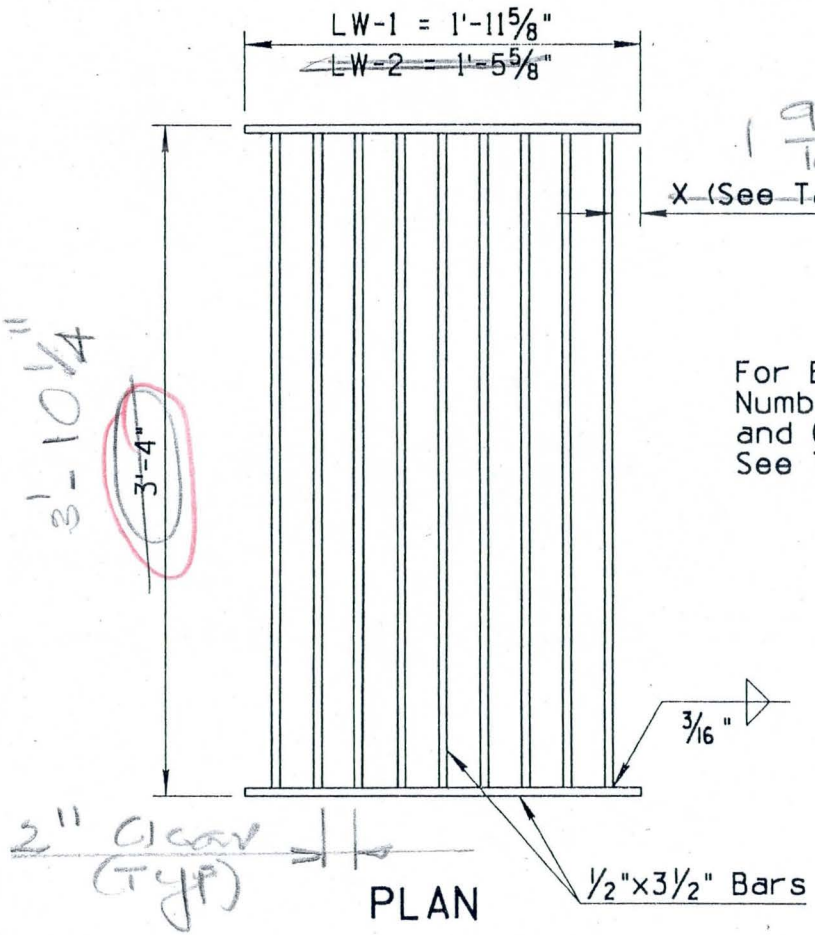

PLAN

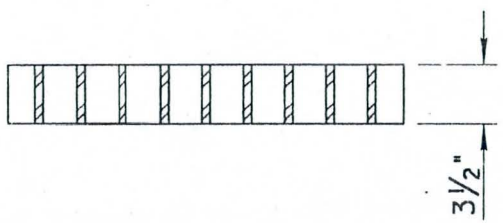

SECTION
GRATES TYPE LW-1 ~~AND LW-2~~

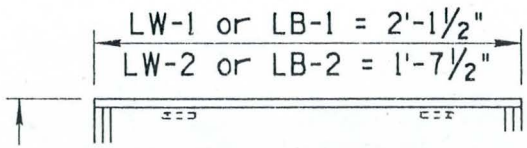

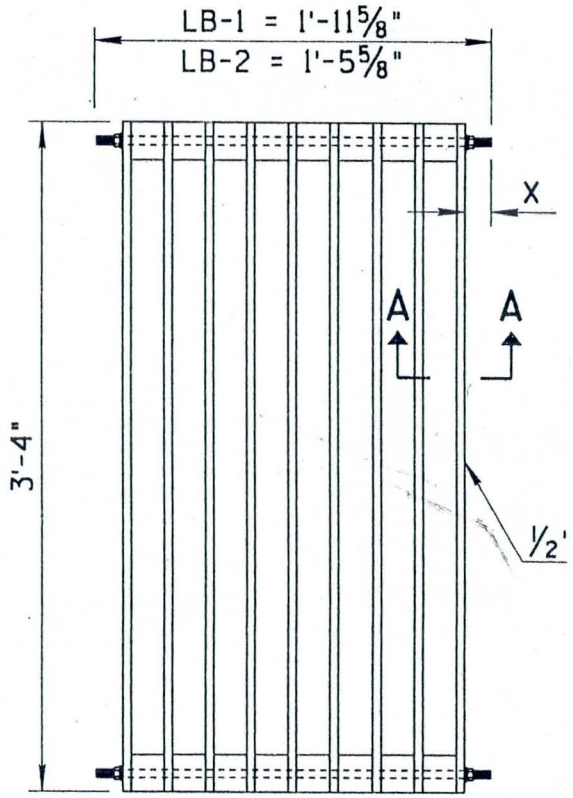

PLAN
GRATES TYPE LB-1 AND LB·

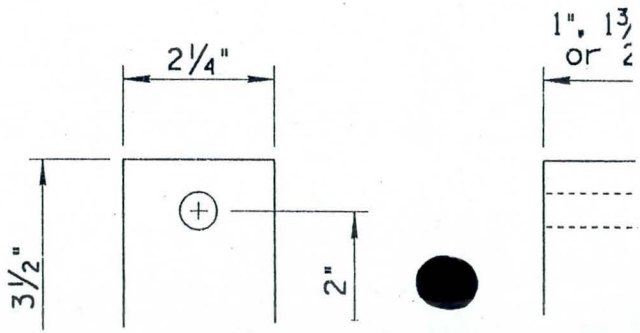

FLOOD CONTROL DISTRICT OF MARICOPA COUNTY

PROJECT LACC PAGE ____ OF ____

DETAIL Box - 1 COMPUTED KVH DATE 4/01

Check on Conc. Qty. CHECKED BY ____ DATE ____

10' High (9'-6")

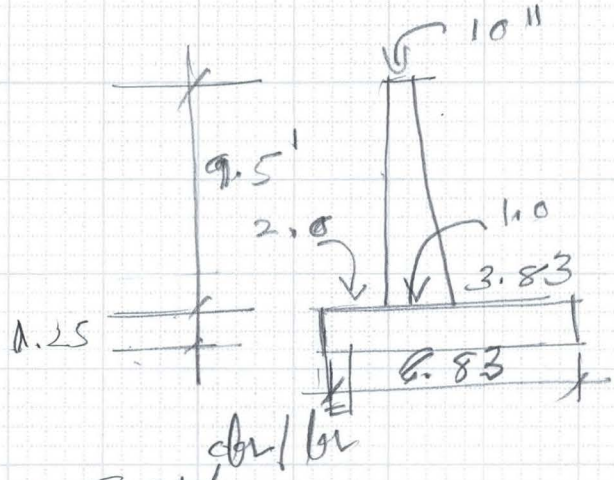

$\left(\frac{0.83+1.0}{2}\right) 9.5 = 8.71$ cu/lin

$(1.25 \times 6.833) = 8.54$

17.25

Top $(3.0 \times 1.0) = 3.00$

20.25 cu = 0.75 cy/lin

8' High (7.5')

$6.25 - (6.64)$ with 8' high

$(0.833 \times 7.5) = 6.25$

$(5.67 \times 1.17) = 6.63$

$(1.5 \times 1.25) = 1.88$

14.76 cu = 0.561 ~~0.549~~ cy/lin ok

6' Ht - (5.5') Actual

$(0.833 \times 6.0) = 5.0$ ~~4.58~~

$(4.5 \times 1.0) = 4.50$

$(1.5 \times 1.25) = 1.88$

~~10.46~~ 11.38 cu = 0.421 cy/lin

ok

6910-153 4-90

FLOOD CONTROL DISTRICT OF MARICOPA COUNTY

PROJECT LACC PAGE ____ OF ____

DETAIL Box-1 COMPUTED KVH DATE 4/01

Check on Conc. Qty's CHECKED BY ____ DATE ____

Box-1

7' Cell (10x7) Modified

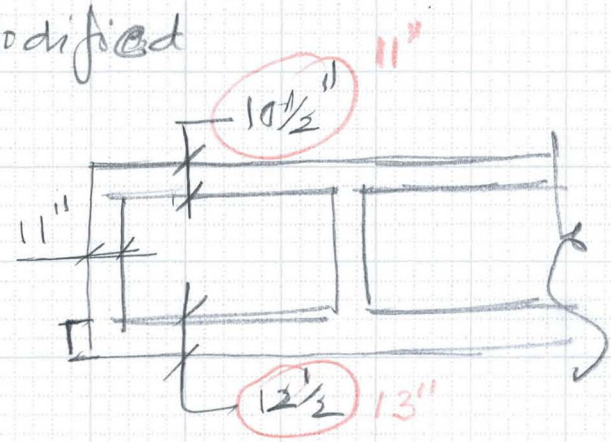

Width = $(10 \times 7) + 8\left(\frac{11''}{12}\right) = 77.33'$

No. of walls

Bottom Slab = $77.33 + \left(\frac{2 \times 4''}{12}\right) = 78'$

Top slab: $\left(77.33 \times \frac{10.5}{12}\right) = 67.7$ cy

Bott. Slab $\left(78 \times \frac{12.5}{12}\right) = 81.3$

Walls: $\left(7.0 \times \frac{11''}{12}\right) 8 = 51.3$

No of walls

200.3 cy/lf

7.3

207.6 cy/lf

7.689 cy/ft

2 walls are 10' high &

2 walls are 8' high

Extra

a) $\frac{11''}{12} \times 3' \times 2 = 5.5$ cy

Extra ht. No

b) $\left(\frac{11}{12} \times 1 \times 2\right) = 1.8$

7.3

FLOOD CONTROL DISTRICT OF MARICOPA COUNTY

PROJECT LAGC PAGE ___ OF ___

DETAIL Retaining walls COMPUTED KVH DATE 11/0

CHECKED BY ___ DATE ___

Check Concrete Section:
(24" x 12")

$d_{eff} = (24 - 2 - 0.5) = 21.5''$

$M_{capacity} = \frac{f_c}{2} \times jkbd^2$

$k = \frac{1}{1 + \frac{f_s}{nf_c}}$ $f_c = 0.4 \times 3000 = 1200$

$n = 9$, $f_s = 24$

$k = \frac{1}{1 + \frac{24}{9 \times 1.2}} = 0.310$

$M_c = \frac{1200}{2} \times 0.88 \times 0.31 \times 12 \times 21.5^2 = 75.7$ kft

$K = \frac{f_c}{2} jk = \frac{1.2}{2} \times 0.88 \times 0.310 = 163$

$d = \sqrt{\frac{75.7 \times 12}{163 \times 12}} = 21.5$ Checks ok

6910-153 4-90

FLOOD CONTROL DISTRICT OF MARICOPA COUNTY

PROJECT LAGC PAGE ___ OF ___

DETAIL Retaining wall COMPUTED KVH DATE 11/01

CHECKED BY ___ DATE ___

1) $H = 16'$

$P_N \frac{H}{\gamma_p} = 0.78$

Horz. force

$P_N = \frac{40 \times 0.78}{16} = 1.95^K$

2) $H = 14'$

$P_N = \frac{40 \times 0.78}{14} = 2.23^K$

3) $H = 12'$

$P_N = \frac{40 \times 0.78}{12} = 2.6^K$

4) $H = 10'$

$P_N = \frac{40 \times 0.78}{10} = 3.12^K$

% Increase $= (3.12 - 1.95)/1.95 = 60\%$

more for short wall

6910-153 4-90

FLOOD CONTROL DISTRICT OF MARICOPA COUNTY

PROJECT LADC PAGE ___ OF ___

DETAIL Retaining Wall COMPUTED KVH DATE 11/01

CHECKED BY ___ DATE ___

$y = 0$ $\quad$ $y = 1.0$ $\quad$ $y = 2.0$

$\cancel{R}\ 0.5 \quad 5.5^K \qquad 1.3^K \qquad 0.2^K$

$z = 1.0, 3.4$

$z = 1.5, 1.5$

$z = 2.0, 0.7$

$x = 1, \quad y = 0, \quad z = 0.5 \qquad G_h = 5.5^K$

$x = 1, \quad y = 1 \quad z = 0.5$

$R = \sqrt{1^2 + 1^2 + 0.5^2} = \cancel{2.25}\ 1.5 \qquad R^5 = \cancel{57.7}\ 7.6$

$G_h(0.5) = \dfrac{0.48 \times x^2 z}{R^5} = \dfrac{0.48 \times \cancel{40}^{K} \times 1^2 \times 0.5}{\cancel{57.7}\ 7.6} = 1.3^K$

$x = 1, \quad y = 1 \quad z = 1,$

$R = \sqrt{1^2 + 1^2 + 1^2} = 1.73, \quad R^5 = 15.5,$

$G_h = \dfrac{0.48 \times 40 \times 1^2 \times 1}{15.5} = \qquad 1.2^K$

$x = 1, \quad y = 2, \quad z = 1, \quad R = \sqrt{1^2 + 2^2 + 1^2} = 2.45$

$(2.45)^5 = 88.3$

$G_h = \dfrac{0.48 \times 40 \times 1^2 \times 1}{88.3} = \qquad 0.2^K$

$(5.5 + 1.3 + 0.2)/3 = 2.33$

$(0.2 + 1.3)/2 = 0.75$

$(1.3 + 5.5)/2 = \dfrac{3.40}{\cancel{4.15}\ 4} \times 2 = 2.1^{K/ft}$ (Avg)

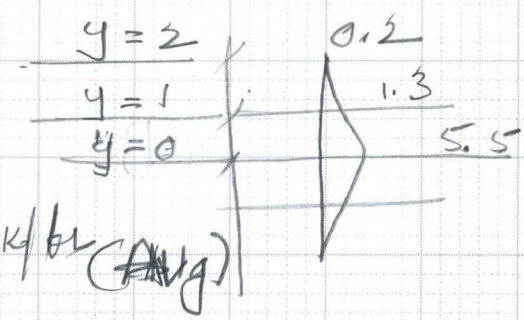

FLOOD CONTROL DISTRICT OF MARICOPA COUNTY

PROJECT LAGG PAGE ____ OF ____

DETAIL Retaining wall @ power poles COMPUTED KVH DATE 9/01

CHECKED BY ____ DATE ____

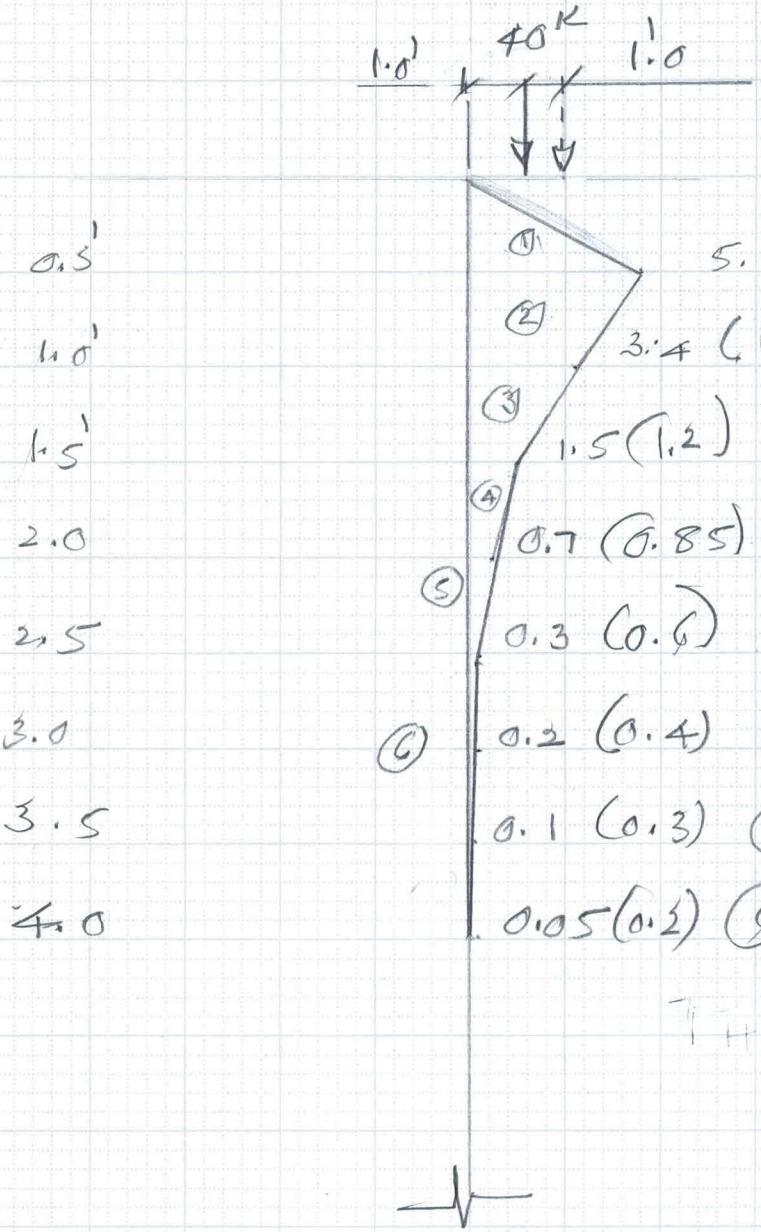

① $\frac{5.5}{2} \times 0.5 = 1.4^K (0.3)$

② $\left(\frac{5.5+3.4}{2}\right) 0.5 = 2.3 (0.64)$

③ $\left(\frac{3.4+1.5}{2}\right) 0.5 = 1.3 (0.64)$

④ $\left(\frac{1.5+0.7}{2}\right) 0.5 = 0.4 (0.51)$

⑤ $\left(\frac{0.7+0.3}{2}\right) 0.5 = 0.3 (0.25)$

⑥ $\left(\frac{0.3+0.05}{2}\right) 1.5 = 0.3 (0.6)$

$P_H = 6.0^K$ (2.94)^K

$$X_R = (1.4 \times \tfrac{2}{3} \times 0.5) + (2.3 \times 0.75) + (1.3 \times 1.25) + (0.4 \times 1.75) + (0.3 \times 2.25) + 0.3(3.4) / 6$$

$X_R = 1.04'$

6910-153 4-90

FLOOD CONTROL DISTRICT OF MARICOPA COUNTY

PROJECT GACC PAGE ____ OF ____

DETAIL Retaining Wall @ Power poles COMPUTED KVH DATE 9/01

CHECKED BY ____ DATE ____

when $Q = 40^K$

$$\sigma_h = \left(\frac{0.48\ Q\ x^2 z}{R^5}\right)$$

1) $x = 1,\ y = 0,\ z = 0.5$ $\quad R = \sqrt{1^2 + 0^2 + 0.5^2} = 1.12$

$(1.12)^5 = 1.762$

$$\sigma_{h_{0.5'}} = \frac{0.48 \times 40^K \times 1^2 \times 0.5}{1.762} = \boxed{5.5^K}$$

2) $x = 1,\ y = 0,\ z = 1,\ R = 1.414,\ (1.414)^5 = 5.652$

$$\sigma_{h_{1.0'}} = \frac{0.48 \times 40 \times 1^2 \times 1}{5.652} = \boxed{3.4^K}$$

3) $x = 1.0,\ y = 0,\ z = 1.5$ $\quad R = 1.803,\ R^5 = 19.05$

$$\sigma_{h_{1.5'}} = \frac{0.48 \times 40 \times 1^2 \times 1.5}{19.05} = \boxed{1.5}$$

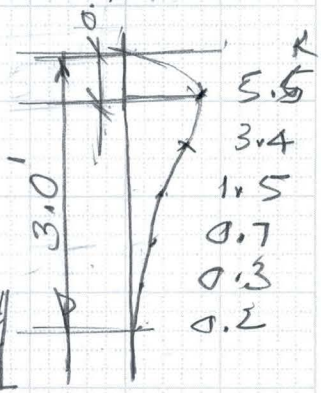

4) $x = 1.0,\ y = 0,\ z = 2.0$

$R = \sqrt{1^2 + 0^2 + 2^2} = 2.236,\ = 55.9$

$$\sigma_{h_{2.0}} = \left(\frac{0.48 \times 40 \times 1^2 \times 2.0}{55.9}\right) = \boxed{0.7^K}$$

5) $x = 1.0,\ y = 0,\ z = 2.5,\ R = \sqrt{1^2 + 0^2 + 2.5^2} = 2.69,\ = 140.9$

$$\sigma_{h_{2.5}} = \frac{0.48 \times 40 \times 1^2 \times 2.5}{140.9} = \boxed{0.3^K}$$

6) $x = 1.0,\ y = 0,\ z = 3.0,\ R = \sqrt{1^2 + 0^2 + 3^2} = 3.16,\ = 315$

$$\sigma_{h_{3.0}} = \left(\frac{0.48 \times 40 \times 1^2 \times 3.0}{315}\right) = \boxed{0.2^K}$$

FLOOD CONTROL DISTRICT OF MARICOPA COUNTY

PROJECT LACC PAGE ____ OF ____

DETAIL Retaining Wall @ power poles. COMPUTED KVH DATE 9/01

CHECKED BY ____ DATE ____

$$\sigma_h = \left(\frac{0.48\, Q\, 3L^2 z}{R^5}\right)$$

1) $x = 2.0 \quad y = 0, \quad z = 0.5 \quad R = \sqrt{2^2 + 0^2 + 0.5^2} = 2.06^5 = 37.1$

$\sigma_h = (0.48 \times 40 \times 2^2 \times 0.5)/37.1 = \boxed{1.1^K}$

2) $x = 2.0, \quad y = 0, \quad z = 1.0 \quad R = 2.24^5 = 56.4$

$\sigma_h = (0.48 \times 40 \times 2^2 \times 1)/56.4 = \boxed{1.36^K}$

3) $x = 2.0 \quad y = 0, \quad z = 1.5, \quad R = 2.5^5 = 97.7$

$\sigma_h = (0.48 \times 40 \times 2^2 \times 1.5)/97.7 = \boxed{1.2^K}$

4) $x = 2.0 \quad y = 0, \quad z = 2.0 \quad R = 2.83^5 = 181.5$

$\sigma_h = (0.48 \times 40 \times 2^2 \times 2)/181.5 = \boxed{0.85^K}$

5) $x = 2.0, \quad y = 0, \quad z = 2.5 \quad R = 3.20^5 = 335$

$\sigma_h = (0.48 \times 40 \times 2^2 \times 2.5)/335 = \boxed{0.6^K}$

6) $x = 2 \quad y = 0, \quad z = 3.0 \quad R = 3.61^5 = 613$

$\sigma_h = (0.48 \times 40 \times 2^2 \times 3)/613 = \boxed{0.4}$

6910-153 4-90

FLOOD CONTROL DISTRICT OF MARICOPA COUNTY

PROJECT LACC PAGE ___ OF ___

DETAIL 10' wall COMPUTED KWH DATE 11/01

CHECKED BY ___ DATE ___

Check 10' wall

$$P = \frac{0.28\,(40000)\,n^2}{H^2\,(0.16+n^2)^3}$$

1) $n = \frac{z}{H}$, $z = 1$, $n = \frac{1}{10} = 0.1$

$$P_1 = \frac{0.28\,(40^{K})\,(0.1)^2}{10^2\,(0.16+0.1^2)^3} = \frac{0.112}{0.4913} = 0.227^{K}$$

2) $n = \frac{2}{10} = 0.2$

$$P_2 = \frac{0.28 \times 40 \times (0.2)^2}{10^2\,(0.16+0.2^2)^3} = \frac{0.448}{0.8} = 0.56^{K}$$

3) $n = \frac{3}{10} = 0.3$ $\quad P_3 = \frac{0.28 \times 40 \times 0.3^2}{10^2\,(0.16+0.3^2)^3} = \frac{1.01}{1.563} = 0.646^{K}$

4) $n = \frac{4}{10} = 0.4$, $\quad P_4 = \frac{0.28 \times 40 \times 0.4^2}{10^2\,(0.16+0.4^2)^3} = \frac{1.792}{3.277} = 0.547^{K}$

5) $n = \frac{5}{10} = 0.5$, $\quad P_5 = \frac{0.28 \times 40 \times 0.5^2}{10^2\,(0.16+0.5^2)^3} = \frac{2.8}{6.892} = 0.406^{K}$

6) $n = 0.6$ $\quad P_6 = \frac{0.28 \times 40 \times 0.6^2}{10^2\,(0.16+0.6^2)^3} = \frac{4.032}{14.061} = 0.287^{K}$

7) $n = 0.7$ $\quad P_7 = \frac{0.28 \times 40 \times 0.7^2}{10^2\,(0.16+0.7^2)^3} = \frac{5.488}{27.463} = 0.199^{K}$

8) $n = 0.8$ $\quad P_8 = \frac{0.28 \times 40 \times 0.8^2}{10^2\,(0.16+0.8^2)^3} = \frac{7.168}{51.2} = 0.14^{K}$

9) $n = 0.9$, $\quad P_9 = \frac{0.28 \times 40 \times 0.9^2}{10^2\,(0.16+0.9^2)^3} = \frac{9.072}{91.27} = 0.10^{K}$

10) $n = 1$ $\quad P_{10} = \frac{0.28 \times 40 \times 1^2}{10^2\,(0.16+1^2)^3} = \frac{11.2}{156.1} = 0.072^{K}$

3.18^{K}

@ $0.59H = 0.59 \times 10 = 5.9'$ from Bottom

6910-153 4-90

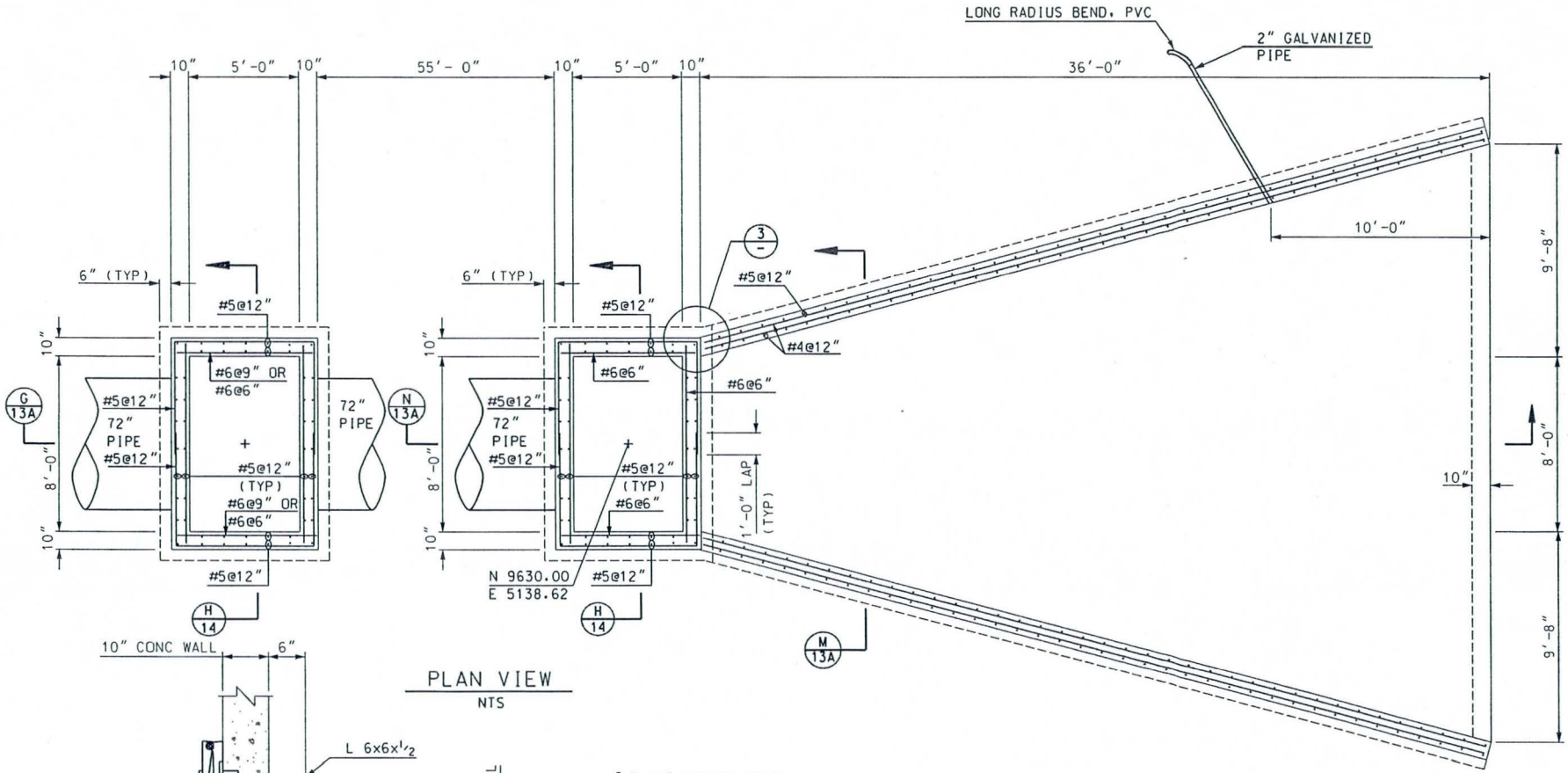

PLAN VIEW
NTS

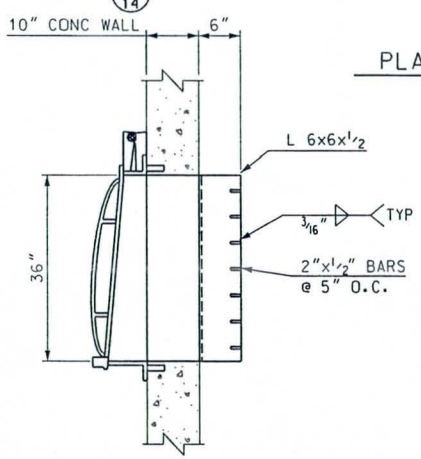

K 13B SECTION
NTS

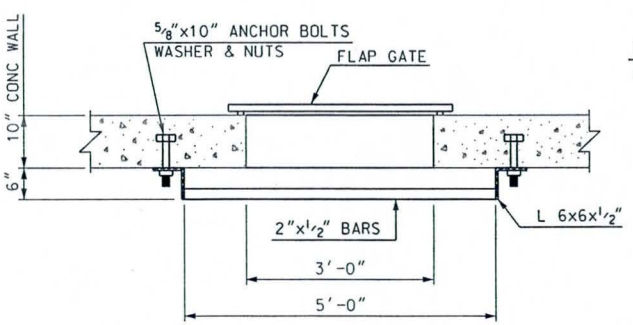

L 13B SECTION
NTS

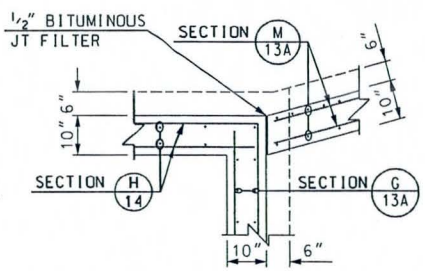

3 - DETAIL
SCALE: 3/4" = 1'-0"

NO.	REVISION	BY	DATE
3			
2			
1			

FLOOD CONTROL DISTRICT OF MARICOPA COUNTY
ENGINEERING DIVISION

43RD AVENUE DETENTION BASIN
FCD PROJECT NO. 1170831
100% SUBMITTAL

	BY	DATE
DESIGNED	KVH	08/01
DRAWN	FC	08/01
CHECKED	MAL	

OUTLET STRUCTURE PLAN

SHEET 12 OF 28

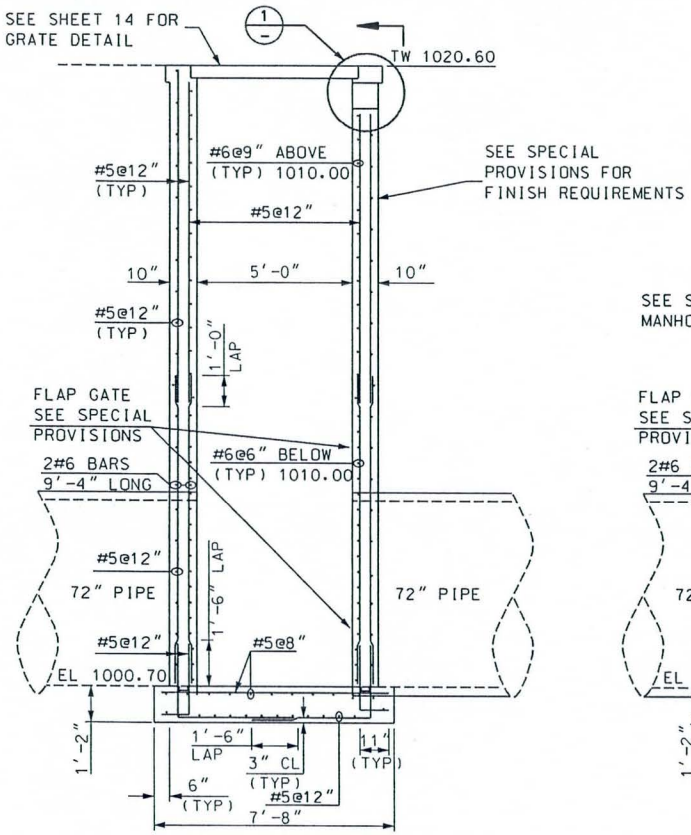

G 12 SECTION
SCALE: 1/2" = 1'-0"

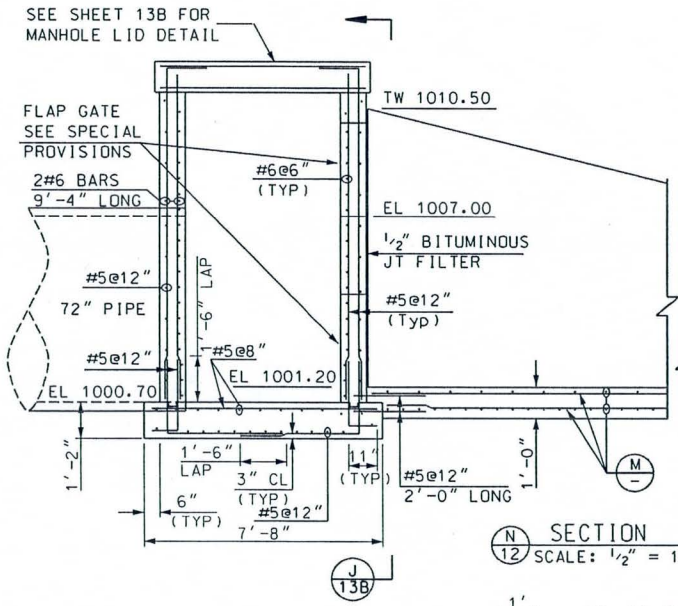

N 12 SECTION
SCALE: 1/2" = 1'-0"

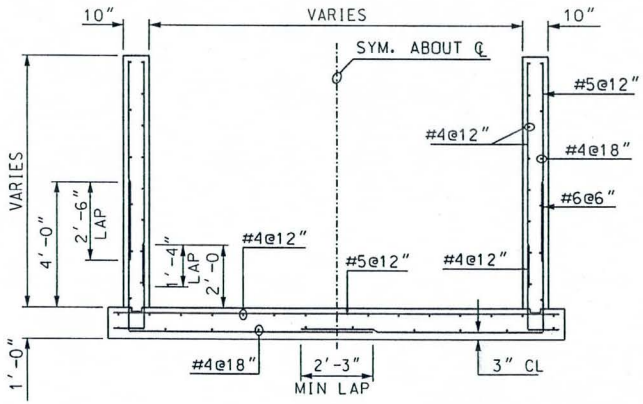

M 12 SECTION
SCALE: 1/2" = 1'-0"

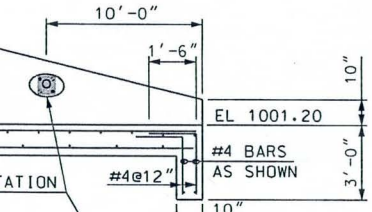

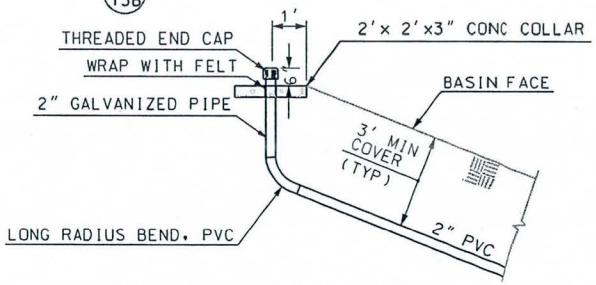

NOTE: PROVIDE COUPLINGS AND ADAPTERS AS NECESSARY

INSTRUMENTATION CONDUIT ELEVATION DETAIL
NTS

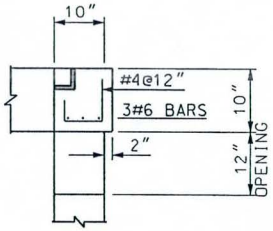

1 DETAIL
SCALE: 1 " = 1'-0"

NO.	REVISION	BY	DATE
3			
2			
1			

FLOOD CONTROL DISTRICT OF MARICOPA COUNTY
ENGINEERING DIVISION

43RD AVENUE DETENTION BASIN
FCD PROJECT NO. 1170831
100% SUBMITTAL

	BY	DATE
DESIGNED	KVH	08/01
DRAWN	FC	08/01
CHECKED	MAL	

OUTLET STRUCTURE DETAIL

SHEET OF 13A 28

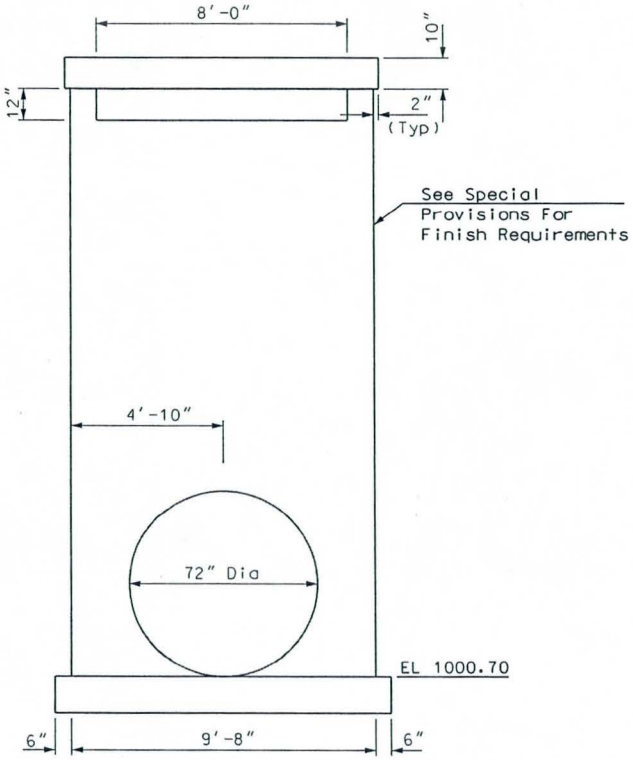

I / 13A ELEVATION
NTS

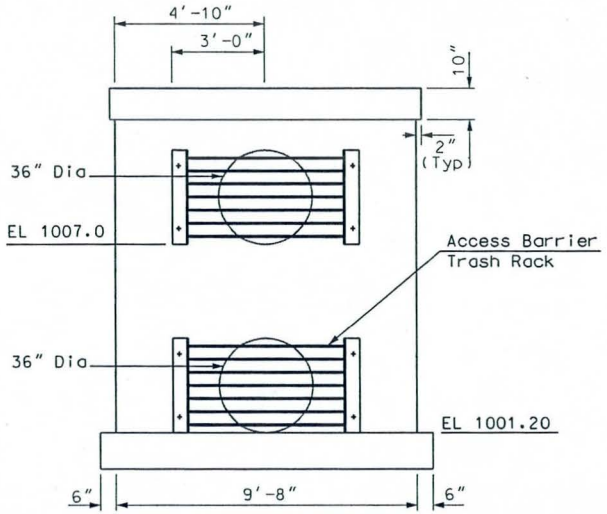

J / 13A ELEVATION
NTS

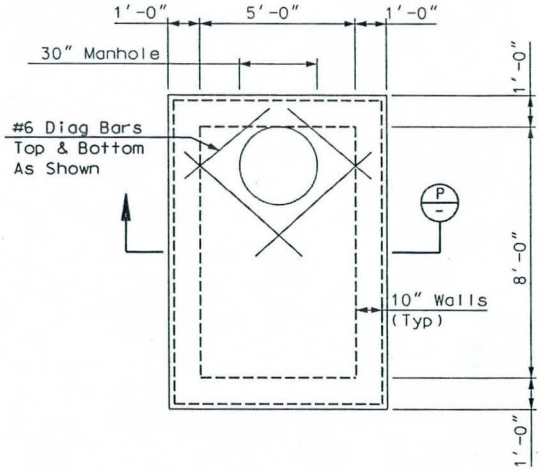

PLAN OF MANHOLE LID
Scale: 1/2" = 1'-0"

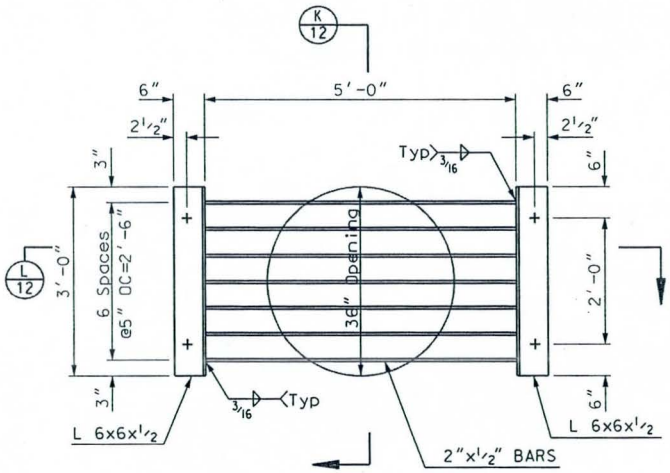

ELEVATION
ACCESS BARRIER/TRASH RACK
NTS

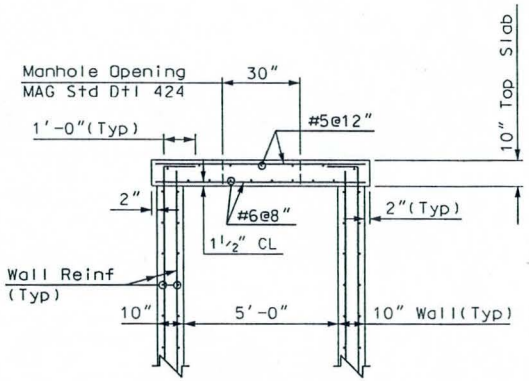

P / - SECTION
Scale: 1/2" = 1'-0"

NO.	REVISION	BY	DATE
3			
2			
1			

FLOOD CONTROL DISTRICT OF MARICOPA COUNTY
ENGINEERING DIVISION

43RD AVENUE DETENTION BASIN
FCD PROJECT NO. 1170831
100% SUBMITTAL

	BY	DATE
DESIGNED	KVH	08/01
DRAWN	FC	08/01
CHECKED	MAL	

OUTLET STRUCTURE DETAIL

SHEET OF 13B 28

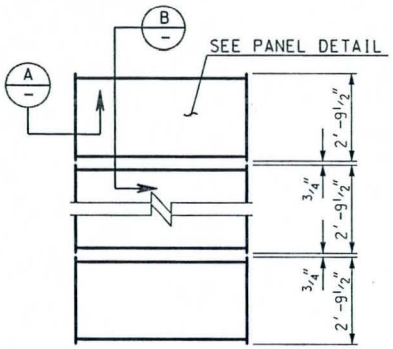

PLAN VIEW OF PANELS
NTS

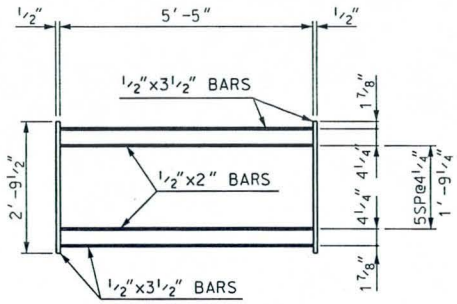

PANEL DETAIL
NTS

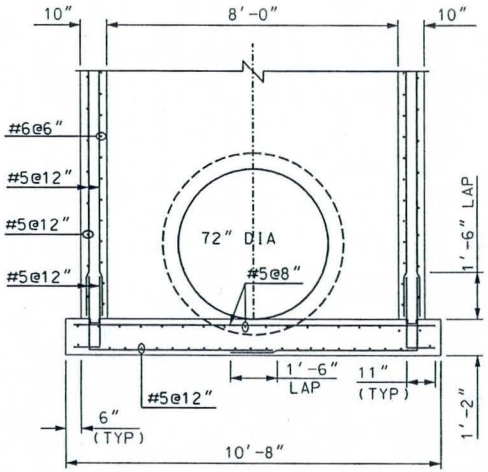

H/12 SECTION
SCALE: ½" = 1'-0"

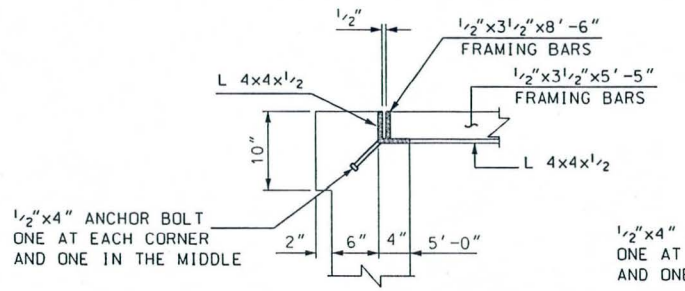

A SECTION
SCALE: 1½" = 1'-0"

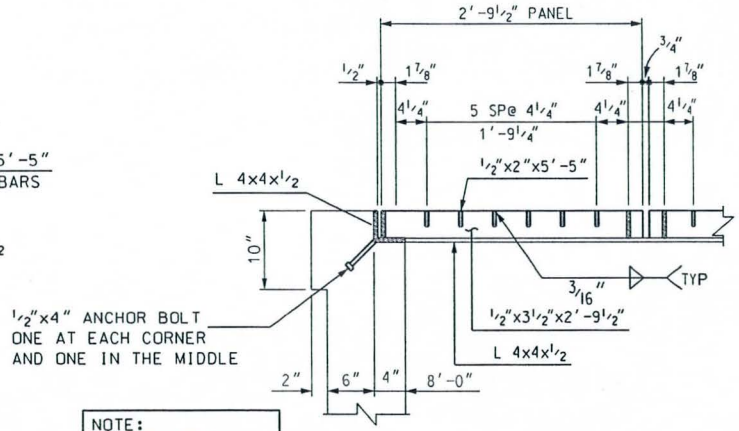

NOTE:
FOR ANCHOR BAR
@ MISC DETAILS
SEE MAG DET 540-1

B SECTION
SCALE: 1½" = 1'-0"

NO.	REVISION	BY	DATE
3			
2			
1			

FLOOD CONTROL DISTRICT OF MARICOPA COUNTY
ENGINEERING DIVISION

43RD AVENUE DETENTION BASIN
FCD PROJECT NO. 1170831
100% SUBMITTAL

	BY	DATE
DESIGNED	KVH	08/01
DRAWN	FC	08/01
CHECKED	MAL	

OUTLET GRATE DETAIL

SHEET OF 14 28

FLOOD CONTROL DISTRICT OF MARICOPA COUNTY

PROJECT LA EC PAGE ____ OF ____

DETAIL Box Culverts COMPUTED KVH DATE 7/01

Box # 4 CHECKED BY ____ DATE ____

Inv. El 993.66 (South)
Box Ht 6.0
999.66
Top Slab 11" 0.92
Top of Box — 1000.58

Top of wall (South) 1002.66
1000.58
2.08

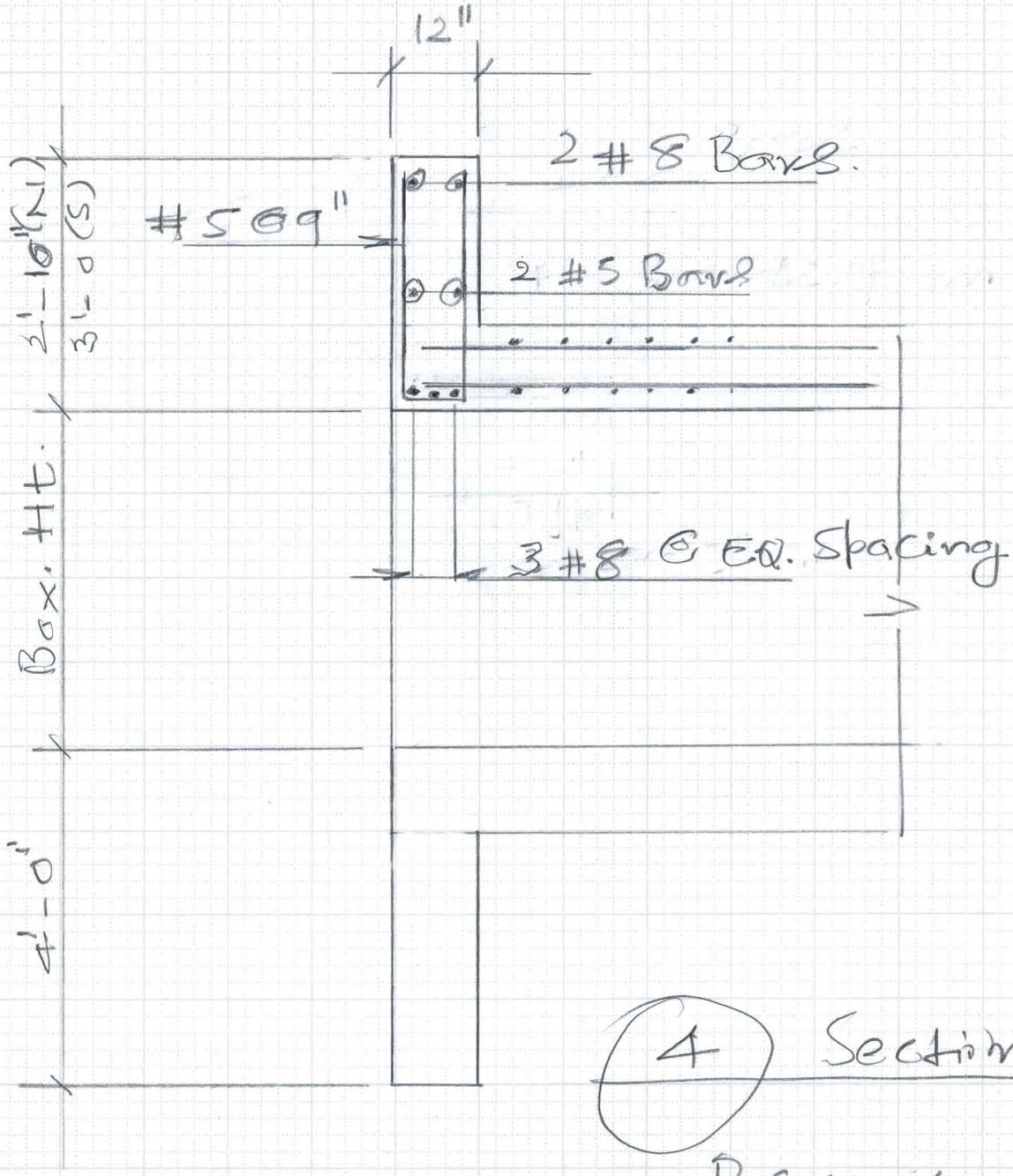

4 Section

Box # 4

6910-153 4-90

FLOOD CONTROL DISTRICT OF MARICOPA COUNTY

PROJECT LA EC PAGE ____ OF ____

DETAIL Box Culverts COMPUTED KVH DATE 7/01

Box # 4 CHECKED BY ____ DATE ____

Inv El 993.66 (South)
Box Ht 6.0
993.66
Top Slab 11" 0.92
Top of Box 1000.58

Top of wall (South) 1002.66
1000.58
2.08

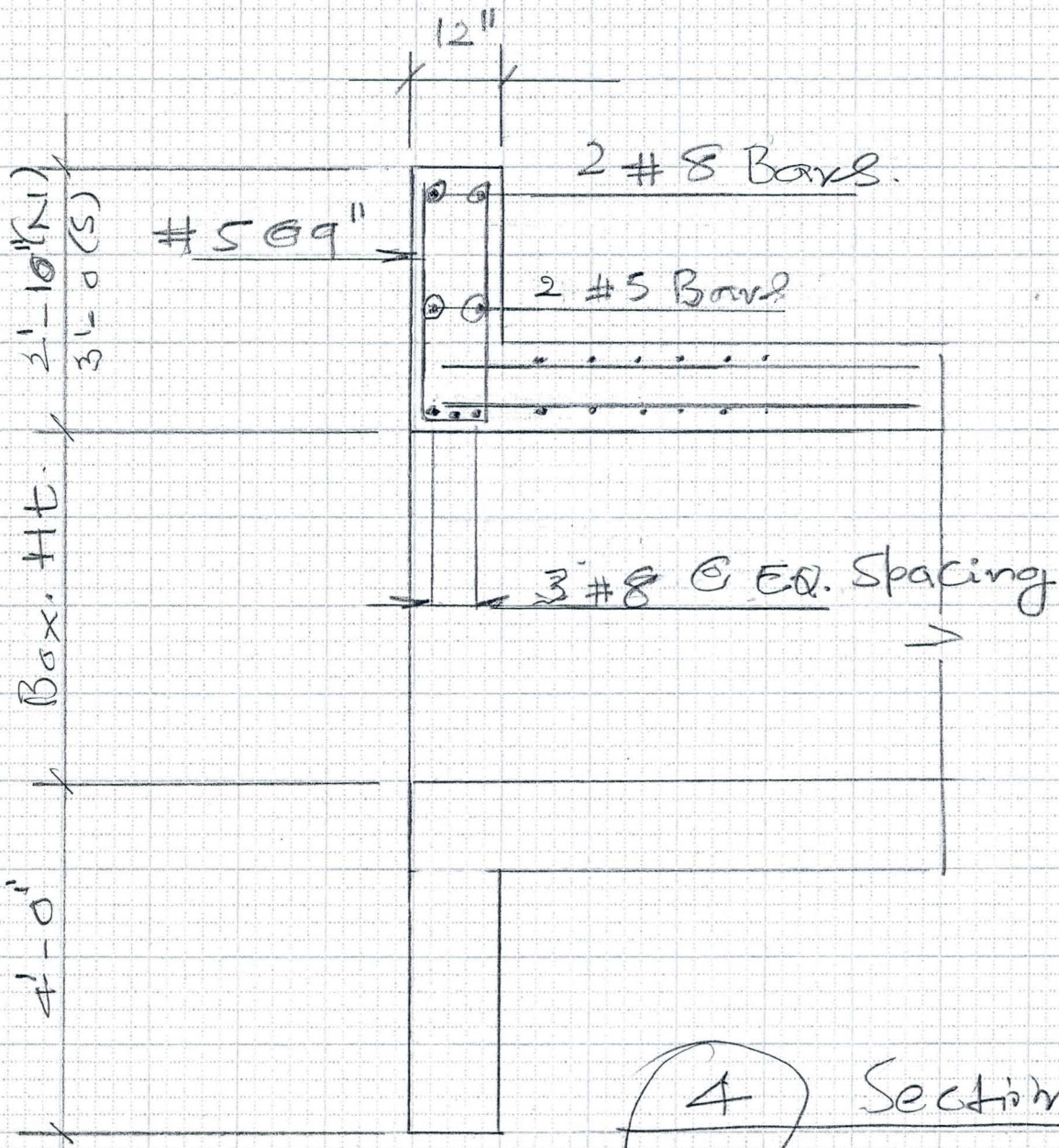

4 Section

Box # 4

FLOOD CONTROL DISTRICT OF MARICOPA COUNTY

PROJECT LACC PAGE ____ OF ____

DETAIL Box Culverts COMPUTED ____ DATE ____

Box. 1 CHECKED BY ____ DATE ____

Box-1 (Edge Beams)

$\tan 53 = \frac{11}{x}$

$x = 8.3'$ $L = \sqrt{11^2 + 8.3^2} = 13.8'$

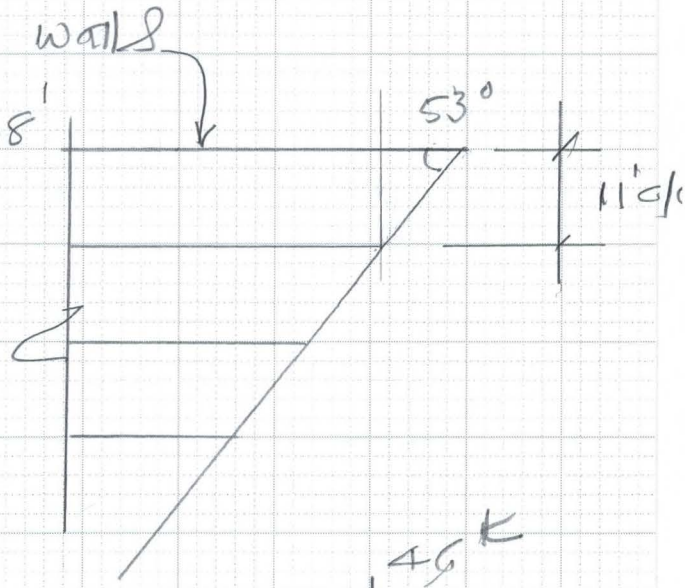

fill ht = 10'

$\frac{(11 \times 1)}{2} 10 \times 0.13 = 6.6$ klf

$W = \left(\frac{6.6}{2} \times 13.8\right) = 46^K$

$R_A = \frac{1}{3}(46) = 15.3^K$

for Triangular loading:

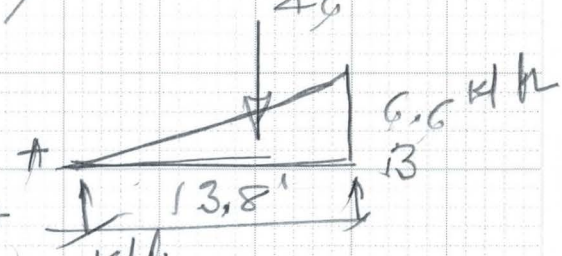

$M_1 = 0.1283 W L$

$= (0.1283 \times 46 \times 13.8) = 81.4$

Self. wt of Bm $= (2.5 \times 1)\, 0.15 = 0.38$ klf

$M_2 = 0.38 \times 13.8^2/8 = 9.0$

$M_{total} = (81.4 + 9) = 90.4$

$d_{eff} = (27.6) - 2 - 0.5 = 27.5''$

$A_s = \frac{90.4 \times 12}{24 \times 0.88 \times 27.5}$

$= 1.9 \text{ in}^2$

use 3 #8

Shear Check:

$V = \frac{2}{3}(46) = 30.6^K$

$\frac{6.6 \times 14.5}{13.8} = 5.5^K$

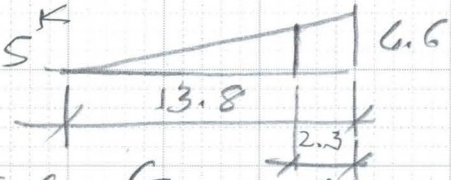

$V_{ed} = 30.6 - \frac{(5.5 + 6.6)}{2} 2.3$

$= 16.7^K$

$v = \frac{16.7}{12 \times 27.5} = 50.6$ psi

$v_c = 0.95\sqrt{3000} = 52$ psi

$\therefore$ OK

6910-153 4-90

FLOOD CONTROL DISTRICT OF MARICOPA COUNTY

PROJECT LACC PAGE ___ OF ___

DETAIL Box Culverts COMPUTED KVH DATE 7/01

Edge Beams CHECKED BY ___ DATE ___

Edge Beams (Box #4)

$L = \sqrt{11^2 + 11^2} = 15.6'$

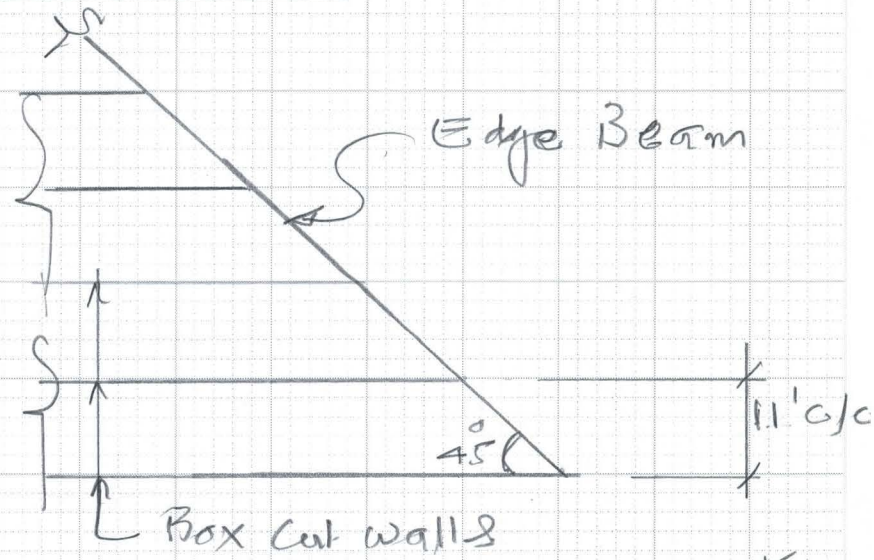

$Bm.\ wt = (3 \times 1)0.15$
$= 0.45$

fill Ht = 10'

$R = \frac{(11 \times 1)}{2} 10 \times 0.12 = 6.6^{K/ft}$

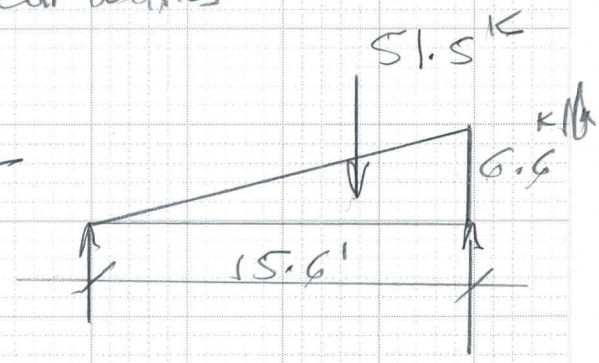

$W = \frac{6.6}{2} \times 15.6 = 51.5^{K}$

$R_A = \left(51.5 \times \frac{5.2}{15.6}\right) = 17.2^{K}$

$M_1 = \left(17.2 \times \frac{2}{3} \times 15.6\right) = 179^{K'/ft}$

Self wt = $0.45^{K/ft}$ $M_2 = 0.45 \times 15.6^2/8 = 13.7$

$M_{total} = (179 + 13.7) = 192.7$

$d_{eff} = (2' - 10) - 2 - 0.5 = 31.5$

$A_s = \frac{192.7 \times 12}{24 \times 0.88 \times 31.5}$
$= 3.5\ in^2$

FLOOD CONTROL DISTRICT OF MARICOPA COUNTY

PROJECT LACC PAGE ___ OF ___

DETAIL Box Culvert COMPUTED KVH DATE 7/01

Edge Beams CHECKED BY ___ DATE ___

Box #4

Check with Triangular Loading

$M_{max} = 0.1283\,WL = (0.1283 \times 51.5 \times 15.5)$

$= 102.4$

$M_{total} = (102.4 + 13.7)$

$= 116.1$

$A_s = \frac{116.1 \times 12}{24 \times 0.88 \times 31.5}$

$= 2.1\ in^2$

Check Shear:

$V = \frac{(51.5 \times 16.4)}{15.6} = 34.3^k$

$v = \frac{34.3}{12 \times 31.5} = 90.7\ psi$

$V @ d = 34.3 - \frac{(5.5 + 6.6)}{2} 2.63$

$= 18.4\ K$

$v = \frac{18.4}{12 \times 31.5} = 48.7\ psi$

$v_c = 0.95\sqrt{f'_c} = 52.\ psi$

$\therefore$ OK

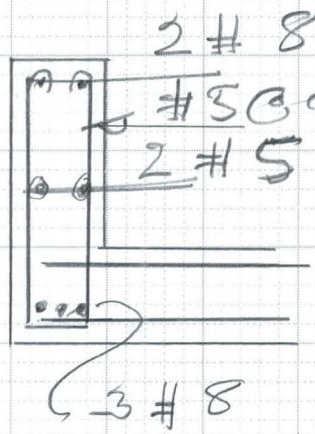

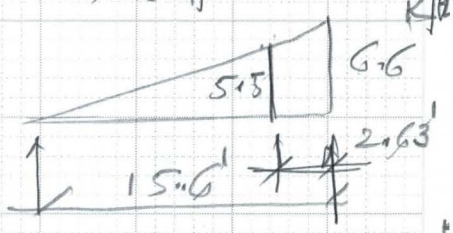

$(6.6 \times \frac{12.97}{15.6}) = 5.5$

FLOOD CONTROL DISTRICT OF MARICOPA COUNTY

PROJECT LACC PAGE ____ OF ____

DETAIL Box Culverts COMPUTED KVH DATE 9/01

CHECKED BY ____ DATE ____

Check ADOT Standard: (Barrier Steel)

$d = (1'-7) - 2 = 17''$, $A_s = \#4 @ 9'' = 0.27\ in^2$

$M_c = Kbd^2$, $K = \frac{f_c}{2} k j$

$k = \sqrt{2\rho n + (\rho n)^2} - \rho n$ $\rho = \frac{0.27}{9 \times 17} = 0.0018$

$k = \sqrt{2 \times 0.0018 \times 9 + (0.0018 \times 9)^2} - 0.0018 \times 9$

$= 0.164$

$j = (1 - \frac{0.164}{3}) = 0.95$

$K = (\frac{3000}{2} \times 0.164 \times 0.95) = 0.399$

$M_c = 0.399 \times \frac{9 \times 17^2}{12} = 7.2^{k\text{-}ft}$

$A_s = \frac{7.2 \times 12}{24 \times 0.88 \times 17} = 0.23\ in^2 \approx 0.27$

Mom. to Relief $= 7.2^{k\text{-}ft}$

using $d = (12 - 2) = 10''$

$A_s = \frac{7.2 \times 12}{24 \times 0.9 \times 10}$

$= 0.4\ in^2$

use #5 @ 9'' $A_s = 0.41$

& #4 @ 12'' Back face

6910-153 4-90

FLOOD CONTROL DISTRICT OF MARICOPA COUNTY

PROJECT LACC PAGE ____ OF ____

DETAIL Box Culverts COMPUTED KVH DATE 7/01

Box #1 CHECKED BY ____ DATE ____

Box #1

Top of wall = 984.34
Top of Box 982.84
1.50

Inv 974.84 (South)
Box Ht 7.0
Top Slab 11" 0.92
982.84 982.76
Top of Box

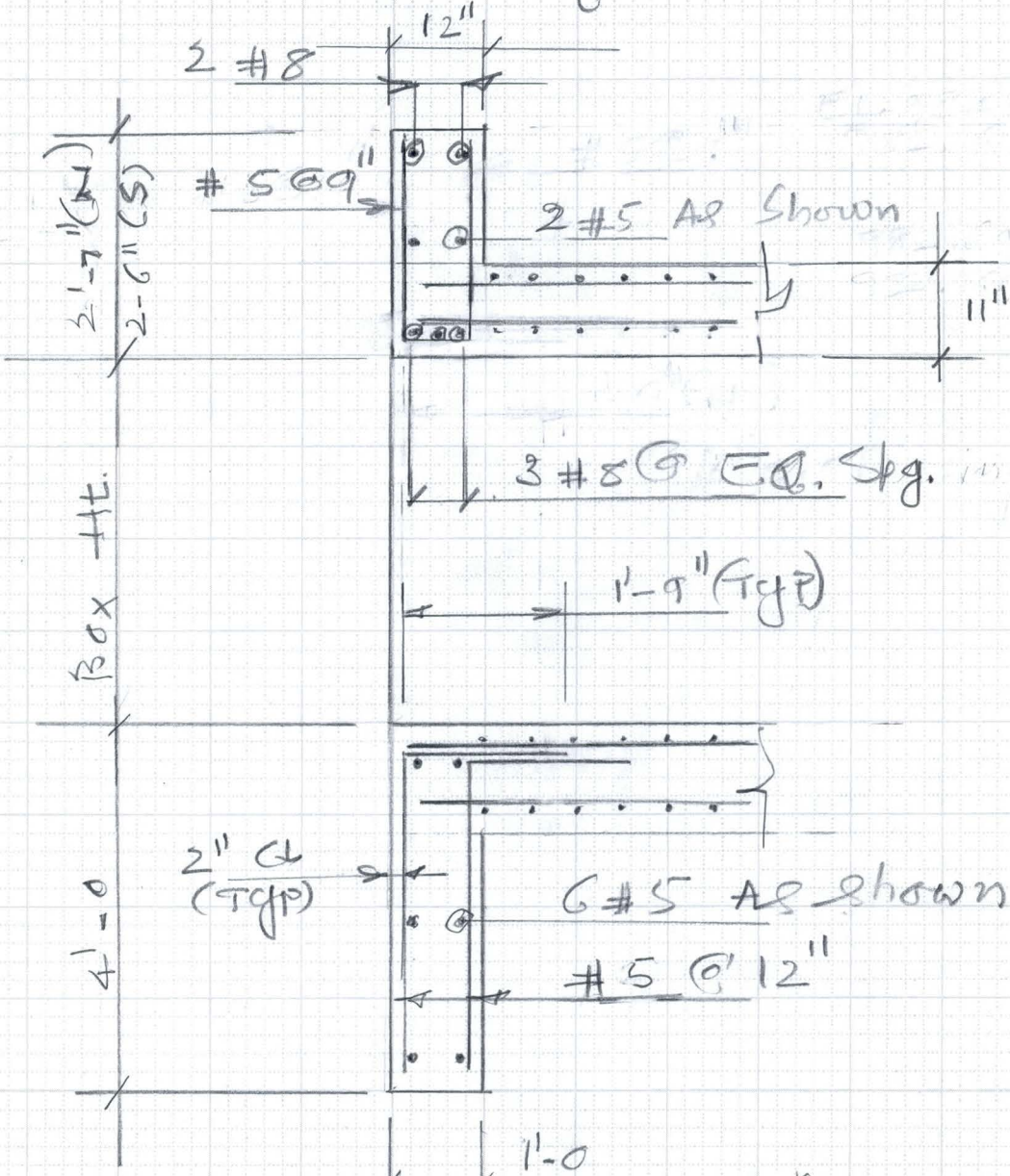

(4) Section Box-1

6910-153 4-90

FLOOD CONTROL DISTRICT OF MARICOPA COUNTY

PROJECT LAOC PAGE ____ OF ____

DETAIL Box Culvert. 2 COMPUTED KVH DATE 7/01

CHECKED BY ____ DATE ____

Box. 2

Inv 987.3 Top of wall 996.3 − 987.3 = 9.3

Box Ht 7.0

Top Slab ~~1.0~~ 0.92

995.3

995.22 ← Top of Box

996.3 − 995.22 = 1.08 + 0.92 = 2.00

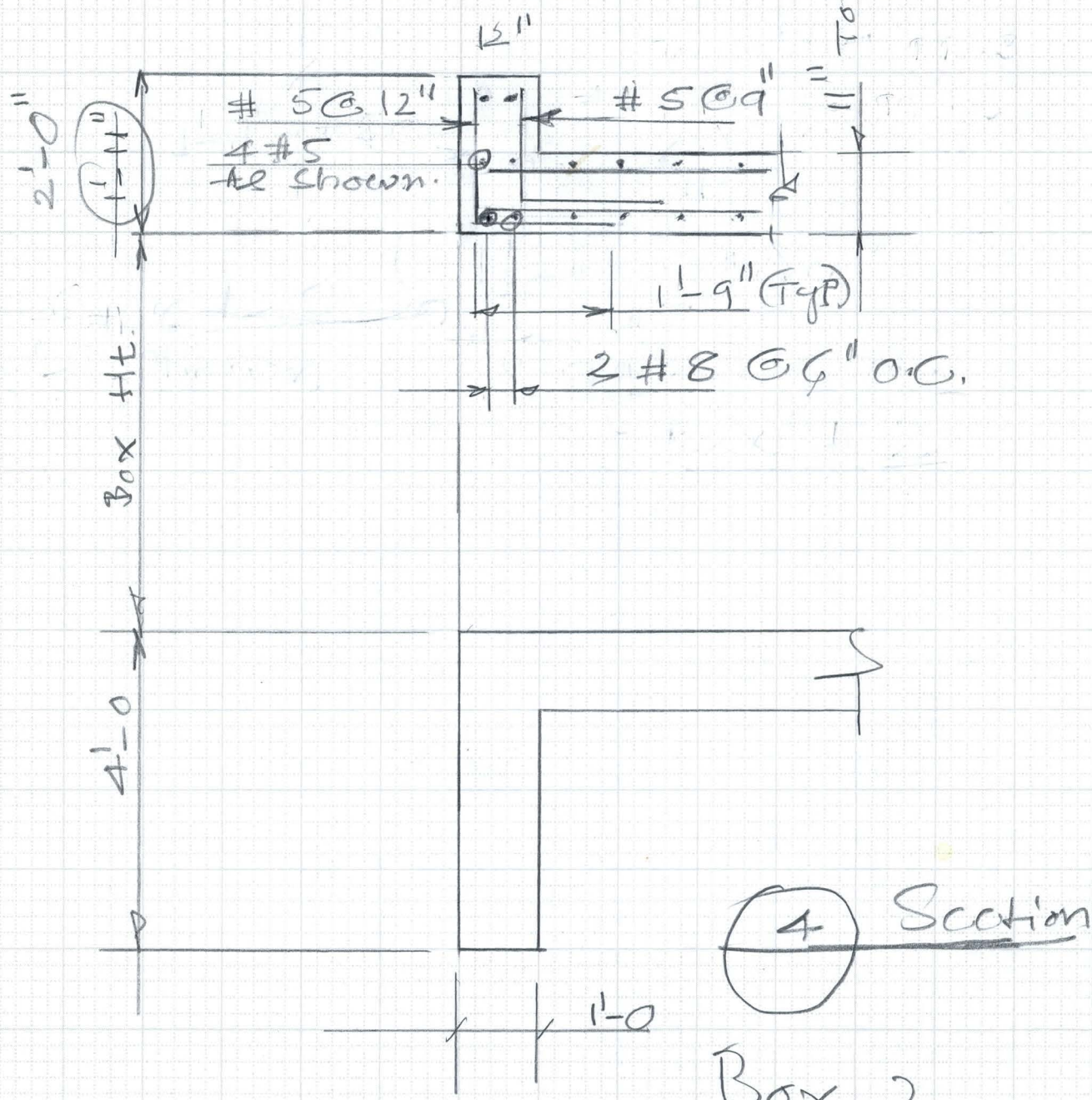

4 Section

Box-2

6910-153 4-90

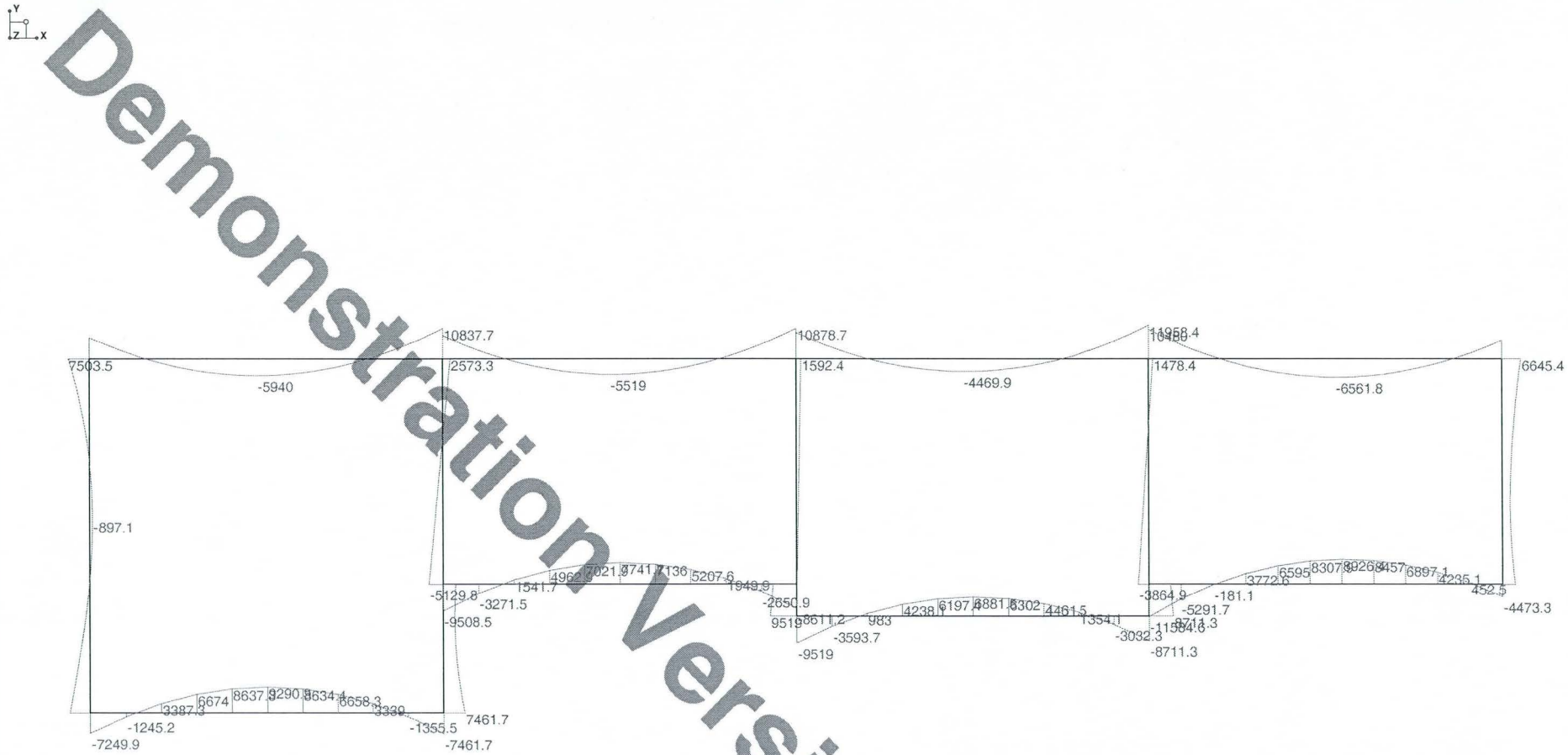

Demonstration Version

Solution: LC 1, O.W.+Soil above+Truck+EP
Member Bending Moments (Lb-ft)

Your Company Name	Culvert Design	April 24, 2001
Sam Hanna		1:28 PM
		culvert4 - Working.r2d

Demonstration Version

Solution: LC 1, O.W.+Soil above+Truck+EP
Member Axial Forces (Lb)

Your Company Name	Culvert Design	April 24, 2001
Sam Hanna		1:17 PM
		culvert4 - Working.r2d

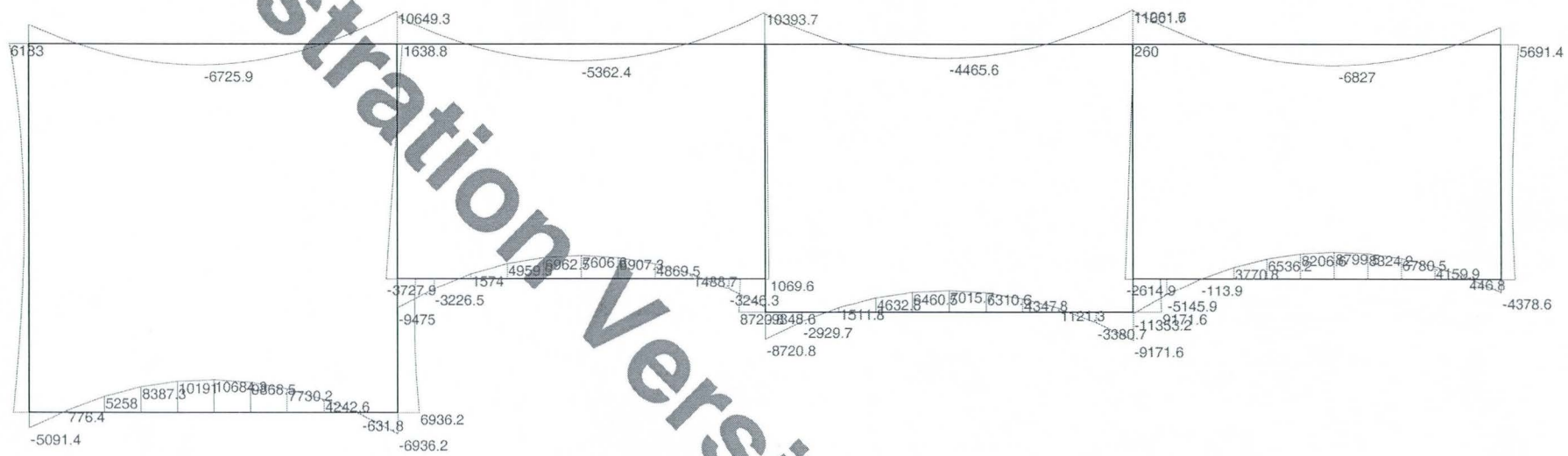

Demonstration Version

Solution: LC 2, O.W+Soil Above+Truck+1/2 EP
Member Bending Moments (Lb-ft)

Your Company Name	Culvert Design	April 24, 2001
Sam Hanna		1:28 PM
		culvert4 - Working.r2d

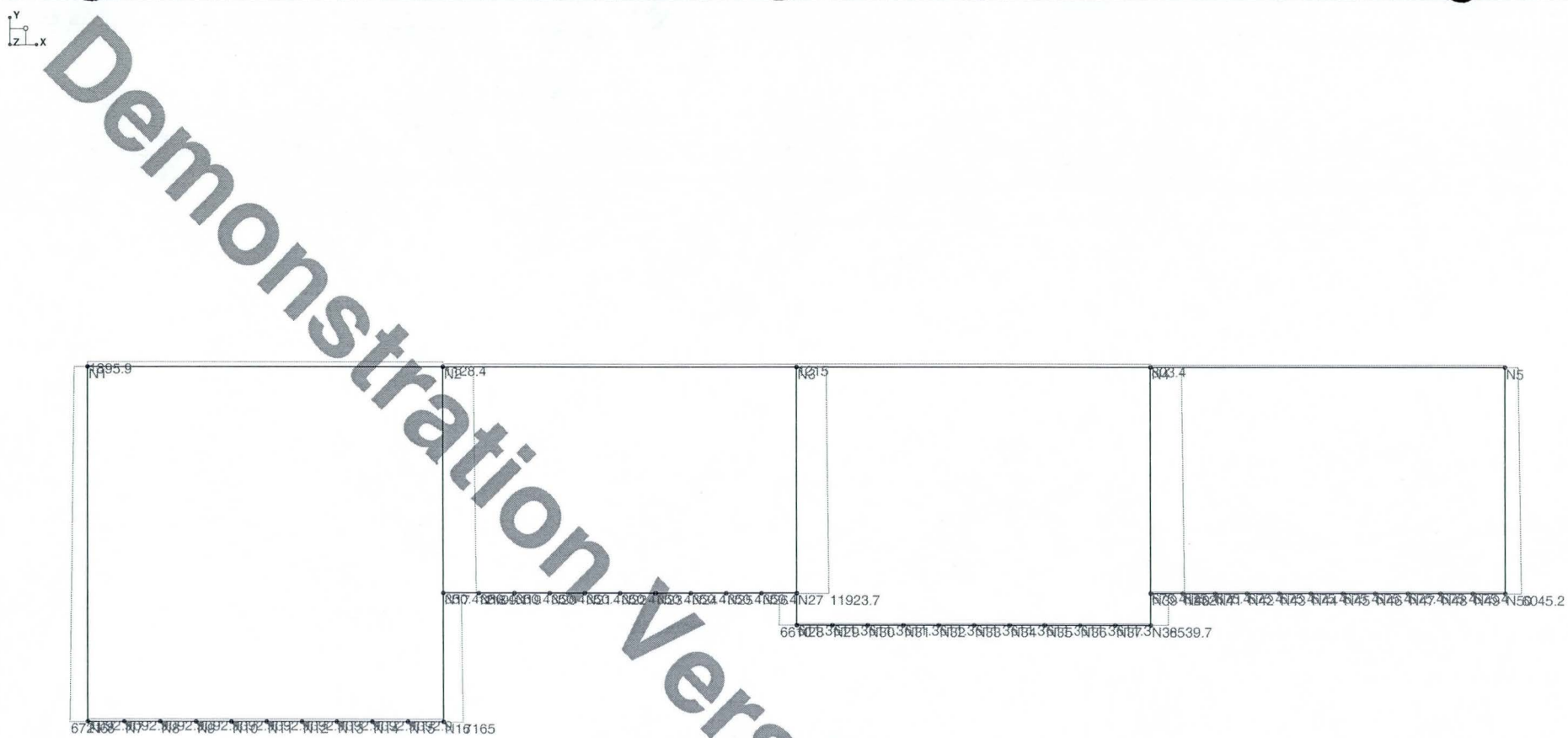

Demonstration Version

Solution: LC 2, O.W+Soil Above+Truck+1/2 EP
Member Axial Forces (Lb)

Your Company Name	Culvert Design	April 24, 2001
Sam Hanna		1:20 PM
		culvert4 - Working.r2d

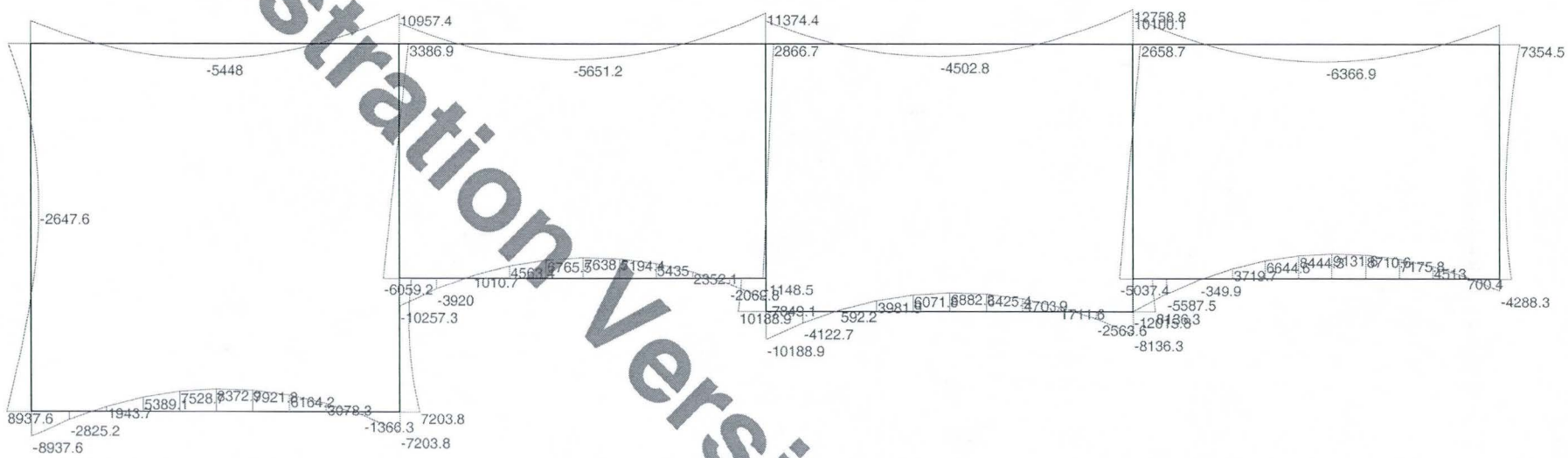

Solution: LC 3, O.W.+Soil above+wet EP
Member Bending Moments (Lb-ft)

Your Company Name	Culvert Design	April 24, 2001
Sam Hanna		1:28 PM
		culvert4 - Working.r2d

Demonstration Version

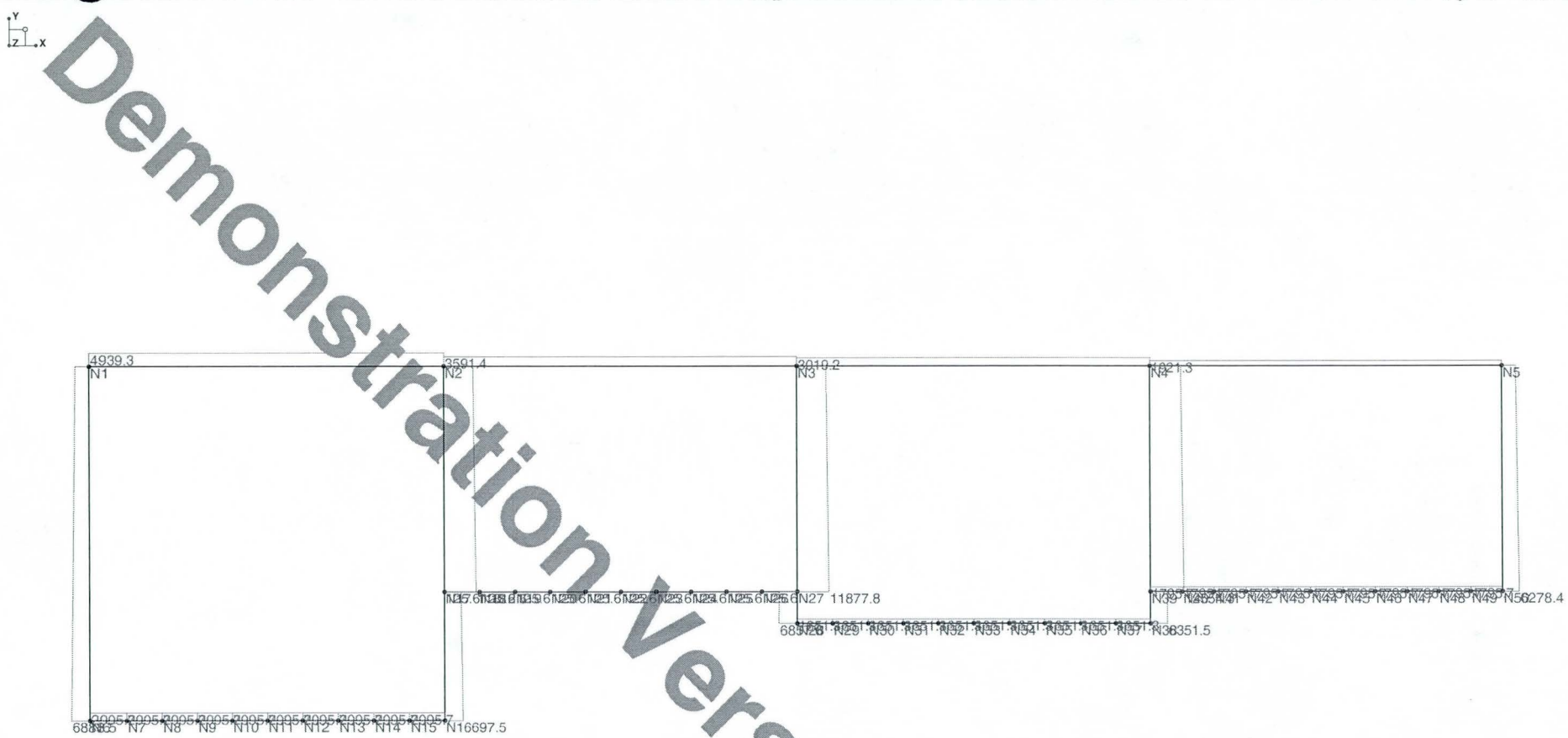

Demonstration Version

Solution: LC 3, O.W.+Soil above+wet EP
Member Axial Forces (Lb)

Your Company Name	Culvert Design	April 24, 2001
Sam Hanna		1:20 PM
		culvert4 - Working.r2d

Demonstration Version

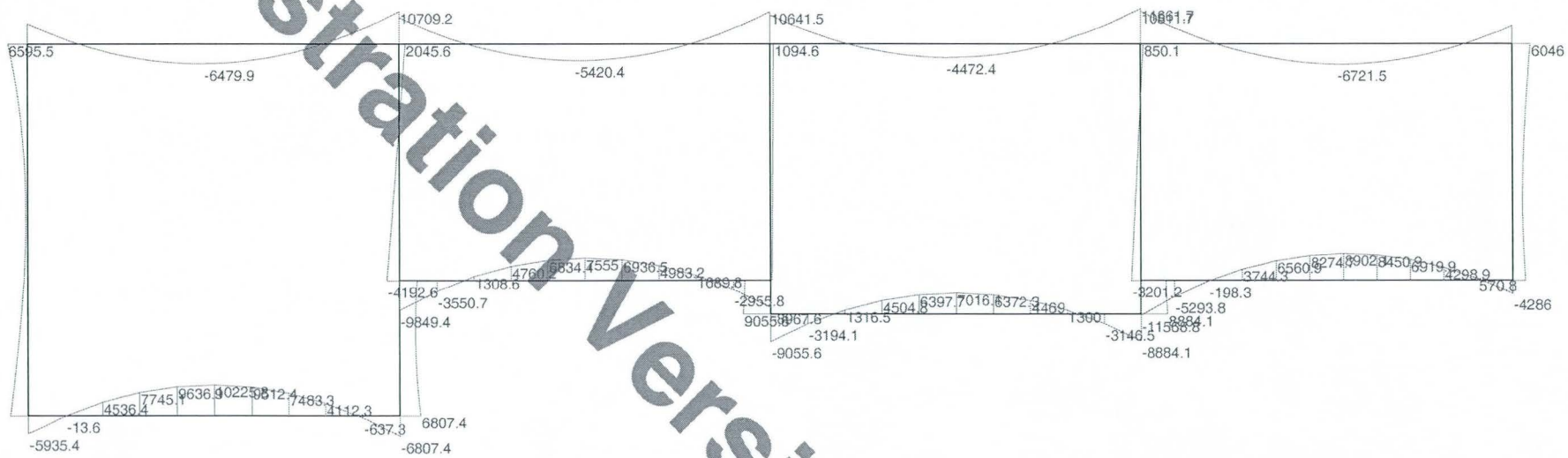

Solution: LC 4, O.W.+Soil above+1/2 wet EP
Member Bending Moments (Lb-ft)

Your Company Name	Culvert Design	April 24, 2001
Sam Hanna		1:28 PM
		culvert4 - Working.r2d

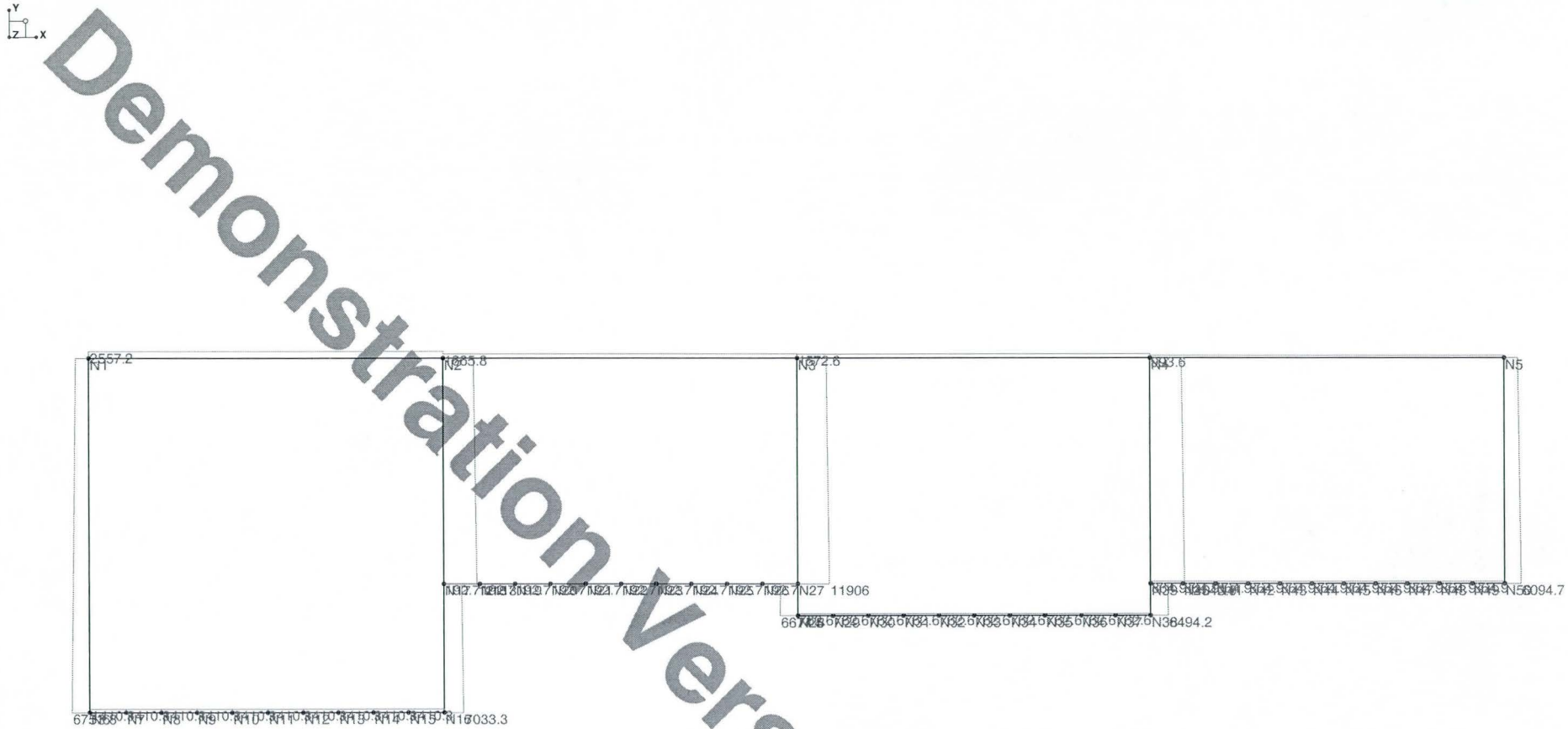

Demonstration Version

Solution: LC 4, O.W.+Soil above+1/2 wet EP
Member Axial Forces (Lb)

Your Company Name	Culvert Design	April 24, 2001
Sam Hanna		1:20 PM
		culvert4 - Working.r2d

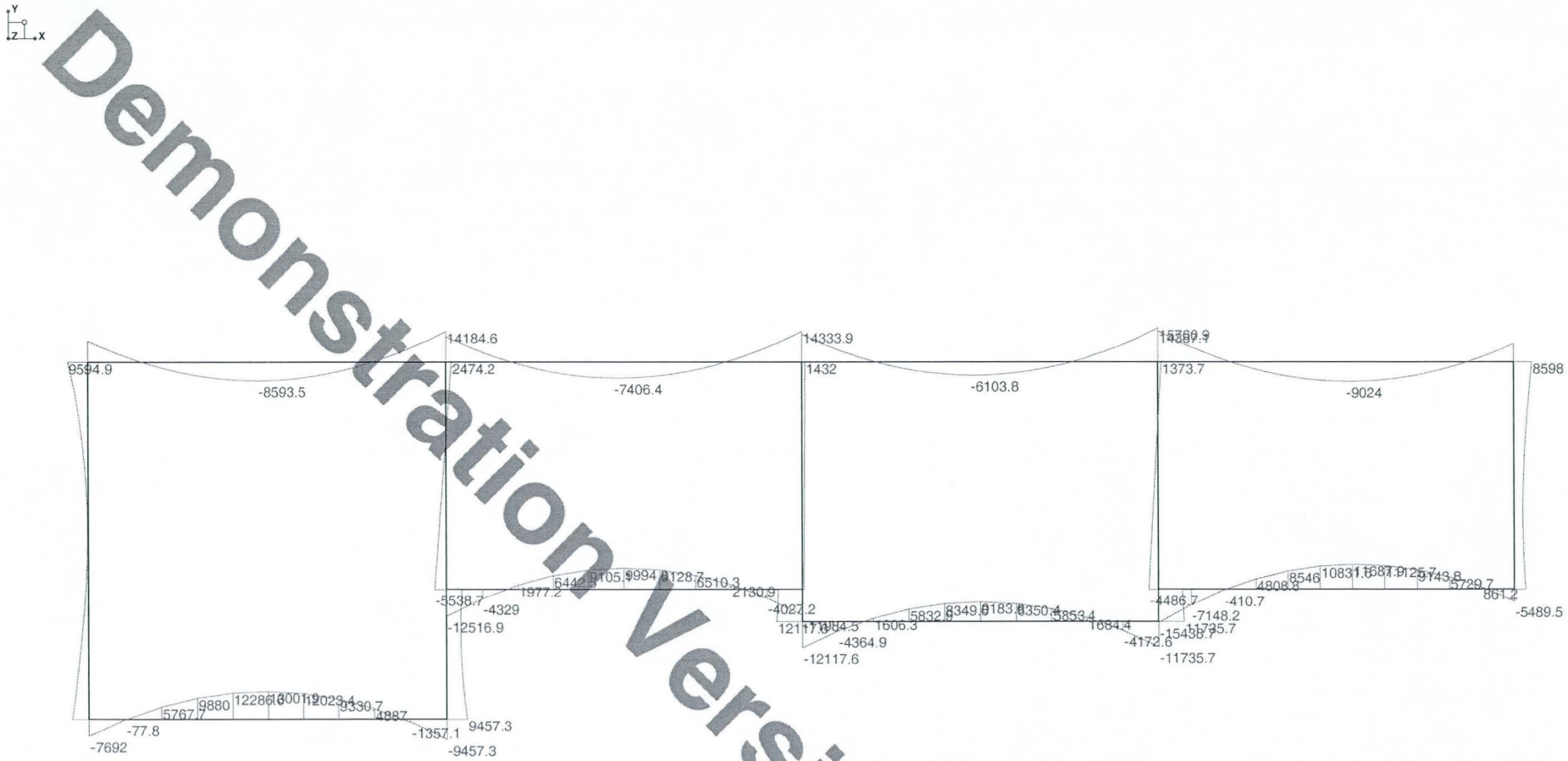

Demonstration Version

Solution: LC 5, O.W.+Max. Soil above+EP
Member Bending Moments (Lb-ft)

Your Company Name	Culvert Design	April 24, 2001
Sam Hanna		1:29 PM
		culvert4 - Working.r2d

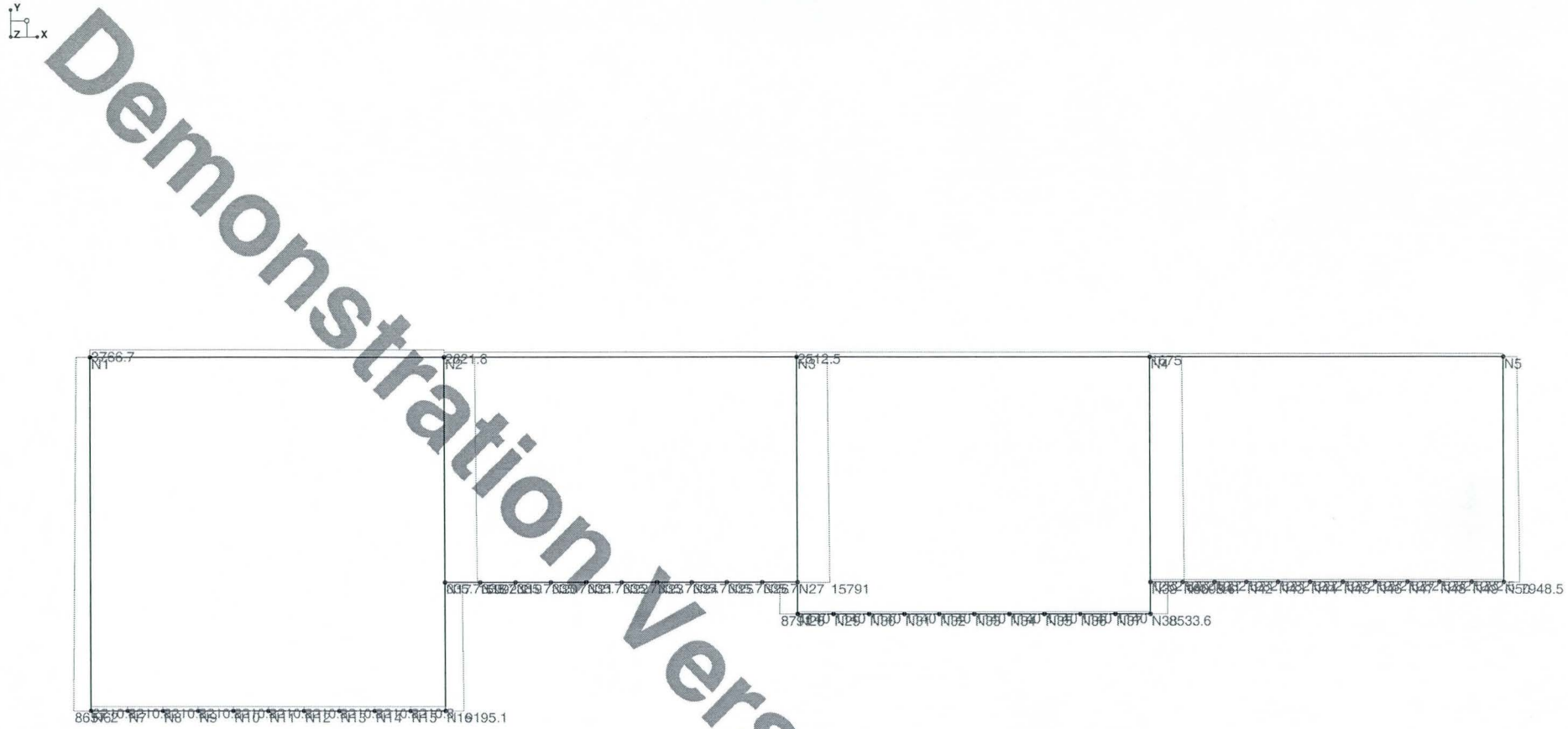

Demonstration Version

Solution: LC 5, O.W.+Max. Soil above+EP
Member Axial Forces (Lb)

Your Company Name	Culvert Design	April 24, 2001
Sam Hanna		1:21 PM
		culvert4 - Working.r2d

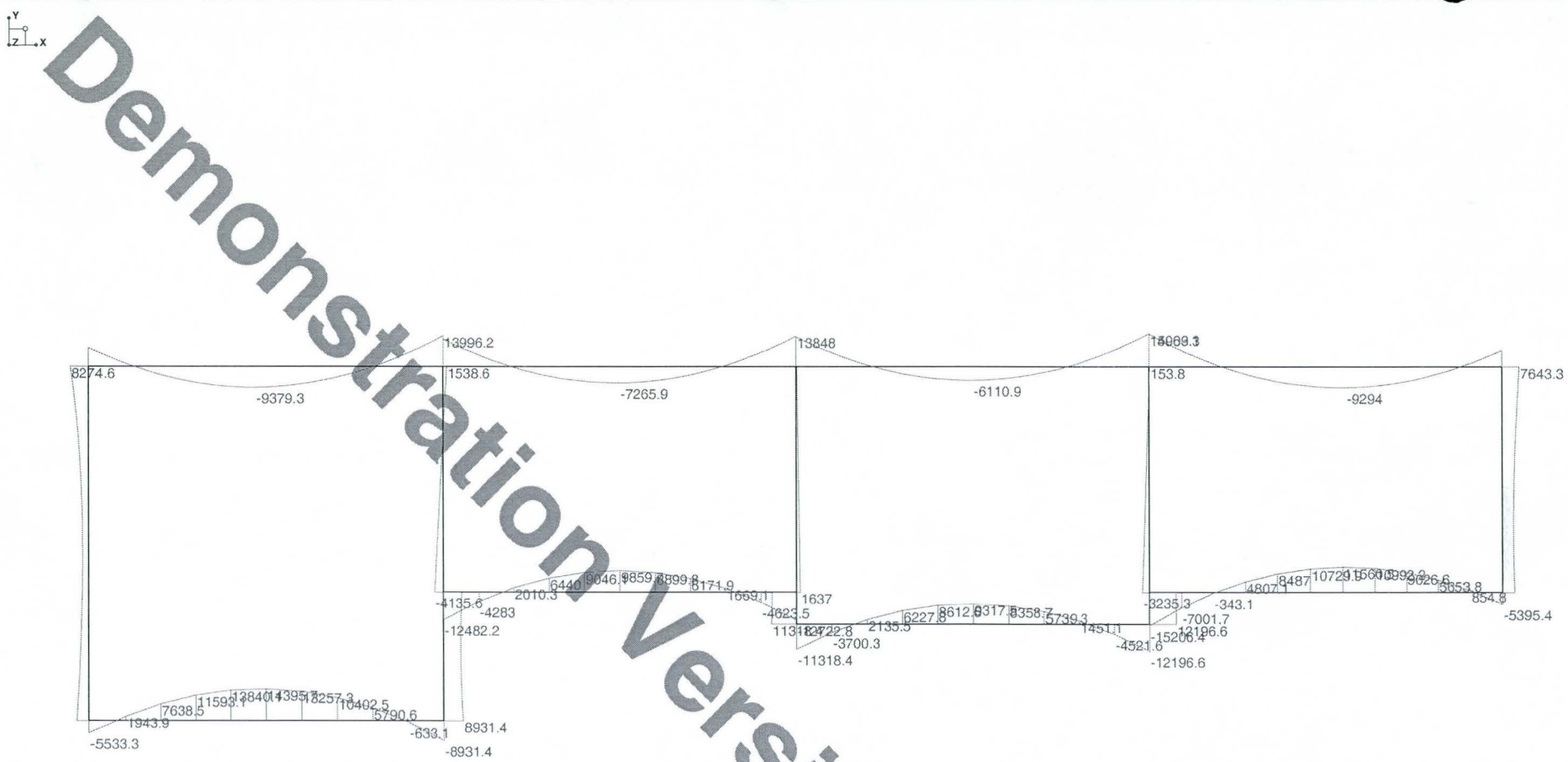

Demonstration Version

Solution: LC 6, O.W.+Max. Soil above+1/2EP
Member Bending Moments (Lb-ft)

Your Company Name	Culvert Design	April 24, 2001
Sam Hanna		1:29 PM
		culvert4 - Working.r2d

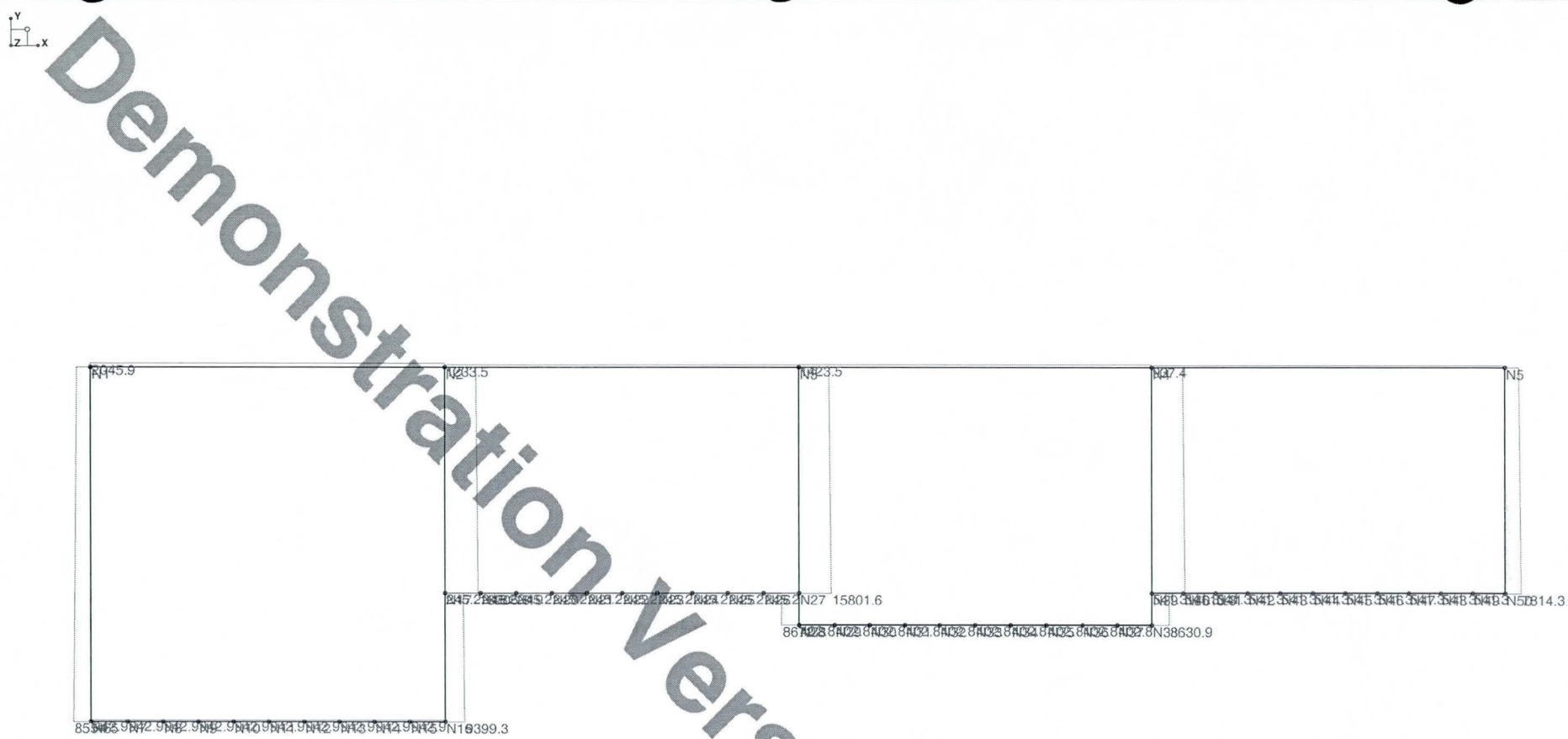

Demonstration Version

Solution: LC 6, O.W.+Max. Soil above+1/2EP
Member Axial Forces (Lb)

Your Company Name	Culvert Design	April 24, 2001
Sam Hanna		1:22 PM
		culvert4 - Working.r2d

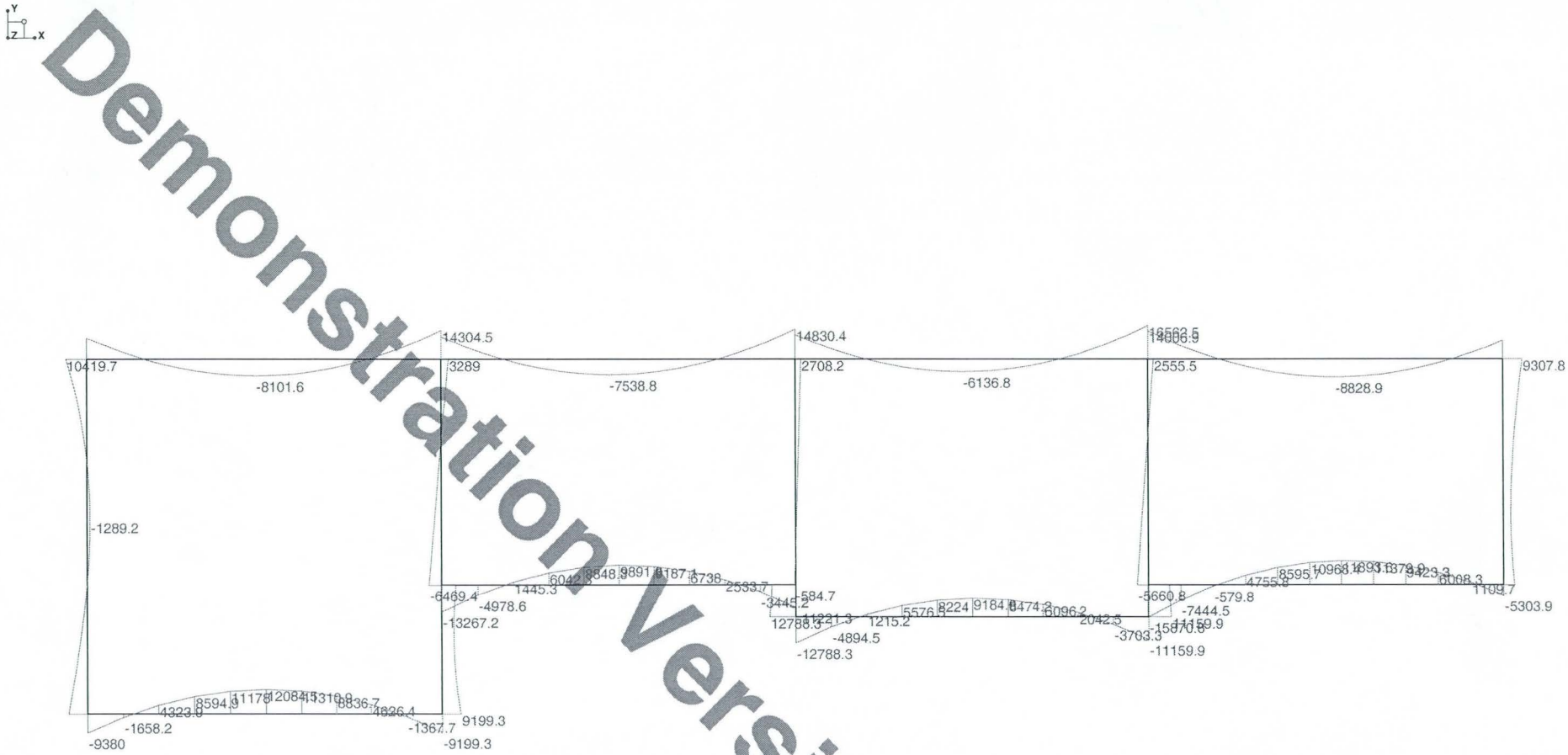

Demonstration Version

Solution: LC 7, O.W.+Max. Soil above+wet EP
Member Bending Moments (Lb-ft)

Your Company Name	Culvert Design	April 24, 2001
Sam Hanna		1:30 PM
		culvert4 - Working.r2d

Demonstration Version

Solution: LC 7, O.W.+Max. Soil above+wet EP
Member Axial Forces (Lb)

Your Company Name	Culvert Design	April 24, 2001
Sam Hanna		1:22 PM
		culvert4 - Working.r2d

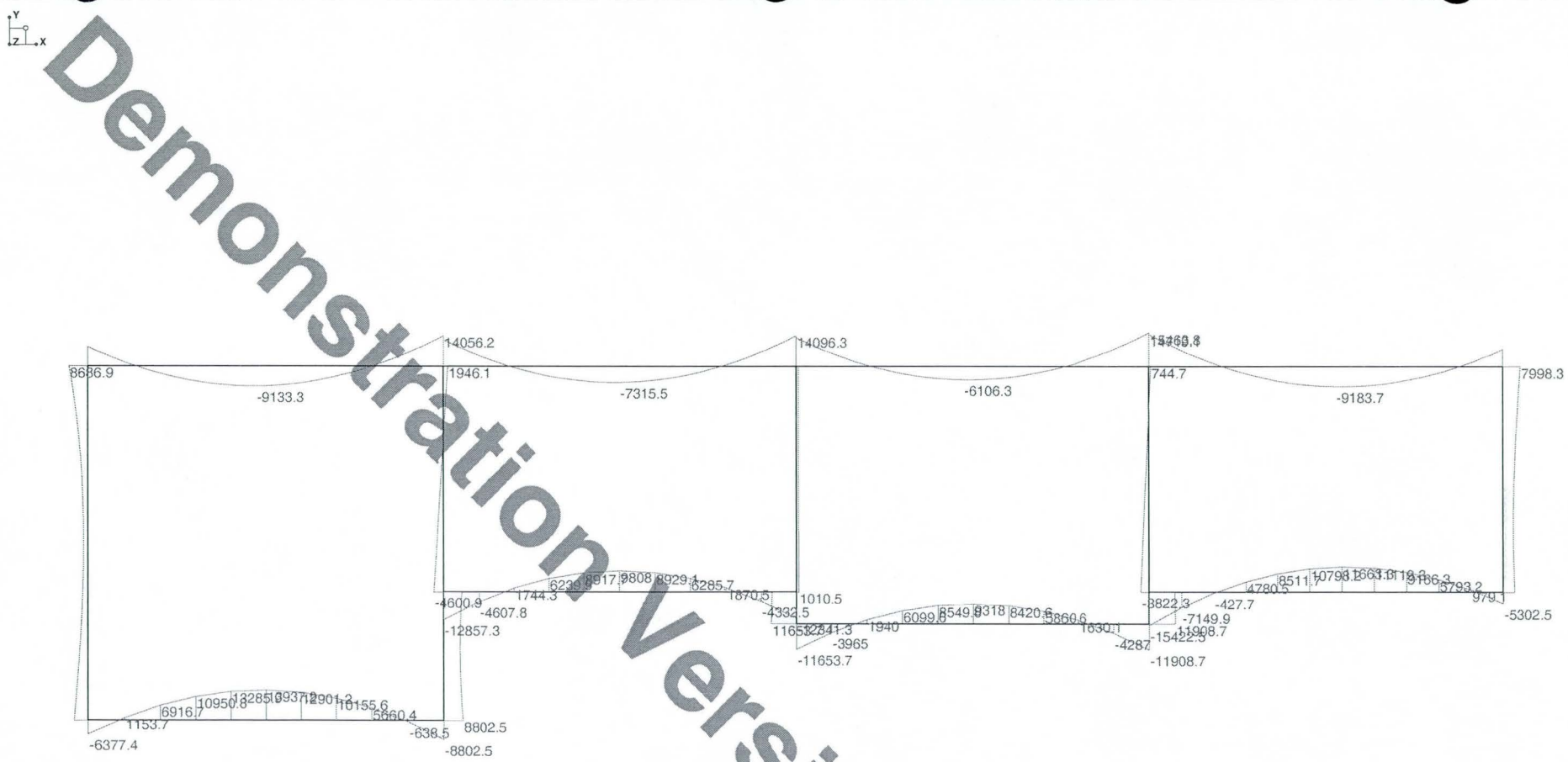

Demonstration Version

Solution: LC 8, O.W.+Max. Soil above+1/2 wet EP
Member Bending Moments (Lb-ft)

Your Company Name	Culvert Design	April 24, 2001
Sam Hanna		1:30 PM
		culvert4 - Working.r2d

Demonstration Version

Solution: LC 8, O.W.+Max. Soil above+1/2 wet EP
Member Axial Forces (Lb)

Your Company Name	Culvert Design	April 24, 2001
Sam Hanna		1:23 PM
		culvert4 - Working.r2d

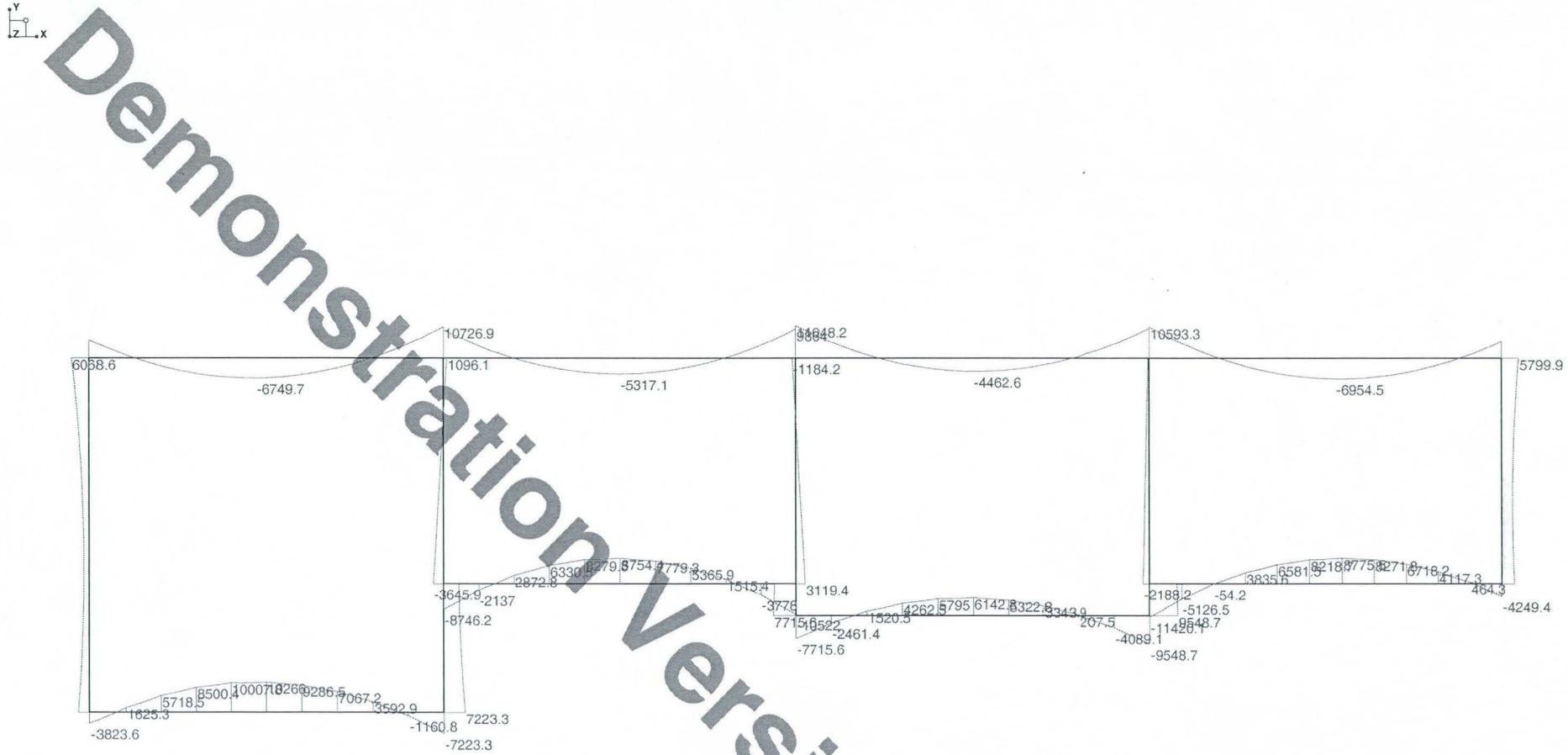

Demonstration Version

Solution: LC 9, O.W./Soil above/Truck/EP/WP
Member Bending Moments (Lb-ft)

Your Company Name	Culvert Design	April 24, 2001
Sam Hanna		1:30 PM
		culvert4 - Working.r2d

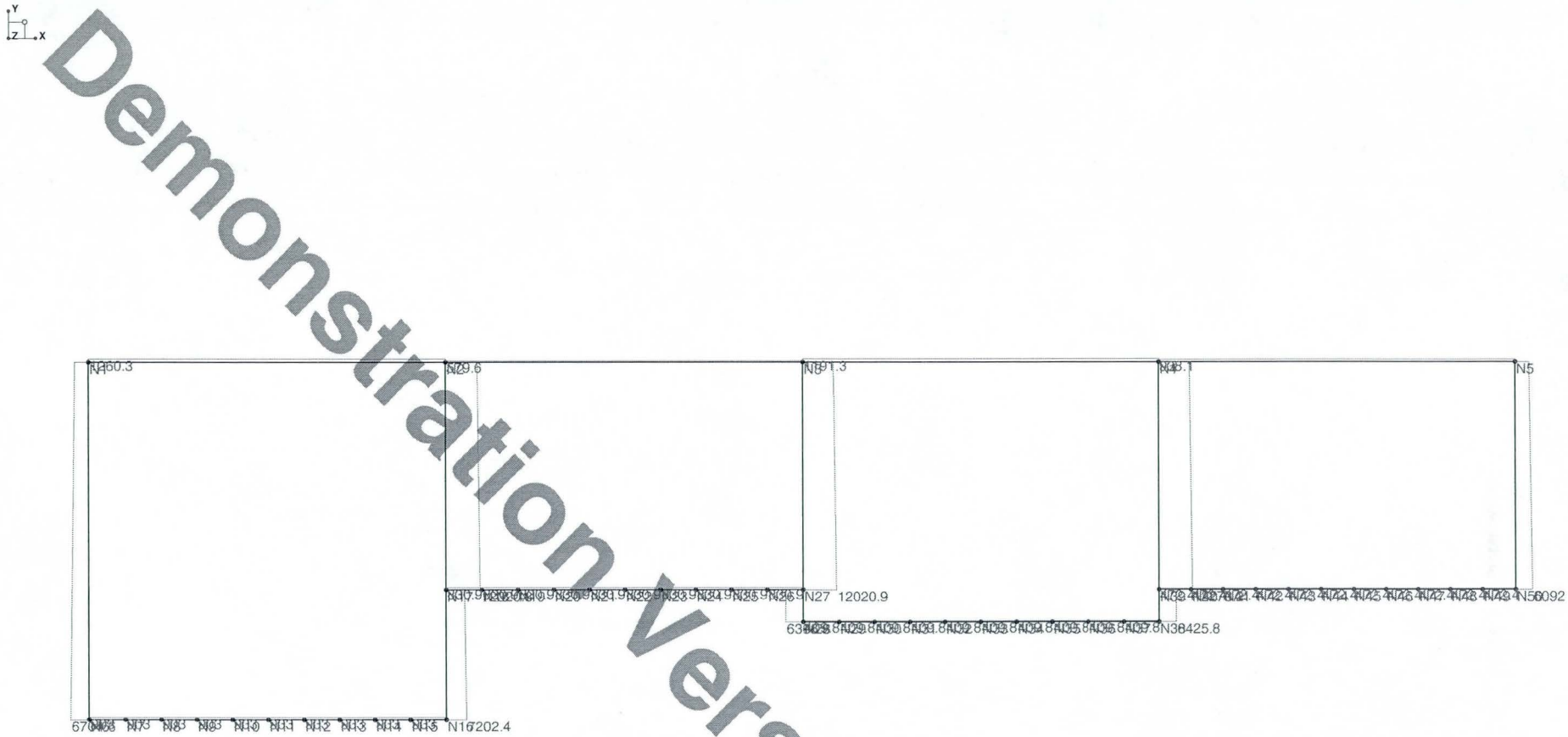

Demonstration Version

Solution: LC 9, O.W./Soil above/Truck/EP/WP
Member Axial Forces (Lb)

Your Company Name	Culvert Design	April 24, 2001
Sam Hanna		1:23 PM
		culvert4 - Working.r2d

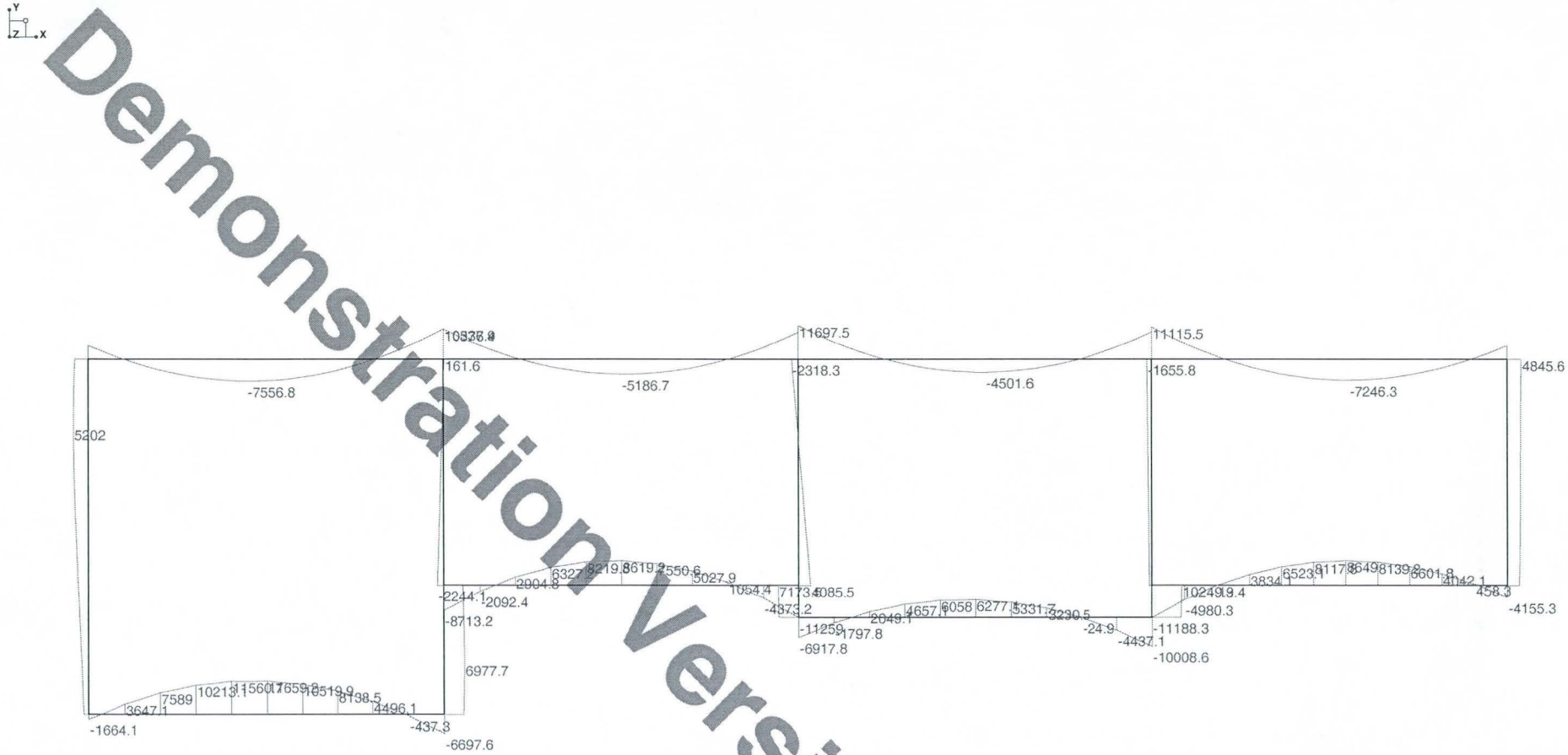

Solution: LC 10, O.W/Soil Above/Truck/1/2 EP/WP
Member Bending Moments (Lb-ft)

Your Company Name	Culvert Design	April 24, 2001
Sam Hanna		1:31 PM
		culvert4 - Working.r2d

Demonstration Version

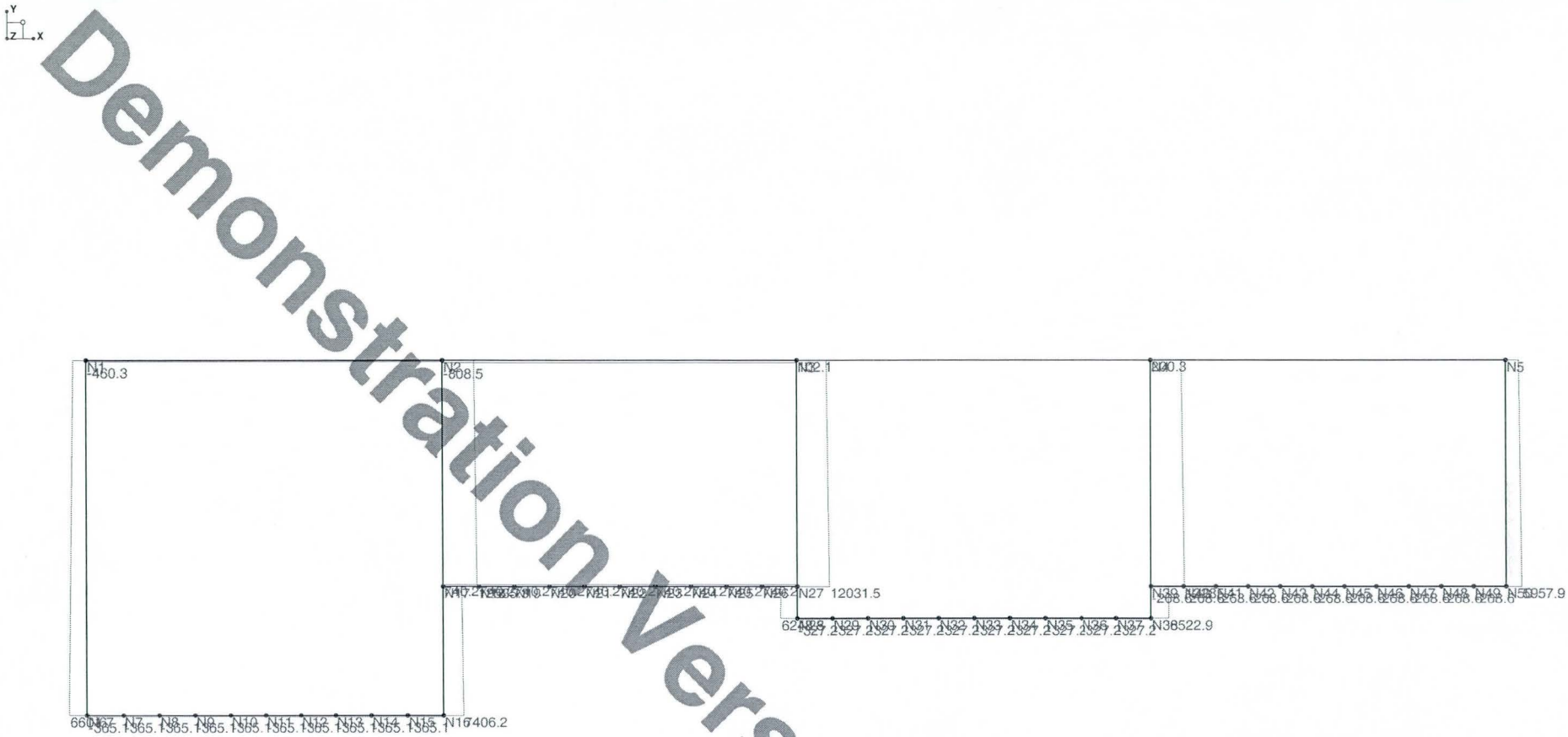

Demonstration Version

Solution: LC 10, O.W/Soil Above/Truck/1/2 EP/WP
Member Axial Forces (Lb)

Your Company Name	Culvert Design	April 24, 2001
Sam Hanna		1:24 PM
		culvert4 - Working.r2d

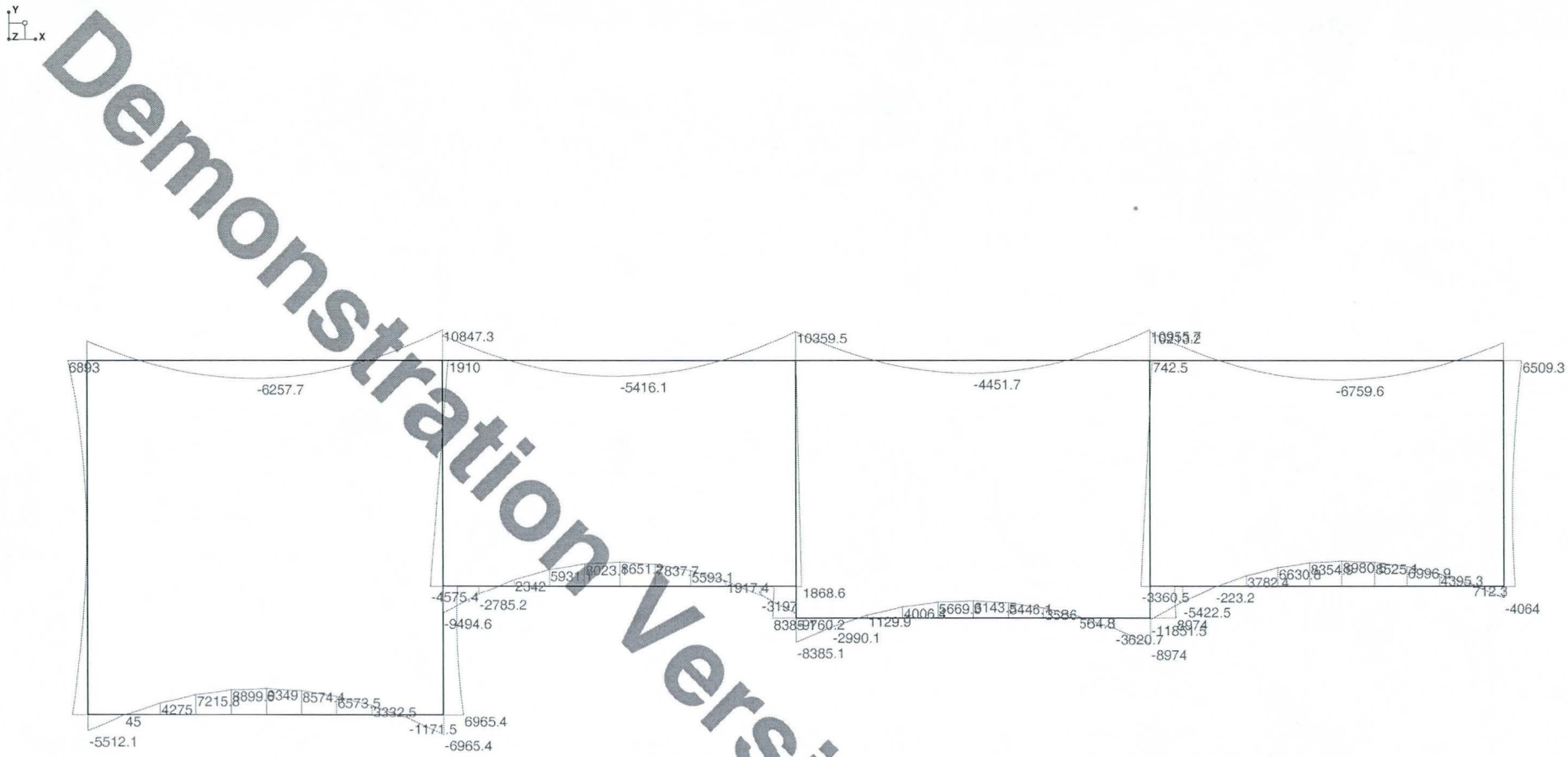

Demonstration Version

Solution: LC 11, O.W./Soil above/wet EP/WP
Member Bending Moments (Lb-ft)

Your Company Name	Culvert Design	April 24, 2001
Sam Hanna		1:24 PM
		culvert4 - Working.r2d

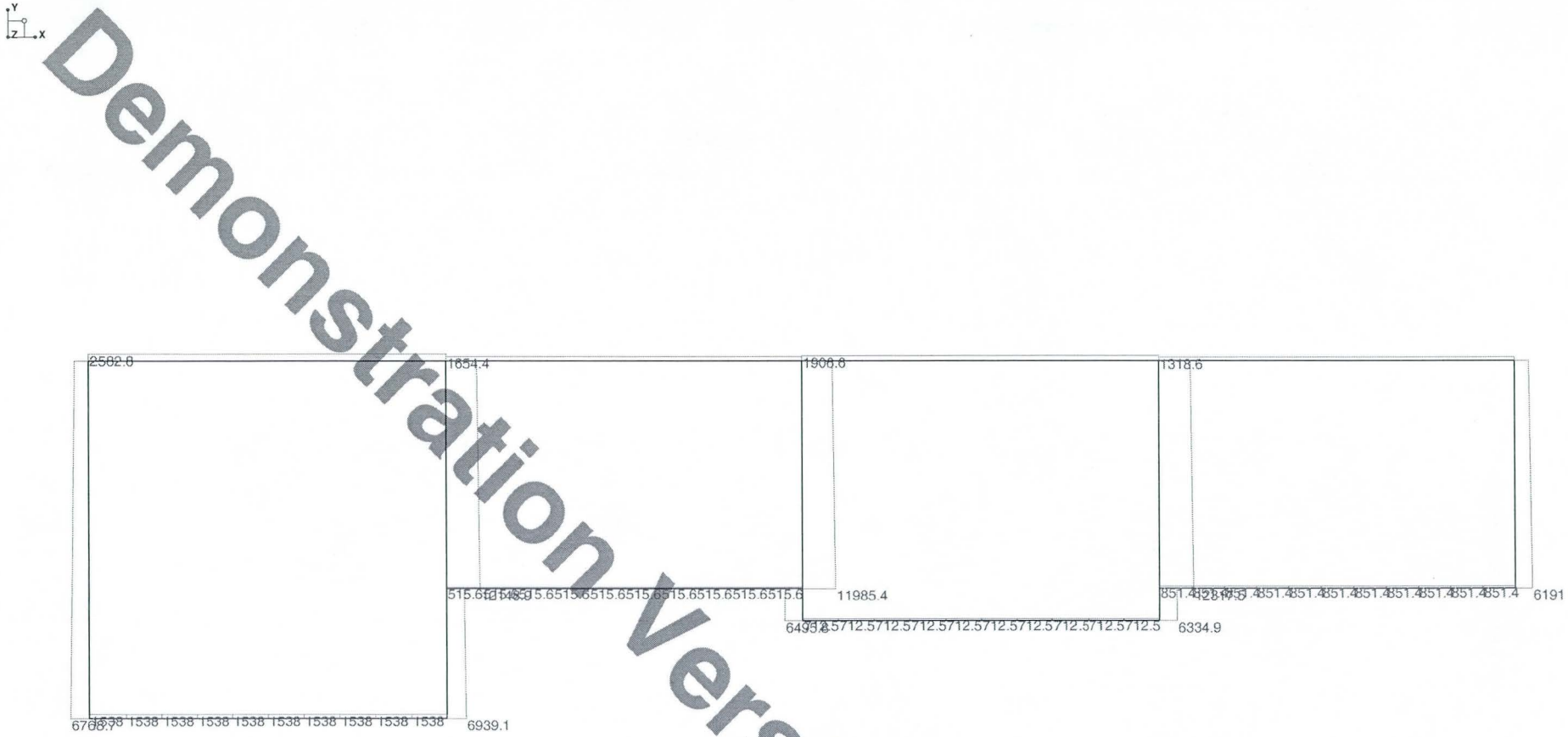

Demonstration Version

Solution: LC 11, O.W./Soil above/wet EP/WP
Member Axial Forces (Lb)

Your Company Name	Culvert Design	April 24, 2001
Sam Hanna		1:24 PM
		culvert4 - Working.r2d

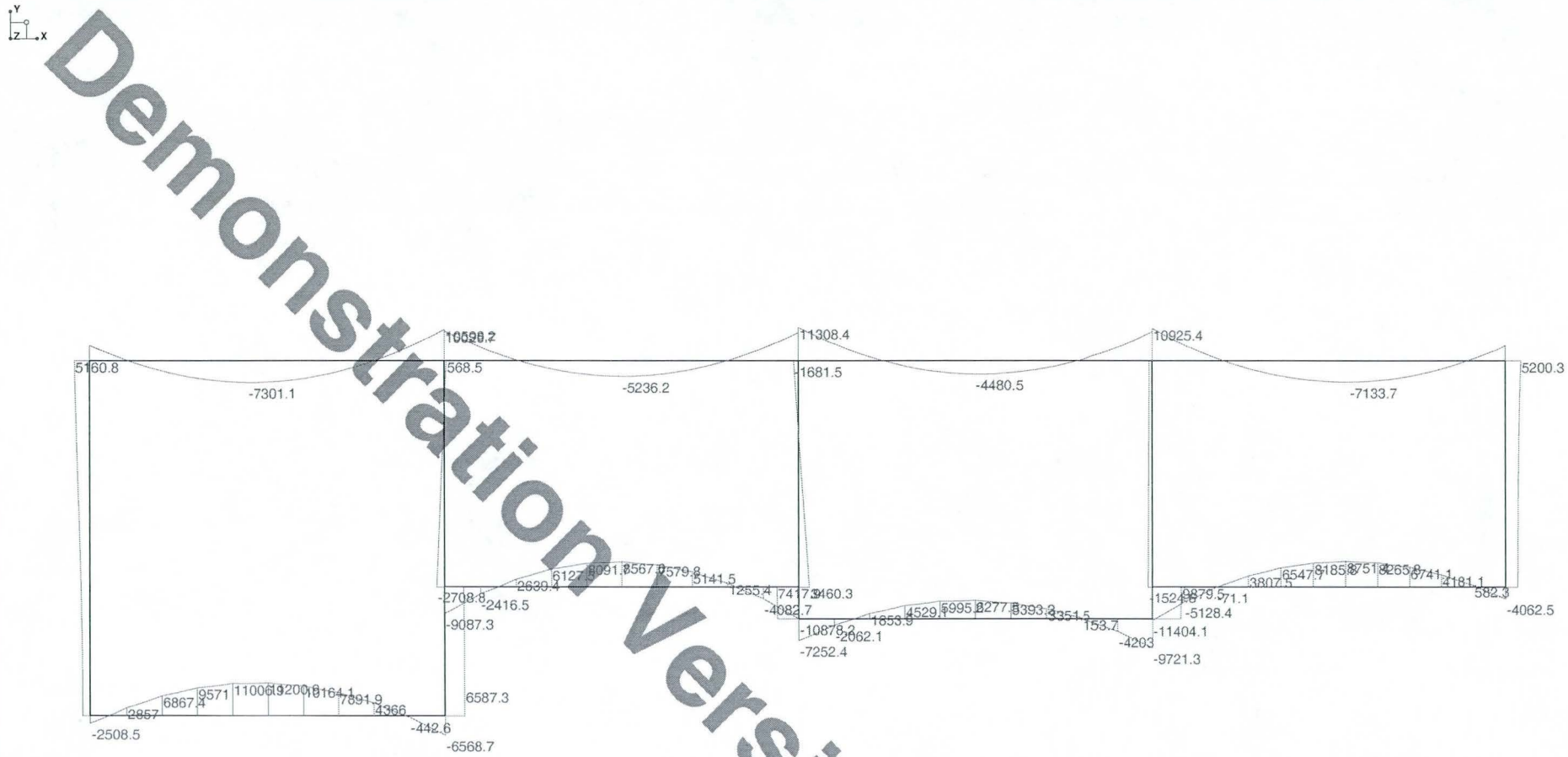

Demonstration Version

Solution: LC 12, O.W./Soil above/1/2 wet EP/WP
Member Bending Moments (Lb-ft)

Your Company Name	Culvert Design	April 24, 2001
Sam Hanna		1:24 PM
		culvert4 - Working.r2d

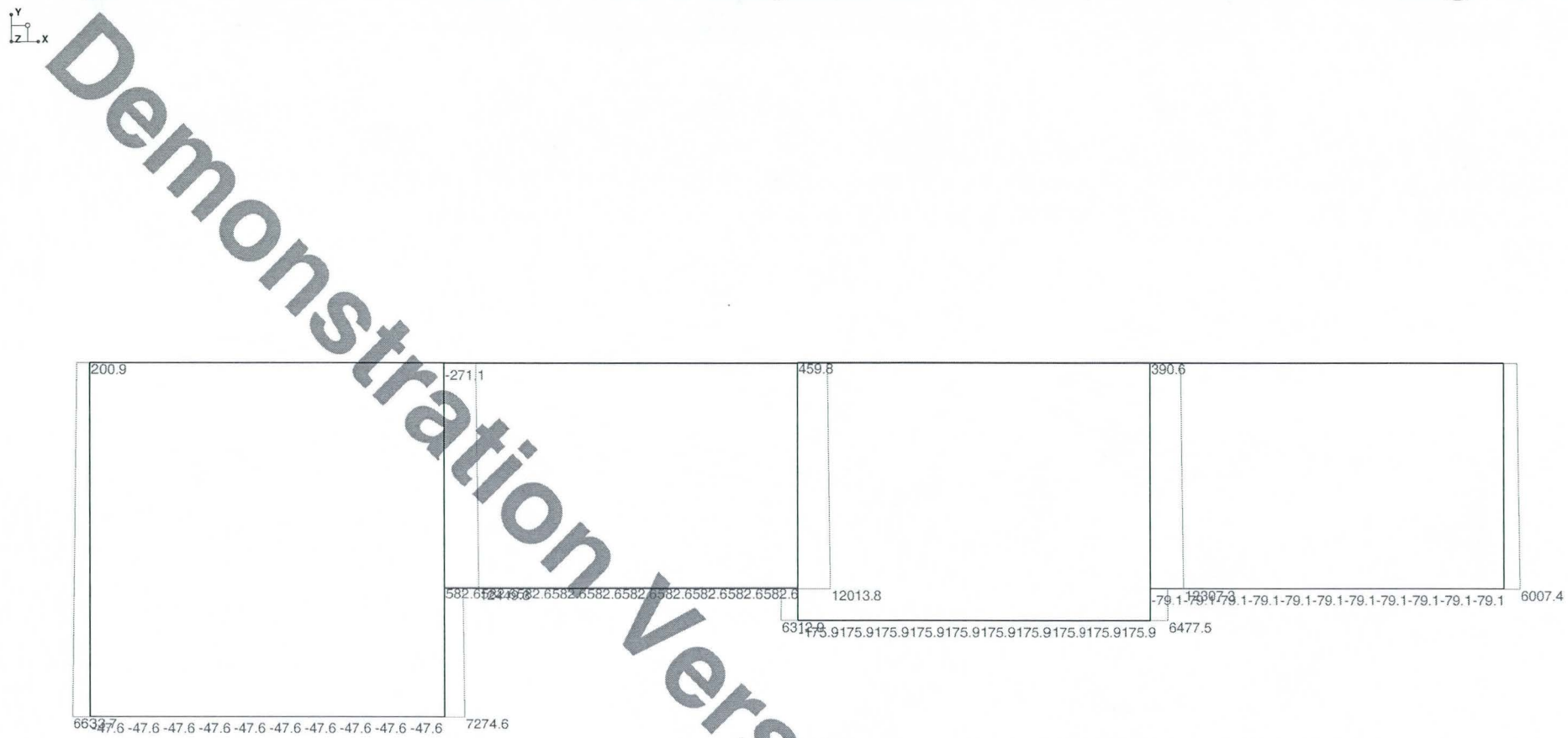

Demonstration Version

Solution: LC 12, O.W./Soil above/1/2 wet EP/WP
Member Axial Forces (Lb)

Your Company Name	Culvert Design	April 24, 2001
Sam Hanna		1:25 PM
		culvert4 - Working.r2d

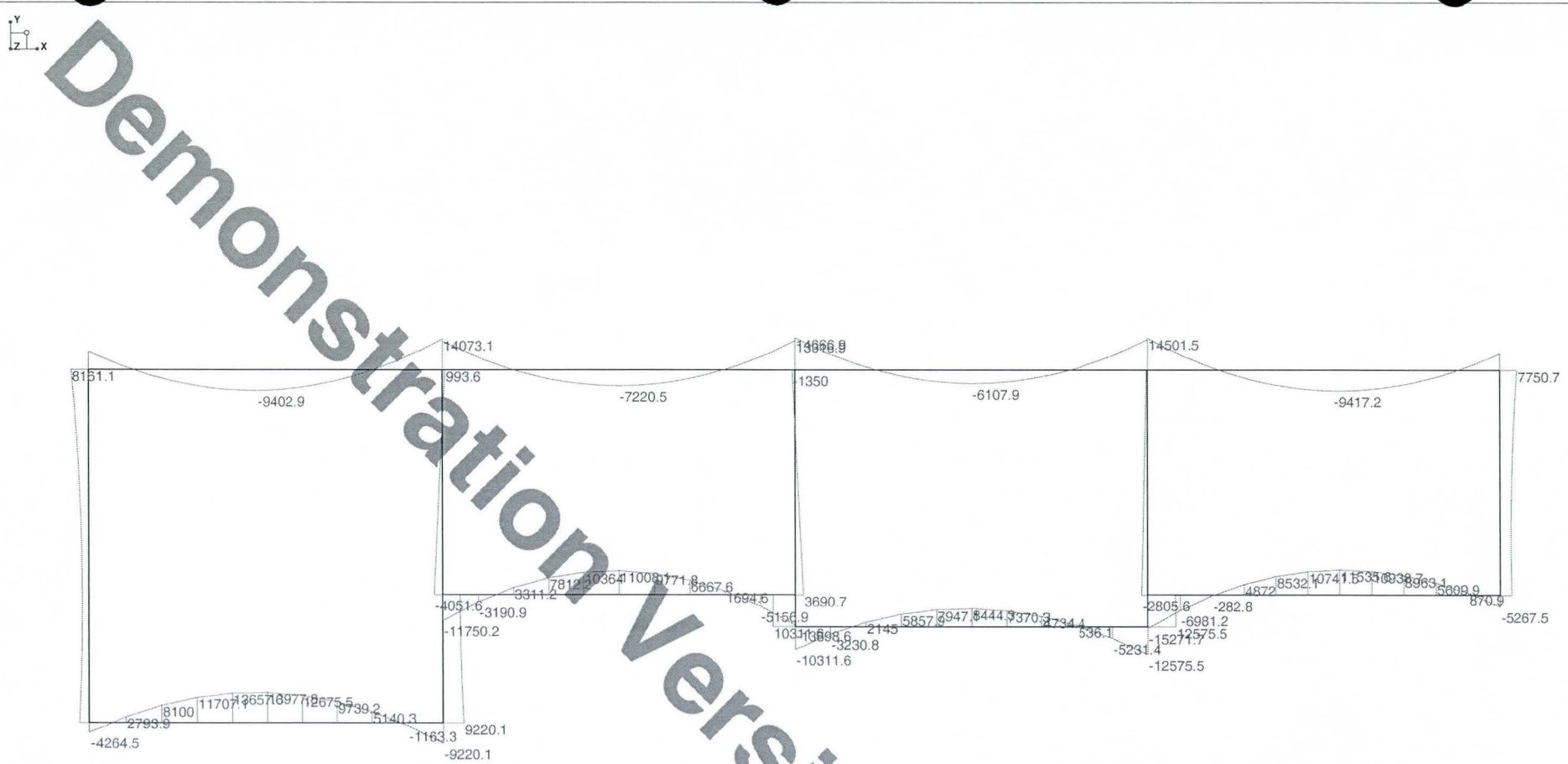

Demonstration Version

Solution: LC 13, O.W./Max. Soil above/EP/WP
Member Bending Moments (Lb-ft)

Your Company Name	Culvert Design	April 24, 2001
Sam Hanna		1:25 PM
		culvert4 - Working.r2d

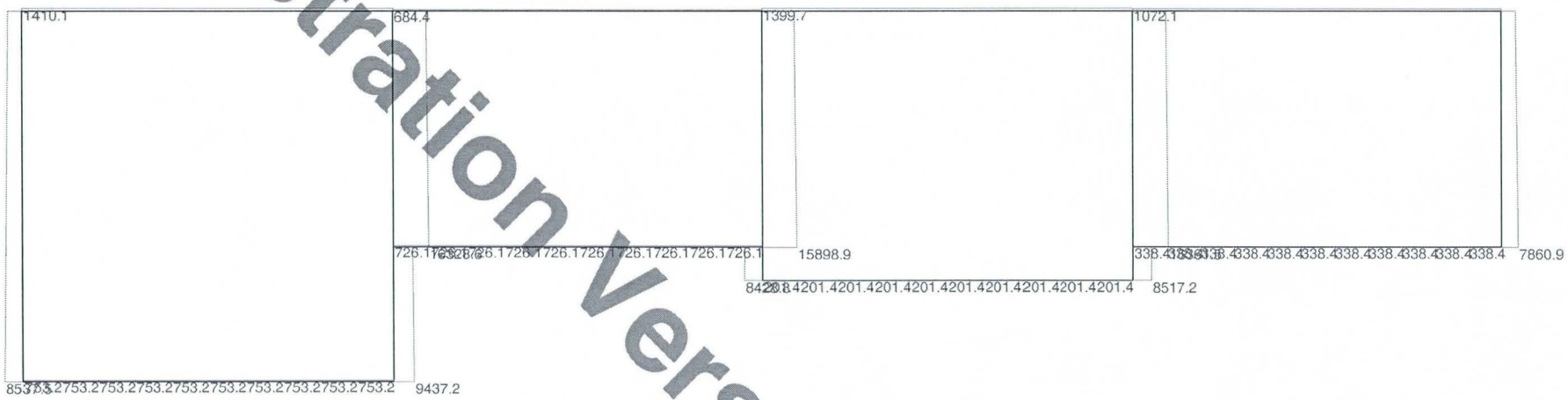

Demonstration Version

Solution: LC 13, O.W./Max. Soil above/EP/WP
Member Axial Forces (Lb)

Your Company Name	Culvert Design	April 24, 2001
Sam Hanna		1:25 PM
		culvert4 - Working.r2d

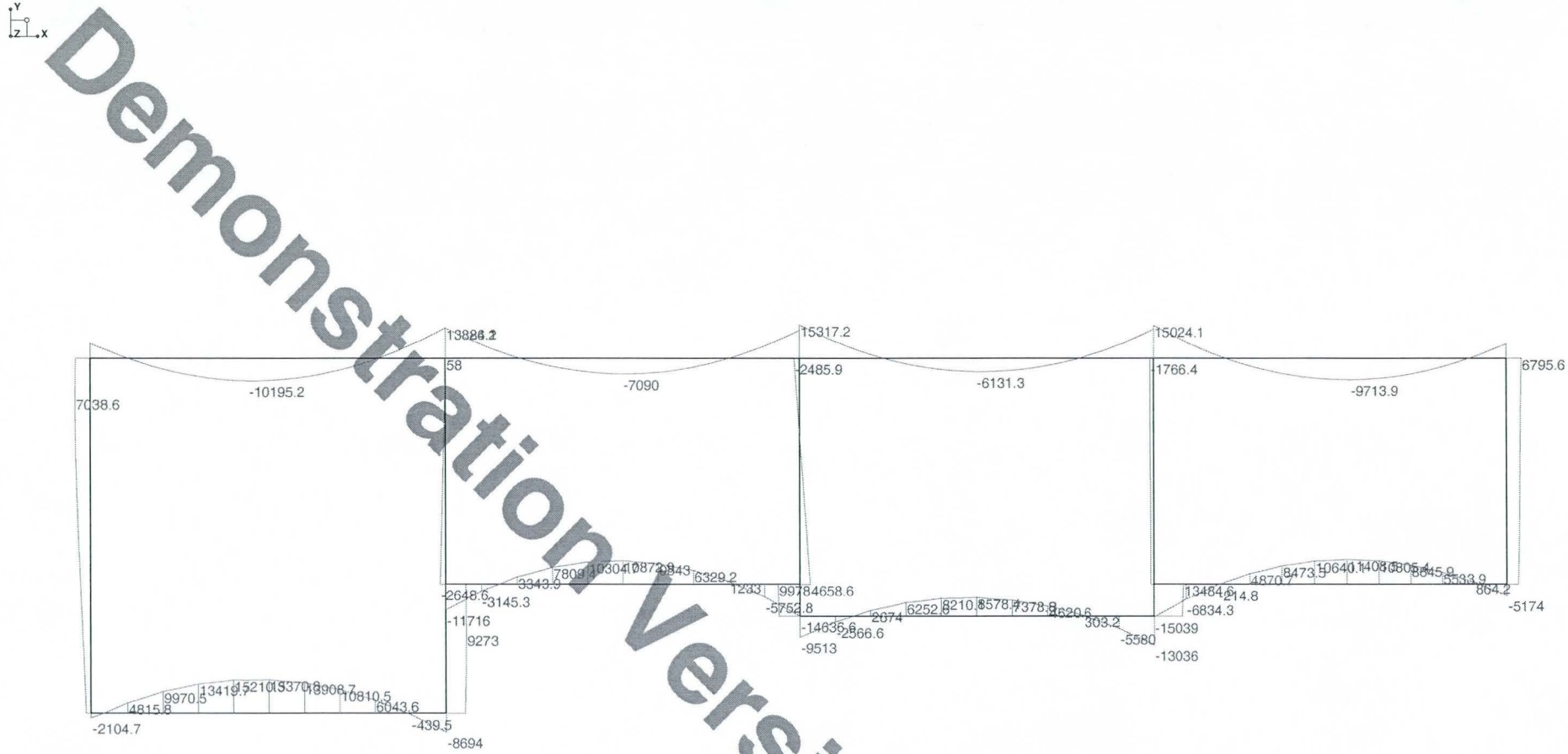

Demonstration Version

Solution: LC 14, O.W./Max. Soil above/1/2EP/WP
Member Bending Moments (Lb-ft)

Your Company Name	Culvert Design	April 24, 2001
Sam Hanna		1:26 PM
		culvert4 - Working.r2d

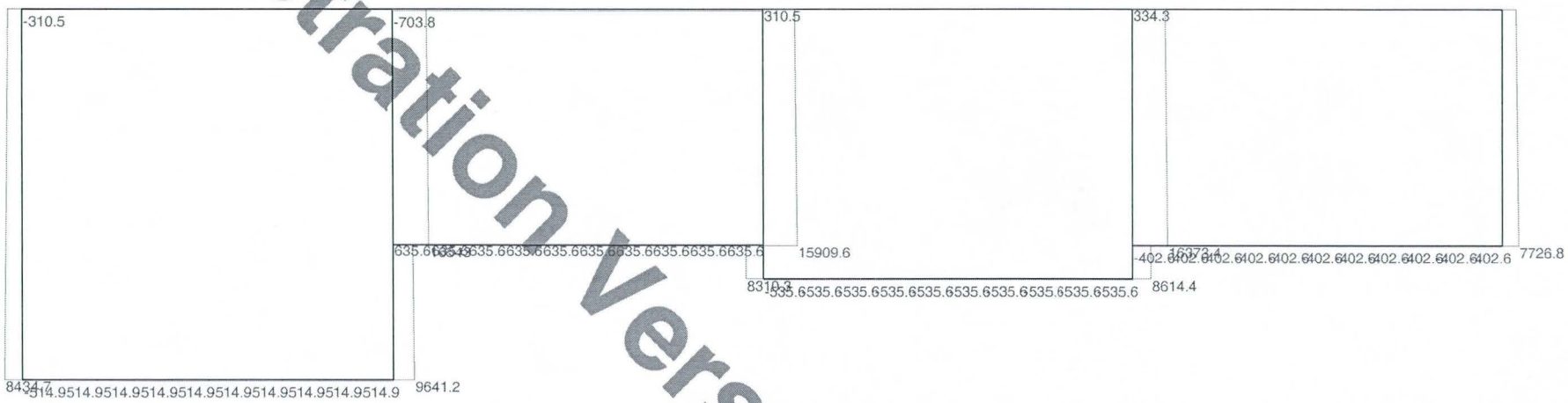

Demonstration Version

Solution: LC 14, O.W./Max. Soil above/1/2EP/WP
Member Axial Forces (Lb)

Your Company Name	Culvert Design	April 24, 2001
Sam Hanna		1:26 PM
		culvert4 - Working.r2d

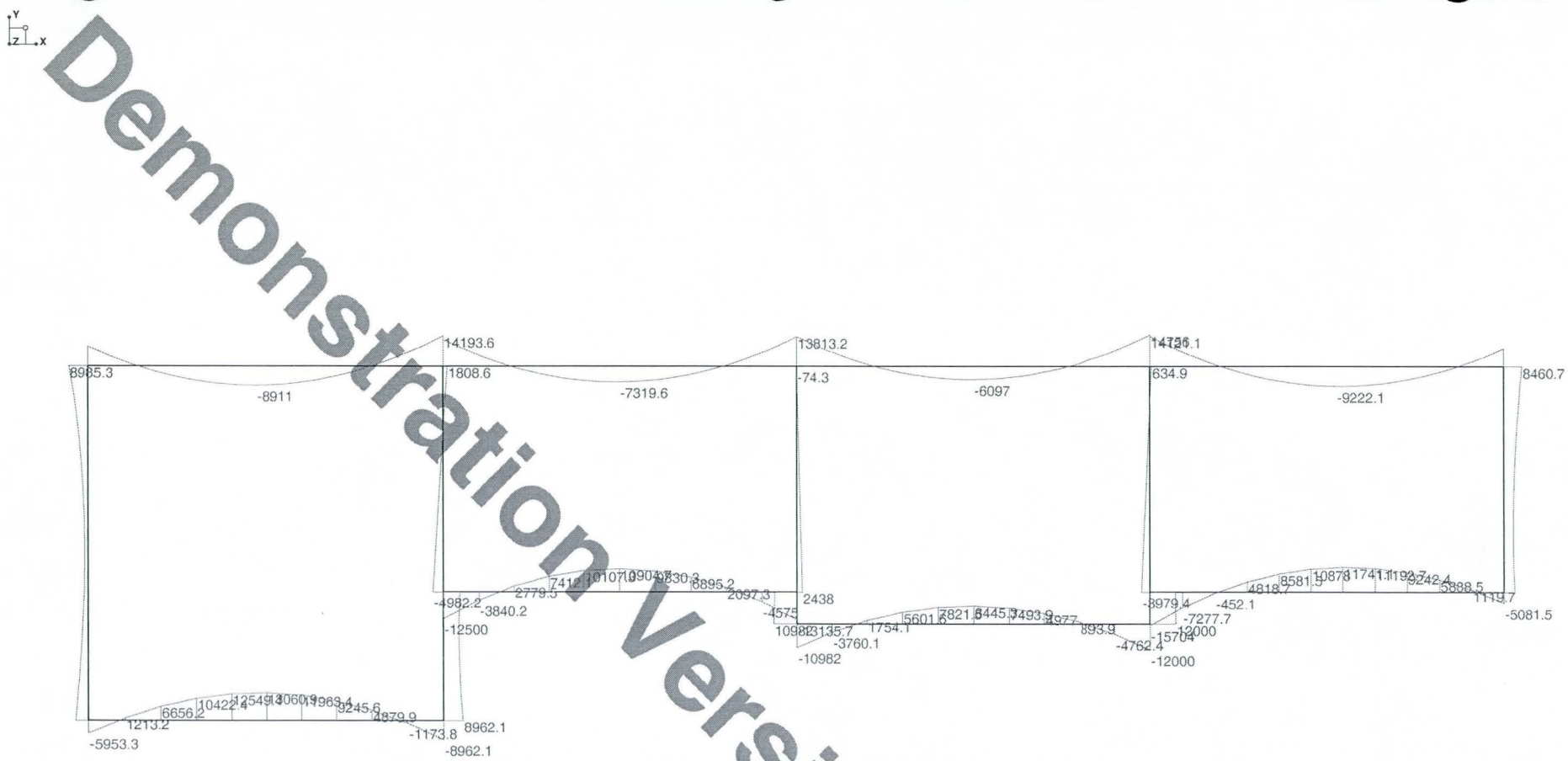

Demonstration Version

Solution: LC 15, O.W./Max. Soil above/wet EP/WP
Member Bending Moments (Lb-ft)

Your Company Name	Culvert Design	April 24, 2001
Sam Hanna		1:26 PM
		culvert4 - Working.r2d

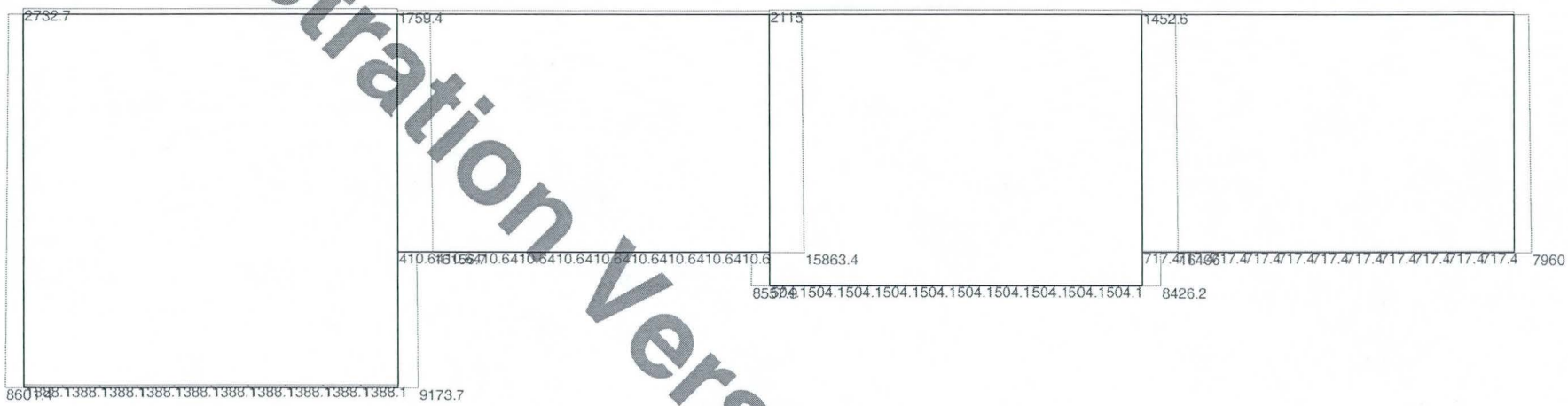

Demonstration Version

Solution: LC 15, O.W./Max. Soil above/wet EP/WP
Member Axial Forces (Lb)

Your Company Name	Culvert Design	April 24, 2001
Sam Hanna		1:26 PM
		culvert4 - Working.r2d

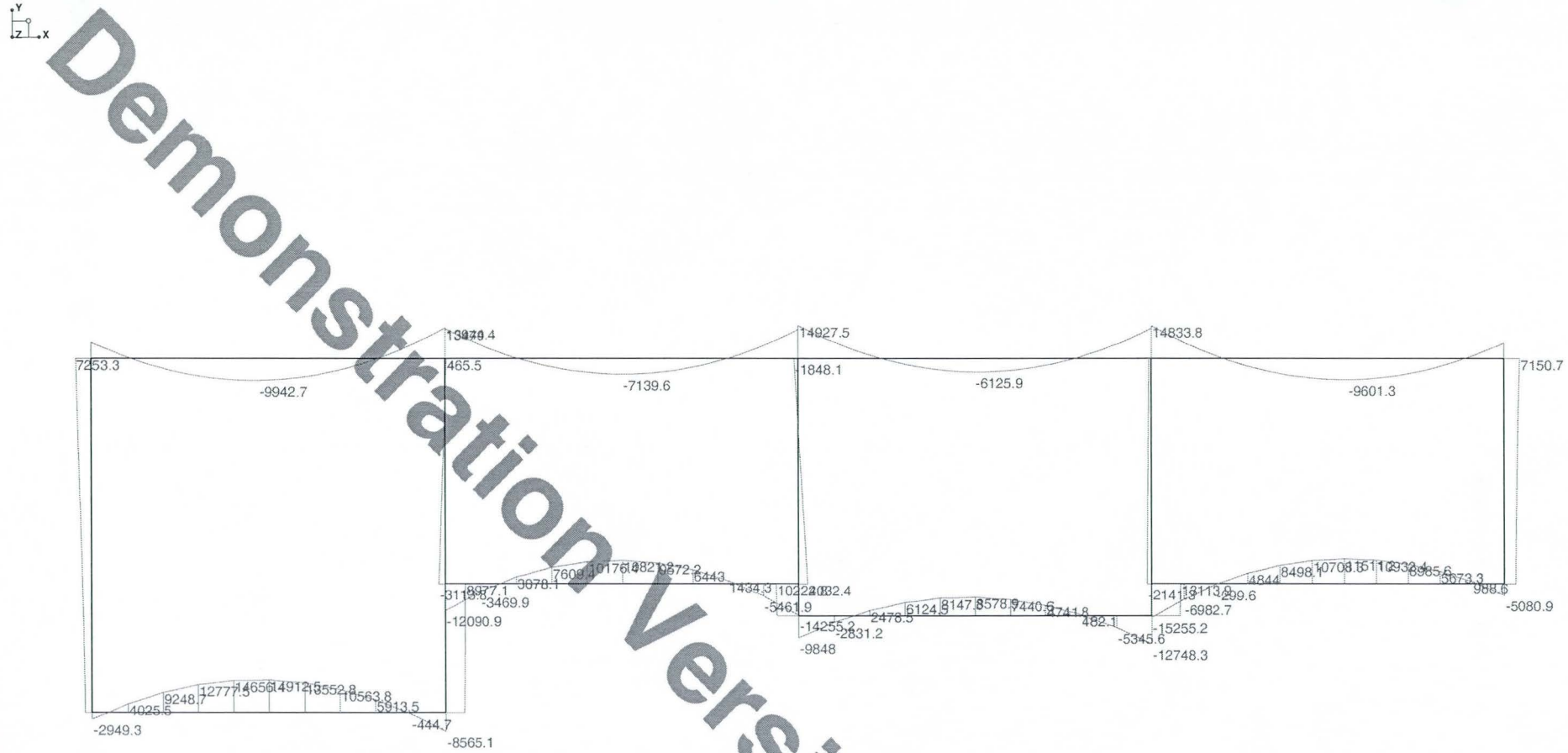

Demonstration Version

Solution: LC 16, O.W./Max. Soil above/1/2 wet EP/WP
Member Bending Moments (Lb-ft)

Your Company Name	Culvert Design	April 24, 2001
Sam Hanna		1:26 PM
		culvert4 - Working.r2d

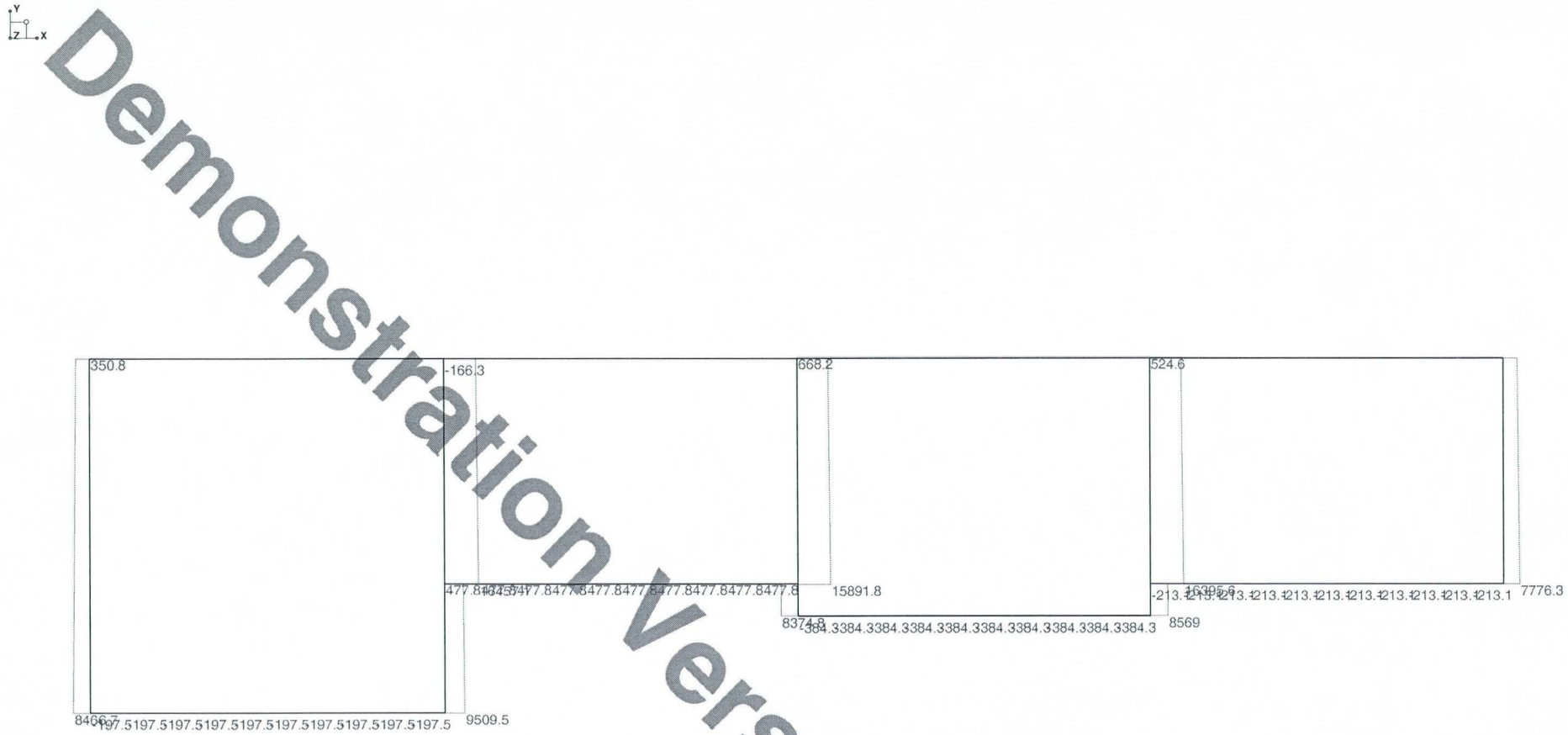

Demonstration Version

Solution: LC 16, O.W./Max. Soil above/1/2 wet EP/WP
Member Axial Forces (Lb)

Your Company Name	Culvert Design	April 24, 2001
Sam Hanna		1:26 PM
		culvert4 - Working.r2d

FLOOD CONTROL DISTRICT OF MARICOPA COUNTY

PROJECT LACC PAGE ___ OF ___

DETAIL Retaining wall COMPUTED KVH DATE 8/0

Bldg. Sta 67+50 CHECKED BY ___ DATE ___

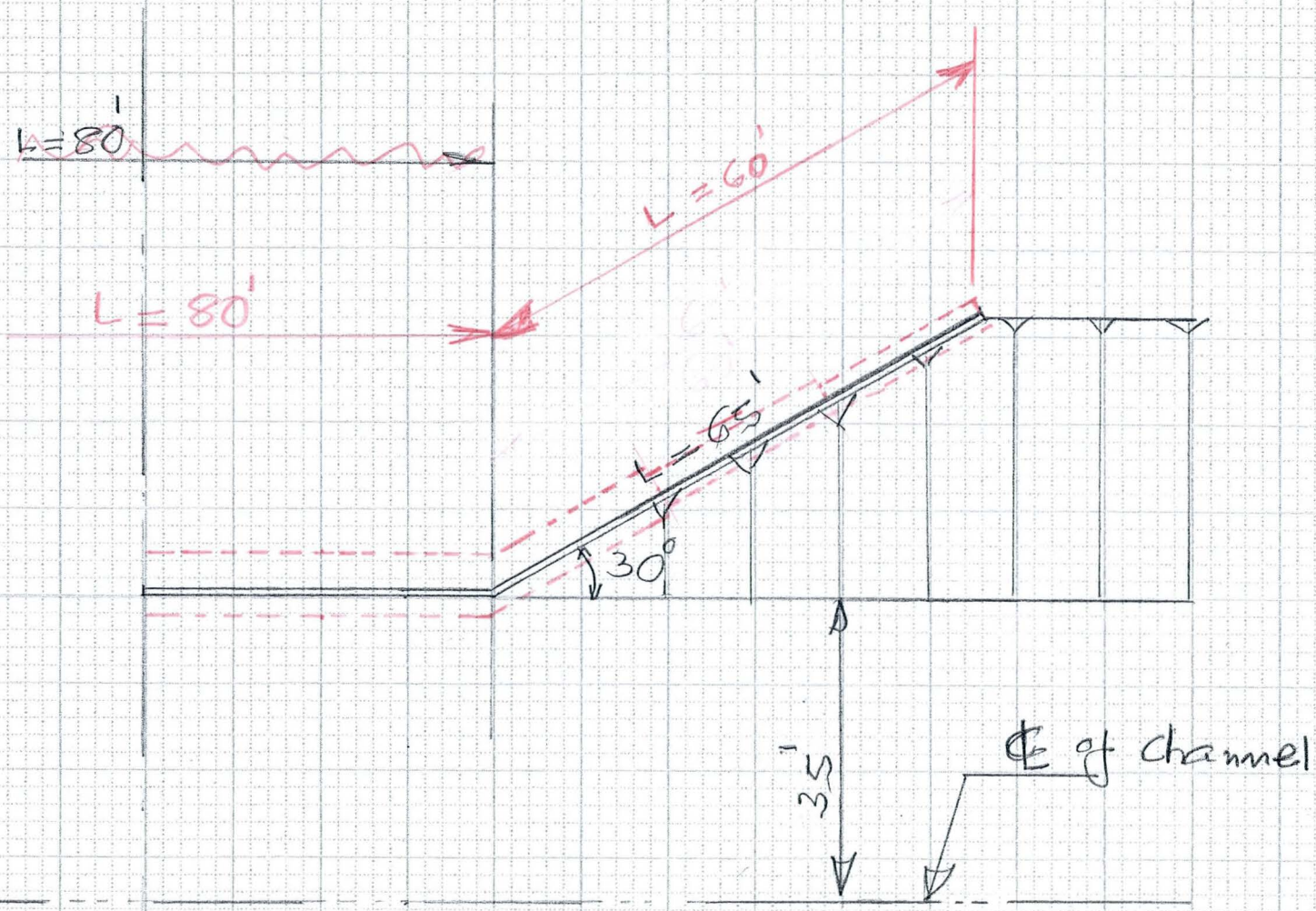

Plan of Retaining wall

Stat. 67+50

Scale: 1" = 20'

6910-159 4-90

FLOOD CONTROL DISTRICT OF MARICOPA COUNTY

PROJECT Laveen (LACC) PAGE ____ OF ____

DETAIL Retaining wall COMPUTED KVH DATE 8/01

Sta. 67+50 ± CHECKED BY ____ DATE ____

Retaining Wall to protect the House:

℄ of wall (67+10) + 40 = 67+50 Sta ±

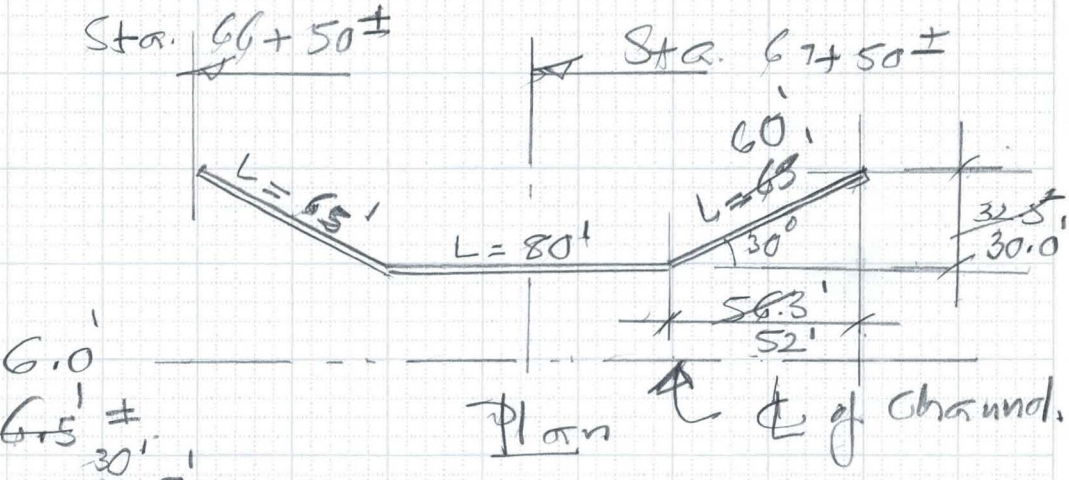

Channel Depth = ~~6.5'~~ 6.0' ±

Use 1:5, ~~6.5~~ 6.0 × 5 = ~~32.5~~ 30'

tan 30 = ~~32.5~~ 30.0 / X, X = ~~56.3~~ 51.96' Say 52'

Length (wings) = $\sqrt{\cancel{32.5}^2 + \cancel{56.3}^2}$ = ~~65'~~ 60'

(56+40) = 96' (67+50) − 96 = 66+50 Low Inv. Elev.

(65+00) — 975.38

75+00 — 976.48

1.1 for 1000'. for 150' — $\frac{150}{1000} \times 1.1$ = 0.17'

∴ Inv Ele Sta. 66+50

= (975.38 + 0.17) = 975.55

Top of footing = (975.55 − 4.0) = 971.55

Top of wall 971.55 + 4 + 6.5 = 982.05

Scour — wall Ht

6910-153 4-90

FLOOD CONTROL DISTRICT OF MARICOPA COUNTY

PROJECT LACC PAGE ____ OF ____

DETAIL Retaining Wall COMPUTED KVH DATE 8/01

@ B1 Adj. Sta. 67+50± CHECKED BY ____ DATE ____

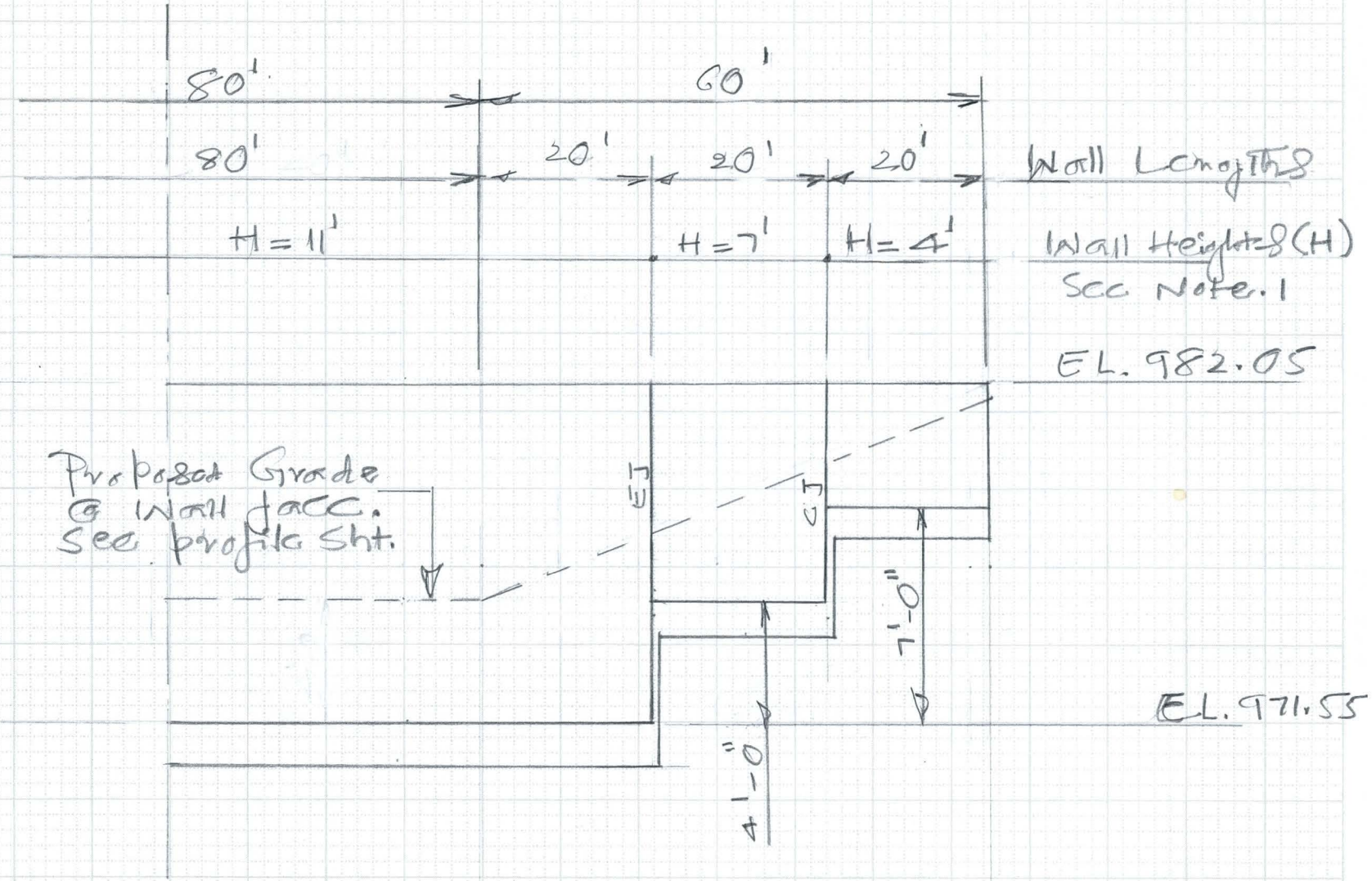

Wall Elevation

Scale; Horz. 1" = 20'
Vert. 1" = 5'

FLOOD CONTROL DISTRICT OF MARICOPA COUNTY

PROJECT LACC PAGE ____ OF ____

DETAIL Box #3 @ 59th Ave COMPUTED KVH DATE 4/01

CHECKED BY ____ DATE ____

Box #3 @ 59th Ave:

Skew = 13°

Span (Skew) =

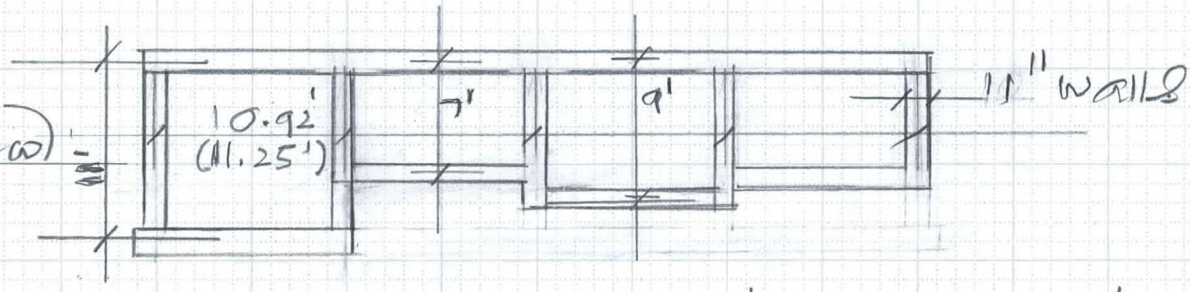

Span = 10' + 11" walls = 10.917' say 10.92'

$\cos 13° = \frac{10.92}{x}$

Span x = 11.21'

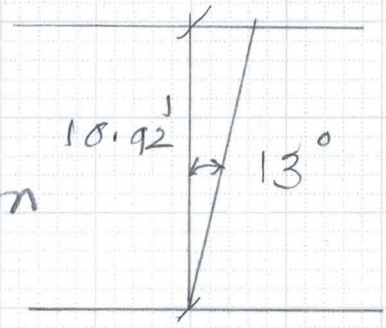

use 11.25' C/C for Design

11" top Slab & walls

13" Bottom Slab

Ht = (10 + 5.5" + 6.5") = 11', 7' & 9'

6910-153 4-90

FLOOD CONTROL DISTRICT OF MARICOPA COUNTY

PROJECT LACC PAGE ___ OF ___

DETAIL BOX-3 @ 59th Av COMPUTED KWH DATE 4/01

CHECKED BY ___ DATE ___

	10.4	9.4	14.3	7.6	14.8	6.1	14.8	9.2	9.3
8)	8.7	9.1	14.1	7.3	14.1	6.1	14.0	9.2	8.0
7)	10.4	8.1	14.3	7.6	14.8	6.1	14.8	8.8	9.3
6)	8.2	9.4	14.0	7.3	13.9	6.1	13.1	9.3	7.6
5)	9.5	8.6	14.2	7.4	14.3	6.1	14.4	9.0	8.6
4)	6.5	6.4	10.7	5.4	10.6	4.5	10.8	6.7	6.0
3)	—	5.4	11.0	5.7	11.4	4.5	12.8	6.4	7.4
2)	6.2	6.7	10.7	5.5	10.4	4.5	11.0	6.8	5.7
1)	7.5	5.9	10.8	5.5	10.8	4.5	11.9	6.6	6.6

1)	7.2	9.3	9.5	9.7	9.5	8.8	8.7	8.3	4.4
2)	5.1	10.7	9.4		8.7	6.4	9.2	9.9	4.4
3)	9.0	9.9	10.3	6.8	10.2	6.8	8.1	9.4	4.3
4)	5.9	10.2	9.8		9.1	7.0	8.8		4.3
5)	7.7	12.3	12.5		12.1		11.7	10.8	5.5
6)	5.5	12.8	12.5		11.3	8.3	12.2	10.7	5.4
7)	9.4	12.0	13.3	9.8	12.8	9.2	11.1	10.9	5.3
8)	6.4	13.1	12.9	9.8	11.6	8.5	11.9	10.8	5.3
	9.0	13.1	13.3	9.8	12.8	9.2	11.9	10.9	5.5

FLOOD CONTROL DISTRICT OF MARICOPA COUNTY

6910-153 4-90

FLOOD CONTROL DISTRICT OF MARICOPA COUNTY

PROJECT LACC PAGE ____ OF ____

DETAIL Box - 3 @ 59th Av COMPUTED KVH DATE 4/01

CHECKED BY ____ DATE ____

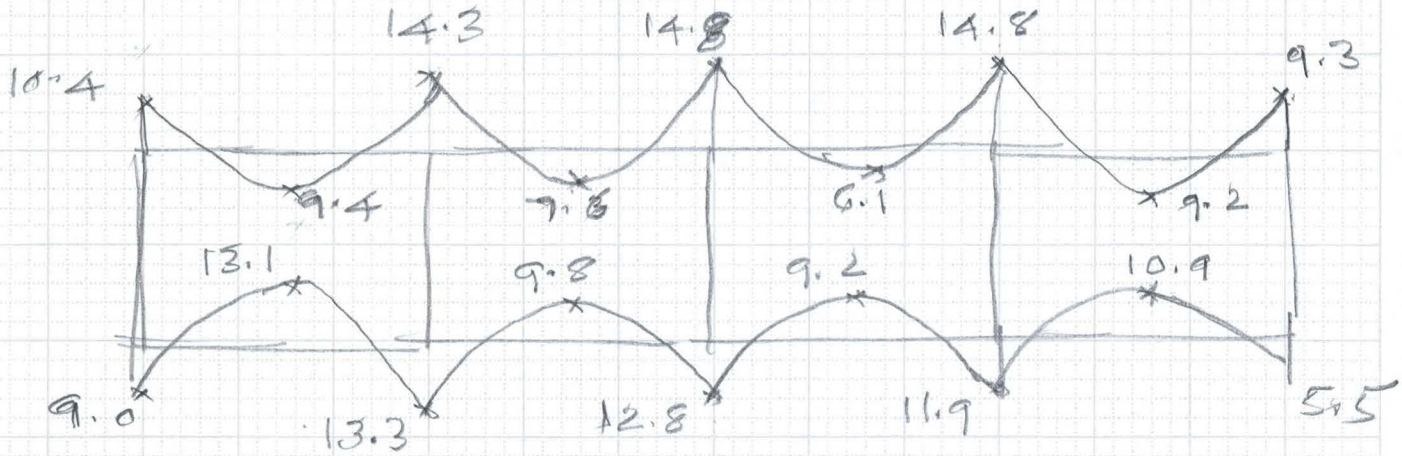

Using 11" for top slab & 13" for Bottom Slab

$d_{eff} = (11 - 2.0 - 0.5) = 8.5''$

Mom Neg (top slab) = 14.8 kft

$A_s = \frac{14.8 \times 12}{24 \times 0.88 \times 8.5}$

$= 0.99 \text{ in}^2$

#7 @ 6" $A_s = 1.2$

Mom Neg Bottom Slab = 13.3

$d_{eff} = (13 - 3 - 0.5) = 9.5$

$A_s = \frac{13.3 \times 12}{24 \times 0.88 \times 9.5}$

$= 0.8 \text{ in}^2$

Mom. Neg = 10.4 kft

$A_s = \left(0.99 \times \frac{10.4}{14.8}\right) = 0.7$, #6 @ 6" = 0.88

6910-153 4-90

FLOOD CONTROL DISTRICT OF MARICOPA COUNTY

PROJECT LACC PAGE ____ OF ____

DETAIL Box. 3 @ 59th Av. COMPUTED KVH DATE 4/01

CHECKED BY ____ DATE ____

Mom. Pos. (Top Slab) = 9.4

$d_{eff} = (11 - 1.5 - 0.5) = 9''$

$A_s = \frac{9.4 \times 12}{24 \times 0.88 \times 9} = 0.6$

#6 @ 6'' $A_s = 0.88$

Mom. Pos. (Bott. Slab) = 13.1

$d_{eff} = (13 - 3 - 0.5) = 10.5$

$A_s = \frac{13.1 \times 12}{24 \times 0.88 \times 10.5}$

$= 0.71$

Mom. Neg (Bott. Slab) = 13.3

$d_{eff} = (13 - 3 - 0.5) = 9.5$

$A_s = \frac{13.3 \times 12}{24 \times 0.88 \times 9.5}$

$= 0.80$

6910-153 4-90

FLOOD CONTROL DISTRICT OF MARICOPA COUNTY

PROJECT LACC PAGE ___ OF ___

DETAIL Box Culverts COMPUTED KVH DATE 7/01

CHECKED BY ___ DATE ___

Check Stresses:

M_{max} (Neg) = 14.8 K/ft

$d_{eff} = (11 - 2 - 0.5) = 8.5''$

$A_s = 1.2$ #7 @ 6''

$f_s = \frac{14.8 \times 12}{1.2 \times 0.88 \times 8.5}$

$= 19.8$ ksi

< 24 ksi

$f_c = \frac{2M}{jKbd^2}$

$\rho = \frac{A_s}{bd} = \frac{1.2}{12 \times 8.5} = 0.0118$

$K = \sqrt{2\rho n + (\rho n)^2} - \rho n$, $n = 9$, $f_c = 3000$

$\rho n = (0.0118)\, 9 = \cancel{0.011}\ 0.1062$

$K = \sqrt{2 \times \cancel{0.011}\ 0.1062 + (\cancel{0.011}\ 0.1062)^2} - \cancel{0.011}\ 0.1062 = \cancel{0.138}\ 0.437$

$j = \left(1 - \frac{\cancel{0.138}\ 0.437}{3}\right) = \cancel{0.954}\ 0.85$

$f_c = \frac{2 \times 14.8 \times 12}{\cancel{0.954}\ 0.85 \times \cancel{0.138}\ 0.437 \times 12 \times 8.5^2}$

$=$

$= 1.10$ ksi $< 0.4 \times 3000$

$= 1200$ psi $\therefore$ OK

6910-153 4-90

FLOOD CONTROL DISTRICT OF MARICOPA COUNTY

PROJECT LACC PAGE ___ OF ___

DETAIL Box Culverts COMPUTED KVH DATE 7/01

Check Stresses. CHECKED BY ___ DATE ___

$M = Rbd^2$

$f'_c = 3000$, $f_s = 24$ ksi, $n = 9$

$R = \frac{f_c}{2} jk$

$k = \left(\frac{f_c}{f_s/n + f_c}\right) = \frac{1.200}{24/9 + 1.200} = 0.31$

$j = \left(1 - \frac{0.31}{3}\right) = 0.89$

$R = \left(\frac{1.2}{2} \times 0.89 \times 0.31\right) = 0.166$

$d_{Reqd} = \sqrt{\frac{M}{Rb}} = \sqrt{\frac{14.8 \times 12}{0.166 \times 12}} = 9.4$

$d_{total}\ (Reqd) = (9.4 + 2 + 0.5) = 11.9''$

used Slab $t = 11''$ ∴ Close Enough

<u>Shear check</u>

fill $= 10'$, $10 \times 0.12 = 1.2$ k/ft

$V = \left(1.2 \times \frac{11}{2}\right) = 6.6^k$

$b = 12$, $d = (11 - 2 - 0.5) = 8.5''$

$v = \frac{6.6 \times 1000}{12 \times 8.5} = 64.7$ psi

V @ d from the face:

$d = \frac{8.5}{12} = 0.71 + \left(\frac{11}{2}\right)\frac{1}{12} = 1.17'$

$V @ d = 1.2 \times (5.5 - 1.17) = 5.2^k$

$v_{@d} = \frac{5.2 \times 1000}{12 \times 8.5} = 51$ psi

$v_c (Allow) = 0.95\sqrt{3000} = 52$ psi

∴ OK

6910-153 4-90

FLOOD CONTROL DISTRICT OF MARICOPA COUNTY

PROJECT Lavern PAGE ___ OF ___

DETAIL Box Reinf COMPUTED KHH DATE 7/01

CHECKED BY ___ DATE ___

10' x 10' ~~R~~ - Cell

	dd	ee	ff	hh	
t = 10½"	#7 @ 14"	#5 @ 14	#7 @ 14"	#6 @ 7" —	10' fill
t = 12½	#7 @ 13"	#4 @ 15"	#7 @ 13"	#5 @ 6½" —	10 to 15'
t = 15"	#7 @ 13	#4 @ 13"	#7 @ 13	#5 @ 6½" —	15 to 20'
t = 17"	#7 @ 13	#4 @ 13"	#7 @ 13"	#5 @ 6½" —	20 to 25

6910-153 4-90

FLOOD CONTROL DISTRICT OF MARICOPA COUNTY

PROJECT LACC PAGE ____ OF ____

DETAIL Box Culvert COMPUTED KVH DATE 7/01

Loading Check CHECKED BY ____ DATE ____

1) fill = 2'

$16^K(1.3) = 20.8^K$

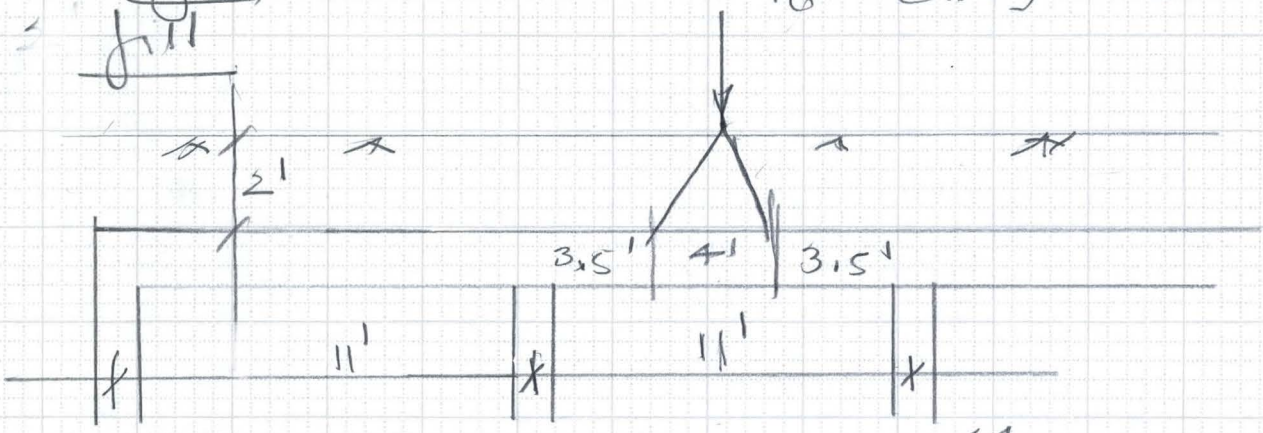

Soil: (2×0.12) $= 0.24$ KSF

Conc. Slab 1×0.15 $= 0.15$

0.39

$L.L = \left(\frac{20.8}{4 \times 4}\right) = 1.3$ KSF

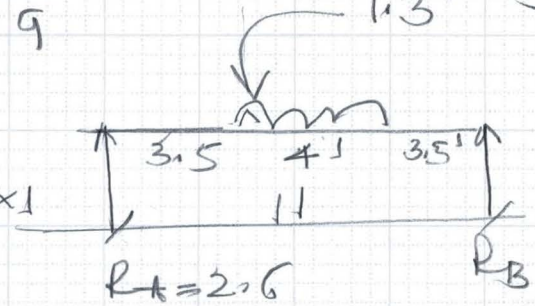

L.L. $M_S = 2.6(5.5) - 1.3 \times 2 \times 1$

$= 11.7$ K'

$M_{DL} = 0.39 \times 11^2/8 = 5.9$

$M_{S\,(total)} = (11.7 + 5.9) = 17.6$ K'

2) fill = 4'

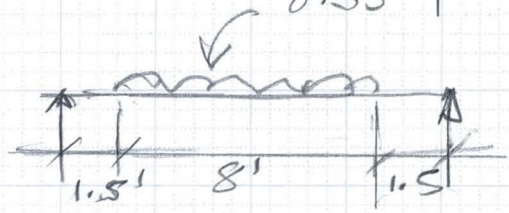

Soil = 4×0.12 $= 0.48$

Conc. C = 1×0.15 $= 0.15$

0.63

$L.L = \frac{20.8}{8 \times 8} = 0.33$ KSF

$R_A = 1.32$

$M_{LL} = 1.32(5.5) - (0.33 \times 4 \times \frac{4}{2}) = 4.6$

$M_{DL} = 0.63 \times 11^2/8 = 9.5$

$M_{S\,(Total)} = (9.5 + 4.6) = 14.1$ K'

6910-153 4-90

FLOOD CONTROL DISTRICT OF MARICOPA COUNTY

PROJECT LACC PAGE ____ OF ____

DETAIL Box Culverts. COMPUTED KVH DATE 7/01

CHECKED BY ____ DATE ____

3) Check with 10' fill:

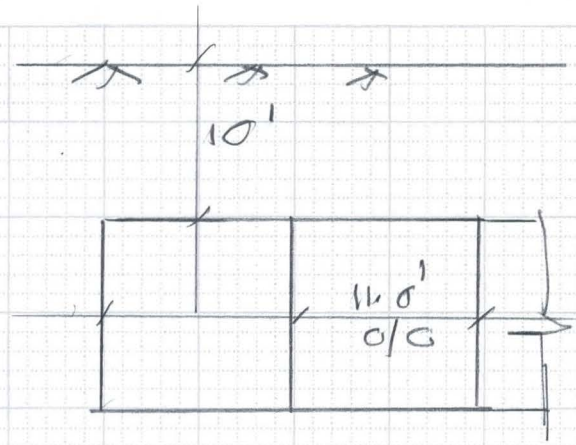

$w = (10 \times 0.12) = 1.2^{k/ft}$

$M_s = 1.2 \times 11^2/8 = 18.2^{k\,ft}$

L.L is Negligable

4) No fill:

$E = (4 + 0.06S) = (4 + 0.06 \times 11) = 4.66'$

$P_{or}/ft = \dfrac{16 \times 1.3}{4.66} = 4.46^{k/ft}$ (1.3 Imp)

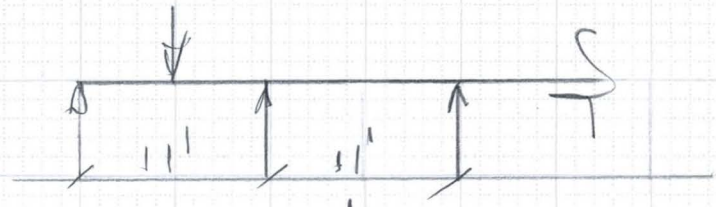

$M_{LL} = 4.46 \times 11/4 = 12.3^{k\,ft}$

Slab = 12" $M_{DL} = 0.15 \times 11^2/8 = 2.3$

$M_{total} = (12.3 + 2.3) = 14.6$

<u>Note</u> only simple B.M.s are used for comparison of all four cases

Case with 10' fill controlls with $M_{max} = 18.2$

& Next check with 2' fill, $M = 17.6^{k\,ft}$

FLOOD CONTROL DISTRICT OF MARICOPA COUNTY

PROJECT LAGG PAGE ____ OF ____

DETAIL Box Culvert COMPUTED KVH DATE 7/01

CHECKED BY ____ DATE ____

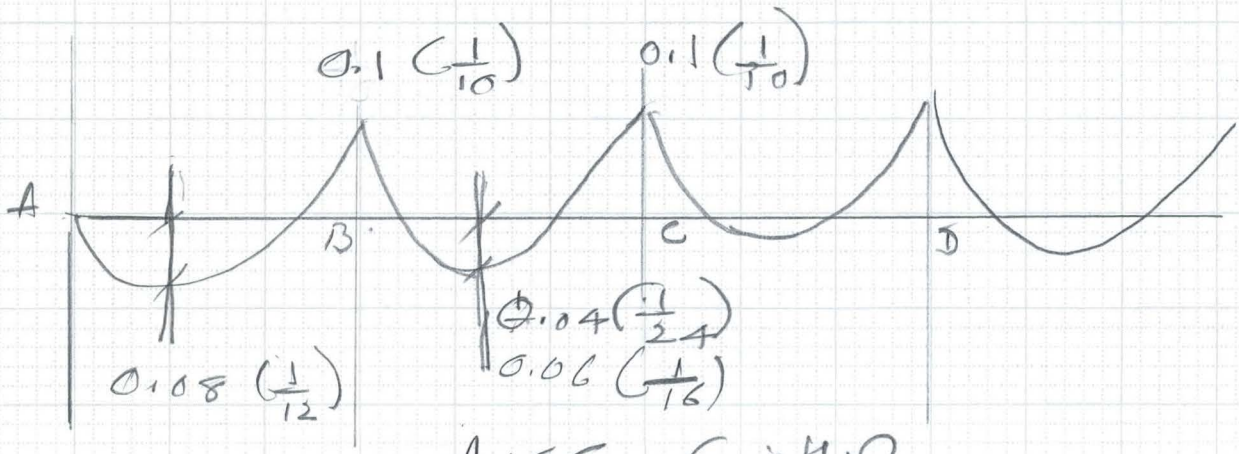

AISC Coeffs

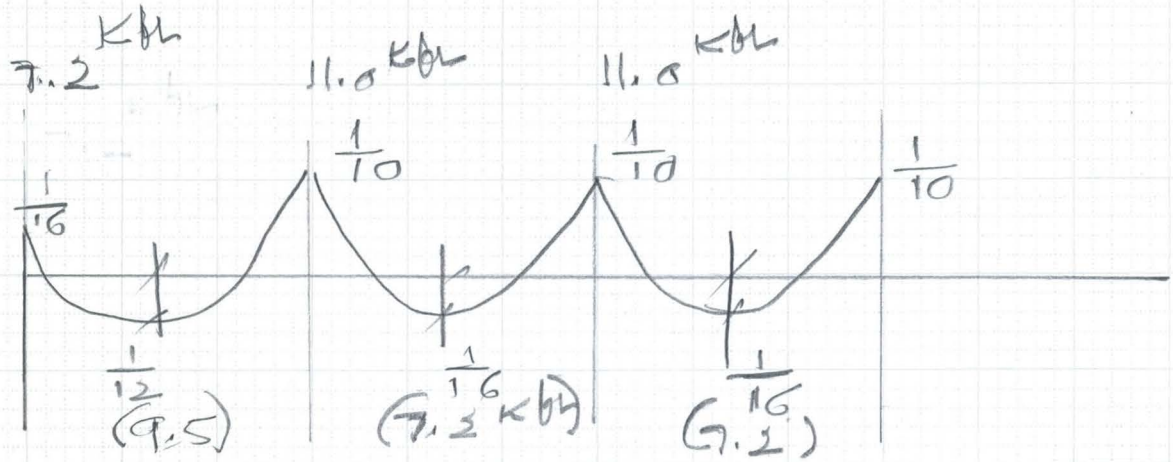

$\frac{1}{12} = 0.083$
$\frac{1}{16} = 0.063$ } 1.32

AISC Modified Coeffs.

$\frac{1}{10} = 0.1$

$\frac{1}{16} = \frac{0.06}{0.16}$ $\quad \frac{0.1}{0.16} \approx 60\%$ $\quad 60 \& 40\%$

$\frac{1}{16} = 0.06$ $\quad \frac{0.06}{0.14} \approx 40\% \& 60\%$

$\frac{1}{12} = \frac{0.08}{0.14}$

$M_{max} = 18.2$, $0.6(18.2) \approx 11$ KFt, $0.4(18.2) = 7.2$

6910-153 4-90

FLOOD CONTROL DISTRICT OF MARICOPA COUNTY

PROJECT LACC PAGE ____ OF ____

DETAIL Loading Check COMPUTED KVH DATE 7/01

Box Culvert CHECKED BY ____ DATE ____

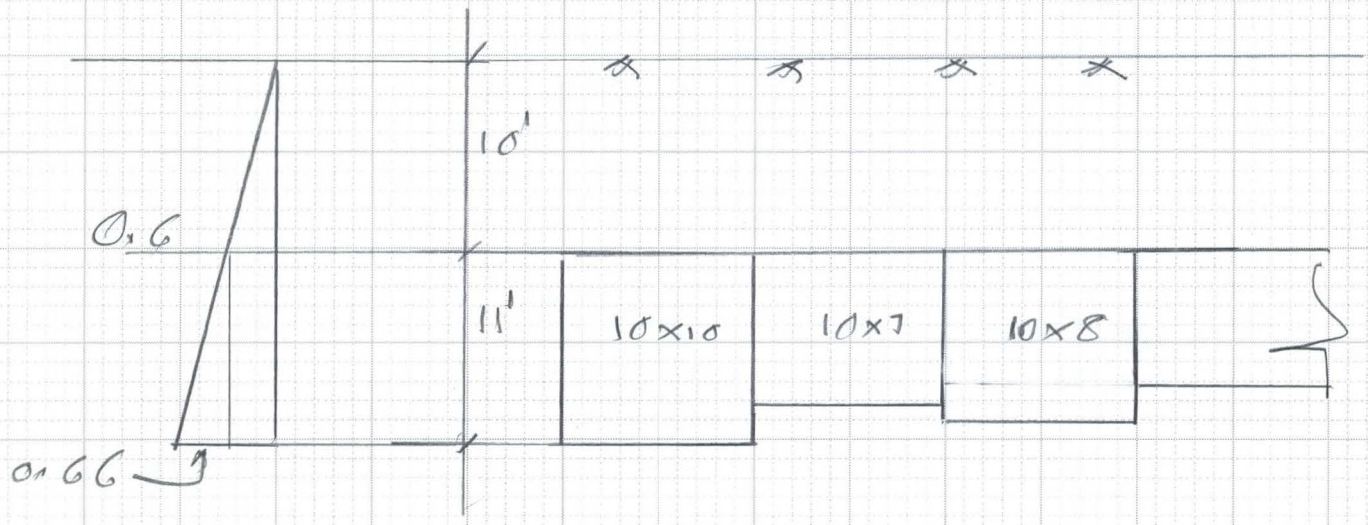

Walls:

Loading At Rest pressure: $K_{At\ Rest} = 0.5$

$p_{r_1} = (0.12 \times 0.5 \times 10) = 0.6^{ksf}$

$p_{r_2} = (0.12 \times 0.5 \times 11) = 0.66$

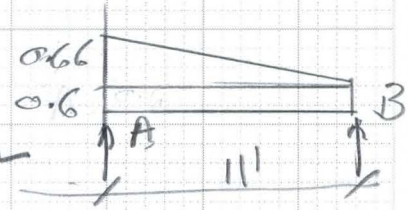

Fixed End Moments.

$M_{F_1} = 0.6 \times 11^2/12 = 6.1^{kft}$

$M_A = \frac{wl^2}{20} = 0.66 \times 11^2/20 = 4.0$

$M_B = \frac{wl^2}{30} = 0.66 \times 11^2/30 = 2.7$

$M_F(AB) = (6.1 + 4.0) = 10.1$

$M_F(BA) = (6.1 + 2.7) = 8.8$

$M_{S_1} = 0.6 \times 11^2/8 = 9.1$

Triangular Load: $W = 0.66/2 \times 11 = 3.63^k$

$M_{max} = 0.1283\ WL = 0.1283 \times 3.63 \times 11 = 5.1$

M_S (total) $= (9.1 + 5.1) = 14.1^{kft}$

FLOOD CONTROL DISTRICT OF MARICOPA COUNTY

PROJECT LACC PAGE ___ OF ___

DETAIL Box Culvert COMPUTED KWH DATE 7/01

CHECKED BY ___ DATE ___

$M_{POS} = 14.1 - \frac{1}{2}(8.8 + 10.1)\,8.8$

$= 4.7$ k'/L

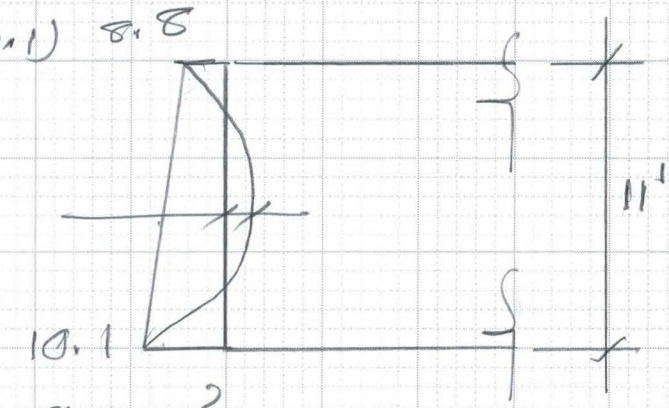

$t_{WALL} = 11''$

$d_{eff} = (11 - 1.5 - 0.5) = 9''$

$A_s = \frac{4.7 \times 12}{24 \times 0.88 \times 9} = 0.3\ in^2$

use #5 @ 12'' or #6 @ 12''

6910-153 4-90

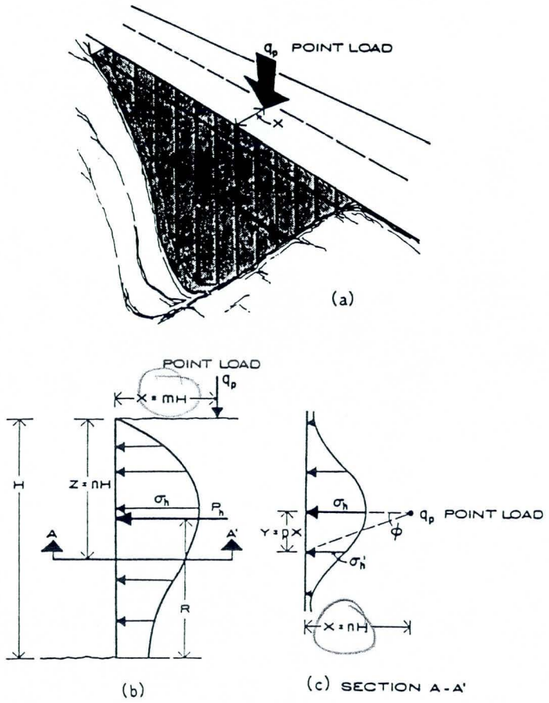

FOR $m \le 0.4$

$$\sigma_h (H^2/q_p) = 0.28\, n^2/(0.16 + n^2)^3$$

FOR $m > 0.4$

$$\sigma_h (H^2/q_p) = 1.77\, m^2 n^2/(m^2 + n^2)^3$$

$\sigma_h' = \sigma_h \cos^2(1.1\theta)$
WHERE $\cos\theta = x/\sqrt{x^2+y^2}$

(BOUSSINESQ DISTRIBUTION MODIFIED BY EXPERIMENT)

FIGURE 3-23
Point Load Surcharge Generalized Conditions

(9) Construct vertical lines tangent to the curve constructed in step 8. The largest value of P_a is the design value.

c. Generalized Graphic Solutions - Generalized graphic solutions for the active and passive cases are presented in Figures 3-22(a) and 3-22(b), respectively. The importance of understanding the free body and force diagrams presented in the preceding sections on Rankine and Coulomb earth pressures is now apparent. Use of this approach permits the engineer to evaluate essentially all possible variables acting on a retaining structure. It is emphasized that this is a trial and error method, and the critical values of P_a or P_p must be established for each trial wedge or failure surface. While this method is somewhat involved, the circular-wedge-type trial and error solution is the only method available for determining the location of the critical failure surface of a complex problem. In lieu of a circular segment in the passive case, as shown in Figure 3-22(b), a log spiral may also be used. However, this makes the problem even more cumbersome and not much more accurate. As previously mentioned, the log spiral method is presented in Terzaghi and Peck, 1967.

5. Surcharge Loadings by Theory of Elasticity

Stress distributions resulting from point, line and strip loadings may be developed by use of the elastic theory, with modifications based upon experimental results. The charts and

TABLE 3-13
Typical Point Load Surcharges

A

Total Horizontal Load ΔP_h, Kips on Retaining Wall due to 60 Kip/axle, Dual Axle

Height of Retaining Wall, H (Ft)	Position of Point	Horizontal Setback Distance to Retaining Wall from Center of Dual Wheels (Ft), X: 2	5	10	15	20	25	30
10	0	3.51	2.84	1.01	-	-	-	-
	C	(2.54)	(3.10)	(1.05)	-	-	-	-
15	0	3.07	3.22	1.74	0.71	-	-	-
	C	(2.46)	(3.46)	(1.78)	(0.72)	-	-	-
20	0	2.85	2.85	2.29	0.90	0.61	-	-
	C	(2.42)	(3.05)	(2.35)	(1.29)	(0.61)	-	-
30	0	2.19	2.51	2.30	1.70	1.16	0.81	0.51
	C	(1.89)	(2.62)	(2.36)	(1.72)	(1.17)	(0.82)	(0.51)

B

Total Horizontal Load ΔP_h, Kips on Retaining Wall Due to 16.5 Kips/axle (Legal Highway Log Truck)

Height of Retaining Wall, H (Ft)	Position of Point	Horizontal Setback Distance to Retaining Wall from Center of Dual Wheels (Ft): 2	5	10	15	20	25	30
10	0	0.97	0.78	0.28	-	-	-	-
	C	(0.70)	(0.85)	(0.29)	-	-	-	-
15	0	0.84	0.89	0.48	0.20	-	-	-
	C	(0.68)	(0.95)	(0.49)	(0.20)	-	-	-
20	0	0.78	0.78	0.63	0.25	0.17	-	-
	C	(0.67)	(0.84)	(0.65)	(0.35)	(0.17)	-	-
30	0	0.60	0.69	0.63	0.47	0.32	0.22	0.14
	C	(0.52)	(0.72)	(0.65)	(0.47)	(0.32)	(0.22)	(0.14)

Note: The resultants of different axle loads of similar geometries may be computed by simple proportion.

graphs presented herein have been adjusted to make the theoretical agree with the measured pressure.

a. Point Loads - Figure 3-23(a) shows a point load applied to a roadway and the generalized location of a point on the wall facing. Figures 3-23(b) and 3-23(c) present generalized curves of influence factors for the computation of the lateral stress distribution on a vertical face perpendicular to the line of application of the load. Also shown are equations required to develop the influence factors.

The equations presented on Figure 3-23 have been solved for various geometries and are summarized on Figure 3-24(a) and (b). Figure 3-24(c) presents the influence factors required to compute the resultant, P_h, of a given point loading condition. Figure 3-24(d) presents influence factors for the determination of the location of the resultant, P_h, above the base of the wall.

The influence of groups of point loadings, such as wheel loads, may be evaluated with the graphs presented above and the principle of superposition. Tables 3-13 A and B present a summary of horizontal surcharge loadings that would commonly be imposed on retaining walls on low volume Forest Service roads. The values presented are in kips and represent the total load imposed on the wall from a tandem axle. For each combination of wall height and setback distance, two values of ΔP_h are presented. The value corresponding to "O" represents the increase in force directly opposite of an axle. The "C" value corresponds to the increase in force at the center of the two axles. For purposes of design, it is recommended that the resultant, ΔP_h, be assumed to act at a point 0.58 H above the base of the wall.

b. Line Loads - Figure 3-25(a) shows schematically a line load, q_l, applied behind a retaining wall and the resulting stress

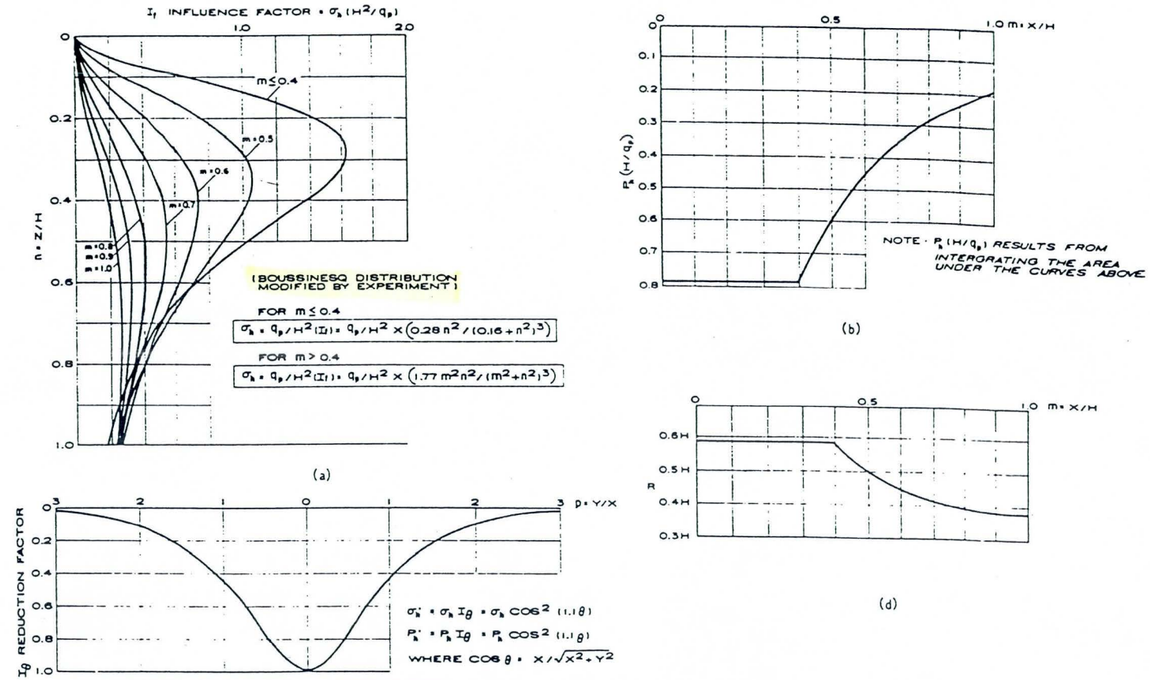

FIGURE 3-24
Influence Factors - Point Loading

H & M VIBRO, INC.
P.O. Box 224, Grandville, MI 49418
(616) 538-4150

The H & M Vibratory Driver/Extractor Model H-75A includes:

- Patented Suppressor System (Eliminates All Boom Vibration)
- Weighs Only 4,000 Pounds (Can be Reduced to 2,500 lbs. or Increased to 7,500 lbs. Quickly and Easily)
- Compact Design (Capable of being used in Confined Areas)

SALES & RENTALS

Note: Model H-75A available with either GM 4-71 or CAT 3208 Power Pack.

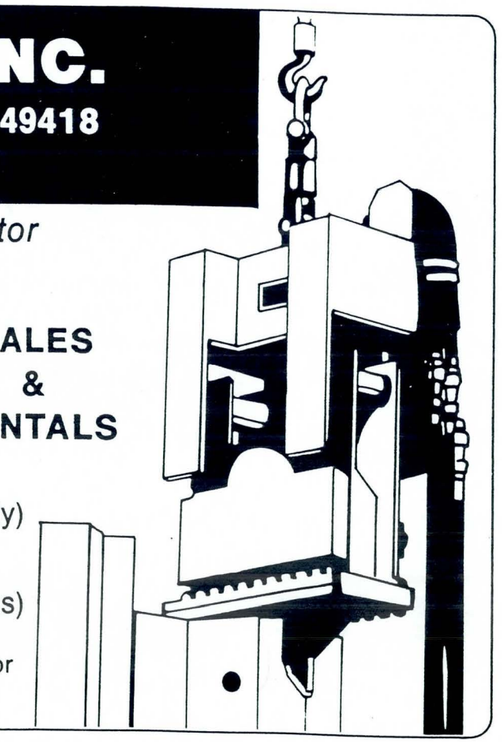

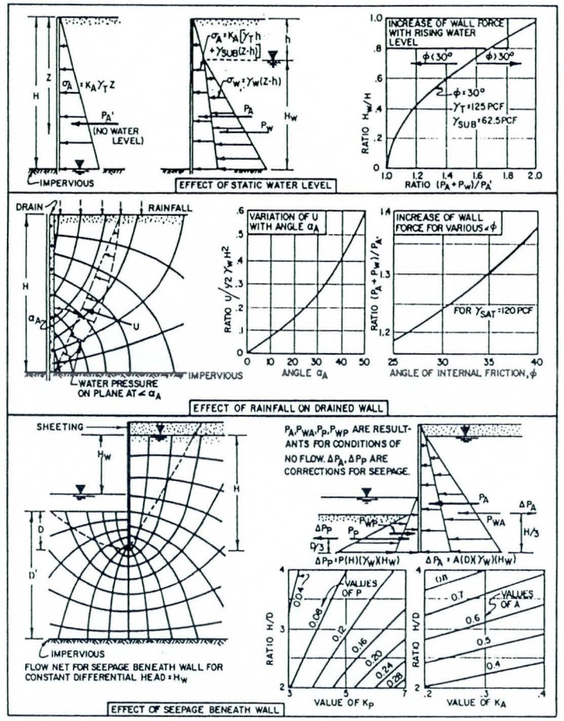

Figure 10
Effect of Groundwater Conditions on Wall Pressures

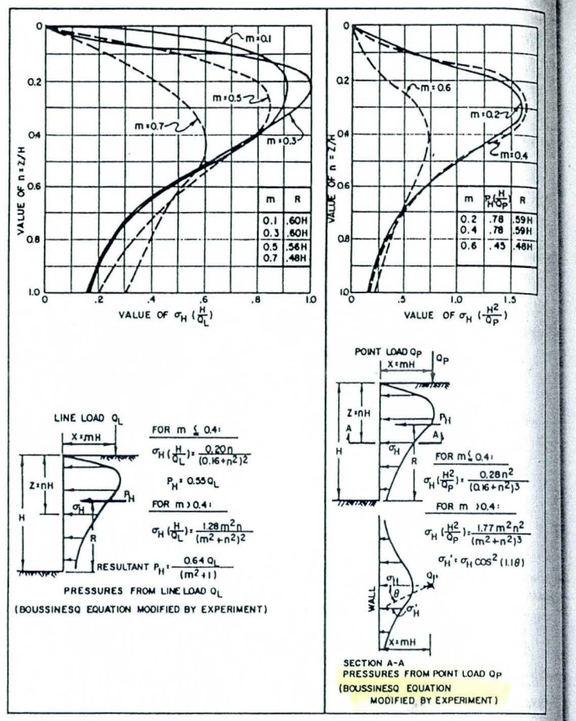

Figure 11
Horizontal Pressures on Rigid Wall from Surface Load

d. Seepage Beneath Wall. See bottom panel of Figure 10 (Reference 4, The Effect of Seepage on the Stability of Sea Walls, by Richart and Schertmann) for correction to be applied to active and passive pressures in cohesionless material for steady seepage beneath a wall.

4. SURCHARGE LOADING. For the effects of surcharge loading, see Figures 7 and 9.

a. Point Load and Live Load. Use Figure 11 (Reference 5, Anchored Bulkheads, based on the work by Terzaghi) to compute lateral pressure on wall due to point load and line loads; this assumes an unyielding rigid wall and the lateral pressures are approximately double the values obtained by elastic equations. The assumption of an unyielding rigid wall is conservative and its applicability should be evaluated for each specific wall.

b. Uniform Loading Area. For uniform surcharge loading lateral stress can be computed by treating the surcharge as if it were backfill and multiplying the vertical stress at any depth by the appropriate earth pressure coefficient.

c. Uniform Rectangular Surcharge Loading. For the effect of this loading see Figure 12 (see Reference 6, Lateral Support Systems and Underpinning, Volume 1, Design and Construction (Summary), by Goldberg, et al.). If the construction procedures are such that the wall will move during the application of live loads, then the pressure calculated from Figure 12 will be conservative.

d. Practical Considerations. For design purposes, it is common to consider a distributed surface load surcharge on the order of 300 psf to account for storage of construction materials and equipment. This surcharge is usually applied within a rather limited work area of about 20 feet to 30 feet from the wall and is also intended to account for concentrated

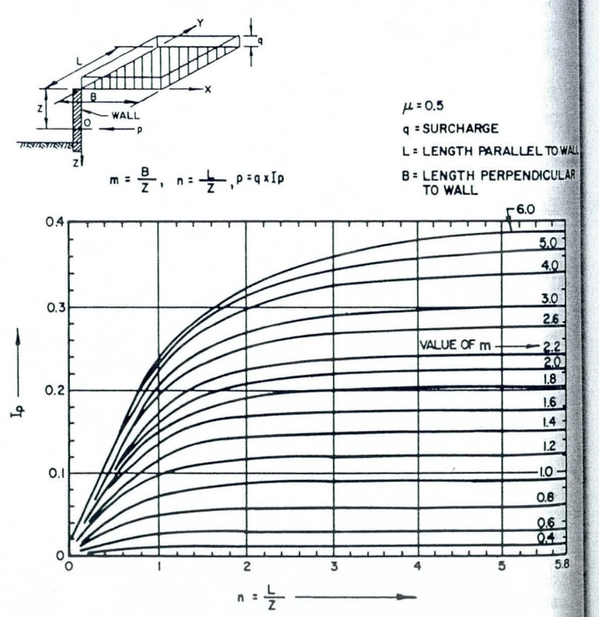

Figure 12
Lateral Pressure on an Unyielding Wall Due to Uniform Rectangular Surface Load

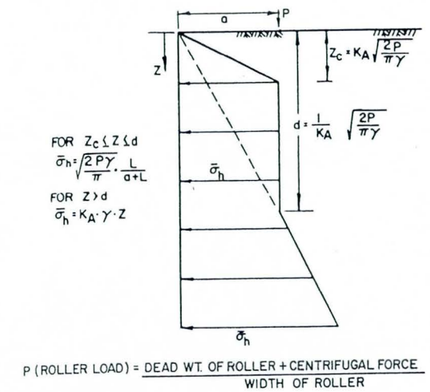

Figure 13
Horizontal Pressure on Walls from Compaction Effort

loads from heavy equipment (concrete trucks, cranes, etc.) located more than about 20 feet away. If such equipment is anticipated within a few feet of the wall, it must be accounted for separately.

5. WALL MOVEMENT. For the effect of wall movement on the earth pressure coefficients, see Figure 1.

a. Wall Rotation. When the actual estimated wall rotation is less than the value required to fully mobilize active or passive conditions, adjust the earth pressure coefficients by using the diagram on the upper right hand corner of Figure 1. Relatively large movements are required to mobilize the passive resistance. A safety factor must be applied to the ultimate passive resistance in order to limit movements.

b. Wall Translation. Wall uniform translation required to mobilize ultimate passive resistance or active pressure is approximately equivalent to movement of top of wall based on rotation criteria given in Figure 1.

c. Internally Braced Flexible Wall. Sheeting on cuts rigidly braced at the top undergoes insufficient movement to produce fully active conditions. Horizontal pressures are assumed to be distributed in a trapezoidal diagram. (See Section 4.) The resultant force is higher than theoretical active force. For clays, the intensity and distribution of horizontal pressures depend on the stability number $N_o = \gamma H/c$. (See Section 4.)

d. Tied Back Walls. Soil movement associated with prestressed tied back walls is usually less than with internally braced flexible walls, and design pressures are higher. (See Section 4.)

e. Restrained Walls. If a wall is prevented from even slight movement, then the earth remains at or near the value of at-rest conditions. The coefficient of earth pressure at-rest, K_o, for normally consolidated cohesive or granular soils is approximately:

$$K_o = 1 - \sin \theta'$$

where:
θ' = effective friction angle
Thus for $\theta' = 30°$, $K_o = 0.5$.

For over-consolidated soils and compacted soils the range of K_o may be on the order of 1.0. In cohesionless soils, full at-rest pressure will occur only with the most rigidly supported wall. In highly plastic clays, soil may creep, and if wall movement is prevented, at-rest conditions may redevelop even after active pressures are established.

f. Basement and Other Below Grade Walls. Pressure on walls below grade may be computed based on restraining conditions that prevail, type of backfill, and the amount of compaction.

6. EFFECT OF CONSTRUCTION PROCEDURES.

a. Staged Construction. As earth pressures are influenced by wall movement, it is important to consider each stage of construction, especially with regard to brace placement and its effects.

b. Compaction. Compaction of backfill in a confined wedge behind the wall tends to increase horizontal pressures beyond those represented by active or at-rest values. For guidance on horizontal pressure computations associated with the compaction of granular soil, see Figure 13 (after Reference 7, Retaining Wall Performance During Backfilling, by Ingold).

Clays and other fine-grained soils, as well as granular soils, with considerable amount of clay and silt (≥ 15%) are not normally used as backfill material. Where they must be used, the earth pressure should be calculated on the basis of "at-rest" conditions or higher pressure with due consideration to potential poor drainage conditions, swelling, and frost action.

c. Hydraulic Fills. Active pressure coefficients for loose hydraulic fill materials range from about 0.35 for clean sands to 0.50 for silty fine sands. Place hydraulic fill by procedures which permit runoff of wash water and prevent building up large hydrostatic pressures. For further guidance see discussion on dredging in DM-7.3, Chapter 3.

7. EARTHQUAKE LOADING. The pressure during earthquake loading can be computed by the Coulomb theory with the additional forces resulting from ground acceleration. for further guidance on the subject see Reference 8, Design of Earth Retaining Structures for Dynamic Loads, be Seed and Whitman. A synopsis of some material from this Reference follows:

(1) A simple procedure for determining the lateral force due to an earthquake is to compute the initial static pressure and add to it the increase in pressure from ground motion. For a vertical wall, with horizontal backfill slope, and θ of 35°, (which may be assumed for most practical cases involving granular fill), the earth pressure coefficient for dynamic increase in lateral force can be approximated as 3/4 k_h, k_h being the horizontal acceleration g's. The combined effect of static and dynamic force is:

$$P_{AE} = 1/2\ \gamma H^2 K_A + 3/8\ \gamma H^2 k_h$$

Assume the dynamic lateral force $P_E = 3/8\ \gamma H^2 k_h$ acts at 0.6 H above the wall base. Effect of liquefaction is considered in DM-7.3, Chapter 1.

(2) For other soil and wall properties, the combined resultant active force:

$$P_{AE} = 1/2\ H^2 . K_A\ (\beta^*, \theta^*)(1-k_v)\ F$$

where: $\beta^* = \beta + \psi$ = modified slope of backfill

$\theta^* = \theta + \psi$ = modified slope of wall back

$$\psi = \tan^{-1} \frac{k_h}{1-k_v}$$

$$F = \frac{\cos^2\theta^*}{\cos\psi \cos^2\theta}$$

k_v = vertical ground acceleration in g's.

For modified slope β^* and θ^*, obtain $K_A(\beta^*, \theta^*)$ from the applicable Figures 3 through 8. Determine F from Figure 14. Dynamic pressure increment ΔP_E can be obtained by

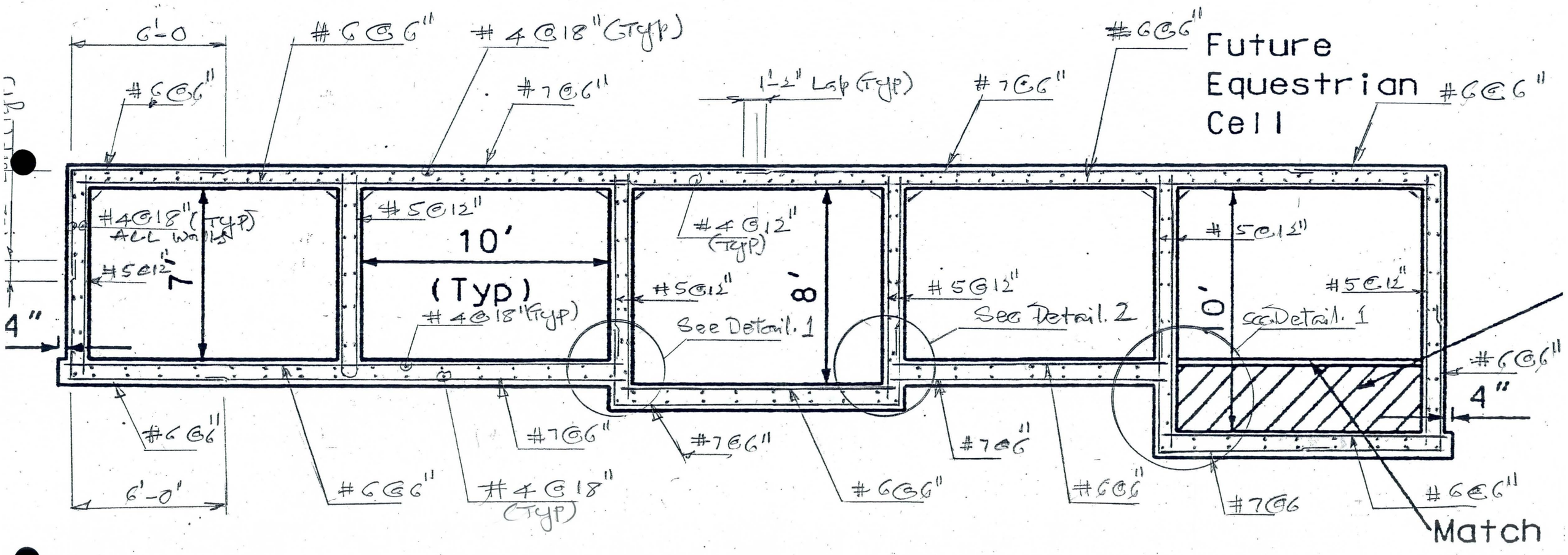

Box-2

1 SECTION

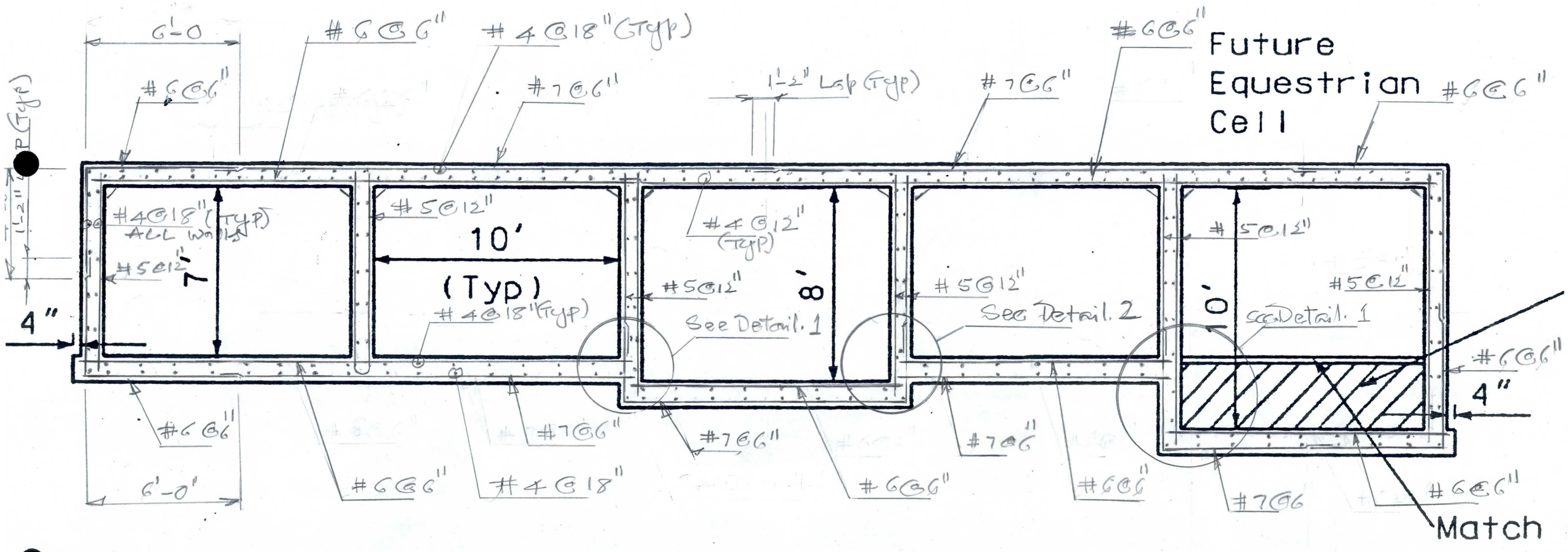

Box-2

1 SECTION

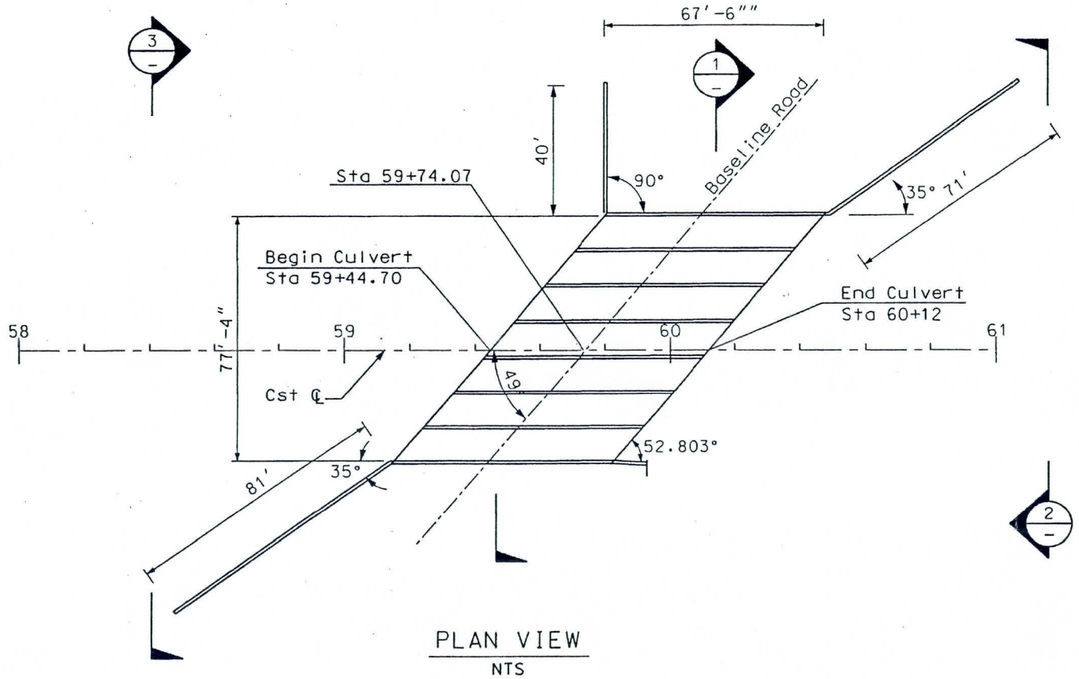

PLAN VIEW
NTS

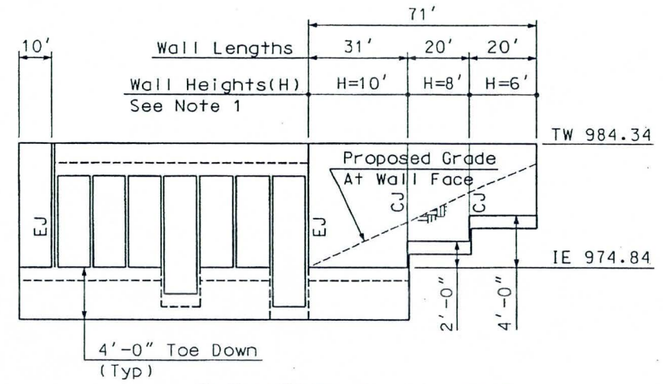

ELEVATION INLET WING
Scale:
Horiz: 1"=20'
Vert: 1"=5'

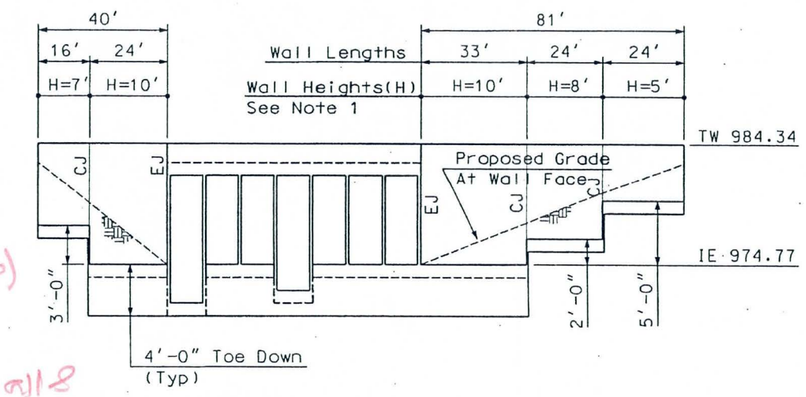

ELEVATION OUTLET WING
Scale:
Horiz: 1"=20'
Vert: 1"=5'

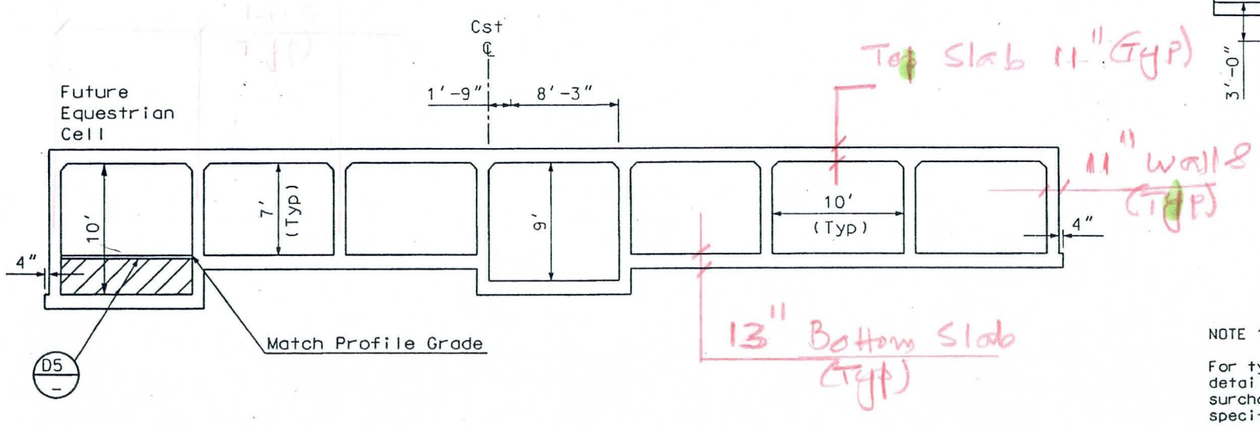

SECTION
NTS

BOX CULVERT NO. 1

NOTE 1:

For typical dimensions and reinforcement details refer to Case II Level fill with 2' surcharge of ADOT B.18.20 and B.18.10 for specified wall heights. Actual wall height may vary and depends on top of wall elevations shown.

60% SUBMITTAL

FLOOD CONTROL DISTRICT OF MARICOPA COUNTY
ENGINEERING DIVISION

LAVEEN AREA CONVEYANCE CHANNEL
FCD PROJECT NO. 1170831
FCD CONTRACT NO.

PRELIMINARY NOT FOR CONSTRUCTION		BY	DATE
	DESIGNED	KVH	05/01
	DRAWN	FC	05/01
	CHECKED		

DRAWING NO.	BOX CULVERT NO. 1 DETAILS	SHEET OF
B1		

...\Laveen\Dgn\PP40\BxCulDtl1.dgn Jun. 01, 2001 16:57:27

FLOOD CONTROL DISTRICT OF MARICOPA COUNTY

PROJECT LA CC PAGE ____ OF ____

DETAIL Typ. Details COMPUTED KVH DATE 4/0

CHECKED BY ____ DATE ____

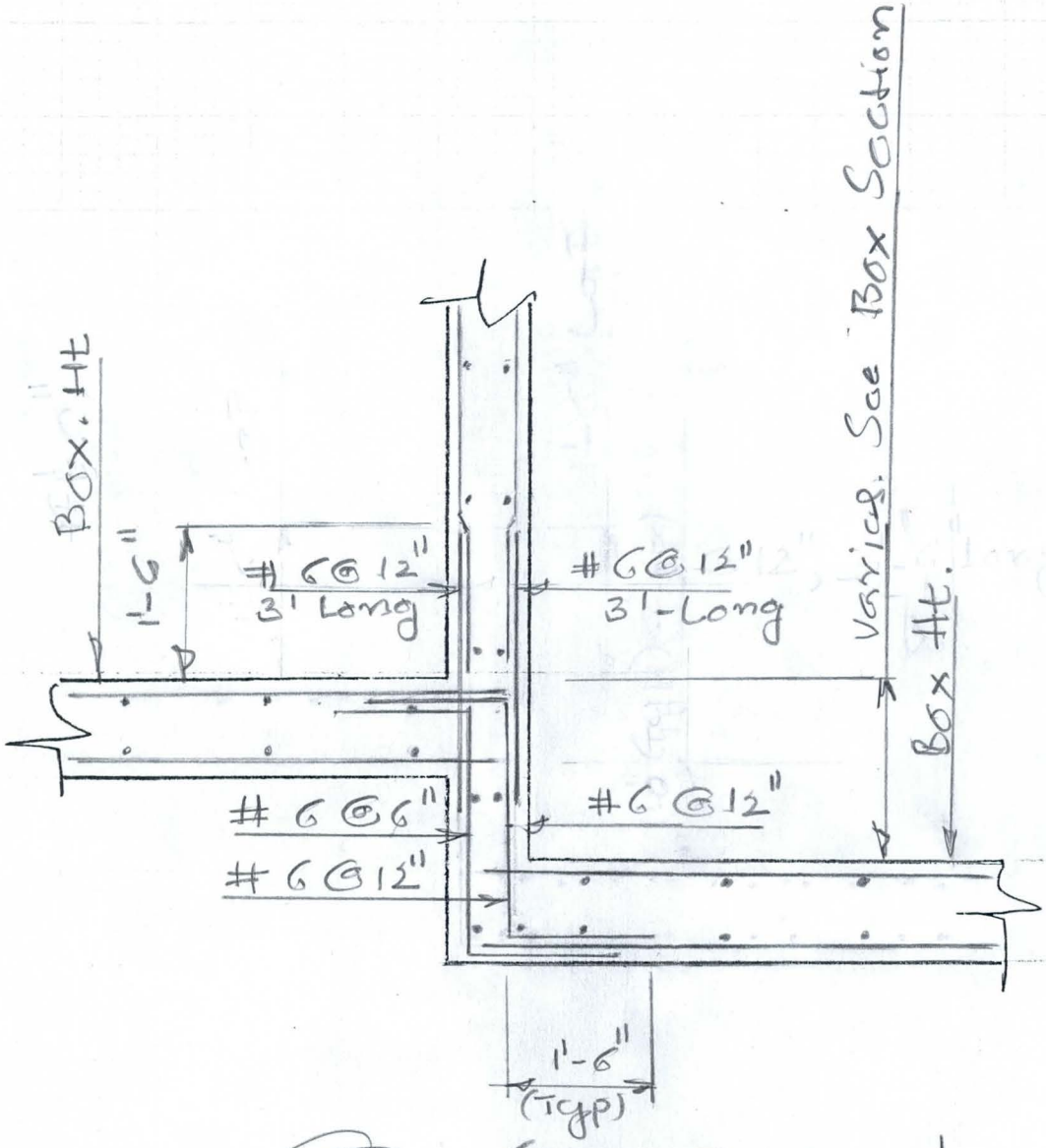

1 Step Detail - 1

1/2" = 1'-0

FLOOD CONTROL DISTRICT OF MARICOPA COUNTY

PROJECT Laveen PAGE ____ OF ____

DETAIL Typ. Details COMPUTED KVH DATE 4/01

CHECKED BY ____ DATE ____

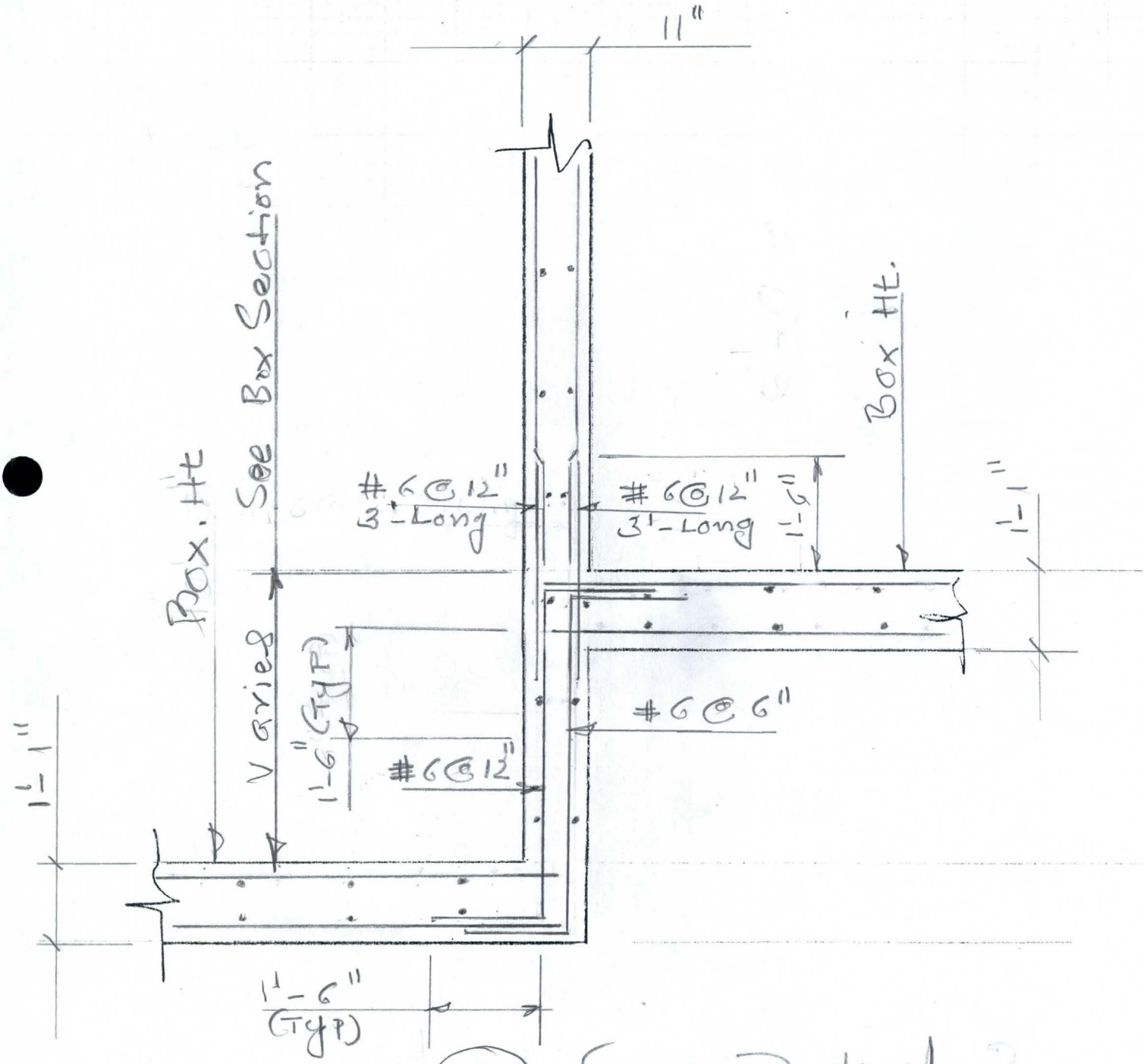

2 Step Detail-2

1/2" = 1'-0

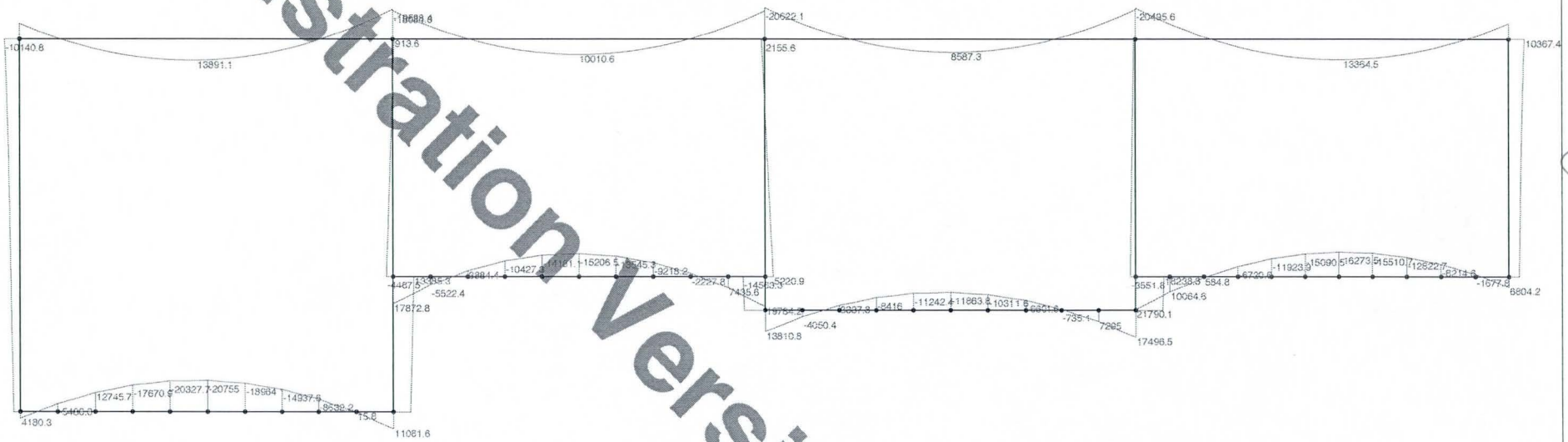

Solution: LC 16, O.W./Max. Soil above/1/2 wet EP/WP
Member Bending Moments (Lb-ft)

Your Company Name	Culvert Design	April 3, 2001
Sam Hanna		4:19 PM
		culvert3.r2d

Demonstration Version

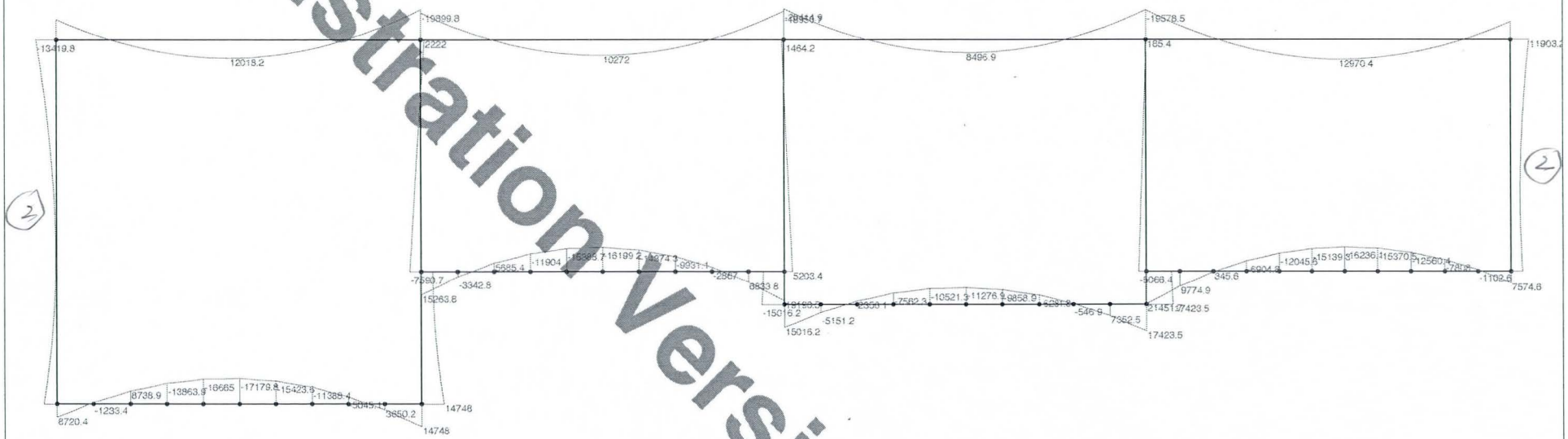

Solution: LC 15, O.W./Max. Soil above/wet EP/WP
Member Bending Moments (Lb-ft)

Your Company Name	Culvert Design	April 3, 2001
Sam Hanna		4:19 PM
		culvert3.r2d

Demonstration Version

3

3

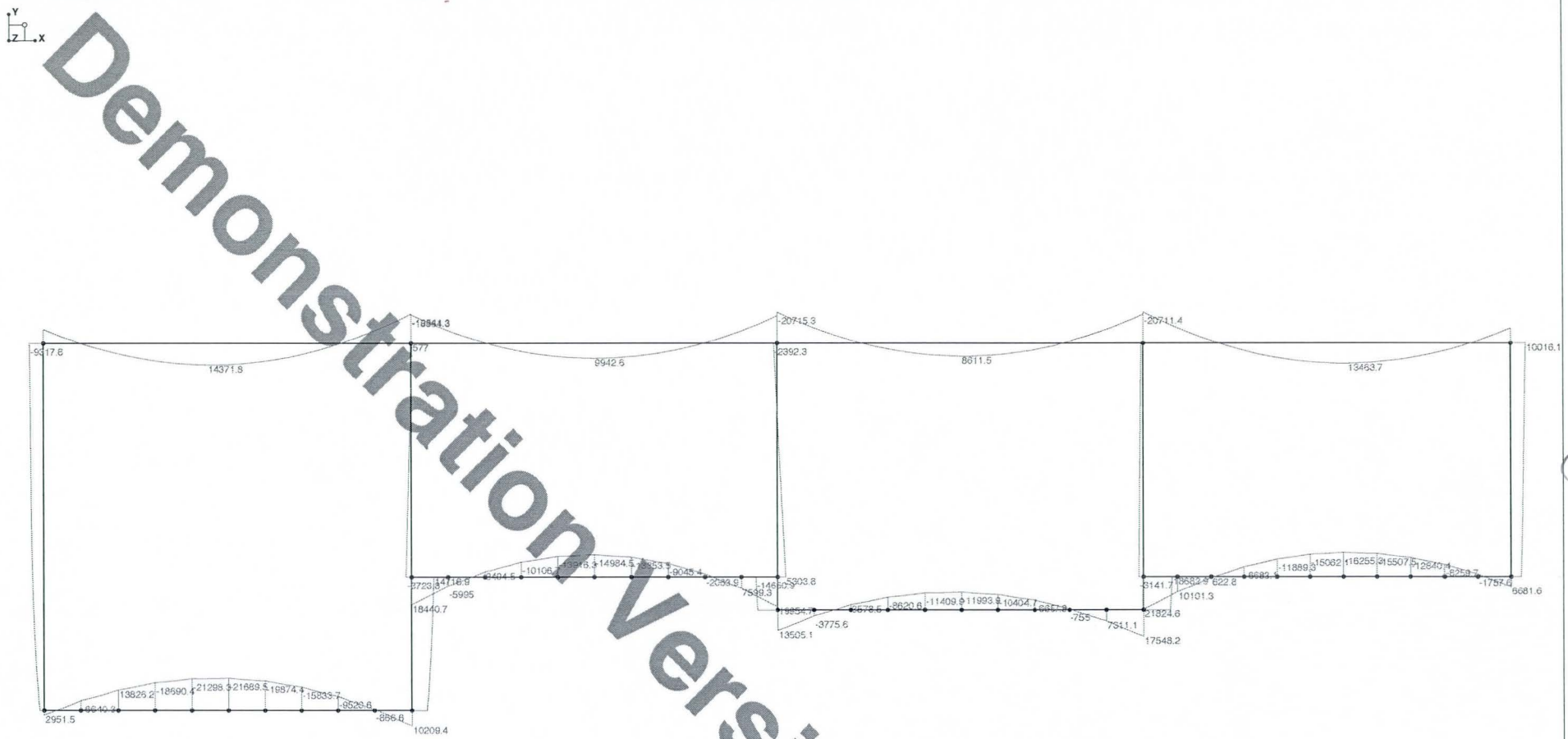

Solution: LC 14, O.W./Max. Soil above/1/2EP/WP
Member Bending Moments (Lb-ft)

Your Company Name	Culvert Design	April 3, 2001
Sam Hanna		4:20 PM
		culvert3.r2d

Demonstration Version

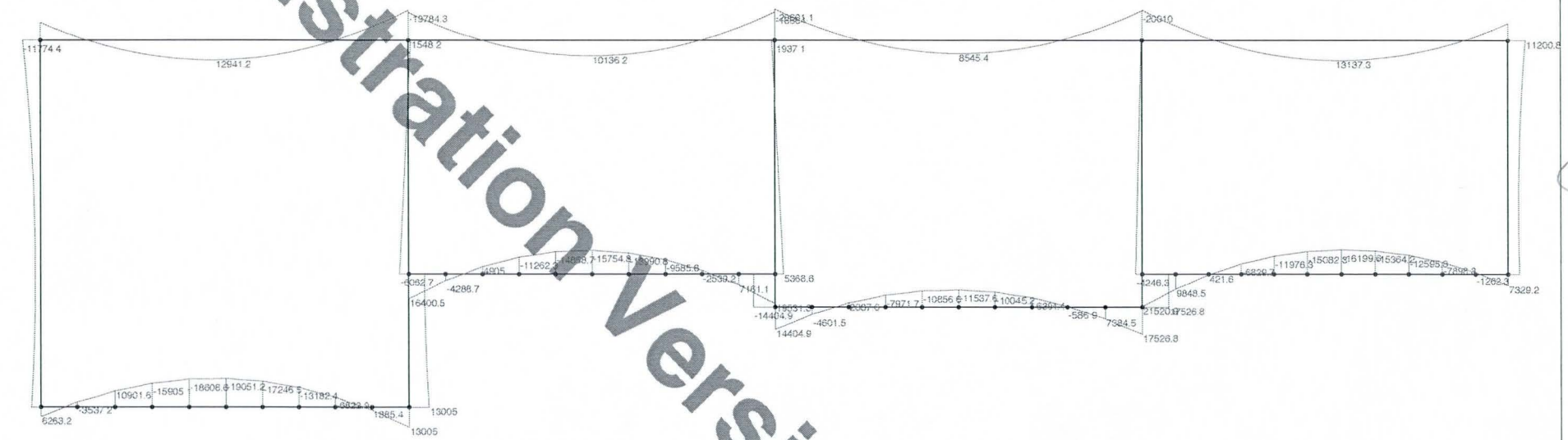

Solution: LC 13, O.W./Max. Soil above/EP/WP
Member Bending Moments (Lb-ft)

Your Company Name	Culvert Design	April 3, 2001
Sam Hanna		4:20 PM
		culvert3.r2d

Demonstration Version

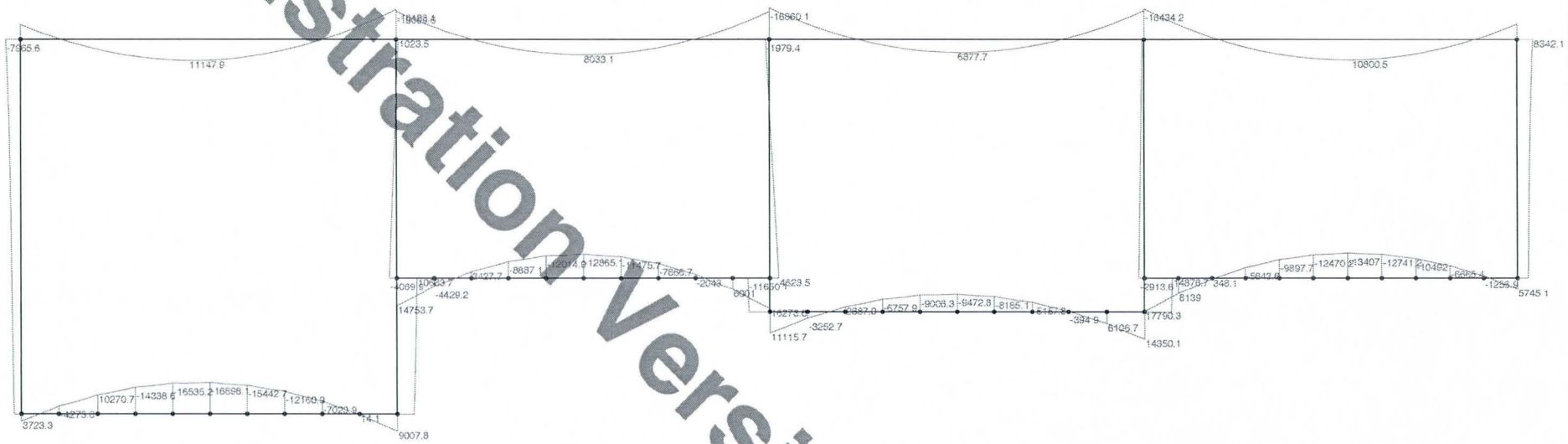

Demonstration Version

Solution: LC 12, O.W./Soil above/1/2 wet EP/WP
Member Bending Moments (Lb-ft)

Your Company Name	Culvert Design	April 3, 2001
Sam Hanna		4:20 PM
		culvert3.r2d

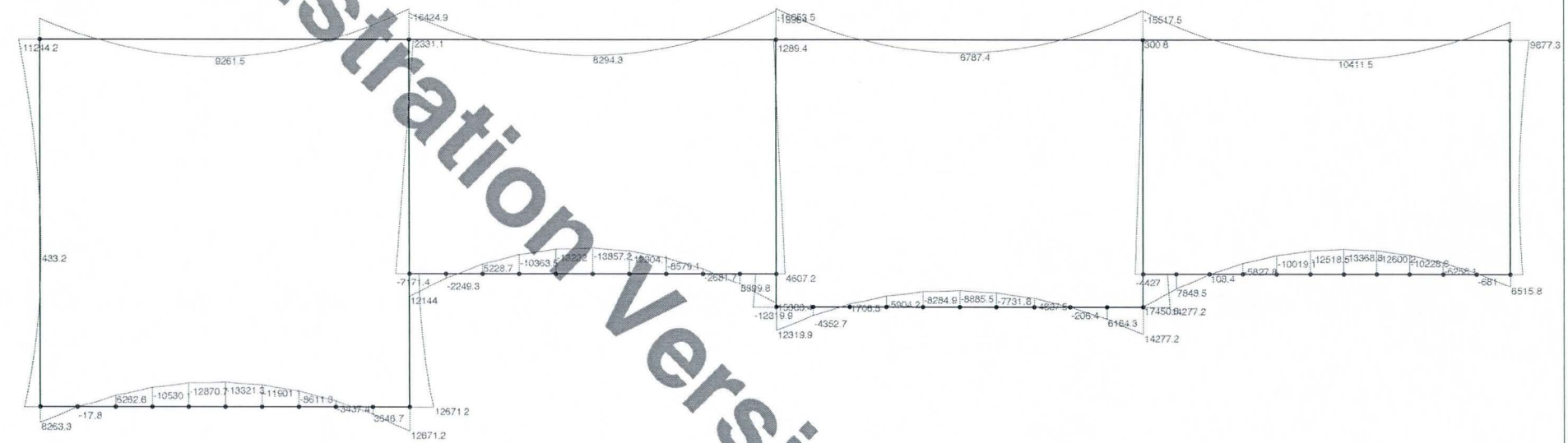

Demonstration Version

Solution: LC 11, O.W./Soil above/wet EP/WP
Member Bending Moments (Lb-ft)

Your Company Name	Culvert Design	April 3, 2001
Sam Hanna		4:20 PM
		culvert3.r2d

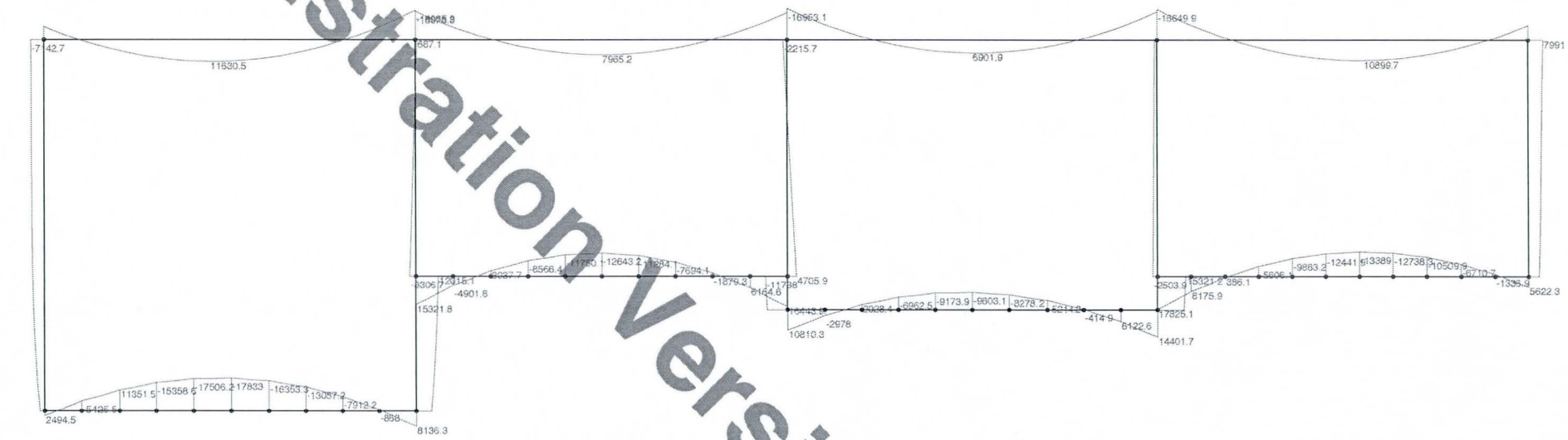

Demonstration Version

Solution: LC 10, O.W/Soil Above/Truck/1/2 EP/WP
Member Bending Moments (Lb-ft)

Your Company Name	Culvert Design	April 3, 2001
Sam Hanna		4:20 PM
		culvert3.r2d

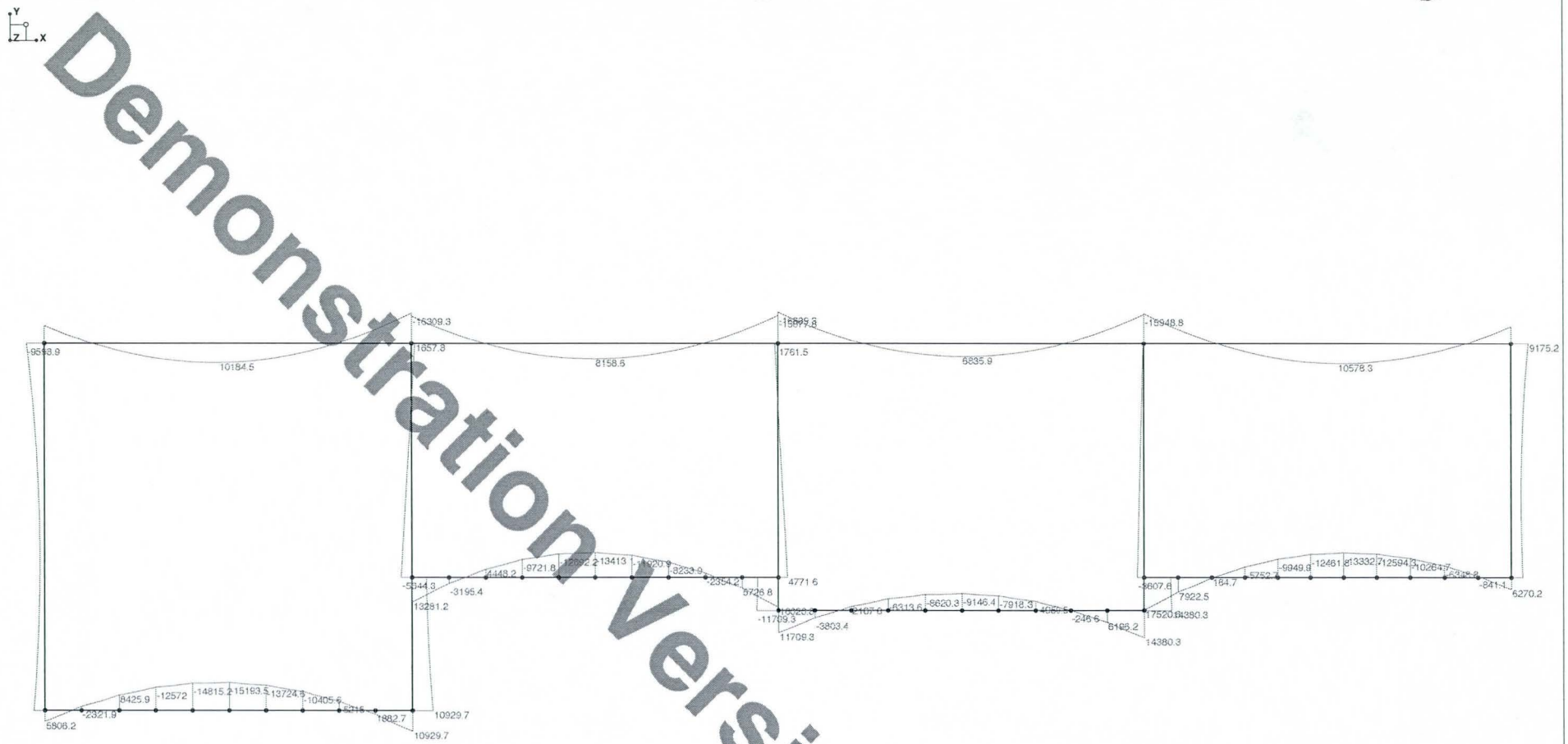

Solution: LC 9, O.W./Soil above/Truck/EP/WP
Member Bending Moments (Lb-ft)

Your Company Name	Culvert Design	April 3, 2001
Sam Hanna		4:21 PM
		culvert3.r2d

Demonstration Version

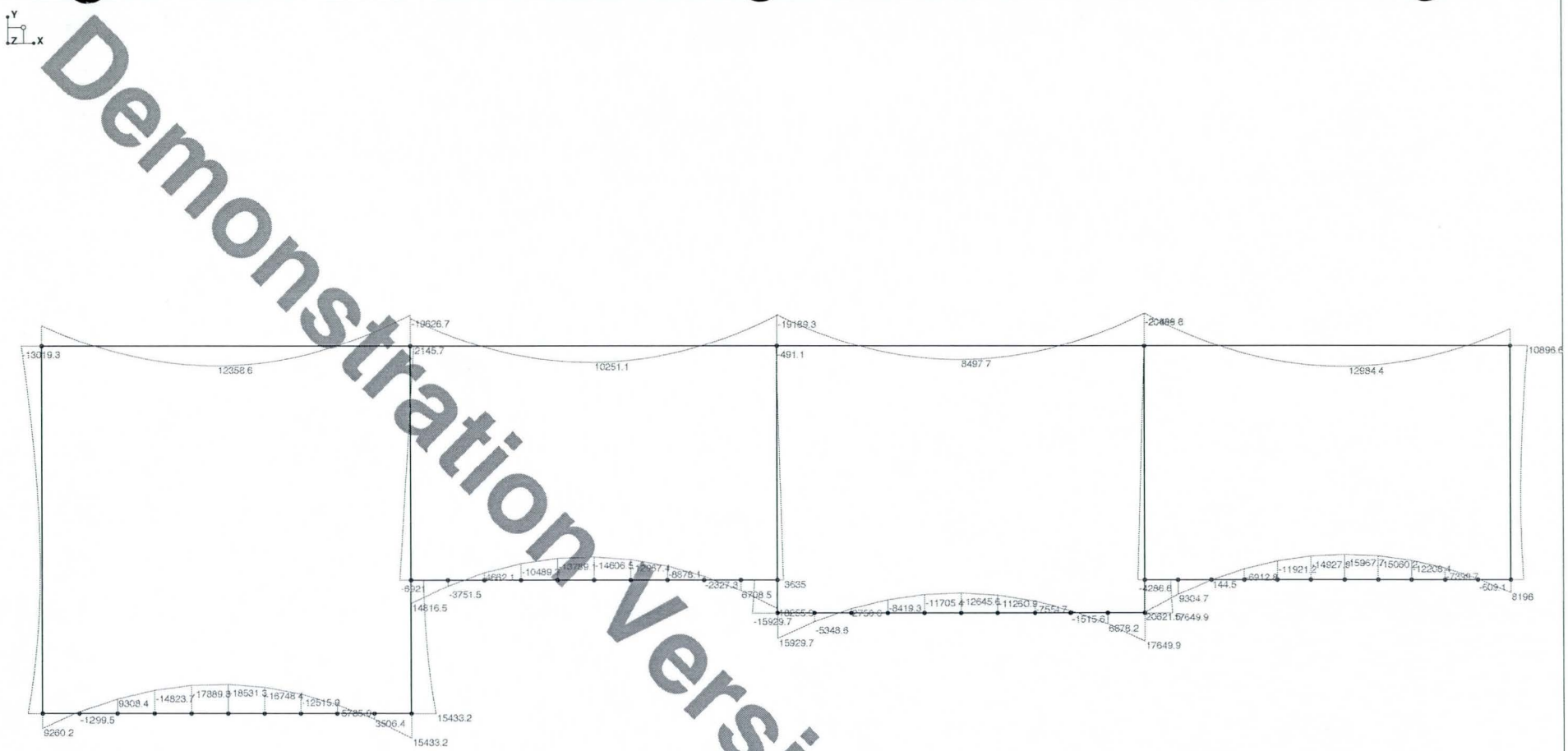

Demonstration Version

Solution: LC 8, O.W.+Max. Soil above+1/2 wet EP
Member Bending Moments (Lb-ft)

Your Company Name	Culvert Design	April 3, 2001
Sam Hanna		4:21 PM
		culvert3.r2d

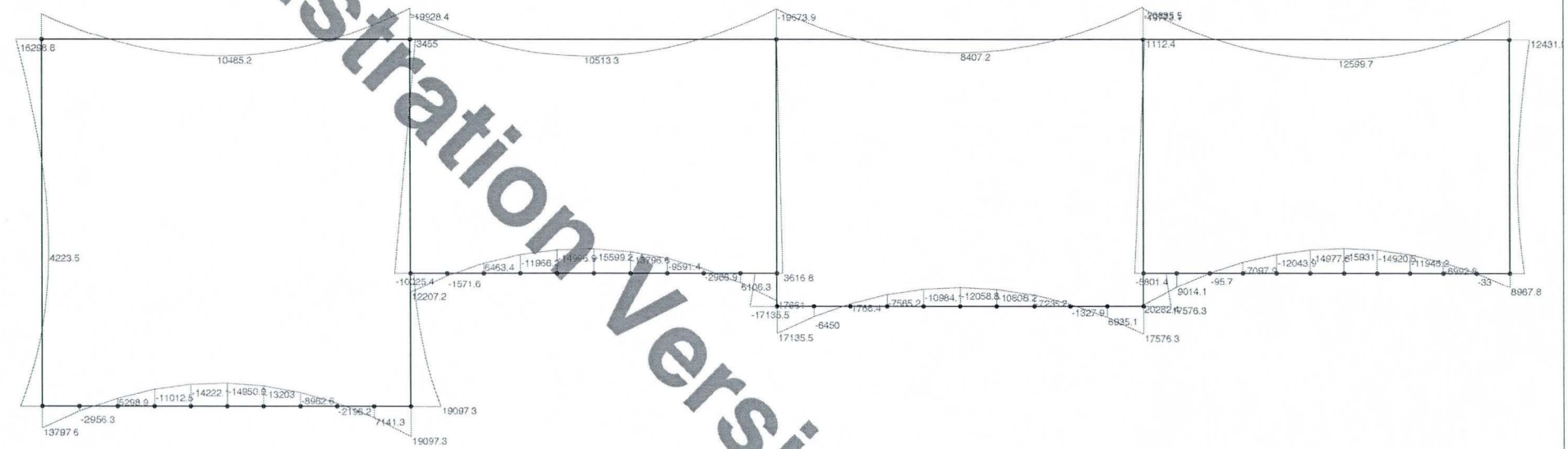

Demonstration Version

Solution: LC 7, O.W.+Max. Soil above+wet EP
Member Bending Moments (Lb-ft)

Your Company Name	Culvert Design	April 3, 2001
Sam Hanna		4:21 PM
		culvert3.r2d

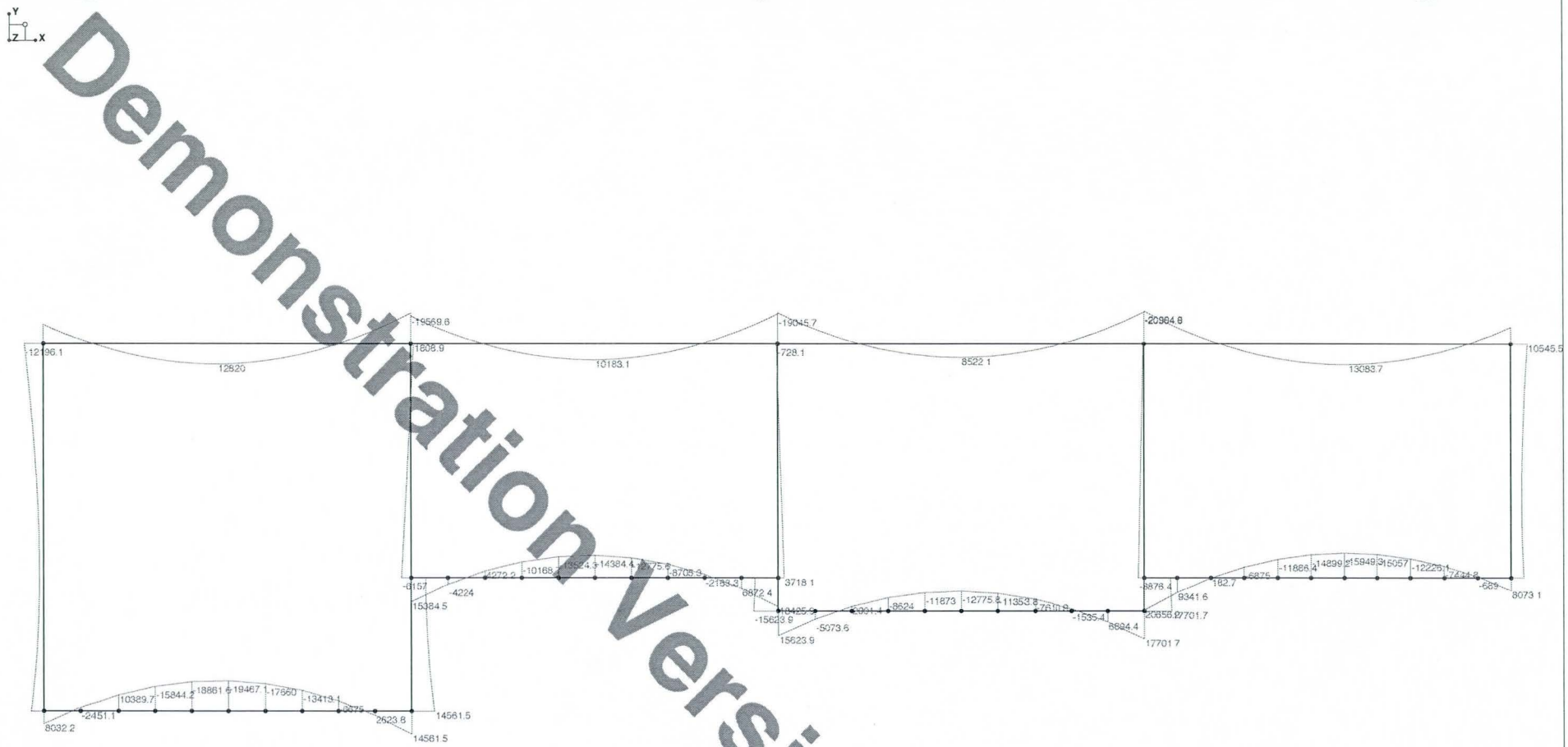

Demonstration Version

Solution: LC 6, O.W.+Max. Soil above+1/2EP
Member Bending Moments (Lb-ft)

Your Company Name	Culvert Design	April 3, 2001
Sam Hanna		4:21 PM
		culvert3.r2d

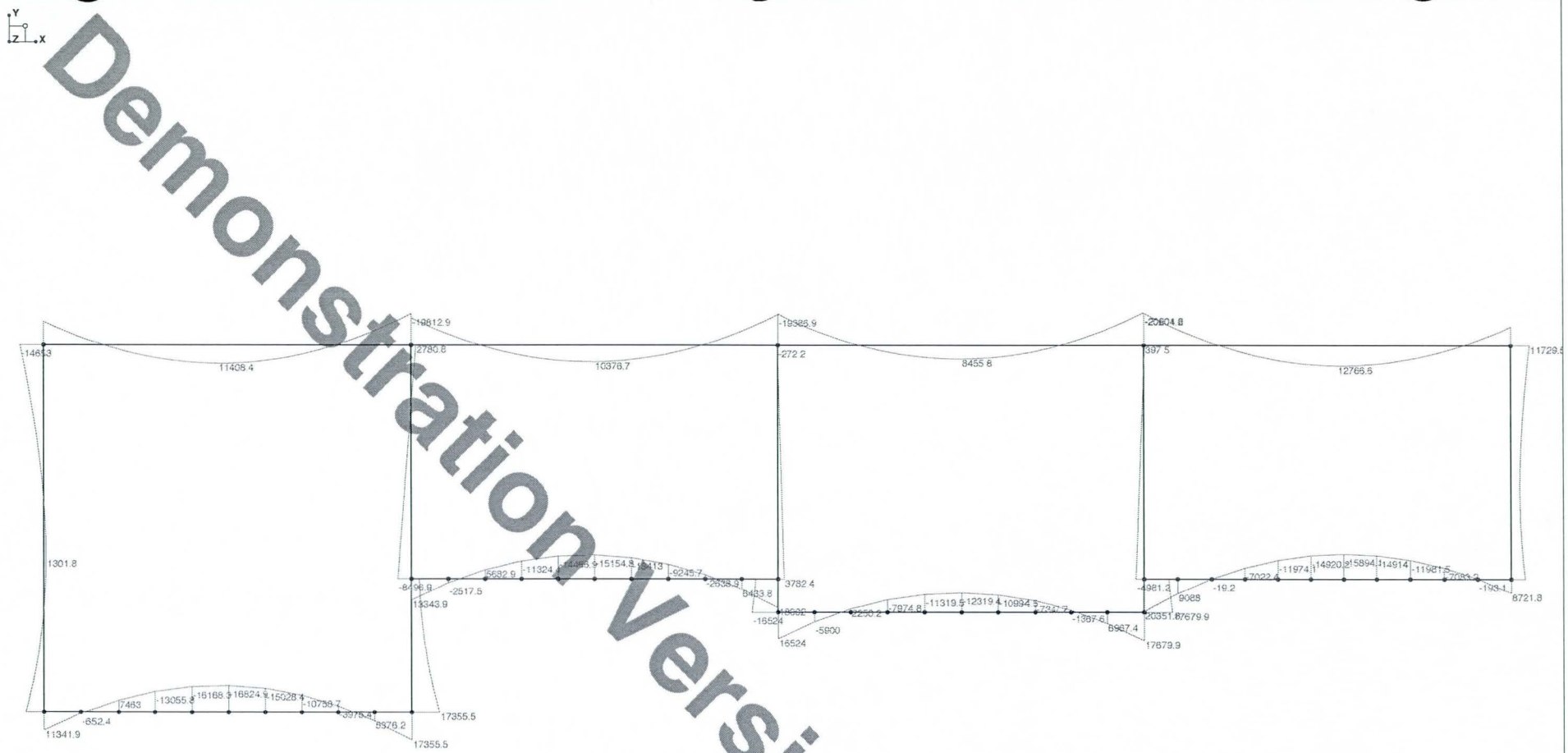

Solution: LC 5, O.W.+Max. Soil above+EP
Member Bending Moments (Lb-ft)

Demonstration Version

Your Company Name	Culvert Design	April 3, 2001
Sam Hanna		4:21 PM
		culvert3.r2d

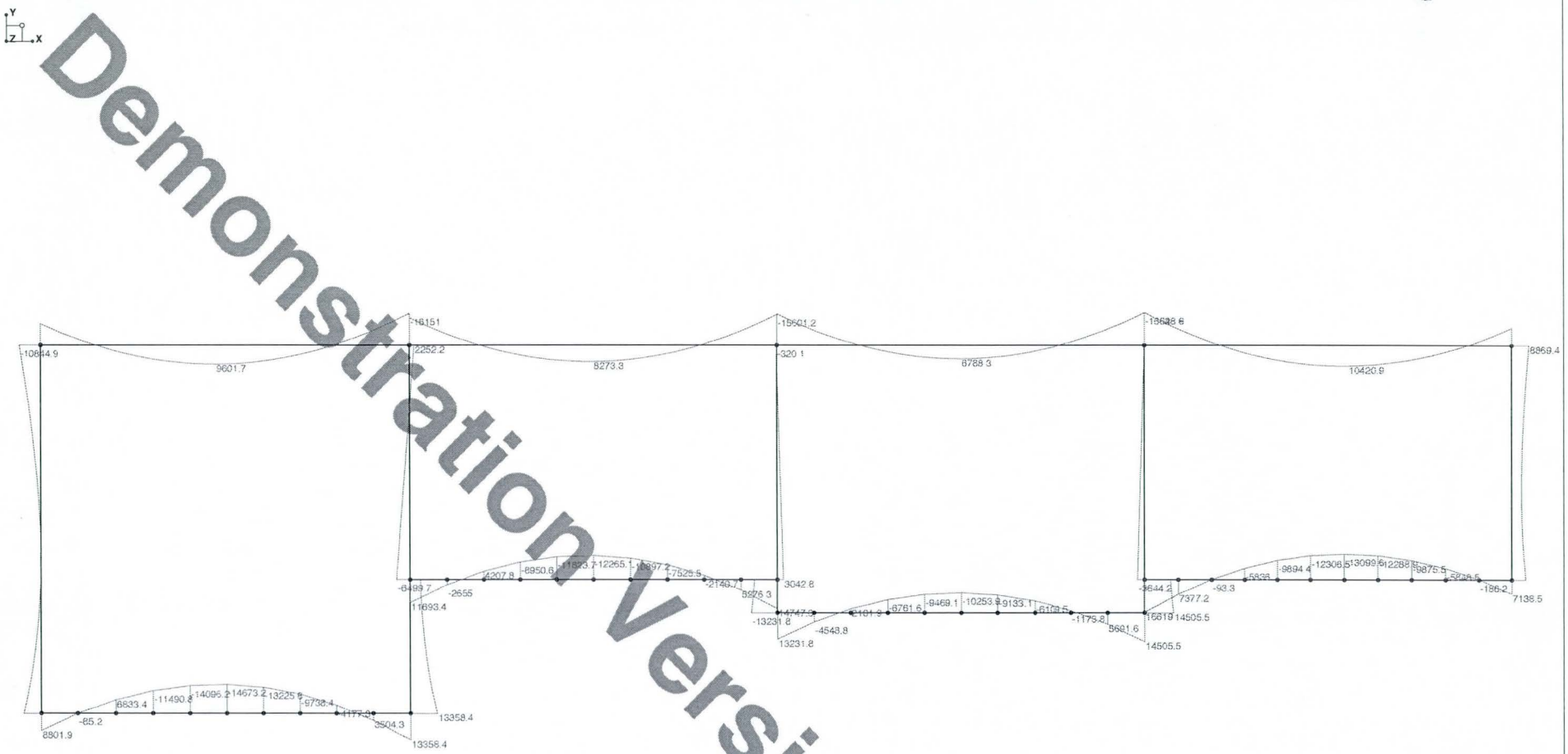

Demonstration Version

Solution: LC 4, O.W.+Soil above+1/2 wet EP
Member Bending Moments (Lb-ft)

Your Company Name	Culvert Design	April 3, 2001
Sam Hanna		4:22 PM
		culvert3.r2d

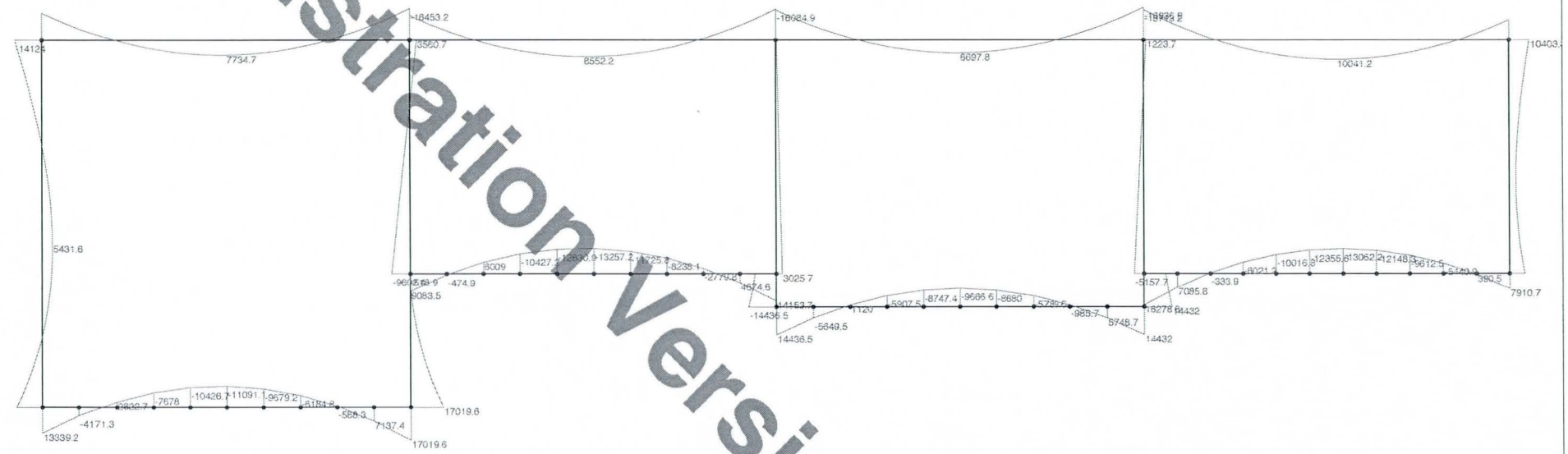

Solution: LC 3, O.W.+Soil above+wet EP
Member Bending Moments (Lb-ft)

Your Company Name	Culvert Design	April 3, 2001
Sam Hanna		4:22 PM
		culvert3.r2d

Demonstration Version

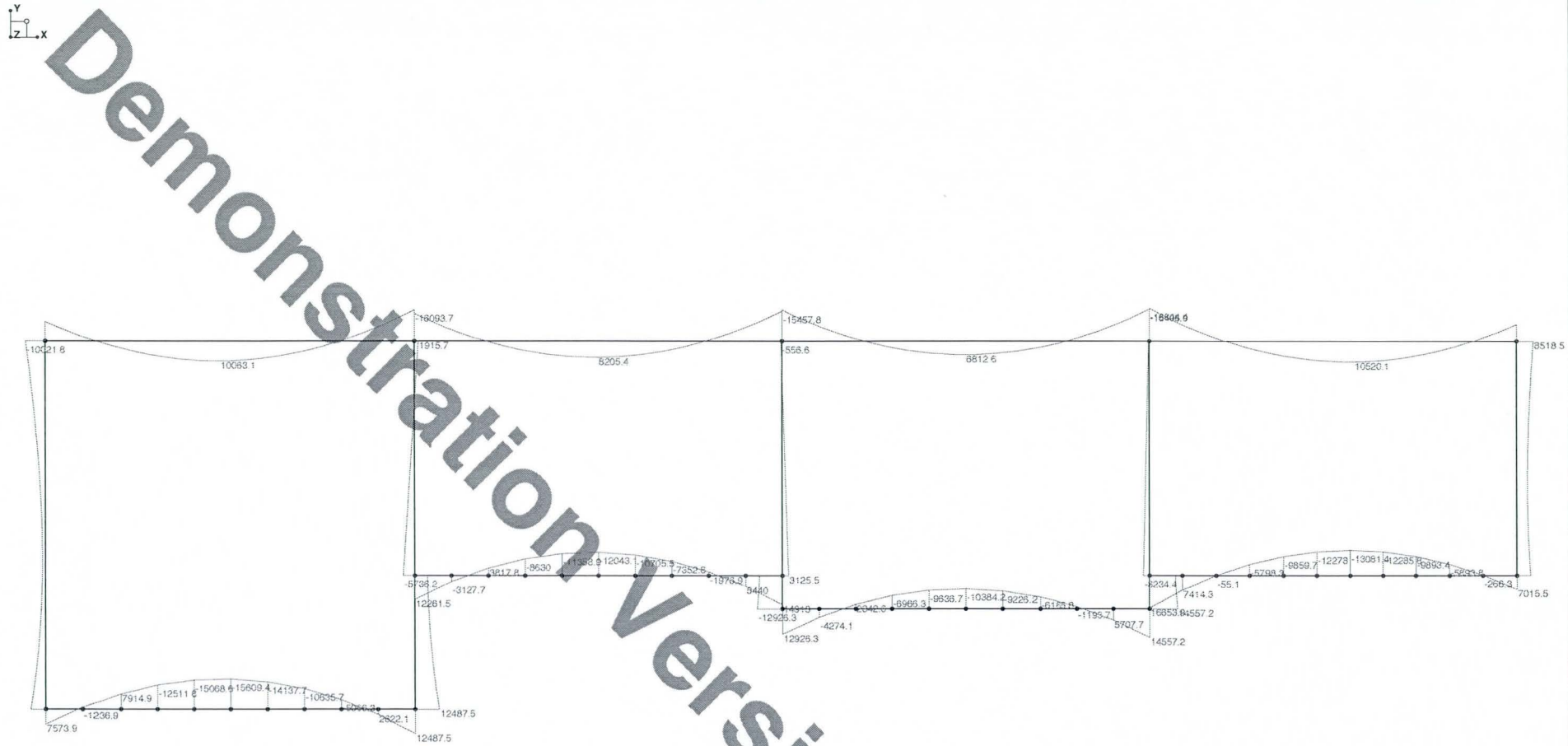

Solution: LC 2, O.W+Soil Above+Truck+1/2 EP
Member Bending Moments (Lb-ft)

Demonstration Version

Your Company Name	Culvert Design	April 3, 2001
Sam Hanna		4:22 PM
		culvert3.r2d

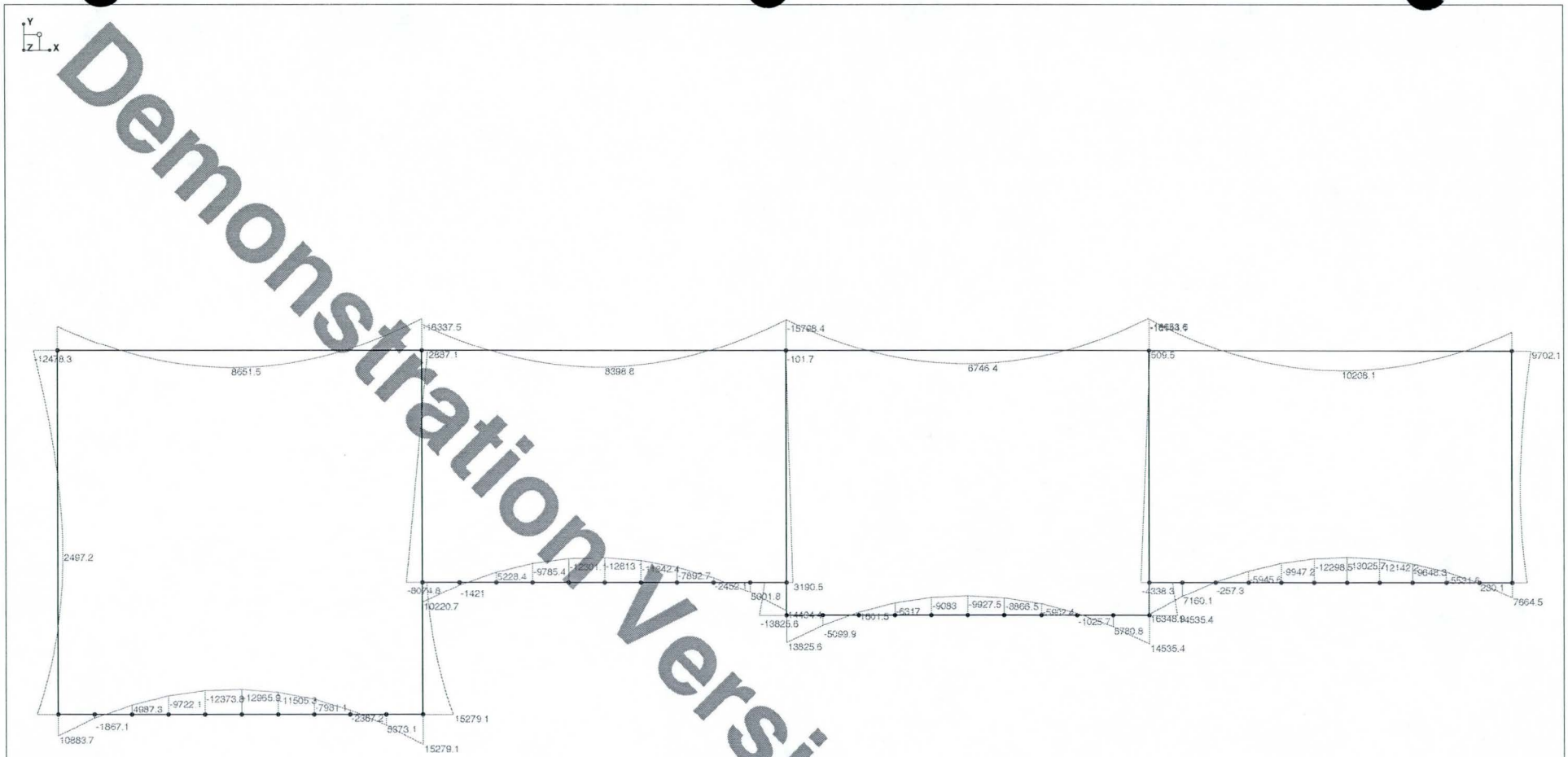

Demonstration Version

Solution: LC 1, O.W.+Soil above+Truck+EP
Member Bending Moments (Lb-ft)

Your Company Name	Culvert Design	April 3, 2001
Sam Hanna		4:22 PM
		culvert3.r2d

LACC CULVERTS (Item No. 505)

Notes:
1. Calcs. on these spreadsheets do not include wingwall (ww) calcs.
2. The volume for Culvert 4's actual box structure was computed differently that other culverts. See worksheet for setup.
3. C/S area for all culverts calculated according to portions, see worksheets for setup.
4. Misc. dimensions are taken from ADOT STD B-02.40 through B-02.70 table 1. Adjustments can be made if needed.
5. Culvert calcs. do not include 3" cap for future equestrian cell (eq cell), this volume is calculated separately.
6. Grand total volume includes volumes from hdwl's, ww's, toes, and the actual box structure.

Misc. Dimensions (ft)	
Top Slab =	0.9167
Bottom Slab =	1.08
Walls =	0.9167
Span =	10
Hdwl Thickness =	1
Toe Thickness =	1

Box Widths (ft)			
Box	No. Walls	No. Cells	Width
1	8	7	77.3
2	6	5	55.5
3	5	4	44.6
4	4	3	33.7
5	4	3	33.7

Volume of 3" Concrete Cap		
Cap C/S area (sq ft) =		2.5
Box	Length (ft)	Vol (cy)
1	67.4	6
2	34.9	3
3	35.8	3
4	212.3	20
5	150.0	14

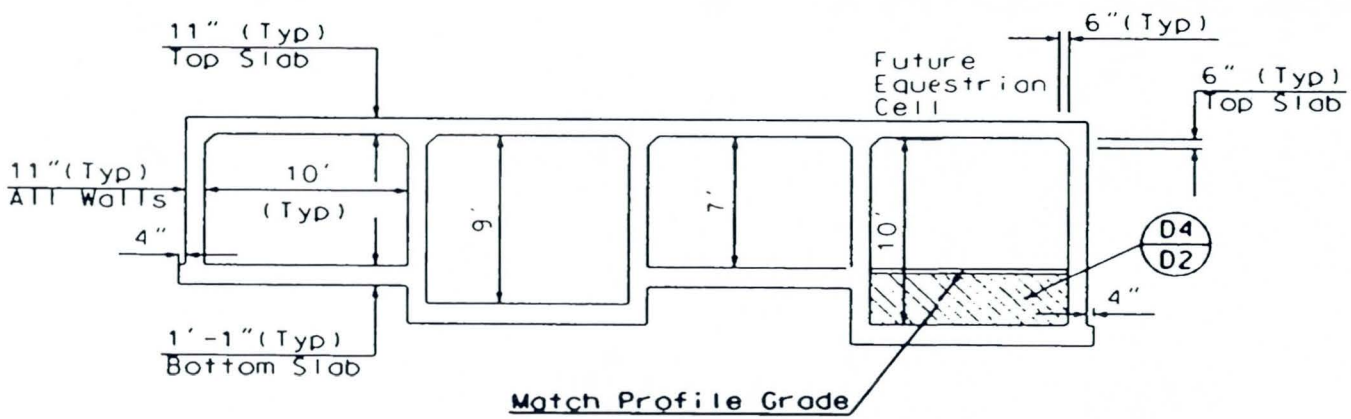

SECTION
NTS

BOX CULVERT 1

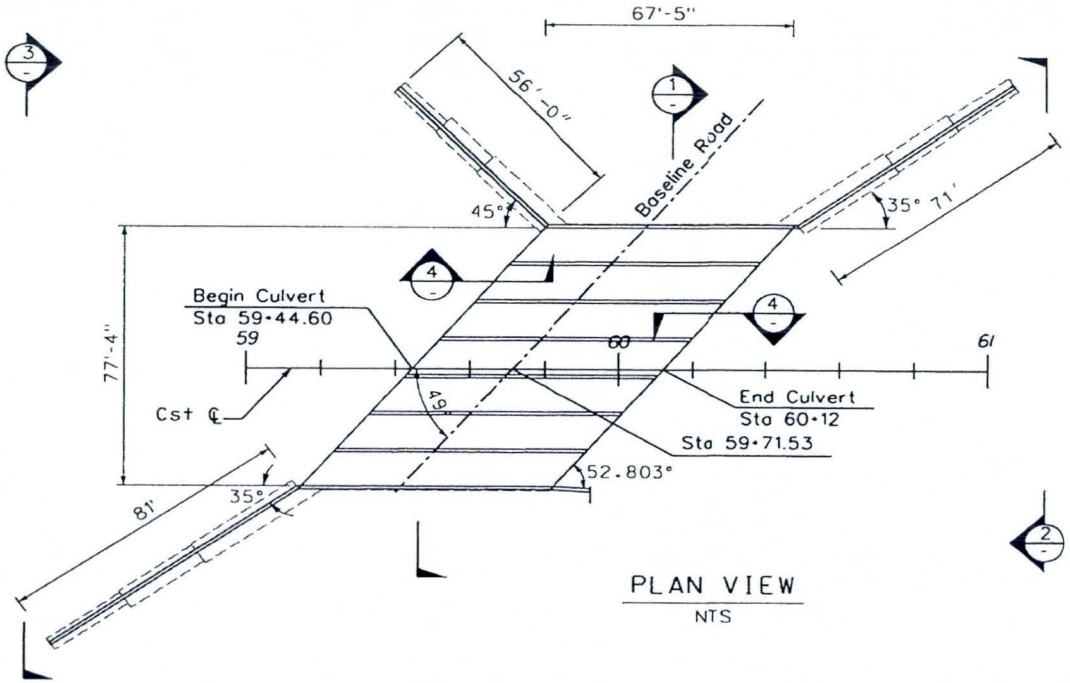

Geometric Data (ft)				
Portion	STA	TW	IE	Height
Inlet	6012.03	984.34	974.84	9.50
Outlet	5944.59	984.34	974.77	9.57
Length:	67.4		Width:	77.3

HEADWALLS				
Typ Cell Ht + Top Slab =			7.92	
Portion	Height (ft.)	Hdwl Ht (ft.)	Area (sq ft)	Volume (cy)
Inlet	9.50	1.58	122.4	4.53
Outlet	9.57	1.65	127.9	4.74
Totals:			**250**	**9**

BOX										
					Box C/S Areas (sq ft)					
Portion	No. Walls per Port.	No. Cells per Port.	Cell Ht. (ft)	Port. Ht (ft)	Cell Area	Portion Area	Total Area	Toe Dwn Area	Vol Toe (cy)	Vol Box (cy)
Eq Cell	2	1	10	12	99.8	142.0	42.2	0.0	0.0	106
Typ	1	2	7	9	139.5	188.2	48.7	61.1	2.3	122
Low Flow	2	1	9	11	89.8	130.2	40.4	10.8	0.4	101
Typ	3	3	7	9	209.3	294.7	85.5	95.6	3.5	214
Totals:	**8**	**7**			**538**	**755**	**217**	**168**	**6.21**	**542**

Grand Total Vol (cy) =	**673**

BOX CULVERT 2

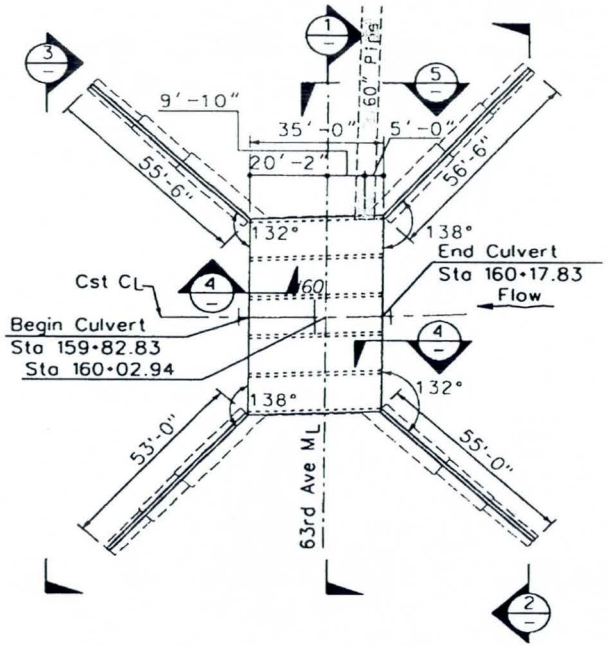

PLAN VIEW
NTS

Geometric Data (ft)				
Portion	STA	TW	IE	Height
Inlet	16017.77	996.32	987.32	9.00
Outlet	15982.83	996.28	987.28	9.00
Length:	34.9		Width:	55.5

HEADWALLS				
Typ Cell Ht + Top Slab =			7.92	
Portion	Height (ft)	Hdwl Ht (ft.)	Area (sq ft)	Volume (cy)
Inlet	9.00	1.08	60.13	2.23
Outlet	9.00	1.08	60.13	2.23
Totals:			**120**	**4**

BOX										
					Box C/S Areas (sq ft)					
Portion	No. Walls per Port.	No. Cells per Port.	Cell Ht. (ft)	Port. Ht (ft)	Cell Area	Portion Area	Total Area	Toe Dwn Area	Vol Toe (cy)	Vol Box (cy)
Eq Cell	2	1	10	12	99.8	142.0	42.2	0.0	0.0	55
Typ	1	1	7	9	69.8	98.2	28.5	42.8	1.6	37
Low Flow	1	1	9	11	89.8	120.1	30.3	20.9	0.8	39
Typ	2	2	7	9	139.5	196.5	57.0	85.6	3.2	74
Totals:	**6**	**5**			**399**	**557**	**158**	**149**	**5.53**	**204**

Grand Total Vol (cy) =	**335**

BOX CULVERT 3

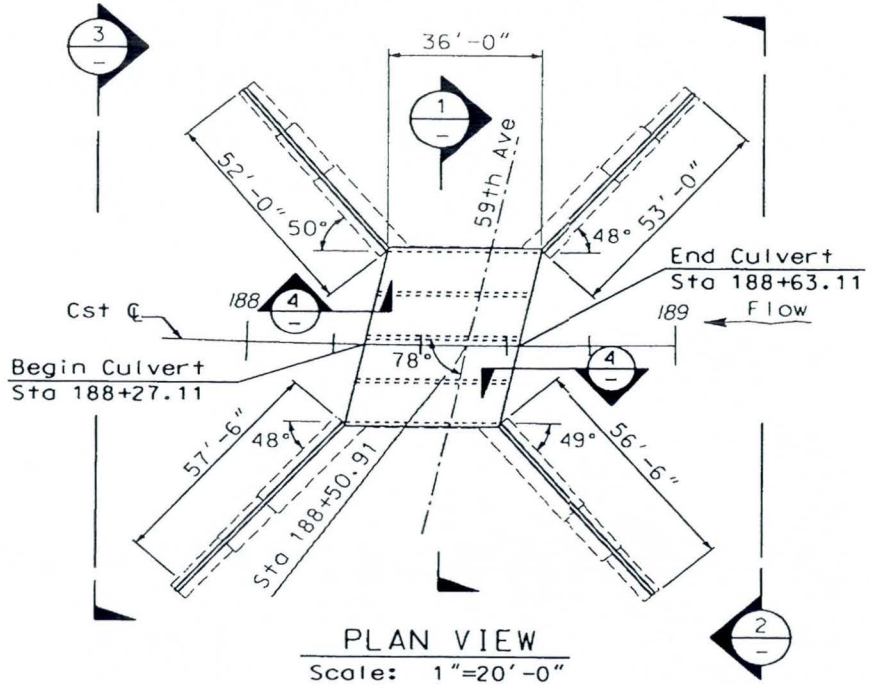

Geometric Data (ft)				
Portion	STA	TW	IE	Height
Inlet	18862.88	1002.00	991.43	10.57
Outlet	18827.11	1002.30	991.39	10.91
Length:	35.8		Width:	44.6

HEADWALLS				
Typ Cell Ht + Top Slab =			7.92	
Portion	Height (ft)	Hdwl Ht (ft.)	Area (sq ft)	Volume (cy)
Inlet	10.57	2.65	118.29	4.38
Outlet	10.91	2.99	133.45	4.94
Totals:			**252**	**9**

BOX										
					Box C/S Areas (sq ft)					
Portion	No. Walls per Port.	No. Cells per Port.	Cell Ht. (ft)	Port. Ht (ft)	Cell Area	Portion Area	Total Area	Toe Dwn Area	Vol Toe (cy)	Vol Box (cy)
Eq Cell	2	1	10	12	99.8	142.0	42.2	0.0	0.0	56
Typ	1	1	7	9	69.8	98.2	28.5	42.8	1.6	38
Low Flow	1	1	9	11	89.8	120.1	30.3	20.9	0.8	40
Typ	1	1	7	9	69.8	98.2	28.5	42.8	1.6	38
Totals:	**5**	**4**			**329**	**459**	**130**	**106**	**3.94**	**172**

Grand Total Vol (cy) =	**321**

BOX CULVERT 4

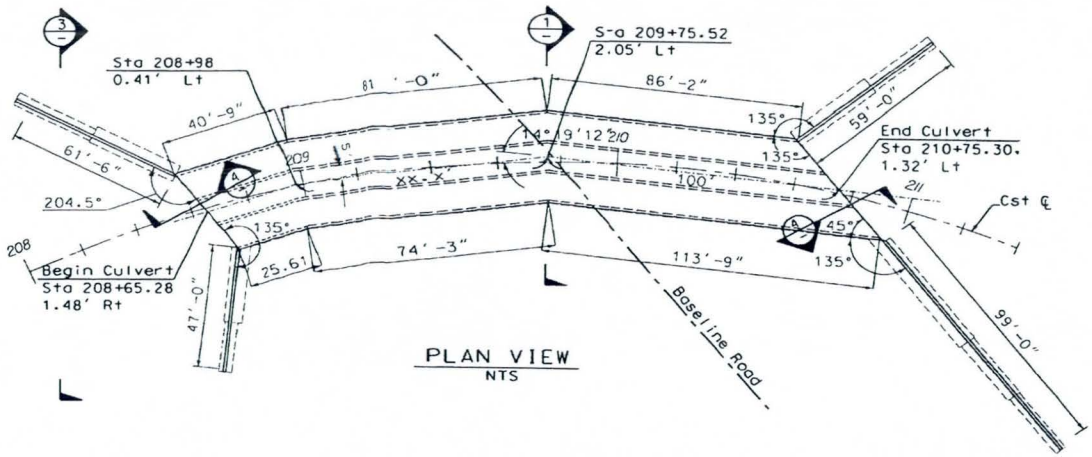

Geometric Data (ft)				
Portion	STA	TW	IE	Height
Inlet	21076.97	1003.36	993.66	9.70
Outlet	20864.69	1003.36	993.63	9.73
Length:	212.3		Width:	33.7

HEADWALLS				
Typ Cell Ht + Top Slab =			8.92	
Portion	Height (ft)	Hdwl Ht (ft.)	Area (sq ft)	Volume (cy)
Inlet	9.70	0.78	26.37	0.98
Outlet	9.73	0.81	27.38	1.01
Totals:			**54**	**2**

BOX										
					Box C/S Areas (sq ft)					
Portion	No. Walls per Port.	No. Cells per Port.	Cell Ht. (ft)	Port. Ht (ft)	Cell Area	Portion Area	Total Area	Toe Dwn Area	Vol Toe (cy)	Vol Box (cy)
Eq Cell	2	1	10	12	99.8	142.0	42.2	0.0	0.0	334
Low Flow	1	1	10	12	99.8	131.0	31.2	0.0	0.0	247
Typ	1	1	8	10	79.8	109.2	29.4	42.8	1.6	232
Totals:	**4**	**3**			**279**	**382**	**103**	**43**	**1.58**	**813**

Grand Total Vol (cy) =	**929**

BOX CULVERT 5

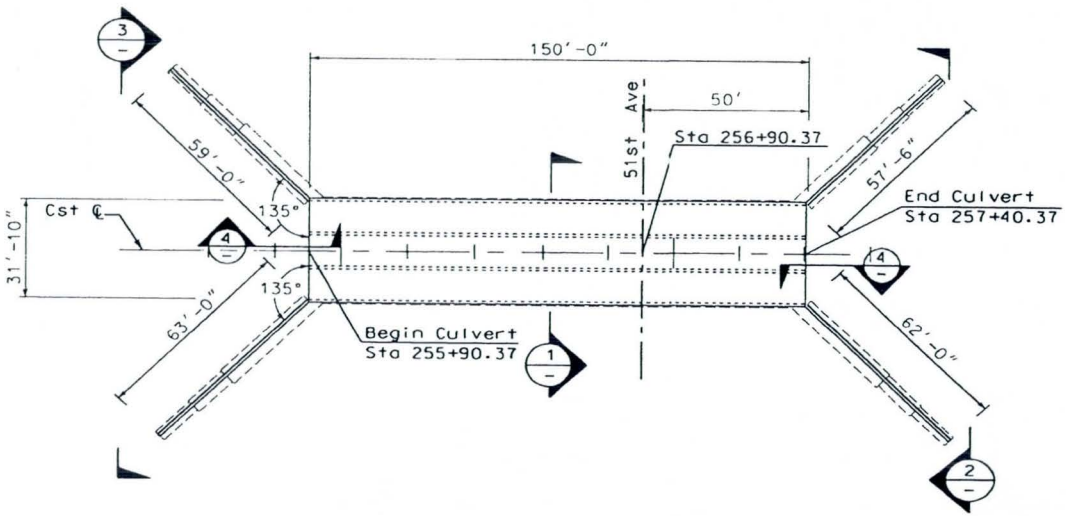

Geometric Data (ft)				
Portion	STA	TW	IE	Height
Inlet	25740.37	1009.92	1001.92	8.00
Outlet	25590.37	1009.26	1001.76	7.50
Length:	150.0		Width:	33.7

HEADWALLS				
Typ Cell Ht + Top Slab =			6.92	
Portion	Height (ft)	Hdwl Ht (ft.)	Area (sq ft)	Volume (cy)
Inlet	8.00	1.08	36.47	1.35
Outlet	7.50	0.58	19.64	0.73
Totals:			**56**	**2**

BOX										
					Box C/S Areas (sq ft)					
Portion	No. Walls per Port.	No. Cells per Port.	Cell Ht. (ft)	Port. Ht (ft)	Cell Area	Portion Area	Total Area	Toe Dwn Area	Vol Toe (cy)	Vol Box (cy)
Eq Cell	2	1	10	12	99.8	142.0	42.2	0.0	0.0	235
Low Flow	1	1	8	10	79.8	109.2	29.4	20.9	0.8	163
Typ	1	1	6	8	59.8	87.3	27.6	42.8	1.6	153
Totals:	**4**	**3**			**239**	**338**	**99**	**64**	**2.36**	**551**

Grand Total Vol (cy) =	**667**

FLOOD CONTROL DISTRICT OF MARICOPA COUNTY

PROJECT LACC Culverts - 90% PAGE 1 OF 3

DETAIL Box 1 & Box 2 COMPUTED CSE DATE 3/02

CHECKED BY DATE

Box 1

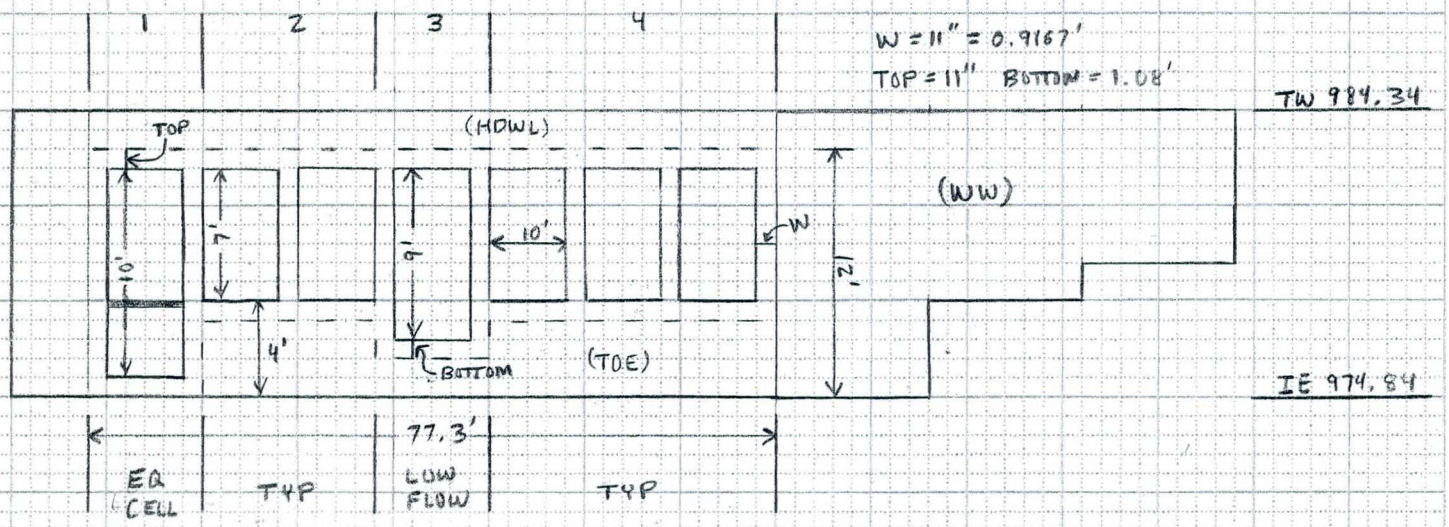

Box 2

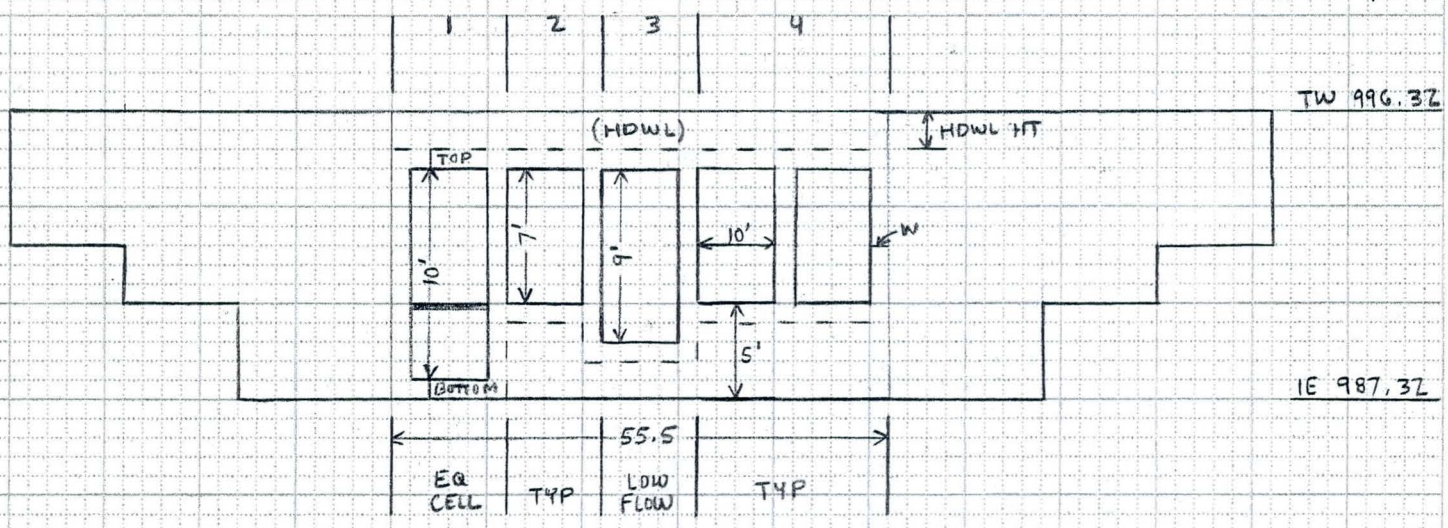

CROSS SECTION VIEWS - INLET PORTION
NTS

$\forall_{OL} = l w h = A_{c/s} \times l$

FLOOD CONTROL DISTRICT OF MARICOPA COUNTY

PROJECT _____ PAGE 2 OF 3

DETAIL Box 3 & Box 4 COMPUTED CSE DATE 3/02

C/S AREA SETUP CHECKED BY _____ DATE _____

Box 3

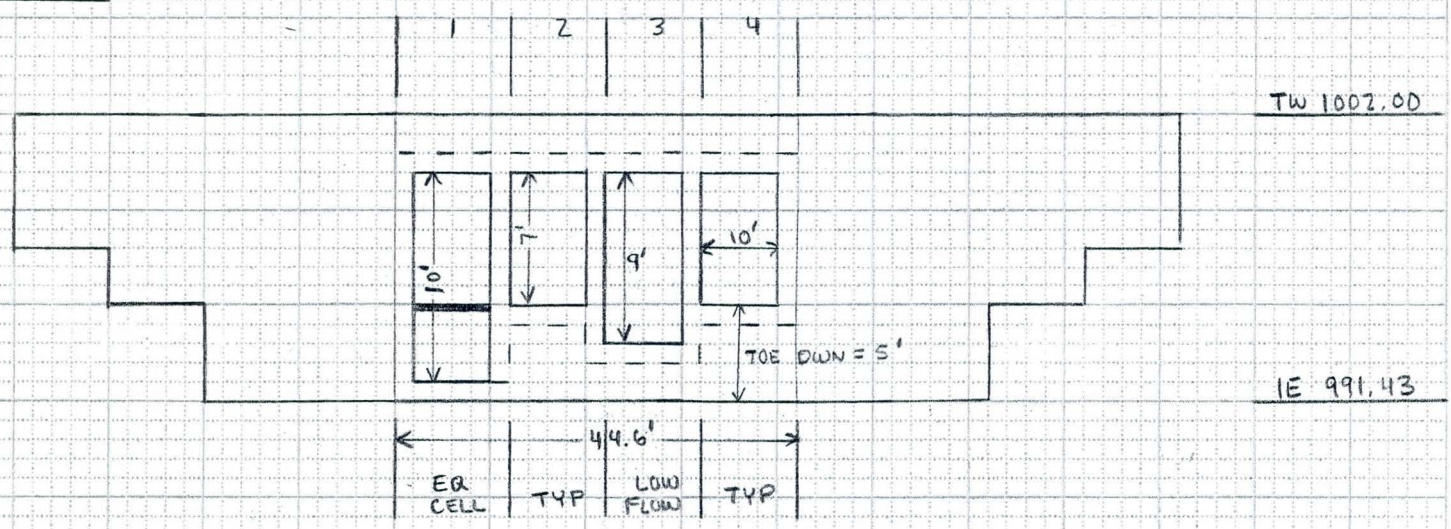

Box 4

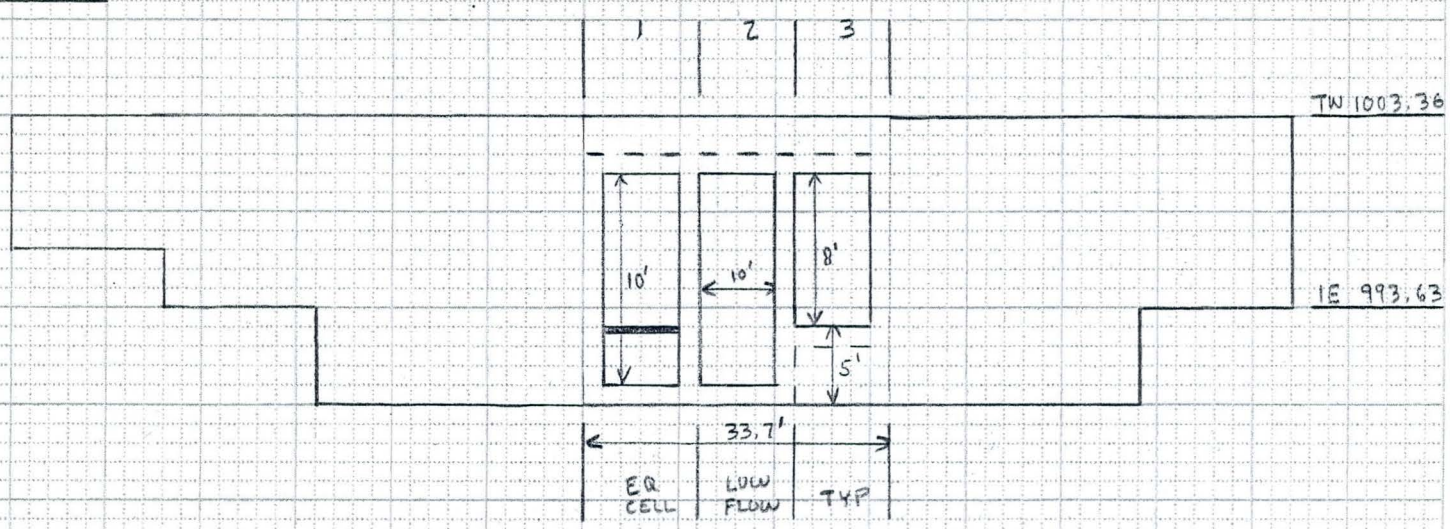

CROSS SECTION VIEWS - INLET PORTION

NTS

FLOOD CONTROL DISTRICT OF MARICOPA COUNTY

PROJECT LACC CULVERTS - 90% PAGE 3 OF 3

DETAIL Box 5 COMPUTED CSE DATE 3/02

CHECKED BY DATE

Box 5

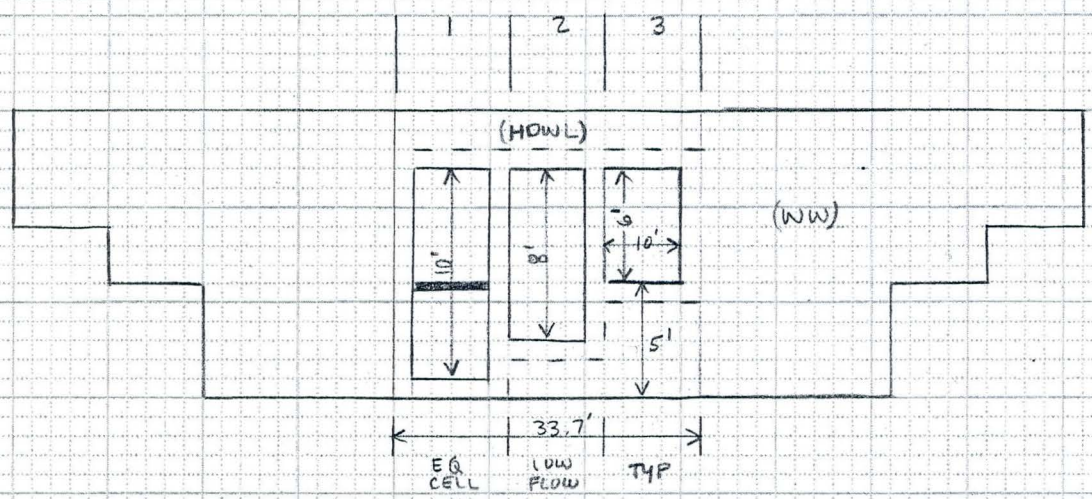

CROSS SECTION VIEW - INLET PORTION

NTS

FLOOD CONTROL DISTRICT OF MARICOPA COUNTY

PROJECT LACC CULVERTS - 90% PAGE 1 OF 1

DETAIL Box 4 COMPUTED CSE DATE 3/02

VOLUME CALCS SETUP CHECKED BY _____ DATE _____

TOP VIEW
NTS

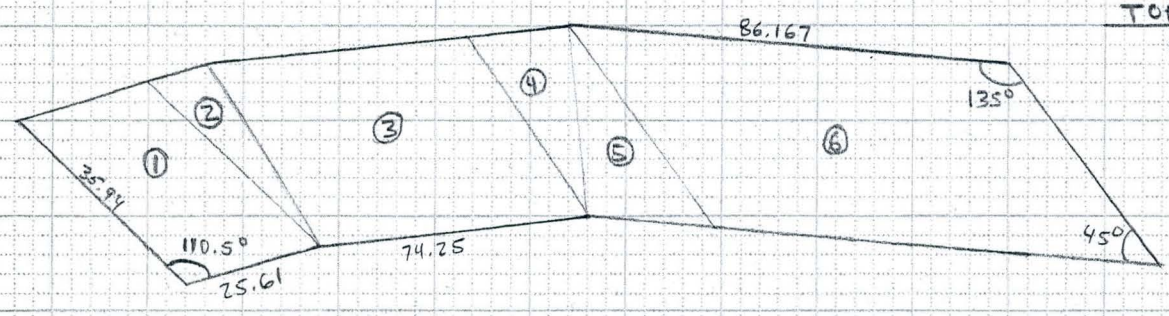

① → $\forall = l w h = A_{c/s}(l) = 103(25.61) = 2638\ cf = 97.70\ cy$

② →

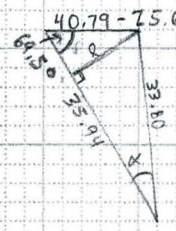

$\sin 69.5° = \frac{l}{15.14}$, $l = 14.18$

$\forall = \frac{1}{2} l A_{c/s} = \frac{1}{2}(14.18)(103) = 776.6\ cf = 28.8\ cy$

③ → $\forall = l A_{c/s} = 74.25(103) = 7648\ cf = 283\ cy$

④ →

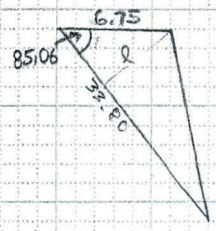

$\sin 85.06° = \frac{l}{6.75}$, $l = 6.72$

⑤ →

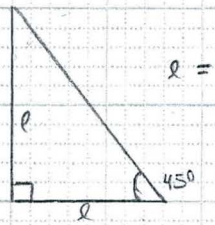

$l = 33.67$

⑥ → $\forall = A_{c/s}\, l = 103(86.17) = 8876\ cf = 329\ cy$

FLOOD CONTROL DISTRICT OF MARICOPA COUNTY

PROJECT LACC PAGE ___ OF ___

DETAIL Retaining walls COMPUTED KVH DATE 4/02

CHECKED BY ___ DATE ___

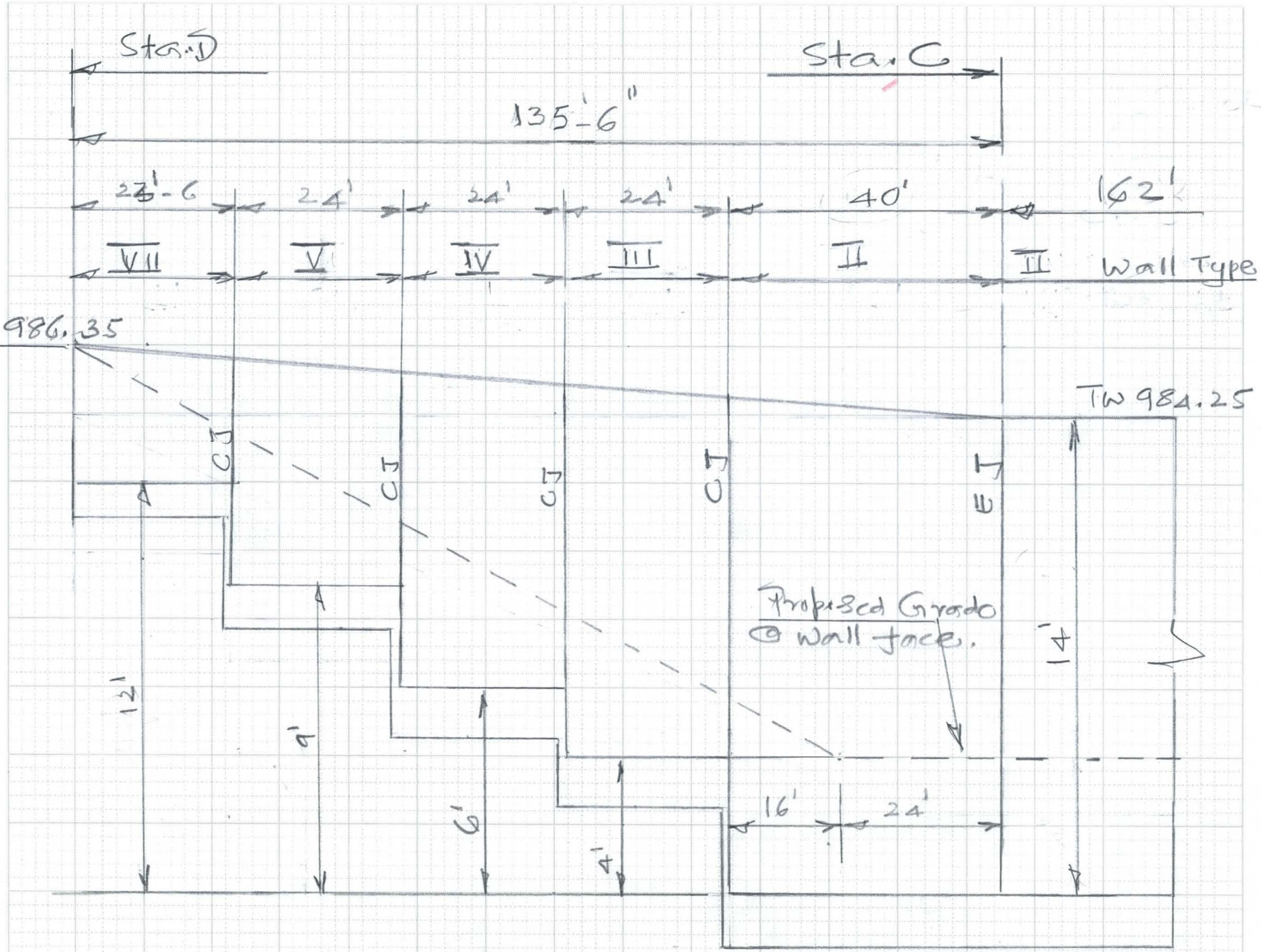

Wall 5

NTS

6910-153 4-90

FLOOD CONTROL DISTRICT OF MARICOPA COUNTY

PROJECT LACC PAGE ___ OF 3/0

DETAIL Retaining Wall COMPUTED KVH DATE

CHECKED BY ___ DATE ___

Stat.	Channel Depth	P. pole #	SRP Scour	Shaft Dia	Shaft Depth	Wall #	
St: 19+10	D=6'	126	15'	8'	~~45'~~	48	#1
29+60	6'	125	15'	8'	~~45'~~	48	#2
40+10	10 ~~9'~~	124	15'	8'	~~45'~~	48	#3
50+60	10'	123	10'	7'	~~31'~~	33	#4
60+91	10'	122	5'	7'	~~27'~~	28	#5
70+60	12'	121	10'	7'	~~31'~~	33	#6
81+90	7'	120	0	7'	~~21'~~	22	#7
92+60	7'	119	0	7'	~~21'~~	22	#8

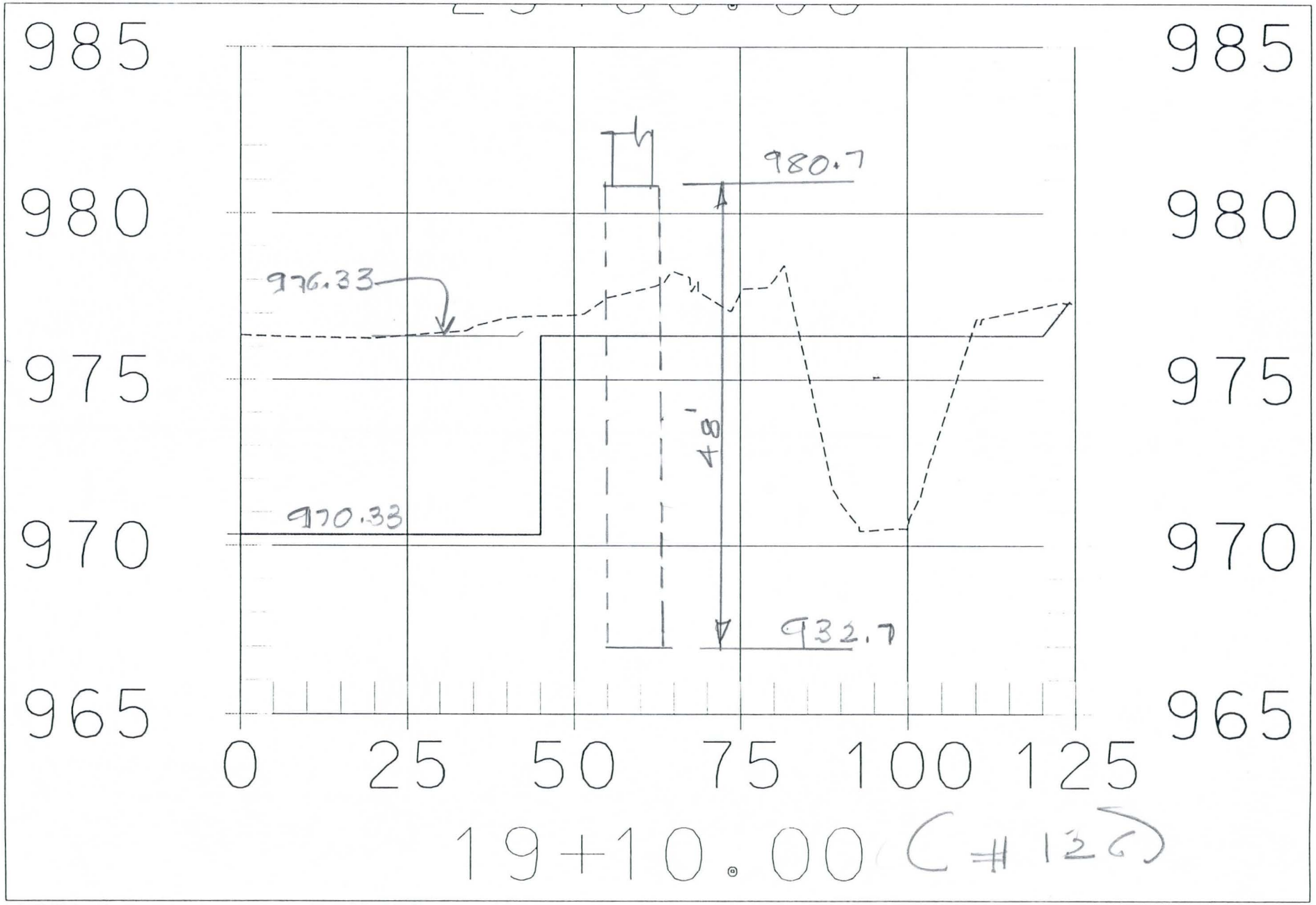

...\PP40\PwrLineProt_details.dgn 21-Mar-01 03:10:58 PM

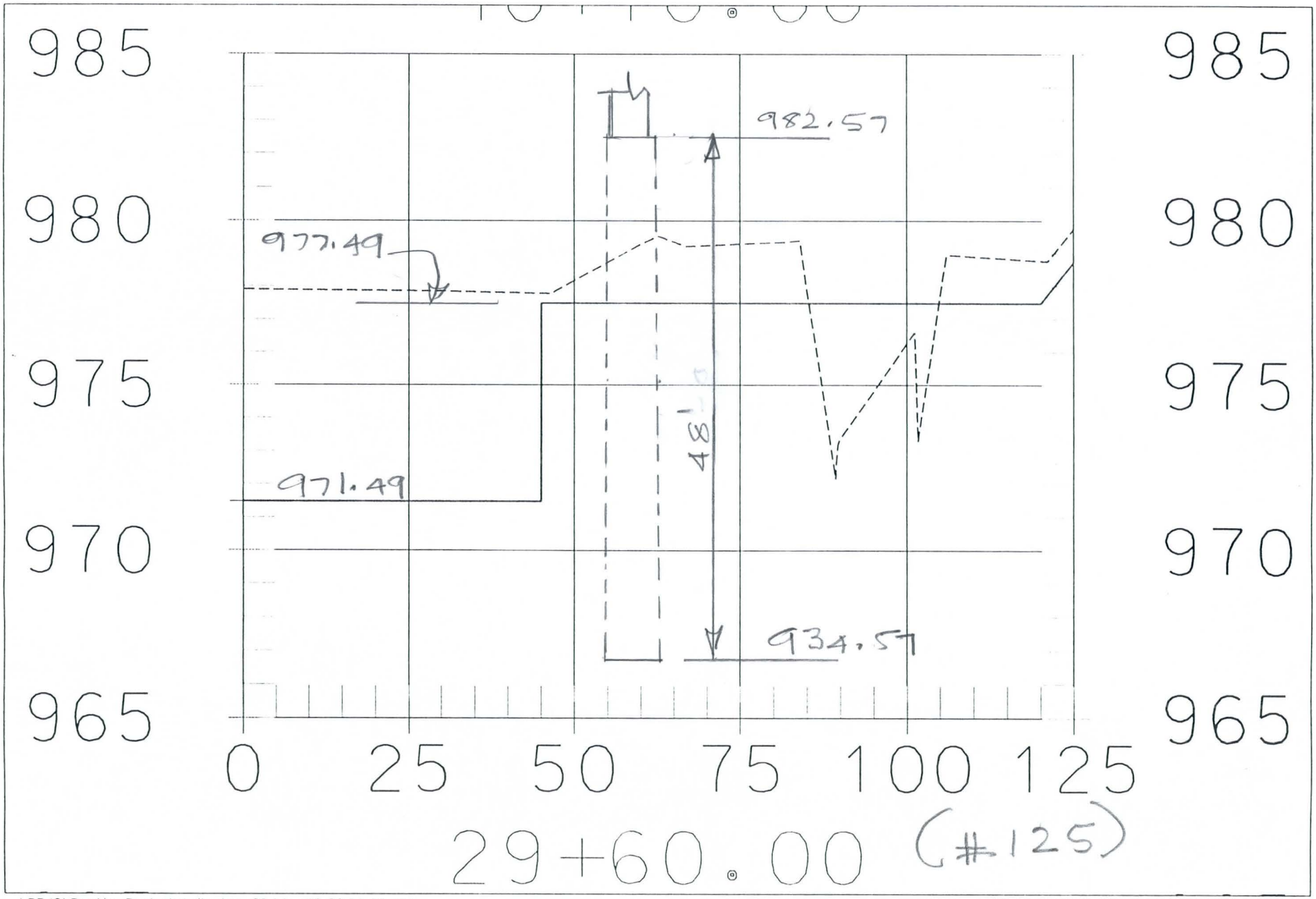

...\PP40\PwrLineProt_details.dgn 21-Mar-01 03:11:15 PM

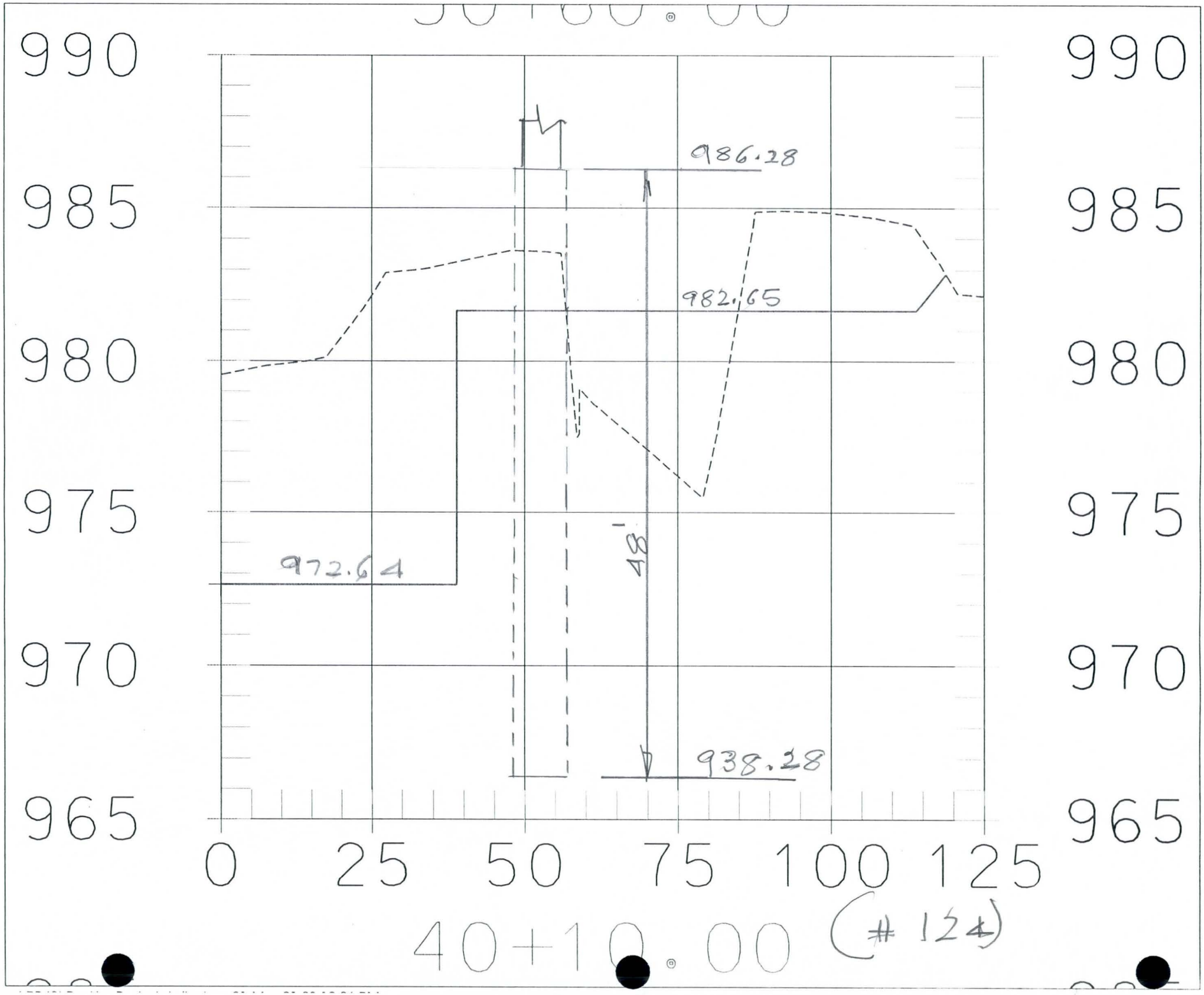
990
985
980
975
970
965
986.28
982.65
972.64
938.28
48'
0
25
50
75
100
125
40+10.00
(#124)

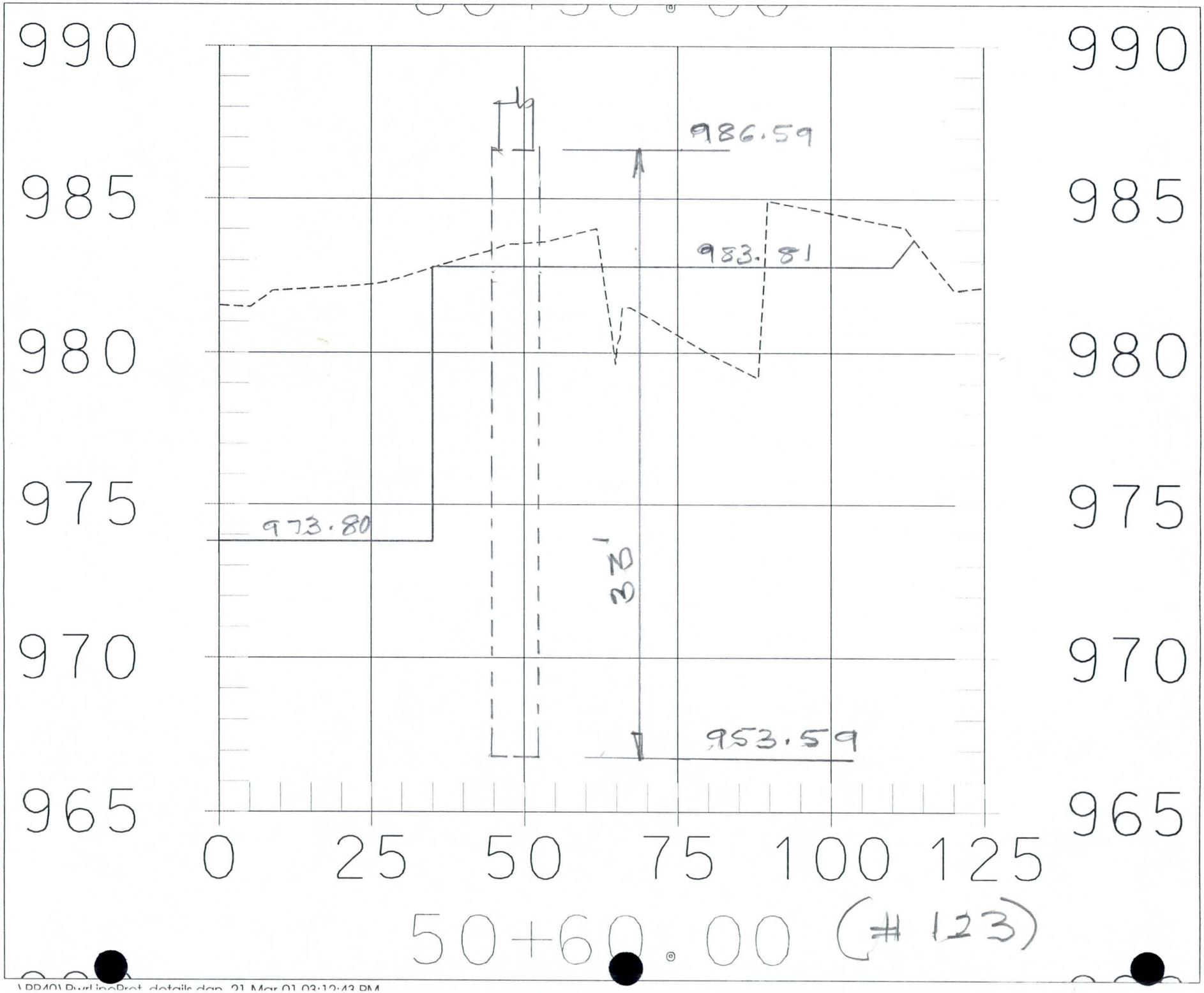

\PP40\PurlineProt_details.dgn 21-Mar-01 03:12:43 PM

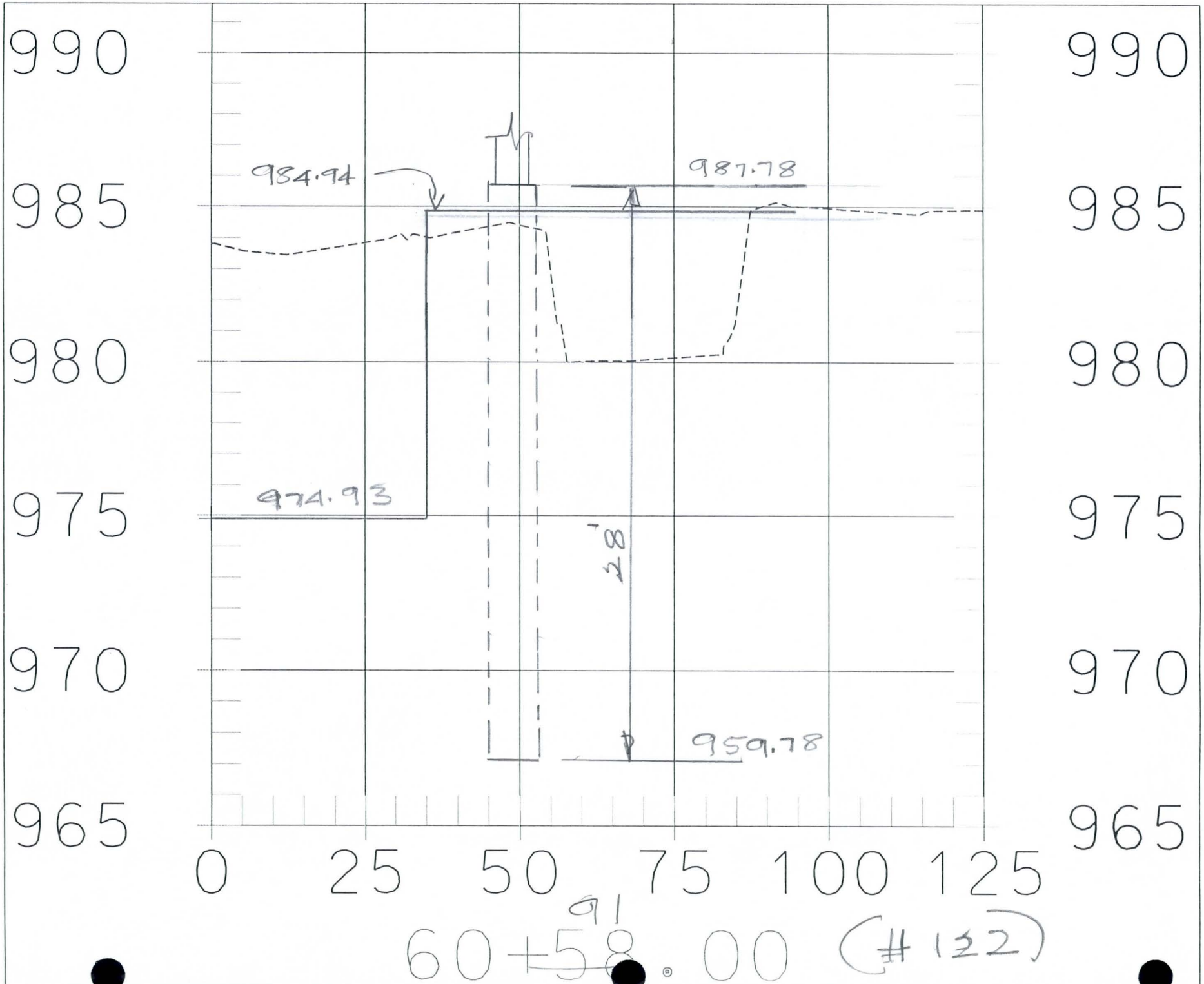
990
985
980
975
970
965
984.94
987.78
974.93
28'
959.78
0
25
50
75
100
125
91
60+58.00 (#122)

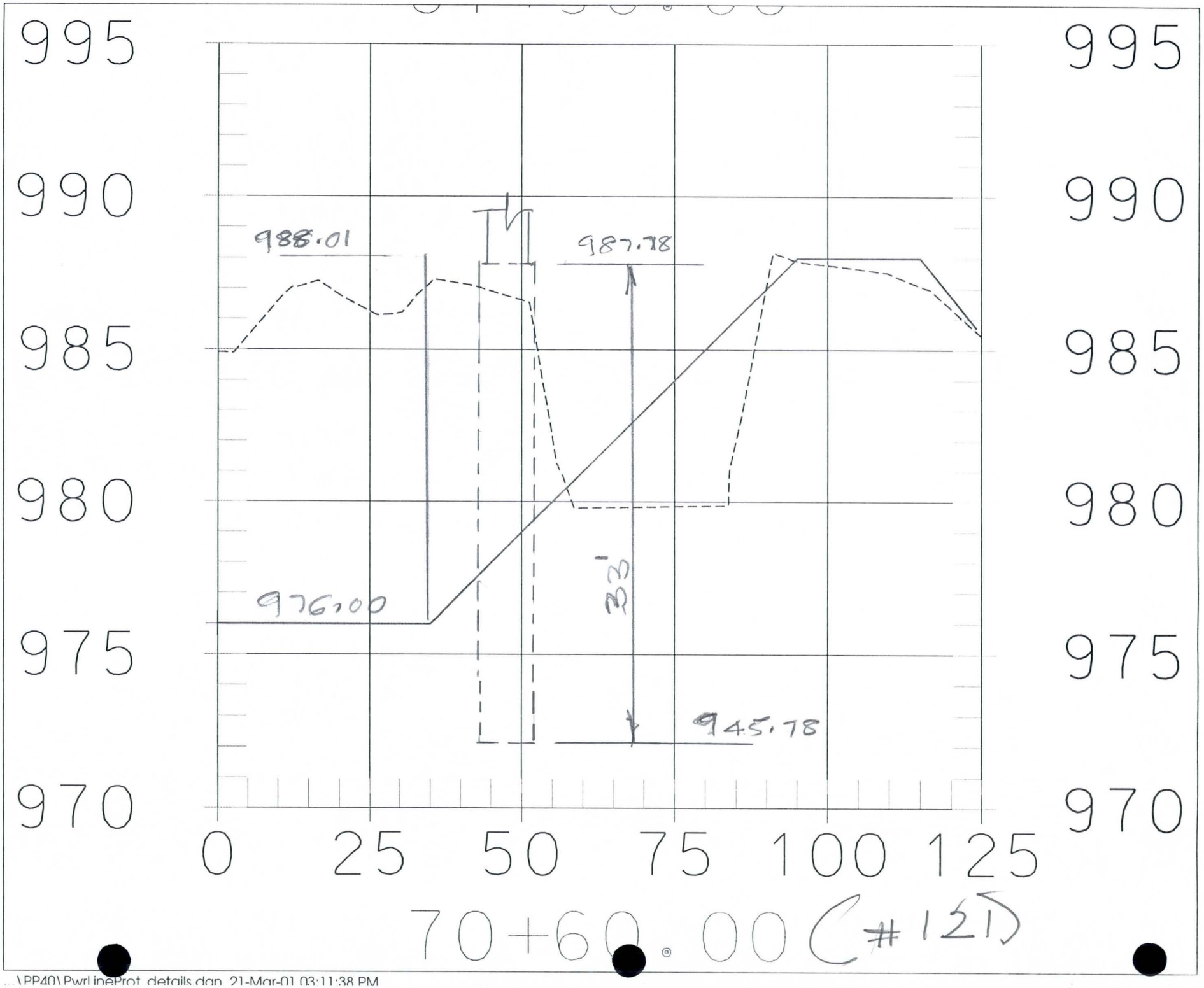
995
990
985
980
975
970
988.01
987.78
976.00
945.78
0
25
50
75
100
125
70+60.00 (#121)

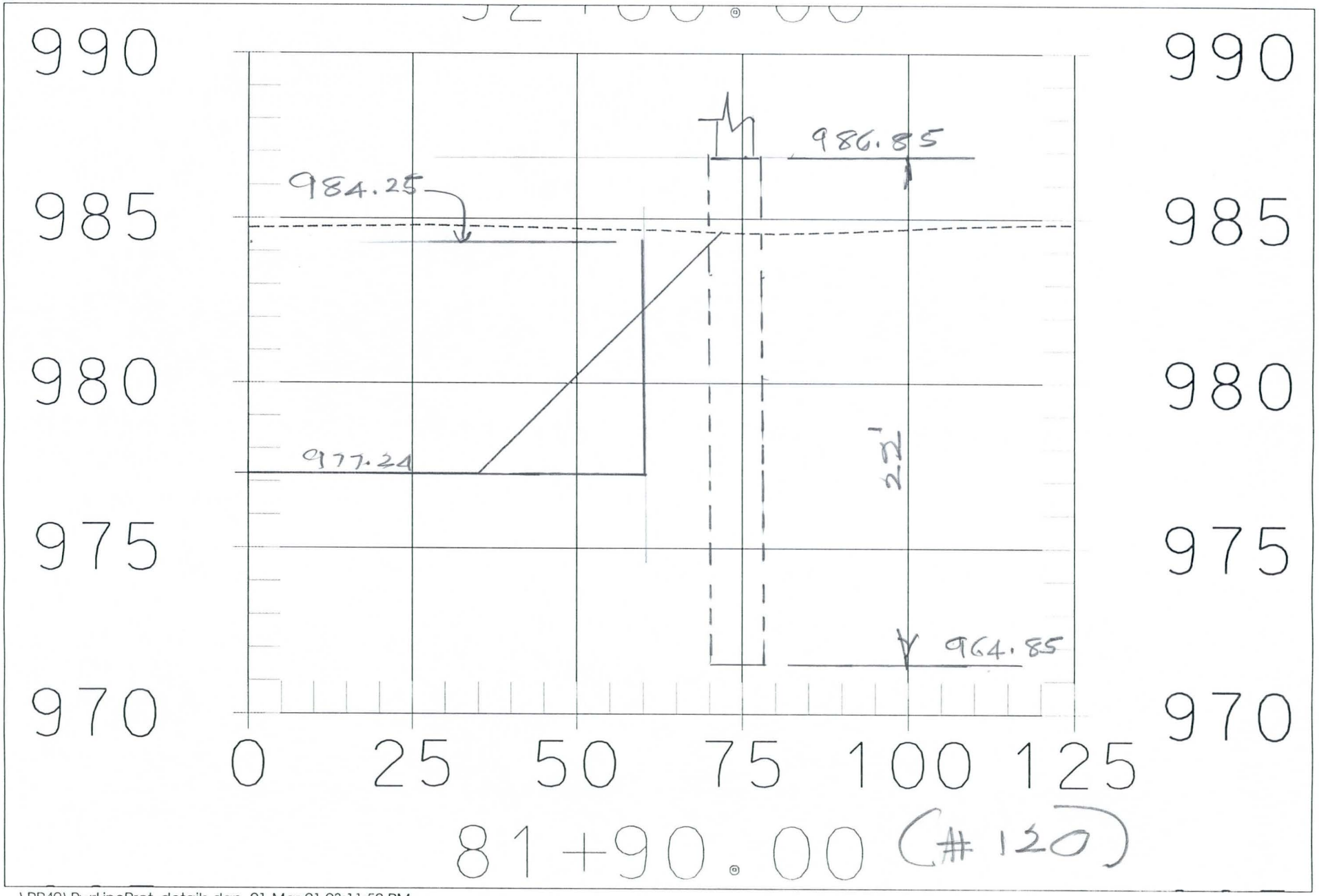

...\PP40\PwrLineProt_details.dgn 21-Mar-01 03:11:52 PM

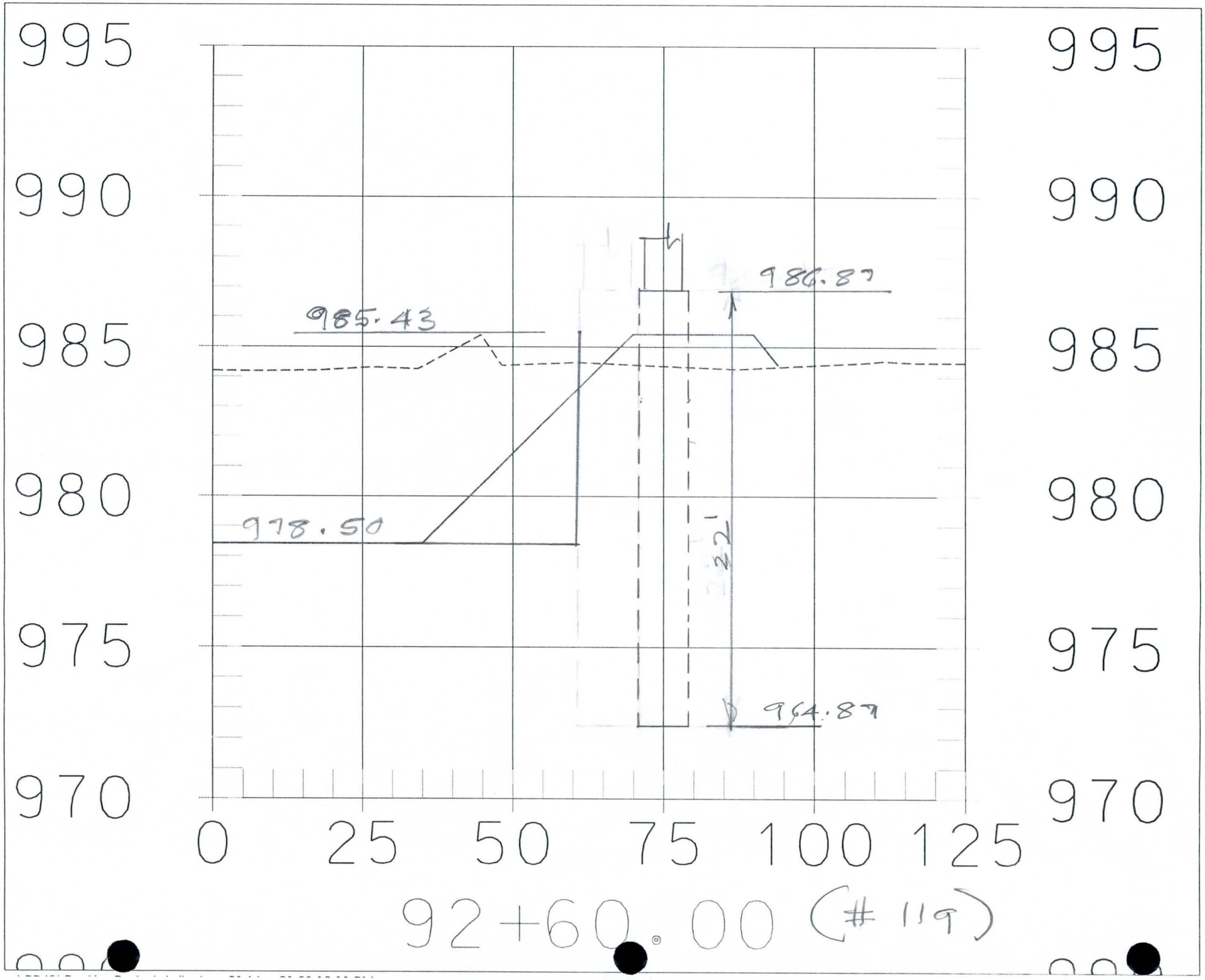
995
990
985
980
975
970
0
25
50
75
100
125
985.43
978.50
986.87
964.87
22'
92+60.00 (#119)

FLOOD CONTROL DISTRICT OF MARICOPA COUNTY

PROJECT GA CC PAGE ____ OF ____

DETAIL Drop Struct. COMPUTED KVH DATE 3/01

CHECKED BY ____ DATE ____

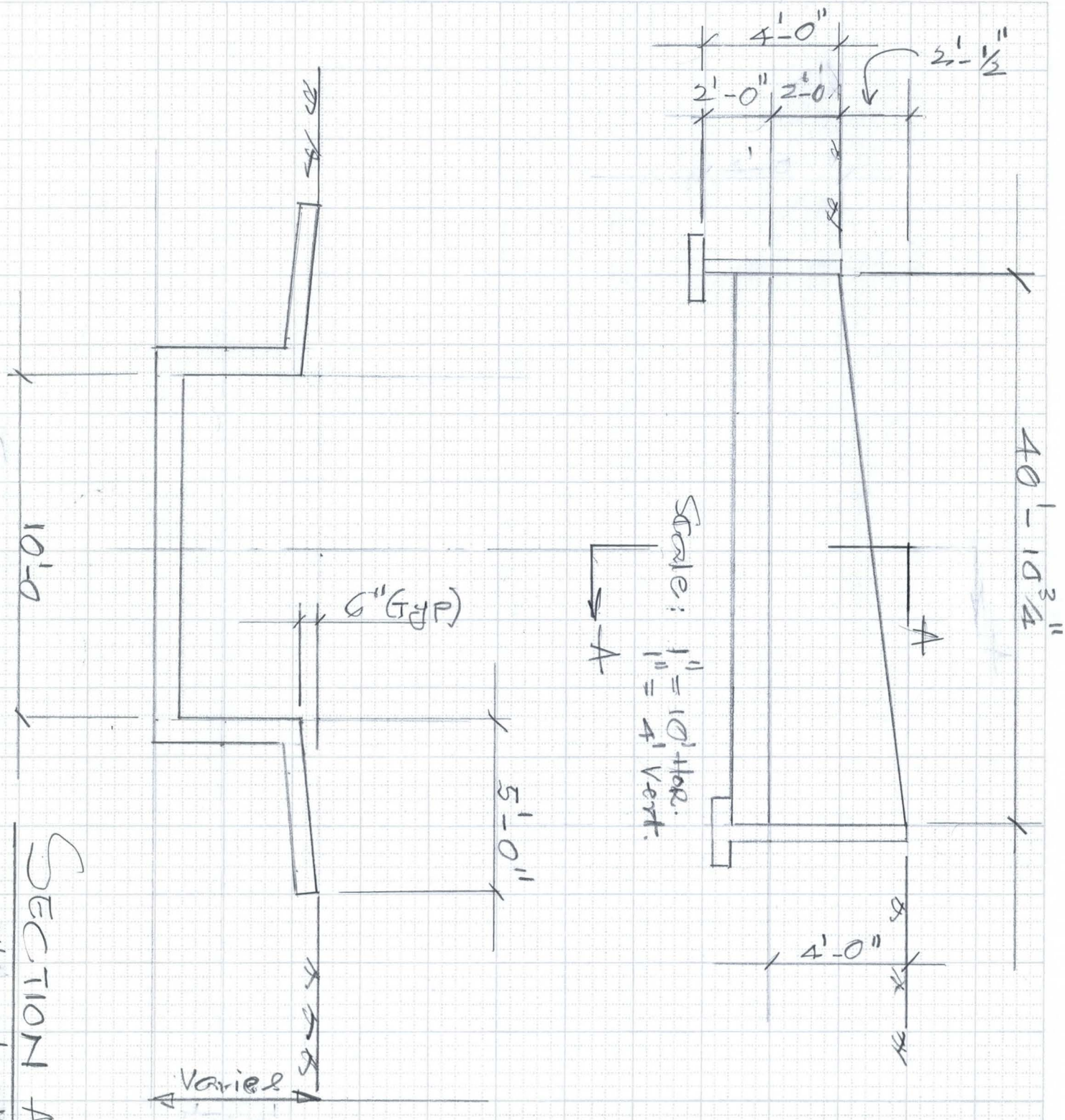

6910-153 4-90

FLOOD CONTROL DISTRICT OF MARICOPA COUNTY

PROJECT: GACC — PAGE ____ OF ____

DETAIL: Drop Struct. — COMPUTED: KVH — DATE: 3/01

CHECKED BY ____ — DATE ____

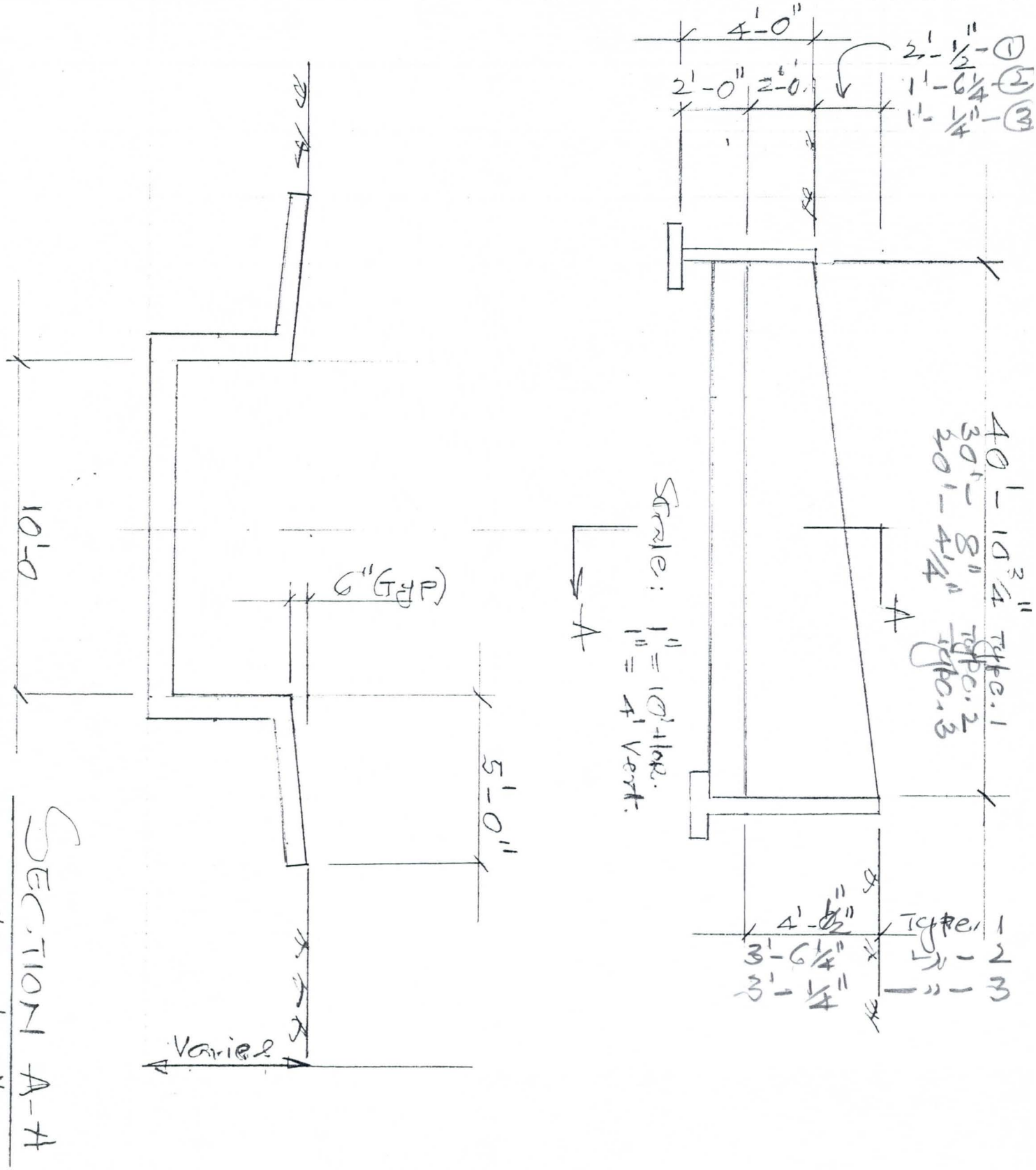

SECTION A-A
1" = 4'-0"

FLOOD CONTROL DISTRICT OF MARICOPA COUNTY

PROJECT LACC PAGE ____ OF ____

DETAIL Drop Structures COMPUTED KVH DATE 3/01

CHECKED BY ____ DATE ____

Drop Structures:

1) Stat. 147+00 (85.94 - 84.41)

L = 30.67' Drop = 1.53' (5%)

2) Sta. 163+00

(88.69 - 87.67)

L = 20.35' Drop = 1.02'

3) Sta. 242+00 1000.4 - 998.36

L = 40.90' Drop = 2.04'

4) Sta. 264+00 (4.82 - 2.78)

L = 40.90 Drop = 2.04'

5) Sta. 302+00 (11.00 - 8.96)

L = 40.90 Drop = 2.04'

6910-153 4-90

Kumar Hanumaiah - FCDX
From: Sam Hanna - FCDX
Sent: Thursday, March 08, 2001 2:26 PM
To: Michael Lopez - FCDX; Kumar Hanumaiah - FCDX
Subject: FW: LACC - 60 Ton Crane - Assembled Loads

FYI

-----Original Message-----

From: wgphilli@srpnet.com [mailto:wgphilli@srpnet.com]
Sent: Thursday, March 08, 2001 1:15 PM
To: Bobbie Ohler - FCDX; Sam Hanna - FCDX
Cc: Tim Phillips - FCDX
Subject: LACC - 60 Ton Crane - Assembled Loads

Here are the live travelling loads for our heaviest assembled crane.

Disassembled, the crane is heavier than HS20 and needs a permit to travel. Our heaviest disassembled crane is 45,000# rear and 33,000# front, with slightly different axle spacings than given here.

As for the outrigger loading, the outriggers are 22" X 22" square. Worst case would be a maximum of 110 Tons on one outrigger. Say 450 psi on the 22" X 22" outrigger. These loads are normally spread further when we put a 5' diameter wood pad under the outrigger, but we can't count on that happening. You might think about pouring a concrete pad (or something like that)adjacent to the wall that will spread these loads a bunch. Just a thought.

Hope this is what you needed... Call if questions.

Bill Phillips

SRP - Transmission Line Design
P.O. Box 52025 Mail Sta. XCT315
Phoenix, AZ 85072-2025
(602) 236-8092 FAX (602) 914-8726

*** Forwarding note from BJBAZARD—PABVMSYS 05/13/96 17:45 ***

To: WGPHILLI—PABVMSYS
FROM: Bryan Bazard, Transportation Services, TSC402, ext. 8353
SUBJECT: 60 Ton Crane - Assembled Loads

Bill, I stand corrected. The Lorain Crane #7245 is heavier. It rides on four axles. All tires are 14.00-20 size highway tread. The front axles have two tires per axle (one on each side), the rear axles have four tires per axle. The axle spacing from the front axle (axle 1) is: axle 1 to axle 2 is 4'4"; axle 2 to axle 3 is 14'1/2"; axle 3 to axle 4 is 4'8". There is 2 ways to travel with the boom installed, either with the boom facing forwards or rearwards, which changes the loadings. With the boom facing forwards the front 2 axles share a load of 17,000 lbs. or 8,500 lbs each and the rear axles share 80,000 lbs or 40,000 lbs each. With the boom facing rearwards, the counterweight is between the axles. With the boom facing rearwards, the front axles share 36,000 lbs. or 18,000 lbs each and the rear axles share 61,000 lbs. or 30,500 lbs each. These weights are with the crane in its' standard condition, 40 feet of boom, total weight of 97,000 lbs. If you need more info. give me a call.

*** Forwarding note from WGPHILLI—PABVMSYS 05/13/96 11:17 ***

To: BJBAZARD—PABVMSYS

Kumar Hanumaiah - FCDX

From: Sam Hanna - FCDX
Sent: Thursday, March 08, 2001 2:26 PM
To: Michael Lopez - FCDX; Kumar Hanumaiah - FCDX
Subject: FW: LACC - 60 Ton Crane - Assembled Loads

FYI

-----Original Message-----
From: wgphilli@srpnet.com [mailto:wgphilli@srpnet.com]
Sent: Thursday, March 08, 2001 1:15 PM
To: Bobbie Ohler - FCDX; Sam Hanna - FCDX
Cc: Tim Phillips - FCDX
Subject: LACC - 60 Ton Crane - Assembled Loads

Here are the live travelling loads for our heaviest assembled crane. Disassembled, the crane is heavier than HS20 and needs a permit to travel. Our heaviest disassembled crane is 45,000# rear and 33,000# front, with slightly different axle spacings than given here.

As for the outrigger loading, the outriggers are 22" X 22" square. Worst case would be a maximum of 110 Tons on one outrigger. Say 450 psi on the 22" X 22" outrigger. These loads are normally spread further when we put a 5' diameter wood pad under the outrigger, but we can't count on that happening. You might think about pouring a concrete pad (or something like that)adjacent to the wall that will spread these loads a bunch. Just a hought.
Hope this is what you needed... Call if questions.

Bill Phillips
SRP - Transmission Line Design
P.O. Box 52025 Mail Sta. XCT315
Phoenix, AZ 85072-2025
(602) 236-8092 FAX (602) 914-8726

*** Forwarding note from BJBAZARD--PABVMSYS 05/13/96 17:45 ***
To: WGPHILLI--PABVMSYS

FROM: Bryan Bazard, Transportation Services, TSC402, ext. 8353
SUBJECT: 60 Ton Crane - Assembled Loads
Bill, I stand corrected. The Lorain Crane #7245 is heavier. It rides on four axles. All tires are 14.00-20 size highway tread. The front axles have two tires per axle (one on each side), the rear axles have four tires per axle. The axle spacing from the front axle (axle 1) is: axle 1 to axle 2 is 4'4"; axle 2 to axle 3 is 14'1/2"; axle 3 to axle 4 is 4'8". There is 2 ways to travel with the boom installed, either with the boom facing forwards or rearwards, which changes the loadings. With the boom facing forwards the front 2 axles share a load of 17,000 lbs. or 8,500 lbs each and the rear axles share 80,000 lbs or 40,000 lbs each. With the boom facing rearwards, the counterweight is between the axles. With the boom facing rearwards, the front axles share 36,000 lbs. or 18,000 lbs each and the rear axles share 61,000 lbs. or 30,500 lbs each. These weights are with the crane in its' standard condition, 40 feet of boom, total weight of 97,000 lbs. If you need more info. give me a call.

*** Forwarding note from WGPHILLI--PABVMSYS 05/13/96 11:17 ***

Kumar Hanumaiah - FCDX

From: Sam Hanna - FCDX
Sent: Tuesday, March 13, 2001 9:33 AM
To: Michael Lopez - FCDX; Bobbie Ohler - FCDX
Cc: Jeff Riddle - FCDX; Mazen Muradvich - FCDX; Tim Phillips - FCDX; Kumar Hanumaiah - FCDX; Amir Motamedi - FCDX
Subject: SRP power poles

Mike & Bobbie:

I had a meeting yesterday (3:00 PM) with Bill Phillips (SRP) for more clarification on the crane loads issue. I got more insight for why Bill indicates the possibility of designing for 110 ton load on one outrigger.

I asked Bill if we can get a copy of the geotechnical report that was prepared for SRP for the design of their poles foundation. We can use the same information for our design till we get our own report done.

I gave Bill a copy of the cross sections of the retaining walls at the locations of the poles to see if SRP agrees or has any concern. Bill will discuss this with their structural designer (Peter Kandars).

In regards to the pole to the west of the box culvert and to the north of the wing wall, as shown in drawing C21, Bill will see if they have any concern having it at that location. He will check also if they need to relocate it.

There is an issue for the fact that soil will be excavated around the poles for their proximity to the retaining walls. If SRP agrees with the way we designed the retaining walls, the construction of the retaining walls may neec to be done in a very short time. If SRP did not agree with the way we designed the footings close to the poles, we will change the design of the walls just around the poles to minimize the excavation around the poles. In anyway, we may need to do sheet piles around the poles to protect them.

Bill promised me to get back with answers to all these questions next week. Should you have any question, please let me know.

Sam Hanna

Kumar Hanumaiah - FCDX

From: Bobbie Ohler - FCDX
Sent: Tuesday, March 13, 2001 9:38 AM
To: Sam Hanna - FCDX; Michael Lopez - FCDX
Cc: Jeff Riddle - FCDX; Mazen Muradvich - FCDX; Tim Phillips - FCDX; Kumar Hanumaiah - FCDX; Amir Motamedi - FCDX
Subject: RE: SRP power poles

Sam - on some of the poles that now have less scour protection (5 ft and 10 ft), is it an option to tie back the powerpoles, similar to what is being done to the powerpoles that have no scour protection, instead of changing our retaining wall design? SRP told us that would cost about $15000 per pole, so may be less expensive than changing the retaining wall design (if it is an option). Can you check with them (if they say we need to redesign).

-----Original Message-----
From: Sam Hanna - FCDX
Sent: Tuesday, March 13, 2001 9:33 AM
To: Michael Lopez - FCDX; Bobbie Ohler - FCDX
Cc: Jeff Riddle - FCDX; Mazen Muradvich - FCDX; Tim Phillips - FCDX; Kumar Hanumaiah - FCDX; Amir Motamedi - FCDX
Subject: SRP power poles

Mike & Bobbie:

I had a meeting yesterday (3:00 PM) with Bill Phillips (SRP) for more clarification on the crane loads issue. I got more insight for why Bill indicates the possibility of designing for 110 ton load on one outrigger.

I asked Bill if we can get a copy of the geotechnical report that was prepared for SRP for the design of their poles foundation. We can use the same information for our design till we get our own report done.

I gave Bill a copy of the cross sections of the retaining walls at the locations of the poles to see if SRP agrees or has any concern. Bill will discuss this with their structural designer (Peter Kandars).

In regards to the pole to the west of the box culvert and to the north of the wing wall, as shown in drawing C21, Bill will see if they have any concern having it at that location. He will check also if they need to relocate it.

There is an issue for the fact that soil will be excavated around the poles for their proximity to the retaining walls. If SRP agrees with the way we designed the retaining walls, the construction of the retaining walls may need to be done in a very short time. If SRP did not agree with the way we designed the footings close to the poles, we will change the design of the walls just around the poles to minimize the excavation around the poles. In anyway, we may need to do sheet piles around the poles to protect them.

Bill promised me to get back with answers to all these questions next week. Should you have any question, please let me know.

Sam Hanna

To: BJBAZARD--PABVMSYS

FROM: Bill Phillips, Power System Design - TLD
Ext. 8092 - XCT315
SUBJECT: 60 Ton Crane - Assembled Loads
Thanks for the efforts on this.
Do you think you can have the loading info by Wed. or Thursday??

*** Forwarding note from CJKISSEL--PABVMSYS 05/13/96 10:22 ***
To: WGPHILLI--PABVMSYS

FROM: Joe Kissel,Water Engineering,Phone:X-4619(Page No.6668)
Mail Station SSW303
Work Hours: 7:00 AM TO 4:30 PM (Payday Fridays off)
SUBJECT: 60 Ton Crane - Assembled Loads
I HAVE MEETING WITH ADOT FRIDAY....PLEASE HAVE DATA BY THURSDAY...
THANKS

*** Reply to note of 05/10/96 17:30
To: CJKISSEL--PABVMSYS
cc: REKONDZI--PABVMSYS RELARCHI--PABVMSYS
GMBASTIA--PABVMSYS

FROM: Bill Phillips, Power System Design - TLD
Ext. 8092 - XCT315
SUBJECT: 60 Ton Crane - Assembled Loads

Sorry bout this: Brian Bazard called me about noon today to say that they only
have the street legal weights, but he is working with the manufacturer to
get the assembled loads. Should have them early next week.
Is this OK for your design schedule ??
Again, my apologies. I meant to get right on this after our ADOT mtg....

*** Forwarding note from WGPHILLI--PABVMSYS 05/09/96 09:14 ***
To: BJBAZARD--PABVMSYS
cc: REKONDZI--PABVMSYS CJKISSEL--PABVMSYS

FROM: Bill Phillips, Power System Design - TLD
Ext. 8092 - XCT315
SUBJECT: 60 Ton Crane - Assembled Loads

As we just discussed: the water group is designing a flume/bridge for the
Western Canal crossing over the future Price Freeway. We would like the
bridge designed such that we can drive over it with the heaviest equipment
which Power or Water C&M uses, WITHOUT disassembling the equipment. I think
the 60 Ton Lorrain Crane is the heaviest, WITH counterweight and max boom.
Do you know of anything heavier?

Could you get me the fully assembled loadings? Total weight and weight per
axle. Also vehicle specs such as # of axles, axle spacing, # of tires
per axle and tire sizes so the WUA Engineer can design the bridge. If he
needs any other info, I'll have him get with you later.

Oh, and by the way, could I get this info by tommorrow noon?? If this is
not possible (or reasonable), please just let me know by noon tommorrow.
I sure do appreciate your help on this.

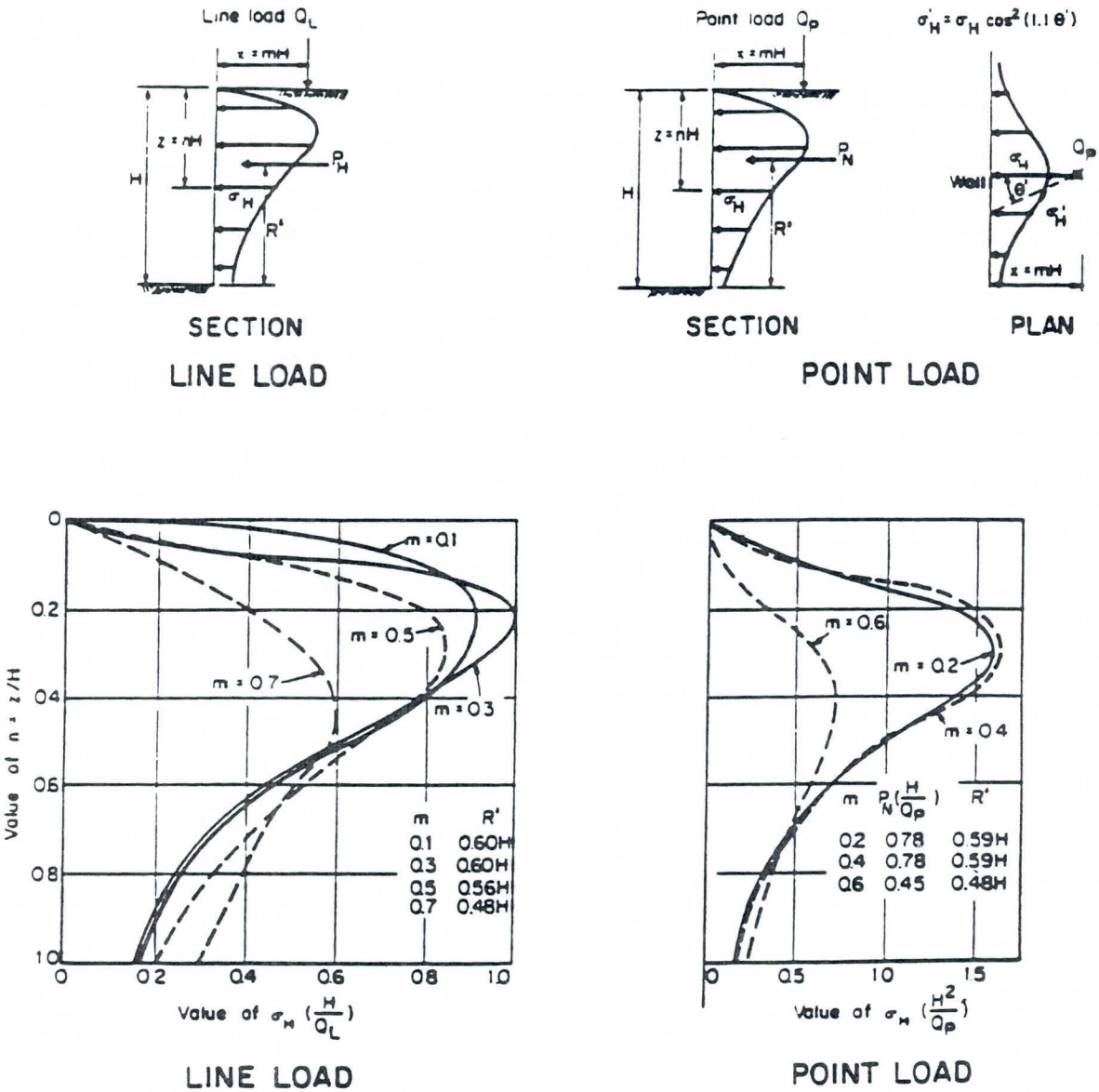

FIGURE 5.5.2C Procedure to Determine Lateral Pressure Due to Point and Line Loads Modified after Terzaghi (1954)

table, the total hydrostatic water pressure shall be determined using the following relationship:

$$P_w = \gamma_w H_w^2/2 \qquad (5.5.3\text{-}1)$$

If the ground water levels differ on opposite sides of a wall, the effects of seepage forces on wall stability or piping potential shall be considered. Seepage forces may be determined by flow net procedures or various analytical methods. Hydrostatic pressures and seepage shall be controlled by providing free-draining granular backfill and weep holes through the wall. Weep pipes shall be placed through the wall at the lowest elevation that will permit gravity drainage. Portions of walls below the level of weep pipes shall be designed for full hydrostatic pressure unless a deeper drainage pipe is provided behind and at the base of the wall.

5.5.4 Seismic Pressure

Refer to Section 6 of Division I-A—Seismic Design for guidance regarding the lateral earth pressure on grav-

NOTES (CONT'D):

7. THE FOLLOWING ULTIMATE LOADS APPLIED AT THE TOP OF THE PIER WERE USED IN THE FOUNDATION DESIGN:

	UPLIFT LEG	COMPRESSION LEG
TRANSVERSE SHEAR:	40.2 K	41.3 K
LONGITUDINAL SHEAR:	37.9 K	41.2 K
VERTICAL LOAD:	191.9 K	248.1 K

THE ABOVE LOADS INCLUDE OVERLOAD FACTORS PER NESC 1977 EDITION.

W.O. NO.	REV	DATE	BY	CHK'D	SUPV ENGR
TWR 279 REMOVAL WAS 650 ft BELOW GD. WAS 34'-0 YP 319	A	6/7/81			
ADDED #8 BAR HOOKS IN C.I.P. TOP ONLY YP 351	B	7-8-81			

REVISIONS

SALT RIVER PROJECT
WATER & POWER

PALO VERDE – KYRENE
500 KV T/L POLE FDN.

TYPES 3AE39FP & 3AE36FP

DESIGNED C. PAUL
DRAWN D. HAAS
DATE AUG. '80
SCALE NONE

W.O. NO. YP 281 | F | C-822-10.2

FOUNDATION TYPE "3AE39FP" @ #127
" " 3AE36FP @ #279

NOTES:

1. ALL REINFORCING STEEL SHALL BE ASTM A615, GR 60 (U.N.O.)
2. ALL CONCRETE SHALL BE 3000 PSI @ 28 DAYS.
3. #5 TIES SHALL BE CIRCULAR W/ 15" LAP.
4. FOR LOADING TREE SEE APS DWG. #E 48766.
5. FOR SOIL REPORT SEE FUGRO REPORT #79-190.
6. FOUNDATION #127 HAS BEEN DESIGNED FOR A MAX. SCOUR OF 15'-0 AND 12'-0 FOR #279 W/ A WATER VELOCITY OF 15'/SEC.

T-127

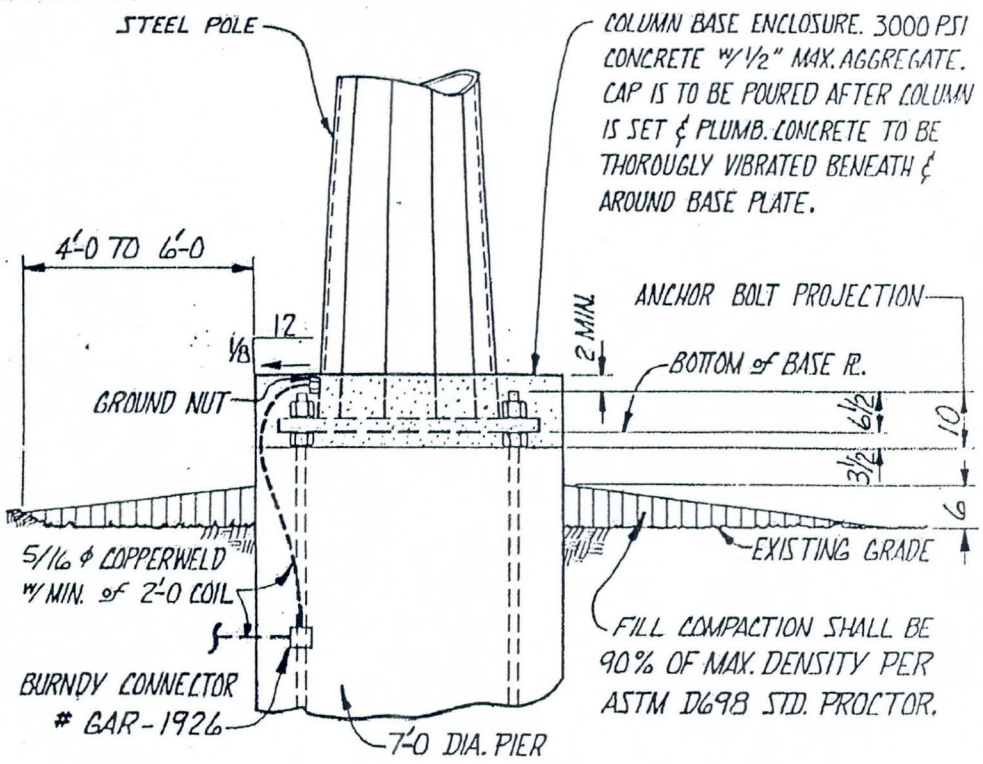

COLUMN CAP GROUNDING & POLE SETTING DETAILS

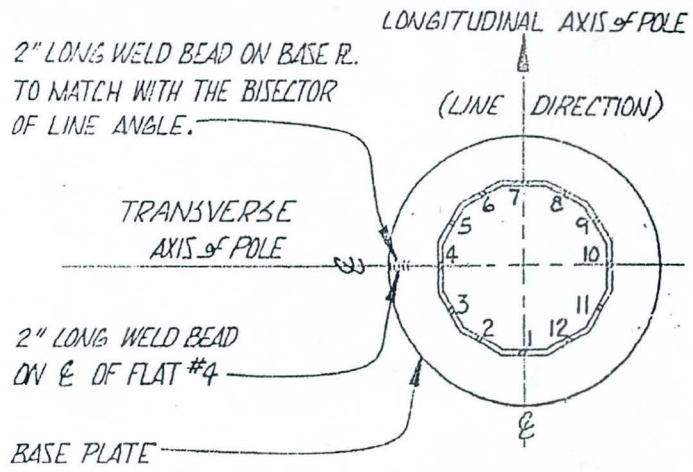

POLE ORIENTATION PLAN

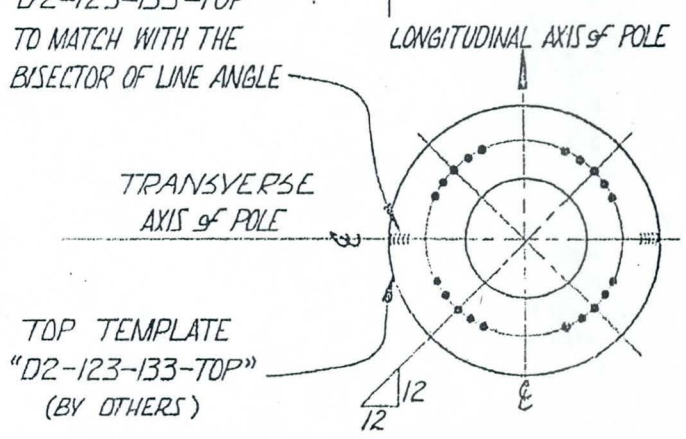

ANCHOR BOLT ORIENTATION PLAN

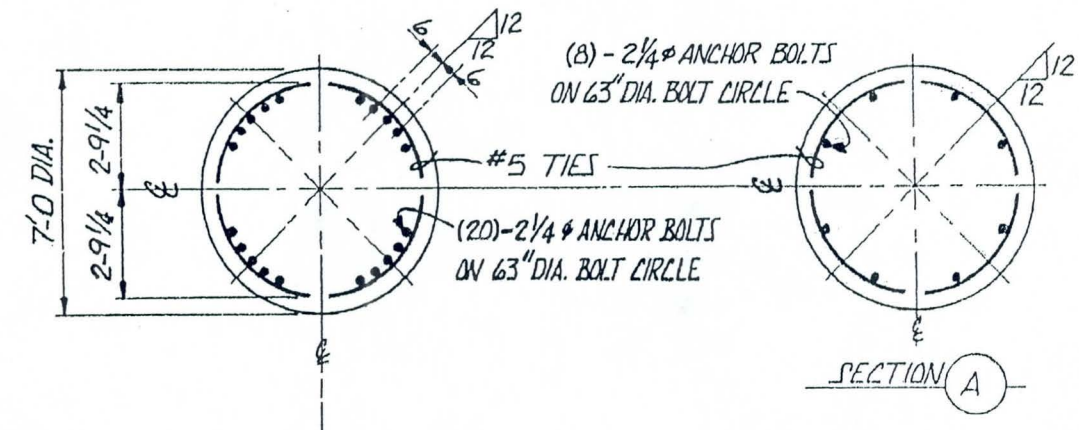

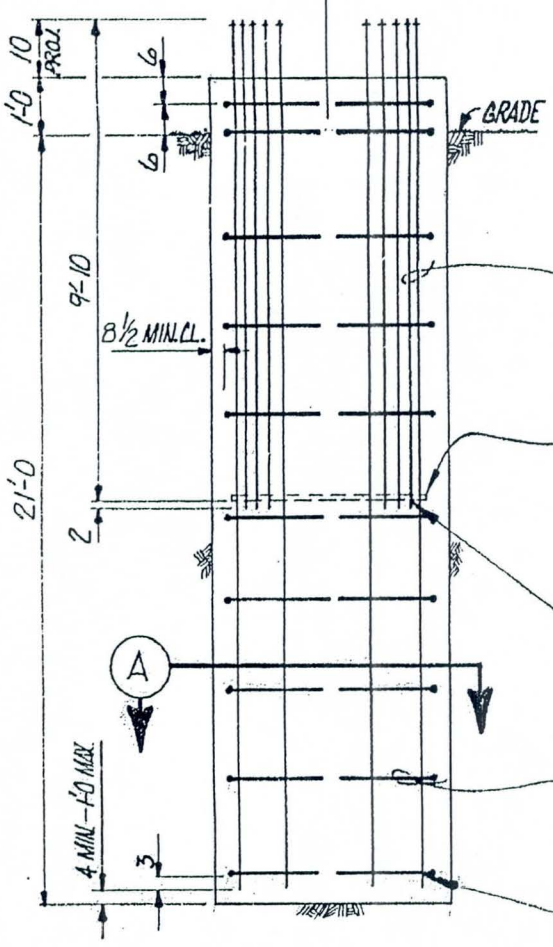

CONCRETE : 3000 PSI
ANCHOR BOLTS : ASTM A615 Fy = 75.0 KSI
#5 TIES SHALL BE CIRCULAR W/ 15" LAP
(ASTM A615 GRADE 60)

(12)- 2 1/4 ϕ x 10'-0 LONG
(8)- 2 1/4 ϕ x 22'-6 LONG
A. BOLTS TAG "A. BOLT No. D2-123-133-2" (BY OTHERS)

BOTTOM TEMPLATE D2-123-133-B (BY OTHERS) TO REMAIN IN PIER

1/8 WELD SHORT ANCHOR BOLTS ONLY TO BOTTOM TEMPLATE

#5 TIES ON 30" C.C. (BY CONTRACTOR)

1/8 TACK WELD BOTTOM TIE ONLY

FOUNDATION TYPE "D2-123-133-2"

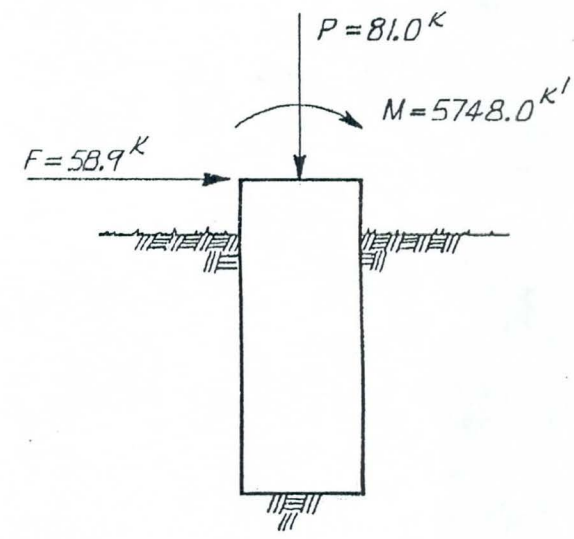

1. LOADS SHOWN ARE ULTIMATE LOADS AND INCLUDE OVER LOAD FACTORS PER NESC (1977) EDITION WITH WIND LOAD OF 20 P.S.F.

2. FOR SOIL DATA SEE FUGRO'S SOILS REPORT # 79-190

REVISIONS						
W.O. NO.	REV	DATE	BY	CHK'D	SUPV. ENGR.	
REVISED						

SALT RIVER PROJECT
WATER & POWER — PHOENIX, ARIZ.
PALO VERDE-KYRENE
500 KV T/L POLE FDN.

D2-123-133-2

P119, 120

C-822-3,2

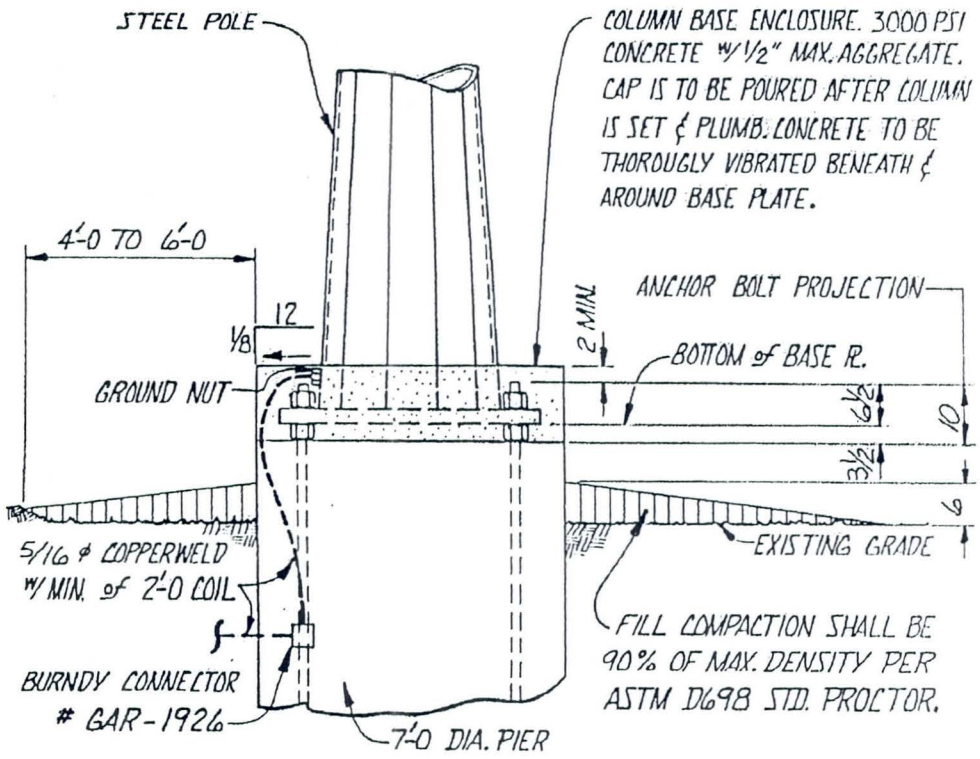

COLUMN CAP GROUNDING & POLE SETTING DETAILS

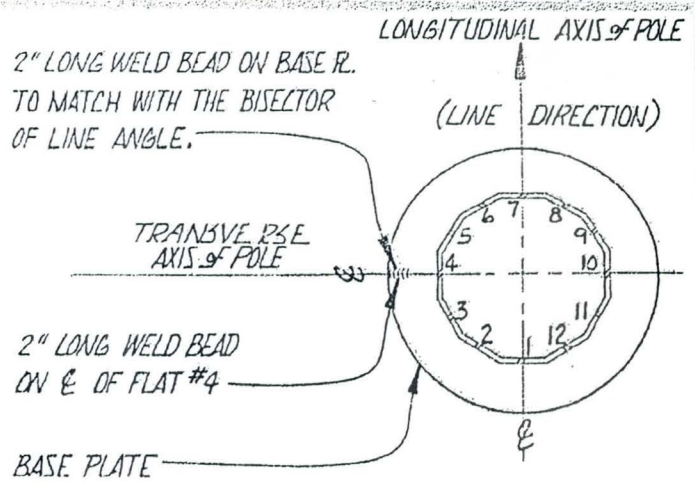

POLE ORIENTATION PLAN

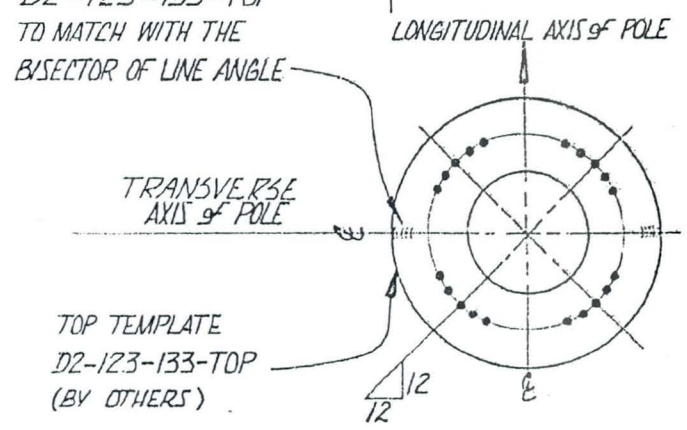

ANCHOR BOLT ORIENTATION PLAN

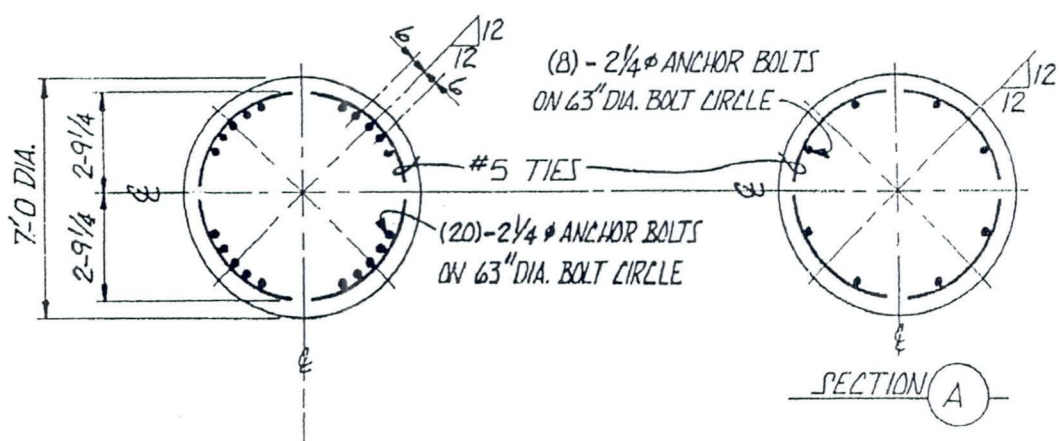

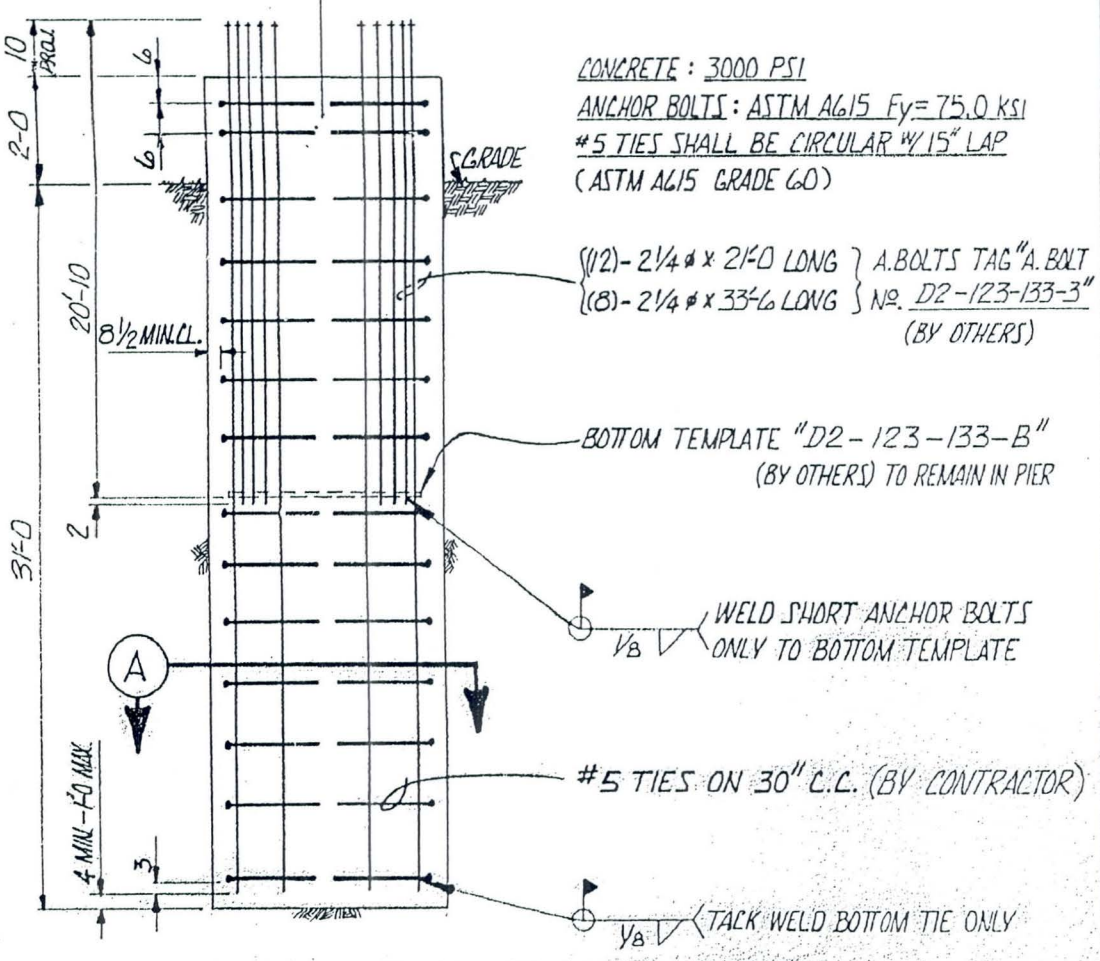

FOUNDATION TYPE "D2-123-133-3"

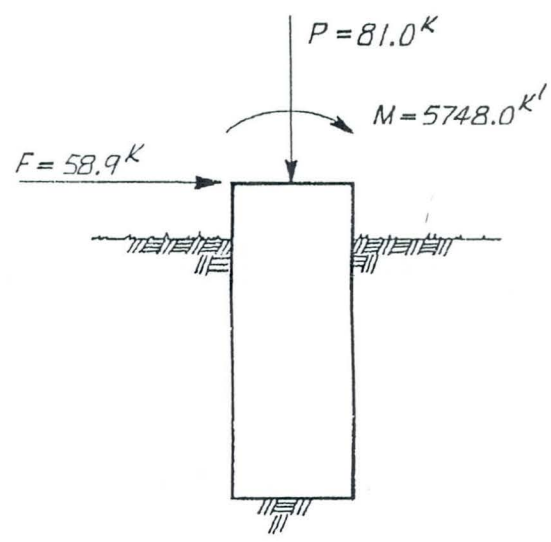

1. LOADS SHOWN ARE ULTIMATE LOADS AND INCLUDE OVER LOAD FACTORS PER NESC (1977) EDITION WITH WIND LOAD OF 20 P.S.F.

2. FOR SOIL DATA SEE FUGRO'S SOILS REPORT # 79-190

3. THE FOUNDATION IS ALSO DESIGNED FOR 10'-0 SCOUR DEPTH AND WATER FORCE DUE TO VELOCITY OF 10 FT./SECOND.

REVISIONS					
W.O. NO.	REV	DATE	BY	CHK'D	SUPV. ENGR
REVISED					
YP527	A	3-81	BJ		

SALT RIVER PROJECT
WATER & POWER — PHOENIX, ARIZ.

PALO VERDE-KYRENE
500 KV T/L POLE FDN.
TYPE D2-123-133-3

C-822-3.3

P121, 123

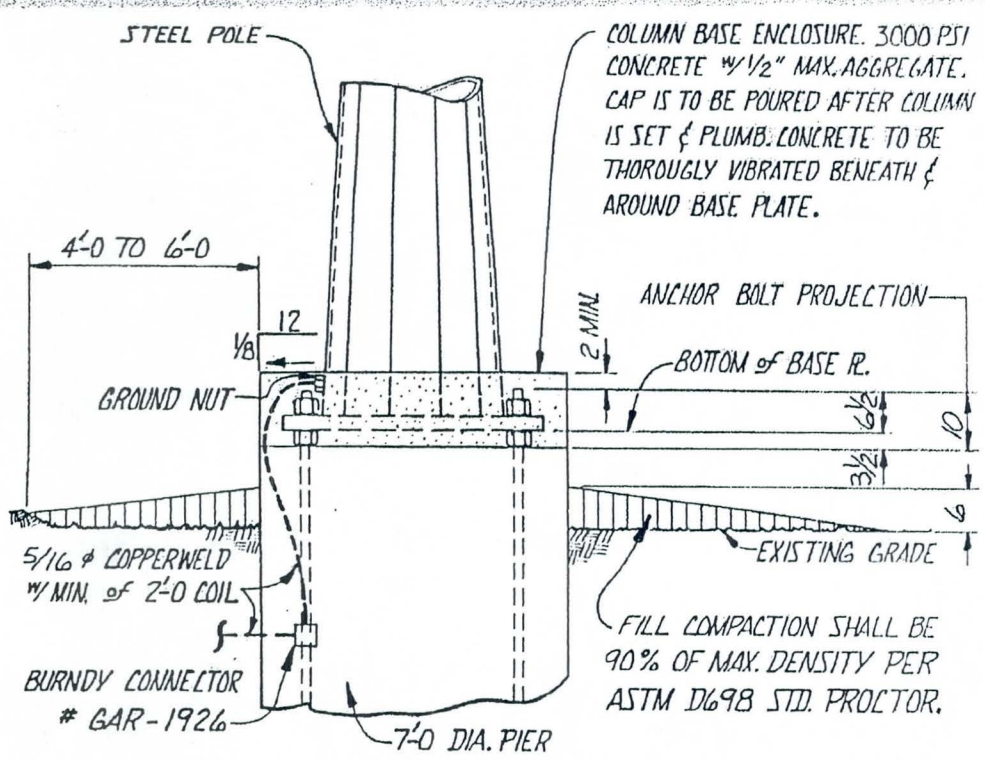

COLUMN CAP GROUNDING & POLE SETTING DETAILS

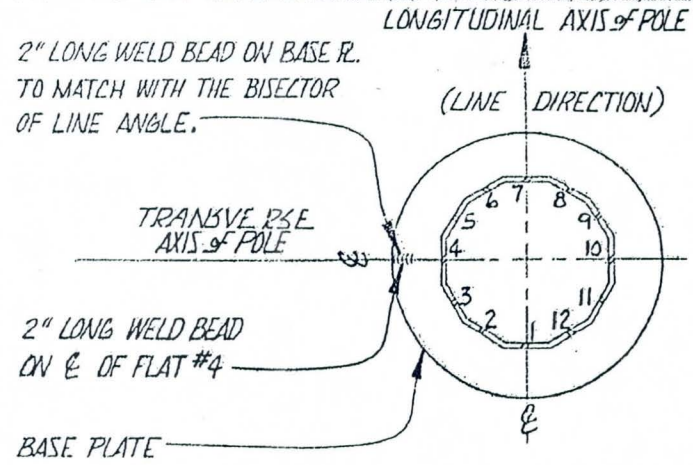

POLE ORIENTATION PLAN

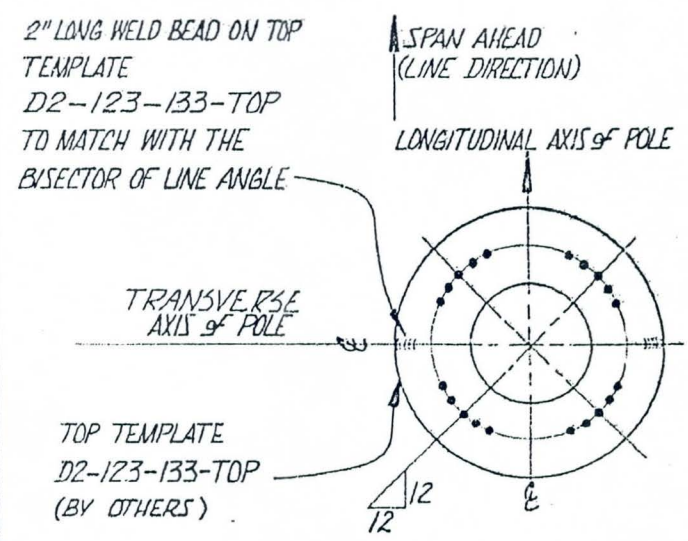

ANCHOR BOLT ORIENTATION PLAN

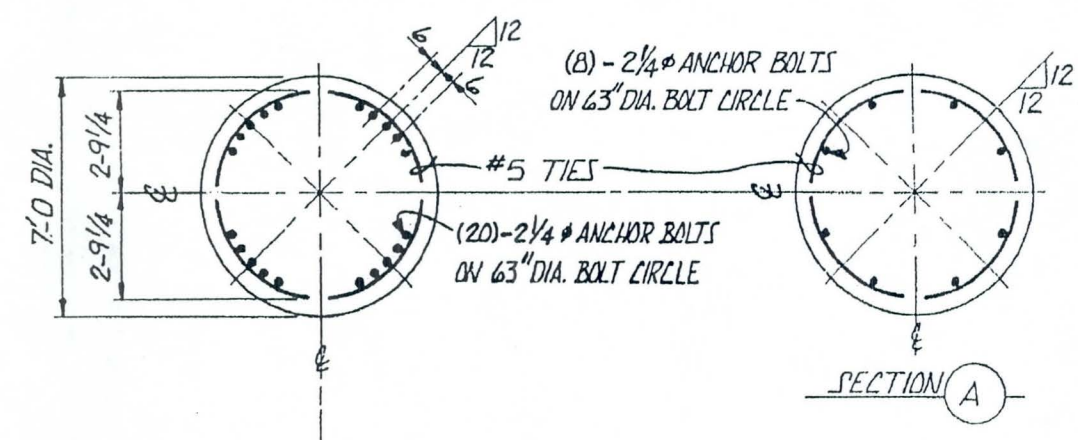

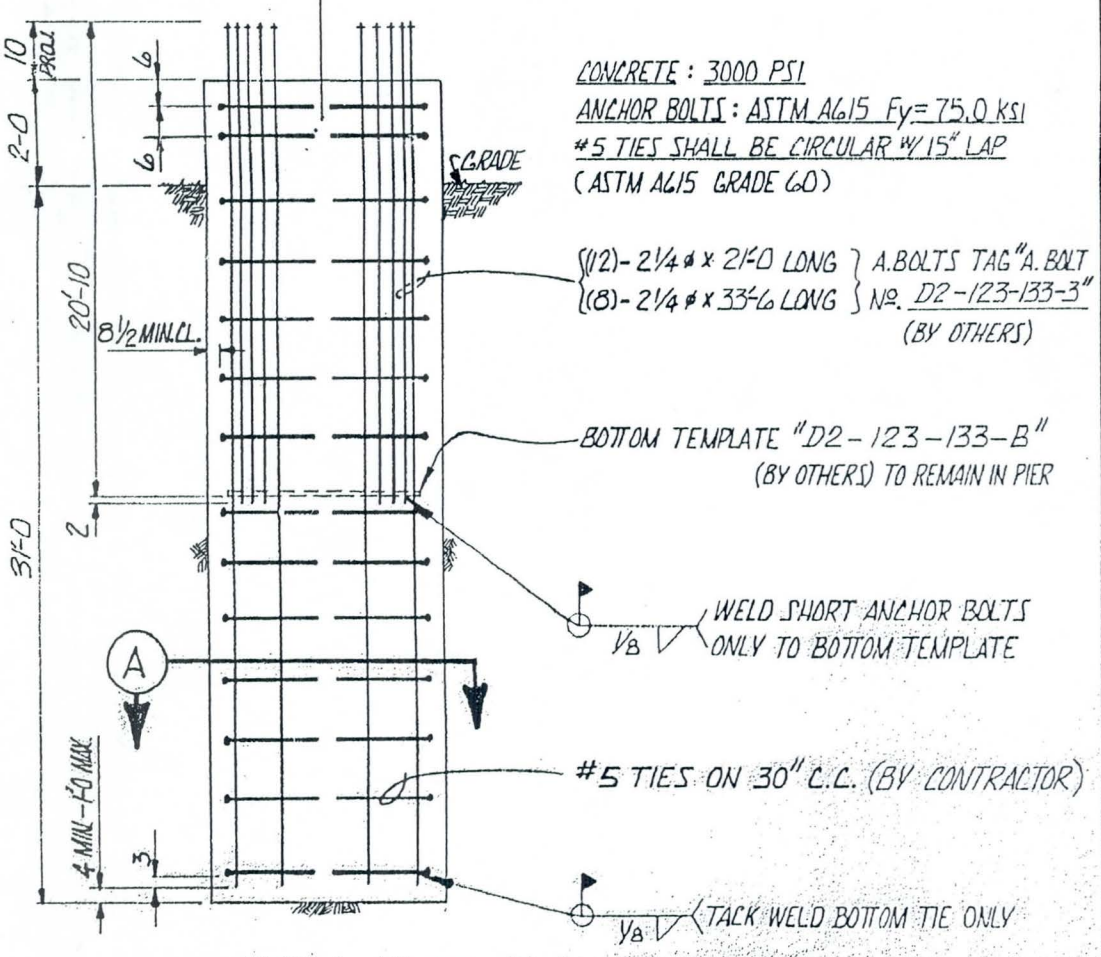

FOUNDATION TYPE "D2-123-133-3"

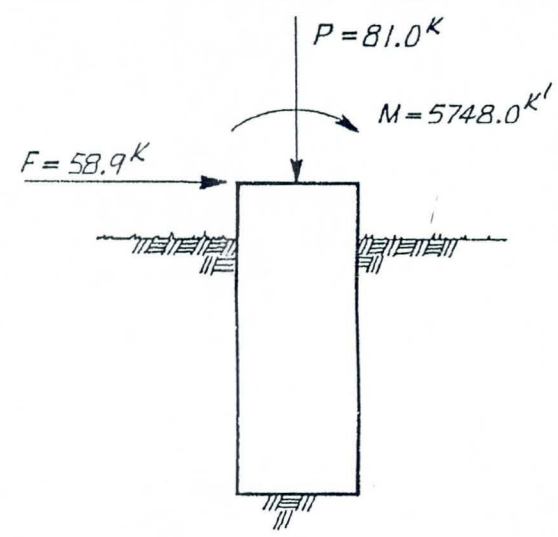

1. LOADS SHOWN ARE ULTIMATE LOADS AND INCLUDE OVER LOAD FACTORS PER NESC (1977) EDITION WITH WIND LOAD OF 20 P.S.F.
2. FOR SOIL DATA SEE FUGRO'S SOILS REPORT # 79-190
3. THE FOUNDATION IS ALSO DESIGNED FOR 10'-0 SCOUR DEPTH AND WATER FORCE DUE TO VELOCITY OF 10 FT./SECOND.

REVISIONS					
W.O. NO.	REV	DATE	BY	CHK'D	SUPV. ENGR.
REVISED					
YP327	A	3-81	BJ		

SALT RIVER PROJECT
WATER & POWER — PHOENIX, ARIZ.

PALO VERDE – KYRENE
500 KV T/L POLE FDN.
TYPE D2-123-133-3

C-822-3.3

P121, 123

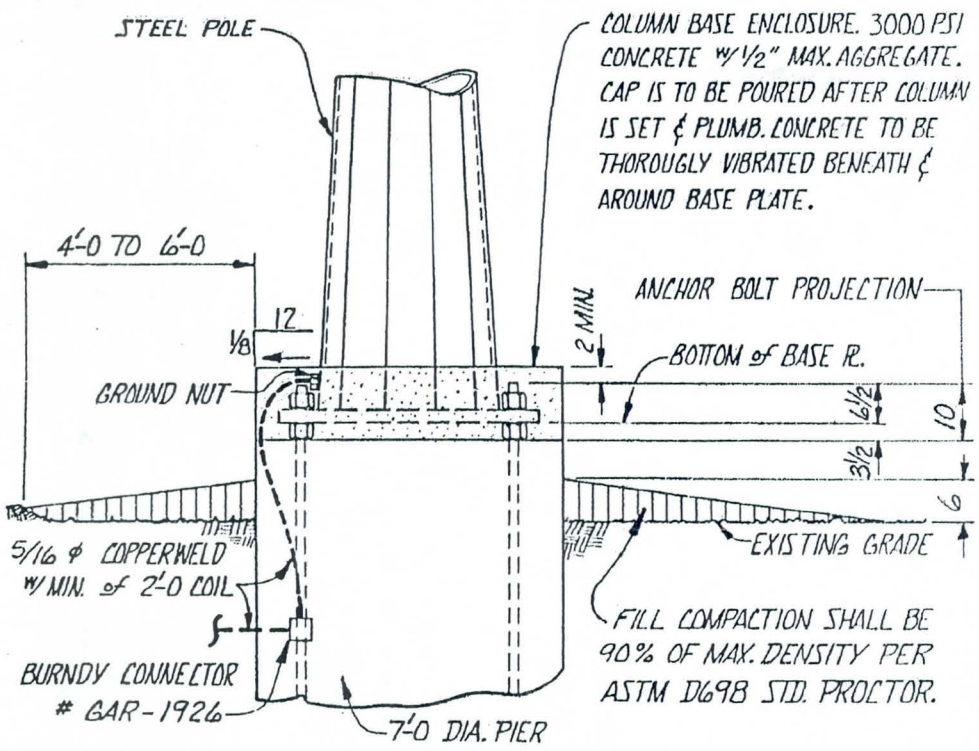

COLUMN CAP GROUNDING & POLE SETTING DETAILS

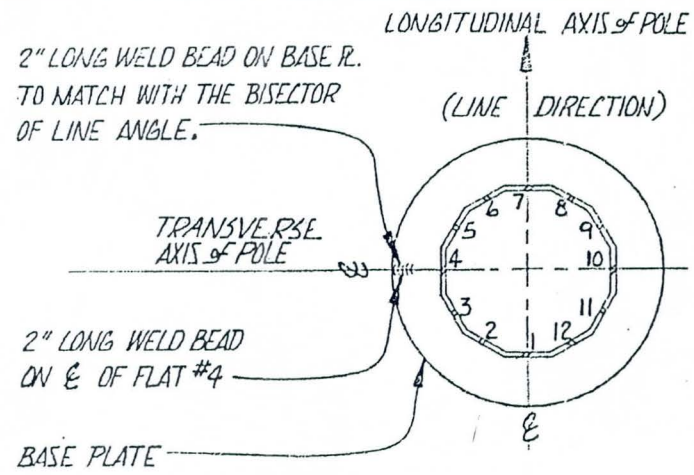

POLE ORIENTATION PLAN

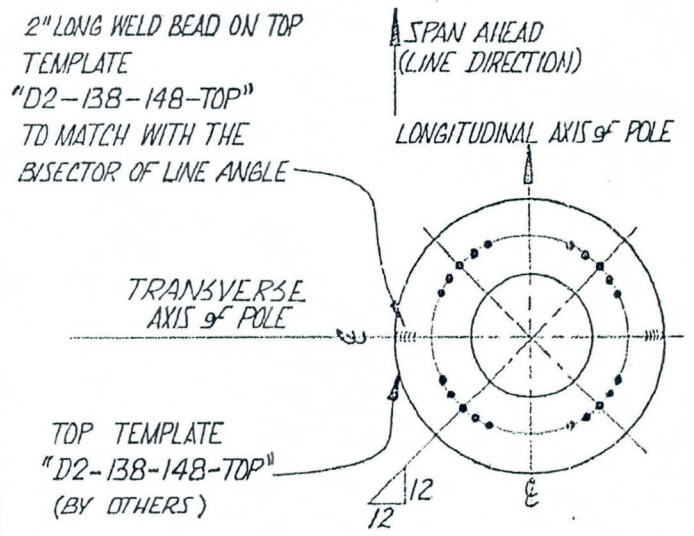

ANCHOR BOLT ORIENTATION PLAN

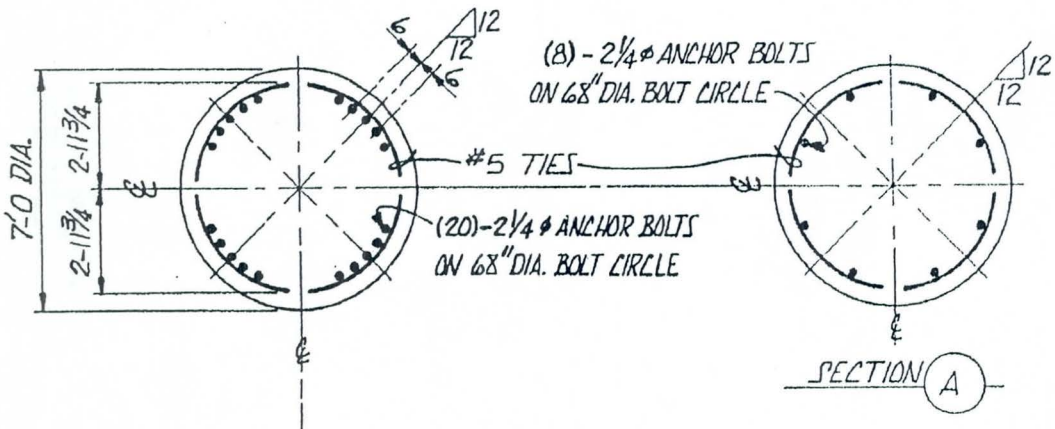

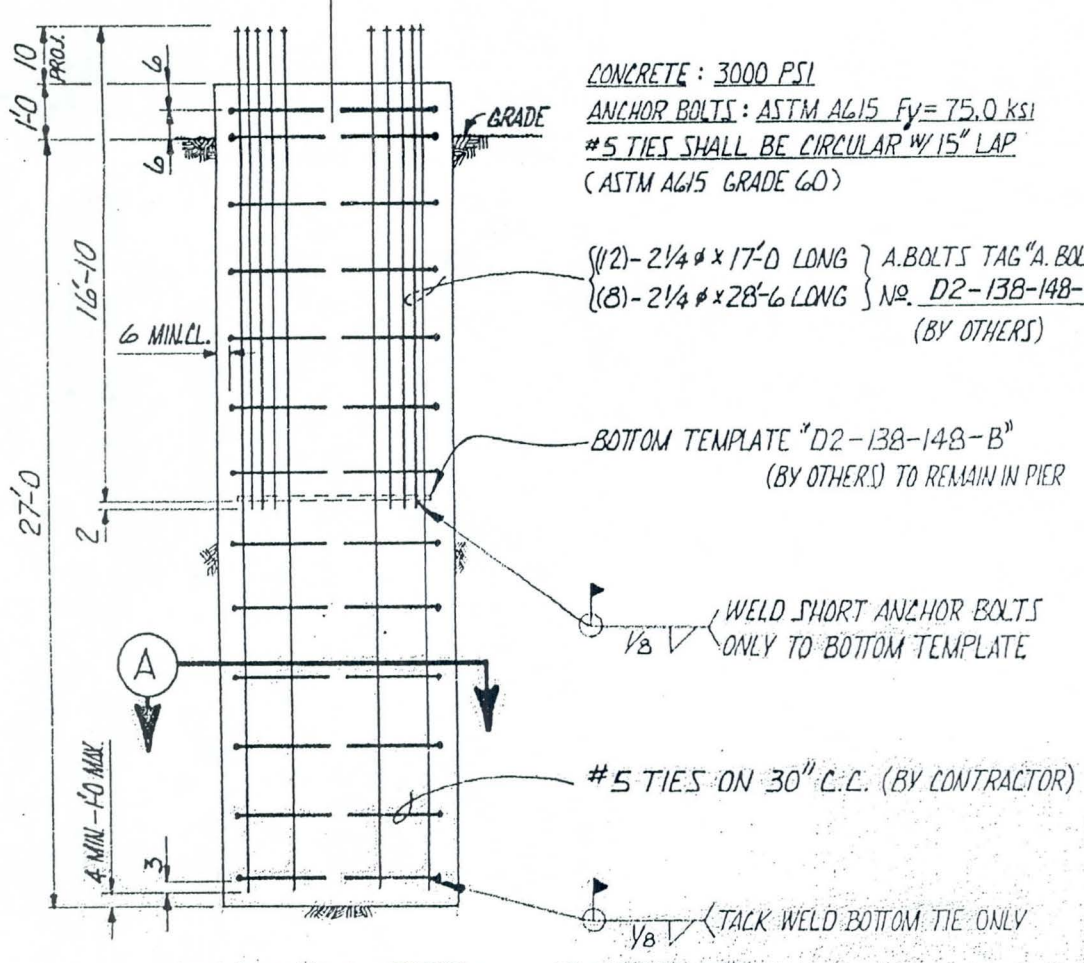

FOUNDATION TYPE D2-138-148-1

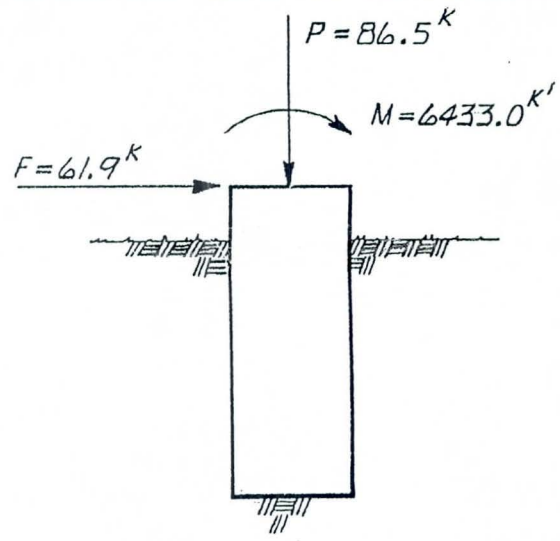

1. LOADS SHOWN ARE ULTIMATE LOADS AND INCLUDE OVER LOAD FACTORS PER NESC (1977) EDITION WITH WIND LOAD OF 20 P.S.F.
2. FOR SOIL DATA SEE FUGRO'S SOILS REPORT #79-190
3. FOUNDATION IS ALSO DESIGNED FOR 5'-0 SCOUR DEPTH WITH WATER VELOCITY OF 5 FT./Sec.

REVISIONS					
W.O. NO.	REV	DATE	BY	CHK'D	SUPV ENGR
REVISED					
YP 327	A	3-81	BJ	[illegible]	[illegible]

SALT RIVER PROJECT
WATER & POWER — PHOENIX, ARIZ.

PALO VERDE—KYRENE
500 KV T/L POLE FDN.

C-822-3.6

P 12

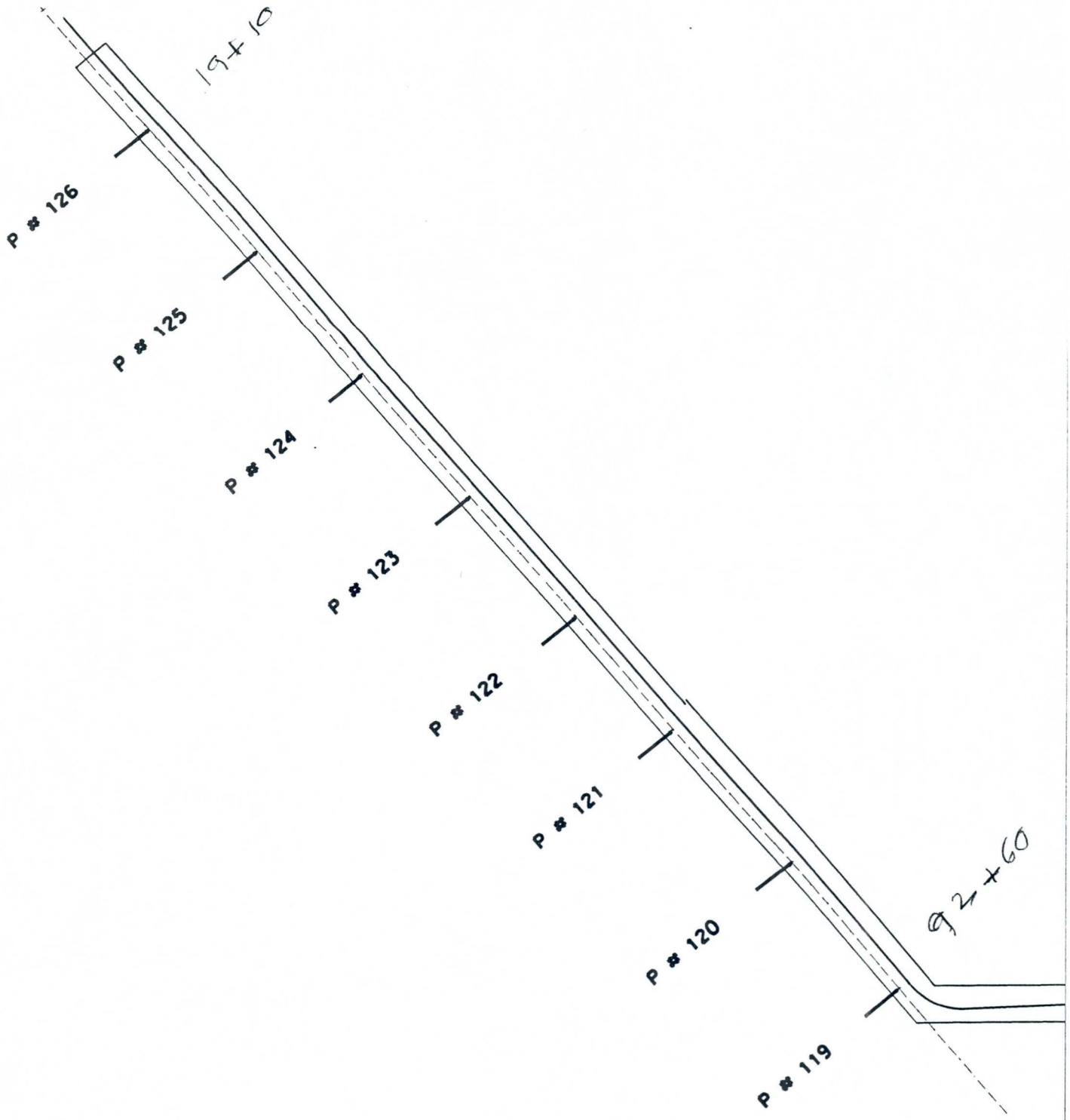

\MAZEN\delme.dgn Mar. 08, 2001 10:39:01

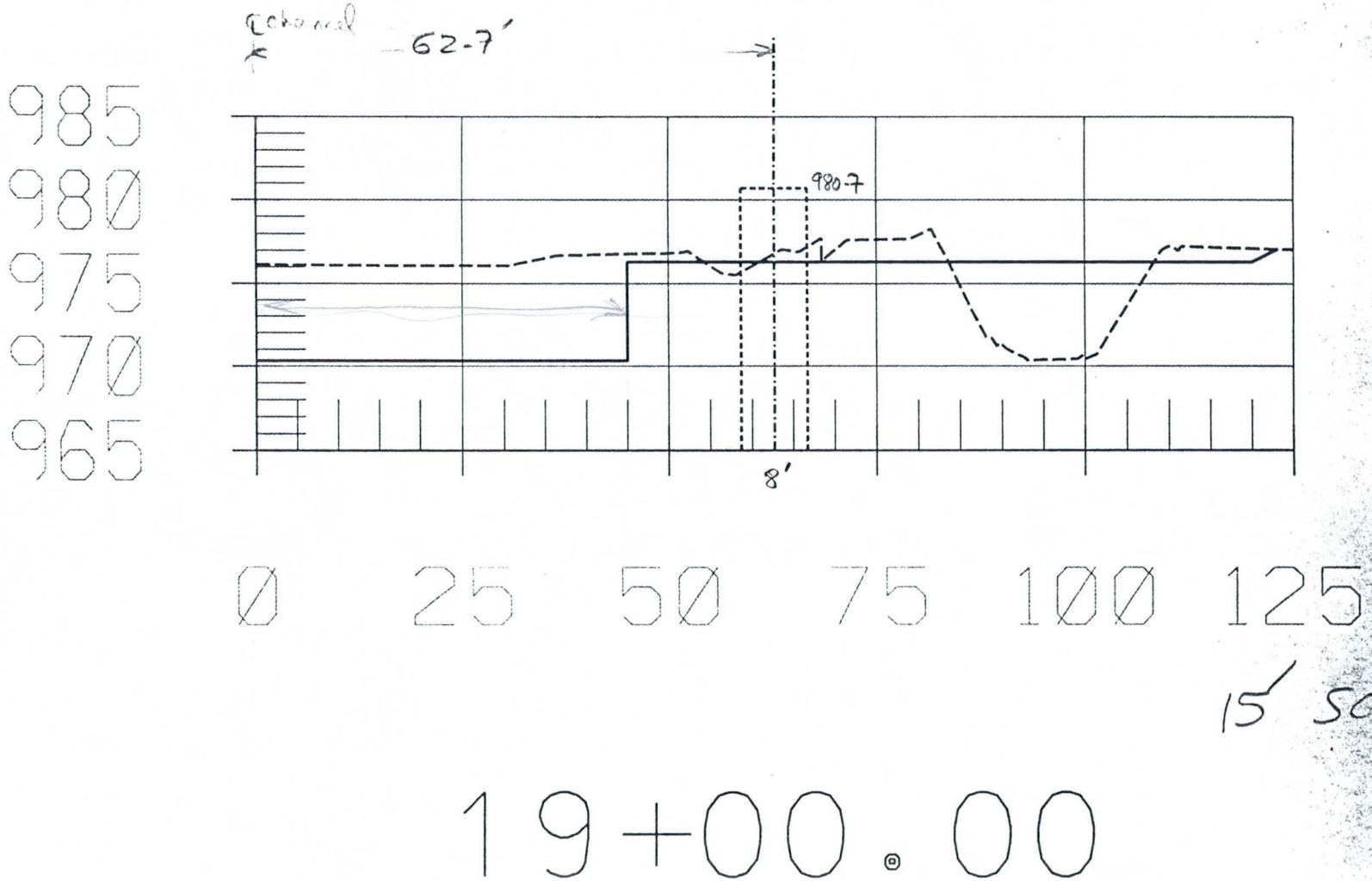

...\PP40\PwrLineProt_details.dgn Mar. 22, 2001 17:26:18

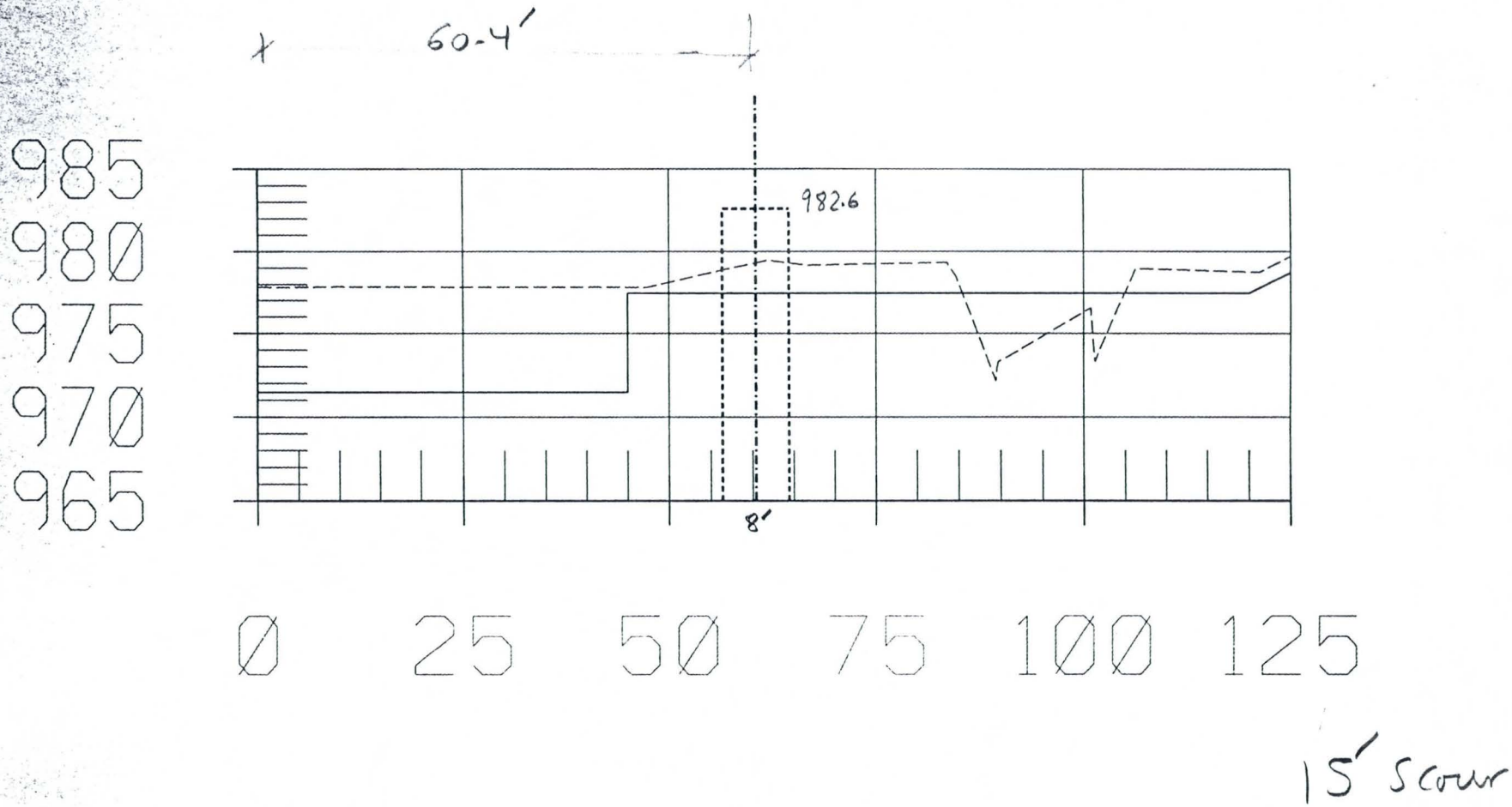

29+50.30

...\PP40\PwrLineProt_details.dgn Mar. 22, 2001 17:26:31

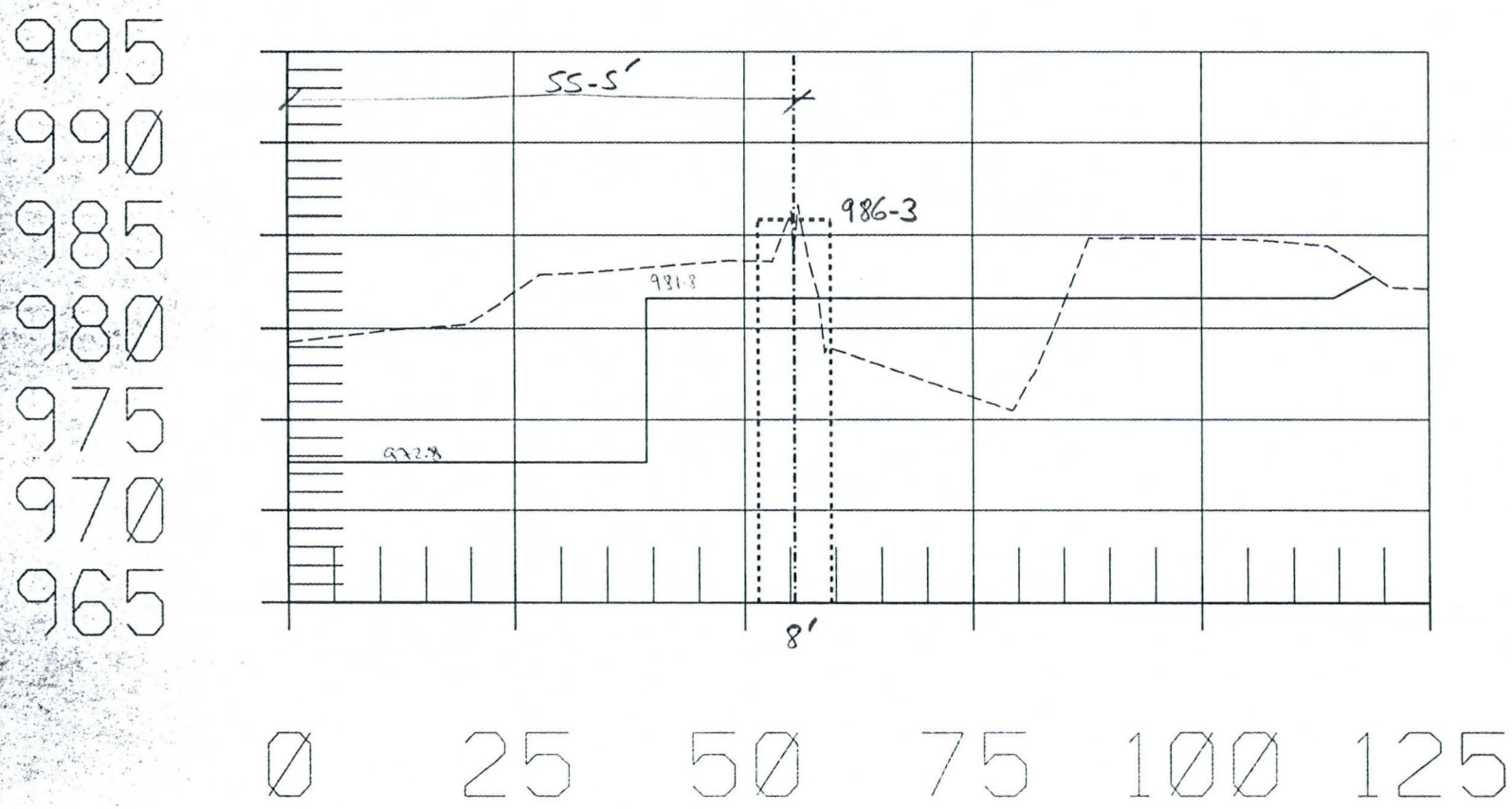

15' scour

40+00.60

...\PP40\PwrLineProt_details.dgn Mar. 22, 2001 17:26:57

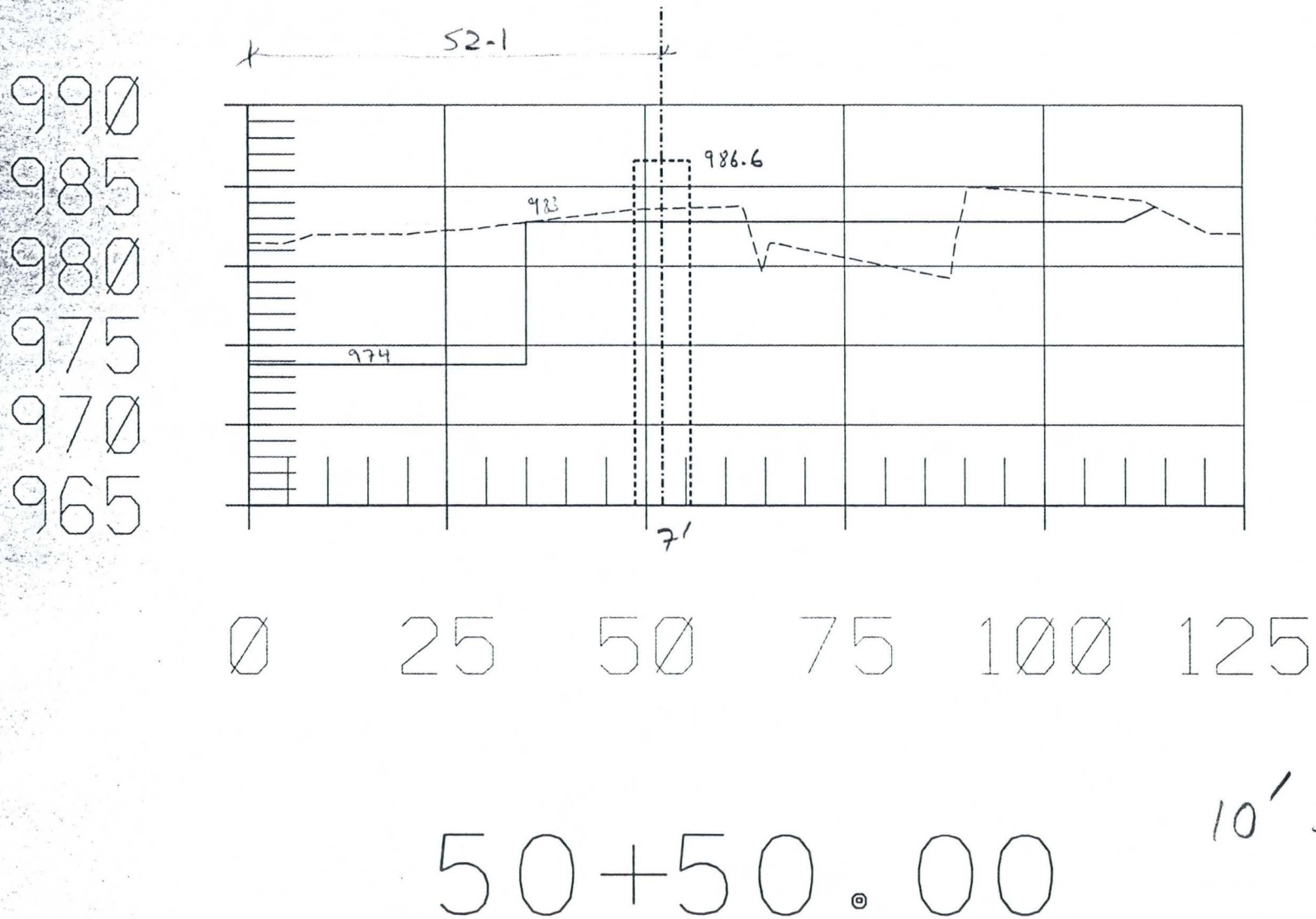

...\PP40\PwrLineProt_details.dgn Mar. 22, 2001 17:26:43

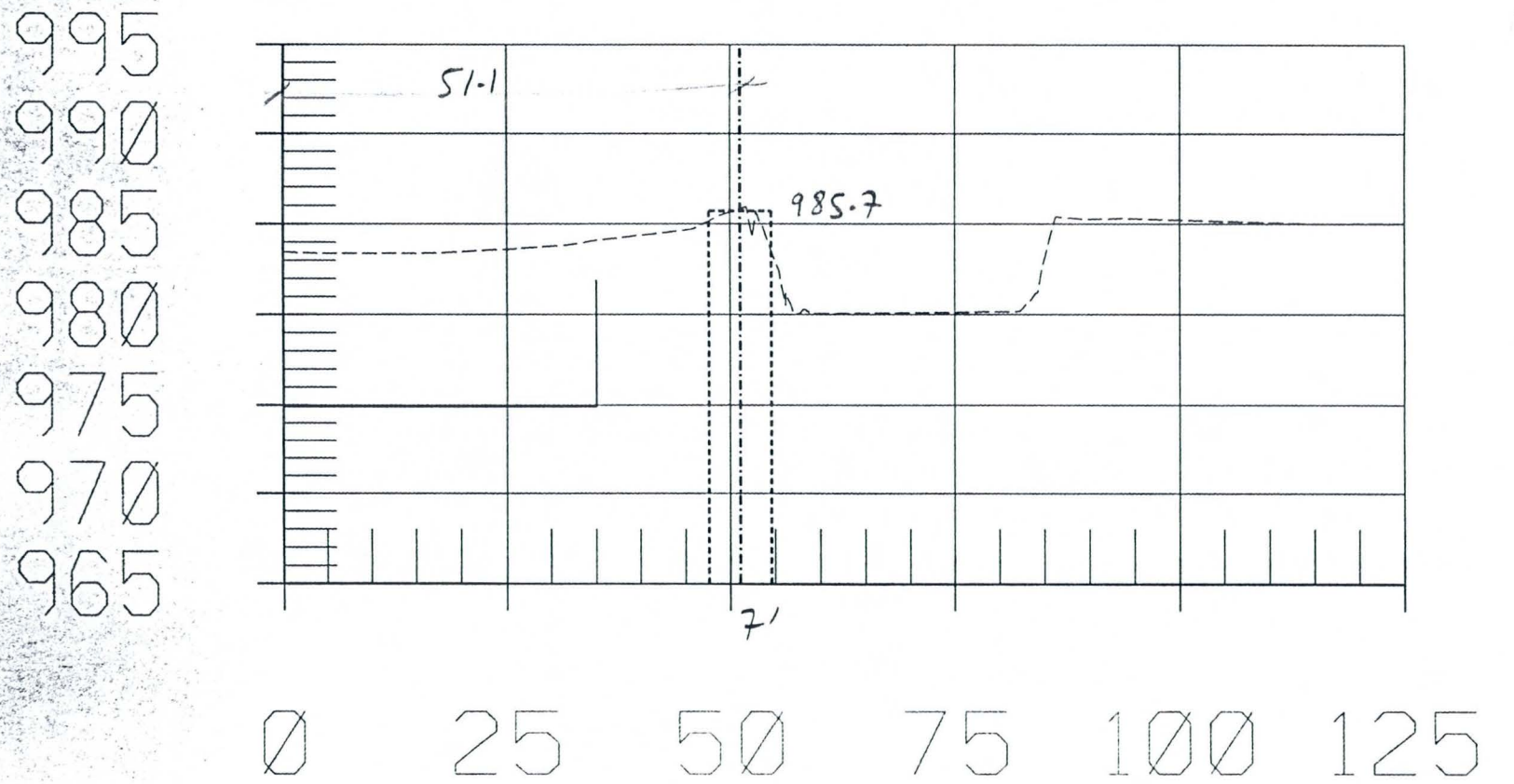

5' scour

60+79.80

...\PP40\PwrLineProt_details.dgn Mar. 22, 2001 17:27:10

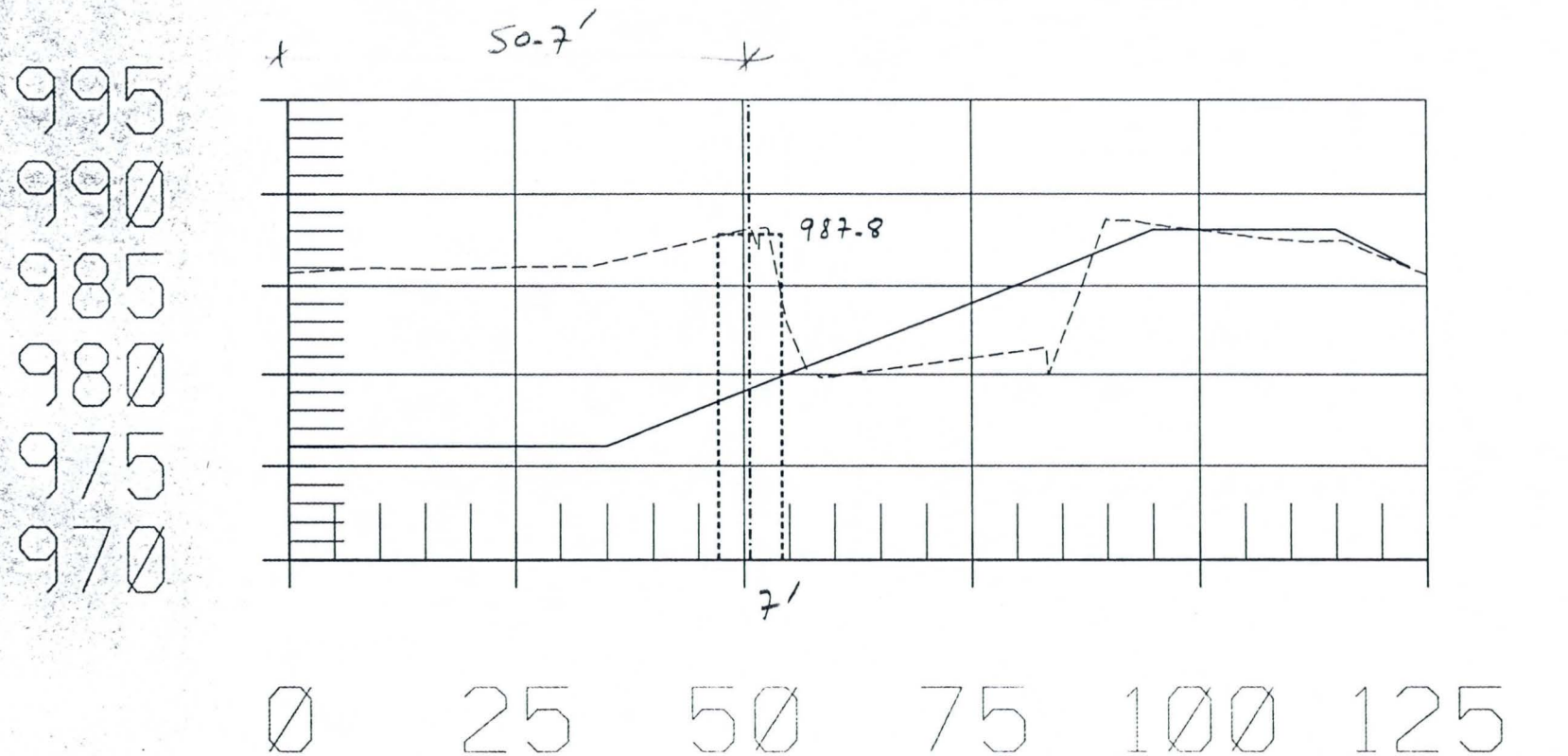

10' scour

71+10.40

...\PP40\PwrLineProt_details.dgn Mar. 22, 2001 17:27:24

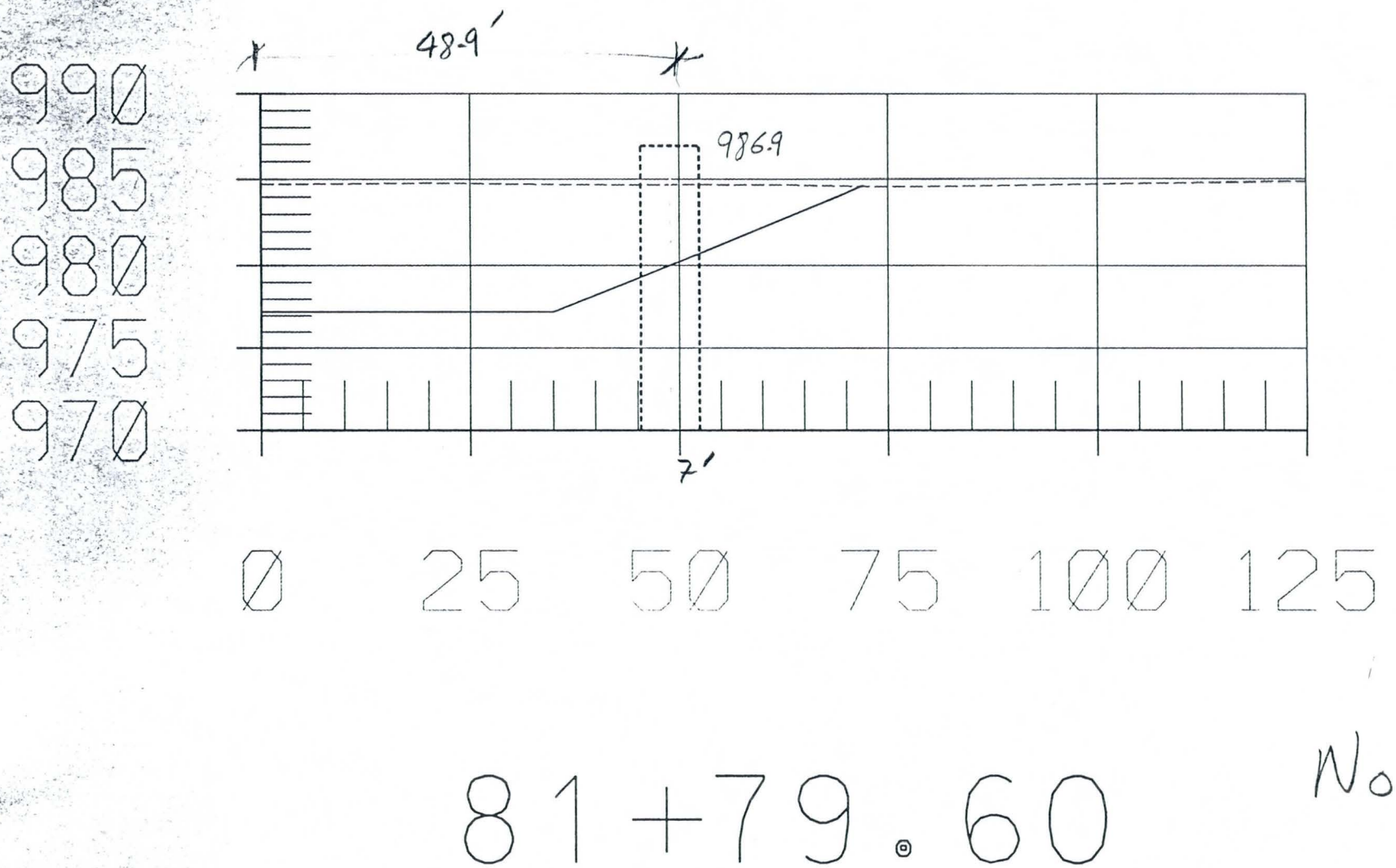

81+79.60

No Scour

FLOOD CONTROL DISTRICT OF MARICOPA COUNTY

PROJECT LACC PAGE ____ OF ____

DETAIL Retaining Wall COMPUTED KVH DATE 3/01

CHECKED BY ____ DATE ____

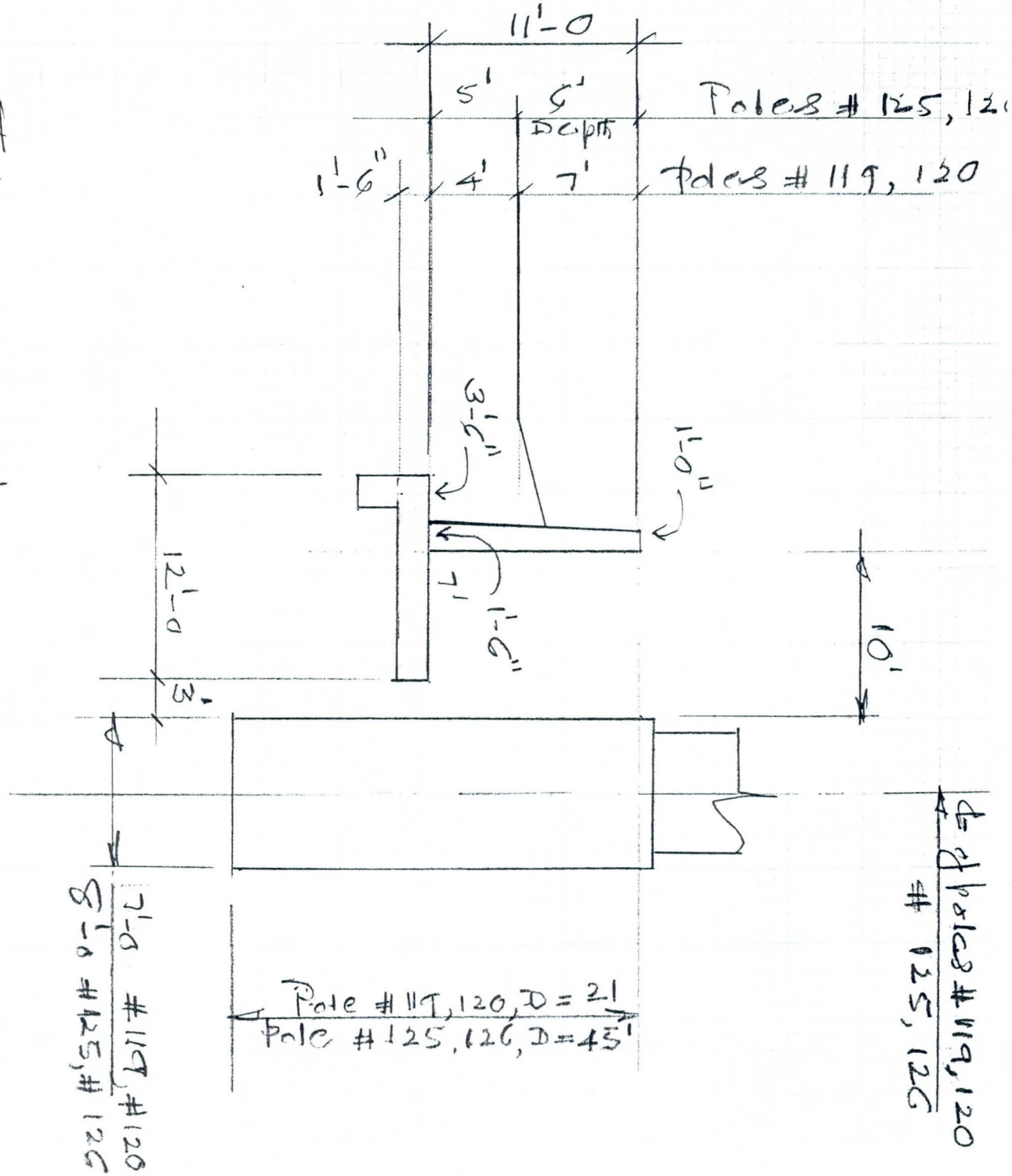

TYPE 1 WALL

1/4" = 1'-0"

FLOOD CONTROL DISTRICT OF MARICOPA COUNTY

PROJECT LACC PAGE ____ OF ____

DETAIL Retaining Wall COMPUTED KrH DATE 3/0

CHECKED BY ____ DATE ____

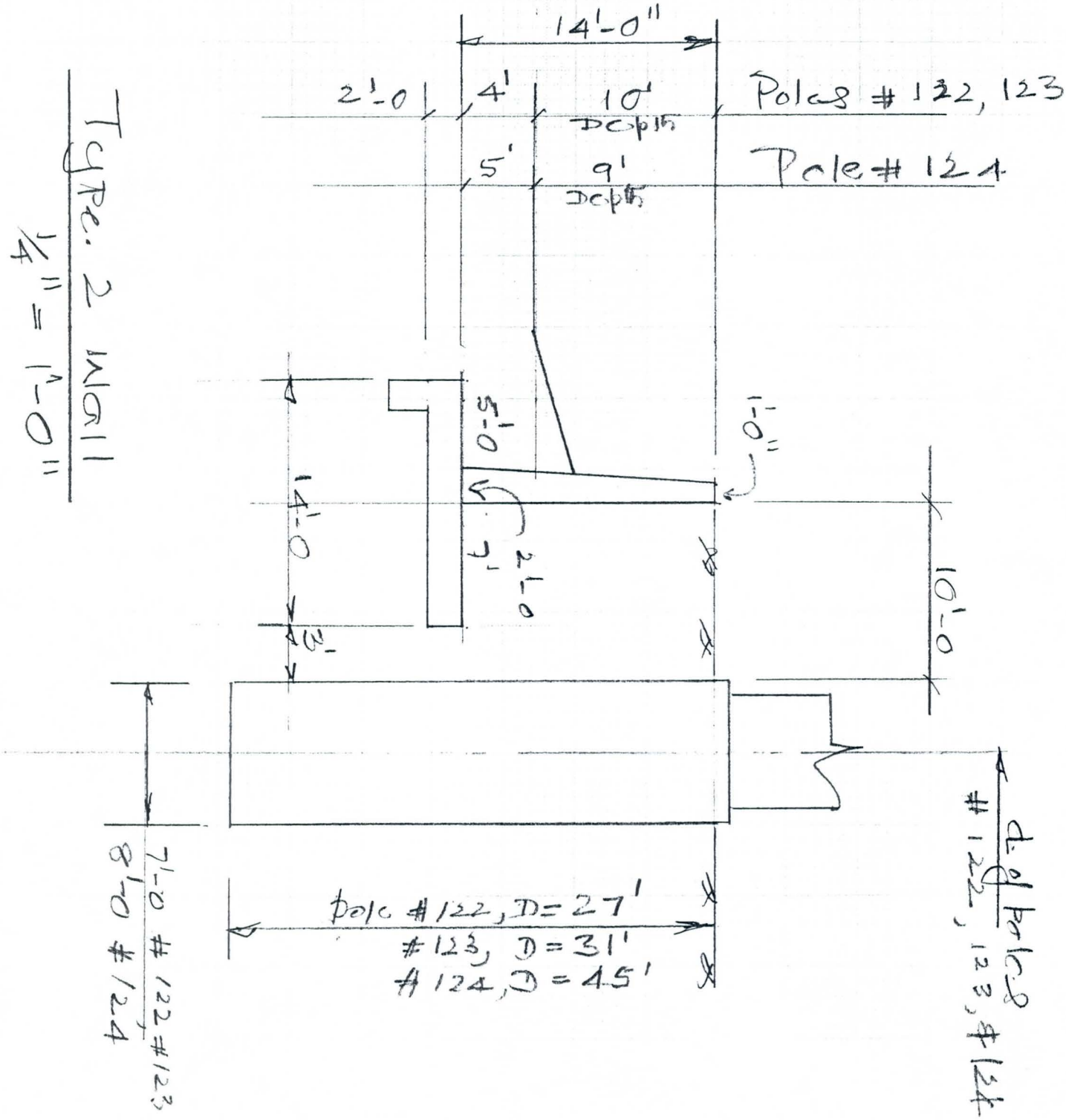

FLOOD CONTROL DISTRICT OF MARICOPA COUNTY

PROJECT LACC PAGE ____ OF ____

DETAIL Retaining Wall COMPUTED KVH DATE 3/0

CHECKED BY ____ DATE ____

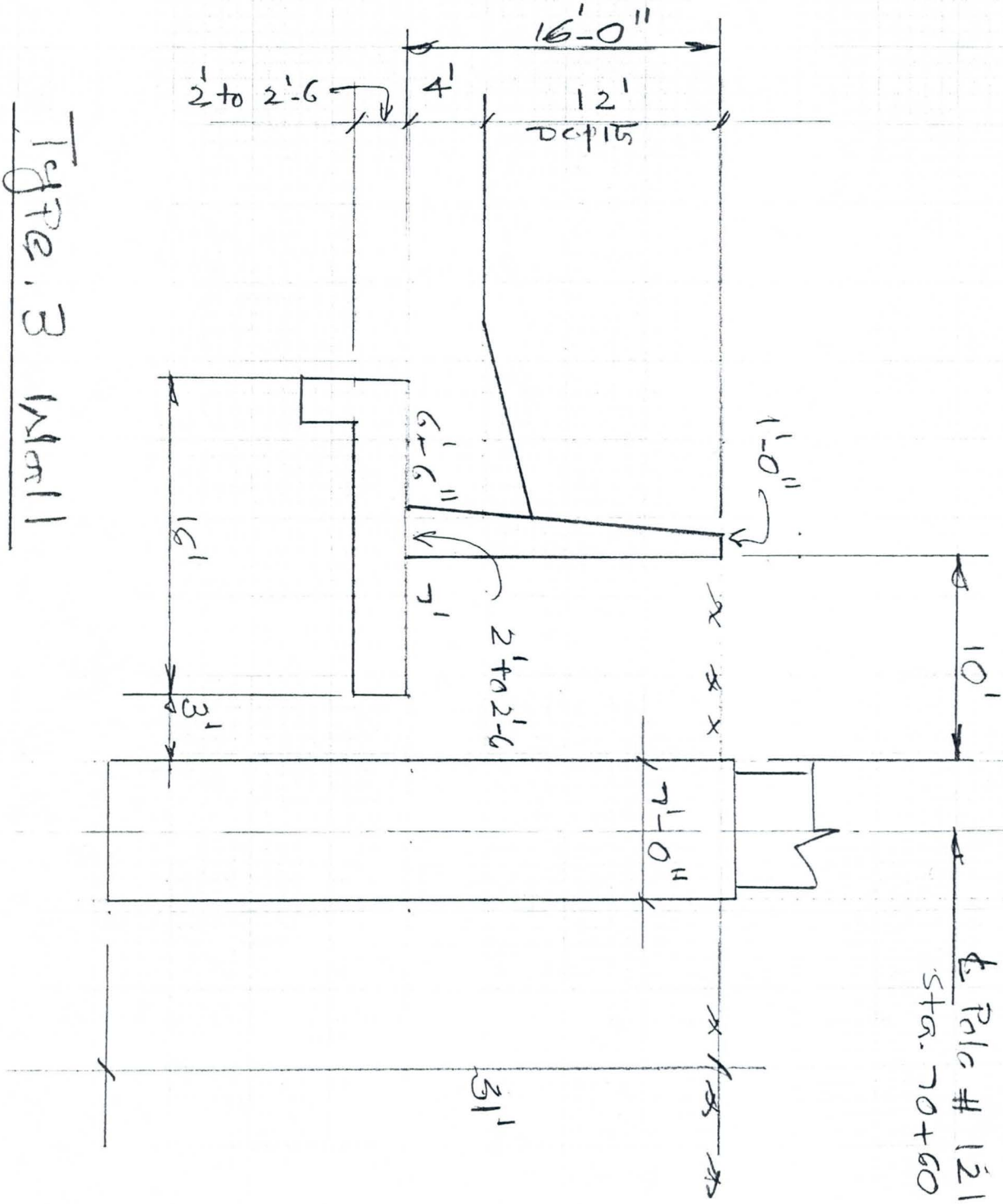

Figure 3 Wall

1" = 1'-0"

FLOOD CONTROL DISTRICT OF MARICOPA COUNTY

PROJECT LACC PAGE ____ OF ____

DETAIL Power poles COMPUTED KVH DATE 5/01

CHECKED BY ____ DATE ____

Depth of Shafts below Excn for footing

pole #	119 / 120	#121	122	123	124	125 / 126
	21	31	27	31	45	45
	− 12	− 18	− 16	− 16	− 16	− 12
	9	13	11	15	29	33

Depth of Shafts Below Excvn Line

126, 125 & 124 are OK

#123 — Recommend limiting the Excvn time. (Trap. Dwg)

122 — Recommend Lateral Ground Anchors (18K Load)

121 — Recommend limiting Excn time. (Trap Dwg.)

120 — Ground Anchors (30K Load)

119 — " — (30K Load)

#	126	125	124	123	122	121	120	119
	10.00	10.0	10.0	10.0	10.0	10.0	10.0	10.0
	− 4.4	3.4	4.6	4.6	6.1	3.2	2.7	4.2
	5.6	6.6	5.4	5.4	3.9	6.8	7.3	5.8

6910-153 4-90

FLOOD CONTROL DISTRICT OF MARICOPA COUNTY

PROJECT LAGG PAGE ____ OF ____

DETAIL Power poles COMPUTED KVH DATE 5/01

CHECKED BY ____ DATE ____

122

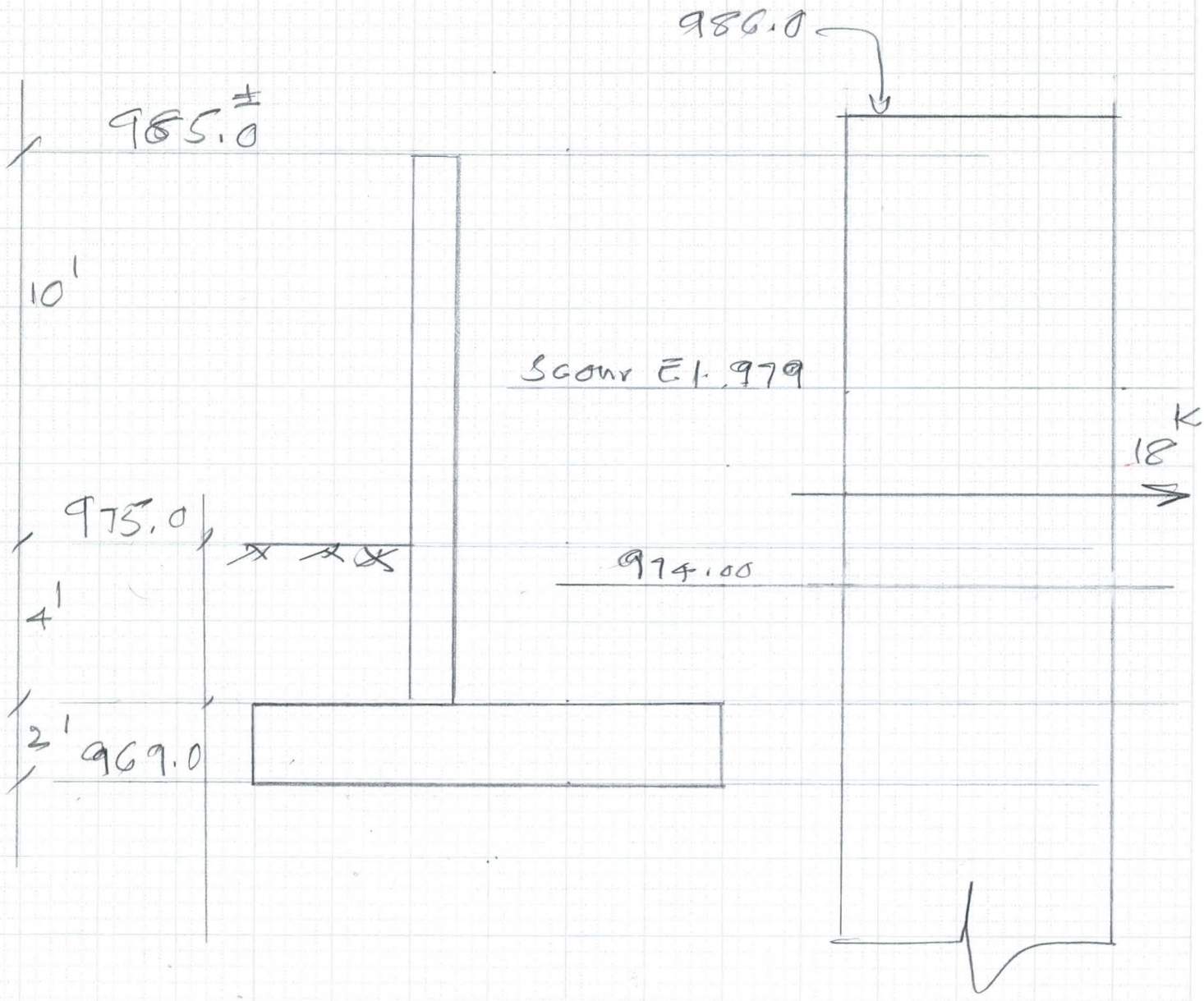

6910-153 4-90

FLOOD CONTROL DISTRICT OF MARICOPA COUNTY

PROJECT LACC PAGE ____ OF ____

DETAIL Power pole COMPUTED KVH DATE 5/01

CHECKED BY ____ DATE ____

120

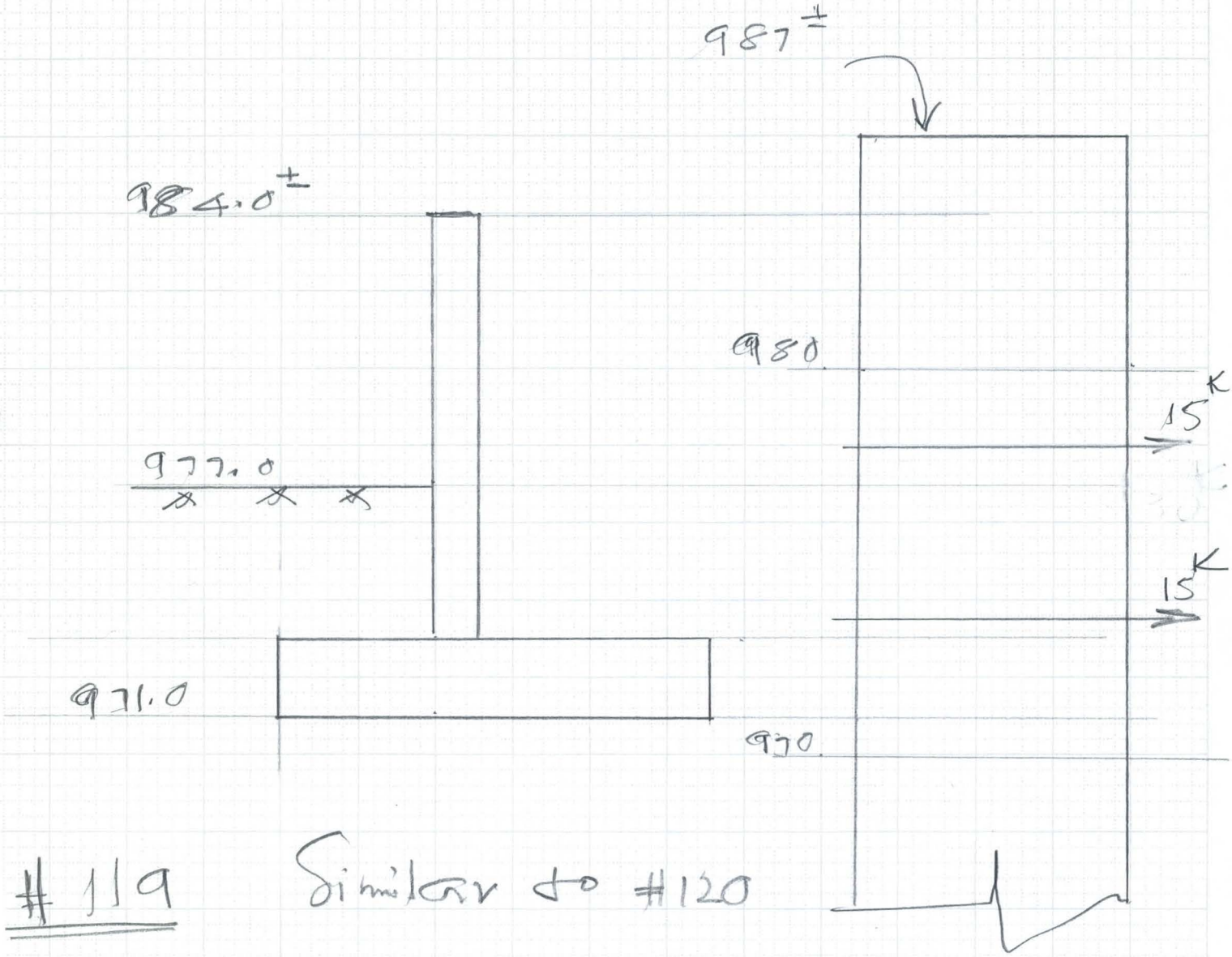

119 Similar to #120

153 4-90

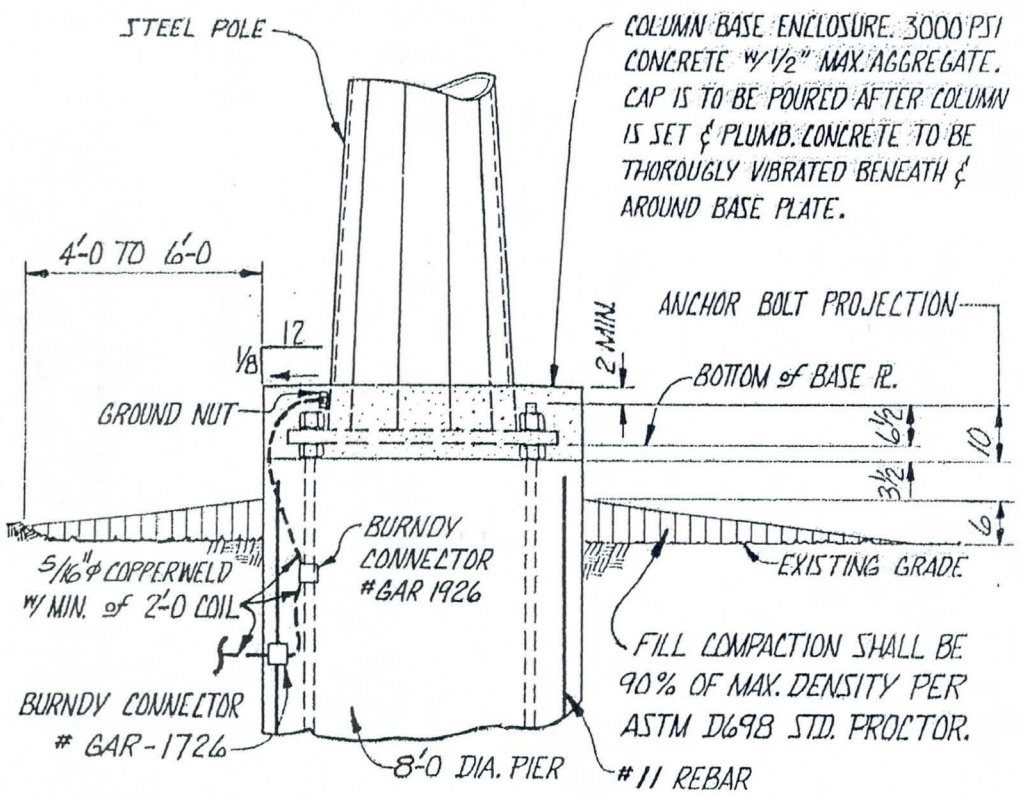

COLUMN CAP GROUNDING & POLE SETTING DETAILS

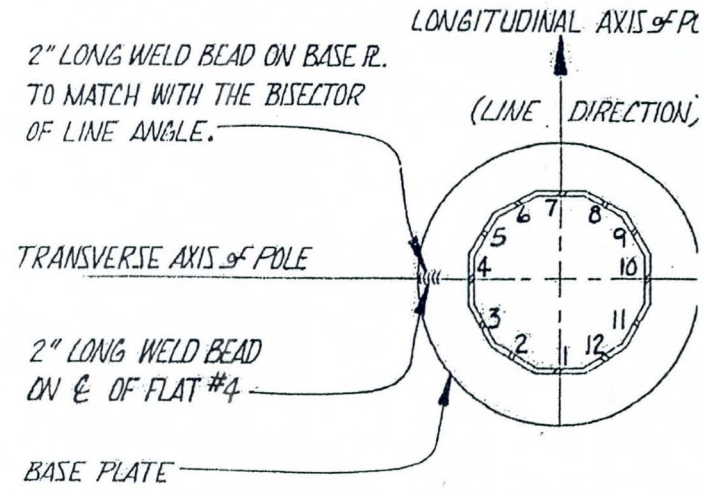

POLE ORIENTATION PLAN

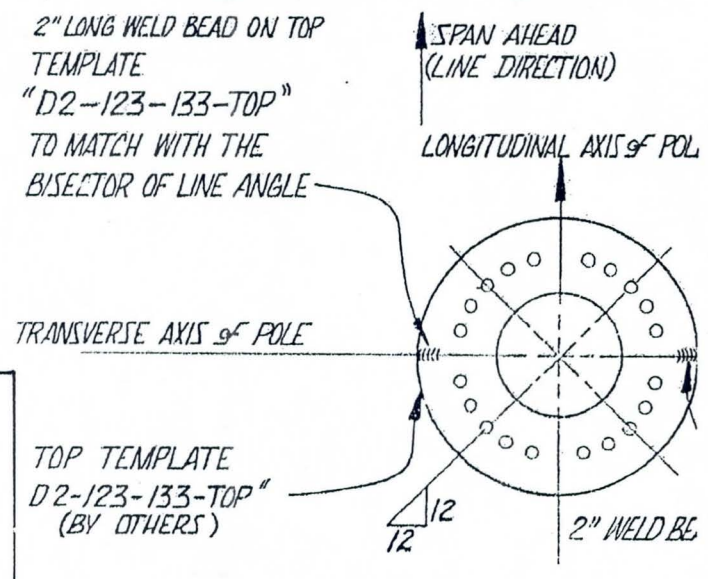

ANCHOR BOLT ORIENTATION PLAN

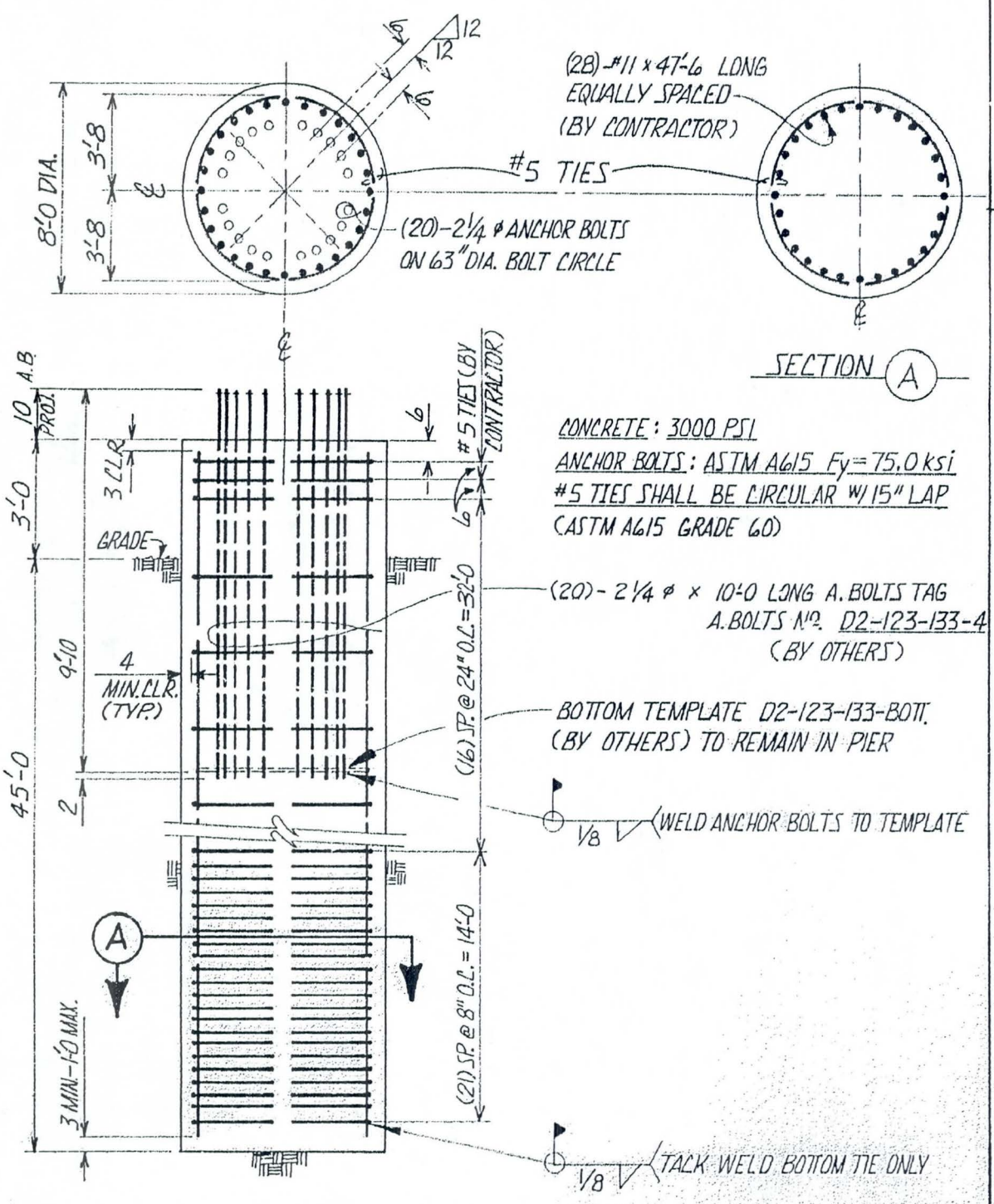

CONCRETE: 3000 PSI
ANCHOR BOLTS: ASTM A615 Fy = 75.0 ksi
#5 TIES SHALL BE CIRCULAR W/ 15" LAP
(ASTM A615 GRADE 60)

FOUNDATION TYPE "D2-123-133-4"

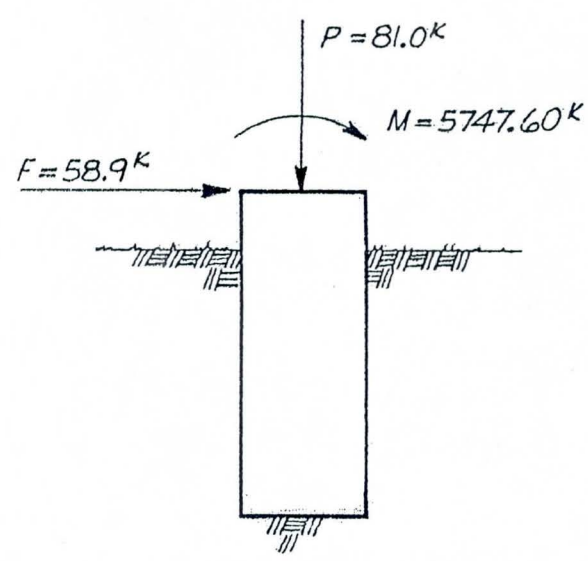

1. LOADS SHOWN ARE ULTIMATE LOADS AND INCLUDE OVER LOAD FACTORS PER NESC (1977) EDITION WITH WIND LOAD OF 20 P.S.F.
2. FOR SOIL DATA SEE FUGRO SOILS REPORT # 79-1
3. ALL REINFORCING STEEL SHALL BE ASTM 615, GR (U.N.O.)
4. THE FOUNDATION IS ALSO DESIGNED FOR 15'-0 SCOUR AND WATER FORCE DUE TO VELOCITY 15 FT/S

REVISIONS						
W.O. NO.	REV	DATE	BY	CHK'D	SUPV ENGR	SALT RIVER PROJECT WATER & POWER PHOENIX

C-822-3.4

P 124, 125, 126

Kumar Hanumaiah - FCDX
From: Sam Hanna - FCDX
Sent: Tuesday, May 08, 2001 6:59 AM
To: Michael Lopez - FCDX; Kumar Hanumaiah - FCDX
Subject: FW: Impacts of FCD Laveen Channel on T/L Poles

-----Original Message-----

From: wgphilli@srpnet.com [mailto:wgphilli@srpnet.com]
Sent: Monday, May 07, 2001 5:33 PM
To: BAO@MAIL.MARICOPA.GOV; skh@MAIL.MARICOPA.GOV; tsp@MAIL.MARICOPA.GOV
Cc: pmkandar@srpnet.com
Subject: FW: Impacts of FCD Laveen Channel on T/L Poles

We have scheduled a meeting for Monday 5/14 from 2:00 to 3:30 here at the SRP CrossCut Facility in the Falls Conf.Rm. to discuss further.

In preparation for the meeting, attached are Peter Kandaris' comments regarding the LAAC excavation cross sections which Samuel provided. To summarize: 3 of the 500kV poles require lateral ground anchors, 2 require limited time excavation or temporary downguys, and 3 of the 500kV poles require no special consideration for the excavation as proposed. The proposed excavation is close enough to the 230kV pole near Southern & 57th Ave that either the pole needs to be relocated or the LAAC excavation needs to be further away.

Besides these excavation concerns, we are very concerned with our continued ability to access Tower #127 which is just downstream from where the LAAC dumps into the Salt River. The tower foundations are sufficiently designed for the expected scour. However, we located this tower with access in mind. There have been several major flood events since we constructed this tower in about 1982 and our access to this tower is still intact and in excellent shape (hardpacked cobbles). We are concerned that the LAAC outflows will change the erosion patterns in the vicinity of the tower and hinder our continued access to this tower. We're open to suggestions on how to ensure this access.

There are other concerns which we discussed in our last meeting, such as the full 30' usable SRP access road along the SW side of the channel (some appears to be sideslopes and not usable), access ramps down into the channel for 500kV maintenance, and also the proposed channel seems to be elevated where P-119 and P-120 are in the farm field and not adjacent to the Maricopa Drain.

We'll talk further next Monday. Call if questions.

-----Original Message-----
From: **KANDARIS PETER M**
Sent: Wednesday, April 11, 2001 9:25 AM
To: PHILLIPS BILL (WILDBILL)
Subject: Impacts of FCD Laveen Channel on T/L Poles

Bill:

I've completed the review of impacts to SRP transmission line pole foundations from proposed construction of the Laveen Channel.

500kV Poles near existing Maricopa Drain:

P126 - Wall foundation requires excavation to elev. 963.8, within 4.4 ft

of the pole foundation. It is anticipated that the pole foundation will be exposed to about elev. 968 (used 1:1 side slopes, but slope makes very little difference). The pole foundation was designed for water scour to elev. 957.4. No bracing or construction limitations are needed to insure pole foundation capacity during wall construction.

P125 - Wall foundation requires excavation to elev. 965, within 3.4 ft of the pole foundation. It is anticipated that the pole foundation will be exposed to about elev. 968. The pole foundation was designed for water scour to elev. 960. No bracing or construction limitations are needed to insure pole foundation capacity during wall construction.

P124 - Wall foundation requires excavation to elev. 966, within 4.6 ft of the pole foundation. It is anticipated that the pole foundation will be exposed to about elev. 970. The pole foundation was designed for water scour to elev. 967.8. The wall foundation excavation will reduce support soils below scour depth during construction. Analysis shows that, at maximum wind loads and full safety factors, pole foundation rotation will remain within the limits of acceptable performance with this type of excavation. No bracing or construction limitations are needed to insure pole foundation capacity during wall construction.

P123 - Wall foundation requires excavation to elev. 967.5, within 4.6 ft of the pole foundation. It is anticipated that the pole foundation will be exposed to about elev. 972. The pole foundation was designed for water scour to elev. 970.6. The wall foundation excavation will reduce support soils below scour depth during construction. Analysis shows that, at maximum wind loads and full safety factors, the pole foundation will rotate to just beyond the limit of acceptable performance with this type of excavation. Recommend limiting the time of excavation within 14 feet both sides of the pole to minimize the potential of pole over-rotation (see description of limited time excavation below).

Temp. Down Guy

P122 - Wall foundation requires excavation to elev. 968.5, within 6.1 ft of the pole foundation. It is anticipated that the pole foundation will be exposed to about elev. 974.5. The pole foundation was designed for water scour to elev. 978.9. The wall foundation excavation will reduce support soils below scour depth during construction and the final channel invert elevation (975) will also remain below the scour elevation. Analysis shows that, at maximum wind loads and full safety factors, the pole foundation will not be able to resist loads. Lateral ground anchors will need to be installed to resist about 18 kips of load to allow for wall and channel construction (installed between elev. 974 and 979).

L. GR. A

P121 - Wall foundation requires excavation to elev. 969.5, within 3.2 ft of the pole foundation. It is anticipated that the pole foundation will be exposed to about elev. 972.7. The pole foundation was designed for water scour to elev. 973.7. The wall foundation excavation will reduce support soils below scour depth during construction. Analysis shows that, at maximum wind loads and full safety factors, the pole foundation will not be able to resist loads. With safety factors reduced to 1.1 (for temporary construction), the pole foundation will rotate to just beyond the limit of acceptable performance with this type of excavation. Recommend limiting the time of excavation within 14 feet both sides of the pole to minimize the potential of pole over-rotation (see description of limited time excavation below).

Temp. Down Guy

P120 - Wall foundation requires excavation to elev. 970.5, within 2.7 ft of the pole foundation. It is anticipated that the pole foundation will be exposed to about elev. 973. The pole foundation was not designed for scour and the minimum embedment is at elev. 982.7. The wall foundation excavation will reduce support soils below minimum depth during construction and the final channel invert elevation (977.2) will also remain below minimum embedment elevation. Analysis shows that at minimum wind loads and without any safety factors, the pole foundation will not be able to resist loads. Lateral ground anchors will need to be installed to resist about 30 kips of load to allow for wall and channel construction (two sets installed about 5-10 feet apart between elev. 970 and 980).

L.GR.A.

P119 - Wall foundation requires excavation to elev. 972, within 4.2 ft of the pole foundation. It is anticipated that the pole foundation will be exposed to about elev. 976. The pole foundation was not designed for scour and the minimum embedment is at elev. 985.2. The wall foundation excavation will reduce support soils below minimum depth during construction and the final channel invert elevation (978.4) will also remain below minimum embedment elevation. Analysis shows that at minimum wind loads and without any safety factors, the pole foundation will not be able to resist loads. Lateral ground anchors will need to be installed to resist about 30 kips of load to allow for wall and channel construction (two sets installed about 5-10 feet apart between elev. 972 and 983).

L.Gr.A.

230kV Pole near Baseline & 57th Ave:

P27 (near 57th Ave & Baseline, Orme-Kyrene 230kV T/L) - Wall foundation requires excavation to elev. 989, within 21.5 ft of the pole foundation. It is anticipated that the pole foundation will not be exposed. The pole foundation is embedded to elev. 985. Analysis shows that at maximum wind loads and without any safety factors, the slope between the pole foundation and the excavation may fail from forces on the pole. Either the excavation needs to be made more shallow or the pole should be relocated to the west, out of the influence area of the excavation (estimated at about 40 feet of clearance between pole foundation and channel wall structure).

LIMITED TIME EXCAVATION:

Practical contractor limitations and/or requirements need to be discussed and finalized. Basically, for P-121 & P-123, we are concerned with the excavation temporarily exposing the pole foundations during the retaining wall construction time. There is no angle on the conductors, so the only forces these poles should experience is caused by wind loads. Once the retaining wall is constructed and backfilled next to the poles, our concerns are eliminated. Therefore, we need to discuss such things as limiting the number of days from excavation to backfill, limiting the time of year to minimal wind seasons, requiring the contractor to backfill if the winds are expected to exceed ???mph (difficult to predict winds), etc. Another option is to install a temporary downguy from the pole to an anchor to the southwest, which will probably need to be on the GRIC property (with temporary land rights).

Kumar Hanumaiah - FCDX

From: Kumar Hanumaiah - FCDX
Sent: Monday, May 14, 2001 8:44 AM
To: Michael Lopez - FCDX; Jeff Riddle - FCDX; Sam Hanna - FCDX; Kumar Hanumaiah - FCDX
Subject: LACC

The following issues or comments needs to be resolved;

1. First in order appears to be, to divert the flow from the existing Maricopa drain. Backfill and compact well as per the requirements. Latter excavate as required for the Construction of 100' retaining wall located at about 10' from the face of the drilled shaft and for the wings at each end of the retaining wall.

2. At each power pole we have a section of the retaining wall 100' long located at about 10' from the face of the existing drilled shaft, Wing at one end at 30 degrees and the Wing at the other end at 45 degrees. Present thinking is to design the 100' wall section with the influence of the 110 ton crane loading and the Wings with no influence of the crane loading. Wings will be referred to the standard ADOT retaining wall design with 2' surcharge as per the AASHTO requirements. **We need to make sure from SRP that 110 ton crane will not be operating close to these Wings and there will not be any any influence of the crane loading on the Wings.**

3. As already mentioned the 100' section of the retaining wall is located at about 10' from the face of the drilled shaft. We need to know from SRP, how close can we get from the face of drilled shaft to the Heel of the retaining wall footing.

4. SRP is recommending Lateral ground anchors for poles 119, 120,122 and temporary downguys for poles 121,123 with the temporary land rights from GRIC. If there is going to be any problems for temporary land rights we may have to go with lateral ground anchors for poles 121 and 123 also.

FLOOD CONTROL DISTRICT OF MARICOPA COUNTY

PROJECT _____ PAGE ____ OF ____

DETAIL _____ COMPUTED _____ DATE ____

_____ CHECKED BY _____ DATE ____

Bill Phillips 236-5072

Dia of Shaft
How Deep
Load on the Retaining wall
~~Ht of~~ Size of pole } for wind load
Ht. of pole

Guide Lines

— Called Again Tuesday Oct. 31st

— Called Again on Nov. 14th

6910-153 4-90

FLOOD CONTROL DISTRICT
OF MARICOPA COUNTY

2801 West Durango Street · Phoenix, Arizona 85009
Telephone: (602) 506-1501
Fax: (602) 506-4601
TT: (602) 506-5897

COVER SHEET

TO: Jim Adams

Company or Department: SRP **Fax #** 602-236-864

FROM: Kumar

Number of pages being sent including Cover Sheet: 2

Comments: Here is a Preliminary Section of Proposed Retaining Wall & Existing Power Poles along Maricopa Drain of Gila River Indian Community.

FLOOD CONTROL DISTRICT OF MARICOPA COUNTY

PROJECT _____ PAGE ____ OF ____

DETAIL _____ COMPUTED _____ DATE ____

CHECKED BY _____ DATE ____

Lavon Project

Gila River Indian Comm

~~Ag~~ along Maricopa Drain

near Salt River

Starts at 43rd Ave

Jim Adams — GeoTech

236-8601

(Fax) 602-236-8640

Transmission Line Design

Bill Phillips 236-8092

64th St — Indian Sch To Thomas

6910-153 4-90

FLOOD CONTROL DISTRICT OF MARICOPA COUNTY

PROJECT Maricopa Drain PAGE ____ OF ____

DETAIL ____ COMPUTED Kumar DATE ____

CHECKED BY ____ DATE ____

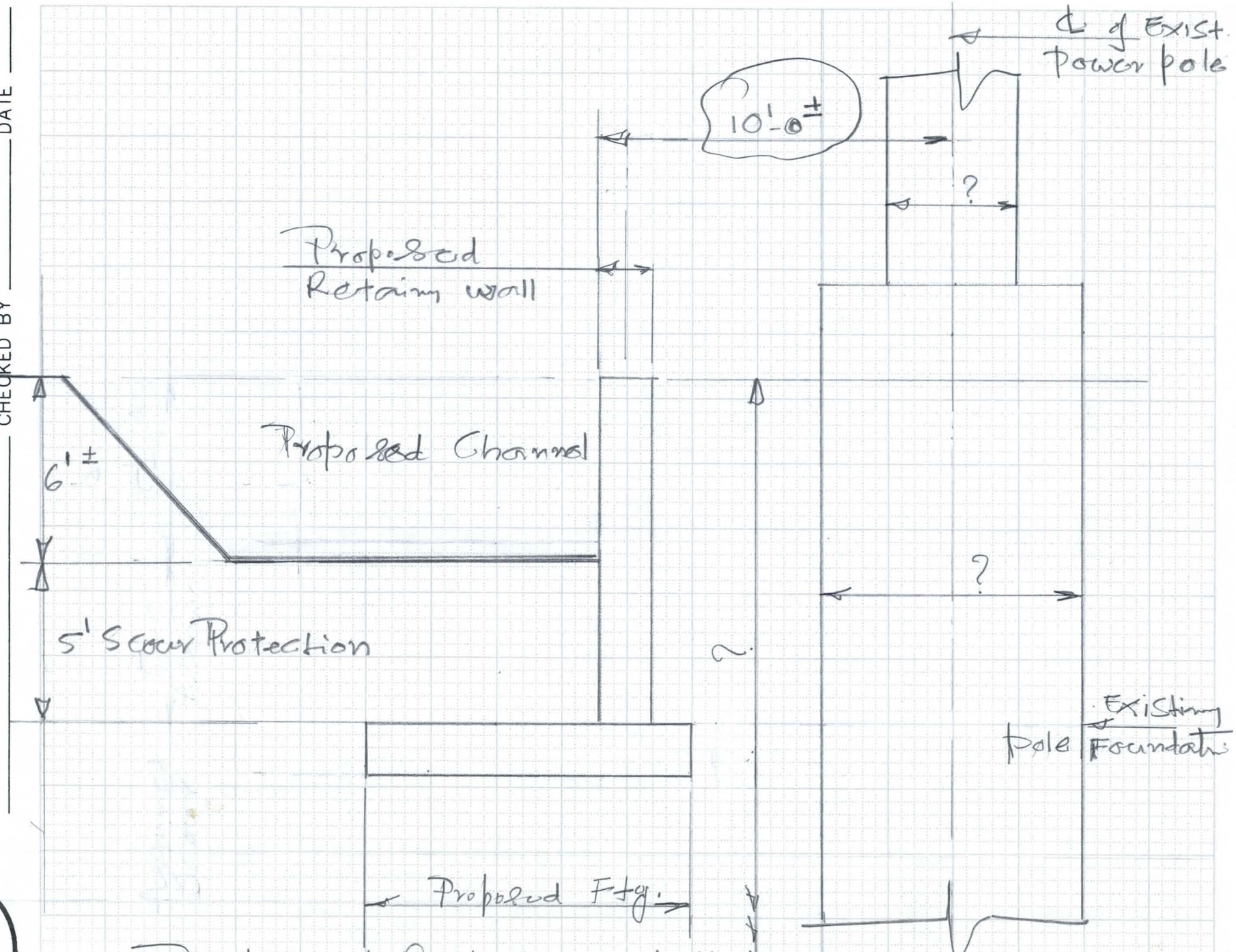

Proposed Retaining Wall & Existing power poles Along Maricopa Drain

372 PP	867462.3	604249.8	976.96	237
372A	866620.1	605023.3	980.75	4 REBAR
700	864955	606766.2	980	webster north point
689	864953.8	607362.8	980	PK shiner
701	864277.1	607354.8	971	south webster
228	862293.5	608838	987.69	rebar
227	862240.1	610095.5	991.23	rebar
226	862253.2	611246.4	992.33	panel 125
372M/L	866620.1	605023.3	980.75	4 REBAR
1747	862293.4	608837.8	987.582	228
1747	862293.4	608837.8	987.582	228
1 — 100	868002.7	603910.7	978.031	POLE 1 WST SIDE D8 MU 2.7 — 19+10 (#126)
2 — 101	867208	604597	979.267	POLE 2 WST SIDE D8 MU 3.3
3 — 102	866419.4	605289.4	983.584	POLE 3 EAST SIDE D8 MU 2.7
4 — 103	865624.1	605975.4	983.49	POLE 4 EAST SIDE D7 MU 3.1
104	864844	606647.9	984.647	POLE 5 EAST SIDE D7 MU 1.1
105	864067.6	607324.3	986.577	P 6 EASTSIDED7MU1.2 OS 6.2 —
106	863254.3	608013.9	984.851	P 7 NTH SIDE D7 MU 2.0
107	862442.5	608710	984.566	P 8 NTH SIDE D7 MU 2.3 — 92+60 (#119)
108	863890.6	607362.3	988.494	REBAR

No. 6

FLOOD CONTROL DISTRICT
OF MARICOPA COUNTY

2801 W. Durango, Phoenix, Arizona 85009
Fax: (602) 506-8561
Office: (602) 506-8945

E-mail: _____

Date: 9-12-01

COVER SHEET

To: Bill Phillips Fax No. 914-8726

SRP - Transmission Line Design Fax No. _____

From: Bobbie Ohler

Number of pages being sent including Cover Sheet: 3

SUBJECT: LACC - Retaining Wall Requirements

Comments:

Bill - thanks for the information. We are proceeding with the design per attached drawing and criteria. Please give me a call if we are missing any requirements! Thanks - Bobbie
602 506-2943

12.000
12.000
10.000
65.000
75.000

Bobbie Ohler - FCDX

From: Bobbie Ohler - FCDX
Sent: Wednesday, September 12, 2001 2:00 PM
To: Michael Lopez - FCDX
Cc: Jeff Riddle - FCDX; Tim Phillips - FCDX; Ed Raleigh - FCDX; Don Rerick - FCDX; Bobbie Ohler - FCDX
Subject: LACC - SRP Power requirements

- Outrigger loading is **68** psi, applied 10 feet perpendicular from centerline between poles.
- Outrigger will be extended 10 feet from centerline of powerpole.
- Distance from centerline of powerpole to outer face of retaining wall should be 12 feet.
- If retaining wall needs to be moved to meet above criteria, also move channel invert over the same amount, keep east bank side-slopes at 5:1, and decrease width of O&M road on east side of channel as necessary.
- Retaining wall should extend a minimum of 75 feet upstream of the centerline of the powerpole, parallel to the powerline.
- SRP has no requirements for space downstream of each powerpole.

wall) and provide a cost estimate for constructing a retaining wall with the 68 psi loading at 3 feet from inside face of retaining wall. before spending time on the cost estimate, determine if the concentrated load at 3' versus 1' back of the retaining wall significantly changes the loading and moment on the wall and the wall section. if minimal benefit then stop there.

If you have any questions, give me a call. I will drop off a sketch showing the above dimensions. Thanks - Bobbie