910.001

SVERDRUP & PARCEL

JOB 8080 FCDMC ACDC

COMPUTATIONS FOR AZ CANAL BRIDGE AT THUNDERBIRD RD.

SHEET NO. 1 OF

DATE 8-82

BY CHKD

Property of
Flood Control District of MC Library
Please Return to
2801 W. Durango
Phoenix, AZ 85009

STRUCTURAL DESIGN

INDEX

2 BRIDGE LAYOUT

5 SUPER STRUCTURE ANALYSIS & DESIGN

19 SLAB EDGE BEAM

30 SUBSTRUCTURE LOADS

36 ABUTMENT ANALYSIS & DESIGN

51 PIER ANALYSIS & DESIGN

SUBMITTED FOR REVIEW AND COMMENTS
BY JFF DATE AUG 25 1982

A APPENDIX
1. WORKING STRESS CONCRETE DESIGN

ENGINEERING DIVISION
LIBRARY
A118.610

910.001

SVERDRUP & PARCEL

JOB 8080 FCDMC ACDC

COMPUTATIONS FOR AZ CANAL BRIDGE AT THUNDERBIRD RD.

SHEET NO. 1 OF

DATE 8/82

BY CHKD

Property of
Flood Control District of MC Library
Please Return to
2801 W. Durango
Phoenix, AZ 85009

STRUCTURAL DESIGN

INDEX

2 BRIDGE LAYOUT

5 SUPER STRUCTURE ANALYSIS & DESIGN

19 SLAB EDGE BEAM

30 SUBSTRUCTURE LOADS

36 ABUTMENT ANALYSIS & DESIGN

51 PIER ANALYSIS & DESIGN

SUBMITTED FOR REVIEW AND COMMENTS
BY JTT DATE AUG 25 1982

A APPENDIX
1. WORKING STRESS CONCRETE DESIGN

ENGINEERING DIVISION
LIBRARY

SVERDRUP & PARCEL

JOB 8080 FCDMC / ACDC

SHEET NO. 2 OF

DATE 8/82

COMPUTATIONS FOR ARIZ. CANAL BRIDGE

BY RT CHKD

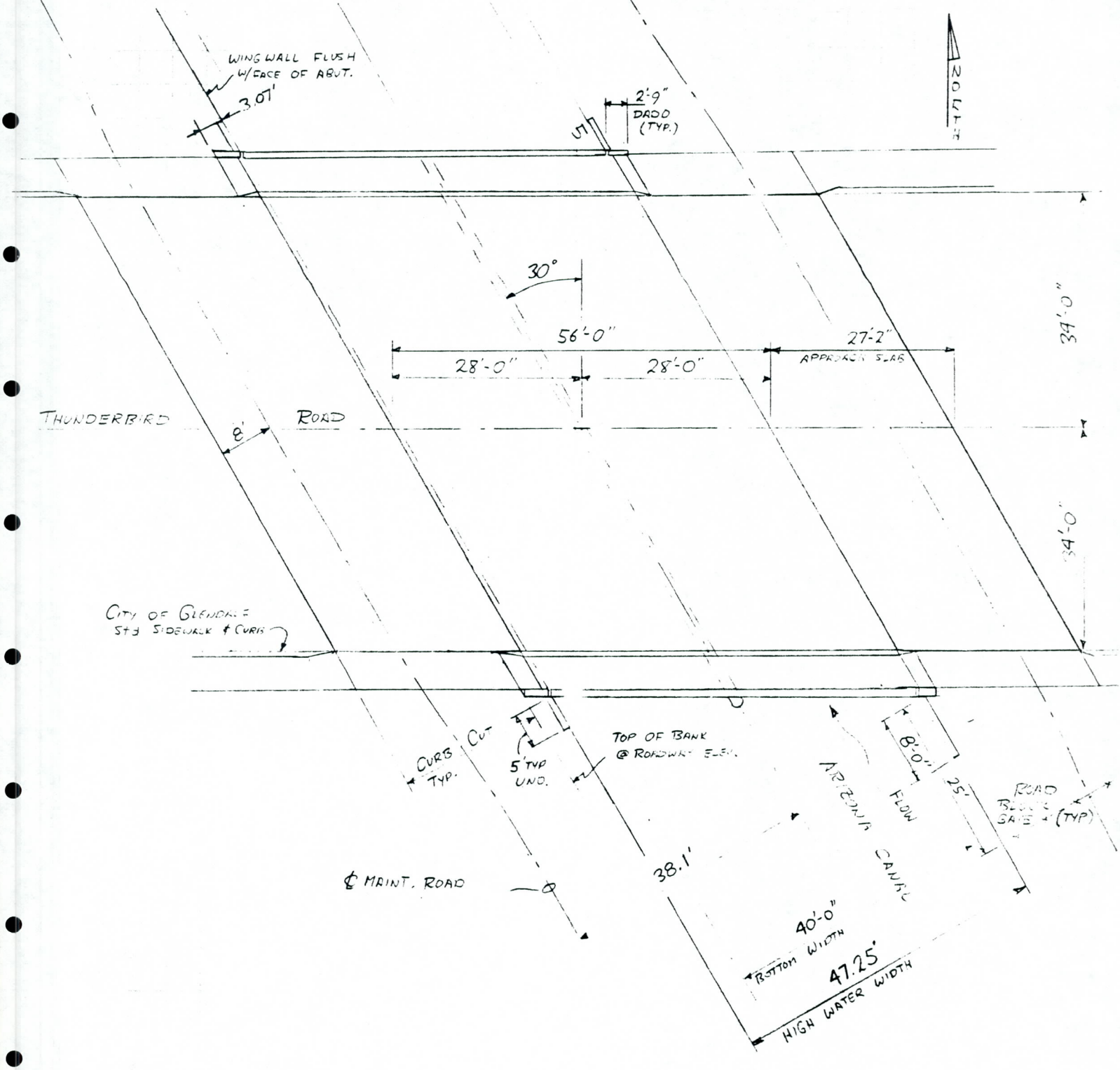

BRIDGE PLAN

SVERDRUP & PARCEL

JOB 8080 FCD MC / ACDC

COMPUTATIONS FOR AZ. CANAL BRIDGE

SHEET NO. 3 OF

DATE 8/82

BY RV CHKD

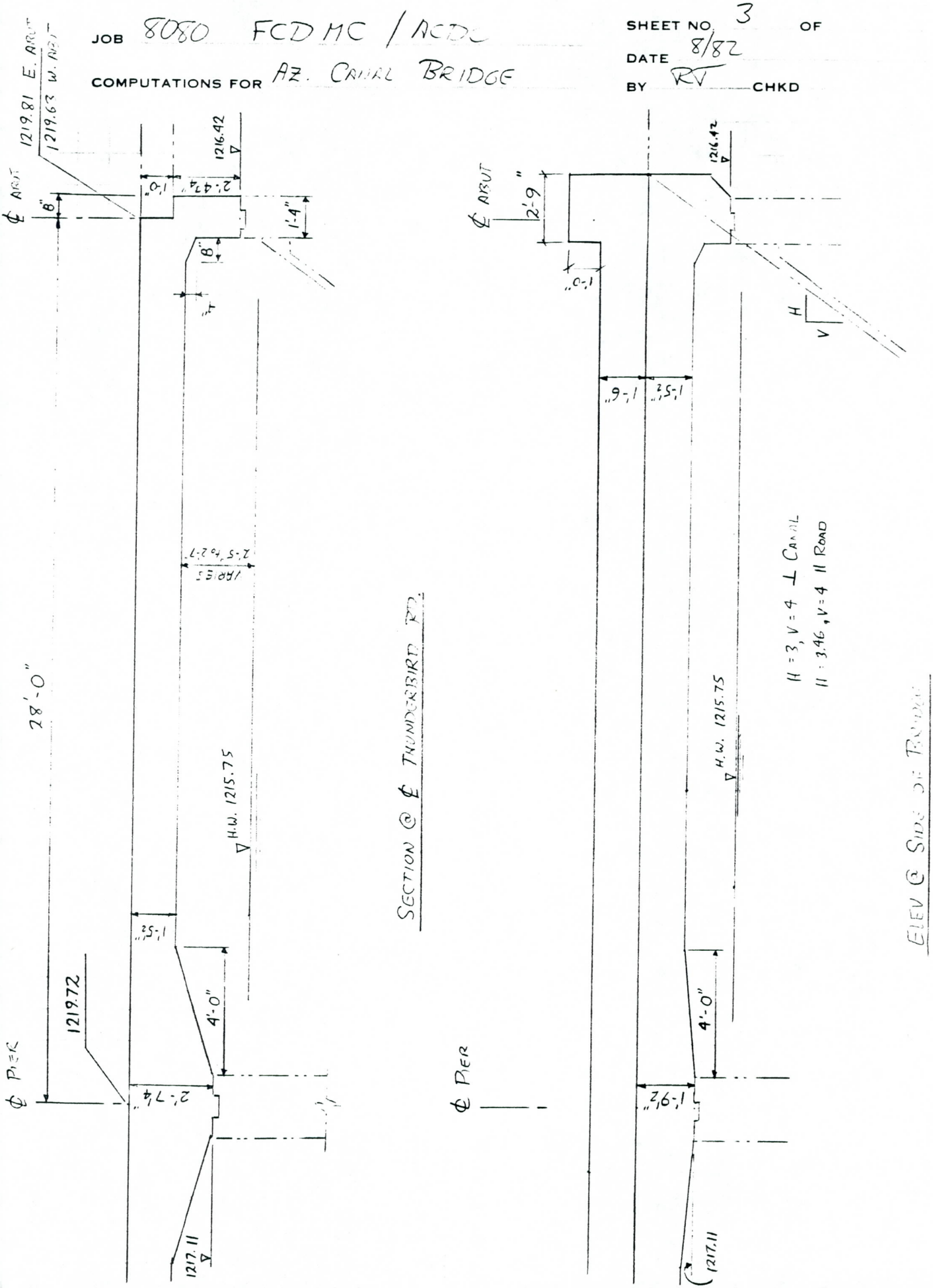

SVERDRUP & PARCEL

JOB FCDMC/ACDC

COMPUTATIONS FOR AZ. CANAL BRIDGE

SHEET NO. 4 OF

DATE 8/82

BY RV CHKD

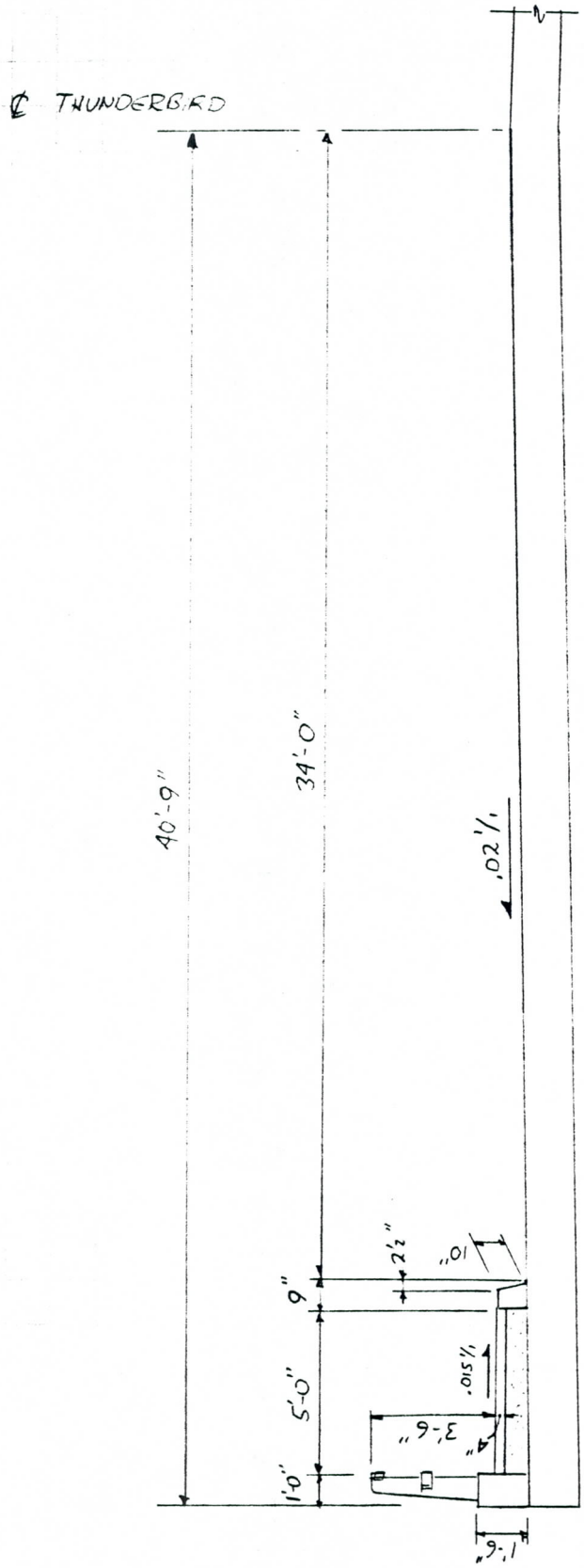

BRIDGE SECTION MID-SPAN

SVERDRUP & PARCEL

JOB 8080 FCDMC / ACDC

COMPUTATIONS FOR Az. Canal Bridge

SHEET NO. 5 OF

DATE 8/82

BY RY CHKD

SUPERSTRUCTURE DL

SLAB (17.5)(150)(81.5)/12 = 17,828 plf

÷81.5 = 219 psf

4" × 4' HAUNCHES AT PIERS 4" @ EDGE, 13¾" @ ℄

AVG THKNS = (4 + 13.75)/2 = 8.88"

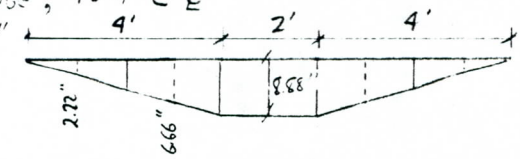

SUPERIMPOSED DL (SDL)

CONCRETE CURB	[(9 + 6.5)(10)/(2)(144)](2)(150)	=	161 plf
SIDEWALKS	(2)(4/12)(5)(150)	=	500
SAND BED	(2)(6/12)(5)(120)	=	600
HANDRAIL CURB	(2)(1.5)(1.0)(150)	=	450
HANDRAIL	EST @ 50 plf × 2	=	100
			1811 plf

÷81.5 = 22.2 psf

FUTURE WEARING SURFACE (FWS)

(25)(68) = 1700 plf

÷81.5 = 20.9 psf

SDL + FWS = 22.2 + 20.9 = 43.1 psf

× 81.5' = 3511 plf

ADDITIONAL DEAD LOAD FOR HAUNCHES @ PIER

AVG THICKNESS = 5.33" (FOR 5 ft.)

Wt = (5.33/12)(150) = 66.6 psf

SVERDRUP & PARCEL

JOB 8080 FCDMC / ACDC

COMPUTATIONS FOR Az. CANAL BRIDGE

SHEET NO. 6 OF

DATE 8/82

BY RV CHKD

LIVE LOAD

AASHTO ARTICLE 1.3.2 (C) CASE B, HS20-44

$E = 4 + 0.06S \leq 7$ ft.

$S = 28'$

$\therefore E = 4 + (.06)(28) = 5.68$ ft $(< 7 \checkmark)$

LIVE LOAD DISTRIBUTION FACTOR $= D.F. = \frac{1}{5.68} = 0.18$ WHEELS/FT. OF WIDTH

SIDEWALK

AASHTO 1.2.11(A) = 60 psf

EQUIVALENT SECTION PROPERTIES FOR COMPUTER PROGRAM INPUT

S&P COMPUTER PROGRAM P7300 WILL BE USED TO OBTAIN CONTINUOUS SPAN MOMENTS, SHEARS AND DEFLECTIONS

MINIMUM ELEMEMENT LENGTH $= L/20 = 28/20 = 1.40'$

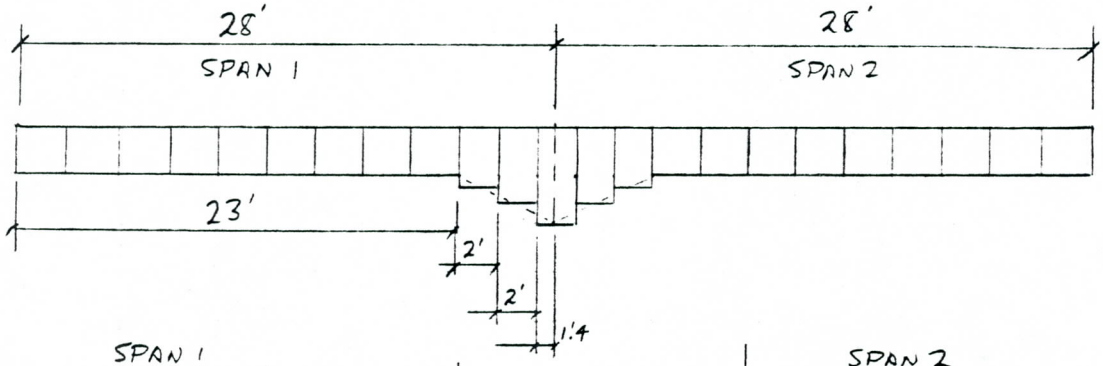

SPAN 1 RANGE	AVG THK	I of 1' STRIP	SPAN 2 RANGE
0-23'	17.5"	4913 in^4	5-28
23-24.8	19.50"	7411	3-5
24.8-26.60	23.49"	12962	1-3
26.6-28	26.25"	18,094	0-1

P7300 TWO TO EIGHT SPAN CONTINUOUS GIRDER, ANALYSIS AND DESIGN

SVERDRUP AND PARCEL

FORM I - FEB., 1

FORM ___ OF ___

JOB NO.	PROGRAM P7300
PROBLEM NO.	BY CHKD

CODE(1) (col. 4 5 6)

+1 PRINT DL MOMENT, SHEARS AND DEFLECTION

-1 SUPPRESS PRINTING

CODE(2) (col. 14 15 16)

+1 DESIGN (SERVICE LOAD OR LOAD FACTOR, SEE BELOW *)

+2 STRESS INVESTIGATION-FORM IIA MUST FOLLOW

-1 ANALYSIS ONLY

CODE(3) (col. 24 25 26)

+1 FORM IIA TO FOLLOW

-1 FORM IIB TO FOLLOW

CODE(4) (col. 34 35 36)

+1 PRINT STIFFNESS AND CARRY-OVER FACTORS

-1 SUPPRESS PRINTING

CODE(5) (col. 44 45 46)

+1 EXPANSION HINGE IN ONE OR MORE SPANS

-1 NO EXPANSION HINGES

CODE(6) (col. 54 55 56)

+1 PLOT MOMENT AND SHEAR ENVELOPES

-1 SUPPRESS PLOT

+2 DL MOMENTS, SHEARS, AND DEFLECTIONS ONLY. (1ST RUN FOR COMPOSITE GDR. ANALYSIS)

+3 TO BE USED FOR 2ND RUN FOR COMP. GDR. ANALY.

NOTE - FOR FORM IIB ONLY. 'LL COMPUTED'=0. FOR BOTH RUNS AND RUN BACK TO BACK.

(col. 61 62 63 64 65 66 67)

SDL FOR COMPOSITE GDR. USING FORM IIA WITH VARIABLE COMPOSITE I, OTHERWISE LEAVE BLANK AND ENTER UNDER FWS. (LBS/FT)

(col. 5 6)

NO. OF SPANS

(col. 15 16)

LIVE LOAD

H-15 =1.
HS-15=2.
H-20 =3.
HS-20=4.
HS-20 (INTERSTATE)=5.
SPECIAL LDG. (USE FORM IV) =6.

(col. 24 25 26)

LL COMPUTED

0.=VARIABLE NON-COMP. I
-1.=USING CONSTANT I
+1.=USING VARIABLE COMPOSITE I (WITH FORM IIA ONLY)

(col. 34 35 36 37 38 39 40)

'LLR'

NO. OF WHEELS FROM SIMPLE BM. DISTRIBUTION OF SLAB REACTIONS TO BE USED FOR SUBSTR. DESIGN

(col. 41 42 43 44 45 46 47)

SIDEWALK LL (LBS/FT)

(col. 51 52 53 54 55 56 57)

FWS (LBS/FT)

(col. 63 64 65)

$N=E_s/E_c$

(col. 68 69 70 71 72 73)

SLAB THICKNESS (INCHES)

(col. 75 76 77 78 79 8

DISTANCE FROM BOTTOM OF SLA TO TOP OF WEB (INCHES)

(col. 1 2 3 4 5 6)

SPAN NO. OF FIRST SPAN. A NEGATIVE NO. WILL COUNT SPAN NO. BACKWARDS.

(col. 19 14 15 16 17 18 19 20)

SLAB REINF. ACTIVE AT SUPPORT. IN^2/FT OF SLAB

(col. 24 25 26 27 28 29 30)

POSITION OF REINFORCING (INCHES FROM TOP OF SLAB)

(col. 31 32 33 34 35)

SHEAR D.F. DIVIDED BY D.F.

(col. 36 37 38 39 40)

FATIGUE CASE (1.0, 1.1, 2.0, OR 3.0) IF 1.0, 11 OR 12 KSI IS USED FOR CAT.C. IF 1.1, 9 OR 10 KSI IS USED FOR CAT.C.

(col. 41 42 43 44 45)

ENTER
1=REDUNDANT STRUCTURE
2=NONREDUNDANT STRUCTURE
(SEE COMMENTARY FOR AASHTO ART.1.7.3.)

(col. 46 47 48 49 50)

ENTER
1=ONE LANE BRIDGE
2=MULTILANE BRIDGE

(col. 55 56 57 58 59 60)

F'_c (KSI)

ENTER ONLY IF LOAD FACTOR DESIGN IS DESIRED, OTHERWISE LEAVE BLANK.

TWO TO EIGHT SPAN CONTINUOUS GIRDER

ANALYSIS PROGRAM 7300

Input Form IIB

80-COLUMN CARD PUNCH FORMAT

SVERDRUP & PARCEL

JOB _____ DATE _____ BY _____ CHKD _____

SHEET 2 OF 3 _____ CARDS ON THIS SHEET

SPAN LENGTH ft.	D.F.	D.L. lbs/ft
.	.	.

RANGE	I in^4
.	.
.	.
.	.
.	.
.	.
.	.
.	.

SPAN #

D.F. = Distribution factor. The fraction of the wheel load per AASHO.

RANGE: Distance in feet from start of span to change in moment of inertia. Must be greater than 1/20 span and changes in range must be greater than 1/20 span. Last range value must equal span length.

SPAN LENGTH ft.	D.F.	D.L. lbs/ft
.	.	.

RANGE	I in^4
.	.
.	.
.	.
.	.
.	.
.	.
.	.

SPAN #

SPAN LENGTH ft.	D.F.	D.L. lbs/ft
.	.	.

RANGE	I in^4
.	.
.	.
.	.
.	.
.	.
.	.
.	.

SPAN#

TWO TO EIGHT SPAN CONTINUOUS GIRDER

PROGRAM 7300

Input Form III

80-COLUMN CARD PUNCH FORMAT

SVERDRUP & PARCEL

JOB _____ DATE _____ BY _____ CHKD _____

SHEET 3 OF 3 ____ CARDS ON THIS SHEET

HINGE & additional D.L. CARDS (1 req'd for each Span)

H1 (ft)	H2 (ft)	X1 (ft)	X2 (ft)	W1 (lbs/ft)	W2 (lbs/ft)	
.	.	.	.	.	.	SPAN 1
.	.	.	.	.	.	SPAN 2
.	.	.	.	.	.	SPAN 3
.	.	.	.	.	.	SPAN 4
.	.	.	.	.	.	SPAN 5
.	.	.	.	.	.	SPAN 6
.	.	.	.	.	.	SPAN 7
.	.	.	.	.	.	SPAN 8

NOTE: If all values are zero, it is only necessary to enter 0. in H1.

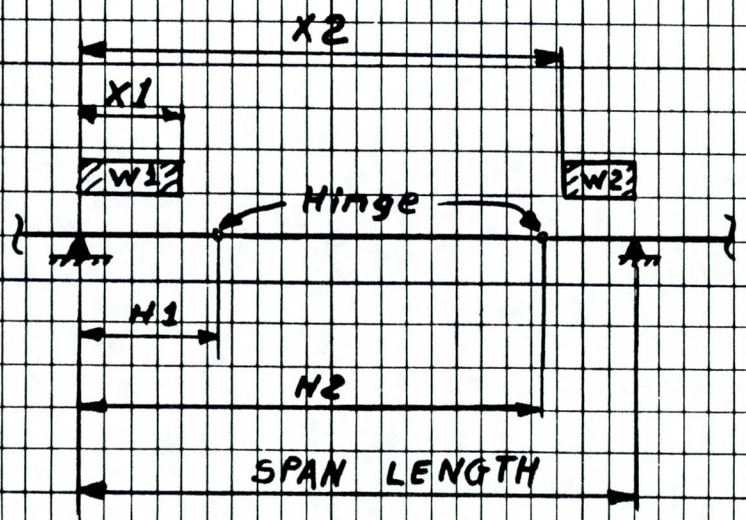

80-COLUMN CARD PUNCH FORMAT

SVERDRUP & PARCEL

JOB 8080 FCDMC

DATE 8/82

BY RJ CHKD

SHEET 10 OF

13 CARDS ON THIS SHEET

```
JOB NO. 8080  FCDMC/ACDC - ARIZONA CANAL BRIDGE                    PROGRAM P7300
PROBLEM NO. 1 - THUNDERBIRD ROAD                                   BY: RDT    CHKD: JFF
   1.      -1.      -1.      -1.      -1.      -1.      0.
   2.       4.       0.      .18      60.      20.9     1.       0.       0.
   1.       0.       0.      1.       0.       0.       0.       0.
  28.       .18      219.
  23.      4913.
  24.8     7411.
  26.6    12962.
  28.     18094.
99999.      .18      219
   0.       0.       0.      23.      0.       66.6
   0.       0.       5.      0.       66.6     0.
```

SVERD... & PARCEL AND ASSOCIATES, INC. 10:20 AUG 12,'82 PAGE

JOB NO. 8080 FCDMC/ACDC - ARIZONA CANAL BRIDGE PROGRAM P7300

PROBLEM NO. 1 - THUNDERBIRD ROAD BY: RDT CHKD: JFF

****

INPUT DATA

****

CODE(1)	CODE(2)	CODE(3)	CODE(4)	CODE(5)	CODE(6)
1.0000	-1.0000	-1.0000	-1.0000	-1.0000	-1.0000

NO. SPANS	LIVE LOAD	L.L.C.	L.L.R.	L.L.SDWK.	FWS.+(SDL)	N=ES/EC	SLAB THCK.	DIST.SLAB TO WEB
2.0000	4.0000	0.0000	0.1800	60.0000	20.9000	1.0000	0.0000	0.0000

WORKING LOAD DESIGN

SLAB REBARS INCL. IN COMP. DESIGN AT SUPP.= 0.000 IN2/FT. AT 0.000 INCH FROM TOP OF SLAB

RATIO SHEAR D.F./D.F.= 1.00 REDUNDANT STRUCTURE ASSUMED

MULTILANE BRIDGE ASSUMED

SPAN LENGTH	D.F.	DL.(SDL)	EFF.SLAB WIDTH	
28.0000	0.1800	219.0000	0.0000	0.0000

RANGE	I
23.00	4913.0
24.80	7411.0
26.60	12962.0
28.00	18094.0

SPAN LENGTH	D.F.	DL.(SDL)	EFF.SLAB WIDTH	
99999.0000	0.1800	219.0000	0.0000	0.0000

H1	H2	X1	X2	W1	W2
0.0000	0.0000	0.0000	23.0000	0.0000	66.6000
0.0000	0.0000	5.0000	0.0000	66.6000	0.0000

JOB NO. 8080 FCDMC/ACDC - ARIZONA CANAL BRIDGE PROGRAM P7300

PROBLEM NO. 1 - THUNDERBIRD ROAD BY: RDT CHKD: JFF

NUMBER OF SPANS 2

SPAN LENGTHS 28.00 99999.00

NOTE, 99999.00 INDICATES SYMMETRICAL SPANS

DEAD LOAD MOMENTS(FT-KIPS) AND SHEARS(KIPS) AT TENTH POINTS

SPAN 1

POINT	MOMENT	SHEAR
0	0.0	2.1
1	5.1	1.5
2	8.4	0.9
3	10.0	0.3
4	9.9	-0.3
5	8.1	-1.0
6	4.6	-1.6
7	-0.6	-2.2
8	-7.6	-2.8
9	-16.4	-3.6
10	-27.5	-4.4

SVERDRUP & PARCEL AND ASSOCIATES, INC. 10:20 AUG 12,'82 PAGE

JOB NO. 8080 FCDMC/ACDC - ARIZONA CANAL BRIDGE PROGRAM P7300

PROBLEM NO. 1 - THUNDERBIRD ROAD BY: RDT CHKD: JFF

DEAD LOAD DEFLECTIONS(INCHES) AT TENTH POINTS

POINT	DEFLECTION
SPAN 1	
0	0.00
1	0.00
2	0.00
3	0.01
4	0.01
5	0.01
6	0.00
7	0.00
8	0.00
9	0.00
10	0.00

SVERD. . & PARCEL AND ASSOCIATES, INC. 10:20 AUG 12,'82 .AGE

JOB NO. 8080 FCDMC/ACDC - ARIZONA CANAL BRIDGE PROGRAM P7300

PROBLEM NO. 1 - THUNDERBIRD ROAD BY: RDT CHKD: JFF

MAXIMUM LIVE LOAD MOMENTS(FT-KIPS)AT TENTH POINTS

POINT	POSITIVE SDK LL	NEGATIVE SDK LL	LANE LOAD INCL.IMP. POSITIVE	LANE LOAD INCL.IMP. NEGATIVE	TRUCK LOAD INCL.IMP. POSITIVE	TRUCK LOAD INCL.IMP. NEGATIVE	FWS.+(SDL)
SPAN 1							
1	1.8	-0.4	7.3	-1.2	12.0	-1.8	0.5
2	3.0	-0.7	12.5	-2.4	19.4	-3.6	0.8
3	3.8	-1.1	15.6	-3.5	22.8	-5.5	1.0
4	4.2	-1.5	16.8	-4.7	22.9	-7.3	0.9
5	4.0	-1.8	16.3	-5.9	19.9	-9.1	0.8
6	3.4	-2.2	14.2	-7.1	19.7	-10.9	0.4
7	2.4	-2.6	10.8	-8.2	15.6	-12.8	-0.1
8	1.0	-3.1	6.6	-10.2	8.5	-14.6	-0.7
9	0.2	-4.7	3.1	-15.8	0.0	-18.3	-1.6
10	0.0	-7.3	0.0	-23.5	0.0	-26.3	-2.6

SVERDRUP & PARCEL AND ASSOCIATES, INC. 10:20 AUG 12,'82 PAGE

JOB NO. 8080 FCDMC/ACDC - ARIZONA CANAL BRIDGE PROGRAM P7300

PROBLEM NO. 1 - THUNDERBIRD ROAD BY: RDT CHKD: JFF

LIVE LOAD SHEARS(KIPS) AT TENTH POINTS

	POINT	FWS.+(SDL)	POSITIVE SIDEWALK	NEGATIVE SIDEWALK	POS.LIVE LOAD+IMP.	NEG.LIVE LOAD+IMP.	LEFT SUPPORT REACTIONS(KIPS) ONE FULL LANE WIDTH NO IMPACT LANE	TRUCK	GIRDER REACT. INCL.IMP.(L.L.R) LANE	TRUCK
SPAN	1						33.6	44.2	3.9	5.2
	0	0.2	0.7	-0.1	5.2	-0.2				
	1	0.1	0.6	-0.1	4.2	-0.6				
	2	0.1	0.4	-0.2	3.4	-1.0				
	3	0.0	0.3	-0.2	2.6	-1.5				
	4	0.0	0.2	-0.3	1.9	-1.9				
	5	-0.1	0.1	-0.4	1.3	-2.4				
	6	-0.1	0.1	-0.5	1.0	-3.2				
	7	-0.2	0.0	-0.6	0.6	-4.0				
	8	-0.3	0.0	-0.8	0.4	-4.8				
	9	-0.3	0.0	-0.9	0.2	-5.4				
	10	-0.4	0.0	-1.1	0.0	-6.1				
SPAN	2						49.5	61.6	5.8	7.2

SVERDRUP & PARCEL

JOB 8080 FCDMC / ACDC

SHEET NO. 16 OF

DATE 8/82

COMPUTATIONS FOR AZ. CANAL BRIDGE

BY RT CHKD

BENDING MOMENT PER FT OF SLAB WIDTH (K-FT) *

SPAN	10TH POINT	DL	SDL	FWS	SDWK LL POS	SDWK LL NEG	VEH L+I POS	VEH L+I NEG	DESIGN MOMENT POS.	DESIGN MOMENT NEG.
1	0	0	0	0	0	0	0	0	0	0
	1	5.1	.5	.5	1.8	-.4	12.0	-1.8	18.1	
	2	8.4	.9	.8	3.0	-.7	19.4	-3.6	29.5	
	3	10.0	1.0	1.0	3.8	-1.1	22.8	-5.5	34.8	
	4	9.9	1.0	.9	4.2	-1.5	22.9	-7.3	34.7	
	5	8.1	.8	.8	4.0	-1.8	19.9	-9.1	29.6	-.2
	6	4.6	.5	.4	3.4	-2.2	19.7	-10.9	25.2	-5.8
	7	-0.6	-.1	-.1	2.4	-2.6	15.6	-12.8	14.9	-13.6
	8	-7.6	-.8	-.7	1.0	-3.1	8.5	-14.6	0.1	-23.7
	9	-16.4	-1.7	-1.6	.2	-4.7	3.1	-18.3		-38.0
	10									
2	0	-27.5	-2.8	-2.6	0	-7.3	0	-26.3		-59.2
	1	-16.4	-1.7	-1.6	.2	-4.7	3.1	-18.3		-38.0
	2	-7.6	-.8	-.7	1.0	-3.1	8.5	-14.6	0.1	-23.7
	3	-0.6	-.1	-.1	2.4	-2.6	15.6	-12.8	14.9	-13.6
	4	4.6	.5	.4	3.4	-2.2	19.7	-10.9	25.2	-5.8
	5	8.1	.8	.8	4.0	-1.8	19.9	-9.1	29.6	-.2
	6	9.9	1.0	.9	4.2	-1.5	22.9	-7.3	34.7	
	7	10.0	1.0	1.0	3.8	-1.1	22.8	-5.5	34.8	
	8	8.4	.9	.8	3.0	-.7	19.4	-3.6	29.5	
	9	5.1	.5	.5	1.8	-.4	12.0	-1.8	18.1	
	10	0	0	0	0	0	0	0	0	0

* NOTE: VEHICLE L+I GOVERNS OVER SIDEWALK LL IN ALL CASES. FWS INCLUDED ONLY IF IT CAUSES MOMENT TO BE MORE POSITIVE OR MORE NEGATIVE.

SVERDRUP & PARCEL

JOB 8080 FCDMC / ACDC

COMPUTATIONS FOR AZ CANAL BRIDGE

SHEET NO. 17 OF

DATE 8/82

BY RV CHKD

SLAB DESIGN

$f'_c = 4500$ psi $\quad f_y = 40{,}000$ psi $\quad n = 7.7$

$f_c = 1400$ psi $\quad f_s = 20{,}000$ psi

FOR BALANCED DESIGN: $k = .350 \quad \rho = .0123$

$j = .883 \quad n\rho = .0944$

$b = 12''$

d for TOP BARS $= t - 2 - \frac{1.27}{2} = t - 2.64''$ (ASSUMING # 5 BAR)

d for BOTTOM BARS $= 17.5 - 1 - \frac{1.27}{2} = 15.87''$

REQ'D A_s, TOP BARS $= \frac{M}{f_s j d} = \frac{12M}{(20{,}000)(.883)(t-2.64)} = \frac{M}{1.47(t-2.64)}$

BOTTOM BARS $= \frac{12M}{(20{,}000)(.883)(15.87)} = \frac{M}{23.35}$

ACTUAL $d = t - \text{COVER} - \frac{\text{BAR } \phi}{2}$

SVERDRUP & PARCEL

JOB 8080 FCDMC / ACOC

SHEET NO. 18 OF

DATE 8/82

COMPUTATIONS FOR AZ CANAL BRIDGE

BY RT CHKD

SPAN	10TH Pt.	NEGATIVE DESIGN M	SLAB t	REQD As	USE As	ACT. As	ACT d	$np = \frac{n\,As}{bd}$	$k = \sqrt{2np + (np)^2} - np$	$j = 1 - \frac{k}{3}$	$f_s = \frac{M \times 12}{As\,j\,d}$ KSI	$f_c = \frac{f_s}{n} \cdot \frac{k}{1-k}$ PSI
1	0		17.5		#6 @ 18"	.29	15.1"					
	1		17.5			.29						
	2		17.5			.29						
	3		17.5			.29						
	4		17.5		#10 @ 18"	.85	14.9					
	5	-.2	17.5	.01		.85		.037	.236	.921	.2	8.
	6	-5.8	17.5	.27		.85		.037	.236	.921	6.0	240.
	7	-13.6	17.5	.62		.85		.037	.236	.921	14.0	563.
	8	-23.7	17.5	1.82	#10 @ 9"	1.69	19.8	.073	.316	.895	12.7	759.
	9	-38.0	22.4*	1.31		1.69		.055	.281	.906	15.0	762.
2	10 / 0	-59.2	26.4	1.69		1.69	23.8	.046	.260	.913	19.3	881.
1		SYMMETRIC										
		POSITIVE DESIGN M										
1	0	0	17.5	0	#10 @ 9"	1.69	15.9	.068	.307	.898		
	1	18.1	17.5	.78							9.0	519.
	2	29.5	17.5	1.26							14.7	846.
	3	34.8	17.5	1.49							17.3	998.
	4	34.7	17.5	1.49							17.3	995.
	5	29.6	17.5	1.27							14.7	849.
	6	25.2	17.5	1.08							12.5	723.
	7	14.9	17.5	.64							7.4	427.
	8	0.1	17.5	.01	#10 @ 18"	.85	15.9	.026	.202	.933	.1	4.
	9		*									
2	10 / 0											
		SYMMETRIC										

* t AT HAUNCH COMPUTED As AVG. OF SLAB DEPTH AT PIER

$$t = 17.5 + 4" + \left(\frac{40.75}{2}\right)(.02)(12) = 26.4"$$

SVERDRUP & PARCEL

JOB 8080 FCDMC / ACDC

SHEET NO. 19 OF

DATE 8/82

COMPUTATIONS FOR AZ CANAL BRIDGE

BY RCY CHKD

SLAB EDGE BEAM

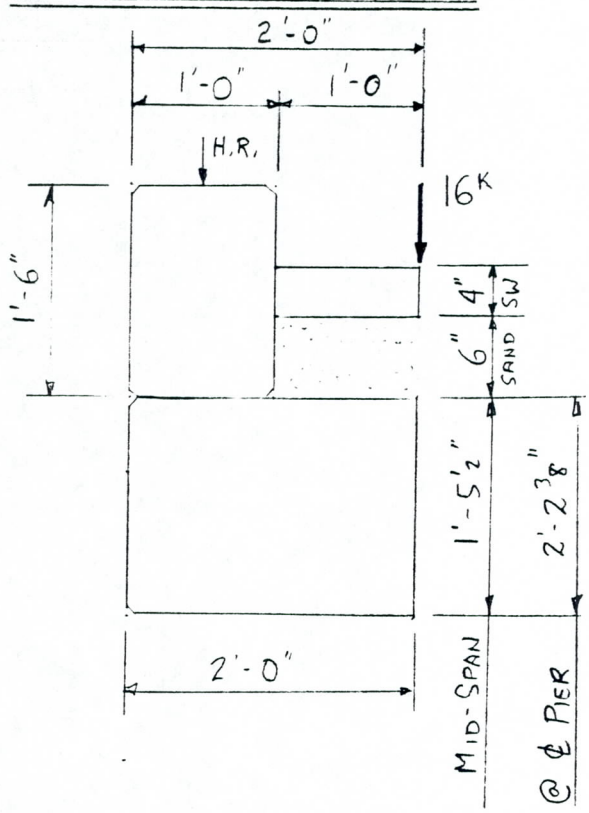

DEAD LOAD

NCDL:	SLAB	(17.5)(24)(0.15)/144	=	0.438 KLF	
SDL:	SIDEWALK	(12)(4)(0.15)/144	=	0.050	0.385
	SAND BED	(12)(6)(0.12)/144	=	0.060	
	H.R. CURB	(12)(18)(0.15)/144	=	0.225	
	H.R.	(SEE P. 5)	=	0.050	
FWS		(0.025 KSF)(1 ft.)	=	0.025	

LIVE LOAD (SEE P. 6)

E = 5.68' D.F. = 1/E = 0.18 WHEELS/FT.

FACTOR FOR EDGE BEAM (.5)(5.6')(12 in/ft)/24 = 1.400

SVERDRUP & PARCEL

JOB 8080 FCDMC/ACDC

SHEET NO. 20 OF

DATE 8/82

COMPUTATIONS FOR AZ. CANAL BRIDGE

BY RT CHKD

SLAB EDGE BEAM

OBTAIN DESIGN BENDING MOMENTS & SHEARS BY FACTORING TASK FROM COMPUTER PROGRAM ANALYSIS AS SUMMARIZED ON P. 16

POSITIVE MOMENT:

NCDL	$\frac{438}{219}$	$\times$ 10. $\frac{K\text{-}FT}{FT}$	= 20.0	38.5	82.6	102.6
SDL	$\frac{385}{22.2}$	$\times$ 1.	= 17.3			
FWS	$\frac{25}{20.9}$	$\times$ 1.	= 1.2			
L+I	$\frac{24}{12} \times 1.4$	$\times$ 22.9	= 64.1			

NEGATIVE MOMENT:

NCDL	$\frac{438}{219}$	$\times$ -27.5	= -55.0	-106.7	-125.3	-180.3
SDL	$\frac{385}{22.2}$	$\times$ -2.8	= -48.6			
FWS	$\frac{25}{20.9}$	$\times$ -2.6	= -3.1			
L+I	$\frac{24}{12} \times 1.4$	$\times$ -26.3	= -73.6			

SVERDRUP & PARCEL

JOB 8080 FCDMC / ACDC

COMPUTATIONS FOR AZ. CANAL BRIDGE

SHEET NO. 21 OF

DATE 8/82

BY RK CHKD

SLAB EDGE BEAM

TIES NOT SHOWN FOR CLARITY

NON-COMPOSITE SECTION FOR POSITIVE BENDING MOMENT

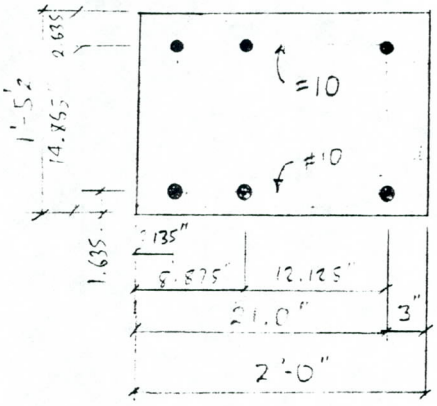

NON-COMPOSITE SECTION FOR NEGATIVE BENDING MOMENT

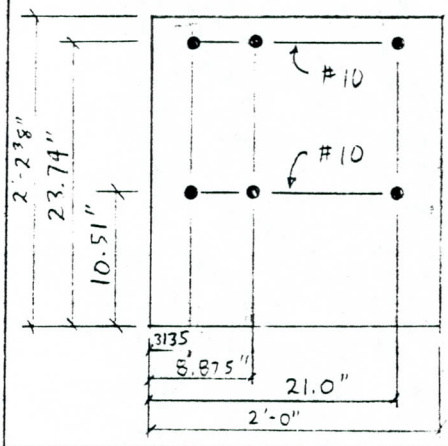

COMPOSITE SECTION FOR POSITIVE BENDING MOMENT

(DIMS. NOT SHOWN S/A ABOVE)

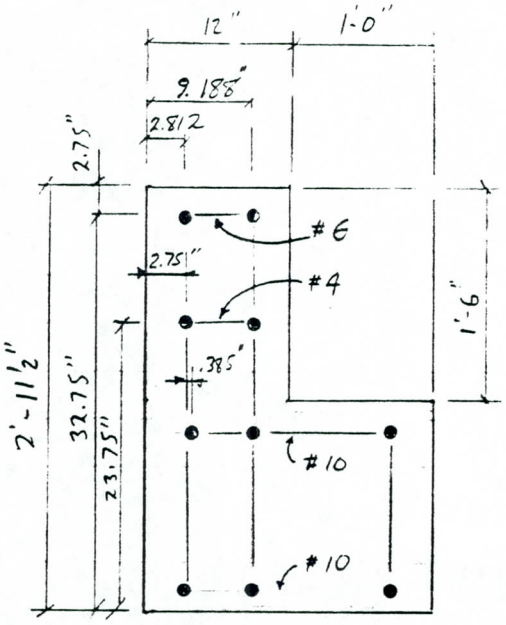

COMPOSITE SECTION FOR NEGATIVE BENDING MOMENT

(DIMS. NOT SHOWN S/A ABOVE)

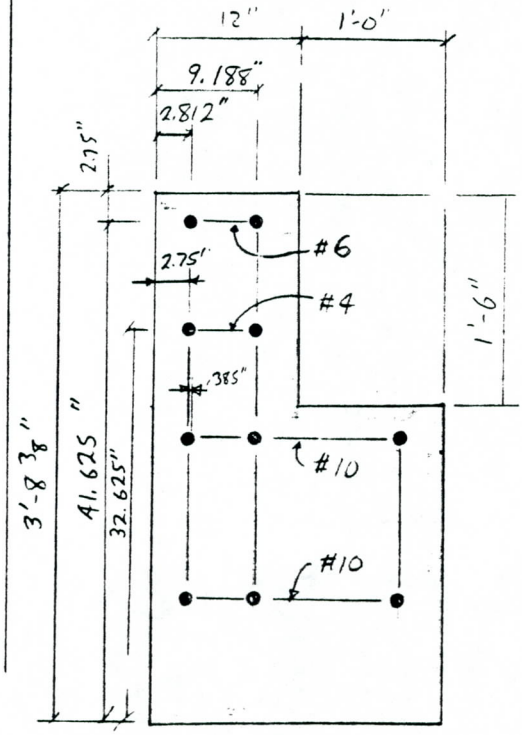

```
JOB NO. 8080  FCDMC - ARIZONA CANAL AT THUNDERBIRD ROAD      PROGRAM P7347
PROBLEM NO. 1 SLAB EDGE BEAM ANALYSIS - NON-COMP.POS.MOM.    BY: RDT  CHKD: JFF
          5          2          1          1
                                3
                0.         0.         0.        17.5       24.        17.5
               24.         0.         0.         0.
                1.27       3.125      1.635      3.         21.         1.635
                1.27       3.125     14.865      3.         21.        14.865
          1     0.         0.      -240.         7.7         1.9
JOB NO. 8080  FCDMC - ARIZONA CANAL AT THUNDERBIRD ROAD      PROGRAM P7347
PROBLEM NO. 2 SLAB EDGE BEAM ANALYSIS - NON-COMP.NEG.MOM.    BY: RDT  CHKD: JFF
          5          2          1          1
                                3
                0.        -8.875      0.        17.5       24.        17.5
               24.        -8.875      0.        -8.875
                1.27       3.125      1.635      3.         21.         1.635
                1.27       3.125     14.865      3.         21.        14.865
          2     0.         0.       660.         7.7         1.9
JOB NO. 8080  FCDMC - ARIZONA CANAL AT THUNDERBIRD ROAD      PROGRAM P7347
PROBLEM NO. 3 SLAB EDGE BEAM ANALYSIS - COMP.POS.MOM.        BY: RDT  CHKD: JFF
          7          4          1          1
                                3
                0.         0.         0.        35.5       12.        35.5
               12.        17.5       24.        17.5       24.         0.
                0.         0.
                1.27       3.125      1.635      3.         21.         1.635
                1.27       3.125     14.865      3.         21.        14.865
                 .2        2.75      23.75       2.          9.26      23.75
                 .44       2.812     32.688      2.          9.188     32.688
          3     0.         0.      -991.2        7.7         1.9
JOB NO. 8080  FCDMC - ARIZONA CANAL AT THUNDERBIRD ROAD      PROGRAM P7347
PROBLEM NO. 4 SLAB EDGE BEAM ANALYSIS - COMP.NEG.MOM.        BY: RDT  CHKD: JFF
          7          4          1          1
                                3
                0.        -8.875      0.        35.5       12.        35.5
               12.        17.5       24.        17.5       24.        -8.875
                0.        -8.875
                1.27       3.125      1.635      3.         21.         1.635
                1.27       3.125     14.865      3.         21.        14.865
                 .2        2.75      23.75       2.          9.26      23.75
                 .44       2.812     32.688      2.          9.188     32.688
          4     0.         0.      1503.6        7.7         1.9
[EOB]
*** Executing ***
```

22

JOB NO. 8080 FCDMC - ARIZONA CANAL AT THUNDERBIRD ROAD PROGRAM P7347

PROBLEM NO. 1 SLAB EDGE BEAM ANALYSIS - NON-COMP.POS.MOM. BY: RDT CHKD:

STEEL COORDINATES - INPUT

BAR AREA	XI	YI	NO OF BARS	XI+I	YI+I
1.270	3.125	1.635	3.000	21.000	1.635
1.270	3.125	14.865	3.000	21.000	14.865

LOADING	P	MYY	MXX
1	0.	0.	-240.

COORDINATES ARE IN INCHES ,STRESS IN KIPS/IN2.

TENSION IS NEGATIVE - COMPRESSION IS POSITIVE

5 ITERATIONS 0.000 X 0.051 Y -0.666 = STRESS

CONCRETE	X	Y	STRESS
	0.00	0.00	-0.67
	0.00	17.50	0.23
	24.00	17.50	0.23
	24.00	0.00	-0.67
	0.00	0.00	-0.67

STEEL	X	Y	STRESS
	3.13	1.63	-4.5
	21.00	1.63	-4.5
	3.13	14.86	1.4
	21.00	14.86	1.4

JOB NO. 8080 FCDMC - ARIZONA CANAL AT THUNDERBIRD ROAD PROGRAM P7347

PROBLEM NO. 2 SLAB EDGE BEAM ANALYSIS - NON-COMP.NEG.MOM. BY: RDT CHKD:

STEEL COORDINATES - INPUT

BAR AREA	XI	YI	NO OF BARS	XI+I	YI+I
1.270	3.125	1.635	3.000	21.000	1.635
1.270	3.125	14.865	3.000	21.000	14.865

LOADING	P	MYY	MXX
2	0.	0.	660.

COORDINATES ARE IN INCHES ,STRESS IN KIPS/IN2.

TENSION IS NEGATIVE - COMPRESSION IS POSITIVE

5 ITERATIONS 0.000 X -0.058 Y -0.108 = STRESS

CONCRETE

X	Y	STRESS
0.00	-8.88	0.41
0.00	17.50	-1.13
24.00	17.50	-1.13
24.00	-8.88	0.41
0.00	-8.88	0.41

STEEL

X	Y	STRESS
3.13	1.63	-1.6
21.00	1.63	-1.6
3.13	14.86	-7.5
21.00	14.86	-7.5

JOB NO. 8080 FCDMC - ARIZONA CANAL AT THUNDERBIRD ROAD PROGRAM P7347

PROBLEM NO. 3 SLAB EDGE BEAM ANALYSIS - COMP.POS.MOM. BY: RDT CHKD:

STEEL COORDINATES - INPUT

BAR AREA	XI	YI	NO OF BARS	XI+I	YI+I
1.270	3.125	1.635	3.000	21.000	1.635
1.270	3.125	14.865	3.000	21.000	14.865
0.200	2.750	23.750	2.000	9.260	23.750
0.440	2.812	32.688	2.000	9.188	32.688

LOADING	P	MYY	MXX
3	0.	0.	-991.

COORDINATES ARE IN INCHES ,STRESS IN KIPS/IN2.

TENSION IS NEGATIVE - COMPRESSION IS POSITIVE

6 ITERATIONS 0.000 X 0.041 Y -0.982 = STRESS

CONCRETE X	Y	STRESS
0.00	0.00	-0.98
0.00	35.50	0.48
12.00	35.50	0.48
12.00	17.50	-0.26
24.00	17.50	-0.26
24.00	0.00	-0.98
0.00	0.00	-0.98

STEEL X	Y	STRESS
3.13	1.63	-7.0
21.00	1.63	-7.0
3.13	14.86	-2.9
21.00	14.86	-2.9
2.75	23.75	0.0
9.26	23.75	0.0
2.81	32.69	5.3
9.19	32.69	5.3

JOB NO. 8080 FCDMC - ARIZONA CANAL AT THUNDERBIRD ROAD PROGRAM P7347

PROBLEM NO. 4 SLAB EDGE BEAM ANALYSIS - COMP.NEG.MOM. BY: RDT CHKD:

STEEL COORDINATES - INPUT

BAR AREA	XI	YI	NO OF BARS	XI+I	YI+I
1.270	3.125	1.635	3.000	21.000	1.635
1.270	3.125	14.865	3.000	21.000	14.865
0.200	2.750	23.750	2.000	9.260	23.750
0.440	2.812	32.688	2.000	9.188	32.688

LOADING	P	MYY	MXX
4	0.	0.	1504.

COORDINATES ARE IN INCHES ,STRESS IN KIPS/IN2.

TENSION IS NEGATIVE - COMPRESSION IS POSITIVE

6 ITERATIONS 0.000 X -0.071 Y -0.043 = STRESS

CONCRETE	X	Y	STRESS
	0.00	-8.88	0.59
	0.00	35.50	-2.58
	12.00	35.50	-2.58
	12.00	17.50	-1.29
	24.00	17.50	-1.29
	24.00	-8.88	0.59
	0.00	-8.88	0.59

STEEL	X	Y	STRESS
	3.13	1.63	-1.2
	21.00	1.63	-1.2
	3.13	14.86	-8.5
	21.00	14.86	-8.5
	2.75	23.75	-13.4
	9.26	23.75	-13.4
	2.81	32.69	-18.3
	9.19	32.69	-18.3

SVERDRUP & PARCEL

JOB 8080 FCDMC / ACDC

COMPUTATIONS FOR AZ. CANAL BRIDGE

SHEET NO. 27 OF

DATE 8/82

BY RY CHKD

SLAB EDGE BEAM

SUPERIMPOSE STRESSES FOR NCDL ON NON-COMPOSITE SECTION WITH STRESSES FOR SDL, FWS & L+I ON COMPOSITE SECTION

SIGN CONVENTION: ("−" = TENSION , "+" = COMPRESSION)

	Y COORDINATE (in.)	POSITIVE MOMENT STRESSES (KSI)			NEGATIVE MOMENT STRESSES (KSI)		
		NON-COMP LOADING #1	COMP. LOADING #3	TOTAL	NON-COMP LOADING #2	COMP LOADING #4	TOTAL
STEEL	32.56		5.3	5.3		-18.3	-18.3
	23.75					-13.4	-13.4
	14.86	1.4	-2.9	-1.5	-7.5	-8.5	-16.0
	1.63	-4.5	-7.0	-11.5	-1.6	-1.2	-2.8
CONCRETE	35.5		0.48	0.48			
	17.5	0.23	-0.26	-.03			
	0						
	-8.88				0.41	0.59	1.00

MAX TENSION STRESS IN STEEL REINF. = -18.3 KSI < 20.0 KSI ✓

MAX COMPRESSIVE STRESS IN CONCRETE = 1.0 KSI < 1.4 KSI ✓

USE ASSUMED REINF. PATTERN

SVERDRUP & PARCEL

JOB 8080 FCDMC / ACDC

COMPUTATIONS FOR AZ. CANAL BRIDGE

SHEET NO. 28 OF

DATE 8/82

BY RV CHKD

SLAB EDGE BEAM

SHEAR (USE VALUES FROM COMPUTER OUTPUT, PP. 11-15)

@ 10TH PT:

NCDL	$\frac{438}{219}$	× 4.4 K/FT	= 8.8 K	PER 24" STRIP
SDL	$\frac{382}{22.2}$	× 0.4	= 7.3	"
FWS	$\frac{25.0}{20.9}$	× 0.4	= 0.5	"
L+I	$\frac{24}{12}$	× 6.1	= 12.2	"
			28.8 K	per 24" STRIP

ASSUME SLAB TAKES SHEAR: $b = 24''$

d @ PIER $= 26.375 - 2 - \frac{1.27}{2} = 23.74$ in.

$$v = \frac{28{,}800}{(24)(23.74)} = 50.6 \text{ psi}$$

$$v_c = 0.95\sqrt{4500} = 64 \text{ psi} \quad (> 50.6 \checkmark)$$

NO SHEAR REINF REQ'D; HOWEVER, CONSTRUCT PEDESTRIAN RAIL PER ADOT STD DWG B-22.10 WITH #5 HOOPS @ 12"

CHECK SHEAR AT COLD JOINT DUE TO COMPOSITE LOADS

N.A. (LOADING #4) = .043/-.071 = -0.61"↓

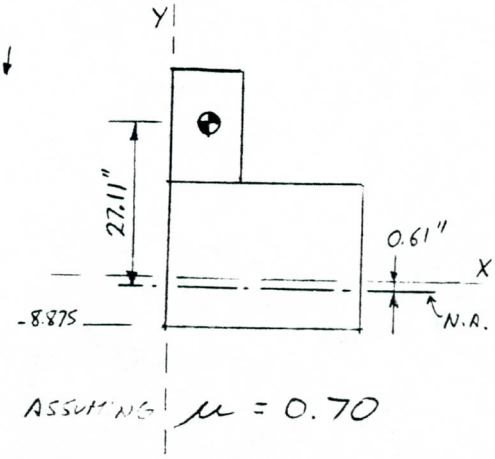

$V = 7.3 + 0.5 + 12.2 = 20^K$

$Q = (12)(18)(27.11) = 5855 \text{ in}^3$

$t = 12''$

$I_{NA} = 210{,}100 \text{ in}^4$ $\quad v = \frac{VQ}{It}$ $\quad 46.44$ PSI

SHEAR-FRICTION $V_L = (46.44)(12)(12) = 6688$ lbs.

CAP $= (2)(.31)(20{,}000)(0.7) = 8680$ lbs $(> 6688 \checkmark)$ ASSUMING $\mu = 0.70$

SVERDRUP & PARCEL

JOB 8080 FCDMC /RCDC

COMPUTATIONS FOR AZ. CANAL BRIDGE

SHEET NO. 29 OF

DATE 8/82

BY

CHKD

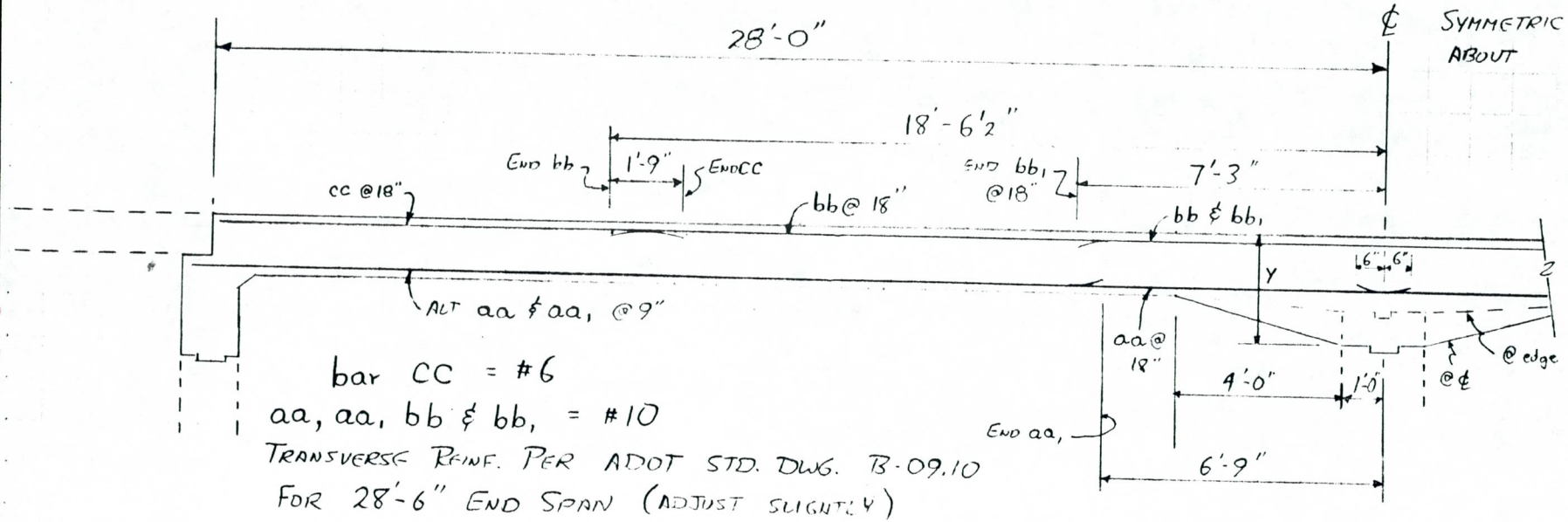

bar CC = #6

aa, aa₁ bb & bb₁ = #10

TRANSVERSE REINF. PER ADOT STD. DWG. B-09.10

FOR 28'-6" END SPAN (ADJUST SLIGHTLY)

Y = 2'-7¼" @ ℄

= 1'-9½" @ EDGE

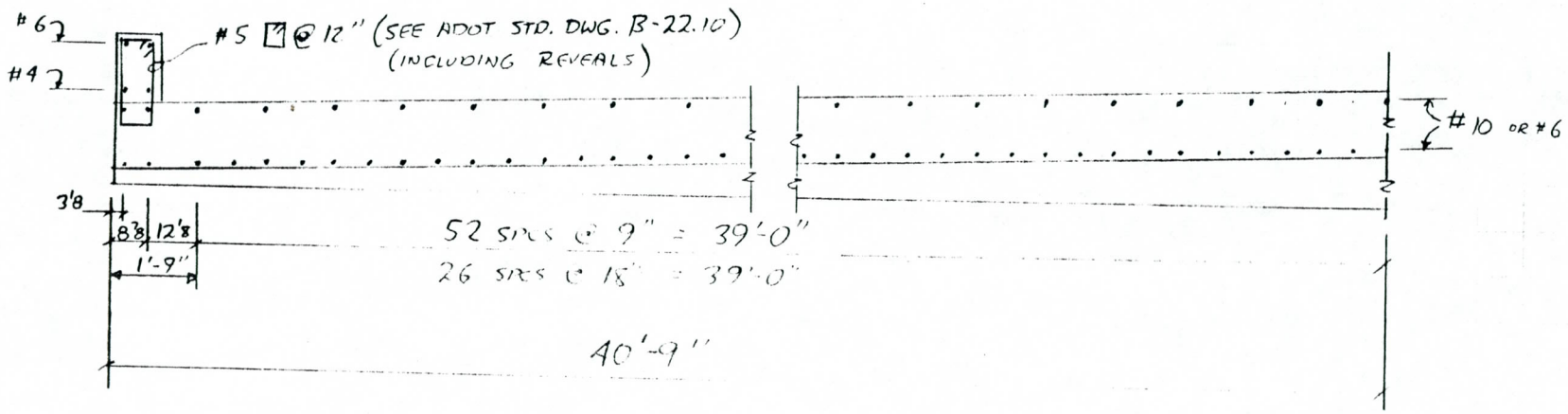

SVERDRUP & PARCEL

JOB 8080 FCDMC / ACOC

COMPUTATIONS FOR AZ. CANAL BRIDGE

SHEET NO. 30 OF

DATE 8/82

BY RV CHKD

LATERAL LOADS (SF)

FORCE OF STREAM CURRENT

$P = KV^2$ $V = 5.5$ fps

$K = 1.375$

$P = 1.375(5.5)^2 = 41.6$ psf

EFFECTIVE WIDTH $= 2' + 2(4) = 10'$

$W_{SF} = (41.6)(10) = 416$ plf

DEPTH OF WATER $= 1215.75 - 1210.92 = 4.83'$

$F_{SF} = (416)(4.83)/1000 = 2.01^K$

$M_{OT} = (2.01)(4.94) = 9.92^{K\text{-}FT}$

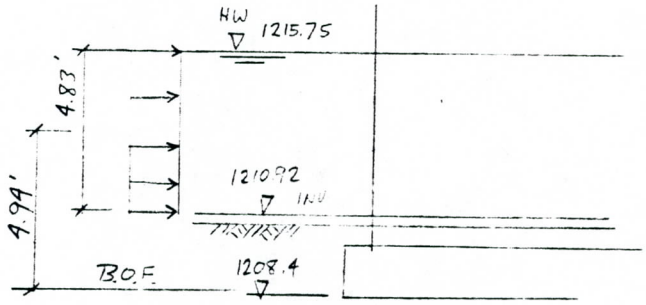

EARTH PRESSURE (E)

ACTIVE - 35 PCF

AT REST - 60 PCF

PASSIVE - 250 PCF

SLIDING - 0.4

SVERDRUP & PARCEL

JOB 8080 FCDMC / ACDC

COMPUTATIONS FOR AZ. CANAL BRIDGE

SHEET NO. 31 OF

DATE 8/82

BY RV CHKD

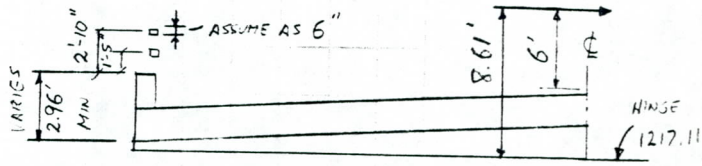

LATERAL LOADS

WIND LOADS (W, WL)

	STRUCTURE		ON LIVE LOAD
ON SUPERSTRUCTURE:	TRANSVERSE:	50 PSF	100 plf
	LONGITUDINAL:	12 PSF	40 plf

TRIB TO PIER

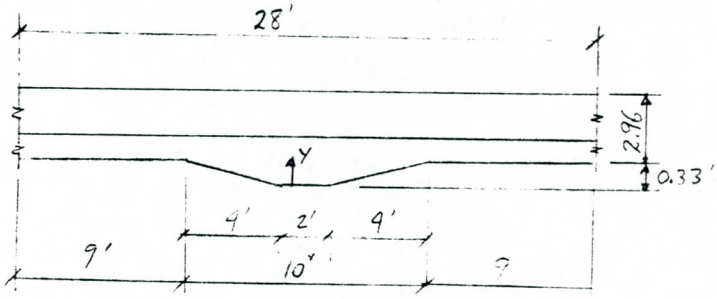

DETERMINE RESULTANT WIND FORCE ABOVE PIER HINGE

STRUCTURE

ITEM	AREA	Y	AY
HR	14.0 SF	4.71	65.94
HR	14.0 SF	6.13	85.75
STR. EDGE	82.9	1.81	150.33
TRAP. EDGE	2.0	0.20	0.41
	112.9		302.42

$\bar{Y} = 302.42/112.9 = 2.68'$ ABOVE HINGE

$W_{DT} = (112.9)(.050) = 5.64^K$

$W_{DL} = (112.9)(.012) = 1.35^K$

CONVERT ABOVE // & ⊥ TO PIER

$W_T = 5.64 \cos 30 + 1.35 \sin 30 = 5.56^K$

$W_L = 5.64 \sin 30 - 1.35 \cos 30 = 1.65^K$

ON LIVE LOAD

TO SUBSTRUCTURE

$WL_T = (0.10 \cos 30 + .04 \sin 30)28 = 2.98^K$

$WL_L = (0.10 \sin 30 - .04 \cos 30)28 \quad 0.43^K$

BOTH @ 8.61' ABOVE HINGE

WIND ON PIER

(ASSUME DRY CHANNEL) WIDTH = 2', L = 94.11', H = 6.33'

$W_P // = (2)(6.33)(.04) = 0.51^K$

$W_P \perp = (94.11)(6.33)(.04) = 23.83^K$

RESOLVE WIND INTO EQUIL LOAD AT ℄ CAP BM (1218.21) FOR // & TOP OF CAP BM (1219.31) FOR ⊥

MOMENTS ABOUT BOF ELEV. 1208.4

//: W $5.56 \times 11.39 = 63.33$; Wp $.51 \times 4.17 = 2.12$ } $= 6.67^K$ @ 9.81'; WL $2.98 \times 17.32 = 51.61$ } 11.93^K @ 9.81'

⊥: $1.65 \times 11.39 = 18.79$; $23.83 \times 4.17 = 99.37$ } 10.83^K @ 10.91'; $0.43 \times 17.32 = 7.45$ } 11.51^K @ 10.91'

SVERDRUP & PARCEL

JOB 8080 FCDMC / ACDC

COMPUTATIONS FOR AZ. CANAL BRIDGE

SHEET NO. 32 OF

DATE 8/82

BY RT CHKD

LATERAL LOADS

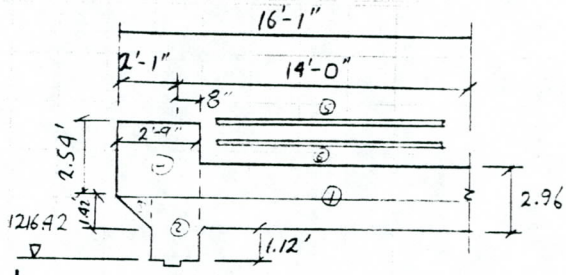

WIND TRIB. TO ABUTMENTS

ON STRUCTURE

ITEM	AREA	Y	AY
1 STR. EDGE	39.5	2.60	102.61
2 BK WALL	3.5	1.30	4.51
3 CORBEL	1.0	2.13	2.13
4 DADO	7.0	3.87	27.03
5 NR	6.7	6.82	45.69
6 NR	6.7	5.10	34.17
	64.4		216.14

$\bar{Y} = 216.14/64.4 = 3.36'$ ABOVE HINGE

$W_L = (64.4)(.050) = 3.22^k$

$W_T = (64.4)(.012) = 0.77$

CONVERT TO ∥ & ⊥ TO ABUT.

$W_T = 3.22 \cos 30 + .77 \sin 30 = 3.17^k$

$W_L = 3.22 \sin 30 - .77 \cos 30 = 0.94$

ON LIVE LOAD

TO SUBSTRUCTURE

$WL_T = (0.10 \cos 30 + 0.09 \sin 30)(16.08) = 1.71^k$

$WL_L = (0.10 \sin 30 - 0.04 \cos 30)(16.08) = 0.25^k$

T_{BOTH} @ 9.60 ft ABOVE HINGE

EARTHQUAKE (EQ) ASSUME C = 0.06, ZONE II, A = 0.22g, DEPTH 11'-80'

DL REACTIONS (FROM COMPUTER OUTPUT, pp 12-15) ½ PIER/ABUT

$W_{PIER} = (4.4\ DL + 0.4\ FWS + 0.4\ SDL)(2)(81.5) = 847.6^k + 113.7 = 961.3$

$W_{ABUT} = (2.1\ DL + 0.2\ FWS + 0.2\ SDL)(81.5) = 203.8^k + 149.6 = 353.4$

PIER EQ $= (.06)(1.0)(961.3) = 57.7^k$

ABUT EQ $= (.06)(1.0)(353.4) = 21.2^k$

EQ CAN OCCUR ⊥ OR ∥ TO PIER OR ABUTMENT, ~~ALSO CONSIDER ACTING SIMULTANEOUSLY~~

	PIER		ABUT	
DIR	∥	⊥	∥	⊥
EQ_T	44.1	25.5	10.6	6.1
EQ_L	25.5	44.1	6.1	10.6

SVERDRUP & PARCEL

JOB 8080 FCDMC / ACDC

COMPUTATIONS FOR AZ. CANAL BRIDGE

SHEET NO. 33 OF

DATE 8/82

BY RT CHKD

LATERAL LOADS

LONGITUDINAL FORCE (LF)

ASSUME 3 LANES @ 90%

$LF = (3)(0.9)(.05)\left[(0.64)(28) + 18\right] = 4.8^K$ PIER — HEIGHT ABOVE BANK 8.61'

$(14) = 3.6^K$ ABUT — 9.60'

VECTOR	PIER	ABUT
‖	2.4^K	1.8^K
⊥	4.2^K	3.2^K

CENTRIFUGAL FORCE (CF) (DURING DETOUR)

S = 25 MPH (DETOUR)

D = 26°46'25"

R = 214'

$C = .00117(25)^2(26.77) = 19.58\%$

2 TRAFFIC LANES $CF = (.1958)(2)(W$

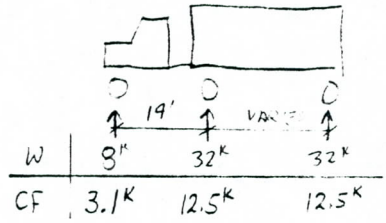

PIER, AXLE SPCNG = 14' ‖ TO PIER $CF = 12.5 + (3.1 + 12.5)/2 = 20.3^K$ @ 8.61' ↑ BANK

ABUT " " " " 7½° TO ABUT $CF_{\parallel} = \left[12.5 + (12.5/2)\right]\cos 7.5 = 18.59^K$ } @ 9.60' ↑

$CF_{\perp} = \left[12.5 + (12.5/2)\right]\sin 7.5 = 2.45^K$

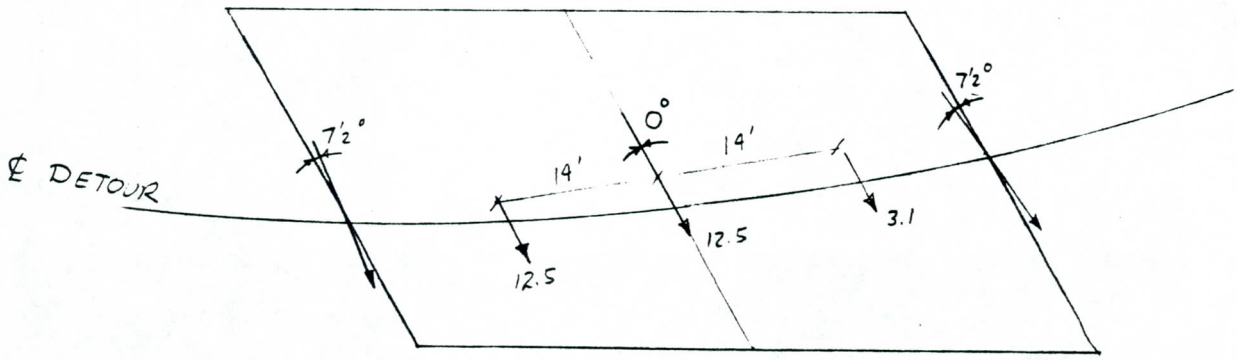

SVERDRUP & PARCEL

JOB 8080 FCDMC /ACDC

COMPUTATIONS FOR AZ. CANAL BRIDGE

SHEET NO. 34 OF

DATE 8/82

BY RV CHKD

DEAD LOAD FROM SUPERSTRUCTURE (D)

FROM COMPUTER OUTPUT, PP 12 & 15

P.		PIER	ABUTMENTS
12	DL (USE 2×R FOR PIER)	(2)(4.4)(81.5) = 717.2 K	(2.1)(81.5) = 171.2 K
15	FWS	(2)(0.4)(81.5) = 65.2 K	(0.2)(81.5) = 16.3 K
15	SDL USE (22.2/20.9) FWS	(2)(0.4)(81.5) = 69.3	(0.2)(81.5) = 17.3 K
		Σ = 851.7 K	Σ = 204.8 K
2	APPROACH SLAB (L = 27'-2") DUE TO LENGTH, ASSUME 1/3 BEARS ON ABUTMENT: (1)(0.15)[2(2.75)(5.0)+(68)(27.17)]/3		93.7
3	DL OF BACKWALL & CONCRETE ABOVE HINGE FOR ABUTMENTS		33.8
32	DADOS: [(2.75)(1.0)(1.0) + ... + (2.08)(1.54)(1.0) + (1.42)²(1.0)/2](0.15)2		2.1
	TOTAL DL ABOVE HINGES	851.7 K	334.4 K

LIVE LOAD & IMPACT FROM SUPER STRUCTURE (L + I)

15	TRUCK: (R)(5 lanes)(0.75) R_{PIER} = 61.6; R_{ABUT} = 44.2	231.0 K	165.8 K
	IMPACT (30% OF ABOVE)	69.3	49.7
	(L + I)	300.3 K	215.5 K
	LANE LOADING (TRUCK)	61.6	44.2
	IMPACT @ 30%	18.5	13.3
	LANE LOADING WITH IMPACT	80.1 K	57.5 K

SVERDRUP & PARCEL

JOB 8080 FCDMC / ACDC

COMPUTATIONS FOR AZ. CANAL BRIDGE

SHEET NO. 35 OF

DATE 8/82

BY RT CHKD

LIVE LOAD LANE POSITIONS

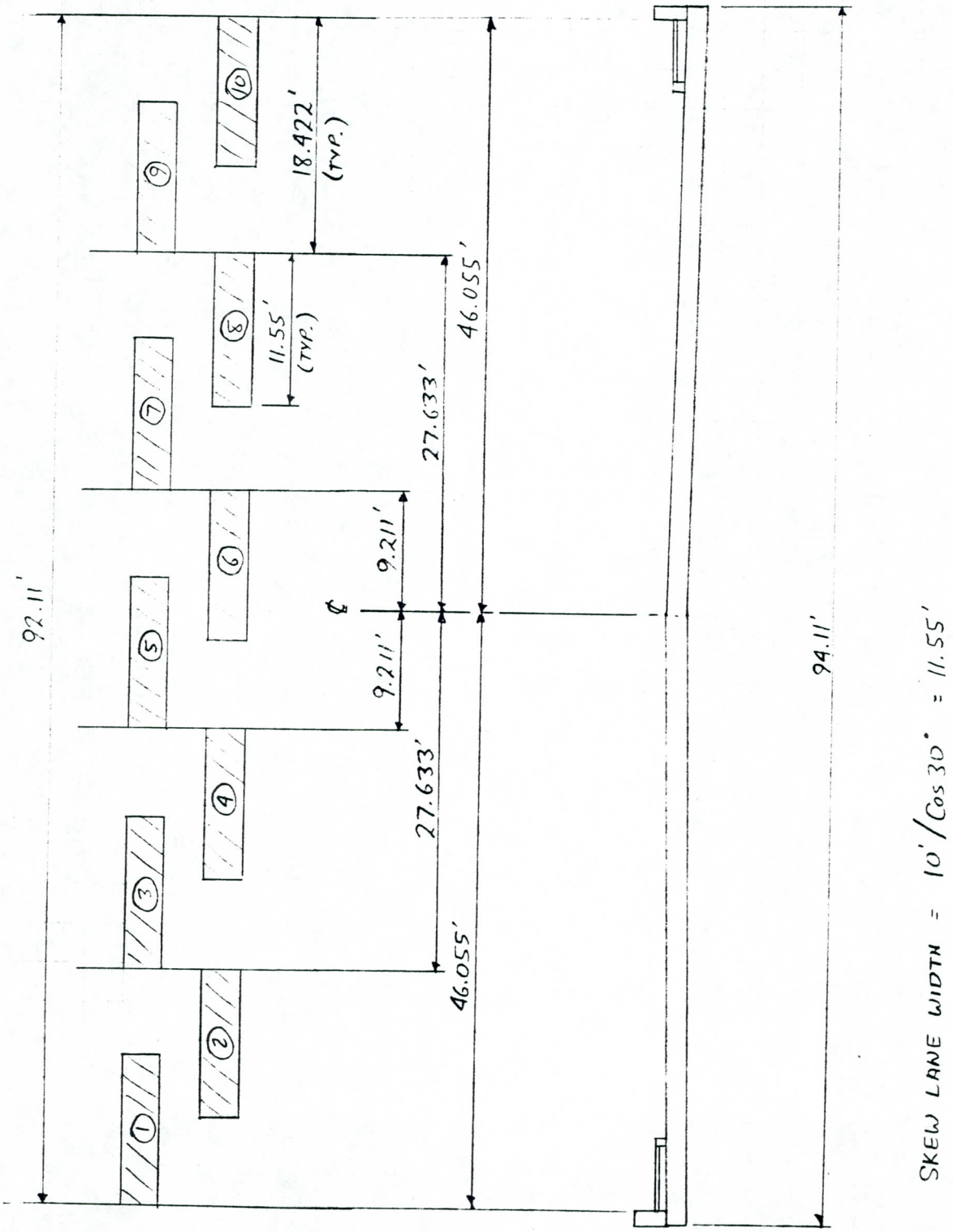

SKEW LANE WIDTH = 10'/Cos 30° = 11.55'

SVERDRUP & PARCEL

JOB 8080 FCDMC/ACDC

SHEET NO. 36 OF

DATE 8/82

COMPUTATIONS FOR AZ CANAL BRIDGE

BY RT CHKD

ABUTMENTS

LIVE LOAD + IMPACT FROM SUPERSTRUCTURE (L+I)

SEE P. 34

LANE COMBINATIONS & ECCENTRIC MOMENTS

SKEW LANE WIDTH = 10/COS 30° = 11.55'

DISTRIBUTION S/A PIER - SEE p. 35

LANE LL REACTION +I = (1.3)(44.2) = 57.46 K

UNIFORM LOAD = 57.46/11.55 = 4.98 KLF/LANE 1 & 2 LANES

3 LANES, REDUCED = (4.98)(.90) = 4.48 KLF/LANE

4 & 5 LANES, REDUCED = (4.98)(.75) = 3.73 KLF/LANE

LANES COMBOS WITH OPP. SIGN ON MOMENT NOT SHOWN

#	LANE COMBINATION	VERTICAL REACTION (L+I)	⊕ M_T MOMENT ABT. ℄	GOVERNING CASE FOR EA VERT. COMB.
1	1	57.46 K	-2315 K-FT	GOVERNS
2	2	57.46	-1920	
3	3	57.46	-1256	
4	4	57.46	-861	
5	5	57.46	-198	
6	1-3	114.92	-3571	GOVERNS
7	2-5	114.92	-2117	
8	4-5	114.92	-1059	
9	4-7	114.92	0	
10	4-6	114.92	-663	
11	2-6	114.92	-1722	
12	2-3-7	155.14	-2082	
13	2-5-7	155.14	-1130	
14	4-5-7	155.14	-178	
15	1-3-5	155.14	-3391	GOVERNS
16	1-3-5-7	172.38	-2180	GOVERNS
17	2-3-5-7	172.38	-1884	
18	1-3-5-7-9	215.48	-741	GOVERNS
19	2-3-5-7-9	215.48	-444	
20	1-3-5-8-10	215.48	-148	

USE #'s 1, 6, 15, 16 & 18

SVERDRUP & PARCEL

JOB 8080 FCDMC / ACDC

COMPUTATIONS FOR AZ. CANAL BRIDGE

SHEET NO. 37 OF

DATE 8/82

BY FV CHKD

ABUTMENTS

B.O.F ELEV = 1208.42 (2.5 ft. BELOW INV.)

℄ ROADWAY E. ABUT = 1219.81 } DESIGN BOTH FOR 1219.81

℄ ROADWAY W. ABUT = 1219.63

HINGE ELEV = 1216.42 (BOTH ABUTMENTS)

$P_{DL} = 334.4^K$ (SEE p. 34)

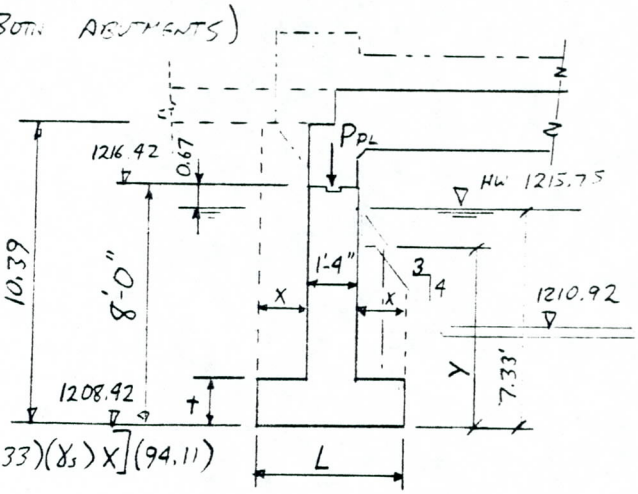

LENGTH OF ABUT. ALONG SKEW = 94.11'

$DL_{ABUT} = 94.11\left[(0.67)(1.33)(.15) + (7.33 - t)(1.33)(\gamma_c) + \ldots + tL\gamma_c\right]$

$X = (L - 1.33)/2$

$Y = 7.33 - 1.33X$

BKFL WT. REAR $= \left[(10.39 - 7.33)(0.12)X + (7.33)(\gamma_s)X\right](94.11)$

BKFL WT. FRONT $= YX\gamma_s(94.11)$

ACTIVE EARTH PRESSURE

$P_a = 35$ pcf (SOILS REPORT)

$P_A = (35)(10.39)^2/(2)(1000) = 1.89$ KLF

$M_{OT}\circlearrowleft = (1.89)(10.39)/3 = 6.54 \frac{K\text{-}FT}{FT}$

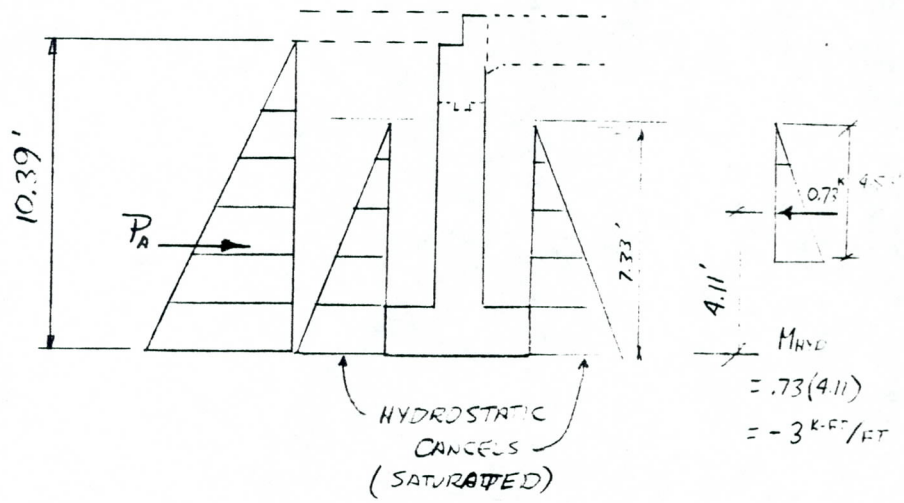

BUOYANCY (B)

ASSUME WATER TABLE AT HIGH WATER ELEV IN CANAL = 1215.75

CONCRETE: $\gamma_{BC} = (150 - 64.4)/1000 = 0.086$ KCF

SOIL: $\gamma_{BS} = (120 - 64.4)/1000 = 0.056$ KCF

SOIL, DRY = 120/1000 = 0.12 KCF

SOIL, SATURATED = 125/1000 = 0.125 KCF

(NOT BUOYANT)

ABUTMENTS (Cont.)

DEAD LOAD

TRY $L = 5'\text{-}6''$ (5.5) $t = 1'\text{-}4''$ (1.33')

$\therefore X = 2.083'$

& $Y = 4.556'$

DRY CONDITION: $\beta_B = 0$

$DL_A = 229.0^K$

REAR BKFL $= 244.5^K$

FRONT BKFL $= 107.2^K$

SATURATED CONDITION: $\beta_B = 1$

$DL_A = 136.6^K$

RR BKFL $= 152.5^K$

FR BKFL $= 50.0^K$

LOAD COMBINATIONS

PER AASHTO TBL. 1.2.22

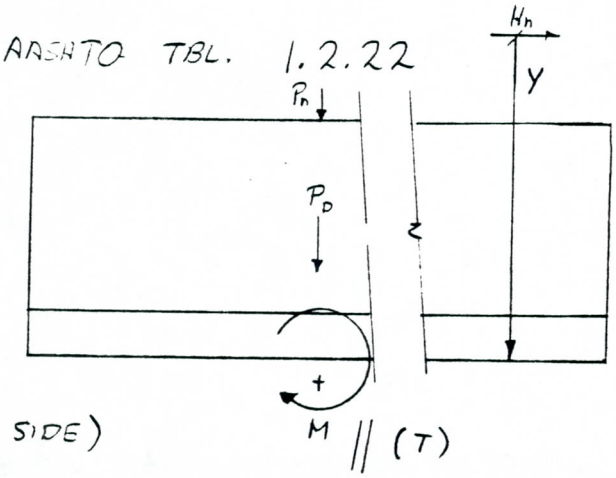

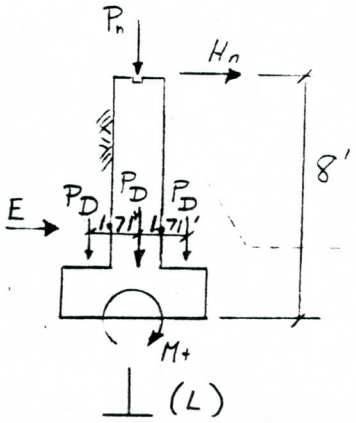

REDUCE LOADS FOR COMBINATIONS INTO EQ P, H & M FOR EA. LOAD CASE

SVERDRUP & PARCEL

JOB 8080 FCDMC / ACDC

SHEET NO. 39 OF

DATE 8/82

COMPUTATIONS FOR AZ. CANAL BRIDGE

BY RV CHKD

LOADS, SHEARS & MOMENTS TO ABUTMENTS (FULL WIDTH)

(D+B) SEE SHTS. 37 & 38

$P = 334.4 + 136.6 + 152.5 + 50.0 = 673.6^{K}$

$M_T = 0$

$M_L = (50.0 - 152.5)(1.71) = -175.1^{K\text{-}FT}$

(L+I) - SEE SHT. 36

(CF) SEE SHT. 33

$V_T = 18.59$

$M_T = 18.59\,(9.6+8) = +327.2^{K\text{-}FT}$

$V_L = 2.45$

$M_L = -2.45\,(8) = -19.6^{K\text{-}FT}$

(E) SEE SHT. 37

$V_L = (1.89)(94.11) = +177.9^{K}$

$M_L = (6.54)(94.11) = 615.5^{K\text{-}FT}$

E + HYDROSTATIC (NOT SATURATED)

$V_L = (1.89 - 0.73)(94.11) = +109.2^{K}$

$M_L = (6.54 - 3.00)(94.11) = 333.1^{K\text{-}FT}$

(SF) = 0.

(W) SEE SHT 32

$V_T = \pm 3.17^{K}$

$M_T = (3.17)(8 + 3.36) = \pm 36.0^{K\text{-}FT}$

$V_L = \pm 0.94^{K}$

$M_L = (0.94)(8) = \pm 7.5^{K\text{-}FT}$

(WL) SEE SHT. 32

$V_T = \pm 1.17^{K}$

$M_T = (1.17)(8 + 9.60) = 20.6^{K\text{-}FT}$

$V_L = \pm 0.25^{K}$

$M_L = (0.25)(8) = \pm 2.0^{K\text{-}FT}$

SVERDRUP & PARCEL

JOB 8080 FCDMC/ACDC

SHEET NO. 40 OF

DATE 8/82

COMPUTATIONS FOR AZ CANAL BRIDGE

BY RV CHKD

LOADS, SHEARS & MOMENTS TO ABUTMENTS

(LF) SEE SHT. 33

$V_T = \pm 1.8^K$

$M_T = 1.8(8+9.6) = \pm 31.7^{K\text{-}FT}$

$V_L = \pm 3.2^K$

$M_L = (3.2)(8) = \pm 25.6^{K\text{-}FT}$

(EQ) SEE SHT. 32

$V_T = \pm 21.2^K$

$M_T = 21.2\ (8.0 + 2) = \pm 212^{K\text{-}FT}$

$V_L = \pm 21.2^K$

$M_L = 21.2\ (8) = \pm 169.6^{K\text{-}FT}$

SVERDRUP & PARCEL

JOB 8080 FCDMC / ACDC

SHEET NO. 41 OF

DATE 8/82

COMPUTATIONS FOR AZ. CANAL BRIDGE

BY RV CHKD

FOOTING DESIGN - ABUTMENTS

GROUP LOADING COMBINATIONS

CASE	GROUP	%BUS	COMBINATION	P	M_T	M_L	V_T	V_L
	I	100	D + B	673.6	0	-175.1	0	0
			CF	0	327.2	-19.6	18.59	2.45
			$\beta_E(E)$ (USE $\beta_E = 1$)	0	0	615.5	0	+177.9
				673.6	327.2	420.8	18.59	180.4
1	I	100	ABOVE + L_1 (SHT. 36)	731.1	2642.2	420.8	18.6	180.4
2	I	100	ABOVE + L_6	788.5	3898.2	"	18.6	"
3	"	"	" L_{15}	828.7	3718.2	"	"	"
4	"	"	" L_{16}	846.0	2507.2	"	"	"
5	"	"	" L_{18}	889.1	1068.2	"	"	"
	II		D + B	673.6	0	-175.1	0	0
			E	0	0	615.5	0	+177.9
			W	0	36.0	7.5	3.2	0.9
6	II	125		673.6	36.0	447.9	3.2	178.8
~~6~~	~~II~~	~~125~~	~~ABOVE + L_1~~	~~668.0~~	~~2351.0~~	~~"~~	~~"~~	~~"~~
~~7~~	~~"~~	~~"~~	~~" L_6~~	~~725.4~~	~~3607~~	~~"~~	~~"~~	~~"~~
~~8~~	~~"~~	~~"~~	~~" L_{15}~~	~~765.6~~	~~3427~~	~~"~~	~~"~~	~~"~~
~~9~~	~~"~~	~~"~~	~~" L_{16}~~	~~782.9~~	~~2216~~	~~"~~	~~"~~	~~"~~
~~10~~	~~"~~	~~"~~	~~" L_{18}~~	~~826.0~~	~~777~~	~~"~~	~~"~~	~~"~~
	III	125	D + B	673.6	0	-175.1	0	0
			CF	0	327.2	-19.6	18.6	2.4
			$\beta_E E$ $\beta_E = 1$	0	0	615.5	0	177.9
			0.3 W	0	10.8	2.3	1.0	.3
			WL	0	20.6	2.0	1.2	.3
			LF	0	31.7	25.6	1.8	3.2
				673.6	390.3	450.7	22.6	184.1
7	III	125	ABOVE + L_1	731.1	2705.3	"	"	"
8	"	"	L_6	788.5	3961.3	"	"	"
9	"	"	L_{15}	828.7	3781.3	"	"	"
10	"	"	L_{16}	846.0	2570.3	"	"	"
11	"	"	L_{18}	889.1	1131.3	"	"	"

SVERDRUP & PARCEL

JOB 8080 FCDMC/ACDC

COMPUTATIONS FOR AZ CANAL BRIDGE

SHEET NO. 42 OF

DATE 8/82

BY RT CHKD

FOOTING DESIGN ABUTMENTS (Cont.)

GROUP LOADING COMBINATIONS								
CASE	GRP.	% BUS	COMBINATION	P	M_T	M_L	V_T	V_L
	VII	133	D + B	673.6	0	-175.1^k	0	0
			E	0	0	615.5	0	177.9
			EQ	0	212.0	169.6	21.2	21.2
12	VII	133		673.6	212.0	610.0^k	21.2	199.1
			D + B	673.6	0	-175.1	0	0
			E + Hyd	0	0	333.1	0	109.2
			EQ	0	212.0	-169.6	21.2	-21.2
13	VII	133		673.6	212.0	-11.6	21.2	88.0
	IV, V, VIII, IX, X		COVERED ABOVE EXCEPT FOR R+S+T WHICH IS ASSUMED TO BE ABSORBED BY FLEXIBILITY & ROTATION OF ABUTMENTS					

FOOTING ANALYSIS

LONGITUDINAL : B = 94.11' L = 4.33'

TRANSVERSE : L = 94.11' B = 4.33'

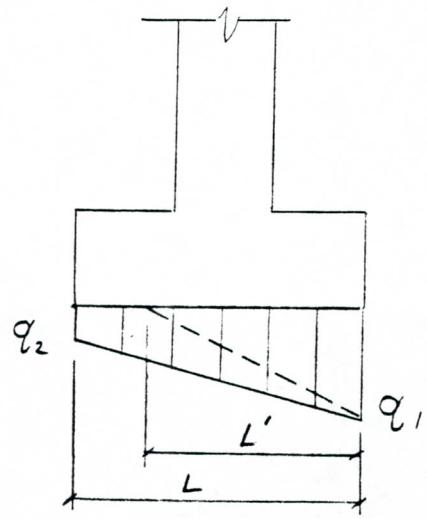

IF $V_L < 0$
PASSIVE PRESSURE WILL BE EFFECTIVE
(CASE 13 ONLY)
ASSUME $P_P = V$ AND DETERMINE OVERTURNING MOMENTS

SVERDRUP & PARCEL

JOB 8080 FCDMC

COMPUTATIONS FOR AZ. CANAL BRIDGE

SHEET NO. 43 OF

DATE 8/82

BY RV CHKD

FOOTING DESIGN ABUTMENTS

CASE	% BUS	$q_a = \% \times q_B$, $q_B = 4.0$ KSF	R	LONGITUDINAL			TRANSVERSE	
				q_1	q_2	L'	q_1	q_2
1	100	4.0	731.1	2.30	0.53	5.5 ✓	1.74	1.09
2	100	4.0	788.5	2.41	0.64	5.5 ✓	2.00	1.04
3	100	4.0	828.7	2.49	0.71	5.5 ✓	2.06	1.14
4	100	4.0	846.0	2.52	0.75	5.5 ✓	1.94	1.33
5	100	4.0	889.1	2.60	0.83	5.5 ✓	1.85	1.59
6	125	5.0	673.6	2.25	0.36	5.5 ✓	1.31	1.30
7	125	5.0	731.1	2.36	0.46	5.5 ✓	1.75	1.08
8	125	5.0	788.5	2.47	0.57	5.5 ✓	2.01	1.04
9	125	5.0	828.7	2.55	0.65	5.5 ✓	2.07	1.14
10	125	5.0	846.0	2.58	0.68	5.5 ✓	1.95	1.32
11	125	5.0	889.1	2.67	0.77	5.5 ✓	1.86	1.58
12	133	5.33	673.6	2.59	0.02	5.5 ✓	1.33	1.28
13	133	5.33	673.6	1.28	1.33	5.5 ✓	1.33	1.28

CHK CASES 9 & 11 FOR NO BUOYANCY

$P = 334.4 + 229.0 + 244.5 + 107.5 + LL = 915.4 + 155.1 = 1070.5$ LL_{15}

$915.4 + 215.5 = 1130.9$ LL_{18}

$M_L = (107.2 - 244.5)(1.71) - 19.6 + 615.5 + 2.3 + 2.0 + 25.6 = 391.02$

M_T = S/A BEFORE: CASE 9 = 3781.1 K-FT; CASE 11 = 1131.3 K-FT

9	125%	5.0 KSF	1070.5 K	2.89	1.24	5.5 ✓	2.53	1.60
11	125%	5.0 KSF	1130.9	3.01	1.36	5.5 ✓	2.32	2.05

MAX TOE PRESSURE (L) = 3.01 KSF (CASE 11, NO B)

MIN HEEL PRESSURE (L) = 0.02 KSF (CASE 12)

ABUTMENT FOOTING DESIGN

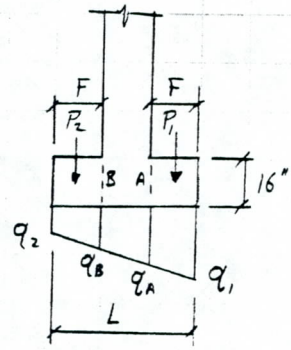

CHECK SHEAR @ FACE OF WALL (CONSERVATIVE)

P_1 P_2 - TOTAL OVERBURDEN FORCES (CONCRETE + SOIL)

$q_A = q_1 - [(q_1 - q_2)/L] F$

$q_B = q_2 + [(q_1 - q_2)/L] F$

$V_A = q_A F + (q_1 - q_A) F/2 - P_1$

$V_B = q_2 F + (q_B - q_2) F/2 - P_2$

$v_A = V_A / b d_1$

$v_B = V_B / b d_2$

$M_A = q_A F^2/2 + (q_1 - q_A) F^2/3 - P_1 F/2$

$M_B = q_2 F^2/2 + (q_B - q_2) F^2/6 - P_2 F/2$

REINF. FOR FLEXURE DETERMINED BY STD. WORKING STRESS METHODS (SEE APPENDIX)

$f_c = 1200$ psi $f_s = 20{,}000$ psi $n = 9$

f_c & f_s INCREASED PER % BUS FOR EACH CASE AS APPLICABLE

$d = 16 - 3 - .375 = 12.625''$ FOR BOTTOM REINF. ASSUMING # 6 BARS

$d = 16 - 2 - .25 = 13.75''$ FOR TOP REINF. ASSUMING # 4 BARS

$v_c = 0.95\sqrt{f_c'} = 0.95\sqrt{3000} = 52$ psi

ALL DESIGN BASED ON 1 ft WIDE STRIP

ABUTMENT

$L = 5.5'$

$F = 2.08'$

OVERBURDEN SOIL + CONCRETE (SEE SHT 38)

TOE: $P_1 = 107.2/94.11 + (2.08)(1.33)(0.15) = 1.56^K$ (D)

$P_1 = 50.0/94.11 + (2.08)(1.33)(0.086) = 0.77^K$ (D + B)

HEEL: $P_2 = 244.5/94.11 + (2.08)(1.33)(0.15) = 3.01^K$ (D)

$P_2 = 152.5/94.11 + (2.08)(1.33)(0.086) = 1.86^K$ (D+B)

SVERDRUP & PARCEL

JOB 8080 FCDMC /ACDC

SHEET NO. 45 OF

DATE 8/82

COMPUTATIONS FOR AZ CANAL BRIDGE

BY RT CHKD

ABUTMENTS

$^{N}_{B}$ = NO BUOYANCY

-M FOR TOP STEEL

CASE	OVERBURDEN		SOIL PRESSURES (KSF)				TOE SHEAR		HEEL SHEAR		TOE MOMENT		HEEL MOMENT		% BUS
	P_1 (K)	P_2 (K)	q_1	q_2	q_A	q_B	V_A(K)	v_A (psi)	V_B (K)	v_b (psi)	M_A (K-ft)	A_s	M_B (K-ft)	A_s	
			← SHT. 43 →												
1	0.77	1.86	2.30	0.53	1.63	1.20	3.32	21.9	0.64	3.9	3.70	0.18	-0.30	~	100
2			2.41	0.64	1.74	1.31	3.55	23.4	0.87	5.3	3.94	0.20	-0.06	~	100
3			2.49	0.71	1.82	1.38	3.72	24.5	1.02	6.2	4.11	0.21	0.09	~	100
4			2.52	0.75	1.85	1.42	3.78	25.0	1.10	6.7	4.18	0.21	0.18	~	100
5			2.60	0.83	1.93	1.50	3.95	26.1	1.27	7.7	4.36	0.22	0.35	~	100
6			2.25	0.36	1.53	1.08	3.17	20.9	0.38	2.3	3.56	0.14	-0.64	~	125
7			2.36	0.46	1.64	1.18	3.40	22.4	0.60	3.6	3.80	0.15	-0.42	~	125
8			2.47	0.57	1.75	1.29	3.63	23.9	0.83	5.0	4.04	0.16	-0.18	~	125
9			2.55	0.65	1.83	1.37	3.79	25.0	0.99	6.0	4.21	0.17	-0.01	~	125
9 $^{N}_{B}$	1.56	3.01	2.89	1.24	2.27	1.87	3.81	25.1	0.88	5.3	4.19	0.17	0.01	~	125
10	0.77	1.86	2.58	0.68	1.86	1.40	3.86	25.4	1.06	6.4	4.28	0.17	0.06	~	125
11	0.77	1.86	2.67	0.77	1.95	1.49	4.04	26.7	1.24	7.5	4.47	0.18	0.25	~	125
11 $^{N}_{B}$	1.56	3.01	3.01	1.36	2.39	1.99	4.06	26.8	1.13	6.8	4.46	0.18	0.27	~	125
12	0.77	1.86	2.59	0.02	1.62	0.99	3.61	23.8	0.21	1.3	4.11	0.15	-1.19	0.04	133
13	0.77	1.86	1.28	1.33	1.30	1.31	1.92	12.6	0.87	5.3	1.99	0.07	0.94	~	133

SVERDRUP & PARCEL

JOB 8080 FCDMC /ACDC

COMPUTATIONS FOR AZ CANAL BRIDGE

SHEET NO. 46 OF

DATE 8/82

BY RT CHKD

ABUTMENTS

BOTTOM REINF (SHT 45) MAX A_s = 0.22 in²/ft (CASE 5 @ 100%)

USE 1'3 × = 0.29 in²/ft

USE # 6 @ 16" (A_P = 0.33 in²/ft)

TOP REINF. MAX A_s = 0.04 in²/ft

USE 1'3 × = 0.05

USE # 4 @ 16." (A_P = 0.15 in²/ft)

SHEAR

@ 100% $V_c = .95\sqrt{3000} = 52$ psi (MAX v = 26.1 psi ✓)

@ 125% V_c = 65 psi (MAX v = 26.8 psi ✓)

@ 133% V_c = 69 psi (MAX v = 23.8 psi ✓)

ABUTMENT STEM WALL

FOR EARTH PRESSURE, ASSUME WALL 6.67 + 2.39 = 9.06' HIGH

HYDROSTATIC S/A SHT. 37

ALL APPLIED LOADS (P, H) S/A FOR FOOTING (MOMENT ARM 1.33' LESS)

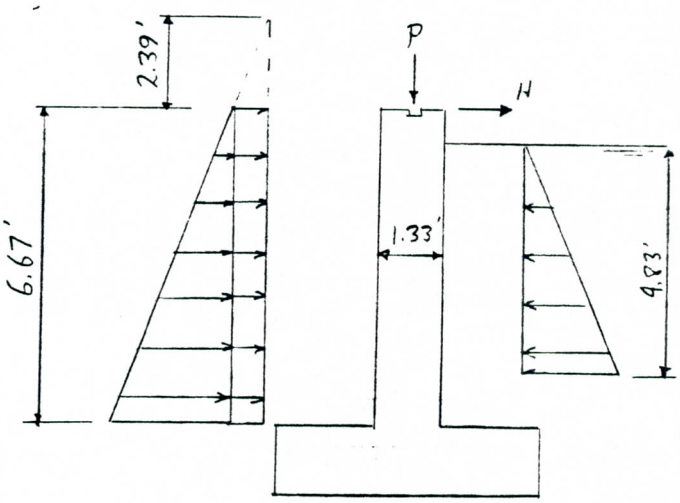

SVERDRUP & PARCEL

JOB 8060 FCDMC / ACDC

COMPUTATIONS FOR AZ CANAL BRIDGE

SHEET NO. 47 OF

DATE 8/82

BY RV CHKD

ABUTMENT STEM WALL — MOMENTS @ TOP OF FTG

(D) & (B) (SEE SHT. 37)

$(D) = (6.67)(1.33)(0.15) + 334.4/94.11 = 4.88^{KLF}$

$(D+B) = [(0.67)(0.15) + (6.0)(0.086)]1.33 + 3.55 = 4.37^{KLF}$

(L + I) SEE SHT 36 $\quad w = 57.46/11.55 = 4.97^{KLF}$

(CF) SEE SHT. 33

$V_L = 2.5/94.11 = 0.03^{KLF}$

$M_L = (2.5)(6.67)/94.11 = 0.18^{K\text{-}FT/FT}$

(E) SEE SHTS 37 & 47

$V_L = (.035)(9.06)^2/2 = 1.44^{KLF}$

$M_L = (.035)(9.06)^3/3 = 8.68^{K\text{-}FT/FT}$

(E + HYD)

$V_L = 1.44 - (.0624)(4.83)^2/2 = 0.71^{KLF}$

$M_L = 8.68 - [(.0624)(4.83)^2/2](4.83/3 + 1.17) = 6.66^{K\text{-}FT}$

(W) SEE SHT 32

$V_L = 0.94/94.11 = 0.01^{KLF}$

$M_L = (.01)(6.67) = 0.07^{K\text{-}FT/FT}$

(WL)

$V_L = 0.25/94.11 = .003^{KLF}$

$M_L = (.003)(6.67) = .02^{K\text{-}FT/FT}$

ABUTMENT STEM WALL

(LF) SEE SHT 33

$V_L = 3.2/94.11 = .04^{KLF}$

$M_L = (.04)(6.67) = 0.26^{K\text{-}FT/FT}$

(EQ) SEE SHT 32

$V_L = 21.2/94.11 = 0.23^{KLF}$

$M_L = (0.23)(6.67) = 1.50^{K\text{-}FT/FT}$

COMBINATIONS

GRP I (D+B) + (L+I) + CF + E

$P = 4.37 + 4.97 = 9.34^{KLF}$

$V_L = 0.03 + 1.44 = 1.47^{KLF}$

$M_L = 0.18 + 8.68 = 8.86^{K\text{-}FT/FT}$

GRP II (D+B) + E + W

$P = 4.37^{KLF}$

$V_L = 1.44 + .01 = 1.45^{KLF}$

$M_L = 8.68 + .07 = 8.75^{K\text{-}FT/FT}$

GRP III (D+B) + (L+I) + CF + E + 0.3W + WL + LF

$P = 9.34^{KLF}$

$V_L = 1.47 + (.3)(.01) + .003 + .04 = 1.52^{KLF}$

$M_L = 8.68 + .18 + (.3)(.07) + .02 + .26 = 9.16^{K\text{-}FT/FT}$

GRP VII (D+B) + E + EQ

$P = 4.37^{KLF}$

$V_L = 1.44 + .23 = 1.67^{KLF}$

$M_L = 8.68 + 1.50 = 10.18^{K\text{-}FT/FT}$

SVERDRUP & PARCEL

JOB 8060 FCDMC / ACDC

SHEET NO. 49 OF

DATE 8/82

COMPUTATIONS FOR AZ. CANAL BRIDGE

BY RJ CHKD

ABUTMENT STEM WALL

1. DETERMINE MAXIMUM COMPRESSIVE STRESS DUE TO AXIAL LOADS

$P_{MAX} = 4.88 + 4.97 = 9.85^{KIP}$ (D) + (L+I)

$f_p = 9850/(12)(15) = 51$ psi

2. DECREASE ALLOWABLE FLEXURAL COMPRESSIVE STRENGTH BY ABOVE AMOUNT

$f_c = 1200 - 51 = 1149$ @ 100%

1436 @ 125%

1532 @ 133%

3. USE ABOVE VALUES FOR REBAR DESIGN (SEE APPENDIX FOR METHOD)

GRP I, $M = 8.86^{K\text{-}FT/FT}$ $f_c = 1149$ psi

$b = 12''$

$d = 16 - 2 - .5 - .5 = 13''$ (2" COVER + #4 HORZ + ½ #8 VERT)

$A_s = 0.44$ in²

GRP II, DOES NOT GOVERN

GRP III, $M = 9.16^{K\text{-}FT/FT}$

b & d AS ABOVE

$f_c = 1436$ psi $f_s = 25{,}000$ psi

$A_s = 0.36$ in²/ft DOES NOT GOVERN

GRP VII, $M = 10.18^{K\text{-}FT/FT}$

$f_c = 1532$ psi, $f_s = 26{,}667$ psi

$A_s = 0.37^{in^2/ft}$ - DOES NOT GOVERN

USE 1.3 × 0.44 = 0.58 in²/ft

USE #8 @ 16" (EARTH FACE)

USE #5 @ 16" (OTHER FACE)

USE #4 @ 18" HORZ BOTH FACES

SVERDRUP & PARCEL

JOB 8080 FCDMC / ACDC

COMPUTATIONS FOR AZ. CANAL BRIDGE

SHEET NO. 50 OF

DATE 8/82

BY RJ CHKD

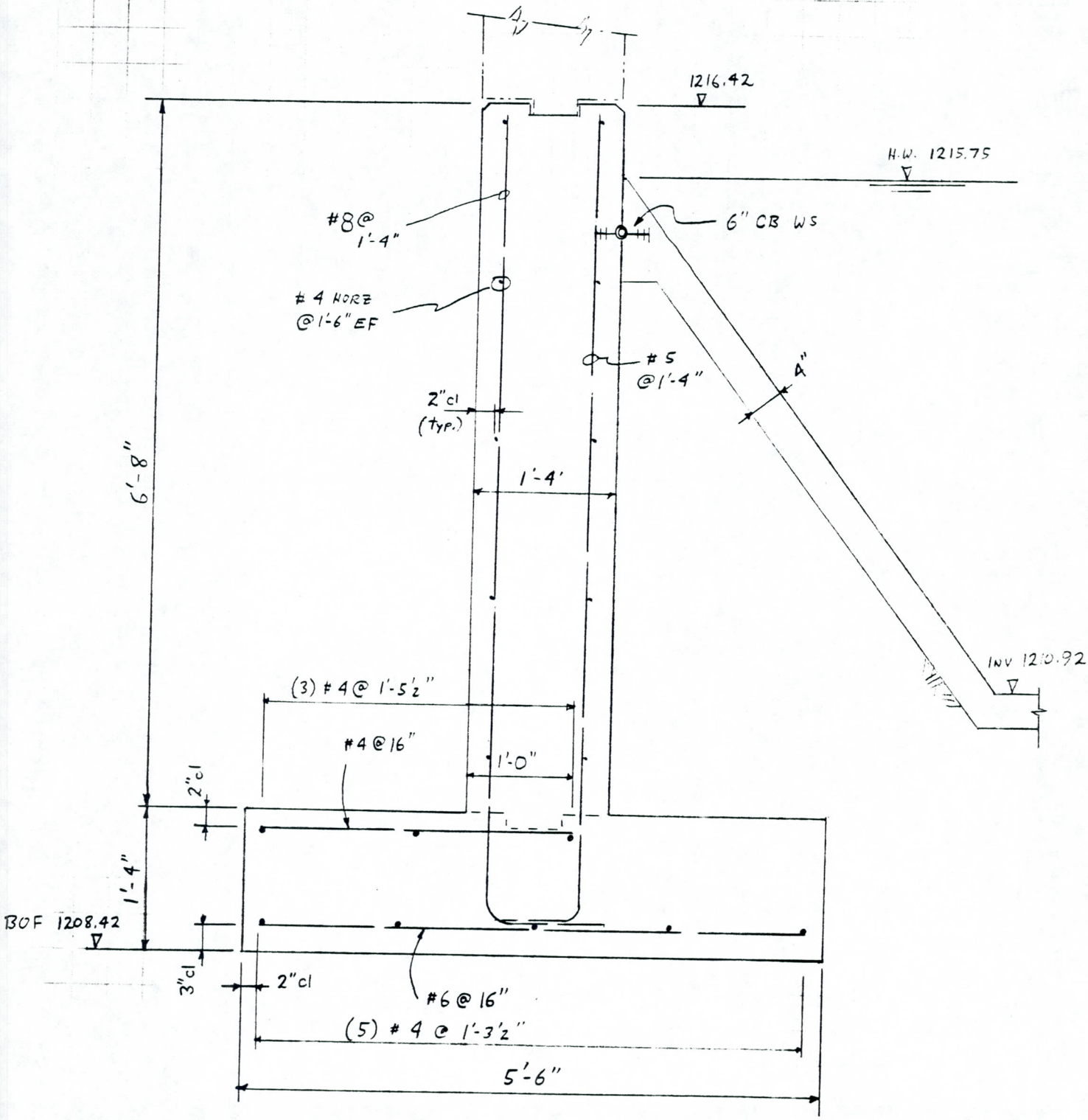

SVERDRUP & PARCEL

JOB 8080 FCDMC / ACDC

COMPUTATIONS FOR AZ. CANAL BRIDGE

SHEET NO. 51 OF

DATE 8/82

BY RV CHKD

PIER

LIVE LOAD + IMPACT FROM SUPERSTRUCTURE (SHT. 34)

1 & 2 LANES 80.1 K/LANE
3 LANES (.90)(80.1) = 72.1 K
4 & 5 LANES (.75)(80.1) = 60.1 K

LIVE LOAD LANE COMBINATIONS & MOMENT ABOUT ℄ OF PIER

#	LANE COMBINATION (SEE SHT. 35)	VERTICAL REACTION (L+I)	M_T	GOVERNING CASE
1	1	80.1 K	3226 K-FT	GOVERNS
2	2	80.1	2676	
3	3	80.1	1751	
4	4	80.1	1201	
5	5	80.1	275	
6	1 - 3	160.2 K	4977	GOVERNS
7	2 - 5	160.2	2951	
8	2 - 6	160.2	2401	
9	4 - 5	160.2	1476	
10	4 - 6	160.2	926	
11	4 - 7	160.2	0	
12	1 - 3 - 5	216.3 K	4727	GOVERNS
13	2 - 3 - 7	216.3	2903	
14	2 - 5 - 7	216.3	1575	
15	4 - 5 - 7	216.3	248	
16	1 - 3 - 5 - 7	240.4 K	3038	GOVERNS
17	2 - 3 - 5 - 7	240.4	2626	
18	1 - 3 - 5 - 7 - 9	300.5 K	1031	GOVERNS
19	1 - 3 - 5 - 8 - 10	300.5	206	
20	2 - 3 - 5 - 7 - 9	300.5	619	

USE # 1, 6, 12, 16, 18

SVERDRUP & PARCEL

JOB 8080 FCDMC /ACDC

SHEET NO. 52 OF

DATE 8/82

COMPUTATIONS FOR AZ. CANAL BRIDGE

BY RV CHKD

PIER

B.O.F. = 1208.42

℄ ROADWAY = 1219.72

EDGE ROADWAY = 1218.91

HINGE ELEV. = 1217.11

P_{DL} = 851.7^K

SKEW LENGTH = 95.61'
(94.11 + 1.5' NOSE)

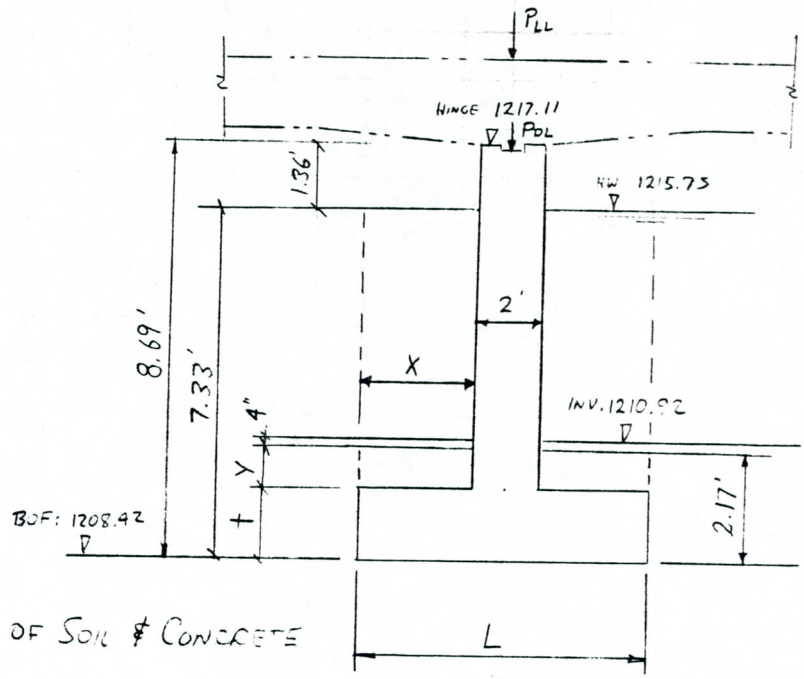

SEE SHT. 37 FOR BUOYANT WT. OF SOIL & CONCRETE

$DL_{PIER} = 95.61\left[LT\gamma_c + (1.36)(2.0)(.15) + (7.33 - t)(2.0)(\gamma_c)\right]$

$X = (L-2)/2$

$Y = 2.17 - t$

$DL_{INVERT} = (L-2)(.33)\gamma_c$

$DL_{SOIL} = 2XY\gamma_s$

$DL_{WATER} = 2(4.83)(95.61)(.0624)X = 57.63X^K$

LOADS

(L + I) SEE SHT 51

(CF) SEE SHT 33

$V_T = 20.3^K$

$M_T = 20.3(8.61 + 8.69) = 351.2^{K\text{-}FT}$ (OPP. DIRECTION OF SF)

$V_L = 0$

$M_L = 0$

(E) EARTH PRESSURE CANCELS

SVERDRUP & PARCEL

JOB 8080 FCDMC / ACDC

SHEET NO. 53 OF

DATE 8/82

COMPUTATIONS FOR AZ. CANAL BRIDGE

BY RV CHKD

PIER

(SF) SEE SHT. 30

$V_T = -2.0^K$

$M_T = -9.9^{K\text{-}FT}$ (OPP. DIRECTION OF CF)

$V_L = 0$

$M_L = 0$

(W) SEE SHT. 31

$V_T = 5.56 + 0.51 = \pm 6.1^K$

$M_T = 63.33 + 2.12 = \pm 65.5^{K\text{-}FT}$

$V_L = 1.65 + 23.83 = \pm 25.5^K$

$M_L = 18.79 + 99.37 = \pm 118.2^{K\text{-}FT}$

(WL) SEE SHT. 31

$V_T = \pm 3.0^K$

$M_T = \pm 51.6^{K\text{-}FT}$

$V_L = \pm 0.4$

$M_L = \pm 7.5^{K\text{-}FT}$

(LF) SEE SHT. 33

$V_T = \pm 2.4^K$

$M_T = 2.4(8.61 + 8.69) = \pm 41.5^{K\text{-}FT}$

$V_L = \pm 4.2^K$

$M_L = 4.2(8.69) = \pm 36.5^{K\text{-}FT}$

(EQ) SEE SHT 32

$V_T = \pm 57.7^K$

$M_T = 57.7(8.69 + 2) = \pm 616.8^{K\text{-}FT}$

$V_L = \pm 57.7^K$

$M_L = 57.7(8.69) = \pm 501.4^{K\text{-}FT}$

SVERDRUP & PARCEL

JOB 8080 FCDMC /ACDC

COMPUTATIONS FOR AZ. CANAL BRIDGE

SHEET NO. 54 OF

DATE 8/82

BY RT CHKD

PIER

(D + B)

TRY $L = 5'$, $t = 1'\text{-}4''$

$\therefore X = 1.50$

& $Y = 0.83'$

DRY CONDITION (& CHANNEL FULL)

PIER DL	=	306.7^K
INV & SOIL	=	43.0
WATER	=	86.4
		431.6^K
SUPERSTRUCTURE DL	=	851.7
		1287.8^K

DRY CONDITION (& CHANNEL EMPTY)

		1287.8
WATER	−	86.4
		1201.4^K

SATURATED CONDITION (CHANNEL FULL) (HYDROSTATIC CANCELS)

PIER DL	=	192.5^K
INV & SOIL	=	21.6
		214.1^K
SUPERSTRUCTURE		851.7
		1065.8^K

SVERDRUP & PARCEL

JOB 8080 FCDMC / ACDC

SHEET NO. 55 OF

COMPUTATIONS FOR AZ. CANAL BRIDGE

DATE 8/82

BY RV CHKD

PIER

SEE SHT 51 FOR LL

GROUP LOADING COMBINATIONS

CASE	GROUP	% BUS	COMBINATION	P	M_T	M_L	V_T	V_L
	I	100	D + B	1065.8	0	0	0	0
			CF	0	351.2	0	20.3	0
			SF	0	-9.9	0	-2.0	0
				1065.8	341.3	0	18.3	0
1	I	100	ABOVE + LL_1	1145.9	3567		"	
2	I	100	LL_6	1226.0	5318		"	
3	I	100	LL_{12}	1282.1	5068		"	
4	I	100	LL_{16}	1306.2	3379		"	
5	I	100	LL_{18}	1366.3	1372		"	
	II	125	D + B	1065.8	0	0	0	0
			SF		-9.9	0	-2.0	0
			W		-65.5	118.2	-6.1	25.5
6	II	125		1065.8	-75.4	118.2	-8.1	25.5
	III	125	D + B	1065.8	0	0	0	0
			CF	0	351.2	0	20.3	0
			SF	0	-9.9	0	-2.0	0
			0.3 W		19.7	35.5	1.8	7.7
			WL		51.6	7.5	3.0	0.4
			LF		41.5	36.5	2.4	4.2
				1065.8	454.1	79.5	25.5	12.3
7	III	125	ABOVE + LL_1	1145.9	3680	"	"	"
8	III	125	LL_6	1226.0	5431	"	"	"
9	III	125	LL_{12}	1282.1	5181	"	"	"
10	III	125	LL_{16}	1306.2	3492	"	"	"
11	III	125	LL_{18}	1366.3	1485	"	"	"
	IV	125	S/A I W/S+T					
	V	140	S/A II W/S+T					
	VI	140	S/A III W/S+T					

SVERDRUP & PARCEL

JOB 8080 FCDMC / ACDC

COMPUTATIONS FOR AZ CANAL BRIDGE

SHEET NO. 56 OF

DATE 8/82

BY TEN CHKD

PIER

	GROUP LOADING CONDITIONS							
CASE	GROUP	%BUS	COMBINATION	P	M_T	M_L	V_T	V_L
	III	133	D+B	1065.8	0	0	0	0
			SF	0	-9.9	0	-2.0	0
			EQ	0	-616.8	501.4	-57.7	57.7
12				1065.8	-626.7	501.4	-59.7	57.7
	VII	133	D (NO B, CHANNEL FULL)	1287.8				
			SF		-9.9		-2.0	
			EQ		-616.8	501.4	-57.7	57.7
13				1287.8	-626.7	501.4	-59.7	57.7

FOOTING DIMENSIONS (SEE SHT. 38 FOR NOMECLATURE)

LONGITUDINAL : B = 95.61 L = 5'

TRANSVERSE : B = 5' L = 95.61'

CASE	% BUS	$q_a = \% \times q_B$, $q_B = 4.0^{KSF}$	R	LONGITUDINAL			TRANSVERSE	
				q_1	q_2	L'	q_1	q_2
1	100	4.0	1145.9	2.40	2.40	5.00'	2.87	1.93
2	100	4.0	1226.0	2.56	2.56	"	3.26	1.87
3	100	4.0	1282.1	2.68	2.68	"	3.35	2.02
4	100	4.0	1306.2	2.73	2.73	"	3.18	2.29
5	100	4.0	1366.3	2.86	2.86	"	3.04	2.68
6	125	5.0	1065.8	2.53	1.93	"	2.24	2.22
7	125	5.0	1145.9	2.60	2.20	"	2.88	1.91
8	125	5.0	1226.0	2.76	2.37	"	3.28	1.85
9	125	5.0	1282.1	2.88	2.48	"	3.36	2.00
10	125	5.0	1306.2	2.93	2.53	"	3.19	2.27
11	125	5.0	1366.3	3.06	2.66	"	3.05	2.66
12	133	5.33	1065.8	3.49	0.97	"	2.31	2.15
13	133	5.33	1287.8	3.95	1.44	"	2.78	2.61
11 NO (B)	125	5.00	1588.3	3.52	3.12	"	3.52	3.13

SVERDRUP & PARCEL

JOB 8080 FCDMC /ACDC

COMPUTATIONS FOR AZ. CANAL BRIDGE

SHEET NO. 57 OF

DATE 8/82

BY RCT CHKD

PIER FOOTING DESIGN

REVIEW OF SOIL PRESSURES ON SHT. 56 INDICATES THAT CASE 3, FOR TRANSVERSE DIRECTION WILL GOVERN DESIGN

$P_1 = 43/(2)(96.51) = 0.22^K$

CHECK CASE 3, TRANSVERSE, FOR B = 0 CONDITION

$P = 1287.8 + 216.3 = 1504.1^K$ (SHTS 51 & 54)

$M = 5068^{K\text{-}FT}$

$q_1 = 3.77^{KSF}$ – USE FOR LONGITUDINAL DSN

$q_2 = 2.46^{KSF}$

$P_1 = (43 + 86.4)/(2)(96.51) = 0.67^K$

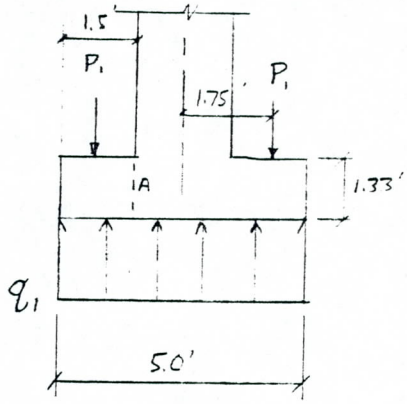

CASE 3 (D+B)

$V_A = (3.35)(1.5) - .22 - (1.33)(1.5)(.15) = 4.51^K/_{FT}$

$d = 16 - 3 - .375 = 12.625$

$v_a = 4510/(12)(12.625) = 29.8$ psi ✓

$M_A = [3.35 - (1.33)(.15)](1.5)^2/2 - (.22)(.75) = 3.38^{K\text{-}FT}/_{FT}$

$A_s = 0.17\ in^2/ft$ (SEE APPENDIX)

CASE 3 (D ONLY)

$V_A = [3.77 - (1.33)(.15)](1.5) - .67 = 4.69^K/_{FT}$

$v_a = 4690/(12)(12.625) = 31.0$ psi ✓

$M_A = [3.77 - (1.33)(.15)](1.5)^2/2 - (.67)(.75) = 3.51^{K\text{-}FT}/_{FT}$

$A_s = 0.17\ in^2/ft$ (SEE APPENDIX)

USE 1.3x = 0.23 in^2/ft **USE #6 @ 16" BOTTOM**

MAX OVERBURDEN = $0.67/1.5 + (1.33)(.15) = 0.65^{KSF}$

WHICH IS LESS THAN ANY TABULATED SOIL PRESSURES,

∴ NO NEGATIVE MOMENT WILL DEVELOP

USE #4 @ 16" TOP

SVERDRUP & PARCEL

JOB 8080 FCDMC / ACDC

COMPUTATIONS FOR AZ CANAL BRIDGE

SHEET NO. 58 OF

DATE 8/82

BY RV CHKD

PIER WALL DESIGN

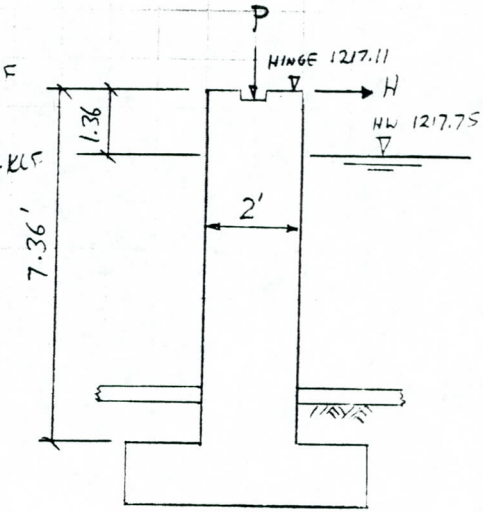

$(D) = (2)(7.36)(0.15) + 851.7/95.61 = 11.12^{KLF}$

$(D+B) = 2\left[(1.36)(.15)+(6)(.086)\right] + 851.7/95.61 = 10.35^{KLF}$

(L + I) SEE SHT. 34 & 51

$P = 80.1/11.55 = 6.94^{KLF}$

(CF) TRANSVERSE ONLY

(E) 0

(SF) TRANSVERSE ONLY

(W) SEE SHT. 31

$V_L = (1.65 + 23.83)/95.61 = 0.27^{KLF}$

$M_L = (0.27)(7.36) = 1.96^{K\text{-}FT/FT}$

(WL) SEE SHT. 31

$V_L = 0.93/95.61 = .004^{KLF}$

$M_L = (.004)(7.36) = 0.03^{K\text{-}FT/FT}$

(LF) SEE SHT. 33

$V_L = 4.2/95.61 = .04^{KLF}$

$M_L = (.04)(7.36) = .32^{K\text{-}FT/FT}$

(EQ) SEE SHT. 32

$V_L = 57.7/95.61 = 0.60^{KLF}$

$M_L = (0.60)(7.36) = 4.44^{K\text{-}FT/FT}$

PIER WALL DESIGN

COMBINATIONS

GRP I (D+B) + (L+I)

$P = 10.35 + 6.99 = 17.29^{KLF}$

$V_L = 0$

$M_L = 0$

GRP I D + (L+I)

$P = 11.12 - 6.99 = 18.06^{KLF}$

$V_L = 0$

$M_L = 0$

GRP II (D+B) + W

$P = 10.35^{KLF}$

$V_L = 0.27^{KLF}$

$M_L = 1.96^{K\text{-}FT/FT}$

GRP III (D+B) + (L+I) + .3W + WL + LF

$P = 17.29^{KLF}$

$V_L = (.3)(.27) + .004 + .04 = 0.13^{KLF}$

$M_L = (.3)(1.96) + .03 + .32 = 0.94^{K\text{-}FT/FT}$

GRP VII (D+B) + EQ

$P = 10.35^{KLF}$

$V_L = 0.60^{KLF}$

$M_L = 4.44^{K\text{-}FT/FT}$

SVERDRUP & PARCEL

JOB 8080 FCDMC / ACDC

SHEET NO. 60 OF

DATE 8/82

COMPUTATIONS FOR AZ CANAL BRIDGE

BY RT CHKD

PIER WALL DESIGN

SEE SHT. 49 FOR PROCEDURE

$P_{MAX} = 11.12 + 6.94 = 18.06$ KLF

$f_p = 18.06 / (12)(24) = 63$ psi

USE $f_c = 1200 - 63 = 1137$ psi @ 100%

1421 psi @ 125%

1516 psi @ 133%

GRP I $M = 0$

GRP II (D+B) + W

$M = 1.96$ K-FT/FT

$b = 12''$

$d = 24 - 2 - .5 - .5 = 21''$

$f_c = 1421$ psi $f_s = 25{,}000$ psi

$A_s = 0.05$ in²/ft

GRP III WILL NOT GOVERN

GRP VI (D+B) + EQ

$M = 4.44$ K-FT/FT

$f_c = 1516$ psi $f_s = 26{,}667$ psi

$A_s = 0.10$ in²/ft $\times 1/3 = .13$ in²/ft

MIN WALL REINF $= \frac{1}{8}$ in²/ft $= .125$

2' THK WALL IS MUCH TOO LARGE

TRY 1'-4" THK WALL

$\Delta wt = (1.33)(7.36)(.15) = 1.47$ KLF

$\Delta q = 1.47/5 = 0.29$ KSF > MIN SOIL PRESSURE SHT. 56

FDN IS STABLE

SVERDRUP & PARCEL

JOB 8080 FCDMC / ACDC

COMPUTATIONS FOR AZ. CANAL BRIDGE

SHEET NO. 61 OF

DATE 8/82

BY RV CHKD

PIER WALL DESIGN

FOOTING DESIGN CONSERVATIVE As / s

$f_p = 18.06/(12)(16) = 94 psi$

USE $f_c = 1200 - 94 = 1106$ psi @ 100%

1383 psi @ 125%

1475 psi @ 133%

GRP VII GOVERNS

$M = 4.44$ K-FT/FT

$b = 12''$

$d = 16 - 2 - .5 - .375 = 13.125''$ (2" COVER + #4 HORZ + ½ #6 VERT)

$f_c = 1475$ psi , $f_s = 26667$ psi

$A_s = 0.16 \text{ in}^2/\text{ft} \times 1'3 = 0.21 \text{ in}^2/\text{ft}$

USE #6 VERTS @ 16" E.F. (TO MATCH & CONTINUE FTG. REINF)

USE #4 HORZ @ 18" EF

SHEAR OK BY INSP

SVERDRUP & PARCEL

JOB 8080 FCDMC /ACDC

SHEET NO. 62 OF

DATE 8/82

COMPUTATIONS FOR AZ. CANAL BRIDGE

BY RV CHKD

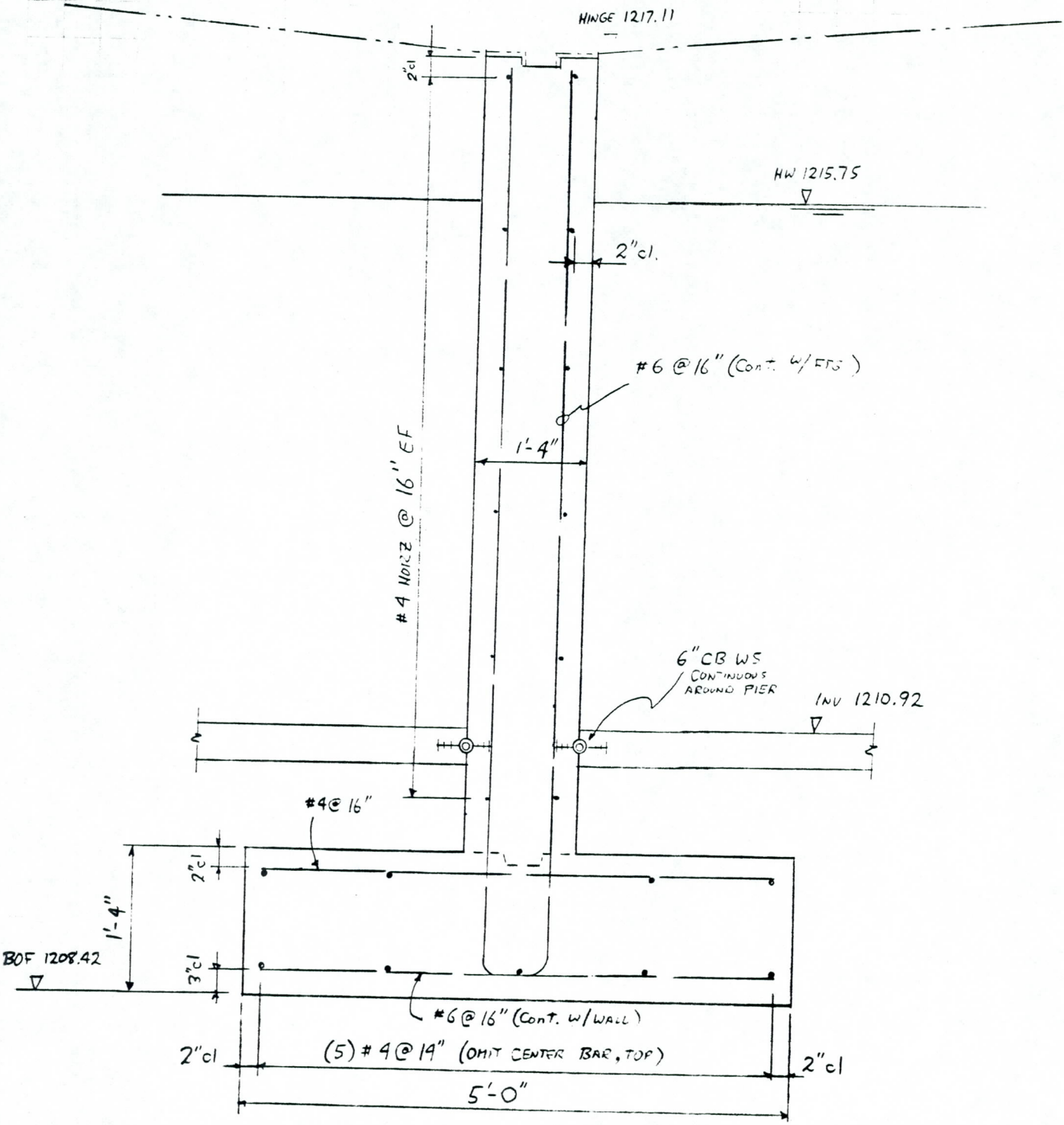

SVERDRUP & PARCEL

JOB GENERAL

SHEET NO. 1 OF

DATE 9/81

COMPUTATIONS FOR WORKING STRESS

BY RT CHKD

DEVELOP HP-97 COMPUTER PROGRAM TO DESIGN REINF. STEEL DIRECTLY FOR WORKING STRESS.

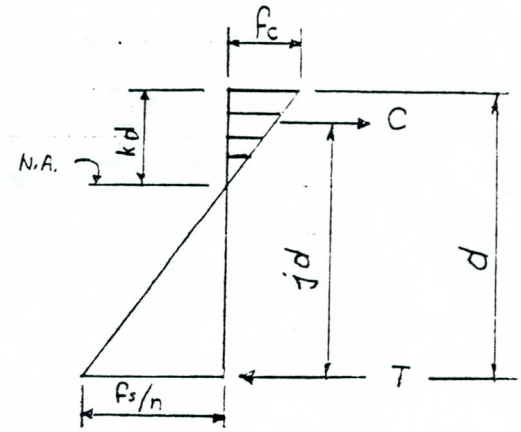

ALGORITHM (M IN K-FT)

$$\rho = A_s / bd$$

$$K = \rho f_s j = 12000M/bd^2$$

$$j = 1 - \frac{k}{3}$$

$$\rho j = \frac{K}{f_s}$$

$$\rho\left(1 - \frac{k}{3}\right) = \frac{K}{f_s}$$

$$1 - \frac{k}{3} = \frac{K}{\rho f_s}$$

$$\frac{k}{3} = 1 - \frac{K}{\rho f_s}$$

$$k = 3 - \frac{3K}{\rho f_s} = \sqrt{(n\rho)^2 + 2n\rho} - n\rho$$

$$3 - \frac{3K}{\rho f_s} + n\rho = \sqrt{(n\rho)^2 + 2n\rho}$$

$$3\rho f_s - 3K + n f_s \rho^2 = \rho f_s \sqrt{(n\rho)^2 + 2n\rho}$$

SQUARING BOTH SIDES & COMBING TERMS OF ρ YIELDS:

$$n^2 f_s^2 \rho^4 + 6n f_s^2 \rho^3 + (9f_s^2 - 6Kn f_s)\rho^2 - 18Kf_s\rho + 9K^2 = \rho^2 f_s^2 (2n\rho + (n\rho)^2)$$

$$(4n f_s^2)\rho^3 + (9f_s^2 - 6Kn f_s)\rho^2 - (18Kf_s)\rho + 9K^2 = 0$$

SOLVING THE ABOVE CUBIC EQUATION WILL GIVE ρ DIRECTLY

CUBIC SOLUTION

$$A_3 e^3 + A_2 e^2 + A_1 e + A_0 = 0$$

WHERE:

$$A_0 = 9K^2$$
$$A_1 = -18K f_s$$
$$A_2 = 9f_s^2 - 6Knf_s$$
$$A_3 = 4nf_s^2$$

$$Q = (3A_1 - A_2^2/A_3) / 9A_3$$
$$R = (9A_1A_2/A_3 - 27A_0 - 2A_2^3/A_3^2) / 54A_3$$

$$S = \sqrt[3]{R + \sqrt{Q^3 + R^2}}$$

$$T = \sqrt[3]{R - \sqrt{Q^3 + R^2}}$$

IF: $Q^3 + R^2 \geq 0$

THEN: $e = S + T - A_2/3A_3$

OTHERWISE: $e = 2\sqrt{-Q}\ \cos\left[\frac{1}{3}\cos^{-1}\left(R/\sqrt{-Q^3}\right)\right] - A_2/3A_3$

ABOVE GIVES ONE REAL, RATIONAL ROOT
THE OTHER TWO ROOTS MAY BE IMAGINARY AND ARE NOT CONSIDERED

THE PROGRAM TAKES THE FOLLOWING INPUT:

f_c	f_y
f_s	n
b	d
M	

THE COEFFICIENTS ARE COMPUTED FROM THE ABOVE INFORMATION AND THE CUBIC SOLVED, THE PROGRAM CHECKS FOR MINIMUM FLEXURE ($200/f_y$) AND FOR LIMITING BALANCED CONDITIONS

RESULTING DESIGN GIVES REINF STRESS $= f_s$ AND CONCRETE STRESS $\leq f_c$

User Instructions

REINF. DESIGN FOR WORKING STRESS

1 | 2

$f_c \uparrow f_s \uparrow f_y \uparrow n$ | $b \uparrow d$ | $M \rightarrow A_s$

STEP	INSTRUCTIONS	INPUT DATA/UNITS	KEYS	OUTPUT DATA/UNITS
1	LOAD SIDES 1 & 2			
2	ENTER ALLOWABLE CONCRETE FLEXURAL STRESS	f_c / psi	ENT ↑	
	ENTER ALLOWABLE STEEL TENSILE STRESS	f_s / psi	ENT ↑	
	ENTER STEEL YIELD STRESS	f_y / psi	ENT ↑	
	ENTER MODULAR RATIO (E_s/E_c)	n / N/D	A	f_c/psi
3	ENTER WIDTH OF SECTION	b / in	ENT ↑	
	ENTER EFFECTIVE DEPTH OF SECTION	d / in	B	bd^2
4	ENTER SERVICE LOAD MOMENT	M / k-FT	C	INDICATOR ***
	(PROCESSING TAKES 15.6 SECONDS)			K ***
				A ***
	OUTPUT			
5	IF INDICATOR = 0, MINIMUM FLEXURE GOVERNS			
	A = MIN FLEXURE REINF.			
	(REQ'D A_s, IS IN REGISTER # 1)			
6	IF INDICATOR = 1			
	A = REQUIRED REINF. FOR M			
	(MIN FLEX A_{MF}, IS IN REGISTER Ø)			
7	IF INDICATOR = ■ 2			
	"ERROR" WILL BE ON DISPLAY			
	REQUIRED REINF. WOULD EXCEED			
	BALANCED CONDITIONS			
	- NO OTHER OUTPUT -			

STEP	KEY ENTRY	KEY CODE	COMMENTS
001	*LBLA	21 11	$f_c \uparrow f_s \uparrow f_y \uparrow n$
002	STOE	35 15	
003	R↓	-31	
004	STOA	35 11	
005	R↓	-31	
006	STOB	35 00	
007	x⇄y	-41	
008	STOC	35 13	
009	RTN	24	
010	*LBLE	21 15	$b \uparrow d$
011	STOE	35 14	
012	x²	53	
013	x⇄y	-41	
014	STOE	35 12	
015	×	-35	
016	STO9	35 09	bd^2
017	RTN	24	
018	*LBLD	21 13	$M \rightarrow A$
019	1	01	
020	0	00	
021	STO1	35 46	
022	R↓	-31	
023	1	01	
024	2	02	
025	EEX	-23	
026	3	03	
027	STO5	35 05	
028	×	-35	
029	STO2	35 02	
030	RCL9	36 09	
031	÷	-24	
032	STO3	35 03	$K = 12{,}000\,M/bd^2$
033	x²	53	
034	9	09	
035	×	-35	
036	STO1	35 45	$A_0 = 9K^2$
037	ISZI	16 26 46	
038	RCL3	36 03	
039	RCL8	36 08	
040	×	-35	
041	1	01	
042	8	08	
043	×	-35	
044	CHS	-22	
045	STO1	35 45	$A_1 = -18Kf_s$
046	ISZI	16 26 46	
047	RCL8	36 08	
048	x²	53	
049	9	09	
050	×	-35	
051	RCLE	36 15	
052	RCL8	36 08	
053	×	-35	
054	RCL3	36 03	
055	×	-35	
056	6	06	
057	×	-35	
058	-	-45	
059	STO1	35 45	$A_2 = 9f_s^2 - 6Kr$
060	ISZI	16 26 46	
061	RCL8	36 08	
062	x²	53	
063	RCLE	36 15	
064	×	-35	
065	4	04	
066	×	-35	
067	STO1	35 45	$A_3 = 4nf_s^2$
068	F26	16-51	
069	RCL1	36 01	
070	3	03	
071	×	-35	
072	RCL2	36 02	
073	x²	53	
074	RCL3	36 03	
075	÷	-24	
076	-	-45	
077	RCL3	36 03	
078	÷	-24	
079	9	09	
080	÷	-24	
081	STO4	35 04	Q
082	RCL1	36 01	
083	RCL2	36 02	
084	×	-35	
085	RCL3	36 03	
086	÷	-24	
087	RCL0	36 00	
088	3	03	
089	×	-35	
090	-	-45	
091	9	09	
092	×	-35	
093	RCL2	36 02	
094	RCL2	36 02	
095	÷	-24	
096	x²	53	
097	RCL2	36 02	
098	×	-35	
099	2	02	
100	×	-35	
101	-	-45	
102	RCL3	36 03	
103	5	05	
104	4	04	
105	×	-35	
106	÷	-24	
107	STO5	35 05	R
108	x²	53	
109	RCL4	36 04	
110	3	03	
111	y^x	31	
112	+	-55	$Q^3 + R^2$

REGISTERS

0 A_{MF}	1 A_s	2 12000 M	3 K	4 e	5 12000	6 $k \rightarrow k_b$	7	8 f_s	9 bd^2
S0 A_0	S1 A_1	S2 A_2	S3 A_3	S4 Q	S5 R	S6 $\sqrt{Q^3+R^2}$	S7	S8	S9
A f_y	B b	C f_c	D d	E n	I INDIRECT CTRL				

Program Listing

STEP	KEY ENTRY	KEY CODE	COMMENTS
113	X<0?	16-45	$(Q^3+R^2) < \emptyset$?
114	GTO1	22 01	IF SO, GO TO LBL 1
115	√X	54	
116	STO6	35 06	$\sqrt{Q^3+R_2}$
117	RCL5	36 05	
118	X⇄Y	-41	
119	-	-45	
120	3	03	
121	1/X	52	
122	Y^X	31	$\sqrt[3]{R-\sqrt{Q^3+R^2}} = T$
123	RCL5	36 05	
124	RCL6	36 06	
125	+	-55	
126	3	03	
127	1/X	52	
128	Y^X	31	$\sqrt[3]{R+\sqrt{Q^3+R^2}} = S$
129	+	-55	
130	RCL2	36 02	
131	RCL3	36 03	
132	÷	-24	
133	3	03	
134	÷	-24	
135	-	-45	e
136	*LBL2	21 02	
137	F#S	16-51	
138	STO4	35 04	e
139	RCLE	36 15	
140	RCLE	36 15	
141	RCL8	36 08	
142	RCLC	36 13	
143	÷	-24	
144	+	-55	
145	÷	-24	
146	STOE	35 06	$k_b = \frac{n}{f_s/f_c + n}$
147	RCLC	36 13	(BALANCED k)
148	X	-35	
149	RCL8	36 08	
150	÷	-24	
151	2	02	
152	÷	-24	$e_b = \frac{f_c}{2f_s}\left[\frac{n}{f_s/f_c + n}\right]$
153	RCL4	36 04	
154	X:Y?	16-34	$e > e_b$?
155	GTO3	22 03	IF SO GO TO LBL 3
156	2	02	
157	0	00	
158	0	00	
159	RCLA	36 11	
160	÷	-24	$200/f_y = e_{mf}$
161	RCLB	36 12	
162	RCLD	36 14	
163	×	-35	
164	×	-35	
165	STO0	35 00	$A_{mf} = e_{mf}\,bd$
166	X⇄Y	-41	
167	LSTX	16-63	
168	×	-35	$A_s = e\,bd$
169	STO1	35 01	
170	X≤Y?	16-35	$A_s \le A_{mf}$?
171	GTO4	22 04	IF SO, GO TO LBL 4
172	1	01	CODE 1
173	*LBL5	21 05	PRINT CODE ***
174	SPC	16-11	PRINT K ***
175	DSP0	-63 00	PRINT A ***
176	PRTX	-14	FOR GOVERNING
177	X⇄Y	-41	CONDITION
178	RCL2	36 02	
179	DSP1	-63 01	
180	PRTX	-14	
181	R↓	-31	
182	DSP2	-63 02	
183	PRTX	-14	
184	RTN	24	
185	*LBL4	21 04	CODE 0
186	X⇄Y	-41	MIN. FLEXURE GOVERNS
187	0	00	
188	GTO5	22 05	
189	*LBL3	21 03	CODE 2
190	2	02	REQ'D e EXCEEDS
191	SPC	16-11	BALANCED DESIGN
192	DSP0	-63 00	
193	PRTX	-14	
194	DSP2	-63 02	- NO OUTPUT -
195	GTO6	22 06	
196	*LBL1	21 01	FOR $(Q^3+R^2) < \emptyset$
197	RCL5	36 05	
198	RCL4	36 04	
199	CHS	-22	
200	3	03	
201	Y^X	31	
202	√X	54	
203	÷	-24	
204	COS⁻¹	16 42	
205	3	03	
206	÷	-24	
207	COS	42	
208	RCL4	36 04	
209	CHS	-22	
210	√X	54	
211	×	-35	
212	2	02	
213	×	-35	
214	RCL2	36 02	
215	RCL3	36 03	
216	÷	-24	
217	3	03	
218	÷	-24	
219	-	-45	$e = 2\sqrt{-Q}\,\cos\left[\frac{1}{3}\cos^{-1}(R/\sqrt{-Q^3})\right] - A_2/3A_3$
220	GTO2	22 02	
221	R/S	51	

LABELS

A f_c f_s f_y n	B b d	C M → A	D	E
a	b	c	d	e
0	1 $Q^3+R^2<\emptyset$	2 USED	3 CODE 2	4 CODE 0
5	6	7	8	9

FLAGS

0	
1	
2	
3	

SET STATUS

FLAGS	ON	OFF	TRIG		DISP	
0	☐	☐	DEG	■	FIX	■
1	☐	☐	GRAD	☐	SCI	☐
2	☐	☐	RAD	☐	ENG	☐
3	☐	☐			n	2

Program Description

gram Title REINF. DESIGN FOR WORKING STRESS

Name R. TROYER

Date 9/81

Address

City State Zip Code

Program Description, Equations, Variables, etc.

SEE ATTACHED SHEETS FOR DESCRIPTION

FOR INPUT VALUES OF f_c & f_s, BALANCED CONDITIONS EXIST WHEN:

$$\frac{f_c}{2} bkd = \rho A_s bd$$

SOLVE FOR ρ:

$$\rho_b = \frac{k f_c}{2 f_s}$$

$$k_b = \frac{n}{n + f_s/f_c}$$

$$\therefore \rho_b = \frac{f_c}{2 f_s}\left[\frac{n}{n + f_s/f_c}\right]$$

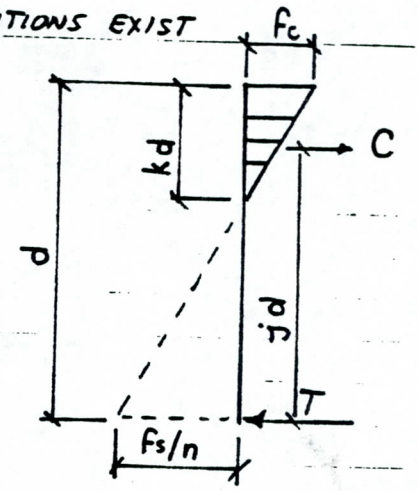

MIN. FLEXURE

ACI: $\rho_{mf} = \frac{200}{f_y}$

AASHTO: ρ_{mf} REQ'D FOR 1.2 x CRACKING MOMENT (NOT CHECKED IN THIS PROGRAM)

Operating Limits and Warnings

VERY SMALL MOMENTS FOR A GIVEN SECTION WILL GENERATE AN "ERROR" CONDITION AS IT CAUSES $R - \sqrt{Q^3 + R^2}$ TO BE LESS THAN 1, AND THE Y^X FUNCTION WILL NOT RAISE A [redacted] NEGATIVE NUMBER TO A NON-INTEGER POWER. (UNDEFINED)

FOR THIS CASE, MIN. FLEXURE WOULD GOVERN REGUARDLESS

DO NOT USE THIS SPACE