Thunderbird Road
Bridge over ACDC
Calculations

FCD Received 8-10-83

A118.814

910.xxx
013

Property of
Flood Control District of MC Library
Please Return to
2801 W. Durango
Phoenix, AZ 85009
JAN 10 1983

SVERDRUP & PARCEL

JOB 8080 FCDMC / ACDC SHEET NO. 1 OF

DATE 10/82

COMPUTATIONS FOR BRIDGE OVER DIVERSION CHANNEL BY RT CHKD JFF

INDEX TO CALCULATIONS

SUBJECT	SHEET(S)
SUPERSTRUCTURE LOADS	2 - 5
INTERIOR GIRDER DESIGN - PRETENSIONED	6 - 56
INTERIOR GIRDER DESIGN - POSTTENSIONED	56 - 63
STIRRUPS	64 - 70
SLAB DESIGN	72 - 76
BARRIER DESIGN	77
SLAB ELEVATIONS	78 - 79
PAYBACK LINE SUPPORTS	80 - 81
BEARING DESIGN	82 - 85
BICYCLE RAILING	86
ABUTMENTS	87 - 98
WINGWALLS	99 - 133
PIERS	134 - 267

ENGINEERING DIVISION
LIBRARY

SVERDRUP & PARCEL

JOB 8080 FCDMC / ACDC

COMPUTATIONS FOR DIVERSION CHANNEL

SHEET NO. 2 OF

DATE 9/82

BY RV CHKD JFF

AASHTO TYPE VI GIRDER DESIGN

PREPARE INPUT FOR S&P PROGRAM P7329

"PRECAST, PRESTRESSED GIRDERS MADE COMPOSITE AND CONTINUOUS WITH MILD REINFORCEMENT"

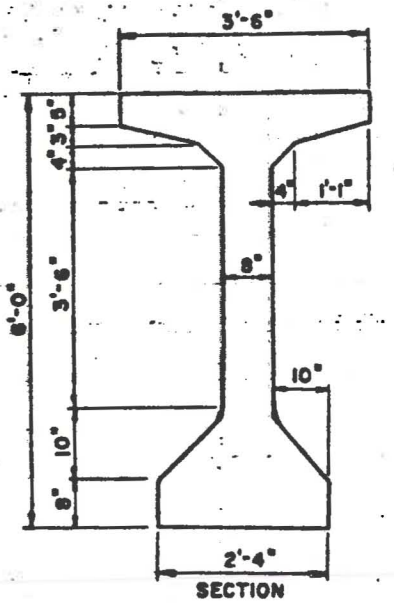

SECTION

TYPE VI BEAM
110 FT. TO 140 FT. SPANS

BEAM PROPERTIES

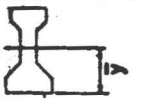

BEAM TYPE	AREA Inches²	ȳ Inches	Moment of Inertia Inches⁴
I	276	12.59	22,750
II	369	15.83	50,980
III	560	20.27	125,390
IV	789	24.73	260,730
V	1013	31.96	521,180
VI	1085	36.38	733,320

GIRDER SPACING = 9'-3"

SLAB THICKNESS (AASHTO TBL. 1.5.40, P. 117)

CLEAR SPAN = 9.25 - 3.5 = 5.75

$t \geq \frac{S+10}{30} = (5.75+10)/30 = 0.525' = 6.3$ in.

ADD 1" INTEGRAL WEARING SURFACE +1

7.3 in

USE $t = 7\frac{1}{2}$"

SVERDRUP & PARCEL

JOB 8080 FCDMC / ACDC

COMPUTATIONS FOR DIVERSION CHANNEL

SHEET NO. 3 OF

DATE 9/82

BY RJ CHKD JFF

COMPUTER INPUT FILE

DEAD LOAD

SET HAUNCH HEIGHT AT 2.5" AT ℄ OF GIRDERS

SLAB

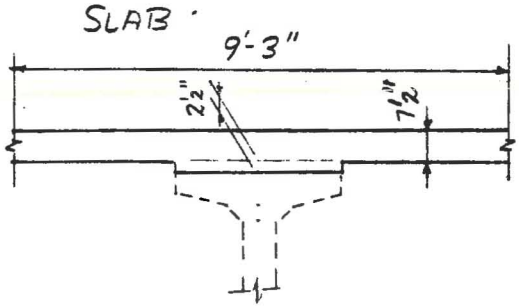

INTERIOR GIRDER

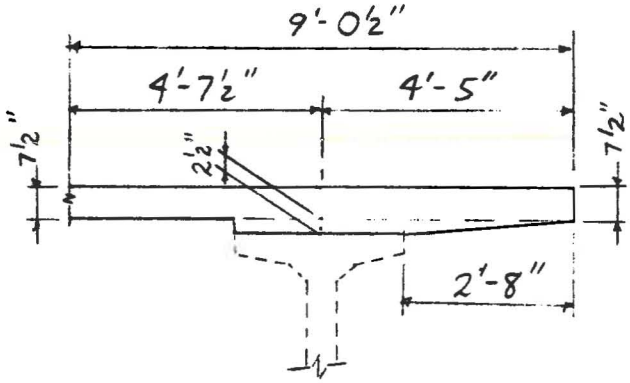

EXTERIOR GIRDER

TRIBUTARY SLAB DEAD LOAD

$(6.5/12)(9.25)(0.15) = .752^{KLF}$

$(6.5/12)(9.04)(0.15) = .735^{KLF}$

INTEGRAL WEARING SURFACE

$(1/12)(9.25)(0.15) \quad .116^{KLF}$

$(1/12)(9.04)(0.15) = .113$

FUTURE WEARING SURFACE

$(25\ psf/1000)(9.25) = .231^{KLF}$

$(25/1000)(9.04) = .226^{KLF}$

INTERMEDIATE DIAPHRAGMS @ 1/3 POINTS - 10" THICK

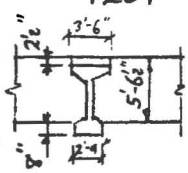

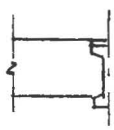

$\left[(5.54)(9.25) - (1085/144) + (8/12)(2.33) - (2.5/12)(3.5)\right](10/12)(.15)$

$= 5.57^{K}$

HALF OF INTERIOR GIRDER

$= 2.79^{K}$

HAUNCHS

$(2.5/12)(3.5)(0.15) = .109^{KLF}$

$\left[(2.5/12)(3.5) + (2.5/12)(2.67)/2\right]0.15 = .151$

SVERDRUP & PARCEL

JOB 8080 FCDMC / ACDC

SHEET NO. 4 OF

DATE 9/82

COMPUTATIONS FOR DIVERSION CHANNEL

BY RV CHKD VFF

COMPUTER INPUT FILE

COMPOSITE DEAD LOADS

DEAD LOAD ITEMS CONSTRUCTED AFTER SPANS MADE CONTINUOUS

1. JERSEY BARRIERS
2. SIDEWALK
3. SAND BED
4. PVC DUCTS
5. EDGE CURB
6. CHAIN LINK FENCE
7. FUTURE WEARING SURFACE (SEE SHT. 3)
8. 20" ø PAYBACK WATER LINE

BARRIERS

$$\left[(8/12)(2.67) + (.25)(.75) + (.17)(.83) + (.83)(.58)/2 + (1.58)(.17)/2\right](0.15)$$

$= 0.372$ KLF (2.479 SF/FT)

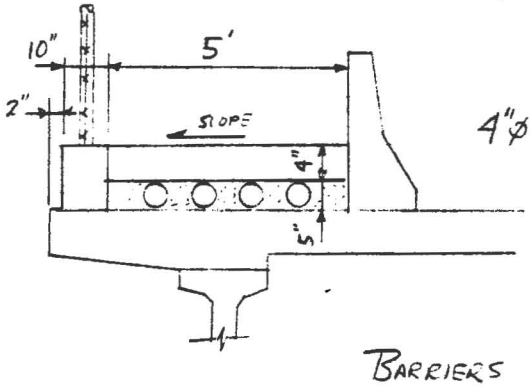

4"ø PVC ⇒ 204.3 lbs/100 ft

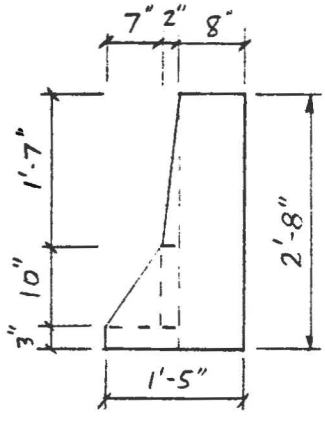

BARRIERS		= 0.372 KLF
SIDEWALK :	$(5)(4/12)(.15)$	= 0.250
CURB :	$(10/12)(9/12)(.15)$	= 0.094
SAND :	$\left[(5/12)(5) - (4)(4.5/12)^2\pi/4\right]12$	= 0.197
DUCTS :	$(4)(2.043)/1000$	= 0.008
8' CHAIN LINK	10 plf /1000	= 0.010
PAYBACK	$\left[122.9(DL) + 120.4(H_2O)\right]/1000$	0.931 KLF
	= 0.243 KLF	

DISTRIBUTE TO ALL GIRDERS $\left[(2)(.931) + .243\right]/9 = .234$ KLF

SVERDRUP & PARCEL

JOB 8080 FCDMC / ACDC

COMPUTATIONS FOR DIVERSION CHANNEL

SHEET NO. 5 OF

DATE 9/82

BY RT CHKD JFF

COMPUTER INPUT FILE

LIVE LOADS

AASHTO HS20-44 (CODE 4)

SIDEWALK LL (AASHTO 1.2.11, p. 22)

= 85 psf (PEDESTRIAN AND/OR BICYCLE)

(85)(5) = 425 plf (EXTERIOR GIRDER ONLY)

LIVE LOAD REACTION (LLR)

INTERIOR GIRDER

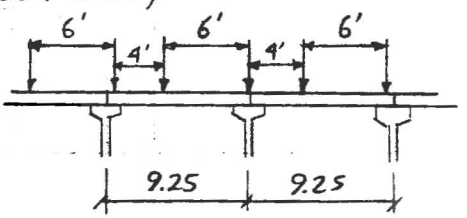

$$1 + \frac{5.25}{9.25} + \frac{3.25}{9.25} = 1.919$$

EXTERIOR GIRDER

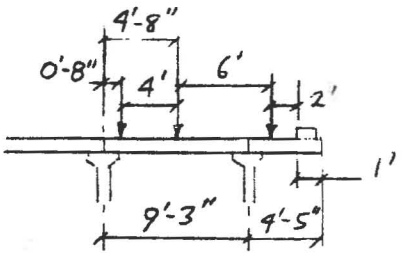

$$1 + \frac{0.67}{9.25} + \frac{4.67}{9.25} = 1.577$$

$E_{GIRDERS} = 57000\sqrt{5500} = 4.23 \times 10^6$ psi

$E_{DECK} = 57000\sqrt{4500} = 3.82 \times 10^6$ psi

ABUTMENT DIAPHRAGM WEIGHT

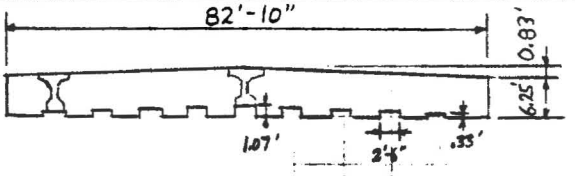

THICKNESS = 3', PEDESTALS FULL WIDTH, GIRDERS 77% WIDTH

Σ PEDESTAL HEIGHTS = $[(1.07+.33)/2]\,9 = 6.31'$

TIMES PEDESTAL WIDTH $= \times 2.5$

$15.79\ ft^2$

GIRDERS AREA $(1085/144)\,9 = 67.81$

$83.60\ ft^2$

FACE AREA = $(6.25)(82.83) + (0.83)(82.83/2) - 83.60 = 474.45$ (W/GIRDERS) $\quad 542.26$ (W/O GIRDERS)

VOL = $(474.45/\cos 30°)(3)(0.77) + (542.26/\cos 30°)(3)(0.23) = 1697.57\ ft^3$

Wt/GIRDER = $(1697.57)(0.15)/9 = 28.3^K$

SVERDRUP & PARCEL

JOB 8080 FCDMC / ACDC

COMPUTATIONS FOR DIVERSION CHANNEL

SHEET NO. 6 OF

DATE 9/82

BY RV CHKD JFF

COMPUTER INPUT FILE

DIFFERENTIAL SHRINKAGE STRAIN (REF: INTERIM #5, 1975 AASHTO COMMENTARY)

$\epsilon_{su} = 550 \times 10^{-6}$ in/in @ 50% RELATIVE HUMIDITY (RH) (REF. IP 1.6.7(B)(1)(a))

RH = 40% PHOENIX (REF. FIG. 1.6.7)

HUMIDITY SHRINKAGE COEFF = 1.0

VOLUME / SURFACE AREA RATIO = 4.41 in (TYPE VI)

V/S FACTOR = 0.77

ϵ_{su} CORRECTED $= (550 \times 10^{-6})(1.0)(0.77) = 423.5 \times 10^{-6}$ in/in

T = 28 DAYS

TIME FACTOR = 0.4 (PCA PHAMLET p. 5, FIG. 8)

DIFFERENTIAL SHRINKAGE STRAIN $= (0.4)(423.5 \times 10^{-6}) = 169.4 \times 10^{-6}$

USE $\epsilon_s = .00017$

DISTRIBUTION FACTOR = S/5.5 (AASHTO TBL. 1.3.1(B), p.37)

= 9.25/5.5 = 1.68 (ALL SPANS)

VDF/DF USE 1.0

SVERDRUP & PARCEL

JOB 8080 FCDMC / ACDC

COMPUTATIONS FOR DIVERSION CHANNEL

SHEET NO. 7 OF

DATE 9/82

BY RT CHKD JFF

COMPUTER INPUT FILE

SPAN LENGTHS 123'-4" (ALL)

EFFECTIVE SLAB WIDTH (AASHTO 1.6.23(A), P. 134)

(1) 123.33/4 = 30.83 ft
(2) 9.25 ft
(3) $12 t_{eff} + t_w$ → USE GIRDER WEB THICKESS OF AN EQUIVALENT PRISMATIC SECTION OF SAME DEPTH $t_w = (12)(733320)/(72)^3 = 23.6''$

$(12)(6.5) + 23.6 = 101.6'' = 8.47$ ft GOVERNS

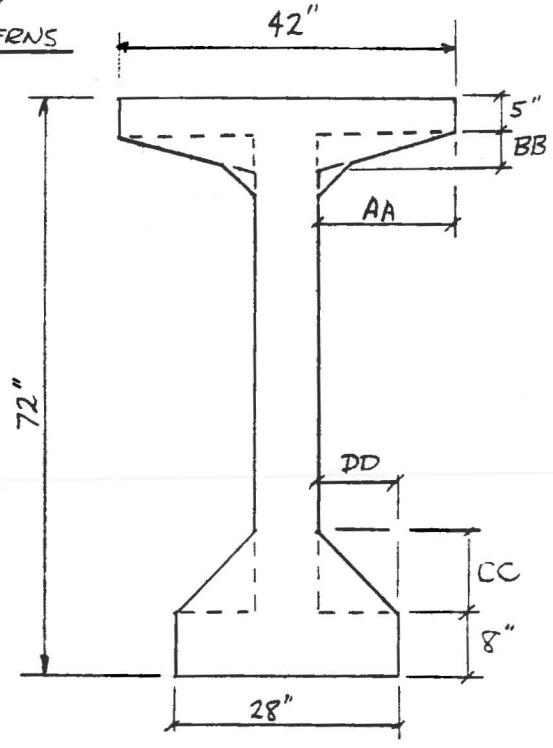

AA = 17"
BB = 4.65 (TO GIVE EQUIV. AREA)
CC = 10"
DD = 10"

GIRDER CONCRETE

$f'_c = 5500$ psi
$f_c = (0.4)(5500) = 2200$ psi
$f_t = 6\sqrt{5500} = 445$ psi

TENSION COEFF $= \frac{445}{5500} = 0.081$

$F_{sy} = 60$ KSI

SVERDRUP & PARCEL

JOB 8080 FCDMC / ACOC

COMPUTATIONS FOR DIVERSION CHANNEL

SHEET NO. 8 OF

DATE 9/82

BY RV CHKD JFF

PIER & ABUTMENT STIFFNESS

USING PRELIMINARY PIER & ABUTMENT PLAN DIMENSIONS, DETERMINE EQUIVALENT HEIGHTS THAT WILL PROVIDE SAME STIFFNESS WITH FIXED BASE.

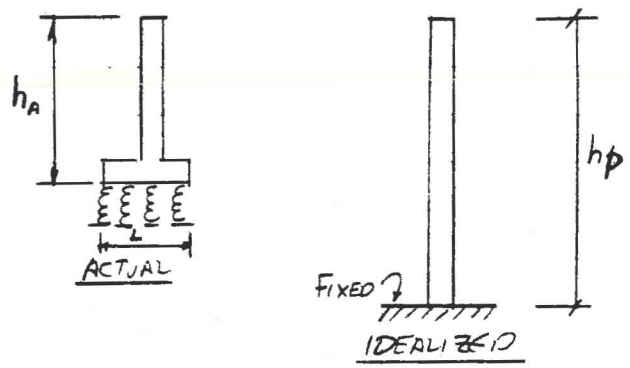

STEM OR COLUMN EI SAME FOR BOTH SITUATIONS

FOR MODULUS OF SUBGRADE REACTION, USE $k_o = 260\ ^K/ft^3$ (BOWLES, 1st ed., p 233) (MEDIUM DENSE DRY OR MOIST SAND)

DETERMINE ROTATIONAL STIFFNESS OF ACTUAL SPREAD FTG.
ASSUME FULL BEARING UNDER ALL LOADING COMBINATIONS (ROTATION ABOUT FTG ℄)

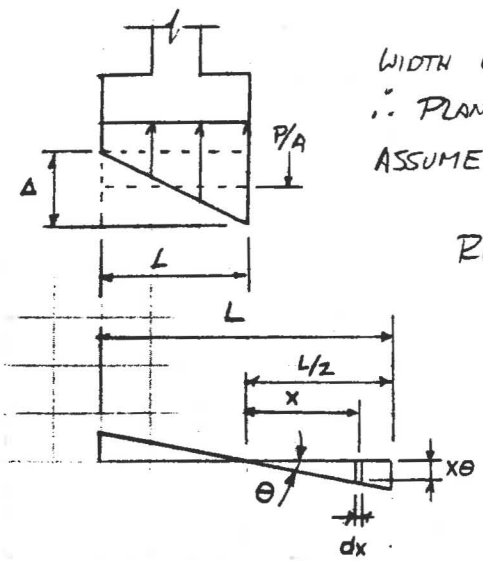

WIDTH OF FTG = B

∴ PLANE STIFFNESS = BK_o

ASSUME FTG STIFFNESS >> SOIL STIFFNESS

RESISTING MOMENT DUE TO ROTATION

$$M_R = 2\int_0^{L/2} (BK_o \theta x^2)\,dx = 2BK_o\theta \left[\frac{x^3}{3}\right]_0^{L/2}$$

$$M_R = BK_o \theta L^3/12$$

SOIL FORCE @ X = $BK_o \theta x\, dx$

MOMENT @ X = $BK_o \theta x^2 dx$

$$\therefore\ \theta = 12 M_R / BK_o L^3$$

SVERDRUP & PARCEL

JOB 8080 FCDMC / ACDC

COMPUTATIONS FOR DIVERSION CHANNEL

SHEET NO. 9 OF

DATE 9/82

BY RV CHKD JFF

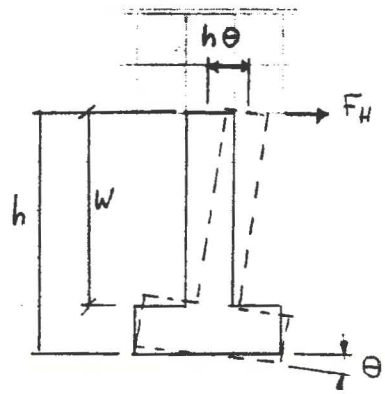

ROTATIONAL STIFFNESS

$$M_H = F_H h \Rightarrow F_H = M_H / h$$

$$K_R = \frac{F_H}{h\theta} \quad \text{(FOR SMALL } \theta\text{)}$$

SUBSTITUTE FOR θ (SHT. 8)

$$K_R = \frac{F_H}{h\left[12M_R / BK_0L^3\right]}$$

SUBSTITUTE F_H (ABOVE), $M_H = M_R$, REDUCE

$$K_R = BK_0L^3/12h^2$$

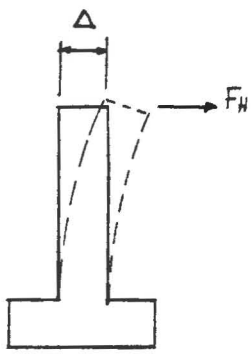

CANTILEVER STIFFNESS

$$\Delta = F_H w^3 / 3EI$$

$$K_C = \frac{F_H}{\Delta} = \frac{3EI}{w^3}$$

COMBINED STIFFNESS

TOTAL DEFLECTION $= h\theta + \Delta$

TOTAL STIFFNESS $= K_T = \dfrac{F_H}{h\theta + \Delta}$

$$\frac{1}{K_T} = \frac{h\theta + \Delta}{F_H} = \frac{h\theta}{F_H} + \frac{\Delta}{F_H} = \frac{1}{K_R} + \frac{1}{K_C}$$

$$K_T = \frac{1}{\frac{1}{K_R} + \frac{1}{K_C}} = \frac{1}{\left[\frac{12h^2}{BK_0L^3} + \frac{w^3}{3EI}\right]}$$

PSUEDO LENGTH STIFFNESS WILL HAVE CANTILEVER STIFFNESS ONLY $\left(K_T = \dfrac{3EI}{h_p^3}\right)$

$$h_p = \sqrt[3]{3EI\left[\frac{12h^2}{BK_0L^3} + \frac{w^3}{3EI}\right]}$$

SVERDRUP & PARCEL

JOB 8080 FCDMC / ACDC

SHEET NO. 10 OF

DATE 9/82

COMPUTATIONS FOR DIVERSION CHANNEL

BY BT CHKD JFF

PARAMETER	ABUT 1	PIER 2	PIER 3	PIER 4	ABUT 5
AVG. BRNG ELEV.	1212.90	1212.71	1212.51	1212.31	1212.11
B.O. FTG. ELEV.	1201.10	1180.55	1180.55	1180.55	1201.10
h (FT)	11.80	32.16	31.96	31.76	11.01
FOOTING THICKNESS	2.0	4.0	4.0	4.0	2.0
W (FT)	9.80	28.16	27.96	27.76	9.01
COL/WALL ?	WALL	COL	COL	COL	WALL
EI (K-FT²)	129.0×10^6	1.788×10^6	1.788×10^6	1.788×10^6	129×10^6
B (FT)	82.83	7	7	7	82.83
L (FT)	6.5	13	13	13	6.5
h_p (FT)	47.95'	33.91	33.71	33.51	45.77
K_T	3510 K/FT	137.6 K/FT	140.0 K/FT	142.5 K/FT	4035 K/FT

PIER DIAPHRAGM WEIGHT (3' THK)

GIRDERS DISPLACE $(1 - 1/3 \cos 30) = 62\%$ OF THICKNESS

FACE AREA ⊥ ROADWAY

Σ PEDESTAL HEIGHTS = $[(1.07 + .33)/2]8 = 5.63'$

TIMES PEDESTAL WIDTH $\times 2.5$

Σ PEDESTAL AREA = 14.07 SF

GIRDERS AREA = $(1085/144)8 = 60.27$

74.34 SF

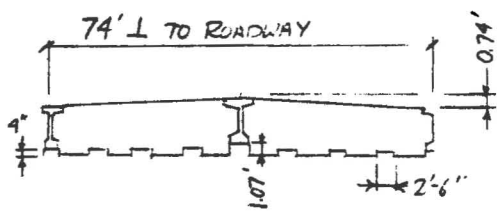

$A_T = (6.33)(74) + (0.74)(74/2) - 74.34 = 421.7\ ft^2$ (W/ GIRDERS) $482.0\ ft^2$ (W/O GIRDERS)

$Vol = (421.7/\cos 30°)(3')(.62) + (482/\cos 30°)(3)(.38) = 1540.15\ ft^3$

WT/GIRDER $= (1540.15)(0.15)/(2)(9) = 12.8^K$

SVERDRUP & PARCEL

JOB 8080 FCDMC IACDC

COMPUTATIONS FOR DIVERSION CHANNEL

SHEET NO. 11 OF

DATE 9/82

BY RSV CHKD JFF

COMPUTER INPUT FILE

FROM PRELIMINARY COMPUTER RUNS
USE 63 STRANDS FOR END SPANS
58 STRANDS FOR INTERIOR SPANS

STRAND DIMENSIONS TYPICAL
2" ℄ STRAND TO EDGE OF CONCRETE
2" ℄ STRAND TO ℄ STRAND

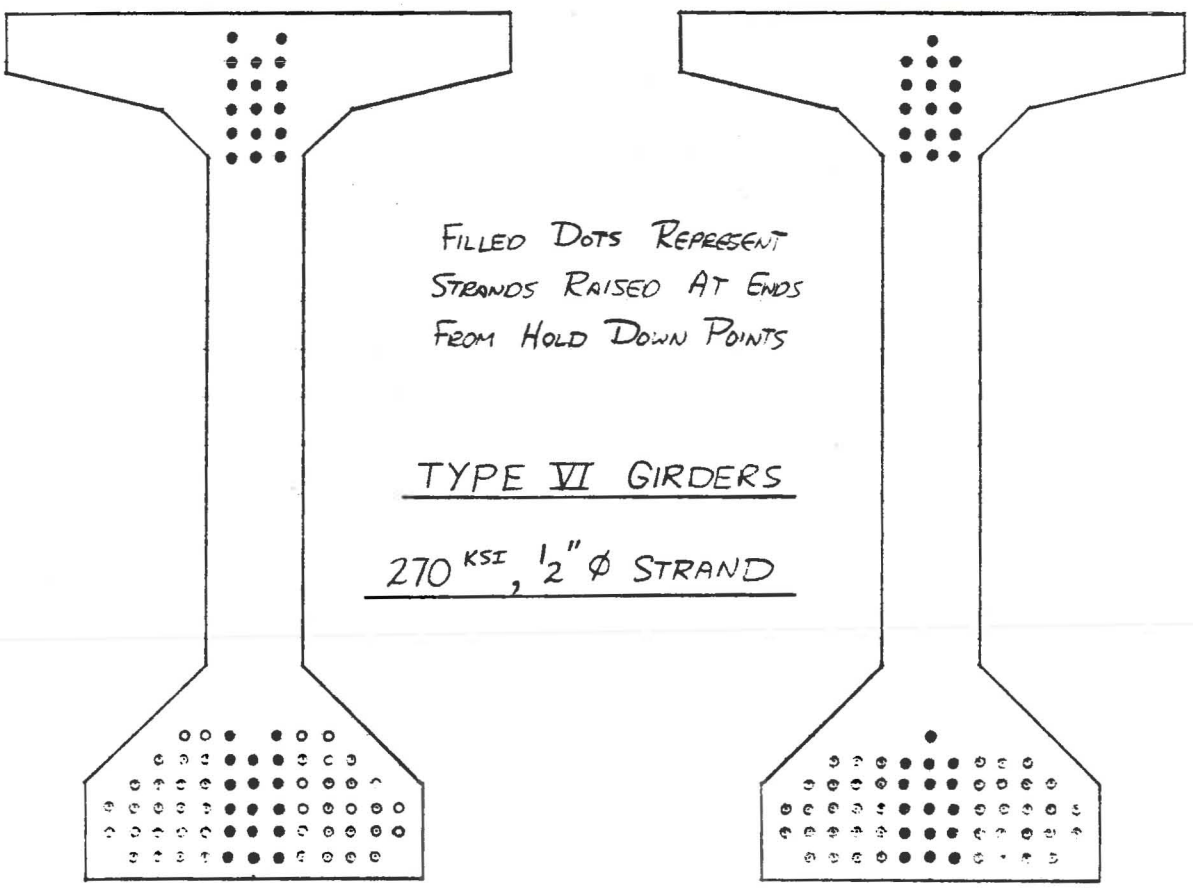

END SPAN, 63 STRANDS

C.G.PS FROM TOP OF GIRDER

@ ℄ = 65.62 in ↓
@ END = 49.97 in. ↓

INTERIOR SPAN, 58 STRANDS

C.G. PS FROM TOP OF GIRDER

@ ℄ = 66.10" ↓
@ END = 50.10" ↓

COMPUTER INPUT FILE

PRESTRESS LOSSES (REF. AASHTO 1.6.7)

$$\text{LOSSES} = \Delta f_s = SH + ES + CR_c + CR_s$$

SH, SHRINKAGE

$SH = 17000 - 150\,RH$ (RH = 40% FOR PHOENIX, FIG. 1.6.7)

$SH = 17000 - (150)(40) = 11{,}000$ psi

ES, ELASTIC SHORTENING

$ES = (E_s)(f_{cir}) / E_{ci}$

$E_s = 28 \times 10^6$ psi (AASHTO 1.6.7, p. 123) (28,000 KSI)

$E_{ci} = 33 w^{1.5} \sqrt{f'_{ci}}$

$f'_{ci} = 4400$ psi (@ RELEASE)

$E_{ci} = 33(150)^{1.5}\sqrt{4400} = 4.02 \times 10^6$ psi (4020 KSI)

f_{cir} = CONCRETE STRESS @ CGS AFTER TRANSFER

USE $0.61 f'_s$ AFTER TRANSFER $= (.61)(270) = 164.7$ KSI

RELEASE ASSUMED AT 24 HOURS

@ ℄ SPAN CGS $= 36.38 - (72 - 65.62) = 30.00''$ (END SPANS)

$= 36.38 - (72 - 66.10) = 30.48''$ (INTERIOR SPANS)

$W_{GIRDER} = (1085/144)(0.15) = 1.13$ KLF

@ HOLD-DOWNS: $M_{DL} = (1.13)(49.34)(123.33 - 49.34)/2 = 2063$ K-FT

$P = (63)(164.7)(.153) = 1588^K$ (END SPANS)

$= (58)(164.7)(.153) = 1462^K$ (INTERIOR SPANS)

SVERDRUP & PARCEL

JOB 8080 FCDMC / ACDC

COMPUTATIONS FOR DIVERSION CHANNEL

SHEET NO. 13 OF

DATE 9/82

BY RT CHKD JFF

COMPUTER INPUT FILE

$$f_{cir} = \frac{P}{A} + \frac{Pec}{I} - \frac{M_{DL}\,c}{I}$$

$$= \frac{1588}{1085} + \frac{1588(30.00)^2}{733,320} - \frac{(2063)(12)(30.00)}{733,320} = 2.40^{KSI} \text{ (END SPANS)}$$

$$= \frac{1462}{1085} + \frac{1462(30.48)^2}{733,320} - \frac{(2063)(12)(30.48)}{733,320} = 2.17^{KSI} \text{ (INTERIOR SPANS)}$$

$$ES = (28,000)(2.40)/4020 = 16.72^{KSI} \text{ (END SPANS)}$$

$$ES = (28,000)(2.17)/4020 = 15.11^{KSI} \text{ (INTERIOR SPANS)}$$

CHECK $0.63 f'_s$ ASSUMPTION (REF AASHTO INTERIM 5, 1975, FIG. C2)

$$\left[189 - \boxed{\begin{matrix}16.72\\15.11\end{matrix}} - \left(\frac{\text{Log } 24}{10}\left(189/(.85)(270) - .55\right) \times 189\right)\right]/270 = \boxed{\begin{matrix}0.612\\0.618\end{matrix}} \begin{matrix}\text{END SPANS}\\ \text{INTERIOR SPAN}\end{matrix}$$

BOTH $\simeq 0.61$ ✓

CR_c CREEP

$$CR_c = 12 f_{cir} - 7 f_{cds}$$

f_{cir} = 2.40 END SPANS
= 2.17 INTERIOR SPANS

NON-COMPOSITE DEAD LOADS

DECK	0.752
IWS	0.116
HAUNCH'S	0.109
	0.977 KLF

INTERIOR DIAPHRAGMS = 5.57^K @ 41.11' & 82.22'

@ HOLD DOWN POINTS: $M_{NC} = (0.977)(49.34)(123.33 - 49.34)/2 + (5.57)(41.11) = 2012^{K\text{-}FT}$

SVERDRUP & PARCEL

JOB 8080 FCDMC /ACDC

COMPUTATIONS FOR DIVERSION CHANNEL

SHEET NO. 14 OF

DATE 9/82

BY RV CHKD JFF

COMPUTER INPUT FILE

COMPOSITE DEAD LOADS = 0.234 KLF (SEE SHT. 4)

FWS = 0.231 (SEE SHT. 3)

0.465 KLF

@ HOLD-DOWN POINTS: $M_c = 0.465\left[(6)(123.33)(49.34) - (123.33)^2 - (6)(49.34)^2\right]/12$

$= 259^{K\text{-}FT}$

COMPOSITE MOMENT OF INERTIA = $66.59\ ft^4 \times 12^4 = 1{,}380{,}810\ in^4$ (FROM PREVIOUS COMPUTER RUN)

$$f_{cds} = \frac{(2012)(12)(30.00)}{733{,}320} + \frac{(259)(12)(51.00-(72-65.62))}{1{,}380{,}810} = 1.09^{KSI} \quad \text{(END SPANS)}$$

$$= \frac{(2012)(12)(30.48)}{733{,}320} + \frac{(259)(12)(51.00-(72-66.10))}{1{,}380{,}810} = 1.11^{KSI} \quad \text{(INTERIOR SPANS)}$$

$$CR_c = (12)(2.40) - (7)(1.09) = 21.18^{KSI} \quad \text{(END SPANS)}$$

$$= (12)(2.17) - (7)(1.11) = 18.30^{KSI} \quad \text{(INTERIOR SPANS)}$$

CR_s RELAXATION OF PRESTRESSING STEEL

$$CR_s = 20{,}000 - .4ES - .2(SH + CR_c)$$

END SPANS: $= 20{,}000 - (.4)(16{,}720) - (.2)(11{,}000 + 21{,}180) = 6876\ psi$

INTERIOR SPANS: $= 20{,}000 - (.4)(15{,}110) - (.2)(11{,}000 + 18{,}300) = 8096\ psi$

SUMMATION, LOSSES

	SH	ES	CR_c	CR_s	Σ	USE
END SPANS:	11,000	16,720	21,180	6876	55,776	56 KSI
INTERIOR SPANS:	11,000	15,110	18,300	8096	52,506	53 KSI

SVERDRUP & PARCEL

JOB 8080 FCDMC / ACDC

COMPUTATIONS FOR DIVERSION CHANNEL

SHEET NO. 15 OF

DATE 9/82

BY RV CHKD JFF

COMPUTER INPUT FILE - P7329

CONTINUITY ESTABLISHED AT 28 DAYS (DESIGN CRITERIA)

PRO-RATE STEEL RELAXATION USING PREVIOUS VALUES ASSUMED AT LIFE OF BRIDGE = 50 YEARS

FROM AASHTO INTERIM 5, 1975, STEEL RELAXATION VARIES WITH TIME PROPORTIONATELY TO LOG_{10} (TIME)

LOG_{10} (24 HOURS) = 1.38

LOG_{10} (28 DAYS × 24) = 2.83

LOG_{10} (50 YEARS × 365 × 24) = 5.64

$\therefore CR_{S\ 28\ DAYS} = (2.83/5.64)(CR_{S\ 50\ YEARS})$

$= (2.83/5.64)(6876) = 3446$ psi (END SPANS)

$= (2.83/5.64)(8096) = 4058$ psi (INTERIOR SPANS)

40% OF CR_C & SH HAS OCCURRED AT 28 DAYS

	END SPANS		INTERIOR SPANS	
SH	(11,000)(0.4)	= 4400 psi		4400
ES		16720		15,110
CR_C	(21,180)(0.4)	= 8472	(18,300)(0.4)	= 7320
CR_S		3446		4058
Σ		33,038 psi		30,888

% PRESTRESS LOSS REMAINING AFTER CONTINUITY ESTABLISHED

END SPANS: (55776 - 33038) / 55776 = 40%

INTERIOR SPANS: (52,506 - 30,888) / 52,506 = 41%

SVERDRUP & PARCEL

JOB 8080 FCDMC / ACDC

COMPUTATIONS FOR DIVERSION CHANNEL

SHEET NO. 16 OF

DATE 9/82

BY RY CHKD JFF

COMPUTER INPUT FILE

CREEP STRAIN (REF. PCA "DESIGN OF CONTINUOUS HIGHWAY BRIDGES WITH PRECAST, PRESTRESSED CONCRETE GIRDERS)

ASSUME f_{ci} = 4400 psi @ RELEASE

$E_y = 57000\sqrt{4400} = 3.78 \times 10^6$ psi

FROM REF, FIG. 5, SPECIFIC CREEP @ 20 YEARS = 0.4×10^{-6} in/in/psi

ADJUST FOR RELEASE AT ONE DAY (REF. FIG. 6).

$(1.80)(0.4 \times 10^{-6}) = 0.72 \times 10^{-6}$ in/in/psi

VOL/SURF RATIO = 4.4 (TYPE VI)
CORRECTION FACTOR = 1.18 } REF. TBL 1

$(1.18)(0.72 \times 10^{-6}) = 0.85 \times 10^{-6}$ in/in/psi

ASSUMING CONTINUITY ESTABLISHED AT 28 DAYS:
60% OF CREEP YET TO OCCUR

$\epsilon_c = (0.60)(0.85 \times 10^{-6}) = \underline{0.51 \times 10^{-6}}$ in/in/psi SPECIFIC CREEP

SHRINKAGE STRAIN (ASSUMING CAST-IN-PLACE DECK)

$\epsilon_s = 0.4 \times 1.1 \times .0006 = 0.00026$ in/in (.0006 @ 50%, 1.1 C.R. FOR 4.4 V/S)
(REF FIGS 8 & 10)

$\phi = \epsilon_c \times E = (.47 \times 10^{-6})(4.23 \times 10^6) = 1.99$

$\frac{1 - e^{-\phi}}{\phi} = 0.43$

CREEP + SHRINKAGE STRAIN = $(0.43)(.00026) = \underline{.000113 \text{ in/in}}$

P7329 PRECAST, PRESTRESSED GIRDERS MADE COMPOSITE AND CONTINUOUS WITH MILD REINF.

FORM I

SVERDRUP AND PARCEL

FORM ____ OF ____

Card columns 1–80:

JOB NO. (columns 1–6) … PROGRAM P7329 (columns 61–73)

PROBLEM (columns 1–7) … BY (columns 53–54) … CHKD (columns 67–70)

CODE(1) — columns 4, 5, 6: [ ] [1] [.]

CODE(2) — columns 14, 15, 16: [ ] [ ] [.]
+1 DESIGN
-1 DL+LL MOM.+SHEARS ONLY

CODE(3) — columns 24, 25, 26: [ ] [0] [.]

CODE(4) — columns 34, 35, 36: [ ] [ ] [.]
+1 PRINT STIFFNESS AND CARRY-OVER FACTORS
-1 SUPPRESS PRINTING
-2 SHEAR BY AASHTO AND ACI

CODE(5) — columns 44, 45, 46: [-] [1] [.]

CODE(6) — columns 54, 55, 56: [ ] [ ] [.]
+1 PLOT INITIAL AND FINAL TOP AND BOTTOM STRESSES
-1 SUPPRESS PLOT

CODE(7) — columns 64, 65, 66: [ ] [ ] [.]
+1 PRINT SECTION PROPERTIES
-1 SUPPRESS PRINTING

CODE(8) — columns 74, 75, 76: [ ] [ ] [.]
+1 EFFECTS OF CHANGE IN SPAN LENGTH DUE TO CREEP+SHRINK. AND TEMP. ACCOUNTED FOR.
-1 EFFECTS NEGLECTED.

Columns	Field
4–5	NO. OF SPANS MAX. 8.
9–10	LIVE LOAD H15 = 1. HS15 = 2. H20 = 3. HS20 = 4. HS20 WITH INTERSTATE = 5. SPECIAL LDG. (USE FORM VI) = 6.
11–15	SECTION UNIT WEIGHT (LBS/FT.3)
16–20	'LLR' NO. OF WHEELS FROM SIMPLE BEAM DISTR-TO BE USED FOR SUBSTR.DESIGN.
22–27	SIDEWALK LL. (LBS/FT.)
32–37	SDL (LBS/FT.)
41–50	E (PSI) (CONCRETE) PRECAST GDRS
51–60	E(PSI) (CONCRETE) SLAB
62–67	FWS (LBS/FT)
74–80	* DIFFERENTIAL SHRINK. STRAIN $\epsilon_s = \frac{\epsilon_{su} T}{N_s + T}$

* (SEE 'DESIGN OF CONTINUOUS HIGHWAY BRIDGES,' PCI, VOL. 14 NO. 2, APRIL 1969)

Columns	Field
1–6	SHEAR DIST. FACT. DIVIDED BY DIST. FACT.

NOTE – WEIGHT OF SECTION IS COMBINED WITH DEAD LOAD (FORM II) AND ADDITIONAL DEAD LOAD (FORM IV) FOR COMPUTING D.L. MOMENTS, SHEARS AND DEFLECTIONS ON SIMPLE SPANS

P7329 PRECAST, PRESTRESSED GIRDERS MADE COMPOSITE AND CONTINUOUS WITH MILD REINF.

FORM II

SVERDRUP AND PARCEL

FORM ___ OF ___

SUPERSTRUCTURE DESCRIPTION-USE 1 SHEET PER SPAN

SPAN LENGTH (FT)	DISTR. FACTOR	ADD'L GDR DEAD LOAD (LBS/FT.)	TOP FLG.WTH. OF GIRDER AT BEG.SPAN (INCH)	BOTT.FLG.WTH. OF GIRDER AT BEG.SPAN (INCH)	WIDENING OF TOP AND BOTT. FLANGE (IN/FT)	AA (INCH)	BB (INCH)	CC (INCH)	DD (INCH)

GIRDER SPACING* (FT)	EFF.SLAB WTH. FOR ONE GDR. (FT)	EFF. SLAB THICKNESS (IN)	EMBEDMENT (IN)	NO. OF GDRS.

* FOR EXTERIOR GDR. USE OVERHANG + ONE-HALF GDR.SPA.

TYPE	RANGE (FT.)	A(INCH)	B(INCH)

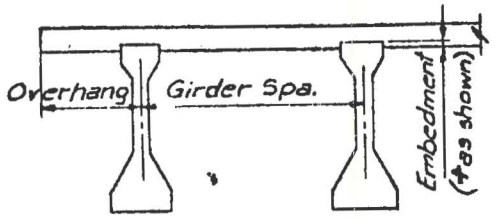

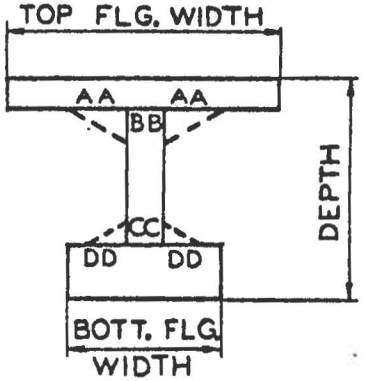

NOTE -

NCDL = UNIT WT.*(GDR. AREA + (GDR. SPA. * EFF. SLAB THICK.))
+ DEAD LOAD(FIRST CARD THIS FORM) + DEAD LOAD (FORM IV)

FLANGE WIDTH MUST BE AT LEAST EQUAL TO WEB THICKNESS.
FOR RECTANGULAR SECTION ENTER FLANGE THICKNESSES AS ZERO.

THE LAST RANGE VALUE FOR EACH TYPE MUST EQUAL THE SPAN LENGTH.

DISTR.FACTOR = DISTRIBUTION FACTOR. THE FRACTION OF THE WHEEL LOAD PER AASHTO (NO. OF LANES TIMES TWO).

RANGE = DISTANCE IN FEET FROM START OF SPAN TO CHANGE. MUST BE GREATER THAN 1/20 SPAN AND CHANGES IN RANGE MUST BE GREATER THAN 1/20 SPAN.

TYPE = 1. GIRDER DEPTH
A=DEPTH AT BEGINNING('+' FOR STRAIGHT HAUNCH, '-' FOR PARABOLIC)
B=DEPTH AT END
2. TOP FLANGE THICKNESS
3. BOTT. FLANGE THICKNESS
4. WEB THICKNESS
} STRAIGHT TAPER ONLY

A = THICKNESS AT BEGINNING

P7325 PRECAST, PRESTRESSED GIRDERS MADE COMPOSITE AND CONTINUOUS WITH MILD REINF.

FORM 111

SVERDRUP AND PARCEL

FORM ___ OF ___

SUBSTRUCTURE DESCRIPTION-- USE ONE CARD FOR EACH SUPPORT

PIER (COL.) END CONDITION	NO. OF COLS. PER PIER	PIER HEIGHT (FT)	DIM. // TO BRIDGE (IN.)	DIM. ⊥ TO BRIDGE (IN.)	'E' OF SUBSTRUCTURE (PSI)
1 2 3 4	5	6 7 8 9 10 11 12 13 14 15 16 17 18 19 20 21 22 23 24 25 26 27 28 29 30	31 32 33 34 35 36 37 38 39 40	41 42 43 44 45 46 47 48 49 50	51 52 53 54 55 56 57 58 59 60

NOTE - FOR ROUND COLUMN - ENTER DIAMETER IN DIM. // TO BRIDGE AND LEAVE DIM. ⊥ TO BRIDGE BLANK.

DIM. // TO BRIDGE = DEPTH OF ONE COLUMN (PIER)

DIM. ⊥ TO BRIDGE = WIDTH OF ONE COLUMN (PIER)

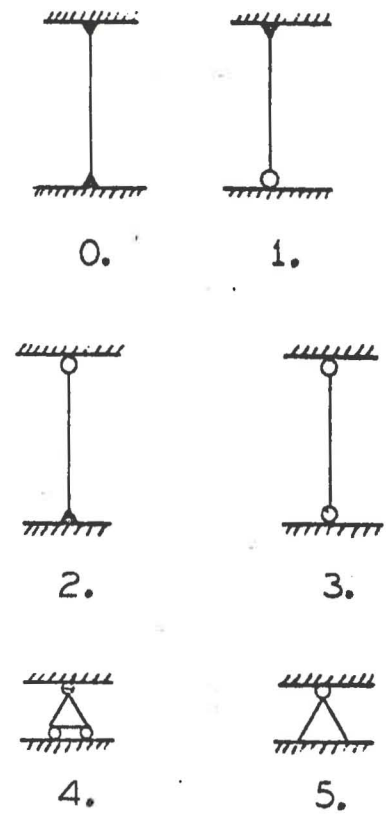

PIER END CONDITIONS

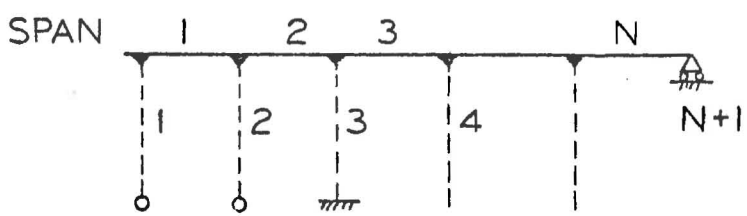

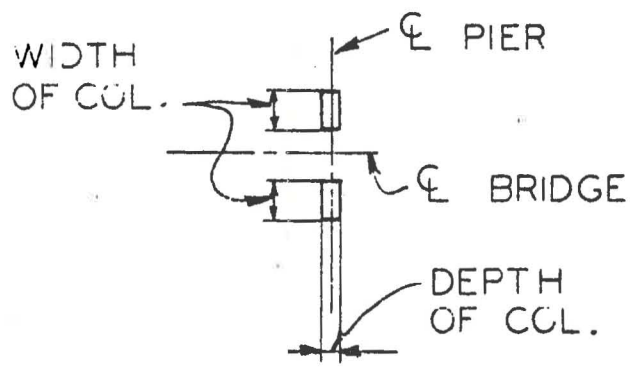

P7325 PRECAST, PRESTRESSED GIRDERS MADE COMPOSITE
AND CONTINUOUS WITH MILD REINF.

FORM IV

SVERDRUP AND PARCEL

FORM ___ OF ___

ADDITIONAL NODL CARDS (1 REQUIRED FOR EACH SPAN)

X1 (FT)	X2 (FT)	W1 (LBS/FT)	W2 (LBS/FT)	DL1 (KIPS)	A1 (FT)	DL2 (KIPS)	A2 (FT)

NOTE - A) CONCENTRATED DEAD LOAD IS HANDLED AS A UNIFORM LOAD OVER AT LEAST 1/20 OF THE SPAN.

B) IF ALL VALUES ARE ZERO, IT IS NECESSARY TO ENTER '0.' IN X1.

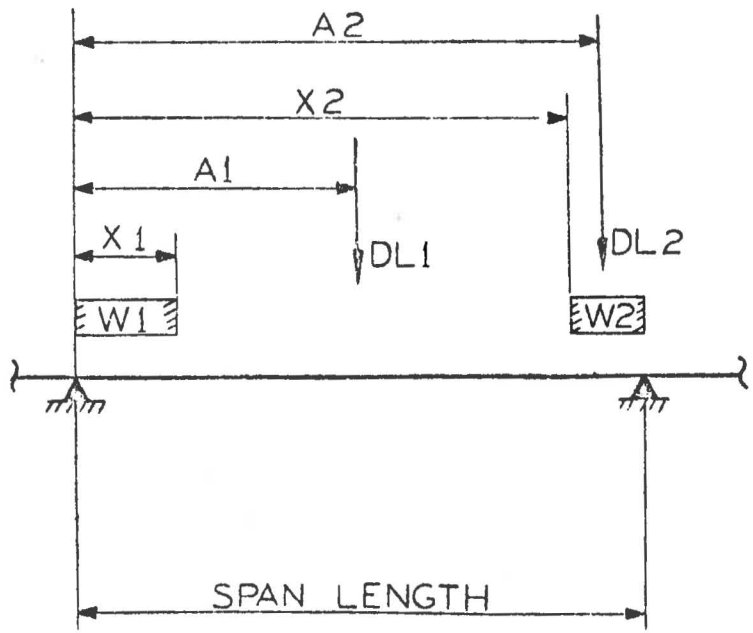

P7329 PRECAST, PRESTRESSED GIRDERS MADE COMPOSITE
AND CONTINUOUS WITH MILD REINF.

FORM V

SVERDRUP AND PARCEL

FORM ___ OF ___

PRETENSIONING INFORMATION (1 CARD REQUIRED FOR EACH SPAN)

** PER CENT LOSS AND PER CENT CREEP INDICATE PER CENT OCCURRING AFTER CONTINUITY IS MADE.

NO. OF STRANDS	STRAND SIZE *	DIST. TOP OF GDR. TO C.G. STRANDS AT ℄ (IN.)	DIST. TOP OF GDR. TO C.G. STRANDS AT END (IN.)	HOLD-DOWN PTS. FT. FROM ℄ SPAN	INITIAL PRSTRS (KSI)	LOSSES (KSI)	PER CENT LOSS **	CREEP FACTOR PHI (ϕ)	PER CENT CREEP **

* STRAND SIZE- 1= 1/2 DIA.
2= 7/16 DIA. F'_s = 270 KSI ONLY
3= 3/8 DIA.

NOTE - PRESTRESS AFTER TRANSFER IS SET TO

(FPI-10.0 KSI) OR 189 KSI, WHICHEVER IS LESS.

FPI IS INITIAL PRETENSIONING STEEL STRESS.
10.0 KSI IS SET AS LOSS DUE TO ELASTIC SHORTENING AND RELAXATION OF STEEL STRESS AT TRANSFER.

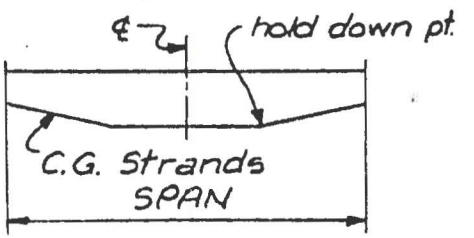

P732 PRECAST, PRESTRESSED GIRDERS MADE COMPOSITE AND CONTINUOUS WITH MILD REINF.

SVERDRUP AND PARCEL

FORM ___ OF ___
FORM VI

OPTION

9	10

OPTION = 1 IF IMPACT (FRACTION OF LL) IS DIFFERENT FROM AASHTO ART. 1.2.12(C), OTHERWISE ENTER -1 AND DISREGARD AND DO NOT ENTER NEXT 2 CARDS.

IMPACT - (FRACTION OF LL, MUST BE FILLED IN IF 1 WAS ENTERED ABOVE)

SPAN 1	SPAN 2	SPAN 3	SPAN 4	SPAN 5	SPAN 6	SPAN 7	SPAN 8

DISTRIBUTION FACTOR - (FRACTION OF WHEEL LOAD, MUST BE FILLED IN IF 1 WAS ENTERED ABOVE)

SPAN 1	SPAN 2	SPAN 3	SPAN 4	SPAN 5	SPAN 6	SPAN 7	SPAN 8

LANE LOAD - FOR MOMENT COMPUTATION

CONC. LOAD -KIPS	UNIF. LOAD-K/FT

TRUCK LOAD (SPECIAL TRUCK)

10

NO. OF AXLES (8 MAX.)

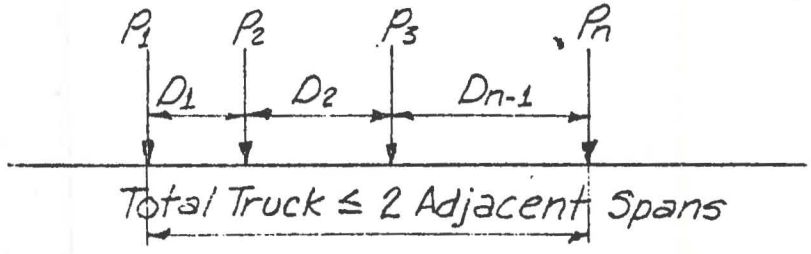

TRUCK AXLE LOADS P (KIPS)

P1	P2	P3	P4	P5	P6	P7	P8

AXLE SPACING IN FT.

D1	D2	D3	D4	D5	D6	D7

LANE LOAD - FOR SHEAR COMPUTATION

CONC. LOAD -KIPS	UNIF. LOAD -K/FT

P732 PRECAST, PRESTRESSED GIRDERS MADE COMPOSITE AND CONTINUOUS WITH MILD REINF.

FORM VII

SVERDRUP AND PARCEL

FORM ___ OF ___

CONCRETE SPECIFICATIONS

F'_c (KSI)	FINAL TENSION COEFFICIENT	COVER(IN)(TO CTR. OF BAR) FOR NON-PRESTRESSED REINFORCEMENT AT TOP OF SLAB	AT BOTT OF GDR.	F_{SY} (KSI)
1 2 3 4 5 6 7 8 9 10	11 12 13 14 15 16 17 18 19 20	21 22 23 24 25 26 27 28 29 30	31 32 33 34 35 36 37 38 39 40	41 42 43 44 45 46 47 48 49 50
.	.	.	.	.

DEFINITION OF CONCRETE SPECIFICATIONS -
F'_c = COMPR.STRENGTH OF CONCRETE AT 28 DAYS
FINAL TENSION COEFFICIENT = COEFFICIENT TO BE MULTIPLIED BY CONCRETE STRENGTH TO OBTAIN ALLOWABLE FINAL TENSION IN CONCRETE.
(COEFFICIENT USUALLY IN RANGE OF .0 TO .085)
F_{SY} = YIELD STRENGTH OF CONVENTIONAL MILD REINFORCEMENT IN TENSION

* SPECIFY AS POSITIVE NUMBER FOR CREEP AND SHRINKAGE, NEGATIVE SIGN INDICATES EXPANSION OR SWELLING.

** NEGATIVE SIGN INDICATES TEMPERATURE FALL.

*** REDUCTION FACTOR FOR AASHTO GROUP LOADING TO REDUCE LOAD TO N.U.S. DO NOT USE '0.'

**** FACTOR BY WHICH CREEP AND SHRINKAGE IS MULTIPLIED FOR ULTIMATE LOAD INVESTIGATION.

CREEP+SHRINKAGE STRAIN*	TEMPERATURE CHANGE** (DEGREES FAHRENHEIT)
1 2 3 4 5 6 7 8 9 10	11 12 13 14 15 16 17 18 19 20
.	.

COEFF. FOR AASHTO GROUP LOADING***	LOAD FACTOR FOR CREEP+SHRINKAGE****
1 2 3 4 5 6 7 8 9 10	11 12 13 14 15 16 17 18 19 20

NOTE - LAST TWO CARDS MUST BE ENTERED.

23 OF

```
 1   JOB NO. 8080  THUNDERBIRD ROAD OVER DIVERSION CHANNEL        PROGRAM P7329
 2   PROBLEM: INTERIOR GIRDER DESIGN   RUN # 10 (9 GIRDERS)       BY:RDT  CHKD:
 3       1.        1.        0.        -2.       -1.       -1.        1.        1.
 4      4.   4. 150.1.919    0.       234.      4230000.  3820000.  231.       .00017
 5    1.
 6     123.33     1.68      0.        42.       28.       0.   17.    4.65 10.   10.
 7     9.25     8.47     6.50     -2.5        9.
 8       1.     123.33     72.       72.
 9       2.     123.33      5.        5.
10       3.     123.33      8.        8.
11       4.     123.33      8.        8.
12     123.33     1.68      0.        42.       28.       0.   17.    4.65 10.   10.
13     9.25     8.47     6.50     -2.5        9.
14       1.     123.33     72.       72.
15       2.     123.33      5.        5.
16       3.     123.33      8.        8.
17       4.     123.33      8.        8.
18     123.33     1.68      0.        42.       28.       0.   17.    4.65 10.   10.
19     9.25     8.47     6.50     -2.5        9.
20       1.     123.33     72.       72.
21       2.     123.33      5.        5.
22       3.     123.33      8.        8.
23       4.     123.33      8.        8.
24     123.33     1.68      0.        42.       28.       0.   17.    4.65 10.   10.
25     9.25     8.47     6.50     -2.5        9.
26       1.     123.33     72.       72.
27       2.     123.33      5.        5.
28       3.     123.33      8.        8.
29       4.     123.33      8.        8.
30     2.        1.       47.95     41.57     994.      3122000.
31     2.        5.       33.91     36.                 3122000.
32     2.        5.       33.71     36.                 3122000.
33     2.        5.       33.51     36.                 3122000.
34     2.        1.       45.77     41.57     994.      3122000.
35                     123.33    0.    116.      0.      5.57   41.11    5.57   82.22
36                     123.33    0.    116.      0.      5.57   41.11    5.57   82.22
37                     123.33    0.    116.      0.      5.57   41.11    5.57   82.22
38                     123.33    0.    116.      0.      5.57   41.11    5.57   82.22
39    63.        1.       65.62     49.97     12.33     189.    56.  40.   2.  60.
40    58.        1.       66.10     50.10     12.33     189.    53.  41.   2.  60.
41    58.        1.       66.10     50.10     12.33     189.    53.  41.   2.  60.
42    63.        1.       65.62     49.97     12.33     189.    56.  40.   2.  60.
43     5.5       .081      2.25      3.0      40.
44    .000113  -40.
45     1.3       1.
[EOB]
{_* Executing ***
```

24

SVERDRUP & PARCEL AND ASSOCIATES, INC. 15:43 OCT 15,'82 PAGE

JOB NO. 8080 THUNDERBIRD ROAD OVER DIVERSION CHANNEL PROGRAM P7329

PROBLEM: INTERIOR GIRDER DESIGN RUN # 10 (9 GIRDERS) BY:RDT CHKD: JFF

****

INPUT DATA

****

CODE(1)	CODE(2)	CODE(3)	CODE(4)	CODE(5)	CODE(6)	CODE(7)	CODE(8)
1.	1.	0.	-2.	-1.	-1.	1.	1.

NO. SPANS	LIVE LOAD	DL.LBS/FT3	L.L.R	L.L.SDWK.	SDL	(E) GDR.	(E) SLAB	FWS	SHRINK.STRAIN
4.0000	4.0000	150.0000	1.9190	0.0000	234.0000	4230000.	3820000.	231.0000	0.0001700

SHEAR DIST.FACT. DIVIDED BY D.F.= 1.0000

SPAN LENGTH	D.F.	DL.LBS/FT	T-FLG.W.	B-FLG.W.	WIDENING	AA	BB	CC	DD
123.33	1.68	0.00	42.00	28.00	0.00	17.00	4.65	10.00	10.00

GIRDER SPACING= 9.25 FT. EFF.SLAB WIDTH= 8.47 FT. EFF.SLAB THICKNESS= 6.50 IN. EMBEDMENT= -2.50IN.NO.OF GDRS= 9.

TYPE	RANGE	A	B
1.0000	123.3300	72.0000	72.0000
2.0000	123.3300	5.0000	5.0000
3.0000	123.3300	8.0000	8.0000
4.0000	123.3300	8.0000	8.0000

SECTION PROPERTIES SPAN 1

SECT.	DEPTH	THK.T.FLG	THK.B.FLG	WEB THK	AREA	GDR.WEIGHT	MOM.INERTIA	YT	YB	T.FLG.	B.FLG.	COMP.I.	COMP.YB
	IN.	IN.	IN.	IN.	FT2	LBS.PR.FT	FT4	IN.	IN.	IN.	IN.	FT4	IN.
1	72.000	5.000	8.000	8.000	7.54	1130.26	35.42	35.60	36.40	42.00	28.00	69.61	52.37
2	72.000	5.000	8.000	8.000	7.54	1130.26	35.42	35.60	36.40	42.00	28.00	69.61	52.37
3	72.000	5.000	8.000	8.000	7.54	1130.26	35.42	35.60	36.40	42.00	28.00	69.61	52.37
4	72.000	5.000	8.000	8.000	7.54	1130.26	35.42	35.60	36.40	42.00	28.00	69.61	52.37
5	72.000	5.000	8.000	8.000	7.54	1130.26	35.42	35.60	36.40	42.00	28.00	69.61	52.37
6	72.000	5.000	8.000	8.000	7.54	1130.26	35.42	35.60	36.40	42.00	28.00	69.61	52.37
7	72.000	5.000	8.000	8.000	7.54	1130.26	35.42	35.60	36.40	42.00	28.00	69.61	52.37
8	72.000	5.000	8.000	8.000	7.54	1130.26	35.42	35.60	36.40	42.00	28.00	69.61	52.37
9	72.000	5.000	8.000	8.000	7.54	1130.26	35.42	35.60	36.40	42.00	28.00	69.61	52.37
10	72.000	5.000	8.000	8.000	7.54	1130.26	35.42	35.60	36.40	42.00	28.00	69.61	52.37
11	72.000	5.000	8.000	8.000	7.54	1130.26	35.42	35.60	36.40	42.00	28.00	69.61	52.37
12	72.000	5.000	8.000	8.000	7.54	1130.26	35.42	35.60	36.40	42.00	28.00	69.61	52.37
13	72.000	5.000	8.000	8.000	7.54	1130.26	35.42	35.60	36.40	42.00	28.00	69.61	52.37
14	72.000	5.000	8.000	8.000	7.54	1130.26	35.42	35.60	36.40	42.00	28.00	69.61	52.37
15	72.000	5.000	8.000	8.000	7.54	1130.26	35.42	35.60	36.40	42.00	28.00	69.61	52.37
16	72.000	5.000	8.000	8.000	7.54	1130.26	35.42	35.60	36.40	42.00	28.00	69.61	52.37
17	72.000	5.000	8.000	8.000	7.54	1130.26	35.42	35.60	36.40	42.00	28.00	69.61	52.37
18	72.000	5.000	8.000	8.000	7.54	1130.26	35.42	35.60	36.40	42.00	28.00	69.61	52.37
19	72.000	5.000	8.000	8.000	7.54	1130.26	35.42	35.60	36.40	42.00	28.00	69.61	52.37
20	72.000	5.000	8.000	8.000	7.54	1130.26	35.42	35.60	36.40	42.00	28.00	69.61	52.37
21	72.000	5.000	8.000	8.000	7.54	1130.26	35.42	35.60	36.40	42.00	28.00	69.61	52.37

SPAN LENGTH	D.F.	DL.LBS/FT	T-FLG.W.	B-FLG.W.	WIDENING	AA	BB	CC	DD
123.33	1.68	0.00	42.00	28.00	0.00	17.00	4.65	10.00	10.00

GIRDER SPACING= 9.25 FT. EFF.SLAB WIDTH= 8.47 FT. EFF.SLAB THICKNESS= 6.50 IN. EMBEDMENT= -2.50IN.NO.OF GDRS= 9.

TYPE	RANGE	A	B
1.0000	123.3300	72.0000	72.0000
2.0000	123.3300	5.0000	5.0000
3.0000	123.3300	8.0000	8.0000
4.0000	123.3300	8.0000	8.0000

SECTION PROPERTIES SPAN 2

SECT.	DEPTH	THK.T.FLG	THK.B.FLG	WEB THK	AREA	GDR.WEIGHT	MOM.INERTIA	YT	YB	T.FLG.	B.FLG.	COMP.I.	COMP.YB
	IN.	IN.	IN.	IN.	FT2	LBS.PR.FT	FT4	IN.	IN.	IN.	IN.	FT4	IN.
1	72.000	5.000	8.000	8.000	7.54	1130.26	35.42	35.60	36.40	42.00	28.00	69.61	52.37
2	72.000	5.000	8.000	8.000	7.54	1130.26	35.42	35.60	36.40	42.00	28.00	69.61	52.37
3	72.000	5.000	8.000	8.000	7.54	1130.26	35.42	35.60	36.40	42.00	28.00	69.61	52.37
4	72.000	5.000	8.000	8.000	7.54	1130.26	35.42	35.60	36.40	42.00	28.00	69.61	52.37
5	72.000	5.000	8.000	8.000	7.54	1130.26	35.42	35.60	36.40	42.00	28.00	69.61	52.37
6	72.000	5.000	8.000	8.000	7.54	1130.26	35.42	35.60	36.40	42.00	28.00	69.61	52.37
7	72.000	5.000	8.000	8.000	7.54	1130.26	35.42	35.60	36.40	42.00	28.00	69.61	52.37
8	72.000	5.000	8.000	8.000	7.54	1130.26	35.42	35.60	36.40	42.00	28.00	69.61	52.37
9	72.000	5.000	8.000	8.000	7.54	1130.26	35.42	35.60	36.40	42.00	28.00	69.61	52.37
10	72.000	5.000	8.000	8.000	7.54	1130.26	35.42	35.60	36.40	42.00	28.00	69.61	52.37
11	72.000	5.000	8.000	8.000	7.54	1130.26	35.42	35.60	36.40	42.00	28.00	69.61	52.37
12	72.000	5.000	8.000	8.000	7.54	1130.26	35.42	35.60	36.40	42.00	28.00	69.61	52.37
13	72.000	5.000	8.000	8.000	7.54	1130.26	35.42	35.60	36.40	42.00	28.00	69.61	52.37
14	72.000	5.000	8.000	8.000	7.54	1130.26	35.42	35.60	36.40	42.00	28.00	69.61	52.37
15	72.000	5.000	8.000	8.000	7.54	1130.26	35.42	35.60	36.40	42.00	28.00	69.61	52.37
16	72.000	5.000	8.000	8.000	7.54	1130.26	35.42	35.60	36.40	42.00	28.00	69.61	52.37
17	72.000	5.000	8.000	8.000	7.54	1130.26	35.42	35.60	36.40	42.00	28.00	69.61	52.37
18	72.000	5.000	8.000	8.000	7.54	1130.26	35.42	35.60	36.40	42.00	28.00	69.61	52.37
19	72.000	5.000	8.000	8.000	7.54	1130.26	35.42	35.60	36.40	42.00	28.00	69.61	52.37
20	72.000	5.000	8.000	8.000	7.54	1130.26	35.42	35.60	36.40	42.00	28.00	69.61	52.37
21	72.000	5.000	8.000	8.000	7.54	1130.26	35.42	35.60	36.40	42.00	28.00	69.61	52.37

SPAN LENGTH	D.F.	DL.LBS/FT	T-FLG.W.	B-FLG.W.	WIDENING	AA	BB	CC	DD
123.33	1.68	0.00	42.00	28.00	0.00	17.00	4.65	10.00	10.00

GIRDER SPACING= 9.25 FT. EFF.SLAB WIDTH= 8.47 FT. EFF.SLAB THICKNESS= 6.50 IN. EMBEDMENT= -2.50IN.NO.OF GDRS= 9.

TYPE	RANGE	A	B
1.0000	123.3300	72.0000	72.0000
2.0000	123.3300	5.0000	5.0000
3.0000	123.3300	8.0000	8.0000
4.0000	123.3300	8.0000	8.0000

SECTION PROPERTIES SPAN 3

SECT.	DEPTH	THK.T.FLG	THK.B.FLG	WEB THK	AREA	GDR.WEIGHT	MOM.INERTIA	YT	YB	T.FLG.	B.FLG.	COMP.I.	COMP.YB
	IN.	IN.	IN.	IN.	FT2	LBS.PR.FT	FT4	IN.	IN.	IN.	IN.	FT4	IN.
1	72.000	5.000	8.000	8.000	7.54	1130.26	35.42	35.60	36.40	42.00	28.00	69.61	52.37
2	72.000	5.000	8.000	8.000	7.54	1130.26	35.42	35.60	36.40	42.00	28.00	69.61	52.37
3	72.000	5.000	8.000	8.000	7.54	1130.26	35.42	35.60	36.40	42.00	28.00	69.61	52.37
4	72.000	5.000	8.000	8.000	7.54	1130.26	35.42	35.60	36.40	42.00	28.00	69.61	52.37
5	72.000	5.000	8.000	8.000	7.54	1130.26	35.42	35.60	36.40	42.00	28.00	69.61	52.37
6	72.000	5.000	8.000	8.000	7.54	1130.26	35.42	35.60	36.40	42.00	28.00	69.61	52.37
7	72.000	5.000	8.000	8.000	7.54	1130.26	35.42	35.60	36.40	42.00	28.00	69.61	52.37
8	72.000	5.000	8.000	8.000	7.54	1130.26	35.42	35.60	36.40	42.00	28.00	69.61	52.37
9	72.000	5.000	8.000	8.000	7.54	1130.26	35.42	35.60	36.40	42.00	28.00	69.61	52.37
10	72.000	5.000	8.000	8.000	7.54	1130.26	35.42	35.60	36.40	42.00	28.00	69.61	52.37
11	72.000	5.000	8.000	8.000	7.54	1130.26	35.42	35.60	36.40	42.00	28.00	69.61	52.37
12	72.000	5.000	8.000	8.000	7.54	1130.26	35.42	35.60	36.40	42.00	28.00	69.61	52.37
13	72.000	5.000	8.000	8.000	7.54	1130.26	35.42	35.60	36.40	42.00	28.00	69.61	52.37
14	72.000	5.000	8.000	8.000	7.54	1130.26	35.42	35.60	36.40	42.00	28.00	69.61	52.37
15	72.000	5.000	8.000	8.000	7.54	1130.26	35.42	35.60	36.40	42.00	28.00	69.61	52.37
16	72.000	5.000	8.000	8.000	7.54	1130.26	35.42	35.60	36.40	42.00	28.00	69.61	52.37
17	72.000	5.000	8.000	8.000	7.54	1130.26	35.42	35.60	36.40	42.00	28.00	69.61	52.37
18	72.000	5.000	8.000	8.000	7.54	1130.26	35.42	35.60	36.40	42.00	28.00	69.61	52.37
19	72.000	5.000	8.000	8.000	7.54	1130.26	35.42	35.60	36.40	42.00	28.00	69.61	52.37
20	72.000	5.000	8.000	8.000	7.54	1130.26	35.42	35.60	36.40	42.00	28.00	69.61	52.37
21	72.000	5.000	8.000	8.000	7.54	1130.26	35.42	35.60	36.40	42.00	28.00	69.61	52.37

SPAN LENGTH	D.F.	DL.LBS/FT	T-FLG.W.	B-FLG.W.	WIDENING	AA	BB	CC	DD
123.33	1.68	0.00	42.00	28.00	0.00	17.00	4.65	10.00	10.00

GIRDER SPACING= 9.25 FT. EFF.SLAB WIDTH= 8.47 FT. EFF.SLAB THICKNESS= 6.50 IN. EMBEDMENT= -2.50IN.NO.OF GDRS= 9.

TYPE	RANGE	A	B
1.0000	123.3300	72.0000	72.0000
2.0000	123.3300	5.0000	5.0000
3.0000	123.3300	8.0000	8.0000
4.0000	123.3300	8.0000	8.0000

SECTION PROPERTIES SPAN 4

SECT.	DEPTH	THK.T.FLG	THK.B.FLG	WEB THK	AREA	GDR.WEIGHT	MOM.INERTIA	YT	YB	T.FLG.	B.FLG.	COMP.I.	COMP.YB
	IN.	IN.	IN.	IN.	FT2	LBS.PR.FT	FT4	IN.	IN.	IN.	IN.	FT4	IN.
1	72.000	5.000	8.000	8.000	7.54	1130.26	35.42	35.60	36.40	42.00	28.00	69.61	52.37
2	72.000	5.000	8.000	8.000	7.54	1130.26	35.42	35.60	36.40	42.00	28.00	69.61	52.37
3	72.000	5.000	8.000	8.000	7.54	1130.26	35.42	35.60	36.40	42.00	28.00	69.61	52.37
4	72.000	5.000	8.000	8.000	7.54	1130.26	35.42	35.60	36.40	42.00	28.00	69.61	52.37
5	72.000	5.000	8.000	8.000	7.54	1130.26	35.42	35.60	36.40	42.00	28.00	69.61	52.37
6	72.000	5.000	8.000	8.000	7.54	1130.26	35.42	35.60	36.40	42.00	28.00	69.61	52.37
7	72.000	5.000	8.000	8.000	7.54	1130.26	35.42	35.60	36.40	42.00	28.00	69.61	52.37
8	72.000	5.000	8.000	8.000	7.54	1130.26	35.42	35.60	36.40	42.00	28.00	69.61	52.37
9	72.000	5.000	8.000	8.000	7.54	1130.26	35.42	35.60	36.40	42.00	28.00	69.61	52.37
10	72.000	5.000	8.000	8.000	7.54	1130.26	35.42	35.60	36.40	42.00	28.00	69.61	52.37
11	72.000	5.000	8.000	8.000	7.54	1130.26	35.42	35.60	36.40	42.00	28.00	69.61	52.37
12	72.000	5.000	8.000	8.000	7.54	1130.26	35.42	35.60	36.40	42.00	28.00	69.61	52.37
13	72.000	5.000	8.000	8.000	7.54	1130.26	35.42	35.60	36.40	42.00	28.00	69.61	52.37
14	72.000	5.000	8.000	8.000	7.54	1130.26	35.42	35.60	36.40	42.00	28.00	69.61	52.37
15	72.000	5.000	8.000	8.000	7.54	1130.26	35.42	35.60	36.40	42.00	28.00	69.61	52.37
16	72.000	5.000	8.000	8.000	7.54	1130.26	35.42	35.60	36.40	42.00	28.00	69.61	52.37
17	72.000	5.000	8.000	8.000	7.54	1130.26	35.42	35.60	36.40	42.00	28.00	69.61	52.37
18	72.000	5.000	8.000	8.000	7.54	1130.26	35.42	35.60	36.40	42.00	28.00	69.61	52.37
19	72.000	5.000	8.000	8.000	7.54	1130.26	35.42	35.60	36.40	42.00	28.00	69.61	52.37
20	72.000	5.000	8.000	8.000	7.54	1130.26	35.42	35.60	36.40	42.00	28.00	69.61	52.37
21	72.000	5.000	8.000	8.000	7.54	1130.26	35.42	35.60	36.40	42.00	28.00	69.61	52.37

COL. END CONDITION	NUMBER COLUMNS	HEIGHT (FT)	COLUMN THICKNESS (IN)	COLUMN WIDTH (IN)	E OF SUBSTRUCTURE (PSI)
2.	1.0	47.95	41.57	994.00	3122000.
2.	5.0	33.91	36.00	0.00	3122000.
2.	5.0	33.71	36.00	0.00	3122000.
2.	5.0	33.51	36.00	0.00	3122000.
2.	1.0	45.77	41.57	994.00	3122000.

H1	H2	X1	X2	W1	W2	DL1	A	DL2	B
0.00	0.00	123.33	0.00	116.00	0.00	5.57	41.11	5.57	82.22
0.00	0.00	123.33	0.00	116.00	0.00	5.57	41.11	5.57	82.22
0.00	0.00	123.33	0.00	116.00	0.00	5.57	41.11	5.57	82.22
0.00	0.00	123.33	0.00	116.00	0.00	5.57	41.11	5.57	82.22

SVERDRUP & PARCEL AND ASSOCIATES, INC. 15:43 OCT 15,'82 PAGE

JOB NO. 8080 THUNDERBIRD ROAD OVER DIVERSION CHANNEL PROGRAM P7329

PROBLEM: INTERIOR GIRDER DESIGN RUN # 10 (9 GIRDERS) BY:RDT CHKD: JFF

==========

NUMBER OF SPANS 4

SPAN LENGTHS(FT) 123.33 123.33 123.33 123.33

NOTE: 99999.00 INDICATES SYMMETRICAL SPANS

==========

PRETENSIONING DESIGN DATA

NO.STRANDS	SIZE	ECC.CENTER	ECC.END	HOLD-DOWN	INIT.PRET.	LOSSES	PERC.L.	PHI	PERC.CREEP
63.0000	1/2	65.6200	49.9700	12.3300	189.0000	56.0000	40.0000	2.0000	60.0000
58.0000	1/2	66.1000	50.1000	12.3300	189.0000	53.0000	41.0000	2.0000	60.0000
58.0000	1/2	66.1000	50.1000	12.3300	189.0000	53.0000	41.0000	2.0000	60.0000
63.0000	1/2	65.6200	49.9700	12.3300	189.0000	56.0000	40.0000	2.0000	60.0000

SVERDRUP & PARCEL AND ASSOCIATES, INC. 13:43 OCT 15,'82 PAGE

JOB NO. 8080 THUNDERBIRD ROAD OVER DIVERSION CHANNEL PROGRAM P7329

PROBLEM: INTERIOR GIRDER DESIGN RUN # 10 (9 GIRDERS) BY:RDT CHKD: JFF

DEAD LOAD AND PRETENSIONING MOMENTS(FT-KIPS) AND SHEARS(KIPS) AT TENTH POINTS
NEGATIVE SIGN FOR STRESS INDICATES COMPRESSION. STRESS IN KIPS/IN2

ATTENTIONPROGRAM DOES NOT CHECK STRESSES AGAINST ALLOWABLE STRESSES

	DEAD LOAD GDR.		ADD. DEAD LOAD		INITIAL PRETENSIONING			FINAL PRETENSIONING			DL.GDR.+IN.PRET.		NCDL+INIT.PRET.	
POINT	MOMENT	SHEAR	MOMENT	SHEAR	MOMENT	THRUST	SHEAR	MOMENT	THRUST	SHEAR	STR.TOP	STR.BOT	STR.TOP	STR.BOT
SPAN 1														
0	0.0	69.7	0.0	65.8	-2066.5	1725.4	-45.6	-1535.4	1282.0	-33.9	-0.388	-2.819	-0.388	-2.819
1	773.6	55.8	737.3	53.8	-2629.0	1725.4	-45.6	-1953.4	1282.0	-33.9	-0.511	-2.693	-0.940	-2.255
2	1375.3	41.8	1326.1	41.7	-3191.5	1725.4	-45.6	-2371.3	1282.0	-33.9	-0.534	-2.670	-1.305	-1.882
3	1805.1	27.9	1765.3	28.8	-3754.0	1725.4	-45.6	-2789.3	1282.0	-33.9	-0.457	-2.749	-1.483	-1.699
4	2063.0	13.9	2012.0	12.1	-4316.5	1725.4	-45.6	-3207.2	1282.0	-33.9	-0.280	-2.930	-1.450	-1.734
5	2148.9	0.0	2086.2	0.0	-4316.6	1725.4	0.0	-3207.3	1282.0	0.0	-0.330	-2.879	-1.543	-1.639
6	2063.0	-13.9	2011.9	-11.7	-4316.5	1725.4	45.6	-3207.2	1282.0	33.9	-0.280	-2.930	-1.450	-1.734
7	1805.1	-27.9	1765.1	-28.9	-3754.0	1725.4	45.6	-2789.3	1282.0	33.9	-0.457	-2.749	-1.483	-1.699
8	1375.3	-41.8	1325.9	-41.7	-3191.5	1725.4	45.6	-2371.3	1282.0	33.9	-0.534	-2.670	-1.305	-1.882
9	773.6	-55.8	737.0	-53.8	-2629.0	1725.4	45.6	-1953.4	1282.0	33.9	-0.511	-2.693	-0.940	-2.255
10	0.0	-69.7	0.0	-65.7	-2066.5	1725.4	45.6	-1535.4	1282.0	33.9	-0.388	-2.819	-0.388	-2.819
SPAN 2														
0	0.0	69.7	0.0	65.8	-1919.7	1588.4	-42.9	-1458.5	1206.9	-32.6	-0.348	-2.606	-0.348	-2.606
1	773.6	55.8	737.3	53.8	-2449.1	1588.4	-42.9	-1860.8	1206.9	-32.6	-0.490	-2.460	-0.918	-2.022
2	1375.3	41.8	1326.1	41.7	-2978.6	1588.4	-42.9	-2263.0	1206.9	-32.6	-0.532	-2.417	-1.303	-1.629
3	1805.1	27.9	1765.3	28.8	-3508.0	1588.4	-42.9	-2665.3	1206.9	-32.6	-0.474	-2.477	-1.500	-1.427
4	2063.0	13.9	2012.0	12.1	-4037.5	1588.4	-42.9	-3067.6	1206.9	-32.6	-0.316	-2.638	-1.486	-1.442
5	2148.9	0.0	2086.2	0.0	-4037.6	1588.4	0.0	-3067.7	1206.9	0.0	-0.366	-2.587	-1.579	-1.346
6	2063.0	-13.9	2011.9	-11.7	-4037.5	1588.4	42.9	-3067.6	1206.9	32.6	-0.316	-2.638	-1.486	-1.442
7	1805.1	-27.9	1765.1	-28.9	-3508.0	1588.4	42.9	-2665.3	1206.9	32.6	-0.474	-2.477	-1.500	-1.427
8	1375.3	-41.8	1325.9	-41.7	-2978.6	1588.4	42.9	-2263.0	1206.9	32.6	-0.532	-2.417	-1.303	-1.629
9	773.6	-55.8	737.0	-53.8	-2449.1	1588.4	42.9	-1860.8	1206.9	32.6	-0.490	-2.460	-0.918	-2.022
10	0.0	-69.7	0.0	-65.7	-1919.7	1588.4	42.9	-1458.5	1206.9	32.6	-0.348	-2.606	-0.348	-2.606

SVERDRUP & PARCEL AND ASSOCIATES, INC. 15:43 OCT 15,'82 PAGE

JOB NO. 8080 THUNDERBIRD ROAD OVER DIVERSION CHANNEL PROGRAM P7329

PROBLEM: INTERIOR GIRDER DESIGN RUN # 10 (9 GIRDERS) BY:RDT CHKD: JFF

DEAD LOAD AND PRETENSIONING MOMENTS(FT-KIPS) AND SHEARS(KIPS) AT TENTH POINTS
NEGATIVE SIGN FOR STRESS INDICATES COMPRESSION. STRESS IN KIPS/IN2

ATTENTIONPROGRAM DOES NOT CHECK STRESSES AGAINST ALLOWABLE STRESSES

	DEAD LOAD GDR.		ADD. DEAD LOAD		INITIAL PRETENSIONING			FINAL PRETENSIONING			DL.GDR.+IN.PRET.		NCDL+INIT.PRET.	
POINT	MOMENT	SHEAR	MOMENT	SHEAR	MOMENT	THRUST	SHEAR	MOMENT	THRUST	SHEAR	STR.TOP	STR.BOT	STR.TOP	STR.BOT
SPAN 3														
0	0.0	69.7	0.0	65.8	-1919.7	1588.4	-42.9	-1458.5	1206.9	-32.6	-0.348	-2.606	-0.348	-2.606
1	773.6	55.8	737.3	53.8	-2449.1	1588.4	-42.9	-1860.8	1206.9	-32.6	-0.490	-2.460	-0.918	-2.022
2	1375.3	41.8	1326.1	41.7	-2978.6	1588.4	-42.9	-2263.0	1206.9	-32.6	-0.532	-2.417	-1.303	-1.629
3	1805.1	27.9	1765.3	28.8	-3508.0	1588.4	-42.9	-2665.3	1206.9	-32.6	-0.474	-2.477	-1.500	-1.427
4	2063.0	13.9	2012.0	12.1	-4037.5	1588.4	-42.9	-3067.6	1206.9	-32.6	-0.316	-2.638	-1.486	-1.442
5	2148.9	0.0	2086.2	0.0	-4037.6	1588.4	0.0	-3067.7	1206.9	0.0	-0.366	-2.587	-1.579	-1.346
6	2063.0	-13.9	2011.9	-11.7	-4037.5	1588.4	42.9	-3067.6	1206.9	32.6	-0.316	-2.638	-1.486	-1.442
7	1805.1	-27.9	1765.1	-28.9	-3508.0	1588.4	42.9	-2665.3	1206.9	32.6	-0.474	-2.477	-1.500	-1.427
8	1375.3	-41.8	1325.9	-41.7	-2978.6	1588.4	42.9	-2263.0	1206.9	32.6	-0.532	-2.417	-1.303	-1.629
9	773.6	-55.8	737.0	-53.8	-2449.1	1588.4	42.9	-1860.8	1206.9	32.6	-0.490	-2.460	-0.918	-2.022
10	0.0	-69.7	0.0	-65.7	-1919.7	1588.4	42.9	-1458.5	1206.9	32.6	-0.348	-2.606	-0.348	-2.606
SPAN 4														
0	0.0	69.7	0.0	65.8	-2066.5	1725.4	-45.6	-1535.4	1282.0	-33.9	-0.388	-2.819	-0.388	-2.819
1	773.6	55.8	737.3	53.8	-2629.0	1725.4	-45.6	-1953.4	1282.0	-33.9	-0.511	-2.693	-0.940	-2.255
2	1375.3	41.8	1326.1	41.7	-3191.5	1725.4	-45.6	-2371.3	1282.0	-33.9	-0.534	-2.670	-1.305	-1.882
3	1805.1	27.9	1765.3	28.8	-3754.0	1725.4	-45.6	-2789.3	1282.0	-33.9	-0.457	-2.749	-1.483	-1.699
4	2063.0	13.9	2012.0	12.1	-4316.5	1725.4	-45.6	-3207.2	1282.0	-33.9	-0.280	-2.930	-1.450	-1.734
5	2148.9	0.0	2086.2	0.0	-4316.6	1725.4	0.0	-3207.3	1282.0	0.0	-0.330	-2.879	-1.543	-1.639
6	2063.0	-13.9	2011.9	-11.7	-4316.5	1725.4	45.6	-3207.2	1282.0	33.9	-0.280	-2.930	-1.450	-1.734
7	1805.1	-27.9	1765.1	-28.9	-3754.0	1725.4	45.6	-2789.3	1282.0	33.9	-0.457	-2.749	-1.483	-1.699
8	1375.3	-41.8	1325.9	-41.7	-3191.5	1725.4	45.6	-2371.3	1282.0	33.9	-0.534	-2.670	-1.305	-1.882
9	773.6	-55.8	737.0	-53.8	-2629.0	1725.4	45.6	-1953.4	1282.0	33.9	-0.511	-2.693	-0.940	-2.255
10	0.0	-69.7	0.0	-65.7	-2066.5	1725.4	45.6	-1535.4	1282.0	33.9	-0.388	-2.819	-0.388	-2.819

SVERDRUP & PARCEL AND ASSOCIATES, INC. 15:43 OCT 15,'82 PAGE

JOB NO. 8080 THUNDERBIRD ROAD OVER DIVERSION CHANNEL PROGRAM P7329

PROBLEM: INTERIOR GIRDER DESIGN RUN # 10 (9 GIRDERS) BY:RDT CHKD: JFF

DEAD LOAD DEFLECTIONS(INCHES) AT TENTH POINTS

POINT	GDR. DL	IN.PR.DISP.	TOT.IN.DISP	ADD.DL.DISP	PR.DISP.CON.	TOTAL DISP.
SPAN 1						
0	0.00	0.00	0.00	0.00	0.00	0.00
1	0.59	-1.35	-0.76	0.58	-2.14	-0.49
2	1.12	-2.48	-1.35	1.09	-3.93	-0.81
3	1.54	-3.34	-1.80	1.50	-5.29	-1.02
4	1.80	-3.88	-2.07	1.75	-6.14	-1.14
5	1.89	-4.06	-2.17	1.84	-6.43	-1.18
6	1.80	-3.88	-2.07	1.75	-6.14	-1.14
7	1.54	-3.34	-1.80	1.50	-5.29	-1.02
8	1.12	-2.48	-1.35	1.09	-3.93	-0.81
9	0.59	-1.35	-0.76	0.58	-2.14	-0.49
10	0.00	0.00	0.00	0.00	0.00	0.00
SPAN 2						
0	0.00	0.00	0.00	0.00	0.00	0.00
1	0.59	-1.26	-0.67	0.58	-2.02	-0.37
2	1.12	-2.32	-1.19	1.09	-3.71	-0.59
3	1.54	-3.12	-1.58	1.50	-4.99	-0.73
4	1.80	-3.62	-1.82	1.75	-5.80	-0.80
5	1.89	-3.80	-1.90	1.84	-6.08	-0.83
6	1.80	-3.62	-1.82	1.75	-5.80	-0.80
7	1.54	-3.12	-1.58	1.50	-4.99	-0.73
8	1.12	-2.32	-1.19	1.09	-3.71	-0.59
9	0.59	-1.26	-0.67	0.58	-2.02	-0.37
10	0.00	0.00	0.00	0.00	0.00	0.00
SPAN 3						
0	0.00	0.00	0.00	0.00	0.00	0.00
1	0.59	-1.26	-0.67	0.58	-2.02	-0.37
2	1.12	-2.32	-1.19	1.09	-3.71	-0.59
3	1.54	-3.12	-1.58	1.50	-4.99	-0.73
4	1.80	-3.62	-1.82	1.75	-5.80	-0.80
5	1.89	-3.80	-1.90	1.84	-6.08	-0.83
6	1.80	-3.62	-1.82	1.75	-5.80	-0.80
7	1.54	-3.12	-1.58	1.50	-4.99	-0.73
8	1.12	-2.32	-1.19	1.09	-3.71	-0.59
9	0.59	-1.26	-0.67	0.58	-2.02	-0.37
10	0.00	0.00	0.00	0.00	0.00	0.00

SVERDRUP & PARCEL AND ASSOCIATES, INC. 15:43 OCT 15,'82 PAGE

JOB NO. 8080 THUNDERBIRD ROAD OVER DIVERSION CHANNEL PROGRAM P7329

PROBLEM: INTERIOR GIRDER DESIGN RUN # 10 (9 GIRDERS) BY:RDT CHKD: JFF

DEAD LOAD DEFLECTIONS(INCHES) AT TENTH POINTS

SPAN 4

POINT	GDR. DL	IN.PR.DISP.	TOT.IN.DISP	ADD.DL.DISP	PR.DISP.CON.	TOTAL DISP.
0	0.00	0.00	0.00	0.00	0.00	0.00
1	0.59	-1.35	-0.76	0.58	-2.14	-0.49
2	1.12	-2.48	-1.35	1.09	-3.93	-0.81
3	1.54	-3.34	-1.80	1.50	-5.29	-1.02
4	1.80	-3.88	-2.07	1.75	-6.14	-1.14
5	1.89	-4.06	-2.17	1.84	-6.43	-1.18
6	1.80	-3.88	-2.07	1.75	-6.14	-1.14
7	1.54	-3.34	-1.80	1.50	-5.29	-1.02
8	1.12	-2.48	-1.35	1.09	-3.93	-0.81
9	0.59	-1.35	-0.76	0.58	-2.14	-0.49
10	0.00	0.00	0.00	0.00	0.00	0.00

SVERDRUP & PARCEL AND ASSOCIATES, INC. 15:43 OCT 15, '82 PAGE

JOB NO. 8080 THUNDERBIRD ROAD OVER DIVERSION CHANNEL PROGRAM P7329

PROBLEM: INTERIOR GIRDER DESIGN RUN # 10 (9 GIRDERS) BY:RDT CHKD: JFF

MAXIMUM LIVE LOAD MOMENTS(FT-KIPS)AT TENTH POINTS

POINT	POSITIVE SDK LL	NEGATIVE SDK LL	LANE LOAD INCL.IMP. POSITIVE	LANE LOAD INCL.IMP. NEGATIVE	TRUCK LOAD INCL.IMP. POSITIVE	TRUCK LOAD INCL.IMP. NEGATIVE	FWS.+(SDL)
SPAN 1							
0	0.0	0.0	0.0	0.0	0.0	0.0	0.0
1	0.0	0.0	585.2	-71.7	698.6	-68.4	242.7
2	0.0	0.0	1016.3	-143.4	1178.3	-136.8	414.6
3	0.0	0.0	1295.3	-215.1	1455.8	-205.2	515.9
4	0.0	0.0	1425.8	-286.8	1569.6	-273.6	546.4
5	0.0	0.0	1413.0	-358.5	1531.7	-341.9	506.1
6	0.0	0.0	1263.2	-430.2	1363.1	-410.3	395.2
7	0.0	0.0	984.5	-501.9	1062.6	-478.7	213.5
8	0.0	0.0	588.4	-575.9	666.2	-547.1	-38.9
9	0.0	0.0	281.5	-927.0	215.4	-615.5	-362.0
10	0.0	0.0	179.2	-1588.2	185.7	-898.2	-755.9
SPAN 2							
0	0.0	0.0	179.2	-1588.2	185.7	-898.2	-755.9
1	0.0	0.0	254.2	-964.9	271.1	-784.4	-412.4
2	0.0	0.0	525.3	-662.0	705.4	-670.6	-139.7
3	0.0	0.0	874.8	-639.3	1037.8	-556.9	62.3
4	0.0	0.0	1094.1	-616.6	1237.3	-443.1	193.6
5	0.0	0.0	1178.0	-593.9	1288.8	-329.3	254.2
6	0.0	0.0	1125.2	-571.3	1223.5	-371.3	244.0
7	0.0	0.0	938.1	-548.6	1011.6	-464.1	163.1
8	0.0	0.0	632.2	-539.9	673.3	-557.0	11.5
9	0.0	0.0	419.6	-834.3	243.6	-649.8	-210.9
10	0.0	0.0	411.4	-1433.9	239.5	-742.6	-503.9
SPAN 3							
0	0.0	0.0	411.4	-1433.9	239.5	-742.6	-503.9
1	0.0	0.0	419.6	-834.3	243.6	-649.8	-210.9
2	0.0	0.0	632.2	-539.9	673.3	-557.0	11.5
3	0.0	0.0	938.1	-548.6	1011.6	-464.1	163.1
4	0.0	0.0	1125.2	-571.3	1223.5	-371.3	244.0
5	0.0	0.0	1178.0	-593.9	1288.8	-329.3	254.2
6	0.0	0.0	1094.1	-616.6	1237.3	-443.1	193.6
7	0.0	0.0	874.8	-639.3	1037.8	-556.9	62.3
8	0.0	0.0	525.3	-662.0	705.4	-670.6	-139.7
9	0.0	0.0	254.2	-964.9	271.1	-784.4	-412.4
10	0.0	0.0	179.2	-1588.2	185.7	-898.2	-755.9

SVERDRUP & PARCEL AND ASSOCIATES, INC. 15:43 OCT 15,'82 PAGE

JOB NO. 8080 THUNDERBIRD ROAD OVER DIVERSION CHANNEL PROGRAM P7329

PROBLEM: INTERIOR GIRDER DESIGN RUN # 10 (9 GIRDERS) BY:RDT CHKD: JFF

MAXIMUM LIVE LOAD MOMENTS(FT-KIPS)AT TENTH POINTS

POINT	POSITIVE SDK LL	NEGATIVE SDK LL	LANE LOAD INCL.IMP. POSITIVE	LANE LOAD INCL.IMP. NEGATIVE	TRUCK LOAD INCL.IMP. POSITIVE	TRUCK LOAD INCL.IMP. NEGATIVE	FWS.+(SDL)
SPAN 4							
0	0.0	0.0	179.2	-1588.2	185.7	-898.2	-755.9
1	0.0	0.0	281.5	-927.0	215.4	-615.5	-362.0
2	0.0	0.0	588.4	-575.9	666.2	-547.1	-38.9
3	0.0	0.0	984.5	-501.9	1062.6	-478.7	213.5
4	0.0	0.0	1263.2	-430.2	1363.1	-410.3	395.2
5	0.0	0.0	1413.0	-358.5	1531.7	-341.9	506.1
6	0.0	0.0	1425.8	-286.8	1569.6	-273.6	546.4
7	0.0	0.0	1295.3	-215.1	1455.8	-205.2	515.9
8	0.0	0.0	1016.3	-143.4	1178.3	-136.8	414.6
9	0.0	0.0	585.2	-71.7	698.6	-68.4	242.7
10	0.0	0.0	0.0	0.0	0.0	0.0	0.0

SVERDRUP & PARCEL AND ASSOCIATES, INC. 15:43 OCT 15,'82 PAGE

JOB NO. 8080 THUNDERBIRD ROAD OVER DIVERSION CHANNEL PROGRAM P7329

PROBLEM: INTERIOR GIRDER DESIGN RUN # 10 (9 GIRDERS) BY:RDT CHKD: JFF

LIVE LOAD SHEARS(KIPS) AT TENTH POINTS

	POINT	FWS.+(SDL)	POSITIVE SIDEWALK	NEGATIVE SIDEWALK	POS.LIVE LOAD+IMP.	NEG.LIVE LOAD+IMP.
SPAN 1	0	22.5	0.0	0.0	65.7	-4.3
	1	16.8	0.0	0.0	56.6	-8.1
	2	11.1	0.0	0.0	47.8	-12.9
	3	5.3	0.0	0.0	39.2	-20.4
	4	-0.4	0.0	0.0	31.1	-29.1
	5	-6.1	0.0	0.0	23.5	-37.5
	6	-11.9	0.0	0.0	16.7	-45.3
	7	-17.6	0.0	0.0	10.6	-52.6
	8	-23.3	0.0	0.0	5.4	-59.1
	9	-29.1	0.0	0.0	2.7	-66.5
	10	-34.8	0.0	0.0	1.1	-75.6
SPAN 2	0	30.7	0.0	0.0	74.2	-5.3
	1	25.0	0.0	0.0	64.5	-7.6
	2	19.2	0.0	0.0	55.1	-11.1
	3	13.5	0.0	0.0	46.3	-15.6
	4	7.8	0.0	0.0	37.9	-22.2
	5	2.0	0.0	0.0	30.4	-30.4
	6	-3.7	0.0	0.0	23.9	-38.9
	7	-9.4	0.0	0.0	18.4	-47.2
	8	-15.2	0.0	0.0	14.0	-55.1
	9	-20.9	0.0	0.0	10.7	-62.3
	10	-26.6	0.0	0.0	8.5	-71.7
SPAN 3	0	26.6	0.0	0.0	71.7	-8.5
	1	20.9	0.0	0.0	62.3	-10.7
	2	15.2	0.0	0.0	55.1	-14.0
	3	9.4	0.0	0.0	47.2	-18.4
	4	3.7	0.0	0.0	38.9	-23.9
	5	-2.0	0.0	0.0	30.4	-30.4
	6	-7.8	0.0	0.0	22.2	-37.9
	7	-13.5	0.0	0.0	15.6	-46.3
	8	-19.2	0.0	0.0	11.1	-55.1
	9	-25.0	0.0	0.0	7.6	-64.5
	10	-30.7	0.0	0.0	5.3	-74.2

LEFT SUPPORT REACTIONS(KIPS)

	ONE FULL LANE WIDTH NO IMPACT LANE	ONE FULL LANE WIDTH NO IMPACT TRUCK	GIRDER REACT. INCL.IMP.(L.L.R) LANE	GIRDER REACT. INCL.IMP.(L.L.R) TRUCK
SPAN 1	61.2	65.1	65.5	70.3
SPAN 2	122.5	71.7	127.4	76.9
SPAN 3	116.2	70.9	121.0	76.2

SVERDRUP & PARCEL AND ASSOCIATES, INC. 15:43 OCT 15,'82 PAGE

JOB NO. 8080 THUNDERBIRD ROAD OVER DIVERSION CHANNEL PROGRAM P7329

PROBLEM: INTERIOR GIRDER DESIGN RUN # 10 (9 GIRDERS) BY:RDT CHKD: JFF

LIVE LOAD SHEARS(KIPS) AT TENTH POINTS

POINT	FWS.+(SDL)	POSITIVE SIDEWALK	NEGATIVE SIDEWALK	POS.LIVE LOAD+IMP.	NEG.LIVE LOAD+IMP.
SPAN 4					
0	34.8	0.0	0.0	75.6	-1.1
1	29.1	0.0	0.0	66.5	-2.7
2	23.3	0.0	0.0	59.1	-5.4
3	17.6	0.0	0.0	52.6	-10.6
4	11.9	0.0	0.0	45.3	-16.7
5	6.1	0.0	0.0	37.5	-23.5
6	0.4	0.0	0.0	29.1	-31.1
7	-5.3	0.0	0.0	20.4	-39.2
8	-11.1	0.0	0.0	12.9	-47.8
9	-16.8	0.0	0.0	8.1	-56.6
10	-22.5	0.0	0.0	4.3	-65.7

LEFT SUPPORT REACTIONS(KIPS)

ONE FULL LANE WIDTH NO IMPACT LANE	TRUCK	GIRDER REACT. INCL.IMP.(L.L.R) LANE	TRUCK
122.5	71.7	127.4	76.9
61.2	65.1	65.5	70.3

JOB NO. 8080 THUNDERBIRD ROAD OVER DIVERSION CHANNEL PROGRAM P7329

PROBLEM: INTERIOR GIRDER DESIGN RUN # 10 (9 GIRDERS) BY:RDT CHKD: JFF

CONCRETE SPECIFICATION
COMPRESSIVE STRENGTH OF CONCRETE AT 28 DAYS = 5.5000 KSI
CONCRETE ALLOWABLE FINAL TENSION COEFFICIENT= 0.0810 TIMES COMPRESSIVE STRENGTH ABOVE

CONCRETE COVER (TO CTR. OF BAR) FOR NON-PRESTRESSED CONVENTIONAL REINFORCEMENT
AT TOP OF SLAB = 2.2500 IN.
AT BOTTOM OF GIRDER = 3.0000 IN.

YIELD STRENGTH OF CONVENTIONAL REINF. FSY= 40.0000 KSI

CREEP AND SHRINKAGE STRAIN 0.000113 TEMPERATURE VARIATION -40.0000 DEGREES FAHRENHEIT

SVERDRUP & PARCEL AND ASSOCIATES, INC. 15:43 OCT 15,'82 PAGE

JOB NO. 8080 THUNDERBIRD ROAD OVER DIVERSION CHANNEL PROGRAM R7329

PROBLEM: INTERIOR GIRDER DESIGN RUN # 10 (9 GIRDERS) BY:RDT CHKD: JFF

CREEP MOMENTS (FT-KIPS) DUE TO CREEP OCCURRING AFTER SLAB POUR

POINT	DL+PRESTR.CR.	DIFF.SHRK.CR.	TOTAL CREEP
SPAN 1			
1	0.000	0.000	0.000
2	121.327	-67.926	53.401
3	242.654	-135.852	106.802
4	363.981	-203.778	160.203
5	485.308	-271.704	213.604
6	606.634	-339.630	267.005
7	727.961	-407.556	320.406
8	849.288	-475.481	373.807
9	970.615	-543.407	427.208
10	1091.942	-611.333	480.609
11	1213.269	-679.259	534.010
SPAN 2			
1	1213.269	-679.259	534.010
2	1157.833	-656.617	501.216
3	1102.398	-633.975	468.423
4	1046.962	-611.333	435.629
5	991.527	-588.691	402.836
6	936.091	-566.049	370.042
7	880.656	-543.407	337.249
8	825.220	-520.765	304.455
9	769.784	-498.123	271.661
10	714.349	-475.481	238.868
11	658.913	-452.839	206.074
SPAN 3			
1	658.913	-452.839	206.074
2	714.349	-475.481	238.868
3	769.784	-498.123	271.661
4	825.220	-520.765	304.455
5	880.656	-543.407	337.248
6	936.091	-566.049	370.042
7	991.527	-588.691	402.836
8	1046.962	-611.333	435.629
9	1102.398	-633.975	468.423
10	1157.833	-656.617	501.216
11	1213.269	-679.259	534.010

SVERDRUP & PARCEL AND ASSOCIATES, INC. 15:43 OCT 15,'82 PAGE

JOB NO. 8080 THUNDERBIRD ROAD OVER DIVERSION CHANNEL PROGRAM P7329

PROBLEM: INTERIOR GIRDER DESIGN RUN # 10 (9 GIRDERS) BY:RDT CHKD: JFF

CREEP MOMENTS (FT-KIPS) DUE TO CREEP OCCURRING AFTER SLAB POUR

POINT	DL+PRESTR.CR.	DIFF.SHRK.CR.	TOTAL CREEP
SPAN 4			
1	1213.269	-679.259	534.010
2	1091.942	-611.333	480.609
3	970.615	-543.407	427.208
4	849.288	-475.481	373.807
5	727.961	-407.555	320.406
6	606.634	-339.629	267.005
7	485.307	-271.704	213.604
8	363.981	-203.778	160.203
9	242.654	-135.852	106.802
10	121.327	-67.926	53.401
11	0.000	0.000	0.000

JOB NO. 8080 THUNDERBIRD ROAD OVER DIVERSION CHANNEL PROGRAM P7329

PROBLEM: INTERIOR GIRDER DESIGN RUN # 10 (9 GIRDERS) BY:RDT CHKD: JFF

THE COEFFICIENT FOR AASHTO GROUP LOADING IS 1.3000

'THE LOAD FACTOR FOR CREEP AND SHRINKAGE IS 1.0000

AXIAL LOADS AND MOMENTS DUE TO CHANGES IN LENGTH

SPAN	CREEP AND SHRINKAGE			TEMPERATURE EFFECTS		
	THRUST	LEFT JT.	RIGHT JT.	THRUST	LEFT JT.	RIGHT JT.
1	-11.31	0.00	0.00	-24.03	0.00	0.00
2	-12.49	0.00	0.00	-26.52	0.00	0.00
3	-12.61	0.00	0.00	-26.77	0.00	0.00
4	-11.63	0.00	0.00	-24.70	0.00	0.00

SVERDRUP & PARCEL AND ASSOCIATES, INC. 15:43 OCT 15,'82 PAGE

JOB NO. 8080 THUNDERBIRD ROAD OVER DIVERSION CHANNEL PROGRAM P7329

PROBLEM: INTERIOR GIRDER DESIGN RUN # 10 (9 GIRDERS) BY:RDT CHKD: UFF

ATTENTIONPROGRAM DOES NOT CHECK STRESSES AGAINST ALLOWABLE STRESSES

NEGATIVE SIGN FOR STRESS INDICATES COMPRESSIVE STRESS. STRESSES IN KIPS PER IN2.POINT 0+10 AT PIERS INDICATES STRESS BETW.GDRS.

	STRESS AFTER LOSSES DUE TO PREST.+NCDL+C+S		STRESS AFTER LOSSES DUE TO PRESTRESS DL+SDL+FWS+LL+IMP+SDWLK+CREEP+SHRINK.						FINAL STRESS INCLUDING TEMPERATURE REDUCED TO NUS.					
	TOP GDR.	BOTT.GDR.	TOP GDR.STR.		BOT.GDR.STR.		TOP OF SLAB STR.		TOP GDR.STR.		BOTT.GDR.STR.		TOP OF SLAB STR.	
POINT	STRESS	STRESS	MAX.LL	MIN.LL	MAX.LL	MIN.LL	MAX.LL	MIN.LL	MAX.LL	MIN.LL	MAX.LL	MIN.LL	MAX.LL	MIN.LL
SPAN 1														
0	-0.282	-2.088	-0.282	-0.282	-2.088	-2.088	0.000	0.000	-0.273	-0.273	-2.079	-2.079	0.000	0.000
1	-0.927	-1.415	-1.080	-0.954	-1.005	-1.341	-0.237	-0.053	-0.831	-0.734	-1.304	-1.562	-0.182	-0.041
2	-1.385	-0.932	-1.644	-1.429	-0.239	-0.814	-0.405	-0.090	-1.209	-1.043	-0.771	-1.214	-0.311	-0.069
3	-1.656	-0.641	-1.977	-1.705	0.218	-0.510	-0.507	-0.110	-1.409	-1.199	-0.478	-1.037	-0.390	-0.084
4	-1.715	-0.566	-2.060	-1.757	0.355	-0.453	-0.554	-0.113	-1.416	-1.183	-0.429	-1.051	-0.426	-0.087
5	-1.816	-0.448	-2.149	-1.841	0.440	-0.383	-0.549	-0.099	-1.485	-1.248	-0.364	-0.997	-0.422	-0.076
6	-1.732	-0.520	-2.019	-1.726	0.246	-0.535	-0.495	-0.068	-1.385	-1.160	-0.513	-1.114	-0.381	-0.052
7	-1.690	-0.548	-1.899	-1.643	0.008	-0.674	-0.393	-0.020	-1.348	-1.152	-0.639	-1.163	-0.302	-0.016
8	-1.437	-0.793	-1.539	-1.336	-0.520	-1.061	-0.251	0.045	-1.128	-0.972	-0.988	-1.404	-0.193	0.034
9	-0.996	-1.229	-0.983	-0.786	-1.264	-1.790	-0.095	0.192	-0.756	-0.605	-1.503	-1.908	-0.073	0.148
10	-0.081	0.239	0.012	0.302	-0.009	-0.782	0.009	0.431	0.020	0.242	0.003	-0.591	0.007	0.331
SPAN 2														
0	-0.080	0.240	0.013	0.302	-0.009	-0.781	0.009	0.431	0.021	0.244	0.005	-0.589	0.007	0.331
1	-0.984	-1.095	-0.961	-0.759	-1.157	-1.695	-0.086	0.209	-0.734	-0.579	-1.390	-1.804	-0.066	0.160
2	-1.437	-0.641	-1.529	-1.304	-0.394	-0.993	-0.246	0.081	-1.118	-0.945	-0.859	-1.320	-0.189	0.063
3	-1.703	-0.377	-1.882	-1.609	0.102	-0.629	-0.365	0.034	-1.335	-1.125	-0.533	-1.095	-0.281	0.026
4	-1.757	-0.331	-1.990	-1.688	0.292	-0.515	-0.436	0.005	-1.365	-1.132	-0.441	-1.062	-0.336	0.004
5	-1.845	-0.250	-2.096	-1.789	0.422	-0.398	-0.455	-0.007	-1.446	-1.210	-0.342	-0.972	-0.350	-0.006
6	-1.746	-0.359	-1.986	-1.693	0.280	-0.502	-0.430	-0.002	-1.361	-1.136	-0.451	-1.052	-0.330	-0.002
7	-1.681	-0.435	-1.873	-1.618	0.077	-0.602	-0.352	0.019	-1.328	-1.132	-0.552	-1.074	-0.271	0.015
8	-1.404	-0.726	-1.516	-1.315	-0.428	-0.964	-0.228	0.065	-1.108	-0.953	-0.885	-1.297	-0.175	0.050
9	-0.941	-1.209	-0.975	-0.770	-1.119	-1.665	-0.107	0.192	-0.745	-0.588	-1.361	-1.781	-0.082	0.148
10	-0.027	0.097	-0.012	0.290	0.056	-0.747	-0.027	0.412	0.003	0.234	0.055	-0.563	-0.021	0.317
SPAN 3														
0	-0.027	0.097	-0.011	0.290	0.056	-0.747	-0.027	0.412	0.003	0.234	0.055	-0.563	-0.021	0.317
1	-0.941	-1.209	-0.975	-0.770	-1.118	-1.664	-0.107	0.192	-0.745	-0.588	-1.361	-1.781	-0.082	0.148
2	-1.404	-0.726	-1.516	-1.315	-0.428	-0.964	-0.228	0.065	-1.108	-0.953	-0.885	-1.297	-0.175	0.050
3	-1.681	-0.434	-1.873	-1.618	0.077	-0.602	-0.352	0.019	-1.328	-1.132	-0.552	-1.074	-0.271	0.015
4	-1.746	-0.359	-1.986	-1.693	0.280	-0.502	-0.430	-0.002	-1.361	-1.136	-0.451	-1.052	-0.330	-0.002
5	-1.845	-0.250	-2.096	-1.789	0.422	-0.398	-0.455	-0.007	-1.446	-1.210	-0.341	-0.972	-0.350	-0.006
6	-1.757	-0.331	-1.990	-1.688	0.292	-0.515	-0.436	0.005	-1.364	-1.132	-0.441	-1.062	-0.336	0.004
7	-1.703	-0.377	-1.882	-1.608	0.102	-0.629	-0.365	0.034	-1.335	-1.125	-0.533	-1.094	-0.281	0.026
8	-1.436	-0.641	-1.529	-1.304	-0.394	-0.994	-0.246	0.081	-1.117	-0.945	-0.859	-1.320	-0.189	0.063
9	-0.983	-1.095	-0.960	-0.759	-1.157	-1.695	-0.086	0.209	-0.734	-0.579	-1.390	-1.804	-0.066	0.160
10	-0.080	0.240	0.013	0.302	-0.009	-0.781	0.009	0.431	0.021	0.244	0.005	-0.589	0.007	0.331

SVERDRUP & PARCEL AND ASSOCIATES, INC. 15:43 OCT 15,'82 PAGE

JOB NO. 8080 THUNDERBIRD ROAD OVER DIVERSION CHANNEL PROGRAM P7329

PROBLEM: INTERIOR GIRDER DESIGN RUN # 10 (9 GIRDERS) BY:RDT CHKD: UFF

ATTENTIONPROGRAM DOES NOT CHECK STRESSES AGAINST ALLOWABLE STRESSES

NEGATIVE SIGN FOR STRESS INDICATES COMPRESSIVE STRESS. STRESSES IN KIPS PER IN2.POINT 0+10 AT PIERS INDICATES STRESS BETW.GDRS.

	STRESS AFTER LOSSES DUE TO PREST.+NCDL+C+S		STRESS AFTER LOSSES DUE TO PRESTRESS DL+SDL+FWS+LL+IMP+SDWLK+CREEP+SHRINK.						FINAL STRESS INCLUDING TEMPERATURE REDUCED TO NUS.					
	TOP GDR.	BOTT.GDR.	TOP GDR.STR.		BOT.GDR.STR.		TOP OF SLAB STR.		TOP GDR.STR.		BOTT.GDR.STR.		TOP OF SLAB STR.	
POINT	STRESS	STRESS	MAX.LL	MIN.LL	MAX.LL	MIN.LL	MAX.LL	MIN.LL	MAX.LL	MIN.LL	MAX.LL	MIN.LL	MAX.LL	MIN.LL
SPAN 4														
0	-0.081	0.239	0.012	0.302	-0.009	-0.782	0.009	0.431	0.020	0.243	0.004	-0.591	0.007	0.331
1	-0.996	-1.229	-0.983	-0.786	-1.264	-1.790	-0.095	0.192	-0.756	-0.604	-1.502	-1.907	-0.073	0.148
2	-1.437	-0.793	-1.539	-1.336	-0.520	-1.060	-0.251	0.045	-1.128	-0.972	-0.987	-1.403	-0.193	0.034
3	-1.690	-0.548	-1.898	-1.643	0.008	-0.673	-0.393	-0.020	-1.348	-1.152	-0.639	-1.163	-0.302	-0.016
4	-1.732	-0.519	-2.019	-1.726	0.246	-0.535	-0.495	-0.068	-1.384	-1.159	-0.513	-1.113	-0.381	-0.052
5	-1.816	-0.447	-2.149	-1.840	0.440	-0.383	-0.549	-0.099	-1.484	-1.247	-0.364	-0.997	-0.422	-0.076
6	-1.714	-0.566	-2.060	-1.757	0.355	-0.453	-0.554	-0.113	-1.416	-1.183	-0.429	-1.051	-0.426	-0.087
7	-1.655	-0.641	-1.977	-1.704	0.218	-0.510	-0.507	-0.110	-1.408	-1.199	-0.477	-1.037	-0.390	-0.084
8	-1.384	-0.932	-1.644	-1.429	-0.239	-0.814	-0.405	-0.090	-1.209	-1.043	-0.771	-1.214	-0.311	-0.069
9	-0.926	-1.415	-1.080	-0.954	-1.005	-1.341	-0.237	-0.053	-0.831	-0.734	-1.303	-1.561	-0.182	-0.041
10	-0.282	-2.088	-0.282	-0.282	-2.088	-2.088	0.000	0.000	-0.273	-0.273	-2.079	-2.079	0.000	0.000

JOB NO. 8080 THUNDERBIRD ROAD OVER DIVERSION CHANNEL PROGRAM P7329

PROBLEM: INTERIOR GIRDER DESIGN RUN # 10 (9 GIRDERS) BY:RDT CHKD: JFF

ULTIMATE LOAD INVESTIGATION

POINT	APPLIED MOMENT 1.3/PHI(D+5/3(L+I)) +1.0000(C+S) +RESTRAINT MOM. FT-KIPS	ULTIMATE MOMENT FT-KIPS	TENSION REINF. REQUIRED FSY= 40.0000 KSI IN2	
SPAN 1				
0	0.0	11537.0	0.00	
1	3846.8	12386.4	0.00	
2	6710.7	13235.5	0.00	
3	8626.5	14084.5	0.00	
4	9622.1	14933.4	0.00	
5	9749.4	14933.6	0.00	
6	9084.8	14933.4	0.00	
7	7595.1	14084.5	0.00	
8	5331.7	13235.5	0.00	
9	2583.7	12386.4	0.00	
9	-34.8	-2278.5	3.33	REINFORCING INDEX =0.6160
10	-3889.8	-4048.2	15.92	
SPAN 2				
0	-3889.8	-4048.2	15.92	
1	2516.7	11598.5	0.00	
1	-161.4	-2395.8	3.60	REINFORCING INDEX =0.5769
2	5326.9	12394.6	0.00	
3	7406.8	13191.1	0.00	
4	8632.7	13987.7	0.00	
5	8998.7	13987.9	0.00	
6	8602.7	13987.7	0.00	
7	7349.6	13191.1	0.00	
8	5256.9	12394.6	0.00	
9	2837.8	11598.5	0.00	
10	-3555.9	-3711.0	14.56	
10	442.3	1580.7	6.10	CRACKING MOMENT = 1277.4

JOB NO. 8080 THUNDERBIRD ROAD OVER DIVERSION CHANNEL PROGRAM P7329

PROBLEM: INTERIOR GIRDER DESIGN RUN # 10 (9 GIRDERS) BY:RDT CHKD: JFF

ULTIMATE LOAD INVESTIGATION

POINT	APPLIED MOMENT 1.3/PHI(D+5/3(L+I)) +1.0000(C+S) +RESTRAINT MOM. FT-KIPS	ULTIMATE MOMENT FT-KIPS	TENSION REINF. REQUIRED FSY= 40.0000 KSI IN2	
SPAN 3				
0	-3555.9	-3711.0	14.56	
0	442.3	1580.7	6.10	CRACKING MOMENT = 1277.4
1	2838.2	11598.5	0.00	
2	5257.2	12394.6	0.00	
3	7349.8	13191.1	0.00	
4	8602.8	13987.7	0.00	
5	8998.7	13987.9	0.00	
6	8632.6	13987.7	0.00	
7	7406.6	13191.1	0.00	
8	5326.6	12394.6	0.00	
9	2516.3	11598.5	0.00	
9	-161.7	-2395.5	3.60	REINFORCING INDEX =0.5770
10	-3889.8	-4048.2	15.92	
SPAN 4				
0	-3889.8	-4048.2	15.92	
1	2584.1	12386.4	0.00	
1	-34.4	-2278.8	3.33	REINFORCING INDEX =0.6160
2	5332.0	13235.5	0.00	
3	7595.3	14084.5	0.00	
4	9084.9	14933.4	0.00	
5	9749.4	14933.6	0.00	
6	9622.0	14933.4	0.00	
7	8626.3	14084.5	0.00	
8	6710.5	13235.5	0.00	
9	3846.4	12386.4	0.00	
10	0.0	11537.0	0.00	

SVERDRUP & PARCEL AND ASSOCIATES, INC. 15:43 OCT 15,'82 PAGE

JOB NO. 8080 THUNDERBIRD ROAD OVER DIVERSION CHANNEL PROGRAM P7329

PROBLEM: INTERIOR GIRDER DESIGN RUN # 10 (9 GIRDERS) BY:RDT CHKD: UFF

ULTIMATE SHEAR DESIGN -FULL TRANSFER OF HOR. SHEAR ASSUMED AASHTO 1.6.14 B

POINT	BY AASHTO 1977 ULT.SHEAR 1.3/PHI(D+5/3(L+I)) +PRESTRESS + 1.0000 (C+S) KIPS	SHEAR BY REINFORCING CONCRETE KIPS	REQ.GRADE 40.0000 IN2/FT	BY AASHTO 1980 ULT.SHEAR 1.3/PHI(D+5/3(L+I)) + 1.0000 (C+S) KIPS	SHEAR BY REINFORCING CONCRETE KIPS	REQ.GRADE 40.0000 IN2/FT
SPAN 1						
0	357.0	80.2	0.74	390.9	288.9	0.47
1	289.3	85.9	0.51	323.2	333.3	0.12
2	222.1	91.5	0.31	256.0	225.9	0.14
3	154.5	97.1	0.24	188.4	131.6	0.24
4	82.4	102.8	0.24	116.3	75.3	0.17
5	94.7	102.8	0.24	94.7	75.3	0.12
6	125.1	102.8	0.24	159.0	87.6	0.29
7	195.7	97.1	0.24	229.6	157.0	0.31
8	258.4	91.5	0.39	292.3	272.8	0.12
9	322.0	85.9	0.59	355.9	333.2	0.12
10	389.7	88.7	1.21	389.7	274.7	0.44
SPAN 2						
0	383.5	88.7	1.18	383.5	270.4	0.43
1	314.3	86.2	0.57	347.0	324.9	0.12
2	245.8	91.9	0.36	278.5	256.5	0.12
3	177.6	97.7	0.24	210.2	145.7	0.27
4	104.9	103.5	0.24	137.6	80.1	0.23
5	73.4	103.5	0.24	73.4	75.7	0.12
6	106.0	103.5	0.24	138.6	75.7	0.25
7	179.2	97.7	0.24	211.8	137.5	0.31
8	245.2	91.9	0.36	277.8	240.3	0.17
9	308.3	86.2	0.56	340.9	324.9	0.12
10	376.8	88.7	1.16	376.8	279.2	0.37
SPAN 3						
0	376.9	88.7	1.16	376.9	279.3	0.37
1	308.3	86.2	0.56	340.9	324.9	0.12
2	245.2	91.9	0.36	277.9	240.3	0.17
3	179.1	97.7	0.24	211.8	137.4	0.31
4	106.6	103.5	0.24	139.2	75.7	0.25
5	73.4	103.5	0.24	73.4	75.7	0.12
6	104.3	103.5	0.24	136.9	79.4	0.23
7	177.7	97.7	0.24	210.3	145.8	0.27
8	245.8	91.9	0.36	278.4	256.4	0.12
9	314.4	86.2	0.57	347.0	324.9	0.12
10	383.4	88.7	1.18	383.4	270.3	0.43

JOB NO. 8080 THUNDERBIRD ROAD OVER DIVERSION CHANNEL PROGRAM P7329

PROBLEM: INTERIOR GIRDER DESIGN RUN # 10 (2 GIRDERS) BY:RDT CHKD: JFF

ULTIMATE SHEAR DESIGN -FULL TRANSFER OF HOR. SHEAR ASSUMED AASHTO 1.6.14 B

POINT	BY AASHTO 1977 ULT.SHEAR 1.3/PHI(D+5/3(L+I)) +PRESTRESS + 1.0000 (C+S) KIPS	SHEAR BY CONCRETE KIPS	REINFORCING REQ.GRADE 40.0000 IN2/FT	BY AASHTO 1980 ULT.SHEAR 1.3/PHI(D+5/3(L+I)) + 1.0000 (C+S) KIPS	SHEAR BY CONCRETE KIPS	REINFORCING REQ.GRADE 40.0000 IN2/FT
SPAN 4						
0	389.9	88.7	1.21	389.9	274.8	0.44
1	322.0	85.9	0.59	355.9	333.2	0.12
2	258.4	91.5	0.39	292.3	272.8	0.12
3	195.6	97.1	0.24	229.5	156.9	0.31
4	125.7	102.8	0.24	159.6	88.3	0.29
5	94.7	102.8	0.24	94.7	75.3	0.12
6	81.8	102.8	0.24	115.7	75.3	0.16
7	154.5	97.1	0.24	188.4	131.7	0.24
8	222.1	91.5	0.31	256.0	225.9	0.14
9	289.3	85.9	0.51	323.2	333.2	0.12
10	356.8	80.2	0.74	390.7	288.9	0.47

SVERDRUP & PARCEL AND ASSOCIATES, INC. 15:43 OCT 15,'82 PAGE

JOB NO. 8080 THUNDERBIRD ROAD OVER DIVERSION CHANNEL PROGRAM P7329

PROBLEM: INTERIOR GIRDER DESIGN RUN # 10 (9 GIRDERS) BY:RDT CHKD: JFF

DEFLECTIONS DUE TO SUPERIMPOSED DEAD LOAD IN INCHES AT TENTH POINTS

POINT	DEFLECTION
SPAN 1	
0	0.00
1	0.04
2	0.07
3	0.09
4	0.10
5	0.10
6	0.08
7	0.06
8	0.04
9	0.02
10	0.00
SPAN 2	
0	0.00
1	0.00
2	0.00
3	0.01
4	0.02
5	0.03
6	0.03
7	0.02
8	0.01
9	0.00
10	0.00
SPAN 3	
0	0.00
1	0.00
2	0.01
3	0.02
4	0.03
5	0.03
6	0.02
7	0.02
8	0.01
9	0.00
10	0.00

SVERDRUP & PARCEL AND ASSOCIATES, INC. 15:43 OCT 15,'82 PAGE

JOB NO. 8080 THUNDERBIRD ROAD OVER DIVERSION CHANNEL PROGRAM P7329

PROBLEM: INTERIOR GIRDER DESIGN RUN # 10 (9 GIRDERS) BY:RDT CHKD: JFF

DEFLECTIONS DUE TO SUPERIMPOSED DEAD LOAD IN INCHES AT TENTH POINTS

POINT	DEFLECTION
SPAN 4	
0	0.00
1	0.02
2	0.04
3	0.06
4	0.08
5	0.10
6	0.10
7	0.09
8	0.07
9	0.04
10	0.00

COMPUTER OUTPUT REVIEW

RELEASE STRENGTH

ALLOWABLE $f_{ci}' = 0.80 f_c' = (.80)(5500) = 4400$ psi

MAX STRESS AFTER RELEASE = 2930 psi (END SPANS)
(.4 & .6 P_{o} - ts) = 2638 psi (INTERIOR SPANS)

REQUIRED f_{ci}' = 2930/0.6 = 4883 psi
2638/0.6 = 4397 psi

PROGRAM P7329 ASSUMES AN INITIAL LOSS DUE TO ELASTIC SHORTENING (ES) AND STEEL RELAXATION (CR_s) OF 10 KSI.

ESTIMATE LOSSES AT 24 HOURS (RELEASE)
- ASSUME 12% SH & CR_c HAS TAKEN PLACE (AASHTO INTERIM 5, 1975, FIG. C1)
- PRORATE STEEL RELAXATION AS PER SHT. 15, BUT FOR 24 HOURS

$CR_{s\ 24\ HOURS}$ = (1.38/5.64)(6876) = 1682 psi (END SPANS)
(1.38/5.64)(8096) = 1981 psi (INTERIOR SPANS)

SEE SHT. 14

	END SPANS		INTERIOR SPANS	
SH	(11,000)(0.12)	= 1320 psi		= 1320 psi
ES		= 16720		= 15110
CR_c	(21,180)(0.12)	= 2542	(18300)(0.12)	= 2196
CR_s		= 1682		= 1981
Σ		22,264 psi		20607 psi

COMPUTE REQUIRED f_{ci}' USING ABOVE LOSSES

P = (63)(.153)(189 - 22.3) = 1607 K
(58)(.153)(189 - 20.6) = 1494 K

Cont....

SVERDRUP & PARCEL

JOB 8080 FCDMC /ACDC

COMPUTATIONS FOR DIVERSION CHANNEL

SHEET NO. 53 OF

DATE 9/82

BY RV CHKD JFF

COMPUTER OUTPUT REVIEW

ECCENTRICITY OF P W/R TO C.G. CONCRETE

$e = 36.38 - (72 - 65.62) = 30''$ (END SPANS)

$36.38 - (72 - 66.10) = 30.48''$ (INTERIOR SPANS)

$M_i = (1607)(30) = 48{,}210$ in-K (END SPANS)

$(1494)(30.48) = 45537$ in-K (INTERIOR SPANS)

GIRDER DL MOMENT @ 0.4 & 0.6 POINTS = 2063 K-FT

$$\text{STRESS AFTER RELEASE} = \frac{M_{DL}\,e}{I} - \frac{M_i\,e}{I} - \frac{P}{A}$$

$$\text{END SPANS:} = \frac{(2063)(12)(36.38)}{733{,}320} - \frac{(48{,}210)(36.38)}{733{,}320} - \frac{1607}{1085} = -2.64 \text{ KSI}$$

$$\text{INTERIOR SPANS:} = \frac{(2063)(12)(36.38)}{733{,}320} - \frac{(45{,}537)(36.38)}{733{,}320} - \frac{1494}{1085} = -2.41 \text{ KSI}$$

REQUIRED RELEASE STRENGTH $f_{ci}' = 2.64/0.6 = 4.40$ KSI

$= 2.41/0.6 = 4.02$ KSI

SPECIFY RELEASE STRENGTH OF 4400 psi

COMPUTER OUTPUT REVIEW

CHECK STRESSES

$f'_c = 5500$ psi (5.5 KSI)

$f_c = (.4)(5500) = 2200$ psi (2.2 KSI)

$f_t = 6\sqrt{5500} = 445$ psi (.445 KSI)

REVIEW OF FINAL STRESSES (SHTS 44,45)

MAX COMP STRESS = 2.149 KSI (< 2.2 ✓) (.5 PT. SPANS 1 & 4)

MAX TEN STRESS = 0.440 KSI (≃ .445 - SAY OK) (.5 PT SPANS 1 & 4)

USE $f'_c = 5500$ psi

$f'_s = 270$ KSI ½" Ø STRANDS

63 STRANDS FOR SPANS 1 & 4

58 STRANDS FOR SPANS 2 & 3

SPECIFY $f'_{ci} = 4400$ psi

SVERDRUP & PARCEL

JOB 8080 FCDMC / ACDC

COMPUTATIONS FOR DIVERSION CHANNEL

SHEET NO. 55 OF

DATE 9/82

BY RV CHKD JFF

PRESTRESSING LAYOUTS

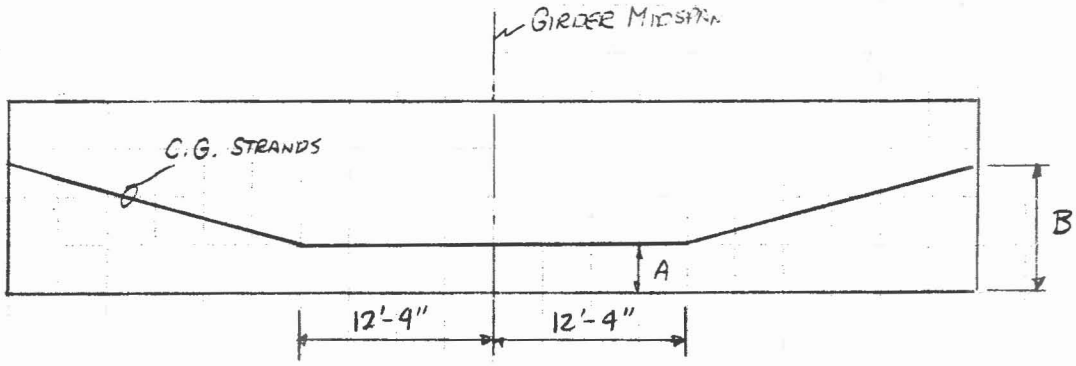

$$P_f = (63)(.153)(189-56) = 1282^K \quad \text{(SPANS 1 \& 4)}$$
$$(58)(.153)(189-53) = 1207^K \quad \text{(SPANS 2 \& 3)}$$

PRETENSIONED VALUES

SPAN	LENGTH	A	B	f'c	f'ci	P_f	LOSSES
1 & 4	123'-7"	6.38 in	22.03 in	5500 psi	4400 psi	1282^K	56 KSI
2 & 3	122'-4"	5.90 in	21.90 in	5500 psi	4400 psi	1207^K	53 KSI

SVERDRUP & PARCEL

JOB 8080 FCDMC / ACDC

SHEET NO. 56 OF

DATE 10/82

COMPUTATIONS FOR DIVERSION CHANNEL

BY RV CHKD JFF

POST - TENSIONED ALTERNATE

DETERMINE CG STEEL

ASSUME: (2) 4"Ø GALVANIZED, RIGID STEEL DUCTS, 24 ga (.0276 in.)
(30) 1/2"Ø STRANDS PER DUCT INITIALLY
DUCTS IN VERTICAL PLANE
1 1/2" CLEAR BETWEEN DUCTS

OD = 4 + 2(.0276) = 4.06"

CGS W/R TO BOTTOM OF GIRDER (SEE BELOW)

[(3.53 + 3.53 + 5.56 + .71)]/2 = 6.67" ↑

W/R TO CG TYPE VI

e = 36.38 - 6.67 = 29.71"

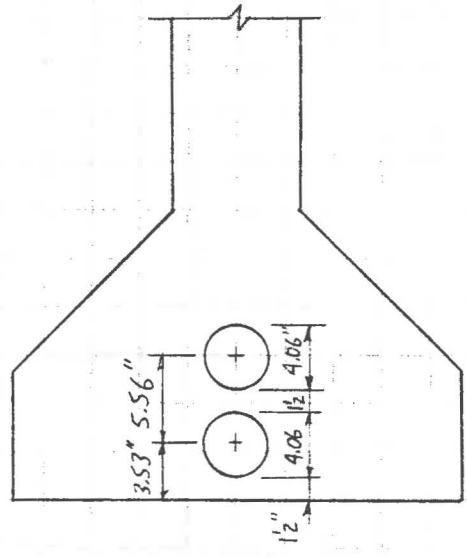

LOCATION AT ℄ SPAN

ASSUME STRANDS ORIENT THEMSELVES IN A MAXIMUM PACKING CONFIGURATION AGAINST THE TOP OF THE DUCT FOR TOP DUCT, AT ℄ DUCT FOR BOTTOM DUCT

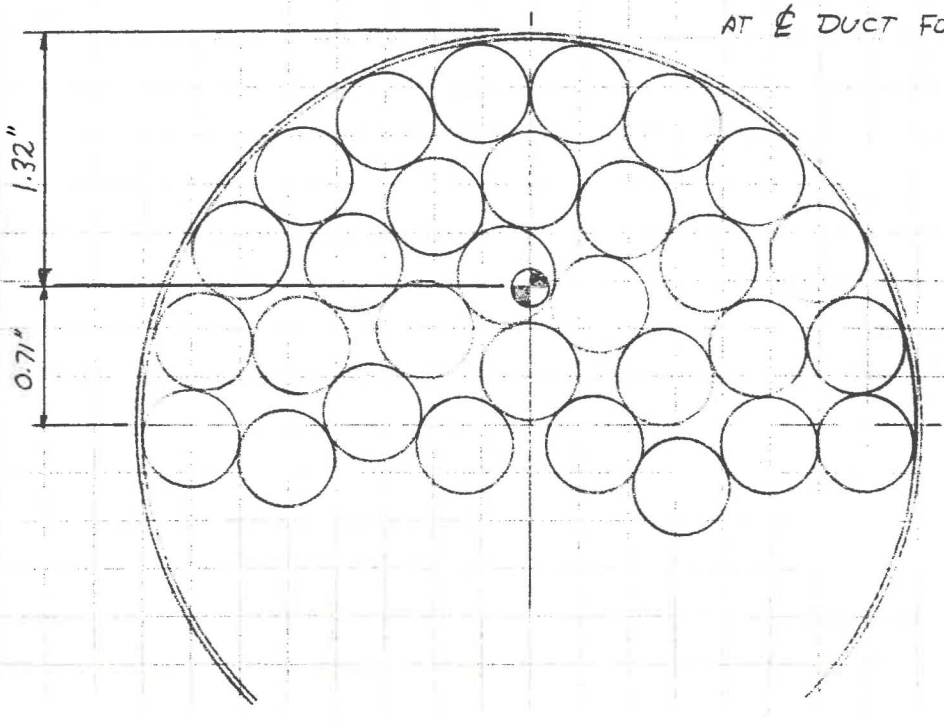

SVERDRUP & PARCEL

JOB 8080 FCDMC / ACDC

COMPUTATIONS FOR DIVERSION CHANNEL

SHEET NO. 57 OF

DATE 10/82

BY RT CHKD JFF

POST-TENSIONED ALTERNATE

NON-COMPOSITE MOMENTS @ ℄ (K-FT)

	END SPANS	INTERIOR SPANS	REF
GIRDER	2148.9	2148.9	32
SLAB & DIAPHRAGMS	2086.2	2086.2	32
	4235.1	4235.1	
COMPOSITE MOMENTS @ ℄			
LL + I	1531.7	1288.8	36
FWS + SDL	506.1	254.2	36
CREEP & SHRINKAGE	213.6	402.8	41
	2269.4 K-FT	1945.8 K-FT	
	6504.5 K-FT	6180.9 K-FT	

$I_{girder} = 733,320 \text{ in}^4$

$A_{girder} = 1085 \text{ in}^2$

$I_{comp} = 69.61 \times 12^4 = 1,443,433 \text{ in}^4$ (SHT. 29)

	NON-COMPOSITE	COMPOSITE	REF
Y_t	35.62 in	(72-52.37) = 19.63	(TOP OF GIRDER)
Y_b	36.38 in	52.37	29

POST-TENSIONED ALTERNATE

ESTIMATE REQUIRED P_f AT MIDSPAN

$$f_t \text{ ALLOWABLE} = 6\sqrt{5500} = 445 \text{ psi}$$

$$f_t \geq \frac{M_{NC} C_{NC}}{I_g} + \frac{M_c C_c}{I_c} - \frac{P_f}{A_g} - \frac{P_f e C_{nc}}{I_g}$$

$$P_f \geq \left[\frac{M_{NC} C_{NC}}{I_g} + \frac{M_c C_c}{I_c} - f_t\right] \Big/ \left[\frac{1}{A_g} + \frac{e C_{nc}}{I_g}\right]$$

$$P_f \geq \left[\frac{(4235.1)(12)(36.38)}{733,320} + \frac{(2269.4)(12)(52.37)}{1,443,433} - 445\right] \div \left[\frac{1}{1085} + \frac{(29.71)(36.38)}{733,320}\right]$$

$$\geq 1279^K \text{ (END SPANS)}$$

$$P_f \geq \left[\frac{(4235.1)(12)(36.38)}{733,320} + \frac{(1945.8)(12)(52.37)}{1443,433} - 445\right] \div \left[\frac{1}{1085} + \frac{(29.71)(36.38)}{733,320}\right]$$

$$\geq 1220^K \text{ (INTERIOR SPANS)}$$

ESTIMATE NUMBER OF STRANDS REQUIRED

USE PROGRAM POSTBAL TO BALANCE LOSSES WITH NUMBER OF STRANDS

SVERDRUP & PARCEL

SHEET NO. 59 OF ____

JOB 8080 FCDMC / ACDC

DATE: 10-21-82

TITLE: DIVERSION CHANNEL BRIDGE, END SPANS

BY: RDT CHKD: JFF

POST-TENSIONING LOSSES AND NUMBER OF STRANDS REQUIRED

PRESTRESSED FORCE REQUIRED = 1279. KIPS

STRAND SIZE = .1530 IN**2

CONCRETE STRENGTH = 5500. PSI

STRAND STRENGTH = 270. KSI

GIRDER AREA = 1085. IN**2

GIRDER MOI = 733320. IN**4

GIRDER N.A. TO CGS = 29.71 IN

COMPOSITE MOI = 1443433. IN**4

COMPOSITE N.A. TO CGS = 45.70 IN

RELATIVE HUMIDITY = 40. %

THE FOLLOWING MOMENTS ARE AT 61.67 FT. FROM THE LEFT SUPPORT

GIRDER DEAD LOAD MOMENT = 2148.9 K-FT

OTHER NON-COMPOSITE DEAD LOAD MOMENT = 2086.2 K-FT

SDL + FWS DEAD LOAD MOMENT = 506.1 K-FT

SH = 8.800 KSI

ES = 7.516 KSI

CRC = 20.519 KSI

CRS = 11.130 KSI

==========

TOTAL PRESTRESS LOSS = 47.965 KSI

NUMBER OF STRANDS REQUIRED = 56.27

SVERDRUP & PARCEL

SHEET NO. 60 OF ____

JOB 8080 FCDMC / ACDC
TITLE: DIVERSION CHANNEL BRIDGE, INTERIOR SPANS

DATE: 10-21-82
BY: RDT CHKD: JFF

POST-TENSIONING LOSSES AND NUMBER OF STRANDS REQUIRED

PRESTRESSED FORCE REQUIRED = 1220. KIPS
STRAND SIZE = .1530 IN**2
CONCRETE STRENGTH = 5500. PSI
STRAND STRENGTH = 270. KSI
GIRDER AREA = 1085. IN**2
GIRDER MOI = 733320. IN**4
GIRDER N.A. TO CGS = 29.71 IN
COMPOSITE MOI = 1443433. IN**4
COMPOSITE N.A. TO CGS = 45.70 IN
RELATIVE HUMIDITY = 40. %

THE FOLLOWING MOMENTS ARE AT 61.67 FT. FROM THE LEFT SUPPORT

GIRDER DEAD LOAD MOMENT = 2148.9 K-FT
OTHER NON-COMPOSITE DEAD LOAD MOMENT = 2086.2 K-FT
SDL + FWS DEAD LOAD MOMENT = 254.2 K-FT

SH = 8.800 KSI
ES = 6.952 KSI
CRC = 19.016 KSI
CRS = 11.656 KSI

TOTAL PRESTRESS LOSS = 46.424 KSI

NUMBER OF STRANDS REQUIRED = 53.33

SVERDRUP & PARCEL

JOB 8080 FCDMC / ACDC

COMPUTATIONS FOR DIVERSION CHANNEL

SHEET NO. 61 OF

DATE 10/82

BY RT CHKD JFF

POST-TENSIONED ALTERNATE

CHECK INITIAL STRESS AT MIDSPAN

FOR $f_s = 0.7 f'_s = (.7)(270) = 189^{KSI}$

$P_i = (56)(.153)(189) = 1619^K$ (END SPANS)

$(53)(.153)(189) = 1533^K$ (INT SPANS)

$$\frac{M_{GDL} C_{nc}}{I_g} - \frac{P_i}{A_g} - \frac{P_i e C_{nc}}{I_g}$$

$$= \frac{(2148.9)(12)(36.38)}{733320} - \frac{1619}{1085} - \frac{(1619)(29.71)(36.38)}{733,320} = -2.599^{KSI} \text{ END SPANS}$$

$$\frac{(2148.9)(12)(36.38)}{733320} - \frac{1533}{1085} - \frac{(1533)(29.71)(36.38)}{733320} = -2.393^{KSI} \text{ INT SPANS}$$

REQ'D $f'_{ci} = 2.599/0.55 = 4.725^{KSI}$ (AASHTO 1.6.6 (B)(1))

USE $f'_{ci} = 5000$ psi FOR ALL POST-TENSIONED SPANS

POST-TENSIONED ALTERNATE

CHECK REQUIRED ECCENTRICITY AT ENDS

MAX STRESS IN STRANDS PRIOR TO ANCHORAGE SET IS $0.8 f'_s$

$(0.8)(270) = 216$ KSI AT JACK

$ES = 7.445$ KSI (END SPANS, SHT. 59)

$= 6.873$ KSI (INT SPANS, SHT. 60)

MAX P JUST PRIOR TO ANCHOR SET.

$P = (56)(.153)(216 - 7.445) = 1787^K$

$(53)(.153)(216 - 6.873) = 1696^K$

ALLOWABLE COMPRESSION IN CONCRETE $= (0.55)(5000) = 2750$ PSI @ JACKING

$$\frac{P}{A} + \frac{Pec}{I} = \frac{1787}{1085} + \frac{1787(e)(36.38)}{733,320} = 2.75$$

$e = 12.44''$ (END SPANS)

$$\frac{1696}{1085} + \frac{1696\,e\,(36.38)}{733320} = 2.75$$

$e = 14.11''$ (INT SPANS)

SVERDRUP & PARCEL

JOB 8080 FCDMC / ACDC

SHEET NO. 63 OF

DATE 10/82

COMPUTATIONS FOR DIVERSION CHANNEL

BY RV CHKD JFF

POST-TENSIONED ALTERNATE

$f'_c = 5500$ psi $\qquad f'_{ci} = 5000$ psi

$P_f = (56)(.153)(189 + 7.518 - 47.973) = 1274^K$ (END SPANS)

$= (53)(.153)(189 + 6.954 - 46.434) = 1214^K$ (INT SPANS)

LOSS OF PRESTRESS

$\Delta f_s = 48^{KSI}$ (END SPANS)

$= 46^{KSI}$ (INT SPANS)

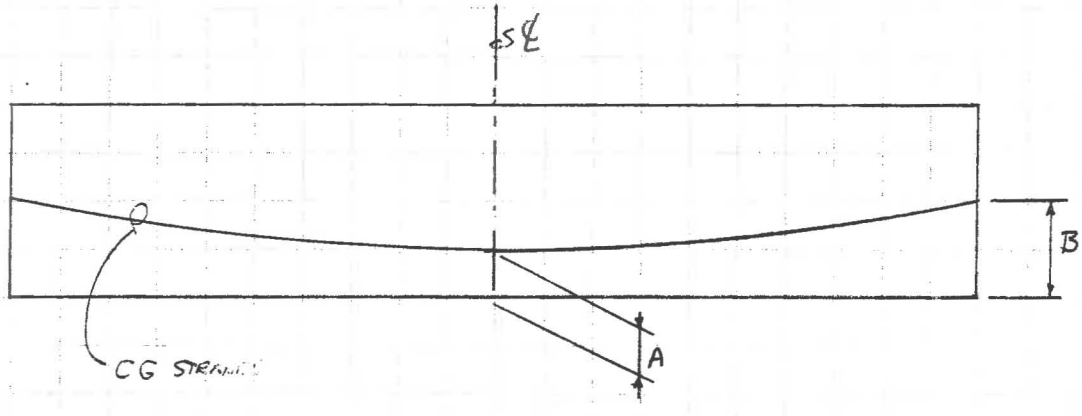

SPAN	LENGTH	A	B	f'_c	f'_{ci}	P_F	LOSSES
1 & 4	123'-7"	6.67 in	23.94 in	5500 psi	5000 psi	1274^K	48 KSI
2 & 3	122'-4"	6.67 in	22.27 in	5500 psi	5000 psi	1214^K	46 KSI

SVERDRUP & PARCEL

JOB 8080 FCDMC / ACDC

COMPUTATIONS FOR DIVERSION CHANNEL

SHEET NO. 64 OF

DATE 10/82

BY RV CHKD JFF

STIRRUPS

WORKING STRESS - AASHTO 1.5.29

$f'_c = 5500$ psi $\qquad f_s = 40{,}000$ psi

$v_c \leq 0.95\sqrt{5500} = 70$ psi $= .070$ KSI

TYPE VI GIRDERS - $b_w = 8''$

d VARIES - USE END SPAN VALUES (SMALLER)

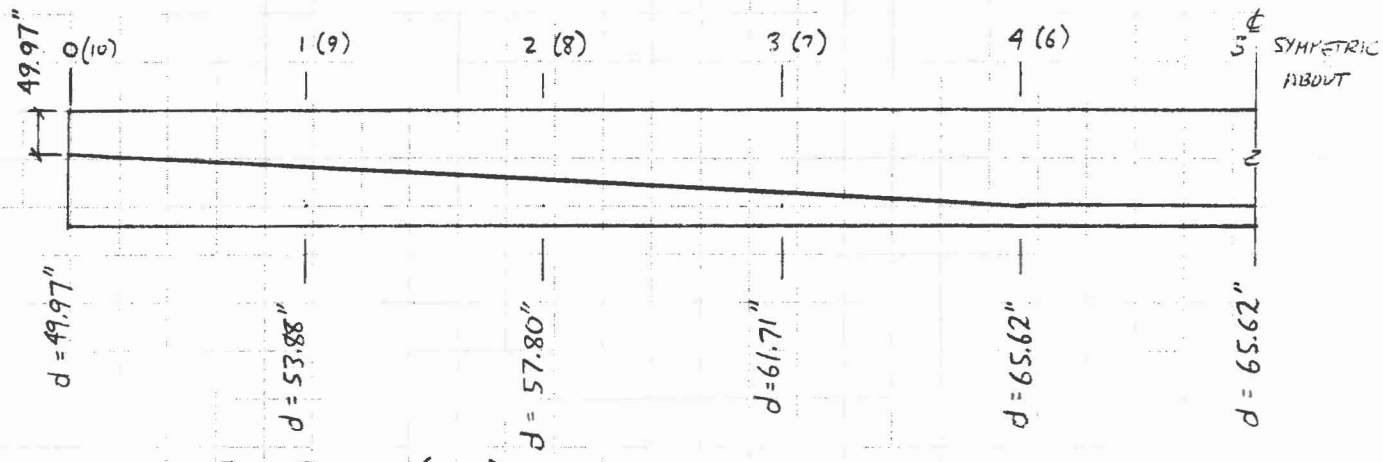

SHEARS - END SPANS (KIPS)

LOAD	POINT					
	0 (10)	1 (9)	2 (8)	3 (7)	4 (6)	5 (5)
GIRDER	69.7	55.8	41.8	27.9	13.9	0
NC DL	65.8	53.8	41.7	28.8	12.1	0
PRESTRESS	-33.9	-33.9	-33.9	-33.9	-33.9	-33.9/33.9
L+I *	75.6	66.5	59.1	52.6	45.3	37.5
FWS+SDL *	34.8	29.1	23.3	17.6	11.9	6.1
TOTAL	212.0	171.3	132.0	93.0	49.3	9.7

* TAKEN FROM END GIVING THE HIGHEST VALUES

INTERIOR SPANS (KIPS)

GIRDER	69.7	55.8	41.8	27.9	13.9	0
NCDL	65.8	53.8	41.7	28.8	12.1	0
PRESTRESS	-32.6	-32.6	-32.6	-32.6	-32.6	-33.9/33.9
L+I *	74.2	64.5	55.1	47.2	38.9	30.4
FWS+SDL *	30.7	25.0	19.2	13.5	7.8	2.0
TOTAL	207.8	166.5	125.2	84.8	40.1	-1.5

SVERDRUP & PARCEL

JOB 8080 FCDMC / ACDC

COMPUTATIONS FOR DIVERSION CHANNEL

SHEET NO. 65 OF

DATE 10/82

BY RT CHKD JFF

STIRRUPS

$v = \frac{V}{b_w d}$ $\qquad A_v = (v - v_c)\, b_w S / f_s \geq .050\, b_w S / f_s$

USE # 4 STIRRUPS $\therefore A_v = 2(.20) = .40$

$\# S = (.40)(40)/(8)(v - v_c) = 2/(v - v_c)$

END SPANS $\qquad$ MAX $S = (.40)(40)/(8)(.050) = 40''$

FUNCTION	POINT					
	0(10)	1(9)	2(8)	3(7)	4(6)	5(5)
v	0.530 KSI	.397 KSI	.285 KSI	.188	.094	.012
v_c	.070	.070	.070	.070	.070	.070
$v - v_c$	.460	.327	.215	.118	.024	-.058
S	4.34"	6.11"	9.28"	16.90	40	0
USE	4"	6"	9"	12"	12"	12"

INT. SPANS

v	.520 KSI	.386	.270	.172	.076	.003
v_c	.070	.070	.070	.070	.070	.070
$v - v_c$	.450	.316	.201	.102	.006	-.067
S	4.45"	6.32"	9.96"	19.65"	40	0
USE	4	6	9	12	12	12

END ZONE REQUIREMENTS

MAX # STRANDS = 63, ASSUME $f_s = 0.62 f_s'$ (SHT. 13)

$P = (63)(.153)(.62)(270) = 1614^K$

$4\% P = (.04)(1614) = 65^K$ AASHTO 1.6.15

$d = \sim 50''$ $\quad d/4 = 12.5''$, $f_s = 20{,}000$ psi

$A_{req'd} = 65.0/20 = 3.23\ in^2$

TRY #7's FOR BOTH SHEAR & END ZONE REINF IN END 12.5"

TRY 4 STIRRUPS

$(2)(4)(0.60) - (12.5/4.34)(.40) = 3.65\ in^2 (> 3.23 \checkmark)$

SHEAR RQMNT

USE (4) #7 STIRRUPS IN 12½" FROM END

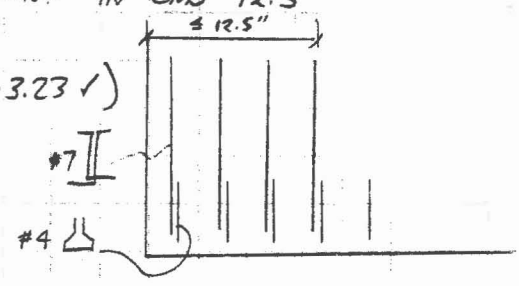

SVERDRUP & PARCEL

JOB 8080 FCDMC / ACDC

COMPUTATIONS FOR DIVERSION CHANNEL

SHEET NO. 66 OF

DATE 10/82

BY RV CHKD JFF

STIRRUPS

POST-TENSIONED ALTERNATE

END-ZONE REQUIREMENTS

STRANDS = 56 MAX (SHT. 59)

$f_{s\ INITIAL} = (0.8)(270) = 216$ KSI

$P_{INITIAL} = (56)(.153)(216) = 1851^{K}$

$e = 12.44''$ (SHT. 62)

END BLOCK (WIDE AS NARROWER PART OF FLANGE - AASHTO 1.6.15)

72" DEEP × 28" WIDE

$A = (72)(28) = 2016\ in^2$

$I = (28)(72)^3/12 = 870{,}912\ in^4$

$f_{top} = (1851)(12.44)(36.38)/870{,}912 - 1851/2016 = +44$ psi (TEN)

SECTION IS NOT FULLY UNDER COMPRESSION, DETERMINE LOADED LENGTH

$L' = 3(72/2 - 12.44) = 70.68''$

$f_c = (2)(1851)/(3)(28)(72/2 - 12.44) = 1.871^{KSI} \times 28'' = 52.38\ K/in$

$P_{INITIAL}$ WILL BE DISTRIBUTED BY HEAVY STEEL ANCHOR PLATES. ASSUME ANCHOR ⊥ SIZE WILL BE 17"⌀, THEN $P_{INITIAL}$ IS DISTRIBUTED ON TWO PLATES (TWO DUCTS) OR 34"

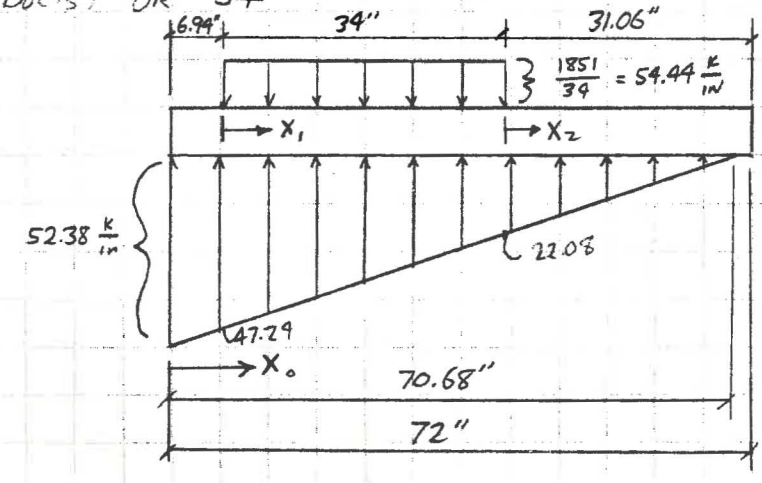

STIRRUPS

POST-TENSIONED ALTERNATE, END ZONE REQUIREMENTS

FROM $X_0 = 0''$ to $6.94''$:

$$w(x_0) = 52.38 - (52.38/70.68)x = 52.38 - 0.74x$$

$$V(x_0) = \int_0^{6.94} w(x_0)\,dx = 52.38x - 0.37x^2, \quad V(6.94) = 345.67^K$$

$$M(x_0) = \int_0^{6.94} V(x_0)\,dx = 26.19x^2 - 0.124x^3, \quad M(6.94) = 1220.12 \text{ k-in}$$

FROM $X_1 = 0$ to $34''$:

$$w(x_1) = 47.24 - 0.74x - 54.44 = -7.20 - 0.74x$$

$$V(x_1) = \int_0^{34} w(x_1)dx + 345.67 = -7.20x - 0.37x^2 + 345.67, \quad V(34) = -327.48$$

FIND $V(x_1) = 0$ (SOLVE QUADRATIC); $X_1 = 22.34''$ (FOR M_{MAX})

$$M(x_1) = \int_0^{34} (-7.20x - .37x^2 + 345.67)dx + 1220.12$$

$$M(x_1) = -3.60x^2 - .124x^3 + 345.67x + 1220.12$$

$M(22.34) = 5768.61$ K-IN (USE FOR DESIGN)

LENGTH OF END BLOCK $\geq (.75)(72) = 54''$ (AASHTO 1.6.15)

USE $d = \frac{1}{2}$ END BLOCK $= (.5)(54) = 27''$ $\quad f_s = 20{,}000$ psi

$b = 28''$

$f_c = 0.55(5500) = 3025$ psi $\quad n = 6.23$

$K = 282.6$

$A_s = 12.13 \text{ in}^2$ (APPENDIX "A")

SVERDRUP & PARCEL

JOB 8080 FCDMC / ACOC

COMPUTATIONS FOR DIVERSION CHANNEL

SHEET NO. 68 OF

DATE 10/82

BY RT CHKD JFF

STIRRUPS

POST-TENSION ALTERNATE, END ZONE REQUIREMENTS

DISTRIBUTE STIRRUPS OVER END BLOCK

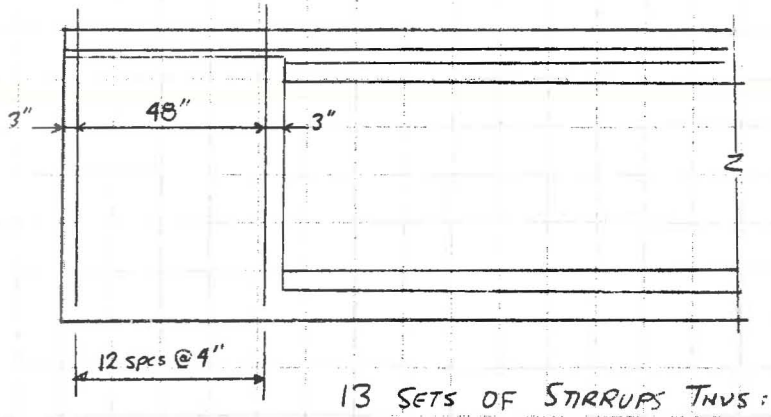

13 SETS OF STIRRUPS THUS:
#5's

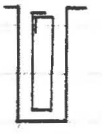

$A_p = (4)(.31)(13) = 16.12 \text{ in}^2 \quad (\simeq 12.13 \text{ in}^2 \checkmark)$

PROVIDE #4 HORZ STIRRUPS, 4 EQ SPCS VERTICALLY, SPC'D/VERT STIRRUPS
PROVIDE #4 LONGITUDINAL BARS, SPC'D/HORZ STIRRUPS IN END ZONE

PROVIDE #3 @ 3" E.W. GRILLAGE AT END (AASHTO 1.6.15)

SVERDRUP & PARCEL

JOB 8080 FCDMC / ACDC

COMPUTATIONS FOR DIVERSION CHANNEL

SHEET NO. 69 OF

DATE 10/82

BY RT CHKD JFF

STIRRUPS

TYPE VI GIRDER, TOP FLANGE REINF.

TREAT AS A CANTILEVER SLAB PER AASHTO 1.3.2.(H) CASE A

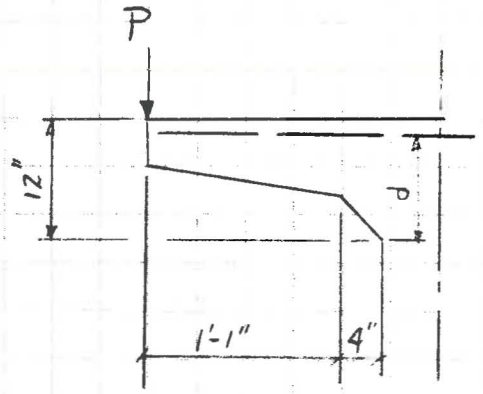

$E = 0.8X + 3.75$

$X = 1'\text{-}1'' + 4'' = 1'\text{-}5''$

$E = (0.8)(1.42) + 3.75 = 4.88$ ft

$P = 16^k$ IMPACT = 30%

$M = (1.3)(16/4.88)(1.42) = 6.03$ K-FT/FT

$b = 12''$ $d = 12'' - 1'' - .625/2 = 10.69''$

$f_c = 3025$ psi $f_s = 20{,}000$ psi $n = 6.5$

$K = 52.8$
$A_s = 0.36$ in^2 } APPENDIX A

USE #4 @ 6", $A_P = 0.40$ in^2/ft > 0.36 ✓

SVERDRUP & PARCEL

JOB 8080 FCDMC / ACDC

COMPUTATIONS FOR DIVERSION CHANNEL

SHEET NO. 70 OF

DATE 10/82

BY RV CHKD JFF

STIRRUPS

SHEAR AT COMPOSITE INTERFACE

$v_{ALLOWABLE}$ = 300 psi (MIN TIES & ROUGHENED SURFACE - AASHTO 1.6.14(C))

$v = VQ/Ib$

$V = 212^K$ (SHT. 64)

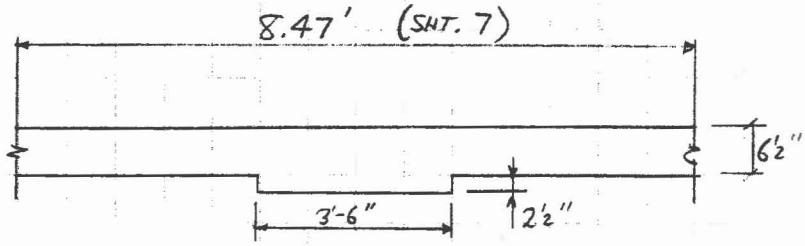

$Q = (8.47)(12)(6.5)(2.5 + 6.5/2) + (3.5)(12)(2.5)^2/2 = 3930 \text{ in}^3$

$b = 42''$

$I = (69.61)(12)^4 = 1,443,433 \text{ in}^4$ (SHT. 26)

$v = (212)(3930)/(1443433)(42) = .014^{KSI} = 14 \text{ psi} < 300 \text{ psi}$ ✓

MINIMUM SHEAR REINF PROVIDED FOR GIRDER WEB REINF. EXTENDED INTO SLAB = 2 #4's @ 12" (>2 #3 @ 12" ✓)

USE EXTENDED GIRDER SHEAR REINF FOR COMPOSITE ACTION

SVERDRUP & PARCEL

JOB 8080 FCDMC/ACDC

COMPUTATIONS FOR DIVERSION CHANNEL

SHEET NO. 71 OF

DATE 10/82

BY RJ CHKD JFF

POSITIVE MOMENT REINF @ PIERS

MOMENTS AT PIERS

	LOCATION			REF. SHT.
	PIER 2	PIER 3	PIER 4	
CREEP & SHRINKAGE	534.01	206.07	534.01	41
SUPERIMPOSED DEAD LOADS = .503 $M_{FWS+SDL}$ *	-380.4	-253.6	-380.4	36
MAX POSITIVE L+I (TRUCK OR LANE)	185.7	411.4	185.7	36
	339.3	363.9	339.3	

* INPUT VALUES, FWS = .231 KLF

SDL = .234 KLF

ADJUST OUTPUT MOMENTS FOR SDL ONLY

$.234/(.234+.231) = .503$

PIER 3 GOVERNS, $M = 363.9$ K-FT/GIRDER

$t = 6.5''$ $b = 101.6''$ f'_c, FLANGE = 4500 psi

$n = 7.3$

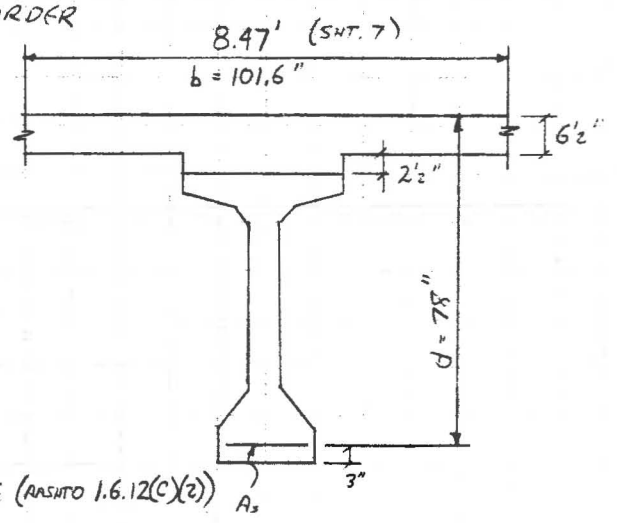

TRY $\rho = 1\% = .01$

$$k = \frac{2\rho n + \left(\frac{t}{d}\right)^2}{2\rho n + 2\left(\frac{t}{d}\right)} = 0.488$$

$$j = \frac{6 - 6\left(\frac{t}{d}\right) + 2\left(\frac{t}{d}\right)^2 + \frac{\left(\frac{t}{d}\right)^3}{2\rho n}}{6 - 3\left(\frac{t}{d}\right)} = 0.960$$

$$A_s = \frac{M}{f_s j d}$$ $f_s = (0.6) f_s = 24000$ psi (AASHTO 1.6.12(C)(2))

$A_s = (363.9)(12)/(24)(.960)(78) = 2.43 \text{ in}^2$

CHK $\rho = 2.43/(101.6)(78) = .0003 << .01$ (5/13 CONSERVATIVE)

INCREASE BY 1/3 ⇒ USE $(2.43)(1\tfrac{1}{3}) = 3.24 \text{ in}^2$

SINCE THE ABOVE IS SIGNIFICANTLY LESS THAN THAT REQUIRED BY USD OF 6.10 in^2, USE USD VALUE (SHT. 46)

USE 11 #7 BARS

SVERDRUP & PARCEL

JOB 8080 FCDMC / ACDC

COMPUTATIONS FOR DIVERSION CHANNEL

SHEET NO. 72 OF

DATE 10/82

BY RV CHKD JFF

SLAB DESIGN

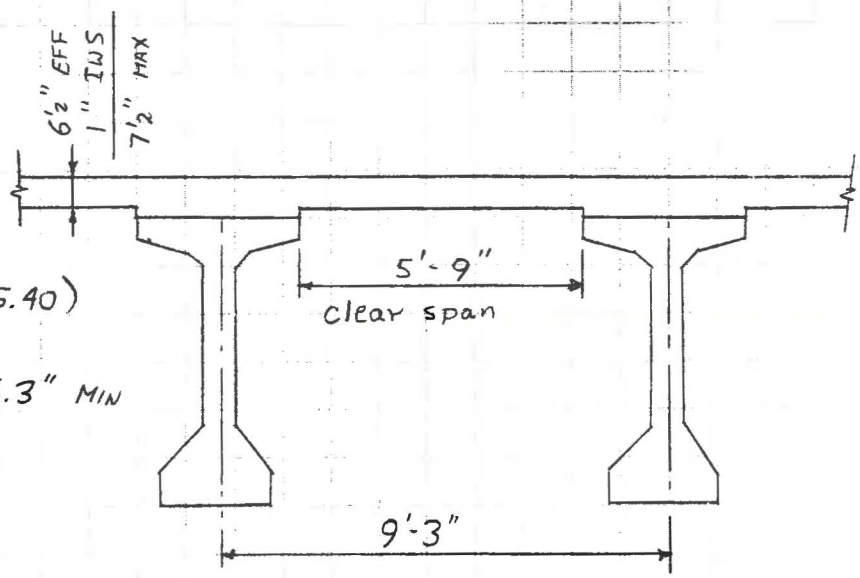

MIN SLAB THICKNESS (AASHTO 1.5.40)

$(S+10)/30$

$= (5.75+10)/30 = .525' = 6.3''$ MIN

USE $t_{eff} = 6.5''$

COMPUTE BENDING MOMENTS DUE TO L+I FOR INTERIOR SPANS ONLY. CANTILEVER PORTION OF SLAB IS PROTECTED FROM WHEEL LOADS BY A TRAFFIC BARRIER, SO IT WILL BE DESIGNED FOR PEDESTRIAN & BICYCLE LOADS.

IMPACT FACTOR $= 50/(5.75+125) = .38$ (> .30 - USE 30%)

$= 1.3$ (AASHTO 1.2.12(C))

LIVE LOAD MOMENT, CASE A (AASHTO 1.3.2 (C))

$$M_{LL} = \left(\frac{S+2}{32}\right) P_{20} = \left(\frac{5.75+2}{32}\right) 16 = 3.88 \text{ K-FT/FT}$$

CONTINUITY FACTOR = 0.8

$$M_{LL+I} = (1.3)(0.8)(3.88) = 4.04 \text{ K-FT/FT}$$

DEAD LOAD MOMENT

FWS = 25 psf

$$w_{DL} = 25 + \left(\frac{7.5}{12}\right)(150) = 119 \text{ psf}$$

SVERDRUP & PARCEL

JOB 8080 FCDMC / ACDC

COMPUTATIONS FOR DIVERSION CHANNEL

SHEET NO. 73 OF

DATE 10/82

BY RV CHKD JFF

SLAB DESIGN

$M_{DL} = (0.8)(.119)(5.75)^2/8 = 0.39^{K\text{-}FT}/FT$

$M = 4.04 + 0.39 = 4.43^{K\text{-}FT}/FT$

DECK CONCRETE: $f'_c = 4500$ psi, $f_c = 1400$ psi, $n = 8$ } DESIGN CRITERIA

REINFORCING: $f_y = 40{,}000$ psi, $f_{s\,MAX} = 20{,}000$ psi

$d_{TOP} = 7.5 - 2 - \frac{.625}{2} = 5.19''$

$d_{BOTTOM} = 7.5 - 1 - \frac{.625}{2} = 6.19''$

$b = 12''$

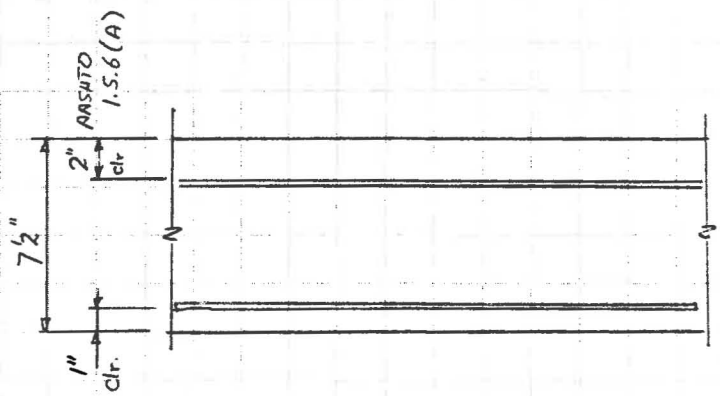

APPENDIX "A"

$K_{TOP} = 164.6$

$A_{TOP} = 0.57\ in^2/ft$ (USE # 6 @ 9", $A_p = 0.59\ in^2/ft$)

$K_{BOT} = 115.6$

$A_{BOT} = 0.47\ in^2/ft$ (USE # 5 @ 7½", $A_p = 0.50\ in^2/ft$)

SINCE $f_y \not> 40{,}000$ psi AASHTO 1.5.39 DOES NOT APPLY

SVERDRUP & PARCEL

JOB 8080 FCDMC / ACOC

COMPUTATIONS FOR DIVERSION CHANNEL

SHEET NO. 74 OF

DATE 10/82

BY RV CHKD JFF

SLAB DESIGN

DISTRIBUTION REINFORCEMENT AASHTO 1.3.2(E)

$\% = 220\sqrt{S} = 220\sqrt{5.75} = 92\% > 67\%$ USE 67%

A_s MIDDLE ½ SPAN $= (0.67)(.47) = 0.31\ in^2/ft \Rightarrow$ # 4 @ 7½"

A_s OUTER ¼ SPAN $= (0.67)(.47)/2 = 0.16\ in^2/ft \Rightarrow$ # 4 @ 15"

SHRINKAGE & TEMPERATURE REINF. AASHTO 1.5.12

$\frac{1}{8}\ in^2/ft \Rightarrow$ USE # 4 @ 18" $\Rightarrow 0.133\ in^2/ft$

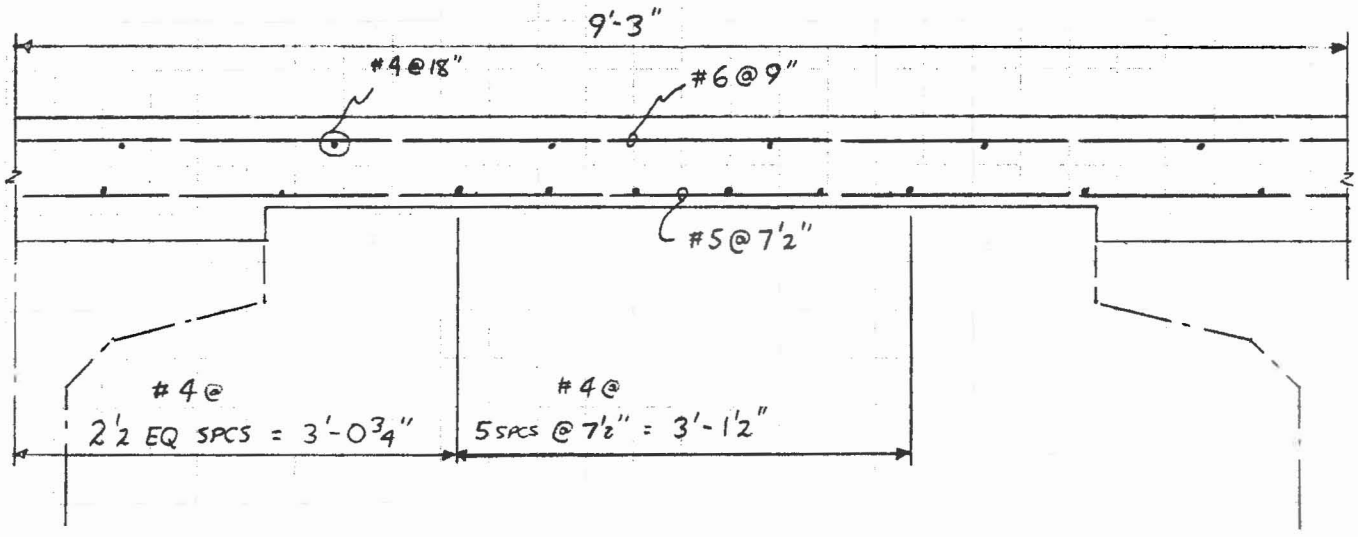

SVERDRUP & PARCEL

JOB 8080 FCDMC / ACDC

COMPUTATIONS FOR DIVERSION CHANNEL

SHEET NO. 75 OF

DATE 10/82

BY RT CHKD JFF

SLAB DESIGN

PER AASHTO 1.6.12(C)(3), NEGATIVE MOMENT REINFORCING SHALL BE PROPORTIONED BY ULTIMATE STRENGTH DESIGN.

SEE SHTS. 46 & 47

MAX $-A_s$ = 15.92 in²/GIRDER (@ PIERS 2 & 4)
$-A_s$ = 3.60 in²/GIRDER (@ TENTH POINT FROM PIER

TOTAL STEEL @ PIER = (9)(15.92) = 143.28 in²
TOTAL STEEL @ 1/10 PT = (9)(3.60) = 32.40 in²

PROVIDE ADDITIONAL TOP REINF ABOUT PIERS A_s:

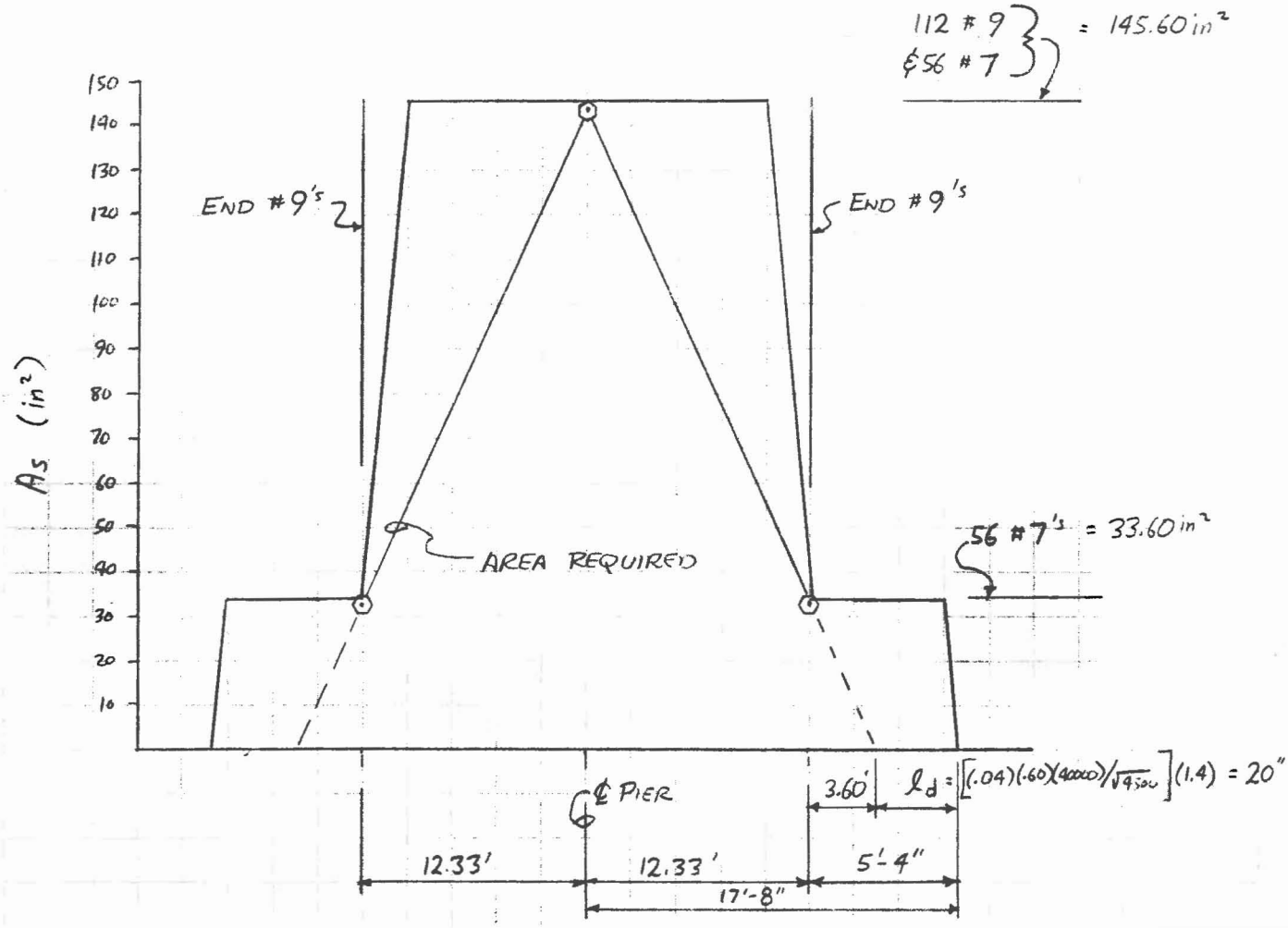

SVERDRUP & PARCEL

JOB 8080 FCDMC / ACDC

COMPUTATIONS FOR DIVERSION CHANNEL

SHEET NO. 76 OF

DATE 10/82

BY RV CHKD JFF

SLAB DESIGN

CANTILEVERED SLAB

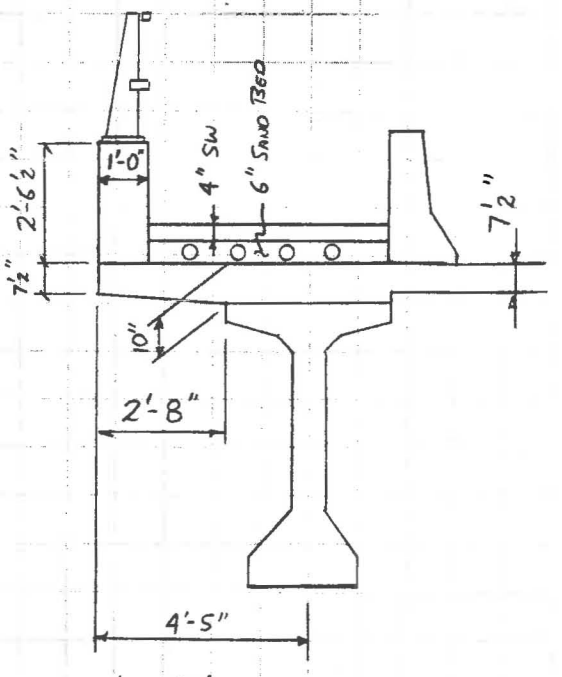

P_1 = CURB Wt = (1.0)(2.54)(0.15) = 0.381 KLF

P_2 = RAIL Wt = ASSUME ≃ .050 KLF

0.431 KLF

$W_D \simeq (7.5+10)(0.15)/(12)(2) = 0.109$ KSF

W_1 (SAND) (0.100)(6/12) = 0.050

W_2 (SW) (0.150)(4/12) = 0.050

W_L (85PSF) = 0.085

0.294 KSF

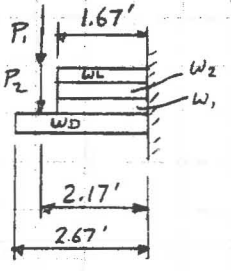

$M = (.431)(2.17) + (.294)(1.67)^2/2 = 1.342$ K-FT/FT

$V = .431 + (.294)(1.67) = 0.922$ KLF

$d = 7.5 - 2 - .625/2 = 5.19''$

$b = 12''$

$f_c = 1400$ psi $\quad n = 8$

$f_s = 20000$ psi

$K = 49.8$, $A_s = 0.17$ in²/ft } APPENDIX "A"

INCREASE A_s BY 1/3 = 0.22 in²/ft (< 0.59 in²/ft)

USE #6 @ 9" (CONTINUE DECK STEEL T & B)

SVERDRUP & PARCEL

JOB 8080 FCDMC / ACDC

COMPUTATIONS FOR DIVERSION CHANNEL

SHEET NO. 77 OF

DATE 10/82

BY RT CHKD JFF

BARRIER DESIGN

USE JERSEY TYPE BARRIER SIMILIAR TO ADOT STD. 2.42 BUT DESIGN REINF TO SPACE WITH TRANSVERSE DECK REINF.

BENDING MOMENTS

@ DECK LEVEL: $P = 10^K$ LL

$h = 2.67'$

$W = 5'$ (AASHTO 1.1.8(3))

$$M = (10)(2.67)/5 = 5.34^{K\text{-}FT}/_{FT}$$

@ 1'-7" BELOW TOP OF BARRIER

$h = 1.58'$

$$M = (10)(1.58)/5 = 3.16^{K\text{-}FT}/_{FT}$$

REINF. DESIGN (SEE APPENDIX "A")

$b = 12"$

$d_D = 17" - 2" - .25 = 14.75"$ @ DECK LEVEL

$d_T = 10" - 2" - .25 = 7.75"$ @ 1'-7" BELOW TOP

$f'_c = 3000$ psi $f_c = 1200$ psi $n = 9$ $f_s = 20{,}000$ psi

$K = 24.5$, $A_s = 0.23\ in^2/ft$ } @ DECK LEVEL

$K = 52.6$, $A_s = 0.26\ in^2/ft$ } @ 1'-7" BELOW TOP

USE #4 @ 7½" ($A_P = 0.32\ in^2/ft$)

SLAB ELEVATIONS

COMPUTE ALLOWANCE FOR SCREED ELEVATION DUE TO DECK DEAD LOAD AND TIME DEPENDENT EFFECTS

REF: "MODERN PRESTRESSED CONCRETE" BY: LIBBY

GIRDER DEFL JUST PRIOR TO SLAB PLACING (CONTINUITY @ 28 DAYS)

FINAL PRESTRESS DEFL. + LONG TERM GIRDER DL DEFL.

$$\Delta g = \underbrace{\Delta i\left[1 - \frac{P_i - P_f}{P_i} + \alpha_s K_r C_u \lambda'\right]}_{\text{CALCULATED BY PROGRAM P7329}} + \underbrace{\Delta_{GDL}}_{\text{CALCULATED BY PROGRAM P7329}}\left[1 + \alpha_s K_r C_u\right]$$

$C_u = 2.$ (ULTIMATE CREEP RATIO)

$K_r \simeq 1.$

$\alpha_s = t^c/(d + t^c)$

$t = 28$ days

$c = 0.6$, $d = 10$ } RECOMMENDED VALUES WHEN NO EXPERIMENTAL DATA AVAILABLE

$\alpha_s = 28^{.6}/(10 + 28^{.6}) = 0.42$

$1 + \alpha_s K_r C_u = 1 + (.42)(1)(2) = 1.8$

$\Delta g = \Delta_{PR.\,DISP.\,CON} + 1.8\,\Delta_{GR\,DL}$

SVERDRUP & PARCEL

JOB #8080 FCDMC / ACDC

SHEET NO. 79 OF

DATE 10/82

COMPUTATIONS FOR BR. OVER DIVERSION CHANNEL

BY JGK CHKD JFF

SPAN 1

Pt	Δ_{ult}	$1.8 \times \Delta_{gdl}$	$+\Delta_{pdc}$	$= \Delta_g$	Δ_{cd}	$\Delta_{ult} + \Delta_g + \Delta_{cd} = \Delta_{SDL}$
0	0.00	0.00	0.00	0.00	0.00	0 0.00
1	-0.49	0.59	-2.14	-1.08	0.04	.02 .01 0.61
2	-0.81	1.12	-3.93	-1.91	0.07	.035 .02 1.14
3	-1.02	1.54	-5.29	-2.52	0.09	.045 .05 1.55
4	-1.14	1.80	-6.14	-2.90	0.10	.05 .04 1.81
5	-1.18	1.89	-6.43	-3.03	0.10	.05 .05 1.90
6	-1.14	1.80	-6.14	-2.90	0.08	.04 .05 1.80
7	-1.02	1.54	-5.29	-2.52	0.06	.03 .045 1.53
8	-0.81	1.12	-3.93	-1.91	0.04	.02 .035 1.12
9	-0.49	0.59	-2.14	-1.08	0.02	.01 .02 0.60
10	0.00	0.00	0.00	0.00	0.00	0 0.00

SPAN 2

0	0.00	0.00	0.00	0.00	0.00	0 0.00
1	-0.37	0.59	-2.02	-0.96	0.00	0 0.59
2	-0.59	1.12	-3.71	-1.69	0.00	.05 1.10
3	-0.73	1.54	-4.99	-2.22	0.01	.005 .01 1.50
4	-0.80	1.80	-5.80	-2.56	0.02	.01 .015 1.77
5	-0.83	1.89	-6.08	-2.68	0.03	.015 .015 1.87
6	-0.80	1.80	-5.80	-2.56	0.03	.015 .01 1.78
7	-0.73	1.54	-4.99	-2.22	0.02	.01 .005 1.50
8	-0.59	1.12	-3.71	-1.69	0.01	.005 1.11
9	-0.37	0.59	-2.02	-0.96	0.00	0.59
10	0.00	0.00	0.00	0.00	0.00	0.00

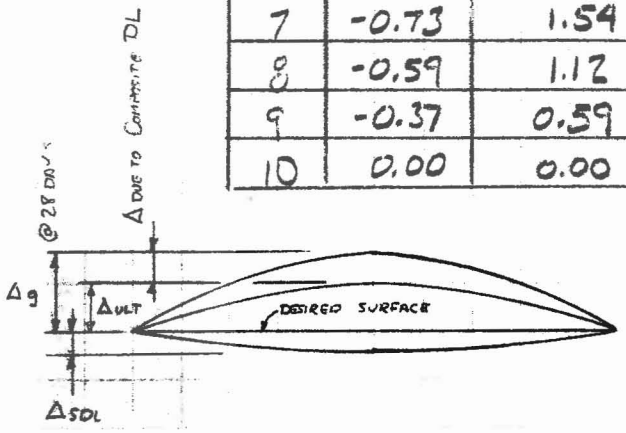

CORRECTION = $\Delta_{ULT} + \Delta_{SD} - \Delta g$

(SCREED ELEV. ABOVE DESIRED SURFACE PRIOR TO SLAB PLACEMENT)

SVERDRUP & PARCEL

JOB 8080 FCDMC / ACDC

COMPUTATIONS FOR DIVERSION CHANNEL

SHEET NO. 80 OF

DATE 10/82

BY RV CHKD JFF

PAYBACK LINE SUPPORTS

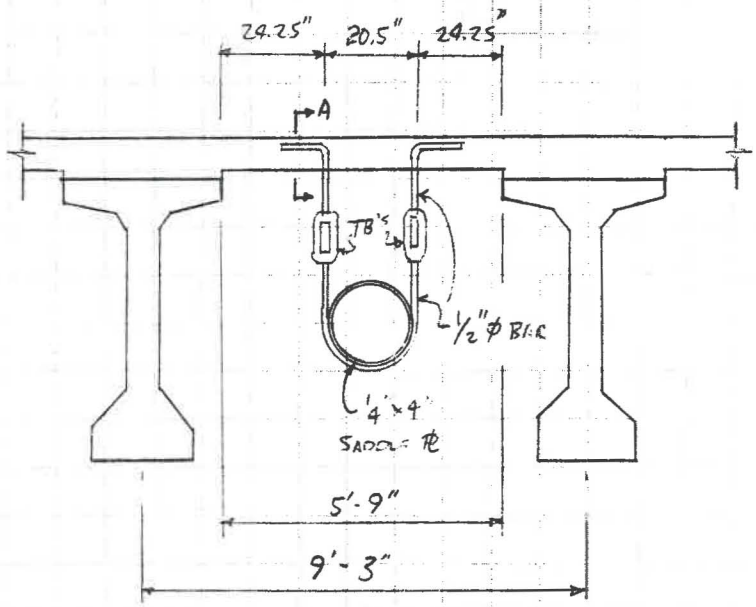

PIPE 20"φ STD

PIPE WT = 122.9 plf
WATER WT = 120.4 plf
243.3 plf

SUPPORT @ 1/3 POINTS BETWEEN DIAPHRAGMS

$123.33 / 3^2 = 13.70$ ft
SAY 14'

$P = (243.3)(14) = 3406$ lbs.

CHK SLAB, DISTRIBUTE OVER 45° PROJECTED WIDTH

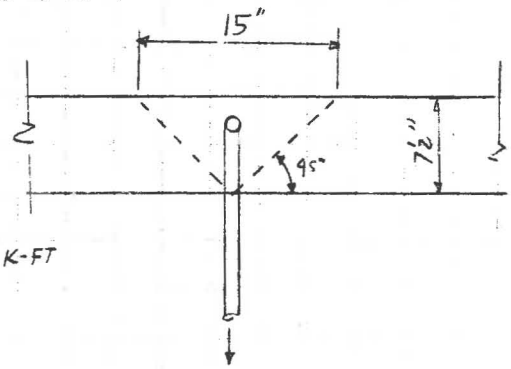

SPAN = 5.75 ft (ASSUME SIMPLE)
b = 13"
d = 6.19" (SNT. 73)

$M = (3406/2)(24.25) = 41,298$ in-lbs $= 3.44^{K\text{-}FT}$

K = 71.8
$A_s = 0.36$ in^2
} APPENDIX "A"

USE 2 #4 BARS ADDITIONAL @ PIPE SUPPORTS

SVERDRUP & PARCEL

JOB 8080 FCDMC / ACDC

COMPUTATIONS FOR DIVERSION CHANNEL

SHEET NO. 81 OF

DATE 10/82

BY RV CHKD JFF

PAYBACK LINE SUPPORTS

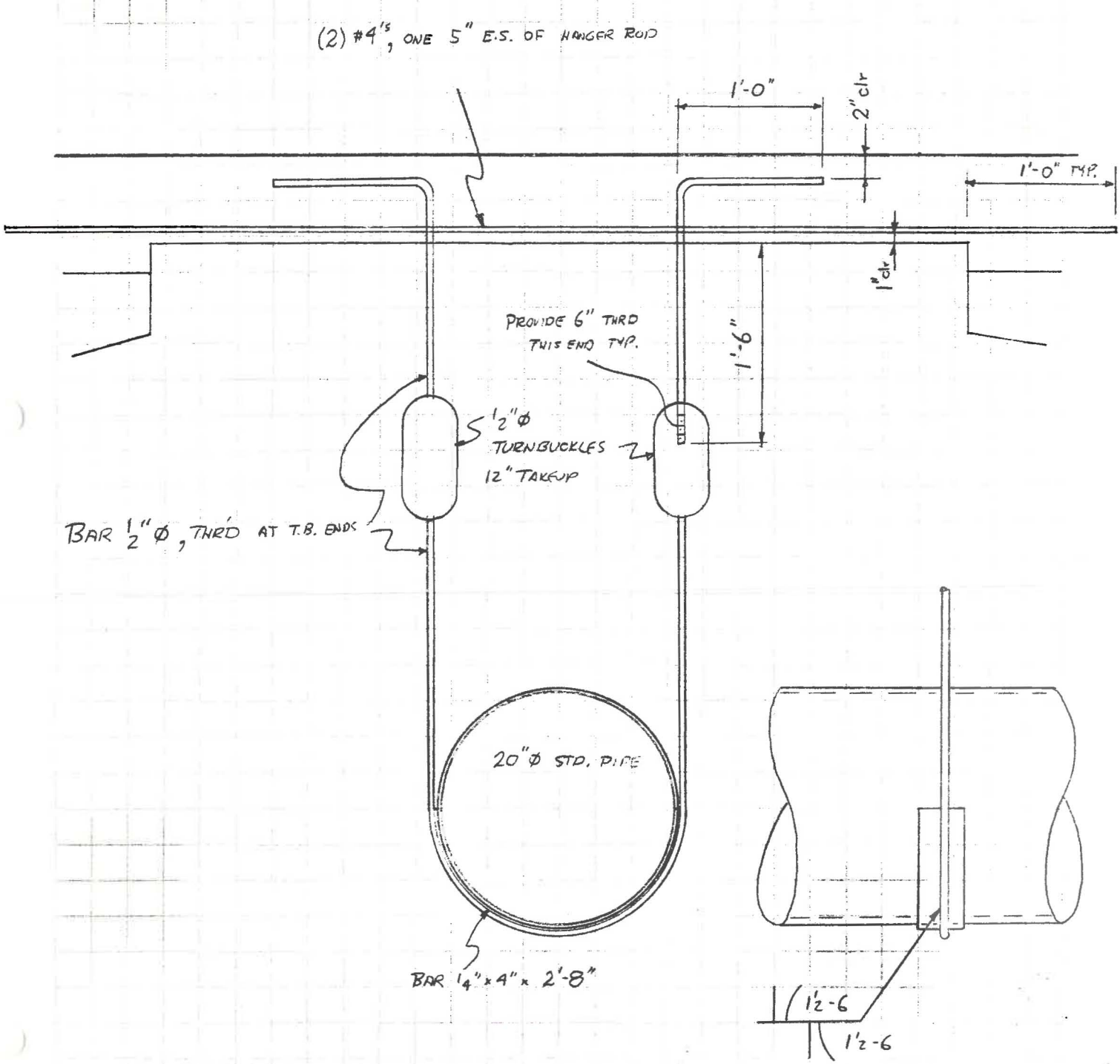

BEARING DESIGN

BEARINGS TO BE USED SHALL BE ELASTOMERIC PADS, EITHER NEOPPRENE OR NATURAL RUBBER.

ALL BEARINGS WILL BE IN A FIXED (NON-SLIDING) ENVIRONMENT.

BEARINGS WILL ALLOW ROTATION BUT NOT TRANSLATION WITH RESPECT TO SUBSTRUCTURE.

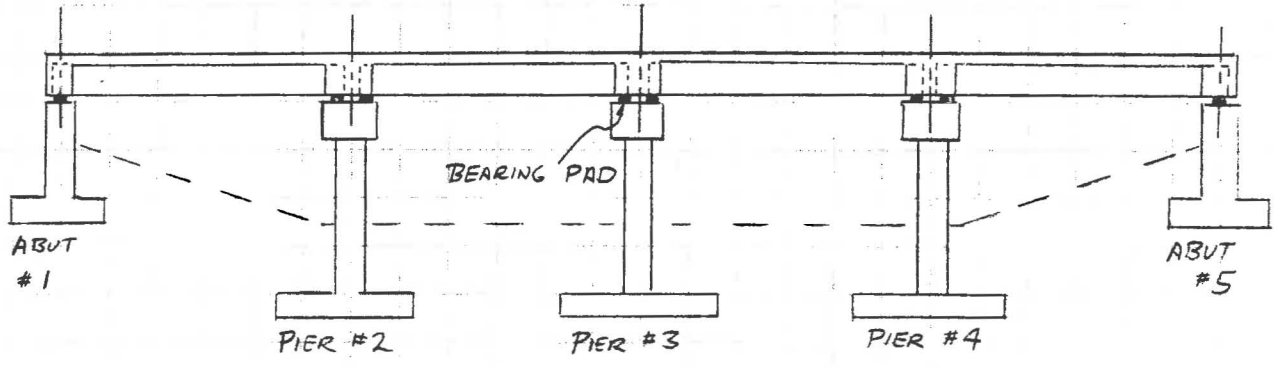

DESIGN ALL BEARINGS FOR HIGHEST POSSIBLE COMBINATION OF DEAD + LIVE LOADS (WITHOUT IMPACT)

DEAD LOADS

		ABUTS 1 & 5	PIERS 2 & 4	PIER 3	REF. SHT.
GIRDER	=	69.7 K	69.7 K	69.7 K	32
NCDL (SLAB, INT. DIAPHRAGMS)	=	65.8	65.8	65.8	32
ABUT OR PIER DIAPHRAGM	=	28.3	12.8	12.8	5/10
CDL (SW, HR, BARRIER, FWS)	=	22.5	32.8 *	26.6	38
DEAD LOAD REACTIONS		186.3 K	181.1 K	174.9 K	

* $(34.8 + 30.7)/2 = 32.8^K$ (AVG/GIRDER)

SVERDRUP & PARCEL

JOB 8080 FCDMC / ACOC

COMPUTATIONS FOR DIVERSION CHANNEL

SHEET NO. 83 OF

DATE 10/82

BY RT CHKD VFF

BEARING DESIGN

LL/BEARING PAD w/o IMPACT

$I = 50/L+125 = 50/(123.33+125) = 0.20$

	ABUTS 1 & 5	PIERS 2 & 4	PIER 3	REF. SHT.
LOADING TYPE	TRUCK	LANE	LANE	38
LL w/IMPACT	70.3	127.4	121.0	38
LL w/o IMP = (LL w/IMP)/1.20 =	58.5	÷2= 53.1 *	÷2= 50.4 *	
DL FROM PREVIOUS SHT =	186.3	181.1	174.9	
BRNG. PAD DSN. LOAD =	244.8	234.2	225.3 K	

* - 2 BRNG PADS PER REACTION

USE 245K FOR ALL LOCATIONS

PAD WIDTH - PROVIDE 1" RECESS FROM GIRDER

$W = 28-2 = 26"$

ALLOWABLE STRESSES (AASHTO 1.12.2)

DL ONLY 500 psi

DL+LL 800 psi

$L = 300/(26)(0.8) = 14.42"$

OR $194/(26)(0.5) = 14.92"$ (GOVERNS)

TRY 26" W × 15" L × 1" T

SHAPE FACTOR, $S = LW/(2)(T)(L+W) = (15)(26)/(2)(1)(15+26) = 4.76$

SVERDRUP & PARCEL

JOB 8080 FCDMC/ACDC

COMPUTATIONS FOR DIVERSION CHANNEL

SHEET NO. 84 OF

DATE 10/82

BY RV CHKD JFF

BEARING DESIGN

REF: "DESIGN OF NEOPRENE BEARING PADS" BY DUPONT

$f_{tL} = 245{,}000 / (15)(26) = 628$ psi

FROM FIG 1 (NEXT SHT.) FOR DUROMETER 60

COMPRESSIVE STRAIN = 6% (AASHTO 1.12.2, ALLOWABLE = 7%)

ASSUMING PIER PEDESTALS ARE LEVEL PLANES, DETERMINE IF ROADWAY SLOPE ± GIRDER CAMBER AT ENDS RESULTS IN A SLOPE THAT WOULD REQUIRE A TAPERED BEARING.

ROAD SLOPE = .0016 ft/ft

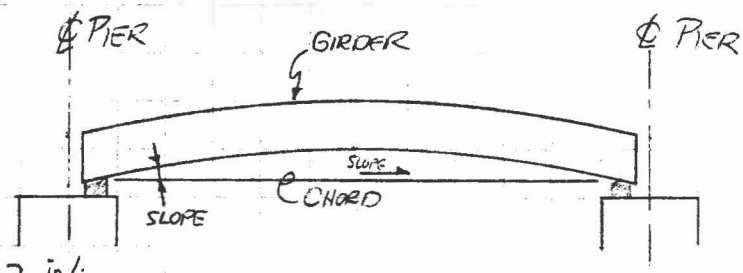

CAMBER:

Δ @ 0.1 PT / 12.333

$\Delta_{.1} = 0.49$ in (SHT. 34)

SLOPE = $0.49 / (12)(12.333) = .0033$ in/in

$\pm .0016$

.0017, .0049

SLOPE ACROSS LENGTH OF PAD = $(.0049)(15'') = 0.074'' \simeq 1/16''$ MAX

$(.0017)(15) = 0.026'' \simeq 1/32''$

SINCE CROSS SLOPE IS SO SMALL, USE 1" UNIFORM THICKNESS

Figure 1. Stress/Strain in Compression *(Typical Neoprene Bearing Compositions)*

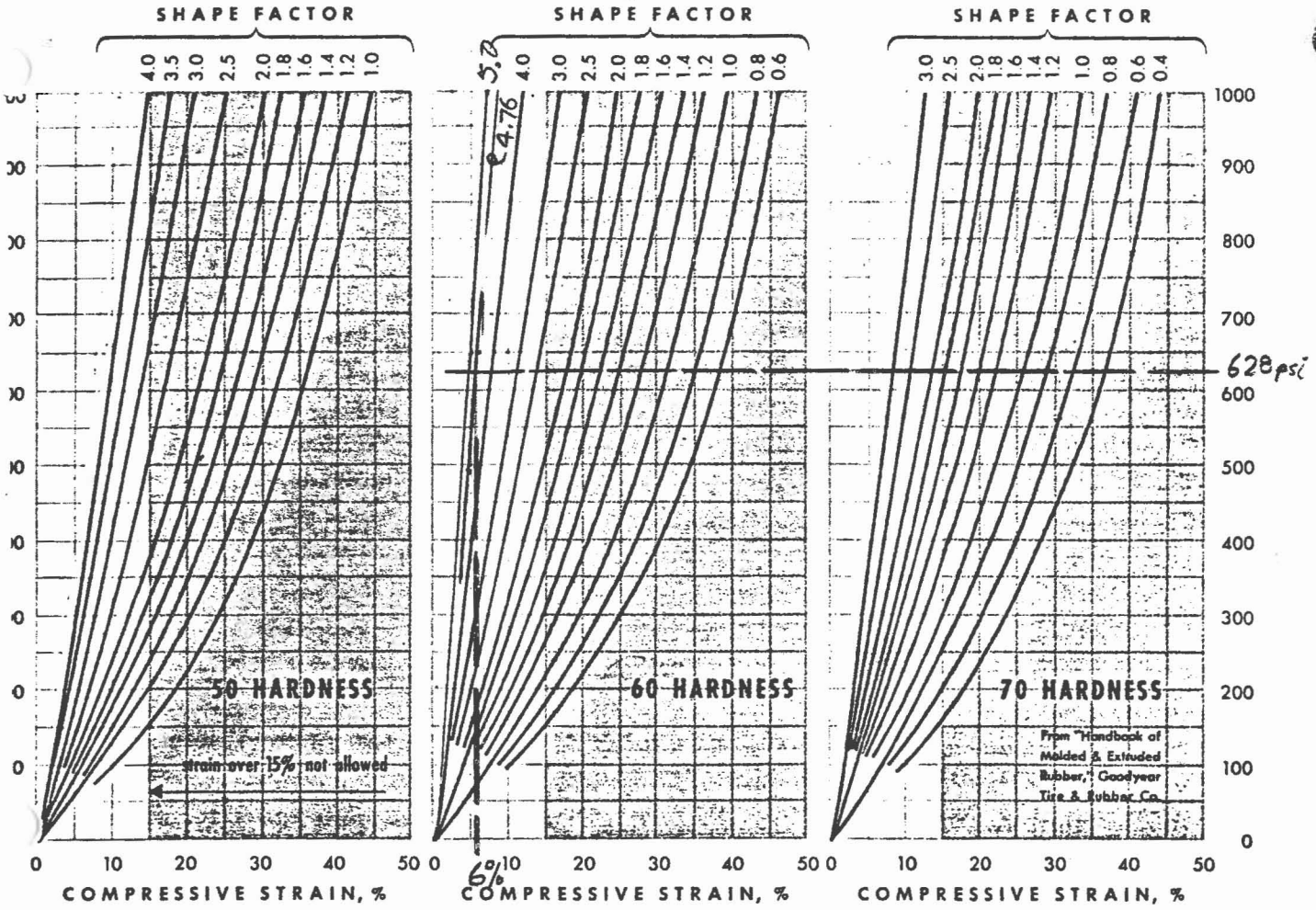

Figure 2. Modulus of Elasticity in Shear *(Typical Neoprene Bearing Compositions)*

50 HARDNESS	60 HARDNESS	70 HARDNESS
110 psi at 70°F.	160 psi at 70°F.	215 psi at 70°F.
1.1 x 110 psi at 20°F.	1.1 x 160 psi at 20°F.	1.1 x 215 psi at 20°F.
1.25 x 110 psi at 0°F.	1.25 x 160 psi at 0°F.	1.25 x 215 psi at 0°F.
1.9 x 110 psi at −20°F.	1.9 x 160 psi at −20°F.	1.9 x 215 psi at −20°F.

Figure 3. Creep in Compression *(Typical Neoprene Bearing Compositions)*

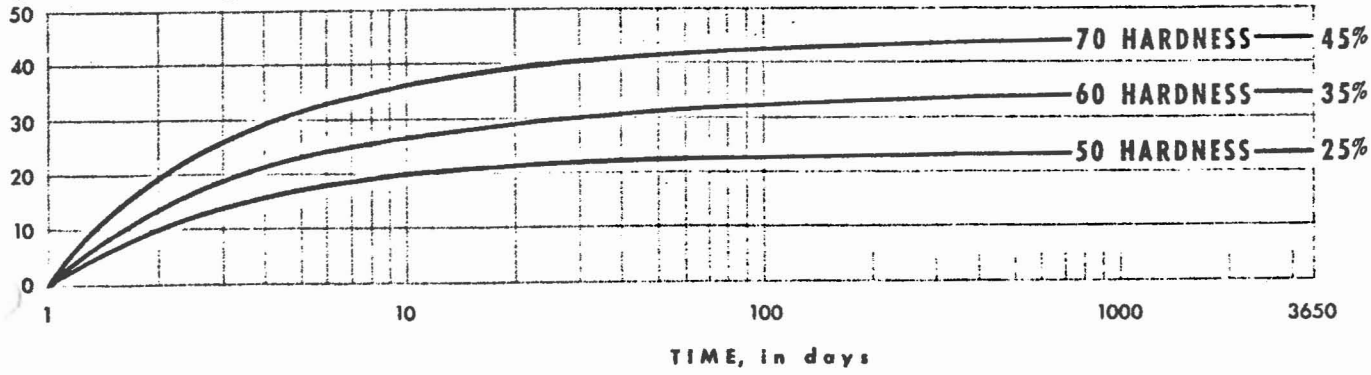

SVERDRUP & PARCEL

JOB 8080 FCDMC / ACDC

COMPUTATIONS FOR DIVERSION CHANNEL

SHEET NO. 86 OF

DATE 10/82

BY RV CHKD JFF

BICYCLE RAILING (AASHTO 1.1.8 (C)(2))

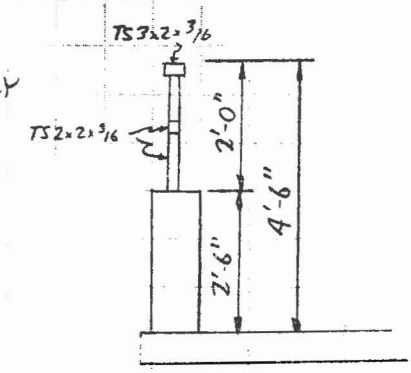

RAIL LOADING = 50 plf VERT & HORZ SIMULTANEOUSLY
EACH HORZ. RAIL

POST SPACING = L

$M_x = .05L^2/8 = L^2/160 = .00625L^2$ K-FT
$M_y = .05L^2/8 = L^2/160 = .00625L^2$ K-FT

POSTS, 50 plf TOP RAIL ONLY

$M_{BASE} = (.05)L(2) = 0.1L$ K-FT

MATERIAL ASTM A500 STRUCTURAL TUBE, $F_y = 42$ KSI
$F_b = .6F_y = 25.2$ KSI

TRY TS 3×2×3/16 TOP RAIL
TS 2×2×3/16 INTERMEDIATE RAIL & POST

INTERMEDIATE RAIL WILL GOVERN

POST SPACING ≤ 10' USE 3 PREFABRICATED SECTIONS / SPAN
123.33 / 3 = 41.11'
TRY 5 SPACINGS / SECTION
L = 41.11 / 5 = 8.22'
$M_x = M_y = 0.423$ K-FT

FOR TS 2×2×3/16 $S_x = S_y = 0.668$ in³
$f_b = (.423)(12)/.668 = 7.59$ KSI

$$\frac{7.59}{25.2} + \frac{7.59}{25.2} = 0.602 < 1 \checkmark$$

HORZ RAILS OK

POSTS: $M = (0.1)(8.22) = .822$ K-FT
$f_b = (.822)(12)/.668 = 14.77$ KSI < 25.2 ✓

SVERDRUP & PARCEL

JOB 8080 FCDMC / ACDC

COMPUTATIONS FOR DIVERSION CHANNEL

SHEET NO. 87 OF

DATE 11/82

BY RJ CHKD JFF

ABUTMENTS

SINCE ABUT #1 IS SLIGHTLY HIGHER THAN ABUT #5, USE ABUT #1 FOR DESIGN.

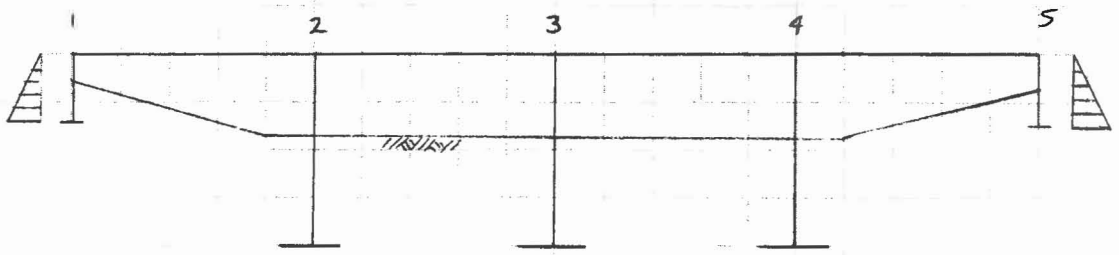

1. BRIDGE IS CONTINUOUS, NO EXPANSION JOINTS

2. ABUTMENTS ARE ESSENTIALLY EQUAL HEIGHT & EQUAL ACTIVE EARTHPRESSURES WILL CANCEL, UTILIZING SUPERSTRUCTURE AS A COMPRESSION STRUT.

3. APPLIED HORIZONTAL LOADS (W, WL, LF, EQ, S+T) WILL BE RESISTED BY PIERS AND PASSIVE EARTHPRESSURE AT ABUTMENT OPPOSITE LOADS (LONGITUDINAL W/R TO SPANS)

4 ∴ DESIGN ABUTMENTS FOR APPLIED VERTICAL LOADS, AND ACTIVE OVERTURNING DURING CONST. ASSUMING ABUTMENTS ARE BACKFILLED UP TO HINGE ELEV. BEFORE CONTINUITY IS ESTABLISHED. CHECK PASSIVE CAPACITY.

5. CHECK ABUTMENTS FOR OVERTURNING FORCES PARALLEL TO ABUTMENT.

SVERDRUP & PARCEL

JOB 8080 FCDMC / ACDC

COMPUTATIONS FOR DIVERSION CHANNEL

SHEET NO. 88 OF

DATE 10/82

BY RT CHKD JFF

ABUTMENTS

LIVE LOADS

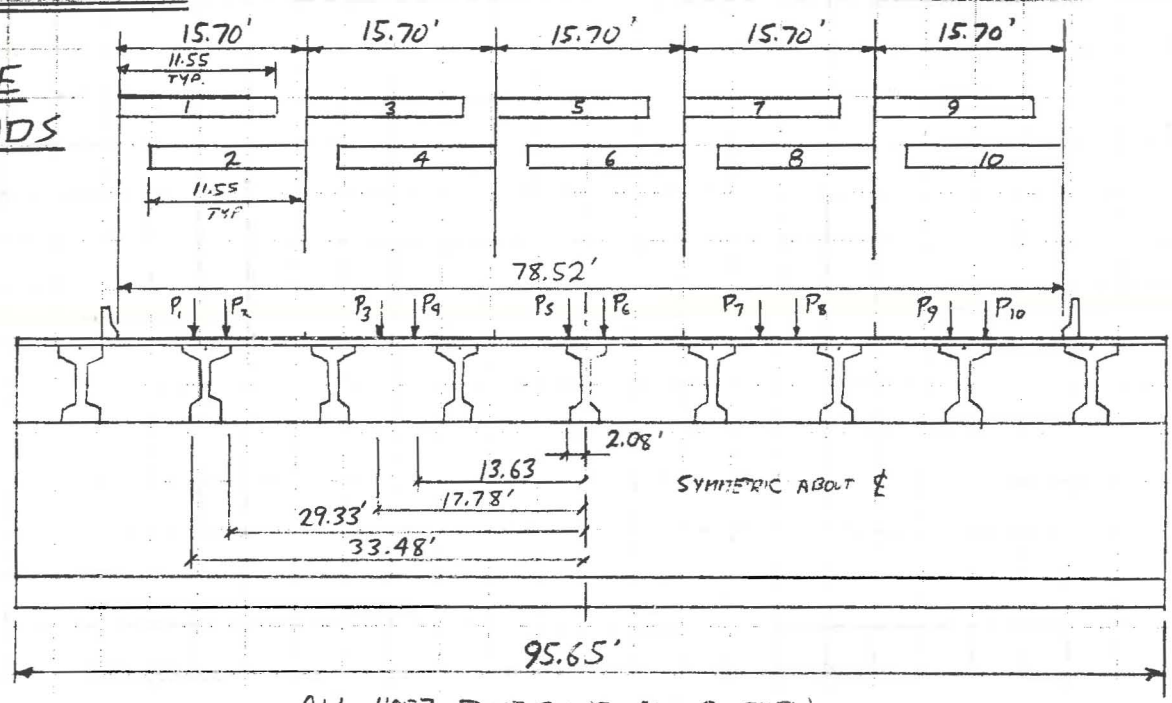

ALL HORZ. DIMENSIONS ALONG SKEW

1 LOADED LANE = 65.1 K (SHT. 38, TRUCK)
2 LOADED LANES = (2)(65.1) = 130.2 K
3 LOADED LANES = (3)(.9)(65.1) = 175.8 K
4 LOADED LANES = (4)(.75)(65.1) = 195.3 K
5 LOADED LANES = (5)(.75)(65.1) = 244.1 K

#	LANE COMBINATION	REACTION	MOMENT ABT ℄	REMARKS
1	1	65.1 K	2180 K-FT	10 SAME, 2-9 DO NOT GOVERN
2	1-3	130.2	3337	8-10 SAME, OTHERS DO NOT GOVERN
3	1-3-5	175.8	3126	6-8-10 SAME, OTHERS DO NOT GOVERN
4	1-3-5-7	195.3	1939	4-6-8-10 SAME, OTHERS DO NOT GOVERN
5	1-3-5-7-9	244.1	507	2-4-6-8-10 SAME, OTHERS DO NOT GOVERN

SVERDRUP & PARCEL

JOB 8080 FCDMC / ACDC

COMPUTATIONS FOR DIVERSION CHANNEL

SHEET NO. 89 OF

DATE 11/82

BY RV CHKD JFF

ABUTMENTS

VERTICAL LOADS

GIRDERS :	69.7 K	SHT. 33
NCDL :	65.8	SHT. 33
FWS & SDL :	22.5	SHT. 38
ABUTMENT DIAPHRGAGM :	28.3	SHT. 5

APPLIED DEAD : 186.3 K /(9.25/Cos 30°) = 17.44 K/FT

MAX LIVE LOAD FOR DESIGN ⊥ TO ABUTMENT (SHT. 38, TRUCK)

= 70.3 K / GIRDER (INCLUDES IMPACT)

I = 50 / (123.33 + 125) = 0.20

REACTION / FT WITHOUT IMPACT = (70.3 / 1.20) / (9.25 / Cos 30°) = 5.48 K/FT

TOTAL APPLIED VERTICAL LOAD = 17.44 + 5.48 = 22.92 K/FT

ALLOWABLE SOIL BEARING PRESSURE @ EL. 1201 = 8.0 KSF (SOILS REPORT)

ESTIMATE ABUTMENT SIZE / WT.

$$Wt = 0.15\left[(3)(10.91-t) + tL\right] + \ldots$$
$$\ldots + (0.12)(L-3/2)(10.91-t+8.5-t)$$

EARTH PRESSURE (DRY DURING CONST.)

$$P = (.035)(10.91)^2/2 = 2.08 \text{ K/FT}$$
$$M_{OT} = (.035)(10.91)^3/6 = 7.58 \text{ K-FT/FT}$$

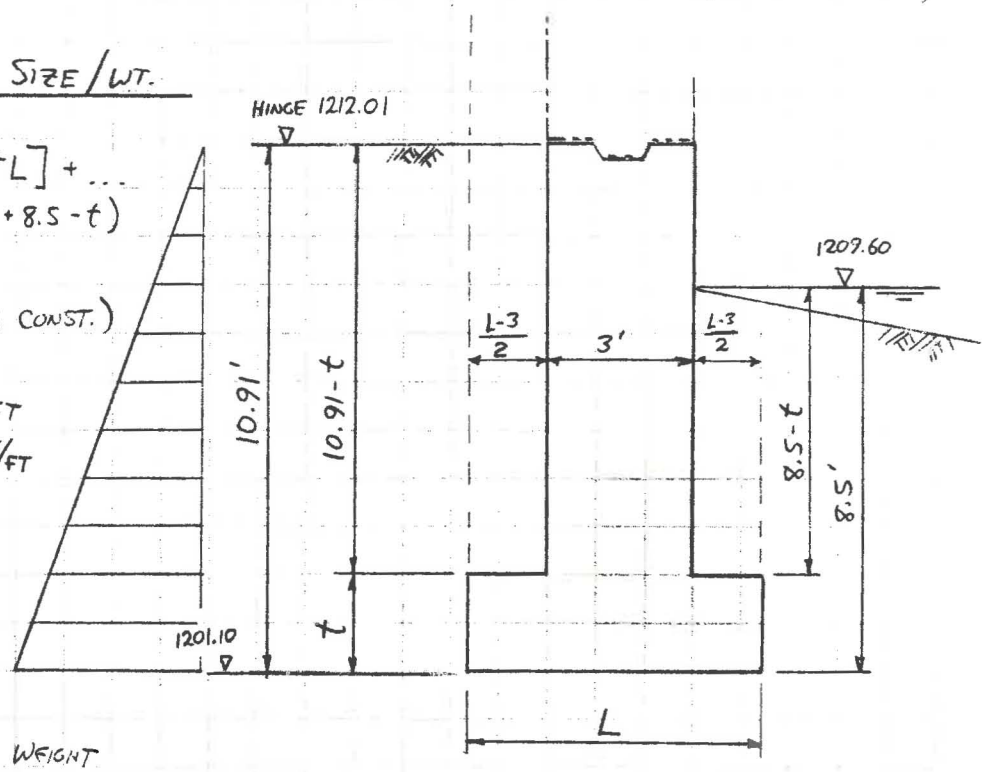

SIZE FOOTING FOR :

1. ABUT DL + EP

2. APPLIED VERT LOADS + ABUT WEIGHT

SVERDRUP & PARCEL

JOB 8080 FCDMC / ACDC

COMPUTATIONS FOR DIVERSION CHANNEL

SHEET NO. 90 OF

DATE 11/82

BY RV CHKD JFF

ABUTMENT

TRY $L = 6.0'$
$t = 1.5'$

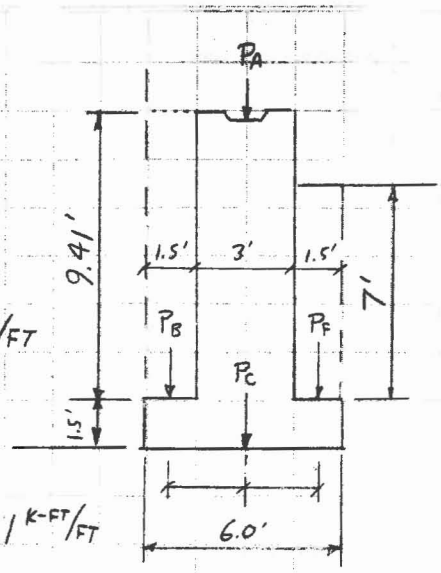

$P_A = 17.44$ K/FT (DL)

$P_C = [(9.41)(3.0) + (1.5)(6.0)](.15) = 5.58$ K/FT

$P_B = (1.5)(9.41)(.12) = 1.69$ K/FT

$P_F = (1.5)(7.0)(.12) = 1.26$ K/FT

$\Sigma = 5.58 + 1.69 + 1.26 = 8.54$ K/FT

$M_{OT} = 7.58 + (1.26)(2.25) - (1.69)(2.25) = 6.61$ K-FT/FT

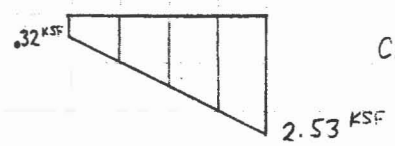

CASE I

CHK W/ APPLIED DL

$\Sigma P = 8.54 + 17.44 = 25.98$ K-FT

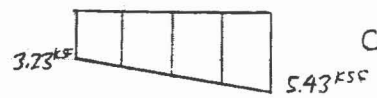

CASE II

MAX $q_s = 5.43$ (< 8 ✓)

SLIDING

MAX $H = 2.08$ K/FT

COEF $= 0.4$ (SOILS REPORT)

MIN $P = 8.54 - 1.26 = 7.28$ K/FT

$(7.28)(0.4) = 2.91$ K/FT (> 2.08 ✓)

CHK. SOIL PRESSURE AFTER CONTINUITY WITH FULL BACKFILL

OVERBURDEN ABOVE HINGE

$P = 25.98 + 5.48 + (6.64)(1.5)(0.12) = 32.66$ K/FT

$q = 32.66/6 = 5.44$ KSF (< 8.0 ✓)

CASE III

USE FOOTING 6' WIDE × 1½' DEEP

SVERDRUP & PARCEL

JOB 8080 FCDMC / ACDC

SHEET NO. 91 OF

DATE 10/82

COMPUTATIONS FOR DIVERSION CHANNEL

BY RT CHKD JFF

ABUTMENT

FOOTING DESIGN

CASE III GOVERNS BOTTOM REINF.
CASE I GOVERNS TOP REINF (@ HEEL)

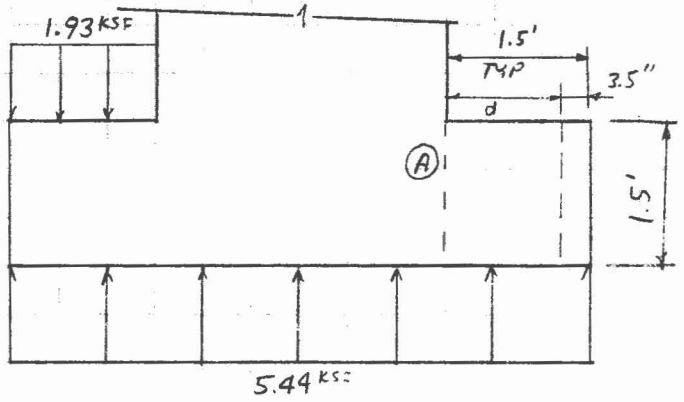

BOTTOM REINF

DISREGARD SOIL OVER TOE
∴ TOE GOVERNS

$M_A = (5.44)(1.5)^2/2 = 6.12$ K-FT/FT

$d = 18 - 3 - .5 = 14.5''$

$b = 12''$

$f_c = 1200$ psi $f_s = 20000$ psi $n = 9$

$K = 29.1$
$A_s = 0.27 \times 1'3 = 0.36$ in²/ft } APPENDIX "A"

USE # 6 @ 14" ($A_P = 0.38$ in²/ft)

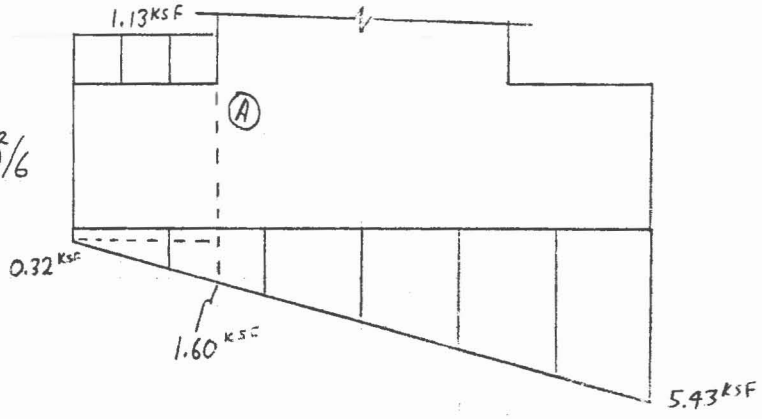

TOP REINF

$M_A = (1.13)(1.5)^2/2 - (.32)(1.5)^2/2 - (1.60 - .32)(1.5)^2/6$
$= 0.43$ K-FT/FT (NEGLIBLE)

USE # 4 @ 14"

SHEAR OK BY INSP.

SVERDRUP & PARCEL

JOB 8080 FCDMC / ACDC

COMPUTATIONS FOR DIVERSION CHANNEL

SHEET NO. 92 OF

DATE 11/82

BY RV CHKD JFF

ABUTMENT

STEM WALL

TWO CASES:

1) DURING CONST, WALL IS CANTILEVER
2) AFTER CONTINUITY, WALL IS SIMPLE SPAN

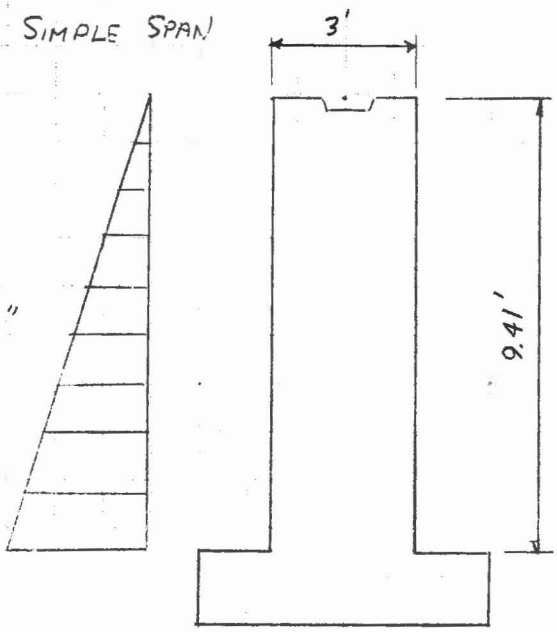

1) $M = (.035)(9.41)^3/6 = 4.86^{K\text{-}FT}/_{FT}$

$d = 36 - 2 - .5 = 33.5''$

$b = 12''$

$K = 4.3$
$M = (0.9)(1'3) = 0.12\ in^2/ft$ } APPENDIX "A"

USE # 4 @ 14" ($A_P = 0.17\ in^2/ft$)

2) $R_B = 2.12^K/_{FT}$

$R_T = 1.60^K/_{FT}$

$M_{MAX} = 4.39^{K\text{-}FT}$ @ $4.37' \uparrow R_B$

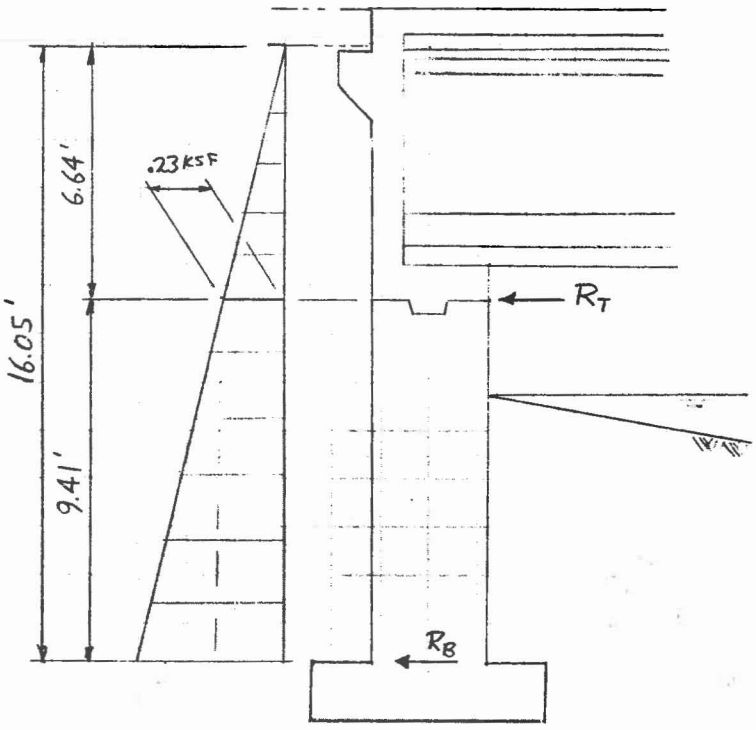

BASED ON ABOVE:

USE # 4 @ 14"

TEMP REINF (AASHTO 1.4.7(B))
$.125\ in^2/ft$ (< #4 @ 14" ✓)

USE #4 @ 14" EF, EW

ABUTMENT

CHECK SOIL PRESSURES DUE TO OVERTURNING ‖ TO ABUTMENT

HORZ LOADS

CENTRIFUGAL FORCE (CF) - NONE

STREAM FLOW (SF) - NONE

WIND (W) (APPLIED AS HORZ. FORCE AT HINGE ELEV.)

TRIBUTARY LENGTH = 123.33/2 = 61.67'

TRANS. : $(9.62)(61.67)(.050^{KSF}) = 29.7^K$

LONG. : $(9.62)(61.67)(.012^{KSF}) = 7.1^K$

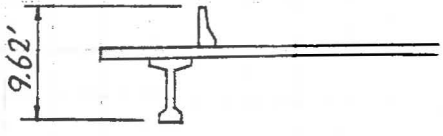

RESOLVE ⊥ TO ABUT : $7.1 \sin 30° + 29.7 \cos 30° = 29.3^K$

‖ TO ABUT : $7.1 \cos 30° + 29.7 \sin 30° = 21.0^K$

WIND ON ABUTMENT SUBSTRUCTURE EITHER ZERO OR NEGLIBLE

WIND ON LIVE LOAD (WL)

TRANS. : $(61.67)(0.10^{KLF}) = 6.17^K$

LONG. : $(61.67)(0.04^{KLF}) = 2.47^K$

⊥ TO ABUT : $6.17 \cos 30° + 2.47 \sin 30° = 6.6^K$

‖ TO ABUT : $6.17 \sin 30° + 2.47 \cos 30° = 5.2^K$

LONGITUDINAL FORCE (LF)

LANE LOAD = $.64^{KLF} + 18^K$ ASSUME MAX 3 LANES ONE DIRECTION

$LF = .05\left[(.64)(61.67) + 18\right](3)(.90) = 7.76^K$

⊥ TO ABUT. : $7.76 \cos 30° = 6.7^K$

‖ TO ABUT. : $7.76 \sin 30° = 3.9^K$

SVERDRUP & PARCEL

JOB 8080 FCDMC / ACDC

COMPUTATIONS FOR DIVERSION CHANNEL

SHEET NO. 94 OF

DATE 11/82

BY RT CHKD JFF

ABUTMENT

DEAD LOAD, SOIL OVER HEEL & TOE (DLs)

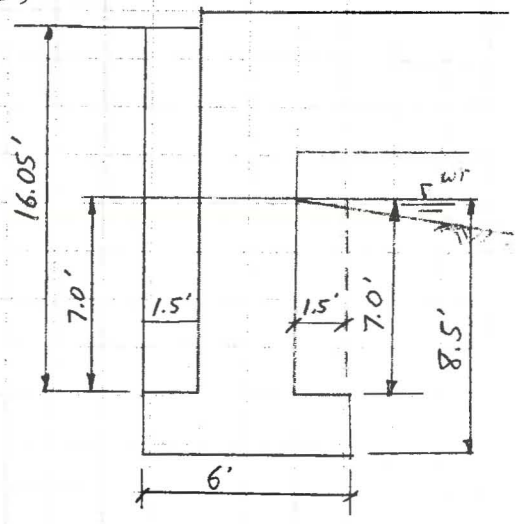

DRY

$$\left[(1.5)(16.05) + (1.5)(7.0)\right](.12)(95.65) = 397^{k}$$

BUOYANCY (B)

$$B = -(6)(8.5)(95.65)(.0624) = -304.4^{k}$$

ABUTMENT

EARTHQUAKE (EQ)

DL TRIB TO ABUTMENT HINGE = (186.3)(9 GIRDERS) = 1676.7^K (SHT. 89)

F = 1.0

P = FORCE TO CAUSE 1" DEFL @ HINGE

⊥ TO ABUTMENT: ⟶ (SEE SHT. 9)

$$\Delta = \frac{P}{K_T}$$

$$P = \Delta K_T$$

$$K_T = 1 \Big/ \left[\frac{12h^2}{BK_o L^3} + \frac{W^3}{3EI}\right]$$

$B = 82.83 / \cos 30° = 95.65'$

$K_o = 260$ KCF

$L = 6'$

$h = 10.91'$

$W = 9.41'$

$E = 3320$ KSI

$I = (95.65)(12)(36)^3/12 = 4.463 \times 10^6$ in^4

$$P = 1'' \Big/ \left[\frac{(12)(10.91)^2(12)}{(95.65)(260)(6)^3} + \frac{(9.41 \times 12)^3}{(3)(3320)(4.463 \times 10^6)}\right] = 310^K$$

$$T = 0.32\sqrt{1676.7/310} = 0.74 \text{ SEC.}$$

C = 0.083 (AASHTO FIG. 1.2.20(B))

$$EQ_\perp = CFW = (.083)(1.0)(1676.7) = 139^K$$

|| TO ABUTMENT: S/A ABOVE BUT EXCHANGE B & L, I = 54.44×10^9 in^4

$$P = 1 \Big/ \left[\frac{(12)(10.91)^2(12)}{(6)(260)(95.65)^3} + \frac{(9.41 \times 12)^3}{(3)(3320)(54.44 \times 10^9)}\right] = 79{,}630^K$$

$$T = 0.32\sqrt{1676.7/79{,}630} = 0.05 \text{ SEC}$$

C = 0.06

$$EQ_{\parallel} = CFW = (0.06)(1.0)(1676.7) = 101^K$$

SVERDRUP & PARCEL

JOB 8080 FCDMC /ACDC

COMPUTATIONS FOR DIVERSION CHANNEL

SHEET NO. 96 OF

DATE 11/82

BY RT CHKD JFF

ABUTMENT

OVERTURNING ‖ TO ABUT

LOADING	VERT FORCE	HORZ FORCE	ARM	MOMENT	REMARKS
SOIL	397				
DL	1676.7		0		
ABUT DL.	533.7		0		
W		21.	16.74	352 K-FT	
WL		5.2	23.55	122	6' ABOVE DECK
LF		3.9	23.55	92	6' ABOVE DECK
EQ		101.	13.0	1313	
	2607.4 K				

LIVE LOADS - CHK BOTH LL1, LL2, & LL5 (SHT 88)

	VERT	MOMENT
LL1	65.1	2180
LL2	130.2	3337
LL5	244.1	507

AASHTO TBL 1.2.22

GRP	LOADING COMBINATION	HORZ	VERT	MOMENT	e	q_{max}	q_{min}
I	$D+(L+I)_1+B$	0	2368.1	2180	0.92'	4.36	3.89
	$D+(L+I)_2+B$	0	2433.2	3337	1.37'	4.60	3.88
	$D+(L+I)_5+B$	0	2547.1	507	0.20'	4.49	4.38
II	$D+B+W$	21.0	2303.0	352	0.15'	4.05	3.97
III	$D+(L+I)_1+B+.3W+WL+LF$	15.4	2368.1	2500	1.06'	4.40	3.85
		15.4	2433.2	3657	1.50'	4.64	3.84
		15.4	2547.1	827	0.32	4.53	4.35
VII	$D+B+EQ$	101.	2303.0	1313	0.57	4.16	3.87
						ALL	<8 KSF

SVERDRUP & PARCEL

JOB 8080 FCDMC / ACDC

COMPUTATIONS FOR DIVERSION CHANNEL

SHEET NO. 97 OF

DATE 11/82

BY RY CHKD JFF

ABUTMENT

CHECK PASSIVE CAPACITY TO RESIST E.Q

$EQ_{\perp} = 139^{K} / 95.65 = 1.45^{KCF}$

$p_p = 250$ pcf (SOILS REPORT)

$250/120 = 2.08$

$P_p = (1.45)(10.91)/5.85 = 2.70^{K}/FT$

$P_f = 2.70 - 1.45 = 1.25^{K}$
$(< 2.91 \checkmark)$

ACTUAL PASSIVE PRESSURE
$= (2)(2.70)/17.55^2 = .018$ KCF
$(< .250$ KCF $\checkmark)$

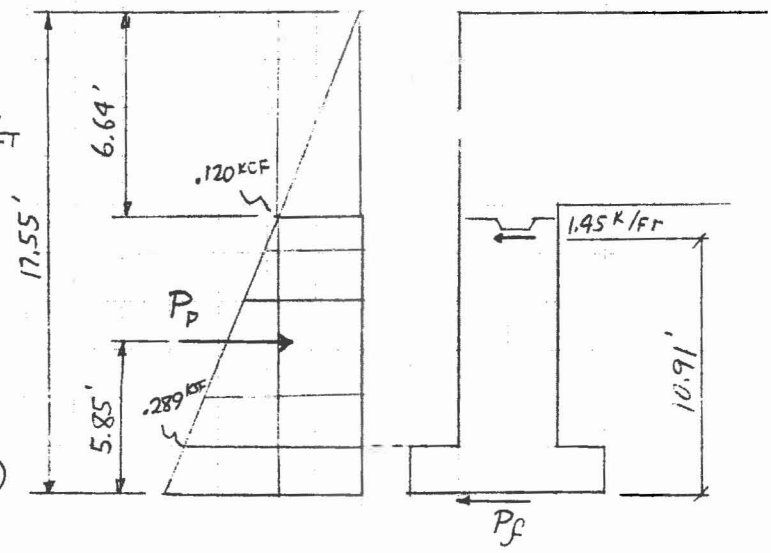

PASSIVE ADEQUATE

CHECK WALL DSN @ 133% ALLOWABLE STRESSES

SINCE LOADS ARE LESS THAN FOR ACTIVE CASE, OK BY INSP.

SVERDRUP & PARCEL

JOB 8080 FCDMC /ACDC

COMPUTATIONS FOR DIVERSION CHANNEL

SHEET NO. 98 OF

DATE 11/82

BY R. CHKD JFF

ABUTMENT

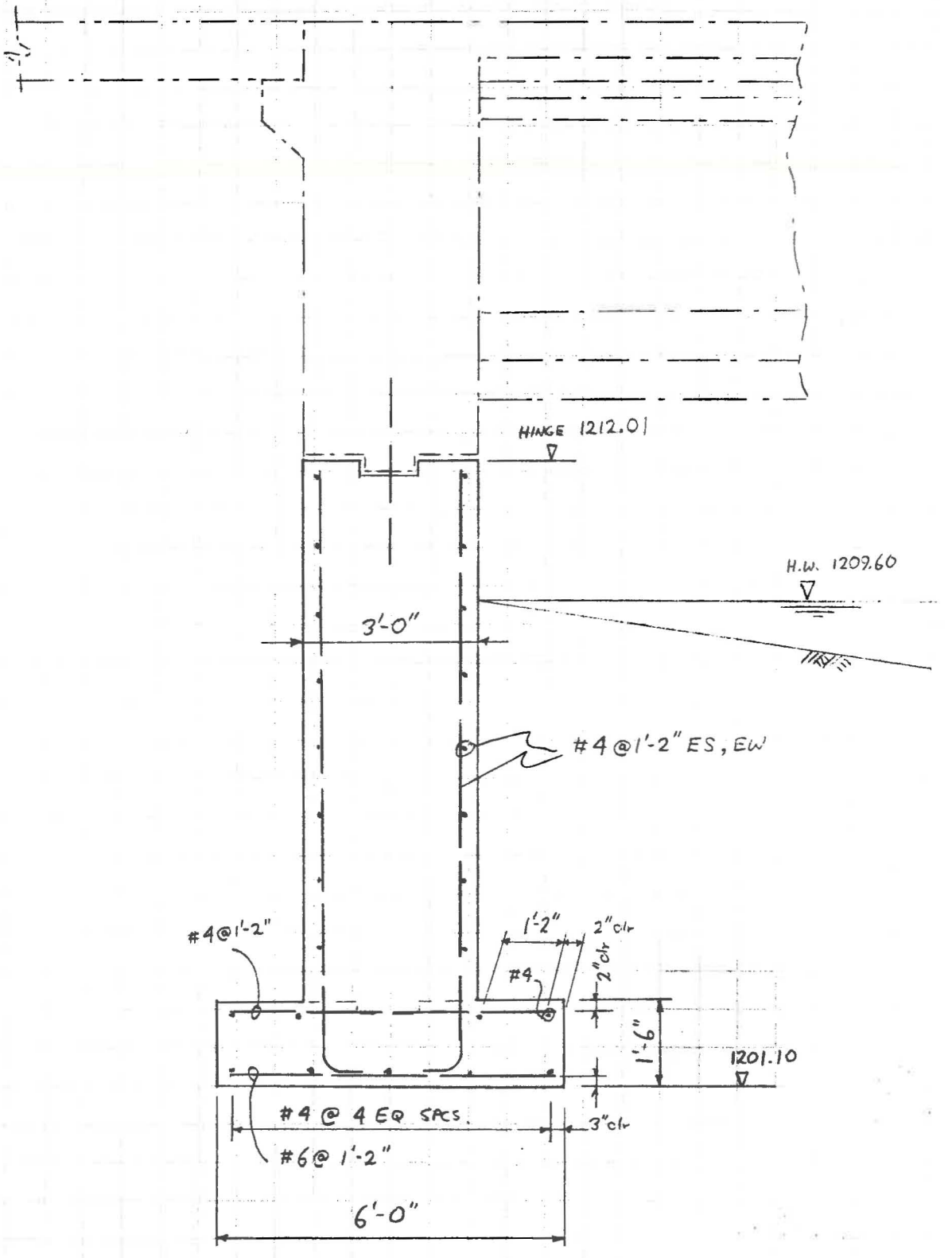

SVERDRUP & PARCEL

JOB 8080 FCDMC / ACDC

COMPUTATIONS FOR DIVERSION CHANNEL

SHEET NO. 99 OF

DATE 11/82

BY RS CHKD JFF

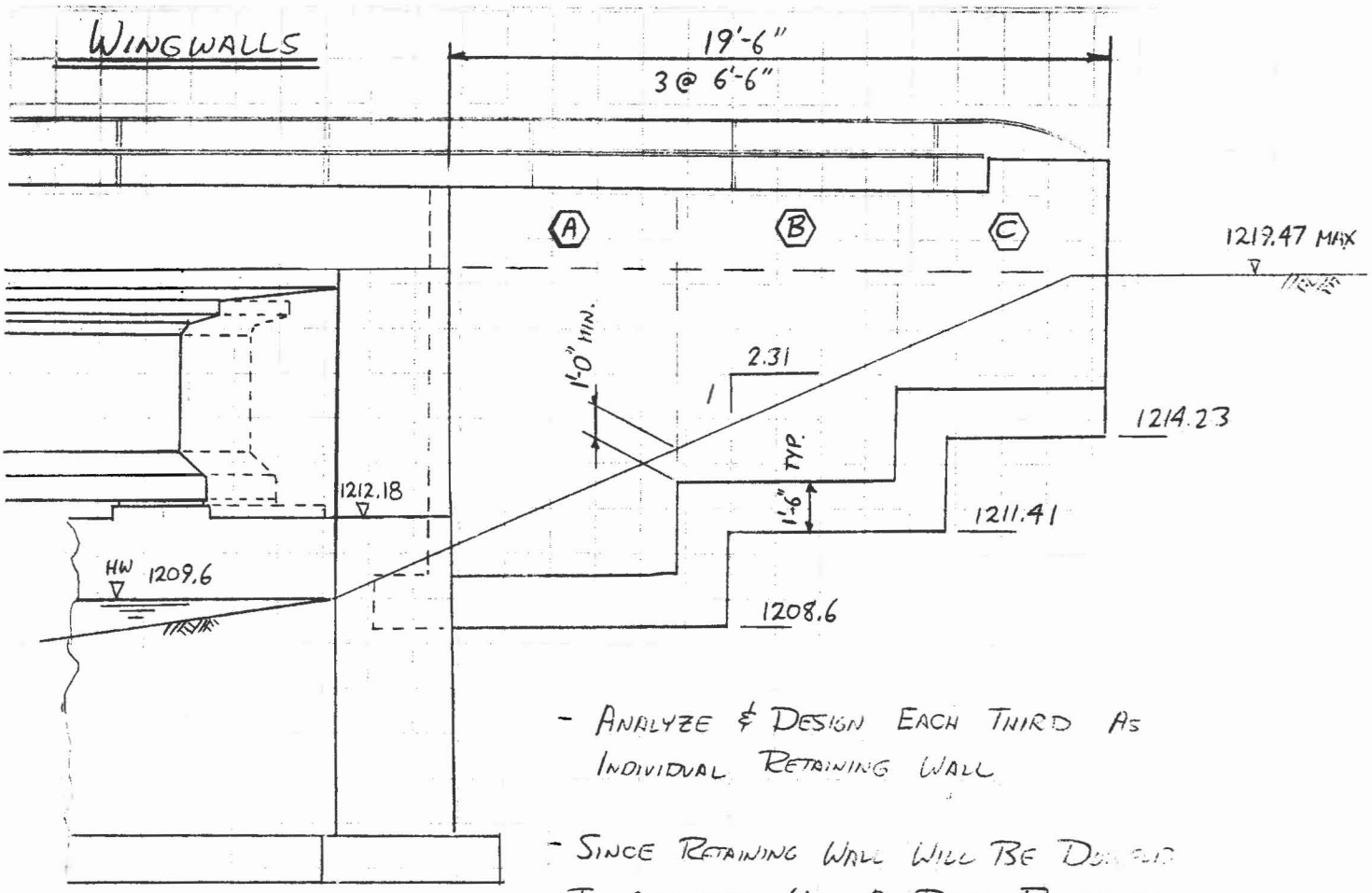

- ANALYZE & DESIGN EACH THIRD AS INDIVIDUAL RETAINING WALL

- SINCE RETAINING WALL WILL BE DOWELED TO ABUTMENT, USE AT REST PRESSURE

- DISREGUARD SOIL OVER TOE FOR LATERAL, BUT USE FOR OVERTURNING

AT REST PRESSURE = 60 pcf (SOILS REPORT)
DRY SOIL WEIGHT = 120 pcf
SURCHARGE = (2)(120) = 240 psf (AASHTO 1.2.19)

PROGRAM 'ABUT'

Cross-sectional analysis of cantilever abutment on spread footing. A rational retaining wall analysis with (optionally) applied vertical and horzontal concentrated loads.

INPUT

- Geometry
- Applied superstructure loads
- Soil data
- Watertable elevation

OUTPUT

- Soil pressures
- Overturning moments
- Resulting vertical and horizontal loads
- Footing moments at face of abutment wall
- Abutment wall moments (optional)

The above are output for dry soil condition and the saturated condition up to watertable, if requested.

10/82

SVERDRUP & PARCEL

JOB 8080 FCDMC / ACDC

COMPUTATIONS FOR DIVERSION CHANNEL

SHEET NO. 101 OF

DATE 11/82

BY RV CHKD JFF

WING WALLS

WALL (A)

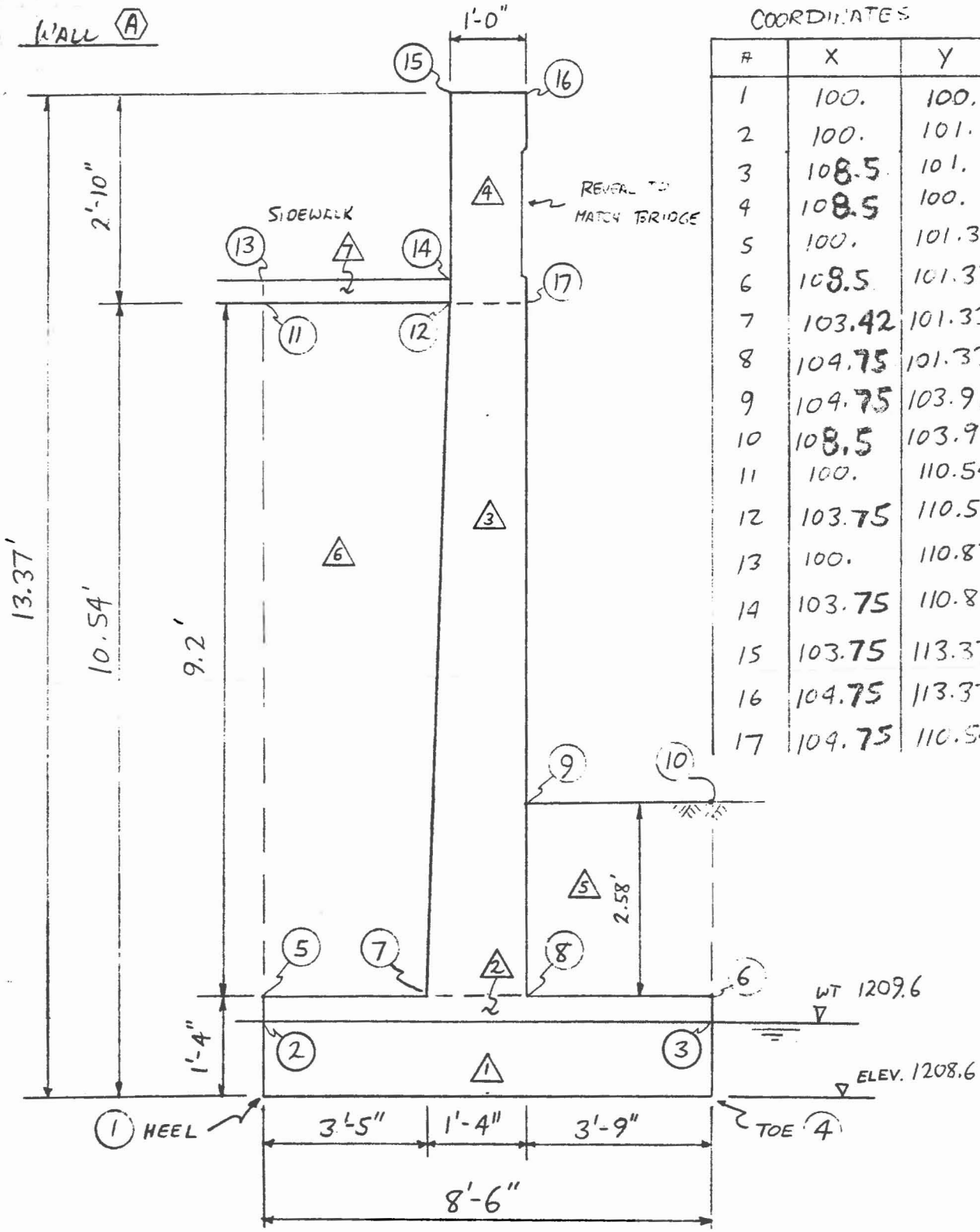

COORDINATES

#	X	Y
1	100.	100.
2	100.	101.
3	108.5	101.
4	108.5	100.
5	100.	101.33
6	108.5	101.33
7	103.42	101.33
8	104.75	101.33
9	104.75	103.91
10	108.5	103.91
11	100.	110.54
12	103.75	110.54
13	100.	110.87
14	103.75	110.87
15	103.75	113.37
16	104.75	113.37
17	104.75	110.54

```
8080  FLOOD CONTROL DISTRICT OF MARICOPA COUNTY
WINGWALL 'A' AT DIVERSION CHANNEL BRIDGE          RDT
   17     7
    1     100.       100.       H
    2     100.       101.
    3     108.50     101.
    4     108.50     100.       T
    5     100.       101.33
    6     108.50     101.33
    7     103.42     101.33
    8     104.75     101.33
    9     104.75     103.91
   10     108.50     103.91
   11     100.       110.54
   12     103.75     110.54
   13     100.       110.87
   14     103.75     110.87
   15     103.75     113.37
   16     104.75     113.37
   17     104.75     110.54
    1     1     2     3     4     C     W
    2     2     5     6     3     C
    3     7    12    17     8     C
    4    12    15    16    17     C
    5     8     9    10     6     T
    6     5    11    12     7     H
    7    11    13    14    12     C
    150.       120.       0.5       290.      101.       0.
    110.54     103.91     101.33      3.33      3.0      0
      0.       103.83     113.37
      0.       103.83     113.37
      0.       103.83     113.37
      0.       103.83     113.37
   10
    101.33     102.33     103.33     104.33     105.33     106.33     107.33     108.33
    109.33     110.53
END
[EOB]
```

SHT 102 of ___

CANTILEVER ABUTMENT ON SPREAD FOOTING

****
INPUT COORDINATES
****

NUMBER OF COORDINATES = 17

NODE	X-COOR	Y-COOR	(T = TOE, H = HEEL)
1	100.0000	100.0000	H
2	100.0000	101.0000	
3	108.5000	101.0000	
4	108.5000	100.0000	T
5	100.0000	101.3300	
6	108.5000	101.3300	
7	103.4200	101.3300	
8	104.7500	101.3300	
9	104.7500	103.9100	
10	108.5000	103.9100	
11	100.0000	110.5400	
12	103.7500	110.5400	
13	100.0000	110.8700	
14	103.7500	110.8700	
15	103.7500	113.3700	
16	104.7500	113.3700	
17	104.7500	110.5400	

SVERDRUP & PARCEL

SHEET NO. 104 OF ____

JOB 8080 FLOOD CONTROL DISTRICT OF MARICOPA COUNTY
TITLE: WINGWALL 'A' AT DIVERSION CHANNEL BRIDGE

DATE: 11-11-82
BY: RDT CHKD: JFF

CANTILEVER ABUTMENT ON SPREAD FOOTING

****
INPUT ELEMENTS
****

NUMBER OF ELEMENTS = 7

ELEMENT #	NODE I	NODE J	NODE K	NODE L	T = SOIL/TOE H = SOIL/HEEL C = CONCRETE	BELOW WATERLINE = W
1	1	2	3	4	C	W
2	2	5	6	3	C	
3	7	12	17	8	C	
4	12	15	16	17	C	
5	8	9	10	6	T	
6	5	11	12	7	H	
7	11	13	14	12	C	

CANTILEVER ABUTMENT ON SPREAD FOOTING

APPLIED LOADS

	LOAD(KIPS)	X-COOR	Y-COOR
DEAD LOAD =	0.000	103.830	113.370
LIVE LOAD =	0.000	103.830	113.370
HORZ LOAD W/DEAD =	0.000	103.830	113.370
HORZ LOAD W/LIVE =	0.000	103.830	113.370

ACTIVE PRESSURE

DRY CONDITION

SURCHARGE = 290.00 (PSF) ACTIVE COEFF. = 0.5000 (N/D)
UNIT DRY WEIGHT = 120.00 (PCF)

HORZ. FORCE = 4.861 (KIPS)
OVERTURNING MOMENT = 19.763 (K-FT)

SATURATED UP TO WATERTABLE

BACK-WATERTABLE AT 1.00 FT. ABOVE BOTTOM

FRONT-WATERTABLE AT 0.00 FT. ABOVE BOTTOM

HORZ. FORCE = 4.877 (KIPS)
OVERTURNING MOMENT = 19.768 (K-FT)

SVERDRUP & PARCEL

SHEET NO. 106 OF ____

JOB 8080 FLOOD CONTROL DISTRICT OF MARICOPA COUNTY
TITLE: WINGWALL 'A' AT DIVERSION CHANNEL BRIDGE

DATE: 11-11-82
BY: RDT CHKD: JFF

CANTILEVER ABUTMENT ON SPREAD FOOTING

****
OUTPUT
****

ALL CASES INCLUDE ACTIVE PRESSURE AND SURCHARGE
AS INPUT, DRY OR SATURATED AS INDICATED

LENGTH OF FOOTING = 8.50 (FT)

LOADING	VERTICAL (KIPS)	HORZ (KIPS)	MOMENT (K-FT)	ECC (F)	SP @ HEEL (KSF)	SP @ TOE (KSF)	BRNG L (FT)
DEAD LOAD (DRY)	9.038	4.861	12.21	1.35	0.049	2.077	8.50
DL + LL (DRY)	9.038	4.861	12.21	1.35	0.049	2.077	8.50
DL + HL (DRY)	9.038	4.861	12.21	1.35	0.049	2.077	8.50
D + L + H (DRY)	9.038	4.861	12.21	1.35	0.049	2.077	8.50
DEAD LOAD (WET)	8.508	4.877	12.21	1.44	0.000	2.015	8.44
DL + LL (WET)	8.508	4.877	12.21	1.44	0.000	2.015	8.44
DL + HL (WET)	8.508	4.877	12.21	1.44	0.000	2.015	8.44
D + L + H (WET)	8.508	4.877	12.21	1.44	0.000	2.015	8.44

SVERDRUP & PARCEL

SHEET NO. 107 OF ____

JOB 8080 FLOOD CONTROL DISTRICT OF MARICOPA COUNTY
TITLE: WINGWALL 'A' AT DIVERSION CHANNEL BRIDGE

DATE: 11-11-82
BY: RDT CHKD: JFF

CANTILEVER ABUTMENT ON SPREAD FOOTING

****
FOOTING MOMENTS
****

A NEGATIVE MOMENT INDICATES TENSION IN TOP OF FOOTING

LOADING TITLE	AT HEEL FACE OF STEM S. P. (KSF)	MOMENT (K-FT)	AT TOE FACE OF STEM S. P. (KSF)	MOMENT (K-FT)
DEAD LOAD (DRY)	0.765	-4.38	1.283	7.25
DL + LL (DRY)	0.765	-4.38	1.283	7.25
DL + HL (DRY)	0.765	-4.38	1.283	7.25
D + L + H (DRY)	0.765	-4.38	1.283	7.25
DEAD LOAD (WET)	0.703	-4.66	1.221	6.91
DL + LL (WET)	0.703	-4.66	1.221	6.91
DL + HL (WET)	0.703	-4.66	1.221	6.91
D + L + H (WET)	0.703	-4.66	1.221	6.91

JOB 8080 FLOOD CONTROL DISTRICT OF MARICOPA COUNTY
TITLE: WINGWALL 'A' AT DIVERSION CHANNEL BRIDGE

DATE: 11-11-82
BY: RDT CHKD: JFF

CANTILEVER ABUTMENT ON SPREAD FOOTING

****
STEM WALL MOMENTS
****

HORIZONTAL LOAD FOR USE WITH DEAD LOAD
IS PART OF WALL SHEARS & MOMENTS

PT #	HEIGHT ABOVE FOOTING (FT)	SHEAR DRY (KIP)	MOMENT DRY (K-FT)	SHEAR WET (KIP)	MOMENT WET (K-FT)
1	0.00	3.880	13.962	3.880	13.962
2	1.00	3.213	10.421	3.213	10.421
3	2.00	2.605	7.517	2.605	7.517
4	3.00	2.057	5.191	2.057	5.191
5	4.00	1.570	3.382	1.570	3.382
6	5.00	1.142	2.031	1.142	2.031
7	6.00	0.775	1.078	0.775	1.078
8	7.00	0.467	0.462	0.467	0.462
9	8.00	0.219	0.124	0.219	0.124
10	9.20	0.001	0.000	0.001	0.000

SVERDRUP & PARCEL

JOB 8080 FCDMC / ACDC — SHEET NO. 109 OF

DATE 11/82

COMPUTATIONS FOR DIVERSION CHANNEL — BY RCV CHKD JFF

WINGWALLS

WALL (A)

FOOTING DESIGN, DRY CONDITION GOVERNS TOE — $M = 7.25^{K\text{-}FT}/_{FT}$

WET CONDITION GOVERNS HEEL — $M = 4.66^{K\text{-}FT}/_{FT}$

$d_{BOT} = 16 - 3 - .5 = 12.5''$ $\quad b = 12''$

$d_{TOP} = 16 - 2 - .5 = 13.5''$ $\quad f_c = 1200$ psi $\quad f_s = 20000$ psi, $n = 9$

BOTTOM REINF, $M = 7.25^{K\text{-}FT}$

$K = 46.4$

$A_s = 0.37\ in^2/ft \times 6.5 = 2.41\ in^2$ (8 #5's)

TOP REINF, $M = 4.66^{K\text{-}FT}$

$K = 25.6$

$A_s = 0.22\ in^2/ft \times 6.5 = 1.43\ in^2$ (8 #4's)

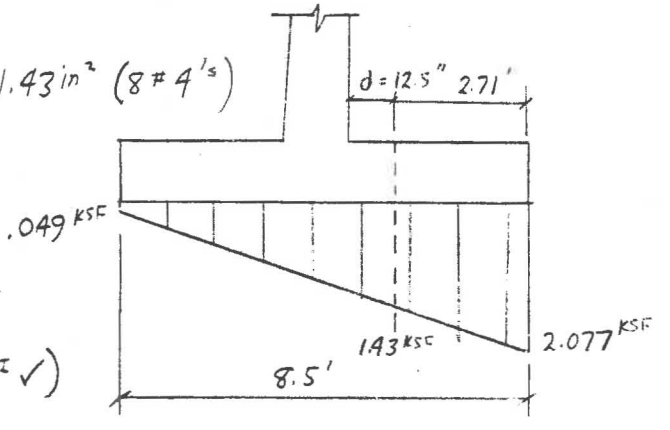

CHK SHEAR @ TOE

$V = (1.43 - .31 - .20)(2.71) + (2.077 - 1.43)(2.71)/2$ (SOIL, CONC)

$= 3.37^K$

$v = 3.37/(12)(12.5) = .022^{KSI}$ ($< .052^{KSI}$ ✓)

WET & HEEL SHEAR OK BY INSP.

CHECK SLIDING

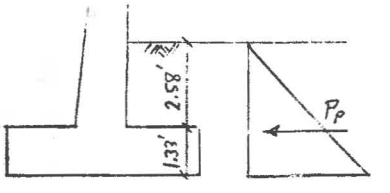

MAX HORZ $= 4.877^{K}/_{FT}$

RESPECTIVE VERT $= 8.508^{K}/_{FT} \times 0.4 = 3.403^{K}/_{FT}$

PASSIVE CAPACITY IN FRONT OF WALL

SOIL DEPTH VARIES FROM 1'-2" TO 3.98' IN FRONT OF WALL (AVG = 2.58')

$P_P = (.25)(2.58 + 1.33)^2/2 = 1.91^{K}/_{FT}$

SLIDING RESISTANCE $= 3.40$

$5.31^{K}/_{FT} > 4.877$ ✓ — SLIDING OK

SVERDRUP & PARCEL

JOB 8080 FCDMC / ACOC

COMPUTATIONS FOR DIVERSION CHANNEL

SHEET NO. 110 OF

DATE 11/82

BY RV CHKD JFF

WINGWALLS

WALL (A)

SEE APPENDIX "A" FOR REINF.

HT	d	M	A_s
0	13.5"	13.962	0.67 in²/ft
1	13.1	10.421	0.51
2	12.6	7.517	0.38
3	12.2	5.191	0.27
4	11.7	3.382	0.18
5	11.3	2.031	0.11
6	10.8	1.078	0.06
7	10.4	0.462	0.03
8	9.9	0.124	0.01
9	9.5	0	0

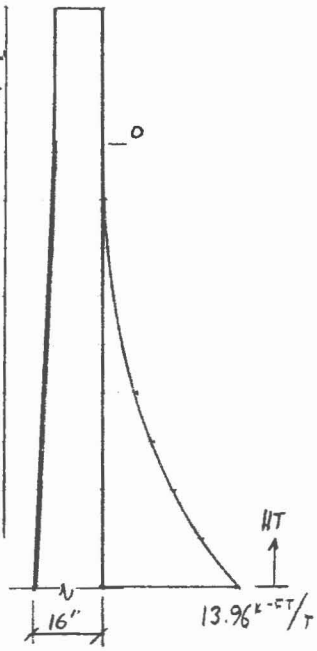

MOMENT

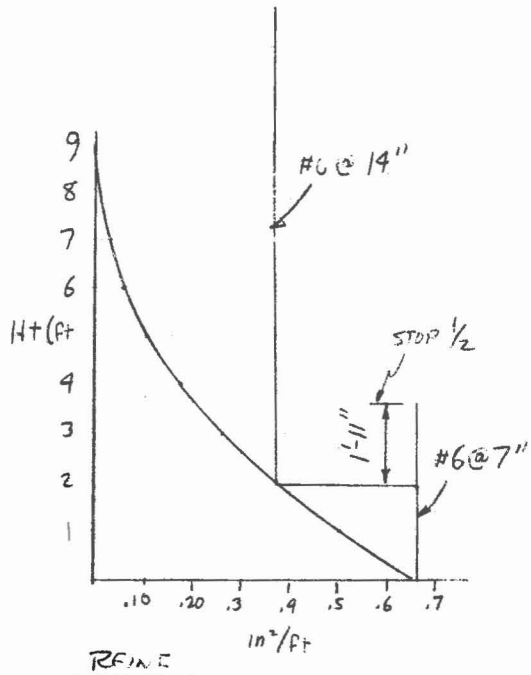

REINF

$(.67)(6.5') = 4.36 \text{ in}^2 \Rightarrow 10 \#6 = 4.40 \text{ in}^2$

$5 \#6 = 2.20 \text{ in}^2 / 6.5 = 0.34$

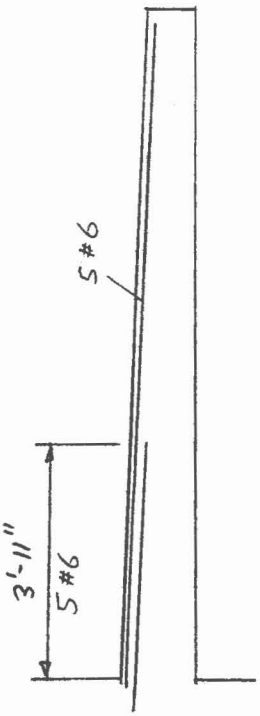

SVERDRUP & PARCEL

JOB 8080 FCDMC / ACDC

COMPUTATIONS FOR DIVERSION CHANNEL

SHEET NO. 111 OF

DATE 11/82

BY RJ CHKD JFF

WING WALLS

WALL ⬡

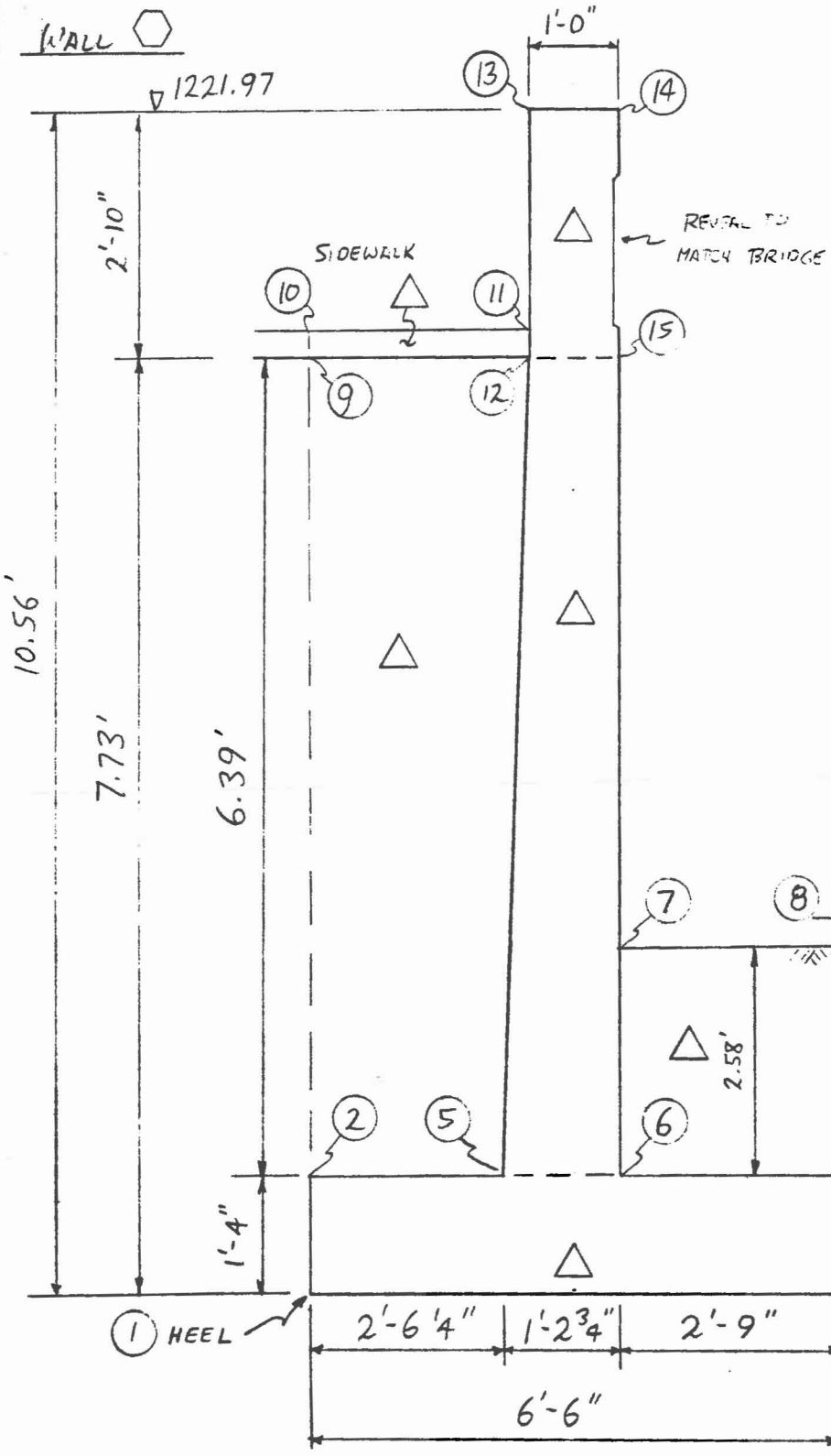

COORDINATES

#	X	Y
1	100.	100.
2	100.	101.33
3	106.5	101.33
4	106.5	100.
5	102.52	101.33
6	103.75	101.33
7	103.75	103.91
8	106.50	103.91
9	100.00	107.73
10	100.00	108.06
11	102.75	108.06
12	102.75	107.73
13	102.75	110.56
14	103.75	110.56
15	103.75	107.73

ELEV. 1211.41

ABOVE WATER TABLE

```
8080  FLOOD CONTROL DISTRICT OF MARICOPA COUNTY
WINGWALL 'B' AT DIVERSION CHANNEL BRIDGE                    RDT
   15    6
    1    100.       100.       H
    2    100.       101.33
    3    106.50     101.33
    4    106.50     100.       T
    5    102.52     101.33
    6    103.75     101.33
    7    103.75     103.91
    8    106.50     103.91
    9    100.       107.73
   10    100.       108.06
   11    102.75     108.06
   12    102.75     107.73
   13    102.75     110.56
   14    103.75     110.56
   15    103.75     107.73
    1    1    2    3    4    C
    2    5   12   15    6    C
    3   12   13   14   15    C
    4    6    7    8    3    T
    5    2    9   12    5    H
    6    9   10   11   12    C
   150.       120.       0.5      290.       0.       0.
   107.73     103.91     101.33     2.75     2.52     0
     0.       103.83     113.37
     0.       103.83     113.37
     0.       103.83     113.37
     0.       103.83     113.37
    7
   101.33     102.33     103.33     104.33     105.33     106.33
 1 .73
END
[EOB]
```

CANTILEVER ABUTMENT ON SPREAD FOOTING

****
INPUT COORDINATES
****

NUMBER OF COORDINATES = 15

NODE	X-COOR	Y-COOR	(T = TOE, H = HEEL)
1	100.0000	100.0000	H
2	100.0000	101.3300	
3	106.5000	101.3300	
4	106.5000	100.0000	T
5	102.5200	101.3300	
6	103.7500	101.3300	
7	103.7500	103.9100	
8	106.5000	103.9100	
9	100.0000	107.7300	
10	100.0000	108.0600	
11	102.7500	108.0600	
12	102.7500	107.7300	
13	102.7500	110.5600	
14	103.7500	110.5600	
15	103.7500	107.7300	

SVERDRUP & PARCEL

SHEET NO. 114 OF ____

JOB 8080 FLOOD CONTROL DISTRICT OF MARICOPA COUNTY
TITLE: WINGWALL 'B' AT DIVERSION CHANNEL BRIDGE

DATE: 11-12-82
BY: RDT CHKD: JFF

CANTILEVER ABUTMENT ON SPREAD FOOTING

****
INPUT ELEMENTS
****

NUMBER OF ELEMENTS = 6

ELEMENT #	NODE I	NODE J	NODE K	NODE L	T = SOIL/TOE H = SOIL/HEEL C = CONCRETE	BELOW WATERLINE = W
1	1	2	3	4	C	
2	5	12	15	6	C	
3	12	13	14	15	C	
4	6	7	8	3	T	
5	2	9	12	5	H	
6	9	10	11	12	C	

JOB 8080 FLOOD CONTROL DISTRICT OF MARICOPA COUNTY
TITLE: WINGWALL 'B' AT DIVERSION CHANNEL BRIDGE

DATE: 11-12-82
BY: RDT CHKD: JFF

CANTILEVER ABUTMENT ON SPREAD FOOTING

APPLIED LOADS

	LOAD(KIPS)	X-COOR	Y-COOR
DEAD LOAD =	0.000	103.830	113.370
LIVE LOAD =	0.000	103.830	113.370
HORZ LOAD W/DEAD =	0.000	103.830	113.370
HORZ LOAD W/LIVE =	0.000	103.830	113.370

ACTIVE PRESSURE

DRY CONDITION

SURCHARGE = 290.00 (PSF) ACTIVE COEFF. = 0.5000 (N/D)
UNIT DRY WEIGHT = 120.00 (PCF)

HORZ. FORCE = 2.913 (KIPS)
OVERTURNING MOMENT = 8.951 (K-FT)

CANTILEVER ABUTMENT ON SPREAD FOOTING

****
OUTPUT
****

ALL CASES INCLUDE ACTIVE PRESSURE AND SURCHARGE
AS INPUT, DRY OR SATURATED AS INDICATED

LENGTH OF FOOTING = 6.50 (FT)

LOADING	VERTICAL (KIPS)	HORZ (KIPS)	MOMENT (K-FT)	ECC (F)	SP @ HEEL (KSF)	SP @ TOE (KSF)	BRNG L (FT)
DEAD LOAD (DRY)	5.803	2.913	6.32	1.09	0.000	1.790	6.48
DL + LL (DRY)	5.803	2.913	6.32	1.09	0.000	1.790	6.48
DL + HL (DRY)	5.803	2.913	6.32	1.09	0.000	1.790	6.48
D + L + H (DRY)	5.803	2.913	6.32	1.09	0.000	1.790	6.48

CANTILEVER ABUTMENT ON SPREAD FOOTING

****
FOOTING MOMENTS
****

A NEGATIVE MOMENT INDICATES TENSION IN TOP OF FOOTING

LOADING TITLE	AT HEEL FACE OF STEM S. P. (KSF)	AT HEEL FACE OF STEM MOMENT (K-FT)	AT TOE FACE OF STEM S. P. (KSF)	AT TOE FACE OF STEM MOMENT (K-FT)
DEAD LOAD (DRY)	0.691	-2.34	1.031	3.89
DL + LL (DRY)	0.691	-2.34	1.031	3.89
DL + HL (DRY)	0.691	-2.34	1.031	3.89
D + L + H (DRY)	0.691	-2.34	1.031	3.89

CANTILEVER ABUTMENT ON SPREAD FOOTING

****
STEM WALL MOMENTS
****

HORIZONTAL LOAD FOR USE WITH DEAD LOAD
IS PART OF WALL SHEARS & MOMENTS

PT #	HEIGHT ABOVE FOOTING (FT)	SHEAR DRY (KIP)	MOMENT DRY (K-FT)	SHEAR WET (KIP)	MOMENT WET (K-FT)
1	0.00	2.157	5.591	2.157	5.591
2	1.00	1.658	3.689	1.658	3.689
3	2.00	1.219	2.255	1.219	2.255
4	3.00	0.840	1.231	0.840	1.231
5	4.00	0.521	0.556	0.521	0.556
6	5.00	0.262	0.170	0.262	0.170
7	6.40	0.000	0.000	0.000	0.000

SVERDRUP & PARCEL

JOB 8080 FCDMC / ACDC

COMPUTATIONS FOR DIVERSION CHANNEL

SHEET NO. 119 OF

DATE 11/82

BY RT CHKD JFF

WINGWALLS

WALL (B)

FOOTING DESIGN

BOTTOM REINF

$d = 16 - 3 - .5 = 12.5''$ $b = 12''$

$M = 3.89$ K-FT/FT

$K = 24.9$

$A_s = 0.20$ in²/ft $\times 6.5' = 1.30$ in²

TOP REINF

$d = 16 - 2 - .5 = 13.5''$

$M = -2.34$ K-FT/FT

$K = 12.8$

$A_s = 0.11$ in²/ft $\times 6.5 = 0.70$ in²

SHEAR OK BY INSP

SLIDING

HORZ = 2.913 K/FT

VERT = 5.803 K/FT × 0.4 = 2.32 K/FT

PASSIVE FROM WALL A = 1.91

4.23 K/FT (> 2.913 K/FT ✓)

SLIDING OK

WALL REINF

REINF FOR MOMENT @ BOTTOM = 5.591 K-FT/FT

$d = 14.75 - 2 - .5 = 12.25''$

$K = 37.3$

$A_s = 0.29$ in²/ft

SVERDRUP & PARCEL

JOB 8080 FCDMC / ACDC

COMPUTATIONS FOR DIVERSION CHANNEL

SHEET NO. 120 OF

DATE 11/82

BY RJ CHKD JFF

WING WALLS

WALL (C)

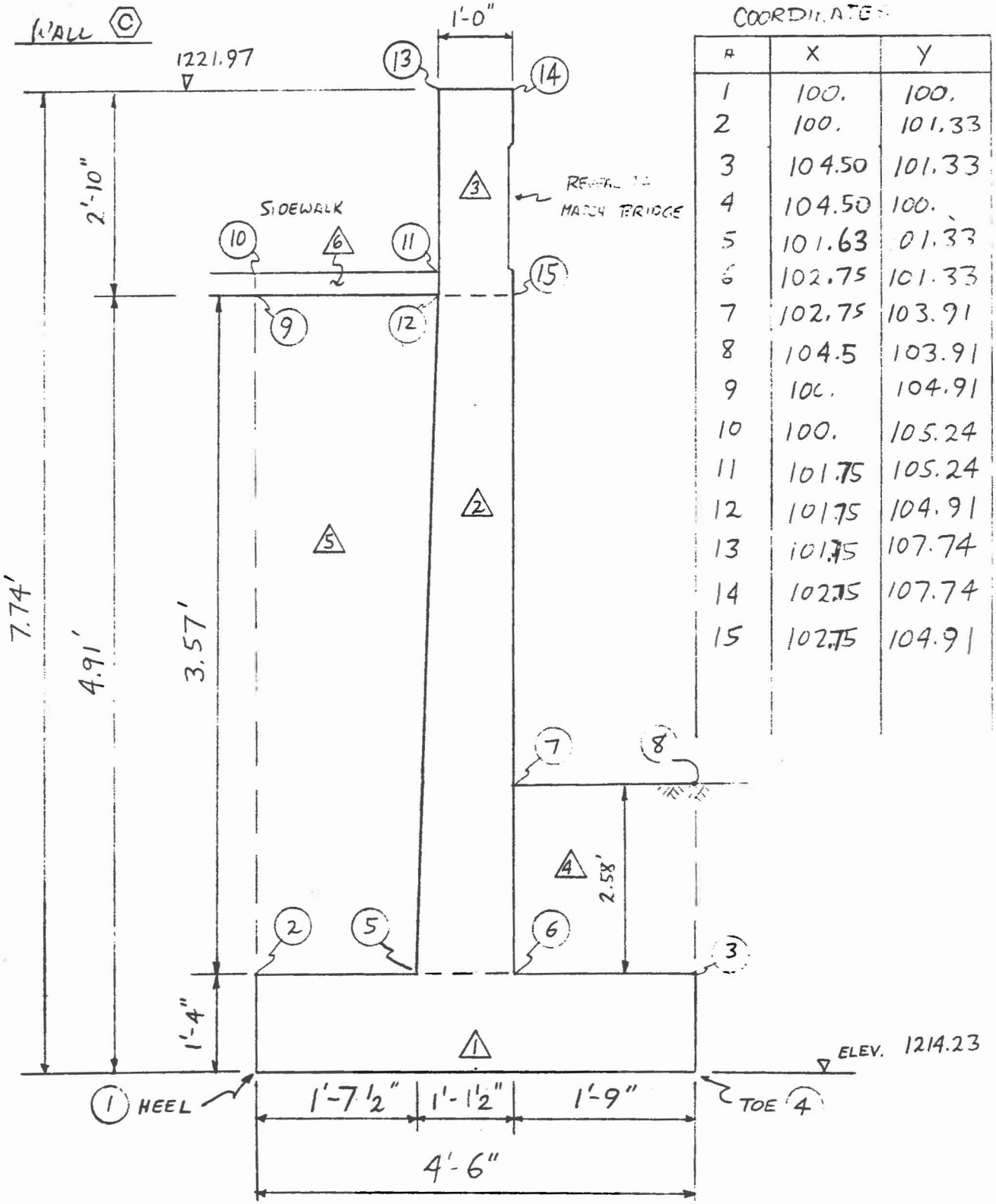

COORDINATES

#	X	Y
1	100.	100.
2	100.	101.33
3	104.50	101.33
4	104.50	100.
5	101.63	01.33
6	102.75	101.33
7	102.75	103.91
8	104.5	103.91
9	100.	104.91
10	100.	105.24
11	101.75	105.24
12	101.75	104.91
13	101.75	107.74
14	102.75	107.74
15	102.75	104.91

```
8080  FLOOD CONTROL DISTRICT OF MARICOPA COUNTY
WINGWALL 'C' AT DIVERSION CHANNEL BRIDGE                    RDT
   15    6
    1    100.       100.       H
    2    100.       101.33
    3    104.50     101.33
    4    104.50     100.       T
    5    101.63     101.33
    6    102.75     101.33
    7    102.75     103.91
    8    104.50     103.91
    9    100.       104.91
   10    100.       105.24
   11    101.75     105.24
   12    101.75     104.91
   13    101.75     107.74
   14    102.75     107.74
   15    102.75     104.91
    1    1    2    3    4    C
    2    5   12   15    6    C
    3   12   13   14   15    C
    4    6    7    8    3    T
    5    2    9   12    5    H
    6    9   10   11   12    C
    150.       120.       0.5      290.       0.       0.
    107.73     103.91     101.33     2.63     2.4      0
      0.       103.83     113.37
      0.       103.83     113.37
      0.       103.83     113.37
      0.       103.83     113.37
    4
    101.33     102.33     103.33     104.91
END
[EOB]
```

```
$ TY ABUT.OUT
```

CANTILEVER ABUTMENT ON SPREAD FOOTING

****
INPUT COORDINATES
****

NUMBER OF COORDINATES = 15

NODE	X-COOR	Y-COOR	(T = TOE, H = HEEL)
1	100.0000	100.0000	H
2	100.0000	101.3300	
3	104.5000	101.3300	
4	104.5000	100.0000	T
5	101.6300	101.3300	
6	102.7500	101.3300	
7	102.7500	103.9100	
8	104.5000	103.9100	
9	100.0000	104.9100	
10	100.0000	105.2400	
11	101.7500	105.2400	
12	101.7500	104.9100	
13	101.7500	107.7400	
14	102.7500	107.7400	
15	102.7500	104.9100	

SVERDRUP & PARCEL

SHEET NO. 123 OF ____

JOB 8080 FLOOD CONTROL DISTRICT OF MARICOPA COUNTY
TITLE: WINGWALL 'C' AT DIVERSION CHANNEL BRIDGE

DATE: 11-12-82
BY: RDT CHKD: JFF

CANTILEVER ABUTMENT ON SPREAD FOOTING

****
INPUT ELEMENTS
****

NUMBER OF ELEMENTS = 6

ELEMENT #	NODE I	NODE J	NODE K	NODE L	T = SOIL/TOE H = SOIL/HEEL C = CONCRETE	BELOW WATERLINE = W
1	1	2	3	4	C	
2	5	12	15	6	C	
3	12	13	14	15	C	
4	6	7	8	3	T	
5	2	9	12	5	H	
6	9	10	11	12	C	

CANTILEVER ABUTMENT ON SPREAD FOOTING

APPLIED LOADS

	LOAD(KIPS)	X-COOR	Y-COOR
DEAD LOAD =	0.000	103.830	113.370
LIVE LOAD =	0.000	103.830	113.370
HORZ LOAD W/DEAD =	0.000	103.830	113.370
HORZ LOAD W/LIVE =	0.000	103.830	113.370

ACTIVE PRESSURE

DRY CONDITION

SURCHARGE = 290.00 (PSF) ACTIVE COEFF. = 0.5000 (N/D)
UNIT DRY WEIGHT = 120.00 (PCF)

HORZ. FORCE = 1.435 (KIPS)
OVERTURNING MOMENT = 2.932 (K-FT)

SVERDRUP & PARCEL

SHEET NO. 125 OF ____

JOB 8080 FLOOD CONTROL DISTRICT OF MARICOPA COUNTY
TITLE: WINGWALL 'C' AT DIVERSION CHANNEL BRIDGE

DATE: 11-12-82
BY: RDT CHKD: JFF

CANTILEVER ABUTMENT ON SPREAD FOOTING

****
OUTPUT
****

ALL CASES INCLUDE ACTIVE PRESSURE AND SURCHARGE
AS INPUT, DRY OR SATURATED AS INDICATED

LENGTH OF FOOTING = 4.50 (FT)

LOADING	VERTICAL (KIPS)	HORZ (KIPS)	MOMENT (K-FT)	ECC (F)	SP @ HEEL (KSF)	SP @ TOE (KSF)	BRNG L (FT)
DEAD LOAD (DRY)	3.246	1.435	2.52	0.78	0.000	1.468	4.42
DL + LL (DRY)	3.246	1.435	2.52	0.78	0.000	1.468	4.42
DL + HL (DRY)	3.246	1.435	2.52	0.78	0.000	1.468	4.42
D + L + H (DRY)	3.246	1.435	2.52	0.78	0.000	1.468	4.42

CANTILEVER ABUTMENT ON SPREAD FOOTING

****
FOOTING MOMENTS
****

A NEGATIVE MOMENT INDICATES TENSION IN TOP OF FOOTING

LOADING TITLE	AT HEEL FACE OF STEM S. P. (KSF)	AT HEEL FACE OF STEM MOMENT (K-FT)	AT TOE FACE OF STEM S. P. (KSF)	AT TOE FACE OF STEM MOMENT (K-FT)
DEAD LOAD (DRY)	0.512	-0.62	0.887	1.17
DL + LL (DRY)	0.512	-0.62	0.887	1.17
DL + HL (DRY)	0.512	-0.62	0.887	1.17
D + L + H (DRY)	0.512	-0.62	0.887	1.17

SVERDRUP & PARCEL

SHEET NO. 127 OF ____

JOB 8080 FLOOD CONTROL DISTRICT OF MARICOPA COUNTY
TITLE: WINGWALL 'C' AT DIVERSION CHANNEL BRIDGE

DATE: 11-12-82
BY: RDT CHKD: JFF

CANTILEVER ABUTMENT ON SPREAD FOOTING

****
STEM WALL MOMENTS
****

HORIZONTAL LOAD FOR USE WITH DEAD LOAD
IS PART OF WALL SHEARS & MOMENTS

PT #	HEIGHT ABOVE FOOTING (FT)	SHEAR DRY (KIP)	MOMENT DRY (K-FT)	SHEAR WET (KIP)	MOMENT WET (K-FT)
1	0.00	0.904	1.388	0.904	1.388
2	1.00	0.574	0.654	0.574	0.654
3	2.00	0.304	0.220	0.304	0.220
4	3.58	0.000	0.000	0.000	0.000

SVERDRUP & PARCEL

JOB 8080 FCDMC / ACDC

COMPUTATIONS FOR DIVERSION CHANNEL

SHEET NO. 128 OF

DATE 11/82

BY RV CHKD JFF

WINGWALLS

WALL (C)

FOOTING DESIGN, TOE MOMENT = 1.17 K-FT/FT
HEEL MOMENT = -0.62 K-FT/FT

d_{bot} = 12.5"
d_{top} = 13.5"

BOTTOM REINF (M = 1.17 K-FT/FT)
K = 7.5
$A_s = (1'3)(.06) = .08$ in²/ft

TOP REINF (M = 0.62 K-FT/FT)
K = 3.4
$A_s = (1'3)(.03) = .04$ in²/ft

FTG SHEAR OK BY INSP

SLIDING

HORZ = 1.435 K/FT
VERT = 3.246 × 0.4 = 1.30 K/FT
PASSIVE 1.91 K/FT (SAME AS WALL "A")
3.21 K/FT > 1.435 K/FT ✓

SLIDING OK

SVERDRUP & PARCEL

JOB 8080 FCDMC / ACDC

COMPUTATIONS FOR DIVERSION CHANNEL

SHEET NO. 129 OF

DATE 11/82

BY JSY CHKD JFF

WINGWALLS

WALL (C)

REINF WALL FOR MOMENT AT BOTTOM = 1.39 K-FT/FT

d = 13.5 - 2 - .5 = 11" b = 12"

K = 10.5

As = (1'3)(.07) = 0.10 in²/ft

MIN REINF = 0.125 in²/ft

SVERDRUP & PARCEL

JOB 8080 FCDMC / ACDC

COMPUTATIONS FOR DIVERSION CHANNEL

SHEET NO. 130 OF

DATE 11/82

BY RV CHKD JFF

WING WALLS

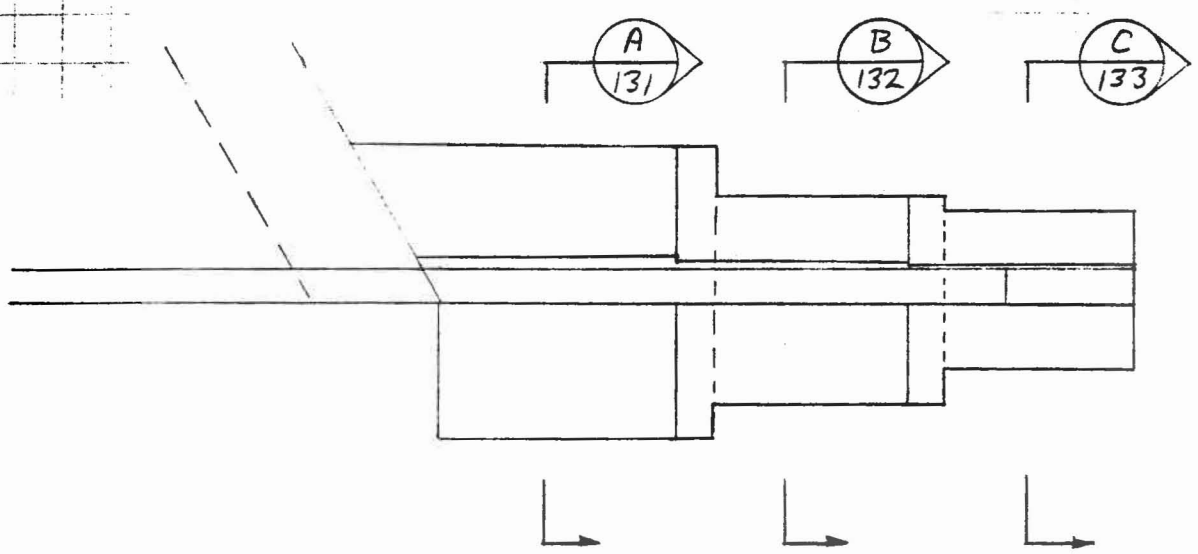

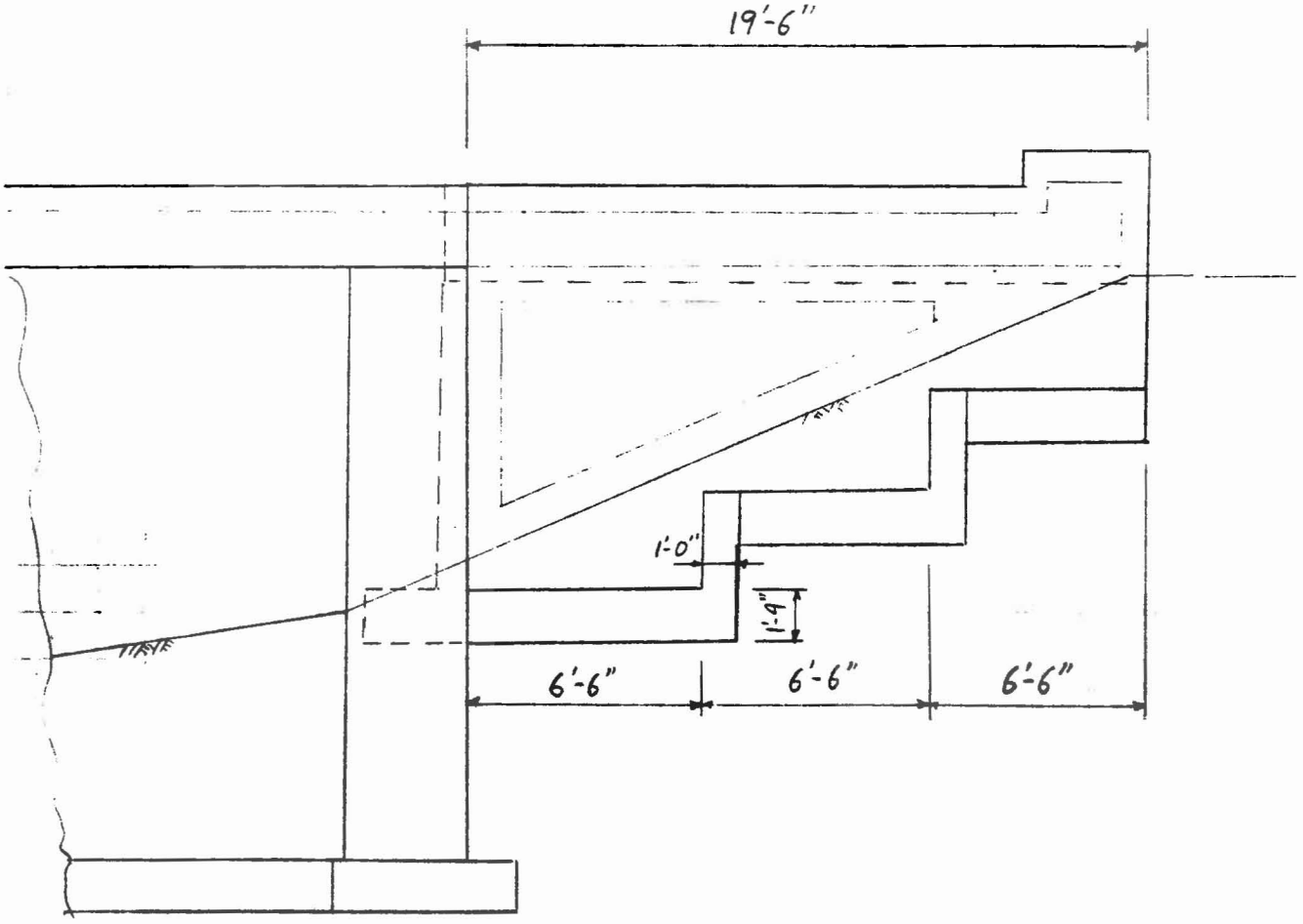

SVERDRUP & PARCEL

JOB 8080 FCDMC / ACDC

COMPUTATIONS FOR DIVERSION CHANNEL

SHEET NO. 131 OF

DATE 11/82

BY RT CHKD. JFF

WINGWALLS

SECTION A/130

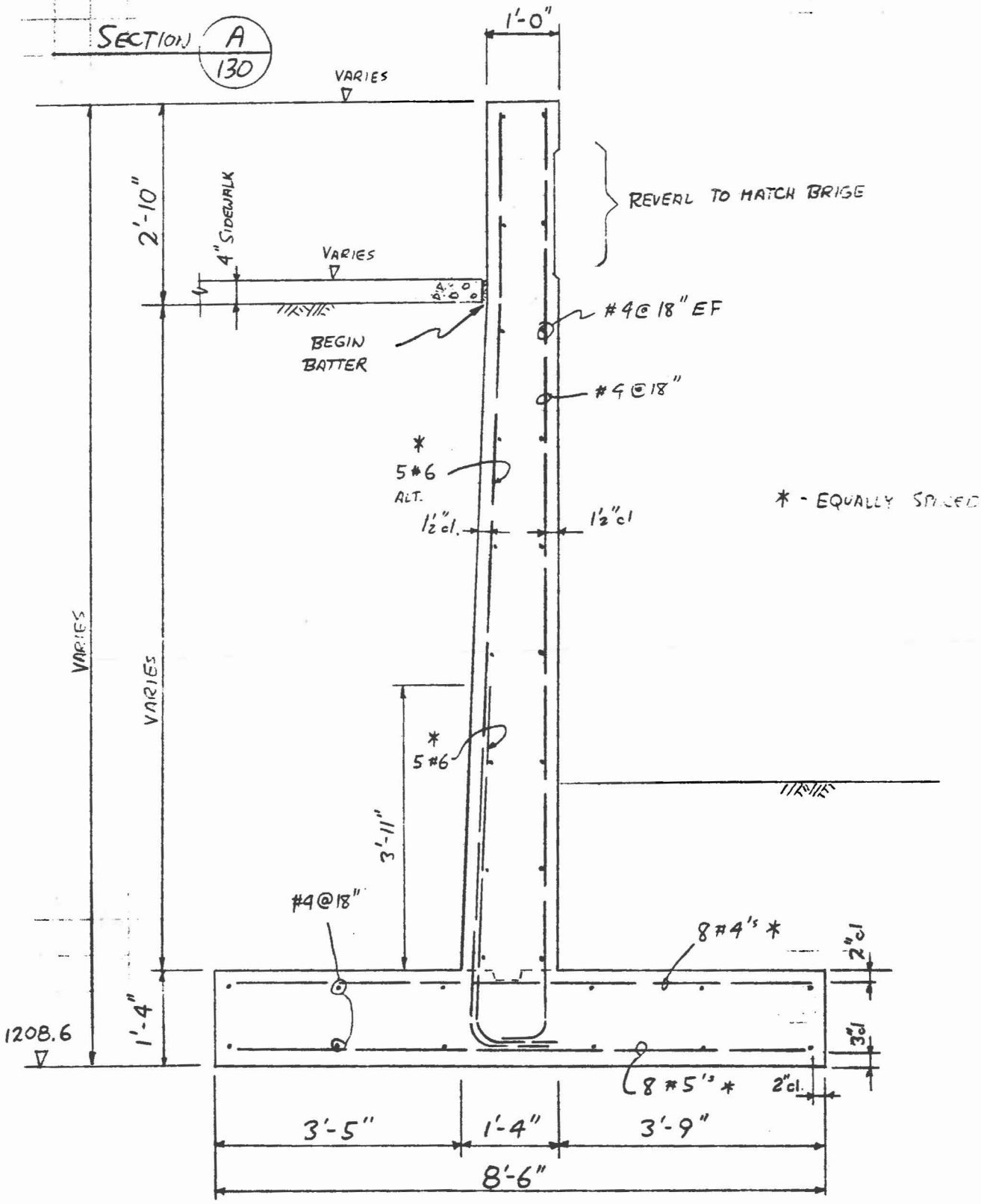

SVERDRUP & PARCEL

JOB 8080 FCDMC / ACDC

COMPUTATIONS FOR DIVERSION CHANNEL

SHEET NO. 132 OF

DATE 11/82

BY RV CHKD JFF

WING WALLS

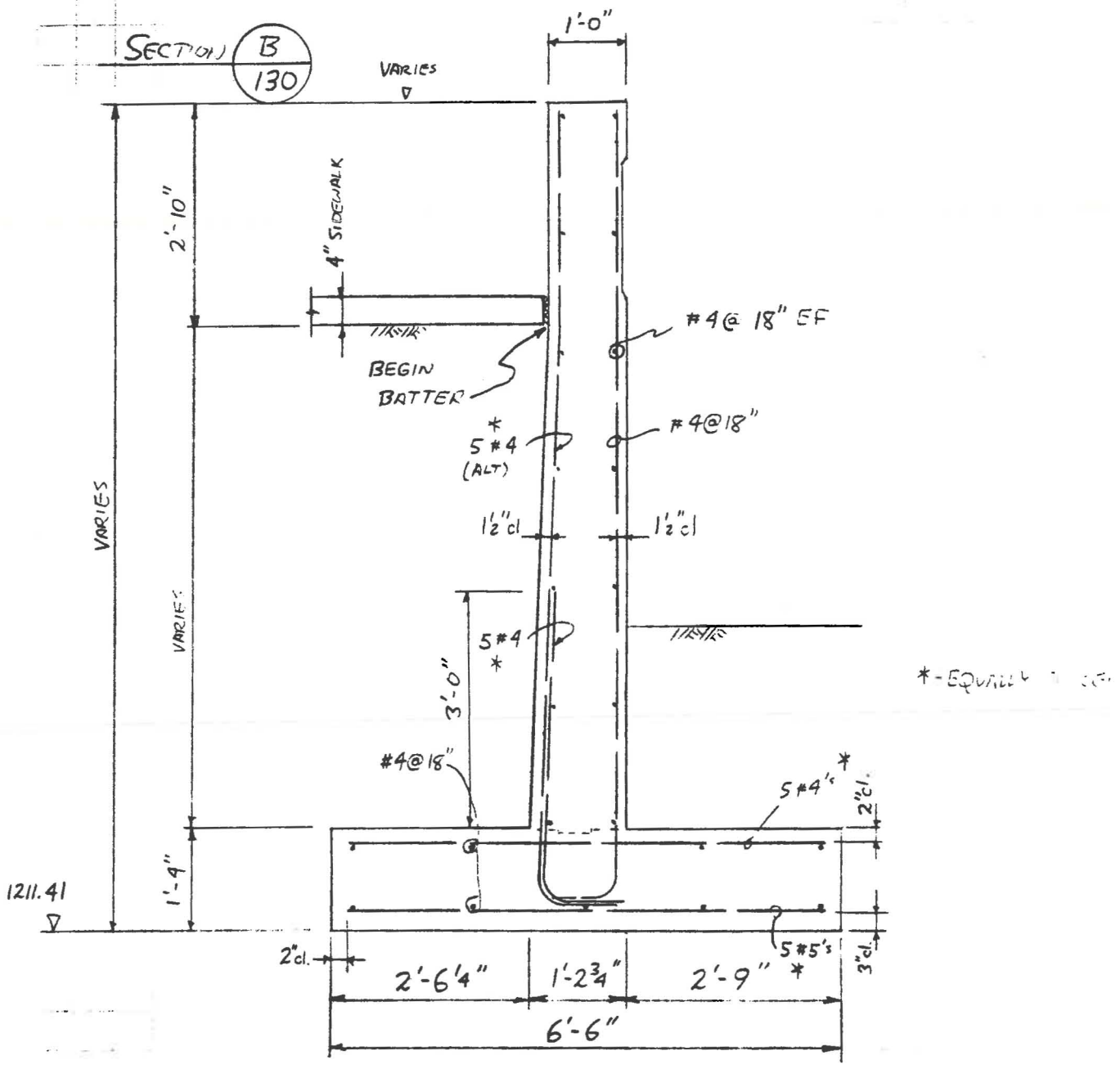

*-EQUALLY

SVERDRUP & PARCEL

JOB 8080 FCDMC / ACDC

SHEET NO. 133 OF

DATE 11/82

COMPUTATIONS FOR DIVERSION CHANNEL

BY RT CHKD JFF

WINGWALLS

SECTION C/130

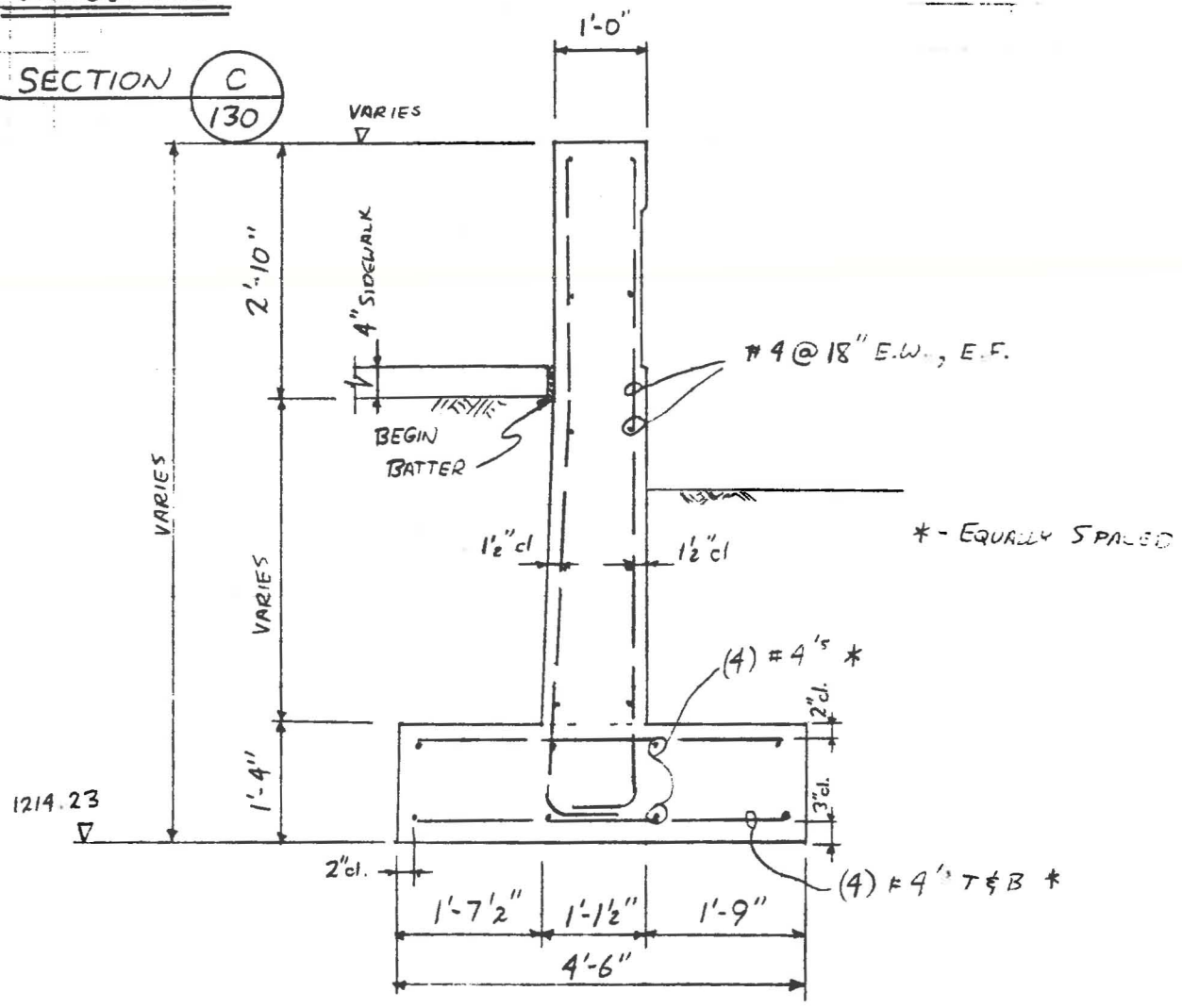

SVERDRUP & PARCEL

JOB 8080 FCDMC /ACDC

COMPUTATIONS FOR DIVERSION CHANNEL

SHEET NO. 134 OF

DATE 10/82

BY RV CHKD JFF

PIER ANALYSIS & DESIGN

USE S&P PROGRAM P7310, 'BRIDGE PIER DESIGN' TO ANALYZE AND DESIGN CAP BEAM, COLUMNS & FOOTINGS

P7310 HIGHWAY BRIDGE PIER ANALYSIS AND DESIGN

***DESCRIPTION

Revision of CEPA program No. 2.0110.
Highway bridge AASHTO load application, plane frame analysis, and design of beams, columns, and footings. The frame members may be haunched, tapered, or prismatic, and arranged in single or multi-story pattern. The foundation of the pier can be individual columns footings or continuous footings, either on soil or on piles. Columns may have a rectangular or round cross-section. Design of members is by the Service Load Design Method and the option of Load Factor Design is available for cap beams and columns only.

***INPUT

1. Traffic lane locations and combinations
2. Basic structural configuration
3. Choice of AASHTO loading
4. Concrete and reinforcing steel properties
5. Stringer dead load reactions to cap
6. Horizontal loads and temperature range
7. Choice of tied or spiral columns
8. Choice of continuous or individual footings
9. Choice of spread or pile footings
10. Allowable soil pressure or pile load
11. Pile batter
12. Choice of Design Method for Cap Beams and Columns

***OUTPUT

1. Print-out of all input data
2. Member loads for each live load lane combination plus dead load
3. Maximum positive and negative member loads from combinations just mentioned
4. Dead load only member loads
5. Horizontal force member loads
6.. Temperature change member loads
7. Required reinforcing steel for beams members, columns, and footings
8. Required footing dimensions
9. Pile pattern, maximum and minimum pile loads, and battered piles for pile footings
10. Maximum soil pressure for footings on soil
11. Printout of AASHTO loading combinations Groups I through VI for Cap Beams and Group I through VII for columns

***LIMITATIONS:

1. Maximum 13 members (not including cantilevers)
   - 6 cap and tie beam members
   - 7 column members
   - 6 continuous footing members
   - 4 cantilevers (2 on cap, 2 on continuous footing)
   - 14 Joints (free ends of cantilevers not counted as joints)
   - 16 lane positions
   - 2 stringer reactions on cantilever
   - 29 stringer reactions from either span
   - 40 stringer reactions total
   - 10 segments per member (must always be an even number)
   - 20 live load lane combinations
   - 7 lanes per combination
   - 5 choices of bar sizes for cap design
   - 2 choices of bar sizes for column design
   - 100 piles each individual footing, pattern 10 x 10
   - 200 Piles continuous footing, pattern 10 x 20
2. Symmetrical pile patterns only
3. Uniform pile spacing in each direction
4. Minor deviations in column heights are required for multiple level columns (defined by joint members)
5. Column inclinations must be small (assumed vertical)
6. Frames with continuous footings are analyzed as if footing stiffness was infinite.
7. Column design is for prismatic members only.

SVERDRUP & PARCEL

JOB 8080 FCDMC / ACDC

COMPUTATIONS FOR DIVERSION CHANNEL

SHEET NO. 135 OF

DATE 10/82

BY RV CHKD JFF

PIER ANALYSIS & DESIGN

PIER CAP GEOMETRY

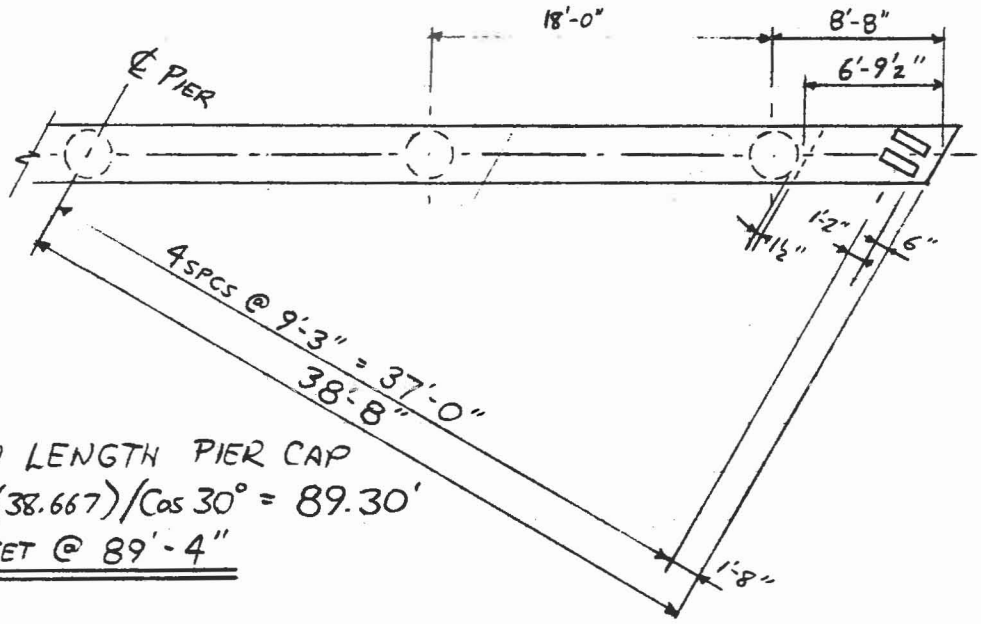

SKEW LENGTH PIER CAP

$= (2)(38.667)/\cos 30° = 89.30'$

SET @ 89'-4"

CAP WIDTH

MIN EDGE CLEARANCE FROM BRNG PAD

$\geq 6"$

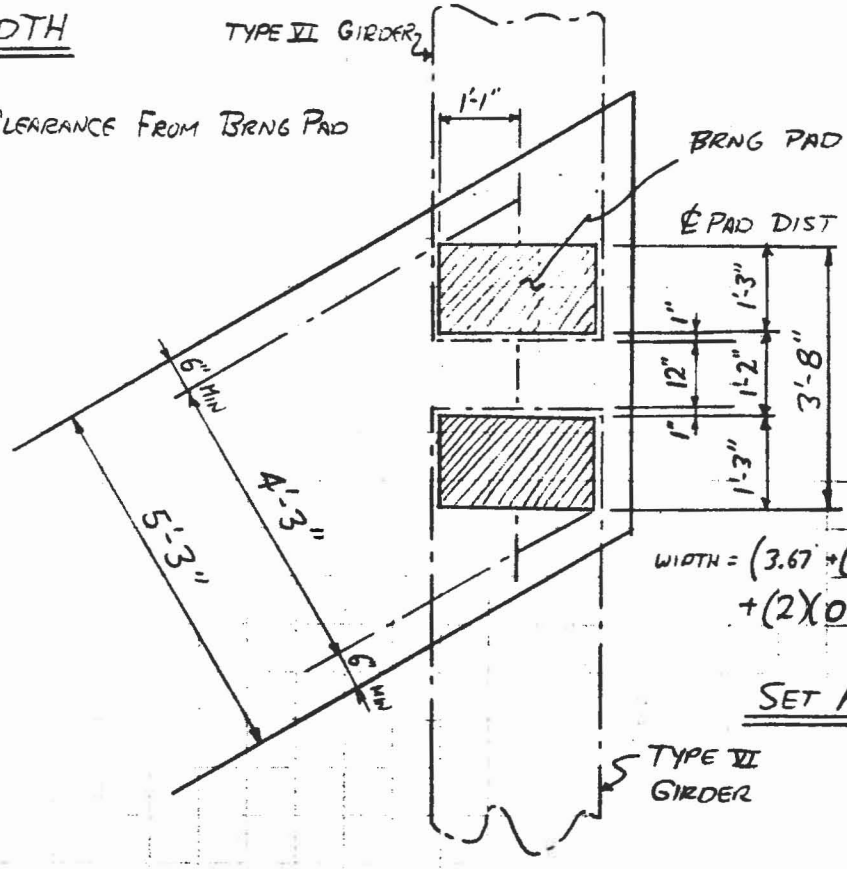

WIDTH $= (3.67 + (2)(1.083)\tan 30°)\cos 30° + (2)(0.5) = 5.26'$

SET AT 5'-3"

SVERDRUP & PARCEL

JOB 8080 FCDMC / ACDC

COMPUTATIONS FOR DIVERSION CHANNEL

SHEET NO. 136 OF

DATE 10/82

BY RV CHKD JFF

PIER ANALYSIS & DESIGN

SET INITIAL CAP THICKNESS @ SPAN/6 = 18/6 = 3'

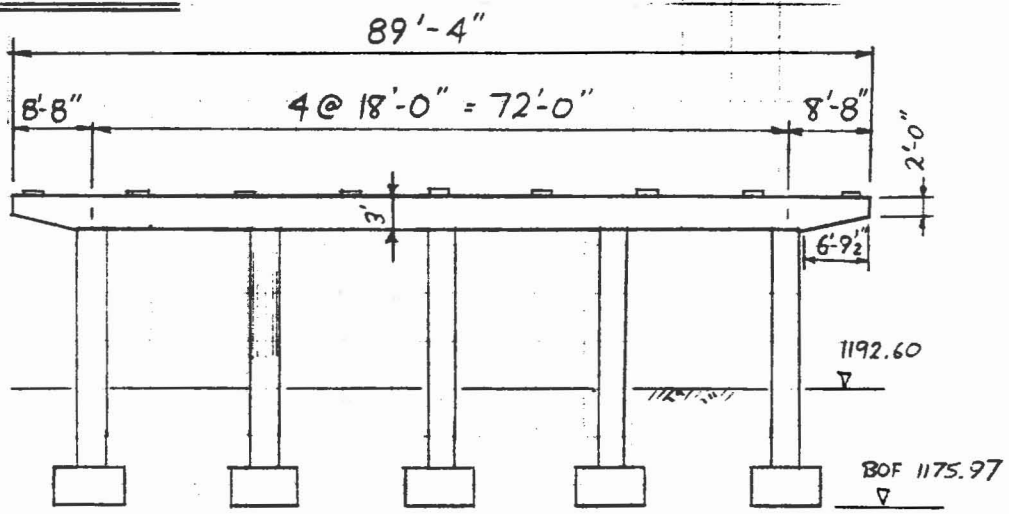

TOP OF PIER CAP ELEVS.

LOWEST OUTSIDE GIRDER ℄
37 ft OFFSET
37 TAN 30° = 21.36 ft OFF STATION
W/R TO ℄ ROADWAY ELEV.
RWE - 7.25 - (.02)(37) - (.0028)(21.36)
RWE - 8.05' TOP OF CAP ELEV.

PIER	APPROX ℄ RW ELEV	APPROX CAP ELEV
2	1220.57	1212.52
3	1220.92	1212.87
4	1220.57	1212.52

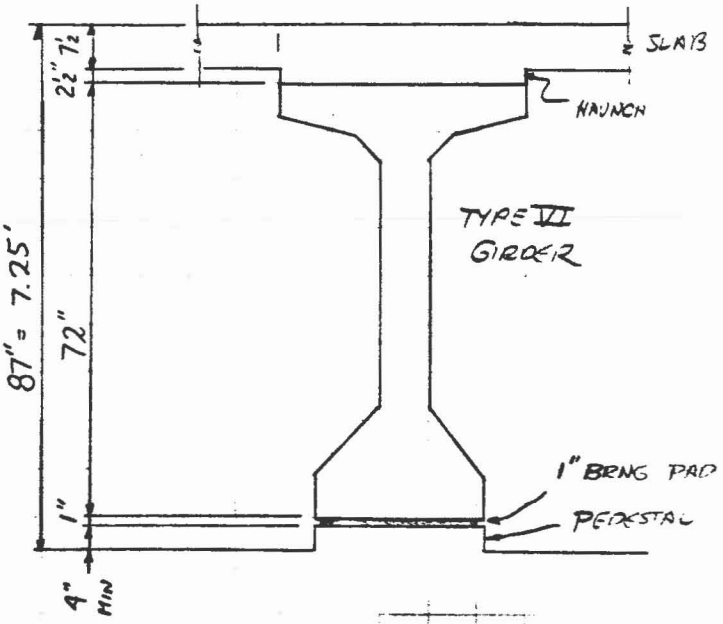

FOR COMPUTER ANALYSIS, USE PIER 3 (HIGHEST)

SVERDRUP & PARCEL

JOB 8080 FCDMC / ACDC

COMPUTATIONS FOR DIVERSION CHANNEL

SHEET NO. 137 OF

DATE 10/82

BY RT CHKD JFF

PIER ANALYSIS & DESIGN

COMPUTER MODEL

ELEMENT DIMENSIONS @ ℄ OF ACTUAL MEMBERS

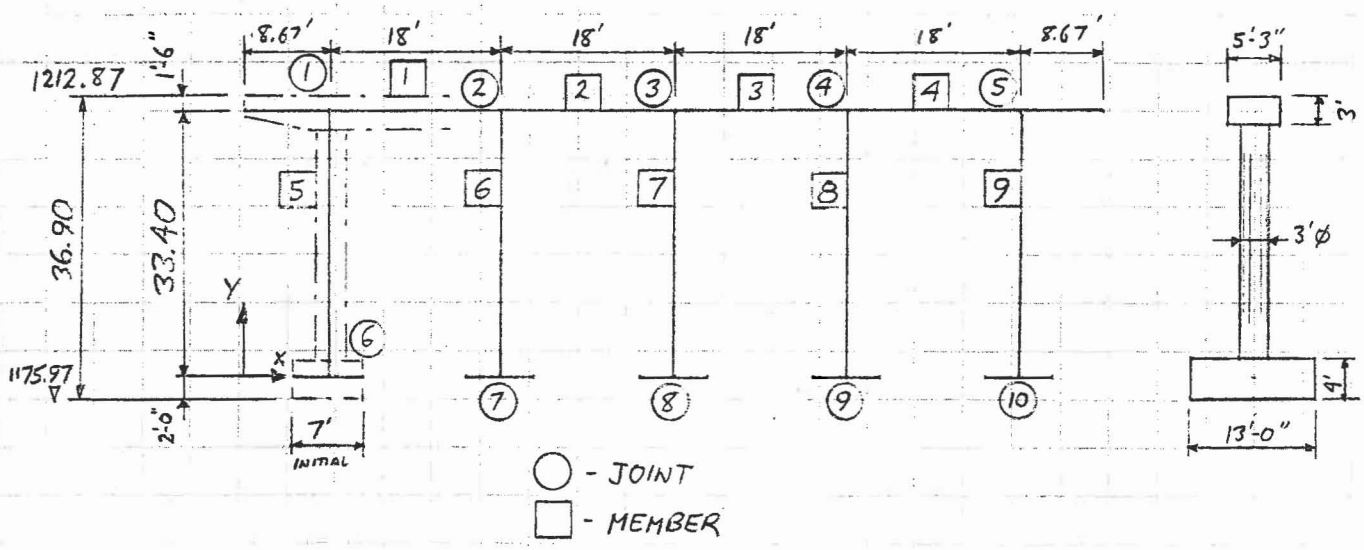

CONCRETE $f'_c = 3000$ psi

$$E_c = (150)^{1.5}\, 33\sqrt{3000} = 3{,}320{,}000 \text{ psi} \quad (= 478{,}080 \text{ KSF})$$

NUMBER OF TRAFFIC LANES

BARRIER TO BARRIER = 68'

68/12 = 5.67 — 5 LANES

68/5 = 13.60 ft/LANE

SKEW LOADED WIDTH = 10'/Cos 30 = 11.55 ft

SKEW LANE WIDTH = 13.60/Cos 30 = 15.70 ft

SVERDRUP & PARCEL

JOB 8080 FCDMC / ACDC

COMPUTATIONS FOR DIVERSION CHANNEL

SHEET NO. 138 OF

DATE 10/82

BY RV CHKD JFF

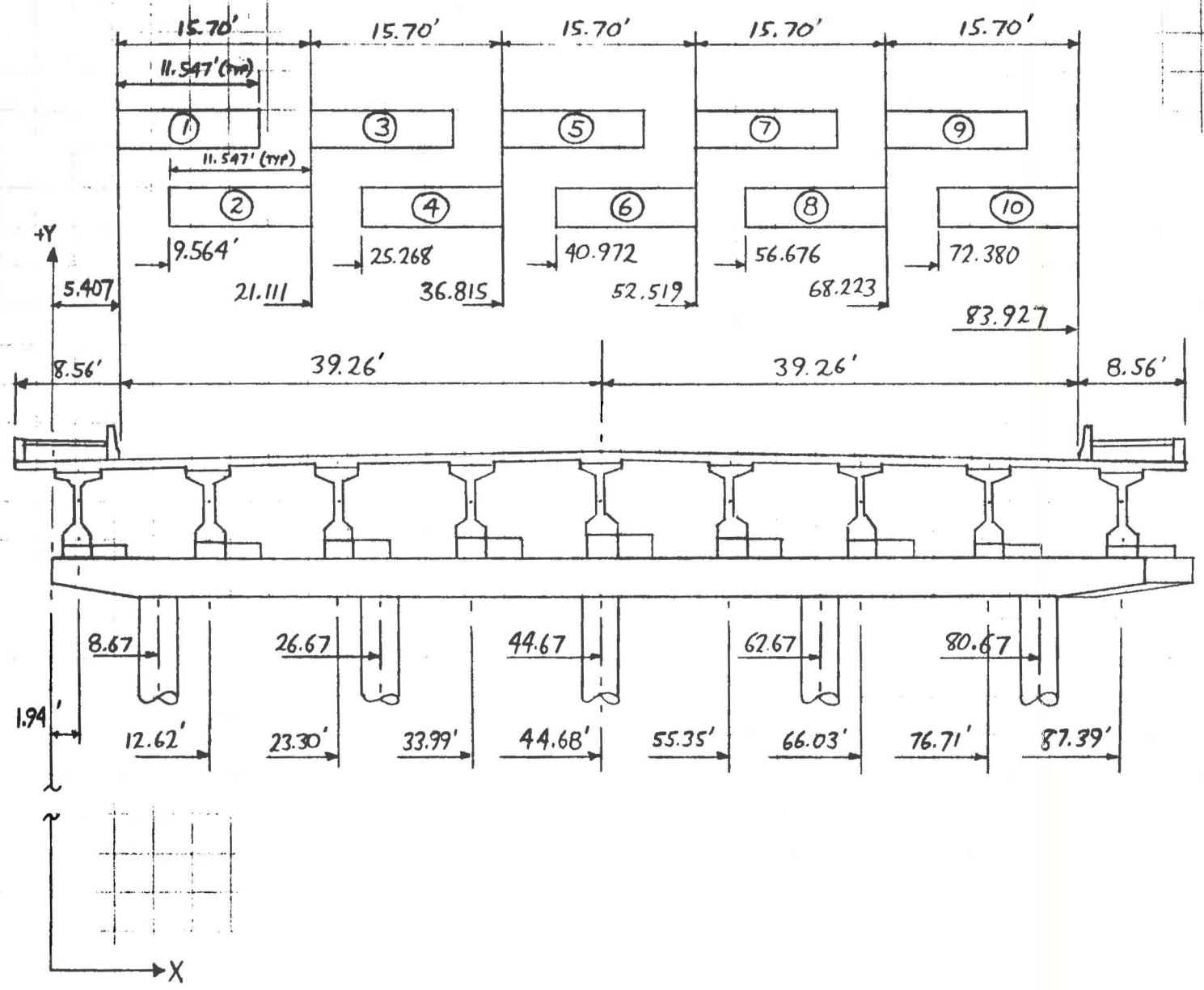

SVERDRUP & PARCEL

JOB 8080 FCDMC / ACDC

COMPUTATIONS FOR DIVERSION CHANNEL

SHEET NO. 139 OF

DATE 10/82

BY RT CHKD JFF

DEAD LOAD REACTIONS (SEE BEARING DESIGN CALCS)

$R_{DL} = 2(69.7 + 65.8 + 32.8) + 25.7 = 362.3^K$

SPECIFY LOCATIONS FOR CAP BEAM DESIGN

- SLIGHTLY TO THE RIGHT OF GIRDER LOADS
- AT FACE OF EQUIVALENT AREA SQUARE COLUMN

$b = \sqrt{\pi(3)^2/4} = 2.66' \div 2 = 1.33'$

SPAN 1

$A_1 = 1.33'$ (FACE OF COLUMN - FC)
$A_2 = 3.96'$ (SLIGHTLY TO RIGHT OF GIRDER - RG)
$A_3 = 14.64'$ (RG)
$A_4 = 16.67'$ (FC)

SPAN 2

$A_1 = 1.33'$ (FC)
$A_3 = 7.33'$ (RG)
$A_5 = 16.67'$ (FC)

$A_2 = 4.33'$
$A_4 = 12.00'$

SPAN 3

$A_1 = 1.33'$ (FC)
$A_3 = 10.69'$ (RG)
$A_4 = 16.67'$ (FC)

$A_2 = 6.00'$

SPAN 4

$A_1 = 1.33'$ (FC)
$A_2 = 3.37'$ (RG)
$A_3 = 14.05'$ (RG)
$A_4 = 16.67'$ (FC)

SVERDRUP & PARCEL

JOB 8080 FCDMC / ACDC

COMPUTATIONS FOR DIVERSION CHANNEL

SHEET NO. 140 OF

DATE 10/82

BY RT CHKD JFF

INPUT FOR P7310

HORIZONTAL LOADS

WIND ON SUPERSTRUCTURE (W)

9.62/2 = 4.81' ABOVE EDGE GIRDER PEDESTAL

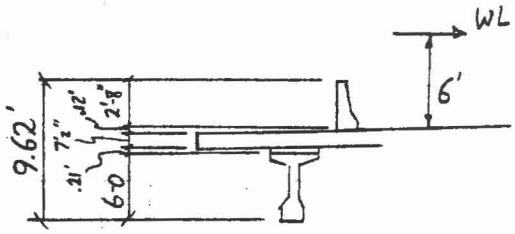

TRANSVERSE

$(9.62)(123.33)(50 \text{ psf})/1000 = 59.32^K$

LONGITUDINAL

$(9.62)(123.33)(12)/1000 = 14.24^K$

WIND ON LIVE LOAD (WL)

TRANSVERSE: $(100)(123.33)/1000 = 12.33^K$

LONGITUDINAL: $(40)(123.33)/1000 = 4.93^K$

} 6' ABOVE DECK

WIND ON SUBSTRUCTURE (W)

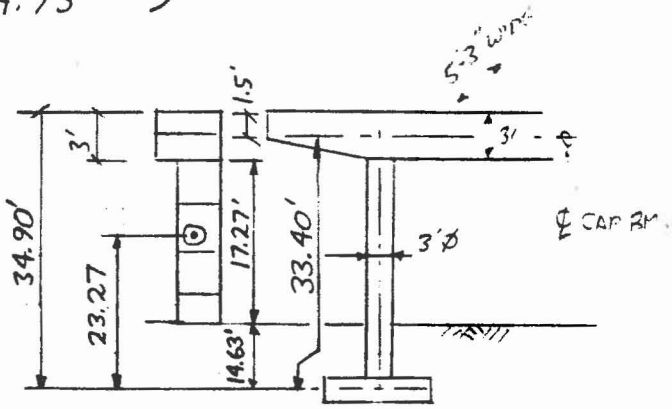

|| TO PIER (RESOLVE TO FORCE APPLIED AT ℄ CAP)

$40\left[(5.25)(3)(33.40) + (3)(17.27)(23.27)\right]/(33.40)(1000)$

$= 2.07^K$

⊥ PIER (ASSUME CAP A RECTANGLE, RESOLVE TO FORCE AT TOP OF CAP BEAM)

$40\left[(89.33)(3)(33.40) + (5)(3)(17.27)(23.27)\right]/(34.90)(1000) = 17.17^K$

SVERDRUP & PARCEL

JOB 8080 FCDMC / ACDC

COMPUTATIONS FOR DIVERSION CHANNEL

SHEET NO. 141 OF

DATE 10/82

BY RY CHKD JFF

INPUT FOR P7310

SUMMATION OF WIND LOADS

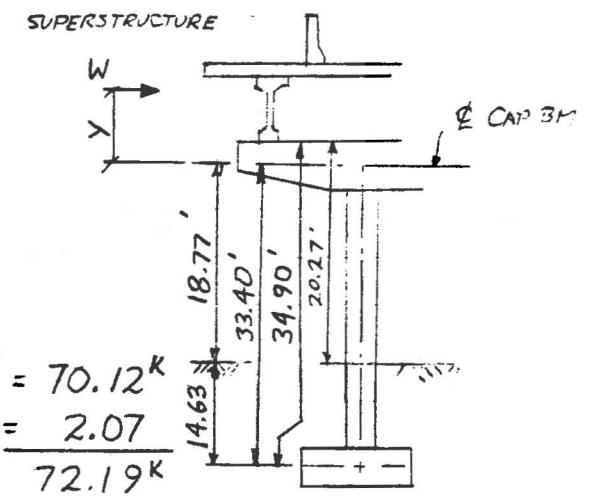

∥ TO PIER (@ ℄ OF CAP BEAM)

$Y = \underset{\text{PREVIOUS SKT.}}{4.81'} + \underset{\text{PEDESTAL}}{.33'} + \underset{\text{½ CAP BM}}{1.5'} = 6.64 \text{ ft}$

$W_{\parallel} = W\,(33.40+6.64)/33.40 = 1.20W$

$W_{\parallel} = 1.20\left[14.24 \sin 30° + 59.32 \cos 30°\right] = 70.12^{K}$

WIND ∥ PIER ON SUBSTRUCTURE $= 2.07$

72.19^{K}

$0.3W_{\parallel} = (0.3)(72.19) = 21.66^{K}$

⊥ TO PIER (@ TOP OF CAP BEAM)

$W_{\perp} = W\,(33.40-6.64)/34.90 = 1.15W$

$W_{\perp} = 1.15\left[14.24 \cos 30° + 59.32 \sin 30°\right] = 48.18^{K}$

WIND ⊥ PIER ON SUBSTRUCTURE $= 17.17$

$W_{\perp} = 65.35^{K}$

$0.3W_{\perp} = (0.3)(65.35) = 19.60^{K}$

CENTRIFUGAL FORCE (CF) – NONE

STREAM FLOW (SF)

$V = 5.5$ ft/sec
$K = 1.375$ ft
} DESIGN CRITERIA

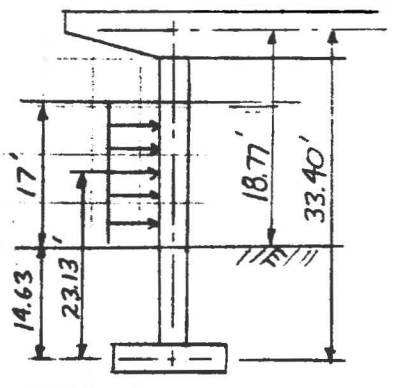

$P = 1.375(5.5)^2 = 41.6$ psf

WIDTH = PIER DIAMETER + 4 DEBRIS EACH SIDE
$= 3 + (2)(4) = 11'$

RESOLVE TO EQUIV. FORCE @ ℄ OF CAP

$SF = \left[(41.6)(11)(17)(23.13)\right] / (33.40)(1000) = 5.39^{K}$

SVERDRUP & PARCEL

JOB 8080 FCDMC / ACDC

COMPUTATIONS FOR DIVERSION CHANNEL

SHEET NO. 142 OF

DATE 10/82

BY RT CHKD JFF

INPUT FOR P7310

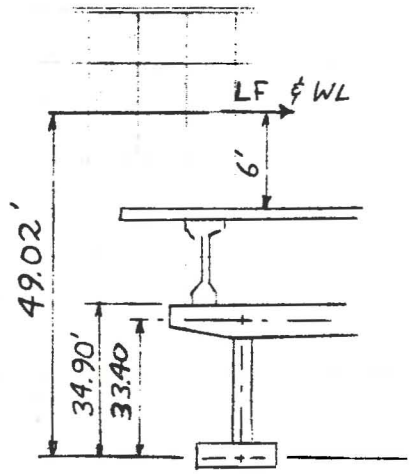

LONGITUDINAL FORCE (LF)

LANE LOAD = 640 plf + 18,000

LF/LANE = $(.05)[(123.33)(0.64) + 18] = 4.85^K$

(ASSUME 3 LANES MAX ONE DIRECTION)

3 LANES ⇒ 90 % REDUCTION

RESOLVE TO EQUIV. LOAD AT ℄ CAP BM - ∥ TO PIER

" " " " AT TOP " " - ⊥ TO PIER

∥ TO PIER

$LF_{\parallel} = [(.90)(3)(4.85)(49.02)/33.40] \sin 30° = 9.61^K$

⊥ TO PIER

$LF_{\perp} = [(.90)(3)(4.85)(49.02)/34.90] \cos 30° = 15.93^K$

SUMMATION GROUP III HORIZONTAL LOADS

RESOLVE WL INTO EQUIV PIER FORCES @ ℄ CAP - ∥ TO PIER

" " " " " " " TOP OF CAP - ⊥ " "

∥ TO PIER

$WL_{\parallel} = [12.33 \cos 30° + 4.93 \sin 30°](49.02)/33.40 = 19.29^K$

⊥ TO PIER

$WL_{\perp} = [12.33 \sin 30° + 4.93 \cos 30°](49.02)/34.90 = 14.66^K$

Cont...

SVERDRUP & PARCEL

JOB 8080 FCDMC / ACDC

COMPUTATIONS FOR DIVERSION CHANNEL

SHEET NO. 143 OF

DATE 10/82

BY RV CHKD JFF

INPUT FOR P7310

SUMMATION OF GROUP III HORIZONTAL LOADS (Cont.)

LOAD	∥ TO PIER	⊥ TO PIER	REF
SF	5.39	0	141
0.3W	21.66	19.60	141
WL	19.29	14.66	142
LF	9.61	15.93	142
	55.95^K	50.19^K	

TEMPERATURE

FALL 40°
RISE 40°

ADJUST FALL TEMP. TO ACCOUNT FOR SHRINKAGE
USE PIER TWO (PIER THREE, IN CENTER, SEES VERY LITTLE THRUST)
CREEP & SHRINKAGE THRUST = 12.49 - 11.31 = 1.18^K (SHT. 43)
TEMPERATURE THRUST = 26.52 - 24.03 = 2.49^K FOR 40° FALL (SHT. 43)
2.49/40 = .06 ^{K}/°F
1.1 / .06 = 19.50° (EQUIVALENT) SAY 20° F

FALL + SHRINKAGE = 40 + 20 = 60° F LONGITUDINAL

PARALLEL TO PIER
ASSUME A SHRINKAGE STRAIN OF .0002

$$-40° - \frac{.0002}{.000006} = 40 - 33.3 = -73.3\ °F$$

INPUT FOR P7310

EARTHQUAKE (EQ)

WEIGHTS (@ PIER 2)

SUPERSTRUCTURE DL (181.15)(2) = 3623^k/GIRDER (SHT. 82 FOR PIERS 2&4)
(9 GIRDERS) × 9
3261 → 3261

PIER CAP: (5.25)(0.15)[(89.33)(2) + (75)(1) + (2)(7.17)(1)/2] = 205^k
GIRDER PEDESTALS: (Σ HEIGHTS = 6.33')(2.33)(5.25/Cos 30°)(0.15) = 13
½ COLUMNS: (5)(π 3²/4)(29.90/2)(0.15) = 79
TRIB EQ WEIGHT AT PIER #2 = 3558

FORCE REQ'D TO CAUSE 1" DEFL @ ℄ CAP

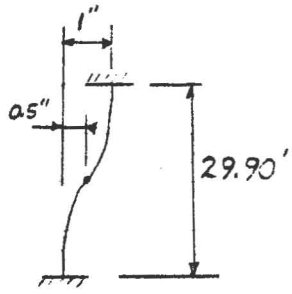

ASSUME COLUMNS FIXED AT FTG.
COLUMN HEIGHT = 29.90 ft
I_{COLS} (GROSS) = (5) π (3)⁴/64 = 19.88 ft⁴ = 412,240 in⁴
E = 3320 KSI
P = $\frac{\Delta}{2}$ 3EI/L³ = (.5)(3)(3320)(412240)/[(12)(29.90/2)]³
P = 356^k (@ BOTTOM OF CAP BM.)

RESOLVE TO FORCE @ ℄ CAP - ∥ PIER
" " " @ TOP OF CAP - ⊥ PIER

$P_{\parallel}$ = (356)(29.90)/(29.90+1.5) = 339^k
$P_{\perp}$ = (356)(29.90)/(29.90+3.0) = 324^k

$T_{\parallel}$ = 0.32 $\sqrt{3558/339}$ = 1.04 SEC

$T_{\perp}$ = 0.32 $\sqrt{3558/324}$ 1.06 SEC

A = 0.22 g (DESIGN CRITERIA)

$C_{\parallel}$ = 0.06
$C_{\perp}$ = 0.06 } AASHTO FIG. 1.2.20B & DESIGN CRITERIA

$F_{\perp}$ = 1.0 $F_{\parallel}$ = 0.8

$EQ_{\perp}$ = CFW = (.06)(1.0)(3558) = 213^k @ CG OF TRIB. MASS
$EQ_{\parallel}$ = (.06)(0.8)(3558) = 171^k " " " " "

Cont...

SVERDRUP & PARCEL

JOB 8080 FCDMC / ACDC

COMPUTATIONS FOR DIVERSION CHANNEL

SHEET NO. 145 OF

DATE 10/82

BY RT CHKD JFF

INPUT FOR P7310

EARTHQUAKE (EQ) Cont.

LOCATE TRIB. CG

#	WT	ARM	M
SS	3261	37.60	122,614
PED	13	37.25	484
CAP	205	35.40	7257
½ COL	79	26.43	2088
	3558^K		132,443

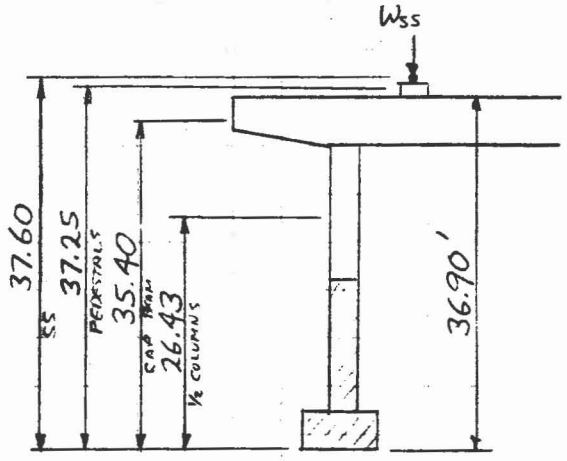

$\bar{Y} = 132443/3558 = 37.22' \uparrow$

RESOLVE EQ TO EQUIV FORCE AT ℄ OF CAP - ∥ TO PIER
" " " " " " TOP " " - ⊥ " "

$EQ_{\parallel} = (171)(37.22)/35.40 = 180^K$

$EQ_{\perp} = (213)(37.22)/36.90 = 215^K$

P7310 BRIDGE PIER DESIGN

SVERDRUP AND PARCEL FORM 1 FORM ___ OF ___

1 JOB NO. 8080 THUNDERBIRD ROAD OVER DIVERSION CHANNEL PROGRAM P7310
PROBLEM NO. PIER ANALYSIS AND DESIGN RUN # BY RDT CHKD JFF

CODE(1)	CODE(2)	CODE(3)	CODE(4)	CODE(5)
2 1.	0.	1.	0.	1.

INPUT FORMS REQUIRED.

CODE(1)=1. PIER ANALYSIS AND DESIGN
2. FOOTING DESIGN ONLY (INDIVIDUAL FTGS.) . . . . . FORMS 1,10 THRU 13
(CONTINUOUS FTGS.) . . FORMS 1,10 THRU 12,14,15

CODE(2)=0.

CODE(3)=0. NO PRINT-OUT OF AASHTO LOADING COMBINATIONS
1. AASHTO LOADING COMBINATIONS PRINTED

CODE(4)=0. EXIT AFTER COMPLETE DESIGN . . . . . FORMS 1 THRU 11
2. EXIT AFTER PIER ANALYSIS . . . . . FORMS 1 THRU 8
3. EXIT AFTER DESIGN OF PIER CAP . . . . . FORMS 1 THRU 9
4. EXIT AFTER DESIGN OF COLUMNS . . . . . FORMS 1 THRU 9
5. EXIT AFTER DESIGN OF COLUMNS ONLY . . . . . FORMS 1 THRU 9
6. EXIT AFTER ANALYSIS FOR CAP BEAM ONLY (CONT. BEAM).FORMS 1 THRU 8

CODE(5)=1. SERVICE LOAD DESIGN (MUST BE 1.0 FOR FOOTING DESIGN)
2. ULTIMATE STRENGTH DESIGN (LOAD FACTOR) OF CAP BEAMS AND COLUMNS ONLY.

STRUCTURE PARAMETERS (CC1 THRU CC18 ONLY REQUIRED FOR CODE(1)=2.)

	NO. CAP CANTI-LEVERS	NO.CONT. FTG. CANTI-LEVERS	NO. CAP BEAMS	NO. TIE BEAMS	NO.CONT. FTG. BEAMS	NO. COLS.	NO. JOINTS	NO. SUPPTS.	NO. REL'D. SUPPT. JOINTS	CONCRETE MODULUS OF ELASTICITY(KSF)
3	2	0	4	0	0	5	10	5		4780 80.

NOTES.
1) PROGRAM P7310 IS INTENDED FOR USE WHEN COLUMNS HAVE ONLY A MINOR DEVIATION IN HEIGHT (FOR MULTIPLE- LEVEL COLUMNS) AND WHEN COLUMN INCLINATION IS SMALL
2) MAXIMUM NUMBER OF CANTILEVERS,4 (2 ON CAP, 2 ON CONT. FOOTING).
3) SUM OF CAP BEAMS AND TIE BEAMS, MAXIMUM 8.
4) MAXIMUM NUMBER OF CONTINUOUS FOOTING BEAMS,6.
5) MAXIMUM NUMBER OF COLUMNS,7.
6) MAXIMUM NUMBER OF JOINTS,14 (FREE ENDS OF CANTILEVERS NOT COUNTED AS JOINTS)
8) FOR CODE(1)=2. OTHER CODES NEED NOT BE SPECIFIED.
9) FRAMES WITH CONTINUOUS FTGS ARE ANALYSED AS IF FOOTING STIFFNESS WAS INFINITE

SHT 146 OF

PIER STRUCTURE DESCRIPTION

JOINT COORDINATES (DIM. FT.) S FOR SUPPORT

Joint	X	X coordinate	Y	Y coordinate	S for support
1	X	8.67	Y	38.40	
2	X	26.67	Y	33.40	
3	X	44.67	Y	33.40	
4	X	62.67	Y	33.40	
5	X	80.67	Y	33.40	
6	X	8.67	Y	0.	S
7	X	26.67	Y	0.	S
8	X	44.67	Y	0.	S
9	X	62.67	Y	0.	S
10	X	80.67	Y	0.	S
11	X	.	Y	.	
12	X	.	Y	.	
13	X	.	Y	.	
14	X	.	Y	.	

SUPPORT JOINT RELEASES
(ENTER 1.0 FOR EACH RELEASE)

JT.	FORCE X	FORCE Y	MOMENT Z
1	.	.	.
2	.	.	.
3	.	.	.
4	.	.	.
5	.	.	.
6	.	.	.
7	.	.	.
8	.	.	.
9	.	.	.

NOTES:
1) JOINTS AT TOP OF COLUMNS ARE TO BE NUMBERED FIRST FROM LEFT TO RIGHT, THEN JOINTS AT BOTTOM OF COLUMNS FROM LEFT TO RIGHT.
2) CAP BEAM MEMBERS ARE TO BE NUMBERED FIRST FROM LEFT TO RIGHT, THEN COLUMN MEMBERS FROM LEFT TO RIGHT, AND FINALLY CONTINUOUS FOOTING MEMBERS FROM LEFT TO RIGHT.
3) CANTILEVERS ARE NOT COUNTED AS BEAM MEMBERS AND DO NOT RECEIVE A MEMBER NUMBER.
4) MEMBER INCIDENCES (REFER TO FORM VII), BEGINNING JOINT IS AT LEFT END OF HORIZONTAL MEMBER, AT BOTTOM END OF COLUMN MEMBERS.
5) COLUMNS MAY BE SUBDIVIDED INTO MULTIPLE LEVELS WITH TIE BEAMS. IF THIS IS DONE, JOINT AND MEMBER NUMBERS SHOULD FOLLOW A LEFT-TO-RIGHT, TOP-TO-BOTTOM PATTERN AS SHOWN BELOW (STILL FOLLOWING GENERAL RULE OF BEAMS FIRST, THEN COLUMNS, THEN CONTINUOUS FOOTING BEAMS).
6) JOINTS ON CONTINUOUS FOOTING ARE CONSIDERED AS SUPPORT JOINTS, BUT NO JOINT RELEASES ARE REQUIRED.
7) TIE BEAMS ARE ASSUMED TO BE HORIZONTAL WHILE CAP BEAMS MAY BE SLOPED BUT ALL DISTANCES MUST BE GIVEN HORIZONTALLY.

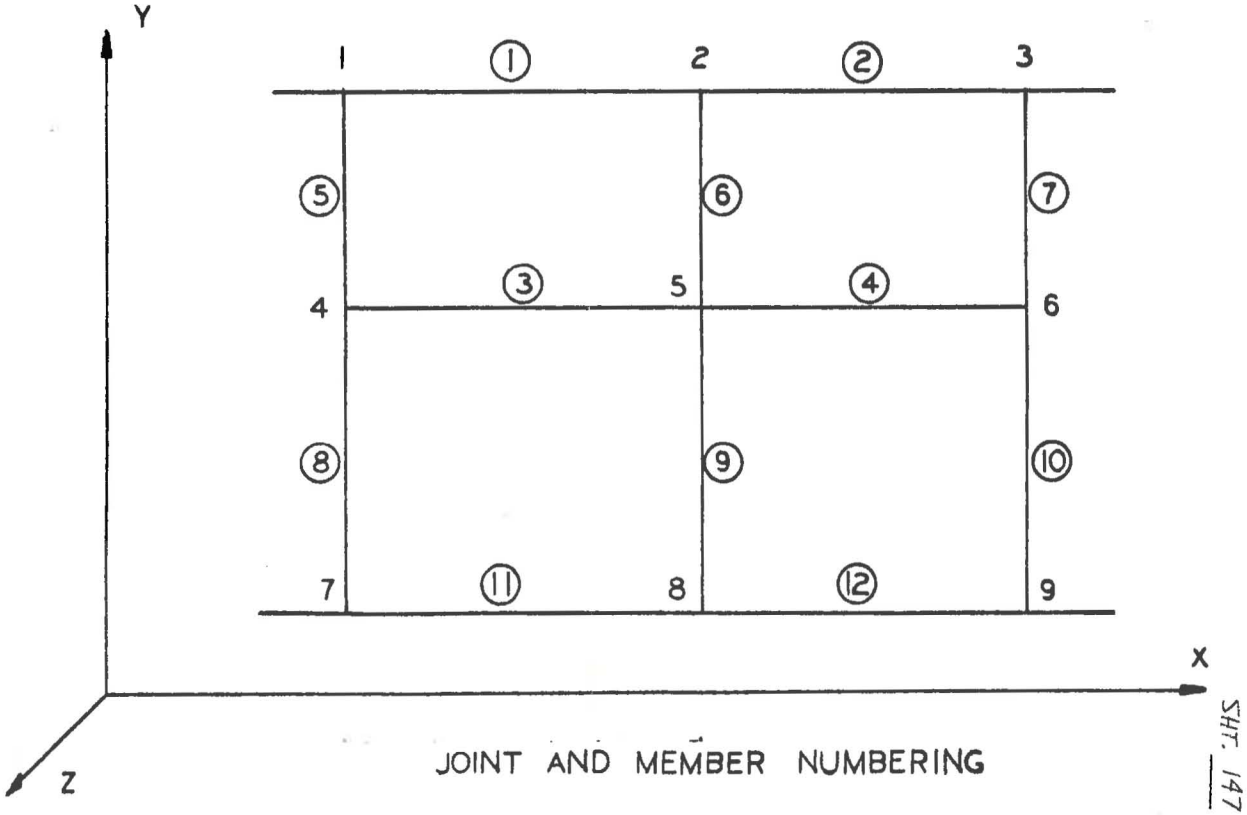

JOINT AND MEMBER NUMBERING

P7310 BRIDGE PIER DESIGN

SVERDRUP AND PARCEL — FORM III — FORM ___ OF ___

1-2: 10 — NO. OF LONG SPAN BEAM SPACINGS TO FOLLOW (29MAX) - DIM. FT. (SEE FORM 4)

1–10	11–20	21–30	31–40	41–50	51–60	61–70	71–80
1.94	10.68	10.68	10.69	10.69	10.67	10.68	10.68
10.68	1.0	.	.	.	.	.	.
.	.	.	.	.	.	.	.
.	.	.	.	.			

1-2: 0 — NO.OF SHORT SPAN BEAM SPACINGS TO FOLLOW (29MAX) - DIM.FT. (0 FOR CONT. GIRDERS)

1–10	11–20	21–30	31–40	41–50	51–60	61–70	71–80
.	.	.	.	.	.	.	.
.	.	.	.	.	.	.	.
.	.	.	.	.	.	.	.
.	.	.	.	.			

LONG SPAN LENGTH (FT.) NEAR FACE	LONG SPAN LENGTH (FT.) FAR FACE	SHORT SPAN LENGTH (FT.) NEAR FACE	SHORT SPAN LENGTH (FT.) FAR FACE	CODE FOR AASHTO LIVE LOAD	(>1.0) IMPACT FACT.	SKEW DIM. FOR ONE LANE	REACTION FOR ONE LANE (K)
.	.	.	.	.	1.20	11.546	122.5

NOTES.
1) THE FIRST SEVEN NUMBERS ON THE LAST CARD ABOVE ARE REQUESTED IF SIMPLE SPAN SUPERSTRUCTURE. THE LAST THREE NUMBERS ARE REQUESTED IF CONTINUOUS SUPERSTRUCTURE. GIVE ONLY REQUESED INFORMATION.
2) SKEW DIMENSION IS WIDTH OF 10 FT. LANE MEASURED PARALLEL TO CENTERLINE OF PIER.
3) CODE FOR AASHTO LIVE LOAD = 1.00 = HS20-44 -1.00 = H20-44
0.75 = HS15-44 -0.75 = H15-44
-0.50 = H10-44
4) FOR SIMPLE SPAN SUPERSTRUCTURES SUM OF LONG SPAN BEAM SPACINGS AND SUM OF SHORT SPAN BEAM SPACINGS MUST AGREE WITHIN 0.01 FT.
5) IF BEAMS ARE ALIGNED THEIR DISTANCES FROM ORIGIN MUST AGREE WITHIN 0.01 FT.
6) IF MORE THAN SIX BEAM REACTIONS OCCUR IN ANY SPAN OF CAP, PAIRS OF BEAMS WHICH ARE CLOSEST TOGETHER MUST BE COMBINED AND TREATED AS ONE. SEE FORM VI
7) UP TO TWO BEAMS MAY BE PLACED ON A CANTILEVER.
8) DL AND LL REACTIONS TO BEAMS ARE COMPUTED ON THE BASIS OF SIMPLE SPAN SLABS BETWEEN BEAMS.

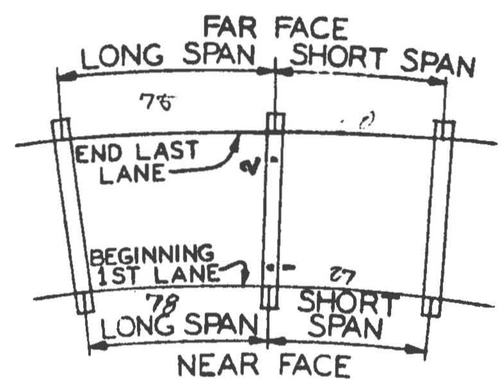

SHT. 148 OF ___

1-2: 10 — NO.OF 'C' DISTANCES FROM LOCAL ORIGIN TO BEGINNING OF LANE TO FOLLOW (16MAX)-DIM FT.
(DISTANCES MUST BE GIVEN IN ORDER OF INCREASING MAGNITUDE.)

1–10	11–20	21–30	31–40	41–50	51–60	61–70	71–80
5.407	9.564	21.111	25.268	36.815	40.972	52.519	56.676
67.223	72.380	.	.	.	.	.	.

1-2
12
9

NO. OF DL BEAM REACTIONS TO FOLLOW (29 MAX. EA. SPAN, 40 MAX. TOTAL) - DIM. KIPS
(DOWNWARD REACTION NO SIGN REQUIRED, UPWARD NEGATIVE)

1-10	11-20	21-30	31-40	41-50	51-60	61-70	71-80
362.3	362.3	362.3	362.3	362.3	362.3	362.3	362.3
362.3	.	.	.	.	.	.	.
.	.	.	.	.	.	.	.
.	.	.	.	.	.	.	.
.	.	.	.	.	.	.	.

NOTES,
1) IF BEAMS ARE ALIGNED THEIR DEAD LOAD REACTIONS MUST BE ADDED AND ENTERED AS ONE REACTION.
2) IF MORE THAN SIX BEAMS OCCUR IN ANY SPAN OF CAP THE DEAD LOAD REACTION OF PAIRS OF BEAMS WHICH ARE CLOSEST TOGETHER MUST BE ADDED AND ENTERED AS ONE REACTION. SEE FORM VI
3) DEAD LOAD BEAM REACTIONS ARE APPLIED IN ORDER FROM LEFT TO RIGHT, REGARDLESS OF WHICH SPAN THEY OCCUPY.

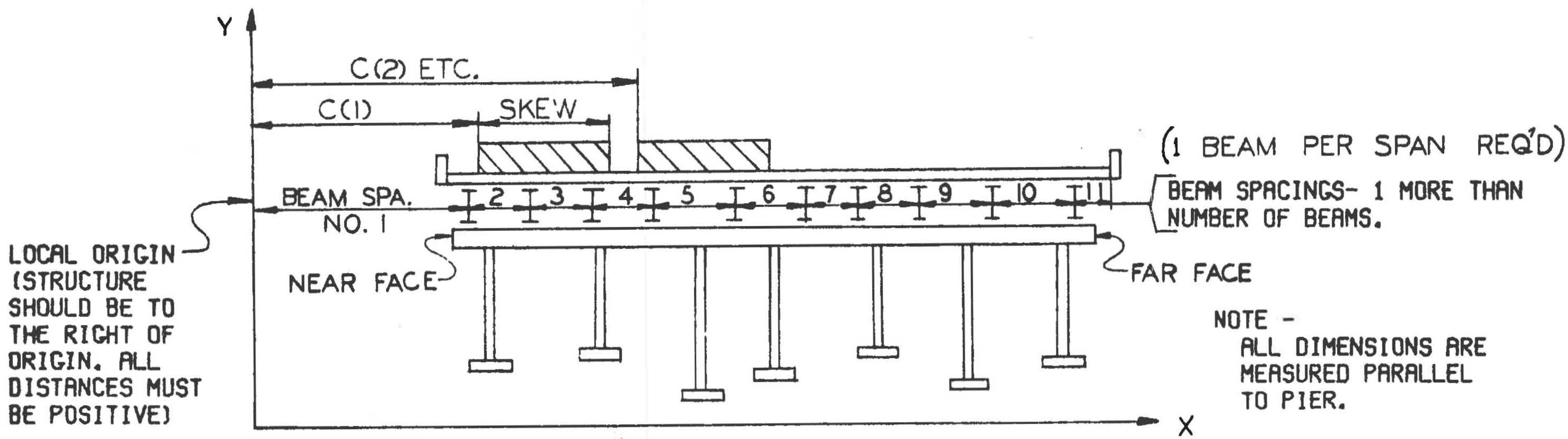

NOTE -
ALL DIMENSIONS ARE MEASURED PARALLEL TO PIER.

1	2
2	0

NO. OF LIVE LOAD COMBINATIONS TO FOLLOW (20 MAX.)

L.L. COMBINATION

1	2	3	4	5	6	7	8	9	10	11	12	13	14
	1												
	2												
	3												
	4												
	5												
	2		3										
	2		5										
	4		5										
	4		7										
	5		7										
	5		9										
	2		3		7								
	2		5		7								
	4		5		7								
	4		6		7								
	1		3		5		7						
	2		3		5		7						
	1		3		5		7		9				
	2		4		6		8		9				
	1		3		6		8		10				

NOTE:

EACH LL COMBINATION SPECIFIES A LOADING CASE CONSISTING OF A COMBINATION OF LL LANES WHICH ARE TO BE APPLIED TO THE STRUCTURE SIMULTANEOUSLY. LANES ARE IDENTIFIED BY LANE NUMBERS WHICH CORRESPOND TO SUBSCRIPTS OF 'C' DISTANCES ON FORM III. MAXIMUM OF 7 LANES PER COMBINATION. AASHTO REDUCTION FACTORS FOR MULTIPLE LANES ARE APPLIED. LANES MAY OVERLAP, BUT LANES INCLUDED IN A COMBINATION MAY NOT.
ALL INTEGER (NON-DECIMAL) NUMBERS MUST BE RIGHT JUSTIFIED.

A(1) 1.55	A(2)	A(3)	A(4)	A(5)	A(6)	CAP BEAM NO. (SPAN NO.) (1 CARD PER CAP BEAM)
1.33	3.96	14.64	16.675	.	.	1
1.33	4.33	7.33	12.	16.675	.	2
1.33	6.	10.69	13.68	16.675	.	3
1.33	3.37	14.05	16.675	.	.	4
.	.	.	.	.	.	5
.	.	.	.	.	.	6

HORIZONTAL LOADS (FORCE X -POSITIVE FROM LEFT TO RIGHT) -DIM. KIPS OR DEGREES (REQ'D)

GROUP II WIND	GROUP III LOAD	TEMP FALL+SHK.	TEMP. RISE	EARTHQUAKE FORCE	CENTRIFUGAL FORCE
72.19	55.95	-73.3	40.	180.	0.

HORIZONTAL LOADS NORMAL TO PIER (FORCE Z) - DIM. KIPS (REQ'D)

GROUP II WIND	GROUP III LOAD	EARTHQUAKE FORCE
65.35	50.19	215.

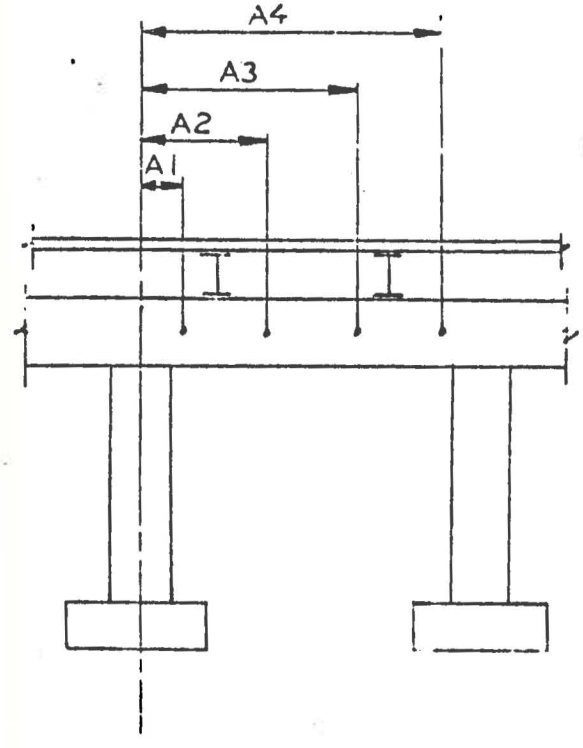

NOTES.
1) ENTER DIMENSION 'A' TO DESIGNATE ADDITIONAL POINTS AT WHICH MOMENTS AND SHEARS WILL BE OUTPUT. THE 'A' DIMENSION(FT.) IS MEASURED FROM LEFT MEMBER END TO THE POINT (SEE FIGURE). THE NUMBER OF 'A' DIMENSIONS AND BEAMS UPON EACH SPAN OF THE PIER CAP (EXCLUDING CANTILEVERS) MUST EQUAL 6. ENTER ONE CARD FOR EACH SPAN OF PIER CAP. ENTER '0' FOR 'A' VALUES NOT NEEDED.
2) TEMP FALL + SHK. MUST BE ENTERED WITH A NEGATIVE SIGN.
3) LOAD NORMAL TO PIER IS DISTRIBUTED TO COLUMNS IN PROPORTION TO I/L RATIOS.
4) LOADS DUE TO TEMPERATURE CHANGE ACT AS AXIAL FORCES APPLIED AT MEMBER ENDS.
5) TEMPERATURE FORCES ARE NOT APPLIED TO MEMBERS OF CONTINUOUS FOOTINGS.
6) HORIZONTAL LOADS PARALLEL TO PIER ARE APPLIED AT CENTERLINE OF CAP BEAM. HORIZONTAL LOADS NORMAL TO PIER ARE APPLIED AT TOP OF CAP BEAM.
7) GROUP II WIND FORCES ARE REQUIRED IF ANY HORIZONTAL FORCES ARE TO BE APPLIED TO THE PIER FRAME. ENTER AS A POSITIVE FORCE.

P7310 BRIDGE PIER DESIGN

SVERDRUP AND PARCEL FORM VII FORM ___ OF ___

MEMBER INCIDENCES

	MEMB NO.	BEG. JT.	END JT.
52	1	1	2
53	2	2	3
54	3	3	4
55	4	4	5
56	5	6	1
57	6	7	2
58	7	8	3
59	8	9	4
60	9	10	5
	10		
	11		
	12		
	13		

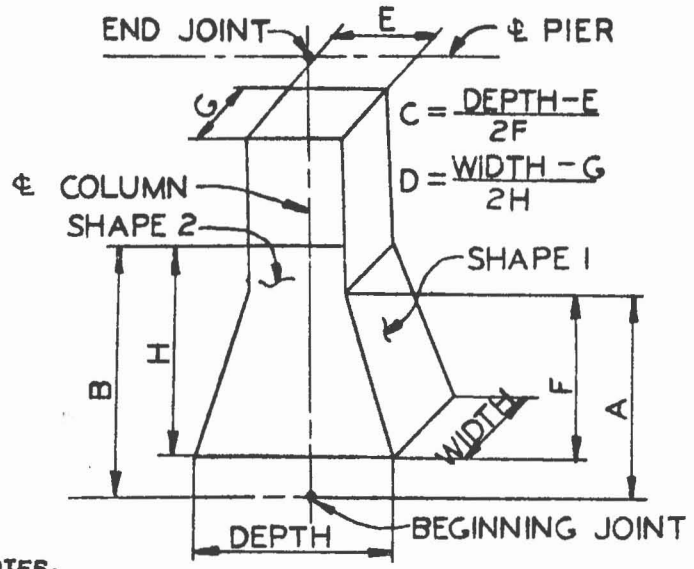

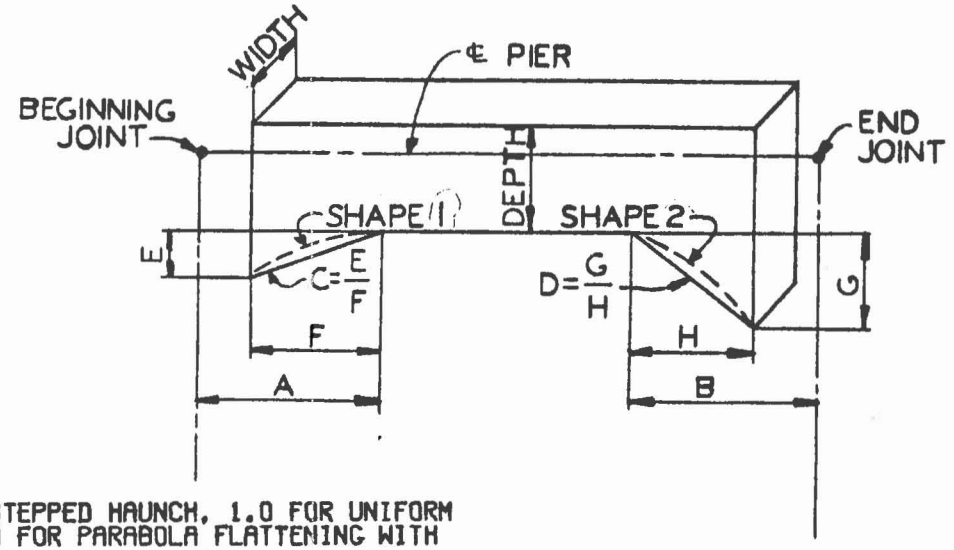

NOTES.
1) SHAPE1 AND SHAPE2 ARE 0.0 FOR NO HAUNCH OR STEPPED HAUNCH, 1.0 FOR UNIFORM STRAIGHT TAPER, 2.0 FOR PARABOLA, 3.0 TO 9.0 FOR PARABOLA FLATTENING WITH THE INCREASE.
2) FOR ROUND COLUMNS ENTER DIAMETER AS DEPTH, WIDTH AS ZERO, AND SHAPE2=-1.0.
3) VARIABLE COLUMN CROSS-SECTIONS ALLOWED FOR ANALYSIS ONLY. COLUMN DESIGN ASSUMES PRISMATIC MEMBER OF DIMENSIONS DEPTH(OR DIAM.)×WIDTH.

MEMBER PROPERTY DESCRIPTIONS (DIMENSIONS IN FT.)

	M.NO.	DEPTH (DIA.)	WIDTH	A	B	C	D	SHAPE 1	SHAPE 2
61	1	3.	5.25	.	.	.	.	.	.
62	2	3.	5.25	.	.	.	.	.	.
63	3	3.	5.25	.	.	.	.	.	.
64	4	3.	5.25	.	.	.	.	.	.
65	5	3.	.	.	.	.	.	.	-1.
66	6	3.	.	.	.	.	.	.	-1.
67	7	3.	.	.	.	.	.	.	-1.
68	8	3.	.	.	.	.	.	.	-1.
69	9	3.	.	.	.	.	.	.	-1.
	10	.	.	.	.	.	.	.	.
	11	.	.	.	.	.	.	.	.
	12	.	.	.	.	.	.	.	.

SHT. 152 OF ___

CANTILEVER DESCRIPTION (DIMENSIONS IN FT.)
(NOT REQ'D IF NO. CANTILEVERS=0 FOR BOTH CAP AND FTG.)

JT. NO.	A	B	C	D	WIDTH(E)	F
70	1	7.17	1.	2.	1.	5.25	-8.67
71	5	7.17	1.	2.	1.	5.25	8.67
		.	.	.	.	.	.
		.	.	.	.	.	.

NOTES.
1) DEFINITION OF 'D' SAME AS 'SHAPE1' AND 'SHAPE2' FOR BEAMS AND COLUMNS.
2) 'F' MUST BE NEGATIVE IF CANTILEVER PROJECTS LEFT FROM THE JOINT.

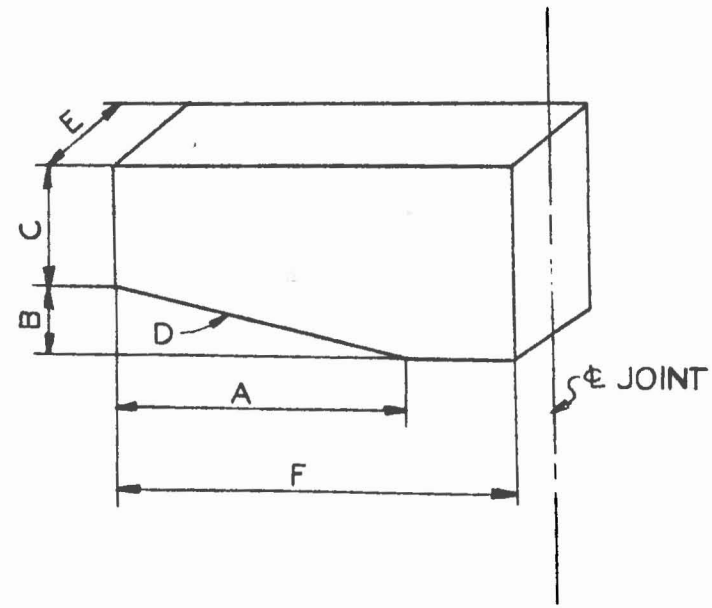

P731U BRIDGE PIER DESIGN

SVERDRUP AND PARCEL FORM IX FORM ___ OF ___

CAP DESIGN DATA
(NOT REQUIRED FOR COLUMN DESIGN ONLY)

CONC. STRENGTH 28 DAYS F'C (PSI)	YIELD STRESS OF REINFORCEMENT (PSI)	ALPHA (DEG.)
3000.	40000.	.

MAX. AGGREGATE SIZE (IN.)	BAR COVER (IN.)
1.5	1.5

NOTES:
1) ALPHA IS THE ANGLE OF INCLINED STIRRUPS MEASURED FROM THE VERTICAL POSITION. 45 DEGREES IS THE MAXIMUM ANGLE ACCEPTED.
2) COLUMN TYPE
   CC2, 1=CIRCULAR CROSS SECTION WITH CIRCULAR REINFORCEMENT PATTERN
   2=RECTANGULAR CROSS SECTION WITH CIRCULAR REINFORCEMENT PATTERN
   3=RECTANGULAR CROSS SECTION WITH RECTANGULAR REINFORCEMENT PATTERN
   CC4, (NOT REQUIRED FOR RECTANGULAR REINFORCEMENT PATTERN)
   1=SPIRAL REINFORCEMENT
   2=TIED REINFORCEMENT
   TIED REINFORCEMENT IS ASSUMED WHEN A RECTANGULAR REINFORCEMENT PATTERN IS SPECIFIED.
3) THE TOTAL INCREASE IN COLUMN SIZE SHOULD NORMALLY BE LESS THAN 12 IN. THE DEPTH AND WIDTH INCREMENTS ARE SET INTERNALLY TO MINIMUM VALUES EQUAL TO 10 PERCENT OF THE COLUMN DIMENSIONS. LARGER VALUES ONLY SHOULD BE SPECIFIED.
4) FOR ROUND COLUMNS THE INCREMENTS FOR DEPTH AND WIDTH SHOULD HAVE THE SAME VALUE.
5) THE COLUMN DESIGNS ARE BASED ON 2 BAR SIZES ONLY, THE MAXIMUM BAR SIZE INPUT AND THE NEXT SIZE SMALLER.
6) THE PIER IS NOT REANALYZED WHEN THE COLUMN SIZES ARE INCREASED.
7) THE EFF. LENGTH FACTOR IS APPLIED IN THE LONGITUDINAL DIRECTION ONLY. IN THE TRANSVERSE DIRECTION K=1 IN ALL CASES.
8) SLENDERNESS AFFECTS ARE APPLIED IN THE LONGITUDINAL DIRECTION ONLY.

REINFORCING BAR COMBINATIONS (MAX.5)

	CHOICE 1	CHOICE 2	CHOICE 3	CHOICE 4	CHOICE 5
LONGITUDINAL BAR SIZE	7	8	9	10	11
STIRRUP BAR SIZE	4	4	4	5	6

COLUMN DESIGN DATA (NOT REQUIRED FOR 'CAP DESIGN ONLY' OPTION)

COL. TYPE	MAX. PCT. STEEL	TOTAL INCREASE TO BE CONSIDERED IN DESIGN DEPTH (IN.)	WIDTH (IN.)	CONC. STRENGTH 28 DAYS F'C (PSI)	YIELD STRESS OF REINF. FY (PSI)	MIN. CLEAR SPACING OF REINF. (IN.)	COVER FOR REINF. (IN.)	DEPTH INCREMENT (IN.)	WIDTH INCREMENT (IN.)	LONGIT. EFF. LGTH. FACT. (K)	MAX. BAR SIZE
1	28.	12.	12.	3000.	40000.	1.5	1.5	6.	6.	2.1	14

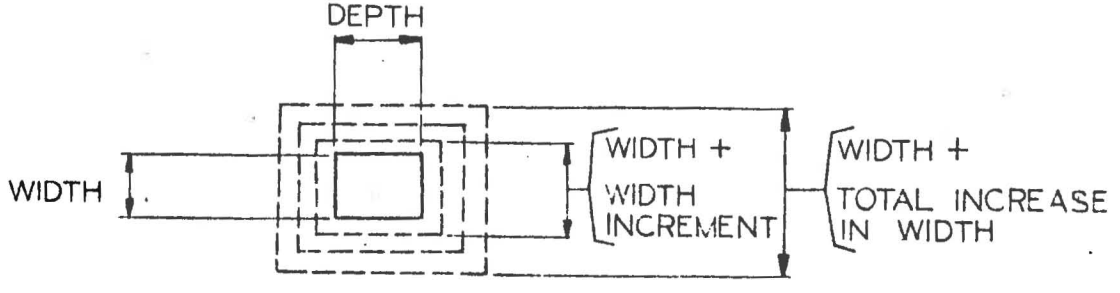

SHT. 154 OF ___

P7310 BRIDGE PIER DESIGN

SVERDRUP AND PARCEL

FORM X

FORM ___ OF ___

FOOTING DESIGN DATA

	28-DAY COMP. STRENGTH CONC. F'C (PSI)	REINFORCEMENT YIELD STRESS FY (PSI)
77	3000.	40000.

	FOOTING TYPE	FOOTING BASE
78	2	1

FOOTING TYPE=1 FOR CONTINUOUS FOOTING
TYPE=2 FOR INDIVIDUAL COLUMN FOOTINGS
FOOTING BASE=1 ON SOIL
BASE=2 ON PILES

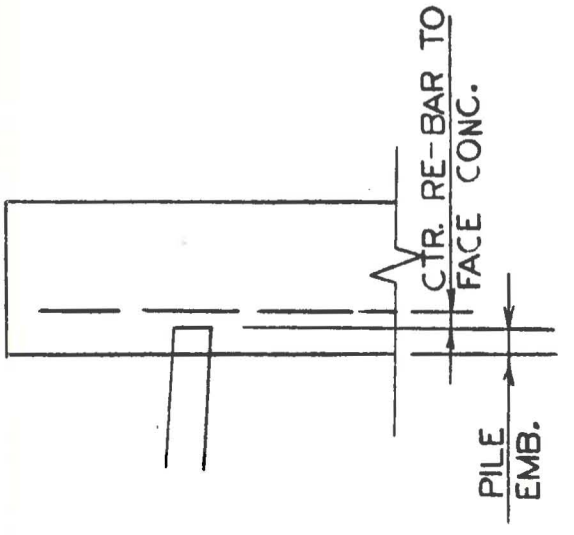

FOOTINGS ON PILES

	MAX. RATIO COL. HEIGHT TO MIN. FTG. WIDTH	DISTANCE (IN) CENTER OF FOOTING RE-BAR TO FACE OF CONCRETE	SOIL WEIGHT (PCF)
79	4.	4.	120.

	DISTANCE (FT) CENTER OF PILES TO EDGE OF FTGS	PILE EMBEDMENT (FT)	PILE SPACING 1 (FT)	PILE SPACING 2 (FT)
80	.	.	.	.

FOR FOOTINGS ON SOIL ENTER ALL PILE DATA AS ZERO.

PILE SPACING-FOR CONTINUOUS FOOTING-PILE SPACING 1=MAX. LONGITUDINAL PILE SPACING (PERPENDICULAR TO PIER)
2=MAX. TRANSVERSE PILE SPACING (PARALLEL TO PIER)
FOR INDIVIDUAL FOOTINGS-PILE SPACING 1=MAX. PILE SPACING
2=MIN. PILE SPACING

	ALLOWABLE SOIL PRESSURE (KSF)	MAX. ALLOWABLE PILE LOAD (KIPS)	MIN. ALLOWABLE PILE LOAD (KIPS)	PILE BATTER (VERT/HORIZ)
81	12.	.	.	.

	MAX. RATIO FTG. LENGTH L TO FTG. WIDTH W	MIN. RATIO FTG. LENGTH L TO FTG. WIDTH W	MAX. RATIO ECCENTRICITY TO L (ZERO FOR PILE FTG)	MAX. RATIO ECCENTRICITY TO W (ZERO FOR PILE FTG)
82	2.5	1.	.17	.17

FOR PILE FTG. ALLOW. SOIL PRESSURE = MAX. ALLOW. PILE LOAD/(DESIRED PILE SPACING)
ALLOWABLE PILE LOADS + FOR DOWNWARD, -FOR UPLIFT.
FOR FTG. ON SOIL ENTER ALLOW. PILE LOADS AND BATTER AS ZERO.

SHT. 155 OF ___

FOOTING DESIGN DATA (CONTINUED)
(ONE CARD ONLY REQUIRED FOR CONTINUOUS FOOTING)

CONTROLLING DIMENSIONS FROM SKETCHES BELOW (FT.)-

COLUMN MEMBER NUMBER (6 7)	MAX. 'A'	MIN. 'A'	MAX. 'B'	MIN. 'B'	MAX. 'W'	MIN. 'W'	SOIL DEPTH 'D'	MIN. FTG. THICKNESS
5	9.	2.	9.	2.	30.	6.	12.63	2.
6	9.	2.	9.	2.	30.	6.	12.63	2.
7	9.	2.	9.	2.	30.	6.	12.63	2.
8	9.	2.	9.	2.	30.	6.	12.63	2.
9	9.	2.	9.	2.	30.	6.	12.63	2.
	.	.	.	.	.	.	.	.
	.	.	.	.	.	.	.	.

CONTINUOUS FOOTING

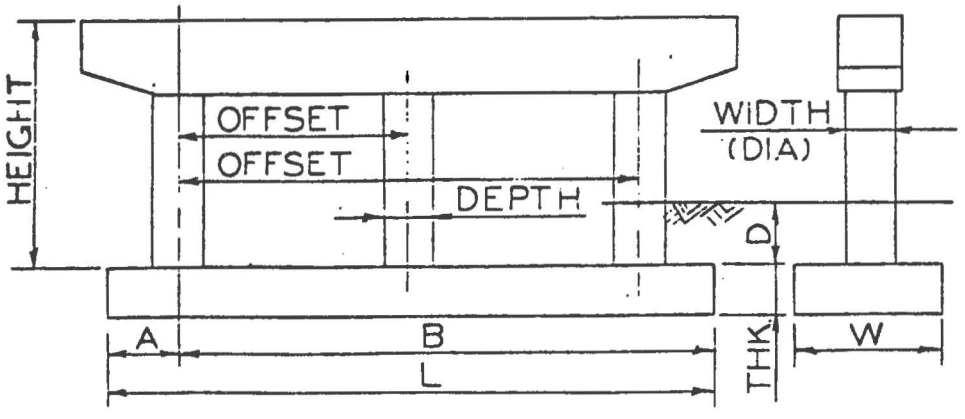

INDIVIDUAL FOOTING

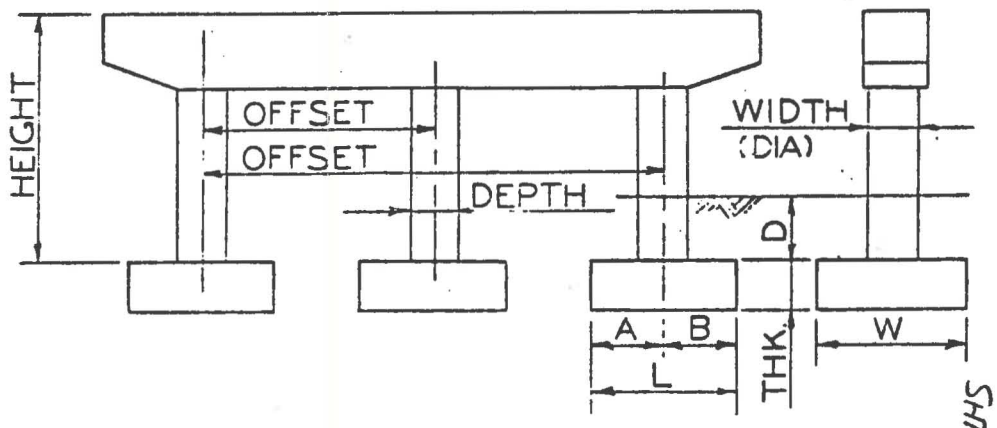

```
JOB NO. 8080  THUNDERBIRD ROAD OVER DIVERSION CHANNEL        PROGRAM P7310
PROBLEM NO. 2: PIER ANALYSIS AND DESIGN                  BY: RDT  CHKD: JFF
  1.        0.        1.        0.        1.
 2 0 4 0 0 5 10 5 0     478080.
 1 X   8.67   Y   33.40
 2 X  26.67   Y   33.40
 3 X  44.67   Y   33.40
 4 X  62.67   Y   33.40
 5 X  80.67   Y   33.40
 6 X   8.67   Y   0.      S
 7 X  26.67   Y   0.      S
 8 X  44.67   Y   0.      S
 9 X  62.67   Y   0.      S
10 X  80.67   Y   0.      S
10
  1.94     10.68     10.68     10.69     10.69     10.67     10.68     10.68
 10.68     1.0
0
                                                   1.20     11.546    122.5
10
  5.407     9.564    21.111    25.268    36.815    40.972    52.519    56.676
 68.223    72.380
9
 362.3     362.3     362.3     362.3     362.3     362.3     362.3     362.3
 362.3
20
1
2
3
4
5
2 3
2 5
4 5
4 7
5 7
5 9
2 3 7
2 5 7
4 5 7
4 6 7
1 3 5 7
2 3 5 7
1 3 5 7 9
2 4 6 8 9
1 3 6 810
  1.55      3.96     14.64     16.45
  1.55      4.33      7.33     12.       16.45
  1.55      6.       10.69     16.45
  1.55      3.37     14.05     16.45
 72.19     55.95    -73.3      40.       180.      0.
 65.35     50.19    215.
1  1  2
2  2  3
3  3  4
4  4  5
5  6  1
6  7  2
7  8  3
8  9  4
9  10 5
```

```
62          1   5.      5.25
63          2   5.      5.25
64          3   5.      5.25
65          4   5.      5.25
66          5   3.5                                                  1.
67          6   3.5                                                 -1.
68          7   3.5                                                 -1.
69          8   3.5                                                  1.
70          9   3.5                                                 -1.
71          1   6.92   2.      3.      1.      5.25    -8.67
72          5   6.92   2.      3.      1.      5.25    -8.67
73          3000.   40000.
74              1.5     1.5
75                          7       8       9       10      11
76                          4       4       4       5       6
77          1 28.   12.     12.     3000.   40000.  1.5     1.5     6.      6.      2.1 14
78          3000.   40000.
79          2   1
80              8.          4.      120.
81              0.      0.      0.      0.
82              12.     0.      0.      0.
83              2.5     .2      .1666   .1666
84              5           9.      2.      9.      2.      30.     6.      14.63   2.
85              6           9.      2.      9.      2.      30.     6.      14.63   2.
86              7           9.      2.      9.      2.      30.     6.      14.63   2.
87              8           9.      2.      9.      2.      30.     6.      14.63   2.
88              9           9.      2.      9.      2.      30.     6.      14.63   2.
[EOB]
```

SHT. 158 of

JOB NO. 8080 THUNDERBIRD ROAD OVER DIVERSION CHANNEL PROGRAM P/310

PROBLEM NO. 2; PIER ANALYSIS AND DESIGN BY: RDT CHKD: JEF

CODE(1)	CODE(2)	CODE(3)	CODE(4)	CODE(5)
1.0000	0.0000	1.0000	0.0000	1.0000

****

INPUT DATA

****

NO. OF CAP CANTILEVERS = 2
NO. OF CONT. FTG. CANTILEVERS = 0
NO. OF CAP BEAMS = 4
NO. OF TIE BEAMS = 0
NO. OF CONT. FTG. BEAMS = 0
NO. OF COLUMNS = 5

NO. OF JOINTS = 10
NO. OF SUPPORTS = 5
NO. OF REL. SUPPORT JTS. = 0
NO. OF SEGMENTS PER MEMBER = 10
MODULUS OF ELASTICITY = 478080.

JOINT COORDINATES

1	X 8.6700	Y 33.4000		
2	X 26.6700	Y 33.4000		
3	X 44.6700	Y 33.4000		
4	X 62.6700	Y 33.4000		
5	X 80.6700	Y 33.4000		
6	X 8.6700	Y 0.0000	S	
7	X 26.6700	Y 0.0000	S	
8	X 44.6700	Y 0.0000	S	
9	X 62.6700	Y 0.0000	S	
10	X 80.6700	Y 0.0000	S	

10 LONG SPAN BEAM SPACINGS TO FOLLOW

1.9400	10.6800	10.6800	10.6900	10.6900	10.6700	10.6800	10.6800
10.6800	1.0000						

SUPERSTRUCTURE IS CONTINUOUS OVER PIER

IMP.FACT. SKEW DIM. REACTION FROM ONE LANE(MAX)

1.2000	11.5460	122.5000

NO. OF LIVE LOAD LANE LOCATIONS TO FOLLOW IS 10

5.4070	9.5640	21.1110	25.2680	36.8150	40.9720	52.5190	56.6760
68.2230	72.3800						

NO. OF DEAD LOAD BEAM REACTIONS TO FOLLOW IS 9

362.3000	362.3000	362.3000	362.3000	362.3000	362.3000	362.3000	362.3000
362.3000							

COLUMN DISTANCES FROM ORIGIN TO FOLLOW

8.6700	26.6700	44.6700	62.6700	80.6700	0.0000	0.0000	0.0000

JOB NO. 8080 THUNDERBIRD ROAD OVER DIVERSION CHANNEL PROGRAM P7310

PROBLEM NO. 2: PIER ANALYSIS AND DESIGN BY: RDT CHKD: JFF

NO. OF LIVE LOAD COMBINATIONS TO FOLLOW IS 20

```
1 0 0 0 0 0 0
2 0 0 0 0 0 0
3 0 0 0 0 0 0
4 0 0 0 0 0 0
5 0 0 0 0 0 0
2 3 0 0 0 0 0
2 5 0 0 0 0 0
4 5 0 0 0 0 0
4 7 0 0 0 0 0
5 7 0 0 0 0 0
5 9 0 0 0 0 0
2 3 7 0 0 0 0
2 5 7 0 0 0 0
4 5 7 0 0 0 0
4 6 7 0 0 0 0
1 3 5 7 0 0 0
2 3 5 7 0 0 0
1 3 5 7 9 0 0
2 4 6 8 9 0 0
1 3 6 810 0 0
```

A(1)	A(2)	A(3)	A(4)	A(5)	A(6)
1.5500	3.9600	14.6400	16.4500	0.0000	0.0000
1.5500	4.3300	7.3300	12.0000	16.4500	0.0000
1.5500	6.0000	10.6900	16.4500	0.0000	0.0000
1.5500	3.3700	14.0500	16.4500	0.0000	0.0000

HORIZONTAL LOADS (FORCE X - POSITIVE FROM LEFT TORIGHT

GR.2 WIND	GR.3 LOAD	TEMP. F+S	TEMP.RISE	GR.7 EQ	CENT.FORCE
72.190	55.950	-73.300	40.000	180.000	0.000

HORIZONTAL LOADS NORMAL TO PIER (FORCE Z)

GR.2 WIND	GR.3 LOAD	GR.7 EQ
65.350	50.190	215.000

MEMBER INCIDENCES

1	1	2
2	2	3
3	3	4
4	4	5
5	6	1
6	7	2
7	8	3
8	9	4
9	10	5

Sht 160 of 1

PRINTED IN U.S.A.

MEM.	DEPTH	WIDTH	A	B	C			SHAPE1	SHAPE2
1	5.0000	5.2500	0.0000	0.0000	0.0000	0	0	0.0000	0.0000
2	5.0000	5.2500	0.0000	0.0000	0.0000	0.0000		0.0000	0.0000
3	5.0000	5.2500	0.0000	0.0000	0.0000	0.0000		0.0000	0.0000
4	5.0000	5.2500	0.0000	0.0000	0.0000	0.0000		0.0000	0.0000
5	3.5000	0.0000	0.0000	0.0000	0.0000	0.0000		0.0000	-1.0000
6	3.5000	0.0000	0.0000	0.0000	0.0000	0.0000		0.0000	-1.0000
7	3.5000	0.0000	0.0000	0.0000	0.0000	0.0000		0.0000	-1.0000
8	3.5000	0.0000	0.0000	0.0000	0.0000	0.0000		0.0000	-1.0000
9	3.5000	0.0000	0.0000	0.0000	0.0000	0.0000		0.0000	-1.0000

CANTILEVER DESCRIPTION

JT.	A	B	C	D	WIDTH(E)	F
1	6.9200	2.0000	3.0000	1.0000	5.2500	-8.6700
5	6.9200	2.0000	3.0000	1.0000	5.2500	8.6700

Sht 16 of

PRINTED IN U.S.A.

JOB NO. 8080 THUNDERBIRD ROAD OVER DIVERSION CHANNEL PROGRAM P7310

PROBLEM NO. 2; PIER ANALYSIS AND DESIGN BY: RDT CHKD: JFF

RIGID FRAME BRIDGE PIER
LOADING CASE 1
(LIVE LOAD COMBINATION 1 + DEAD LOAD)

JOINT	JOINT DISPLACEMENTS IN INCHES,ROT.IN RADIANS X	Y	R	JOINT REACTIONS X	Y	R
1	-0.002812	-0.086317	0.000388	0.000	0.000	0.000
2	-0.002690	-0.058409	0.000012	0.000	0.000	0.000
3	-0.002569	-0.060529	0.000000	0.000	0.000	0.000
4	-0.002451	-0.063598	0.000026	0.000	0.000	0.000
5	-0.002330	-0.075806	-0.000362	0.000	0.000	0.000
6	0.000000	0.000000	0.000000	-7.088	1014.696	77.429
7	0.000000	0.000000	0.000000	0.032	694.417	-1.771
8	0.000000	0.000000	0.000000	0.235	718.748	-3.964
9	0.000000	0.000000	0.000000	-0.252	662.152	1.521
10	0.000000	0.000000	0.000000	7.074	894.065	-79.978

MEMBER END ACTIONS
THRUST AND SHEAR (K); MOMENTS (K-FT)

MEMBER NO.			THRUST	SHEAR	MOMENT	THRUST	SHEAR	MOMENT		
1	JOINT	1	-7.088	547.249	2589.158	7.088	364.215	-1197.939	JOINT	2
2	JOINT	2	-7.056	282.000	1197.235	7.056	151.175	-628.474	JOINT	3
3	JOINT	3	-6.821	519.371	632.348	6.821	276.104	-1091.349	JOINT	4
4	JOINT	4	-7.074	337.846	1084.437	7.074	457.629	-2379.853	JOINT	5
5	JOINT	6	1014.696	7.088	77.429	-966.494	-7.088	159.297	JOINT	1
6	JOINT	7	694.417	-0.032	-1.771	-646.215	0.032	0.705	JOINT	2
7	JOINT	8	718.748	-0.235	-3.964	-670.547	0.235	-3.874	JOINT	3
8	JOINT	9	662.152	0.252	1.521	-613.950	-0.252	6.912	JOINT	4
9	JOINT	10	894.065	-7.074	-79.978	-845.863	7.074	-156.279	JOINT	5

MOMENTS AND SHEARS BEAM NO 1

DIST.FROM LT.SUPT.	1.550	3.950	3.960	14.630	14.640	16.450
MOMENTS	-1745.529	-458.000	-457.340	7.209	3.709	-638.013
SHEARS	540.162	533.074	65.976	23.451	-350.040	-357.127

MOMENTS AND SHEARS BEAM NO 2

DIST.FROM LT.SUPT.	1.550	4.330	7.320	7.330	12.000	16.450
MOMENTS	-764.742	-12.038	761.543	760.457	208.410	-398.760
SHEARS	274.912	267.825	253.650	-108.650	-129.913	-144.088

MOMENTS AND SHEARS BEAM NO 3

DIST.FROM LT.SUPT.	0.010	1.550	6.000	10.680	10.690	16.450
MOMENTS	-627.154	-389.871	243.538	824.266	821.790	-667.995
SHEARS	519.371	149.984	135.809	114.546	-247.754	-269.016

MOMENTS AND SHEARS BEAM NO 4

DIST.FROM LT.SUPT.	1.550	3.360	3.370	14.040	14.050	16.450
MOMENTS	-565.383	28.616	28.230	-598.265	-602.696	-1675.135
SHEARS	330.759	323.671	-38.629	-81.154	-443.454	-450.541

Sht 162 of

PRINTED IN U.S.A.

NO.	JOINT	MOMENT	SHEAR
1	1	-2748.456	419.245
2	5	2536.132	388.234

Sht 163 of

PRINTED IN U.S.A.

JOB NO. 8080 THUNDERBIRD ROAD OVER DIVERSION CHANNEL PROGRAM P7310

PROBLEM NO. 2; PIER ANALYSIS AND DESIGN BY: RDT CHKD: JFF

RIGID FRAME BRIDGE PIER
LOADING CASE 2
(LIVE LOAD COMBINATION 2 + DEAD LOAD)

JOINT	JOINT DISPLACEMENTS IN INCHES,ROT.IN RADIANS X	Y	R	JOINT REACTIONS X	Y	R
1	-0.000663	-0.083527	0.000321	0.000	0.000	0.000
2	-0.000559	-0.060992	0.000021	0.000	0.000	0.000
3	-0.000450	-0.060826	0.000007	0.000	0.000	0.000
4	-0.000339	-0.055486	0.000025	0.000	0.000	0.000
5	-0.000220	-0.075828	-0.000363	0.000	0.000	0.000
6	0.000000	0.000000	0.000000	-6.013	982.671	66.592
7	0.000000	0.000000	0.000000	-0.352	724.059	3.629
8	0.000000	0.000000	0.000000	-0.090	722.157	0.769
9	0.000000	0.000000	0.000000	-0.439	660.871	4.712
10	0.000000	0.000000	0.000000	6.895	894.320	-76.876

MEMBER END ACTIONS
THRUST AND SHEAR (K); MOMENTS (K-FT)

MEMBER NO.			THRUST	SHEAR	MOMENT	THRUST	SHEAR	MOMENT		
1	JOINT	1	-6.013	540.668	2442.985	6.013	396.240	-1188.386	JOINT	2
2	JOINT	2	-6.365	279.616	1180.245	6.365	153.558	-654.386	JOINT	3
3	JOINT	3	-6.455	520.397	652.137	6.455	275.078	-1092.678	JOINT	4
4	JOINT	4	-6.895	337.591	1082.720	6.895	457.884	-2382.726	JOINT	5
5	JOINT	6	982.671	6.013	66.592	-934.469	-6.013	134.230	JOINT	1
6	JOINT	7	724.059	0.352	3.629	-675.857	-0.352	8.142	JOINT	2
7	JOINT	8	722.157	0.090	0.769	-673.955	-0.090	2.249	JOINT	3
8	JOINT	9	660.871	0.439	4.712	-612.669	-0.439	9.958	JOINT	4
9	JOINT	10	894.320	-6.895	-76.876	-846.118	6.895	-153.405	JOINT	5

MOMENTS AND SHEARS BEAM NO 1

DIST.FROM LT.SUPT.	1.550	3.950	3.960	14.630	14.640	16.450
MOMENTS	-1609.556	-337.821	-337.164	124.688	120.868	-578.821
SHEARS	533.581	526.493	65.723	23.198	-382.065	-389.153

MOMENTS AND SHEARS BEAM NO 2

DIST.FROM LT.SUPT.	1.550	4.330	7.320	7.330	12.000	16.450
MOMENTS	-751.446	-5.368	761.086	759.976	196.798	-420.978
SHEARS	272.529	265.441	251.266	-111.034	-132.296	-146.471

MOMENTS AND SHEARS BEAM NO 3

DIST.FROM LT.SUPT.	0.010	1.550	6.000	10.680	10.690	16.450
MOMENTS	-646.932	-408.070	229.902	815.430	812.964	-670.915
SHEARS	520.397	151.009	136.834	115.572	-246.728	-267.991

MOMENTS AND SHEARS BEAM NO 4

DIST.FROM LT.SUPT.	1.550	3.360	3.370	14.040	14.050	16.450
MOMENTS	-564.060	29.476	29.088	-600.128	-604.561	-1677.613
SHEARS	330.504	323.416	-38.884	-81.409	-443.709	-450.796

Sht 164 of

PRINTED IN U.S.A.

NO.	JOINT	MOMENT	SHEAR
1	1	-2577.215	393.801
2	5	2536.132	388.234

Sht 165 of

PRINTED IN U.S.A.

JOB NO. 8080 THUNDERBIRD ROAD OVER DIVERSION CHANNEL PROGRAM P7310

PROBLEM NO. 2; PIER ANALYSIS AND DESIGN BY: RDT CHKD: JFF

RIGID FRAME BRIDGE PIER
LOADING CASE 3
(LIVE LOAD COMBINATION 3 + DEAD LOAD)

	JOINT DISPLACEMENTS IN INCHES,ROT.IN RADIANS			JOINT REACTIONS		
JOINT	X	Y	R	X	Y	R
1	0.000449	-0.077489	0.000303	0.000	0.000	0.000
2	0.000548	-0.064583	-0.000018	0.000	0.000	0.000
3	0.000643	-0.063496	0.000036	0.000	0.000	0.000
4	0.000750	-0.053320	0.000027	0.000	0.000	0.000
5	0.000868	-0.075770	-0.000365	0.000	0.000	0.000
6	0.000000	0.000000	0.000000	-5.791	913.382	64.706
7	0.000000	0.000000	0.000000	0.292	765.271	-2.960
8	0.000000	0.000000	0.000000	-0.744	752.799	8.621
9	0.000000	0.000000	0.000000	-0.590	658.966	6.959
10	0.000000	0.000000	0.000000	6.832	893.659	-75.611

MEMBER END ACTIONS
THRUST AND SHEAR (K); MOMENTS (K-FT)

MEMBER NO.			THRUST	SHEAR	MOMENT	THRUST	SHEAR	MOMENT		
1	JOINT	1	-5.791	476.946	2411.048	5.791	413.391	-1125.349	JOINT	2
2	JOINT	2	-5.499	303.677	1132.134	5.499	181.635	-730.011	JOINT	3
3	JOINT	3	-6.243	522.962	713.785	6.243	272.513	-1108.152	JOINT	4
4	JOINT	4	-6.832	338.252	1095.418	6.832	457.223	-2383.539	JOINT	5
5	JOINT	6	913.382	5.791	64.706	-865.180	-5.791	128.704	JOINT	1
6	JOINT	7	765.271	-0.292	-2.960	-717.069	0.292	-6.785	JOINT	2
7	JOINT	8	752.799	0.744	8.621	-704.597	-0.744	16.226	JOINT	3
8	JOINT	9	658.966	0.590	6.959	-610.764	-0.590	12.734	JOINT	4
9	JOINT	10	893.659	-6.832	-75.611	-845.457	6.832	-152.593	JOINT	5

MOMENTS AND SHEARS BEAM NO 1

DIST.FROM LT.SUPT.	1.550	3.950	3.960	14.630	14.640	16.450
MOMENTS	-1676.388	-557.587	-556.611	245.525	241.533	-489.199
SHEARS	469.859	462.771	97.615	55.090	-399.216	-406.304

MOMENTS AND SHEARS BEAM NO 2

DIST.FROM LT.SUPT.	1.550	4.330	7.320	7.330	12.000	16.450
MOMENTS	-666.041	146.926	985.322	983.931	289.635	-453.083
SHEARS	296.590	289.502	275.327	-139.110	-160.373	-174.548

MOMENTS AND SHEARS BEAM NO 3

DIST.FROM LT.SUPT.	0.010	1.550	6.000	10.680	10.690	16.450
MOMENTS	-708.554	-465.741	183.646	781.179	778.739	-690.364
SHEARS	522.962	153.575	139.400	118.137	-244.163	-265.425

MOMENTS AND SHEARS BEAM NO 4

DIST.FROM LT.SUPT.	1.550	3.360	3.370	14.040	14.050	16.450
MOMENTS	-575.735	18.997	18.615	-603.555	-607.982	-1679.449
SHEARS	331.164	324.077	-38.223	-80.748	-443.048	-450.136

Sht 145 of 166

PRINTED IN U.S.A.

NO.	JOINT	MOMENT	SHEAR
1	1	-2539.751	388.234
2	5	2536.132	388.234

PRINTED IN U.S.A.

JOB NO. 8080 THUNDERBIRD ROAD OVER DIVERSION CHANNEL PROGRAM P7310

PROBLEM NO. 2; PIER ANALYSIS AND DESIGN BY: RDT CHKD: JFF

RIGID FRAME BRIDGE PIER
LOADING CASE 4
(LIVE LOAD COMBINATION 4 + DEAD LOAD)

JOINT	JOINT DISPLACEMENTS IN INCHES,ROT.IN RADIANS X	Y	R	JOINT REACTIONS X	Y	R
1	0.000540	-0.076353	0.000322	0.000	0.000	0.000
2	0.000646	-0.063864	-0.000054	0.000	0.000	0.000
3	0.000735	-0.065320	0.000048	0.000	0.000	0.000
4	0.000842	-0.055414	0.000031	0.000	0.000	0.000
5	0.000959	-0.075707	-0.000366	0.000	0.000	0.000
6	0.000000	0.000000	0.000000	-6.157	900.350	68.836
7	0.000000	0.000000	0.000000	0.960	757.022	-10.351
8	0.000000	0.000000	0.000000	-0.972	773.727	11.212
9	0.000000	0.000000	0.000000	-0.668	660.048	7.881
10	0.000000	0.000000	0.000000	6.837	892.930	-75.619

MEMBER END ACTIONS
THRUST AND SHEAR (K); MOMENTS (K-FT)

MEMBER NO.			THRUST	SHEAR	MOMENT	THRUST	SHEAR	MOMENT		
1	JOINT	1	-6.157	463.914	2402.931	6.157	376.862	-1154.278	JOINT	2
2	JOINT	2	-5.197	331.958	1176.000	5.197	198.167	-743.416	JOINT	3
3	JOINT	3	-6.169	527.359	722.153	6.169	272.865	-1122.814	JOINT	4
4	JOINT	4	-6.838	338.981	1108.382	6.838	456.494	-2383.378	JOINT	5
5	JOINT	6	900.350	6.157	68.836	-852.148	-6.157	136.820	JOINT	1
6	JOINT	7	757.022	-0.960	-10.351	-708.820	0.960	-21.722	JOINT	2
7	JOINT	8	773.727	0.972	11.212	-725.526	-0.972	21.263	JOINT	3
8	JOINT	9	660.048	0.668	7.881	-611.846	-0.668	14.433	JOINT	4
9	JOINT	10	892.930	-6.837	-75.619	-844.728	6.837	-152.753	JOINT	5

MOMENTS AND SHEARS BEAM NO 1

DIST.FROM LT.SUPT.	1.550	3.950	3.960	14.630	14.640	16.450
MOMENTS	-1688.471	-600.945	-600.071	93.491	89.864	-574.750
SHEARS	456.827	449.739	87.439	44.914	-362.687	-369.774

MOMENTS AND SHEARS BEAM NO 2

DIST.FROM LT.SUPT.	1.550	4.330	7.320	7.330	12.000	16.450
MOMENTS	-666.072	225.515	1148.471	1146.915	375.417	-440.866
SHEARS	324.871	317.783	303.608	-155.642	-176.904	-191.079

MOMENTS AND SHEARS BEAM NO 3

DIST.FROM LT.SUPT.	0.010	1.550	6.000	10.680	10.690	16.450
MOMENTS	-716.878	-474.608	173.211	769.096	766.652	-704.480
SHEARS	527.359	153.222	139.047	117.785	-244.515	-265.778

MOMENTS AND SHEARS BEAM NO 4

DIST.FROM LT.SUPT.	1.550	3.360	3.370	14.040	14.050	16.450
MOMENTS	-587.568	8.483	8.108	-606.283	-610.702	-1680.419
SHEARS	331.893	324.806	-37.494	-80.019	-442.319	-449.407

PRINTED IN U.S.A.

NO.	JOINT	MOMENT	SHEAR
1	1	-2539.751	388.234
2	5	2536.132	388.234

Sh+ 169 of

PRINTED IN U.S.A.

JOB NO. 8080 THUNDERBIRD ROAD OVER DIVERSION CHANNEL PROGRAM P7310

PROBLEM NO. 2; PIER ANALYSIS AND DESIGN BY: RDT CHKD: JFF

RIGID FRAME BRIDGE PIER
LOADING CASE 5
(LIVE LOAD COMBINATION 5 + DEAD LOAD)

JOINT	JOINT DISPLACEMENTS IN INCHES, ROT. IN RADIANS X	Y	R	JOINT REACTIONS X	Y	R
1	-0.000068	-0.075423	0.000358	0.000	0.000	0.000
2	0.000048	-0.058972	-0.000066	0.000	0.000	0.000
3	0.000144	-0.069391	0.000011	0.000	0.000	0.000
4	0.000243	-0.057445	0.000055	0.000	0.000	0.000
5	0.000360	-0.075427	-0.000362	0.000	0.000	0.000
6	0.000000	0.000000	0.000000	-6.766	889.675	75.288
7	0.000000	0.000000	0.000000	1.245	700.876	-13.835
8	0.000000	0.000000	0.000000	-0.231	820.447	2.650
9	0.000000	0.000000	0.000000	-1.070	683.357	12.035
10	0.000000	0.000000	0.000000	6.821	889.721	-75.756

MEMBER END ACTIONS
THRUST AND SHEAR (K); MOMENTS (K-FT)

MEMBER NO.			THRUST	SHEAR	MOMENT	THRUST	SHEAR	MOMENT		
1	JOINT	1	-6.766	453.239	2389.068	6.766	342.236	-1179.900	JOINT	2
2	JOINT	2	-5.521	310.439	1207.646	5.521	159.573	-520.399	JOINT	3
3	JOINT	3	-5.752	612.672	515.326	5.752	292.966	-1190.498	JOINT	4
4	JOINT	4	-6.822	342.189	1166.812	6.822	453.286	-2384.052	JOINT	5
5	JOINT	6	889.675	6.766	75.288	-841.473	-6.766	150.684	JOINT	1
6	JOINT	7	700.876	-1.245	-13.835	-652.674	1.245	-27.746	JOINT	2
7	JOINT	8	820.447	0.231	2.650	-772.245	-0.231	5.073	JOINT	3
8	JOINT	9	683.357	1.070	12.035	-635.156	-1.070	23.687	JOINT	4
9	JOINT	10	889.721	-6.821	-75.756	-841.520	6.821	-152.080	JOINT	5

MOMENTS AND SHEARS BEAM NO 1

DIST. FROM LT. SUPT.	1.550	3.950	3.960	14.630	14.640	16.450
MOMENTS	-1691.154	-629.249	-628.481	-48.821	-52.102	-654.042
SHEARS	446.152	439.064	76.764	34.239	-328.061	-335.148

MOMENTS AND SHEARS BEAM NO 2

DIST. FROM LT. SUPT.	1.550	4.330	7.320	7.330	12.000	16.450
MOMENTS	-731.073	100.690	959.303	958.133	366.870	-277.669
SHEARS	303.351	296.264	282.089	-117.048	-138.310	-152.485

MOMENTS AND SHEARS BEAM NO 3

DIST. FROM LT. SUPT.	0.010	1.550	6.000	10.680	10.690	16.450
MOMENTS	-509.198	-285.435	308.908	848.553	845.908	-741.006
SHEARS	612.672	141.205	127.030	105.768	-264.616	-285.879

MOMENTS AND SHEARS BEAM NO 4

DIST. FROM LT. SUPT.	1.550	3.360	3.370	14.040	14.050	16.450
MOMENTS	-641.025	-39.166	-39.508	-619.662	-624.050	-1686.065
SHEARS	335.102	328.014	-34.286	-76.811	-439.111	-446.198

PRINTED IN U.S.A.

NO.	JOINT	MOMENT	SHEAR
1	1	-2539.751	388.234
2	5	2536.132	388.234

PRINTED IN U.S.A.

JOB NO. 8080 THUNDERBIRD ROAD OVER DIVERSION CHANNEL PROGRAM P7310

PROBLEM NO. 2; PIER ANALYSIS AND DESIGN BY: RDT CHKD: JFF

RIGID FRAME BRIDGE PIER
LOADING CASE 6
(LIVE LOAD COMBINATION 6 + DEAD LOAD)

JOINT DISPLACEMENTS IN INCHES,ROT.IN RADIANS — JOINT REACTIONS

JOINT	X	Y	R	X	Y	R
1	0.000047	-0.085151	0.000260	0.000	0.000	0.000
2	0.000132	-0.069959	0.000030	0.000	0.000	0.000
3	0.000227	-0.063450	0.000044	0.000	0.000	0.000
4	0.000337	-0.055124	0.000025	0.000	0.000	0.000
5	0.000455	-0.075784	-0.000365	0.000	0.000	0.000
6	0.000000	0.000000	0.000000	-4.937	1001.312	54.985
7	0.000000	0.000000	0.000000	-0.579	826.968	6.515
8	0.000000	0.000000	0.000000	-0.848	752.263	9.564
9	0.000000	0.000000	0.000000	-0.515	656.720	5.908
10	0.000000	0.000000	0.000000	6.879	893.815	-76.341

MEMBER END ACTIONS
THRUST AND SHEAR (K); MOMENTS (K-FT)

MEMBER NO.		THRUST	SHEAR	MOMENT	THRUST	SHEAR	MOMENT	
1	JOINT 1	-4.937	559.309	2467.320	4.937	472.462	-1227.370	JOINT 2
2	JOINT 2	-5.516	306.304	1214.548	5.516	179.008	-765.138	JOINT 3
3	JOINT 3	-6.363	525.053	746.368	6.363	270.422	-1103.097	JOINT 4
4	JOINT 4	-6.879	338.096	1091.813	6.879	457.379	-2382.730	JOINT 5
5	JOINT 6	1001.312	4.937	54.985	-953.110	-4.937	109.895	JOINT 1
6	JOINT 7	826.968	0.579	6.515	-778.766	-0.579	12.822	JOINT 2
7	JOINT 8	752.263	0.848	9.564	-704.061	-0.848	18.770	JOINT 3
8	JOINT 9	656.720	0.515	5.908	-608.518	-0.515	11.284	JOINT 4
9	JOINT 10	893.815	-6.879	-76.341	-845.613	6.879	-153.401	JOINT 5

MOMENTS AND SHEARS BEAM NO 1

DIST.FROM LT.SUPT.	1.550	3.950	3.960	14.630	14.640	16.450
MOMENTS	-1604.998	-288.524	-287.709	342.569	337.987	-499.662
SHEARS	552.222	545.134	81.508	38.983	-458.286	-465.374

MOMENTS AND SHEARS BEAM NO 2

DIST.FROM LT.SUPT.	1.550	4.330	7.320	7.330	12.000	16.450
MOMENTS	-744.384	75.887	922.138	920.774	238.745	-492.282
SHEARS	299.217	292.129	277.954	-136.483	-157.746	-171.921

MOMENTS AND SHEARS BEAM NO 3

DIST.FROM LT.SUPT.	0.010	1.550	6.000	10.680	10.690	16.450
MOMENTS	-741.117	-495.084	163.608	770.928	768.508	-688.550
SHEARS	525.053	155.666	141.491	120.228	-242.072	-263.334

MOMENTS AND SHEARS BEAM NO 4

DIST.FROM LT.SUPT.	1.550	3.360	3.370	14.040	14.050	16.450
MOMENTS	-572.371	22.079	21.696	-602.132	-606.561	-1678.400
SHEARS	331.009	323.921	-38.379	-80.904	-443.204	-450.291

PRINTED IN U.S.A.

NO.	JOINT	MOMENT	SHEAR
1	1	-2577.215	393.801
2	5	2536.132	388.234

Sht 173 of —

PRINTED IN U.S.A.

JOB NO. 8080 THUNDERBIRD ROAD OVER DIVERSION CHANNEL PROGRAM P7310

PROBLEM NO. 2; PIER ANALYSIS AND DESIGN BY: RDT CHKD: JFF

RIGID FRAME BRIDGE PIER
LOADING CASE 7
(LIVE LOAD COMBINATION 7 + DEAD LOAD)

JOINT	JOINT DISPLACEMENTS IN INCHES,ROT.IN RADIANS X	Y	R	JOINT REACTIONS X	Y	R
1	-0.000470	-0.083085	0.000314	0.000	0.000	0.000
2	-0.000368	-0.064348	-0.000018	0.000	0.000	0.000
3	-0.000273	-0.069344	0.000019	0.000	0.000	0.000
4	-0.000171	-0.057250	0.000053	0.000	0.000	0.000
5	-0.000053	-0.075441	-0.000362	0.000	0.000	0.000
6	0.000000	0.000000	0.000000	-5.911	977.605	65.567
7	0.000000	0.000000	0.000000	0.374	762.574	-4.359
8	0.000000	0.000000	0.000000	-0.336	819.911	3.593
9	0.000000	0.000000	0.000000	-0.995	681.111	10.983
10	0.000000	0.000000	0.000000	6.867	889.877	-76.486

MEMBER END ACTIONS
THRUST AND SHEAR (K); MOMENTS (K-FT)

MEMBER NO.			THRUST	SHEAR	MOMENT	THRUST	SHEAR	MOMENT		
1	JOINT	1	-5.912	535.603	2445.340	5.912	401.306	-1281.922	JOINT	2
2	JOINT	2	-5.537	313.066	1290.061	5.537	156.945	-555.526	JOINT	3
3	JOINT	3	-5.873	614.763	547.910	5.873	290.875	-1185.444	JOINT	4
4	JOINT	4	-6.868	342.034	1163.207	6.868	453.441	-2383.243	JOINT	5
5	JOINT	6	977.605	5.911	65.567	-929.403	-5.911	131.875	JOINT	1
6	JOINT	7	762.574	-0.374	-4.359	-714.372	0.374	-8.138	JOINT	2
7	JOINT	8	819.911	0.336	3.593	-771.709	-0.336	7.616	JOINT	3
8	JOINT	9	681.111	0.995	10.983	-632.909	-0.995	22.237	JOINT	4
9	JOINT	10	889.877	-6.867	-76.486	-841.675	6.867	-152.888	JOINT	5

MOMENTS AND SHEARS BEAM NO 1

DIST.FROM LT.SUPT.	1.550	3.950	3.960	14.630	14.640	16.450
MOMENTS	-1619.762	-360.185	-359.579	48.223	44.352	-664.505
SHEARS	528.515	521.428	60.658	18.133	-387.131	-394.218

MOMENTS AND SHEARS BEAM NO 2

DIST.FROM LT.SUPT.	1.550	4.330	7.320	7.330	12.000	16.450
MOMENTS	-809.416	29.651	896.119	894.975	315.980	-316.869
SHEARS	305.978	298.891	284.716	-114.421	-135.683	-149.858

MOMENTS AND SHEARS BEAM NO 3

DIST.FROM LT.SUPT.	0.010	1.550	6.000	10.680	10.690	16.450
MOMENTS	-541.761	-314.778	288.870	838.300	835.676	-739.194
SHEARS	614.763	143.296	129.121	107.859	-262.525	-283.788

MOMENTS AND SHEARS BEAM NO 4

DIST.FROM LT.SUPT.	1.550	3.360	3.370	14.040	14.050	16.450
MOMENTS	-637.661	-36.083	-36.427	-618.239	-622.628	-1685.017
SHEARS	334.947	327.859	-34.441	-76.966	-439.266	-446.353

Sht 174 of

PRINTED IN U.S.A.

NO.	JOINT	MOMENT	SHEAR
1	1	-2577.215	393.801
2	5	2536.132	388.234

Sht 175 of

PRINTED IN U.S.A.

RIGID FRAME BRIDGE PIER
LOADING CASE 8
(LIVE LOAD COMBINATION 8 + DEAD LOAD)

JOINT	JOINT DISPLACEMENTS IN INCHES,ROT.IN RADIANS X	Y	R	JOINT REACTIONS X	Y	R
1	0.000733	-0.075912	0.000316	0.000	0.000	0.000
2	0.000837	-0.067220	-0.000093	0.000	0.000	0.000
3	0.000913	-0.073838	0.000060	0.000	0.000	0.000
4	0.001009	-0.057178	0.000060	0.000	0.000	0.000
5	0.001126	-0.075320	-0.000365	0.000	0.000	0.000
6	0.000000	0.000000	0.000000	-6.056	895.285	67.811
7	0.000000	0.000000	0.000000	1.687	795.537	-18.340
8	0.000000	0.000000	0.000000	-1.218	871.481	14.036
9	0.000000	0.000000	0.000000	-1.223	680.288	14.152
10	0.000000	0.000000	0.000000	6.810	888.487	-75.229

MEMBER END ACTIONS
THRUST AND SHEAR (K); MOMENTS (K-FT)

MEMBER NO.			THRUST	SHEAR	MOMENT	THRUST	SHEAR	MOMENT		
1	JOINT	1	-6.056	458.849	2405.287	6.056	381.927	-1247.814	JOINT	2
2	JOINT	2	-4.369	365.407	1285.816	4.369	201.554	-644.557	JOINT	3
3	JOINT	3	-5.587	621.725	617.926	5.587	288.662	-1215.579	JOINT	4
4	JOINT	4	-6.810	343.423	1188.868	6.810	452.052	-2383.896	JOINT	5
5	JOINT	6	895.285	6.056	67.811	-847.083	-6.056	134.465	JOINT	1
6	JOINT	7	795.537	-1.687	-18.340	-747.335	1.687	-38.001	JOINT	2
7	JOINT	8	871.481	1.218	14.036	-823.279	-1.218	26.631	JOINT	3
8	JOINT	9	680.288	1.223	14.152	-632.086	-1.223	26.711	JOINT	4
9	JOINT	10	888.487	-6.810	-75.229	-840.286	6.810	-152.235	JOINT	5

MOMENTS AND SHEARS BEAM NO 1

DIST.FROM LT.SUPT.	1.550	3.950	3.960	14.630	14.640	16.450
MOMENTS	-1698.678	-623.310	-622.486	17.026	13.349	-660.433
SHEARS	451.761	444.674	82.374	39.849	-367.752	-374.840

MOMENTS AND SHEARS BEAM NO 2

DIST.FROM LT.SUPT.	1.550	4.330	7.320	7.330	12.000	16.450
MOMENTS	-724.041	260.535	1283.504	1281.914	494.599	-336.756
SHEARS	358.320	351.232	337.057	-159.029	-180.291	-194.466

MOMENTS AND SHEARS BEAM NO 3

DIST.FROM LT.SUPT.	0.010	1.550	6.000	10.680	10.690	16.450
MOMENTS	-611.707	-381.316	232.180	791.967	789.365	-772.759
SHEARS	621.725	145.509	131.334	110.072	-260.312	-281.575

MOMENTS AND SHEARS BEAM NO 4

DIST.FROM LT.SUPT.	1.550	3.360	3.370	14.040	14.050	16.450
MOMENTS	-661.169	-57.076	-57.406	-624.394	-628.769	-1687.823
SHEARS	336.336	329.248	-33.052	-75.577	-437.877	-444.964

PRINTED IN U.S.A.

NO.	JOINT	MOMENT	SHEAR
1	1	-2539.751	388.234
2	5	2536.132	388.234

Sht 177 of

PRINTED IN U.S.A.

RIGID FRAME BRIDGE PIER
LOADING CASE 9
(LIVE LOAD COMBINATION 9 + DEAD LOAD)

JOINT	JOINT DISPLACEMENTS IN INCHES,ROT.IN RADIANS X	Y	R	JOINT REACTIONS X	Y	R
1	-0.000226	-0.076246	0.000326	0.000	0.000	0.000
2	-0.000120	-0.063597	-0.000058	0.000	0.000	0.000
3	-0.000033	-0.069770	-0.000001	0.000	0.000	0.000
4	0.000053	-0.063662	0.000058	0.000	0.000	0.000
5	0.000158	-0.076193	-0.000324	0.000	0.000	0.000
6	0.000000	0.000000	0.000000	-6.146	899.115	68.310
7	0.000000	0.000000	0.000000	1.114	753.954	-12.469
8	0.000000	0.000000	0.000000	0.014	824.791	-0.177
9	0.000000	0.000000	0.000000	-1.111	754.703	12.395
10	0.000000	0.000000	0.000000	6.129	898.514	-68.148

MEMBER END ACTIONS
THRUST AND SHEAR (K); MOMENTS (K-FT)

MEMBER NO.			THRUST	SHEAR	MOMENT	THRUST	SHEAR	MOMENT		
1	JOINT	1	-6.146	462.679	2402.775	6.146	378.097	-1176.354	JOINT	2
2	JOINT	2	-5.032	327.655	1201.102	5.032	202.469	-845.969	JOINT	3
3	JOINT	3	-5.018	574.120	846.270	5.018	327.833	-1200.902	JOINT	4
4	JOINT	4	-6.129	378.668	1176.196	6.129	462.078	-2399.585	JOINT	5
5	JOINT	6	899.115	6.146	68.310	-850.913	-6.146	136.976	JOINT	1
6	JOINT	7	753.954	-1.114	-12.469	-705.752	1.114	-24.748	JOINT	2
7	JOINT	8	824.791	-0.014	-0.177	-776.590	0.014	-0.300	JOINT	3
8	JOINT	9	754.703	1.111	12.395	-706.501	-1.111	24.707	JOINT	4
9	JOINT	10	898.514	-6.129	-68.148	-850.312	6.129	-136.546	JOINT	5

MOMENTS AND SHEARS BEAM NO 1

DIST.FROM LT.SUPT.	1.550	3.950	3.960	14.630	14.640	16.450
MOMENTS	-1690.229	-605.668	-604.806	75.577	71.938	-594.911
SHEARS	455.592	448.504	86.204	43.679	-363.922	-371.010

MOMENTS AND SHEARS BEAM NO 2

DIST.FROM LT.SUPT.	1.550	4.330	7.320	7.330	12.000	16.450
MOMENTS	-697.844	181.782	1091.872	1090.273	298.681	-536.749
SHEARS	320.568	313.480	299.305	-159.944	-181.207	-195.382

MOMENTS AND SHEARS BEAM NO 3

DIST.FROM LT.SUPT.	0.010	1.550	6.000	10.680	10.690	16.450
MOMENTS	-840.527	-533.609	301.021	1093.371	1090.378	-697.368
SHEARS	574.120	195.202	181.027	159.765	-299.483	-320.745

MOMENTS AND SHEARS BEAM NO 4

DIST.FROM LT.SUPT.	1.550	3.360	3.370	14.040	14.050	16.450
MOMENTS	-593.868	74.018	73.588	-600.379	-604.855	-1687.972
SHEARS	371.581	364.493	-43.078	-85.603	-447.903	-454.990

PRINTED IN U.S.A.

NO.	JOINT	MOMENT	SHEAR
1	1	-2539.751	388.234
2	5	2536.132	388.234

PRINTED IN U.S.A.

JOB NO. 8080 THUNDERBIRD ROAD OVER DIVERSION CHANNEL PROGRAM P7310

PROBLEM NO. 2; PIER ANALYSIS AND DESIGN BY: RDT CHKD: JFF

RIGID FRAME BRIDGE PIER
LOADING CASE 10
(LIVE LOAD COMBINATION 10 + DEAD LOAD)

JOINT	JOINT DISPLACEMENTS IN INCHES,ROT.IN RADIANS X	Y	R	JOINT REACTIONS X	Y	R
1	-0.000834	-0.075316	0.000361	0.000	0.000	0.000
2	-0.000717	-0.058705	-0.000070	0.000	0.000	0.000
3	-0.000625	-0.073841	-0.000037	0.000	0.000	0.000
4	-0.000546	-0.065693	0.000083	0.000	0.000	0.000
5	-0.000441	-0.075914	-0.000321	0.000	0.000	0.000
6	0.000000	0.000000	0.000000	-6.755	888.440	74.762
7	0.000000	0.000000	0.000000	1.399	697.809	-15.952
8	0.000000	0.000000	0.000000	0.755	871.511	-8.739
9	0.000000	0.000000	0.000000	-1.512	778.013	16.549
10	0.000000	0.000000	0.000000	6.112	895.305	-68.284

MEMBER END ACTIONS
THRUST AND SHEAR (K); MOMENTS (K-FT)

MEMBER NO.			THRUST	SHEAR	MOMENT	THRUST	SHEAR	MOMENT		
1	JOINT	1	-6.755	452.004	2388.911	6.755	343.471	-1201.977	JOINT	2
2	JOINT	2	-5.356	306.136	1232.749	5.356	163.875	-622.952	JOINT	3
3	JOINT	3	-4.600	659.434	639.443	4.600	347.934	-1268.587	JOINT	4
4	JOINT	4	-6.113	381.877	1234.627	6.113	458.869	-2400.258	JOINT	5
5	JOINT	6	888.440	6.755	74.762	-840.238	-6.755	150.840	JOINT	1
6	JOINT	7	697.809	-1.399	-15.952	-649.607	1.399	-30.772	JOINT	2
7	JOINT	8	871.511	-0.755	-8.739	-823.309	0.755	-16.491	JOINT	3
8	JOINT	9	778.013	1.512	16.549	-729.811	-1.512	33.960	JOINT	4
9	JOINT	10	895.305	-6.112	-68.284	-847.103	6.112	-135.873	JOINT	5

MOMENTS AND SHEARS BEAM NO 1

DIST.FROM LT.SUPT.	1.550	3.950	3.960	14.630	14.640	16.450
MOMENTS	-1692.912	-633.971	-633.216	-66.735	-70.028	-674.204
SHEARS	444.917	437.829	75.529	33.001	-329.296	-336.383

MOMENTS AND SHEARS BEAM NO 2

DIST.FROM LT.SUPT.	1.550	4.330	7.320	7.330	12.000	16.450
MOMENTS	-762.845	56.957	902.704	901.491	290.134	-373.552
SHEARS	299.048	291.961	277.786	-121.350	-142.613	-156.788

MOMENTS AND SHEARS BEAM NO 3

DIST.FROM LT.SUPT.	0.010	1.550	6.000	10.680	10.690	16.450
MOMENTS	-632.847	-344.435	436.718	1172.828	1169.633	-733.895
SHEARS	659.434	183.185	169.010	147.747	-319.584	-340.847

MOMENTS AND SHEARS BEAM NO 4

DIST.FROM LT.SUPT.	1.550	3.360	3.370	14.040	14.050	16.450
MOMENTS	-647.324	26.370	25.971	-613.759	-618.201	-1693.618
SHEARS	374.789	367.702	-39.869	-82.394	-444.694	-451.782

Sht 180 of

PRINTED IN U.S.A.

NO.	JOINT	MOMENT	SHEAR
1	1	-2539.751	388.234
2	5	2536.132	388.234

Sht 181 of

PRINTED IN U.S.A.

RIGID FRAME BRIDGE PIER
LOADING CASE 11
(LIVE LOAD COMBINATION 11 + DEAD LOAD)

JOINT	JOINT DISPLACEMENTS IN INCHES,ROT.IN RADIANS X	Y	R	JOINT REACTIONS X	Y	R
1	0.000342	-0.075437	0.000358	0.000	0.000	0.000
2	0.000460	-0.058776	-0.000064	0.000	0.000	0.000
3	0.000557	-0.069345	0.000004	0.000	0.000	0.000
4	0.000656	-0.062826	0.000007	0.000	0.000	0.000
5	0.000759	-0.083085	-0.000319	0.000	0.000	0.000
6	0.000000	0.000000	0.000000	-6.811	889.831	76.014
7	0.000000	0.000000	0.000000	1.170	698.628	-12.787
8	0.000000	0.000000	0.000000	-0.126	819.917	1.699
9	0.000000	0.000000	0.000000	-0.198	745.104	2.552
10	0.000000	0.000000	0.000000	5.966	977.598	-66.019

MEMBER END ACTIONS
THRUST AND SHEAR (K); MOMENTS (K-FT)

MEMBER NO.			THRUST	SHEAR	MOMENT	THRUST	SHEAR	MOMENT		
1	JOINT	1	-6.811	453.395	2388.263	6.811	342.080	-1176.294	JOINT	2
2	JOINT	2	-5.641	308.346	1202.594	5.641	161.665	-553.018	JOINT	3
3	JOINT	3	-5.767	610.050	550.498	5.767	295.589	-1272.871	JOINT	4
4	JOINT	4	-5.966	401.313	1268.802	5.966	535.584	-2440.376	JOINT	5
5	JOINT	6	889.831	6.811	76.014	-841.629	-6.811	151.488	JOINT	1
6	JOINT	7	698.628	-1.170	-12.787	-650.426	1.170	-26.300	JOINT	2
7	JOINT	8	819.917	0.126	1.699	-771.716	-0.126	2.520	JOINT	3
8	JOINT	9	745.104	0.198	2.552	-696.902	-0.198	4.069	JOINT	4
9	JOINT	10	977.598	-5.966	-66.019	-929.396	5.966	-133.236	JOINT	5

MOMENTS AND SHEARS BEAM NO 1

DIST.FROM LT.SUPT.	1.550	3.950	3.960	14.630	14.640	16.450
MOMENTS	-1690.108	-627.829	-627.060	-45.740	-49.018	-650.677
SHEARS	446.307	439.220	76.920	34.395	-327.905	-334.993

MOMENTS AND SHEARS BEAM NO 2

DIST.FROM LT.SUPT.	1.550	4.330	7.320	7.330	12.000	16.450
MOMENTS	-729.265	96.681	949.036	947.845	346.808	-307.044
SHEARS	301.258	294.171	279.996	-119.140	-140.403	-154.578

MOMENTS AND SHEARS BEAM NO 3

DIST.FROM LT.SUPT.	0.010	1.550	6.000	10.680	10.690	16.450
MOMENTS	-544.396	-324.671	258.003	785.375	782.704	-819.314
SHEARS	610.050	138.583	124.408	103.145	-267.239	-288.501

MOMENTS AND SHEARS BEAM NO 4

DIST.FROM LT.SUPT.	1.550	3.360	3.370	14.040	14.050	16.450
MOMENTS	-651.374	57.500	57.319	-350.084	-355.293	-1614.826
SHEARS	394.226	387.138	-18.095	-60.620	-521.409	-528.497

PRINTED IN U.S.A.

NO.	JOINT	MOMENT	SHEAR
1	1	-2539.751	388.234
2	5	2573.613	393.811

Sht 183 of

PRINTED IN U.S.A.

JOB NO. 8080 THUNDERBIRD ROAD OVER DIVERSION CHANNEL PROGRAM P7310

PROBLEM NO. 2; PIER ANALYSIS AND DESIGN BY: RDT CHKD: JFF

RIGID FRAME BRIDGE PIER
LOADING CASE 12
(LIVE LOAD COMBINATION 12 + DEAD LOAD)

JOINT DISPLACEMENTS IN INCHES,ROT.IN RADIANS — JOINT REACTIONS

JOINT	X	Y	R	X	Y	R
1	-0.000673	-0.084125	0.000274	0.000	0.000	0.000
2	-0.000585	-0.068284	0.000020	0.000	0.000	0.000
3	-0.000491	-0.067197	-0.000004	0.000	0.000	0.000
4	-0.000399	-0.062603	0.000050	0.000	0.000	0.000
5	-0.000292	-0.076225	-0.000328	0.000	0.000	0.000
6	0.000000	0.000000	0.000000	-5.120	989.543	56.644
7	0.000000	0.000000	0.000000	-0.331	807.746	3.373
8	0.000000	0.000000	0.000000	0.126	795.264	-1.660
9	0.000000	0.000000	0.000000	-0.913	742.549	9.956
10	0.000000	0.000000	0.000000	6.237	898.875	-69.598

MEMBER END ACTIONS
THRUST AND SHEAR (K); MOMENTS (K-FT)

MEMBER NO.		THRUST	SHEAR	MOMENT	THRUST	SHEAR	MOMENT	
1	JOINT 1	-5.120	548.097	2459.119	5.120	460.044	-1233.138	JOINT 2
2	JOINT 2	-5.450	299.500	1225.469	5.450	180.598	-842.847	JOINT 3
3	JOINT 3	-5.324	566.464	845.392	5.324	320.568	-1172.840	JOINT 4
4	JOINT 4	-6.237	373.780	1152.298	6.237	462.439	-2397.397	JOINT 5
5	JOINT 6	989.543	5.120	56.644	-941.341	-5.120	114.350	JOINT 1
6	JOINT 7	807.746	0.331	3.373	-759.545	-0.331	7.670	JOINT 2
7	JOINT 8	795.264	-0.126	-1.660	-747.062	0.126	-2.544	JOINT 3
8	JOINT 9	742.549	0.913	9.956	-694.347	-0.913	20.543	JOINT 4
9	JOINT 10	898.875	-6.237	-69.598	-850.673	6.237	-138.734	JOINT 5

MOMENTS AND SHEARS BEAM NO 1

DIST.FROM LT.SUPT.	1.550	3.950	3.960	14.630	14.640	16.450
MOMENTS	-1614.175	-324.611	-323.806	294.954	290.496	-524.677
SHEARS	541.010	533.922	80.429	37.904	-445.869	-452.956

MOMENTS AND SHEARS BEAM NO 2

DIST.FROM LT.SUPT.	1.550	4.330	7.320	7.330	12.000	16.450
MOMENTS	-765.851	35.505	861.412	860.032	170.577	-567.526
SHEARS	292.413	285.325	271.150	-138.073	-159.336	-173.511

MOMENTS AND SHEARS BEAM NO 3

DIST.FROM LT.SUPT.	0.010	1.550	6.000	10.680	10.690	16.450
MOMENTS	-839.726	-536.548	287.271	1068.251	1065.330	-680.568
SHEARS	566.464	192.773	178.598	157.335	-292.218	-313.480

MOMENTS AND SHEARS BEAM NO 4

DIST.FROM LT.SUPT.	1.550	3.360	3.370	14.040	14.050	16.450
MOMENTS	-577.546	81.493	81.059	-596.761	-601.239	-1685.224
SHEARS	366.692	359.605	-43.439	-85.964	-448.264	-455.351

Sht 184 of

PRINTED IN U.S.A.

NO.	JOINT	MOMENT	SHEAR
1	1	-2573.468	393.244
2	5	2536.132	388.234

Sht 185 of

PRINTED IN U.S.A.

JOB NO. 8080 THUNDERBIRD ROAD OVER DIVERSION CHANNE' PROGRAM P7310

PROBLEM NO. 2: PIER ANALYSIS AND DESIGN BY: RDT CHKD: JFF

RIGID FRAME BRIDGE PIER
LOADING CASE 13
(LIVE LOAD COMBINATION 13 + DEAD LOAD)

JOINT	JOINT DISPLACEMENTS IN INCHES,ROT.IN RADIANS X	Y	R	JOINT REACTIONS X	Y	R
1	-0.001138	-0.082266	0.000322	0.000	0.000	0.000
2	-0.001035	-0.063234	-0.000023	0.000	0.000	0.000
3	-0.000941	-0.072502	-0.000026	0.000	0.000	0.000
4	-0.000857	-0.064516	0.000075	0.000	0.000	0.000
5	-0.000749	-0.075916	-0.000325	0.000	0.000	0.000
6	0.000000	0.000000	0.000000	-5.997	968.207	66.168
7	0.000000	0.000000	0.000000	0.527	749.792	-6.414
8	0.000000	0.000000	0.000000	0.587	856.147	-7.033
9	0.000000	0.000000	0.000000	-1.345	764.501	14.524
10	0.000000	0.000000	0.000000	6.228	895.331	-69.728

MEMBER END ACTIONS
THRUST AND SHEAR (K); MOMENTS (K-FT)

MEMBER NO.			THRUST	SHEAR	MOMENT	THRUST	SHEAR	MOMENT		
1	JOINT	1	-5.997	526.761	2439.337	5.997	396.004	-1282.235	JOINT	2
2	JOINT	2	-5.470	305.586	1293.430	5.470	160.742	-654.197	JOINT	3
3	JOINT	3	-4.882	647.203	666.780	4.882	338.976	-1246.952	JOINT	4
4	JOINT	4	-6.228	377.324	1216.552	6.228	458.895	-2397.859	JOINT	5
5	JOINT	6	968.207	5.997	66.168	-920.005	-5.997	134.132	JOINT	1
6	JOINT	7	749.792	-0.527	-6.414	-701.590	0.527	-11.195	JOINT	2
7	JOINT	8	856.147	-0.587	-7.033	-807.945	0.587	-12.582	JOINT	3
8	JOINT	9	764.501	1.345	14.524	-716.300	-1.345	30.400	JOINT	4
9	JOINT	10	895.331	-6.228	-69.728	-847.129	6.228	-138.273	JOINT	5

MOMENTS AND SHEARS BEAM NO 1

DIST.FROM LT.SUPT.	1.550	3.950	3.960	14.630	14.640	16.450
MOMENTS	-1627.464	-389.106	-388.489	30.042	26.224	-673.037
SHEARS	519.674	512.586	61.663	19.138	-381.829	-388.916

MOMENTS AND SHEARS BEAM NO 2

DIST.FROM LT.SUPT.	1.550	4.330	7.320	7.330	12.000	16.450
MOMENTS	-824.379	-6.107	837.995	836.813	240.089	-409.654
SHEARS	298.498	291.411	277.236	-118.217	-139.479	-153.654

MOMENTS AND SHEARS BEAM NO 3

DIST.FROM LT.SUPT.	0.010	1.550	6.000	10.680	10.690	16.450
MOMENTS	-660.306	-374.273	400.006	1128.886	1125.782	-726.146
SHEARS	647.203	181.640	167.465	146.203	-310.626	-331.888

MOMENTS AND SHEARS BEAM NO 4

DIST.FROM LT.SUPT.	1.550	3.360	3.370	14.040	14.050	16.450
MOMENTS	-636.307	29.146	28.748	-611.257	-615.700	-1691.179
SHEARS	370.236	363.149	-39.895	-82.420	-444.720	-451.807

Sht 186 of

PRINTED IN U.S.A.

NO.	JOINT	MOMENT	SHEAR
1	1	-2573.468	393.244
2	5	2536.132	388.234

PRINTED IN U.S.A.

RIGID FRAME BRIDGE PIER
LOADING CASE 14
(LIVE LOAD COMBINATION 14 + DEAD LOAD)

JOINT	JOINT DISPLACEMENTS IN INCHES,ROT.IN RADIANS X	Y	R	JOINT REACTIONS X	Y	R
1	-0.000055	-0.075810	0.000324	0.000	0.000	0.000
2	0.000050	-0.065819	-0.000090	0.000	0.000	0.000
3	0.000126	-0.076546	0.000010	0.000	0.000	0.000
4	0.000206	-0.064451	0.000081	0.000	0.000	0.000
5	0.000312	-0.075807	-0.000328	0.000	0.000	0.000
6	0.000000	0.000000	0.000000	-6.127	894.119	68.188
7	0.000000	0.000000	0.000000	1.709	779.458	-18.996
8	0.000000	0.000000	0.000000	-0.206	902.560	2.365
9	0.000000	0.000000	0.000000	-1.551	763.760	17.376
10	0.000000	0.000000	0.000000	6.176	894.080	-68.596

MEMBER END ACTIONS
THRUST AND SHEAR (K); MOMENTS (K-FT)

MEMBER NO.			THRUST	SHEAR	MOMENT	THRUST	SHEAR	MOMENT		
1	JOINT	1	-6.127	457.683	2403.289	6.127	378.563	-1251.537	JOINT	2
2	JOINT	2	-4.419	352.693	1289.609	4.419	200.889	-734.325	JOINT	3
3	JOINT	3	-4.625	653.469	729.794	4.625	336.984	-1274.074	JOINT	4
4	JOINT	4	-6.176	378.574	1239.647	6.176	457.644	-2398.446	JOINT	5
5	JOINT	6	894.119	6.127	68.188	-845.917	-6.127	136.463	JOINT	1
6	JOINT	7	779.458	-1.709	-18.996	-731.257	1.709	-38.072	JOINT	2
7	JOINT	8	902.560	0.206	2.365	-854.358	-0.206	4.531	JOINT	3
8	JOINT	9	763.760	1.551	17.376	-715.558	-1.551	34.427	JOINT	4
9	JOINT	10	894.080	-6.176	-68.596	-845.878	6.176	-137.685	JOINT	5

MOMENTS AND SHEARS BEAM NO 1

DIST.FROM LT.SUPT.	1.550	3.950	3.960	14.630	14.640	16.450
MOMENTS	-1698.487	-625.918	-625.106	1.965	-1.678	-669.372
SHEARS	450.595	443.508	81.208	38.683	-364.388	-371.476

MOMENTS AND SHEARS BEAM NO 2

DIST.FROM LT.SUPT.	1.550	4.330	7.320	7.330	12.000	16.450
MOMENTS	-747.542	201.688	1186.642	1185.058	400.846	-427.553
SHEARS	345.606	338.518	324.343	-158.364	-179.627	-193.802

MOMENTS AND SHEARS BEAM NO 3

DIST.FROM LT.SUPT.	0.010	1.550	6.000	10.680	10.690	16.450
MOMENTS	-723.258	-434.157	348.984	1087.185	1084.101	-756.355
SHEARS	653.469	183.632	169.457	148.194	-308.634	-329.897

MOMENTS AND SHEARS BEAM NO 4

DIST.FROM LT.SUPT.	1.550	3.360	3.370	14.040	14.050	16.450
MOMENTS	-657.464	10.253	9.866	-616.796	-621.227	-1693.704
SHEARS	371.487	364.399	-38.644	-81.169	-443.469	-450.557

PRINTED IN U.S.A.

NO.	JOINT	MOMENT	SHEAR
1	1	-2539.751	388.234
2	5	2536.132	388.234

Sht 189 of

PRINTED IN U.S.A.

RIGID FRAME BRIDGE PIER
LOADING CASE 15
(LIVE LOAD COMBINATION 15 + DEAD LOAD)

JOINT DISPLACEMENTS IN INCHES,ROT.IN RADIANS — JOINT REACTIONS

JOINT	X	Y	R	X	Y	R
1	-0.000374	-0.075859	0.000329	0.000	0.000	0.000
2	-0.000267	-0.064387	-0.000081	0.000	0.000	0.000
3	-0.000187	-0.076548	-0.000012	0.000	0.000	0.000
4	-0.000111	-0.065882	0.000091	0.000	0.000	0.000
5	-0.000006	-0.075758	-0.000323	0.000	0.000	0.000
6	0.000000	0.000000	0.000000	-6.194	894.680	68.766
7	0.000000	0.000000	0.000000	1.554	763.023	-17.441
8	0.000000	0.000000	0.000090	0.237	902.582	-2.733
9	0.000000	0.000000	0.000000	-1.706	780.176	18.931
10	0.000000	0.000000	0.000000	6.109	893.516	-68.020

MEMBER END ACTIONS
THRUST AND SHEAR (K); MOMENTS (K-FT)

MEMBER NO.			THRUST	SHEAR	MOMENT	THRUST	SHEAR	MOMENT		
1	JOINT	1	-6.194	458.244	2401.629	6.194	378.002	-1239.769	JOINT	2
2	JOINT	2	-4.641	336.819	1274.230	4.641	190.979	-729.299	JOINT	3
3	JOINT	3	-4.404	663.400	734.471	4.404	352.836	-1289.487	JOINT	4
4	JOINT	4	-6.109	379.138	1251.449	6.109	457.081	-2400.102	JOINT	5
5	JOINT	6	894.680	6.194	68.766	-846.478	-6.194	138.122	JOINT	1
6	JOINT	7	763.023	-1.554	-17.441	-714.821	1.554	-34.461	JOINT	2
7	JOINT	8	902.582	-0.237	-2.733	-854.380	0.237	-5.171	JOINT	3
8	JOINT	9	780.176	1.706	18.931	-731.974	-1.706	38.038	JOINT	4
9	JOINT	10	893.516	-6.109	-68.020	-845.315	6.109	-136.030	JOINT	5

MOMENTS AND SHEARS BEAM NO 1

DIST.FROM LT.SUPT.	1.550	3.950	3.960	14.630	14.640	16.450
MOMENTS	-1695.957	-622.040	-621.222	11.842	8.204	-658.473
SHEARS	451.157	444.069	81.769	39.244	-363.827	-370.914

MOMENTS AND SHEARS BEAM NO 2

DIST.FROM LT.SUPT.	1.550	4.330	7.320	7.330	12.000	16.450
MOMENTS	-756.767	148.335	1085.826	1084.342	346.409	-437.889
SHEARS	329.732	322.644	308.469	-148.454	-169.717	-183.892

MOMENTS AND SHEARS BEAM NO 3

DIST.FROM LT.SUPT.	0.010	1.550	6.000	10.680	10.690	16.450
MOMENTS	-727.835	-423.551	403.466	1187.810	1184.566	-747.198
SHEARS	663.400	193.491	179.316	158.054	-324.486	-345.749

MOMENTS AND SHEARS BEAM NO 4

DIST.FROM LT.SUPT.	1.550	3.360	3.370	14.040	14.050	16.450
MOMENTS	-668.392	0.345	-0.036	-620.684	-625.109	-1696.233
SHEARS	372.051	364.963	-38.081	-80.606	-442.906	-449.993

PRINTED IN U.S.A.

NO.	JOINT	MOMENT	SHEAR
1	1	-2539.751	388.234
2	5	2536.132	388.234

PRINTED IN U.S.A.

RIGID FRAME BRIDGE PIER
LOADING CASE 16
(LIVE LOAD COMBINATION 16 + DEAD LOAD)

JOINT DISPLACEMENTS IN INCHES,ROT.IN RADIANS JOINT REACTIONS

JOINT	X	Y	R	X	Y	R
1	-0.002072	-0.084511	0.000335	0.000	0.000	0.000
2	-0.001966	-0.066753	-0.000024	0.000	0.000	0.000
3	-0.001871	-0.072308	0.000001	0.000	0.000	0.000
4	-0.001779	-0.062856	0.000068	0.000	0.000	0.000
5	-0.001668	-0.075850	-0.000332	0.000	0.000	0.000
6	0.000000	0.000000	0.000000	-6.141	993.963	67.281
7	0.000000	0.000000	0.000000	0.644	790.170	-8.205
8	0.000000	0.000000	0.000000	0.167	853.927	-2.844
9	0.000000	0.000000	0.000000	-1.123	745.451	11.568
10	0.000000	0.000000	0.000000	6.453	894.566	-72.723

MEMBER END ACTIONS
THRUST AND SHEAR (K); MOMENTS (K-FT)

MEMBER NO.			THRUST	SHEAR	MOMENT	THRUST	SHEAR	MOMENT		
1	JOINT	1	-6.141	534.268	2558.448	6.141	419.345	-1285.993	JOINT	2
2	JOINT	2	-5.497	322.623	1299.300	5.497	177.282	-712.005	JOINT	3
3	JOINT	3	-5.330	628.443	714.740	5.330	325.952	-1228.899	JOINT	4
4	JOINT	4	-6.453	371.298	1202.955	6.453	458.130	-2393.319	JOINT	5
5	JOINT	6	993.963	6.141	67.281	-945.761	-6.141	137.832	JOINT	1
6	JOINT	7	790.170	-0.644	-8.205	-741.968	0.644	-13.306	JOINT	2
7	JOINT	8	853.927	-0.167	-2.844	-805.725	0.167	-2.735	JOINT	3
8	JOINT	9	745.451	1.123	11.568	-697.249	-1.123	25.944	JOINT	4
9	JOINT	10	894.566	-6.453	-72.723	-846.364	6.453	-142.812	JOINT	5

MOMENTS AND SHEARS BEAM NO 1

DIST.FROM LT.SUPT.	1.550	3.950	3.960	14.630	14.640	16.450
MOMENTS	-1734.939	-478.563	-477.793	104.944	100.893	-640.616
SHEARS	527.181	520.093	77.053	34.528	-405.170	-412.258

MOMENTS AND SHEARS BEAM NO 2

DIST.FROM LT.SUPT.	1.550	4.330	7.320	7.330	12.000	16.450
MOMENTS	-803.841	61.795	956.839	955.492	281.524	-441.824
SHEARS	315.536	308.448	294.273	-134.757	-156.020	-170.195

MOMENTS AND SHEARS BEAM NO 3

DIST.FROM LT.SUPT.	0.010	1.550	6.000	10.680	10.690	16.450
MOMENTS	-708.454	-426.626	335.502	1051.602	1048.628	-728.282
SHEARS	628.443	178.910	164.735	143.472	-297.602	-318.864

MOMENTS AND SHEARS BEAM NO 4

DIST.FROM LT.SUPT.	1.550	3.360	3.370	14.040	14.050	16.450
MOMENTS	-632.051	22.495	22.104	-609.744	-614.181	-1687.824
SHEARS	364.210	357.123	-39.130	-81.655	-443.955	-451.043

PRINTED IN U.S.A.

NO.	JOINT	MOMENT	SHEAR
1	1	-2696.280	411.492
2	5	2536.132	388.234

Sht 193 of

PRINTED IN U.S.A.

JOB NO. 8080 THUNDERBIRD ROAD OVER DIVERSION CHANNEL PROGRAM P7310

PROBLEM NO. 2; PIER ANALYSIS AND DESIGN BY: RDT CHKD: JFF

RIGID FRAME BRIDGE PIER
LOADING CASE 17
(LIVE LOAD COMBINATION 17 + DEAD LOAD)

JOINT DISPLACEMENTS IN INCHES,ROT.IN RADIANS JOINT REACTIONS

JOINT	X	Y	R	X	Y	R
1	-0.000459	-0.082418	0.000284	0.000	0.000	0.000
2	-0.000368	-0.068690	-0.000017	0.000	0.000	0.000
3	-0.000282	-0.072531	0.000005	0.000	0.000	0.000
4	-0.000195	-0.062772	0.000068	0.000	0.000	0.000
5	-0.000086	-0.075866	-0.000333	0.000	0.000	0.000
6	0.000000	0.000000	0.000000	-5.335	969.943	59.153
7	0.000000	0.000000	0.000000	0.356	812.402	-4.155
8	0.000000	0.000000	0.000000	-0.077	856.484	0.706
9	0.000000	0.000000	0.000000	-1.263	744.491	13.961
10	0.000000	0.000000	0.000000	6.319	894.758	-70.396

MEMBER END ACTIONS
THRUST AND SHEAR (K); MOMENTS (K-FT)

MEMBER NO.			THRUST	SHEAR	MOMENT	THRUST	SHEAR	MOMENT		
1	JOINT	1	-5.335	529.333	2448.818	5.335	443.364	-1278.828	JOINT	2
2	JOINT	2	-4.980	320.835	1286.557	4.980	179.070	-731.439	JOINT	3
3	JOINT	3	-5.055	629.212	729.582	5.055	325.182	-1229.896	JOINT	4
4	JOINT	4	-6.319	371.106	1201.667	6.319	458.322	-2395.475	JOINT	5
5	JOINT	6	969.943	5.335	59.153	-921.742	-5.335	119.032	JOINT	1
6	JOINT	7	812.402	-0.356	-4.155	-764.200	0.356	-7.729	JOINT	2
7	JOINT	8	856.484	0.077	0.706	-808.282	-0.077	1.856	JOINT	3
8	JOINT	9	744.491	1.263	13.961	-696.289	-1.263	28.229	JOINT	4
9	JOINT	10	894.758	-6.319	-70.396	-846.556	6.319	-140.657	JOINT	5

MOMENTS AND SHEARS BEAM NO 1

DIST.FROM LT.SUPT.	1.550	3.950	3.960	14.630	14.640	16.450
MOMENTS	-1632.959	-388.429	-387.661	193.054	188.762	-596.220
SHEARS	522.245	515.158	76.863	34.338	-429.189	-436.277

MOMENTS AND SHEARS BEAM NO 2

DIST.FROM LT.SUPT.	1.550	4.330	7.320	7.330	12.000	16.450
MOMENTS	-793.869	66.797	956.496	955.131	272.815	-458.488
SHEARS	313.748	306.660	292.485	-136.545	-157.807	-171.982

MOMENTS AND SHEARS BEAM NO 3

DIST.FROM LT.SUPT.	0.010	1.550	6.000	10.680	10.690	16.450
MOMENTS	-723.289	-440.276	325.274	1044.975	1042.008	-730.472
SHEARS	629.212	179.679	165.504	144.241	-296.832	-318.095

MOMENTS AND SHEARS BEAM NO 4

DIST.FROM LT.SUPT.	1.550	3.360	3.370	14.040	14.050	16.450
MOMENTS	-631.059	23.140	22.747	-611.142	-615.580	-1689.683
SHEARS	364.019	356.931	-39.322	-81.847	-444.147	-451.234

Sht 194 of

PRINTED IN U.S.A.

NO.	JOINT	MOMENT	SHEAR
1	1	-2567.849	392.409
2	5	2536.132	388.234

PRINTED IN U.S.A.

JOB NO. 8080 THUNDERBIRD ROAD OVER DIVERSION CHANNEL PROGRAM P7310

PROBLEM NO. 2; PIER ANALYSIS AND DESIGN BY: RDT CHKD: JFF

RIGID FRAME BRIDGE PIER
LOADING CASE 18
(LIVE LOAD COMBINATION 18 + DEAD LOAD)

JOINT	JOINT DISPLACEMENTS IN INCHES,ROT.IN RADIANS X	Y	R	JOINT REACTIONS X	Y	R
1	-0.001764	-0.084521	0.000335	0.000	0.000	0.000
2	-0.001658	-0.066606	-0.000023	0.000	0.000	0.000
3	-0.001561	-0.072274	-0.000005	0.000	0.000	0.000
4	-0.001469	-0.066891	0.000032	0.000	0.000	0.000
5	-0.001369	-0.081592	-0.000300	0.000	0.000	0.000
6	0.000000	0.000000	0.000000	-6.175	994.079	67.826
7	0.000000	0.000000	0.000000	0.588	788.484	-7.419
8	0.000000	0.000000	0.000000	0.246	853.530	-3.557
9	0.000000	0.000000	0.000000	-0.470	791.761	4.456
10	0.000000	0.000000	0.000000	5.811	960.474	-65.421

MEMBER END ACTIONS
THRUST AND SHEAR (K); MOMENTS (K-FT)

MEMBER NO.			THRUST	SHEAR	MOMENT	THRUST	SHEAR	MOMENT		
1	JOINT	1	-6.176	534.385	2557.844	6.176	419.228	-1283.289	JOINT	2
2	JOINT	2	-5.588	321.053	1295.511	5.588	178.852	-736.468	JOINT	3
3	JOINT	3	-5.342	626.476	741.118	5.342	327.918	-1290.679	JOINT	4
4	JOINT	4	-5.811	415.641	1279.449	5.811	519.855	-2435.562	JOINT	5
5	JOINT	6	994.079	6.175	67.826	-945.878	-6.175	138.435	JOINT	1
6	JOINT	7	788.484	-0.588	-7.419	-740.282	0.588	-12.222	JOINT	2
7	JOINT	8	853.530	-0.246	-3.557	-805.328	0.246	-4.650	JOINT	3
8	JOINT	9	791.761	0.470	4.456	-743.559	-0.470	11.231	JOINT	4
9	JOINT	10	960.474	-5.811	-65.421	-912.272	5.811	-128.680	JOINT	5

MOMENTS AND SHEARS BEAM NO 1

DIST.FROM LT.SUPT.	1.550	3.950	3.960	14.630	14.640	16.450
MOMENTS	-1734.154	-477.499	-476.727	107.256	103.206	-638.092
SHEARS	527.298	520.210	77.170	34.645	-405.053	-412.141

MOMENTS AND SHEARS BEAM NO 2

DIST.FROM LT.SUPT.	1.550	4.330	7.320	7.330	12.000	16.450
MOMENTS	-802.485	58.788	949.139	947.776	266.477	-463.855
SHEARS	313.966	306.878	292.703	-136.327	-157.590	-171.765

MOMENTS AND SHEARS BEAM NO 3

DIST.FROM LT.SUPT.	0.010	1.550	6.000	10.680	10.690	16.450
MOMENTS	-734.852	-456.053	297.323	1004.219	1001.225	-787.013
SHEARS	626.476	176.943	162.768	141.505	-299.568	-320.831

MOMENTS AND SHEARS BEAM NO 4

DIST.FROM LT.SUPT.	1.550	3.360	3.370	14.040	14.050	16.450
MOMENTS	-639.813	94.994	94.724	-407.560	-412.612	-1634.393
SHEARS	408.553	401.466	-26.988	-69.513	-505.679	-512.767

Sht 196 of

PRINTED IN U.S.A.

NO.	JOINT	MOMENT	SHEAR
1	1	-2696.280	411.492
2	5	2564.242	392.417

Sht 197 of

PRINTED IN U.S.A.

JOB NO. 8080 THUNDERBIRD ROAD OVER DIVERSION CHANNE' PROGRAM P7310

PROBLEM NO. 2; PIER ANALYSIS AND DESIGN BY: RDT CHKD: JFF

RIGID FRAME BRIDGE PIER
LOADING CASE 19
(LIVE LOAD COMBINATION 19 + DEAD LOAD)

JOINT	JOINT DISPLACEMENTS IN INCHES,ROT.IN RADIANS X	Y	R	JOINT REACTIONS X	Y	R
1	-0.000280	-0.081665	0.000302	0.000	0.000	0.000
2	-0.000182	-0.066740	-0.000031	0.000	0.000	0.000
3	-0.000095	-0.072498	-0.000001	0.000	0.000	0.000
4	-0.000008	-0.068611	0.000016	0.000	0.000	0.000
5	0.000084	-0.082371	-0.000283	0.000	0.000	0.000
6	0.000000	0.000000	0.000000	-5.696	961.302	63.271
7	0.000000	0.000000	0.000000	0.613	790.019	-6.926
8	0.000000	0.000000	0.000000	0.029	856.099	-0.370
9	0.000000	0.000000	0.000000	-0.296	811.495	3.294
10	0.000000	0.000000	0.000000	5.350	969.412	-59.523

MEMBER END ACTIONS
THRUST AND SHEAR (K); MOMENTS (K-FT)

MEMBER NO.			THRUST	SHEAR	MOMENT	THRUST	SHEAR	MOMENT		
1	JOINT	1	-5.696	520.691	2440.864	5.696	414.835	-1278.284	JOINT	2
2	JOINT	2	-5.083	326.982	1291.847	5.083	185.046	-755.560	JOINT	3
3	JOINT	3	-5.054	622.851	756.151	5.054	319.409	-1282.522	JOINT	4
4	JOINT	4	-5.351	443.884	1275.921	5.351	528.793	-2445.063	JOINT	5
5	JOINT	6	961.302	5.696	63.271	-913.100	-5.696	126.985	JOINT	1
6	JOINT	7	790.019	-0.613	-6.926	-741.817	0.613	-13.564	JOINT	2
7	JOINT	8	856.099	-0.029	-0.370	-807.897	0.029	-0.590	JOINT	3
8	JOINT	9	811.495	0.296	3.294	-763.293	-0.296	6.601	JOINT	4
9	JOINT	10	969.412	-5.350	-59.523	-921.211	5.350	-119.179	JOINT	5

MOMENTS AND SHEARS BEAM NO 1

DIST.FROM LT.SUPT.	1.550	3.950	3.960	14.630	14.640	16.450
MOMENTS	-1638.400	-414.611	-413.907	97.455	93.449	-639.896
SHEARS	513.603	506.516	70.363	27.838	-400.660	-407.748

MOMENTS AND SHEARS BEAM NO 2

DIST.FROM LT.SUPT.	1.550	4.330	7.320	7.330	12.000	16.450
MOMENTS	-789.632	88.122	996.199	994.774	284.550	-473.346
SHEARS	319.894	312.807	298.632	-142.521	-163.784	-177.958

MOMENTS AND SHEARS BEAM NO 3

DIST.FROM LT.SUPT.	0.010	1.550	6.000	10.680	10.690	16.450
MOMENTS	-749.921	-476.759	260.327	950.092	947.182	-792.045
SHEARS	622.851	173.282	159.107	137.845	-291.059	-312.322

MOMENTS AND SHEARS BEAM NO 4

DIST.FROM LT.SUPT.	1.550	3.360	3.370	14.040	14.050	16.450
MOMENTS	-592.509	193.418	193.081	-381.664	-386.806	-1630.040
SHEARS	436.796	429.709	-33.779	-76.304	-514.618	-521.706

Sht 198 of

PRINTED IN U.S.A.

NO.	JOINT	MOMENT	SHEAR
1	1	-2567.849	392.409
2	5	2564.242	392.417

PRINTED IN U.S.A.

JOB NO. 8080 THUNDERBIRD ROAD OVER DIVERSION CHANNEL PROGRAM P7310

PROBLEM NO. 2; PIER ANALYSIS AND DESIGN BY: RDT CHKD: JFF

RIGID FRAME BRIDGE PIER
LOADING CASE 20
(LIVE LOAD COMBINATION 20 + DEAD LOAD)

JOINT DISPLACEMENTS IN INCHES,ROT.IN RADIANS JOINT REACTIONS

JOINT	X	Y	R	X	Y	R
1	-0.000380	-0.084593	0.000338	0.000	0.000	0.000
2	-0.000270	-0.065425	-0.000012	0.000	0.000	0.000
3	-0.000165	-0.070684	-0.000010	0.000	0.000	0.000
4	-0.000063	-0.066687	0.000021	0.000	0.000	0.000
5	0.000045	-0.084495	-0.000332	0.000	0.000	0.000
6	0.000000	0.000000	0.000000	-6.362	994.903	70.626
7	0.000000	0.000000	0.000000	0.260	774.934	-3.040
8	0.000000	0.000000	0.000000	0.200	835.287	-2.315
9	0.000000	0.000000	0.000000	-0.385	789.419	4.255
10	0.000000	0.000000	0.000000	6.286	993.784	-69.965

MEMBER END ACTIONS
THRUST AND SHEAR (K); MOMENTS (K-FT)

MEMBER NO.			THRUST	SHEAR	MOMENT	THRUST	SHEAR	MOMENT		
1	JOINT	1	-6.362	535.209	2554.428	6.362	418.404	-1265.037	JOINT	2
2	JOINT	2	-6.102	308.328	1270.692	6.102	170.091	-711.227	JOINT	3
3	JOINT	3	-5.901	616.994	715.596	5.901	321.705	-1283.326	JOINT	4
4	JOINT	4	-6.286	419.512	1274.715	6.286	534.071	-2552.556	JOINT	5
5	JOINT	6	994.903	6.362	70.626	-946.702	-6.362	141.852	JOINT	1
6	JOINT	7	774.934	-0.260	-3.040	-726.732	0.260	-5.655	JOINT	2
7	JOINT	8	835.287	-0.200	-2.315	-787.085	0.200	-4.369	JOINT	3
8	JOINT	9	789.419	0.385	4.255	-741.217	-0.385	8.611	JOINT	4
9	JOINT	10	993.784	-6.286	-69.965	-945.582	6.286	-140.001	JOINT	5

MOMENTS AND SHEARS BEAM NO 1

DIST.FROM LT.SUPT.	1.550	3.950	3.960	14.630	14.640	16.450
MOMENTS	-1729.460	-470.827	-470.047	122.729	118.688	-621.117
SHEARS	528.122	521.034	77.994	35.469	-404.229	-411.317

MOMENTS AND SHEARS BEAM NO 2

DIST.FROM LT.SUPT.	1.550	4.330	7.320	7.330	12.000	16.450
MOMENTS	-797.390	28.506	880.809	879.534	239.151	-452.194
SHEARS	301.241	294.153	279.978	-127.566	-148.828	-163.003

MOMENTS AND SHEARS BEAM NO 3

DIST.FROM LT.SUPT.	0.010	1.550	6.000	10.680	10.690	16.450
MOMENTS	-709.425	-439.798	287.071	966.092	963.160	-789.290
SHEARS	616.994	170.986	156.811	135.549	-293.355	-314.618

MOMENTS AND SHEARS BEAM NO 4

DIST.FROM LT.SUPT.	1.550	3.360	3.370	14.040	14.050	16.450
MOMENTS	-629.079	112.734	112.391	-468.258	-473.453	-1729.354
SHEARS	412.424	405.337	-34.332	-76.857	-519.896	-526.983

Sht 200 of

PRINTED IN U.S.A.

NO.	JOINT	MOMENT	SHEAR
1	1	-2696.280	411.492
2	5	2692.557	411.511

Sht 201 of

PRINTED IN U.S.A.

JOB NO. 8080 THUNDERBIRD ROAD OVER DIVERSION CHANNE' PROGRAM P7310

PROBLEM NO. 2; PIER ANALYSIS AND DESIGN BY: RDT CHKD: JFF

RIGID FRAME BRIDGE PIER
MAXIMUM POSITIVE VALUES

MEMBER END ACTIONS
THRUST AND SHEAR (K); MOMENTS (K-FT)

MEMBER NO.	THRUST	SHEAR	MOMENT	THRUST	SHEAR	MOMENT	
1 JOINT 1	-4.937	559.309	2589.158	7.088	472.462	-1125.349	JOINT 2
LOAD CASE	6	6	1	1	6	3	
2 JOINT 2	-4.369	365.407	1299.300	7.056	202.469	-520.399	JOINT 3
LOAD CASE	8	8	16	1	9	5	
3 JOINT 3	-4.404	663.400	846.270	6.821	352.836	-1091.349	JOINT 4
LOAD CASE	15	15	9	1	15	1	
4 JOINT 4	-5.351	443.884	1279.449	7.074	535.584	-2379.853	JOINT 5
LOAD CASE	19	19	18	1	11	1	
5 JOINT 6	1014.696	7.088	77.429	-840.238	-4.937	159.297	JOINT 1
LOAD CASE	1	1	1	10	6	1	
6 JOINT 7	826.968	0.579	6.515	-646.215	1.709	12.822	JOINT 2
LOAD CASE	6	6	6	1	14	6	
7 JOINT 8	902.582	1.218	14.036	-670.547	0.755	26.631	JOINT 3
LOAD CASE	15	8	8	1	10	8	
8 JOINT 9	811.495	1.706	18.931	-608.518	-0.198	38.038	JOINT 4
LOAD CASE	19	15	15	6	11	15	
9 JOINT 10	993.784	-5.350	-59.523	-840.286	7.074	-119.179	JOINT 5
LOAD CASE	20	19	19	8	1	19	

BEAM MOMENTS AND SHEARS

MEMBER NO. 1

DIST.FROM LT.SUPT.	1.550	3.950	3.960	14.630	14.640	16.450
MOMENTS	-1604.998	-288.524	-287.709	342.569	337.987	-489.199
LD.CASE	6	6	6	6	6	3
SHEARS	552.222	545.134	97.615	55.090	-327.905	-334.993
LD.CASE	6	6	3	3	11	11

MEMBER NO. 2

DIST.FROM LT.SUPT.	1.550	4.330	7.320	7.330	12.000	16.450
MOMENTS	-666.041	260.535	1283.504	1281.914	494.599	-277.669
LD.CASE	3	8	8	8	8	5
SHEARS	358.320	351.232	337.057	-108.650	-129.913	-144.088
LD.CASE	8	8	8	1	1	1

MEMBER NO. 3

DIST.FROM LT.SUPT.	0.010	1.550	6.000	10.680	10.690	16.450
MOMENTS	-509.198	-285.435	436.718	1187.810	1184.566	-667.995
LD.CASE	5	5	10	15	15	1
SHEARS	663.400	195.202	181.027	159.765	-242.072	-263.334
LD.CASE	15	9	9	9	6	6

Sht 202 of

PRINTED IN U.S.A.

DIST.FROM LT.SUPT.	1.550	3.360	3.370	14.040	14.050	16.450
MOMENTS	-564.060	193.418	193.081	-350.084	-355.293	-1614.826
LD.CASE	2	19	19	11	11	11
SHEARS	436.796	429.709	-18.095	-60.620	-437.877	-444.964
LD.CASE	19	19	11	11	8	8

CANTILEVERS

NO.	JOINT	MOMENT	SHEAR
1	1	-2539.751	419.245
2	5	2692.557	411.511

Sht 203 of

PRINTED IN U.S.A.

RIGID FRAME BRIDGE PIER
MAXIMUM NEGATIVE VALUES

MEMBER END ACTIONS
THRUST AND SHEAR (K); MOMENTS (K-FT)

MEMBER NO.	THRUST	SHEAR	MOMENT	THRUST	SHEAR	MOMENT	
1 JOINT 1	-7.088	452.004	2388.263	4.937	342.080	-1285.993	JOINT 2
LOAD CASE	1	10	11	6	11	16	
2 JOINT 2	-7.056	279.616	1132.134	4.369	151.175	-845.969	JOINT 3
LOAD CASE	1	2	3	8	1	9	
3 JOINT 3	-6.821	519.371	515.326	4.404	270.422	-1290.679	JOINT 4
LOAD CASE	1	1	5	15	6	18	
4 JOINT 4	-7.074	337.591	1082.720	5.351	452.052	-2552.556	JOINT 5
LOAD CASE	1	2	2	19	8	20	
5 JOINT 6	888.440	4.937	54.985	-966.494	-7.088	109.895	JOINT 1
LOAD CASE	10	6	6	1	1	6	
6 JOINT 7	694.417	-1.709	-18.996	-778.766	-0.579	-38.072	JOINT 2
LOAD CASE	1	14	14	6	6	14	
7 JOINT 8	718.748	-0.755	-8.739	-854.380	-1.218	-16.491	JOINT 3
LOAD CASE	1	10	10	15	8	10	
8 JOINT 9	656.720	0.198	1.521	-763.293	-1.706	4.069	JOINT 4
LOAD CASE	6	11	1	19	15	11	
9 JOINT 10	888.487	-7.074	-79.978	-945.582	5.350	-156.279	JOINT 5
LOAD CASE	8	1	1	20	19	1	

BEAM MOMENTS AND SHEARS

MEMBER NO. 1

DIST.FROM LT.SUPT.	1.550	3.950	3.960	14.630	14.640	16.450
MOMENTS	-1745.529	-633.971	-633.216	-66.735	-70.028	-674.204
LD.CASE	1	10	10	10	10	10
SHEARS	444.917	437.829	60.658	18.133	-458.286	-465.374
LD.CASE	10	10	7	7	6	6

MEMBER NO. 2

DIST.FROM LT.SUPT.	1.550	4.330	7.320	7.330	12.000	16.450
MOMENTS	-824.379	-12.038	761.086	759.976	170.577	-567.526
LD.CASE	13	1	2	2	12	12
SHEARS	272.529	265.441	251.266	-159.944	-181.207	-195.382
LD.CASE	2	2	2	9	9	9

MEMBER NO. 3

DIST.FROM LT.SUPT.	0.010	1.550	6.000	10.680	10.690	16.450
MOMENTS	-840.527	-536.548	163.608	769.096	766.652	-819.314
LD.CASE	9	12	6	4	4	11
SHEARS	519.371	138.583	124.408	103.145	-324.486	-345.749
LD.CASE	1	11	11	11	15	15

PRINTED IN U.S.A.

DIST.FROM LT.SUPT.	1.550	3.360	3.370	14.040	14.050	16.450
MOMENTS	-668.392	-57.076	-57.406	-624.394	-628.769	-1729.354
LD.CASE	15	8	8	8	8	20
SHEARS	330.504	323.416	-43.439	-85.964	-521.409	-528.497
LD.CASE	2	2	12	12	11	11

CANTILEVERS

NO.	JOINT	MOMENT	SHEAR
1	1	-2748.456	388.234
2	5	2536.132	388.234

Sht 205 of

PRINTED IN U.S.A.

JOB NO. 8080 THUNDERBIRD ROAD OVER DIVERSION CHANNEL PROGRAM P7310

PROBLEM NO. 2; PIER ANALYSIS AND DESIGN BY: RDT CHKD: JFF

RIGID FRAME BRIDGE PIER
LOADING CASE 21
DEAD LOAD ONLY

JOINT 5 HORIZONTAL FORCE 0.000 TEMPR.CHANGE 0.0 A.A.S.H.T.O. GROUP 0.000 REDUCTION FACT. 1.000

JOINT	JOINT DISPLACEMENTS IN INCHES, ROT. IN RADIANS X	Y	R	JOINT REACTIONS X	Y	R
1	-0.000261	-0.075865	0.000364	0.000	0.000	0.000
2	-0.000143	-0.055616	-0.000027	0.000	0.000	0.000
3	-0.000034	-0.060873	-0.000001	0.000	0.000	0.000
4	0.000075	-0.055682	0.000027	0.000	0.000	0.000
5	0.000193	-0.075814	-0.000363	0.000	0.000	0.000
6	0.000000	0.000000	0.000000	-6.867	894.741	76.313
7	0.000000	0.000000	0.000000	0.518	662.362	-5.846
8	0.000000	0.000000	0.000000	0.014	722.693	-0.174
9	0.000000	0.000000	0.000000	-0.514	663.118	5.764
10	0.000000	0.000000	0.000000	6.849	894.164	-76.146

MEMBER END ACTIONS
THRUST AND SHEAR (K); MOMENTS (K-FT)

MEMBER NO.			THRUST	SHEAR	MOMENT	THRUST	SHEAR	MOMENT		
1	JOINT	1	-6.867	458.305	2386.713	6.867	337.170	-1086.364	JOINT	2
2	JOINT	2	-6.349	276.989	1097.830	6.349	156.186	-619.259	JOINT	3
3	JOINT	3	-6.334	518.306	619.554	6.334	277.169	-1097.733	JOINT	4
4	JOINT	4	-6.849	337.747	1086.325	6.849	457.728	-2383.534	JOINT	5
5	JOINT	6	894.741	6.867	76.313	-846.539	-6.867	153.039	JOINT	1
6	JOINT	7	662.362	-0.518	-5.846	-614.160	0.518	-11.466	JOINT	2
7	JOINT	8	722.693	-0.014	-0.174	-674.491	0.014	-0.295	JOINT	3
8	JOINT	9	663.118	0.514	5.764	-614.916	-0.514	11.408	JOINT	4
9	JOINT	10	894.164	-6.849	-76.146	-845.962	6.849	-152.597	JOINT	5

MOMENTS AND SHEARS BEAM NO 1

DIST.FROM LT.SUPT.	1.550	3.950	3.960	14.630	14.640	16.450
MOMENTS	-1680.947	-606.884	-606.066	27.643	24.414	-568.358
SHEARS	451.217	444.130	81.830	39.305	-322.995	-330.083

MOMENTS AND SHEARS BEAM NO 2

DIST.FROM LT.SUPT.	1.550	4.330	7.320	7.330	12.000	16.450
MOMENTS	-673.103	65.672	824.271	823.135	247.689	-381.778
SHEARS	269.902	262.814	248.639	-113.661	-134.923	-149.098

MOMENTS AND SHEARS BEAM NO 3

DIST.FROM LT.SUPT.	0.010	1.550	6.000	10.680	10.690	16.450
MOMENTS	-614.370	-378.728	249.940	825.682	823.195	-672.727
SHEARS	518.306	148.918	134.743	113.481	-248.819	-270.082

Sht 206 of

PRINTED IN U.S.A.

DIST.FROM LT.SUPT.	1.550	3.360	3.370	14.040	14.050	16.450
MOMENTS	-567.424	26.394	26.007	-601.551	-605.983	-1678.661
SHEARS	330.659	323.572	-38.728	-81.253	-443.533	-450.641

CANTILEVERS

NO.	JOINT	MOMENT	SHEAR
1	1	-2539.751	388.234
2	5	2536.132	388.234

PRINTED IN U.S.A.

JOB NO. 8080 THUNDERBIRD ROAD OVER DIVERSION CHANNEL PROGRAM P7310

PROBLEM NO. 2; PIER ANALYSIS AND DESIGN BY: RDT CHKD: JFF

RIGID FRAME BRIDGE PIER
LOADING CASE 22
HORIZONTAL FORCE

JOINT 1 HORIZONTAL FORCE 72.190 TEMPR.CHANGE 0.0 A.A.S.H.T.O. GROUP 0.000 REDUCTION FACT. 1.000

	JOINT DISPLACEMENTS IN INCHES,ROT.IN RADIANS			JOINT REACTIONS		
JOINT	X	Y	R	X	Y	R
1	0.159583	0.001710	-0.000049	0.000	0.000	0.000
2	0.158584	-0.000521	-0.000012	0.000	0.000	0.000
3	0.157839	-0.000006	-0.000012	0.000	0.000	0.000
4	0.157347	0.000503	-0.000012	0.000	0.000	0.000
5	0.157108	-0.001687	-0.000048	0.000	0.000	0.000
6	0.000000	0.000000	0.000000	-14.148	-19.623	241.480
7	0.000000	0.000000	0.000000	-14.764	5.981	247.812
8	0.000000	0.000000	0.000000	-14.699	0.063	246.695
9	0.000000	0.000000	0.000000	-14.649	-5.778	245.874
10	0.000000	0.000000	0.000000	-13.931	19.356	237.754

MEMBER END ACTIONS
THRUST AND SHEAR (K);MOMENTS (K-FT)

MEMBER NO.			THRUST	SHEAR	MOMENT	THRUST	SHEAR	MOMENT		
1	JOINT	1	58.043	-19.623	-231.075	-58.043	19.623	-122.130	JOINT	2
2	JOINT	2	43.278	-13.642	-123.184	-43.278	13.642	-122.364	JOINT	3
3	JOINT	3	28.578	-13.578	-121.894	-28.578	13.578	-122.512	JOINT	4
4	JOINT	4	13.931	-19.356	-120.880	-13.931	19.356	-227.530	JOINT	5
5	JOINT	6	-19.623	14.148	241.480	19.623	-14.148	231.075	JOINT	1
6	JOINT	7	5.981	14.764	247.812	-5.981	-14.764	245.315	JOINT	2
7	JOINT	8	0.063	14.699	246.695	-0.063	-14.699	244.258	JOINT	3
8	JOINT	9	-5.778	14.649	245.874	5.778	-14.649	243.392	JOINT	4
9	JOINT	10	19.356	13.931	237.754	-19.356	-13.931	227.530	JOINT	5

MOMENTS AND SHEARS BEAM NO 1

DIST.FROM LT.SUPT.	1.550	3.950	3.960	14.630	14.640	16.450
MOMENTS	200.660	153.566	153.370	-56.002	-56.199	-91.715
SHEARS	-19.623	-19.623	-19.623	-19.623	-19.623	-19.623

MOMENTS AND SHEARS BEAM NO 2

DIST.FROM LT.SUPT.	1.550	4.330	7.320	7.330	12.000	16.450
MOMENTS	102.040	64.116	23.328	23.192	-40.515	-101.220
SHEARS	-13.642	-13.642	-13.642	-13.642	-13.642	-13.642

MOMENTS AND SHEARS BEAM NO 3

DIST.FROM LT.SUPT.	0.010	1.550	6.000	10.680	10.690	16.450
MOMENTS	121.758	100.848	40.425	-23.120	-23.256	-101.466
SHEARS	-13.578	-13.578	-13.578	-13.578	-13.578	-13.578

Sht 208 of

PRINTED IN U.S.A.

DIST.FROM LT.SUPT.	1.550	3.360	3.370	14.040	14.050	16.450
MOMENTS	90.878	55.843	55.650	-150.880	-151.073	-197.528
SHEARS	-19.356	-19.356	-19.356	-19.356	-19.356	-19.356

CANTILEVERS

NO.	JOINT	MOMENT	SHEAR
1	1	0.000	0.000
2	5	0.000	0.000

Sht 209 of

PRINTED IN U.S.A.

JOB NO. 8080 THUNDERBIRD ROAD OVER DIVERSION CHANNEL PROGRAM P7310

PROBLEM NO. 2; PIER ANALYSIS AND DESIGN BY: RDT CHKD: JFF

RIGID FRAME BRIDGE PIER
LOADING CASE 23
TEMPERATURE CHANGE

JOINT 1 HORIZONTAL FORCE 0.000 TEMPR.CHANGE -73.3 A.A.S.H.T.O. GROUP 0.000 REDUCTION FACT. 1.000

	JOINT DISPLACEMENTS IN INCHES,ROT.IN RADIANS			JOINT REACTIONS		
JOINT	X	Y	R	X	Y	R
1	0.189267	-0.174497	-0.000066	0.000	0.000	0.000
2	0.094556	-0.177624	-0.000005	0.000	0.000	0.000
3	-0.000001	-0.177117	0.000000	0.000	0.000	0.000
4	-0.094562	-0.177624	0.000005	0.000	0.000	0.000
5	-0.189270	-0.174497	0.000066	0.000	0.000	0.000
6	0.000000	0.000000	0.000000	-16.644	-20.370	284.884
7	0.000000	0.000000	0.000000	-8.836	15.519	148.124
8	0.000000	0.000000	0.000000	0.000	9.700	-0.002
9	0.000000	0.000000	0.000000	8.837	15.519	-148.134
10	0.000000	0.000000	0.000000	16.644	-20.370	-284.888

MEMBER END ACTIONS
THRUST AND SHEAR (K);MOMENTS (K-FT)

MEMBER NO.			THRUST	SHEAR	MOMENT	THRUST	SHEAR	MOMENT		
1	JOINT	1	-16.577	-20.369	-271.025	16.577	20.369	-95.620	JOINT	2
2	JOINT	2	-25.558	-4.850	-51.383	25.558	4.850	-35.920	JOINT	3
3	JOINT	3	-25.342	4.850	35.921	25.342	-4.850	51.384	JOINT	4
4	JOINT	4	-16.764	20.370	95.622	16.764	-20.370	271.032	JOINT	5
5	JOINT	6	-20.370	16.644	284.884	20.370	-16.644	271.029	JOINT	1
6	JOINT	7	15.519	8.836	148.124	-15.519	-8.836	147.002	JOINT	2
7	JOINT	8	9.700	0.000	-0.002	-9.700	0.000	-0.002	JOINT	3
8	JOINT	9	15.519	-8.837	-148.134	-15.519	8.837	-147.011	JOINT	4
9	JOINT	10	-20.370	-16.644	-284.888	20.370	16.644	-271.032	JOINT	5

MOMENTS AND SHEARS BEAM NO 1

DIST.FROM LT.SUPT.	1.550	3.950	3.960	14.630	14.640	16.450
MOMENTS	239.453	190.567	190.363	-26.976	-27.179	-64.047
SHEARS	-20.369	-20.369	-20.369	-20.369	-20.369	-20.369

MOMENTS AND SHEARS BEAM NO 2

DIST.FROM LT.SUPT.	1.550	4.330	7.320	7.330	12.000	16.450
MOMENTS	43.865	30.382	15.880	15.831	-6.819	-28.402
SHEARS	-4.850	-4.850	-4.850	-4.850	-4.850	-4.850

MOMENTS AND SHEARS BEAM NO 3

DIST.FROM LT.SUPT.	0.010	1.550	6.000	10.680	10.690	16.450
MOMENTS	-35.872	-28.403	-6.819	15.880	15.928	43.866
SHEARS	4.850	4.850	4.850	4.850	4.850	4.850

Sht 210 of

PRINTED IN U.S.A.

DIST.FROM LT.SUPT.	1.550	3.360	3.370	14.040	14.050	16.450
MOMENTS	-64.049	-27.180	-26.976	190.368	190.572	239.459
SHEARS	20.370	20.370	20.370	20.370	20.370	20.370

CANTILEVERS

NO.	JOINT	MOMENT	SHEAR
1	1	0.000	0.000
2	5	0.000	0.000

Sht 211 of

PRINTED IN U.S.A.

JOB NO. 8080 THUNDERBIRD ROAD OVER DIVERSION CHANNEL PROGRAM P7310

PROBLEM NO. 2; PIER ANALYSIS AND DESIGN BY: RDT CHKD: JFF

A.A.S.H.T.O. LOADING COMBINATIONS (CAP BEAMS)
M-MOMENT (K-FT); V-SHEAR (K); T-THRUST (K); D-DISTANCE (FT)
(NO ADJUSTMENT OF LOADS TO DESIGN LOADS)

GROUP I DL + 1.00LL + CF

MEM	1	JOINT 1		JOINT 2								
D	-6.73	0.00	0.00	1.55	3.95	3.96	14.63	14.64	16.45	18.00	0.00	0.00
+M	0.00	-2539.75	-2388.26	-1605.00	-288.52	-287.71	342.57	337.99	-489.20	-1125.35	0.00	0.00
-M	0.00	-2748.46	-2589.16	-1745.53	-633.97	-633.22	-66.74	-70.03	-674.20	-1285.99	0.00	0.00
V	-419.24	419.24	559.31	552.22	545.13	97.61	55.09	-458.29	-465.37	472.46	0.00	0.00
T	7.09											

MEM	2	JOINT 2		JOINT 3								
D	0.00	0.00	0.00	1.55	4.33	7.32	7.33	12.00	16.45	18.00	0.00	0.00
+M	0.00	0.00	-1132.13	-666.04	260.54	1283.50	1281.91	494.60	-277.67	-520.40	0.00	0.00
-M	0.00	0.00	-1299.30	-824.38	-12.04	761.09	759.98	170.58	-567.53	-845.97	0.00	0.00
V	0.00	0.00	365.41	358.32	351.23	337.06	-159.94	-181.21	-195.38	202.47	0.00	0.00
T	7.06											

MEM	3	JOINT 3		JOINT 4								
D	0.00	0.00	0.00	0.01	1.55	6.00	10.68	10.69	16.45	18.00	0.00	0.00
+M	0.00	0.00	-515.33	-509.20	-285.43	436.72	1187.81	1184.57	-667.99	-1091.35	0.00	0.00
-M	0.00	0.00	-846.27	-840.53	-536.55	163.61	769.10	766.65	-819.31	-1290.68	0.00	0.00
V	0.00	0.00	663.40	663.40	195.20	181.03	159.76	-324.49	-345.75	352.84	0.00	0.00
T	6.82											

MEM	4	JOINT 4		JOINT 5								
D	0.00	0.00	0.00	1.55	3.36	3.37	14.04	14.05	16.45	18.00	0.00	6.72
+M	0.00	0.00	-1082.72	-564.06	193.42	193.08	-350.08	-355.29	-1614.83	-2379.85	-2536.13	0.00
-M	0.00	0.00	-1279.45	-668.39	-57.08	-57.41	-624.39	-628.77	-1729.35	-2552.56	-2692.56	0.00
V	0.00	0.00	443.88	436.80	429.71	-43.44	-85.96	-521.41	-528.50	535.58	411.51	411.51
T	7.07											

GROUP II DL + W

MEM	1	JOINT 1		JOINT 2								
D	-6.73	0.00	0.00	1.55	3.95	3.96	14.63	14.64	16.45	18.00	0.00	0.00
+M	0.00	-2539.75	-2155.64	-1480.29	-453.32	-452.70	83.65	80.61	-476.64	-964.23	0.00	0.00
-M	0.00	-2539.75	-2617.79	-1881.61	-760.45	-759.44	-28.36	-31.78	-660.07	-1208.49	0.00	0.00
V	-388.23	388.23	477.93	470.84	463.75	101.45	58.93	-342.62	-349.71	356.79	0.00	0.00
T	64.91											

MEM	2	JOINT 2		JOINT 3								
D	0.00	0.00	0.00	1.55	4.33	7.32	7.33	12.00	16.45	18.00	0.00	0.00
+M	0.00	0.00	-974.65	-571.06	129.79	817.60	846.33	288.20	-280.56	-496.90	0.00	0.00
-M	0.00	0.00	-1221.01	-775.14	1.56	800.94	799.94	207.17	-483.00	-741.62	0.00	0.00
V	0.00	0.00	290.63	283.54	276.46	262.28	-127.30	-148.56	-162.74	169.83	0.00	0.00
T	49.63											

Sht 212 of —

PRINTED IN U.S.A.

D	0.00	0.00	0.00	0.01	1.55	6.00	10.68	10.69	16.45	18.00	0.00	0.00
+M	0.00	0.00	-497.66	-492.61	-277.88	90.36	848.80	846.45	-571.26	-975.22	0.00	0.0
-M	0.00	0.00	-741.45	-736.13	-479.58	9.51	802.56	799.94	-774.19	-1220.25	0.00	0.0
V	0.00	0.00	531.88	531.88	162.50	148.32	127.06	-262.40	-283.66	290.75	0.00	0.00
T	34.91											

MEM	4	JOINT	4	JOINT	5							
D	0.00	0.00	0.00	1.55	3.36	3.37	14.04	14.05	16.45	18.00	0.00	6.72
+M	0.00	0.00	-965.45	-476.55	82.24	81.66	-450.67	-454.91	-1481.13	-2136.00	-2536.13	0.00
-M	0.00	0.00	-1207.20	-658.30	-29.45	-29.64	-752.43	-757.06	-1876.19	-2611.06	-2536.13	0.00
V	0.00	0.00	357.10	350.02	342.93	-58.08	-100.61	-462.91	-470.00	477.08	388.23	388.23
T	20.78											

GROUP III DL + LL + HORIZ. FORCES + CF

MEM	1	JOINT	1	JOINT	2							
D	-6.73	0.00	0.00	1.55	3.95	3.96	14.63	14.64	16.45	18.00	0.00	0.00
+M	0.00	-2539.75	-2209.17	-1449.48	-169.50	-168.84	385.97	381.54	-418.12	-1030.69	0.00	0.00
-M	0.00	-2748.46	-2768.25	-1901.05	-752.99	-752.08	-110.14	-113.58	-745.29	-1380.65	0.00	0.00
V	-419.24	419.24	574.52	567.43	560.34	112.82	70.30	-473.49	-480.58	487.67	0.00	0.00
T	52.07											

MEM	2	JOINT	2	JOINT	3							
D	0.00	0.00	0.00	1.55	4.33	7.32	7.33	12.00	16.45	18.00	0.00	0.00
+M	0.00	0.00	-1036.66	-586.96	310.23	1301.58	1299.89	526.00	-199.22	-425.56	0.00	0.00
-M	0.00	0.00	-1394.77	-903.46	-61.73	743.01	742.00	139.18	-645.98	-940.81	0.00	0.00
V	0.00	0.00	375.98	368.89	361.80	347.63	-170.52	-191.78	-205.95	213.04	0.00	0.00
T	40.60											

MEM	3	JOINT	3	JOINT	4							
D	0.00	0.00	0.00	0.01	1.55	6.00	10.68	10.69	16.45	18.00	0.00	0.00
+M	0.00	0.00	-420.85	-414.83	-207.27	468.05	1205.73	1202.59	-589.35	-996.40	0.00	0.00
-M	0.00	0.00	-940.74	-934.89	-614.71	132.28	751.18	748.63	-897.95	-1385.63	0.00	0.00
V	0.00	0.00	673.92	673.92	205.73	191.55	170.29	-335.01	-356.27	363.36	0.00	0.00
T	28.97											

MEM	4	JOINT	4	JOINT	5							
D	0.00	0.00	0.00	1.55	3.36	3.37	14.04	14.05	16.45	18.00	0.00	6.72
+M	0.00	0.00	-989.03	-493.63	236.70	236.21	-233.15	-238.21	-1461.73	-2203.51	-2536.13	0.00
-M	0.00	0.00	-1373.13	-738.83	-100.36	-100.54	-741.33	-745.86	-1882.45	-2728.90	-2692.56	0.00
V	0.00	0.00	458.89	451.80	444.71	-58.44	-100.97	-536.41	-543.50	550.59	411.51	411.51
T	17.87											

GROUP IV DL + LL + (S+T) + CF

MEM	1	JOINT	1	JOINT	2							
D	-6.73	0.00	0.00	1.55	3.95	3.96	14.63	14.64	16.45	18.00	0.00	0.00
+M	0.00	-2539.75	-2117.24	-1365.54	-97.96	-97.35	357.29	352.82	-454.25	-1073.17	0.00	0.00
-M	0.00	-2748.46	-2737.06	-1876.20	-737.96	-737.10	-93.71	-97.21	-738.25	-1381.61	0.00	0.00
V	-419.24	419.24	570.42	563.34	556.25	108.73	66.21	-478.66	-485.74	492.83	0.00	0.00
T	23.66											

MEM	2	JOINT	2	JOINT	3							
D	0.00	0.00	0.00	1.55	4.33	7.32	7.33	12.00	16.45	18.00	0.00	0.00
+M	0.00	0.00	-1080.75	-622.18	290.92	1299.38	1297.75	498.32	-262.17	-500.80	0.00	0.00
-M	0.00	0.00	-1327.34	-848.32	-28.62	752.42	751.34	163.76	-595.93	-881.89	0.00	0.00
V	0.00	0.00	368.05	360.97	353.88	339.70	-164.79	-186.06	-200.23	207.32	0.00	0.00
T	32.61											

Sht 213 of

PRINTED IN U.S.A.

D	0.00	0.00	0.00	0.01	1.55	6.00	10.68	10.69	16.45	18.00	0.00	0.00
+M	0.00	0.00	-495.72	-489.62	-269.94	10.44	1203.69	1200.19	-624.13	-1039.97	0.00	0.0
-M	0.00	0.00	-882.19	-876.40	-564.95	36.79	760.43	757.96	-843.25	-1318.72	0.00	0.0
V	0.00	0.00	668.25	668.25	200.05	185.88	164.61	-327.13	-348.40	355.48	0.00	0.00
T	32.16											

MEM	4	JOINT	4	JOINT	5							
D	0.00	0.00	0.00	1.55	3.36	3.37	14.04	14.05	16.45	18.00	0.00	6.72
+M	0.00	0.00	-1030.54	-529.11	208.25	207.80	-159.72	-164.72	-1375.37	-2108.82	-2536.13	0.00
-M	0.00	0.00	-1375.07	-732.44	-84.26	-84.38	-728.28	-732.76	-1860.03	-2700.46	-2692.56	0.00
V	0.00	0.00	464.25	457.17	450.08	-54.55	-97.08	-532.53	-539.61	546.70	411.51	411.51
T	23.84											

GROUP V DL + W + (S+T)

MEM	1	JOINT	1	JOINT	2							
D	-6.73	0.00	0.00	1.55	3.95	3.96	14.63	14.64	16.45	18.00	0.00	0.00
+M	0.00	-2539.75	-1884.61	-1240.83	-262.75	-262.33	98.37	95.44	-441.69	-912.05	0.00	0.00
-M	0.00	-2539.75	-2765.69	-2012.28	-864.44	-863.32	-55.33	-58.96	-724.12	-1304.11	0.00	0.00
V	-388.23	388.23	489.04	481.96	474.87	112.57	70.04	-362.99	-370.07	377.16	0.00	0.00
T	81.49											

MEM	2	JOINT	2	JOINT	3							
D	0.00	0.00	0.00	1.55	4.33	7.32	7.33	12.00	16.45	18.00	0.00	0.00
+M	0.00	0.00	-923.26	-527.20	160.17	863.48	862.16	291.92	-265.06	-477.29	0.00	0.00
-M	0.00	0.00	-1249.05	-799.08	-15.02	792.28	791.30	200.36	-511.40	-777.54	0.00	0.00
V	0.00	0.00	293.28	286.19	279.10	264.93	-132.15	-153.41	-167.59	174.68	0.00	0.00
T	75.18											

MEM	3	JOINT	3	JOINT	4							
D	0.00	0.00	0.00	0.01	1.55	6.00	10.68	10.69	16.45	18.00	0.00	0.00
+M	0.00	0.00	-478.06	-473.04	-262.38	294.09	864.68	862.38	-527.39	-923.84	0.00	0.00
-M	0.00	0.00	-777.37	-772.00	-507.98	202.70	793.90	791.25	-798.13	-1248.29	0.00	0.00
V	0.00	0.00	536.73	536.73	167.35	153.17	131.91	-265.04	-286.31	293.39	0.00	0.00
T	60.25											

MEM	4	JOINT	4	JOINT	5							
D	0.00	0.00	0.00	1.55	3.36	3.37	14.04	14.05	16.45	18.00	0.00	6.72
+M	0.00	0.00	-913.26	-441.59	97.07	96.38	-260.30	-264.34	-1241.67	-1884.97	-2536.13	0.00
-M	0.00	0.00	-1302.83	-722.35	-56.63	-56.62	-856.32	-861.05	-2006.86	-2758.97	-2536.13	0.00
V	0.00	0.00	377.47	370.38	363.30	-69.20	-111.73	-474.03	-481.11	488.20	388.23	388.23
T	37.54											

GROUP VI DL + LL + HORIZ. FORCES + (S+T) + CF

MEM	1	JOINT	1	JOINT	2							
D	-6.73	0.00	0.00	1.55	3.95	3.96	14.63	14.64	16.45	18.00	0.00	0.00
+M	0.00	-2539.75	-1938.15	-1210.03	21.06	21.52	400.69	396.38	-383.16	-978.51	0.00	0.00
-M	0.00	-2748.46	-2916.15	-2031.72	-856.98	-855.96	-137.12	-140.76	-809.33	-1476.27	0.00	0.00
V	-419.24	419.24	585.63	578.55	571.46	123.94	81.41	-493.86	-500.95	508.04	0.00	0.00
T	68.65											

MEM	2	JOINT	2	JOINT	3							
D	0.00	0.00	0.00	1.55	4.33	7.32	7.33	12.00	16.45	18.00	0.00	0.00
+M	0.00	0.00	-985.28	-543.09	340.61	1317.16	1315.72	529.72	-183.72	-405.96	0.00	0.00
-M	0.00	0.00	-1422.81	-927.40	-78.31	734.34	733.36	132.36	-674.38	-976.73	0.00	0.00
V	0.00	0.00	378.63	371.54	364.45	350.28	-175.37	-196.63	-210.80	217.89	0.00	0.00
T	66.16											

Sht 2/4 of

PRINTED IN U.S.A.

D	0.00	0.00	0.00	0.01	1.55	6.00	10.68	10.69	16.45	18.00	0.00	0.00
+M	0.00	0.00	-401.25	-395.26	-191.77	1.77	1221.61	1218.52	-345.49	-945.01	0.00	0.00
-M	0.00	0.00	-976.66	-970.77	-643.11	5.46	742.51	739.94	-921.89	-1413.67	0.00	0.00
V	0.00	0.00	678.77	678.77	210.58	196.40	175.14	-337.66	-358.92	366.01	0.00	0.00
T	54.31											

MEM 4 JOINT 4 JOINT 5

D	0.00	0.00	0.00	1.55	3.36	3.37	14.04	14.05	16.45	18.00	0.00	6.72
+M	0.00	0.00	-936.85	-438.67	251.53	250.93	-42.78	-47.63	-1222.28	-1932.48	-2536.13	0.00
-M	0.00	0.00	-1468.76	-802.88	-127.54	-127.51	-845.22	-849.85	-2013.12	-2876.80	-2692.56	0.00
V	0.00	0.00	479.26	472.17	465.08	-69.56	-112.08	-547.53	-554.61	561.70	411.51	411.51
T	34.63											

Sht 215 of

PRINTED IN U.S.A.

JOB NO. 8080 THUNDERBIRD ROAD OVER DIVERSION CHANNEL PROGRAM P7310

PROBLEM NO. 2; PIER ANALYSIS AND DESIGN BY: RDT CHKD: JFF

MAX. AND MIN. MOMENT ENVELOPES -- MAX. SHEAR AND AXIAL VALUES
(ALL VALUES ADJUSTED TO DESIGN LOADS)
M-MOMENT (K-FT); V-SHEAR (K); T-THRUST (K); D-DISTANCE FROM JOINT (FT)

MEM	1	JOINT 1		JOINT 2								
D	-6.73	0.00	0.00	1.55	3.95	3.96	14.63	14.64	16.45	18.00	0.00	0.00
+M	0.00	-1814.11	-1346.15	-864.30	15.04	15.37	342.57	337.99	-273.69	-651.47	0.00	0.00
-M	0.00	-2748.46	-2589.16	-1745.53	-633.97	-633.22	-97.94	-100.55	-674.20	-1285.99	0.00	0.00
V	-419.24	419.24	559.31	552.22	545.13	97.61	58.15	-458.29	-465.37	472.46	0.00	0.00
T	58.20											

MEM	2	JOINT 2		JOINT 3								
D	0.00	0.00	0.00	1.55	4.33	7.32	7.33	12.00	16.45	18.00	0.00	0.00
+M	0.00	0.00	-659.47	-376.57	260.54	1283.50	1281.91	494.60	-131.23	-289.97	0.00	0.00
-M	0.00	0.00	-1299.30	-824.38	-55.94	524.53	523.83	94.54	-567.53	-845.97	0.00	0.00
V	0.00	0.00	365.41	358.32	351.23	337.06	-159.94	-181.21	-195.38	202.47	0.00	0.00
T	53.70											

MEM	3	JOINT 3		JOINT 4								
D	0.00	0.00	0.00	0.01	1.55	6.00	10.68	10.69	16.45	18.00	0.00	0.00
+M	0.00	0.00	-286.61	-282.33	-136.98	436.72	1187.81	1184.57	-376.71	-659.88	0.00	0.00
-M	0.00	0.00	-846.27	-840.53	-536.55	89.61	530.37	528.53	-819.31	-1290.68	0.00	0.00
V	0.00	0.00	663.40	663.40	195.20	181.03	159.76	-324.49	-345.75	352.84	0.00	0.00
T	43.04											

MEM	4	JOINT 4		JOINT 5								
D	0.00	0.00	0.00	1.55	3.36	3.37	14.04	14.05	16.45	18.00	0.00	6.72
+M	0.00	0.00	-652.33	-315.42	193.42	193.08	-30.56	-34.02	-873.05	-1346.41	-1811.52	0.00
-M	0.00	0.00	-1279.45	-668.39	-91.10	-91.08	-624.39	-628.77	-1729.35	-2552.56	-2692.56	0.00
V	0.00	0.00	443.88	436.80	429.71	-49.68	-85.96	-521.41	-528.50	535.58	411.51	411.51
T	26.82											

Sht 216 of

FRINTED IN U.S.A.

CAP DESIGN INPUT DATA

F'C(PSI)	FY(PSI)	ALPH(DEG)	AGG.(IN)	CLEAR.
3000.00	40000.00	0.00	1.50	1.50

CAP REINFORCING BAR COMBINATIONS-	LONG. BARS	STIRRUPS
	7	4
	8	4
	9	4
	10	5
	11	6

DESCRIPTION OF CAP DESIGN OUTPUT

IF THERE IS A CANTILEVER AT JOINT AT LEFT END OF CAP BEAM MEMBER, COLUMN 1 OF TABLE BELOW GIVES OUTPUT AT POINT OF LOAD ON CANTILEVER, COLUMN 2 GIVES OUTPUT AT JOINT AT FIXED END OF CANTILEVER.

COLUMN 3 OF TABLE GIVES OUTPUT AT JOINT AT LEFT END OF CAP BEAM MEMBER.

COLUMNS 4 THRU 9 OF TABLE GIVE OUTPUT AT SIX POINTS ALONG MEMBER. THESE SIX POINTS ARE LOCATED AT DISTANCE 'D' FROM LEFT END OF MEMBER. 'D' VALUES (GIVEN IN TABLE ABOVE) ARE POINTS OF BEAM REACTIONS ON CAP AND ADDITIONAL POINTS DESIGNATED BY 'A' DIMENSIONS IN INPUT DATA.

COLUMN 10 OF TABLE BELOW GIVES OUTPUT AT JOINT AT RIGHT END OF CAP BEAM MEMBER.

IF THERE IS A CANTILEVER AT JOINT AT RIGHT END OF CAP BEAM MEMBER, COLUMN 11 OF TABLE BELOW GIVES OUTPUT AT JOINT AT FIXED END OF CANTILEVER, COLUMN 12 GIVES OUTPUT AT POINT OF LOAD ON CANTILEVER.

DEP = DEPTH OF THE MEMBER AT THE SPECIFIED LOCATION(FT.)
M+ =POSITIVE MOMENT (K-FT)
M- =NEGATIVE MOMENT (K-FT)
VRS = SHEAR ON SECTION (K)
VSC = SHEAR CAPACITY OF CONCRETE SECTION (K)
BAS = REQUIRED AREA BOTTOM REINFORCING BARS (IN2)
BNO.= REQUIRED NUMBER BOTTOM REINFORCING BARS
SPH =HORIZ. BAR SPACING (IN)
TAS = REQUIRED AREA TOP REINFORCING BARS (IN2)
TNO.= REQUIRED NUMBER TOP REINFORCING BARS

ASV = REQUIRED AREA STEEL OF STIRRUPS (IN2/FT)
S = REQUIRED STIRRUP SPACING (IN)
WHERE STIRRUPS ARE REQUIRED FOR SHEAR, THE MAXIMUM SPACING IS LIMITED TO 1/2 THE BEAM DEPTH. BUT NOT MORE THAN 24 IN.

PRINTED IN U.S.A.

SERVICE LOAD DESIGN OF REINFORCEMENTS

REINFORCING BARS NO. 7 STIRRUPS NO. 4

MEM 1 JOINT 1 JOINT 2 SIMPLE BENDING

DEP	3.05	5.00	5.00	5.00	5.00	5.00	5.00	5.00	5.00	5.00	0.00	0.00
M+	0.00	-1814.11	-1346.15	-864.30	15.04	15.37	342.57	337.99	-273.69	-651.47	0.00	0.00
M-	0.00	-2748.46	-2589.16	-1745.53	-633.97	-633.22	-97.94	-100.55	-674.20	-1285.99	0.00	0.00
VRS	-419.24	419.24	559.31	552.22	545.13	97.61	58.15	-458.29	-465.37	472.46	0.00	0.00
VSC	111.98	188.49	188.49	188.49	188.49	188.49	188.49	188.49	188.49	188.49	0.00	0.00
BAS	0.00	0.00	0.00	0.00	0.21	0.22	3.73	3.68	0.00	0.00	0.00	0.00
BND.	0	0	0	0	1	1	7	7	0	0	0	0
SPH	0.00	0.00	0.00	0.00	0.00	0.00	9.75	9.75	0.00	0.00	0.00	0.00
TAS	0.00	32.22	30.26	20.01	7.01	7.00	1.39	1.43	7.47	14.56	0.00	0.00
TND.	0	54	51	34	12	12	3	3	13	25	0	0
SPH	0.00	3.13	3.13	3.13	5.38	5.38	29.50	29.50	4.88	3.13	0.00	0.00
ASV	5.40	2.41	3.87	3.80	3.72	0.94	0.00	2.82	2.89	2.96	0.00	0.00
S	0.89	1.99	1.24	1.26	1.29	5.08	0.00	1.71	1.66	1.62	0.00	0.00

MEM 2 JOINT 2 JOINT 3 SIMPLE BENDING

DEP	0.00	0.00	5.00	5.00	5.00	5.00	5.00	5.00	5.00	5.00	0.00	0.00
M+	0.00	0.00	-659.47	-376.57	260.54	1283.50	1281.91	494.60	-131.23	-289.97	0.00	0.00
M-	0.00	0.00	-1299.30	-824.38	-55.94	524.53	523.83	94.54	-567.53	-845.97	0.00	0.00
VRS	0.00	0.00	365.41	358.32	351.23	337.06	-159.94	-181.21	-195.38	202.47	0.00	0.00
VSC	0.00	0.00	188.49	188.49	188.49	188.49	188.49	188.49	188.49	188.49	0.00	0.00
BAS	0.00	0.00	0.00	0.00	3.53	14.53	14.51	5.44	0.00	0.00	0.00	0.00
BND.	0	0	0	0	6	25	25	10	0	0	0	0
SPH	0.00	0.00	0.00	0.00	11.75	3.13	3.13	6.50	0.00	0.00	0.00	0.00
TAS	0.00	0.00	14.72	9.19	0.79	0.00	0.00	0.00	6.26	9.44	0.00	0.00
TND.	0	0	25	16	2	0	0	0	11	16	0	0
SPH	0.00	0.00	3.13	3.88	59.13	0.00	0.00	0.00	5.88	3.88	0.00	0.00
ASV	0.00	0.00	1.85	1.77	1.70	1.55	0.94	0.94	0.94	0.94	0.00	0.00
S	0.00	0.00	2.60	2.71	2.83	3.10	5.08	5.08	5.08	5.08	0.00	0.00

Sht 218 of

PRINTED IN U.S.A.

DEP	0.00	0.00	5.00	5.00	5.00	5.00	5.00	5.00	5.00	5.00	0.00	0.00
M+	0.00	0.00	-286.61	-282.33	-136.98	6.72	1187.81	1184.57	-376.71	-659.88	0.00	0.00
M-	0.00	0.00	-846.27	-840.53	-536.55	89.61	530.37	528.53	-819.31	-1290.68	0.00	0.00
VRS	0.00	0.00	663.40	663.40	195.20	181.03	159.76	-324.49	-345.75	352.84	0.00	0.00
VSC	0.00	0.00	188.49	188.49	188.49	188.49	188.49	188.49	188.49	188.49	0.00	0.00
BAS	0.00	0.00	0.00	0.00	0.00	4.78	13.41	13.37	0.00	0.00	0.00	0.00
BND.	0	0	0	0	0	8	23	23	0	0	0	0
SPH	0.00	0.00	0.00	0.00	0.00	8.38	3.13	3.13	0.00	0.00	0.00	0.00
TAS	0.00	0.00	9.44	9.38	5.91	0.00	0.00	0.00	9.13	14.62	0.00	0.00
TND.	0	0	16	16	10	0	0	0	16	25	0	0
SPH	0.00	0.00	3.88	3.88	6.50	0.00	0.00	0.00	3.88	3.13	0.00	0.00
ASV	0.00	0.00	4.96	4.96	0.94	0.94	0.94	1.42	1.64	1.71	0.00	0.00
S	0.00	0.00	0.97	0.97	5.08	5.08	5.08	3.38	2.93	2.80	0.00	0.00

MEM 4 JOINT 4 JOINT 5 SIMPLE BENDING

DEP	0.00	0.00	5.00	5.00	5.00	5.00	5.00	5.00	5.00	5.00	5.00	3.06
M+	0.00	0.00	-652.33	-315.42	193.42	193.08	-30.56	-34.02	-873.05	-1346.41	-1811.52	0.00
M-	0.00	0.00	-1279.45	-668.39	-91.10	-91.08	-624.39	-628.77	-1729.35	-2552.56	-2692.56	0.00
VRS	0.00	0.00	443.88	436.80	429.71	-49.68	-85.96	-521.41	-528.50	535.58	411.51	411.51
VSC	0.00	0.00	188.49	188.49	188.49	188.49	188.49	188.49	188.49	188.49	188.49	112.09
BAS	0.00	0.00	0.00	0.00	2.78	2.78	0.00	0.00	0.00	0.00	0.00	0.00
BND.	0	0	0	0	5	5	0	0	0	0	0	0
SPH	0.00	0.00	0.00	0.00	14.75	14.75	0.00	0.00	0.00	0.00	0.00	0.00
TAS	0.00	0.00	14.48	7.41	1.30	1.30	6.90	6.95	19.82	29.81	31.53	0.00
TND.	0	0	25	13	3	3	12	12	33	50	53	0
SPH	0.00	0.00	3.13	4.88	29.50	29.50	5.38	5.38	3.13	3.13	3.13	0.00
ASV	0.00	0.00	2.66	2.59	2.52	0.00	0.00	3.47	3.55	3.62	2.33	5.25
S	0.00	0.00	1.80	1.85	1.91	0.00	0.00	1.38	1.35	1.33	2.06	0.91

PRINTED IN U.S.A.

JOB NO. 8080 THUNDERBIRD ROAD OVER DIVERSION CHANNEL PROGRAM P7310

PROBLEM NO. 2: PIER ANALYSIS AND DESIGN BY: RDT CHKD: JFF

SERVICE LOAD DESIGN OF REINFORCEMENTS

REINFORCING BARS NO. 8 STIRRUPS NO. 4

MEM 1 JOINT 1 JOINT 2 SIMPLE BENDING

DEP	3.05	5.00	5.00	5.00	5.00	5.00	5.00	5.00	5.00	5.00	0.00	0.00
M+	0.00	-1814.11	-1346.15	-864.30	15.04	15.37	342.57	337.99	-273.69	-651.47	0.00	0.00
M-	0.00	-2748.46	-2589.16	-1745.53	-633.97	-633.22	-97.94	-100.55	-674.20	-1285.99	0.00	0.00
VRS	-419.24	419.24	559.31	552.22	545.13	97.61	58.15	-458.29	-465.37	472.46	0.00	0.00
VSC	111.98	188.49	188.49	188.49	188.49	188.49	188.49	188.49	188.49	188.49	0.00	0.00
BAS	0.00	0.00	0.00	0.00	0.21	0.22	3.73	3.68	0.00	0.00	0.00	*0.00
BNO.	0	0	0	0	1	1	5	5	0	0	0	0
SPH	0.00	0.00	0.00	0.00	0.00	0.00	14.75	14.75	0.00	0.00	0.00	0.00
TAS	0.00	32.22	30.26	20.01	7.01	7.00	1.39	1.43	7.47	14.56	0.00	0.00
TNO.	0	41	39	26	9	9	2	2	10	19	0	0
SPH	0.00	3.25	3.25	3.25	7.38	7.38	59.00	59.00	6.50	3.25	0.00	0.00
ASV	5.40	2.41	3.87	3.80	3.72	0.94	0.00	2.82	2.89	2.96	0.00	0.00
S	0.89	1.99	1.24	1.26	1.29	5.08	0.00	1.71	1.66	1.62	0.00	0.00

MEM 2 JOINT 2 JOINT 3 SIMPLE BENDING

DEP	0.00	0.00	5.00	5.00	5.00	5.00	5.00	5.00	5.00	5.00	0.00	0.00
M+	0.00	0.00	-659.47	-376.57	260.54	1283.50	1281.91	494.60	-131.23	-289.97	0.00	0.00
M-	0.00	0.00	-1299.30	-824.38	-55.94	524.53	523.83	94.54	-567.53	-845.97	0.00	0.00
VRS	0.00	0.00	365.41	358.32	351.23	337.06	-159.94	-181.21	-195.38	202.47	0.00	0.00
VSC	0.00	0.00	188.49	188.49	188.49	188.49	188.49	188.49	188.49	188.49	0.00	0.00
BAS	0.00	0.00	0.00	0.00	3.53	14.53	14.51	5.44	0.00	0.00	0.00	0.00
BNO.	0	0	0	0	5	19	19	7	0	0	0	0
SPH	0.00	0.00	0.00	0.00	14.75	3.25	3.25	9.75	0.00	0.00	0.00	0.00
TAS	0.00	0.00	14.72	9.19	0.79	0.00	0.00	0.00	6.26	9.44	0.00	0.00
TNO.	0	0	19	12	1	0	0	0	8	12	0	0
SPH	0.00	0.00	3.25	5.25	0.00	0.00	0.00	0.00	8.38	5.25	0.00	0.00
ASV	0.00	0.00	1.85	1.77	1.70	1.55	0.94	0.94	0.94	0.94	0.00	0.00
S	0.00	0.00	2.60	2.71	2.83	3.10	5.08	5.08	5.08	5.08	0.00	0.00

Sht 220 of

PRINTED IN U.S.A.

DEP	0.00	0.00	5.00	5.00	5.00	5.00	5.00	5.00	5.00	5.00	0.00	0.00
M+	0.00	0.00	-286.61	-282.33	-136.98	6.72	1187.81	1184.37	-376.71	-659.88	0.00	0.00
M-	0.00	0.00	-846.27	-840.53	-536.55	89.61	530.37	528.53	-819.31	-1290.68	0.00	0.00
VRS	0.00	0.00	663.40	663.40	195.20	181.03	159.76	-324.49	-345.75	352.84	0.00	0.00
VSC	0.00	0.00	188.49	188.49	188.49	188.49	188.49	188.49	188.49	188.49	0.00	0.00
BAS	0.00	0.00	0.00	0.00	0.00	4.78	13.41	13.37	0.00	0.00	0.00	0.00
BNO.	0	0	0	0	0	7	17	17	0	0	0	0
SPH	0.00	0.00	0.00	0.00	0.00	9.75	3.63	3.63	0.00	0.00	0.00	0.00
TAS	0.00	0.00	9.44	9.38	5.91	0.00	0.00	0.00	9.13	14.62	0.00	0.00
TNO.	0	0	12	12	8	0	0	0	12	19	0	0
SPH	0.00	0.00	5.25	5.25	8.38	0.00	0.00	0.00	5.25	3.25	0.00	0.00
ASV	0.00	0.00	4.96	4.96	0.94	0.94	0.94	1.42	1.64	1.71	0.00	0.00
S	0.00	0.00	0.97	0.97	5.08	5.08	5.08	3.38	2.93	2.80	0.00	0.00

MEM 4 JOINT 4 JOINT 5 SIMPLE BENDING

DEP	0.00	0.00	5.00	5.00	5.00	5.00	5.00	5.00	5.00	5.00	5.00	3.06
M+	0.00	0.00	-652.33	-315.42	193.42	193.08	-30.56	-34.02	-873.05	-1346.41	-1811.52	0.00
M-	0.00	0.00	-1279.45	-668.39	-91.10	-91.08	-624.39	-628.77	-1729.35	-2552.56	-2692.56	0.00
VRS	0.00	0.00	443.88	436.80	429.71	-49.68	-85.96	-521.41	-528.50	535.58	411.51	411.51
VSC	0.00	0.00	188.49	188.49	188.49	188.49	188.49	188.49	188.49	188.49	188.49	112.09
BAS	0.00	0.00	0.00	0.00	2.78	2.78	0.00	0.00	0.00	0.00	0.00	0.00
BNO.	0	0	0	0	4	4	0	0	0	0	0	0
SPH	0.00	0.00	0.00	0.00	19.63	19.63	0.00	0.00	0.00	0.00	0.00	0.00
TAS	0.00	0.00	14.48	7.41	1.30	1.30	6.90	6.95	19.82	29.81	31.53	0.00
TNO.	0	0	19	10	2	2	9	9	26	38	40	0
SPH	0.00	0.00	3.25	6.50	59.00	59.00	7.38	7.38	3.25	3.25	3.25	0.00
ASV	0.00	0.00	2.66	2.59	2.52	0.00	0.00	3.47	3.55	3.62	2.33	5.25
S	0.00	0.00	1.80	1.85	1.91	0.00	0.00	1.38	1.35	1.33	2.06	0.91

Sht 221 of

PRINTED IN U.S.A.

JOB NO. 8080 THUNDERBIRD ROAD OVER DIVERSION CHANNE' PROGRAM P7310

PROBLEM NO. 2; PIER ANALYSIS AND DESIGN BY: RDT CHKD: JFF

SERVICE LOAD DESIGN OF REINFORCEMENTS

REINFORCING BARS NO. 9 STIRRUPS NO. 4

MEM 1 JOINT 1 JOINT 2 SIMPLE BENDING

DEP	3.05	5.00	5.00	5.00	5.00	5.00	5.00	5.00	5.00	5.00	0.00	0.00
M+	0.00	-1814.11	-1346.15	-864.30	15.04	15.37	342.57	337.99	-273.69	-651.47	0.00	0.00
M-	0.00	-2748.46	-2589.16	-1745.53	-633.97	-633.22	-97.94	-100.55	-674.20	-1285.99	0.00	0.00
VRS	-419.24	419.24	559.31	552.22	545.13	97.61	58.15	-458.29	-465.37	472.46	0.00	0.00
VSC	111.98	188.49	188.49	188.49	188.49	188.49	188.49	188.49	188.49	188.49	0.00	0.00
BAS	0.00	0.00	0.00	0.00	0.21	0.22	3.73	3.68	0.00	0.00	0.00	0.00
BND.	0	0	0	0	1	1	4	4	0	0	0	0
SPH	0.00	0.00	0.00	0.00	0.00	0.00	19.50	19.50	0.00	0.00	0.00	0.00
TAS	0.00	32.22	30.26	20.01	7.01	7.00	1.39	1.43	7.47	14.56	0.00	0.00
TNO.	0	33	31	20	7	7	2	2	8	15	0	0
SPH	0.00	3.38	3.38	3.38	9.75	9.75	58.75	58.75	8.38	4.13	0.00	0.00
ASV	5.40	2.41	3.87	3.80	3.72	0.94	0.00	2.82	2.89	2.96	0.00	0.00
S	0.89	1.99	1.24	1.26	1.29	5.08	0.00	1.71	1.66	1.62	0.00	0.00

MEM 2 JOINT 2 JOINT 3 SIMPLE BENDING

DEP	0.00	0.00	5.00	5.00	5.00	5.00	5.00	5.00	5.00	5.00	0.00	0.00
M+	0.00	0.00	-659.47	-376.57	260.54	1283.50	1281.91	494.60	-131.23	-289.97	0.00	0.00
M-	0.00	0.00	-1299.30	-824.38	-55.94	524.53	523.83	94.54	-567.53	-845.97	0.00	0.00
VRS	0.00	0.00	365.41	358.32	351.23	337.06	-159.94	-181.21	-195.38	202.47	0.00	0.00
VSC	0.00	0.00	188.49	188.49	188.49	188.49	188.49	188.49	188.49	188.49	0.00	0.00
BAS	0.00	0.00	0.00	0.00	3.53	14.53	14.51	5.44	0.00	0.00	0.00	0.00
BND.	0	0	0	0	4	15	15	6	0	0	0	0
SPH	0.00	0.00	0.00	0.00	19.50	4.13	4.13	11.75	0.00	0.00	0.00	0.00
TAS	0.00	0.00	14.72	9.19	0.79	0.00	0.00	0.00	6.26	9.44	0.00	0.00
TNO.	0	0	15	10	1	0	0	0	7	10	0	0
SPH	0.00	0.00	4.13	6.50	0.00	0.00	0.00	0.00	9.75	6.50	0.00	0.00
ASV	0.00	0.00	1.85	1.77	1.70	1.55	0.94	0.94	0.94	0.94	0.00	0.00
S	0.00	0.00	2.60	2.71	2.83	3.10	5.08	5.08	5.08	5.08	0.00	0.00

Sht 222 of

PRINTED IN U.S.A.

DEP	0.00	0.00	5.00	5.00	5.00	5.00	5.00	5.00	5.00	5.00	0.00	0.00
M+	0.00	0.00	-286.61	-282.33	-136.98	6.72	1187.81	1184.57	-376.71	-659.88	0.00	0.00
M-	0.00	0.00	-846.27	-840.53	-536.55	89.61	530.37	528.53	-819.31	-1290.68	0.00	0.00
VRS	0.00	0.00	663.40	663.40	195.20	181.03	159.76	-324.49	-345.75	352.84	0.00	0.00
VSC	0.00	0.00	188.49	188.49	188.49	188.49	188.49	188.49	188.49	188.49	0.00	0.00
BAS	0.00	0.00	0.00	0.00	0.00	4.78	13.41	13.37	0.00	0.00	0.00	0.00
BND.	0	0	0	0	0	5	14	14	0	0	0	0
SPH	0.00	0.00	0.00	0.00	0.00	14.63	4.50	4.50	0.00	0.00	0.00	0.00
TAS	0.00	0.00	9.44	9.38	5.91	0.00	0.00	0.00	9.13	14.62	0.00	0.00
TND.	0	0	10	10	6	0	0	0	10	15	0	0
SPH	0.00	0.00	6.50	6.50	11.75	0.00	0.00	0.00	6.50	4.13	0.00	0.00
ASV	0.00	0.00	4.96	4.96	0.94	0.94	0.94	1.42	1.64	1.71	0.00	0.00
S	0.00	0.00	0.97	0.97	5.08	5.08	5.08	3.38	2.93	2.80	0.00	0.00

MEM 4 JOINT 4 JOINT 5 SIMPLE BENDING

DEP	0.00	0.00	5.00	5.00	5.00	5.00	5.00	5.00	5.00	5.00	5.00	3.06
M+	0.00	0.00	-652.33	-315.42	193.42	193.08	-30.56	-34.02	-873.05	-1346.41	-1811.52	0.00
M-	0.00	0.00	-1279.45	-668.39	-91.10	-91.08	-624.39	-628.77	-1729.35	-2552.56	-2692.56	0.00
VRS	0.00	0.00	443.88	436.80	429.71	-49.68	-85.96	-521.41	-528.50	535.58	411.51	411.51
VSC	0.00	0.00	188.49	188.49	188.49	188.49	188.49	188.49	188.49	188.49	188.49	112.09
BAS	0.00	0.00	0.00	0.00	2.78	2.78	0.00	0.00	0.00	0.00	0.00	0.00
BND.	0	0	0	0	3	3	0	0	0	0	0	0
SPH	0.00	0.00	0.00	0.00	29.38	29.38	0.00	0.00	0.00	0.00	0.00	0.00
TAS	0.00	0.00	14.48	7.41	1.30	1.30	6.90	6.95	19.82	29.81	31.53	0.00
TND.	0	0	15	8	2	2	7	7	20	30	32	0
SPH	0.00	0.00	4.13	8.38	58.75	58.75	9.75	9.75	3.38	3.38	3.38	0.00
ASV	0.00	0.00	2.66	2.59	2.52	0.00	0.00	3.47	3.55	3.62	2.33	5.25
S	0.00	0.00	1.80	1.85	1.91	0.00	0.00	1.38	1.35	1.33	2.06	0.91

Sht 223 of

PRINTED IN U.S.A.

JOB NO. 8080 THUNDERBIRD ROAD OVER DIVERSION CHANNEL PROGRAM P7310

PROBLEM NO. 2: PIER ANALYSIS AND DESIGN BY: RDT CHKD: JFF

SERVICE LOAD DESIGN OF REINFORCEMENTS

REINFORCING BARS NO. 10 STIRRUPS NO. 5

MEM 1 JOINT 1 JOINT 2 SIMPLE BENDING

DEP	3.05	5.00	5.00	5.00	5.00	5.00	5.00	5.00	5.00	5.00	0.00	0.00
M+	0.00	-1814.11	-1346.15	-864.30	15.04	15.37	342.57	337.99	-273.69	-651.47	0.00	0.00
M-	0.00	-2748.46	-2589.16	-1745.53	-633.97	-633.22	-97.94	-100.55	-674.20	-1285.99	0.00	0.00
VRS	-419.24	419.24	559.31	532.22	545.13	97.61	58.15	-458.29	-465.37	472.46	0.00	0.00
VSC	111.98	188.49	188.49	188.49	188.49	188.49	188.49	188.49	188.49	188.49	0.00	0.00
BAS	0.00	0.00	0.00	0.00	0.21	0.22	3.73	3.68	0.00	0.00	0.00	0.00
BNO.	0	0	0	0	1	1	3	3	0	0	0	0
SPH	0.00	0.00	0.00	0.00	0.00	0.00	29.25	29.25	0.00	0.00	0.00	0.00
TAS	0.00	32.22	30.26	20.01	7.01	7.00	1.39	1.43	7.47	14.56	0.00	0.00
TNO.	0	26	24	16	6	6	2	2	6	12	0	0
SPH	0.00	3.50	3.50	3.88	11.63	11.63	58.63	58.63	11.63	5.25	0.00	0.00
ASV	5.40	2.41	3.87	3.80	3.72	0.94	0.00	2.82	2.89	2.96	0.00	0.00
S	1.38	3.09	1.92	1.96	2.00	7.87	0.00	2.64	2.58	2.51	0.00	0.00

MEM 2 JOINT 2 JOINT 3 SIMPLE BENDING

DEP	0.00	0.00	5.00	5.00	5.00	5.00	5.00	5.00	5.00	5.00	0.00	0.00
M+	0.00	0.00	-659.47	-376.57	260.54	1283.50	1281.91	494.60	-131.23	-289.97	0.00	0.00
M-	0.00	0.00	-1299.30	-824.38	-55.94	524.53	523.83	94.54	-567.53	-845.97	0.00	0.00
VRS	0.00	0.00	365.41	358.32	351.23	337.06	-159.94	-181.21	-195.38	202.47	0.00	0.00
VSC	0.00	0.00	188.49	188.49	188.49	188.49	188.49	188.49	188.49	188.49	0.00	0.00
BAS	0.00	0.00	0.00	0.00	3.53	14.53	14.51	5.44	0.00	0.00	0.00	0.00
BNO.	0	0	0	0	3	12	12	5	0	0	0	0
SPH	0.00	0.00	0.00	0.00	29.25	5.25	5.25	14.63	0.00	0.00	0.00	0.00
TAS	0.00	0.00	14.72	9.19	0.79	0.00	0.00	0.00	6.26	9.44	0.00	0.00
TNO.	0	0	12	8	1	0	0	0	5	8	0	0
SPH	0.00	0.00	5.25	8.38	0.00	0.00	0.00	0.00	14.63	8.38	0.00	0.00
ASV	0.00	0.00	1.85	1.77	1.70	1.55	0.94	0.94	0.94	0.94	0.00	0.00
S	0.00	0.00	4.03	4.20	4.38	4.80	7.87	7.87	7.87	7.87	0.00	0.00

Sht 224 of

PRINTED IN U.S.A.

DEP	0.00	0.00	5.00	5.00	5.00	5.00	5.00	5.00	5.00	5.00	0.00	0.0
M+	0.00	0.00	-286.61	-282.33	-136.98	6.72	1187.81	1184.57	-376.71	-659.88	0.00	0.0
M-	0.00	0.00	-846.27	-840.53	-536.55	89.61	530.37	528.53	-819.31	-1290.68	0.00	0.00
VRS	0.00	0.00	663.40	663.40	195.20	181.03	159.76	-324.49	-345.75	352.84	0.00	0.00
VSC	0.00	0.00	188.49	188.49	188.49	188.49	188.49	188.49	188.49	188.49	0.00	0.00
BAS	0.00	0.00	0.00	0.00	0.00	4.78	13.41	13.37	0.00	0.00	0.00	0.00
BNO.	0	0	0	0	0	4	11	11	0	0	0	0
SPH	0.00	0.00	0.00	0.00	0.00	19.50	5.75	5.75	0.00	0.00	0.00	0.00
TAS	0.00	0.00	9.44	9.38	5.91	0.00	0.00	0.00	9.13	14.62	0.00	0.00
TNO.	0	0	8	8	5	0	0	0	8	12	0	0
SPH	0.00	0.00	8.38	8.38	14.63	0.00	0.00	0.00	8.38	5.25	0.00	0.00
ASV	0.00	0.00	4.96	4.96	0.94	0.94	0.94	1.42	1.64	1.71	0.00	0.00
S	0.00	0.00	1.50	1.50	7.87	7.87	7.87	5.24	4.53	4.34	0.00	0.00

MEM 4 JOINT 4 JOINT 5 SIMPLE BENDING

DEP	0.00	0.00	5.00	5.00	5.00	5.00	5.00	5.00	5.00	5.00	5.00	3.06
M+	0.00	0.00	-652.33	-315.42	193.42	193.08	-30.56	-34.02	-873.05	-1346.41	-1811.52	0.00
M-	0.00	0.00	-1279.45	-668.39	-91.10	-91.08	-624.39	-628.77	-1729.35	-2552.56	-2692.56	0.00
VRS	0.00	0.00	443.88	436.80	429.71	-49.68	-85.96	-521.41	-528.50	535.58	411.51	411.51
VSC	0.00	0.00	188.49	188.49	188.49	188.49	188.49	188.49	188.49	188.49	188.49	112.09
BAS	0.00	0.00	0.00	0.00	2.78	2.78	0.00	0.00	0.00	0.00	0.00	0.00
BNO.	0	0	0	0	3	3	0	0	0	0	0	0
SPH	0.00	0.00	0.00	0.00	29.25	29.25	0.00	0.00	0.00	0.00	0.00	0.00
TAS	0.00	0.00	14.48	7.41	1.30	1.30	6.90	6.95	19.82	29.81	31.53	0.00
TNO.	0	0	12	6	1	1	6	6	16	24	25	0
SPH	0.00	0.00	5.25	11.63	0.00	0.00	11.63	11.63	3.88	3.50	3.50	0.00
ASV	0.00	0.00	2.66	2.59	2.52	0.00	0.00	3.47	3.55	3.62	2.33	5.25
S	0.00	0.00	2.79	2.87	2.96	0.00	0.00	2.14	2.10	2.05	3.20	1.42

PRINTED IN U.S.A.

SERVICE LOAD DESIGN OF REINFORCEMENTS

REINFORCING BARS NO. 11 STIRRUPS NO. 6

MEM 1 JOINT 1 JOINT 2 SIMPLE BENDING

DEP	3.05	5.00	5.00	5.00	5.00	5.00	5.00	5.00	5.00	5.00	0.00	0.00
M+	0.00	-1814.11	-1346.15	-864.30	15.04	15.37	342.57	337.99	-273.69	-651.47	0.00	0.00
M-	0.00	-2748.46	-2589.16	-1745.53	-633.97	-633.22	-97.94	-100.55	-674.20	-1285.99	0.00	0.00
VRS	-419.24	419.24	559.31	552.22	545.13	97.61	58.15	-458.29	-465.37	472.46	0.00	0.00
VSC	111.98	188.49	188.49	188.49	188.49	188.49	188.49	188.49	188.49	188.49	0.00	0.00
BAS	0.00	0.00	0.00	0.00	0.21	0.22	3.73	3.68	0.00	0.00	0.00	0.00
BNO.	0	0	0	0	1	1	3	3	0	0	0	0
SPH	0.00	0.00	0.00	0.00	0.00	0.00	29.25	29.25	0.00	0.00	0.00	0.00
TAS	0.00	32.22	30.26	20.01	7.01	7.00	1.39	1.43	7.47	14.56	0.00	0.00
TNO.	0	21	20	13	5	5	1	1	5	10	0	0
SPH	0.00	3.63	3.63	4.88	14.63	14.63	0.00	0.00	14.63	6.50	0.00	0.00
ASV	5.40	2.41	3.87	3.80	3.72	0.94	0.00	2.82	2.89	2.96	0.00	0.00
S	1.96	4.39	2.73	2.78	2.84	11.17	0.00	3.75	3.65	3.56	0.00	0.00

MEM 2 JOINT 2 JOINT 3 SIMPLE BENDING

DEP	0.00	0.00	5.00	5.00	5.00	5.00	5.00	5.00	5.00	5.00	0.00	0.00
M+	0.00	0.00	-659.47	-376.57	260.54	1283.50	1281.91	494.60	-131.23	-289.97	0.00	0.00
M-	0.00	0.00	-1299.30	-824.38	-55.94	524.53	523.83	94.54	-567.53	-845.97	0.00	0.00
VRS	0.00	0.00	365.41	358.32	351.23	337.06	-159.94	-181.21	-195.38	202.47	0.00	0.00
VSC	0.00	0.00	188.49	188.49	188.49	188.49	188.49	188.49	188.49	188.49	0.00	0.00
BAS	0.00	0.00	0.00	0.00	3.53	14.53	14.51	5.44	0.00	0.00	0.00	0.00
BNO.	0	0	0	0	3	10	10	4	0	0	0	0
SPH	0.00	0.00	0.00	0.00	29.25	6.50	6.50	19.50	0.00	0.00	0.00	0.00
TAS	0.00	0.00	14.72	9.19	0.79	0.00	0.00	0.00	6.26	9.44	0.00	0.00
TNO.	0	0	10	6	1	0	0	0	4	7	0	0
SPH	0.00	0.00	6.50	11.63	0.00	0.00	0.00	0.00	19.50	9.75	0.00	0.00
ASV	0.00	0.00	1.85	1.77	1.70	1.55	0.94	0.94	0.94	0.94	0.00	0.00
S	0.00	0.00	5.72	5.96	6.22	6.81	11.17	11.17	11.17	11.17	0.00	0.00

PRINTED IN U.S.A.

DEF	0.00	0.00	5.00	5.00	5.00	5.00	5.00	5.00	5.00	5.00	0.00	0.00
M+	0.00	0.00	-286.61	-282.33	-136.98	6.72	1187.81	1184.57	-376.71	-659.88	0.00	0.00
M-	0.00	0.00	-846.27	-840.53	-536.55	89.61	530.37	528.53	-819.31	-1290.68	0.00	0.00
VRS	0.00	0.00	663.40	663.40	195.20	181.03	159.76	-324.49	-345.75	352.84	0.00	0.00
VSC	0.00	0.00	188.49	188.49	188.49	188.49	188.49	188.49	188.49	188.49	0.00	0.00
BAS	0.00	0.00	0.00	0.00	0.00	4.78	13.41	13.37	0.00	0.00	0.00	0.00
BNO.	0	0	0	0	0	4	9	9	0	0	0	0
SPH	0.00	0.00	0.00	0.00	0.00	19.50	7.25	7.25	0.00	0.00	0.00	0.00
TAS	0.00	0.00	9.44	9.38	5.91	0.00	0.00	0.00	9.13	14.62	0.00	0.00
TNO.	0	0	7	6	4	0	0	0	6	10	0	0
SPH	0.00	0.00	9.75	11.63	19.50	0.00	0.00	0.00	11.63	6.50	0.00	0.00
ASV	0.00	0.00	4.96	4.96	0.94	0.94	0.94	1.42	1.64	1.71	0.00	0.00
S	0.00	0.00	2.13	2.13	11.17	11.17	11.17	7.44	6.44	6.16	0.00	0.00

MEM 4 JOINT 4 JOINT 5 SIMPLE BENDING

DEF	0.00	0.00	5.00	5.00	5.00	5.00	5.00	5.00	5.00	5.00	5.00	3.06
M+	0.00	0.00	-652.33	-315.42	193.42	193.08	-30.56	-34.02	-873.05	-1346.41	-1811.52	0.00
M-	0.00	0.00	-1279.45	-668.39	-91.10	-91.08	-624.39	-628.77	-1729.35	-2552.56	-2692.56	0.00
VRS	0.00	0.00	443.88	436.80	429.71	-49.68	-85.96	-521.41	-528.50	535.58	411.51	411.51
VSC	0.00	0.00	188.49	188.49	188.49	188.49	188.49	188.49	188.49	188.49	188.49	112.09
BAS	0.00	0.00	0.00	0.00	2.78	2.78	0.00	0.00	0.00	0.00	0.00	0.00
BNO.	0	0	0	0	2	2	0	0	0	0	0	0
SPH	0.00	0.00	0.00	0.00	58.50	58.50	0.00	0.00	0.00	0.00	0.00	0.00
TAS	0.00	0.00	14.48	7.41	1.30	1.30	6.90	6.95	19.82	29.81	31.53	0.00
TNO.	0	0	10	5	1	1	5	5	13	20	21	0
SPH	0.00	0.00	6.50	14.63	0.00	0.00	14.63	14.63	4.88	3.63	3.63	0.00
ASV	0.00	0.00	2.66	2.59	2.52	0.00	0.00	3.47	3.55	3.62	2.33	5.25
S	0.00	0.00	3.96	4.08	4.20	0.00	0.00	3.04	2.98	2.92	4.54	2.01

PRINTED IN U.S.A.

JOB NO. 8080 THUNDERBIRD ROAD OVER DIVERSION CHANNEL PROGRAM P7310

PROBLEM NO. 2; PIER ANALYSIS AND DESIGN BY: KDT CHKD: JFF

A.A.S.H.T.O. LOADING COMBINATIONS (COLUMNS)
ALL LOADINGS ARE NOT ADJUSTED TO DESIGN LOADS
DIMENSIONS: FORCES IN KIPS, MOMENTS IN KIP-FT

GROUP I DL+1.00LL+CF

MEM	JOINT	AXIAL	SHEAR	MOM(TRANS)	MOM(LONGI)	FORCE(LONGI)
5	6	888.44	7.09	77.43	0.00	0.00
6	7	694.42	-1.71	-19.00	0.00	0.00
7	8	718.75	1.22	14.04	0.00	0.00
8	9	656.72	1.71	18.93	0.00	0.00
9	10	888.49	-7.07	-79.98	0.00	0.00
5	6	1014.70	7.09	77.43	0.00	0.00
6	7	826.97	-1.71	-19.00	0.00	0.00
7	8	902.58	1.22	14.04	0.00	0.00
8	9	811.49	1.71	18.93	0.00	0.00
9	10	993.78	-7.07	-79.98	0.00	0.00

GROUP II DL+W

MEM	JOINT	AXIAL	SHEAR	MOM(TRANS)	MOM(LONGI)	FORCE(LONGI)
5	6	875.12	21.02	317.79	469.21	13.07
6	7	668.34	14.25	241.97	469.21	13.07
7	8	722.76	14.69	246.52	469.21	13.07
8	9	657.34	15.16	251.64	469.21	13.07
9	10	913.52	7.08	161.61	469.21	13.07
5	6	914.36	-7.28	-165.17	469.21	13.07
6	7	656.38	-15.28	-253.66	469.21	13.07
7	8	722.63	-14.71	-246.87	469.21	13.07
8	9	668.90	-14.13	-240.11	469.21	13.07
9	10	874.81	-20.78	-313.90	469.21	13.07

PRINTED IN U.S.A.

MEM	JOINT	AXIAL	SHEAR	M' 'TRANS)	MOM(LONGI)	FORCE(LONGI)
5	6	873.23	18.05	264.59	360.36	10.04
6	7	689.78	-13.15	-211.06	360.36	10.04
7	8	718.70	12.61	205.23	360.36	10.04
8	9	652.24	13.06	209.49	360.36	10.04
9	10	873.49	-17.87	-264.25	360.36	10.04
5	6	1029.90	18.05	264.59	360.36	10.04
6	7	831.60	-13.15	-211.06	360.36	10.04
7	8	902.63	12.61	205.23	360.36	10.04
8	9	815.97	13.06	209.49	360.36	10.04
9	10	1008.79	-17.87	-264.25	360.36	10.04

GROUP IV DL + LL + (S+T) + CF

MEM	JOINT	AXIAL	SHEAR	MOM(TRANS)	MOM(LONGI)	FORCE(LONGI)
5	6	868.07	23.73	362.31	0.00	0.00
6	7	685.95	7.13	129.13	0.00	0.00
7	8	713.45	1.22	14.04	0.00	0.00
8	9	648.25	-7.13	-129.20	0.00	0.00
9	10	868.12	-23.72	-364.87	0.00	0.00
5	6	1025.81	23.73	362.31	0.00	0.00
6	7	842.49	7.13	129.13	0.00	0.00
7	8	912.28	1.22	14.04	0.00	0.00
8	9	827.01	-7.13	-129.20	0.00	0.00
9	10	1004.90	-23.72	-364.87	0.00	0.00

GROUP V DL + W + (S+T)

MEM	JOINT	AXIAL	SHEAR	MOM(TRANS)	MOM(LONGI)	FORCE(LONGI)
5	6	854.75	37.66	602.68	469.21	13.07
6	7	647.91	23.08	390.09	469.21	13.07
7	8	717.34	-14.71	-246.87	469.21	13.07
8	9	648.87	-22.97	-388.24	469.21	13.07
9	10	854.44	-37.42	-598.79	469.21	13.07
5	6	925.48	37.66	602.68	469.21	13.07
6	7	683.86	23.08	390.09	469.21	13.07
7	8	732.46	-14.71	-246.87	469.21	13.07
8	9	684.41	-22.97	-388.24	469.21	13.07
9	10	924.64	-37.42	-598.79	469.21	13.07

PRINTED IN U.S.A.

MEM	JOINT	AXIAL	SHEAR	(TRANS)	MOM(LONGI)	FORCE(LONGI)
5	6	852.86	34.70	549.47	360.36	10.04
6	7	681.31	-17.97	-291.89	360.36	10.04
7	8	713.41	12.61	205.24	360.36	10.04
8	9	643.77	17.88	290.33	360.36	10.04
9	10	853.12	-34.51	-549.13	360.36	10.04
5	6	1041.02	34.70	549.47	360.36	10.04
6	7	847.12	-17.97	-291.89	360.36	10.04
7	8	912.33	12.61	205.24	360.36	10.04
8	9	831.49	17.88	290.33	360.36	10.04
9	10	1019.90	-34.51	-549.13	360.36	10.04

GROUP VII DL+EQ

MEM	JOINT	AXIAL	SHEAR	MOM(TRANS)	MOM(LONGI)	FORCE(LONGI)
5	6	845.81	42.14	678.42	1543.70	43.00
6	7	677.27	36.30	612.05	1543.70	43.00
7	8	722.85	36.64	614.94	1543.70	43.00
8	9	648.71	37.04	618.83	1543.70	43.00
9	10	942.43	27.89	516.67	1543.70	43.00
5	6	943.67	-28.41	-525.80	1543.70	43.00
6	7	647.45	-37.33	-623.74	1543.70	43.00
7	8	722.54	-36.67	-615.29	1543.70	43.00
8	9	677.52	-36.01	-607.30	1543.70	43.00
9	10	845.90	-41.58	-668.97	1543.70	43.00

RATIO OF HORIZONTAL EARTHQUAKE FORCE TO HORIZONTAL FORCE LOADING CASE
TRANSVERSE EQ/GROUP II WIND = 2.4934
LONGITUDINAL EQ/GP. II WIND = 3.2900

PRINTED IN U.S.A.

JOB NO. 8080 THUNDERBIRD ROAD OVER DIVERSION CHANNE' PROGRAM P7310

PROBLEM NO. 2: PIER ANALYSIS AND DESIGN BY: RDT CHKD: JFF

A.A.S.H.T.O. LOADING COMBINATIONS (COLUMNS)
ALL LOADINGS ARE NOT ADJUSTED TO DESIGN LOADS
DIMENSIONS: FORCES IN KIPS, MOMENTS IN KIP-FT

GROUP I DL+1.00LL+CF

MEM	JOINT	AXIAL	SHEAR	MOM(TRANS)	MOM(LONGI)	FORCE(LONGI)
5	1	-840.24	-7.09	159.30	0.00	0.00
6	2	-646.21	1.71	-38.07	0.00	0.00
7	3	-670.55	-1.22	26.63	0.00	0.00
8	4	-608.52	-1.71	38.04	0.00	0.00
9	5	-840.29	7.07	-156.28	0.00	0.00
5	1	-966.49	-7.09	159.30	0.00	0.00
6	2	-778.77	1.71	-38.07	0.00	0.00
7	3	-854.38	-1.22	26.63	0.00	0.00
8	4	-763.29	-1.71	38.04	0.00	0.00
9	5	-945.58	7.07	-156.28	0.00	0.00

GROUP II DL+W

MEM	JOINT	AXIAL	SHEAR	MOM(TRANS)	MOM(LONGI)	FORCE(LONGI)
5	1	-826.92	-21.02	384.11	32.67	13.07
6	2	-620.14	-14.25	233.85	32.67	13.07
7	3	-674.55	-14.69	243.96	32.67	13.07
8	4	-609.14	-15.16	254.80	32.67	13.07
9	5	-865.32	-7.08	74.93	32.67	13.07
5	1	-866.16	7.28	-78.04	32.67	13.07
6	2	-608.18	15.28	-256.78	32.67	13.07
7	3	-674.43	14.71	-244.55	32.67	13.07
8	4	-620.69	14.13	-231.98	32.67	13.07
9	5	-826.61	20.78	-380.13	32.67	13.07

PRINTED IN U.S.A.

MEM	JOINT	AXIAL	SHEAR	M' TRANS)	MOM(LONGI)	FORCE(LONGI)
5	1	-825.03	-18.05	338.39	25.09	10.04
6	2	-641.58	13.15	-228.20	25.09	10.04
7	3	-670.50	-12.61	215.94	25.09	10.04
8	4	-604.04	-13.06	226.68	25.09	10.04
9	5	-825.28	17.87	-332.62	25.09	10.04
5	1	-981.70	-18.05	338.39	25.09	10.04
6	2	-783.40	13.15	-228.20	25.09	10.04
7	3	-854.43	-12.61	215.94	25.09	10.04
8	4	-767.77	-13.06	226.68	25.09	10.04
9	5	-960.58	17.87	-332.62	25.09	10.04

GROUP IV DL + LL + (S+T) + CF

MEM	JOINT	AXIAL	SHEAR	MOM(TRANS)	MOM(LONGI)	FORCE(LONGI)
5	1	-819.87	-23.73	430.33	0.00	0.00
6	2	-637.75	-7.13	-118.29	0.00	0.00
7	3	-665.25	-1.22	26.63	0.00	0.00
8	4	-600.05	7.13	118.26	0.00	0.00
9	5	-819.92	23.72	-427.31	0.00	0.00
5	1	-977.61	-23.73	430.33	0.00	0.00
6	2	-794.29	-7.13	-118.29	0.00	0.00
7	3	-864.08	-1.22	26.63	0.00	0.00
8	4	-778.81	7.13	118.26	0.00	0.00
9	5	-956.70	23.72	-427.31	0.00	0.00

GROUP V DL + W + (S+T)

MEM	JOINT	AXIAL	SHEAR	MOM(TRANS)	MOM(LONGI)	FORCE(LONGI)
5	1	-806.55	-37.66	655.14	32.67	13.07
6	2	-599.71	-23.08	380.85	32.67	13.07
7	3	-669.13	14.71	-244.55	32.67	13.07
8	4	-600.67	22.97	-378.99	32.67	13.07
9	5	-806.24	37.42	-651.16	32.67	13.07
5	1	-877.28	-37.66	655.14	32.67	13.07
6	2	-635.66	-23.08	380.85	32.67	13.07
7	3	-684.26	14.71	-244.55	32.67	13.07
8	4	-636.21	22.97	-378.99	32.67	13.07
9	5	-876.43	37.42	-651.16	32.67	13.07

PRINTED IN U.S.A.

MEM	JOINT	AXIAL	SHEAR	M (TRANS)	MOM(LONGI)	FORCE(LONGI)
5	1	-804.66	-34.70	609.42	25.09	10.04
6	2	-633.11	17.97	-308.42	25.09	10.04
7	3	-665.20	-12.61	215.94	25.09	10.04
8	4	-595.57	-17.88	306.90	25.09	10.04
9	5	-804.91	34.51	-603.66	25.09	10.04
5	1	-992.82	-34.70	609.42	25.09	10.04
6	2	-798.92	17.97	-308.42	25.09	10.04
7	3	-864.13	-12.61	215.94	25.09	10.04
8	4	-783.29	-17.88	306.90	25.09	10.04
9	5	-971.70	34.51	-603.66	25.09	10.04

GROUP VII DL+EQ

MEM	JOINT	AXIAL	SHEAR	MOM(TRANS)	MOM(LONGI)	FORCE(LONGI)
5	1	-797.61	-42.14	729.21	107.50	43.00
6	2	-629.07	-36.30	600.21	107.50	43.00
7	3	-674.65	-36.64	608.74	107.50	43.00
8	4	-600.51	-37.04	618.29	107.50	43.00
9	5	-894.23	-27.89	414.73	107.50	43.00
5	1	-895.47	28.41	-423.13	107.50	43.00
6	2	-599.25	37.33	-623.14	107.50	43.00
7	3	-674.33	36.67	-609.33	107.50	43.00
8	4	-629.32	36.01	-595.47	107.50	43.00
9	5	-797.70	41.58	-719.92	107.50	43.00

RATIO OF HORIZONTAL EARTHQUAKE FORCE TO HORIZONTAL FORCE LOADING CASE
TRANSVERSE EQ/GROUP II WIND = 2.4934
LONGITUDINAL EQ/GP. II WIND = 3.2900

Sht 233 of

PRINTED IN U.S.A.

DESIGN OF ROUND R.C. COMPRESSION MEMBERS

TIED COMPRESSION MEMBER

TIED REINFORCEMENT ASSUMED FOR ALL MEMBERS

RECTANGULAR REINFORCEMENT PATTERN IS GIVEN BY NUMBER OF BARS PER ROW
OTHERWISE INDICATES A CIRCULAR REINFORCEMENT PATTERN.

TOTAL DEPTH INCREMENT = 12.00 IN TOTAL WIDTH INCREMENT = 12.00 IN
DEPTH INCREMENT = 6.00 IN WIDTH INCREMENT = 6.00 IN
MIN.CLEAR SPACING = 1.50 IN BARS CONSIDERED 11 14
MAX. PERCENT STEEL = 8.00

MEMBER 5 JOINT 1

DEPTH= 42.000 WIDTH= 42.000 FPC= 3.000 FY= 40.000

USE- 39 NO.11 AST= 60.84 SQ.IN. PCT.AS= 4.39 COVER= 1.50 IN.
PHIC=PHIB=.350
BY SERVICE LOAD DESIGN OF COLUMNS

LOAD CASE	APPLIED LOADS AP	AMX	AMY	COMPUTED STRENGTH UP	UMX	UMY	UP/AP
2	966.5	338.3	997.5	961.1	336.4	992.1	0.995
2	840.2	294.1	867.2	962.9	336.0	991.0	1.144
3	661.5	307.3	682.8	938.5	436.2	969.2	1.419
4	692.9	242.5	715.2	961.0	336.4	992.2	1.387
5	660.0	270.7	681.2	949.8	389.7	980.6	1.439
6	785.4	274.9	810.6	961.1	336.4	992.1	1.224
7	655.9	344.3	677.0	924.8	485.9	955.4	1.411
8	782.1	344.3	807.2	943.8	415.5	974.4	1.207
9	576.1	468.0	594.6	849.8	692.5	880.0	1.478
10	626.6	468.0	646.8	867.9	649.5	897.7	1.387
11	574.8	435.3	593.2	864.8	656.7	895.0	1.507
12	709.2	435.3	731.9	903.3	555.0	933.3	1.275
13	598.2	546.9	617.4	821.7	752.9	850.0	1.376
14	671.6	317.3	693.2	936.7	442.9	967.4	1.395
15	634.9	222.2	655.3	961.0	336.5	992.2	1.514

AMX=MOMENT ABOUT THE LONGITUDINAL ROADWAY AXIS - MOM.(TRANS) K-FT
AMY=MOMENT ABOUT THE TRANSVERSE ROADWAY AXIS - MOM.(LONG) K-FT

PRINTED IN U.S.A.

MEMBER 6 JOINT 2

DEPTH= 42.000 WIDTH= 42.000 FPC= 3.000 FY= 40.000

USE- 28 NO.11 AST= 43.68 SQ.IN. PCT.AS= 3.15 COVER= 1.50 IN.
PHIC=PHIB=.350
BY SERVICE LOAD DESIGN OF COLUMNS

LOAD CASE	APPLIED LOADS AP	AMX	AMY	COMPUTED STRENGTH UP	UMX	UMY	UP/AP
2	778.8	272.6	875.7	789.7	277.1	890.2	1.016
2	646.2	226.2	726.6	790.7	277.0	889.8	1.224
3	496.1	187.1	557.9	786.2	297.0	885.6	1.586
4	486.5	205.4	547.1	779.3	329.6	877.7	1.603
5	513.3	182.6	577.1	789.3	281.2	889.1	1.539
6	626.7	219.4	704.7	790.6	277.0	889.8	1.262
7	510.2	178.6	573.7	790.1	277.0	890.0	1.550
8	635.4	222.4	714.5	790.7	277.0	889.8	1.245
9	428.4	272.0	481.7	738.1	469.5	831.4	1.725
10	454.0	272.0	510.6	745.8	447.7	840.2	1.644
11	452.2	220.3	508.5	767.8	374.8	865.2	1.700
12	570.7	220.3	641.7	785.3	303.5	883.9	1.377
13	471.8	450.2	530.5	662.2	632.2	745.1	1.404
14	449.4	467.4	505.4	640.3	666.3	720.5	1.425
15	460.6	161.2	518.0	789.9	277.1	890.1	1.717

AMX=MOMENT ABOUT THE LONGITUDINAL ROADWAY AXIS - MOM.(TRANS) K-FT
AMY=MOMENT ABOUT THE TRANSVERSE ROADWAY AXIS - MOM.(LONG) K-FT

PRINTED IN U.S.A.

JOB NO. 8080 THUNDERBIRD ROAD OVER DIVERSION CHANNEL PROGRAM P7310

PROBLEM NO. 2: PIER ANALYSIS AND DESIGN BY: RDT CHKD: JFF

MEMBER 7 JOINT 3

DEPTH= 42.000 WIDTH= 42.000 FPC= 3.000 FY= 40.000

USE- 33 NO.11 AST= 51.48 SQ.IN. PCT.AS= 3.72 COVER= 1.50 IN.
PHIC=PHIB=.350
BY SERVICE LOAD DESIGN OF COLUMNS

LOAD	APPLIED LOADS			COMPUTED STRENGTH			
CASE	AP	AMX	AMY	UP	UMX	UMY	UP/AP
2	854.4	299.0	947.8	855.1	299.3	948.7	1.001
8	691.3	241.9	766.9	854.8	299.4	948.8	1.237
3	539.6	195.2	598.7	852.8	308.8	947.1	1.581
4	539.5	195.6	598.5	852.6	309.5	947.0	1.581
5	536.4	187.7	595.1	854.6	299.4	949.0	1.594
6	683.5	239.2	758.3	854.8	299.4	948.8	1.251
7	532.2	186.3	590.4	854.5	299.4	949.0	1.607
1	670.5	234.7	743.9	854.8	299.4	948.9	1.275
9	478.0	174.7	530.2	852.1	311.8	946.6	1.784
10	488.8	174.7	542.2	853.3	305.4	947.9	1.747
11	475.1	166.3	527.1	854.5	299.4	949.0	1.800
12	617.2	216.0	684.7	854.7	299.4	948.9	1.385
13	506.0	456.6	561.3	736.0	665.3	818.0	1.456
14	505.8	457.0	561.1	735.7	666.0	817.6	1.456
15	505.9	177.1	561.2	854.5	299.4	949.0	1.690

AMX=MOMENT ABOUT THE LONGITUDINAL ROADWAY AXIS - MOM.(TRANS) K-FT
AMY=MOMENT ABOUT THE TRANSVERSE ROADWAY AXIS - MOM.(LONG) K-FT

Sht 236 of

PRINTED IN U.S.A.

JOB NO. 8080 THUNDERBIRD ROAD OVER DIVERSION CHANNEL PROGRAM P7310

PROBLEM NO. 2; PIER ANALYSIS AND DESIGN BY: RDT CHKD: JFF

MEMBER 8 JOINT 4

DEPTH= 42.000 WIDTH= 42.000 FPC= 3.000 FY= 40.000

USE- 28 NO.11 AST= 43.68 SQ.IN. PCT.AS= 3.15 COVER= 1.50 IN.
PHIC=PHIB=.350
BY SERVICE LOAD DESIGN OF COLUMNS

LOAD CASE	APPLIED LOADS AP	AMX	AMY	COMPUTED STRENGTH UP	UMX	UMY	UP/AP
2	763.3	267.2	906.9	762.7	267.0	906.3	0.999
8	623.0	218.1	740.3	762.5	267.0	906.4	1.224
3	487.3	203.8	579.0	752.6	315.2	895.3	1.546
4	496.6	185.6	590.0	759.1	284.0	902.9	1.530
5	483.2	181.3	574.1	758.8	285.1	902.7	1.571
6	614.2	215.0	729.8	762.5	267.0	906.4	1.242
7	480.0	168.0	570.4	762.2	267.0	906.5	1.589
1	608.5	213.0	723.0	762.5	267.0	906.4	1.253
9	429.0	270.7	509.8	714.7	431.6	850.4	1.667
10	454.4	270.7	539.9	721.7	430.5	858.7	1.590
11	425.4	219.2	505.4	736.6	380.1	876.5	1.733
12	559.5	219.2	664.8	756.7	296.7	899.8	1.353
13	450.4	463.7	535.1	625.5	644.5	743.8	1.390
14	472.0	446.6	560.8	645.2	610.8	767.0	1.368
15	461.2	161.4	548.0	762.2	267.0	906.5	1.654

AMX=MOMENT ABOUT THE LONGITUDINAL ROADWAY AXIS - MOM.(TRANS) K-FT
AMY=MOMENT ABOUT THE TRANSVERSE ROADWAY AXIS - MOM.(LONG) K-FT

PRINTED IN U.S.A.

JOB NO. 8080 THUNDERBIRD ROAD OVER DIVERSION CHANNEL PROGRAM P7310

PROBLEM NO. 2: PIER ANALYSIS AND DESIGN BY: RDT CHKD: JFF

MEMBER 9 JOINT 5

DEPTH= 42.000 WIDTH= 42.000 FPC= 3.000 FY= 40.000

USE- 37 NO.11 AST= 57.72 SQ.IN. PCT.AS= 4.17 COVER= 1.50 IN.
PHIC=PHIB=.350
BY SERVICE LOAD DESIGN OF COLUMNS

LOAD	APPLIED LOADS			COMPUTED STRENGTH			
CASE	AP	AMX	AMY	UP	UMX	UMY	UP/AP
2	945.6	331.0	966.8	943.3	330.2	964.5	0.998
2	840.3	294.1	859.2	943.6	330.1	964.2	1.123
3	692.3	242.3	707.8	943.2	330.2	964.5	1.363
4	661.3	304.1	676.1	921.5	424.1	942.8	1.394
5	660.2	266.1	675.1	933.3	376.3	954.5	1.414
6	768.5	269.0	785.7	943.2	330.2	964.5	1.227
7	655.9	341.8	670.7	907.7	473.6	929.2	1.385
8	765.4	341.8	782.5	924.5	413.0	945.5	1.208
9	575.9	465.1	588.8	833.4	675.0	854.5	1.450
10	626.0	465.1	640.1	851.2	633.9	872.4	1.362
11	574.9	431.2	587.9	849.1	638.6	870.6	1.479
12	694.1	431.2	709.7	883.5	549.5	904.5	1.274
13	670.7	311.0	685.7	920.7	427.3	942.0	1.373
14	598.3	539.9	611.7	807.2	729.8	826.8	1.351
15	634.5	222.1	648.7	943.1	330.2	964.5	1.487

AMX=MOMENT ABOUT THE LONGITUDINAL ROADWAY AXIS - MOM.(TRANS) K-FT
AMY=MOMENT ABOUT THE TRANSVERSE ROADWAY AXIS - MOM.(LONG) K-FT

Sht 238 of ___

PRINTED IN U.S.A.

MEMBER 5 JOINT 6

DEPTH= 48.000 WIDTH= 48.000 FPC= 3.000 FY= 40.000

USE- 37 NO.14 AST= 83.25 SQ.IN. PCT.AS= 4.60 COVER= 1.50 IN.
PHIC=PHIB=.350
BY SERVICE LOAD DESIGN OF COLUMNS

LOAD	APPLIED LOADS			COMPUTED STRENGTH			
CASE	AP	AMX	AMY	UP	UMX	UMY	UP/AP
15	671.1	268.4	1847.7	673.8	269.7	1856.8	1.005
2	1014.7	405.9	647.7	1682.7	673.5	1074.9	1.659
3	700.1	280.0	599.0	1507.3	603.2	1290.4	2.154
4	731.5	292.6	599.0	1535.5	614.5	1258.1	2.100
5	698.6	279.4	460.1	1665.0	667.0	1098.2	2.385
6	823.9	329.6	526.0	1682.3	673.7	1075.2	2.043
7	694.5	289.9	443.3	1672.6	699.3	1069.5	2.410
8	820.6	328.3	523.9	1682.3	673.8	1075.2	2.051
9	610.5	430.5	534.9	1368.4	966.2	1200.4	2.243
10	661.1	430.5	534.9	1431.7	933.2	1159.5	2.167
11	609.2	392.5	410.8	1516.9	978.4	1024.0	2.491
12	743.6	392.5	474.7	1609.8	850.7	1028.9	2.166
13	634.4	508.8	404.9	1442.1	1157.8	921.4	2.274
14	707.8	394.3	451.8	1592.3	888.1	1017.5	2.251
1	888.4	355.4	567.1	1682.4	673.7	1075.1	1.894

AMX=MOMENT ABOUT THE LONGITUDINAL ROADWAY AXIS - MOM.(TRANS) K-FT
AMY=MOMENT ABOUT THE TRANSVERSE ROADWAY AXIS - MOM.(LONG) K-FT

PRINTED IN U.S.A.

MEMBER 6 JOINT 7

DEPTH= 48.000 WIDTH= 48.000 FPC= 3.000 FY= 40.000

USE- 47 NO.11 AST= 73.32 SQ.IN. PCT.AS= 4.05 COVER= 1.50 IN.
PHIC=PHIB=.350
BY SERVICE LOAD DESIGN OF COLUMNS

LOAD CASE	APPLIED LOADS AP	AMX	AMY	COMPUTED STRENGTH UP	UMX	UMY	UP/AP
15	496.8	198.7	1720.6	492.8	197.1	1706.8	0.992
2	827.0	330.8	491.6	1633.2	654.0	971.9	1.976
3	534.7	213.9	557.8	1301.2	520.9	1358.7	2.435
4	525.1	210.0	557.8	1289.2	516.0	1370.6	2.456
5	551.8	220.7	428.4	1488.1	596.1	1157.1	2.698
6	665.3	266.1	428.4	1592.4	638.1	1027.3	2.395
7	548.8	219.5	326.2	1632.3	654.5	972.6	2.977
8	674.0	269.6	400.7	1632.8	654.2	972.3	2.424
9	462.8	278.6	498.1	1225.5	738.8	1320.6	2.650
10	488.5	278.6	498.1	1266.9	723.4	1293.1	2.595
11	486.7	208.5	382.5	1469.4	630.6	1157.0	3.022
12	605.1	242.0	382.5	1601.8	642.0	1014.7	2.649
13	508.0	459.0	302.0	1325.7	1199.6	789.1	2.612
14	485.6	467.8	288.7	1290.9	1245.0	768.2	2.660
1	694.4	277.8	412.8	1632.8	654.2	972.2	2.353

AMX=MOMENT ABOUT THE LONGITUDINAL ROADWAY AXIS - MOM.(TRANS) K-FT
AMY=MOMENT ABOUT THE TRANSVERSE ROADWAY AXIS - MOM.(LONG) K-FT

PRINTED IN U.S.A.

JOB NO. 8080 THUNDERBIRD ROAD OVER DIVERSION CHANNEL PROGRAM P7310

PROBLEM NO. 2; PIER ANALYSIS AND DESIGN BY: RDT CHKD: JFF

MEMBER 7 JOINT 8

DEPTH= 48.000 WIDTH= 48.000 FPC= 3.000 FY= 40.000

USE- 35 NO.14 AST= 78.75 SQ.IN. PCT.AS= 4.35 COVER= 1.50 IN.
PHIC=PHIB=.350
BY SERVICE LOAD DESIGN OF COLUMNS

LOAD CASE	APPLIED LOADS AP	AMX	AMY	COMPUTED STRENGTH UP	UMX	UMY	UP/AP
15	542.0	216.8	1782.6	543.5	217.5	1788.4	1.003
2	902.6	361.0	555.9	1660.8	664.9	1023.7	1.841
3	578.2	231.3	578.0	1368.5	547.8	1369.0	2.368
4	578.1	231.2	578.0	1368.3	547.8	1369.2	2.368
5	575.0	230.0	443.9	1534.1	614.6	1186.2	2.670
6	722.1	288.8	444.7	1660.4	665.1	1024.0	2.300
7	570.8	228.3	351.5	1660.0	665.3	1024.3	2.910
8	729.8	291.9	449.5	1660.4	665.1	1024.0	2.276
9	512.4	205.0	516.0	1363.3	545.8	1374.3	2.662
10	523.2	209.3	516.0	1377.3	551.5	1359.9	2.634
11	509.6	203.8	396.3	1529.5	612.8	1191.6	3.004
12	651.7	260.7	401.3	1660.2	665.2	1024.1	2.549
13	542.1	461.2	333.9	1387.3	1182.1	855.8	2.561
14	541.9	461.5	333.7	1386.8	1182.8	855.5	2.561
1	718.7	287.5	442.7	1660.4	665.1	1024.0	2.311

AMX=MOMENT ABOUT THE LONGITUDINAL ROADWAY AXIS - MOM.(TRANS) K-FT
AMY=MOMENT ABOUT THE TRANSVERSE ROADWAY AXIS - MOM.(LONG) K-FT

Sht 241 of

PRINTED IN U.S.A.

MEMBER 8 JOINT 9

DEPTH= 48.000 WIDTH= 48.000 FPC= 3.000 FY= 40.000

USE- 33 NO.14 AST= 74.25 SQ.IN. PCT.AS= 4.10 COVER= 1.50 IN.
PHIC=PHIB=.350
BY SERVICE LOAD DESIGN OF COLUMNS

LOAD	APPLIED LOADS			COMPUTED STRENGTH			
CASE	AP	AMX	AMY	UP	UMX	UMY	UP/AP
15	497.3	198.9	1727.1	493.3	197.3	1713.2	0.992
2	811.5	324.6	484.2	1636.2	655.2	977.4	2.017
3	525.9	210.3	559.9	1290.9	516.8	1375.6	2.456
4	535.1	214.0	559.9	1302.6	521.5	1364.1	2.435
5	521.8	208.7	430.0	1456.5	583.4	1202.1	2.793
6	652.8	261.1	430.0	1585.0	635.2	1046.1	2.430
7	518.6	207.4	309.4	1635.4	655.6	978.0	3.156
8	661.6	264.6	394.8	1635.8	655.4	977.7	2.474
9	463.5	277.3	499.9	1228.3	735.9	1326.7	2.652
10	488.9	277.3	499.9	1269.3	720.9	1299.6	2.598
11	459.8	207.4	384.0	1429.4	645.6	1195.4	3.111
12	593.9	237.6	384.0	1594.9	639.2	1033.2	2.687
13	486.5	464.1	290.3	1299.0	1240.8	776.1	2.672
14	508.1	455.5	303.2	1332.7	1196.5	796.5	2.625
1	656.7	262.7	391.9	1635.8	655.4	977.7	2.492

AMX=MOMENT ABOUT THE LONGITUDINAL ROADWAY AXIS - MOM.(TRANS) K-FT
AMY=MOMENT ABOUT THE TRANSVERSE ROADWAY AXIS - MOM.(LONG) K-FT

PRINTED IN U.S.A.

MEMBER 9 JOINT 10

DEPTH= 48.000 WIDTH= 48.000 FPC= 3.000 FY= 40.000

USE- 36 NO.14 AST= 81.00 SQ.IN. PCT.AS= 4.48 COVER= 1.50 IN.
PHIC=PHIB=.350
BY SERVICE LOAD DESIGN OF COLUMNS

LOAD	APPLIED LOADS			COMPUTED STRENGTH			
CASE	AP	AMX	AMY	UP	UMX	UMY	UP/AP
15	670.6	268.2	1839.9	664.8	265.9	1824.0	0.991
2	993.8	397.5	631.7	1664.6	666.2	1058.7	1.675
3	730.8	292.3	596.5	1519.0	608.0	1240.7	2.079
4	699.8	279.9	596.5	1491.5	597.0	1272.1	2.132
5	698.8	279.5	458.2	1647.4	660.0	1081.8	2.359
6	807.0	322.8	513.0	1664.3	666.4	1059.0	2.063
7	694.5	291.9	441.5	1653.1	696.0	1052.7	2.382
8	803.9	321.6	511.0	1664.3	666.4	1059.0	2.071
9	610.3	427.7	532.6	1355.1	951.5	1184.9	2.223
10	660.5	427.7	532.6	1417.2	919.2	1144.7	2.148
11	609.4	392.2	409.1	1500.4	967.2	1008.7	2.464
12	728.5	392.2	463.1	1585.9	854.8	1009.2	2.178
13	706.8	387.5	449.3	1580.0	867.2	1005.5	2.236
14	634.4	501.7	403.3	1432.3	1134.3	911.8	2.259
1	888.5	355.4	564.8	1664.4	666.3	1058.9	1.874

AMX=MOMENT ABOUT THE LONGITUDINAL ROADWAY AXIS - MOM.(TRANS) K-FT
AMY=MOMENT ABOUT THE TRANSVERSE ROADWAY AXIS - MOM.(LONG) K-FT

PRINTED IN U.S.A.

K= 2.10 FOR LONGITUDINAL KL/R
K=1 FOR TRANSVERSE KL/R

COL.NO.	LONG.KL/R	TRANS.KL/R
5	70.1400	33.4000
6	70.1400	33.4000
7	70.1400	33.4000
8	70.1400	33.4000
9	70.1400	33.4000

PRINTED IN U.S.A.

JOB NO. 8080 THUNDERBIRD ROAD OVER DIVERSION CHANNEL PROGRAM P7310

PROBLEM NO. 2: PIER ANALYSIS AND DESIGN BY: RDT CHKD: JFF

FOOTING DESIGN DATA

CONCRETE STRESSES - COMPRESSIVE STRENGTH (F'C) = 3000.00 PSI
SHEAR STRESS = 52.03 PSI
PERIPHERAL SHEAR STRESS = 98.59 PSI

REINFORCEMENT YIELD STRESS = 40000.00 PSI

COLUMN DATA

NO. OF COLS.= 5

COLUMN	OFFSET	HEIGHT	SIZE
5	0.00	35.90	3.50 ROUND
6	18.00	35.90	3.50 ROUND
7	36.00	35.90	3.50 ROUND
8	54.00	35.90	3.50 ROUND
9	72.00	35.90	3.50 ROUND

FOOTING DATA

TYPE OF FOOTING - INDIVIDUAL ON SOIL

MAX.RATIO COL.HEIGHT TO MIN.FTG.WIDTH = 8.00
BAR COVER(CTR.OF BAR TO STR.FACE CONC)= 4.00 IN. ALLOWABLE SOIL PRESSURE =12.00 KSF
MAX.RATIO FTG.LENGTH L TO FTG.WIDTH W = 2.50 MIN.RATIO FTG.L TO FTG.W = 0.20
MAX.RATIO ECCENTRICITY TO L = 0.1666 MAX.RATIO ECCENTRCTY. TO W= 0.1666

CONTROLLING DIMENSIONS (FEET)

FTG.	MAX.'A'	MIN.'A'	MAX.'B'	MIN.'B'	MAX.'W'	MIN.'W'	SOIL DEPTH	MIN.THICKNESS
5	9.00	2.00	9.00	2.00	30.00	6.00	14.63	2.00
6	9.00	2.00	9.00	2.00	30.00	6.00	14.63	2.00
7	9.00	2.00	9.00	2.00	30.00	6.00	14.63	2.00
8	9.00	2.00	9.00	2.00	30.00	6.00	14.63	2.00
9	9.00	2.00	9.00	2.00	30.00	6.00	14.63	2.00

SOIL WEIGHT = 120.00 PCF

Sht 245 of

PRINTED IN U.S.A.

JOB NO. 8080 THUNDERBIRD ROAD OVER DIVERSION CHANNEL PROGRAM P7310

PROBLEM NO. 2; PIER ANALYSIS AND DESIGN BY: RDT CHKD: JFF

FOOTING 5

UNITS ARE IN FEET, KIPS, FT.KIPS, AND KSF

MEM	AXIAL	SHEAR	MOM(TRANS)	MOM(LONG.)	FORCE(LONG.)	L	W	PMAX	CASE	NEUTRAL AXIS X-INTERCEPT	NEUTRAL AXIS Y-INTERCEPT
5	1273.58	7.09	104.01	0.00	0.00	16.50	11.50	6.91	5	286.06	1150000.00
5	1399.84	7.09	104.01	0.00	0.00	16.50	11.50	7.58	5	313.60	1150000.00
5	1008.21	21.02	317.28	414.58	13.07	16.50	11.50	7.06	5	95.81	35.62
5	1039.60	-7.28	153.98	414.58	13.07	16.50	11.50	6.91	5	193.30	34.87
5	1006.70	18.05	265.83	318.41	10.04	16.50	11.50	6.69	5	108.35	43.94
5	1132.04	18.05	265.83	318.41	10.04	16.50	11.50	7.35	5	119.04	48.28
5	1002.57	23.73	361.05	0.00	0.00	16.50	11.50	5.98	5	71.25	1150000.00
5	1128.76	23.73	361.05	0.00	0.00	16.50	11.50	6.64	5	79.18	1150000.00
5	885.64	37.66	531.36	370.16	13.07	16.50	11.50	6.70	5	54.31	37.87
5	936.16	37.66	531.36	370.16	13.07	16.50	11.50	6.97	5	56.47	39.38
5	884.29	34.70	485.42	284.29	10.04	16.50	11.50	6.37	5	56.51	46.87
5	1018.69	34.70	485.42	284.29	10.04	16.50	11.50	7.08	5	62.79	52.08
5	923.24	42.14	627.37	1278.74	43.00	16.50	11.50	9.58	5	65.76	15.67
5	996.63	-28.41	474.27	1278.74	43.00	16.50	11.50	9.68	5	87.84	15.83

FOOTING 5

TRANSV. L	LONG. W	THICKNESS	MAX. SOIL PRESSURE
16.50 FT.	11.50 FT.	3.75 FT.	9.68 KSF

	M (FT.KIPS)	V (KIPS)	V(ED) (PSI)	V(UNIT) (PSI)	AS (SQ.IN./FT.)
TRANS B	1436.1	212.53	60.49	43.48	2.134
LONG B	910.5	60.63	60.49	12.40	1.072
TRANS T	0.0	0.00		0.00	0.440
LONG T	73.3	8.44		1.73	0.440

LARGEST ACCEPTABLE BAR SIZE CHECKED FOR DEVELOPMENT LENGTH IS NO. 11 (BOTTOM STEEL)

V(UNIT)=UNIT SHEARING STRESS DUE TO 1-WAY ACTION OF THE FOOTING
V(ED)=UNIT SHEARING STRESS DUE TO 2-WAY ACTION OF THE FOOTING

PRINTED IN U.S.A.

JOB NO. 8080 THUNDERBIRD ROAD OVER DIVERSION CHANNEL PROGRAM P7310

PROBLEM NO. 2; PIER ANALYSIS AND DESIGN BY: RDT CHKD: JFF

FOOTING 6

UNITS ARE IN FEET, KIPS, FT.KIPS, AND KSF

MEM	AXIAL	SHEAR	MOM(TRANS)	MOM(LONG.)	FORCE(LONG.)	L	W	PMAX	CASE	NEUTRAL AXIS X-INTERCEPT	NEUTRAL AXIS Y-INTERCEPT
6	1089.22	-1.71	24.55	0.00	0.00	14.00	14.00	5.61	5	731.68	1400000.00
6	1221.77	-1.71	24.55	0.00	0.00	14.00	14.00	6.29	5	819.87	1400000.00
6	850.51	14.25	230.61	409.35	13.07	14.00	14.00	5.74	5	79.66	44.88
6	840.94	-15.28	242.66	409.35	13.07	14.00	14.00	5.72	5	75.41	44.70
6	867.66	-13.15	203.04	314.39	10.04	14.00	14.00	5.56	5	87.64	56.60
6	981.12	-13.15	203.04	314.39	10.04	14.00	14.00	6.14	5	96.76	62.49
6	864.60	7.13	121.83	0.00	0.00	14.00	14.00	4.68	5	122.91	1400000.00
6	989.83	7.13	121.83	0.00	0.00	14.00	14.00	5.32	5	139.70	1400000.00
6	744.79	23.08	332.22	365.49	13.07	14.00	14.00	5.33	5	51.32	46.65
6	770.47	23.08	332.22	365.49	13.07	14.00	14.00	5.46	5	52.58	47.79
6	768.65	-17.97	250.22	280.71	10.04	14.00	14.00	5.08	5	65.03	57.97
6	887.09	-17.97	250.22	280.71	10.04	14.00	14.00	5.69	5	72.76	64.86
6	804.08	36.30	547.52	1262.62	43.00	14.00	14.00	8.06	5	47.13	20.44
6	781.71	-37.33	558.82	1262.62	43.00	14.00	14.00	7.97	5	45.66	20.21

FOOTING 6

TRANSV. L	LONG. W	THICKNESS	MAX. SOIL PRESSURE
14.00 FT.	14.00 FT.	3.25 FT.	8.06 KSF

	M (FT.KIPS)	V (KIPS)	V(EO) (PSI)	V(UNIT) (PSI)	AS (SQ.IN./FT.)
TRANS B	888.8	154.95	65.43	41.29	1.433
LONG B	967.0	172.64	65.43	46.00	1.564
TRANS T	81.1	17.23		4.59	0.440
LONG T	158.0	34.65		9.23	0.440

LARGEST ACCEPTABLE BAR SIZE CHECKED FOR DEVELOPMENT LENGTH IS NO. 11 (BOTTOM STEEL)

V(UNIT)=UNIT SHEARING STRESS DUE TO 1-WAY ACTION OF THE FOOTING
V(EO)=UNIT SHEARING STRESS DUE TO 2-WAY ACTION OF THE FOOTING

Sht 247 of

PRINTED IN U.S.A.

JOB NO. 8080 THUNDERBIRD ROAD OVER DIVERSION CHANNEL PROGRAM P7310

PROBLEM NO. 2: PIER ANALYSIS AND DESIGN BY: RDT CHKD: JFF

FOOTING 7

UNITS ARE IN FEET, KIPS, FT.KIPS, AND KSF

MEM	AXIAL	SHEAR	MOM(TRANS)	MOM(LONG.)	FORCE(LONG.)	L	W	PMAX	CASE	NEUTRAL AXIS X-INTERCEPT	NEUTRAL AXIS Y-INTERCEPT
7	1111.46	1.22	17.99	0.00	0.00	15.00	13.00	5.74	5	1165.72	1300000.00
7	1295.29	1.22	17.99	0.00	0.00	15.00	13.00	6.68	5	1357.29	1300000.00
7	892.37	14.69	235.40	409.35	13.07	15.00	13.00	6.03	5	93.63	40.44
7	892.27	-14.71	235.75	409.35	13.07	15.00	13.00	6.03	5	93.49	40.44
7	889.12	12.61	196.97	314.39	10.04	15.00	13.00	5.71	5	105.95	49.86
7	1036.27	12.61	196.97	314.39	10.04	15.00	13.00	6.46	5	119.96	56.45
7	884.93	1.22	14.40	0.00	0.00	15.00	13.00	4.57	5	1160.13	1300000.00
7	1043.99	1.22	14.40	0.00	0.00	15.00	13.00	5.38	5	1367.31	1300000.00
7	792.89	-14.71	210.49	365.49	13.07	15.00	13.00	5.36	5	93.15	40.30
7	803.69	-14.71	210.49	365.49	13.07	15.00	13.00	5.42	5	94.12	40.71
7	790.08	12.61	175.87	280.71	10.04	15.00	13.00	5.08	5	105.55	49.67
7	932.17	12.61	175.87	280.71	10.04	15.00	13.00	5.81	5	120.69	56.80
7	836.69	36.64	550.52	1262.62	43.00	15.00	13.00	8.41	5	55.84	18.29
7	836.45	-36.67	550.85	1262.62	43.00	15.00	13.00	8.41	5	55.81	18.29

FOOTING 7

TRANSV. L	LONG. W	THICKNESS	MAX. SOIL PRESSURE
15.00 FT.	13.00 FT.	3.25 FT.	8.41 KSF

	M (FT.KIPS)	V (KIPS)	V(EO) (PSI)	V(UNIT) (PSI)	AS (SQ.IN./FT.)
TRANS B	1052.8	181.06	71.44	48.25	1.790
LONG B	917.1	137.61	71.44	36.67	1.417
TRANS T	29.7	7.86		2.09	0.440
LONG T	110.0	21.52		5.73	0.440

LARGEST ACCEPTABLE BAR SIZE CHECKED FOR DEVELOPMENT LENGTH IS NO. 11 (BOTTOM STEEL)

V(UNIT)=UNIT SHEARING STRESS DUE TO 1-WAY ACTION OF THE FOOTING
V(EO)=UNIT SHEARING STRESS DUE TO 2-WAY ACTION OF THE FOOTING

Sht 248 of

PRINTED IN U.S.A.

JOB NO. 8080 THUNDERBIRD ROAD OVER DIVERSION CHANNEL PROGRAM P7310

PROBLEM NO. 2; PIER ANALYSIS AND DESIGN BY: RDT CHKD: JFF

FOOTING 8

UNITS ARE IN FEET, KIPS, FT.KIPS, AND KSF

MEM	AXIAL	SHEAR	MOM(TRANS)	MOM(LONG.)	FORCE(LONG.)	L	W	PMAX	CASE	NEUTRAL AXIS X-INTERCEPT	NEUTRAL AXIS Y-INTERCEPT
8	1051.52	1.71	24.47	0.00	0.00	14.00	14.00	5.42	5	708.75	1400000.00
8	1206.29	1.71	24.47	0.00	0.00	14.00	14.00	6.21	5	812.04	1400000.00
8	841.71	15.16	240.73	409.35	13.07	14.00	14.00	5.72	5	76.01	44.70
8	850.96	-14.13	228.84	409.35	13.07	14.00	14.00	5.74	5	80.26	44.87
8	837.63	13.06	201.55	314.39	10.04	14.00	14.00	5.40	5	85.80	55.00
8	968.62	13.06	201.55	314.39	10.04	14.00	14.00	6.07	5	96.42	61.81
8	834.44	-7.13	121.90	0.00	0.00	14.00	14.00	4.52	5	118.80	1400000.00
8	977.45	-7.13	121.90	0.00	0.00	14.00	14.00	5.25	5	137.97	1400000.00
8	745.48	-22.97	330.64	365.49	13.07	14.00	14.00	5.33	5	51.56	46.65
8	770.87	-22.97	330.64	365.49	13.07	14.00	14.00	5.46	5	52.82	47.78
8	741.84	17.88	248.89	280.71	10.04	14.00	14.00	4.94	5	63.58	56.37
8	875.92	17.88	248.89	280.71	10.04	14.00	14.00	5.63	5	72.38	64.17
8	782.65	37.04	554.42	1262.62	43.00	14.00	14.00	7.97	5	46.00	20.20
8	804.26	-36.01	543.27	1262.62	43.00	14.00	14.00	8.05	5	47.45	20.42

FOOTING 8

TRANSV. L	LONG. W	THICKNESS	MAX. SOIL PRESSURE
14.00 FT.	14.00 FT.	3.25 FT.	8.05 KSF

	M (FT.KIPS)	V (KIPS)	V(EO) (PSI)	V(UNIT) (PSI)	AS (SQ.IN./FT.)
TRANS B	887.6	154.71	64.18	41.23	1.431
LONG B	966.2	172.51	64.18	45.97	1.563
TRANS T	78.6	16.78		4.47	0.440
LONG T	156.0	34.30		9.14	0.440

LARGEST ACCEPTABLE BAR SIZE CHECKED FOR DEVELOPMENT LENGTH IS NO. 11 (BOTTOM STEEL)

V(UNIT)=UNIT SHEARING STRESS DUE TO 1-WAY ACTION OF THE FOOTING
V(EO)=UNIT SHEARING STRESS DUE TO 2-WAY ACTION OF THE FOOTING

Sht 249 of

PRINTED IN U.S.A.

FOOTING 9

UNITS ARE IN FEET, KIPS, FT.KIPS, AND KSF

MEM	AXIAL	SHEAR	MOM(TRANS)	MOM(LONG.)	FORCE(LONG.)	L	W	PMAX	CASE	NEUTRAL AXIS X-INTERCEPT	NEUTRAL AXIS Y-INTERCEPT
9	1261.51	-7.07	106.50	0.00	0.00	16.00	11.50	7.07	5	260.69	1150000.00
9	1366.80	-7.07	106.50	0.00	0.00	16.00	11.50	7.65	5	281.78	1150000.00
9	1029.23	7.08	150.53	414.58	13.07	16.00	11.50	7.08	5	184.52	34.61
9	998.26	-20.78	313.46	414.58	13.07	16.00	11.50	7.24	5	90.66	35.41
9	997.20	-17.87	265.01	318.41	10.04	16.00	11.50	6.86	5	101.65	43.71
9	1105.44	-17.87	265.01	318.41	10.04	16.00	11.50	7.45	5	110.36	47.45
9	992.91	-23.72	363.05	0.00	0.00	16.00	11.50	6.14	5	66.35	1150000.00
9	1102.34	-23.72	363.05	0.00	0.00	16.00	11.50	6.73	5	72.78	1150000.00
9	876.76	-37.42	527.95	370.16	13.07	16.00	11.50	6.89	5	51.23	37.75
9	926.90	-37.42	527.95	370.16	13.07	16.00	11.50	7.16	5	53.26	39.24
9	875.81	-34.51	484.69	284.29	10.04	16.00	11.50	6.55	5	53.08	46.75
9	994.94	-34.51	484.69	284.29	10.04	16.00	11.50	7.20	5	58.32	51.37
9	986.61	27.89	465.95	1278.74	43.00	16.00	11.50	9.94	5	83.72	15.76
9	914.21	-41.58	618.69	1278.74	43.00	16.00	11.50	9.86	5	62.53	15.63

FOOTING 9

TRANSV. L	LONG. W	THICKNESS	MAX. SOIL PRESSURE
16.00 FT.	11.50 FT.	3.75 FT.	9.94 KSF

	M (FT.KIPS)	V (KIPS)	V(EO) (PSI)	V(UNIT) (PSI)	AS (SQ.IN./FT.)
TRANS B	1377.8	203.54	58.69	41.64	2.044
LONG B	912.9	62.76	58.69	12.84	1.097
TRANS T	0.0	0.00		0.00	0.440
LONG T	72.4	8.75		1.79	0.440

LARGEST ACCEPTABLE BAR SIZE CHECKED FOR DEVELOPMENT LENGTH IS NO. 11 (BOTTOM STEEL)

V(UNIT)=UNIT SHEARING STRESS DUE TO 1-WAY ACTION OF THE FOOTING
V(EO)=UNIT SHEARING STRESS DUE TO 2-WAY ACTION OF THE FOOTING

Sht 250 of

PRINTED IN U.S.A.

SVERDRUP & PARCEL

JOB 8080 FCDMC /ACDC

COMPUTATIONS FOR DIVERSION CHANNEL

SHEET NO. 251 OF

DATE 12/82

BY RV CHKD JFF

PIERS

CAP BEAM

MINIMUM FLEXURE / CRACKING MOMENT

MODULUS OF RUPTURE = $f_r = 7.5\sqrt{f'_c}$ (AASHTO 1.5.26 (A)(1))

$$f_r = 7.5\sqrt{3000} = 411 \text{ psi}$$

$$M_{CR} = f_r I_{UT} / Y_t$$

$$n = 9$$

$$Y_t = h - \left\{ \left[bh^2/2 + (n-1)A_s d \right] / \left[bh + (n-1)A_s \right] \right\}$$

$$\bar{Y} = h - Y_t$$

$$I_{UT} = bh^3/12 + (n-1)A_s \left| d - \bar{Y} \right|^2 + bh \left| \bar{Y} - h/2 \right|^2$$

$$M_{CAP} = d A_s f_s j / 12000$$

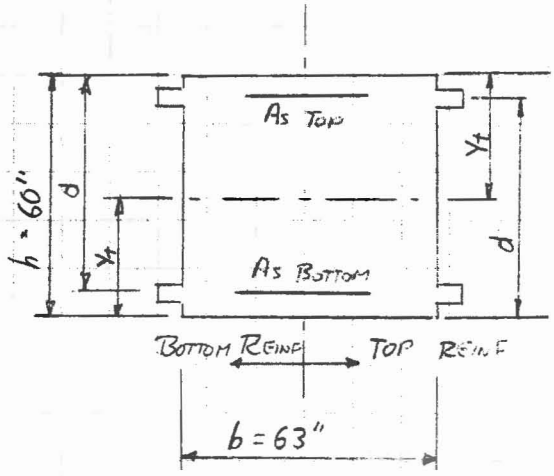

TOP / BOTTOM	As	d	MCR	1.2 MCR	j	MCAP	1.3 As *
B	24.96	56.47"	1505 K-FT	1806 K-FT	.9008	2116 K-FT	N.A.
B	9.36	57.17	1377	1652	.9353	834	12.48
B	6.24	57.17	1350	1620	.9466	563	8.32
T	3.81	57.24	1328	1594	.9563	348	5.08
T	15.24	56.61	1425	1710	.9193	1322	19.92
T	10.16	57.24	1385	1662	.9331	904	13.55

* IF 1.2 MCR > MCAP † As REQ'D TO DEVELOP 1.2 MCR

SVERDRUP & PARCEL

JOB 8080 FCDMC / ACDC — SHEET NO. 252 OF

COMPUTATIONS FOR DIVERSION CHANNEL — DATE 12/82 — BY RV — CHKD JFF

PIERS

CAP BEAM - STIRRUPS

$v_c = .95\sqrt{f'_c} = .95\sqrt{3000} = 52\,psi$ (AASHTO 1.5.26(A)(2))

$d_{min} = 56.47''$ $b = 63$

$V_c = (52)(56.47)(63)/1000 = 185^K$

MAX W/ SHEAR REINF $= 185(4.95/.95) = 964^K$ ($< 472^K$ - MAX SHEAR ✓)

SHEAR REINF - USE #5 BARS, GR. 40

$$A_v = \frac{(v - v_c) b_w s}{f_s} = \frac{(V - V_c)\, s}{d f_s} = \frac{(V-185)s}{(56.47)(20)} = \frac{(V-185)\,s}{1129.4}$$

$$\text{MIN SHEAR REINF} = \frac{50 b_w s}{f_y} = \frac{(50)(63)s}{40{,}000} = .08\,S$$

S

V	2	3	4	5 5.5	6	7	7.5	8	9	12	11"
MIN REINF	0.16 in²	.24	.32	.39	.47	.55	.60	.64	.72	.96	.88
202				MS							
365	.32	.48	.64	.80 .88	.96	1.12	1.20	1.28	1.43	1.91	1.75
472	.51	.76	1.02	1.27 1.40	1.52	1.78	1.91	2.03	2.29	3.05	2.80
559	.66	.99	S=3.75 1.24 1.32	1.66 1.82	1.99	2.32	2.48	2.65	2.98	3.97	3.64
412	.40	.60	.80	1.00 1.11	1.21	1.41	1.51	1.61	1.81	2.41	2.21

2 #5	.62	2#6	.88
3 #5	.93	3#6	1.32
4 #5	1.24	4#6	1.76
5 #5	1.55		
6 #5	1.86		
7 #5	2.17		
8 #5	2.48		

2#6 + #5	1.63
2#6 + #5	2.07

SVERDRUP & PARCEL

JOB 8080 FCDMC / ACDC

COMPUTATIONS FOR DIVERSION CHANNEL

SHEET NO. 253 OF

DATE 12/82

BY RV CHKD JFF

f'_c = 3000 psi f_s = 20,000 psi

DEVELOPMENT LENGTHS

#11 = 3'-10" #10 = 3'-1"

d = 60 - 3 = 57" = 4'-9"

RED ⇒ MIN FLEX FOR 1.2 MCR

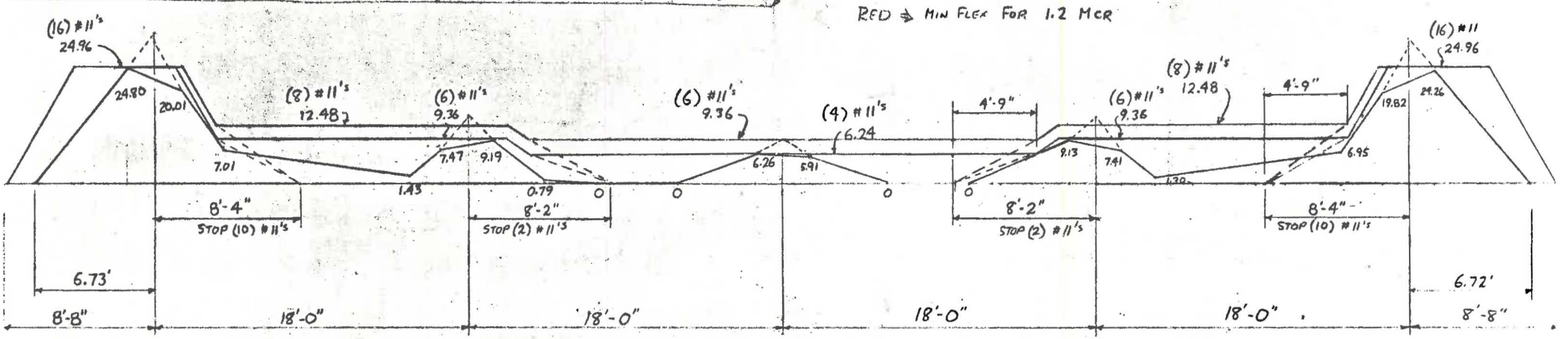

TOP REINF REQ'D (in^2)

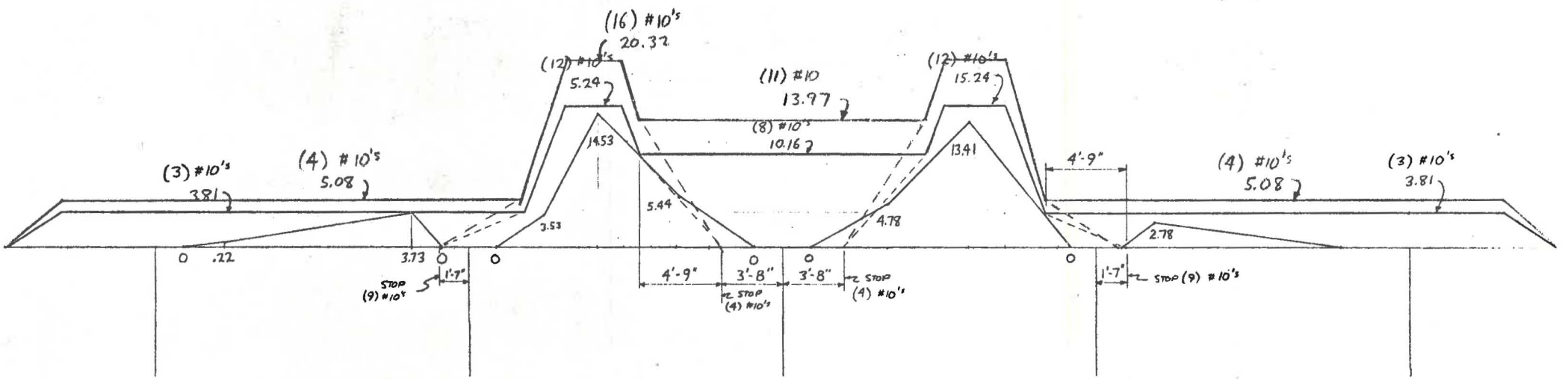

BOTTOM REINF. (in^2)

SVERDRUP & PARCEL

JOB 8080 FCDMC / ACDC

SHEET NO. 254 OF

DATE 12/82

COMPUTATIONS FOR DIVERSION CHANNEL

BY RV CHKD JFF

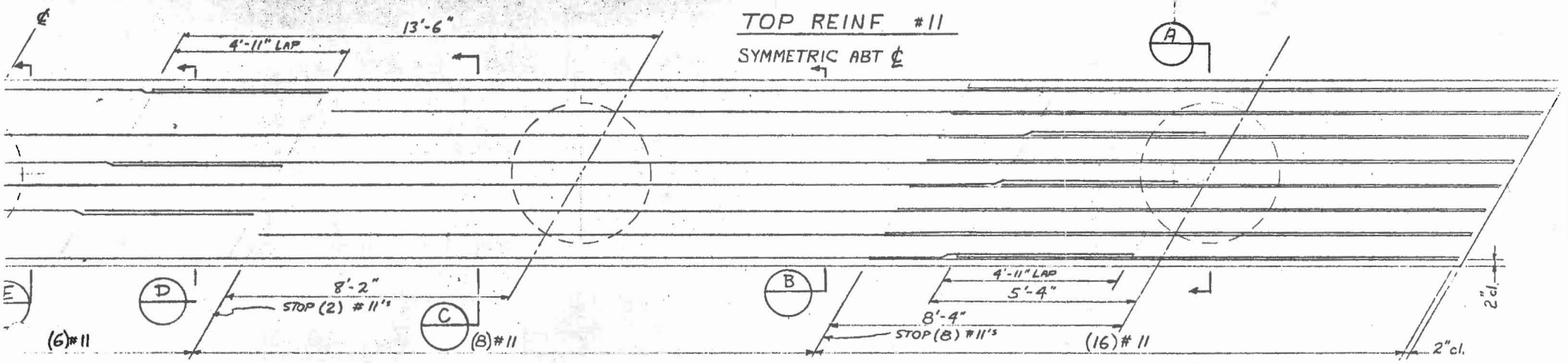

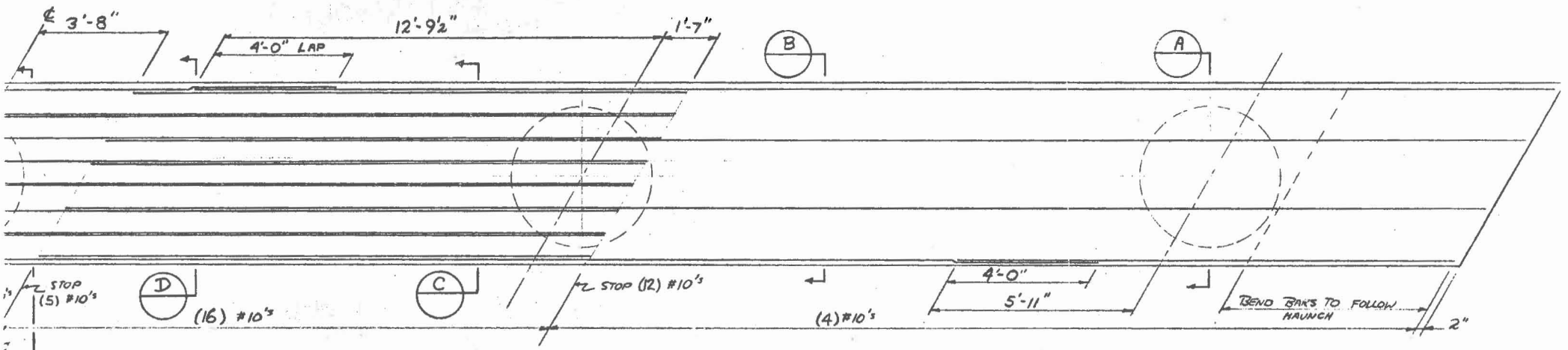

BOTTOM REINF. #10

SYMMETRIC ABT ℄

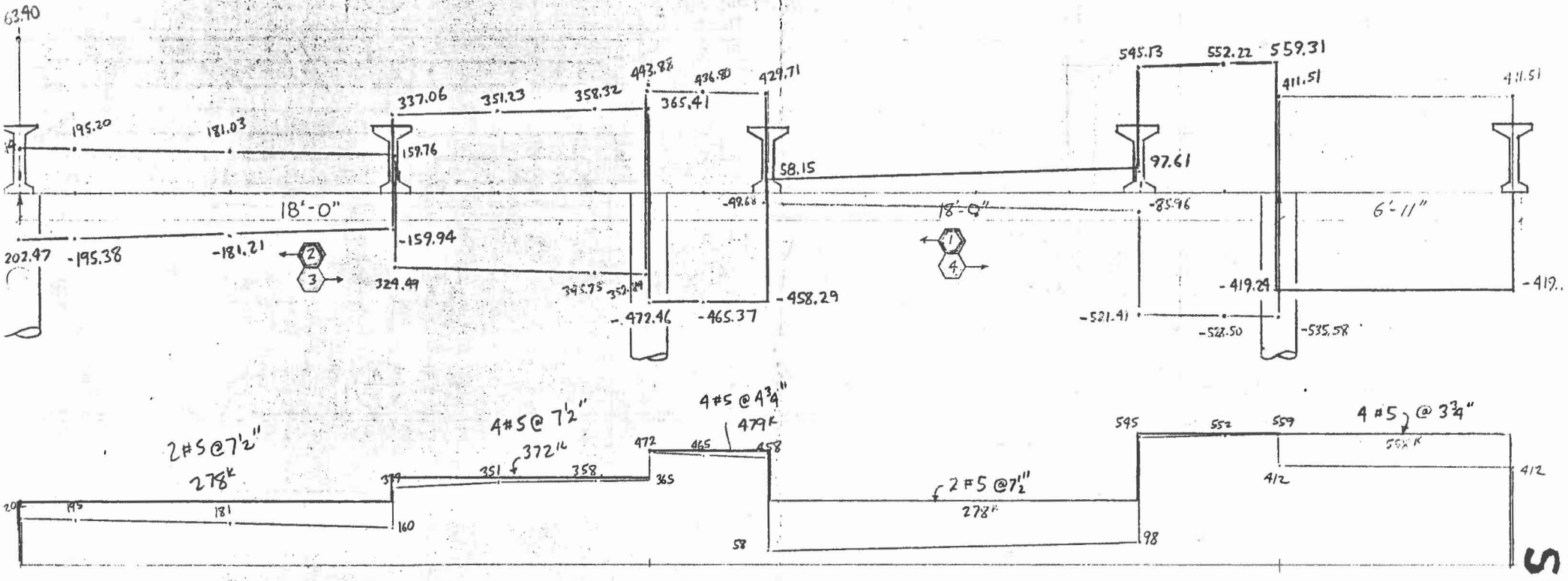
63.90
195.20
181.03
337.06
351.23
358.32
443.88
436.80
429.71
365.41
159.76
58.15
97.61
545.13
552.22
559.31
411.51
411.51
18'-0"
18'-0"
6'-11"
202.47
-195.38
-181.21
-159.94
329.49
-49.68
-85.96
-458.29
-472.46
-465.37
-419.29
-521.41
-522.50
-535.58
2#5@7½"
278k
4#5@7½"
372k
4#5@4¾"
479k
2#5@7½"
278k
4#5@3¾"
559k
195
181
160
351
358
472
465
458
365
58
98
595
552
559
412
412

Sht 255 of

SVERDRUP & PARCEL

JOB 8080 FCDMC / ACOC

COMPUTATIONS FOR DIVERSION CHANNEL

SHEET NO. 256 OF

DATE 12/82

BY RT CHKD JFF

PIERS

FOOTING - DESIGN FROM P7310 OUTPUT

USE FOOTING DESIGN FOR FOOTING 5 FOR FOOTING 9
USE FOOTING DESIGN FOR FOOTING 6 FOR FOOTING 8
CHECK FOOTING DESIGN FOR FOOTING 6 FOR FOOTING 7
$L = W = 14'$

$$q = \frac{P}{A} + \frac{6M_x}{WL^2} + \frac{6M_y}{W^2L} = \frac{P}{196} + \frac{M_x}{457.33} + \frac{M_y}{457.33}$$

P	M	M	q	
1295.29	17.99	0	6.65	
792.89	210.49	365.49	5.30	
836.69	550.52	1262.62	8.23	~ <8.41 KSF FOR 15' x 13'

SVERDRUP & PARCEL

JOB 8080 FCDMC / ACOE

COMPUTATIONS FOR DIVERSION CHANNEL

SHEET NO. 257 OF

DATE 12/82

BY RT CHKD JFF

PIERS

FTGS 5 & 9

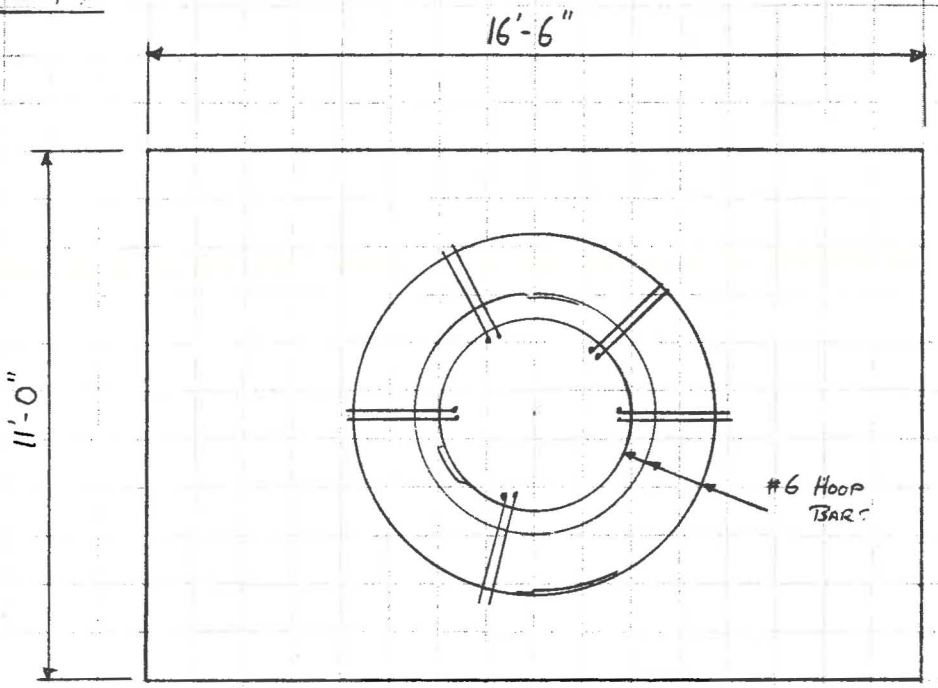

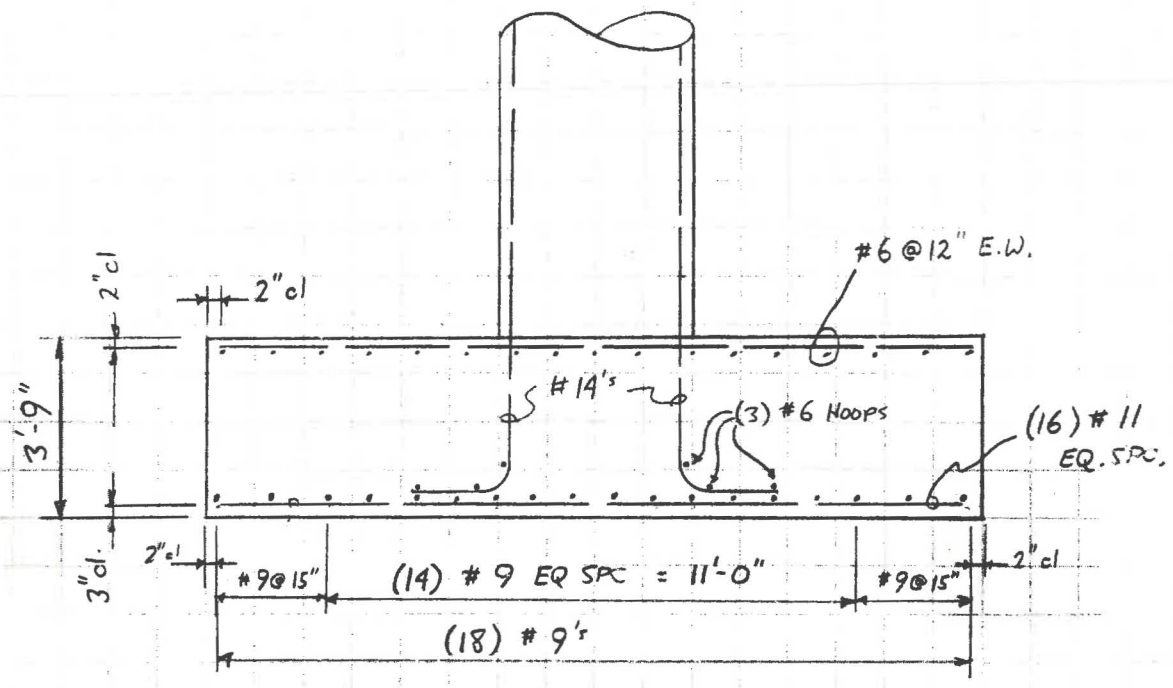

P7310 BRIDGE PIER DESIGN

SVERDRUP AND PARCEL FORM 1 FORM ___ OF ___

JOB NO. 8080 THUNDERBIRD BLVD OVER DIVERSION CANAL	PROGRAM P7310
PROBLEM NO. 3, FOOTING NO. 7 REDESIGN	BY RDT, CHKD JFF

CODE(1)	CODE(2)	CODE(3)	CODE(4)	CODE(5)
2.	0.	0.	0.	1.

INPUT FORMS REQUIRED.

CODE(1)=1. PIER ANALYSIS AND DESIGN
2. FOOTING DESIGN ONLY (INDIVIDUAL FTGS.) . . . . . FORMS 1,10 THRU 19
(CONTINUOUS FTGS.) . . FORMS 1,10 THRU 12,14,15

CODE(2)=0.

CODE(3)=0. NO PRINT-OUT OF AASHTO LOADING COMBINATIONS
1. AASHTO LOADING COMBINATIONS PRINTED

CODE(4)=0. EXIT AFTER COMPLETE DESIGN . . . . . FORMS 1 THRU 11
2. EXIT AFTER PIER ANALYSIS . . . . . FORMS 1 THRU 8
3. EXIT AFTER DESIGN OF PIER CAP . . . . . FORMS 1 THRU 9
4. EXIT AFTER DESIGN OF COLUMNS . . . . . FORMS 1 THRU 9
5. EXIT AFTER DESIGN OF COLUMNS ONLY . . . . . FORMS 1 THRU 9
6. EXIT AFTER ANALYSIS FOR CAP BEAM ONLY (CONT. BEAM).FORMS 1 THRU 8

CODE(5)=1. SERVICE LOAD DESIGN (MUST BE 1.0 FOR FOOTING DESIGN)
2. ULTIMATE STRENGTH DESIGN (LOAD FACTOR) OF CAP BEAMS AND COLUMNS ONLY.

STRUCTURE PARAMETERS (CC1 THRU CC18 ONLY REQUIRED FOR CODE(1)=2.)

NO. CAP CANTI-LEVERS	NO.CONT. FTG. CANTI-LEVERS	NO. CAP BEAMS	NO. TIE BEAMS	NO.CONT. FTG. BEAMS	NO. COLS.	NO. JOINTS	NO. SUPPTS.	NO. REL'D. SUPPT. JOINTS	CONCRETE MODULUS OF ELASTICITY(KSF)
2	0	4	0	0	1	10	1	0	478080.

NOTES.
1) PROGRAM P7310 IS INTENDED FOR USE WHEN COLUMNS HAVE ONLY A MINOR DEVIATION IN HEIGHT (FOR MULTIPLE- LEVEL COLUMNS) AND WHEN COLUMN INCLINATION IS SMALL
2) MAXIMUM NUMBER OF CANTILEVERS,4 (2 ON CAP, 2 ON CONT. FOOTING).
3) SUM OF CAP BEAMS AND TIE BEAMS, MAXIMUM 6.
4) MAXIMUM NUMBER OF CONTINUOUS FOOTING BEAMS,6.
5) MAXIMUM NUMBER OF COLUMNS,7.
6) MAXIMUM NUMBER OF JOINTS,14 (FREE ENDS OF CANTILEVERS NOT COUNTED AS JOINTS)
8) FOR CODE(1)=2. OTHER CODES NEED NOT BE SPECIFIED.
9) FRAMES WITH CONTINUOUS FTGS ARE ANALYSED AS IF FOOTING STIFFNESS WAS INFINITE

Sht 258 of ___

P7310 BRIDGE PIER DESIGN

SVERDRUP AND PARCEL

FORM X

FORM ___ OF ___

FOOTING DESIGN DATA

28-DAY COMP. STRENGTH CONC. F'C (PSI)	REINFORCEMENT YIELD STRESS FY (PSI)
3000.	40000.

FOOTING TYPE	FOOTING BASE
2	1

FOOTING TYPE=1 FOR CONTINUOUS FOOTING
TYPE=2 FOR INDIVIDUAL COLUMN FOOTINGS
FOOTING BASE=1 ON SOIL
BASE=2 ON PILES

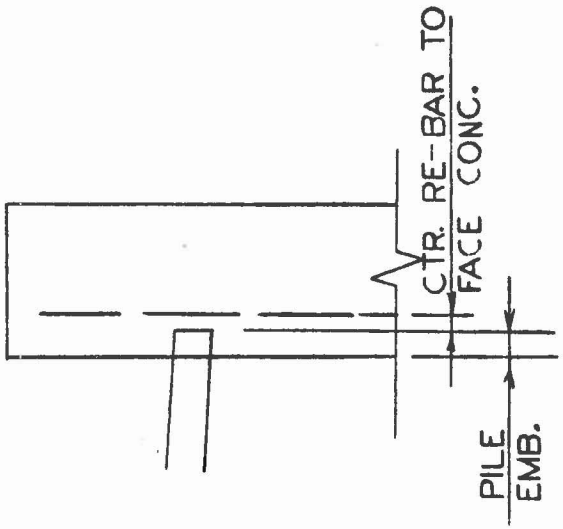

FOOTINGS ON PILES

MAX. RATIO COL. HEIGHT TO MIN. FTG. WIDTH	DISTANCE (IN) CENTER OF FOOTING RE-BAR TO FACE OF CONCRETE	SOIL WEIGHT (PCF)
2.39	4.	120.

DISTANCE (FT) CENTER OF PILES TO EDGE OF FTGS	PILE EMBEDMENT (FT)	PILE SPACING 1 (FT)	PILE SPACING 2 (FT)
0.	0.	0.	0.

FOR FOOTINGS ON SOIL ENTER ALL PILE DATA AS ZERO.

PILE SPACING-FOR CONTINUOUS FOOTING-PILE SPACING 1=MAX. LONGITUDINAL PILE SPACING (PERPENDICULAR TO PIER)
2=MAX. TRANSVERSE PILE SPACING (PARALLEL TO PIER)

FOR INDIVIDUAL FOOTINGS-PILE SPACING 1=MAX. PILE SPACING
2=MIN. PILE SPACING

ALLOWABLE SOIL PRESSURE (KSF)	MAX. ALLOWABLE PILE LOAD (KIPS)	MIN. ALLOWABLE PILE LOAD (KIPS)	PILE BATTER (VERT/HORIZ)
12.	0.	0.	0.

MAX. RATIO FTG. LENGTH L TO FTG. WIDTH W	MIN. RATIO FTG. LENGTH L TO FTG. WIDTH W	MAX. RATIO ECCENTRICITY TO L (ZERO FOR PILE FTG)	MAX. RATIO ECCENTRICITY TO W (ZERO FOR PILE FTG)
1.	1.	.1666	.1666

FOR PILE FTG. ALLOW. SOIL PRESSURE = MAX. ALLOW. PILE LOAD/(DESIRED PILE SPACING)
ALLOWABLE PILE LOADS + FOR DOWNWARD, -FOR UPLIFT.
FOR FTG. ON SOIL ENTER ALLOW. PILE LOADS AND BATTER AS ZERO.

Sht 259 of ___

P7310 BRIDGE PIER DESIGN

SVERDRUP AND PARCEL FORM XI FORM ___ OF ___

FOOTING DESIGN DATA (CONTINUED)
(ONE CARD ONLY REQUIRED FOR CONTINUOUS FOOTING)

CONTROLLING DIMENSIONS FROM SKETCHES BELOW (FT.)-

COLUMN MEMBER NUMBER (6 7)	MAX. 'A' (17–24)	MIN. 'A' (25–32)	MAX. 'B' (33–40)	MIN. 'B' (41–48)	MAX. 'W' (49–56)	MIN. 'W' (57–64)	SOIL DEPTH 'D' (65–72)	MIN. FTG. THICKNESS (73–80)
7	7.	7.	7.	7.	14.	14.	13.38	3.25

Sht 260 of

CONTINUOUS FOOTING

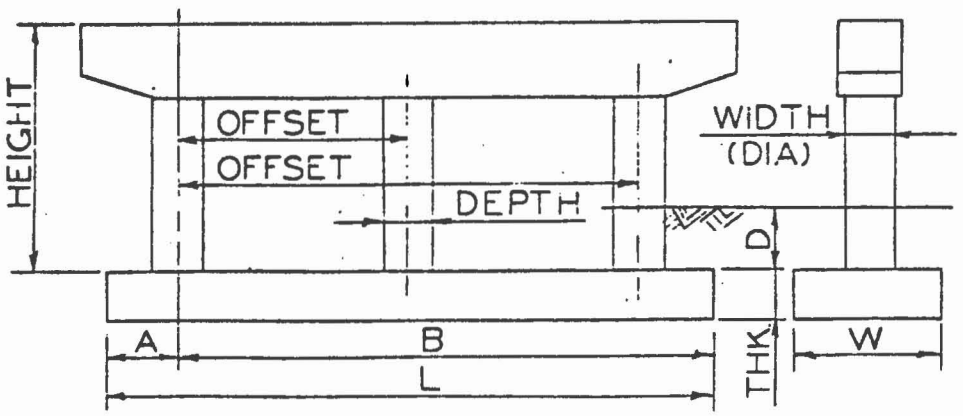

INDIVIDUAL FOOTING

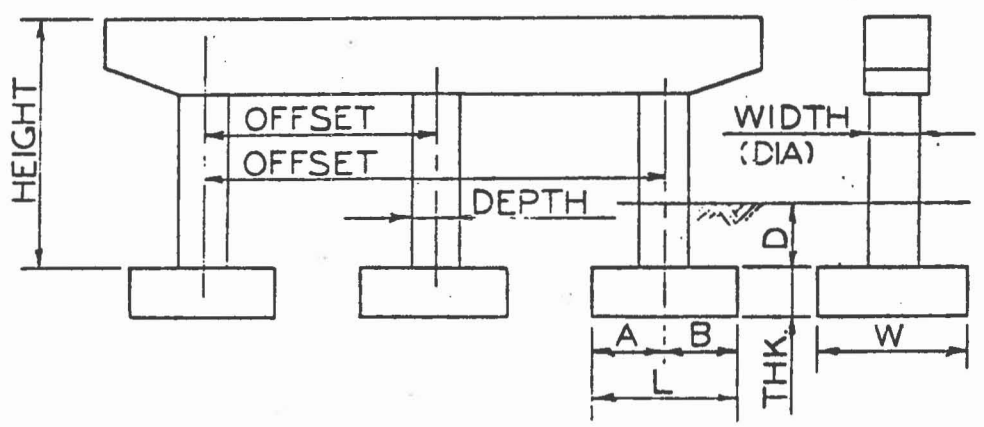

P7310 BRIDGE PIER DESIGN

SVERDRUP AND PARCEL

FORM XII

FORM ___ OF ___

FOOTING DESIGN DATA FOR CODE(1) = 2.0 ONLY

CONTROLLING DIMENSIONS FROM SKETCHES FORM XI (FT)

COLUMN MEMBER NUMBER	OFFSET	HEIGHT	WIDTH(DIAM)	DEPTH
7	0.	33.65	4.	0.
	.	.	.	.
	.	.	.	.
	.	.	.	.
	.	.	.	.
	.	.	.	.
	.	.	.	.
	.	.	.	.

NOTE:
OFFSET IS DISTANCE FROM FIRST COLUMN ON LEFT TO EACH COLUMN, MEASURED PARALLEL TO PIER.
1 CARD REQ,D FOR EACH COLUMN
ROUND COL. DEPTH = 0.

FOOTING DESIGN DATA FOR CODE(1)=2.0 (INDIVIDUAL FOOTINGS ONLY)

LOAD TYPE: 1

NO.OF LOAD CASES (MAX 14): 14

LOAD TYPE =0 APPLY AASHTO GROUP COEFFICIENTS
=1 ALL GROUP COEFFICIENTS SET TO 1.0

CASE 1

COL. NO.	AASHTO GROUP	VERT.LOAD(+KIPS) (NOT INCLUDING DL FTG.+ SOIL)	MY-Y (FT.KIPS) TRANS.MOMENT AT BOTTOM OF FTG	MX-X (FT.KIPS) LONGIT.MOMENT AT BOTTOM OF FTG
7	1	698.26	17.99	0.
7	1	882.09	17.99	0.
7	2	479.17	235.40	409.35
7	2	479.07	235.75	409.35
7	3	475.92	196.97	314.39
7	3	623.07	196.97	314.39
7	4	471.73	14.40	0.

THE COL. NO. IN EACH LOADING CASE SHOULD BE ENTERED LEFT TO RIGHT AND THEN REPEATED IN THE SAME ORDER FOR THE FOLLOWING LOADING CASES.
(NUMBER OF LOADS IN EACH LOADING CASE = NUMBER OF COLUMNS)

Sht 261 of ___

P7..0 BRIDGE PIER DESIGN

SVERDRUP AND PARCEL

FORM XIII

FORM ___ OF ___

FOOTING DESIGN DATA FOR CODE(1)=2. (INDIVIDUAL FOOTINGS ONLY)

(MAX. NO. OF LOADING CASES = 14)

CASE	COL. NO.	AASHTO GROUP	VERT.LOAD(+KIPS) (NOT INCLUDING DL FTG.+ SOIL)	MY-Y (FT.KIPS) TRANS.MOMENT AT BOTTOM OF FTG	MX-X (FT.KIPS) LONGIT.MOMENT AT BOTTOM OF FTG
	7	4	630.79	14.40	0.
	7	5	379.69	210.49	365.49
	7	5	390.49	210.49	365.49
	7	6	376.88	175.87	280.71
	7	6	518.97	175.87	280.71
	7	7	423.49	550.52	1262.62
	7	7	423.25	550.85	1262.62
CASE					
CASE					

Sht 262 of ___

```
 1          JOB NO. 8080  THUNDERBIRD ROAD OVER DIVERSION CH. NEL      PROGRAM P7310
 2          PROBLEM NO. 3, FOOTING NO.7 REDESIGN                 BY: RDT  CHKD: JFF
 3              2.        0.        0.        0.        1.
 4            2  0  4  0  0  1 10  1  0     478080.
 5            3000.     40000.
 6            2    1
 7              2.39                  4.       120.
 8              0.        0.        0.        0.
 9             12.        0.        0.        0.
10              1.        1.      .1666     .1666
11              7.        7.        7.        7.        7.       14.       14.      13.38     3.25
12              7         0.      33.65       4.        0.
13            1    7
14            7  1     882.09                 17.99       0.
15            7  2     479.07                235.75     409.35
16            7  3     623.07                196.97     314.39
17            7  4     630.79                 14.40       0.
18            7  5     390.49                210.49     365.49
19            7  6     518.97                175.87     280.71
20            7  7     423.25                550.85    1262.62
[EOB]
Print output file on terminal (Y or N): Y
```

Sht 263 of

JOB NO. 8080 THUNDERBIRD ROAD OVER DIVERSION CHANNEL ,PROGRAM P7310

PROBLEM NO. 3, FOOTING NO.7 REDESIGN BY: RBT CHKD: JFF

CODE(1)	CODE(2)	CODE(3)	CODE(4)	CODE(5)
2.0000	0.0000	0.0000	0.0000	1.0000

FOOTING DESIGN DATA

CONCRETE STRESSES COMPRESSIVE STRENGTH (F'C) = 3000.00 PSI
SHEAR STRESS = 52.03 PSI
PERIPHERAL SHEAR STRESS = 98.59 PSI

REINFORCEMENT YIELD STRESS = 40000.00 PSI

COLUMN DATA

NO. OF COLS.= 1

COLUMN	OFFSET	HEIGHT	SIZE
7	0.00	33.65	4.00 ROUND

FOOTING DATA

TYPE OF FOOTING - INDIVIDUAL ON SOIL

MAX.RATIO COL.HEIGHT TO MIN.FTG.WIDTH = 2.39
BAR COVER(CTR.OF BAR TO STR.FACE CONC)= 4.00 IN. ALLOWABLE SOIL PRESSURE =12.00 KSF
MAX.RATIO FTG.LENGTH L TO FTG.WIDTH W = 1.00 MIN.RATIO FTG.L TO FTG.W = 1.00
MAX.RATIO ECCENTRICITY TO L = 0.1666 MAX.RATIO ECCENTRCTY. TO W= 0.1666

CONTROLLING DIMENSIONS (FEET)

FTG.	MAX.'A'	MIN.'A'	MAX.'B'	MIN.'B'	MAX.'W'	MIN.'W'	SOIL DEPTH	MIN.THICKNESS
7	7.00	7.00	7.00	7.00	14.00	14.00	13.38	3.25

SOIL WEIGHT = 120.00 PCF

Sht 269 of

SVERDRUP & PARCEL AND ASSOCIATES, INC. 09:33 DEC 10,'82 PAGE

JOB NO. 8080 THUNDERBIRD ROAD OVER DIVERSION CHANNEL PROGRAM P7310

PROBLEM NO. 3, FOOTING NO.7 REDESIGN BY: RDT CHKD: JFF

A.A.S.H.T.O. LOADING COMBINATIONS (FORCES,SHEARS - KIPS ; MOMENTS - FT.-KIPS)

ALL AASHTO COEFFICIENTS = 1.0

NO. FTG.	AASHTO GROUP	AXIAL FORCE	TRANS. SHEAR	TRANS. MOMENT	LONG. MOMENT	LONG. SHEAR
7	1	882.09	0.00	17.99	0.00	0.00
7	2	479.07	0.00	235.75	409.35	0.00
7	3	623.07	0.00	196.97	314.39	0.00
7	4	630.79	0.00	14.40	0.00	0.00
7	5	390.49	0.00	210.49	365.49	0.00
7	6	518.97	0.00	175.87	280.71	0.00
7	7	423.25	0.00	550.85	1262.62	0.00

Sht 265 of 1

SVERDRUP & PARCEL AND ASSOCIATES, INC. 09:33 DEC 10,'82 PAGE

JOB NO. 8080 THUNDERBIRD ROAD OVER DIVERSION CHANNEL PROGRAM P7310

PROBLEM NO. 3, FOOTING NO.7 REDESIGN BY: RDT CHKD: JFF

FOOTING 7

UNITS ARE IN FEET, KIPS, FT.KIPS, AND KSF

MEM	AXIAL	SHEAR	MOM(TRANS)	MOM(LONG.)	FORCE(LONG.)	L	W	PMAX	CASE	NEUTRAL AXIS X-INTERCEPT	NEUTRAL AXIS Y-INTERCEPT
7	1272.16	0.00	17.99	0.00	0.00	14.00	14.00	6.53	5	1162.01	1400000.00
7	869.14	0.00	235.75	409.35	0.00	14.00	14.00	5.84	5	79.37	45.71
7	1013.14	0.00	196.97	314.39	0.00	14.00	14.00	6.29	5	102.19	64.02
7	1020.86	0.00	14.40	0.00	0.00	14.00	14.00	5.24	5	1164.92	1400000.00
7	780.56	0.00	210.49	365.49	0.00	14.00	14.00	5.24	5	79.72	45.91
7	909.04	0.00	175.87	280.71	0.00	14.00	14.00	5.64	5	102.60	64.28
7	813.32	0.00	550.85	1262.62	0.00	14.00	14.00	8.11	5	47.16	20.58

FOOTING 7

TRANSV. L	LONG. W	THICKNESS	MAX. SOIL PRESSURE
14.00 FT.	14.00 FT.	3.25 FT.	8.11 KSF

		M (FT.KIPS)	V (KIPS)	V(EO) (PSI)	V(UNIT) (PSI)	AS (SQ.IN./FT.)	
TRANS	B	846.9	143.73	62.49	36.49	1.337	18.72 in²
LONG	B	905.2	160.59	62.49	40.77	1.432	20.05 in²
TRANS	T	43.7	10.66		2.71	0.440	
LONG	T	118.5	27.53		6.99	0.440	

LARGEST ACCEPTABLE BAR SIZE CHECKED FOR DEVELOPMENT LENGTH IS NO. 11 (BOTTOM STEEL)

V(UNIT)=UNIT SHEARING STRESS DUE TO 1-WAY ACTION OF THE FOOTING
V(EO)=UNIT SHEARING STRESS DUE TO 2-WAY ACTION OF the FOOTING

Sht 266 of 1

SVERDRUP & PARCEL

JOB 8080 FCDMC / ACDC

COMPUTATIONS FOR DIVERSION CHANNEL

SHEET NO. 267 OF

DATE 12/82

BY [illegible] CHKD JFF
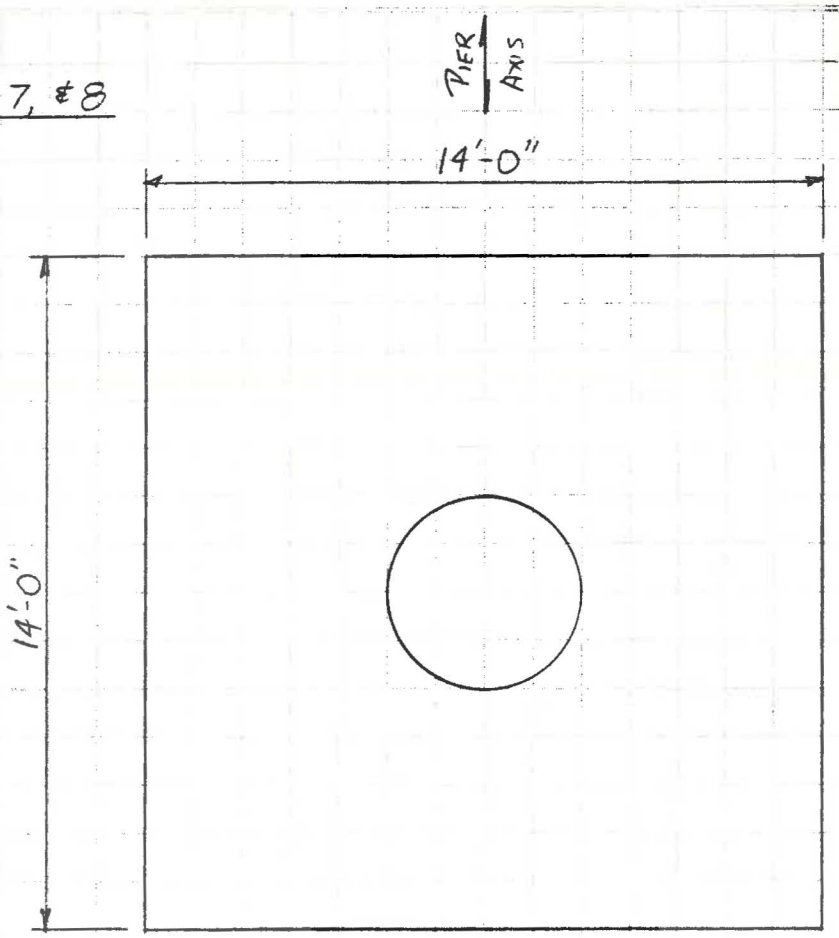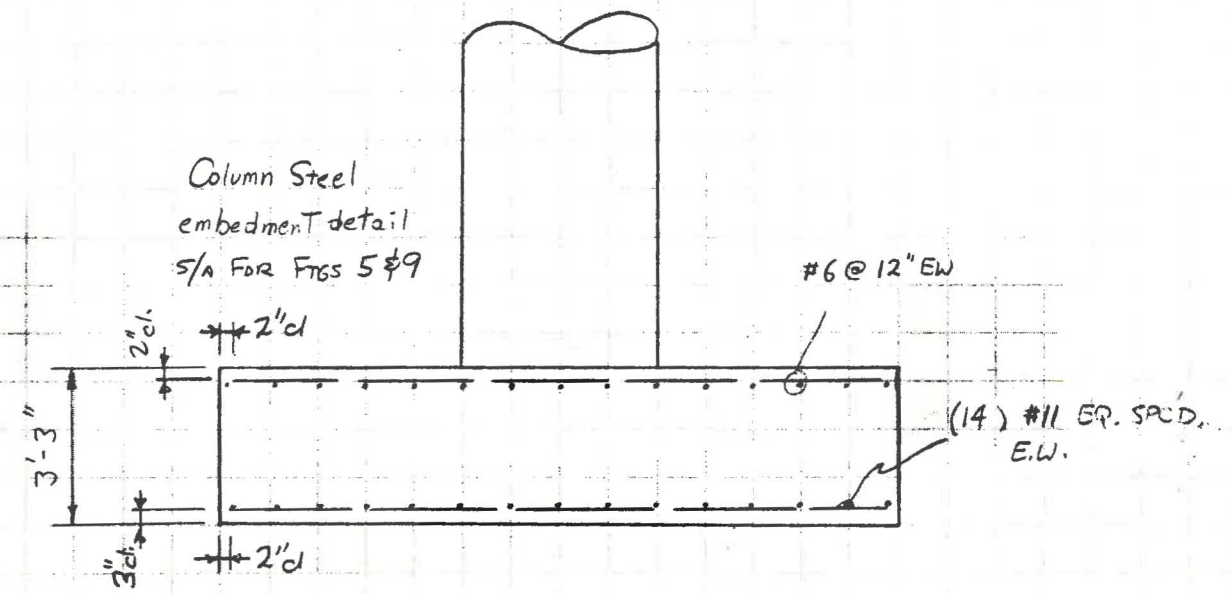
PIERS
FTGS 6, 7, & 8