ENGINEERING DIVISION
LIBRARY
Flood Control Library
Please Return to
2801 W. Durango
Phoenix, AZ 85009

PEORIA AVENUE BRIDGE
OVER
ARIZONA CANAL DIVERSION CHANNEL
CONTRACT FCD 84-9

STRUCTURAL CALCULATIONS

PREPARED FOR

FLOOD CONTROL DISTRICT

OF

MARICOPA COUNTY

FEBRUARY 1985

A118.817

BENSON & GERDIN, INC.

CONSULTING ENGINEERS

3150 NORTH SEVENTH STREET PHOENIX, ARIZONA 85014 PHONE (602) 264-0136

ROGER D. BENSON, P.E. HAROLD E. GERDIN, P.E.

February 18, 1985

D. E. Sagramoso, P.E.
Chief Engineer and General Manager
Flood Control District of Maricopa County
3335 West Durango Street
Phoenix, Arizona 85009

Reference: Peoria Avenue Bridge over Arizona Canal Diversion Channel
Contract No. FCD-84-9
Structural Calculations

Dear Sir:

Pursuant to our agreement for engineering services relative to the above referenced project, we respectfully submit the structural calculations for this project.

Yours very truly,

BENSON & GERDIN, INC.
CONSULTING ENGINEERS

Michael E. Kennelly

Michael E. Kennelly, P.E.

MEK:lr
Encl.

BENSON & GERDIN, INC. CONSULTING ENGINEERS PHONE (602) 264-0136	SHT. NO. 1 OF 99
CLIENT: M.C. FLOOD CONTROL DISTRICT	JOB NO. 2327 J
PROJECT: ARIZONA CANAL DIVERSION CHANNEL	BY AG DATE 10-6-84
PEORIA AVE BRIDGE	CHKD. HEG DATE 12-10-84
	REV.

INDEX

SUBJECT	SHT. NO.
INDEX	1
BASIS OF DESIGN	2
KEY PLAN & SECS	3-4
DECK SLAB	5-20
ACUTE CORNER SLAB DETS	21
CONTINUITY BARS	22-23
PRESTRESSED GIRDER	24-54
LOADING & MOM'S	24-30
PROPERTIES	31
STRESSES	32-33
LOSSES	34-35
FLEX. STRENGTH	36
POSITIVE MOM'S	37-40
SHEARS	41-47
DEFLECTIONS	48-51
DETS	52
EXT. GIRDER	53-54
ELASTOMERIC PADS	55-56
GIRDER CONX. DETAILS	57-59
ABUTMENT	60-71
WALL DET'S	63
FOOTING DET'S	66
WING WALLS	68-71
PIER	72-78
WALL & FOOTING DET'S	77
DIAGHS	79-80
ABUT. DIAPH	79
INTERM "	80
APPROACH SLAB	81
LAT. FORCES	82-92
POST TENSIONED ALTERNATE	93-99
END BLOCK DET'S	98
GIRDER DETAILS	99

PHASE I, CONSTRUCTION

DECK SLAB REVIEW	201
GIRDERS F & G	202 - 208
ABUT. RETAINING WALLS	209 - 212

Registered Professional Engineer (Structural)
CERTIFICATE NO.
6887
ALBERT A. GRIMM
Date Signed 12-14-84
ARIZONA, U.S.A.

BASIS OF DESIGN

LOCATION: PEORIA & 43RD AVE, PHOENIX AZ.

SUPER STRUCTURE:

68'-0 ROADWAY WIDTH
5'-6 RAISED SIDEWALK, EA. SIDE
81'-0 OVERALL WIDTH
52°-31'-10" SKEW LEFT
11 - AASHTO TYPE IV PRESTRESSED CONCRETE GIRDERS @ 7'-6" O.C., 2-SPANS CONTINUOUS OVER A CENTER WALL PIER.
8" SLAB THICKNESS
25 PSF ALLOWANCE FOR FUT. WEARING SURFACE
TOTAL LENGTH.

ABUTMENTS:

CONTINUOUS RETAINING WALL ON SPREAD FOOTING W/ WING WALLS

PIER:

CONTINUOUS WALL PIER ON SPREAD FOOTING.

CODE:

ADOT SPECS	1982
AASHTO	1983

LIVE LOAD HS 20-44

SOILS REPORT
BY WESTERN TECHNOLOGIES
J.N. 2124 J 151
DATED JULY 23, 1984
S_b = 10 000 PSF

CONCRETE STRENGTH

- f'_c = 4500 DECK SLAB (F_c = 1800)
- f'_c = 4500 ABUT. WALL (F_c = 1800)
- f'_c = 4000 FTG'S, PIER & APP. SL. (F_c = 1600)
- f'_c = 3000 ALL OTHERS

REBAR

- f_s = 20 000, GRADE 40 (#6 & SMALLER)
- f_s = 24 000, GRADE 60 (#7 & LARGER)
- f'_s = 270 000 P/S - STEEL, ½"ϕ - 7 WIRE STRAND

BENSON & GERDIN, INC. CONSULTING ENGINEERS PHONE (602) 264-0136

SHT. NO. 3 OF

JOB NO. 2327 J

BY AG DATE 9-1-84

CHKD. HEG DATE 12-10-84

REV.

A.C. D.C BRIDGE

PEORIA AVE.

KEY PLAN

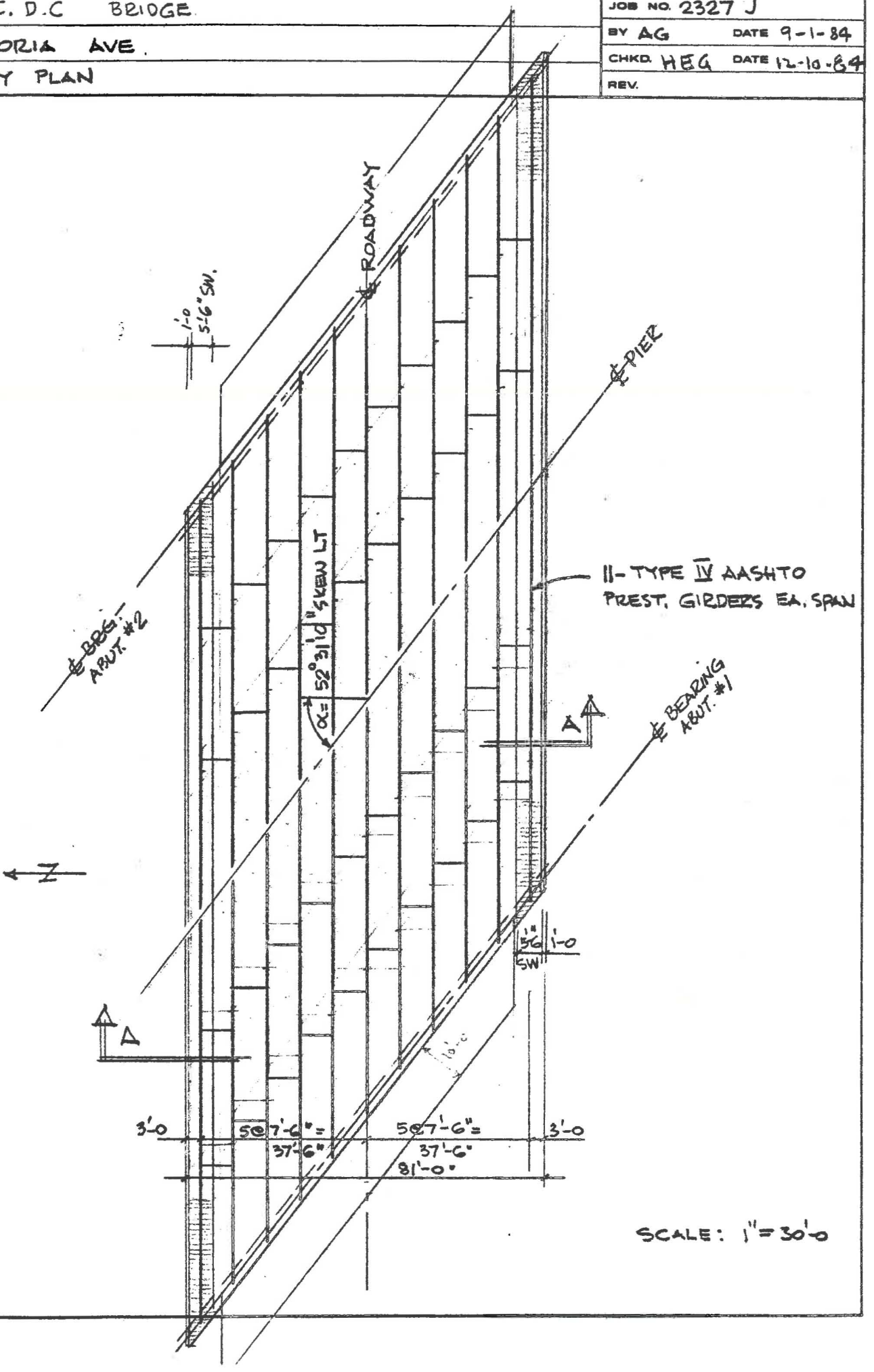

SCALE: 1" = 30'-0

BENSON & GERDIN, INC. CONSULTING ENGINEERS PHONE (602) 264-0136	SHT. NO. 4 OF
A.C.D.C. BRIDGE	JOB NO. 2327 J
PEORIA AVE	BY DG DATE 9-3-84
	CHKD. HEG DATE 12-10-84
	REV.

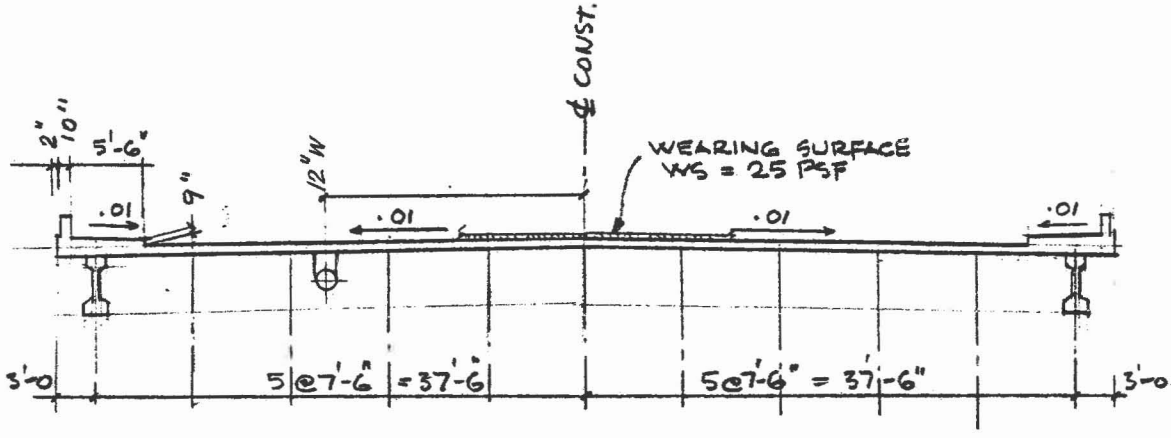

SEC. A-A

37.5
37.5
75.0
6
+ 81.0

BENSON & GERDIN, INC. CONSULTING ENGINEERS PHONE (602) 264-0138	SHT. NO. 5 OF
	JOB NO. 2327 J
	BY AG DATE 9-4-84
	CHKD. HEG DATE 12-10-84
	REV.

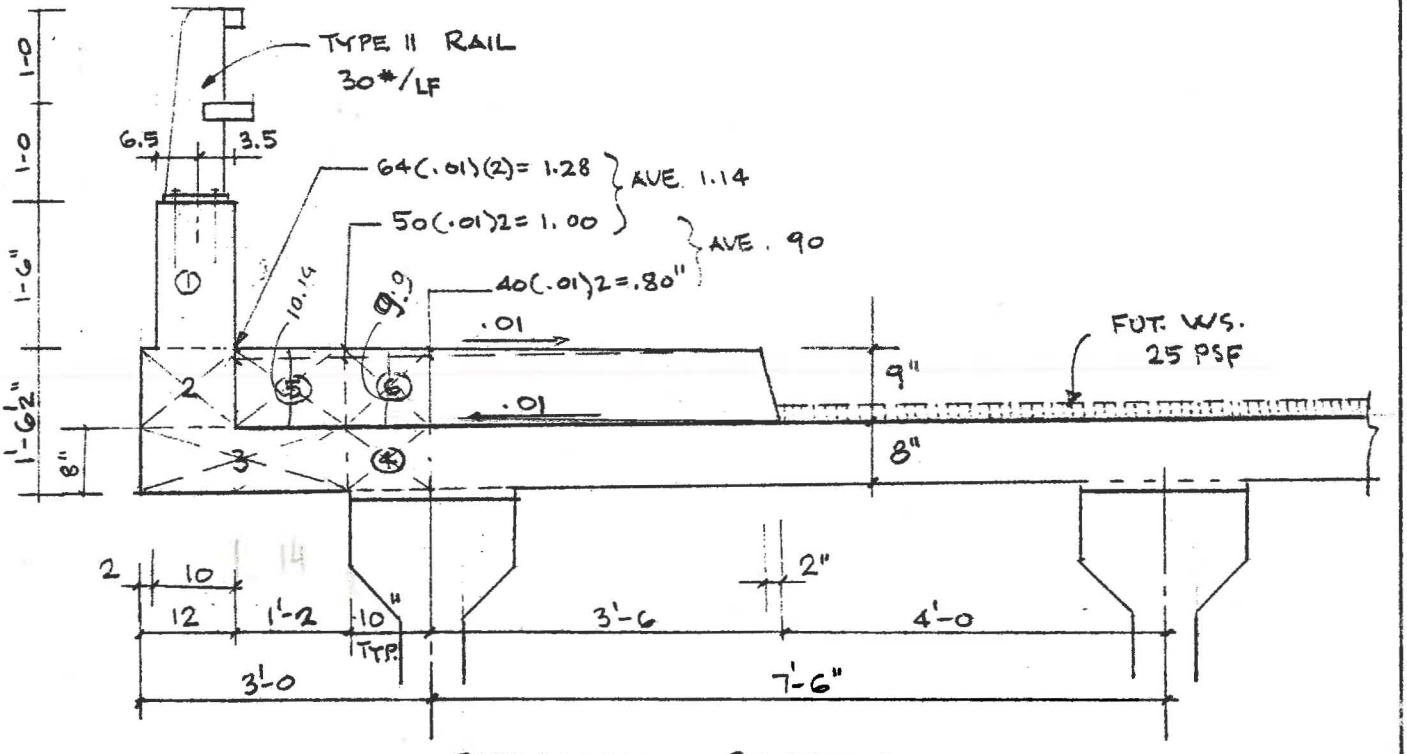

SIDE WALK SECTION

CANTILEVER LOADING

ITEM	h (IN)	b (IN)	P = hb 150/144 Lb/FT	@ EXT. FACE d_e	@ EXT. FACE $M_e = Pd_e/12$ 1-#	@ ℄ GIRDER d	@ ℄ GIRDER $M_{℄} = Pd/12$
① CURB	18	10	187.5	19	296.9	29	453.1
② "	10.5	12	131.3	20	218.8	30	328.1
③ SLAB	8	26 / 10	216.7 / 83.3	13 / —(1)	234.7 / —(6.9)	23 / 5	415.3 / 34.7
Σ DL1			618.8		750.4		1231.2
⑤ SW	10.14	14	147.9	7	86.3	17	209.5
⑥ SW	9.90	10	103.1	—(1)	—(8.2) (3.6)	5	43.0
⑦ RAIL	—	—	30.0	17.5	43.8	27.5	68.8
Σ $DL_1 + DL_2$			899.8		880.5		1552.5

899.8
186.2
713.4

USE @ FACE:

ΣP = 713 #/FT

ΣM_{DL1} = 750 1-#/1

ΣM_{DL2} = 130 -"-

ΣM_{DL} = -880 1-#/1

USE @ ℄ GIRDER:

ΣP = 900 #/L.FT

ΣM_{DL1} = 1231 1-#/1

ΣM_{DL2} = 321 -"-

ΣM_{DL} = 1552 1-#/1

BENSON & GERDIN, INC. CONSULTING ENGINEERS PHONE (602) 264-0136	SHT. NO. 6 OF
	JOB NO. 2327 J
	BY AG DATE 9-3-84
	CHKD. HEG DATE 12-11-84
DECK SLAB	REV.

8.9 1983

MIN. THICKNESS SEC. 1.5.40 1977

GIRDER FLGE $B_G = 20"$ @ TOP

" SPACING $S_G = 7'-6"$

SLAB SPAN $S = S_G - \frac{1}{2} B_G = (7'-6") - 10" = 6'-8"$

(SEC. 1.3.2A 1977
3.24 1983

FT

$\frac{(S+10)}{3}$

$h_{min} = (S+10)\,12/30 = 6.7"$ — 6.666 IN

3.24.1.2

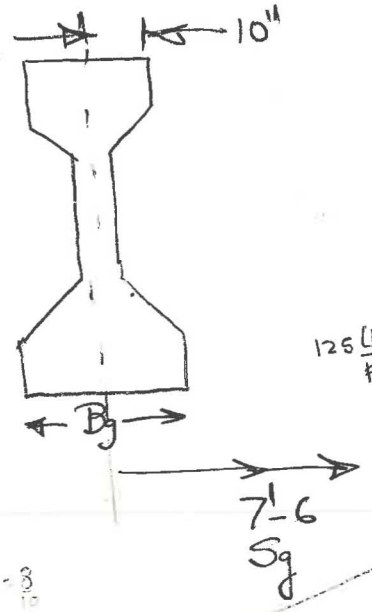

MIN. THICKNESS BY STRESS

ASSUME 8" SLAB: $S = 6.67$ FT

W_{DL}: 8" SLAB — $\left(\frac{8}{12}\right)(1)\frac{150\,lb}{FT^3} = 100$

WEARING SURF. (WS) 25

$w_{DL} = 125$ PSF

$P_{LL} = 16^k$; $\gamma = 0.8$ (CONTINUITY > 3-SPANS)

$125 \times (6.67)^2/10 = 556$ lb-FT

$125\,\frac{lb}{FT}$

$M_{DL} \cong wS^2/10 = .56$ K-FT .56

$M_{LL+I} = (S+2)\,P/32\,(1.3) = 5.64^{K-FT}(\gamma) = 4.51$

6.20 K-F/FT 5.07 ✓ #5@6" OK

AT 2-SPANS ONLY SEE SHT...

$M = \frac{8}{10}$

$\frac{wL^2}{8}$

$((6.67)+2)\frac{16000}{32} \times 1.3 =$

$(-)d = 8.0 - (2.0 + .31) = 5.69$ IN

$(+)d = 8.0 - (1.0 + .31) = 6.69$ IN

$\boxed{\text{TRY } \#5 @ 6"} \Rightarrow A_s = .62$ $\rho = \frac{.62}{12 \times 5.69} = .00908$

$(-)A_s = .62$ $n = 8$ $np = .0726$ $j = .89$ $\gamma = 7.09$

$k = \sqrt{2np + (np)^2} - np = .3153$ $J = 1 - k/3 = .895$

$M_s = f_s A_s J d$

$= 20000 \times .62 \times .895 \times 5.69 = 5.26$ K-F

$5.26 > 5.07 \Rightarrow$ OK

MOM. CAPACITY:

$f_s = 20\,000$ PSI $f_c = 1400$ PSI $M_c = \frac{f_c k J b d^2}{2}$

WRONG

$(-)M_{CONC.} = f_c d^2/\gamma = 6.4^{k'}/1$ (5.69)

$(-)M_{(REBAR)} = A_s f_s j d/12 = 5.26^{k'}/1$ ← GOVERNS

USE 8" SLAB

DECK SLAB

CANTIL. SLAB LL - MOMENTS

CASE 1 SW^{LL} + RAILING^{LL} (PEDESTRIAN)

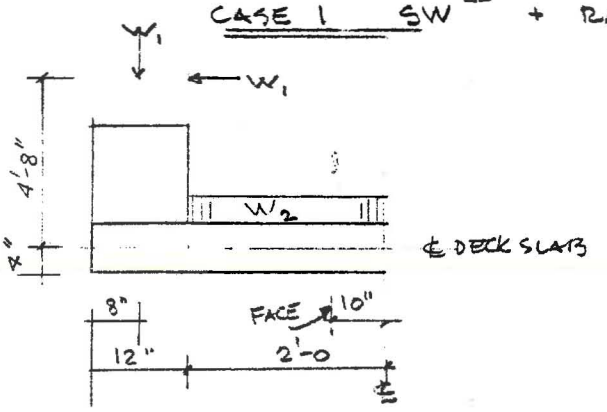

w_1 = PEDEST. 50 #/1 (2.7.3.2.2)

w_2 = SW 85 #/0.1 (3.14.1.1)

@ FACE:

$M^{LL}_{Face} = w_1(1.5) = 75$

$w_1(4.67) = 234$

$w_2(1.17)^2/2 = 58$

$\Sigma M_{Face} = 367^{1-\#}/_1$

@ ℄ GIRDER:

$M^{LL}_{℄} = w_1(2.33) + 234 = 351$ (117)

$w_2(2.0)^2/2 = 170$

$\Sigma M_{℄} = 521^{1-\#}/_1$

CASE 2: TRAFFIC LL + RAILING^{LL} (HIGHWAY DESIGN)

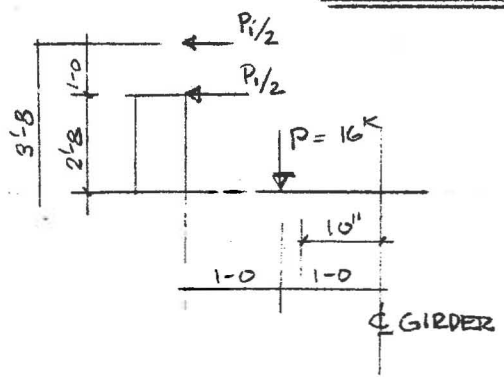

$E = 0.8(2.7+0.5)+5.0 = 7.56$ FT SEC. 3.24.5.2

$P_1 = 10/E = 1.32^K/_{FT}$

$M_{P_1} = P_1/2\,(2.67+3.67) = 4.2^{K-1}$ ← GOVERNS @ FACE

@ FACE: $E = .8\left(\frac{2}{12}\right)+3.75 = 3.88$ (3.24.5.1.1)

$M_P = (1.3)P(2/12) \div E = .90^{K-1}$

@ ℄ GIRDER: $E = .8\frac{12}{12}+3.75 = 4.55$

$M_P = 1.3(P)(1) \div E = 4.57^{K-1}$ ← GOVERNS @ ℄

NOTE: MOMENTS FROM TRAFFIC LL (M_P) AND RAILING LL (M_{P_1}) DO NOT COMBINE

DECK SLAB

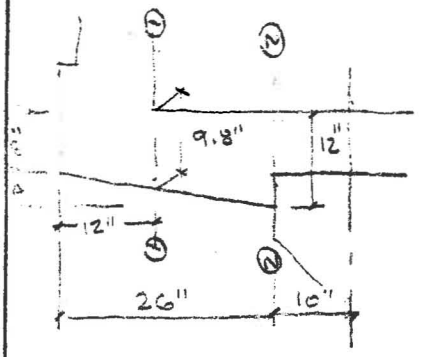

SEE SHT 19 FOR REINF.

CANTIL. SLAB CONT'D

COMBINED DESIGN MOMENT @ SEC. ② - ②

(-) M_{DES} = DL SHT. 5 .88 $^{K'}/_{'}$ + HAUNCH .04 SHT 9 .04

LL+I SHT. 7 4.20

(-) ΣM_{DES} = 5.12 $^{K'}/_{'}$ 150% SEC. 1.3.2B 1977 3.24.2.2 1983

MOM. @ SEC. ① - ① REF. SHT. 5

		#	ARM		
12 (18.5)	$^{150}/_{144}$ =	231	(0.5)	= 116	$^{I-\#}$
10 (18)	-"-	128	(.42)	= 79	"
HAUNCH 2 (12) $\frac{1}{2}$	-"-	13	(.33)	= 4	"
RAIL		30	(.33	= 10	

209 $^{I-\#}$

ΣM_{DL} = 209 $^{I-\#}/_{'}$

(-) M_{DES} = DL .21

LL+I SHT. 7 M_{P_1} = 4.20

4.41 $^{K'}/_{'}$

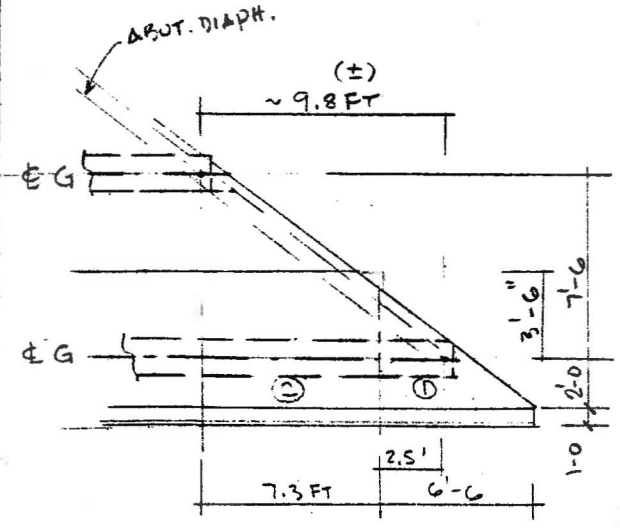

AT ACUTE CORNERS

SKEW LEFT $\measuredangle \alpha$ = 52° 31' 10" = 52.519°

TAN α = 1.304

REINFORCE CONC. STRIP ‖ ABUT.

$L'' = L_{\perp} : \cos\alpha$

$L''_{CANT} = 3.0 / \cos\alpha = 4.93$

$L''_{SPAN} = 7.5 / \cos\alpha = 12.33$

BENSON & GERDIN, INC. CONSULTING ENGINEERS PHONE (602) 264-0136	SHT. NO. 9 OF
	JOB NO. 2327 J
	BY A DATE 9-4-84
	CHKD. HEG DATE 12-11-84
DECK SLAB	REV.

AT ACUTE CORNERS CONT'D
(CANTILEVER)

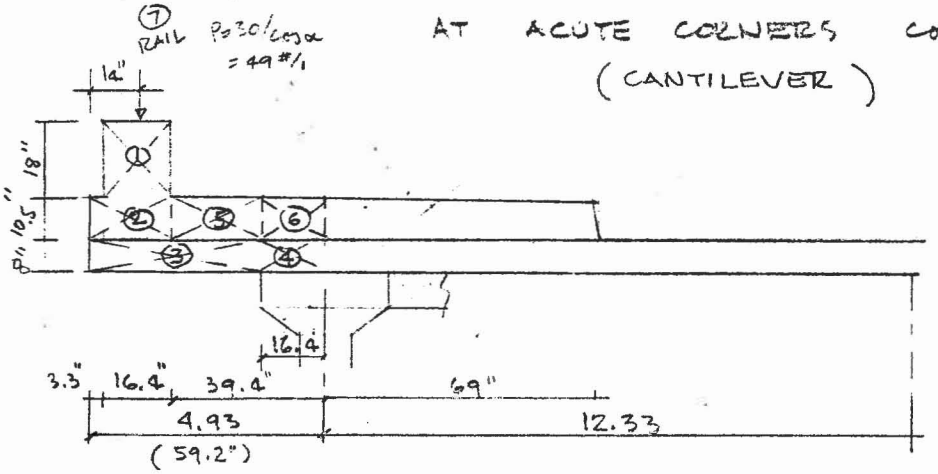

SIDE WALK SECTION PARALLEL ABUT.

$w'' = w^{\perp}/\cos\alpha$; $L'' = L^{\perp}/\cos\alpha$; $\therefore M'' = M^{\perp}/(\cos\alpha)^2$

@ FACE :

$M^{\perp}_{DL1} = 750^{1-\#}/'$ (SHT.5)
$M^{\perp}_{DL2} = 130$ " "
$\Sigma M^{\perp} = 880$ "

@ ACUTE CORNERS

$M''_{DL1} = 750/\cos^2\alpha = 2026$
$M''_{DL2} = 351$
$\Sigma M'' = 2377$

@ ℄ GIRDER :

$M^{\perp}_{DL1} = 1231$
$M^{\perp}_{DL2} = 321$
$\Sigma M^{\perp} = 1552$
(SHT.5)

$M''_{DL1} = 3325$
$M''_{DL2} = 867$
$\Sigma M'' = 4192$

LL - MOMENT

CASE 2: TRAFFIC LL + RAILING LL SHT. 7

AT FACE OF EXT. GIRDER :

RAILING : $M^{\perp}_{P_1} = 4.2^{k-'}$ $M''_{P_1} = M^{\perp}_{P_1}/\cos^2\alpha = 11.34^{k,\ GOV}$

TRAFFIC : $M^{\perp}_{P} = .90$ $M''_{P} = M_P/\cos\alpha = 1.5$

HAUNCH @ OVER HANG

a) PERPENDICULAR :

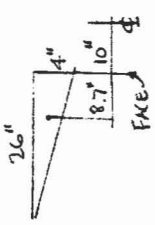

$26\frac{1}{2}(4)\frac{150}{144} = 54^{\#}(8.7)/12 = 39^{1-\#}$ @ FACE
$54(18.7)/12 = 84^{1-\#}$ @ ℄

(b) ON SKEW : $M_{FACE} = 39/\cos^2\alpha = 105$
$M_{℄} = 84/\cos^2\alpha = 227$

BENSON & GERDIN, INC. CONSULTING ENGINEERS PHONE (602) 264-0138

SHT. NO. 10 OF
JOB NO. 2327J
BY AG DATE 9-5-84
CHKD. HEG DATE 1-9-85
REV.

DECK SLAB, ACUTE CORNER

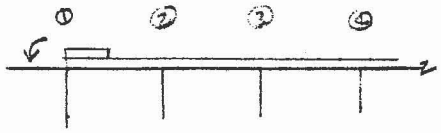

DL: $M_1^{LT} = 4192^{'-\#}$ SHT. 9 CANT.

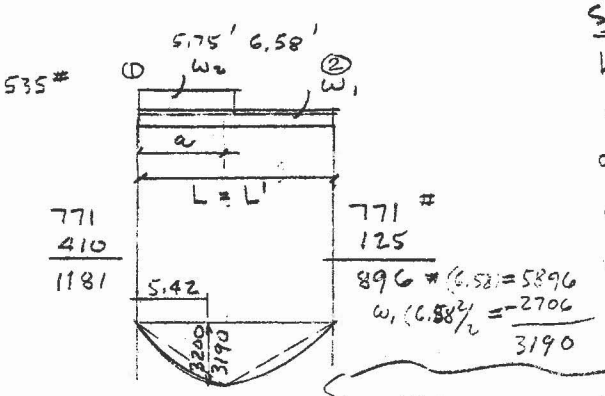

SPAN $\overline{12}$: $\gamma = 52° 31' 10'$ SKEW

$L = 7.5/\cos\alpha = 12.33$

$a = 3.5/\cos\alpha = 5.75$

$\alpha = a/L = 467$

$w_1 = 125$ PSF (8" SL + 25 PSF WS)

$w_2^{AVE} = (9.4 - 2.0)(12.5) = 93$ PSF

$\Sigma w = 218^{\#}$

NOTE: USE 3-MOMENT EQ'S FOR MOM. DISTRIBUTION

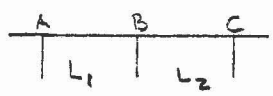

$$M_A L_1' + 2M_B(L_1' + L_2') + M_C L_2' + \mathcal{R}_1 L_1' + \mathcal{L}_1 L_2' = 0$$

$\left(L' = L\frac{I_c}{I} = L \text{ FOR } I_c = I \right)$

I_c = RELATIVE I

$\mathcal{L}_2 = 6EI_2\phi_B^{RT} \div L_2 \qquad \mathcal{R}_1 = 6EI_1\phi_B^{LT} \div L_1$

FOR w_1: $\mathcal{L}_1 = \mathcal{R}_1 = w_1 L^2/4 = 4.75 \Leftarrow$

w_2: $\mathcal{L}_1 = w_2 L^2 \alpha^2 (2-\alpha)^2 \div 4 = 1.81 \Leftarrow$

$\mathcal{R}_1 = w_2 L^2 \alpha^2 (2-\alpha^2) \div 4 = 1.37 \Leftarrow$

RELATIONSHIP BETW. FEM & L OR R:

$\mathcal{L} = -(2M_A + M_B)$

$\mathcal{R} = -(2M_B + M_A)$

$\mathcal{L}_1 = 4.75 + 1.81 = 6.56$

$\mathcal{R}_1 = 4.75 + 1.37 = 6.12$

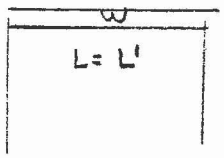

TYP SPANS:

$L = 12.33$

$w = 125$

$\mathcal{L} = \mathcal{R} = wL^2/4 = 4.75^{'K}$

$M_0 = wL^2/8 = 2375^{'\#}$

BENSON & GERDIN, INC. CONSULTING ENGINEERS PHONE (602) 264-0138	SHT. NO. 11 OF
	JOB NO. 2327
	BY AG DATE 9-5-84
	CHKD. HEG DATE 1-9-85
DECK SLAB, ACUTE CORNER	REV.

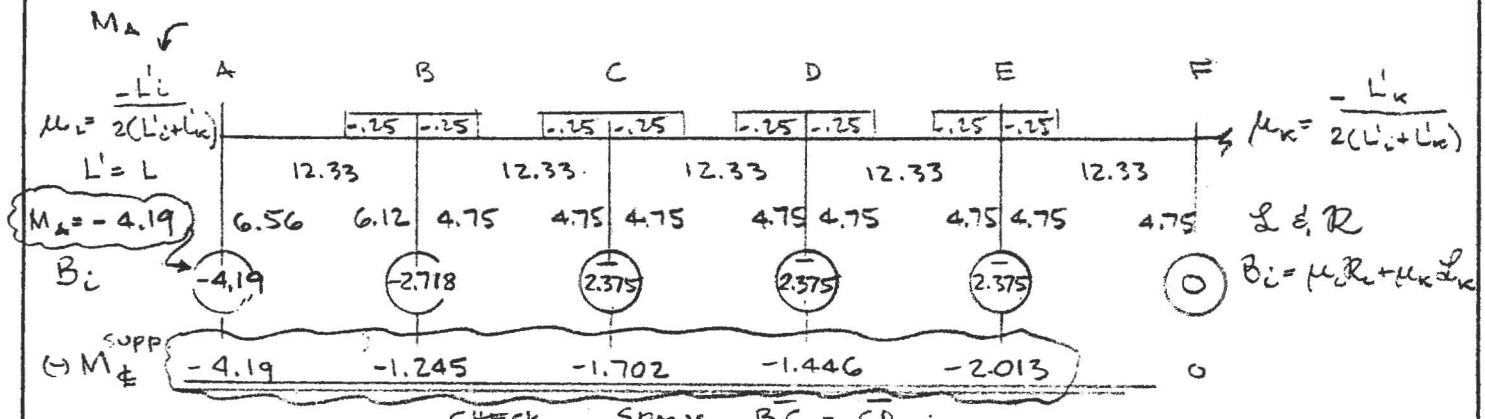

CHECK SPANS BC - CD :

$M_B(L'_2)$	= -15.35	-117.12
$2M_C(L'_2+L'_3)$	= -83.94	
$M_D(L'_3)$	= -17.83	
$R_2 L'_2$	= 58.57	117.14
$R_3 L'_3$	= 58.57	
Σ	= 00.02 ≈ 0.0	O.K.

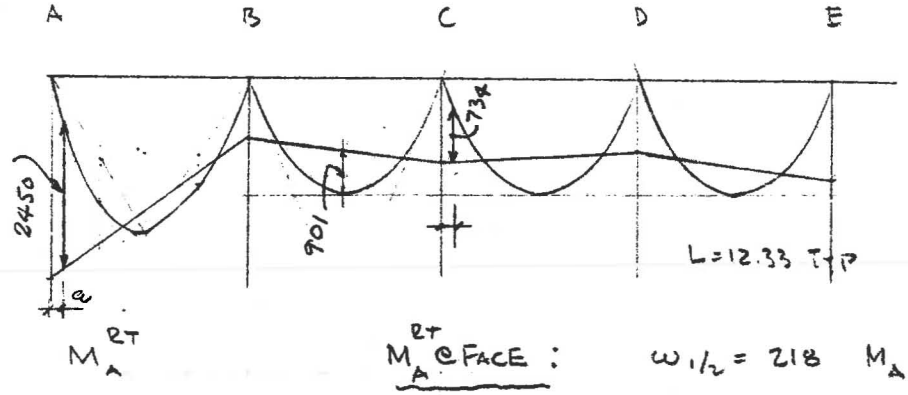

1" = 4000'-#

$a = \frac{10}{12\cos\gamma} = 1.37'$

M_A^{RT} @ FACE : $\omega_{1/2} = 218$ $M_A = 4.19$ $M_B = 1.245$

$\Delta M = 2945$

$V_A = 1181 + \Delta M/L = 1420^{\#}$ (239)

$(-)M_A^{FACE} = V_A(a) - \omega_{1/2}(a)^2/2 - M_{A\,\text{¢}}$

$= 1945 - 205 - 4190 = -2450^{1-\#}$

$(+)M_2^{\text{¢}} = 2375 - (1245 + 1702)\frac{1}{2} = 901$ (M_o = 1474)

LL-MOM'S

$S = 6.67/\cos\gamma = 11.0$ FT $P = 16$

$M_{LL} = (S+2)P/32\,(1.3)(.8)$ (I, CONT.) $= 6.76^{K}$

$(-)M_C^{RT}$: $\Delta M = 256^{1-\#}$ (21)

$V_C^{RT} = 771 + 256/L = 792^{\#}$ $a = 1.37$

$(-)M_C = V(a) - \omega_1(a)^2/2 - M_C$

$= 1085 - 117 - 1702 = -734$

SLAB DESIGN MOMENTS:

OVERHANG (SHT 9)

@ FACE OF GIRDER:

(-) M_{DL} = 2.5 = 2377 + 105 (HAUNCH) = 2482

(-) M_{LL+I} = 11.34 (SHT. 9)

(-) ΣM 13.84 K' 150%

INT. FACE OF EXT. GIRDER

(-) M_{DL} 2.45 } SHT. 11

(-) M_{LL+I} = 6.76 }

(-) ΣM = 9.21 150% ALLOW STRESS

$d_{12'D} = \sqrt{9.21/1.5(.22)} = 5.28$

$h_{MIN} = d + 2.0 + .40 = 7.68 < 8$

POS. MOM 2ND SPAN:

(+) M_{DL} = .90

+ M_{LL+I} = 6.76

7.66 100% ALLOW. STRESS

$d_{12'D} = (7.66/.22)^{1/2} = 5.9$

$h_{MIN} = 5.9 + 1.0 + .4 = 7.3 < 8$

NEG. MOM. 3RD GIRDER

(-) M_{DL} = .73

M_{LL+I} = 6.76

7.49

$d_{12'D} = (7.49/.22)^{1/2} = 5.8$ 100% ALL. STRESS

$h_{MIN} = 5.8 + 2.0 + .4 = 8.2$ IN

THICKEN SLAB 9" AT ACUTE CORNER

DECK SLAB ACUTE CORNER

REINFORCEMENT

TRY #6@6" $A_s = .88\ IN^2$ $n = 8$ $f_c = 1400$

$f_s = 20\ ksi$ SLAB = 9"

OVERHANG $-M = 13.84$ SHT. 12

$(-)\ d = 12 - (2 + .38) = 9.62\ IN$

$np = .061$ $k = .294$ $j = .902$ $\gamma = 7.55$

$M_{CONC} = f_c d^2/\gamma = 17.2^{ki}$

$M_{REBAR} = A_s f_s j d/12 = 12.7^{ki}/_1\ (1.5) = 19.1 > 13.84$ SHT. 12

INT. FACE OF EXT. GIRDER $-M = 9.21$ SHT. 12

$-d = 9 - (2 + .38) = 6.62$

$np = .0886$ $k = .342$ $j = .886$ $\gamma = 6.6$

$M_{CONC} = 9.3^{ki}$

$M_{REBAR} = 8.6^{ki}$ (1.5) INCREASE $= 12.9 > 9.2$

USE #6@6" ✓

NEG. MOM @ 3RD GIRDER

$(-)\ M = 7.49^{ki} < M_{REBAR} = 8.6$ o.k.

POS. MOM $+M = 7.66$ SHT. 12

$+d = 9 - (1 + .38) = 7.62$

$np = .077$ $k = .323$ $j = .892$ $\gamma = 6.94$

$M_{CONC} = 11.7$

$M_{REBAR} = 9.97^{ki} > 7.66$ o.k

BENSON & GERDIN, INC. CONSULTING ENGINEERS PHONE (602) 264-0136 | SHT. NO. 14 OF
JOB NO. 2327 J
BY AG DATE 9-5-84
CHKD. HEG DATE 1-10-85
REV.

DECK SLAB

TYP. INTER SLAB

CASE 1: 9" SL ACUTE CORNER - SIMPLE SPAN

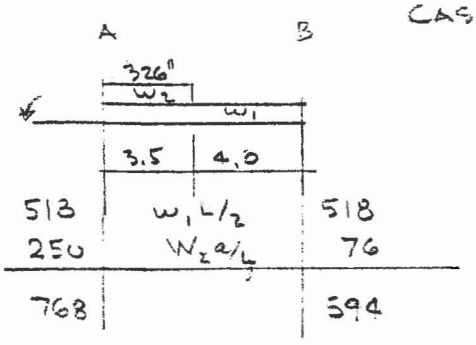

$(-)\ M_A =$ SHT 5 1552
HAUNCH 84 SHT. 9
1636 1-#

w_1 : 9" SL. + 25 WS 138 #/'
w_2^{AVE} : 9.4" SL - 25 -"- 93 -"-
$\Sigma w =$ 231 #/'

$x_o = V_A^o / \Sigma w = 3.32$ FT

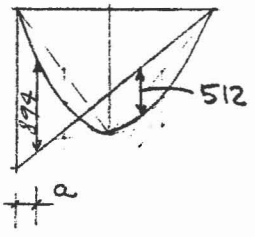

$+M_{x_o} = \overset{2553}{V_A^o(x_o)} - \overset{1277}{\Sigma w\, x_o^2/2} = 1276$

$+M @ 3.5 = \overset{2673}{V_B(4.5)} - \overset{1397}{w_1(4.5)^2/2} = 1276$

$(-)\ M_A^{RT}$ @ $x = 10/12 = .83$ FT $x/L = .111$

$(-)\ M_A = \overset{640}{V_A^o(x)} - \overset{80}{\Sigma w x^2/2} = 560$

$- 1636(.889)$ -1454

-894

$+M_{DL}$: $V_B = 594 - \overset{218}{1636/7.5} = 376$

$x' = V_B / w_1 = 2.72$

$(+)\ M_{1DL} = V_B^2 / 2w_1 = \underline{512}$ 1-#

CASE 2: 9" SL. ACUTE CORNER - 2 SPANS

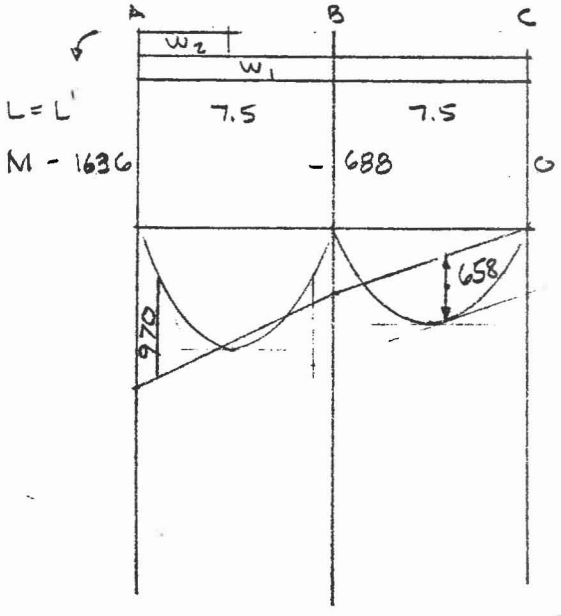

$(-)\ M_A = -1636$

$R_1 = \overset{1940}{w_1 L^2/4} + \overset{508}{w_2 L^2 .097} = 2.448$ } SEE SHT. 10

$\mathcal{L}_2 = w_1 L^2/4 = 1940$

$(-)\ M_B = \frac{1}{30}(7.5)(-M_A - R_1 - \mathcal{L}_2) = -688$

$M_{o2} = w_1 L^2/8 = 970$

@ FACE

$(-)\ M_A =$ CASE 1: -894

$- M_B(.111)$ -76

-970 1-#

$V_c = \overset{w_1 L/2}{518} - \overset{92}{M_B/L} = 426$

$(+)\ M_2 = V_c^2 / 2(w_1) = 658$

DECK SLAB

TYP. INTER SLAB CONT'D ACUTE CORNERS - 3 SPANS

CASE 3 (9" SLAB)

$w_1 = 138$, $w_2 = 93$ } SEE SHT 10

(+) M_3: $V_D = 518 - M/L^{113} = 405$

$M_3 = V_D^2/2w_1 = 595$

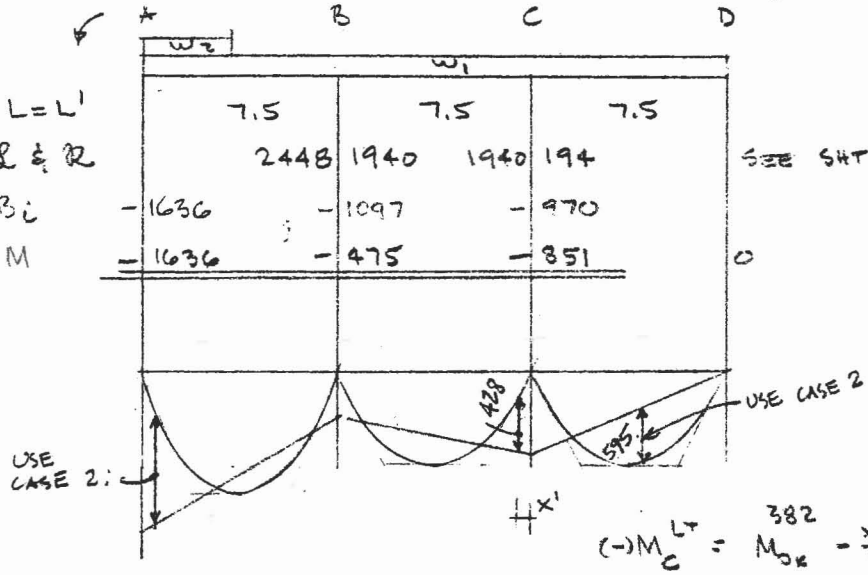

$x' = .83$ FT $x'/L = .111$

$x = 6.67$ FT $x/L = .889$

$M_{0x} = w_1 \times x'/2 = 382$

$(-)M_C^{LT} = M_{0x}^{382} - \frac{x}{L} M_C^{757} - \frac{x'}{L} M_B^{153} = -428$

CASE 4 (8" SL)

$w_1 = 125$ $R_1 = w_1 L^2/4 = 1758$

$w_2 = 93$ $.097 w_2 L^2 = 508$

218 2266

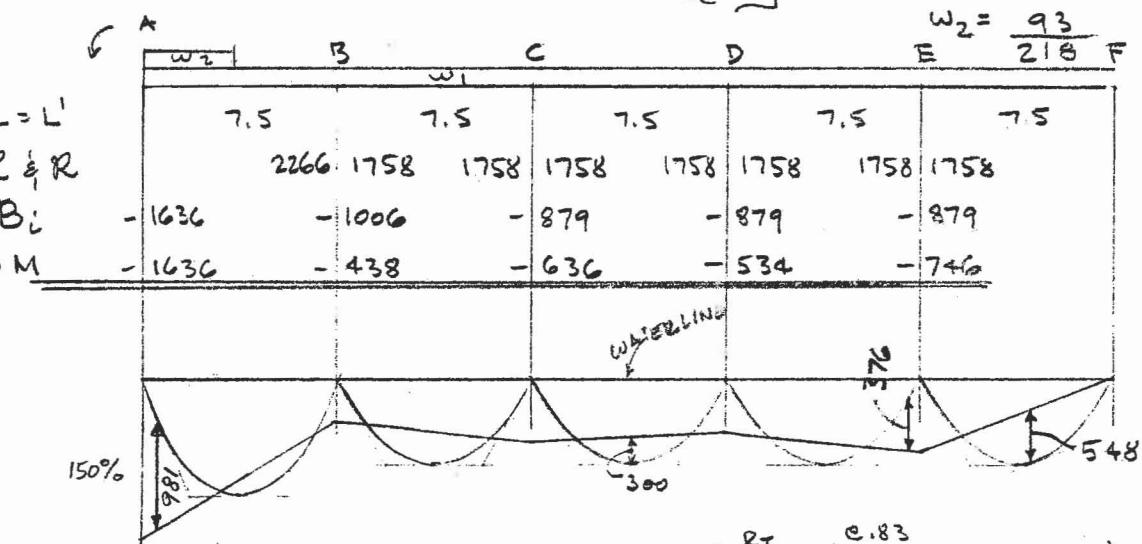

TYP. SPAN:

$M_0 = w_1 L^2/8 = 879$

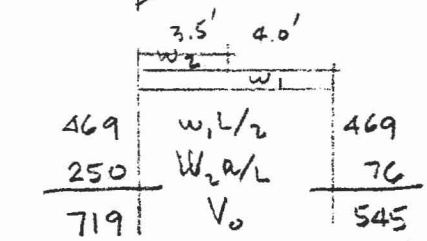

$M_0 @ 3.3 = 719^2/2\Sigma\omega = 1186$

$M_0 @ x = .93$: $V_A(.83) - \Sigma\omega(.83)^2/2$

$= 597 - 75 = 522$ #

$(-)M_A^{RT} = M_x^{@.83} - .889(1636) - .111(438)$

$= 522 - 1454 - 49 = 981$

$(-)M_E^{LT} = {}^{346}\omega_1 \times x'/2 - .889(746) - .111(534)$

$= 346 - 663 - 59 = -376$

$V_F = 469 - 746/7.5 = {}^{99}370$ #

(+) $M_5 = V_F^2/2w_1 = 548$

DECK SLAB

12" WATERLINE SUPPORT

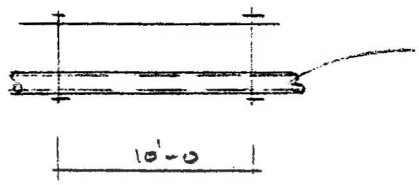

W : PIPE 75 + WATER 50 = 125 #/'

p : HGR : ASSUME 50 # / EACH

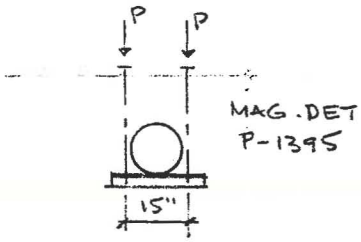

P : PIPE $10(125)/2$ = 625

HGR $\frac{1}{2}(50)$ = 25

650 #

NOTE: DISTRIBUTE PIPE LOAD OVER 3'-0 ± ½ CLR SPAN

CASE 5

$\mathcal{L}=\mathcal{R}=\frac{3P(3.1)4.4}{7.5}=3546$

.413' .587
1.3
3.1 P P 3.1

L = L'	7.5	7.5	7.5	7.5	7.5
$\mathcal{L}$, $\mathcal{R}$	3546	0 0	0 0	0 0	0 0
B		− 886.5	0	0	0
(−) M		− 950	254	−68	17

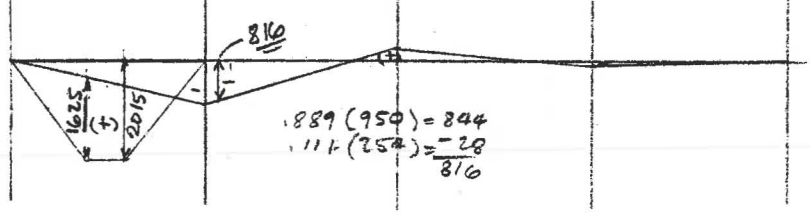

CASE 6 :

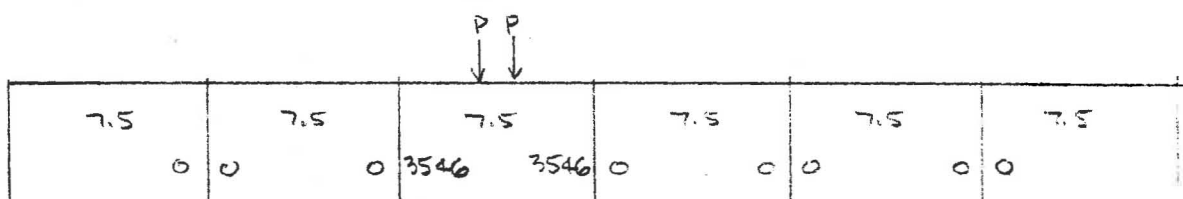

L = L'	7.5	7.5	7.5	7.5	7.5	7.5
$\mathcal{L}$, $\mathcal{R}$	0	0 0	3546	3546 0	0 0	0
B		0	− 886.5	− 886.5	0	0
(−) M	0	186	− 746	− 750	200	− 50

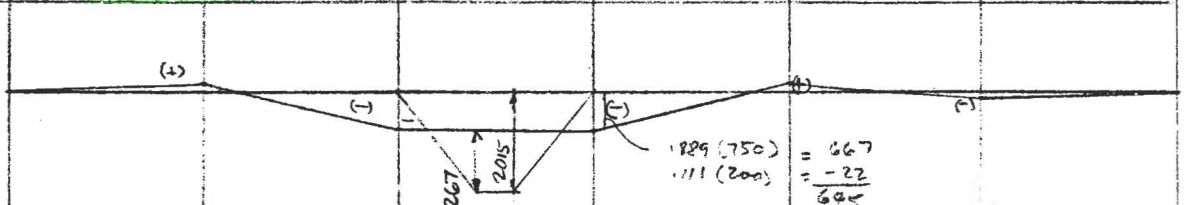

TYP INTER. SLABS DESIGN MOMENTS

(a) INTER. FACE OF EXT. GIRDER

9" SLAB:

(−) M_{DL} SHT. 14 .970 CASE 2

(−) M_{LL+I} SHT. 6 5.64 (2 SPANS)

(−) ΣM 6.61 150%

USE #5@6" ← $M_R = 5.5\,(1.5)$ SHT. 19

$d = 9 - (2.0 + 0.75 + .31) = 5.94$

$d_{req'd} = (6.61 / 1.5(.22))^{1/2} = 4.48 < d$

8" SLAB

(−) M_{DL} SHT 15 .98 CASE 4

(−) M_{LL+I} SHT 6 4.51 (3 OR MORE SPANS)

$-\Sigma M = 5.49$ 150%

USE #5@6" ← $M_R = 5.26\,(1.5)$ SHT. 18

$d = 8 - (2.0 + .31) = 5.69$

$d_{req'd} = \left(5.49 / 1.5(.22)\right)^{1/2} = 4.1 < d$

(b) POSITIVE MOMENTS

@ WATER LINE:

(+) M_{DL} CASE 3: .46

W.LINE CASE 5, $\frac{1625}{3}$ .54

M_{L+I} 4.51

$+\Sigma M = 5.51$

(NOT CRITICAL)

9" SLAB:

$+ M_{DL}$ SHT. 14 .66 CASE 2

$+ M_{LL+I}$ SHT. 6 5.64

$+\Sigma M = 6.30$

USE #5@6" ← $M_R = 6.48 > 6.30$ SH. 19

$d = 9 - (1.0 + .75 + .31) = 6.94$

$d_{req'd} = (M / .22)^{1/2} = 5.35$

8" SL.:

$+ M_{DL}$ SHT. 15 .55 CASE 4

(+) M_{LL+I} 4.51

$+\Sigma M = 5.06$

$d = 8 - (1.0 + .31) = 6.69$ O.K. BY INSP.

USE #5@6" → $M_R = 6.23 > 5.23$ SHT.

AT 12" WATER LINE (DISTRIBUTE OVER 3-FT)

$+M_{DL}$: CASE 4: 300 + (CASE 6 W.LINE 1260)/3 = .72

M_{LL+I} 4.51

(+) ΣM 5.23 ← GOVERNS

DECK SLAB

INTER. DESIGN MOM'S CONT'D

(c) NEGAT MOM'S @ INT. GIRDERS

AT. WATER LINE:

(-) M_{DL} .43
W/LINE 816/3 .27
L+I 4.51
GOVERNS (-) ΣM = 5.21

9" SL:

(-) M_{DL} SHT .43 CASE 3
(-) M_{L+I} SHT. 6 4.51
(-) ΣM = 4.94 100%
$d = 5.94$ $d_{R'D} = (M/.22)^{1/2} = 5.25 < d$

8" SL:

@ WATER LINE:

(-) M_{DL} .38
W/LINE 645/3 .22
L+I 4.51
(-) ΣM = 5.11
GOVERNS

(-) M_{DL} .38
(-) M_{L+I} SHT 6 4.51 (3 OR MORE SPANS)
$-\Sigma M$ = 4.89
$d_{R'D} = (M/.22)^{1/2} = 4.7 < d = 5.69$

USE #5@6"
$M_R = 5.26 > 5.11$
SEE BELOW

REINFORCEMENT

TRY #5@6"

8" SLAB $(+d) = 6.69\ IN^2$ $A_s = .62\ IN^2$ $n = 8$
$np = 8(.62)/12(d) = .0618$
$k = .295$ $j = .90$ $\gamma = 2/kj = 7.516$

(+) RESISTING MOMENTS: f_c ALLOW = 1.4 ksi $f_s = 20.0$ ksi
$M_{CONC.} = f_c (d)^2/\gamma = 8.3$ k'/FT
$M_{REBAR} = A_s f_s j d/12 = 6.23$ " ⟸ GOVERNS

(-) $d = 5.69\ IN^2$ $np = .0726$
$k = .315$ $j = .89$ $\gamma = 7.09$

(-) RESISTG. MOMENTS
$M_{CONC} = f_c d^2/\gamma = 6.4$ k'/'
$M_{REBAR} = A_s f_s j d/12 = 5.26$ k'/' ⟸ GOVERNS

DECK SLAB

REINFORCEMENT (CONT'D)

TRY #5@6"

9" SLAB

$+d = 6.94 \quad A_s = .62 \quad n = 8$

$np = 8(.62)/12\,d = .0596$

$k = .291 \quad j = .903 \quad y = 2/kj = 7.62$

(+) RESISTING MOMENTS: $f_c = 1.4^{ksi} \quad f_s = 20.0^{ksi}$

$M_{CONC} = f_c d^2/y = 8.85^{k\text{-}i/ft}$

$M_{REBAR} = A_s f_s j d/12 = 6.48^{ki/i}$ ⟸ GOVERNS

(-) $d = 5.94$

$np = .07 \quad k = .31 \quad j = .897 \quad y = 7.20$

(-) RESISTING MOMENTS

$M_{CONC} = f_c d^2/y = 6.86$

$M_{REBAR} = A_s f_s j d/12 = 5.50$ ⟸ GOVERNS

REINF. OF CANTIL. SLAB

SEE SHT 8 FOR MOMENTS

AT SEC. ②-②

(-) $M_{DES} = 5.12^{ki} \quad d = 12 - (2 + .31) = 9.69$

#5@6" $np = nA_s/bd = .0426$

USE ⟹ $k = .2525 \quad j = .916 \quad y = 8.6$

$M_{CONC} = f_c d^2/y = 15.2^{ki}$

$M_{REBAR} = A_s f_s j d/12 = 9.17 > M_{DES}$ ⟸

AT SEC. ①-①

(-) $M_{DES} = 4.41 \quad d = 9.8 - (2 + .31) = 7.49$

#5@6" $np = .055 \quad k = .282 \quad j = .906 \quad y = 7.8$

USE ⟹ $M_{CONC} = f_c d^2/y = 10.0^{ki}$

$M_{REBAR} = A_s f_s j d/12 = 7.0 > M_{DES}$

DISTRIB. REINF. 1.3.2E

$S = 7.5 - 0.83 = 6.67 \quad + A_s = .62\,in^2$ (#5@6")

Reqd % = $220/\sqrt{S} = 85\% > 67\%$ USE ⟸

MIDDLE HALF: $A_s(.67)\,S/2 = 1.39\,in^2$ (4.5 #5's)

OUTER QUARTERS $1/2(1.39) = .69\,in^2$ (2.2 #5's)

$2.08\,in^2$ (6.7 #5's)

DECK SLAB TYP DETAILS

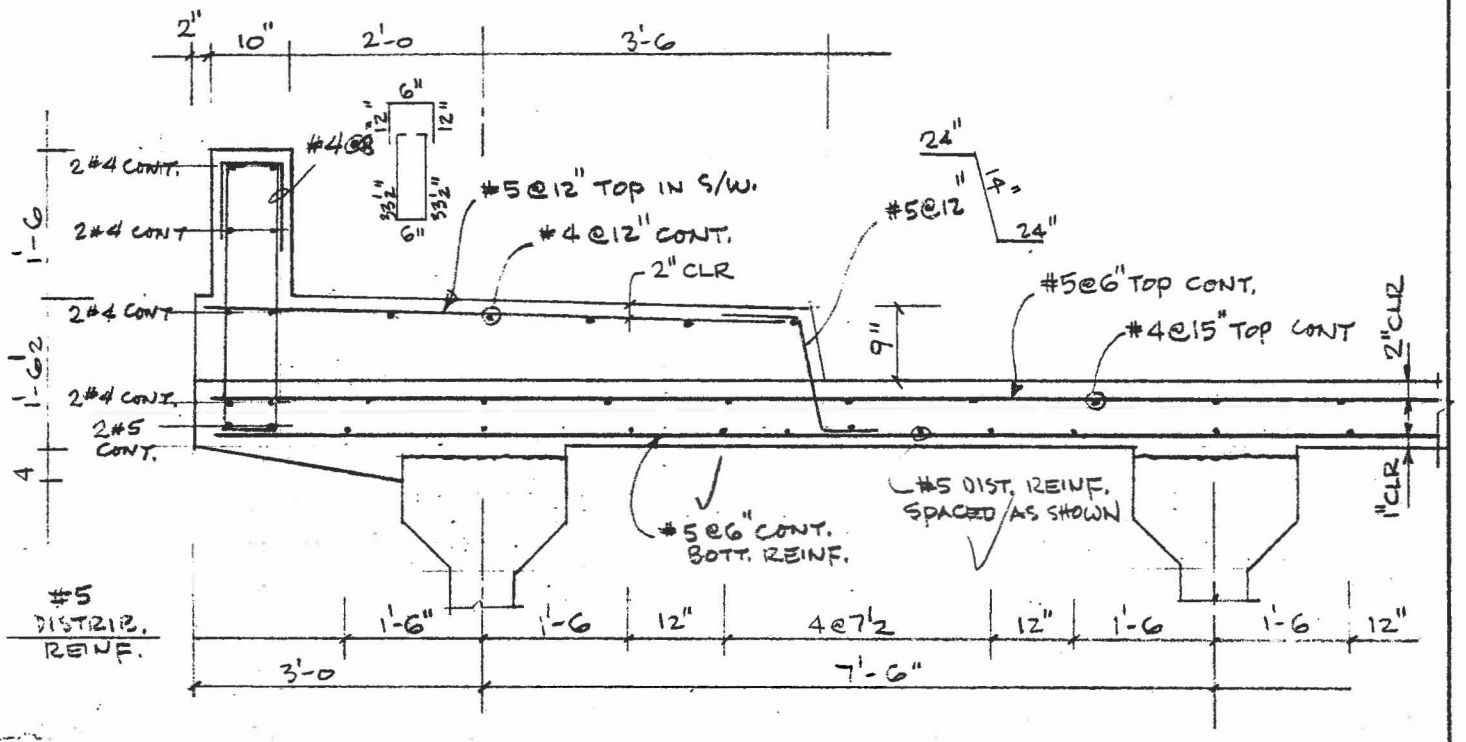

TYP. SLAB REINF. (8" SL.)

NOTE: FOR ADDITIONAL REINF. (CONTINUITY BARS) SEE SHT. .

CURB REINF (HIGHWAY DES. LOAD'G)

P = 10/E = 1.32 K/FT SEE SHT. 7,

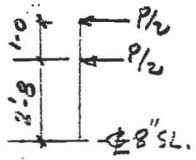

$M = P/2\,(2.7+3.7) = 4.2^{K'}$

$d = 12 - (2 + 0.31) = 9.69$

$A_s = M/1.44d = .30\ IN^2$

USE (#5@12") OR #4@8"

@ TOP OF SIDE WALK: $E = 0.8\,(2.0) + 5.0 = 6.6$

$M = P/2\,(1.5+2.5) = 3.0^{K'}$ $P = 10/E = 1.52$

$d = 10 - 2.31 = 7.69$

$A_s = .27 < .30.$ USE #4@8"

BENSON & GERDIN, INC. CONSULTING ENGINEERS PHONE (602) 264-0136

SHT. NO. 21 OF
JOB NO. 2327 J
BY AG DATE 9-21-84
CHKD HEG DATE 1-23-85
REV.

DECK SLAB @ ACUTE CORNER

DETAILS

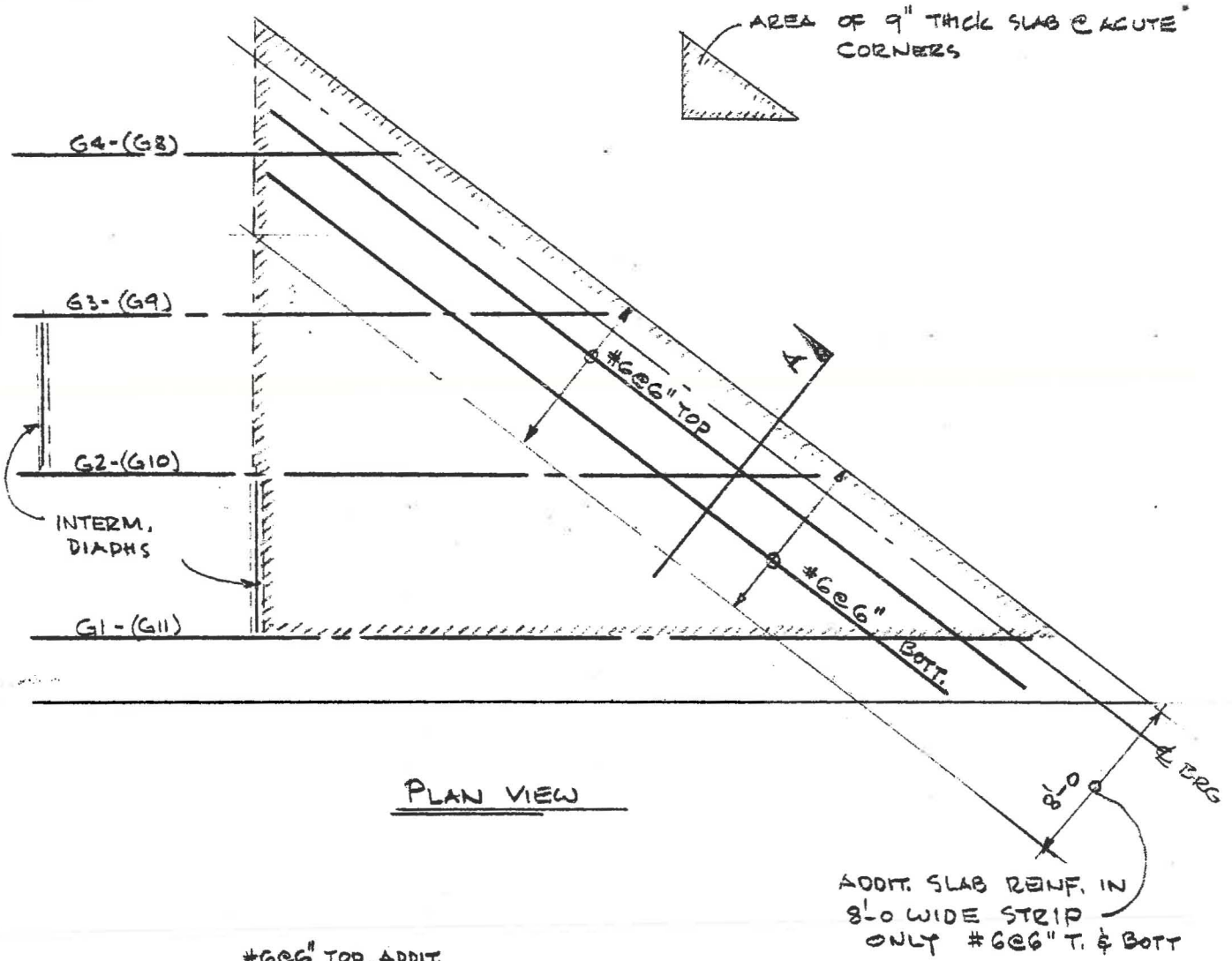

PLAN VIEW

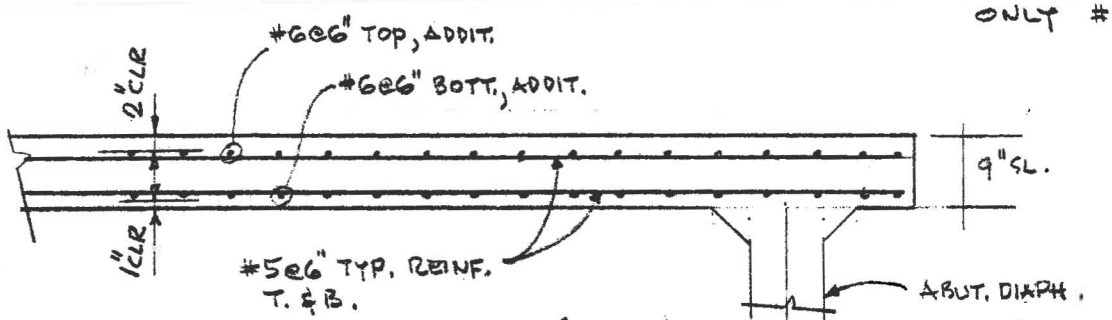

NOTE: TYP. LONGIT. REINF. (#4@15" TOP & #5 DIST. REINF.) NOT SHOWN FOR CLARITY SEE SHT.

SECTION A

CONTINUITY BARS

LOAD CASES

DL 2

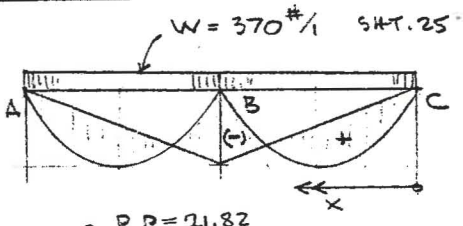

$M_x = wL^2/8\,(3\xi - 4\xi^2)$

$\xi = x/L$

TRUCK LL SHT.

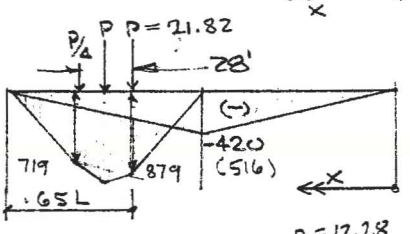

$M_x = M_B\,\xi$

LANE LL

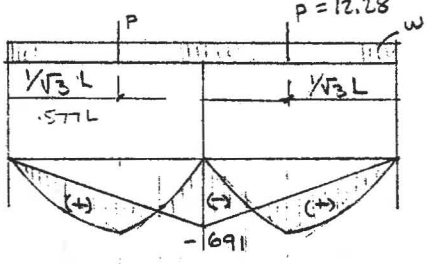

IMPACT COEFF.: (LL+I) = 1.229

=

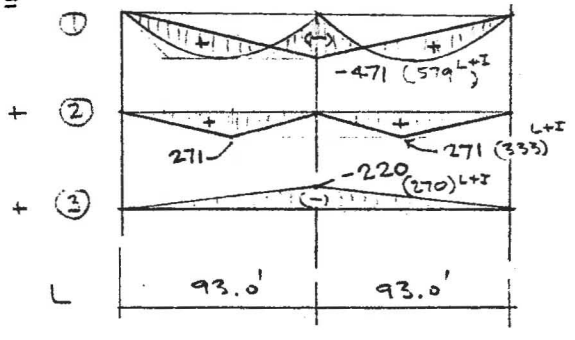

$M_{x_1} = wL^2/8\,(3\xi - 4\xi^2)$

NOT APPLIC. $M_{x2} = \sqrt{3}M^P\xi$ FROM $\xi = 0$ TO $\xi = \frac{1}{\sqrt{3}}$

$M_{x2} = \sqrt{3}M^P(1-\xi)/(\sqrt{3}-1)$ FR. $\xi = \frac{1}{\sqrt{3}}$ TO $\xi = 1.0$

$M_3 = M_B(\xi)$

MAX. NEG. MOMENTS DL2 & (L+I)

	IMP. COEFF	.10	.20	.30	.40	.50	.60	.70	.80	.90	1.0
DL2: W = .370	0	104	176	216	224	200	144	56	-64	-216	-400
TRUCK LL M_B = -420	1.229	-52	-103	-155	-206	-258	-310	-361	-413	-465	-516
LANE LL: w = .436	1.229	151	255	313	324	290	209	81	-93	-313	-579
" " $P^{S.SP}$; M_p = 271	1.229	58	115	173	231	288	315	236	158	79	0
" " M_B^P = -220	1.229	-27	-54	-81	-108	-135	-162	-189	-216	-243	-270
Σ LANE		← TRUCK GOVERNS →						(128)	(-151)	LANE GOV. → -477	-849
Σ DL2 + LANE/TRUCK		52	73	61	18	-58	-166	-305	-477	-693	-1249
FUT. W/S DEDUCT.. w = .211	0	-59	-100	-123	-128	-114	-82	-32	+36	+123	+228
ΣDL2 (LESS FUT. W/S) + LANE/TRUCK		-7	-27	-62	-110	-172	-248	-337	N. CR.	N. CR.	N. CR.

BENSON & GERDIN, INC. CONSULTING ENGINEERS PHONE (602) 264-0138

SHT. NO. 23 OF
JOB NO. 2327
BY AG DATE 9-21-84
CHKD. DATE
REV.

CONTINUITY BARS

DETAILS

8#5; $d = 54+2 = 56"$ $M_{12} = 1.44(56)\overset{N}{8}(.31) = 200^{K'}$

6#4 $d = 54+5 = 59$ $M_{12} = 1.44(59)6(.20) = 102^{K'}$

12#8's : $[4(2.13)+8(4.87)]/12 = 4.0$ $d = 54+4 = 58$

$M_{12} = 1.76(d)\overset{N}{12}(.79) = 968^{K'}$

$L_d^{\#8} = 48"$

4#8: $4(.79)1.76(d) = 322^{K}$

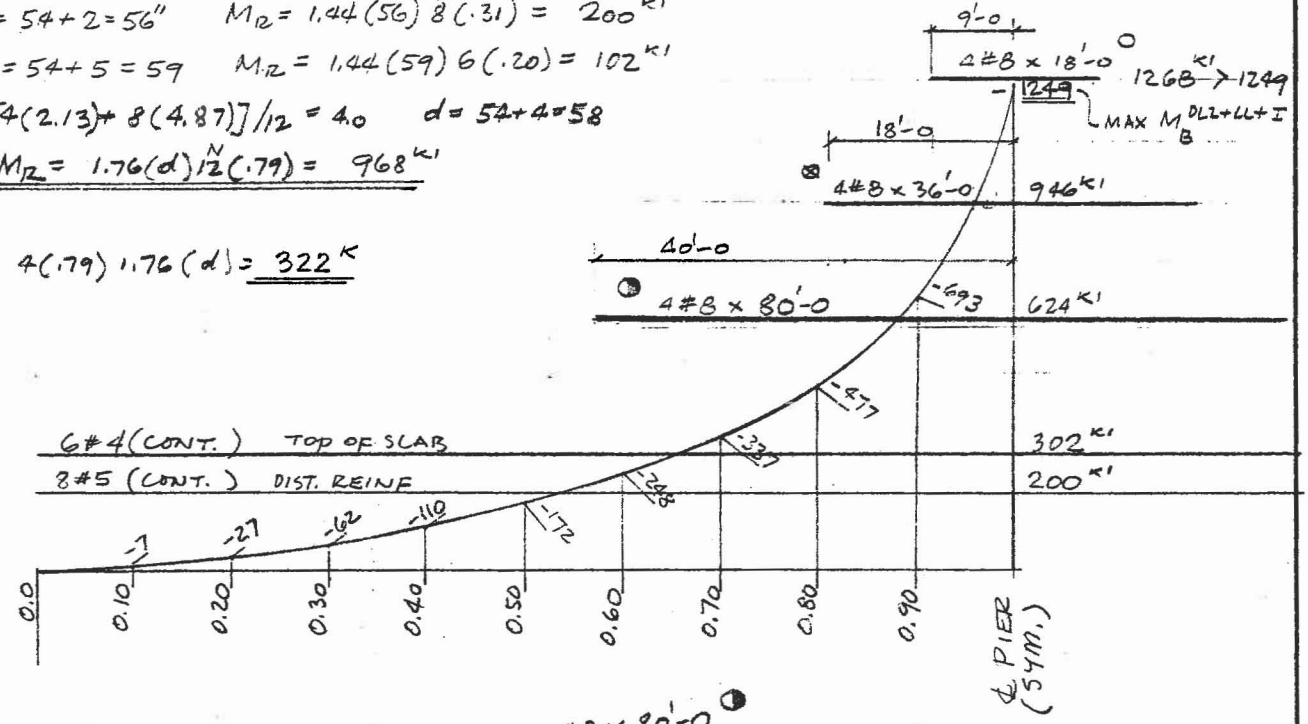

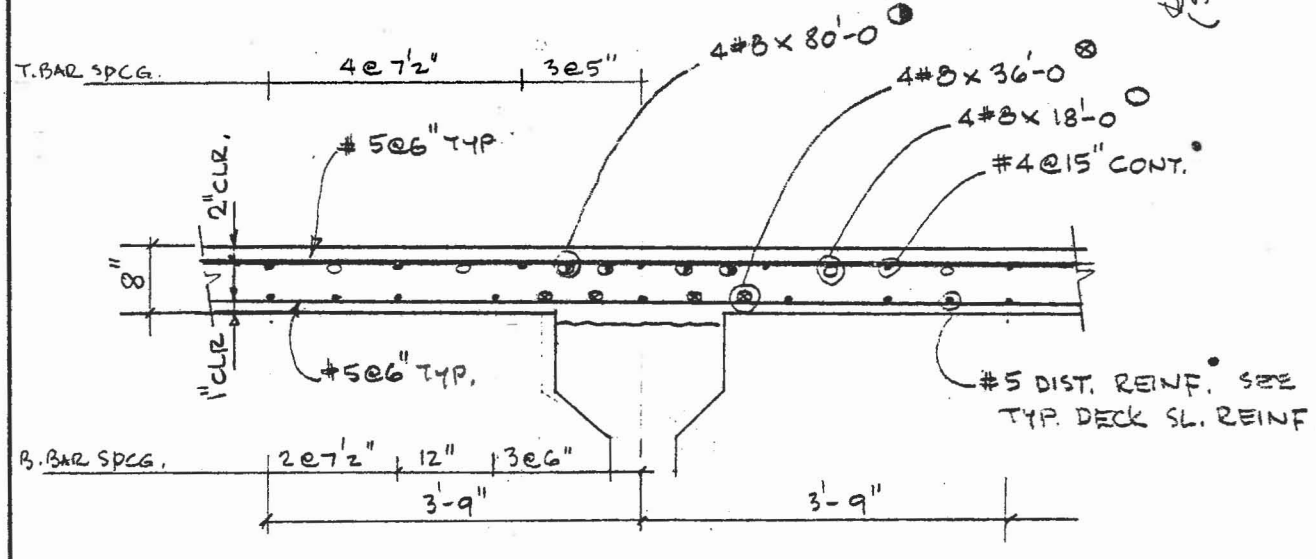

NOTE: LAP #8 BARS 6'-0 MIN (GRADE 60)
LAP #4 & #5 BARS 2'-0 MIN (GRADE 40)

GIRDER LOADING

INTERMED. DIAPH'S (t = 8")

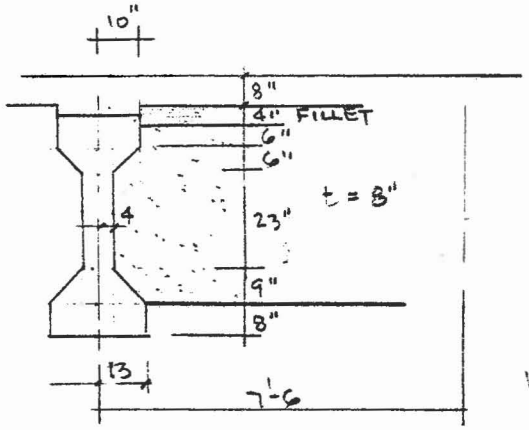

WT: ⊥

$\left(\frac{t}{8}(4+6)+4(4)\right)\frac{150}{144}\left(5+\frac{10}{12}\right)$ = 583

$8(6)\ 150/144\ (6+9/12)$ = 317

$8(23)\ 150/144\ (6+10/12)$ = 1310

$8(9)\ 150/144\ (6+1/12)$ = 456

Σ WT = 2666 #

DL1

½" ϕ WATER LINE 15 #/L.F.

ABUT. DIAPH'S (t = 9") SKEW @ 52° 31' 10"

WT = $2666\ 9/8$ / w/ skew = 4930 DL1

SIDE WALK SLABS

(LESS FUT W/S.)

h_{AVE} = 9.64 IN $h_{W/S}$ = 2"

WT = $(9.64-2.0)\ 12.5\ (5.5)$ = 525 #/FT

EA. SIDE

DL 2

CURB @ OVERHANG:

b h

WT = 10(18) 150/144 = 188

12(10.5) " = 131

319 #/FT

EA. S.

EXT. GIRDER

DL 1: GIRDER 789 150/144 822 #/1

8" SL: (3+3.75) 100 675 "

4" HAUNCH, 26(2) 150/144 54 "

BUILD-UP 42 "

1593 #/1

771

BENSON & GERDIN, INC. CONSULTING ENGINEERS PHONE (602) 264-0136	SHT. NO. 25 OF
	JOB NO. 2327 J
	BY AG DATE 9-6-84
	CHKD. DATE
GIRDER LOADING	REV.

EXT GIRDER (CONT'D)

DL 2: (CURB, RAIL, FUT. W.S., SIDE WALK: OVER 11-GIRD's) ℄ WATERLINE

CURB & W.S: 2(319)/11 + WS. (58, 144) = 202

SIDE WALK (525/11) 2 = 95 #/1

RAIL (30/11) 2 = 6

WATER LINE = 26

Σ DL 2 329 #/1

LL 2: (SW & RAIL)

SW SEC. 1.2.11 60 (5.5) 6.75/7.5 = 297 ⇐

RAIL SEC. 1.1.8 (50) 10/7.5 = 67

Σ LL 2 = 364 #/1

①+②

CURB SHT. 5 = 319

RAIL 30

W.S: (2+3.75)25 = 144

12" WATER LINE: SCHED. 40

PIPE 50

WATER 50

HGR. 20

120#/FT

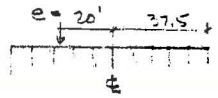

$I = 2(7.5^2 + 15^2 + 22.5^2 + 30^2 + 37.5^2)$

6188

	EXT	INT
$P(e)c/I$ =	15#/1	12#/1
P/N =	11	11
	26#/1	23#/1

TYP. INTER GIRDER

DL 1: GIRDER 822

8" SL 7.5 (100 750 } 792

BUILD-UP 42

Σ DL 1 = 1614 #/1

1614 lb/ft

370 lb/ft

1984 lb/ft

$\frac{wL^2}{8} = \frac{1984 \times (93)^2}{8} =$

DL 2: CURB (58), RAIL (6) & SW. (95) 159

FUT. W.S. 7.5 (25) (188) + WTR L. (23) 211

370 #/1

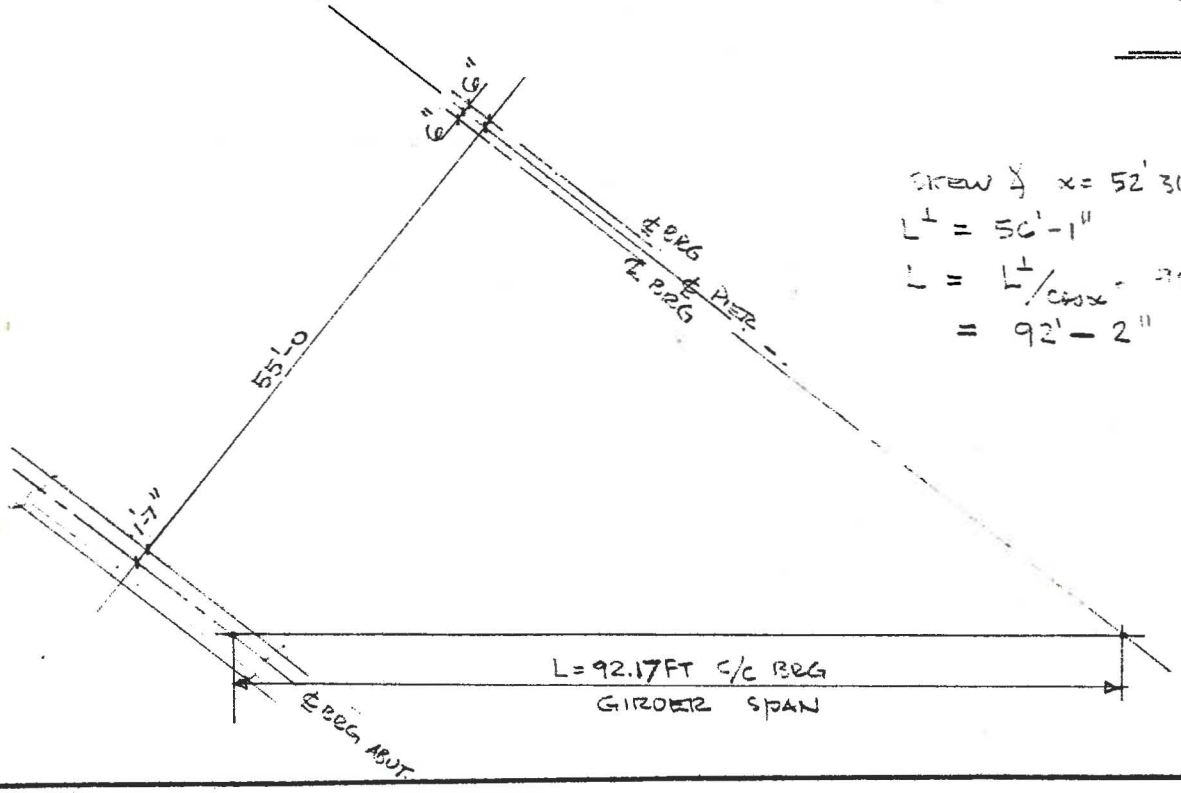

SKEW ∡ x = 52' 31'-10"

$L^{\perp}$ = 56'-1"

$L = L^{\perp}/\cos x$ = 92.168 FT

= 92'-2" C/C BRG

GIRDER

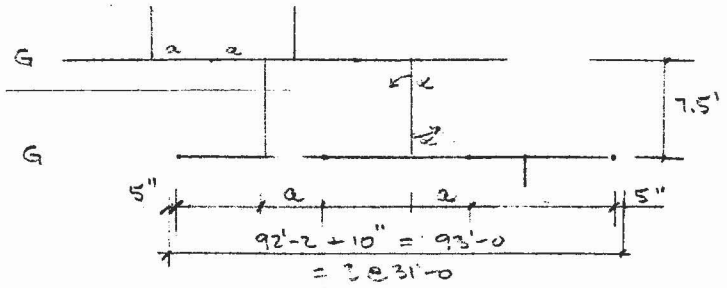

$\frac{a}{7.5 \frac{1}{2}} = \tan x$

$7.5 \tan x = 4.8905$

$a = 7\frac{1}{3}"$ say 5'-0

$C = \frac{1}{3} 93 = 31'\text{-}0$ FT

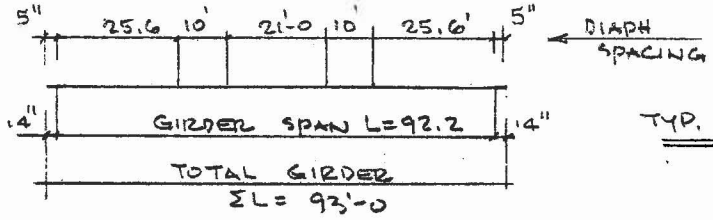

TYP. INT. GIRDER

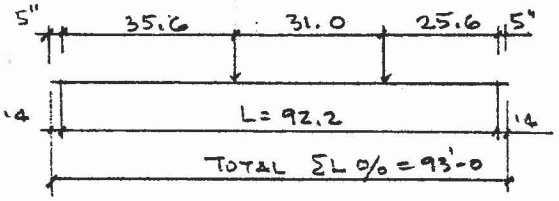

DIAPH. SPACING

TYP. EXT. GIRDER

SIMPLE SPAN DL — MOMENTS & LL 2- MOM'S

EXT. GIRDER $W_G = 822$

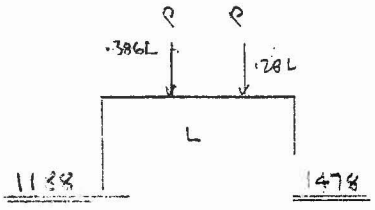

w :	SL. & BUILD-up	771 #/'
w_2 :	DL 2 W/S etc	329 #/'
P :	½ INTERM. DIAPH	1233 #
w_{LL2}		364 #/'

DIAPH.: @ .25 $M = 1.188(\frac{L}{4}) = 27^{K'}$
@ .75 $M = 1.478(\ \ ) = 34^{K'}$
@ .4L: $M = 1.188(36.88) = 43.8$
$-1.333(1.28) = -\frac{1.7}{42.1^{K'}}$
@ .5L $M = 1.188(42.1) = 54.8$
$-1.333(10.5) = -\frac{14.0}{40.8}$
@ .6L: $M = 1.478(36.88) = 54.5$
$-1.333(11.28) = -\frac{15.0}{39.5}$

LOADING	POS. MOMENTS @ (K-FT) .25 L	.40 L	.50 L	
771 SL. & B-up.	614	786	819	$wL^2/2\ (\xi)\xi'$
822 W GIRDER	655	839	873	- " -
DIAP#.	34	42	41	SEE LEFT
329 W_2: DL2	262	336	350	$wL^2/2\ \xi\xi'$
364 W_{LL2}	290	371	387	- " -

BENSON & GERDIN, INC. CONSULTING ENGINEERS PHONE (602) 264-0136	SHT. NO. 27 OF
	JOB NO. 2327 J
	BY AG DATE 9-10-84
	CHKD. DATE
GIRDER	REV.

SIMPLE SPAN DL & LL2 - MOM'S CONT'D

INTER. GIRDER

w_1: DL1 GIRDER 822

DL1 SLAB etc 792

Σw_1 1614 #/'

W2: DL2 W/S. etc 370 -"-

P: ½ INTERM. DIAPH. 1333 #

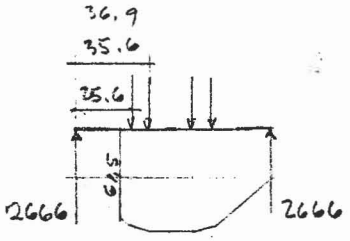

2666 (L/4) = 61.5

2.666 (35.6) = 94.9)

− 1.333 (10) = − 13.3

81.6

LOADING	POS. MOM'S (K-FT) @ .25	.40	.50	
Σw_1 792 - GIRDER	631	808	842	$wL^2/2\,(\xi\xi')$
GIRDER 822	655	839	873	"
DIAPH	61	82	82	SEE LEFT
w_2 370: DL2	295	377	393	$wL^2/2\ \xi\xi'$
				"

1347 1729 1797

CONTINOUS 2- SPANS

DL 2 MOMENTS

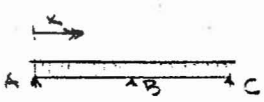

$L = (56'\text{-}7'')\ \%\ \cos\alpha = 93.0\,FT$ (92'-11⅞")

$M_x = wL^2/8\ (3\xi - 4\xi^2)$ 2-LOADED SPAN

$M_{x\rightarrow} = wL^2/16\ (7\xi - 8\xi^2)$ LOADED SPAN

$M_{x\leftarrow} = -wL^2/16\ \xi = M_B\,\xi$ UNLOADED SPAN

	M_x (K-FT) @ .25	.40	.5	.8	.9	1.0
$w2^{DL2} = 370$	200	224	200	−64	−216	−400

GIRDER

POSITIVE LL - MOMENTS

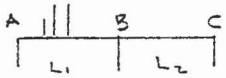

(2) 2-SPANS CONT.

SOLUTION OF 3-MOM. EQ.:

$M_A L_1 + 2M_B(L_1+L_2) + M_C L_2 = -\mathcal{R}_1 L_1 - \mathcal{R}_2 L_2$

$M_A = 0 \quad M_C = 0 \quad \mathcal{R}_2 = 0 \quad L_1 = L_2 = 93.0$ FT

So $M_B = -\mathcal{R}_1 L \div 4L = -\mathcal{R}_1/4 = -\frac{PL(\alpha-\alpha^3)}{4}$

$\mathcal{R}_1 = PL(\alpha-\alpha^3)$

REACTIONS

@ B	@ A
.0625	.1875
.4000	.6000
.5500	.4500
.0125	1.2375

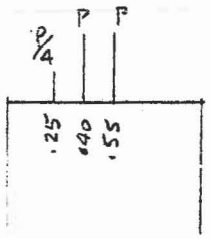

x @ .4L

$-m_B = (.55-.55^3) = .3836$

$(.40-.40^3) = .3360$

$\frac{1}{4}(.25-.25^3) = .0586$

$(-)M_B = .7782$

$(-)M_B^{(.4)} = m_B \frac{PL}{4} = -18.09P$

$+m^{(.4)}$

$1.2375(.4) = .4950$

$-.15/4 = -.0375$

$-.4(m_B)/4 = -.0778$ } .1153

$.3797$

$+M^{(.4)} = mLP = 35.31P$

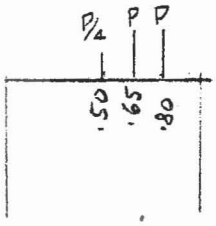

x @ .8L

$-m_B = (.8-.8^3) = .288$

$(.65-.65^3) = .3754$

$\frac{1}{4}(.50-.50^3) = .0938$

$m_B = .7572$

$(-)M_B^{(.8)} = \frac{m_B PL}{4} = 17.6P$

$+m^{(.8)}$

$1.575(.2) = .3150$

$-.8m_B/4 = -.1514$

$m = .1636$

$M^{(.8)} = +15.21P$

MAX NEG. MOM. IN UNLOADED SPAN

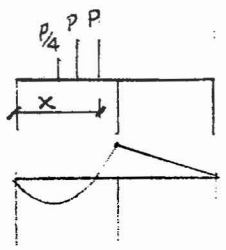

x @ .75L:

$-m_B = (.75-.75^3) = .3281$

$(.60-.60^3) = .3840$

$\frac{1}{4}(.45-.45^3) = .0897$

$.8018$

.70L

x	m
.70	.3570
.55	.3836
.40	.0840
	.8246

.65L

.65	.3754
.50	.3750
.35	.0768
	.8272

.6L

.60	.3840
.45	.3589
.30	.0683
	.8111

$(-)M_B^{max} = \frac{.8272}{4} LP = 19.23P$ = 420

GIRDER

NEG LL-MOMENTS

(LANE)

$\gamma = 7.5/5.5 = 1.364$

$w_{LANE} = \frac{1}{2}\gamma(.64) = .436^{k/l}$

$P_{LANE} = \frac{1}{2}\gamma(18) = 12.28^{k}$

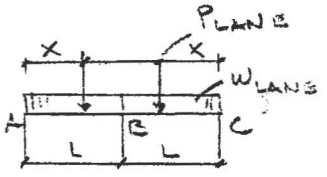

20.27 $wL/2$
5.19 Pb/L
25.46
7.43 M/L
18.03 $V_A(x) = 968$
$wx^2/2$ $(+)M_{@D} = +340$

1367
628
739
-528

MAX $(-)M_B$: $L = 93.0$ FT

$\frac{x}{L} = 1/\sqrt{3}$

$\mathcal{R}_1 = \mathcal{L}_2 = wL^2/4 + PL\left(x - x^3\right)$ (3849)

$= 942.74 + 439.57 = 1382.31$

$(-)M_B = (\mathcal{R}_1 + \mathcal{L}_2)/4 = \frac{1}{2}\mathcal{R}_1 = 691.2^{k'}$

$M_{L+I} = -850$

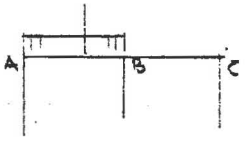

FOR MAX NEG IN UNLOADED SPAN (LANE)

$\mathcal{R}_1 = 1382.3$

$(-)M = \mathcal{R}/4 = 345.6^{k'}$ < TRUCK = $420^{k'}$

TRUCK LL-MOM ORDINATES

$P = \frac{1}{2}\gamma 32 = 21.82^{k}$ $I = \frac{50}{L+125} = .229$

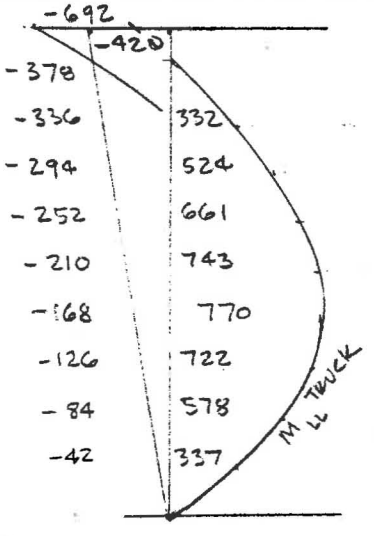

$(+)M_{@.4} = 35.31P = 770^{k'}$

$(+)M_{@.8} = 15.21P = 332^{k'}$ $\Delta M = 438$

ZERO-MOM.: @ x_0

$x_0 = x + \Delta x_0 = 0.4 + .53 = .93L$

$\Delta x_0 = \left[M_{.4}(x)^2 \div (M_{.4} - M_{.8})\right]^{\frac{1}{2}} = .53$

$M_x = M_{.4} - M_{.4}\left(\frac{\Delta x}{x}\right)^2$; $x = 0.4$

@ .10: $\Delta x = .3$ $M_{.1} = 337$

@ .20: $\Delta x = .2$ $M_{.2} = 578$

@ .30: $\Delta x = .1$ $M_{.3} = 722$

@ .50: $\Delta x = .1$ $M_{.5} = 770 - \Delta M\left(\frac{\Delta x}{x}\right)^2 = 743$

@ .60 $x_x = .2$ $M_{.6} = 661$

@ .70 $\Delta x = .3$ $M_{.7} = 524$

GIRDER

S-SPAN POS. LL-MOMENTS (TRUCK)

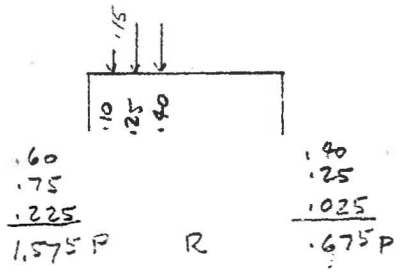

@.25L: L = 92.2 FT P = 21.82

$m_{.25} = .675(.75) - (.15) = .35625$

$(+)M_{.25} = mPL = 717^{K'}$

$\{M_{LL+I} = 881\}$

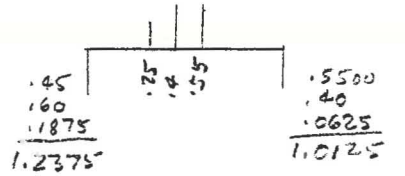

@.4L:

$m_{.4} = 1.0125(.60) - .15 = .4575$

$(+)M_{.4} = mPL = 920^{K'}$

$M_{LL+I} = 1131$

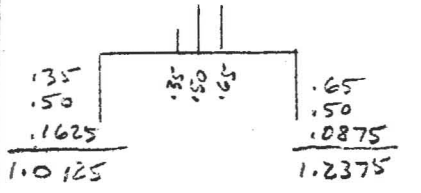

@.5L:

$m_{.4} = 1.2375(.5) - .15 = .46875$

$(+)M_{.5} = mPL = 943^{K'}$

$M_{LL+I} = 1159$

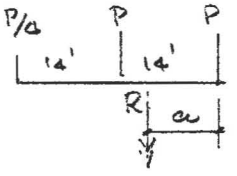

LOCATION OF MAX. MOMENT

RESULTANT @ a = $(14 + 28/4) \div 2.25 = 9.33$

$b = 14 - a = 4.66\ldots$

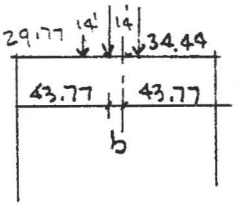

$x = (L - b)/2 = 43.77$

$\Sigma = 2x + b = 92.2$

$R_A = P(34.44 + 48.44 + 62.44/1.068)/92.2 = 23.31$

$R_B = P(29.77/1.182 + 43.77 + 57.77)/92.2 = 25.79$

$\Sigma R = 2.25\,P = 49.10 \Longrightarrow = 49.10$

$x_o = 43.77 = .475$

$M_{xo} = M_{MAX} = R_A(43.77) = 1020.3$

$- P/4\,(14) \quad -56.4$

$(+)M_{MAX} = 963.9$

$M_{L+I} = 1185$

GIRDER

DESIGN MOMENTS

(INTER. GIRDER)

	SIMPLE SPAN MOM's PER ADOT POLICY				CONT. SPAN
Loc.	.25L	.4L	.475L	.5L	1.0 L
GIRDER	655	839	871	873	0.
SL. & DIAPH	692	890	922	924	
DL 2	295	377	392	393	-400
L + I	881	1131	1185	1159	-850

3370

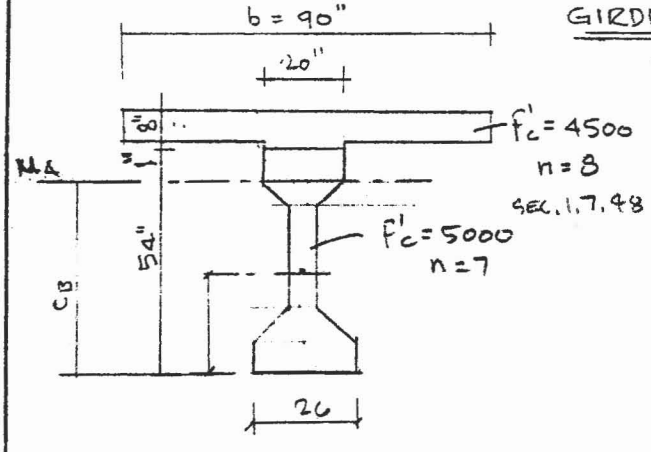

GIRDER PROPERTIES

EFF. $(b_1 = \frac{1}{4}L = 276^{IN})$ SEC. 1.6.23

$b_2 = S = 90^{IN}$ ⇐ GOVERNS

$(b_3 = 12(8) + 8 = 104^{IN})$

$A_G = 789$; $I_G = 260730$; $h_G = 54$

$\bar{Y}_B = 24.73$; $\bar{Y}_T = 29.27$

$S_G^B = 10543$ $S_G^T = 8908$

COMPOSITE SEC. PROPERTIES

(ASSUME 1" BUILD-UP)

SEC.	$A = b(h)\ 7/8$ IN^2	d IN	Ad	Ad^2	I_o
(1) SLAB	90 (8) 7/8 = 630	59	37170	2 193 030	3 360
(2) GIRD.	——— 789	24.73	19512	482 531	260 730
Σ	1419		56 682	-2 264 162	411 399 ΣAd^2
				$C_B^2(\Sigma A)$	675 489

$C_B = \Sigma Ad / \Sigma A = 39.9$ $S_B = I/C_B = 16910$

$C_{T_{SL}} = 63 - C_B = 23.1$ $S_{T_{SL}} = 29242$

$C_{T_G} = 54 - C_B = 14.1$ $S_{T_G} = 47907$

BENSON & GERDIN, INC. CONSULTING ENGINEERS PHONE (602) 264-0136

SHT. NO. 32 OF
JOB NO. 2327 J
BY AG DATE 9-11-84
CHKD. DATE
REV.

GIRDER STRESSES (INTER.)

f = 12M/S

5-SPAN MOMENTS (LIVE LOAD POLICY) CONT. SPAN

	0.0 L		.25L		.4L		.475 L		.50L		@1.0 L	
	Top	Bot	Top	Bot	Top	Bot	Top	Bot	Top	Bot	Top	Bot
GIRDER M^{k_1}	0.0		655		839		871		873		0.0	
S_T = 8903	—	—	-882		-1130		-1173		-1176		—	—
S_B = 10543		—		746		955		991		994		—
SLE DIAPH M	—		692		890		922		924		—	
S_T = 8903	—		-932		-1199		-1242		-1245		—	
S_B = 10543		—		788		1013		1049		1052		—
DL2 M	—		295		377		392		393		-400	
S_T^{CO} = 47907	—		- 74		- 94		- 98		- 98		100	
S_B^{CO} = 16910		—		209		268		278		279		-284
LL 2 M	—											
	—											
		—										
LL+I M	—		881		1131		1135		1159		-850	
S_T^{CO} = 47907	—		- 221		- 283		- 297		- 290		213	
S_B^{CO} = 16910		—		625		803		841		822		- 603
Σf_1			-2109	2368	-2706	3039	-2810	3159	-2809	3147	313	- 887

FINAL P/S-FORCE F = 871 K

ecc.	7.87		15.37		← 19.87 →						7.87	
F/A	-1104		-1104		-1104		-1104		-1104		-1104	
f_2 Fe/S_G	770	-650	1503	-1270	1943	-1642	1943	-1642	1943	-1642	770	-650
Σf_1	—	—	-2109	2368	-2706	3039	-2810	3159	-2809	3147	313	- 887
$\Sigma f = f_1 + f_2$	-334	-1754	-1710	- 6	-1867	293	-1971 ①	413 ③	-1970	401	- 21	-2641 ②

AT RELEASE P/S-FORCE F_i = 1064 K

F/A	-1349		-1349		-1349		-1349		-1349			
Fe/S_G	940	-794	1836	-1551	2373	-2005			2373	-2005		
f_G	—	—	-882	746	-1130	955			-1176	994		
Σf	-409	-2143	-395	-254	-106	-2399 ④			-152	-2360		

FINAL CONC. STRENGTH: $f'_c = 1971/.4 = 4930$ SEC. 1.6.6.B2 ← GOVERNS (① → ③)
($f'_c = 2641/.6 = 4400$ SEC. 1.6.12C4) USE $f'_c = 5000$

ALLOW. FINAL TENSION $f = 6\sqrt{f'_c} = 424$ PSI > 413 ③ OK

RELEASE STRENGTH: $f'_{ci} = 2399/.6 = 4000$ PSI SEC 1.6.6 B1 USE $f'_{ci} = 4000$ PSI (④)

BENSON & GERDIN, INC. CONSULTING ENGINEERS PHONE (602) 264-0136	SHT. NO. 33 OF
	JOB NO. 2327 J
	BY AG DATE 9-11-84
	CHKD. DATE
GIRDER PRESTRESS	REV.

DATA:

$A_s = .153$ (½" φ STRAND)

$f'_s = 270$ ksi

$f_{si} = .7 f'_s = 189$ ksi BEFORE ALL LOSSES

$\Delta f_s = 54$ ksi ESTIMATED LOSS

$f_{se} = f_{si} - \Delta f_s = 135$ ksi EFFECTIVE PRESTRESS

$f'_c = 5000$

REQUIRED P/S - FORCE

$F = \frac{A}{h}[X + Y + Z]$; $A = A_G = 789$ IN^2

$h = h_G = 54$ IN

$X = Y_B \frac{f_{se}}{f_{si}}(F^{+}_{iG}) = -3745$ $F^{T}_{iG} = -3\sqrt{f'_c} = 212$

$Y = \left(1 - \frac{f_{se}}{f_{si}}\right) f^{T}_{G} Y_B$; $f^{T}_{G} = 1176$; $Y_B = \bar{Y} = 24.73$

$Y = 8309$

$2994 - 826 - 424 = 1744$ (1250)

$Z = Y_T f^{B}_{FG} = 51\,047$; $Y_T = 29.27$; $f^{B}_{FG} = \Sigma f^{B} - f^{B}_{G} - 6\sqrt{f'_c} =$

$F_{R'D} = \frac{789}{54}(\underbrace{-3745 + 8309 + 51\,047}_{55\,611}) = 812.5$ (59356)

$N_{R'D} = F / f_{se} A_s = 39.3$ STRANDS (42)

$F = 42(f_{se}) A_s = 867^{k}$

$e_{MIN} = S^{T}_{G}/A_G + M_G/F = \frac{8908}{789} + \frac{12 M_G f_{se}}{F f_{si}} = 19.9''$ (11.3, 8.4, 19.0)

$P_i = 1064^{k}$
$P = 871^{k}$
$f'_{ci} = 4000$ Psi
$f'_c = 5000$ Psi

ACTUAL ECCENTRICITY:

@ CTR: $e = 24.73 - (33(4) + 9(8))/42 = \underline{19.87 \text{ IN}}$

@ END: $e = 24.73 - (24(4) + 6(8) + 12(47))/42 = \underline{7.87 \text{ IN}}$

@ .25L: $e = 19.87 - 12.0 \frac{.15}{.40} = \underline{15.37 \text{ IN}}$ (45)

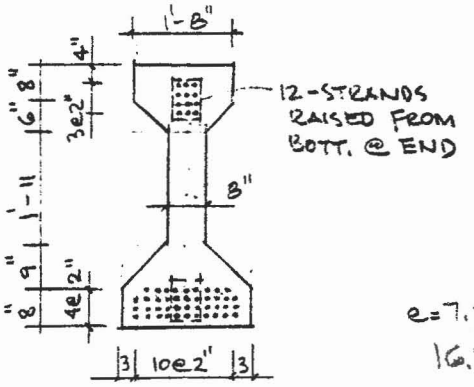

42 - ½" φ STRANDS

TYPE IV GIRDER

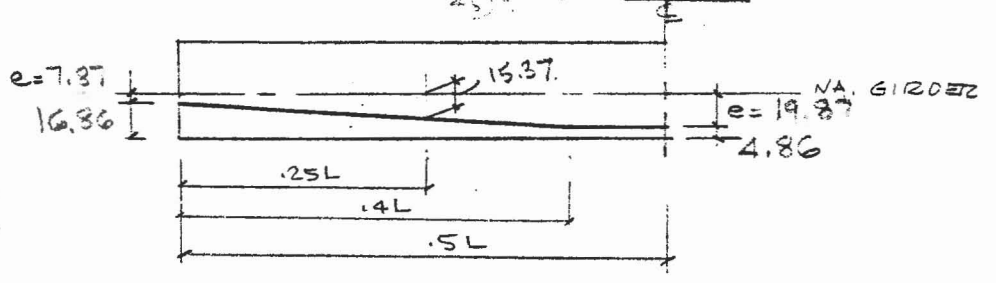

GIRDER P/S - LOSSES

SEC. 1.6.7 B 1977
9.16 1983

TOTAL LOSS $\Delta f_s = SH + ES + CR_c + CR_s$ (SH: SHRINKAGE; ES: ELASTIC SHORT'G; CR_c: CREEP CONC.; CR_s: RELAX. OF P/S STEEL)

(a) SHRINKAGE RH = 40 FIG 1.6.7

$SH = 17000 - 150(40) = 11\,000$ PSI

(b) ELASTIC SHORTENING

$E_s = 28(10)^6$ PSI

$F'_{ci} = 4000$ PSI

8.8.C 1983
1.5.2.3 D 1977

$E_{ci} = 3600(10)^3$ PSI

N = 42 - ½" ϕ STRANDS

EQ. 1 $F_i = .63(270)\,42(.153) = 1093^K$ $A = 789$

$e = 19.87$ $I = 260730$ $M_G = 873$

EQ. 1a $f_{cir} = \frac{F}{A} + \frac{Fe^2}{I} - \frac{M_G e}{I}$

$ES = f_{cir}\, E_s / E_{ci}$

INITIAL LOSSES @ RELEASE

RELAX. LOSS 3.5% OF 189^{ksi} (FIG C2)

EQ. 2 NEW $F_i = \left((1.0 - .035)189 - ES\right) N(A_s) = 1172 - ES(A_s)N$

ITERATION

CYCLES	EQ. 1 & 1a (INITIAL)	1ST	EQ. 2 & 1a 2ND	3RD
F_i	1093	1060	1065	1064
F_i/A	1385	1343	1350	1349
$F_i e^2/I$	1655	1605	1613	1611
$M_G e/I$	-798	-798	-798	-798
f_{cir}	2242	2150	2165	2162
ES	17.4	16.7	16.8	16.8

ES = 16800

$F_i = 1064^K$

GIRDER P/S - LOSSES

CONT'D

(C) CREEP CONCRETE

$C_1 = e_c = 19.87$

$M_1 = 924^{K'}$ (SL & DIA PH) $I_1 = I_G = 260\,720$

$M_2 = 393^{K'}$ (DL 2) $I_2 = I_{CO} = 675\,489$

$C_2 = \overset{19.87}{e_c} + C^B_{CO} - C^B_G = 20.03 + 39.9 - 24.73 = 35.04$

$f_{cds} = \sum \frac{Mc}{I} = \frac{12M_1C_1}{I_1} + \frac{12M_2C_2}{I_2} = .345 + .245 = .590$

$f_{cir} = 2.162$ SEE (6) ES

$CR_c = 12 f_{cir} - 7 f_{cds} = 16.95 \longrightarrow$ 18 300

(d) RELAXATION OF P/S STEEL

$CR_s = 20000 - .4ES - .2(SH + CR_c)$

$= 20000 - 6700 - 5900 =$ 7400

TOTAL P/S LOSS

$\Delta f_s = 11.0 + 16.8 + 18.3 + 7.4 =$ 53.5 <54

$f_{se} = 189 - \Delta f_s = 135.5^{K}$

FINAL $F = f_{se}(42).153 = 871^{K}$

GIRDER FLEX STRENGTH

SEC. 1.6.9 1977 9.17 1983

$A_s^* = 40(.153) = 6.12\ in^2$

$f'_s = 270$ ksi

$f'_c = 5$ ksi

RECTANGULAR SECTION @ ℄ SPAN

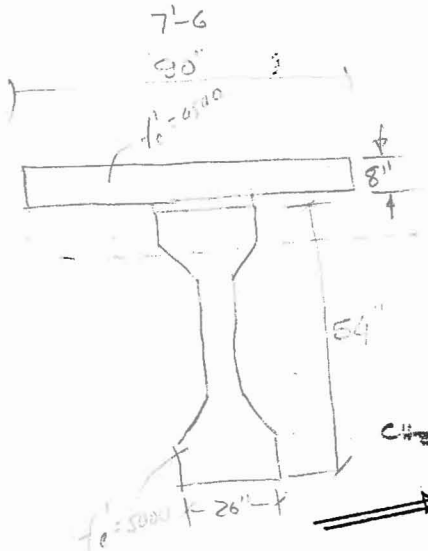

$b = 90\left(\frac{7}{8}\right) = 78.75$? 57.3

$d = 54 + 1.0^{SU} + 8^{SL} - 4.7 = 58.3$

$p^* = A_s^*/bd = .00133$

$f^*_{su} = f'_s\left(1 - 0.5\frac{p^* f'_s}{f'_c}\right) = 260$ ksi

CHECK FLGE: $1.4 d p^* f^*_{su}/f'_c = 5.65 < 8"\ (= T_{FLGE})$

∴ RECTANG. SEC. GOVERNS

$M_u = A_s^* f^*_{su}\, d\left(1 - 0.6\frac{p^* f^*_{su}}{f'_c}\right)$ (.85)

$M_u = 8891.7^{k-1}$ (= ULT. FLEX. STRENGTH) ?

ULT. DESIGN MOMENT

girder Slab & Diaphr. curb rail Sidewalk Dead load

$M = 1.3\left(\overset{GIRD}{873} + \overset{SL}{924} + \overset{DL2}{393}\right) = 2847$

$1.3(1.67)(1185) = 2573$ LL. 1378

SEC. 1.2.22 $\frac{5}{3} = 2.17$

$5420 < M_u$ o.k.

MAX STEEL % (1.6.10)

RECTANG. SEC.:

$p^* f^*_{su}/f'_c = .069 < 0.30$ MAX o.k.

2847 DK
2991.6
5838.6
< 8891.7

MIN. STEEL

$f_{tr} = 7.5\sqrt{5000} = 530$ Psi $S^{co}_B = 10543$

$f_2 = P/A + Pe/S = 1104 + 1642 = 2746$

$f = f_{tr} + f_2 = 3276$ Psi

$M_{in} = 1.2 f S/12000 = 3454^{k-1} < M_u$ o.k.

GIRDER POS. MOMENTS @ PIER

REF: PCA EB 014.01E

(a) CREEP DUE TO PRESTRESS (COMPOS. PROPERTIES

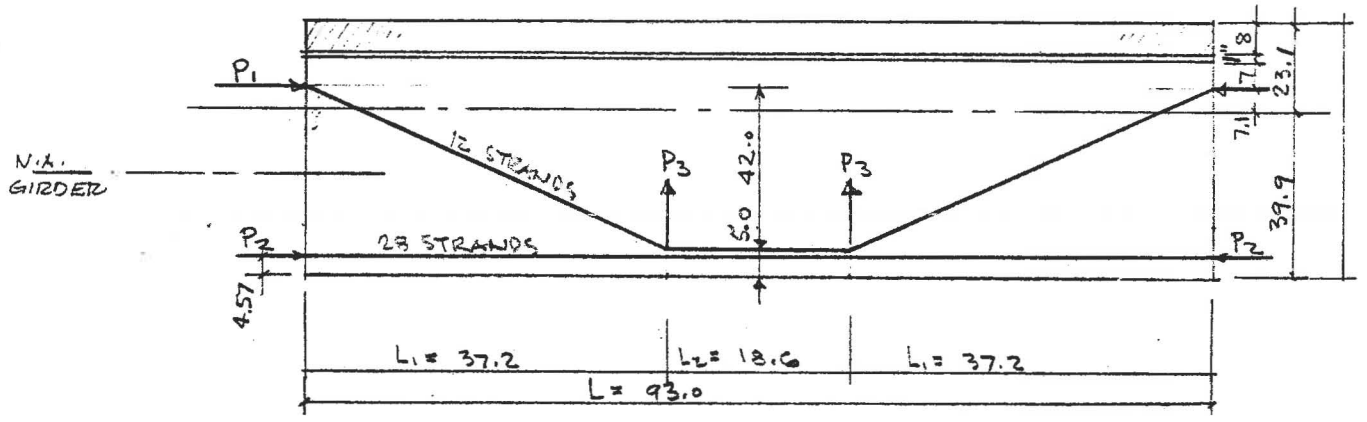

F = 838^K FINAL P/S AFTER ALL LOSSES

$P_1 = F(12)/40 = 251.4$; $P_2 = F(28)/40 = 586.6$

$P_3(12)37.2 = P_1(42)$ $\quad P_3 = 23.7$

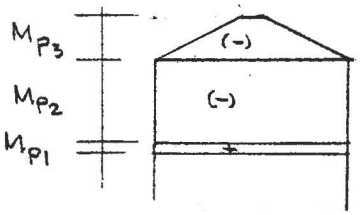

$M_{P_1} = P_1(7.1)/12 = 148.7$
$M_{P_2} = -P_2(39.9-4.57)/12 = -1727.0$ } -1578.3
$M_{P_3} = -P_3(L_1) = -881.6$

SLOPE :

$EI\phi = \frac{1}{2}L[M_{P_1}+M_{P_2}] + \frac{1}{2}(L_1+L_2)M_{P_3}$

$= -\frac{1}{2}93(1578.3) - \frac{1}{2}(55.8)881.6$

$EI\phi_A = EI\phi_B = -73391 - 24597 = -97988$ FT^2-KIPS

FEM (END SPAN) @ B:

$M_B = -\frac{3EI}{L}(\text{Slope}_{\phi_B}) = \frac{3EI\,97988}{L(EI)} = 3161^{K'}$

	.5	.5
FEM	-3161	3161
	0	0
Mc Supp.	-3161	3161

= PRESTRESS CREEP RESTRAINT MOMENT
(NOT ADJUSTED BY CREEP EFFECT FACTOR)

GIRDER POS. MOM's @ PIER

(b) DEAD LOAD CREEP RESTRAINT MOMENTS
(NOT ADJUSTED BY CREEP)

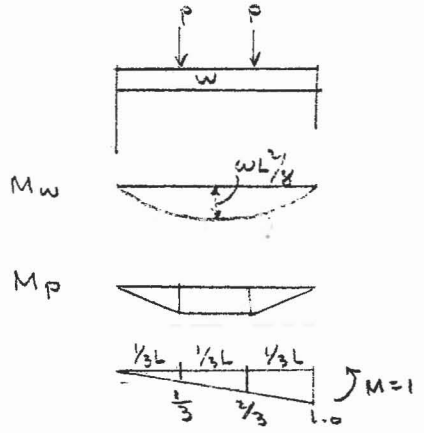

$w = 1.614^{k}/_{1}$ GIRD + SL. etc

$P = 2.7^{k}$ @ 1/3 - POINTS (DIAP)

$L = 92.2$

SLOPE w:

$EI\varphi^{w} = \frac{1}{3}(L)\,wL^2/8 = wL^3/24 = 52709$

SLOPE P:

$M_p = 2.7(92.2)/3 = 83$

$EI\varphi^{P} = \frac{1}{3}\frac{L}{3}\frac{1}{3}83 = 283$

$\frac{1}{2}\frac{L}{3}\left\{2\frac{1}{3}(83) + \frac{1}{3}83 + \frac{2}{3}(83) + 2\frac{2}{3}83\right) = 1275$

$\frac{1}{2}\frac{L}{3}83\left(2\frac{2}{3}+1\right) = 992$

$EI\varphi^{P} = 2550$

$EI(\varphi^{w}+\varphi^{P}) = 55259$

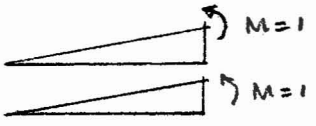

UNIT SLOPE @ B:

$EI\varphi = \frac{1}{3}(L) = 30.73$

$M_B(EI\varphi) = EI(\varphi^{w}+\varphi^{P})$

FEM $M_B = (\varphi^{w}+\varphi^{P})/\varphi = 1798$

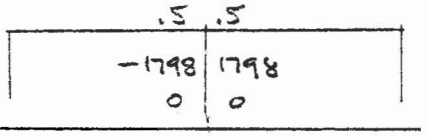

$M_{@support} = -1798 \mid 1798$ = DEAD LOAD CREEP REST. MOMENT (NOT ADJUSTED)

(c) SHRINKAGE RESTRAINT MOMENT

SEE DEFL. CALCS SHT.

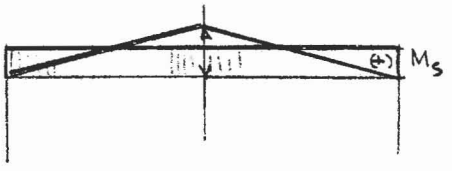

$M_B = -1707 + 1138 = -569$

$M_s = 1138$

GIRDER POS. MOMENTS @ PIER

(d) Pos. (LL+I)-MOMENTS

(+) $M_{L+I} = 0$ (FOR 2-SPAN CONDITION)

(e) CREEP FACTORS

AT RELEASE $f'_{ci} = 4100$ PSI

$E_{ci} = 3.69(10)^6$

FIG 5: SPECIFIC CREEP @ 10 YRS: $= .4(10)^{-6}$ IN/IN/PSI

FOR RELEASE @ 2 DAYS ADJUST SPECIFIC VALUE BY FIG. 6

$= 1.67(.40)\,10^{-6} = .668(10)^{-6}$ IN/IN/PSI

VOLUME/SURFACE RATIO CORRECTION FIG. 7 & TBLE 1

RATIO 4.7 CORRECTION 1.16

$1.16(1.67)(.40) = .775(10)^{-6}$ IN/IN/PSI

AT 28 DAYS 40% OF CREEP HAS OCCURED FIG. 8

LEAVING 60% TO OCCUR:

ε_c $.6(.775)(10)^{-6} = .465(10)^{-6}$ IN/IN/PSI

$\phi = \varepsilon_c/\varepsilon_e$ FOR CONNECTION MADE @ 28 DAYS:

$f'_c = 5000$ $E_{28} = 4.07(10)^6$

$\phi = \varepsilon_c E = .465(10)^{-6}(4.07)(10)^6 = 1.89$

FIG 9: $(1-e^{-\phi}) = .85$ (CREEP); $(1-e^{-\phi})/\phi = .46$ (SHRINKAGE)

SUMMATION OF POS. RESTRAINT MOMENTS

AT B: CREEP P/S $3161(.85) = 2687$

CREEP DL $-1798(.85) = -1528$ } -2313

SHRINKAGE $-1707(.46) = -785$ }

(+) M_B $= 374^{K'}$

ASSUME $f_s = 36$ ksi SEC. 9.7.2.2 $a_s = 2.6$ $d = 63-4 = 59'$

$A_{s\,req'd} = M/ad = 2.44\ IN^2$

$N = A_s/.153 = 15.93$ SAY 16 - STRANDS

OR 5 #7 BARS

GIRDER POS. MOM. @ PIER

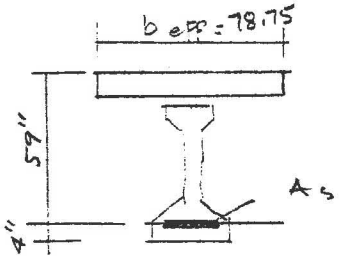

CHECK STRESSES FOR 16 - ½" ϕ STRAND EXTENS.

$f'_c = 5000$ $n = 7$

A_s = 16 - ½ϕ STD. = 2.448 IN^2 $d = 59"$

$np = 7(2.448)/78.75(59) = .0037$

$k = .0823$, $j = .973$ $kd = x = 4.854$ IN (IN FLGE)

$I = 78.75(x)^3/3 + nA_s(d-x)^2$

$= 1524 + 32548 = 53241$

$f_c = 12(374)(x)/I = 409$ PSI

$f_s = 12(374)54.146\ (7)/I = 32.0$ KSI < 36

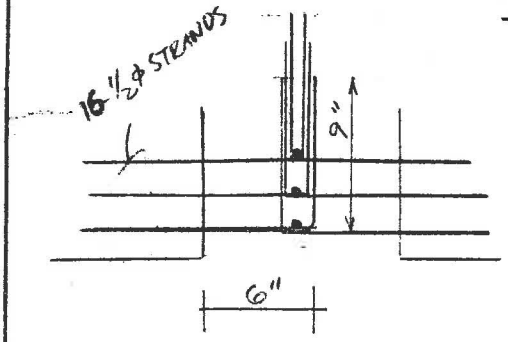

EMBEDMENT LENGTH

ASSUME BOND STRESS $\mu_{ALL} = 500$ PSI

$L_{RD} = \frac{d f_s}{4\mu} = \frac{½\phi(36)}{4(.500)} = 9$ IN ; 12" MIN.

$L_{F'D} = 6 + 9 = 15" > L_{R'D}$

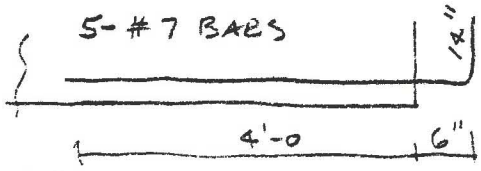

GIRDER SHEAR

TRUCK SHEARS

P = 21.82 K SEE LL-MOM'S SHT

I = .229

2-SPANS CONT.

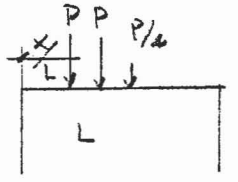

CASE 1

$h/2 = 2.25$ Ft

	.024	0.1	0.2	0.3	0.4	0.5	0.6	0.7
η_1	.024	.099	.192	.273	.336	.375	.384	.357
η_2	.169	.235	.307	.359	.384	.375	.328	.235
$\eta_{3/4}$	.073	.084	.094	.096	.089	.072	.042	-.000
$R = \Sigma\eta(P)L$	540	848	1204	1477	1641	1668	1530	1201
$(-)M_B = R/4$	135	212	301	369	410	417	383	300

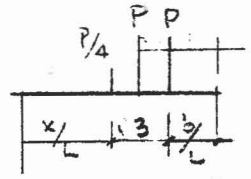

CASE 2

594

	-.150	0.0	.10	.20	.30	.40	.5	.6	.7	.657
η_1	—		.024	.048	.068	.084	.094	.096	.089	.093
η_2	—	.147	.234	.307	.359	.384	.375	.328	.235	.281
η_3	.147	.274	.336	.375	.384	.356	.287	.169	—	.079
R	299	854	1206	1480	1646	1672	1534	1204	654	919
$R/4 = (-)M_B$	75	213	302	370	412	418	384	301	164	230

REACTIONS @ B CASE 2

x/L	-.15	0.0	.10	.20	.30	.40	.5	.6	.7	.657
P/4 %	—	—	.025	.05	.075	.10	.125	.15	.175	.164
P %	—	.15	.25	.35	.45	.55	.65	.75	.85	.807
P %	3.3	.30	.40	.50	.60	.70	.80	.90	1.00	.957
s.sp. R_B	3.3	9.8	14.7	19.6	24.5	29.5	34.4	39.3	44.2	42.1
M/L	.8	2.3	3.2	4.0	4.4	4.5	4.1	3.2	1.8	2.5
R_B	4.1	12.1	17.9	23.6	28.9	34.0	38.5	42.5	46.0	44.6
b/L	.85	.70	.60	.50	.40	.30	.20	.10	0.0	.043
$R_Bb = R_B(b/L)L$	324	788	999	1097	1075	949	716	395	0	178
M_B	-75	-213	-302	-370	-412	-418	-384	-301	-164	-230
(+) M @ b/L	249	575	697	727	663	531	332	94	-164	-52

BENSON & GERDIN, INC. CONSULTING ENGINEERS PHONE (602) 264-0136

SHT. NO. 42 OF
JOB NO. 2327 J
BY AG DATE 9-13-84
CHKD. DATE
REV.

GIRDER SHEAR

TRUCK SHEARS CONT'D

REACTIONS @ A CASE 1

	.024	.10	.20	.30	.40	.50	.60	.70	.8
P %	.976	.90	.80	.70	.60	.50	.40	.30	
P %	.826	.75	.65	.55	.45	.35	.25	.15	
P/4 %	.169	.15	.125	.10	.075	.05	.025	—	
Σ %	1.971	1.80	1.575	1.35	1.125	.90	.675	.45	
S.SP. A	43.0	39.3	34.4	29.5	24.5	19.6	14.7	9.8	
(−) M/L	−1.5	−2.3	−3.2	−4.0	−4.4	−4.5	−4.1	−3.2	
R_A	41.5	37.0	31.2	25.5	20.1	15.1	10.6	6.6	
(+) $M^{@\frac{x}{L}} = R_A(\frac{x}{L})L$	93	344	580	711	748	702	591	430	

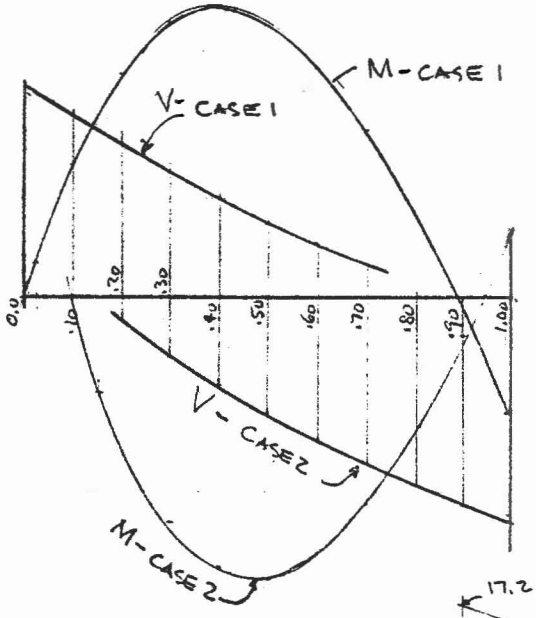

TRUCK SHEAR DIAG.

SCALE:
1" = 40^K
1" = 500^1-K

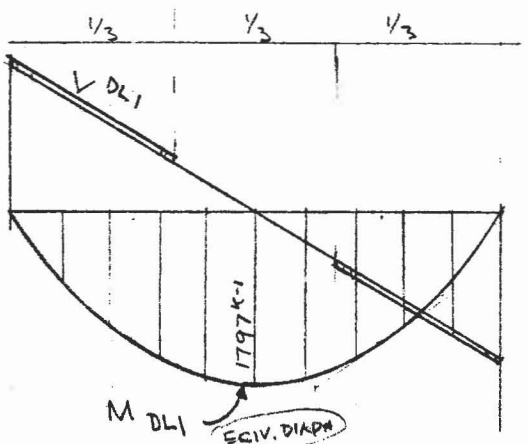

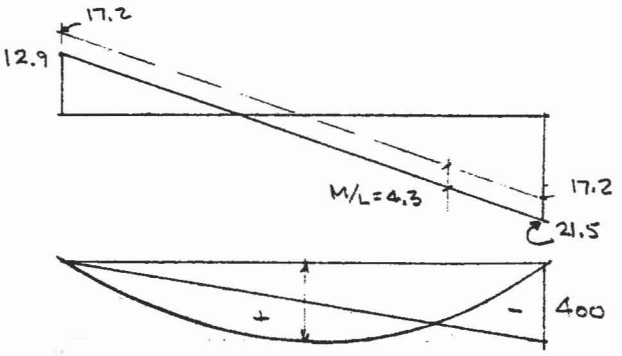

SCALE: 1" = 2000^K-1 ; 1" = 100^KIPS

$\Sigma W_1 = 1614 + 77 = 1691$ #/1
w_1

$w_2 = 370$ #/1 DL 2

GIRDER SHEAR

SEC. 1.6.13 1977 9.20 1983

SHEAR STRENGTH BY CONCRETE V_c : (1.6.13 B) 9.20 1983

V_c SHALL BE THE LESSER OF V_{ci} OR V_{cw}

$$V_{ci}^{MIN} = 1.7\sqrt{f'_c}\, b' d \qquad b' = 8'' \quad d = .8(54) = 43.2 \quad f'_c = 5000$$

$$= 1.7\sqrt{5000}\,(8)\,43.2/1000 = 41.5^k$$

70.7

$$V_{ci} = 0.6\sqrt{f'_c}\, b' d + V_d + V_i M_{CR}/M_{MAX}$$

$$= 14.66^k + V_d + V_i M_{CR}/M_{MAX}$$

V_d = SHEAR FORCE DUE TO UNFACTORED DEAD LOAD

$V_d = V_{DL1} + V_{DL2}$ (kips)

V_u = FACTORED SHEAR FORCE

$V_u = 1.3 V_d + 1.3(1.67)\, I\, V_{LL}$ (kips)

$$\boxed{V_i = V_u - V_d} \quad \text{(kips)}$$

$M_d = M_{d_1} + M_{d_2}$; $M_u = 1.3 M_d + 1.3(1.67) I (M_{LL})$

M_u = MAX. FACTORED MOM. DUE TO EXT. LOAD

$$\boxed{M_{MAX} = M_u - M_d} \quad \text{kip-ft}$$

$$M_{CR} = \frac{I}{Y_T}\left(6\sqrt{f'_c} + f_{pe} - f_d\right)$$

$I = I_{co}$ $\quad Y_T = Y_{co}$ TO BOTT. FIBER (TENS. FACE)

$f'_c = 5000$

f_{pe} = COMP. STRESS (AFTER ALL LOSSES)

$f_{pe} = P/A_G + Pe\,\bar{Y}/I_{GIRDER}$ ksi

f_d = STRESS DUE TO UNFACT'D DEAD LOAD

$$V_{cw} = (3.5\sqrt{f'_c} + 0.3 f_{pc})\, b' d + V_p$$

$f_{pc} = P/A_G + Pe\, c/I_G + M_{DL1}\, c/I_G$; $c = Y_{BOT}^{COMP.} - Y_{BOT}^{GIRD}$ $39.9 - 24.7 = 15.2^{IN}$

$V_p = P(\overset{\Delta e}{12.6}) \div (12(.4L)) = 23^k$

P = HORIZ. COMP. OF P/S FORCE $\cong 838^k$

BENSON & GERDIN, INC. CONSULTING ENGINEERS PHONE (802) 264-0136

SHT. NO. 14 OF
JOB NO. 2327 J
BY AG DATE 9-18-84
CHKD. DATE
REV.

GIRDER SHEAR SEC. 1.6.13 REV. 1980

SHEAR @	A	.024	.10	.20	.30	.40	.50	.60	.70	.80	.90	.957
GIR. & SL. 1614	74.4	70.8	59.5	44.6	29.8	14.9	0.0	14.9	29.8	44.6	59.5	68.0
DIAPH (2.7 K/PC.)	2.7	2.7	2.7	2.7	2.7	.0	.0	.0	2.7	2.7	2.7	2.7
V_{d_1}	77.1	73.5	62.2	47.3	32.5	14.9	0.0	-14.9	-32.5	-47.3	-62.2	-70.7
DL2: $w = .370$	$L = 93.0'$ $M_B = -400$ $V_{d_2} = wL/2 + M_B/L$											
V_{d_2}	12.9	10.7	9.5	6.0	2.6	-.9	-4.3	-7.7	-11.2	-14.6	-18.1	-20.0
$V_d = V_{d_1} + V_{d_2}$	90.0	84.2	71.7	53.3	35.1	14.0	-4.3	-22.6	-43.7	-61.9	-80.3	-90.7
V_{LL} (TRUCK)		41.5	37.0	31.2	25.5	20.1	23.6	28.9	34.0	38.5	42.9	44.6
$V_U = 1.3\,V_d + 1.3(1.67)\,1.229\,(V_{LL})$												
V_U		220	192	153	114	73	69	106	148	183	219	237
$V_U/.85$		259	226	180	134	86	82	125	174	215	258	279
$V_i = V_U - V_d$		136	120	100	79	59	65	83	104	121	139	146
CORRESP. MOMENTS												
GIRD & SL.		161	617	1098	1441	1646	1715	1646	1441	1098	617	282
DIAPH		6	25	50	75	83	83	83	75	50	25	11
M_{d_1}		167	642	1148	1516	1729	1798	1729	1516	1148	642	293
DL2 $w = .370$	$M_x = wL^2/8\,(3\xi - 4\xi^2)$ $L = 93.0'$											
M_{d_2}		28	104	176	216	224	200	144	56	-64	-216	-317
$M_d = M_{d_1} + M_{d_2}$		195	746	1324	1732	1953	1998	1873	1572	1084	426	-24
M_{LL} (TRUCK)		93	344	580	711	750	727	663	531	332	94	-52
$M_U = 1.3\,M_d + 1.3(1.67)\,1.229\,M_{LL}$												
$M_U =$		502	1888	3269	4149	4540	4537	4204	3460	2295	805	-170
$M_{MAX} = M_U - M_d$		307	1142	1945	2417	2587	2539	2331	1888	1211	379	-146
V_i/M_{MAX}		.443	.105	.051	.033	.023	.026	.036	.055	.100	.367	1.00

BENSON & GERDIN, INC. CONSULTING ENGINEERS PHONE (602) 264-0136

SHT. NO. 45 OF
JOB NO. 2327 J
BY AG DATE 9-18-84
CHKD. DATE
REV.

GIRDER SHEARS SEC. 1.6.13 REV. 1980

	.024	.10	.20	.30	.40	.50	.60	.70	.80	.90	.957
SL. & GIRDER $f_{d_1} = M_{d_1}(12)\,Y_B/I_G$ (GIRDER PROPERTIES)											
f_{d_1}	.190	.731	1.307	1.725	1.968	2.046	1.968	1.725	1.307	.731	.333
DL2: $f_{d_2} = M_{d_2}(12)\,Y^B_{Co}/I_{Co}$ (COMPOSITE PROPERTIES)											
f_{d_2}	.020	.074	.125	.153	.159	.142	.102	.040	-.045	-.153	-.225
$f_d = f_{d_1} + f_{d_2}$	.210	.805	1.432	1.878	2.127	2.188	2.070	1.765	1.262	.578	.108
P/S e	8.19	10.58	13.73	16.88	20.03	20.03	20.03	16.88	13.73	10.58	8.78
P/A_G P=838K A=789	1.062	1.062	1.062	1.062	1.062	1.062	1.062	1.062	1.062	1.062	1.062
Pe/S_{BG} 10543	.651	.841	1.091	1.342	1.592	1.592	1.592	1.342	1.091	.841	.698
$f_{pe} = P/A + Pe/S$	1.713	1.903	2.153	2.404	2.654	2.654	2.654	2.404	2.153	1.903	1.760
$6\sqrt{f'_c}$ 5000	.424										.424
$(6\sqrt{f'_c} + f_{pe} - f_d) =$	1.927	1.522	1.145	.950	.951	.890	1.008	1.063	1.315	1.749	2.076
	I_{Co} = 675489	Y_{BCo} = 39.9	S_{BCo} = 16910								
$M_{CR} = \frac{I_{Co}}{Y_{BCo}}(\cdots)/12$	2715	2145	1613	1339	1340	1254	1420	1498	1853	2465	2925
$V_i\, M_{CR}/M_{MAX}$	1203	225	83	44	31	32	51	83	185	904	2925
V_d	84	72	53	35	14	4	23	44	62	80	91
$.6\sqrt{f'_c}\, b_w d$	15										15
V_{ci}	1302	297	136	79	45	~~36~~ 42 MIN	74	127	247	984	3031
P/A	1.062	1.062	1.062	1.062	1.062	1.062	1.062	1.062	1.062	1.062	1.062
$Pe\,c/I_G$	-.400	-.517	-.671	-.825	-.979	-.979	-.979	-.825	-.671	-.517	-.429
$M_{d_1}\,c/I_G$	.117	.449	.803	1.061	1.210	1.258	1.210	1.061	.803	.449	.205
f_{pc}	.779	.994	1.194	1.298	1.293	1.341	1.293	1.298	1.194	.994	.838
$(3.5\sqrt{f'_c})\, b'd$	85.5										85.5
$.3 f_{pc}\, b'd$	81	103	124	134	134	139	134	134	124	103	87
V_p	23	23	23	23	0	0	0	23	23	23	23
V_{cw}	189	211	232	242	219	224	219	242	232	211	195

GIRDER SHEAR

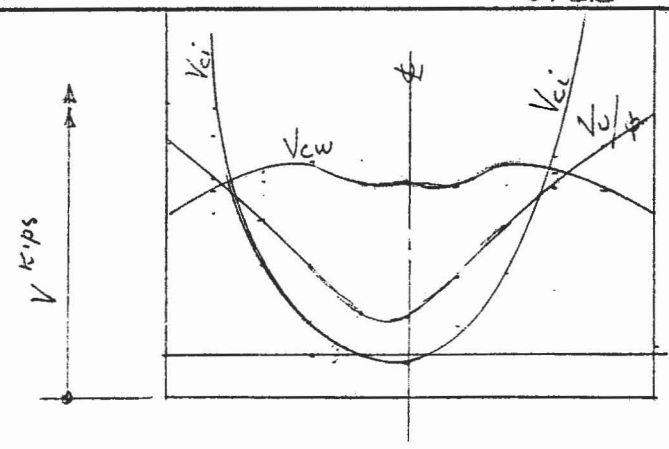

φ = .85

SCALE 1" = 200 K

9.20 1983

SIZE A_v PER SEC. 1.6.13 (1979)

$V_c = .06 f'_c b'jd = .06(5) 8\frac{7}{8}\ 43.2 = 91^K$

$V_c = .18 b'jd = .18(8)\frac{7}{8}\ 43.2 = 54^K$ ⇐ GOVERNS

MAX SPACING FOR 2-#5 STIRRUPS

$A_v = 100 b's/f_{sy}$ $\quad A_v = 2(.31) = .62 in^2$ $\quad f_{sy} = 40\,000$ $\quad b' = 8"$

$s_{max} = A_v f_y / 100 b' = 31 in$

CALCULATED STIRRUP SPACING:

$A_v = (V_u - V_c)\, s \,/\, 2 f_{sy} jd$ $\quad V_u - V_c = \Delta V = V_s$

$\boxed{s = 2 A_v f_{sy} jd / V_s}$ FOR #5's $A_v = .31$ $\quad s = 937.4/V_s$

ALLOW. $V_s = V_u - V_c$

SPACING →	3	4	6	8	12	16	20	24
#5 U $A_v = .31$	312	234	156	117	78	58	47	39

GIRDER SHEAR

SHEAR REINF'T PER 1.6.13 REV. 9.20.1983 REV. 1979 CONT'D

AT FACE: $V_u = 237^k$ $V_c = 54$ $V_s = 183^k$ $s = 5.1$ IN

@ .10L $V_u = 219$ $V_s = 165$ $s = 5.7$"

.20L $V_u = 183$ $V_s = 129$ $s = 7.3$ IN

USE → .30L $V_u = 148$ $V_s = 94$ $s = 10$ IN

.40L $V_u = 106$ $V_s = 52$ $s = 18$ IN

CHECK PER 1.6.13 REV. 1980

$\phi = .85$

@ FACE $V_u/\phi = 279^k$, $V_c = V_{cw} = 195^k$, $V_s = 84^k$

$V_s = A_v f_{sy} d / s$

$s = \frac{.62(40)43.2}{V_s} = \frac{1071}{V_s}$

$s = 12.8" > 5.1$

@ .10L $V_u/\phi = 258$ $V_c = V_{cw} = 211$ $V_s = 47$

$s = 22.8 > 5.7$

@ .40L $V_s = 60^k$ SCALED

$s = 17.8" < 18$ > 16

$4\sqrt{f'_c}\, b' d = 4\sqrt{5000}\ 8\,(43.2)/1000 = 97.8 > V_s$ @ FACE $= 84^k$

ANCHORAGE ZONE SEC. 1.6.15

$P = 838$ $V = .04P = 33.5^k$ $f_s = 20$ ksi

ΣA_v REQ'D $= V/f_s = 1.7\ IN^2$ $A_{sv} = .62\ IN^2$ (2 + 5)

$d = .8h = 43.2$ IN $d/4 = 11$ IN

$n = \Sigma A_v / A_{sv} = 2.74 \sim 3$ SETS MIN.

USE 3 - SPACINGS @ 4" ($= 12" > 11$)

BENSON & GERDIN, INC. CONSULTING ENGINEERS PHONE (602) 264-0138

SHT. NO. 48 OF
JOB NO. 2327 J
BY AG DATE 9-12-84
CHKD. DATE
REV.

GIRDER DEFL'S

REF.: ACI 1968 EQ. 13 (10-ITEMS)

ITEM	EQ's & DEFL. COEFF	DEFL. ITEM	COEFF
①	INITIAL CAMBER DUE TO INITIAL P/S FORCE AFTER ELASTIC SHORTG $F_o = F_i = 1019^k$ $\gamma_1(\Delta i)_{F_o}$	$-(\Delta i)_{F_o}$	$\gamma_1 = 1.0$
②	INITIAL DEAD LOAD : GIRDER f'_{ci} ; E_{ci} ; I_c $\gamma_2(\Delta i)_2$	$(\Delta i)_2$	$\gamma_2 = 1.0$
③	CREEP CAMBER OF GIRDER: $\gamma_3(\Delta i)_{F_o}$ $\gamma_3 = -\alpha\left[1 - \frac{\Delta F}{F_o} + \left(1 - \frac{\Delta F}{2F_o}\right) k_r C_{T2}\right]$ $\alpha = .35$ SUGGESTD AVE $k_r = 1.0$ (EQ.5) $C_{T2} = 1.5$ TABLE 1; 50% HUMIDITY $\geq$ 28 days $\Delta F = F_o - F = 1019 - 838 = 181^k$; $F_o = F_i$ $\gamma_3 = -.35\left(-.178 + .911(1.5)\right) = .416$	$-(\Delta i)_{F_o}$	$\gamma_3 = .416$
④	CREEP CAMBER OF COMPOSITE GIRDER: $\gamma_4(\Delta i)_{F_o}$ $\gamma_4 = \gamma_3\left(\frac{1-\alpha}{\alpha}\right) I_G/I_{co}$; $= .416(.65/.35)\,260730/675489 = .298 \sim .30$	$-(\Delta i)_{F_o}$	$\gamma_4 = .30$
⑤	CREEP DEFL. OF GIRDER : $\gamma_5(\Delta i)_2$ $\gamma_5 = \alpha k_r C_{T2} = .35(1)1.5 = .525$	$(\Delta i)_2$	$\gamma_5 = .525$
⑥	CREEP DEFL. OF COMPOSITE GIRDER: $\gamma_6(\Delta i)_2$ $\gamma_6 = \gamma_5\left(1-\alpha/\alpha\right) I_G/I_{co} = .376$	$(\Delta i)_2$	$\gamma_6 = .376$
⑦	INITIAL DEFL. DUE TO SLAB DL: $\gamma_7(\Delta i)_1$	$(\Delta i)_1$	$\gamma_7 = 1.0$
⑧	CREEP DEFL. OF COMPOS. BM DUE TO SLAB DL. $\gamma_8 = k_r C_{T2} I_G/I_{co} = 1.5\,^{260730}/_{675489} = .5789$ (NOTE: ITEM 9 IS FOR SSP. ONLY, SEE ACI PAPER)	$(\Delta i)_1$	$\gamma_8 = .58$
⑩	LL-DEFL. OF COMP. BEAM ; (LL = DL 2) $\gamma_{10}(\Delta)_{LL}$ $f_R = 7.5\sqrt{f'_c} = 530$ psi $S = 10543$ $M_{CR} = f_R(S)/12000 = 466^{k-1}$ $M_{MAX} = {}^{G}873 + {}^{SL}924 + {}^{SL2}393 = 2190^{k-1} > M_{CR}$ $np = {}^{n}7({}^{A_s}6.12)/78.75(58.3) = .00933$ $k = .1276$ $x = kd = 7.4$ IN $I_{CR} = bx^3/3 + nA_s(d-x)^2 = 10637 + 110990 = 121627$ ~ 121600	$(\Delta)_{LL}$	$\gamma_{10} = 1.0$

$I_{eff} = \left(\frac{M_{CR}}{M_{max}}\right)^3 I_{co} = 6508$

$\left(1 - \left(\frac{M_{CR}}{M_{max}}\right)^3\right) I_{CR} = 120428$

$I_{eff} = 126900$

GIRDER DEFL'S

BASIC EQ'S & PRODERTIES

$(\Delta i)_2$: INITIAL GIRDER DEFL. $\gamma_2 = 1.0$

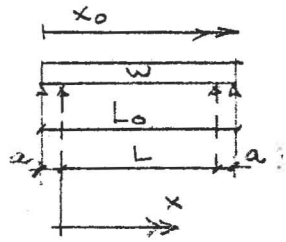

NOTE: ALL DEFLS BASED ON SPAN L = 92.2' C/C. BRG.

$\xi = x/L$ @ 10TH-POINTS

$\xi_o = x_o/L = (\xi L + a)/L_o$

$w_G = .822$ K/FT $L = 92.2$

$L_o = 93.0$ FT $.10L = .10344\, L_o$

$I_G = 260\,730$ $E_{ci} = 3690$ KSI $F'_{ci} = 4100$

$$(\Delta i)_2^{@\,\xi_o} = 72\, w L_o^4 \left(\xi_o - 2\xi_o^3 + \xi_o^4\right) / EI$$

$(\Delta i)_{F_o}$: INITIAL P/S - FORCE $\gamma_1 = 1.0$

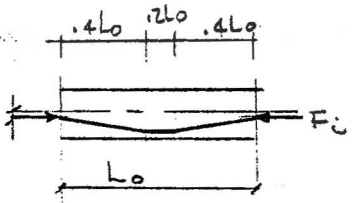

$L_o = 93.0$ FT $\xi_o = (\xi L + a)/L_o$

$I_G = 260\,730$ $E_{ci} = 3690$ $F_i = 1019^K$

$$M_A = M_B = -F_i (e)^{(7.43)}/12 = -631^{K'}$$

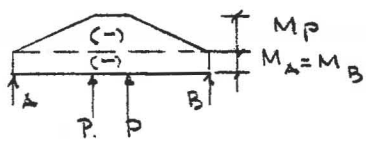

$$M_p = -F_i (e_{\text{@}}^{(12.6)} - e_{END})/12 = -1070^{K'}$$

$$P = M_p \div .4L_o = -28.76^K$$

$$\Delta M = 864\, M_A L_o^2 \left(\xi_o - \xi_o^2\right) / EI$$

ΔP = SEE BM TABLES

$(\Delta i)_{F_o} = \Delta M + \Delta P$

$(\Delta i)_1$: INITIAL SLAB DL $\gamma_1 = 1.0$

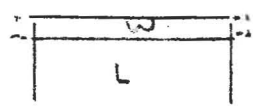

$w_1 = .792$ K/L $I = I_G = 260\,730$

$L = 92.2$ FT $E_c = 4070$ $F'_c = 5000$

$$\Delta_{SL}^{@\,\xi = x/L} = 72 (w_1) L^4 \left(\xi - 2\xi_o^3 + \xi^4\right) / EI$$

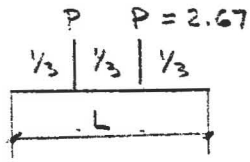

Δ_{DIAPH} = SEE BM TABLES

$$(\Delta i)_1 = \Delta_{SL} + \Delta_{DIAPH}$$

GIRDER DEFL'S

BASIC EQ'S & PROPERTIES CONT'D

$(\Delta)_{LL}$: DL 2 (CURB, RAIL, W/S etc.)

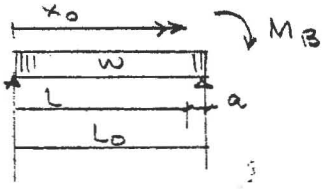

$a = .8$ $L = 92.2$ $L_o = 93.0$

$\xi_o = \xi L / L_o$ $E_c = 4070$ $f'_c = 5000$

$I = I_{eff} = 126900$

$w = .37$ K/I $M_B = -400$ K-I

$$\Delta_w = 72\, w L_o^4 (\xi_o - 2\xi_o^3 + \xi_o^4) / EI$$

$$\Delta_M = 288\, M_B L^2 (\xi_o - \xi_o^3) / EI$$

$$(\Delta)_{LL} = \Delta_w + \Delta_M$$

SHRINKAGE (PCA BULLETIN PG 4)

$\varepsilon_s = .25(10)^{-3}$ $E_c = 3865$ K/in² $f'_c = 4500$ SLAB

Δ_b = FLGE: 8(90) + BUILD-up 1(20) = 740 in²

$C = C^G_{T\,Co}$ + B-up + ½SL = 14.1 + 1.0 + 4.0 = 19.1 in

$M_s = \varepsilon_s E_c \Delta_b C/12 = 1138$ K-I (S.Sp. Pos. MOM)

FEM'S: END SPAN ⟶ $M_B = -1.5 M_s = -1707$

INT. SPAN ⟷ $M = -M_s$ (HERE NOT APPL.)

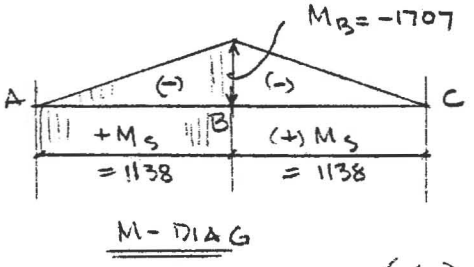

M-DIAG

$E_c = 4070$ $I_{Co} = 675489$

$(\Delta)_{SH}$:

$$\Delta^{+M_s} = 864\, M_s L_o^2 (\xi_o - \xi_o^2) / EI$$

$$\Delta^{M_B} = 288\, M_B L_o^2 (\xi_o - \xi_o^3) / EI$$

$$(\Delta)_{SH} = \Delta^{M_s} + \Delta^{M_B}$$

BENSON & GERDIN, INC. CONSULTING ENGINEERS PHONE (602) 264-0136	SHT. NO. 51 OF
	JOB NO. 2327 J
	BY AG DATE 9-13-84
	CHKD. DATE
GIRDER DEFL'S	REV.

LOCATION IN S.SPAN	.10L	.20L	.30L	.40L	.50L	.60L	.70L	.80L	.90L
INITIAL GIRDER DEFL.							L_o		
(2) $\gamma_2(\Delta i)_2$	.466	.863	1.174	1.371	1.438				
(5) CREEP DEFL. $\gamma_5^{.505}(\Delta i)_2$ BEFORE	.245	.453	.616	.720	.755				
(6) CREEP DEFL. $\gamma_6(\Delta i)_2$ AFTER CO. .276	.175	.325	.441	.515	.541 ℄SYM.				
INITIAL CAMBER P/S									
Δ^M M = -631	-.455	-.792	-1.033	-1.177	-1.225				
Δ^P P = -28.76	-.508	-.952	-1.314	-1.553	-1.634				
(1) $(\Delta i)_{F_o} = \Sigma$	-.963	-1.744	-2.347	-2.730	-2.859				
(3) CREEP CAMBER $\gamma_3^{.416}(\Delta i)_{F_o}$ BEFORE	-.401	-.726	-.976	-1.136	-1.189				
(4) CREEP CAMBER $\gamma_4(\Delta i)_{F_o}$ AFTER CO. .298	-.287	-.520	-.699	-.814	-.852 ℄SYM.				
INITIAL SLAB & DIAPH (DL1)									
Δ^{SL}	.381	.721	.987	1.156	1.214				
Δ^{DIAPH}	.037	.071	.098	.115	.121				
(7) INITIAL $(\Delta i)_1 = \Sigma$	.418	.792	1.085	1.271	1.334				
(8) CREEP CO. $\gamma_8(\Delta i)_1$ .5789	.242	.458	.628	.736	.773 ℄SYM.				
(9) SHRINKAGE									
Δ^{M_S} M = 1138	.278	.495	.650	.742	.773	.742	.650	.495	.278
Δ^{M_B} M = -1707	-.153	-.297	-.422	-.520	-.580	-.594	-.552	-.445	-.264
$(\Delta)_{SH} = \Sigma$	.125	.198	.227	.223	.193	.148	.097	.049	.014
10 LL = DL2									
Δ^W	.375	.711	.975	1.144	1.206	.154	.993	.737	.407
Δ^{M_B}	-.189	-.367	-.523	-.645	-.721	-.741	-.694	-.568	-.351
$(\Delta)_{LL} = \Sigma$	.186	.343	.452	.500	.484	.413	.299	.169	.056

INITIAL GIRDER CAMBER : e28

$$\left[(\Delta i)^{(-)}_{F_o}(\gamma_1+\gamma_3)+(\Delta i)^{(+)}_2(\gamma_2+\gamma_5)\right.$$

FINAL GIRDER CAMBER :

$$\left[\text{INITIAL}^{(-)}\text{ CAMBER} + (\Delta i)^{(-)}_{F_o}\gamma_4 + (\Delta i)^{(+)}_2\gamma_6\right]$$

(7) DECK & CURB DEFL.:

$$\left((\Delta i)_1^{SL} + (\Delta i)_1^{DIAPH} + (\Delta i)_1^{CO} + (\Delta i)_1^{SHR}\right)\gamma_8 = \Sigma^{(+)}(\Delta i)_1\,\gamma_8$$

TOP DEFL. OF GIRDER :

FINAL GIRDER$^{(-)}$ CAMBER + DECK$^{(+)}$ DEFL.

SEE SHT 51A

BENSON & GERDIN, INC. CONSULTING ENGINEERS PHONE (602) 264-0136

SHT. NO. 51 A OF
JOB NO. 2327 J
BY MJK DATE
CHKD. DATE
REV.

Peoria Girder Defl

See calcs Page 48 thru 51

L = 92' - 2"

	℄ Brg	.1L	.2L	.3L	.4L	.5L	.6L	.7L	.8L	.9L	℄ Brg
$(\Delta_i)_{F_0} \times \gamma_1$	0	-.963	-1.744	-2.347	-2.730	-2.859	-2.730	-2.347	-1.744	-.963	0
$(\Delta_i)_2 \times \gamma_2$	0	+.466	+.863	+1.174	+1.371	+1.438	+1.371	+1.174	+.863	+.466	0
$(\Delta_i)_{F_0} \times \gamma_3$	0	-.401	-.726	-.976	-1.136	-1.189	-1.136	-.976	-.726	-.401	0
$(\Delta_i)_2 \times \gamma_5$	0	+.245	+.453	+.616	+.720	+.755	+.720	+.616	+.453	+.245	0
Init. Girder Camber-28	0	-.653	-1.154	-1.533	-1.775	-1.855	-1.775	-1.533	-1.154	-.653	0
$(\Delta_i)_{F_0} \times \gamma_4$	0	-.287	-.528	-.699	-.814	-.852	-.814	-.699	-.520	-.287	0
$(\Delta_i)_2 \times \gamma_6$	0	+.175	+.325	+.441	+.515	+.541	+.515	+.441	+.325	+.175	0
Final Girder Camber	0	-.765	-1.349	-1.791	-2.074	-2.166	-2.074	-1.791	-1.349	-.765	0
$(\Delta_6)^{NC}_{\omega} \times \gamma_7$	0	+.381	+.721	+.987	+1.156	+1.214	+1.152	+.987	+.721	+.381	0
$(\Delta_i)^{NC}_{P} \times \gamma_7$	0	+.037	+.071	+.098	+.115	+.121	+.115	+.098	+.071	+.037	0
$(\Delta_i)^{S}_{\omega} \times \gamma_7$	0	+.186	+.343	+.452	+.500	+.484	+.413	+.299	+.164	+.056	0
$(\Delta_i)_{SHR}$	0	+.125	+.198	+.227	+.223	+.193	+.148	+.097	+.049	+.014	0
$\Sigma(\Delta_i) \times \gamma_8$	0	+.422	+.772	+1.021	+1.154	+1.165	+1.060	+.857	+.585	+.282	0
Final Deck & Curb Defl.	0	+1.151	+2.105	+2.785	+3.148	+3.177	+2.892	+2.338	+1.595	+.771	0
Top Defl Girder	0	.386	.756	.994	1.074	1.011	.818	.547	.246	.006	0
V.C. Corr.	0	-.240	-.432	-.576	-.660	-.696	-.660	-.576	-.432	-.240	0
Slab B.U.	0.500	1.126	1.688	2.070	2.234	2.213	1.978	1.623	1.178	.746	.500
	½"	1⅛	1 11/16	2 1/16	2¼	2¼	2	1 5/8	1 3/16	¾	½"

V.C. Corr.

	0	.1L	.2L	.3L	.4L	.5L	.6L	.7L	.8L	.9L	L
V.C. Elev	26.910	26.942	26.970	26.994	27.013	27.028	27.038	27.043	27.044	27.040	27.031
Chord Elev	26.910	26.922	26.934	26.946	26.958	26.970	26.983	26.995	27.007	27.019	27.031
V.C. Corr	0	.020	.036	.048	.055	.058	.055	.048	.036	.020	0

TDG + VC + ½

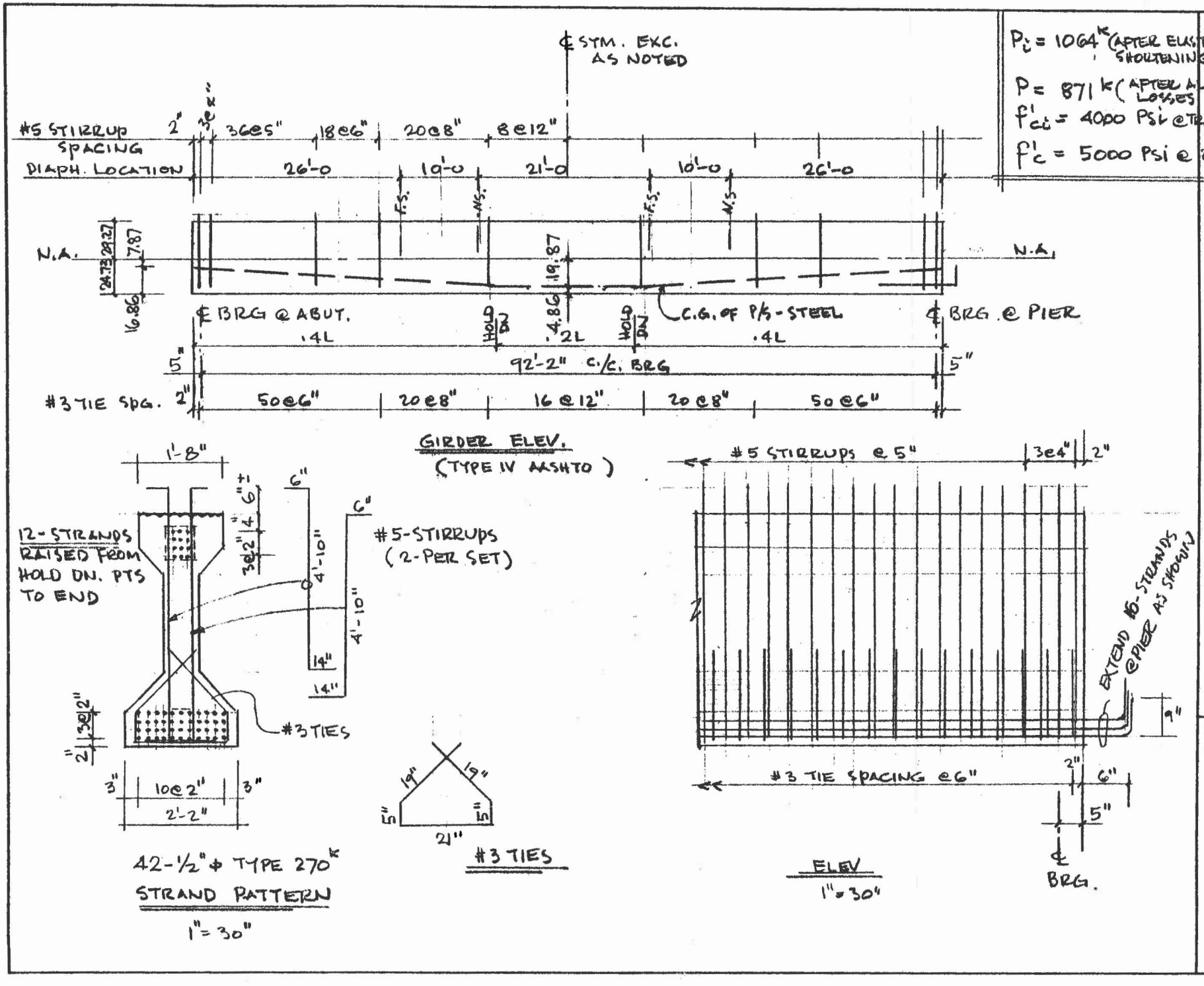

$P_i = 1064^k$ (AFTER ELASTIC SHORTENING)

$P = 871^k$ (AFTER ALL LOSSES)

$f'_{ci} = 4000$ PSI @ TRANSFER

$f'_c = 5000$ PSI @ 28 DAYS

GIRDER DETAILS

BENSON & GERDIN, INC. CONSULTING ENGINEERS PHONE (602) 264-0136

SHT. NO. 52 OF

JOB NO. 2327 J

BY AG DATE 9-19-84

CHKD. DATE

REV.

BENSON & GERDIN, INC. CONSULTING ENGINEERS PHONE (602) 264-0136	SHT. NO. 53 OF
	JOB NO. 2327 J
	BY AG DATE 10-4-84
	CHKD. DATE
	REV.

EXT. GIRDER

S-SPAN vs. L-MOMENTS

(TRUCK) (GOVERNS) $\gamma = 3.0/7.5 = 0.4$ $L = 92.2$ FT

$P = \frac{1}{2} 32 \gamma = 6.4^k$ $I = .23$

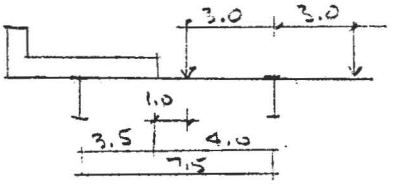

@ .25L (SEE SHT. 30) $m = .35625$

$(+) M_{.25} = mPL = 210^{k'}$

$(M_{L+I}) = 259^{k'}$

PRO RATE FROM SHT. 22

CONTIN. SPAN: $L = 93'$ (SHT 22)

DL 2: $w = .329$ $M_B = wL^2/8 = 356^{k'}$

TRUCK L+I: $M_B = -152^{k'}$

LANE $w = 4(640)2/10(7.5) \cong 70$

$M^w_{L+I} = wL^2/8(1.229) = -93^{k'}$

" $P = 18(4)2/10(7.5) = 1.9^k$

@ .4L: $m = .4575$

$(+) M_{.4} = mPL = 270^{k'}$

$M_{L+I} = 332$

@ .5L: $m = .46875$

$(+) M_{.5} = mPL = 277^{k'}$

$M_{L+I} = 340^{k'}$

MAX (+) MOM @ $x_0 = .475L$

$M_{MAX} = 964(6.4/21.82) = 283^{k'}$

$M_{L+I} = 348^{k'}$

CONTINUOUS 2-SPANS $L = 93.0$ FT

	IMP. COEFF.	Mx @ x/L IN K-FT .10	.20	.30	.40	.50	.60	.70	.80	.90	1.0	
DL 2: W = .329		92	157	192	199	178	128	50	-57	-192	-356	
TRUCK LL+I M_B^{L+I} =	1.229	-15	-30	-46	-61	-76	-91	-106	-122	-137	-152	← GOV.
LANE L+I w = 70	1.229	—	—	—	—	—	—	+13	-15	-50	-93	
" P SSP (+) M_B = 52	1.229	—	—	—	—	—	—	+37	25	12	0	
-" M_B^P = 42.0								-29	-34	-38	-42	
Σ LANE									-24	-76	-135	
DEDUCT. FT. W/S. W = 144#/'		-40	-69	-84	-87	-78	-56	-22	25	84	157	
LL 2 W = 297#/'		83	141	173	180	161	116	45	-51	-173	-321	2-SPANS LOADED
-"-		-16	-32	-48	-64	-80	-97	-113	-129	-145	-161	1-SPAN LOADED
Σ DL 2 + TRUCK + LL 2 LESS W/S.		21	26	14	-13	-56	-116	-191	-359	-647	-990	

EXTER GIRDER NOT CRITICAL FOR CONTINUITY BARS

EXT. GIRDER

COMPILE MOMENTS FOR GIRDER STRESSES

@ .475L

M_G = 871 k' SHT. 32

M_{SL} = .771 $(L^2/2)(\xi)(1-\xi)$ = 817 NON-COMP. SEE SHT 26

M_{DIAPH} = 42

$M_{SL+DIAPH}$ = 859 k' NON-COMP.

M_{DL2}: .329 $(L^2/2)(\xi - \xi^2)$ = 349 k' CO.

M_{LL2}: .297 (" ") = 315 CO.

$M_{(LL+I)}$ = 348 k' CO.

COMPOSITE PROPERTIES

SEC.		A_{IN^2}	d	Ad	Ad^2	I_{IN^4}
(1) SLAB	72(8) 7/8	504	59	29736	1754424	2688
(2) GIRD		789	24.73	19512	482531	260730
	Σ	1293		49248	-1875766	361189
						624607

$C_B = \Sigma Ad/\Sigma A$ = 38.1 $S_B = I/c$ = 16394 IN^3

$C_T^{SL} = 63 - C_B$ = 24.9 S_T^{SL} = = 25085 " S_T^G 8908

$C_T^G = 54 - C_B$ = 15.9 S_T^G = = 39283 " S_{BG} = 10543

STRESSES @ .475L

	TOP	BOTT
GIRDER	-1173	991
SL & DIAPH	-1157	978
DL 2	-107	255
LL 2	-96	231
M_{LL+I}	-106	255
Σf	-3639	2710
f P/S	822	-2654
	-1817	56

∴ EXT. GIRDER IS NOT CRITICAL

ELASTOMERIC PADS

DL - REACTIONS ($L = 92.4$ FT)

EXT. GIRDER

DL 1: $(2.2 + \frac{1}{2}\,92.2)\,1.593$ (16.0) = 76.9

DL 2: $(2.2 + \frac{1}{2}\,93)\,.329 - {}^{3.8}\Delta M/L$ = 12.2

DIAPHS: $\frac{1}{2}(2.7 + 4.9)$ (INT, ABUT) $\simeq$ 3.8

Σ DL = 92.9 K

INT. GIRDER

DL 1: $48.3\,(1.614$ (15.0) = 78.0

DL 2: $48.7\,(.370) - {}^{4.3}M/L$ = 13.7

DIAPHS: $2.7 + 4.9$ $\simeq$ 7.6

Σ DL = 99.3

LL - REACTIONS

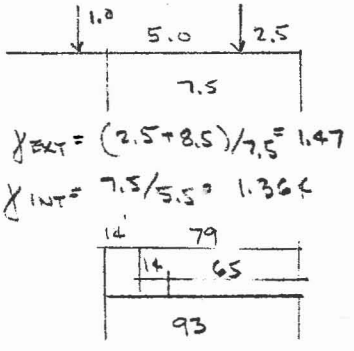

EXT. GIRDER

LL$_1$ (TRUCK): $\gamma_{EXT}\,(16)\left(\frac{93+79+16.3}{93}\right)$ (P) = 47.6

LL$_2$: $48.7\,(.364) - 4.2$ (17.7) = 13.5

ΣP_{LL} = 61.1

INT. GIRDER

LL$_1$ (TRUCK): $\gamma_{INT}\,(16)\,188.3/93$ = 44.2

GIRDER UPLIFT (25% DL)

$P_+ = .25\,(99.3) = 25^K$

P_{TL} EXT. GIRDER:

DL 92.9 + LL 61.1 = 154.0 / 1.25 (INCR) = 123.2 K

INT. GIRDER

DL 99.3 + LL 44.2 = 143.5 K

ELASTOMERIC PADS SEC. 1.12.2

LF MOVEMENT Δ^{LF} = .03 NEGL.
EQ. 11 Δ^{EQ} SEE SHT. 91

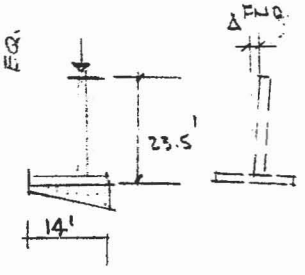

TEMPERATURE MOVEMENT 3.16 1983 1.2.15 1977

$\Delta^T = \alpha L^T \partial^T = 0.4 FT(12) = .48$ IN

$\alpha_T = 6(10)^{-6}$

$L^T = ((1'-0)+(1'-9)+55'-0)/\cos SKEW = 94.9$ FT

∂^T = 30° RISE + 40° FALL = 70°

SHRINKAGE MOVEMENT

$\varepsilon_{SH} = .0002$ $L = 95$ FT $\Delta_{SH} = \varepsilon_{SH}(L) = .23$ IN

MOVEMENT FROM FND. ROTATION

ASSUME 1/4" ROTATION MAX. TOTAL; 3/16 FOR SERVICE:

$\Delta^{FND} = 3/16\,(23.5)/14 = .31$ IN

TOTAL BEAM TRAVEL:

$\Sigma\Delta = \Delta^T + \Delta^{SH} + \Delta^{FND} = .48 + .23 + .31 = 1.02$ IN

MIN ERT = $2(\Sigma\Delta) \cong 2"$

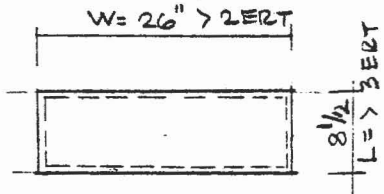

1/8" RUBBER PROTECTION ALL FOUR EDGES

PLAN VIEW

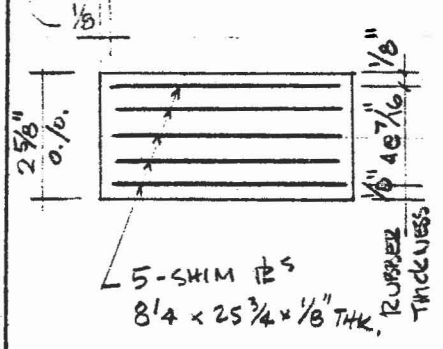

SECTION

N.T.S.C.

LOADING

GOV. $P_{DL} = 100^K$, $P_{LL} = 45$; $P_{TL} = 145^K$ $TL/DL = 1.45 < 1.6$

$b^{DL}_{ALL} = 500$ PSI $b^{TL}_{ALL} = 800$ PSI

PAD SIZE

MIN. NET AREA: $A_N = P_{DL}/b^{DL}_{ALL} = 200 IN^2$

WIDTH $W = 26" = (RM\ WIDTH) > 4.62$

LENGTH $L = A/W = 7.7$ SAY 8"

PLY THICKNESS t:

SHAPE FACTOR $SF = 6.0 > 5.0$

MAX. PLY $t = LW/12(L+W) = .51$ IN $> 1/2"$

FINAL PAD THICKNESS

T. & BOT. LAYER OF ELASTOMER 1/8" EA (ADOT): $2(1/8 = .25$

4 LAYERS OF ELASTOMER @ 7/16": $4(7/16) = 1.75$

FINAL ERT $= 2.00$

5 SHIM PLATES @ 1/8": $5(1/8) = .625$

TOTAL PAD THICKNESS H = 2.625"

FINAL SHAPE FACTOR $SF = 208/2(7/16)(34) = 6.99 > 5.0$ O.K.

BENSON & GERDIN, INC. CONSULTING ENGINEERS PHONE (602) 264-0138

SHT. NO. 57 OF
JOB NO. 2327 J
BY A-G DATE 9-7-84
CHKD. DATE
REV.

GIRDER CONN DET.

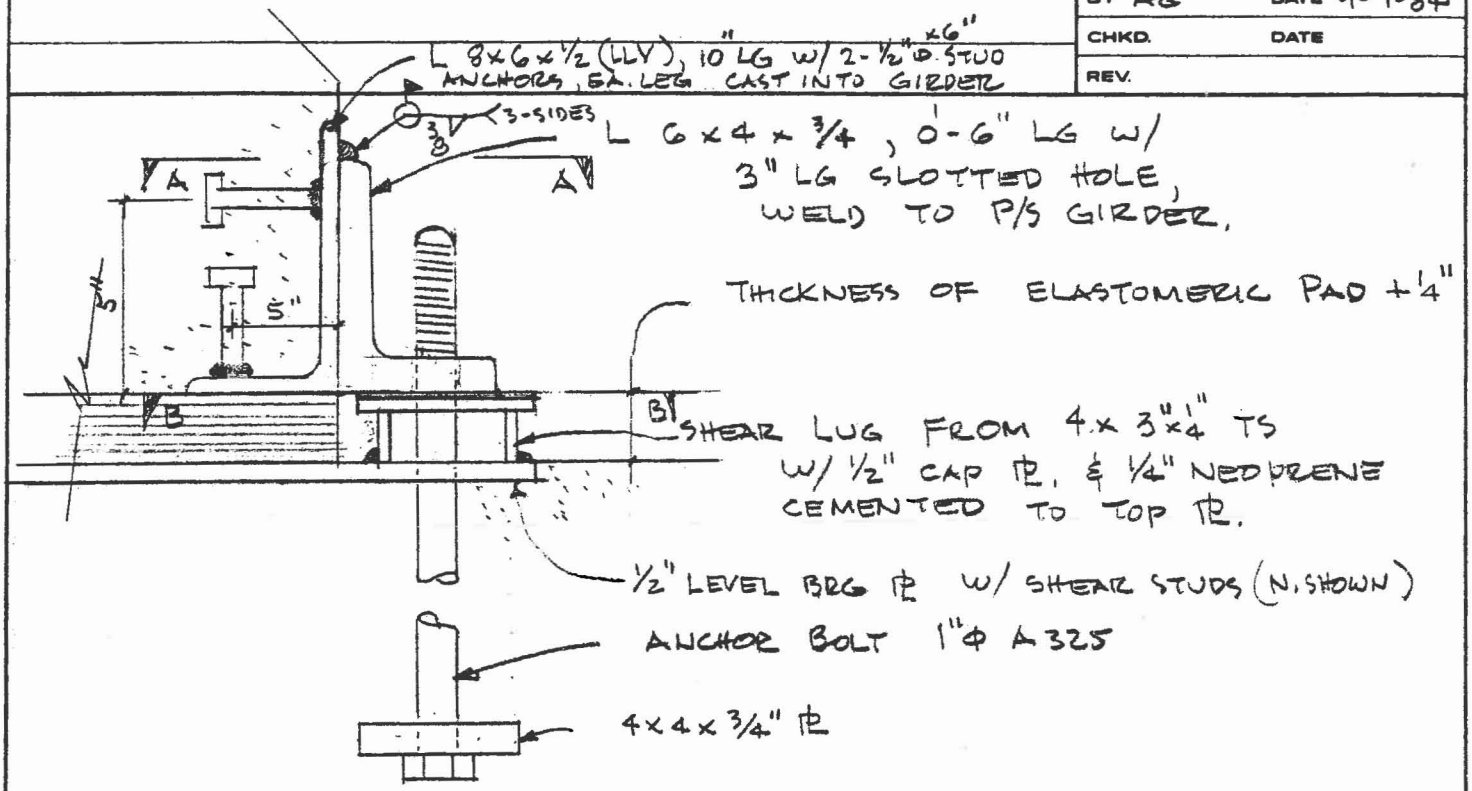

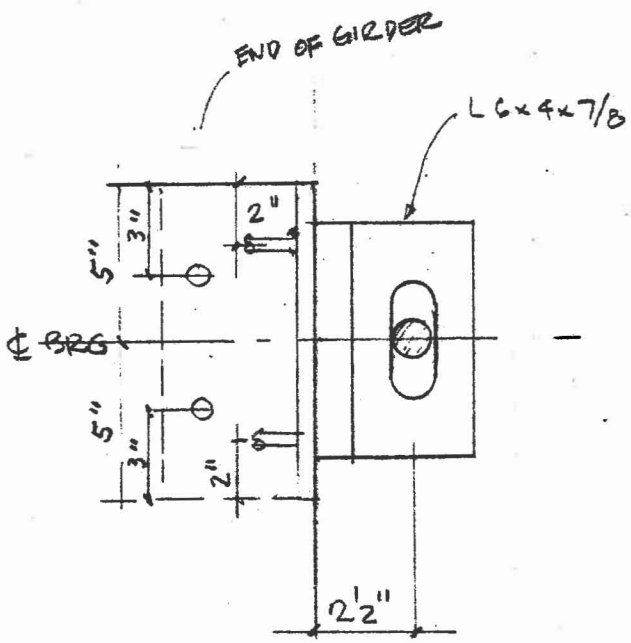

PLAN VIEW A-A

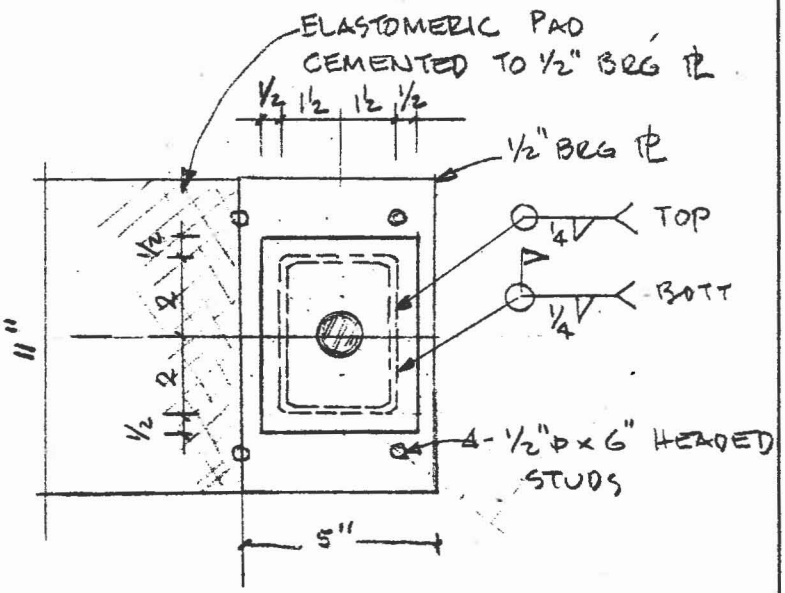

PLAN VIEW B-B

BENSON & GERDIN, INC. CONSULTING ENGINEERS PHONE (602) 264-0136 | SHT. NO. 58 OF
JOB NO. 2327 J
BY AG DATE 9-7-84
CHKD. DATE
REV.

GIRDER CONNECTION TO ABUT.

LAT. LOAD $F = 20.1^k$ (SEISMIC) SHT.
UPLIFT $P_\uparrow = 26.0$ SHT

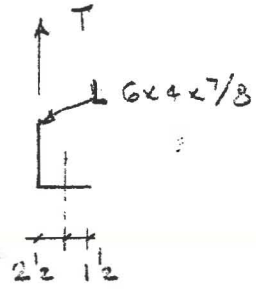

ANALYSIS OF CONX DET. X

$T = \frac{1}{2}(26) = 13.0^k$

$k\measuredangle = 1\frac{3}{8}''$

PRYING FORCE KOEFF:

$q = \left(\frac{3b}{8a} - \frac{t^3}{20}\right) = .25$

$b = 2.5 - 1.375 = 1.125$

$a = 1.5 \qquad t = .875$

$Q = qT = 3.25$

$\Sigma T = Q + T = 16.25^k$

∡ BENDING: INCREASE

$M = \Sigma T(1.125) = 18.28$ IN-K. $f_b = 20(4/3)$

$L = 6''$

$t_{R'D} = \left[\frac{M(6)3}{6(20)4}\right]^{1/2} = .827 < .875$ o.k.

FOR $t = \frac{3}{4}''$ $L_{R'D} = 7.3''$ USE $L = 7\frac{1}{2}''$ w/ L6x4x3/4

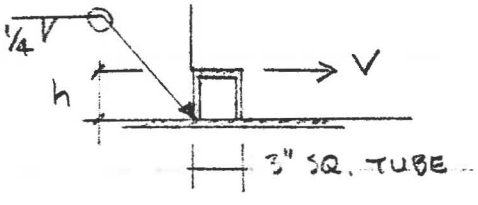

$V = 10.1^k$

3" SQ. TUBE TO B-PL

$A = 2.5\,IN^2 \qquad S = 2.1\,IN^3$

$M = V(h) \qquad M_{ALL} = S(20) = 42$ IN-K

WELD CONX:

$A_{WELD} = .707(2.5) = 1.78\,IN^2$

$S_{WELD} = .707(2.1) = 1.48\,IN^2$

$\Sigma F_{ALL} = \overset{\equiv 70}{21}(1.33) = 28.0$ KSI INCREASE

$V/A = \qquad -5.7$

M/S ALLOW $= 22.3 = Vh/S$

∴ MAX $h = S(22.3)/V = 3.27$ IN $(3\frac{1}{4}'')$

GIRDER CONX DET. X

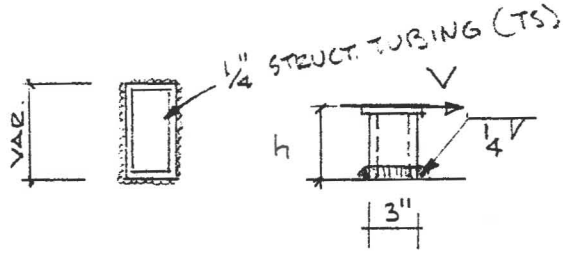

E70 ELECTRODE

$F_{ALL} = 21 (1.33) = 28$ ksi

WELD PROPERTIES = .707 TUBE PROP.

$f_a = \sqrt{2}\, V \div A$

$f_b = \sqrt{2}\, V h \div S$

$\Sigma f = f_a + f_b = \sqrt{2} V \left(1/A + h/S \right) = F_{ALL}$

$V_{ALL} = F_{ALL} \div \left[\sqrt{2} \left(\frac{1}{A} + h/S \right) \right] = 19.8 / \left(\frac{1}{A} + h/S \right)$;

V_{ALL} (kips)

h (IN)		TS 3x3x1/4	TS 4x3x1/4	TS 5x3x1/4	TS 6x3x1/4
	A	2.589	3.089	3.535	4.035
	S	2.101	2.733	3.280	3.912
1.0		23.0	28.7	33.7	39.3
1.5		18.0	22.7	26.7	31.4
2.0		14.8	18.8	22.18	26.1
2.5		12.6	16.0	18.9	22.3
3.0		10.9	13.9	16.5	19.5
3.5		9.7	12.3	14.7	17.3
4.0		8.7	11.1	13.2	15.6

ABUT.

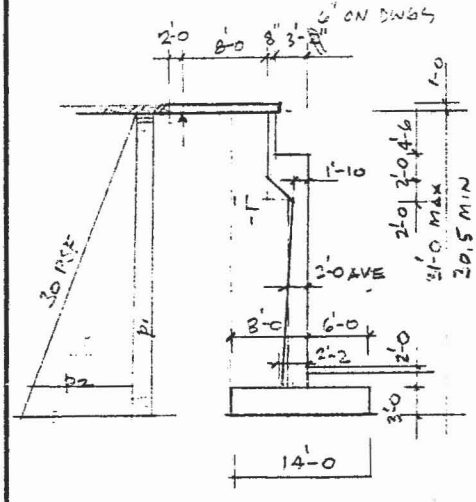

FOR h = 31.0 FT

ADDIT. VERT. LOAD:

	P	M_E
WL: 0.5(.30) =	.15 (0)	—
SURCH 0.5(6).1 =	.30 (4)	1.2
	.45	1.2

ADDIT. RESIST MOM:

ΔM_R = .45(7) + 1.2 = 5.4 (3.2)

ΣM_R = 280.7 + 5.4 = 286.1

GIRD. DL 342.1 + 5.4 = 347.5

" LL 372.4 + 5.4 = 377.8

OVERT. MOM. @ h = 31.0

p_1 = 45 PSF

p_2 = 31(30) = 930 PSF

	E	a	M_E
$p_1(h)$	1.4	h/2	21.6
$p_2 h/2$	14.4	h/3	149.0
Σ	15.8		170.6

VERTICAL LOAD

ITEM	P	@ FACE a	@ FACE M	@ ℄ WALL a	@ ℄ WALL M
APPSL. (4+1).15	.75	1.5	1.13	2.5	1.88
BACK WL. 4.5(.10)	.45	1.5	.68	2.5	1.13
CORBEL 2(1.83).15	.55	.92	.51	1.92	1.05
$-11\frac{1}{2}(1.83)^2(.15)$	.25	.61	.15	1.61	.40
Σ@T. WL.	2.0		2.47	3.83	4.46
WL. 23. (.30)	6.9	—	—	—	—
Σ@T. FTG	8.90	NOT APPL.		—	4.46
SURCH. 6(2).1	1.20			-4	-4.80
" 6(19.0).1	11.40			4	45.6
" 4(8.5).1	3.40			5	17.0
FTG 14(.45)	6.30			0	—
Σ@B. FTG	31.20				62.36
GIRDER DL	8.10			.58	4.7
Σ	39.30				66.96
GIRDER LL	4.00			.58	2.3
Σ	43.30				69.26

RESISTING MOMENTS @ BOTT. OF FTG:

WALL & SURCH.: $M_R = 31.2(7) + 62.3 = 280.7$ (218.4)

ADD GIRDER DL: $M_R = 39.3(7) + 67.0 = 342.1$ (275.1)

ADD GIRDER LL: $M_R = 43.3(7) + 69.3 = 372.4$ (303.1)

OVERTURNING MOM. @ BOT. OF FTG

p_1 = 1.5(30) = 45 PSF

p_2 = 30.5(30) = 915 PSF

@ h = 30.5	E	a	M_E
$p_1(h)$	1.4	h/2	20.9
$\frac{1}{2} p_2(h)$	14.0	h/3	141.8
Σ	15.4		162.8

N1
1.25
2.36

BENSON & GERDIN, INC. CONSULTING ENGINEERS PHONE (602) 264-0138	SHT. NO. 61 OF
	JOB NO. 2327 J
	BY AG DATE 9-25-84
	CHKD. DATE
ABUT.	REV.

LAT. FORCES FROM E-PRESSURE & EQ

CASE 2 '1' - DIRECTION

EQ = 116 L = 130 FT (WALL LENGTH)

$F_s = EQ/L = .9$ K/'

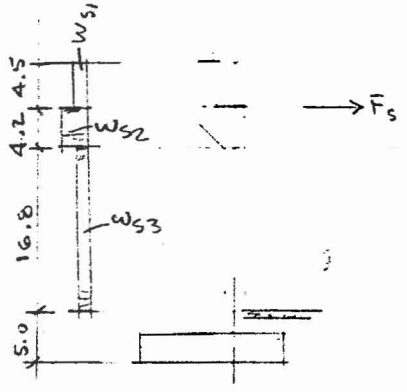

$W_{S1} = .09(100) = .009$ K/□'

$W_{S2} = .09(2.36)/4.2 = .05$ " "

$W_{S3} = .09(300) = .027$ " "

$M_{EQ} = F_s(26)$	=	23.4
$W_{S1}(4.5)\ 28.25$	=	1.1
$W_{S2}(4.2)(23.9)$	=	5.0
$W_{S3}(16.8)\ 13.4$	=	6.1
M_{EQ}	=	35.6 K'

$M_E = 162.8$

$\Sigma M_{OT} = M_E + M_{EQ} = 198.4$ K'

VERTICAL LOAD W/ GIRDER DL (SERVICE CONDITION)

P = 39.30

$M_R = 342.1$

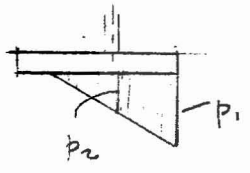

$c = (M_R - M_{OT})/P = 3.7 < B/3 > B_{FTG}/4 = 3.5$

$sp = 2P/3c = 7.2$ K/□'

ALLOW sp = 10.0 (1.33) > sp

CHECK WALL BENDING @ T. FTG

$M_{EQ} = F_s(23$	=	20.7
$W_{S1}(4.5)\ 25.25$	=	1.0
$W_{S2}(4.2)\ 20.9$	=	4.4
$W_{S3}(16.8)\ 10.4$	=	4.7
M_{EQ}	=	30.8 K'
M_E	=	122.9 SHT. 63
ΣM_{E+EQ}	=	153.7 K'

#5 @ 3" SHT. 63

$M_{ALLOW} = 119.7\ (1.33) = 159.2 > 153.7$

GROUP VII LOADING: E + EQ IS NOT CRITICAL.

ABUT. WALL

EP. LOAD - & MOM. - DIAG

p_a = 30 PSF (SOILS REPORT

SURCHARGE 150 PSF (APPR. 12" THICK SLAB)

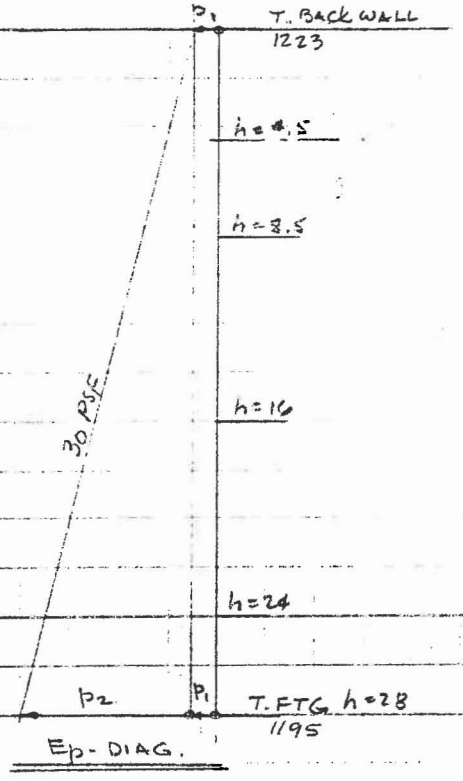

Ep - DIAG.

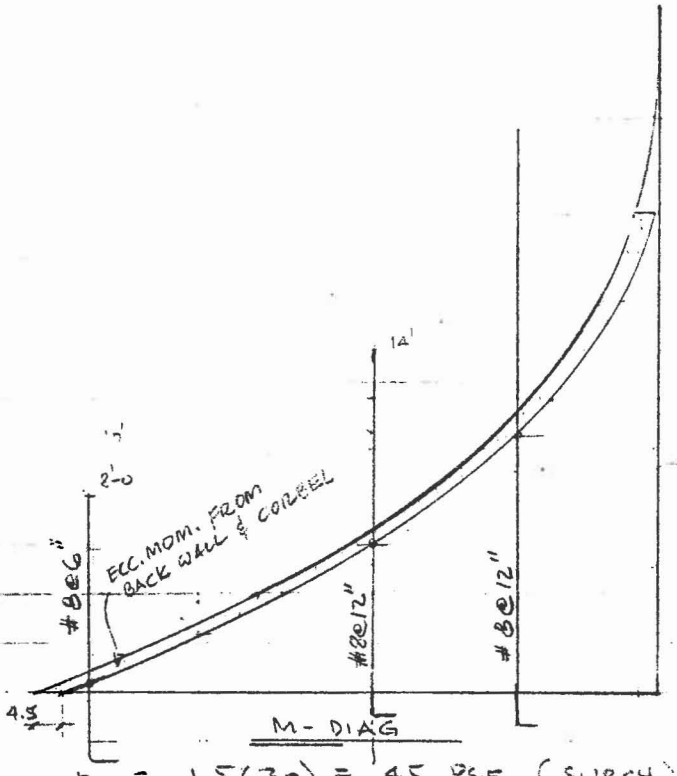

M - DIAG

p_1 = 1.5(30) = 45 PSF (SURCH)

p_2 @ h: h(30) PSF @ ANY LOCATION

(1) @ h = 4.5 FT: p_2 = 4.5(30) = 135 PSF

	E_p	a	M
p_1 (h)	.203	h/2	.46
$\frac{1}{2} p_2$ (h)	.304	h/3	.46
Σ	.507		.92

(2) @ h = 8.5 p_2 = 8.5(30) = 255

	E_p	a	M
p_1 (h)	.383	h/2	1.63
$\frac{1}{2} p_2$ h	1.084	h/3	3.07
Σ	1.467		4.70

(3) @ h = 16.0 p_2 = 16(30) = 480

	E_p	a	M
p_1 h	.720	h/2	5.76
$\frac{1}{2} p_2$ h	3.840	h/3	20.48
Σ	4.56		26.24

@ h = 24.0 FT	E_p	a	M
p_1 h	1.080	h/2	12.96
$\frac{1}{2} p_2$ h	8.640	h/3	69.12
	9.72		82.08

p_2 = 720

@ h = 28.0 FT	E_p	a	M
p_1 h	1.26	h/2	17.64
$\frac{1}{2} p_2$ h	11.76	h/3	109.76
	13.02		127.40

p_2 = 840

BENSON & GERDIN, INC. CONSULTING ENGINEERS PHONE (602) 264-0138	SHT. NO. 63 OF
	JOB NO. 2327 J
	BY AG DATE 10-2-84
	CHKD. DATE
ABUT. WALL	REV.

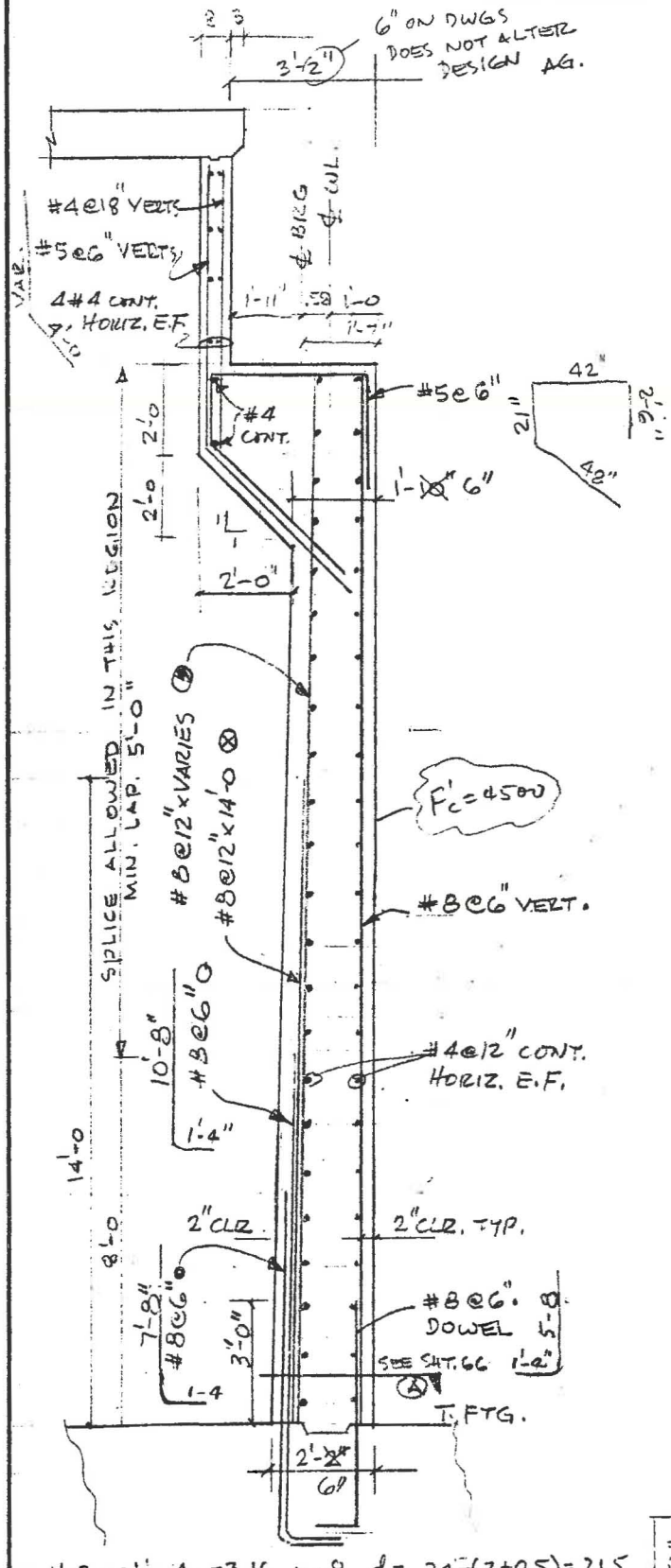

#8@3" A_s=3.16 n=8 d= 24"-(2+0.5)= 21.5
np= 8 As/12 d = .098 k=.355 j=.881
γ= 2/kj = 6.38 f_c=1.8 $M_c = f_c d^2/\gamma$ = 130$^{K'}$
f_s=24 $M_{12 REBAR} = A_s f_s j d/12$ = 119.7

BACK WALL

HT: ASSUME 4'-6" (T.WL TO BOTT. APP. SL.)

ECC. MOM'T @ TOP OF WALL

	D	e @ FACE	M	e @ ℄ WALL	M
App. SL.: (4+1).15	.75	1.5	1.13	2.5	1.88
Back WL. 4.5(.10)	.45	1.5	.68	2.5	1.13
CORBEL: 2.(1.83).15	.55	.92	.51	1.92	1.05
" ½(1.83)²(.15)	.25	.61	.15	1.61	.40
ΣM_e	2.00		2.47		4.46
DL GIRDER 100/2.3	8.10	—		.58	4.70
LL "	4.0			.58	2.32

AT TOP OF FTG

$M_{DES} = M_E - M_e = 127.4 - 4.5 = 122.9$

#8@3" M_{ALL} = 119.7 2.7% over (o.k.)

'C'-SPLICE 1.7 l_d = 59" f'_c=3.0 F_y=60

AT h= 22'-0 : $p_2 = h(30) = 660$

$M_{DES} = p_1 h^2/2 + p_2 h^2/6 - M_e$ = 59.6$^{K'}$

#3@6" M_{ALL} = 61.8$^{K'}$ > M

AT h= 17'-0 : $p_2 = h(30) = 510$

$M_{DES} = p_1 h^2/2 + p_2 h^2/6 - M_e$ = 26.6$^{K'}$

#8@12" M_{ALL} = 31.6 > M

HORIZ. REINF.: #4@12" % = $\frac{.4}{12(24)}$ = .00139

AT h= 4.5 (DESIGN FOR PASSIVE EP)

$M_E^{PASS} = .30\ h^3/6$ = 4.56$^{K'}$ d= 9-(2+.31) = 6.69

$A_s = M/1.44\ d$ = .561 in²

#5@6" (A_s=.62)

#8@6 A_s=1.58 np=.049 k=.268 j=.91 γ=8.2 M_{CONC}=1.8 d^2/γ = 101$^{K'}$ M_{REB} = 61.8	#8@12 A_s=.79 np=.0245 k=.198 j=.93 γ=10.8 M_c = 77.0$^{K'}$ M_{REBAR} = 31.6

BENSON & GERDIN, INC. CONSULTING ENGINEERS PHONE (602) 264-0136	SHT. NO. 64 OF
	JOB NO. 2327 J
	BY AG DATE 9-30-84
	CHKD. DATE
ABUT.	REV.

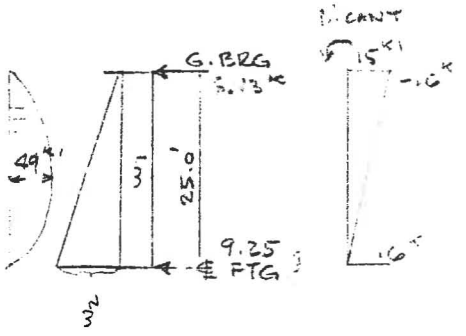

BENDING @ EXP'D FACE FROM EP (@ SERVICE LD)

ASSUME ACTIVE PRESSURE PER SOILS REPORT PG. 4

w_a = 30 PSF (GRANULAR FILL)

w_1 = 8(30) = 240 #/'

w_2 = 25(30) = 750 #/'

w_{BASE} = $w_1 + w_2$ = 990

w_{AVE} = 375 + 240 = 615

ACTIVE

$M = w_{AVE}(h^2)/7.85$ = 49^k'

+ CANT. MOM ½(15) = 7.5

56.5^k'

CANTIL. MOM:

EP = .90^k'

BACKWL DL 4.50

GIRDER 4.70

(LL 2.30)

OR $\frac{16}{6}$(2.5) = 6.7 ⇐ GOV.

Σ = 15.0^k'

15.9^k'

\# 8 @ 6"

A_s = 1.59 in² n = 8 d = 24 − 2.6 = 21.4

n_p = 8(A_s)/12 d = .0492

k = .268 j = .91 γ = 2/kj = 8.18

f'c = 4500 fc = 1.8 ksi fs = 24

M_{CONC} = $f_c d^2/\gamma$ = 100^k'

M_{REBAR} = $A_s f_s j d/12$ = 61.9^k' > M

WALL SHEAR @ T. FTG

V = 13^k b = 12 d = 21.5

SHEAR FRICT. SEC. 1.5.29 D

v = V/bd = 50 psi < 360

μ = 1.0 fs = 24 ksi

A_{vp} = V/fsμ = .54 in²

AVAIL. #8 @ 6" DWL. FOR (+) A_s

ΣA_s = #8@6 = 1.58

A_{vp} = −.54

(+) A_s = 1.04 in²

> ⅓ ΣA_s = .53 o.k.

CHECK FOOTING FOR DL + LL (NO IMP)

(a) @ h = 30.5

P = 43.3 M_R = 372.4 M_{OT} = 162.8

c = (M_R − M_{OT})/P = 4.84 > B/3 e = 2.16

sp = P/14 ± P(e)6/14²

= 3.1 ± 2.9 = 6.0 OR 0.2

(b) @ h = 31.0

P = 43.3 + .45 = 43.75

M_R = 377.8 M_{OT} = 170.6

c = 4.74 e = 2.264

sp = P/14 ± Pe 6/14²

= 3.1 ± 3.0 = 6.1 OR 0.1

(c) DL WALL & SURCH

h = 31.0 P = 31.65

M_R = 286.1 M_{OT} = 170.6

c = 3.65 > B/4

sp = 2P/3c = 5.78

BENSON & GERDIN, INC. CONSULTING ENGINEERS PHONE (602) 264-0136 | SHT. NO. 65 OF
JOB NO. 2327 J
BY AG DATE 9-30-84
CHKD. DATE
REV.

ABUT.

FOOTING REINF.:

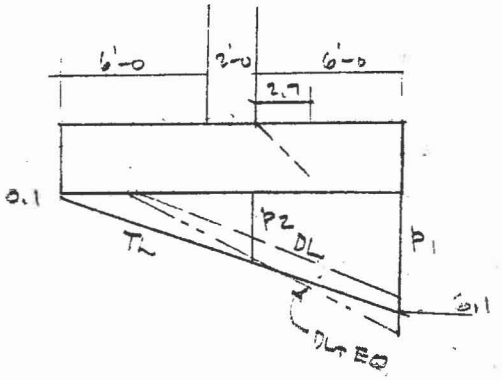

TOE TL (DL / EQ DOES NOT GOVERN)

$p_1 = 6.10$

$p_2 = 0.1 + 6.0 \frac{8}{14} = 3.5$ (3.4)

$M = p_1 (6.0) \frac{1}{2} (6.0) \frac{2}{3} = 73.2$

$p_2 (6.0) \frac{1}{2} (6.0) / 3 = 21.0$

$94.2^{k'}$

CHECK SHEAR @ d (d = 32.4 IN)

$p_3 = 0.1 + 6 \, 10.7/14 = 4.7$

$V = \frac{1}{2}(p_1 + p_3)(3.3) = 17.8^k$ $\quad V_{AVG} = 52$ psi (3.0)

$V_c = 12(d)v = 20.2^k > V$ o.k.

USE #8 @ 6" BOTT.

$A_s = 1.58 \text{ IN}^2$ $\quad d = 36 - (3.0 + .6) = 32.4$ IN

$n = 8$ $\quad np = .0325$ $\quad k = .225$ $\quad j = .925$ $\quad \gamma = 2/kj = 9.6$

$f'_c = 4000$ $\quad f_c = 1.6$ ksi $\quad f_s = 24$

$M_{CONC} = f_c d^2/\gamma = 174^{k'}$

$M_{REBAR} = A_s f_s j d/12 = 94.7^{k'} > M$

EMBEDM'T REQ'T OF #8 WALL REINF.

(a) DEVELOPM'T OF HOOK: $f'_c = 3000$

$\xi = 540(1.3) = 702$

$l_e = .04(A_b)\xi = 22.2$

(b) l_d #8 = 35" FOR $f'_c = 3000$

$\Delta l = l_d - l_e = 13"$

(c) REQ'D FTG DEPTH

$D_{FTG}^{REQ'D} = \Delta l$ ... 13"

$\frac{1}{2}$ j #8 ... 4

BOTT. BAR FTG ... 1

CONC COVER ... 3

D_F REQ'D = 21" < 36 o.k.

HEEL

$w = (28.0 + 3.0 \text{ ~~100~~ 135}) = \cancel{3.1}^{k}/\text{ft}$ (4.18)

L = 6.0 FT

$M = wL^2/2 = \cancel{56.0}^{k'}$ (75.3) (IGNORE UPW. SOIL PR.)

#7 @ 6"

$A_s = 1.20$ $\quad d = 36 - (2 + .6) = 33.4$ IN $\quad n = 8$

$np = .024$ $\quad k = .196$ $\quad j = .93$ $\quad \gamma = 2/kj = 10.9$

$M_{CONC.} = f_c d^2/\gamma = 164^{k'}$

$M_{REBAR} = A_s f_s j d/12 = 74.5^{k'} \sim M$ o.k.

1% OVER o.k.

USE #7 @ 6"

BENSON & GERDIN, INC. CONSULTING ENGINEERS PHONE (602) 264-0136	SHT. NO. 66 OF
	JOB NO. 2327 J
	BY AG DATE 10-3-84
	CHKD. DATE
ABUT.	REV.

TRANSFER VERT MOM OF WING WALLS INTO ABUT. WL.

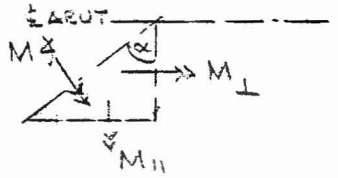

$M_{\measuredangle} = 54^{k'}$ (LEFT WING WALL)

$\alpha = 52.519°$

$M_{\perp} = M_{\measuredangle} \cos\alpha = 33^{k'}$

$M_{\parallel} = M_{\measuredangle} \sin\alpha = 43^{k'}$

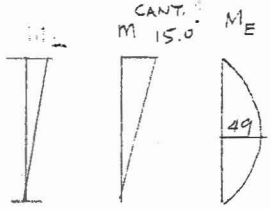

DIST OF $M_{\perp}$ OVER $b = 4(T) + 1.0 = 9.0$ FT (3.0)

$m_{\perp} = M_{\perp}/b = 3.7^{k'}$

AT MIDHT: (4) M = M_E

$\frac{1}{2}(m_{\perp} + \text{CANT.}) \cong 10$ (4.0, 15.0, 49)

$59^{k'} < M_{REBAR}$ #8@6"

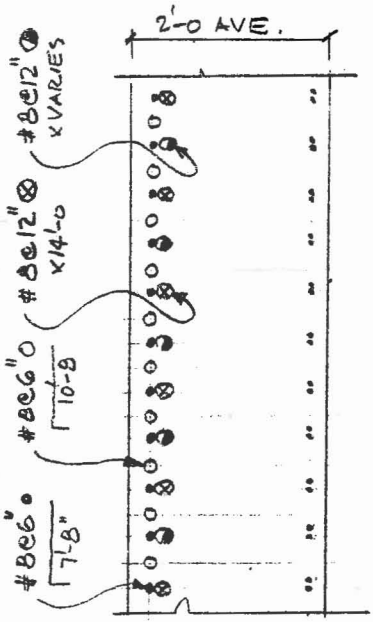

SEC. (A)

AT TOP OF WALL

DIST. $M_{\perp}$ OVER $b = 4'-0$

$m_{\perp} = 33(4) \cong 8^{k'}$

$M_{CANT} = 15^{k'}$

$23^{k'}$

#5@6" ($A_s = .62 IN^2$)

$d_{RD} = 23/1.44\,(A_s) = 25.8"$ o.k.

EQ. - COMPONENT ∥ WALL

(EQ. DISTRIB. IN Y-DIRECTION CASE 2)

EQ = 92^k COMPONENT TO GIRDERS CASE 2

h = 27 FT (BOTT. OF FTG. TO C.G. GIRDER CONX)

$M_{OT} = h(EQ) = 2484^{k'}$

$S = 14(133)^2/6 = 41270\ FT^3$

$M/S = \pm .06\ k/\square'$ (NEGL.)

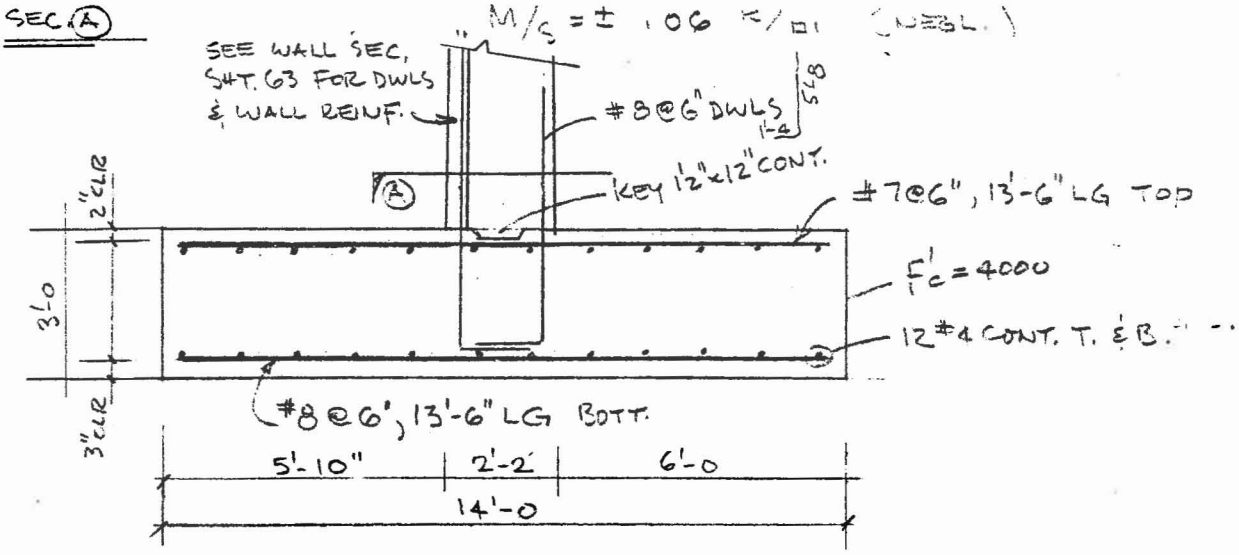

ABUT. LL

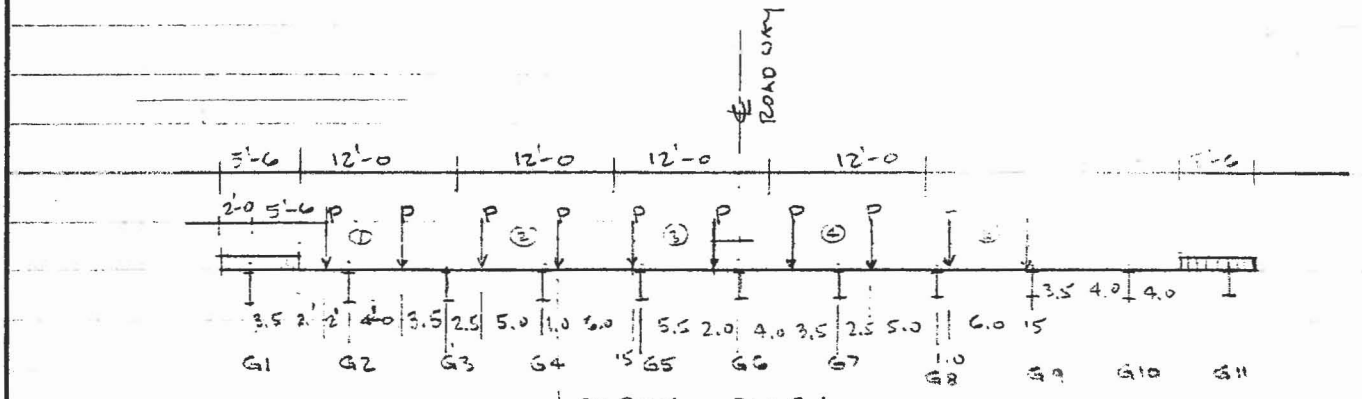

LOADING DIAG.

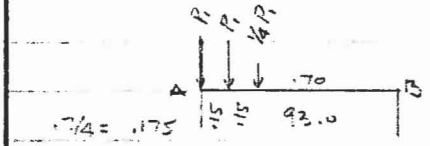

.7/4 = .175
.850
1.000
2.025 ?

$P_1 = 16^K$

$m_B = (.15 - .15^3) = .1466$

$\frac{1}{4}(.30 - .30^3) = .0683$

$\Sigma m_B = .2149$

$M_B = m_B P_1 L/4 = 79.9^{K'}$ $M_B/L = .86^K$

32.4

$P_A = 2.025(16) - .86 = 31.54^K$

SIDE WALK @ 60 PSF

$\omega = .375(93)\,60 = 2.1\ ^K/LFT$

ITEM	P	a	P_a	
SW 5.5(2.1) =	11.55	36.75	424.5	
P_A	31.54	14	441.6	
P_A	31.54	20	630.8	
P_A	31.54	26	820.0	
P_A	31.54	32	1009.3	
2-LANES Σ	137.71		3326.2	
P_A 63.08	31.54	2.0	63.1	315.4
P_A	31.54	8.0	252.3	
3-LANES = .9 Σ	180.7		3277	
P_A 63.08	31.54	-4.0	-126.2	441.6
P_A	31.54	-10.0	-315.4	
4-LANES = .75 Σ	197.9		2400.0	
P_A 63.08	31.54	-16.0	504.6	1198.5
P_A	31.54	-22.0	693.9	
5-LANES = .75 Σ	245.2		1501	

FTG: L = 133 FT $S = 16L^2/6 = 47170$

B = 16 $A = BL = 2128$ □I

2-LANES: $\Sigma P^{LL} = 137.7^K$ M = 3326

$sp^{LL} = \Sigma P/A =$ .065 $^K/$□I

$M/S = \pm$ .071 "

.136 $^K/$□I

3-LANES: $\Sigma P^{LL} = 181$ M = 3277

$sp^{LL} = \Sigma P/A + M/S = .155\ ^K/$□I

4-LANES: $\Sigma P^{LL} = 198^K$ M = 2400

$sp^{LL} = \Sigma P/A + M/S = .144\ ^K/$□I

5-LANES: $\Sigma P^{LL} = 245.2$ M = 1501

$sp^{LL} = \Sigma P/A + M/S = .147\ ^K/$□I

ABUT. WING WALLS

ABUT. #1 RT.

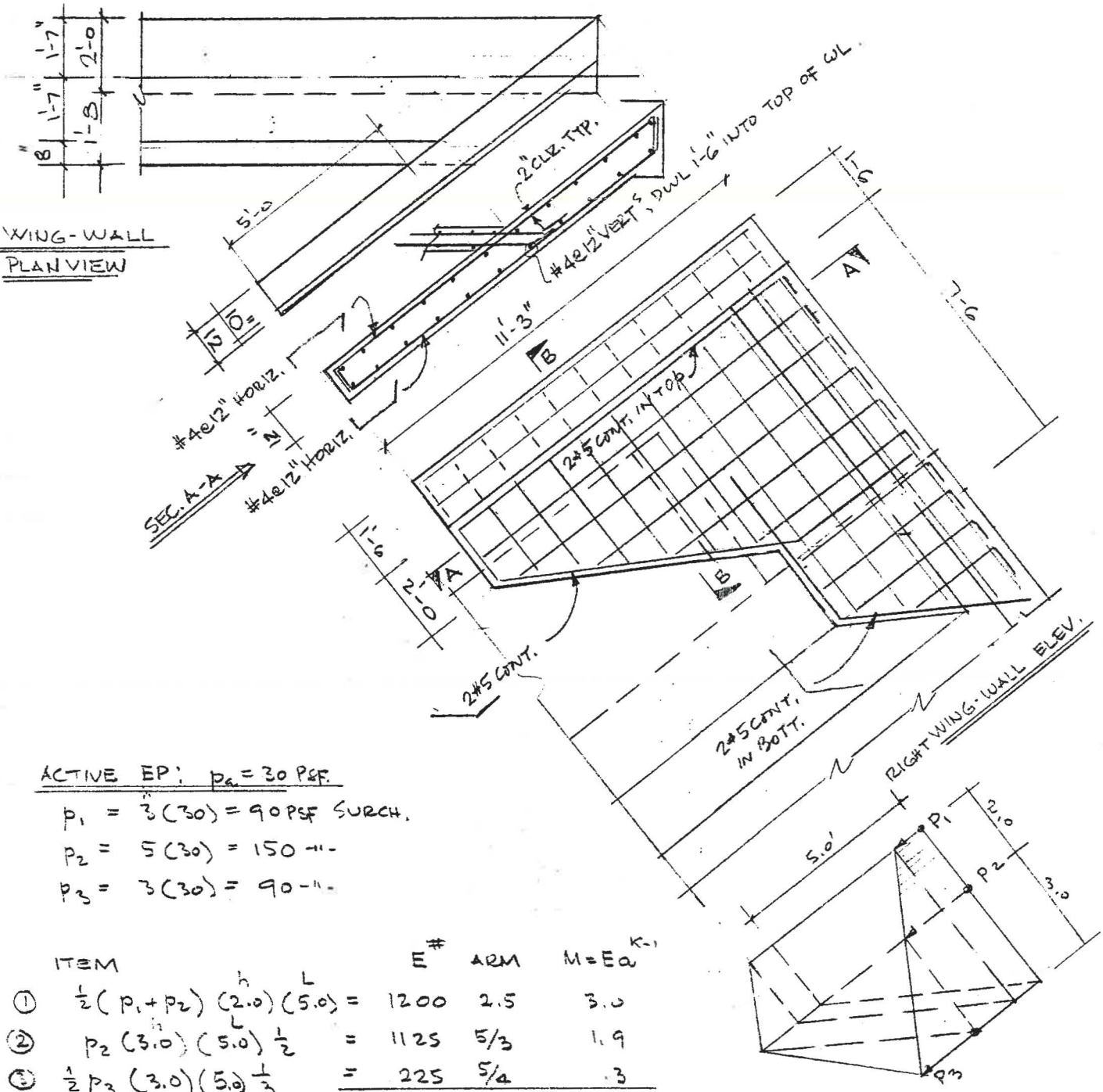

ACTIVE EP: $p_a = 30$ PSF

$p_1 = \frac{3}{3}(30) = 90$ PSF SURCH.

$p_2 = 5(30) = 150$ "

$p_3 = 3(30) = 90$ "

ITEM		E#	ARM	$M = Ea^{K-1}$
①	$\frac{1}{2}(p_1 + p_2)(2.0)(5.0)$	= 1200	2.5	3.0
②	$p_2(3.0)(5.0)\frac{1}{2}$	= 1125	5/3	1.9
③	$\frac{1}{2}p_3(3.0)(5.0)\frac{1}{3}$	= 225	5/4	.3
	Σ	2550#		5.2K'

EP - DIAG

ABUT. WING WALLS

ABUT #1 2T (CONT'D)

VERT. LOADS

ITEM	P (K)	@ FACE ARM	@ FACE MOM.	@ ℄ WALL ARM	@ ℄ WALL MOM.
① RAIL 30 (8.6)	.30	4.3	1.29	5.9	1.8
② CURB 1.5 (125) (8.6) =	1.61	4.3	6.93	5.9	9.5
③ WALL 2.0 (150) (8.7) =	2.61	4.35	11.35	5.95	15.5
④ WALL ½ 5.5 (150) (8.7) =	3.59	4.35	15.61	5.95	21.4
Σ_1	8.11		35.18		48.2
⑤ CORBEL 2.5 (150) 3.0 =	1.13	1.50	1.69	3.10	3.5
Σ_2	9.24		36.87		51.7

$d = 80" - 6" = 74"$ $a = 1.44$

(-)M = M_{FACE} = 37 K'

(-)A_s^{TOP} = M/ad = .35 IN^2 (#5's = .62 o.k)

HORIZ. REINF.:

$d = 12 - (2.0 + 0.5) = 9.5"$

M = 5.2 K' (LAT. BP) $a = 1.44$

A_s = M/ad = .80 IN^2 / 0.2 = #4 MIN

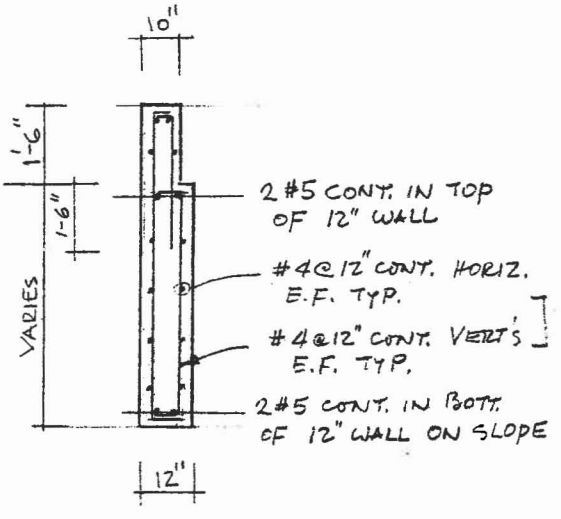

SEC. B-B

ABUT. WING WALLS

ABUT #1 (LEFT)

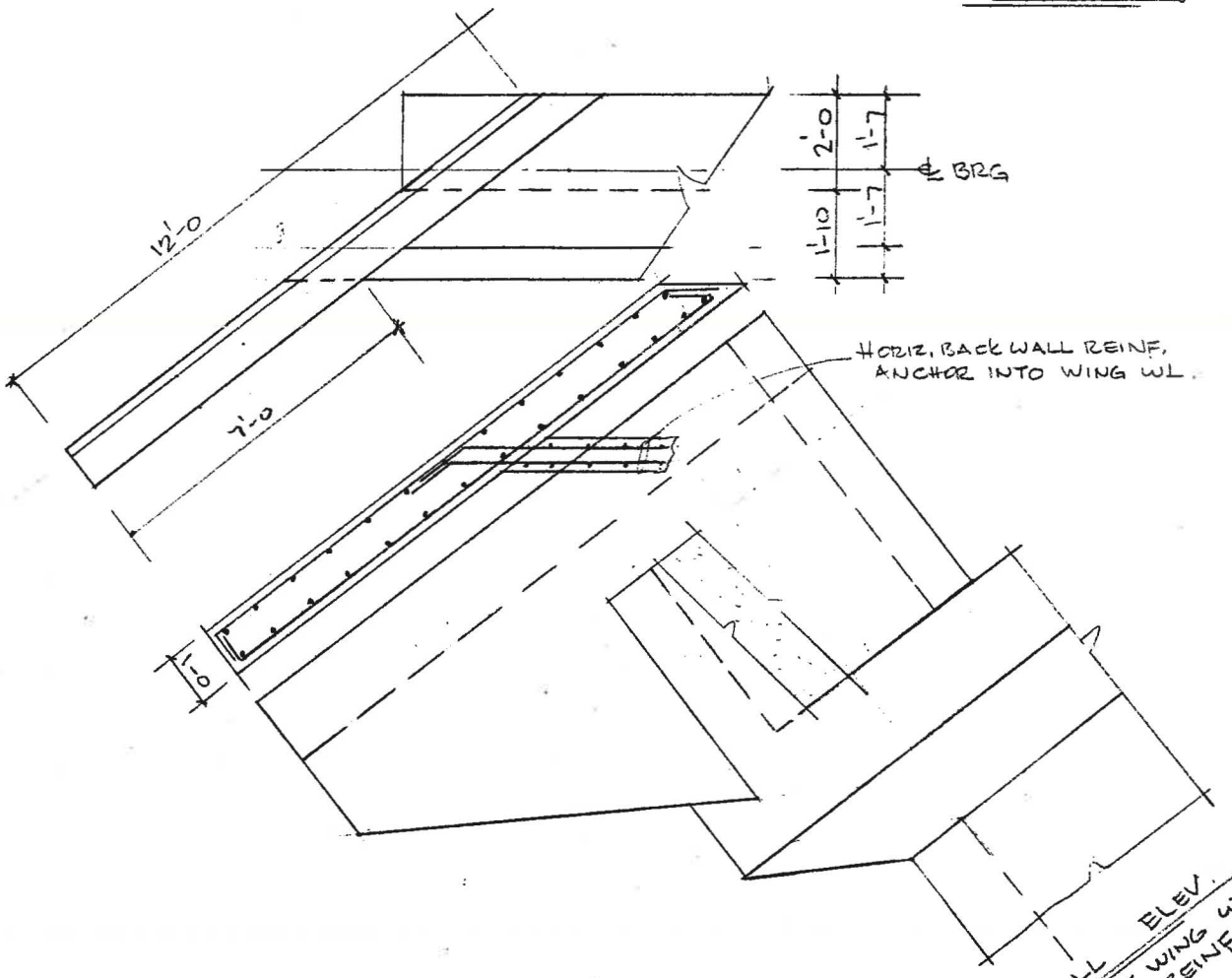

LEFT WING WALL ELEV. SEE RT. WING WALL FOR REINF.

ACTIVE EP: $p_a = 30$ PSF

$p_1 = 3(30) = 90$ PSF (SURCH)

$p_2 = 5(30) = 150$ "

$p_3 = 4.5(30) = 135$ "

ITEM		E^k	a FT (ARM)	$M^{k\text{-}i} = Ea$
①	$\frac{1}{2}(p_1 + p_2)\ 2.0\ (7.0)$ =	1.68	3.5	5.88
②	$p_2\ (4.5)\ (7.0)\ \frac{1}{2}$ =	2.36	7/3	5.51
③	$\frac{1}{2}\ p_3\ 4.5\ (7.0)\ \frac{1}{3}$ =	.71	7/4	1.24
	Σ	4.75		12.63

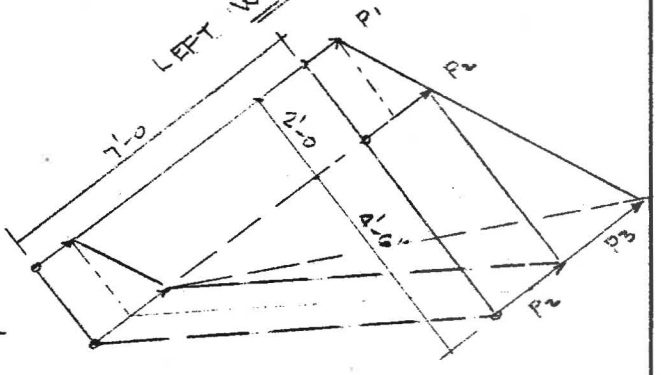

EP - DIAG.

ABUT. WING WALLS

ABUT. #1 LEFT (CONT'D)

VERT. LOADS

ITEM	P	@ FACE a	@ FACE MOM.	@ ℄ WALL a	@ ℄ WALL MOM.
① RAIL .030 (9.5)	.29	4.75	1.35	6.35	1.81
② CURB 1.5(.125) 9.6	1.80	4.80	8.64	6.40	11.52
③ WALL 2(.15) 9.6	2.88	4.80	13.82	6.40	18.43
④ " ½(4).15(6.6)	1.98	5.20	10.30	6.80	13.46
⑤ " 3.5(.15) 3.0	1.58	1.50	2.36	3.10	4.88
⑥ CORBEL: 2.0(.15) 3.0)	.90	1.50	1.35	3.10	2.79
⑦ " 1.8½(.15) 3.0)	.41	1.0	.41	2.60	1.05
Σ	9.84		38.23		53.94

$d = 108 - (18 + 4) = 86"$ $a = 1.44$

(-) $M = M_{FACE} = 38.2^{K'}$

(-) $A_s = M/ad = .31 in^2$ ($2\#5's = .62 in^2$)

HORIZ. REINF.:

$d = 12 - (2.0 + 0.5) = 9.5$

$M = Ea = 12.6^{K'}$ (LAT EP); $a = 1.44$

$A_s = M/ad = .92 in^2 / .2 = 4.6$ (5 #4 = 1.0

USE #4@12" HORIZ. CONT. E.F.

NOTE: FOR REINF. SEE RT. WING WALL

BENSON & GERDIN, INC. CONSULTING ENGINEERS PHONE (602) 264-0136	SHT. NO. 72 OF
	JOB NO. 2327 J
	BY AG DATE 9-22-84
	CHKD. DATE
PIER	REV.

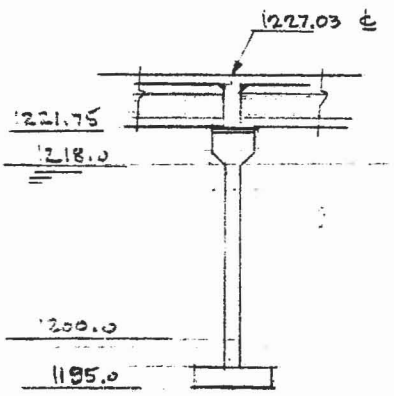

LOADING:

w_1 = GIRDER & SLAB etc. = 1614#/'

w_2 = DL 2 W/S etc = 370#/'

INTERM. DIAPH'S @ 1/3 PTS = 2.7K/EA

EQUIV. GIRDER THICKNESS t_e = 789/54 = 14.6'

PIER DIAPH t = WALL t = 18"

DISTRIBUTION OF CONCENTRATED LOADS:

PER ACI: BRG ASSUM 3'-0

4 x WL. THICKN = 4(1.5): 6'-0

9'-0

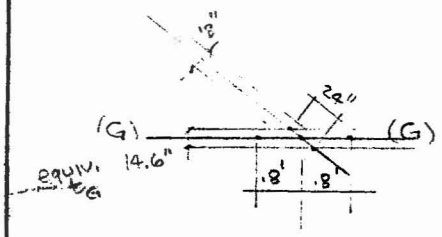

DL REACTION: L_{SAP} = 92.2, L CONT = 93.0

R_B^{DL} = $\overset{w_1}{1.614}$ (½ 92.2 + 0.8) 2 = 151.4K

$\overset{w_2}{.370}$ (93) $\overset{\text{CONTIN.}}{(1.25)}$ = 43.0

R_B^{DL} = 194.4K/GIRDER

LL. REACTION: (LANE GOVERNS)

γ = 1.364 SEE GIRDER DESIGN

$w = \frac{1}{2}\gamma(.64) = .44$ K/'

$P = \frac{1}{2}\gamma(26) = 17.7$ K

R_B^{LL} = w(93)(1.25) = 51.2

P = 17.7

68.9K/GIRDER

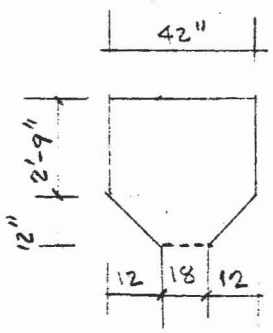

WT OF WALL CAP (CONT.:

W_{CAP} = 2.75 (3.5) .15 1.44 K/'

[1.0 (1.0) + 1.0(1.5)] .15 .44 "

1.88 K/'

WL. WT:

UNIT WT. = 1.5(.15) = 225#/L FT

H_{WL} = 21.0 FT

W_{WALL} = H(.225) = 4.73 K/L.FT

BOYANT WL. WT

(-) W = 1.5 (62.4)(18) = -1685#/' ↑ (-94#/□' UP)

PIER 4

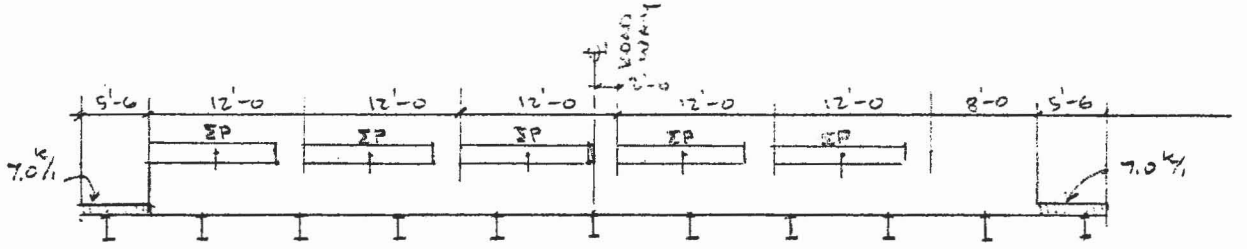

LOADING DIAG

SIDE WALK (60 PSF) L = 93'

w = .06 (1.25) L = 7.0 K/'

LANE LOAD: 640 #/' /LANE

W = .64 (1.25) L = 74.4 K/LANE

P = 26.0 K/LANE

ΣP = 100.4 K/LANE

ITEM	P	a	Pa
SW: 5.5 (7) =	38.5	36.75	1414.9
ΣP	100.4	17.0	1706.8
ΣP	100.4	29.0	2911.6
2-LANES Σ	239.3		6033.3
ΣP	100.4	5.0	502.0
3-LANES = .9 Σ	339.7 / 305.7		6535.3 / 5882
ΣP	100.4	-7.0	-702.8
4-LANES = .75 Σ	440.1 / 330		5179.5 / 4374
ΣP	100.4	-19.0	-1907.6
5-LANES = .75 Σ	540.15 / 405		3271.9 / 2944

FTG: L = 136 FT B = 12.5'

A = BL = 1700 □' $S_x = BL^2/6 = 38533$

2-LANES:

P^{LL} = 239 K M = 6033

$sp^{LL} = P/A \pm M/S = .14 \pm .16 = .30$ K/□'

3-LANES:

P^{LL} = 306 K M = 5882

$sp^{LL} = P/A \pm M/S = .18 \pm .15 = .33$ K/□' ←

4-LANES

P^{LL} = 330 M = 4374

$sp^{LL} = P/A \pm M/S = .194 \pm .114 = .31$ K/□'

5-LANES

P^{LL} = 405 M = 2944

$sp^{LL} = P/A \pm M/S = .238 \pm .076 = .315$ K/□'

PIER

LAT. FORCES FROM EQ.

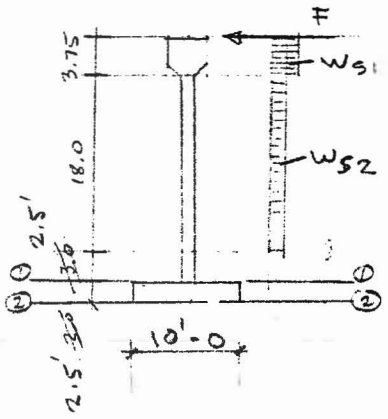

CASE 2: EQ. IN Y-DIRECTION SHT. 91

EQ_Y = 168 K SHT. 91

PIER LENGTH $10(7.5)/\cos 14^\circ + 6.0 = 130$ FT

$F = EQ_Y / L = 1.3$ K/'

W_{S1} = .09 (1.58) / 3.75 = .045 K/CF WT

W_{S2} = .09 (.225) = .020 "

AT SEC. ① - ①

M_{SEISM} = F (24.75)	=	32.20
W_{S1} (3.75) (22.88)	=	3.9
W_{S2} (18) (12)	=	4.3
		40.4 K'

TRY # 7 26" A_s = 1.20 n = 8

d = 18 - 2.7 = 15.3 in

$n\rho = 8(A_s)/12d$ = .052 k = .275 j = .908 f_s = 8.0

f_s = 24000 (GRADE 60); f'_c = 4000 F_c = 1600 PSI

REGISTING MOMENTS:

$M_{CONC} = f_c\, o\, l^2/\chi$ = 46.8 (1.33) = 62.3 K' > M

$M_{REBAR} = A_s f_s j d/12$ = 33.3 (1.33) = 44.3

f'_c = 4000 PSI

T_{WL} = 18" MIN.

#7 @ 6" VERTS, E.F.

VERT. LOADS:

DL: GIRDER (194.4 + DIAPHS 5.4) / 12.3 = 16.2 K/'

PIER DIAPH: .225 (4.7) (12.3 - 2.0) / 12.3 = .9

CAP 1.9 + WL. 4.7 = 6.6 } 23.7

FTG 2.5 (9) .15 = 3.4

SOIL SURCH. 7.5 (2.5) (10) = 1.9

ΣN_{DL} = 29.0

PIER

LAT. FORCES ⊥ FROM EQ. CONT'D

AT SEC. ① - ② (BOTT. OF FTG)

M_{SEISM} = F (26.75) = 34.8

W_{S1} (3.75) 24.88 = 4.2

W_{S2} (18) 14.0 = 5.1

M_{OT} = 44.1 K'/'

$M_{RESISTG}$ = N_{DL} (4.5) = 130.5 $FS = \frac{M_R}{M_{OT}} = 2.96$

$c = (M_R - M_{OT})/N$ = 2.0 FT = $\frac{1}{3} B_{FTG}$

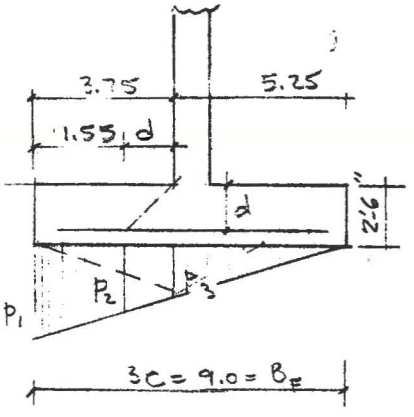

S.P. = $2N/3C$ = 6.44 K/LF = P_1 { $P_2 = P_1 \frac{7.25}{9.3} = 5.33$; $P_3 = P_1 \frac{5.25}{9.0} = 3.8$

d = 30 - 3.7 = 26.3 IN / 12 = 2.2 FT

CHECK FOOTING SHEAR @ d

V = ½ (P1 + P2) (1.55) = 9.1 K

f'_c = 3000 $V_{ALL} = .95\sqrt{f'_c}$ = 52 PSI

ALLOW. $V_c = 12(d) v_c$ = 16.9 K (1.33) = 21.8 K > V

BENDING IN FTG (FROM S.P.)

M = P_1 (3.75) ½ (3.75) ⅔ = 30.2

P_3 (3.75) ½ (3.75) ⅓ = 8.9

39.1 K'

USE ⟹ #7 @ 12

A_S = .601 IN^2 n = 8 ρ = .0152 d = 26.3

k = .160 j = .947 γ = 13.2

f_c = .4 (3000) = 1200 PSI f_s = 24.0 KSI (GRADE 60)

$M_{CONC.} = f_c(d^2)/\gamma$ = 62.8 K' (INCREASE 1.33) = 83.5 K' > M

$M_{REBAR} = A_s f_s j d / 12$ = 29.9 (1.33) = 39.8 > M

HEEL

W = 18.0 (62.4) + 2.5 (150) = 1373 #/'

L = 3.75 = T; (-) M = $wL^2/2$ = 9.7 K'

$A_{S(req)} = M/1.24(d)$ = .24 IN^2 d = 30 - (2+.4) = 27.6

USE #5 @ 12" (A_S = .31)

PIER

LAT FORCES ⊥ FROM EQ. (CONT'D)

ULTIMATE MOM. DIAG

@ 3.75':

M = 1.3 (3.75) = 4.9

.045 (3.75)²/2 = .3

M = 5.2 K'

@ 9.75

M = 1.3 (9.75) = 12.7

.045 (3.75) (7.88) = 1.3

.02 (6)²/2 = .4

M = 14.4 K'

@ 15.75

M = 1.3 (15.75) = 20.5

.045 (3.75) (13.88) = 2.3

.02 (12)²/2 = 1.5

M = 24.3 K'

@ 21.75

M = 1.3 (21.75) = 28.3

.045 (3.75 (19.88) = 3.4

.02 (18)²/2 = 3.2

M = 34.9

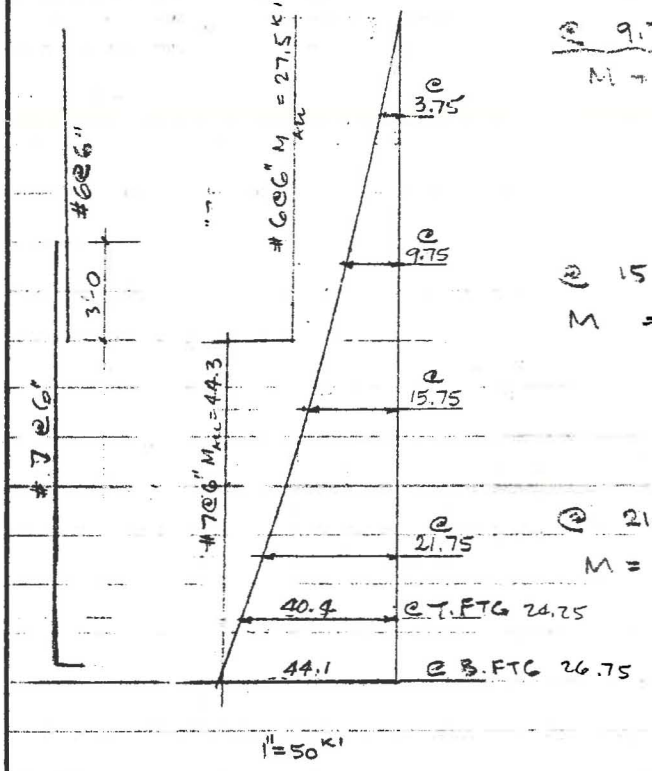

#6@6" A_s = .88 in² d = 15.3 n = 8

$n\rho$ = .0383 k = .241 j = .92 f_c^2/f_s = 9.0

f_s = 20 f_c = 1.6

$M_{CONC} = f_c d^2/f_s$ = 41.5 $(\frac{4}{3})$ = 55.3 K' (INCREASE)

$M_{REBAR} = A_s f_s j d/12$ = 20.6 $(\frac{4}{3})$ = 27.5 K'

BENSON & GERDIN, INC. CONSULTING ENGINEERS PHONE (602) 264-0138	SHT. NO. 77 OF
	JOB NO. 2327 J
	BY AG DATE 10-3-84
	CHKD. DATE
PIER	REV.

EQ - IN X-DIRECTION

EQ = 400^K (CASE ' SHT.)

h = (5.0 + 18 + 4) = ' " TO BOTT. OF FTG.

M_{OT} = h (EQ) = 10 '

S = 9 '(.136)²/6 = '

M/S = ± .40 ^K/DI

P_{DL} = 29.8 ^K A = 9.0 DI/FT

P/A = 3.22 ^K/DI N. CELT.

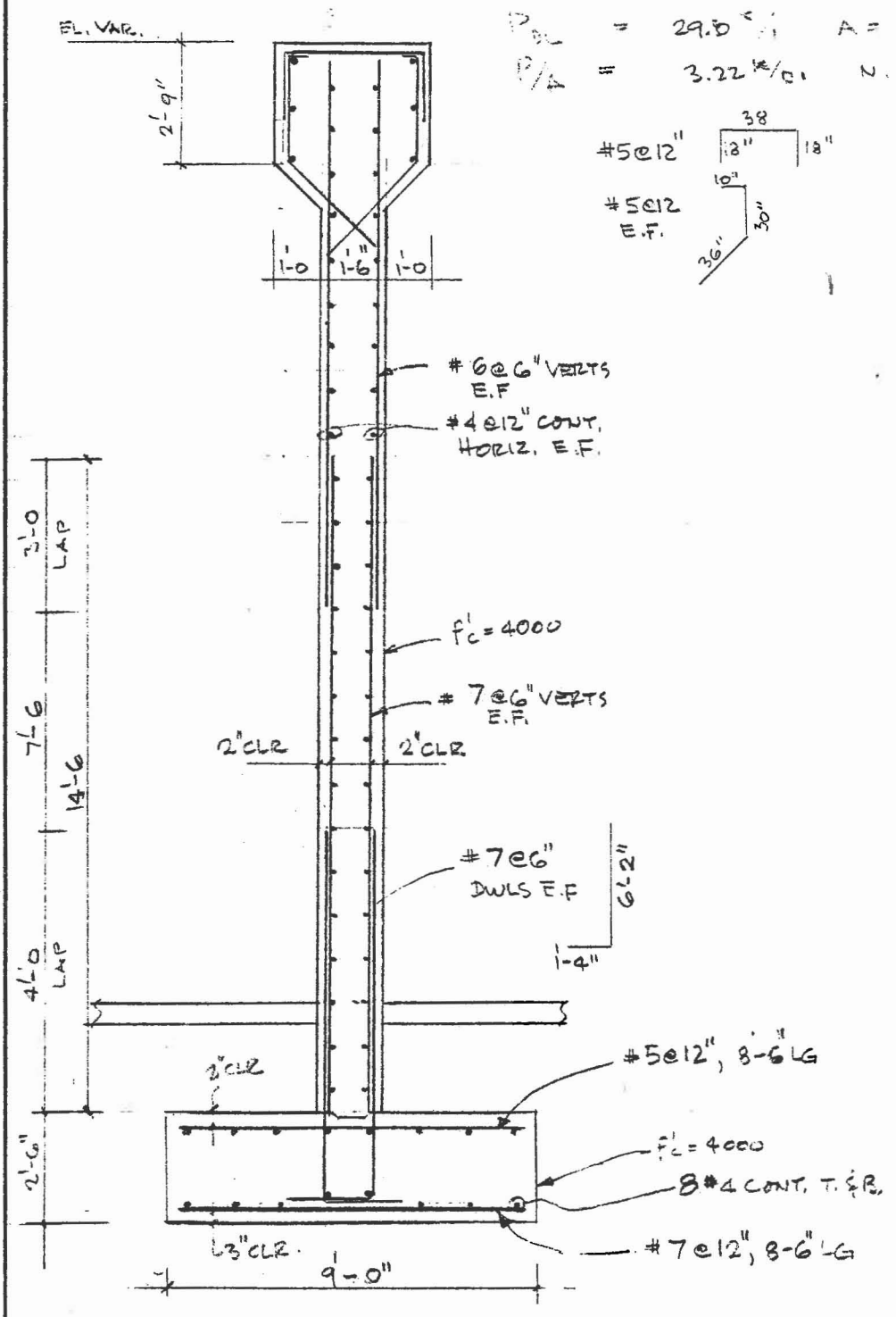

CHECK WALL & FTG DURING CONST.

w_h = 40 PSF (WIND)

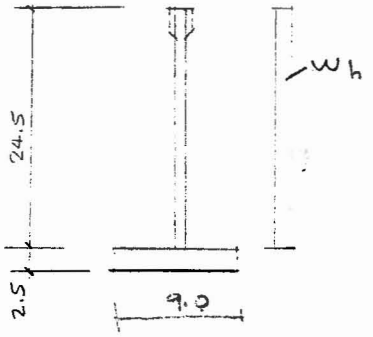

VERT. LOAD

CAP:	1.9 K/'
WALL	4.7
FTG 9.0 (2.5) .15	3.4
w_v =	10.0 K/'

$M_R = w_v (\frac{1}{2}) 9 = 45.0^{K'}$

$M_{OT} = w_h (24.5)(12.25 + 2.5) = 14.5^{K'}$

$C = (M_R - M_{OT})/w_v = 3.05$ (NO TENSION ZONE)

$q_p = w_v / 9 = 1.11$ K/ft

$M_{OT}(e)/(9)^2 = \pm 1.07$

2.18 OR .04 K/ft O.K.

BENDING IN WALL @ T. FTG

$M = w_h (24.5)^2/2 = 12.0^{K'}$

$d = 15.3$ $a = 1.76$

$A_s^{req'd} = M/ad = .45 in^2 < 1.20$ (#7 @ 6")

BENSON & GERDIN, INC. CONSULTING ENGINEERS PHONE (602) 264-0136	SHT. NO. 79 OF
	JOB NO. 2327 J
	BY AG DATE 10-4-84
	CHKD. DATE
DIAPH^S	REV.

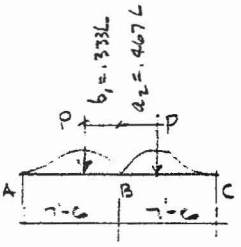

ABUT. DIAPH (CONT. ON SKEW)

NEG. LL-MOM:

$b_1 = .33L = 2.5FT$ $a_2 = 6.0 - 2.5 = 3.5FT = .467L$

FEM - COEFF^S:

$m_{LEFT} = .148$ $m_{RT} = .133$

AVE $m = .14$

$\therefore (-) M_{LL} = m_{AVE} P(L\measuredangle)$: $P = 16^k$ $L\measuredangle = 12.3$ FT

DIAPH. WT $W_{DL} = 4930$ #

$(-)M =$ DL: $W(L\measuredangle)/10 = 6.1^{k'}$

LL+I: $.14(16)12.3(1.3) = 35.8''$

$(-)M = 41.9^{k'}$

$h = \overset{GIRD}{54''} + \overset{SL}{8} - \overset{FLGE\ HT}{8} = 54'$ $d = h - 4 = 50''$ $a = 1.44$

$(-) A_s = M/ad = .58\ IN^2$ (2#5^S CONT $A_s = .62$)

POS. MOM.

$(+) M = WL\measuredangle/8 = 7.6^{k'}$

LL+I $= \frac{1}{4}(16)\ 12.3(1.3) = 64.0$

$71.6^{k'}$

$d = 50$ $a = 1.44$

$(+) A_s = M/ad = 1.0\ IN^2$ (2#7 $A_s = 1.20\ IN^2$

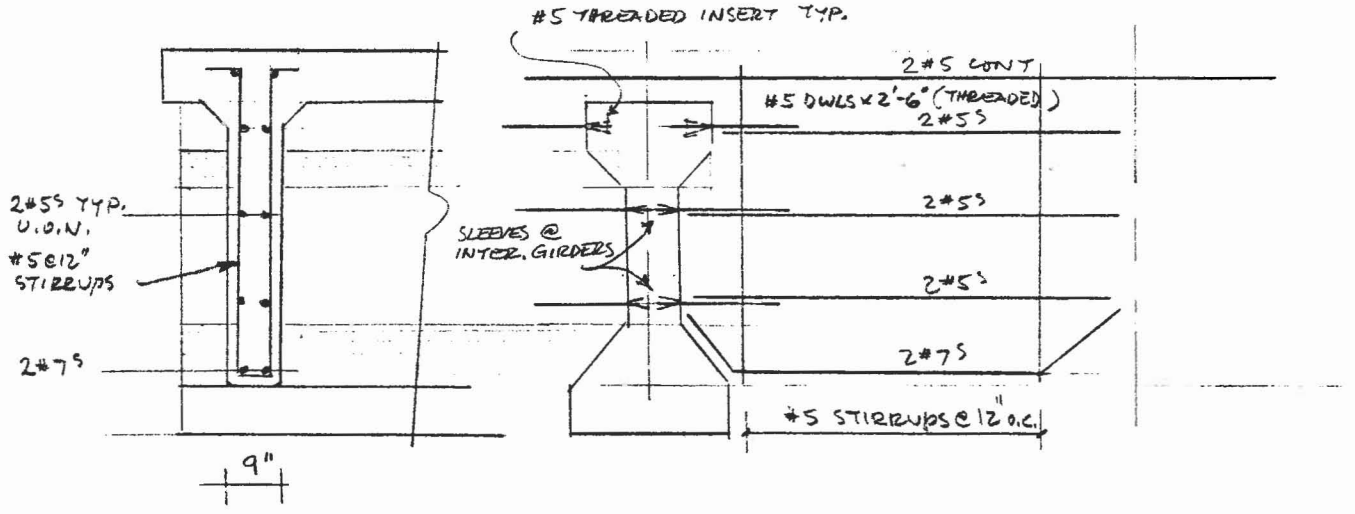

INTERM. DIAPH (⊥ GIRDERS)

W_{DL} = 2.7^K L = 7.5 FT P_{LL} = 16^K

(+) M = W_{DL} L/8 = 2.5^{KI}

LL+I: $\frac{1}{2}$ P(L) 1.3 = 39.0

(+) M = 41.5^{KI}

h = 45 − d = 43 a = 1.44

(+) A_s = M/ad = .62 IN^2 (2#6's A_s = .88 IN^2)

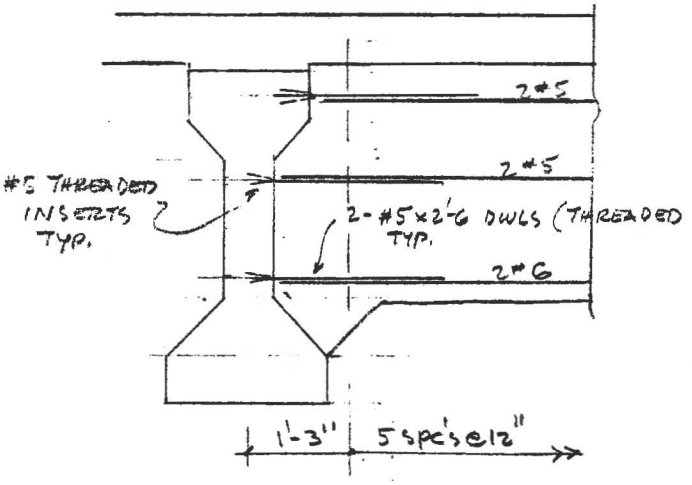

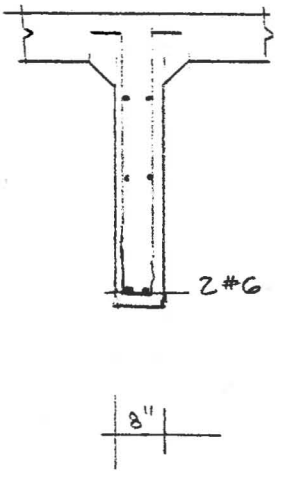

APPROACH SLAB

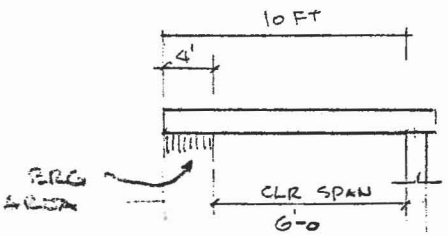

SPAN LENGTH ON SKEW

$\alpha = 52.519°$

$L'_{CLR} = 6.0$ FT

$L^{\alpha}_{CLR} = L'/\cos\alpha = 9.9 \sim 10.0$ FT

DESIGN SPAN $S = L^{\alpha}_{CLR} + h^{12"} = 11.0$ FT

MAIN REINF. ⊥ TRAFFIC

$E = 4 + 0.06S = 4.66$ FT

$P = 16/E = 3.43^{K}$

w: 12" SLAB $= .15^{K}/\square'$

$$(+M = w S^2/8^{2.3} + (LL+I) P\frac{S}{A}^{12.3}(1.3) = 14.6^{K'}$$

$d = 12 - (3 + 0.6) = 8.4$ IN

#8 @10" $A_s = .95 IN^2$ $d = 8.5$ $n = 8$

$np = .0745$ $k = .319$ $j = .894$ $^2/_{kj} = \gamma = 7.0$

f'_c REQ'D $= \gamma M/1.4 d^2 = 3550$ PSI < 4000

$f_c = 1.6$ $f_s = 24.0$

$M_{CONC.} = f_c d^2/\gamma = 16.5^{K'}$

$M_{REBAR} = A_s f_s j d/12 = 14.44^{K'}$ 11.1% OVER 0.K

DIST. REINF. IN TOP OF SLAB:

$A_s = .002(12)12 = .288$ (#5@12" $A_s = .31$)

USE #5@12" E.WAY

DIST. REINF. IN BOTT. OF SLAB:

$S = 11.0$ FT PERCENT, $100/\sqrt{S} = 30.2\% < 50\%$

$A_s = \frac{30.2}{100}(.95) = .29 IN^2$ (#5 @12" = .31)

USE 12" SLAB W / #9@12" BOTT. ⊥ TRAFFIC

#5@12" BOTT DIST. REINF. ∥ TRAFFIC

#5@12" E.W. TOP REINF.

DISTRIBUTION OF LAT. FORCES

WALL STIFFNESS: (STRONG AXIS)
BENDING DEFL.: $\Delta_m = PH^3/3EI$
SHEAR DEFL.: $\Delta_v = PH(1.2)/.4EA$
STIFFNESS $k = 1/(\Delta_m + \Delta_v)$

(a) ABUT. WALL:

$H \cong 26.5$ FT $\quad \Sigma L = \frac{75}{\cos\alpha} + 2(3.0) = 123+6 = 129$ FT

$f'_c = 3000$ $\quad E = 3200$ Ksi $\quad I = 24(L)^3/12$ $\quad P = 1.0^K$

$A = 24(L)$

$\Delta_m = (26.5)^3/3(EI) = \left(\frac{h}{L}\right)^3 4$

$\Delta_v = 26.5(1.2)/.4EA = 3h/L$

$24E_c\Delta_m = \left(\frac{h}{L}\right)^3(4) = .0347$

$24E_c\Delta_v = 3h/L = .6163$

$24E(\Delta_m+\Delta_v)_x = .6510$

RELATIVE $k_x = 1.536$

(b) PIER WALL:

$H \cong 26.5$ FT $\quad \Sigma L = 129$ FT $\quad I = 18(L^3/12$ $\quad A = 18(L)$

$24E_c\Delta_m = \frac{24}{18}\left(\frac{h}{L}\right)^3(4) = .0462$

$24E_c\Delta_v = \frac{24}{18}(h/L)\,3 = .8217$

$18E_c(\Delta_m+\Delta_v) = .8679$

RELATIVE $k_x = 1.152$

ELASTOMERIC PAD STIFFNESS

$\Delta = PT/EA$ (SEE DUPONT P6.10)

$P = 1.0^K$ $\quad T = 2"$ $\quad E = 1110$ Ksi (50-HARDNESS)

$A = 220$ IN^2 $\quad E_c = 3200$

$24E_c\Delta = \frac{1.0(2.0)}{.111(220)}(24)E_c = 6347$

RELATIVE $k = .000158$ PER PAD

$\Sigma k = \sum_1^N (k) = .00173$

DISTRIBUT. OF LAT. FORCES CONT'D

WALL STIFFNESS IN WEAK-AXIS

PIER:

$24E_c\Delta_m = \left(\frac{26.5}{1.5}\right)^3 8/129 = 342$

$24E_c\Delta_v = (26.5/1.5)\ 3/129 = 1$

$24E_c(\Delta_m+\Delta_v) = 343 \quad k_y = .0029$

ABUT: $\Delta_m = \dfrac{\left(\frac{26.5}{2.0}\right)^3 4}{12(129)\,E_c}$

$24E_c\Delta_m = \left(\frac{26.5}{2}\right)^3 \frac{8}{129} = 144.26$

$24E_c\Delta_v = \left(\frac{26.5}{2}\right) 6/129 = .6163$

$24E_c(\Delta_m+\Delta_v) = 144.88 \quad k_y = .0069$

COMBINED STIFFNESS ELASTO PAD & ABUT.

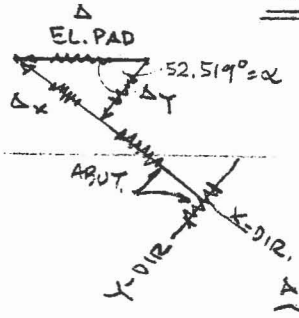

PAD:

$24E_c\Delta_{PAD} = 6347/11 = 577$

$24E_c\Delta_y = \cos\alpha(\Delta) = 351$

$24E_c\Delta_x = \sin\alpha(\Delta) = 458$

ABUT + PAD:

$24E_c\Delta_x = .65 + 458 = 459 \quad k_x = .0022$

$24E_c\Delta_y = 145 + 351 = 496 \quad k_y = .0020$

BENSON & GERDIN, INC. CONSULTING ENGINEERS PHONE (602) 264-0136	SHT. NO. 84 OF
	JOB NO. 2327 J
	BY AG DATE 9-24-84
LAT. FORCE DIST.	CHKD. DATE
ELASTO. PAD & PIER	REV.

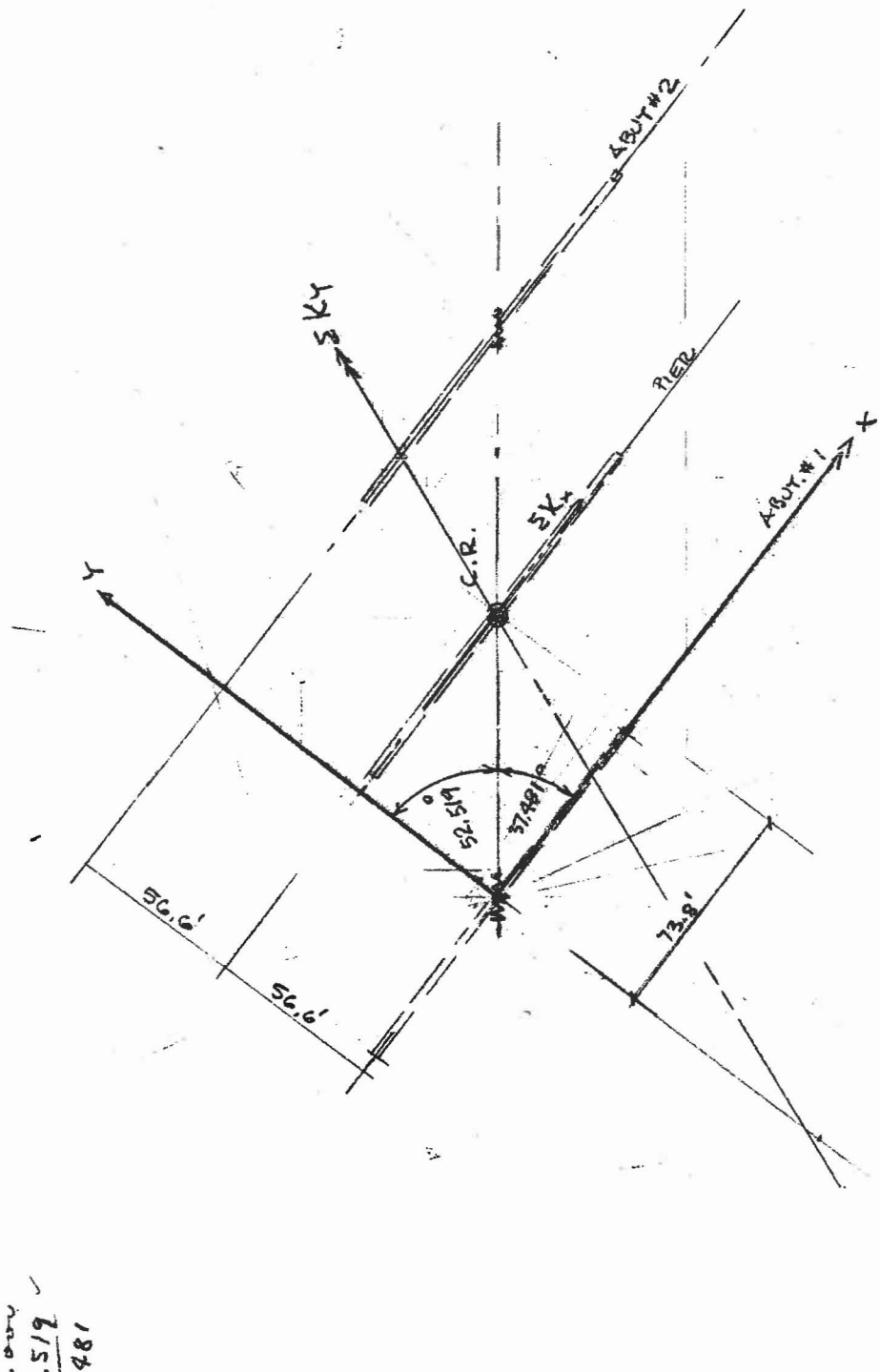

90.000
52.519
37.481

LAT. FORCE DISTRIBUTION

ELASTO PAD & PIER

X-AXIS // WALLS

EL.	k	α	sin α	cos α	k_y	k_x	d_y	d_x	k_{xx}	$k_{xx}d_y$	k_{yy}	$k_{yy}d_x$	k_{xy}
PAD	.00173	37.481°			.00105	.00137	0	0	.00109	0	.00064	0	.000835
PIER X	1.1520	0	0	1.0	—	1.152	56.6	0	1.15200	65.2032	0	0	0.0
PIER Y	.00290	90°	1	0	.00290	—	0	73.8	0.0	0.0	.00290	.21402	0.0
PAD	.00173	37.481°			.00105	.00137	0	0	.00109	0	.00064	0	.000835
Σ						1.1542			1.15418	65.2032	.00418	.2402	.001670

$$\Sigma k_x = [(\Sigma k_{xx})^2 + (\Sigma k_{xy})^2]^{1/2} = 1.1542 \quad \text{EQ.2}$$

$$\Sigma k_y = [(\Sigma k_{yy})^2 + \text{-"-}]^{1/2} = .0045 \quad \text{EQ.3}$$

SLOPE OF Σk_x

$$\text{TAN } \alpha_x = (\Sigma k_{xy} \div \Sigma k_{xx}) = .001447 = .083° \quad \text{EQ.4}$$

SLOPE OF Σk_y

$$\text{TAN } \alpha_y = \Sigma k_{yy} \div \Sigma k_{yx} = 2.503 = 68.° \quad \text{EQ.5}$$

INTERCEPTS OF Σk_x

$$Y_x = \Sigma d_y k_{xx} \div \Sigma k_{xx} = 56.493 \text{ FT} \quad \text{EQ.6}$$

$$X_x = -\Sigma d_y k_{xx} \div \Sigma k_{xy} = -39043.8 \text{ FT} \quad \text{EQ.7}$$

INTERCEPTS OF Σk_y

$$Y_y = -\Sigma d_x k_{yy} \div \Sigma k_{yx} = -128.156 \quad \text{EQ.8}$$

$$X_y = \Sigma d_x k_{yy} \div \Sigma k_{yy} = 52.201 \quad \text{EQ.9}$$

LOCATE C.R. (CENTER OF RIGIDITY)

$$X_k = (Y_y - Y_x) \div (\tan\alpha_x - \tan\alpha_y) \quad \text{EQ.12}$$

$$= (-128.156 - 56.493) \div (.001447 - 2.503) = 73.8$$

$$Y_k = \tan\alpha_x (X_k) + Y_x \quad \text{EQ.10}$$

$$= (.001447)(73.8) + 56.493) = 56.0$$

CHECK $Y_k = \tan\alpha_y (X_k) + Y_y$ EQ.11

$= 2.503(73.8) - 128.156 = 56.6$ } CLOSE O.K.

LAT. FORCE DISTRIBUTION

ELASTO. PAD & PIER CONT'D

COMPONENTS OF FORCE IN Y-DIR.

$\alpha_x = .083°$ $\alpha_y = 68°$

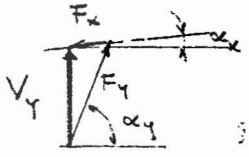

$F_x = V_y \cos\alpha_y \div \sin(\alpha_y - \alpha_x) = .40 V_y$ EQ.13

$F_y = V_y \cos\alpha_x \div$ " $= 1.08 V_y$ EQ.14

COMPONENTS OF FORCE IN X-DIR.

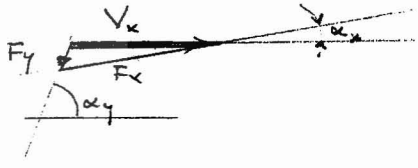

$F_x = V_x \sin\alpha_y \div (\sin\alpha_y - \alpha_x) = 1.0 V_x$ EQ.15

$F_y = V_x \sin\alpha_x \div ($ " $) = .002 V_x$ EQ.16

COMBINED ELASTO. PAD, ABUT.'S & PIER

ELEM	k	α°	sinα	cosα	k_{sin} k_y	k_{cos} k_x	d_y	d_x	k_{xx}	k_{xxdy}	k_{yy}	k_{yydx}	k_{xy}
#1 X ABUT	.0022	0	0	1	–	.0022	0	0	.0022	0	–	–	0
#1 Y ABUT	.0020	90°	1	0	.0020	–	0	0	–	0	.0020	–	0
PIER X	1.1520	0	0	1	–	1.1520	56.6	0	1.1520	65.2	–	–	0
PIER Y	.0029	90°	1	0	.0029	–	0	73.8	–		.0029	.214	0
#2 X ABUT	.0022	0	0	1	–	.0022	113.2	0	.0022	.249	–	–	0
#2 Y ABUT	.0020	90°	1	0	.0020	–	0	147.6	–	–	.0020	.295	0
Σ									1.1564	65.449	.0069	.509	0

$\Sigma K_x = \left((\Sigma k_{xx})^2 + (\Sigma k_{xy})^2\right)^{1/2} = 1.1564$

$\Sigma K_y = \left((\Sigma k_{yy})^2 + $ " $\right)^{1/2} = .0069$

SLOPE OF Σk_x

$\tan\alpha_x = \Sigma k_{xy} \div \Sigma k_{xx} = 0$

SLOPE OF Σk_y

$\tan\alpha_y = \Sigma k_{yy} \div \Sigma k_{xy} = \infty$

LAT. FORCE DIST.

PIER & ABUT'S (COMBINED W/EL. PADS) CONT'D

INTERCEPTS OF Σk_x

$Y_x = \Sigma d_y k_{xx} \div \Sigma k_{xx} = 65.449 \div 1.1564 = 56.6$

$x_x = -\Sigma d_y K_{xx} \div \Sigma k_{xy} = \infty$

INTERCEPT OF Σk_y:

$Y_y = -\Sigma d_x k_{yy} \div \Sigma k_{yx} = \infty$

$x_y = \Sigma d_x k_{yy} \div \Sigma k_{yy} = .509 \div .0069 = 73.8$ FT

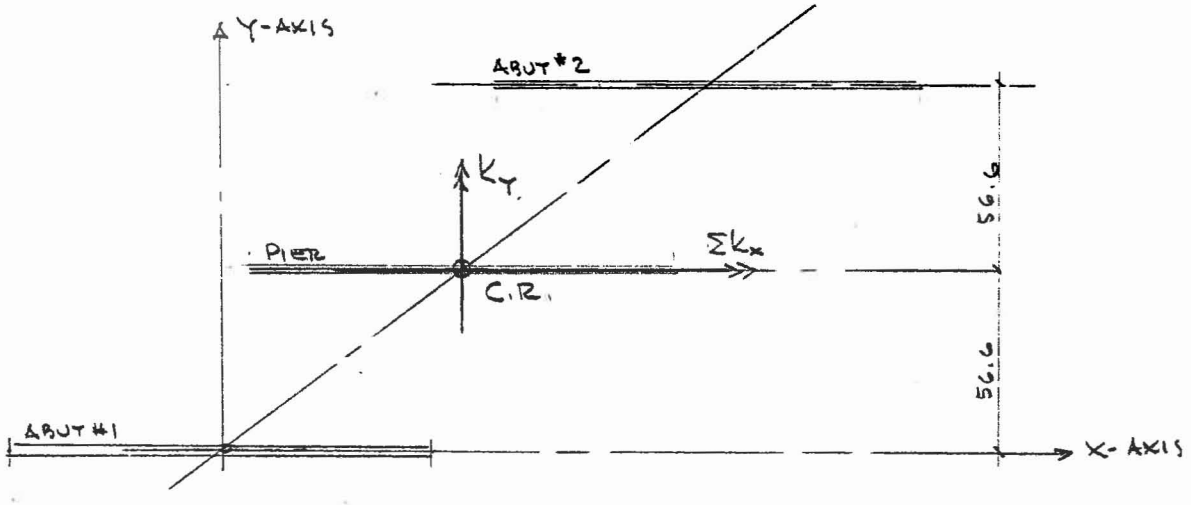

$\alpha_x = 0 \quad \alpha_y = 90°$

COMPONENTS OF FORCE IN Y-DIR:

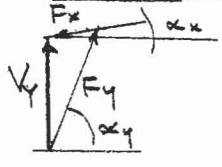

$F_x = 0 \quad F_y = V_y$

COMPONENTS OF FORCE IN X-DIR.

$F_x = V_x \quad F_y = 0$

LAT. FORCES (LF)

LONGITUDINAL FORCES SEC. 1.2.13

ASSUME ONE-WAY ROAD $\therefore$ 5-LANES $R = .75$

LANE LOAD $.64^K/_L$ & $P = 18^K$ (5.0%)

LENGTH $L = 2(93) = 186$ FT

$$LF = .05\,(.75)\left[(186)\left(\tfrac{5}{5}\right)(.64) + 5(18)\right] = 25.7^K$$

$\alpha = 52.519°$

COMPONENT $LF_y = LF(\cos\alpha) = 15.6^K$

$LF_x = LF(\sin\alpha) = 20.4^K$

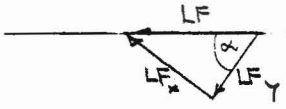

DISTRIBUTION TO PIER & ABUT'S (COMBINED W/ PADS)

ELEM	k_x	LF_x	k_y	LF_y
ABUT. #1 & PADS	.0022	.04	.0020	4.5
PIER	1.1520	20.32	.0029	6.6
ABUT #2	.0022	.04	.0020	4.5
Σ	1.1564	20.4	.0069	15.6

DISTRIB TO PIER & PADS ONLY

ELEM.	k_x	LF_x	k_y	LF_y
PADS #1	.00137	.025	.00105	3.64
PIER	1.15200	20.360	.00290	10.05
PADS #2	.00137	.025	.00105	3.64
	1.1542		.0045	

$$F^{PAD} = \left[(LF_x)^2 + (LF_y^2)\right]^{1/2} = 3.64^K$$

PAD MOVEMENT (Δ^{LF}) : (11 - PADS)

$$\Delta = F(T)/EA = \frac{3.64(2) \;/\; (.11(220))}{11.0} = .03\,IN$$

LAT. FORCES (EQ)

$\alpha = 52° 31' 10"$

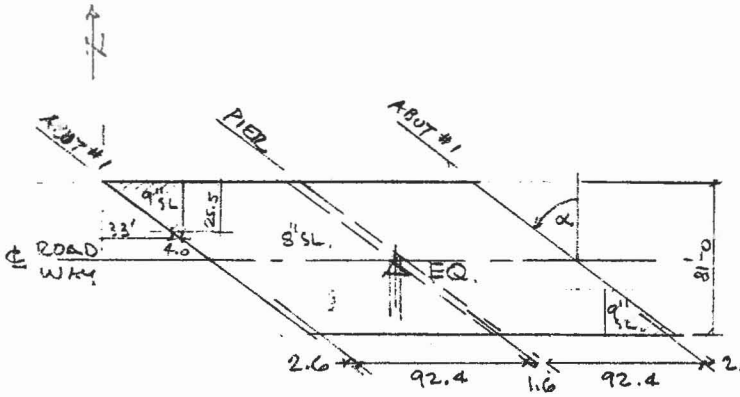

SEISMIC COEFF. PER SOILS REPORT:

A = .22 g PG. 6 (ZONE II)

FIG. ~~2.20~~ : 3.21.1D

C = .09

F = 1.0 SEC. ~~2.20~~ 3.21.1

SEISMIC FORCE EQ = WT (C) F

EQUIV. STATIC FORCE METHOD

WTS:

9" SL @ ACUTE CORNER $\Delta t = 1" = 12.5$ PSF.

A = 33(25.5) = 840
4(25.5) = 102
942 (12.5)(2) = 23.6 K

ABUT. DIAPHS:

2(10) (4.93) = 98.6 K

PIER DIAPH:

b = 18" (EXTENSION OF PIER WALL) = 225 PSF
H ≈ 5.0 FT L ≈ 11(7.5)/cos α = 135.6 FT
WT = 225 (H) L = 152.5 K

SLAB OVERHG @ ABUTS 8" SL + W/S = 125 PSF

(2.6 - 0.3) 81 (125) (2) 46.6 K

SLABS OVER PIER DIAPH.

[1.6 - 2(.3)] 81 (125) 10.1 K

EXT. GIRDERS DL1 + DL2 = 2056 + 101 = 2157 #/'

L = (2(92.4) + 4(4/12)) = 186.1 FT

2 (186.1) 2157 803.0

INT. GIRDERS DL1 + DL2 = 1903 L = 186.1 N = 9

N(L) w 3187.3

LAT FORCES (EQ)

WTS CONT'D

INTERM. DIAPHS

N = 40 W = 2.67 ; N(W) 106.8 K

ΣWT : = 4428.5 SAY 4430 K

ΣEQ = CF ΣWT = .09 ΣWT = 400 K

FORCE DISTRIBUTION :

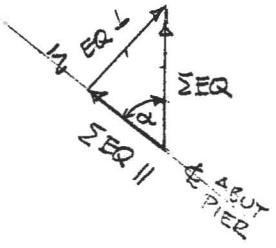

α = SKEW ∠

ΣEQ. ⊥ = ΣEQ (sinα) = 317 K

ΣEQ // = ΣEQ (cos α) = 243 K

LAT. FORCE @ ABUT. GIRDER BRG CONX. :

ASSUME 1/3 TO EA. ABUT. & PIER :

N = 11 GIRDERS

$F_{EQ}^{NS} = \frac{1}{3}\frac{1}{11}(400) = 12.1^{K}$ / GIRDER

(SEE BELOW)

CHECK AGAINST AASHTO 1983

"GUIDE SPECS FOR SEISMIC DESIGN OF HIGHWAY BRIDGES"

ACCEL. COEFF A = .09 } SEC. 4.6 SEISMIC COEFF. C = 0.2

SEISM. PERF. CATEGORY A }

LAT. FORCE @ ABUT. GIRDER BRG. CONX.

$P_{DL} \cong 100^{K}$/GIRDER C = 0.2

GOVERNS → $F_{EQ} = Pc = 20.0^{K} > 12.1$ /GIRDER

DESIGN DISPLACEMENTS SEC. 4.9.1

L = 186 FT H = 26 FT

$N_{REQ} = 8 + .02L + .08H \cong 14" < 19"$ (AVAIL.) O.K.

LAT. FORCES (EQ.)

DISTRIBUTION OF EQ. FORCES, EQ = 400 K

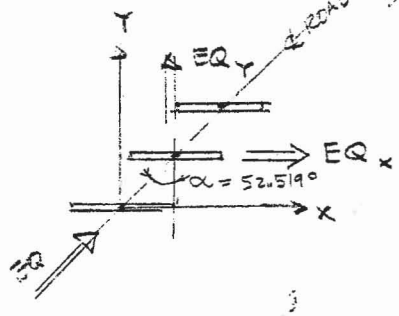

CASE 1: EQ. IN X-DIRECTION

DIST. TO PIER & ABUTS: $EQ_x = EQ(k_x)/\Sigma k_x$

	k_x	EQ_x =
ABUT #1	.0022	.80
PIER	1.1520	400
ABUT #2	.0022	.80
Σ	1.1564	401.6

TO PAD .8 (sin α) = .60 K
TO GIRDERS .8 (cos α) = .50 K

NOTE: CASE 1 & 2 DO NOT ACT SIMULTANEOUSLY

CASE 2: EQ IN Y-DIRECTION

$EQ_y = EQ\,k_y/\Sigma k_y$

	k_y	EQ_y =
ABUT #1	.0020	116
PIER	.0029	168
ABUT #2	.0020	116
Σ	.0069	400

TO PAD: 116 (cos α) = 71 K
TO GIRD: 116 (sin α) = 92 K
GOVERNS →
FOR CONX. FORCE SEE SHT. 90

CASE 3: EQ ∥ ℄ ROADWAY α = 52.519°

$EQ_x = EQ(\sin\alpha) = 318$ K
$EQ_y = EQ(\cos\alpha) = 244$ K
} ACTING SIMULT.

AT ABUTS

TO PADS		TO GIRDERS	
$EQ_x \sin\alpha$	.50	$EQ_x \cos\alpha$	.4
$EQ_y \cos\alpha$	43.20	$EQ_y \sin\alpha$	56.3
Σ	43.7	Σ	56.7

NOT CRITICAL SEE CASE 2

SIMULT. IN X- & Y- DIR.

	k_x	EQ_x	k_y	EQ_y
ABUT	.0022	.60	.0020	71
PIER	1.1520	317.	.0029	103
ABUT	.0022	.60	.0020	71
	1.1564	318.2	.0069	245

DIST. CASE 3 EQ TO PADS & PIER ONLY

	k_x	EQ_x	k_y	EQ_y
PAD	.00137	.40	.00105	57
PIER	1.1520	317.4	.00290	157
PAD	.00137	.4	.00105	57
Σ	1.1542	318.2	.00450	271

TO PADS:

$\left((EQ_x)^2 + (EQ_y)^2\right)^{1/2} = \left(.4^2 + 57^2\right)^{1/2} = 57$ K

NOT CRITICAL SEE CASE 2

PAD DEFORMATION EQ.:

$$\Delta^{EQ} = \frac{F(T)}{EA(N)} = \frac{71\,(2)}{.11(220)11} = .53\text{IN} \,/\, 1.33 = .40\text{ IN} < \tfrac{1}{2}T \text{ o.k.}$$

GROUP LOADINGS

GROUP II DL + EP + B + SF + W 125% f_{allow}

(a) TRANSVERSE (SUPERSTRUCTURE)

DL = 0 EP = 0 B = 0 SF = WIND

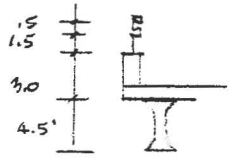

$w = (4.5 + 3.0 + 0.5)\,50 = 400$ #/' > 300

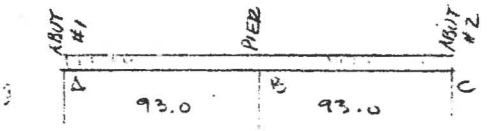

DIAPH ACTS AS DEEP BM

$W = w[(2)(93 + 2.8)] = 77^K$

(b) SUBSTRUCT. (FROM SUPER-STRUCT.)

$W_{TR} = 8(50) = 400$ #/' $W_{TR} = 77^K$

$W_{LONG.} = 8(12) = 96$ #/' $W_{LONG} = 19^K$

$WL_{TRANSV} = 100$ #/' } SIMULT, $WL_{TR} = 20^K$

$WL_{LONG} = 40$ #/' } SIMULT, $WL_{LONG} = 8^K$

GROUP III DL + (L+I) + CF + EP + B + SF + .3W + WL + LF 125%

(a) TRANSVERSE TO SUPERSTRUCT.

$0.3W = 23^K$

$WL = 20^K$

(b) SUBSTRUCT. (FROM SUPERSTR.)

$.3W_{TR} = 23^K$ $.3WL_{TR} = 6^K$

$.3W_{LONG} = 6^K$ $.3WL_{LONG} = 2.4^K$

LF.: ASSUME 5-LANES; $\therefore R = .75$; $\Sigma L = 2(95.8) = 191.6$ FT

$w = 5(.64) = 3.20$ $P = 18(5) = 90^K$

$LF = \left(\Sigma L\left(\frac{w}{.703}\right) + P\right)R = 327^K$

POST-TENSIONED GIRDER
ALTERNATE

AT ℄ SPAN

M_G = 871 K'

M_{DL} = 92[illegible] K'

M_{LL+I} = [illegible] 1577

ASSUME P/S - FORCES SAME AS P/S [illegible] SHT 92

N = 42 STRANDS

$e_{\text{℄}}$ = 19.87 IN

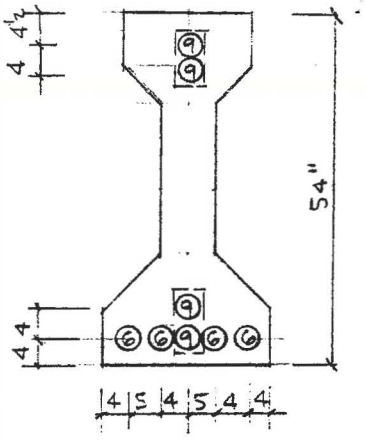

ECCENTRICITIES

AT ℄: $e^{\text{℄}} = 24.73 - (24(4) + 18(6))/42 = 19.87$ IN

AT END: $e_{END} = 24.73 - (24(4) + 18(47.5))/42 = 2.09$ IN

$$e_x = e_{\text{℄}} - (e_{\text{℄}} - e_{END})\left(\frac{a}{c}\right)^2$$

17.78

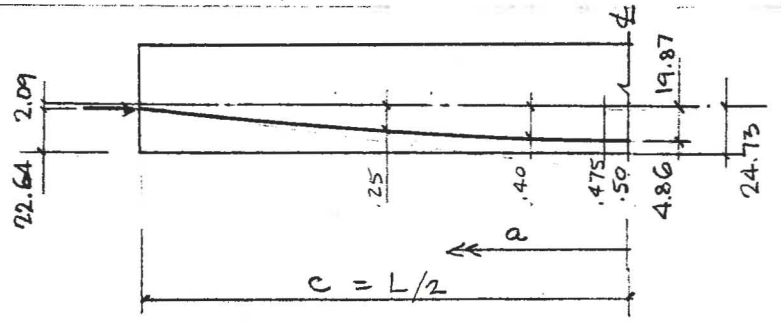

4.44

$e^{.25} = 19.87 - 17.78\left(\frac{1}{2}\right)^2 = 15.43$ IN

17.1

$e^{.40} = 19.87 - 17.78\left(\frac{1}{5}\right)^2 = 19.16$ "

17.4

$e^{.475} = 19.87 - 17.78\left(\frac{1}{20}\right)^2 = 19.83$ "

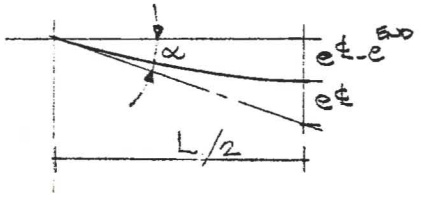

$L = 93$ FT $\quad \alpha = 4e^{17.78}_{\text{℄}}/L = .064$ (RAD.)

SEC. 1.6.7 $\quad L_x = \frac{1}{2}L$ AT ℄

$\mu = .25 \quad k = .0002$ /FT (GALVANIZED RIGID)

$KL_x + \mu\alpha = .0093 + .016 = .0253 < .3$

$T_o^x e\text{℄} = T_o(1 + KL_x + \mu\alpha) = .975\,T_o$

FRICTION LOSS TO MID SPAN:

$d = (1 - .974)\underbrace{.70 f'_s}_{189} = .0247\,(189) = 4.7$ ksi

~5.0

BENSON & GERDIN, INC. CONSULTING ENGINEERS PHONE (602) 264-0136	SHT. NO. 94 OF
	JOB NO. 2327 J
POST-TENSIONED GIRDER	BY AG DATE 10-5-84
	CHKD. DATE
ALTERNATE	REV.

CHANGE IN STRESS DUE TO ANCHOR SET

$E = 28\,(10)^3$ ksi

$\Delta L = 5/8''$ PER MFR.

d = FRICTION LOSS IN LENGTH L_x (ksi)

X = LENGTH INFLUENCED BY ANCHOR SET

Δf = CHANGE IN STRESS DUE TO ANCH. SET.

$$\Delta f = \left(E(\Delta L)\,d \div 3L_x\right)^{1/2} \qquad L_x = \tfrac{1}{2}L = 46.5\text{ FT}$$

$$= \left(28000\ \tfrac{5}{8}(5) \div 3(46.5)\right)^{\frac{1}{2}} = 25.0 \text{ ksi}$$

$$X = \Delta f\, L_x \div 2d = 116.25 \text{ FT}$$

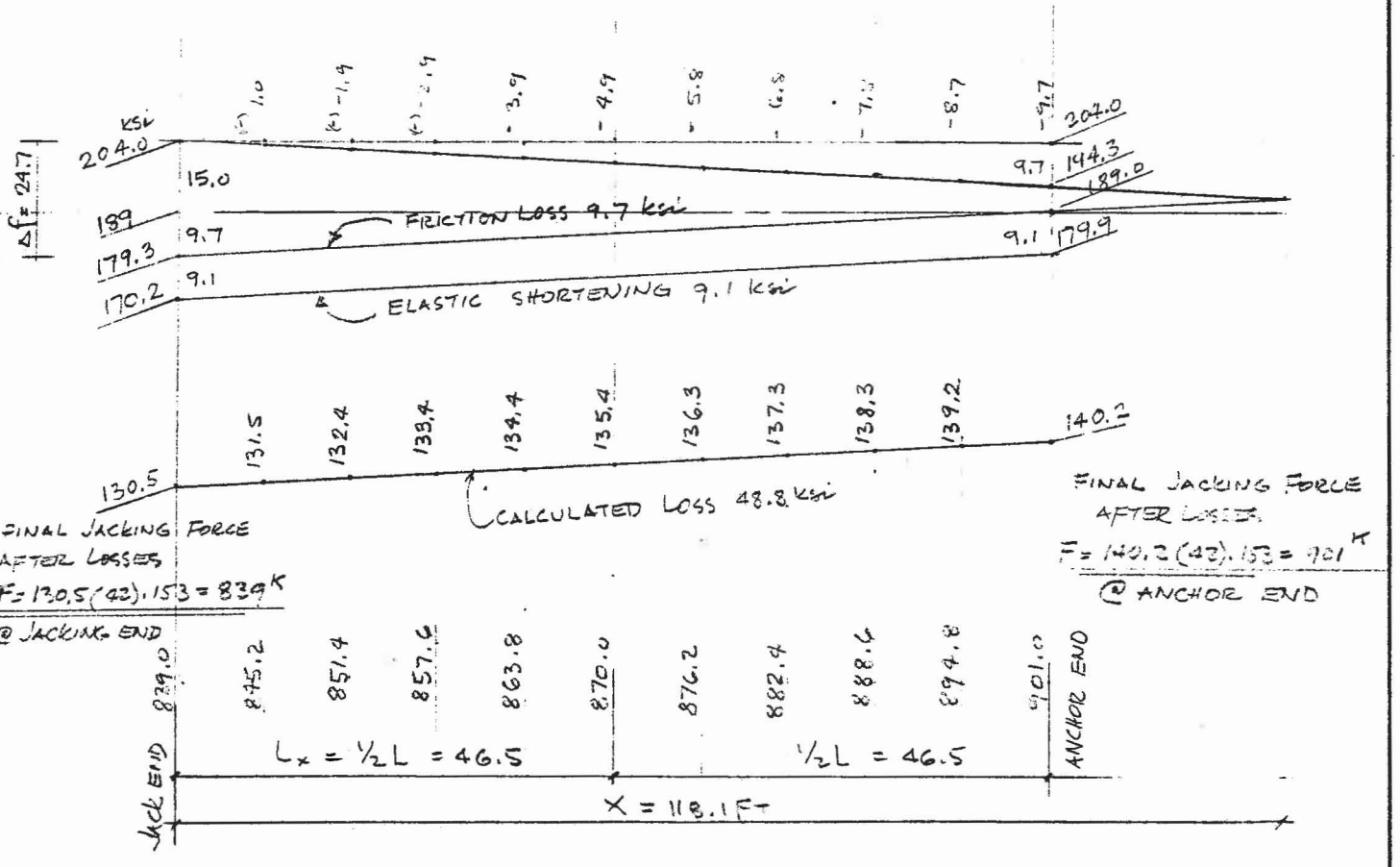

FRICTION LOSS @ $x = L_x = 93$ FT

$\alpha = (4e/L)\,2 = .128$

$KL_x + \mu\alpha = .0186 + .032 = .0506 < .3$

$T_0^{x=L} = T_0 \div (1 + KL_x + \mu\alpha) = .947\ T_0$

$d\,@(x=L) = (1 - .947)\,189 = 10.0$ ksi
.0514

OK @ ℄ $d = \tfrac{1}{2}\,10.0 = 5.0$ ksi

$\Delta f = 24.7$

$X = 118.1$

BENSON & GERDIN, INC. CONSULTING ENGINEERS PHONE (602) 264-0136	SHT. NO. 95 OF
	JOB NO. 2327 J
POST-TENS. GIRDER ALTERNATE	BY AG DATE 10-5-84
LOSSES	CHKD. DATE
	REV.

TOTAL LOSS:

$\Delta f_s = SH + ES + CR_c + CR_s$

SHRINKAGE:

$SH = .8(17000 - 150(40)) =$ 8 800 psi

ELASTIC SHORTENING

$E_s = 28000$ ksi $f'_{ci} = 4000$ $E_{ci} = 3600$ ksi

N = 42 - 1/2" ϕ STRANDS

$f_s = 189 - \underset{\text{FRICT. LOSS}}{5.0} - \underset{ES}{8.0} = 176$ ksi

$F_i = F_s (N) A_s = 176(42) \cdot 153 = 1131^k$

$f_{cir} = F/A + Fe^2/I - M_G e/I$

$ES = .5 f_{cir} E_s / E_{ci} =$ 9100

A = 789
e = 19.87
I = 260730
M_G = 873

F_i	1131	1124	1124
F/A	1433	1425	
Fe^2/I	1713	1702	
$M_G e/I$	3146 −798	3127 −798	
f_{cir}	2348	2329	2329
ES	9.1	9.06	9.1

CONCRETE CREEP

$f_{cir} = 2329$ $f_c d_s = 1090$ SEE SHT 35

$CR_c = 12 f_{cir} - 7 f_c d_s =$ 20 300

RELAX. OF P/S STEEL

$CR_s = 20000 - .3\overset{0.0}{FR} - .4ES - .2(SH + CR_c)$

$= 20000 - 3600 - 5800 = 10600$

TOTAL LOSS:

$\Delta f_s = 8800 + 9100 + 20300 + 10600 = 48.8$ ksi

SAY 49 ksi

BENSON & GERDIN, INC. CONSULTING ENGINEERS PHONE (602) 264-0136	SHT. NO. 96 OF
	JOB NO. 2327 J
POST-TENSIONED GIRDER	BY AG DATE 10-5-84
	CHKD. DATE
ALTERNATE	REV.

FINAL PRESTRESS

$$f_{se} = \underset{54}{\overset{.7 f'_s}{189}} - \overset{\text{FRICT.}}{5.0} - 49 = 135 \text{ ksi}$$

$$F_{FINAL} = f_{se} \overset{N}{(42)} \overset{A_s}{.153} = 868 \text{ kips}$$

$$F_i = 1124 \text{ kips}$$

GIRDER MOMENTS & STRESSES (SEE SHT. 32)

LOCATION	0.0L		.25L		.4L		.475L		.5L		1.0L	
	TOP	BOTT	TOP	BOTT	TOP	BOTT	TOP	BOTT	TOP	BOTT	TOP	BOTT
GIRDER	–	–	-882	746	-1130	955	-1173	991	-1176	994	–	–
Σf_1 GIRD + SL + DL2 + LL + I	–	–	-2109	2368	-2706	3039	-2810	3159	-2809	3147	313	-887
FINAL P/S FORCE F = 868 kips												
e	2.09		15.43		19.16		19.83		19.87		2.09	
F/A	-1100		-1100		-1100		-1100		-1100		-1100	
Fe/S_G	204	-172	1504	-1270	1867	-1577	1932	-1633	1936	-1636	204	-172
Σf_2	-896	-1272	404	-2370	767	-2677	832	-2733	836	-2736	-896	-1272
$f_1 + f_2$	-896	-1272	-1705	-2	-1939	362	-1978 ①	426 ③	-1973	411	-583	-2159 ②
AT RELEASE: F_i = 1124												
F/A	-1425		-1425		-1425		-1425		-1425			
Fe/S_G	264	-223	1947	-1645	2418	-2043	2502	-2114	2507	-2118		
Σf_3	-1161	-1648	522	-3070	993	-3468	1077	-3539	1082	-3543		
$f_G + f_3$	-1161	-1648	-360	-2324	-137	-2513	-96	-2548	-94	-2549 ④		

GOVERNS USE $f'_c = 5000$

FINAL CONC. STRENGTH: ① $f'_c = 1978/.4 = 4945$ SEC. 1.6.6.B2

[② $f'_c = 2159/.6 = 3600$ SEC. 1.6.12 C4]

RELEASE STRENGTH: ④ $f'_{ci} = 2549/.55 = 4635$ SEC. 1.6.6B1

USE 4650 Psi

FINAL TENSION: ③ $f_b = 426$ Psi ~ $6\sqrt{f'_c} = 424$ Psi

f'_c REQ'D $= (426/6)^2 = 5041$ Psi

.8% o.k.

END BLOCK

REF: POST TENSIONED PRESTRESSED CONCRETE
PCA 1967 PG. 9

P_{MAX} = 901 K (JACKING FORCE)
a = DEPTH OF ANCHOR
d = DEPTH OF CONC SECTION
T = TENSILE SPLITTING FORCE

a = 24"
d = 54"
$T = 0.3P(1 - 2a/d) = 150^K$

F_s = 20 ksi
$\Sigma A_s = T/F_s = 7.5 in^2$
DISTRIBUTION OVER $d/2$ = 27"
$A_s = 7.5/27 = .28 in^2/in$

STIRRUPS	#4	#5
A_s (2-LEGS)	.40	.62
$s_{2D} = A_s/.28$	1.4	2.2
$s_{2D} = 2A_s/.28$	2.9	4.5

BENSON & GERDIN, INC. CONSULTING ENGINEERS PHONE (602) 264-0136	SHT. NO. 98 OF
	JOB NO. 2327 J
POSTTENSIONED GIRDER ALT.	BY AG DATE 10-4-84
	CHKD. DATE
END BLOCK DET'S	REV.

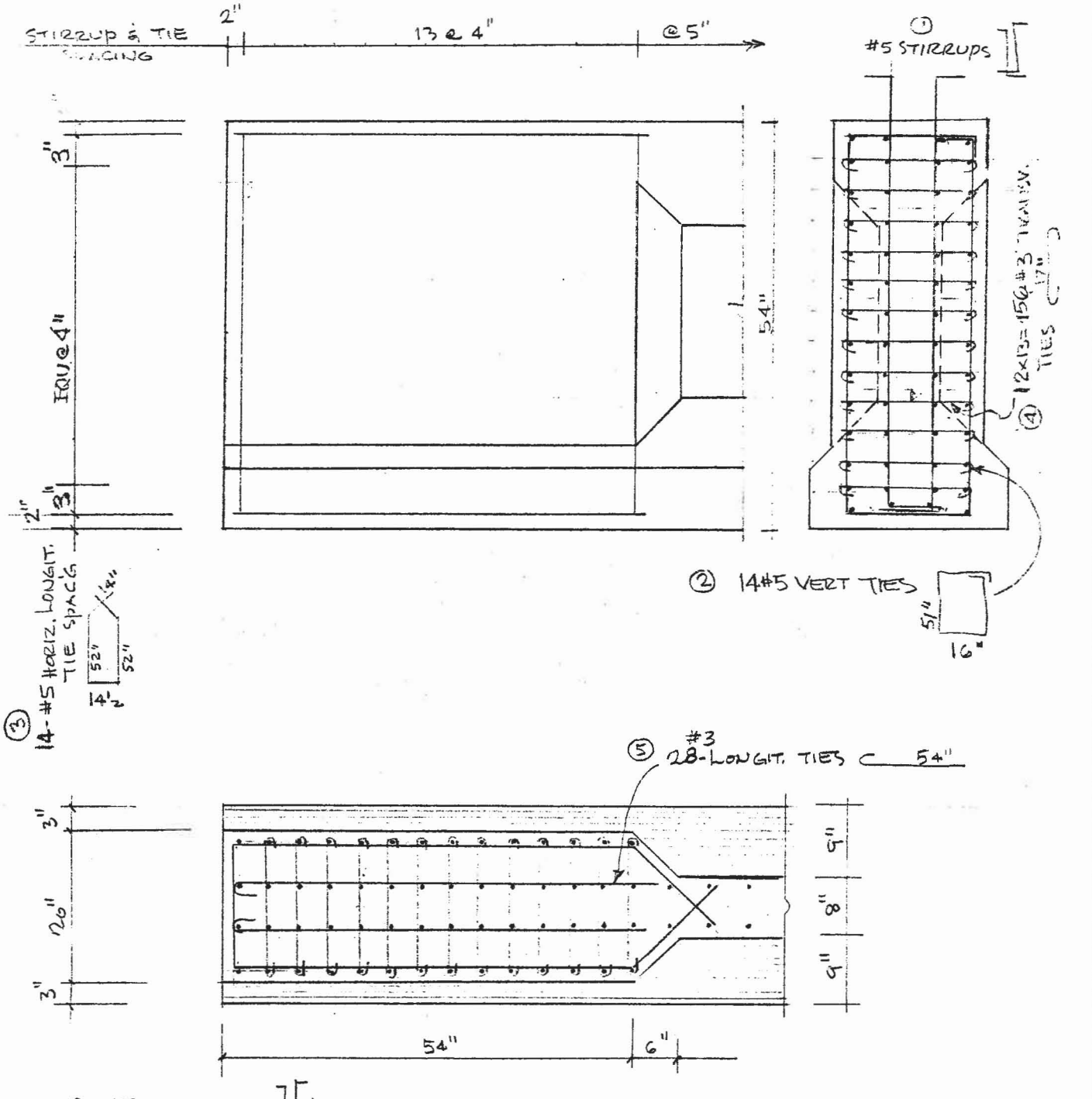

① #5 STIRRUPS TYP.

② 14 #5 VERT TIES

③ 14 #5 HORIZ. LONGIT. TIES

④ 156 #3 TRANSV. TIES. (17")

⑤ 28 #3 LONGIT. TIES

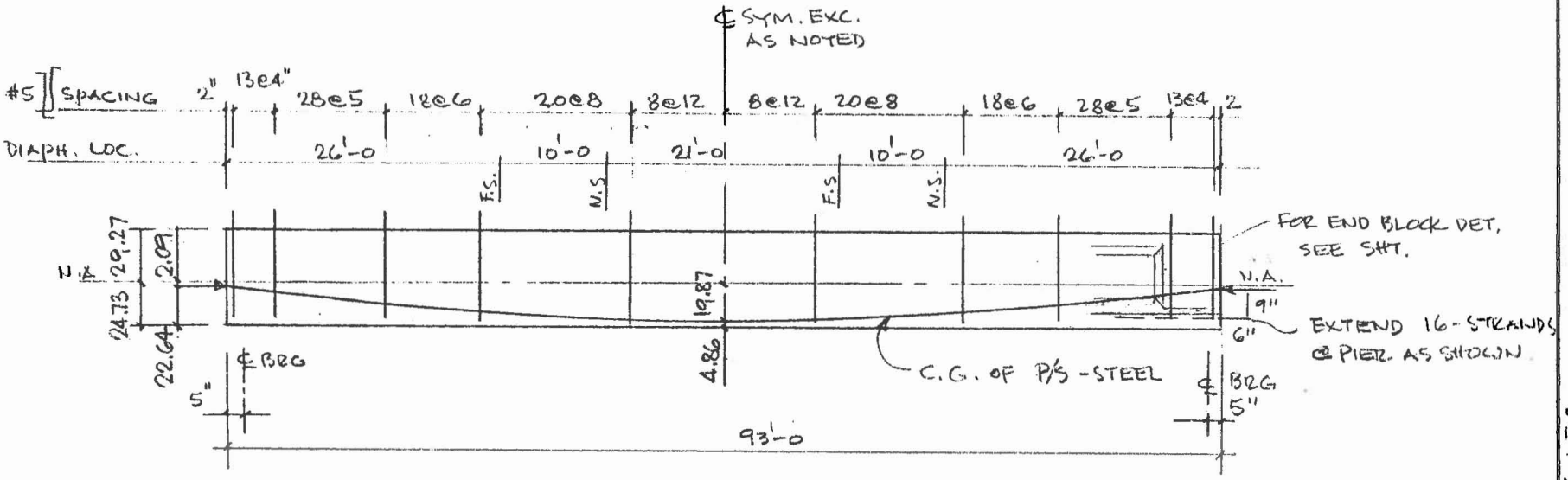

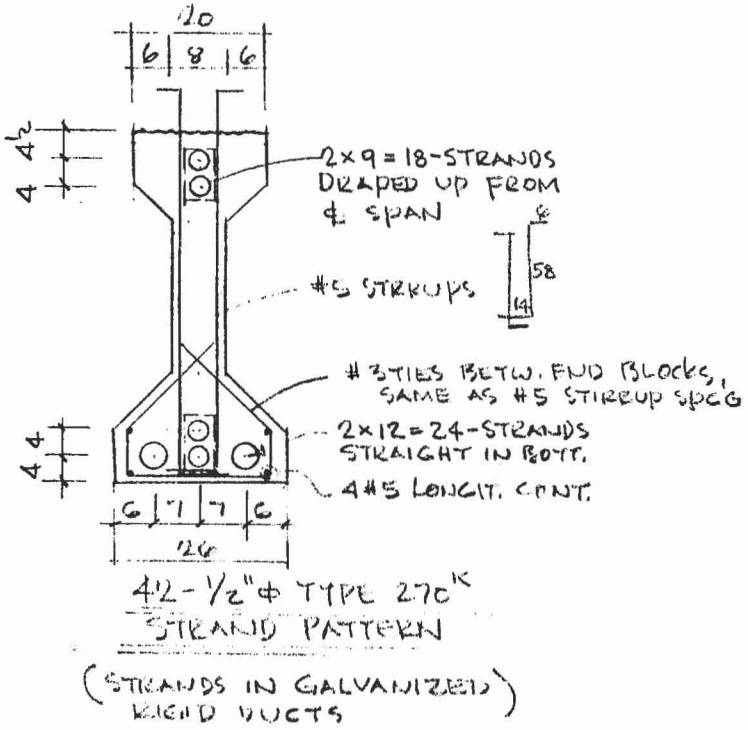

42-½"ϕ TYPE 270^{K} STRAND PATTERN

(STRANDS IN GALVANIZED RIGID DUCTS)

P_i = 1124^{kips} AFTER ELAST. SHORTENING & FRICTION LOSS

P = 870^{kips} AFTER ALL LOSSES

f'_{ci} = 4650 Psi @ TRANSFER

f'_c = 5000 Psi @ 28 DAYS

BENSON & GERDIN, INC. CONSULTING ENGINEERS PHONE (602) 264-0136

POSTTENSIONED GIRDER ALT.

BY AG DATE 10-6-87

JOB NO. 2327

SHT. NO. 99 OF

CHKD. DATE

REV.

PE-5

DECK SLAB PHASE 1

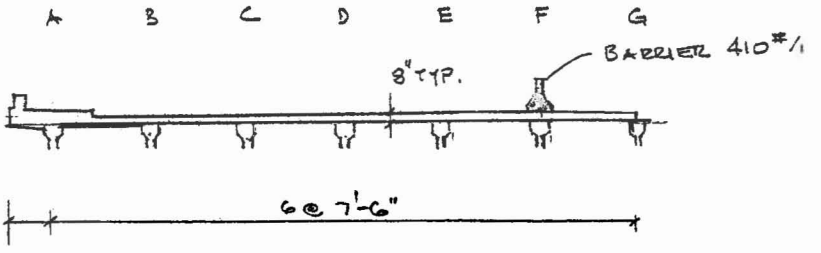

SPAN FG (S. SPAN)

w_{DL} = 100 #/'

w_{LL} = 40 -"- (CONSTRUCTION)

(+) $M_o = w_T (L)^2/8 = .98^{K'}$ $\quad +d = 8 - 1.31 = 6.69$

(+) A_s reqd $= M/1.24\,d = .10\ in^2 < .62\ in^2$ o.k.

SPANS EF & FG $\quad \gamma = 0.8$ (SOME FIXITY @ E)

SLAB SPAN $S = 6.7'$

$w_{DL} = 100 \quad P = 16$

$M_{DL} = w_D S^2/8 \quad .56$

$M_{L+I} = 1.3(S+2)P/32 \quad \gamma = 4.52$

$SM = 5.08^{K'}$

RESISTING MOMENT:

$M_{CONC} = 6.4$

$M_{REBAR} = 5.26$ } $> M = 5.08$ SEE SHT 18 o.k.

NOTE:

ALL OTHER SPANS NOT EFFECTED BY PHASE 1

BENSON & GERDIN, INC. CONSULTING ENGINEERS PHONE (602) 264-0136 | SHT. NO. 202 OF
JOB NO. 2327 J
BY AG DATE 12-26-84
CHKD. DATE
REV.

PHASE 1

GIRDERS

ASSUMPTIONS :

(1) IGNORE FUT. WEARING SURFACE

(2) CURBS, RAILINGS & SW - DEAD LOAD PLACED AFTER SLAB IS CURED, ∴ DISTRIBUTE EQUALLY TO ALL STRINGERS

CURB, RAILING & SW @ A : (REF. SHT. 5)

(a) ITEMS 1, 2,

$P = 187.5 + 131.3 = 319\#/'$

$M^{\text{℄}} = 453 + 328 = 781\ '\text{-}\#$ $\quad e_A = M/P = 2.45$ FT

(b) ITEMS 5, 6, 7 :

$P = 281\ \#/'$

$M_{\text{℄}} = 321\ '\text{-}\#$ $\quad e_A = M/P = 1.14$ FT

(c) BAL. OF SIDE WALK :

$P = 12.5(9.4)3.5 = 410\#/'$ @ 1.75 FT FROM A

$\Sigma P_a^c = 319 + 281 + 410 = 1010\# = \Sigma P_A$

$\Sigma M_a = 781 + 321 - 410(1.75) = 384 = \Sigma M_A$

$e_A = \Sigma M / \Sigma P = .38$ FT

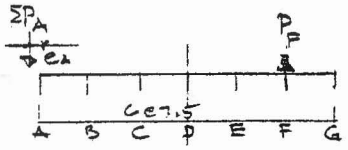

$I = 2(7.5^2 + 15^2 + 22.5^2) = 1575$

$e = e_A + 22.5 = 22.88$ FT

$W_2^A = \pm \Sigma P_A (e) c / I + \Sigma P_A / 7_N$

TO GIRDER F :

$W_2^A = \Sigma P_A / 7 = 1010/7$ $\qquad 144$

$(-) Mc/I = 1010(22.88)15/I =$ $\qquad -219$

$-75\ \#/'$ up ↑

TO GIRDER G :

$W_2^A = \Sigma P_A / 7$ $\qquad 144$

$- Mc/I =$ $\qquad -330$

$-186\ \#/'$ up ↑

PHASE 1

GIRDERS

BARRIER @ F

$P_F = 410$ #/1

$e = 15$ FT

$W_2^F = \pm P_F e c / I + \Sigma P_F / 7$

TO GIRDER F:

$W_2^F = 410/7 = 59$

$+ 410(15.0)(15.0)/I = 59$

$\Sigma W_2^F = 118$

$\Sigma W_2 = W_2^A + W_2^F = -75 + 118 = 43$ #/1

TO GIRDER G:

$W_2^F = 410/7 = 59$

$+ 410(15)\ 22.5/I = 88$

$\Sigma W_2^F = 147$

$\Sigma W_2 = -186 + 147 = -39$ #/1 UP

GIRDER F

LOADING:

W_G: GIRDER 822 #/1

W_1: 8" SLAB (CONT.) 1.132 (100) (7.5) 849 #/1

BUILD-UP 42 "

W_1: 891 #/1

W_2: $W_2^A + W_2^F$ (SEE ABOVE) 43 -"-

WATER LINE: $-120(\overset{-23}{26})15/1575 + \overset{17}{120}/7$ (- 6 IGNORE)

43 #/1

DIAPH. SEE SHT. 27

GIRDER DESIGN ASSUMPTION:

(a) S. SPAN FOR POS. MOMENTS

(b) CONTINUOUS (2-SPANS) FOR NEG. MOM'TS

(+) $M_x = wL^2/2\,[\xi\xi']$ $\xi = x/L$ $\xi' = \frac{L-x}{L}$

(-) M_x SEE SHT. 27

PHASE I

GIRDER F

LL- MOMENTS (5 SPAN)

NOTE: FOR PHASE I, GIRDER F IS CONSIDERED TO BE AN EXT. GIRDER:

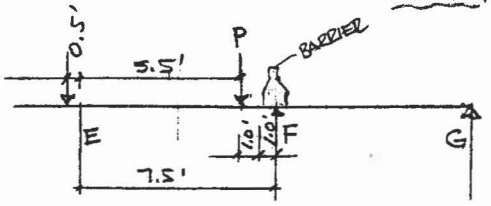

$\gamma = 5.5/7.5 = .733$ $\quad I = .229$

$P = \frac{1}{2}(32)(\gamma) = 11.73^K$ $\quad L = 92.2$ FT

$+M^{.25}_{L+I} = .35625\ PL\ (1.229) = 474^{K'}$

$+M^{.40}_{L+I} = .4575\ PL\ (1.229) = 608^{K'}$

$+M^{.50}_{L+I} = .46875\ PL\ (1.229) = 623^{K'}$

$(+)M^{.475}_{L+I} = 11.85\ (11.73/21.82 = 637$ SHT. 30

$(-)M^{1.0L}_{L+I} = -850\ ^{.733}/_{1.364} = -457^{K'}$

SLAB & DIAPH MOMENTS (SHT. 27)

W_1 = SL & BUILD-UP $\quad 891\ \#/'$ $\quad L = 92.2$ FT

LOCAT.	.25L	.40L	.475L	.50L	EQ.
$W_1 = 891$	710	909	944	947	$M = \frac{wL^2}{2}(\xi - \xi^2)$
DIAPH.	61	82	82	82	SEE SHT. 27
Σ SL&D.	771	991	1026	1029	

W_2 = $43\ \#/'$ CURB, RAIL, SW & BARRIER

$W_2 = 43\ \#/'$	34	44	46	46	$M = \frac{wL^2}{2}(\xi - \xi^2)$

@1.0L $\quad M_2 = -w_2 L^2/8$ ($L = 93.0$) $= -47^{K'}$

GIRDER DL. MOMENTS SEE SHT. 22

$W_G = 822\ \#/'$

BENSON & GERDIN, INC. CONSULTING ENGINEERS PHONE (602) 264-0138	SHT. NO. 205 OF
	JOB NO. 2327 J
	BY AG DATE 12-26-84
PHASE 1	CHKD. DATE
GIRDER F STRESSES	REV.

	0.0L		.25L		.4L		.475L		.5L		1.0L	
	TOP	BOTT	T	B	T	B	T	B	T	B	TOP	BOTT
GIRDER M	0.0		655		839		871		873		0.0	
$S^T_G = 8908$	-		-882		-1130		-1173		-1176		-	
$S^B_G = 10543$		-		746		955		991		994		-
SL. & DIAPH M	0.0		771		991		1026		1029		0.0	
$S^T_G = 8908$	-		-1039		-1335		-1382		-1386		0	
$S^B_G = 10543$		-		878		1128		1168		1171		
DL2 M	0.0		34		44		46		46		-47	
$S^T_{CO} = 47907$	-		- 9		- 11		- 12		- 12		12	
$S^B_{CO} = 16910$		-		24		31		33		33		-33
L+I M	0.0		474		608		623		637		-457	
$S^T_{CO} = 47907$	-		- 119		-152		- 156		-160		114	
$S^B_{CO} = 16910$		-		336		431		442		452		-324
Σf_1	-	-	-2049	1984	-2628	2545	-2723	2634	-2734	2650	126	-357
$F/A \pm Fe/S_G = f_2$	-334	-1754	399	-2374	839	-2746	839	-2746	839	-2746	-334	-1754
$\Sigma f = f_1 + f_2$	-334	-1754	-1650	- 390	-1789	- 201	-1884	- 112	-1895 ①	- 96	- 208	-2111 ②

① & ② LESS THAN ON SHT. 32 O.K.
NO FINAL TENSION O.K.
RELEASE SAME AS SHT. 32 O.K.

PHASE 1

GIRDER G

LOADING

W_G = 822 #/'

~~W_1 : 8" SL. CONT. .395(100)7.5~~ = 296

BUILD-UP ½ 42 = ~~42~~

W_1 =

W_2 = -39

W_{LL} CONST. LOAD 40(½)7.5 = 150 #/'

GIRDER PROPERTIES

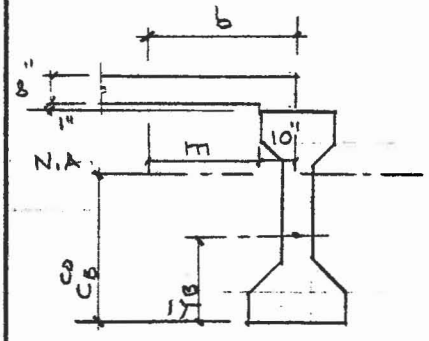

m = ½(90-20)=35; b = m+10 = 45"

n_G = 7. n_{SL} = 8

SEC	A IN^2	d IN	Ad IN^3	Ad^2 IN^4	I_o IN^4
(1) SLAB	45(8)7/8= 315	59	18585	1096515	1680
(2) GIRD	789	24.73	19512	482531	260730
Σ	1104		38097	-1314657	264389
					526800

$C_B = \Sigma Ad / \Sigma A$ = 34.51 S_B^G = 15265

$C_{T\,SL} = 63 - C_B$ = 28.49 S_T^{SL} = 18491

$C_{T\,G} = 54 - C_B$ = 19.49 S_T^G = 27029

SLAB & DIAPH MOMENTS (K-FT)

L=92.2

LOC.	.125L	.40L	.475L	.50L	EQ.
W_1 = 317	253	323	336	337	$M = \frac{wL^2}{2}(\xi\xi')$
½-DIAPH	30	41	41	41	
Σ SL+DIAPH	283	364	377	378	
W_2 = -39	-31	-40	-41	-41	MDL 2
W_{LL} = 150	120	153	159	159	M_{LL}

93.0

@1.0L = $wL^2/8$ = +42

-162

BENSON & GERDIN, INC. CONSULTING ENGINEERS PHONE (602) 264-0136

SHT. NO. 207 OF

JOB NO. 2327 J

BY AG DATE 12-26-84

CHKD. DATE

REV.

PHASE 1

GIRDER G STRESSES

	0.0L		.25L		.40L		.475L		.50L		1.0L	
	T	B	T	B	T	B	T	B	T	B	T	B
M	0.0		655		839		871		873		0.0	
$S^T_G = 8908$	–		-882		-1130		-1173		-1176		–	
$S^B_G = 10543$		–		746		955		991		994		–
SL. & DIAPH. M	0.0		283		364		377		378		0.0	
$S^T_G = 8908$	–		-381		-490		-508		-509		–	
$S^B_G = 10543$		-		322		414		429		430		
DL 2 M	0.0		-31		-40		-41		-41		42	
$S^T_{Co} = 27029$	–		14		18		18		18		-19	
$S^B_{Co} = 15265$		–		-24		-31		-32		-32		33
LL (CONST.) M	0.0		120		153		159		159		-162	
$S^T_{Co} = 27029$	–		-53		-68		-71		-71		72	
$S^B_{Co} = 15265$		–		94		120		125		125		-127
Σf_1	–	–	-1302	1138	-1670	1458	-1734	1513	-1738	1517	53	-94
$f_2 = F/A \pm Fe/S_G$	-334	-1754	399	-2374	839	-2746	839	-2746	839	-2746	-334	-1754
$\Sigma f = f_1 + f_2$	-334	-1754	-903	-1236	-831	-1288	-895	-1233	-899	-1229	-281	-1848
					①							②

① & ② LESS THAN ON SHT. 32 O.K.

NO FINAL TENSION O.K.

RELEASE SAME AS SHT. 32 O.K.

BENSON & GERDIN, INC. CONSULTING ENGINEERS PHONE (602) 264-0136	SHT. NO. 208 OF
	JOB NO. 2327 J
PHASE. 1	BY AG DATE 12-27-84
GIRDER G	CHKD. DATE
	REV.

TORSION

(1) IGNORE COMPOSITE SLAB & FILLETS ---- FOR TORSIONAL RESISTANCE.

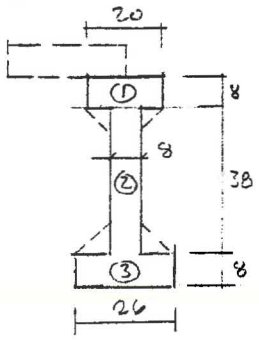

(2) TORSIONAL SECTION MODULUS (SEC'S ①, ② & ③)

SEC. 1: $\mu = h/b = 20/8 = 2.5$

$S_{T1} = .256(8)^2(20) = 328$

SEC 2: $\mu = 38/8 = 4.75$

$S_{T2} = .29(8)^2(38) = 705$

SEC. 3: $\mu = 26/8 = 3.25$

$S_{T3} = .271(8)^2(26) = \underline{451}$

$\Sigma S_T = 1484 \text{ in}^3$

(3) TORSIONAL LOADING

DL: $w_1 = 317$ #/1

LL: $w_L = 150$ -"- } $e = 5''$

$L = 1/3(93) = 31$ FT (DIAPH. SPACING)

$M_T = w e L/2 = 24.6$ in-k DL

$= \underline{11.6}$ -"- LL

36.2 TL

$v_T = M_T/S_T = 17^{DL} / 8^{LL}$ psi $= 25^{TL}$ psi

EFFECT OF TORSIONAL LDG NOT CRITICAL

ALLOW. SHEAR STRESS: $f'_c = 5000$

$v_c = .95\sqrt{f'_c} = 67$ psi

$V = \frac{1}{2}\, 93\,(822^{G} + 317^{DL} + 150^{LL}) = \sim 60^{k}$ $b = 8$ $d = 52$

$v = V/bd = 138$ psi w/o P/S

$\Sigma v = v + v_T = 138 + 25 = 163$ psi

$v' = v - v_c = 96$ psi

#5][$A_v = 2(.31) = .62 \text{ in}^2$ $f_s = 20$ ksi $b_w = 8''$

$s_{RD} = A_v f_s / v' b_w = 16'' > s_{FURNISH'D}$

CHB

ABUT. RETAINING WALLS

ABUT #1

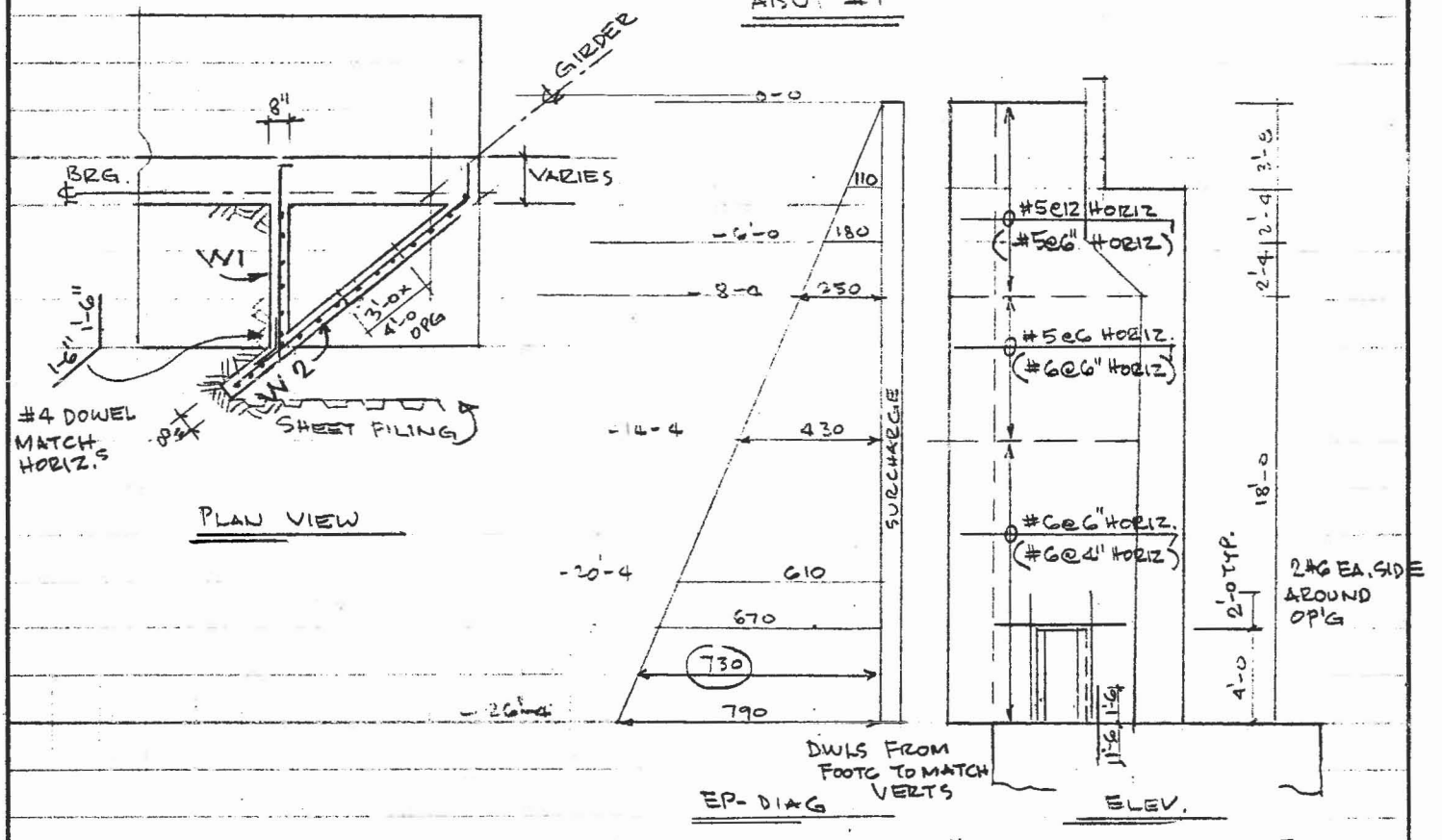

HORIZ. WALL REINF. FOR W1, W2, W3 & W4. (W3 IN PARENTHESIS)

WALL W1

(1) FIRST 6'-0 ABOVE FOOTING

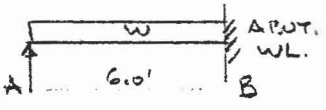

$W_H = 790 - 2(30) + 90 = 820\ ^{\#}/_{'}$

$M_B = -\omega L^2/8 = 3.69^{K'}/_{'}$ $\quad K = .126$ $\quad d_{R'D} = 4"$

$T = 1.42^K + 3.10 = 4.52^K$

$A_S^{R'D} = \frac{M}{1.44d} + T/F_S = .64 + \frac{4.52}{20} = .87\ IN^2$

#6@6" $\quad d = 4"$ $\quad n = 8$

$A_S = .88 - .23 = .65\ IN^2$

$np = 8(.65)/12(4) = .108$ $\quad k = .37$ $\quad j = .877$ $\quad y = 6.17$

$M_C = 1.6\ d^2/y = 4.15 > M$ $\quad M_S = A_S F_S j d/12 = 3.80 > M$

RESOLVE REACTION @ A IN COMPONENTS:

$\alpha = 52°\ 31'\ 10"$ $\quad R_A = 3/8\ wL = 1.845^K/_{'}$

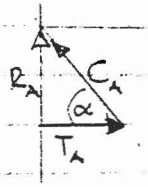

$T_A = R_A/\tan\alpha = 1.42^K$

$C_A = R_A/\sin\alpha = 2.33^K$

USE 8" WALL

$A_{SH} = .88\ IN^2$ $\quad$ #6@6" @ WL. ± HORIZONTALLY

$A_{SV} = .31\ IN^2$ $\quad$ #5@12" " " VERTICALLY

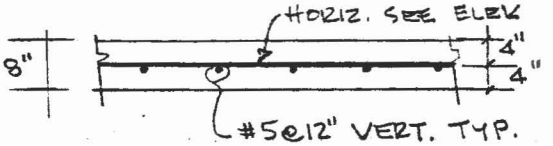

ABUT. RETAINING WALLS

ABUT. #1

WALL W1 CONT'D

(2) SEC. 6'-0 TO 12'-0 ABOVE FTG.

$R_A = \frac{3}{8}wL = 1.58$

$T_A = 1.21^K/_1$ W1

$T_A = 2.65$ W2

$\Sigma T = 3.86$

$w_H = 610 + 90 = 700$ $L = 6.0'$

$(+)M = w_H(L)^2/8 = 3.15$ $\alpha = 1.44$ $d = 4$

$(+)A_s = M/\alpha d = .55\,in^2 + 3.86/20^{*.19} = .74\,in^2$

$np = 8(.55)/12(4) = .092$ $j = .98$ $\gamma = 6.5$

$M_s = .55(20)jd/12 = 3.2 > M$

$M_c = 1.6(4)^2/6.5 = 3.9 > M$ o.k. USE #6@6 HORIZ.

(3) SEC. 12'-0 TO 18'-0 ABOVE FTG

W1

$\Sigma T = .90 + 2.0 = 2.90$

$w_H = 430 + 90 = 520$ $R_A = 1.17$ $T_A = .90$

$M = w_H L^2/8 = 2.34$

$A_s = M/1.44(4) + {}^{.41}2.9/20^{.15} = .56\,in^2$

#5@6" $A_s = .62 - .15 = .47\,in^2 > .41$

USE #5@6" HORIZ.

MIN. $A_{SH} = .0025(12)8 = .24\,in^2$

(4) SEC. 18'-0 TO TOP OF WALL

$w_H = 250 + 90 = 340$ $L = 5.0$ $R_A = .64$ $T_A = .49$

$\Sigma T = .49 + 1.3 = 2.29$

$M = w_H L^2/8 = 1.07$

$A_s = M/1.44(4) + 2.29/20 = .18 + .12 = .30\,in^2$

USE #5@12" HORIZ.

WALL W2 (DIVIDE INTO SAME SECTIONS AS W1)

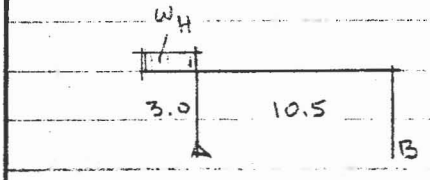

(1) $w_H = 820\ \#/_1$

$M_A = w_H(3)^2/2 = 3.70^{K'}$

$R_A = 3(w_H) = 2.46^K$

$T_A = R_A/\sin\alpha = 3.10^K/_1$

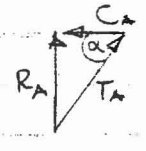

(2) $w_H = .70$ $M_A = .7(3)^2/2 = 3.15$ $R_A = 2.1$

$T_A = R_A/\sin\alpha = 2.65$

ABUT. RETAINING WALLS

ABUT #1

WALL W2 (CONT'D)

③ $w_H = .520$ $M_A = .52(3)^2/2 = 2.34$ $R_A = 3w_H = 1.56$

$T_A = R_A / \sin\alpha = 2.0$

④ $w_H = .34$ $M_A = 1.53$ $R_A = 1.02$ $T_A = 1.3$

USE SAME REINF. AS FOR WALL W1

ABUT. #2

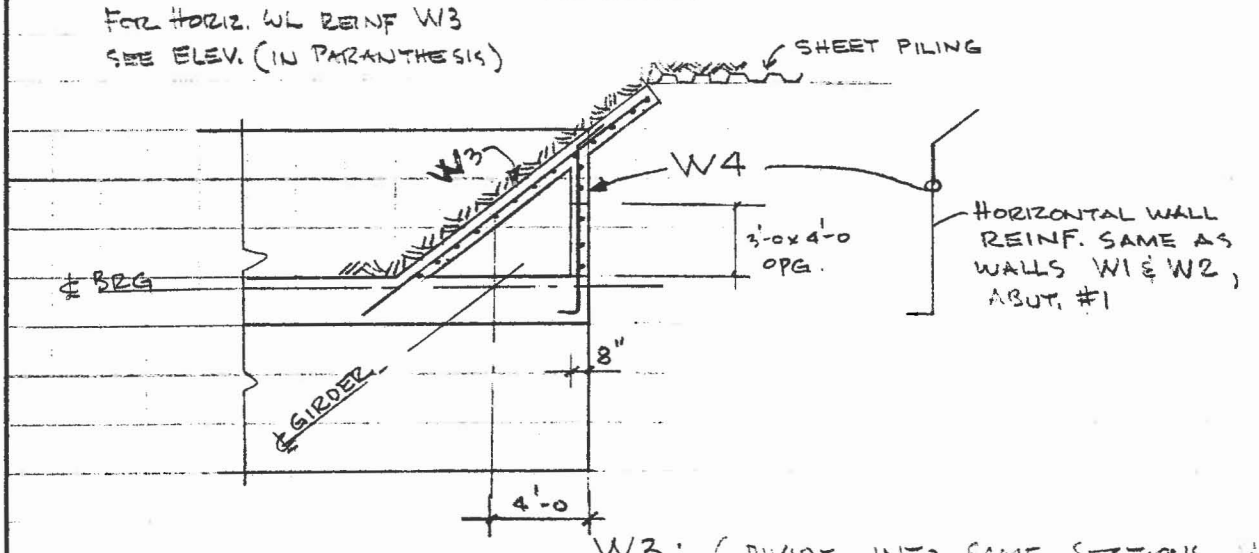

W3: (DIVIDE INTO SAME SECTIONS VERTICALLY AS W1)

(1) T. FTG. TO 6'-0 ABOVE FTG

$w_H = 820\#/'$

$M_B = -w(3.8)^2/2 = 5.92^{K'}$

$M_A = +\frac{1}{2} M_B = 2.96$

$R_B = w(13.3)^2/2(9.5) + M_A/9.5 = 7.94^K$ (1.03, .31)

$T_B = R_B / \tan\alpha = 6.1^K$

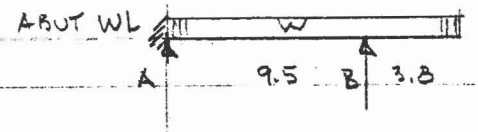

$A_s' = M_B/1.0(4) + T_B/20 = 1.33\ in^2$ (1.03, .31)

6@4" $\Sigma A_s = 1.32\ in^2$ $A_s = 1.32 - .31 = 1.01$

$np = 8(1.01)/12(4) = .168$ $k = .436$ $j = .855$ $f = 5.37$

$f_c' = 4500$ $M_c = 1.8(4)^2/f = 5.36^{K'}$ $M_{FACE} = w3.5^2/2 = 5.0 < M_c$ o.k.

$M_s = 1.01(20)jd/12 = 5.90 > M_{FACE}$ o.k.

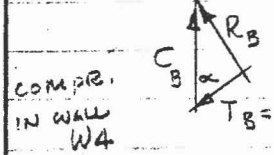

ABUT. RETAINING WALLS

ABUT. #2

W3 CONT'D

(2) SEC. 6'-0 TO 12'-0 ABOVE FTG

$M = w(3.8)^2/2 = 5.05$

USE SEC. 1 #6 @ 4" HORIZ.

(3) SEC. 12'-0 TO 18'-0 ABOVE FTG

$w = 520$ #/'

$M_B = -w(3.8)^2/2 = -3.75$ $\quad M_{FACE} = w\,3.5^2/2 = 3.2^{K'}$

$M_A = 1.88$

$R_B = w(13.3)^2/19 + M_A/9.5 = 5.04^K$ (4.84, .20)

$T_B = R_B/\tan\alpha = 3.9$

$A_s^{R'D} = M_{FACE}/1.44(4) + T_B/20 = .76$ (.56, .20)

USE #6@6" $\quad \Sigma A_s = .88$

$A_s = .88 - .20 = .68 > .56$ o.k.

(4) SEC. 18'-0 ABOVE FTG TO TOP OF WL.

$w_H = 340$ #/'

$M_B = -w\,3.8^2/2 = -2.46$ $\quad M_{FACE} = w\,3.5^2/2 = 2.1^{K'}$

$M_A = 1.23$

$R_B = w\,13.3^2/19 + M_A/9.5 = 3.30^K$ (3.17, .13)

$T_B = R_B/\tan\alpha = 2.53^K$

$A_s^{RD} = M_{FACE}/1.44(4) + T_B/20 = .49$ (.36, .13)

USE #5@6" $\quad \Sigma A_s = .62$ in^2

VERT. WALL REINF. #5@12"

WALL W4

NO EARTH PRESSURE.

USE SAME REINF AS FOR WLS W1 & W2