LETTER OF MAP REVISION
(LOMR)
PACKAGE FOR
SALT RIVER FLOODPLAIN DELINEATION
McCLINTOCK DRIVE TO COUNTRY CLUB DRIVE

Property of
Flood Control District of MC Library
Please Return to
2801 W. Durango
Phoenix, AZ 85009

WOOD/PATEL ASSOCIATES
Civil Engineers
Hydrologists
Land Surveyors

LETTER OF MAP REVISION
(LOMR)
PACKAGE FOR
SALT RIVER FLOODPLAIN DELINEATION
McCLINTOCK DRIVE TO COUNTRY CLUB DRIVE

Prepared by:

WOOD, PATEL & ASSOCIATES, INC.
1550 East Missouri
Suite 203
Phoenix, AZ 85014
(602) 234-1344
Fax 234-1322

September 13, 1995
WP #93080

COMPLETED FEMA FORMS FOR LOMR PACKAGE:

MT-2 FORM 1: Revision Requestor and Community Official Form

MT-2 FORM 2: Certification by Registered Professional Engineer and/or Land Surveyor Form

MT-2 FORM 4: Riverine Hydraulic Analysis Form

2 Forms:

- Salt River
- Salt River - South Alma School Split

MT-2 FORM 5: Riverine/Coastal Mapping Form

MT-2 FORM 7: Bridge/Culvert Form

4 Forms:

- Salt River Bridge - McClintock Dr. - SR101L
- SR202/SR101L Traffic Interchange
- Alma School Road North Bridge Over Salt River
- Alma School Road South Bridge Over Salt River

FEDERAL EMERGENCY MANAGEMENT AGENCY **REVISION REQUESTOR AND COMMUNITY OFFICIAL FORM**	*O.M.B. Burden No. 3067-0148* *Expires July 31, 1997*	*FEMA USE ONLY*

PUBLIC BURDEN DISCLOSURE NOTICE

Public reporting burden for this form is estimated to average 2.13 hours per response. The burden estimate includes the time for reviewing instructions, searching existing data sources, gathering and maintaining the needed data, and completing and reviewing the form. Send comments regarding the accuracy of the burden estimate and any suggestions for reducing this burden, to: Information Collections Management, Federal Emergency Management Agency, 500 C Street, S.W., Washington, DC 20472; and to the Office of Management and Budget, Paperwork Reduction Project (3067-0148), Washington, DC 20503.

1. OVERVIEW

1. The basis for this revision request is (are): *(check all that apply)*
   - ■ Physical change
     - ■ Existing
     - ☐ Proposed
   - ☐ Improved methodology
   - ■ Improved data
   - ■ Floodway revision
   - ☐ Other _____

   Explain _____

2. Flooding Source: Salt River
3. Project Name/Identifier: Floodplain/Floodway Delineation
4. FEMA zone designations affected: _____
   (example: A, AH, AO, A1-A30, A99, AE, V, V1-30, VE, B, C, D, X)
5. The NFIP map panel(s) affected for all impacted communities is (are):

Community No.	Community Name	County	State	Map No.	Panel No.	Effective Date
EX: 480301	Katy,City	Harris, Fort Bend	TX	480301	0005D	02/08/83
480287	Harris County	Harris	TX	48201C	0220G	09/28/90
See Attached Sheet						

6. The area of revision encompasses the following types of flooding, structures, and associated disciplines: *(check all that apply)*

Types of Flooding
- ■ Riverine
- ☐ Coastal
- ☐ Alluvial Fan
- ☐ Shallow Flooding *(e.g. Zones AO and AH)*
- ☐ Lakes

Affected by wind/wave action
- ☐ Yes
- ☐ No

Structures
- ☐ Channelization
- ☐ Levee/Floodwall
- ■ Bridge/Culvert
- ☐ Dam
- ☐ Coastal
- ☐ Fill
- ☐ Pump Station
- ☐ None
- ☐ Channel Relocation
- ☐ Excavation
- ☐ Other *(describe)*

Disciplines*
- ■ Water Resources
  - ☐ Hydrology
  - ■ Hydraulics
  - ☐ Sediment Transport
  - ☐ Interior Drainage
- ☐ Structural
- ☐ Geotechnical
- ☐ Land Surveying
- ☐ Other *(describe)*

☐ Other(describe) _____ _____ _____

*** Attach completed "Certification by Registered Professional Engineer and/or Land Surveyor" Form for each discipline checked. (Form 2)**

2. FLOODWAY INFORMATION

7. Does the affected flooding source have a floodway designated on the effective FIRM or FBFM? ■ Yes ☐ No
8. Does the revised floodway delineation differ from that shown on the effective FIRM or FBFM ■ Yes ☐ No
   If yes, give reason: New topographic mapping

MT-2 FORM 1, ITEM 5:

Community No.	Community Name	County	State	Map No.	Panel No.	Effective Date
040037	Unincorporated Areas	Maricopa	AZ	04013C	2160D	04/15/88
040037	Unincorporated Areas	Maricopa	AZ	04013C	2170E	09/04/91
040037	Unincorporated Areas	Maricopa	AZ	04013C	2180E	09/04/91
040037	Unincorporated Areas	Maricopa	AZ	04013C	2190E	12/03/93
040054	City of Tempe	Maricopa	AZ	04013C	2170E	09/04/91
040048	City of Mesa	Maricopa	AZ	04013C	2180E	09/04/91
040048	City of Mesa	Maricopa	AZ	04013C	2190E	12/03/93

MISC\93090.S12

D. The community is willing to assume responsibility for ☐ performing ☐ overseeing compliance with the maintenance and operation plans of the _____
(Name)

flood control structure. If not performed promptly by an owner other than the community, the community will provide the necessary services without cost to the Federal government.

Attach operation and maintenance plans

7. REQUESTED RESPONSE FROM FEMA

16. After examining the pertinent NFIP regulations and reviewing the document entitled "Appeals, Revisions, and Amendments to Flood Insurance Maps: A guide for Community Officials," dated January 1990, this request is for a:

_____a.	CLOMR	A letter from FEMA commenting on whether a proposed project, if built as proposed, would justify a map revision *(LOMR or PMR)*, or proposed hydrology changes *(see 44 CFR Ch. I, Parts 60, 65, and 72)*.
X b.	LOMR	A letter from FEMA officially revising the current NFIP map to show changes to floodplains, floodways, or flood elevations. LOMRs typically depict decreased flood hazards. *(See 44 CFR Ch. I Parts 60 and 65.)*
_____c.	PMR	A reprinted NFIP map incorporating changes to floodplains, floodways, or flood elevations. Because of the time and cost involved to change, reprint, and redistribute an NFIP map, a PMR is usually processed when a revision reflects increased flood hazards or large-scope changes. *(See 44 CFR Ch. I, Parts 60 and 65.)*
_____d.	Other:	Describe_____

8. FORMS INCLUDED

17. Form 2 entitled, "Certification By Registered Professional Engineer and/or Land Surveyor" must be submitted.

The following forms should be included with this request if (check the included forms):

• Hydrologic analysis for flooding source differs from that used to develop FIRM	☐ Hydrologic Analysis Form (Form 3)
• Hydraulic analysis for riverine flooding differs from that used to develop FIRM	■ Riverine Hydraulic Analysis Form (Form 4)
• The request is based on updated topographic information or a revised floodplain or floodway delineation is requested	■ Riverine /Coastal Mapping Form (Form 5)
• The request involves any type of channel modification	☐ Channelization Form (Form 6)
• The request involves new bridge or culvert or revised analysis of an existing bridge or culvert	■ Bridge/Culvert Form (Form 7)
• The request involves a new revised levee/floodwall system	☐ Levee/Floodwall System Analysis Form (Form 8)
• The request involves analysis of coastal flooding	☐ Coastal Analysis Form (Form 9)
• The request involves coastal structures credited as providing protection from the 100-year flood	☐ Coastal Structures (Form 10)
• The request involves an existing, proposed, or modified dam	☐ Dam Form (Form 11)
• The request involves structures credited as providing protection from the 100-year flood on an alluvial fan	☐ Alluvial Fan Flooding Form (Form 12)

FEDERAL EMERGENCY MANAGEMENT AGENCY **CERTIFICATION BY REGISTERED PROFESSIONAL ENGINEER AND/OR LAND SURVEYOR FORM**	*O.M.B. Burden No. 3067-0148* *Expires July 31, 1997*	*FEMA USE ONLY*

PUBLIC BURDEN DISCLOSURE NOTICE

Public reporting burden for this form is estimated to average . 23 hour per response. The burden estimate includes the time for reviewing instructions, searching existing data sources, gathering and maintaining the needed data, and completing and reviewing the form. Send comments regarding the accuracy of the burden estimate and any suggestions for reducing this burden, to: Information Collections Management, Federal Emergency Management Agency, 500 C Street, S.W., Washington, DC 20472; and to the Office of Management and Budget, Paperwork Reduction Project (3067- 0148), Washington, DC 20503.

1. This certification is in accordance with 44 CFR Ch. I, Section 65.2
2. I am licensed with an expertise in floodplain analysis, hydraulics, hydrology, sediment Transport [example: water resources *(hydrology, hydraulics, sediment transport, interior drainage)** structural, geotechnical, land surveying.]
3. I have 22 years experience in the expertise listed above.
4. I have ☐ prepared ☑ reviewed the attached supporting data and analyses related to my expertise.
5. I ☑ have ☐ have not visited and physically viewed the project.
6. In my opinion, the following analyses and /or designs, is/are being certified:
   Salt River, Floodplain/ Floodway analysis
7. Base upon the following review, the modifications in place have been constructed in general accordance with plans and specifications.

   Basis for above statement: (check all that apply)

   a. ☐ Viewed all phases of actual construction.
   b. ☐ Compared plans and specifications with as-built survey information.
   c. ☐ Examined plans and specifications and compared with completed projects.
   d. ☒ Other Based on the new mapping, viewed all changes to the river channel
8. All information submitted in support of this request is correct to the best of my knowledge. I understand that any false statement may be punishable by fine or imprisonment under Title 18 of the United States Code, Section 1001.

Name: ASHOK C. PATEL
(please print or type)

Title: PRESIDENT
(please print or type)

Registration No. 10512 Expiration Date: Dec 31, 95

State Arizona

Type of License Civil

Ashok C. Patel
Signature

9/13/95
Date

Registered Professional Engineer (Civil) CERTIFICATE NO. 10512 ASHOK C. PATEL Date Signed 9/13/95 ARIZONA, U.S.A.

Seal
(Optional)

*Specify Subdiscipline

Note: Insert not applicable (N/A) when statement does not apply.

FEDERAL EMERGENCY MANAGEMENT AGENCY **RIVERINE HYDRAULIC ANALYSIS FORM**	*O.M.B. Burden No. 3067-0148* *Expires July 31, 1997*	**FEMA USE ONLY**

PUBLIC BURDEN DISCLOSURE NOTICE

Public reporting burden for this form is estimated to average 2.25 hours per response. The burden estimate includes the time for reviewing instructions, searching existing data sources, gathering and maintaining the needed data, and completing and reviewing the form. Send comments regarding the accuracy of the burden estimate and any suggestions for reducing this burden, to: Information Collections Management, Federal Emergency Management Agency, 500 C Street, S.W., Washington, DC 20472; and to the Office of Management and Budget, Paperwork Reduction Project (3067-0148), Washington, DC 20503.

Community Name: Unincorporated Areas of Maricopa County, City of Tempe, City of Mesa, Arizona and Salt River Pima-Maricopa Indian Community

Flooding Source: Salt River
(One form for each flooding source)

Project Name/Identifier: Floodplain/Floodway Delineation

1. REACH TO BE REVISED

Downstream limit: river mile 23.810

Upstream limit: river mile 28.440

2. EFFECTIVE FIS

☐ Not studied

☐ Studied by approximate methods

Downstream limit of study _____

Upstream limit of study _____

■ Studied by detailed methods

Downstream limit of study confluence with Gila River

Upstream limit of study river mile 39.198

■ Floodway delineated

Downstream limit of Floodway confluence with Gila River

Upstream limit of Floodway river mile 39.198

3. HYDRAULIC ANALYSIS

Why is the hydraulic analysis different from that used to develop the FIRM. *(Check all that apply)*

☐ Not studied in FIS

☐ Improved hydrologic data/analysis. Explain: _____

☐ Improved hydraulic analysis. Explain: _____

☐ Flood control structure. Explain: _____

■ Other. Explain: New topographic mapping has been used in the new analysis.

For areas which have detailed flooding:

Full input and output listings along with files on diskette (if available) for each of the models listed below (items 1, 2, 3, 4, and 5) and summary of the source of input parameters used in the models must be provided. The summary must include a complete description of any changes made from model to model (e.g. duplicate effective model to corrected effective model) At a minimum, the Duplicate Effective (item 1) and the Revised or Post-Project Conditions (item 4) models must be submitted. See instructions for directions on when other models may be required.

For areas which do not have detailed flooding:

Only the 100-year flood profile is required. A hydraulic model is not required for areas which do not have detailed flooding; however, BFEs may not be added to the revised FIRM. If a hydraulic model is developed for the area, items 3 and 4 described below must be submitted.

If hydraulic models are not developed, hydraulic analyses for existing or pre-project conditions and revised or post-project conditions must be submitted. All calculations must be submitted for these analyses. (See item 6 below)

1. Duplicate Effective Model

Natural ■ Floodway ☐

Copies of the hydraulic analysis used in the effective FIS, referred to as the effective models *(10-, 50-, 100-, and 500-year multi-profile runs and the floodway run)* must be obtained and then reproduced on the requestor's equipment to produce the duplicate effective model. This is required to assure that the effective model input data has been transferred correctly to the requestor's equipment and to assure that the revised data will be integrated into the effective data to provide a continuous FIS model upstream and downstream of the revised reach.

Effective floodway model not available. Only partial natural effective model was available for revised reach.

2. Corrected Effective Model N/A

Natural ☐ Floodway ☐

The corrected effective model is the model that corrects any errors that occur in the duplicate effective model, adds any additional cross sections to the duplicate effective model, or incorporates more detailed topographic information than that used in the currently effective model. The corrected effective model must not reflect any man-made physical changes since the date of the effective model. An error could be a technical error in the modeling procedures, or any construction in the floodplain that occurred prior to the date of the effective model but was not incorporated into the effective model.

3. Existing or Pre-Project Conditions Model

Natural ■ Floodway ■

The duplicate effective or corrected model is modified to produce the existing or pre-project conditions model to reflect any modifications that have occurred within the floodplain since the date of the effective model but prior to the construction of the project for which the revision is being requested. If no modification has occurred since the date of the effective model, then this model would be identical to the corrected effective or duplicate effective model.

4. Revised or Post-Project Conditions Model N/A

Natural ☐ Floodway ☐

The existing or pre-project conditions model *(or duplicate effective or corrected effective model, as appropriate)* is revised to reflect revised or post-project conditions. This model must incorporate any physical changes to the floodplain since the effective model was produced as well as the effects of the project. When the request is for proposed project this model should reflect proposed conditions.

5. Other: Please attach a sheet describing all other models submitted.

Natural ☐ Floodway ☐

6. Hydraulic Analyses (Only if Hydraulic Models are not developed)

Please attach all calculations for the existing or pre-project conditions and the revised or post-project conditions. Proceed to Form 5, "Riverine/Coastal Mapping Form".

4. MODEL PARAMETERS ***(from model used to revise 100-year water surface elevation)***

1. Discharges:

	Upstream Limit	Downstream Limit
10-year		
50-year		
100-year	220,000 cfs	215,000 cfs
500-year		

Attach diagram showing changes in 100-year discharge not applicable - discharge does not change

2. Explain how the starting water surface elevations were determined starting water surface elevations match those at river mile 23.667 of the City of Tempe. CLOMR package for the Salt River Channelization dated November 23, 1993.

3. Give range of friction loss coefficients (*Manning's "N"*) Channel 0.028-0.035

Overbanks 0.028-0.050

If friction loss coefficients are different anywhere along the revised reach from those used to develop the FIRM, give location, value used in the effective FIS, and revised values and an explanation as to how the revised values were determined.

Location	FIS	Revised
N/A		

Explain:

4. Describe how the cross section geometry data were determined *(e.g., field survey, topographic map, taken from previous study)* and list cross sections that were added.

Cross-section geometry was obtained from aerial photographs/photogrammetry. New cross-section alignments were used within the entire revised study reach.

5. Were natural channel banks selected as the location of the left and right channel banks in the model?

☐ Yes ■ No If no, explain why not: At some locations, channel bank stations are located inside the main channel because the 100-year flood is contained within the natural channel. Since floodway encroachments may not be placed inside of the bank stations, the bank stations were moved inside of the floodplain limits.

6. Explain how reach lengths for channel and overbanks were determined:

Channel reach lengths were measured along the hydraulic control line; overbank reach lengths were measured along the ceutroid of effective overbank flow.

5. RESULTS *(from model used to revise 100-year water surface elevations)*

1. Do the results indicate:

a. Water surface elevations higher than end points of cross sections? ..... ☐ Yes ■ No

b. Supercritical depth? ..... ☐ Yes ■ No

c. Critical depth? ..... ■ Yes ☐ No

d. Other unique situations ..... ☐ Yes ■ No

If yes to any of the above, attach an explanation that discusses the situation and how it is presented on the profiles, tables, and maps. See Attached Sheet.

2. What is the maximum change in energy gradient between cross-sections? ..... 3.44 ft.

Specify location 227.08

3. What is the distance between the cross-sections in 2 above? ..... 505 ft.

4. What is the maximum distance between cross-sections? ..... 764 ft.

Specify location 226.84

5. Floodway determination

a. What is the maximum surcharge allowed by the community or State? ..... 1.0 foot

b. What is the maximum surcharge for the revised conditions? ..... 1.0 foot

Specify location 224.71, 224.90, 227.18, 227.56

c. What is the maximum velocity? ..... 20.0 fps

Specify location 227.08

d. Are there any negeative surcharge values at any cross-section? ■ Yes ☐ No

If yes, the floodway may need to be widened. If it is not widened, please explain and indicate the maximum negative surcharge.

Explain: Maximum negative surcharge is - 0.5 ft. At locations where the majority of negative surcharges occur, the floodway encroachments are set at the natural bank stations. In many cases, the floodway width is not much narrower than the floodplain top width.

6. Explain how reach lengths for channel and overbanks were determined:

Channel reach lengths were measured along the hydraulic control line; overbank reach lengths were measured along the ceutroid of effective overbank flow.

5. RESULTS (*from model used to revise 100-year water surface elevations*)

1. Do the results indicate:

a. Water surface elevations higher than end points of cross sections? ..... ☐ Yes ■ No

b. Supercritical depth? ..... ☐ Yes ■ No

c. Critical depth? ..... ■ Yes ☐ No

d. Other unique situations ..... ☐ Yes ■ No

If yes to any of the above, attach an explanation that discusses the situation and how it is presented on the profiles, tables, and maps. See Attached Sheet.

2. What is the maximum change in energy gradient bet 3.97 → 3.44 ft.

Specify location ..... 226.99 → 227.08

3. What is the distance between the cross-sections in 2 505 ft.

4. What is the maximum distance between cross-sectio 764 ft.

Specify location 226.84

5. Floodway determination

a. What is the maximum surcharge allowed by the community or State? ... 226.48 foot

b. What is the maximum surcharge for the revised conditions? ..... foot

Specify location .....224..71,224.

c. What is the maximum velocity? ..... fps

Specify location .....

d. Are there any negeative surcharge values at any cross-section? ■ Yes ☐ No

If yes, the floodway may need to be widened. If it is not widened, please explain and indicate the maximum negative surcharge.

Explain: Maximum negative surcharge is - 0.5 ft. At locations where the majority of negative surcharges occur, the floodway encroachments are set at the natural bank stations. In many cases, the floodway width is not much narrower than the floodplain top width.

6. Is the discharge value used to determine the floodway anywhere different from that used to determine the natural 100-year flood elevations? ..... ☐ Yes ■ No

If Yes, explain:

_____

_____

_____

7. Do 100-year water surface elevations increase at any location? ..... ☐ Yes ■ No

If yes, please attach a list of the locations where the increases occur, state whether or not the increases are located on the requestor's property, and provide an explanation of the reason for the increases. *(For example: State if the increase is due to fill placed within the floodway fringe or placed within the currently adopted floodway limits)*

_____

_____

_____

Please attach a completed comparison table entitled: Water Surface Elevation Check (See page 6)

6. REVISED FIRM/FBFM AND FLOOD PROFILES

A. The revised water surface elevations tie into those computed by the effective FIS Model *(10-, 50-, 100-, and 500-year)*, downstream of the project at cross-section 23.667(a) within 0 feet *(vertical)* and upstream of the project at cross section 28.440(b) within 0 feet *(vertical)*.

B. The revised floodway elevations tie into those computed by the effective FIS model, dowstream of the project at cross section 23.667(a) within 0.0 feet *(vertical)* and upstream of the project at cross section 28.440(b) within 0.0 feet *(vertical)*.

(a) City of Tempe CLOMR dated November 23, 1993
(b) Effective FIS dated December 3, 1993

C. Attach profiles, at the same vertical and horizontal scale as the profiles in the effective FIS report, showing stream bed and profiles of all floods studied (without encroachment). Also, label all cross sections, road crossings (including low chord and top-of-road data), culverts, tributaries, corporate limits, and study limits. If channel distance has changed, the stationing should be revised for all profile sheets.

D. Attach a Floodway Data Table showing data for each cross section listed in the published Floodway Data Table in the FIS report.

Proceed to Riverine /Coastal Mapping Form

FEDERAL EMERGENCY MANAGMENT AGENCY

WATER SURFACE ELEVATION CHECK

COMMUNITY NAME	FLOODIND SOURCE	PROJECT NAME /IDENTIFIER
City of Mesa, City of Tempe, Unincorporated Areas of Maricopa County, Arizona and Salt River Pima-Maricopa Indian Community	Salt River	Floodplain/Floodway Delineation

	EFFECTIVE			DUPLICATE EFFECTIVE			CORRECTED EFFECTIVE			EXISTING/PRE-PROJECT			REVISED/PROJECT		
(a)	(b)			(b)			(b)			(b)			(b)		
SECNO	NCWSEL[1]	FCWSEL[2]	SURC.[3]	NCWSEL[1]	FCWSEL[2]	SURC.[3]	NCWSEL[1]	FCWSEL[2]	SURC.[3]	NCWSEL[1]	FCWSEL[2]	SURC.[3]	NCWSEL[1]	FCWSEL[2]	SURC.[3]
23.81 223.10	1166.89	Not available		1166.89	Not available					1166.9	1166.9	0.0			
24.54 223.77	1181.51	Not available		1181.51	Not available					1176.6	1176.6	0.0			
24.94 224.21	1182.98	Not available		1182.98	Not available					1178.0	1178.1	0.1			
25.33 224.62	1184.85	Not available		1184.85	Not available					1179.0	1179.2	0.2			
25.93 225.19	1190.5	1190.6	0.1	-	-	-				1182.8	1182.9	0.1			
26.53 225.66	1195.0	1195.0	0.0	-	-	-				1187.0	1187.2	0.0			
27.13 226.23	1202.1	1202.4	0.3	-	-	-				1190.4	1190.2	-0.2			
27.57 226.70	1206.3	1206.6	0.3	-	-	-				1202.1	1201.7	-0.4			
28.09 227.18	1212.0	1212.0	0.0	-	-	-				1211.8	1212.8	1.0			
28.440 227.56	1217.3	1218.3	0.0	-	-	-				1217.3	1218.3	1.0			

COMMENTS:

(a) First number is section number or river mile as in effective FIS; second number is number of closest cross-section in revised study.

(b) See attached "Explanation of HEC-2 models provided with this package" under MT-2 Form 4, item 3. (Follows Form 4).

1-100-year (natural) Water Surface Elevation 2-Encroachment (floodway) Water Surface Elevation 3-Surcharge Value

Include all cross sections in the models between tie-in points. Any interpolated values should be indicated in parentheses.

FEDERAL EMERGENCY MANAGEMENT AGENCY **RIVERINE HYDRAULIC ANALYSIS FORM**	*O.M.B. Burden No. 3067-0148* *Expires July 31, 1997*	**FEMA USE ONLY**

PUBLIC BURDEN DISCLOSURE NOTICE

Public reporting burden for this form is estimated to average 2.25 hours per response. The burden estimate includes the time for reviewing instructions, searching existing data sources, gathering and maintaining the needed data, and completing and reviewing the form. Send comments regarding the accuracy of the burden estimate and any suggestions for reducing this burden, to: Information Collections Management, Federal Emergency Management Agency, 500 C Street, S.W., Washington, DC 20472; and to the Office of Management and Budget, Paperwork Reduction Project (3067-0148), Washington, DC 20503.

Community Name: Maricopa County, Arizona; Salt River Pima Maricopa Indian Community

Flooding Source: Salt River - South Alma School split
(One form for each flooding source)

Project Name/Identifier: Floodplain/Floodway Delineation

1. REACH TO BE REVISED

Downstream limit: cross-section 225.95 (revised model)

Upstream limit: cross-section 226.89 (revised model)

2. EFFECTIVE FIS

☐ Not studied

☐ Studied by approximate methods

Downstream limit of study _____

Upstream limit of study _____

■ Studied by detailed methods

Downstream limit of study _____

Upstream limit of study _____

☐ Floodway delineated

Downstream limit of Floodway _____

Upstream limit of Floodway _____

3. HYDRAULIC ANALYSIS

Why is the hydraulic analysis different from that used to develop the FIRM. *(Check all that apply)*

☐ Not studied in FIS

☐ Improved hydrologic data/analysis. Explain: _____

■ Improved hydraulic analysis. Explain: _____

☐ Flood control structure. Explain: _____

■ Other. Explain: New topographic mapping has been used in the new analysis.

For areas which have detailed flooding:

Full input and output listings along with files on diskette (if available) for each of the models listed below (items 1, 2, 3, 4, and 5) and summary of the source of input parameters used in the models must be provided. The summary must include a complete description of any changes made from model to model (e.g. duplicate effective model to corrected effective model) At a minimum, the Duplicate Effective (item 1) and the Revised or Post-Project Conditions (item 4) models must be submitted. See instructions for directions on when other models may be required.

For areas which do not have detailed flooding:

Only the 100-year flood profile is required. A hydraulic model is not required for areas which do not have detailed flooding; however, BFEs may not be added to the revised FIRM. If a hydraulic model is developed for the area, items 3 and 4 described below must be submitted.

If hydraulic models are not developed, hydraulic analyses for existing or pre-project conditions and revised or post-project conditions must be submitted. All calculations must be submitted for these analyses. (See item 6 below)

1. Duplicate Effective Model

Natural ■ Floodway ☐

Effective floodway model not available.

Copies of the hydraulic analysis used in the effective FIS, referred to as the effective models *(10-, 50-, 100-, and 500-year multi-profile runs and the floodway run)* must be obtained and then reproduced on the requestor's equipment to produce the duplicate effective model. This is required to assure that the effective model input data has been transferred correctly to the requestor's equipment and to assure that the revised data will be integrated into the effective data to provide a continuous FIS model upstream and downstream of the revised reach.

2. Corrected Effective Model

Natural ☐ Floodway ☐

The corrected effective model is the model that corrects any errors that occur in the duplicate effective model, adds any additional cross sections to the duplicate effective model, or incorporates more detailed topographic information than that used in the currently effective model. The corrected effective model must not reflect any man-made physical changes since the date of the effective model. An error could be a technical error in the modeling procedures, or any construction in the floodplain that occurred prior to the date of the effective model but was not incorporated into the effective model.

3. Existing or Pre-Project Conditions Model

Natural ■ Floodway ■

The duplicate effective or corrected model is modified to produce the existing or pre-project conditions model to reflect any modifications that have occurred within the floodplain since the date of the effective model but prior to the construction of the project for which the revision is being requested. If no modification has occurred since the date of the effective model, then this model would be identical to the corrected effective or duplicate effective model.

4. Revised or Post-Project Conditions Model

Natural ☐ Floodway ☐

The existing or pre-project conditions model *(or duplicate effective or corrected effective model, as appropriate)* is revised to reflect revised or post-project conditions. This model must incorporate any physical changes to the floodplain since the effective model was produced as well as the effects of the project. When the request is for proposed project this model should reflect proposed conditions.

5. Other: Please attach a sheet describing all other models submitted.

Natural ☐ Floodway ☐

6. Hydraulic Analyses (Only if Hydraulic Models are not developed)

Please attach all calculations for the existing or pre-project conditions and the revised or post-project conditions. Proceed to Form 5, "Riverine/Coastal Mapping Form".

4. MODEL PARAMETERS *(from model used to revise 100-year water surface elevation)*

1. Discharges:

	Upstream Limit	Downstream Limit
10-year		
50-year		
100-year	72,500 cfs	72,500 cfs
500-year		

Attach diagram showing changes in 100-year discharge

2. Explain how the starting water surface elevations were determined at section 225.95, the water surface elevations match those of the main branch Salt River model, SALTLOMR.

3. Give range of friction loss coefficients (*Manning's "N"*) Channel 0.028–0.031

Overbanks 0.028–0.032

If friction loss coefficients are different anywhere along the revised reach from those used to develop the FIRM, give location, value used in the effective FIS, and revised values and an explanation as to how the revised values were determined.

Location	FIS	Revised
entire reach	0.030–0.035 (channel)	0.028–0.031
entire reach	0.040–0.050 (overbanks)	0.028–0.032

Explain: The above FIS roughness coefficients are general numbers obtained from Volume 1 of 9 of the FIS report. The actual effective model was not available to verify whether a difference in "n" values occurs in this reach.

4. Describe how the cross section geometry data were determined *(e.g., field survey, topographic map, taken from previous study)* and list cross sections that were added.

Cross-section geometry was obtained from aerial photographs/photogrammetry. New cross-section alignments were used within the entire revised study reach.

5. Were natural channel banks selected as the location of the left and right channel banks in the model?

☐ Yes ■ No If no, explain why not: At some locations, channel bank stations are located inside the main channel because the 100-year flood is contained within the natural channel. Since floodway encroachments may not be placed inside of the bank stations, the bank stations were moved inside of the floodplain limits.

6. Explain how reach lengths for channel and overbanks were determined:

Channel reach lengths were measured along the center of the south branch channel; overbank reach lengths were measured along the ceutroid of effective overbank flow.

5. RESULTS *(from model used to revise 100-year water surface elevations)*

1. Do the results indicate:

a. Water surface elevations higher than end points of cross sections? ..... ■ Yes ☐ No

b. Supercritical depth? ..... ☐ Yes ■ No

c. Critical depth? ..... ■ Yes ☐ No

d. Other unique situations ..... ☐ Yes ■ No

If yes to any of the above, attach an explanation that discusses the situation and how it is presented on the profiles, tables, and maps. See attached sheet.

2. What is the maximum change in energy gradient between cross-sections? ..... 5.9 ft.

Specify location 226.48

3. What is the distance between the cross-sections in 2 above? ..... 1 ft.

4. What is the maximum distance between cross-sections? ..... 650 ft.

Specify location 226.70

5. Floodway determination

a. What is the maximum surcharge allowed by the community or State? ..... 1.0 foot

b. What is the maximum surcharge for the revised conditions? ..... 0.9 foot

Specify location 226.80

c. What is the maximum velocity? ..... 18.6 fps

Specify location 226.48

d. Are there any negeative surcharge values at any cross-section? ■ Yes ☐ No

If yes, the floodway may need to be widened. If it is not widened, please explain and indicate the maximum negative surcharge.

Explain: Maximum negative surcharge is - 1.5 ft. at section 226.61. Several attempts were made to adjust the floodway width, but negative surcharges still occurred. Therefore, emphasis was placed on maintaining a smooth floodway boundary.

6. Is the discharge value used to determine the floodway anywhere different from that used to determine the natural 100-year flood elevations? ..... ■ Yes ☐ No

If Yes, explain:

A separate water surface profile model was used to delineate the south branch of the Salt River at Alma School Road. The flow distribution used was determined by matching energy grade elevations with the main branch at the upstream end of the split.

7. Do 100-year water surface elevations increase at any location? ..... ☐ Yes ■ No

If yes, please attach a list of the locations where the increases occur, state whether or not the increases are located on the requestor's property, and provide an explanation of the reason for the increases. *(For example: State if the increase is due to fill placed within the floodway fringe or placed within the currently adopted floodway limits)*

_____

_____

_____

Please attach a completed comparison table entitled: Water Surface Elevation Check (See page 6)

6. REVISED FIRM/FBFM AND FLOOD PROFILES

A. The revised water surface elevations tie into those computed by the effective FIS Model *(10-, 50-, 100-, and 500-year)*, downstream of the project at cross-section_____ within_____feet *(vertical)* and upstream of the project at cross section_____within_____feet *(vertical)*.

N/A - see documentation for main branch Salt River model.

B. The revised floodway elevations tie into those computed by the effective FIS model, dowstream of the project at cross section_____within_____feet *(vertical)* and upstream of the project at cross section_____ within_____feet *(vertical)*.

N/A - see documentation for main branch Salt River model.

C. Attach profiles, at the same vertical and horizontal scale as the profiles in the effective FIS report, showing stream bed and profiles of all floods studied (without encroachment). Also, label all cross sections, road crossings (including low chord and top-of-road data), culverts, tributaries, corporate limits, and study limits. If channel distance has changed, the stationing should be revised for all profile sheets.

D. Attach a Floodway Data Table showing data for each cross section listed in the published Floodway Data Table in the FIS report.

Proceed to Riverine /Coastal Mapping Form

FEDERAL EMERGENCY MANAGMENT AGENCY

WATER SURFACE ELEVATION CHECK

COMMUNITY NAME	FLOODIND SOURCE	PROJECT NAME /IDENTIFIER
Maricopa County, Arizona; Salt River Pima Maricopa Indian Community	Salt River	Floodplain/Floodway Delineation

	EFFECTIVE			DUPLICATE EFFECTIVE			CORRECTED EFFECTIVE			EXISTING/PRE-PROJECT			REVISED/PROJECT		
(a)				(b)											
SECNO	NCWSEL[1]	FCWSEL[2]	SURC.[3]	NCWSEL[1]	FCWSEL[2]	SURC.[3]	NCWSEL[1]	FCWSEL[2]	SURC.[3]	NCWSEL[1]	FCWSEL[2]	SURC.[3]	NCWSEL[1]	FCWSEL[2]	SURC.[3]
27.13 226.13	1201.1	1202.4	0.3	effective model						1189.9	1189.9	0.0			
27.57 226.655	1206.3	1206.6	0.3	not available						(1205.05)	(1204.85)	(-0.2)			

COMMENTS:

(a) Top number is section number from effective FIS; bottom number is river mile from revised model. Note that RM 226.655 existing/pre-project model water surface elevations are interpolated between cross-sections 226.61 and 226.70.

(b) No effective model was available, so no duplicate effective model could be prepared.

1-100-year (natural) Water Surface Elevation 2-Encroachment (floodway) Water Surface Elevation 3-Surcharge Value

Include all cross sections in the models between tie-in points. Any interpolated values should be indicated in parentheses.

MT-2 Form 4, item 3:

Explanation of HEC-2 models provided with this package

The HEC-2 models for the Salt River included with this package include the following:

1. Duplicate Effective Model:

Why wasn't FCD model provided?

Following requests to the Flood Control District of Maricopa County, Michael Baker, Jr. of Alexandria, VA, and to the City of Tempe, Arizona, an effective model for only a portion of the reach covered by this LOMR request could be obtained.

That effective model was obtained from the City of Tempe. The model was prepared by CRSS Civil Engineers, Inc. for the City of Tempe as part of a CLOMR request package for the Salt River Channelization Floodplain Delineation Study, Southern Pacific Railroad Salt River Bridge to McClintock Drive, dated November 23, 1993. That CLOMR was subsequently issued by FEMA on September 9, 1994 in a letter from Michael K. Buckley, Chief, Mitigation Directorate, Hazard Identification and Risk Assessment Division, FEMA to the Honorable Neil Giuliano, Mayor, City of Tempe.

As part of that CLOMR package, CRSS/City of Tempe performed a HEC-2 analysis for the reach immediately upstream of the channelization project (upstream of McClintock Drive) in order to tie in to the effective floodplain. That model, entitled "Above Project Model, File Name: SRBASE4P.DTA" in the City of Tempe CLOMR package, was used as the effective model for this LOMR request.

The effective model obtained from the City of Tempe does not include a floodway profile because within the channelized reach, the floodway limits were taken to be equal to the floodplain limits. Upstream of the channelized reach, then, an effective model was available only for the natural profile.

That natural profile effective model was duplicated and executed using the same equipment and HEC-2 software used to prepare the existing/pre-project model included in this package.

2. Existing/Pre-project model:

The revised study reach submitted as part of this LOMR request was originally studied by Michael Baker, Jr. Inc. of Phoenix under contract with the Maricopa County Flood Control District. Baker prepared the topographic mapping, collected cross section data, and prepared preliminary HEC-2 models for reaches of the Salt River upstream, downstream, and within the reach for which this LOMR is being requested. The HEC-2 model for the reach covered by this LOMR request was refined by Wood, Patel & Associates and was subsequently

used to delineate a new floodplain and floodway.

The existing condition model ties into the City of Tempe CLOMR model by matching cross section 23.667 GR data and water surface elevation from the file SRBASE4P.DTA from the CLOMR package. The new cross section number is 223.10. The upstream end of the revised HEC-2 model ties in to the effective floodplain and floodway at cross section CM (river mile 28.440) of the effective FIS. The new cross section number at the upstream end of the study reach is 227.560.

Flows used in the revised existing condition model match those used in the effective FIS at all cross sections except between cross sections 226.040 and 226.890, where a separate HEC-2 model was prepared. Within this reach, flow splits to the south around a natural island within the Salt River floodplain near Alma School Road. The proportion of flow in each branch of the split was calculated by varying the flow in each split until the energy grade elevations at section 226.890 matched. The flow split proportion is 72,500 cfs in the south channel and 147,500 cfs in the north (main) channel. Note that the model for the south branch (SPLITB.DAT) was started at cross section 225.950 using the water surface elevation for both natural and floodway profiles from the main branch model (SALTLOMR.DAT).

Note that 200 has been added to the river mile cross section numbering on the new work maps. With the exception of the 200 addend, cross section numbering for the revised HEC-2 model is based on the new topographic mapping, and thus differs from the original FIS river miles.

The south branch model is referred to as "Salt River - South Alma School Road Split". At the upstream cross section of that model, a right ineffective flow encroachment was used to confine the flow to the south channel. A left ineffective flow encroachment was used at the same cross section station in the corresponding Salt River main branch model to confine flow to the north channel.

MT-2 FORM 4, ITEM 3

Salt River
Duplicate Effective HEC-2 Model

File name: EFFSALT.OUT

```
*******************************************
*  HEC-2 WATER SURFACE PROFILES           *
*                                         *
*  Version   4.6.2;  May 1991             *
*                                         *
*  RUN DATE    11SEP95    TIME   10:12:45 *
*******************************************
```

```
****************************************
*  U.S. ARMY CORPS OF ENGINEERS        *
*  HYDROLOGIC ENGINEERING CENTER       *
*  609 SECOND STREET, SUITE D          *
*  DAVIS, CALIFORNIA 95616-4687        *
*          (916) 756-1104              *
****************************************
```

```
X     X  XXXXXXX   XXXXX              XXXXX
X     X  X        X     X            X     X
X     X  X        X                        X
XXXXXXX  XXXX     X          XXXXX    XXXXX
X     X  X        X                  X
X     X  X        X     X            X
X     X  XXXXXXX   XXXXX             XXXXXXX
```

THIS RUN EXECUTED 11SEP95 10:12:45

```
************************************
 HEC-2 WATER SURFACE PROFILES

 Version   4.6.2;  May 1991
************************************
```

```
T1   SALT RIVER FLOOD INSURANCE STUDY
T2   AUGUST 1982  ADOT TOPO BASE MAP
T3   HAYDEN ROAD TO COUNTRY CLUB ROAD
T4   DUPLICATE EFFECTIVE MODEL
T4   Sections 23.667 through 25.194 match those taken from the City of Tempe
T4   CLOMR "Above Project Model, File Name SRBASE4P.DTA" for the Salt River
T4   Channelization, dated November 23, 1993.  Note that the above CLOMR model
T4   did not include floodway encroachments.
T4   Upstream of section 25.194, an effective model was not available.
T4   This duplicate effective model does not contain floodway encroachments
T4   because no effective model with floodway encroachments was available.

J1  ICHECK    INQ       NINV      IDIR      STRT      METRIC    HVINS     Q         WSEL      FQ

       0         2         0         0       0.0         0       0.0    215000   1166.93

J2  NPROF     IPLOT     PRFVS     XSECV     XSECH     FN        ALLDC     IBW       CHNIM     ITRACE

     -1         0        -1         0         0         0         0         0         0         0


J3  VARIABLE CODES FOR SUMMARY PRINTOUT

     38        42        39        43         1         3        25         4         5

NC    .045      .045      .035        .1        .3
X1   23.667         9    9973.0   11001.0         0         0         0
X3      10         0         0         0         0         0         0    1159.07    1171.79
GR   1171.8    9896.0   1171.81    9911.0   1159.31    9948.0   1159.07    9973.0    1150.36   10000.0
GR   1147.3   10519.0   1150.35   10937.0   1171.79   11001.0   1171.79   11016.0

X1   23.713        10    9430.0   10515.0     245.0     245.0     245.0       1.0       0.0
X3        0       0.0       0.0       0.0       0.0       0.0       0.0    1159.27    1172.01
GR   1170.0    9255.0    1168.0    9287.0    1166.0    9332.0    1164.0    9363.0    1162.0    9403.0
GR   1159.2    9430.0   1150.56    9456.0   1147.55   10000.0   1150.55   10451.0   1172.01   10515.0

X1   23.751         8    9385.0   10483.0     200.0     200.0     200.0       1.0       0.0
X3        0       0.0       0.0       0.0       0.0       0.0       0.0    1159.47    1170.0
GR   1172.0    9225.0    1166.0    9263.0    1164.0    9360.0   1159.47    9385.0   1150.76    9411.0
GR   1147.7   10000.0   1150.75   10343.0   1170.0   10483.0
```

Section 23.797 matches section 23.94 of the effective FIS. An X5 card is used at this location to force the floodway water surface elevation to that of the effective FIS because a floodway model was not provided in the City of Tempe CLOMR for the Salt River Channelization dated November 23, 1993.

X1	23.797	21	9190	10790	415.0	125.0	245.0	1.0	0.0	
X3	10									
X5	2		1173.7							
GR	1175	8295	1171.5	8760	1173	9190	1170	9450	1165	9470
GR	1160	9590	1155	9620	1154	9980	1152	10210	1155	10370
GR	1160	10520	1165	10640	1170	10715	1174	10790	1170	10850
GR	1170	11320	1171	11390	1170	11450	1170	11590	1171	11770
GR	1174	11880								
X1	23.997	25	9760	10610	1085	1040	1060			
GR	1180	8380	1181	8430	1180	8560	1179	8720	1180	9000
GR	1181	9070	1180	9130	1180	9430	1185	9455	1180	9490
GR	1175	9760	1170	9815	1155	9955	1154	10005	1154	10475
GR	1155	10475	1175	10525	1175	10610	1171	11230	1170	11460
GR	1168	11525	1170	11590	1175	11620	1173.5	11950	1175	12250
NC	.05	.05	.035							
X1	24.196	18	9675	10910	815	1045	1050			
X3	10	0	0							
GR	1180	8155	1180	8340	1183.5	8530	1175	8580	1175	9545
GR	1178.5	9675	1175	9790	1155	9835	1155	10030	1160	10270
GR	1165	10350	1170	10440	1170	10600	1174	10910	1175	11140
GR	1177	11360	1178	11640	1180	12170				
X1	24.396	13	9010	10665	1090	1040	1055			
X3	10									
GR	1184	9010	1180	9150	1175	9270	1158	9430	1158	10200
GR	1165	10275	1165	10340	1170	10400	1175	10640	1179	10665
GR	1175	10710	1180	11050	1181.5	11470				
QT	2	220000	220000							
X1	24.595	16	8985	11005	1025	1070	1052			
X3	10									
GR	1185	8790	1180	8855	1180	8985	1175	9090	1175	9170
GR	1170	9245	1165	9300	1161	9340	1161	9970	1163	10030
GR	1161	10110	1161	10630	1170	10660	1175	11005	1180	11155
GR	1183	11300								
X1	24.795	16	9770	11530	1060	630	1055			
X3	10									
GR	1184	8890	1180	9095	1180	9740	1183	9755	1180	9770
GR	1165	9810	1165	9900	1171.6	9910	1165	9970	1164	10000
GR	1164	11045	1165	11105	1170	11120	1175	11510	1180	11530
GR	1184	11840								
X1	24.995	28	9605	11850	1065	1135	1055			
X3	10									
GR	1186	8250	1184	8570	1184	8571	1184	8572	1184	8573
GR	1180	8705	1179	9605	1175	9630	1167	9650	1167	9745
GR	1170	9755	1170	9945	1167	9980	1167	10260	1170	10280
GR	1173	10350	1170	10385	1167	10395	1167	11060	1170	11070
GR	1170	11380	1171	11430	1169	11580	1170	11640	1175	11665
GR	1180	11850	1185	11860	1186	11940				

X1	25.194	25	9330	12245	1070	870	1050			
GR	1185	8895	1175	8910	1175	9270	1180	9300	1184	9330
GR	1180	9355	1175	9370	1175	9460	1178	9640	1175	9820
GR	1170	9890	1170	10250	1175	10385	1180	10400	1184	10435
GR	1180	10500	1175	10670	1177	10890	1180	11095	1180	11475
GR	1177	11650	1175	11920	1176.8	12115	1175	12215	1185	12245

SECNO	DEPTH	CWSEL	CRIWS	WSELK	EG	HV	HL	OLOSS	L-BANK ELEV
Q	QLOB	QCH	QROB	ALOB	ACH	AROB	VOL	TWA	R-BANK ELEV
TIME	VLOB	VCH	VROB	XNL	XNCH	XNR	WTN	ELMIN	SSTA
SLOPE	XLOBL	XLCH	XLOBR	ITRIAL	IDC	ICONT	CORAR	TOPWID	ENDST

*PROF 1

CCHV= .100 CEHV= .300

*SECNO 23.667

3495 OVERBANK AREA ASSUMED NON-EFFECTIVE, ELLEA= 1159.07 ELREA= 1171.79

23.667	19.63	1166.93	.00	1166.93	1169.18	2.25	.00	.00	1159.07
215000.0	1341.4	213658.6	.0	279.4	17701.9	.0	.0	.0	1171.79
.00	4.80	12.07	.00	.045	.035	.000	.000	1147.30	9925.44
.001793	0.	0.	0.	0	0	0	.00	1061.05	10986.49

*SECNO 23.713

23.713	20.19	1167.74	.00	.00	1169.61	1.87	.39	.04	1159.20
215000.0	1802.1	213197.9	.0	501.9	19372.9	.0	106.5	6.4	1172.01
.01	3.59	11.00	.00	.045	.035	.000	.000	1147.55	9292.76
.001424	245.	245.	245.	2	0	0	.00	1209.51	10502.28

*SECNO 23.751

23.751	20.27	1167.97	.00	.00	1169.94	1.97	.30	.03	1159.47
215000.0	1478.6	213521.4	.0	455.8	18876.1	.0	196.5	12.0	1170.00
.01	3.24	11.31	.00	.045	.035	.000	.000	1147.70	9250.55
.001576	200.	200.	200.	2	0	0	.00	1217.66	10468.21

*SECNO 23.797

3301 HV CHANGED MORE THAN HVINS

3302 WARNING: CONVEYANCE CHANGE OUTSIDE OF ACCEPTABLE RANGE, KRATIO = .47

3495 OVERBANK AREA ASSUMED NON-EFFECTIVE, ELLEA= 1173.00 ELREA= 1174.00

23.797	14.89	1166.89	.00	.00	1171.42	4.53	.72	.77	1173.00
215000.0	.0	215000.0	.0	.0	12592.6	.0	287.1	19.0	1174.00
.02	.00	17.07	.00	.000	.035	.000	.000	1152.00	9462.38
.007094	415.	245.	125.	3	0	0	.00	1206.18	10668.57

SECNO	DEPTH	CWSEL	CRIWS	WSELK	EG	HV	HL	OLOSS	L-BANK ELEV
Q	QLOB	QCH	QROB	ALOB	ACH	AROB	VOL	TWA	R-BANK ELEV
TIME	VLOB	VCH	VROB	XNL	XNCH	XNR	WTN	ELMIN	SSTA
SLOPE	XLOBL	XLCH	XLOBR	ITRIAL	IDC	ICONT	CORAR	TOPWID	ENDST

*SECNO 23.997

3265 DIVIDED FLOW

3301 HV CHANGED MORE THAN HVINS

23.997	18.61	1172.61	1171.33	.00	1177.69	5.08	6.10	.17	1175.00
215000.0	.0	210187.6	4812.4	.0	11498.2	1180.6	594.3	50.1	1175.00
.03	.00	18.28	4.08	.000	.035	.045	.000	1154.00	9786.21
.004764	1085.	1060.	1040.	4	11	0	.00	1359.24	11605.70

*SECNO 24.196

3301 HV CHANGED MORE THAN HVINS

3302 WARNING: CONVEYANCE CHANGE OUTSIDE OF ACCEPTABLE RANGE, KRATIO = 1.53

24.196	24.42	1179.42	.00	.00	1181.13	1.71	3.10	.34	1178.50
215000.0	16420.0	190508.6	8071.4	4667.0	17209.3	2686.0	1030.4	105.1	1174.00
.06	3.52	11.07	3.00	.050	.035	.050	.000	1155.00	8554.01
.002037	815.	1050.	1045.	3	0	0	.00	3461.62	12015.63

*SECNO 24.396

3280 CROSS SECTION 24.40 EXTENDED .02 FEET

3301 HV CHANGED MORE THAN HVINS

3302 WARNING: CONVEYANCE CHANGE OUTSIDE OF ACCEPTABLE RANGE, KRATIO = 1.60

3495 OVERBANK AREA ASSUMED NON-EFFECTIVE, ELLEA= 1184.00 ELREA= 1179.00

24.396	23.51	1181.51	.00	.00	1182.47	.96	1.27	.07	1184.00
215000.0	.0	211422.3	3577.7	.0	26726.6	1891.5	1675.5	175.9	1179.00
.10	.00	7.91	1.89	.000	.035	.050	.000	1158.00	9096.89
.000793	1090.	1055.	1040.	2	0	0	.00	2373.11	11470.00

SECNO	DEPTH	CWSEL	CRIWS	WSELK	EG	HV	HL	OLOSS	L-BANK ELEV
Q	QLOB	QCH	QROB	ALOB	ACH	AROB	VOL	TWA	R-BANK ELEV
TIME	VLOB	VCH	VROB	XNL	XNCH	XNR	WTN	ELMIN	SSTA
SLOPE	XLOBL	XLCH	XLOBR	ITRIAL	IDC	ICONT	CORAR	TOPWID	ENDST

*SECNO 24.595

24.595	21.55	1182.55	.00	.00	1183.14	.59	.63	.04	1180.00
220000.0	431.9	218006.8	1561.2	373.3	35130.2	913.9	2461.2	234.4	1175.00
.14	1.16	6.21	1.71	.050	.035	.050	.000	1161.00	8821.89
.000475	1025.	1052.	1070.	2	0	0	.00	2456.22	11278.11

*SECNO 24.795

3265 DIVIDED FLOW

24.795	18.98	1182.98	.00	.00	1183.83	.85	.62	.08	1180.00
220000.0	3509.8	216126.2	364.0	2197.8	28999.2	345.2	3278.2	295.8	1180.00
.18	1.60	7.45	1.05	.050	.035	.050	.000	1164.00	8942.04
.000738	1060.	1055.	630.	2	0	0	.00	2819.10	11761.30

*SECNO 24.995

24.995	16.96	1183.96	.00	.00	1184.58	.62	.73	.02	1179.00
220000.0	8537.5	211445.1	17.4	4274.0	32792.9	15.7	4110.3	370.2	1180.00
.23	2.00	6.45	1.11	.050	.035	.050	.000	1167.00	8574.28
.000647	1065.	1055.	1135.	2	0	0	.00	3283.64	11857.92

*SECNO 25.194

3302 WARNING: CONVEYANCE CHANGE OUTSIDE OF ACCEPTABLE RANGE, KRATIO = .57

25.194	14.85	1184.85	.00	.00	1185.77	.92	1.10	.09	1184.00
220000.0	23060.1	196939.9	.0	3926.2	24984.7	.0	4907.5	450.4	1185.00
.27	5.87	7.88	.00	.050	.035	.000	.000	1170.00	8895.22
.001968	1070.	1050.	870.	2	0	0	.00	3349.34	12244.56

THIS RUN EXECUTED 11SEP95 10:12:47

****
HEC-2 WATER SURFACE PROFILES

Version 4.6.2; May 1991
****

NOTE- ASTERISK (*) AT LEFT OF CROSS-SECTION NUMBER INDICATES MESSAGE IN SUMMARY OF ERRORS LIST

DEN ROAD TO COUNTRY CLUB

SUMMARY PRINTOUT

	SECNO	ELMIN	XLCH	Q	CWSEL	EG	AREA	TOPWID	10*KS
	23.667	1147.30	.00	215000.00	1166.93	1169.18	17981.36	1061.05	17.93
	23.713	1147.55	245.00	215000.00	1167.74	1169.61	19874.86	1209.51	14.24
	23.751	1147.70	200.00	215000.00	1167.97	1169.94	19331.84	1217.66	15.76
*	23.797	1152.00	245.00	215000.00	1166.89	1171.42	12592.63	1206.18	70.94
	23.997	1154.00	1060.00	215000.00	1172.61	1177.69	12678.73	1359.24	47.64
*	24.196	1155.00	1050.00	215000.00	1179.42	1181.13	24562.36	3461.62	20.37
*	24.396	1158.00	1055.00	215000.00	1181.51	1182.47	28618.01	2373.11	7.93
	24.595	1161.00	1052.00	220000.00	1182.55	1183.14	36417.33	2456.22	4.75
	24.795	1164.00	1055.00	220000.00	1182.98	1183.83	31542.15	2819.10	7.38
	24.995	1167.00	1055.00	220000.00	1183.96	1184.58	37082.50	3283.64	6.47
*	25.194	1170.00	1050.00	220000.00	1184.85	1185.77	28910.91	3349.34	19.68

SUMMARY OF ERRORS AND SPECIAL NOTES

```
WARNING SECNO=     23.797  PROFILE=  1  CONVEYANCE CHANGE OUTSIDE ACCEPTABLE RANGE

WARNING SECNO=     24.196  PROFILE=  1  CONVEYANCE CHANGE OUTSIDE ACCEPTABLE RANGE

WARNING SECNO=     24.396  PROFILE=  1  CONVEYANCE CHANGE OUTSIDE ACCEPTABLE RANGE

WARNING SECNO=     25.194  PROFILE=  1  CONVEYANCE CHANGE OUTSIDE ACCEPTABLE RANGE
```

MT-2 FORM 4, ITEM 3

Salt River
Existing Condition HEC-2 Model

File name: SALTLOMR.OUT

```
*******************************************
*  HEC-2 WATER SURFACE PROFILES           *
*                                         *
*  Version   4.6.2;  May 1991             *
*                                         *
*  RUN DATE    11SEP95    TIME   07:52:58 *
*******************************************
```

```
****************************************
*  U.S. ARMY CORPS OF ENGINEERS        *
*  HYDROLOGIC ENGINEERING CENTER       *
*  609 SECOND STREET, SUITE D          *
*  DAVIS, CALIFORNIA 95616-4687        *
*          (916) 756-1104              *
****************************************
```

```
X     X  XXXXXXX   XXXXX              XXXXX
X     X  X        X     X            X     X
X     X  X        X                        X
XXXXXXX  XXXX     X          XXXXX    XXXXX
X     X  X        X                  X
X     X  X        X     X            X
X     X  XXXXXXX   XXXXX             XXXXXXX
```

THIS RUN EXECUTED 11SEP95 07:52:58

```
************************************
 HEC-2 WATER SURFACE PROFILES

 Version   4.6.2;  May 1991
************************************
```

```
T1      SALT RIVER, MCCLINTOCK DRIVE TO COUNTRY CLUB DRIVE
T2      BASED ON FCDMC PRELIMINARY SALT RIVER MODELS R4A.DAT & R5A.DAT
T3      BASE MODEL PREPARED BY MICHAEL BAKER JR. ENGINEERS, INC.
T4      REVISED BY WOOD, PATEL & ASSOCIATES, INC. August 1995

        100-YEAR FLOW = 220,000 CFS (PRE-ROOSEVELT DAM CONDITION)

        EXISTING CONDITION MODEL, FLOODPLAIN AND FLOODWAY

        FILE SALTLOMR.DAT

J1  ICHECK    INQ       NINV      IDIR      STRT      METRIC    HVINS     Q         WSEL      FQ

                2                                                         215000   1166.93

J2  NPROF     IPLOT     PRFVS     XSECV     XSECH     FN        ALLDC     IBW       CHNIM     ITRACE

     1         0        -1                                      -1        -6

J3  VARIABLE CODES FOR SUMMARY PRINTOUT

    38         1        55        26        56        13        14        15        43         4
    53        54                  38         1         2         3        42         8         5
    33        39        67        68       200

J5  LPRNT    NUMSEC                 ********REQUESTED SECTION NUMBERS********


        Upstream of McClintock Road bridge; this section matches section 23.667
        of downstream model presented in the City of Tempe's CLOMR package for
        Salt River Channelization, November 23, 1993.


NC    0.045     0.045     0.035        .1        .3
ET                          9.1                                                        9973.0    11001.0
```

Upstream of McClintock Road Bridge

X1	223.10	9	9973.0	11001.0	0.0	0.0	0.0	1.0		
GR	1171.8	9896.0	1171.81	9911.0	1159.31	9948.0	1159.07	9973.0	1150.36	10000.0
GR	1147.3	10519.0	1150.35	10937.0	1171.79	11001.0	1171.79	11016.0		
ET		7.1	9.1				19450	20482.7	19450	20420.3
X1	223.19	95	19470.6	20420.3	620	430	514.62			
BT	2	20060.6	1206	1190.5	20257	1206	1190.5			
GR	1174	18431.5	1170.3	18452.1	1168.2	18522.5	1168.7	18632.6	1169	18713.7
GR	1169.7	18793.3	1170.3	18874.4	1170.3	18887.2	1171.1	18887.3	1170.4	18887.4
GR	1172.2	18887.5	1172.3	18976.2	1172	19079.4	1170	19163.5	1170	19177.8
GR	1165.5	19202.7	1160.2	19269.1	1156	19289.2	1148	19359.6	1148	19470.6
GR	1145.8	19538.2	1146	19576.5	1148	19605.3	1145.9	19614.1	1144	19645.2
GR	1144	19681.2	1144.8	19682	1146	19682.3	1150	19688.3	1148.2	19702.8
GR	1147.7	19714.8	1144	19720.9	1142.1	19774.4	1142	19843.1	1143.8	19916.4
GR	1144.1	19995.8	1144.3	20003.8	1147.2	20019.8	1144	20033.7	1145.1	20053.1
GR	1148	20058.3	1147.9	20060.5	1190.5	20060.6	1190.5	20069.5	1147.7	20069.6
GR	1146.1	20113	1190.5	20113.1	1190.5	20122	1164.1	20122.1	1146	20124.6
GR	1146.1	20162.9	1190.5	20163	1190.5	20172	1146.1	20172.1	1146.1	20194.9
GR	1146.1	20197.9	1190.5	20198	1190.5	20207	1146.1	20207.1	1148.5	20248
GR	1190.5	20248.1	1190.5	20256.9	1148.5	20257	1150.2	20283.4	1152.4	20320
GR	1166.5	20356.8	1168	20420.3	1170.4	20440.3	1178	20473.1	1182	20482.7
GR	1181.6	20517	1177.4	20529.4	1177.8	20539.7	1170	20555.3	1169	20626
GR	1168.8	20697.4	1168.7	20768.2	1170	20803.3	1169.5	20807.8	1171.4	20854.4
GR	1171.4	20964.3	1171.3	21040.5	1169.7	21124.6	1165.8	21153.6	1167.6	21213.9
GR	1167.6	21281.8	1167.6	21367.1	1168.9	21465.1	1171.5	21550.8	1171.5	21634.2
GR	1170.1	21644.2	1174.9	21664	1172.9	21722.1	1173.4	21822.6	1174	21899.9
NC	.05	.05	.035							
ET		7.1	9.1				19560	20435.2	19560	20340.0
X1	223.29	96	19578.8	20316	0	0	0			
BT	2	19964.6	1197.04	1181.54	20157	1197.04	1181.54			
GR	1170.4	18676.6	1170.6	18752.2	1170.6	18783.6	1175.5	18783.8	1176.7	18783.9
GR	1173.8	18794.8	1173.1	18869	1172.5	18939.3	1173.6	19018.2	1175.2	19049.5
GR	1170	19110.8	1166.3	19125.6	1164	19192.8	1164	19243.3	1162	19271.1
GR	1160.3	19319	1160	19378.6	1156.6	19392.5	1154	19421.4	1151.3	19459.3
GR	1151.8	19494.3	1145.8	19556	1145.3	19578.8	1146	19643.9	1144	19685.2
GR	1143.8	19746.3	1145.2	19765	1148	19770.2	1148	19776.5	1145.7	19779.3
GR	1144	19783.5	1145.1	19819.6	1150	19826.2	1148	19845.1	1141.6	19857.3
GR	1142	19879.9	1141.1	19882.8	1142	19887.4	1140	19898.3	1142.8	19945
GR	1143	19964.5	1181.5	19964.6	1181.5	19973.5	1143	19973.6	1143.6	20009.5
GR	1143.6	20013	1181.5	20013.1	1181.5	20022	1143.6	20022.1	1143.8	20062.9
GR	1181.5	20063	1181.5	20072	1143.8	20072.1	1144	20097.9	1181.5	20098
GR	1181.5	20107	1144	20107.1	1144.7	20148	1181.5	20148.1	1181.5	20156.9
GR	1144.7	20157	1145.1	20162.5	1146	20214.3	1154.1	20234.9	1160	20272.9
GR	1162.4	20302.8	1166.1	20316	1168.5	20373.3	1174	20435.2	1172	20498.1
GR	1171.9	20560	1173.9	20600.6	1170	20623.8	1170	20685	1170	20696.3
GR	1169.1	20696.4	1168.7	20721.2	1165.7	20759	1166.6	20844.9	1166.7	21027.3
GR	1166	21110.1	1166.3	21206.8	1166.6	21296.2	1166.5	21367.5	1168.3	21420.5
GR	1171.9	21446.6	1168.4	21504.1	1169.8	21516.7	1170	21605.4	1170.9	21685.9
GR	1171.2	21772.5	1171.6	21856.2	1172.1	21918	1174.8	21952	1173.8	21992.4
GR	1179.1	22011.5								

ET		7.1	9.1				19573.8	20351	19639.8	20320
X1	223.38	96	19639.8	20305.9	480	480	480.81			
BT	2	19773.6	1192.23	1176.7	19972	1192.23	1176.7			
GR	1180.1	18689	1175	18689.1	1175.1	18708.2	1174.5	18770.6	1174	18829.6
GR	1175.2	18893.3	1176	19061.7	1176	19120.9	1176.4	19190.6	1177.3	19264.6
GR	1177.3	19356.4	1177.7	19415	1177.9	19492.9	1178	19517.7	1183	19573.8
GR	1181.7	19579.5	1177.8	19586.2	1173.7	19626.7	1168.3	19639.8	1160	19654
GR	1158	19663.3	1152.9	19722.2	1146.8	19773.5	1176.7	19773.6	1176.7	19780.5
GR	1146.8	19780.6	1142	19811	1142	19826	1176.7	19826.1	1176.7	19835
GR	1142	19835.1	1142	19841.9	1143.5	19849.7	1142	19870.5	1141.4	19875.9
GR	1176.7	19876	1176.7	19885	1141.4	19885.1	1136	19887.2	1135	19917.9
GR	1176.7	19918	1176.7	19927	1135	19927.1	1134	19947.8	1134.8	19963
GR	1176.7	19963.1	1176.7	19971.9	1134.8	19972	1134.5	19983.8	1133.9	20043.6
GR	1132	20091.4	1132	20114.4	1134	20119.2	1146	20139.1	1145.2	20180.9
GR	1142.2	20187.4	1144.3	20197.5	1148	20204.4	1148.5	20216.6	1150	20224.1
GR	1158	20248	1166	20305.9	1171.3	20335.2	1172.1	20344.3	1174	20351
GR	1173.4	20425.7	1174	20483.4	1173.4	20538.6	1172.6	20588.5	1171.9	20588.6
GR	1169.8	20588.7	1168.2	20666.5	1167.4	20739.2	1167.2	20800.8	1167.1	20867.2
GR	1166.4	20925.1	1166.2	20948.2	1165.6	21016.5	1166	21053.3	1166	21116.7
GR	1165.5	21201.5	1164.5	21229.6	1167.1	21301.5	1172.2	21351.5	1170.2	21397.6
GR	1170.1	21426.4	1169.9	21486	1169.9	21512.1	1169.8	21582.7	1169.9	21652.2
GR	1169.7	21726.8	1172.8	21746.4	1174.6	21794.3	1175.4	21860.6	1176	21960
GR	1176.6	21979.3								

ET		7.1	9.1				19488.8	20431.4	19561.8	20396.5
X1	223.48	96	19561.8	20325	450	610	527.72			
BT	2	19883.1	1193.41	1177.9	20081.9	1193.41	1177.9			
GR	1180.6	18593.9	1181.3	18669.5	1182.3	18669.6	1184.4	18669.7	1175.9	18693.6
GR	1175	18797.8	1176.1	18851.7	1176.9	18992.2	1175.1	19109	1176	19122.4
GR	1176	19167.6	1178	19196.2	1178	19269.8	1179.8	19275.5	1178	19285.6
GR	1177.4	19361.8	1176	19438.8	1176	19488.8	1169.3	19561.8	1161.3	19612.4
GR	1158	19627.3	1153.7	19699.7	1150	19735	1150	19761.5	1146	19768.8
GR	1140	19778.4	1141.2	19787.5	1144.2	19792.6	1146	19797.5	1146	19806.3
GR	1140	19812.6	1136	19819.6	1135.9	19822.1	1134.8	19883	1177.9	19883.1
GR	1177.9	19892	1134.8	19892.1	1134	19922.8	1134.1	19933	1177.9	19933.1
GR	1177.9	19942	1134.1	19942.1	1134.6	19970.9	1177.9	19971	1177.9	19980
GR	1134.6	19980.1	1134.7	19981.1	1134	20016.3	1132.5	20021	1177.9	20021.1
GR	1177.9	20030	1132.5	20030.1	1132	20073.1	1132.3	20074	1177.9	20074.1
GR	1177.9	20081.9	1132.3	20082	1136	20084.1	1137.4	20100.3	1136	20104.8
GR	1136	20161.2	1138	20168.7	1147.3	20186.4	1156	20210.4	1162	20222.4
GR	1167.4	20249.7	1169.6	20325	1170	20371.2	1172	20431.4	1170.9	20512.5
GR	1171.6	20534.7	1170.7	20534.8	1170.5	20560.3	1171.5	20572.4	1169.8	20639.5
GR	1171.5	20778.7	1170.1	20850.6	1170.4	20933	1169.9	20964.2	1172.8	20980
GR	1175.4	21002.7	1174.6	21092.3	1175.9	21207	1175.6	21293.1	1175.1	21416.3
GR	1175.1	21437.2	1175.6	21556.1	1175.6	21591.9	1175.8	21702.9	1175.9	21736.5
GR	1176.3	21838.6	1176.3	21851	1176.8	21941.5	1176.3	21988.5	1180.1	22039.3
GR	1180.4	22104.4								

ET		7.1	9.1				19704.5	20470	19704.5	20349.1
X1	223.58	96	19704.5	20349.1	490	510	501.29			
BT	2	19806.1	1194.47	1178.9	20006.9	1194.47	1178.9			
GR	1183.6	18635.8	1183.5	18663.8	1184.7	18663.9	1188.6	18664	1177.3	18696.1
GR	1176.6	18777.1	1177.4	18819	1178	18928.3	1174.1	19180.2	1172	19199.1
GR	1172	19265.6	1172	19332.3	1172	19403.5	1172	19452.5	1174	19457.5
GR	1176	19503.4	1170	19519.3	1158	19549.4	1149.6	19590.6	1148	19609.1
GR	1146	19611.9	1146	19623.2	1144.5	19646.3	1146.2	19654.8	1156.1	19671.5
GR	1158.1	19677	1160.3	19681.1	1169.7	19704.5	1161.1	19769.5	1160	19775.4
GR	1157.9	19776.9	1152	19790.4	1145.5	19797.3	1140	19801.8	1139	19806
GR	1178.9	19806.1	1178.9	19815	1139	19815.1	1138	19856	1178.9	19856.1
GR	1178.9	19865	1138	19865.1	1138	19883.1	1138	19892.9	1178.9	19893
GR	1178.9	19902	1138	19902.1	1138	19907.1	1140.3	19913.7	1144.6	19924.5
GR	1147.1	19941.5	1142.5	19943	1178.9	19943.1	1178.9	19952	1142.5	19952.1
GR	1138	19953.4	1138	19998	1178.9	19998.1	1178.9	20006.9	1138	20007
GR	1138	20031.4	1141.8	20107.8	1142	20111.9	1148.8	20121.8	1152	20140.4
GR	1153.7	20149.8	1152.4	20159.3	1154.5	20217.4	1160	20245.4	1166	20309.5
GR	1170	20346.4	1171.8	20349.1	1170	20398.3	1169.7	20458.5	1168	20505.4
GR	1168.4	20582.5	1169.8	20582.6	1171.7	20668.3	1172.3	20704.6	1175.9	20767.3
GR	1176.2	20792.9	1173.5	20873.5	1174.1	20960.4	1176.2	21056.8	1176.8	21089.1
GR	1177.3	21217	1177.5	21430.9	1177.5	21439.5	1177.5	21606.1	1177.6	21625.2
GR	1178	21746.1	1177.8	21823.8	1177.9	21958.4	1178.1	22028.2	1180.9	22096.5
GR	1181.7	22148.9								

ET		7.1	9.1				19365.3	20364.5	19486.3	20364.5
X1	223.67	96	19486.3	20364.5	500	500	500.21			
BT	2	19753.1	1195.88	1180.38	19956.9	1195.85	1180.35			
GR	1174.9	19051.1	1174.1	19095	1180.2	19175.5	1183.9	19184.3	1183	19185.3
GR	1183.4	19186.3	1182.1	19186.8	1180.3	19191.2	1182.4	19195.8	1187.6	19199.1
GR	1187.6	19212.7	1184	19218.3	1182	19229.3	1182.3	19300.8	1190	19316.5
GR	1189.5	19324.8	1186	19338	1184	19365.3	1181.3	19438.4	1180	19472.1
GR	1169.7	19486.3	1168.7	19495.5	1167.8	19521.3	1161.3	19540.3	1148	19596
GR	1146.2	19637.5	1147.5	19667.5	1136	19693.5	1136.6	19715.9	1136.4	19753
GR	1180.3	19753.1	1180.3	19762	1136.4	19762.1	1136.3	19803	1180.3	19803.1
GR	1180.3	19812	1136.3	19812.1	1136.3	19842.9	1180.3	19843	1180.3	19852
GR	1136.3	19852.1	1136.3	19886.9	1136.4	19893	1180.3	19893.1	1180.3	19902
GR	1136.4	19902.1	1137.5	19948	1180.3	19948.1	1180.3	19956.9	1137.6	19957
GR	1137.9	19968.6	1140	19983.7	1144	19990.9	1150	19996.6	1150	20014.9
GR	1140	20028.7	1134	20043	1134	20048	1132.7	20050.7	1136	20067.6
GR	1138	20092.5	1140	20099.5	1150	20118.1	1151.7	20199.1	1152	20220.9
GR	1156	20233.6	1164	20246.5	1166.3	20284.7	1167.7	20290.3	1168	20364.5
GR	1168	20400.6	1171.2	20521.8	1172	20569.1	1170.4	20634.5	1170.9	20643.6
GR	1169.4	20701.1	1172.8	20701.2	1175.6	20702.4	1174.3	20829.9	1173.8	20927.7
GR	1174.6	21027.9	1174.8	21045.9	1178.3	21064.5	1177.6	21152.3	1178	21247.9
GR	1179	21376.6	1179	21452.4	1179.1	21620.1	1179.2	21722.2	1178.9	21805.3
GR	1179.5	21922.4	1179.7	21977.7	1179.5	22095.9	1179.7	22121.7	1181.5	22231.5
GR	1181.8	22249.2								

NC	0.05	0.05	0.03							
ET		7.1	9.1				19456		19475.0	20389.7
X1	223.77	96	19475.0	20389.7	500	500	500			
BT	2	19620.6	1196.85	1181.35	19784.9	1196.83	1181.33			
GR	1179.8	18718.6	1180.3	18799.5	1178.7	18906.5	1177.7	18911.4	1177.3	18937.6
GR	1184.9	19038.1	1186.4	19132	1187	19141.5	1186.3	19244.8	1187.4	19311.6
GR	1187.8	19333.5	1186	19400.3	1186	19456	1182	19460.9	1170	19475.0
GR	1158	19489	1152	19500	1148	19513.1	1147.8	19538.5	1139.5	19564.9
GR	1138	19574.4	1138	19596	1137.1	19620.5	1181.3	19620.6	1181.3	19629.5
GR	1137.1	19629.6	1135.4	19668	1181.3	19668.1	1181.3	19677	1135.4	19677.1
GR	1135.2	19715.9	1181.3	19716	1181.3	19725	1135.2	19725.1	1135.1	19741
GR	1181.3	19741.1	1181.3	19750	1135.1	19750.1	1134.7	19776	1181.3	19776.1
GR	1181.3	19784.9	1134.7	19785	1134.1	19813.2	1135.2	19828.3	1138	19833
GR	1140	19834.3	1142	19844.1	1146.3	19858.2	1150	19862.6	1150	19882.9
GR	1140	19896.7	1138	19905.1	1136	19908.1	1135.5	19926	1136	20064
GR	1136.2	20084.5	1146	20131.3	1150	20138.7	1150.8	20179.2	1150.1	20186.8
GR	1151.5	20252.4	1154.5	20297.1	1160	20317.5	1168	20331.7	1168	20355.6
GR	1175.1	20389.7	1173.2	20401.3	1172	20403.7	1171.4	20488.3	1172	20561.8
GR	1171.5	20627	1171.2	20632.2	1172.8	20664.5	1172.2	20703.1	1173.2	20719.1
GR	1170.5	20820.3	1175.1	20820.4	1176.5	20820.5	1177.6	20820.9	1176.8	20825
GR	1175.7	20862.1	1176.1	20929.6	1177.5	21012.5	1180	21038.6	1179.8	21114.2
GR	1179.7	21128.1	1179.3	21274.1	1179.3	21306.9	1179.8	21471.7	1179.7	21622.1
GR	1179.7	21748.8	1179.9	21842.4	1180.8	21976.4	1181.1	22038.6	1181.7	22188.2
GR	1183.6	22288.3								

ET		7.1	9.1				19333.1	20791.7	19380.3	20491.9
X1	223.86	96	19380.3	20491.9	485	485	483.09			
BT	2	19475.6	1212.38	1196.8	19688.9	1211.8	1196.3			
GR	1187.5	18588.8	1187	18604.2	1191.4	18646.2	1185.9	18646.3	1188.9	18646.4
GR	1181.3	18703.2	1180.4	18784.4	1183.1	18823.3	1182.4	18895.6	1184.1	18985.4
GR	1184	19075.7	1185.4	19152	1185.6	19178.9	1184	19256.9	1182.2	19333.1
GR	1181.9	19338.6	1176	19347.7	1174	19348.6	1172	19351.3	1173.2	19380.3
GR	1158.8	19426.4	1156	19443	1152.8	19469.7	1151	19475.5	1196.8	19475.6
GR	1196.8	19484.5	1151	19484.6	1150	19487	1149.3	19535	1196.8	19535.1
GR	1196.8	19544	1149.3	19544.1	1148.8	19565.9	1148.6	19584.9	1196.3	19585
GR	1196.3	19594	1148.6	19594.1	1148.3	19645	1196.3	19645.1	1196.3	19654
GR	1148.3	19654.1	1148	19680	1196.3	19680.1	1196.3	19688.9	1148	19689
GR	1150	19781	1149.4	19785	1146	19790.1	1148	19796	1148	19809.3
GR	1140	19833.8	1137	19854.8	1138	19875.1	1142	19882.6	1142	19889.4
GR	1136	19900.1	1136.8	20001.6	1138	20076	1146.2	20118.1	1147.9	20165.3
GR	1146	20173	1146.4	20228.7	1148.6	20263.3	1152.3	20298.9	1154	20374.3
GR	1154	20383.6	1157.5	20395.2	1158	20413.4	1160	20424.9	1162	20426.1
GR	1166.7	20432.1	1168	20435.1	1170.9	20478	1172	20491.9	1168	20499.7
GR	1170	20519.3	1172	20637.7	1173.4	20728	1174	20769	1175.3	20791.7
GR	1171.6	20934.8	1177.3	20934.9	1179.4	20935	1180.6	20958.6	1181.2	21039.3
GR	1181.4	21124.5	1181.6	21242.5	1181.4	21320.9	1181.1	21435.1	1181.4	21551.1
GR	1182	21683	1182	21796	1182.2	21903.2	1182.4	22039.5	1182.7	22088.9
GR	1184	22176.3								

NC	0.05	0.05	0.035							
ET		7.1	9.1				19582.7	20899.6	19603.4	20600.5
X1	223.96	96	19603.4	20600.5	515	515	514.21			
GR	1180.2	17616.2	1180.1	17625.4	1176.9	17637.2	1175.1	17640.8	1175.2	17652.6
GR	1171.2	17705.3	1171	17719.8	1168.6	17816.4	1167.5	17931.1	1167.2	17952.4
GR	1168.7	18006.4	1167.6	18083.7	1167.8	18214.1	1168.5	18310	1167.8	18348.4
GR	1168.7	18374.2	1182	18403.5	1180.7	18464.4	1181.8	18595.4	1180.7	18608.7
GR	1181.7	18730.2	1181.3	18862.3	1178.8	18914.5	1180	18915.7	1188.7	18976.5
GR	1192	19078.6	1192	19126.4	1180	19186.7	1178	19264.2	1188	19312.6
GR	1190.1	19368.3	1190.1	19468.2	1187.5	19491.4	1185.6	19582.7	1173	19603.4
GR	1146.9	19646.4	1142	19651.6	1140	19657.6	1140.3	19724.1	1146	19734
GR	1148	19760.9	1158	19776.8	1157.5	19781.3	1141	19807.6	1140	19815.8
GR	1144	19824.3	1144	19900.3	1147.5	19947.5	1145.3	19955.3	1140	19958.7
GR	1140	19966.3	1144	19968.5	1146.2	19970.7	1148	19974.5	1147.4	20009.9
GR	1146	20032.5	1148.8	20100.7	1144	20197.6	1142.8	20234.4	1145.5	20339
GR	1146	20403.2	1144	20421.3	1144	20485.6	1148.6	20530.5	1150.7	20534
GR	1152	20534.7	1156	20541.4	1156.3	20565.4	1158	20582.5	1160	20585.8
GR	1174.5	20600.5	1173.9	20610.6	1172	20618.6	1170	20729.4	1170	20792.6
GR	1172.1	20800.4	1177.1	20886.5	1177.9	20899.6	1177	20936.5	1175.3	20946.1
GR	1175.2	20960.3	1172.7	21057.6	1179.7	21057.7	1180.4	21097	1182.6	21130.1
GR	1182.4	21234.2	1182.4	21274.6	1182.5	21430.3	1182.3	21512.3	1182.8	21640.9
GR	1183	21729	1183.5	21832.3	1183.6	21934.1	1184.4	22029.9	1185.8	22131.1
GR	1186.5	22262.2								

THE UPSTREAM LIMIT OF THE DMJM MAPPING IS AT X-SEC 224.05

QT	2	220000	220000							
ET		7.1	9.1				19700.3	20800	19792.3	20750.5
X1	224.05	96	19792.3	20750.5	490	500	495.4			
GR	1182.9	17632.8	1182.9	17635.7	1179.6	17644.3	1182.4	17692.2	1182.2	17777.2
GR	1182.1	17863.1	1182	17963.6	1182.6	18062.7	1182.4	18157.5	1180.9	18255.7
GR	1180.2	18365	1180.8	18428.7	1182.8	18438.7	1181.4	18455.9	1182.6	18493.6
GR	1181.8	18520.4	1182.3	18556.2	1193.8	18579.6	1186	18579.7	1186.7	18589.4
GR	1184	18624.7	1184	18708.6	1184	18790.4	1194	18824.4	1194	18871.4
GR	1188	18953.4	1183.7	19025.8	1182	19107.6	1182	19124.7	1186	19171.7
GR	1187	19234.3	1186	19310.2	1184	19327.4	1180	19348.3	1180.6	19383.5
GR	1182	19395.6	1183	19424.4	1184	19430.9	1198.2	19466.4	1199.3	19499.7
GR	1198	19518	1197.4	19537.8	1192	19553.2	1178	19612	1180	19700.3
GR	1178	19780.4	1170	19792.3	1143.4	19831.7	1142	19834.8	1141.8	19916.8
GR	1142	19921.9	1150	19939.9	1160	19957.8	1161.4	20041	1154.9	20121.1
GR	1152	20137.9	1151.6	20187.9	1150	20210.4	1148	20283.7	1148	20365.5
GR	1148	20399.3	1144	20408.6	1144	20413.2	1146	20419.6	1149.5	20480.9
GR	1148	20489.2	1146	20518.8	1142	20547.1	1141.1	20613.9	1142.2	20654.3
GR	1154	20700.9	1158.2	20709.2	1168	20736.5	1168.7	20750.5	1168	20793.4
GR	1171.1	20881.7	1172.3	20963.2	1173.3	21043.9	1174	21130.1	1173.8	21175.8
GR	1176.1	21175.9	1171.7	21179.6	1171.6	21200.8	1179.2	21221	1181.6	21278.1
GR	1181.3	21374.2	1181.2	21469.2	1181.2	21488.3	1181.3	21599.6	1181.3	21641.5
GR	1182	21754.4	1182.2	21858.5	1182.3	21947.1	1184.1	22079.6	1184.9	22162.2
GR	1185.2	22213								

Cross sections 224.08 - 224.26 were used to model the Pima Freeway Interchange. This includes the main roadway and the S-W, S-E, W-N,

and the E-N ramps. Please note that the remaining ramps will not impact the floodplain.

```
ET                          9.1                                                     19869.7     20992.5
X1   224.08          6     19890      20960        317        317        317
GR     1183      19865      1152      19890       1152      20120       1152      20460       1152       20960
GR     1183      21000
```

S-W RAMP

```
ET                          9.1                                                     19869.8     20992.4
X1   224.09         36     19890      20960          1          1          1
X2
BT      -12      19865     1224.3     1224.3      19865     1224.3     1211.3    19955.5     1225.3      1212.3
BT            20065.5     1225.4     1212.4    20195.5     1224.4     1211.4    20320.5     1222.6      1209.6
BT            20455.5     1219.8     1206.8    20610.5     1216.4     1203.4      20716     1212.9      1199.9
BT              20851     1209.6     1196.6      21000     1206.2     1193.2      21000     1206.2      1206.2
GR     1183      19865      1152      19890       1152    19955.5     1212.3    19955.5     1212.3     19964.5
GR     1152    19964.5      1152    20065.5     1212.4    20065.5     1212.4    20074.5       1152     20074.5
GR     1152    20195.5     1211.4    20195.5     1211.4    20204.5       1152    20204.5       1152     20320.5
GR   1209.6    20320.5     1209.6    20329.5       1152    20329.5       1152    20455.5     1206.8     20455.5
GR   1206.8    20464.5      1152    20464.5       1152    20610.5     1203.4    20610.5     1203.4     20619.5
GR     1152    20619.5      1152      20716     1199.9      20716     1199.9      20724       1152       20724
GR     1152      20851     1196.6      20851     1196.6      20859       1152      20859       1152       20960
GR     1183      21000
```

S-E RAMP

```
ET                          9.1                                                     19925.7     21034.3
X1   224.11         35    19950.3    21009.7         98         98         98
X2
BT      -11      19920     1234.7     1234.7      19920     1234.7     1221.7    20055.5     1231.2      1218.2
BT            20195.5     1227.9     1214.9    20335.5     1224.3     1211.3    20475.5     1220.8      1207.8
BT              20616     1217.2     1204.2      20756     1212.9     1199.9      20896     1209.6      1196.6
BT              21040     1206.2     1193.2      21040     1206.2     1206.2
GR     1183      19920      1152    19950.3       1152    20055.5     1218.2    20055.5     1218.2     20064.5
GR     1152    20064.5      1152      20120       1152    20195.5     1214.9    20195.5     1214.9     20204.5
GR     1152    20204.5      1152    20335.5     1211.3    20335.5     1211.3    20344.5       1152     20344.5
GR     1152      20420      1152    20475.5     1207.8    20475.5     1207.8    20484.5       1152     20484.5
GR     1152      20616     1204.2      20616     1204.2      20624       1152      20624       1152       20650
GR     1152      20756     1199.9      20756     1199.9      20764       1152      20764       1152       20896
GR   1196.6      20896     1196.6      20904       1152      20904       1152    21009.7       1183       21040

ET                          9.1                                                     19925.5     21034.5
X1   224.12          4    19950.3    21009.7          1          1          1
GR     1183      19920      1152    19950.3       1152    21009.7       1183      21040
```

```
ET                          9.1                                                   19835.2     21084.8
X1   224.15          5    19860.3    21059.7        103        103        103
GR     1183      19830       1152    19860.3       1152      20030       1152    21059.7       1183      21090
```

MAIN BRIDGE

```
ET                          9.1                                                   19835.4     20945.9
X1   224.16         32    19860.3      20946          1          1          1
X2
BT      -11      19830     1209.4     1209.4      19830     1209.4     1196.4      19966     1208.1     1195.1
BT               20106     1206.8     1193.8      20246     1205.5     1192.5      20386     1204.3     1191.3
BT               20526       1203       1190      20666     1201.7     1188.7      20806     1200.5     1187.5
BT               20946     1199.2     1186.2      20946     1199.2     1199.2
GR     1183      19830       1152    19860.3       1152      19966     1195.1      19966     1195.1      19974
GR     1152      19974       1152      20106     1193.8      20106     1193.8      20114       1152      20114
GR     1152      20246     1192.5      20246     1192.5      20254       1152      20254       1152      20386
GR   1191.3      20386     1191.3      20394       1152      20394       1152      20526       1190      20526
GR     1190      20534       1152      20534       1152      20666     1188.7      20666     1188.7      20674
GR     1152      20674       1152      20806     1187.5      20806     1187.5      20814       1152      20814
GR     1152    20945.9       1183      20946
```

```
ET                          9.1                                                   19835.3     20945.9
X1   224.17         32    19860.3    20945.9        175        175        175
X2
BT      -11      19830     1209.4     1209.4      19830     1209.4     1196.4      19966     1208.1     1195.1
BT               20106     1206.8     1193.8      20246     1205.5     1192.5      20386     1204.3     1191.3
BT               20526       1203       1190      20666     1201.7     1188.7      20806     1200.5     1187.5
BT               20946     1199.2     1186.2      20946     1199.2     1199.2
GR     1183      19830       1152    19860.3       1152      19966     1195.1      19966     1195.1      19974
GR     1152      19974       1152      20106     1193.8      20106     1193.8      20114       1152      20114
GR     1152      20246     1192.5      20246     1192.5      20254       1152      20254       1152      20386
GR   1191.3      20386     1191.3      20394       1152      20394       1152      20526       1190      20526
GR     1190      20534       1152      20534       1152      20666     1188.7      20666     1188.7      20674
GR     1152      20674       1152      20806     1187.5      20806     1187.5      20814       1152      20814
GR     1152    20945.9       1183      20946
```

```
ET                          9.1                                                   19835.5     21084.9
X1   224.18          4    19860.3    21059.7          1          1          1
GR     1183      19830       1152    19860.3       1152    21059.7       1183      21090
```

E-N RAMP

```
ET                          9.1                                                   19889.9     21084.9
X1   224.21          6      19915      21060        101        101        101
GR     1183      19885       1152      19915       1152      20005       1152      20290       1152      21060
GR     1183      21090
```

ET			9.1						19890.5	21086.7
X1	224.22	36	19915	21060	1	1	1			
X2										
BT	-12	19885	1207	1207	19885	1207	1194	19995.5	1205.2	1192.2
BT		20125.5	1202.8	1189.8	20255.5	1200.7	1187.7	20385.5	1198.9	1185.9
BT		20530.5	1197.4	1184.4	20666	1196.2	1183.2	20781	1195.3	1182.3
BT		20946	1194.6	1181.6	21090	1193.9	1180.9	21090	1193.9	1193.9
GR	1183	19885	1152	19915	1152	19995.5	1192.2	19995.5	1192.2	20004.5
GR	1152	20004.5	1152	20125.5	1189.8	20125.5	1189.8	20134.5	1152	20134.5
GR	1152	20255.5	1187.7	20255.5	1187.7	20264.5	1152	20264.5	1152	20385.5
GR	1185.9	20385.5	1185.9	20394.5	1152	20394.5	1152	20530.5	1184.4	20530.5
GR	1184.4	20539.5	1152	20539.5	1152	20666	1183.2	20666	1183.2	20674
GR	1152	20674	1152	20781	1182.3	20781	1182.3	20789	1152	20789
GR	1152	20946	1181.6	20946	1181.6	20954	1152	20954	1152	21060
GR	1180.9	21090								

W-N RAMP

ET			9.1						19884.2	21008.3
X1	224.25	42	19900.5	20950	132	132	132			
X2										
BT	-14	19880	1190.4	1190.4	19880	1190.4	1183	19900.5	1191.6	1184.6
BT		19981.5	1192.8	1185.8	19981.5	1192.8	1183.8	20070.5	1193.8	1184.8
BT		20165.5	1194.6	1185.6	20290.5	1195.1	1186.1	20420.5	1195.4	1186.4
BT		20555.5	1195.4	1186.4	20696	1195.3	1186.3	20836	1194.6	1185.6
BT		21020	1193.9	1184.9	21020	1193.9	1193.9			
GR	1183	19880	1156	19900.5	1184.6	19900.5	1184.6	19909.5	1152	19909.5
GR	1152	19915	1152	19981.5	1183.8	19981.5	1183.8	19989.5	1152	19989.5
GR	1152	20070	1152	20070.5	1184.8	20070.5	1184.8	20079.5	1152	20079.5
GR	1152	20165.5	1185.6	20165.5	1185.6	20174.5	1152	20174.5	1152	20290.5
GR	1186.1	20290.5	1186.1	20299.5	1152	20299.5	1152	20420.5	1186.4	20420.5
GR	1186.4	20429.5	1152	20429.5	1152	20460	1152	20555.5	1186.4	20555.5
GR	1186.4	20564.5	1152	20564.5	1152	20696	1186.3	20696	1186.3	20704
GR	1152	20704	1152	20836	1185.6	20836	1185.6	20844	1152	20844
GR	1152	20950	1183	21020						

ET			9.1						19885.9	21008.5
X1	224.26	4	19915	20950	1	1	1			
GR	1183	19880	1152	19915	1152	20950	1183	21020		

NC	0.030	0.030	0.030	.1	.3					
ET		7.1	9.1				19679.2	21402.1	19855	21109.1
X1	224.34	96	20123.4	21109.1	150	250	180		-4	
GR	1185	18516.7	1181.8	18531.9	1181.1	18572.7	1180.8	18602.3	1180.6	18702.6
GR	1179.8	18744.8	1178.8	18765.8	1161.5	18801.3	1160.2	18813.2	1160.2	18918.2
GR	1160.2	19212.3	1160.2	19257.4	1160.2	19296.7	1160.2	19352.3	1160.2	19364.4
GR	1160.2	19438.5	1160.2	19477.3	1160.2	19523.5	1160.2	19566	1160.2	19590.3
GR	1161.6	19610.8	1173.2	19634.6	1185.9	19658.6	1185.9	19672	1184.1	19679.2
GR	1182.2	19685.3	1161.5	19751.6	1164.5	19789	1165.5	19808	1164.2	19823

GR	1163.4	19840.7	1162.5	19846.6	1161.6	19861.4	1170.1	19883.4	1169	19896.1
GR	1168.2	19900.5	1166.4	19931	1164.6	19977.1	1165.9	19999.7	1165.3	20042
GR	1163.6	20070.6	1163.7	20076.9	1167.6	20117.1	1168.2	20123.4	1163.6	20160.7
GR	1161	20171.2	1161.3	20210.6	1161.3	20276.2	1161.4	20319.9	1161.4	20331.4
GR	1160.9	20570.5	1160.7	20600	1159.5	20610.3	1159.9	20765.4	1160	20800
GR	1162.6	20816	1162.2	20834.7	1161	20841	1160.4	20847.5	1160.4	20902.7
GR	1159.9	21060.9	1166.1	21093	1167.6	21109.1	1163.2	21146.4	1159.3	21167
GR	1159.6	21217.2	1160.8	21328.9	1160.4	21375	1160.8	21377.5	1170.4	21402.1
GR	1172.2	21406.3	1169.5	21411.1	1169.3	21436.5	1173.7	21444.1	1175.1	21447.3
GR	1168.8	21464.3	1170.5	21486.4	1173.7	21526.3	1174	21536.9	1175.7	21575.4
GR	1174.2	21613.5	1176.7	21631.8	1176.9	21694.9	1177.3	21735.1	1176.7	21779.5
GR	1176.7	21781.1	1184.9	21795.3	1184.7	21816.1	1184.4	21863.1	1184.5	21888.7
GR	1185	21939.5	1185	21994.5	1185.5	22089.6	1185	22143	1185.9	22182.8
GR	1186	22206.1								

ET		7.1	9.1				19633.8	21493.8	19800	21156.4
X1	224.43	96	20238.3	21156.4	480	440	493.66			
GR	1185.3	18538.6	1183.1	18553.6	1182.6	18603.9	1182.1	18658.3	1182.7	18735.4
GR	1182.5	18749.4	1179	18778.1	1161.8	18817.7	1160.4	18832.8	1160.4	18874.2
GR	1160.4	18921.3	1160.4	18981.8	1160.4	19018	1160.4	19301.4	1160.4	19356.8
GR	1160.4	19416.8	1160.4	19494.1	1160.6	19531.8	1161.5	19549.6	1185.8	19608.2
GR	1185.7	19629.3	1177.5	19673.5	1174.7	19685.1	1173.7	19733.6	1165.3	19775.6
GR	1163.4	19806.7	1162.5	19852.5	1162.8	19893.5	1169.6	19904.2	1166.1	19925.6
GR	1166.1	19929.9	1166.6	19987.3	1173.1	20022.1	1165	20040	1165.8	20051.5
GR	1161.6	20070.8	1160.3	20098.4	1159.8	20148.8	1159.5	20164.7	1162.4	20188.6
GR	1164.5	20193.9	1166.4	20238.3	1161.8	20250	1162.4	20251.6	1162	20253.6
GR	1162.8	20320.5	1163	20353.8	1162.1	20354.4	1160.7	20363.6	1164	20366.2
GR	1165	20369.4	1158.4	20402.9	1159.6	20404.4	1158.5	20457.2	1160.3	20503.5
GR	1161.1	20704.4	1160.8	20739.5	1162.6	20764.2	1162.8	20803.1	1161.7	20822.8
GR	1161	20887	1159.9	20937.7	1160.1	20944.4	1161.8	21001.8	1161.5	21018.6
GR	1160.5	21030	1160.5	21046.4	1161.4	21067.2	1161.7	21099.3	1163	21109
GR	1164.3	21156.4	1164.2	21183.7	1160.5	21200.5	1161.4	21218	1160	21222.4
GR	1159.5	21315.8	1159.5	21319.3	1161.7	21493.8	1161.8	21553.1	1162.1	21572.7
GR	1161.1	21579.9	1168.9	21609.9	1169.1	21625.2	1173.5	21635.8	1171.7	21651.5
GR	1169.4	21660.6	1169.4	21685.2	1171.4	21718	1170.5	21782.5	1168.1	21817.8
GR	1164.2	21846.5	1166.6	21894.1	1170.5	21941.9	1170.5	21942.8	1184.6	21967.2
GR	1186.2	22012.7								

ET		7.1	9.1				18454.1	21756.9	19815	21220
X1	224.53	87	20157.7	20974.6	510	500	506.3			
GR	1183.7	18454.1	1183.6	18504.9	1183.5	18562.4	1183.3	18626.8	1183	18693.4
GR	1183.2	18712.5	1183.2	19193.2	1185.8	19202.2	1185.8	19442.1	1188.5	19463.7
GR	1165.8	19510.4	1164.6	19593.1	1163.7	19646.1	1163.7	19655	1167.7	19669.4
GR	1167.6	19694.1	1178.9	19719.1	1172.5	19732.1	1169.5	19740	1167.2	19789.6
GR	1166.8	19811.4	1166	19821.2	1164.3	19890.5	1165	19912.5	1163.9	19961.5
GR	1166	19975.6	1167.3	19981.1	1169.9	20021.8	1163.4	20041.4	1161.1	20047.1
GR	1162.5	20103.3	1166.9	20128.2	1165	20140.1	1166.7	20157.7	1160.7	20184.3
GR	1160.6	20243.8	1163.1	20548.8	1163.1	20560.7	1166	20577.5	1164.8	20592.6
GR	1162.6	20609.3	1162.1	20627.4	1162.5	20713.4	1163.1	20895.5	1164.5	20932.2
GR	1167.1	20974.6	1165.3	21017.7	1164	21030.1	1162.8	21051.9	1163	21058.1
GR	1162.2	21061	1161.8	21111.5	1161.1	21210.7	1161.2	21243.5	1162.1	21252.8
GR	1161.4	21289	1161.7	21369.9	1161.4	21428.9	1161.9	21476.7	1161	21648.8
GR	1162.2	21729.8	1162.3	21741	1163.6	21744.7	1169.5	21756.9	1167	21778.3

GR	1165.8	21780.1	1162.8	21791.2	1161.8	21817.2	1164.2	21868.4	1165.1	21885.4
GR	1170.8	21945.4	1169.5	21967.7	1170.4	21991.2	1170.6	22022.5	1170.3	22112.8
GR	1170.4	22121.7	1178.9	22131.9	1187	22144.7	1187	22208.3	1186.9	22223.6
GR	1186.8	22289	1187.5	22358	1187.6	22361.6	1187.7	22414.5	1187.9	22461.1
GR	1188.2	22515.6	1188.9	22545.9						

GR data coded out for vertical ineffective areas between stations 18913 and 19346.9 and below El. 1185.5 and between stations 19415.6 and 19435.9 and below El. 1169.9

ET		7.1	9.1				18816.8	21400.0	19770	21270
X1	224.62	83	20024.9	21180.9	505	505	504.94			
GR	1186.8	18816.8	1187.5	18838.5	1187.7	18858.4	1187.3	18883.8	1186.2	18911.2
GR	1185.5	18913	1185.5	19346.9	1184.3	19350.4	1165.2	19400.3	1169.9	19415.6
GR	1169.8	19435.9	1169.9	19498.6	1169.3	19515.4	1170.9	19556.9	1171.9	19593.6
GR	1170.1	19610.7	1168.6	19630.3	1171.8	19643.7	1175.6	19656.3	1166.7	19681.6
GR	1164	19710.6	1172.1	19731.2	1176.3	19744.6	1175.8	19761.7	1176.9	19814.7
GR	1179.7	19825.3	1180.4	19830.2	1167.8	19869.8	1167.8	19897.5	1171.2	19919.8
GR	1169.4	19964	1165.4	19985	1164.7	19996.8	1165.5	20010.8	1168.7	20016.4
GR	1170.8	20024.9	1168.9	20036.5	1167.4	20040.9	1167.5	20053.8	1168.4	20072.7
GR	1163.6	20103.1	1163.1	20158.9	1163	20198.9	1162.9	20499.9	1163.1	20523
GR	1162	20577.5	1160.8	20588.6	1162.9	20650.7	1162.4	20698.3	1162.7	20857.8
GR	1162.9	20951.4	1163.3	21032.1	1163.7	21158	1163.7	21163.5	1165.7	21180.9
GR	1162.2	21199.8	1162	21337.4	1162.5	21481.4	1162.6	21603.3	1163.1	21642.6
GR	1163.9	21669.6	1164	21737.2	1163.9	21853	1166.6	21862	1163.5	21869.9
GR	1162.6	21893.8	1179.6	21926.9	1174.2	21959.4	1172.5	21975.9	1171.9	22031.4
GR	1172.2	22102	1172.1	22122.6	1172.4	22176	1174.6	22185	1174	22208.1
GR	1173.7	22257.5	1171.6	22295.2	1185.7	22320	1189.3	22327.1	1188.9	22358.4
GR	1188.7	22420.6	1189.2	22455.7	1189.2	22497.6				

GR data coded out for vertical ineffective areas between stations 18785.6 and 19325.2 and below El. 1188.8

BEGIN FLOW CONTRACTION TO PIMA FREEWAY AND INTERCHANGE

ET		7.1	9.1				18800.0	21300.0	19635.3	21300
X1	224.71	73	19635.3	21100.3	620	440	491.63			
GR	1187.7	18601.7	1188.9	18675.9	1189.8	18697.2	1189.1	18773.9	1188.8	18785.6
GR	1188.8	19325.2	1190.8	19328.9	1189	19370.9	1188.8	19371	1188.8	19515
GR	1189.6	19519.1	1188.7	19522.7	1184	19535.7	1185.3	19569.6	1191.8	19595.1
GR	1172.5	19635.3	1163.7	19652	1163.7	19691.5	1163.5	19746	1163.2	19784.8
GR	1162.6	19950.2	1162.3	19974.9	1162.4	20052	1162.4	20077.6	1162.9	20160.2
GR	1163.6	20229.6	1163.6	20289.9	1163.6	20339.2	1163.7	20415.4	1166	20430.3
GR	1164.2	20437.2	1161.8	20451.2	1162	20483.1	1162.1	20551.1	1162	20620.6
GR	1162	20638	1162.1	20690.6	1162.2	20741.5	1162.9	20801.1	1163.4	21100.3
GR	1162.4	21154.8	1162.3	21162.7	1163.3	21170	1163.3	21291.6	1161.9	21314.3
GR	1162.7	21679	1162.7	21684.5	1162.6	21795.1	1162.8	21868.2	1163.4	21949.8
GR	1178	21981.8	1173.1	21995.8	1173.2	22004.2	1174.2	22063	1173.8	22135.8
GR	1173.8	22152.1	1171.8	22262.3	1173.9	22308.8	1176.9	22394.4	1176.7	22402.1
GR	1174.7	22422.1	1175	22450.2	1175.6	22458.8	1180.6	22471.6	1184.2	22486.4
GR	1185	22515.4	1179.8	22544.8	1181.5	22574.6	1182.1	22601	1187.1	22651.1

GR	1189.4	22674.6	1189.7	22731.1	1189.5	22792

GR data coded out for vertical ineffective areas between stations 18495.2 and 18665 and below El. 1185.6 and between stations 18688 and 19096.3 and below El. 1185.6

NC				0.1	0.3					
ET		7.1	9.1				18800.0	21140.0	19365	21140
X1	224.81	90	19446.8	20696.3	560	490	509.81			
GR	1188.2	18264.9	1188.3	18350.4	1189.3	18473.9	1188.6	18488.1	1185.6	18495.2
GR	1185.6	18665	1186.1	18667	1185.9	18686.2	1185.6	18688	1185.6	19096.3
GR	1185.9	19112	1180.3	19161.9	1180	19224.6	1178.7	19279.3	1177.8	19290.6
GR	1177.3	19386.3	1175	19392.8	1169.6	19446.8	1167.1	19465.7	1165.8	19498.2
GR	1163.5	19515	1163.7	19530.8	1162.3	19597.8	1168.8	19623.2	1165.5	19651.7
GR	1165.5	19668.9	1163.5	19703.2	1162.6	19778.6	1162.3	19812.2	1164.4	19841
GR	1165.4	19919.1	1164.3	19999.4	1164.1	20087.6	1163.9	20172.5	1163	20572.7
GR	1162.8	20654.1	1164.1	20696.3	1162.2	20813.4	1162.1	20833.4	1162.2	20917.8
GR	1162.3	20924.3	1163.3	21047.7	1163.8	21124	1163.9	21178.2	1162.5	21489.5
GR	1163.1	21602.3	1163	21672.6	1163	21674.6	1163.1	21758	1163.2	21870.3
GR	1163.2	21913.1	1163.9	21952.7	1168.9	21969.9	1167.3	21998.3	1181.6	22031.9
GR	1178.9	22072.5	1177.7	22101	1186.3	22116	1186.3	22152.6	1177.8	22174.6
GR	1178	22247.3	1178.2	22299	1172.7	22317.7	1169.8	22330.3	1165.6	22354.6
GR	1165.2	22371.4	1175.7	22391.9	1180.4	22407.5	1181.7	22420.7	1185.5	22444.5
GR	1183.6	22456.2	1183.7	22478.6	1185.7	22484	1189.7	22501.9	1191.1	22505.1
GR	1190.3	22529.1	1189.7	22576.7	1192.1	22598	1189.7	22616.3	1189	22696
GR	1187.9	22737.6	1185	22782.3	1186.4	22853.2	1188.1	22968.2	1188.6	22996.3
GR	1186.6	23080.3	1185.9	23103.6	1191.4	23159.1	1190.8	23245.8	1191.3	23301.9

GR data coded out for vertical ineffective areas below El. 1184.1 and between Sta.'s 18546.7 and 18867.4

NH	5	0.025	18543.6	0.03	19330.6	0.03	21497.7	0.031	22043.4	0.031
NH	23526									
ET		7.1	9.1				18750.0	20450.0	19025.7	20450
X1	224.90	92	19025.7	20143.6	515	470	494.86			
GR	1190.2	17998	1190.3	18091.3	1191.1	18131.4	1190.2	18186.4	1192.9	18261.6
GR	1189.7	18292.7	1189.4	18340.1	1187.6	18378	1189.4	18425.4	1185.6	18437.4
GR	1185.5	18543.6	1184.1	18546.7	1184.1	18867.4	1184.1	18884.5	1172.6	18921.3
GR	1176.3	18937.4	1174.2	19025.7	1169.7	19067.8	1171	19075.4	1166.5	19098.2
GR	1164.5	19202.7	1166.7	19222.8	1168.6	19306.1	1176.8	19330.6	1168.9	19397.8
GR	1168.8	19437.9	1164.2	19466.5	1163.9	19627.3	1163.6	19712.3	1163.2	19808.9
GR	1163	19890.6	1163	20065.2	1163	20074.5	1167.6	20090.3	1167.2	20109.7
GR	1176.6	20143.6	1178.4	20205.9	1178.8	20305.5	1177	20324.2	1175.2	20389
GR	1168.3	20430.5	1166	20491.5	1162.9	20516.7	1163.5	20559.9	1162.8	20679
GR	1162.9	20861.2	1163.1	21068	1162.9	21216.5	1162.9	21222.3	1165.5	21234.4
GR	1163	21335.3	1163.1	21433.5	1164.2	21471.2	1162.6	21474	1161.9	21497.7
GR	1163.4	21611	1163.4	21715.1	1164	21801.6	1163.6	21847.3	1175.2	21878.6
GR	1186.7	21903.4	1184.6	21908.6	1179.5	21928.4	1178	22023.3	1188.1	22043.4
GR	1187.7	22152.8	1186.5	22225.2	1187.5	22346.9	1185.8	22396	1186.5	22454.5
GR	1185.6	22481.2	1176.3	22501.2	1178.4	22557.2	1176.7	22611	1179.4	22646.1
GR	1182.6	22656.3	1182.6	22697.9	1184.4	22807.8	1184.4	22906.2	1185.2	22951.9
GR	1189.9	22967.3	1185.2	22996	1188	23059.4	1189.3	23149.8	1189.9	23187.5

GR	1188.6	23310.5	1187.9	23347.8	1188.7	23386.2	1191.9	23417.2	1191.7	23460.4
GR	1192.5	23486.2	1192	23526						

GR data coded out for vertical ineffective areas between stations
18470.1 and 18676.4 and below El. 1186.9

NH	5	0.025	18676.4	0.03	19128	0.03	21141.9	0.031	21827.1	0.031
NH	23398									
ET		7.1	9.1				18700.0	19847.7	18830.0	19930
X1	225.00	94	18856.4	19847.7	500	500	496.25			
GR	1189.7	17719.5	1190.1	17870.7	1188.8	18026.8	1189.7	18112.2	1188.8	18130.6
GR	1188.6	18312.4	1188.4	18393.4	1190.4	18426	1190.2	18436.6	1186.9	18470.1
GR	1186.9	18676.4	1167.2	18759.2	1166.6	18779.8	1169.8	18836.1	1174.1	18856.4
GR	1169.4	18896.9	1168.4	18919.9	1172.7	18936.7	1176.8	18987.3	1179.3	19003.2
GR	1184	19017.7	1176.4	19039.8	1175.8	19070.5	1178	19128	1164	19159.5
GR	1164	19172.7	1162.6	19486.6	1161.8	19726	1162.2	19775.8	1164.5	19817.6
GR	1170.9	19847.7	1169.8	19892.4	1168.5	19894.5	1164.6	19912.5	1162.8	19925.1
GR	1162.8	20030.2	1162.5	20138.6	1162.5	20279.4	1162.4	20613.9	1162.6	20623.6
GR	1162.3	20731	1162.9	20748.1	1165.2	20766.3	1164.5	20795.3	1173.7	20815.2
GR	1179.5	20830.2	1176.5	20848.1	1179.5	20950.7	1179.5	20961.2	1188.2	20992.7
GR	1183.1	21016.3	1180.3	21031.9	1180.2	21141.9	1171.4	21161.2	1162	21187
GR	1162.2	21289.3	1162.2	21417.3	1165.8	21501.4	1167.4	21514.4	1175.5	21539.5
GR	1175.2	21561.7	1171.5	21579.4	1170.5	21680.4	1170.7	21789.5	1175.4	21809
GR	1177.7	21827.1	1171.6	21849.4	1171.8	21951	1175.5	22051	1172.9	22059
GR	1172.9	22089.9	1179.7	22110.5	1179.7	22131.4	1182.9	22154.6	1176.5	22200.9
GR	1175.4	22218	1185	22243.5	1186.8	22246.5	1187.7	22353.9	1187.3	22458.6
GR	1186.8	22513.3	1184.2	22572.4	1185.6	22686.2	1186.6	22719.9	1187.2	22804.8
GR	1189.3	22852.6	1188.3	22941	1189.6	23059.7	1190.5	23172.6	1187.6	23200.2
GR	1187.6	23325.7	1188.4	23349.3	1192.8	23387.4	1193.3	23398		

THE INEFFECTIVE FLOW AREA BETWEEN STATIONS 19750 AND 20050 DUE TO
THE PRESENCE OF AN ISLAND BETWEEN CROSS SECTIONS 225.10 AND 225.19
HAS BEEN REMOVED

NH	5	0.025	18537.1	0.03	18819.9	0.03	21243.8	0.03	21279.9	0.031
NH	22788									
ET		7.1	9.1				18469.0	19750.0	18750	19750
X1	225.10	87	18819.9	19750.0	530	520	511.45			
GR	1188.9	18469	1187.8	18516.3	1185.9	18528.8	1183.3	18537.1	1183.1	18548.2
GR	1182.2	18552.2	1181.9	18580.1	1177.7	18596.7	1173.1	18610.2	1172	18670.4
GR	1175	18702	1170.8	18717.4	1171.2	18778.4	1174.9	18797.1	1175	18819.9
GR	1166	18897.7	1162.9	18935	1163.2	18969.9	1163.8	19260.9	1162.9	19364
GR	1163	19552	1163.2	19625.8	1164.5	19649.3	1163	19680.5	1163.3	19701.7
GR	1169.2	19716.7	1175.4	19750	1190	19750.1	1190	20050	1166.2	20050.1
GR	1170.4	20089.5	1170.7	20206.4	1164.2	20232.3	1168.2	20265.9	1167	20270.5
GR	1162.8	20279.5	1164.6	20295.6	1164	20355.9	1162.8	20415.9	1166.8	20448.9
GR	1163.2	20509.4	1162.7	20749.9	1162.5	20905.4	1162.3	20923.8	1164.3	20952.2
GR	1163.1	20971.3	1163.3	21107.2	1163.3	21141.2	1169.3	21163.6	1172.6	21197.5
GR	1171.6	21204.6	1175.1	21217.5	1186	21243.8	1182	21279.9	1181.3	21370.9
GR	1195.1	21433.4	1206.3	21470.2	1202.7	21525.1	1203	21576.3	1205.5	21600.8
GR	1205.1	21649.7	1202.8	21657.5	1206.2	21684.8	1202.9	21693.6	1192.2	21732.2
GR	1183.6	21755.5	1184.9	21868.4	1201.4	21906	1202.1	21928	1209.2	21941.4

GR	1208.1	21952	1189.4	21991.8	1191.4	22097.5	1190.5	22246.3	1190.1	22255.5
GR	1176	22286.1	1178.3	22308.9	1188.6	22337.8	1190.2	22474.3	1189.1	22512.9
GR	1184.2	22523.5	1184.2	22540.6	1192.5	22560.6	1190.7	22654.9	1193.9	22668.5
GR	1191.4	22675.9	1191.9	22788						

NH	5	0.025	18660.5	0.03	19001.3	0.03	20358.8	0.03	20836.5	0.031
NH	22679									
ET		7.1	9.1				18650.0	19830.0	18775	19800
X1	225.19	86	19001.3	19800	480	485	502.05			
GR	1192.9	18396.2	1192.8	18520.2	1192.5	18641.4	1192.3	18660.5	1170	18708.6
GR	1172.6	18819.2	1173.7	18893.8	1180.5	18909.9	1179.6	18923.3	1174.3	18937.6
GR	1174.6	18968.1	1178.6	19001.3	1165	19035.5	1164.9	19045.4	1162.6	19393
GR	1162.9	19495.4	1166	19549.5	1166.1	19626.1	1164	19646.5	1163	19781.4
GR	1162.8	19800	1190	19800.1	1190	20100	1164.3	20100.1	1163.2	20108.8
GR	1163.6	20235.5	1170.8	20275.7	1173.6	20283.3	1177.4	20298.9	1181.6	20358.8
GR	1180.3	20414.5	1182.3	20434.9	1181.3	20439.5	1181.3	20480.2	1178.7	20504.5
GR	1179.7	20518.8	1179.7	20553.6	1176.7	20561.2	1176.4	20564.7	1179.3	20586.8
GR	1178.1	20597.8	1179.1	20603.7	1185.1	20619.5	1186.2	20628.1	1185.2	20641.5
GR	1180.9	20656.1	1183	20667.9	1185.5	20725	1193.9	20752.5	1192.1	20814.5
GR	1190.1	20836.5	1188.3	20939.4	1188.6	20992.2	1187.5	21022.7	1186.8	21133.3
GR	1187.2	21237.8	1188.1	21277.1	1187	21351	1188.7	21374.7	1188.7	21407.1
GR	1187.8	21414.4	1187.3	21457.6	1193.7	21478.6	1186.6	21496.9	1185.3	21561.2
GR	1187.1	21672.6	1187.8	21759.1	1201.9	21783.8	1204.8	21796.4	1196.7	21823.8
GR	1194.2	21848.3	1190	21864.2	1191.3	21888.1	1193.1	21898.9	1192.3	21971.3
GR	1193.2	21997.7	1191.8	22000.2	1191.5	22101.4	1191.9	22206.6	1191.5	22311.8
GR	1190.4	22394.5	1184.2	22413.5	1184.2	22494.2	1192.6	22518.5	1194.5	22627.4
GR	1196	22679								

NH	6	0.025	18664.4	0.03	19177.2	0.030	19850.4	0.03	20406.3	0.031
NH	20947	0.031	22639							
ET		7.1	9.1				18630	20030	18750	20030
X1	225.28	95	19207.6	19850.4	490	430	487.64			
GR	1195.6	18148.3	1195.5	18250.6	1194.9	18363.5	1193	18455.9	1192.9	18546.4
GR	1191.7	18664.4	1174.5	18726.1	1171.7	18745.5	1172.3	18808.8	1175	18907
GR	1178.5	18937.6	1176.6	18994.7	1177.9	19012.5	1179.4	19072.4	1185.9	19096.3
GR	1177.8	19121.7	1179.8	19128.8	1179.8	19164.2	1184.3	19177.2	1176.8	19207.6
GR	1172.9	19262.8	1174.4	19312	1175.3	19324.5	1164.3	19352.6	1164.5	19773.2
GR	1164.5	19823.1	1175.8	19850.4	1164.3	19874.2	1164.5	19990.1	1164.2	20091.7
GR	1164.1	20161	1164.2	20249.9	1164.1	20256.2	1163.4	20362.5	1163	20406.3
GR	1163.8	20624.5	1163.4	20718.1	1163.1	20805.1	1170.9	20847.1	1170.4	20854.5
GR	1172.2	20860.1	1175.2	20889.8	1180.7	20905.5	1193.5	20947	1192.9	20957.3
GR	1189.7	20967.6	1181.6	20989.4	1181.3	21001.2	1183.4	21021.9	1184.8	21057.5
GR	1187.9	21102.3	1187	21132.3	1185.6	21136.3	1190.5	21158.5	1189.6	21189.2
GR	1190.2	21205.3	1188.5	21273.6	1190.6	21282.4	1193.4	21305	1190.5	21315.5
GR	1191.6	21330	1190.3	21338.5	1188.6	21389.6	1189.7	21504.4	1190.4	21565.5
GR	1202.7	21607.1	1190.4	21631.1	1190	21645.9	1196.6	21668.4	1197.5	21691.6
GR	1195.9	21731.7	1193.7	21750.5	1189.7	21762.1	1190.6	21852.1	1191.1	21932.8
GR	1191.9	22061	1192.1	22158	1192.1	22167.6	1196.2	22182.6	1195.9	22193.4
GR	1191.1	22210.6	1191.8	22295.4	1194.1	22357.2	1209.9	22384.9	1209.3	22387.6
GR	1202.5	22398.4	1195.3	22418.1	1194.4	22460.3	1198.1	22469.6	1195.5	22488.3
GR	1194.1	22493.1	1195	22520	1198.1	22531.5	1194.7	22548.1	1194.8	22639

NH	4	0.03	18817.8	0.03	19845.8	0.03	20948.6	0.029	22919.6	
ET		7.1	9.1				18817.8	19845.8	18888.6	19839.5
X1	225.38	95	18914.7	19732.6	400	400	518.68			
GR	1193.9	18611.2	1182.7	18649.2	1186.5	18744.8	1189.3	18817.8	1188.3	18852.5
GR	1185.7	18871.2	1185.8	18884.5	1173.3	18914.7	1165.9	18935.8	1166.5	18941.8
GR	1165.6	19015.9	1165.1	19101.8	1164.9	19180.6	1164.4	19189	1172.7	19240.1
GR	1172.9	19304.8	1162.6	19351.1	1162.5	19402.2	1163.5	19402.3	1164.7	19412.4
GR	1164.9	19438.2	1163.3	19450.2	1163	19620.6	1162.6	19694.9	1171.8	19718.6
GR	1176.1	19732.6	1170.7	19775.5	1179.9	19829.3	1186.5	19845.8	1183.6	19859.7
GR	1183.8	19870	1174.5	19947.7	1170.6	19985.4	1169	20056.1	1166.3	20111.7
GR	1163	20149.2	1163.7	20213	1163.7	20262.4	1162.7	20632.3	1162.4	20737.3
GR	1162.9	20803.5	1164.4	20887.4	1164.5	20895.5	1169.4	20900.2	1172.6	20900.6
GR	1182.4	20936.8	1188.2	20948.6	1180.1	21005.8	1181.4	21045.7	1175.6	21060.8
GR	1177.6	21126.2	1177.6	21203.3	1177.7	21221.5	1176.6	21235.1	1181.9	21295.8
GR	1180.5	21379.2	1177.8	21426.3	1177.8	21471.7	1175.5	21520.7	1163.6	21543.6
GR	1163.8	21560.7	1163.4	21653.6	1162.7	21657.1	1163.4	21669.8	1167.3	21698.6
GR	1166.1	21707.4	1168.7	21742.6	1164.6	21761.2	1163.5	21762.8	1165.2	21805.9
GR	1169.1	21826.9	1172.4	21864.2	1181.5	21903.8	1185.2	21924.7	1182.3	21938.3
GR	1183	22013.7	1191.2	22080.5	1195.4	22096.7	1193.5	22110.8	1191.7	22152
GR	1190.3	22154.9	1190.7	22187.9	1192.8	22212.7	1194.1	22255.1	1193.9	22325
GR	1194	22406.1	1195.1	22471.6	1196.9	22573	1196.3	22638.1	1195.8	22701.9
GR	1196.2	22765.3	1195.5	22822.4	1195.8	22900.3	1196.4	22906.9	1200.4	22919.6
NH	5	0.032	18589.5	0.028	19774.3	0.028	20649	0.031	22324.4	0.032
NH	22522									
ET		7.1	9.1				18589.5	19774.3	18666.0	19697.9
X1	225.48	96	18717	19693.6	505	460	507.13			
GR	1195.5	18401.8	1193.9	18532.5	1195	18589.5	1186.2	18634.4	1184.2	18717
GR	1165.5	18755.6	1166.5	18756.2	1166.6	18886.9	1167.5	19013.8	1171.1	19050.6
GR	1172.8	19102.6	1172	19109.8	1169.8	19212.5	1164.3	19297	1164.2	19414.2
GR	1164	19422.1	1163.1	19588.2	1161.5	19591.4	1162.9	19629.5	1184	19693.6
GR	1187.4	19703.9	1203.5	19762.5	1203.8	19774.3	1197.4	19803.8	1196.2	19812.5
GR	1204.2	19839.2	1203.4	19842.8	1201	19878.3	1192.9	19900.1	1191.7	19961.1
GR	1188.5	19992.3	1188	20016.5	1188.5	20040.9	1187.6	20153.7	1187.5	20178.1
GR	1189	20233.4	1192.8	20240.2	1196.8	20271.6	1174	20291.8	1165	20311.2
GR	1163	20362.4	1168.6	20389.3	1162.7	20411.4	1162	20599.5	1161.7	20603.5
GR	1163.1	20609.1	1182.9	20645.3	1187.2	20649	1168.8	20690.9	1162.7	20708.9
GR	1163.7	20755.9	1167.4	20769.5	1168.1	20775.5	1168.7	20814.9	1166.4	20821.3
GR	1165.7	20831.5	1163.3	20834.5	1164	20861.9	1163.5	20864.1	1163.5	20971.2
GR	1162.5	21079.5	1165.3	21184.7	1164.4	21200.1	1166.3	21213.4	1165.3	21221.9
GR	1164.3	21259.1	1167.4	21342.1	1162.7	21354.8	1163.8	21356.3	1164	21389.6
GR	1162.7	21480.5	1163.8	21585	1164.7	21615.9	1161	21634.1	1160.3	21642.5
GR	1173.1	21685.9	1179.8	21702.1	1186.4	21721.5	1186.1	21798.1	1191.7	21813
GR	1190.6	21835.9	1193.7	21927	1192.1	21991	1193.2	22057.7	1195.5	22096.2
GR	1194.6	22132.9	1196.9	22152.4	1195.5	22172.3	1197.2	22186.1	1196.4	22270.5
GR	1194.4	22324.4	1196.5	22395.3	1195.8	22430.4	1196.7	22504.7	1195.5	22515.5
GR	1197.2	22522								

NH	6	0.032	18546.1	0.028	18700.7	0.028	19789.6	0.028	20412.3	0.031
NH	21433	0.032	22042							
ET		7.1	9.1				18700.7	19789.6	18720.4	19789.6
X1	225.57	96	18720.4	19789.6	495	450	475.36			
GR	1199	18437.1	1193.8	18465.1	1197.2	18546.1	1185.6	18598.5	1184	18632.1
GR	1187.1	18665	1190.8	18678.1	1191.6	18700.7	1182	18720.4	1166.9	18751.5
GR	1167.9	18751.7	1167.1	18791.3	1167	18962.9	1167.8	18969.6	1168	19263.2
GR	1168.3	19336	1167.4	19353.3	1164	19354	1162.4	19354.7	1168.8	19396.7
GR	1167.6	19430.4	1168	19520.8	1160.3	19557.3	1159.6	19573.8	1158.3	19575.5
GR	1158.3	19690.1	1162.2	19721.7	1163.7	19751.5	1183.7	19789.6	1180.6	19812.1
GR	1181	19816.6	1185.2	19829.5	1187	19907.8	1186.6	19942.2	1181.2	19989.8
GR	1184.2	19999.4	1186.8	20072.2	1182	20080.7	1159.1	20114.3	1161.5	20116.9
GR	1157.9	20136.3	1158.7	20259.5	1158.8	20269.1	1162.3	20269.4	1172.4	20278.6
GR	1172.8	20283.2	1169.8	20311	1172.4	20327.3	1174.5	20333.5	1184.5	20352
GR	1185.5	20356.4	1173.8	20383.4	1171.5	20393.4	1172.2	20412.3	1164.9	20424.8
GR	1162.3	20434.4	1161.2	20434.8	1158	20447.3	1159.5	20492.2	1172.7	20516.9
GR	1188.1	20542.6	1188.4	20548.3	1202.8	20577.8	1210.5	20598.4	1206.4	20609.4
GR	1197.1	20676.4	1192.1	20734.1	1191.7	20779.9	1199.1	20814.8	1191.2	20844.6
GR	1189.9	20885.5	1194.4	20909.4	1189.5	20933.3	1190.7	20991	1186.9	21008.3
GR	1184	21143.8	1184.2	21212.2	1191.3	21232.9	1165.8	21282.3	1171.5	21294.3
GR	1184.3	21328.9	1184.7	21341.8	1195.4	21367.7	1190.6	21380.9	1190.6	21417.4
GR	1195.2	21433	1187.9	21460.1	1192	21471.6	1190.3	21541.7	1193.7	21586.5
GR	1194.4	21687.1	1193.2	21741.9	1197.9	21811.7	1197.3	21885.6	1196.1	21941.4
GR	1198.5	22042								
NH	5	0.028	18727.9	0.028	19790.8	0.028	20113.6	0.031	21634.3	0.032
NH	22190									
ET		7.1	9.1				18727.9	19790.8	18802.5	19790.8
X1	225.66	95	18802.5	19790.8	525	520	512.77			
GR	1202.6	18694.6	1190.2	18714.2	1194.7	18727.9	1186.7	18745.5	1181.8	18802.5
GR	1167	18825.6	1164.9	18827	1167.8	18829	1168	18879.7	1167.5	18912.6
GR	1164.2	19213.5	1165.9	19230.1	1166.9	19250.3	1168.7	19319.5	1169.3	19370.7
GR	1169.7	19410.1	1169.2	19423.8	1166.4	19432.8	1166.2	19439.6	1158.8	19467.2
GR	1160.5	19501.3	1160.5	19516.9	1159	19518.4	1159	19533.4	1160.2	19558.6
GR	1159	19562.5	1160.7	19584	1162.3	19596.7	1162.5	19639.1	1165.6	19671.6
GR	1161.6	19698.5	1161.9	19743.5	1163.5	19755.8	1165.9	19763.3	1185.1	19790.8
GR	1183.7	19805.1	1181.5	19854.7	1177	19869.3	1178.5	19886.7	1174.8	19948.3
GR	1174.8	19961.9	1181.1	19974.1	1197.6	20015.3	1195.4	20022.5	1188.4	20040
GR	1188.1	20076.1	1206.8	20113.6	1206.4	20154.6	1204.6	20211.4	1203.8	20276.3
GR	1202.5	20323.5	1200.2	20359.4	1192.9	20392.2	1192.4	20470.6	1192.3	20484
GR	1192.8	20540.9	1193.6	20599.2	1194.2	20661	1195.1	20677.3	1194.6	20717.6
GR	1199.5	20779.8	1203.3	20844.2	1203.1	20903.8	1204.9	20907.8	1207.7	20919.2
GR	1193	20945	1192.5	20952	1193.3	20982.2	1196	20992.9	1194.4	20995.7
GR	1194.7	21004.9	1195	21057.5	1196	21082.9	1197	21092.1	1199	21153.4
GR	1199.1	21186.7	1192.7	21219	1193.6	21274.2	1194.7	21336	1194.8	21392.1
GR	1195.7	21462.3	1193.7	21501.8	1198.8	21544.6	1198.6	21615.3	1197.8	21634.3
GR	1199.3	21706.1	1199.3	21711.8	1198.8	21769.9	1197.8	21810	1199.8	21887.6
GR	1199.8	21962.3	1199.5	22031.8	1198.8	22086.5	1198.3	22141.4	1200.7	22190

NH	5	0.028	18673.2	0.028	19822.4	0.028	20287.1	0.031	21435.5	0.032
NH	21674									
ET		7.1	9.1				18673.2	19822.4	18720.5	19782.4
X1	225.76	94	18720.5	19782.4	440	485	482.78			
GR	1202.1	18599.4	1201.4	18607.5	1200.5	18649.4	1200.7	18673.2	1199.2	18675.4
GR	1165.5	18720.5	1165.6	18740.6	1166	18801.3	1166.2	18851.4	1165.3	18854.2
GR	1165.2	18881.2	1165.2	18915	1166.3	18924.9	1165	19164.4	1165.4	19166.6
GR	1167	19211.7	1168.3	19255.6	1170.7	19317.9	1171.4	19334.8	1171	19414.5
GR	1170.5	19445.1	1169.4	19500	1168.7	19535.3	1167.6	19557.8	1169.1	19593.6
GR	1170.7	19634.6	1170.9	19638.8	1177.8	19656.9	1178.1	19666.7	1180.5	19751.2
GR	1181.3	19780.3	1182.1	19782.4	1196.2	19822.4	1191.4	19834.5	1191.1	19865.6
GR	1190.9	19890	1190.7	19941.8	1190.8	19954	1191.7	20014.4	1190.8	20031
GR	1191.4	20067.7	1192.3	20095.6	1193.9	20141.3	1196.8	20201.8	1196.9	20206.2
GR	1195.9	20250.4	1194.3	20287.1	1195.6	20322.5	1198.2	20384.7	1198.7	20401
GR	1198.9	20438.6	1197.9	20454.7	1199.3	20484.2	1198.8	20509.1	1197.2	20517.6
GR	1198.6	20523.6	1214.7	20564.7	1224.3	20588.8	1227.4	20641.4	1229	20672.2
GR	1229.5	20697.7	1210.3	20730.5	1195.1	20756.4	1194.3	20792	1193.2	20813.3
GR	1194.4	20820.3	1193.3	20844	1193.8	20858.3	1194.7	20900.8	1195	20922.8
GR	1195.6	20955.7	1195.6	20980	1196.8	21012.4	1197.7	21028.5	1214.7	21064.4
GR	1216.5	21069	1216.8	21072.7	1217.1	21109.1	1216.8	21110	1197.5	21144.1
GR	1198.6	21184.6	1198.7	21223.2	1198.7	21255.2	1198.6	21293.7	1198.7	21335.9
GR	1198.7	21386.1	1199.4	21435.5	1199.3	21466.5	1199.1	21484.6	1199.1	21521.9
GR	1199.2	21551.1	1199.2	21586	1200.1	21622.7	1201.8	21674		

NH	6	0.032	18128.4	0.028	18202.9	0.028	19950.6	0.028	20186.5	0.031
NH	21334	0.032	21924.6							
ET		7.1	9.1				18202.9	19950.6	18555	19867.3
X1	225.85	94	18644.0	19867.3	630	505	509.56			
GR	1200.8	17859.9	1200	17925.1	1199.9	17998.1	1199.9	18017.7	1199.3	18017.9
GR	1199.5	18021.9	1195.9	18066.5	1187.3	18086.8	1188.9	18091.7	1194.7	18128.4
GR	1192	18139.2	1190	18171.7	1190	18202.9	1187.8	18205.3	1175.3	18230.7
GR	1167.6	18317.7	1166.8	18340.2	1166.9	18433.5	1167	18644	1167.3	18714.1
GR	1167.3	18730.3	1168	18923.1	1168.1	18951	1169.1	18998.3	1169	19113.9
GR	1168.9	19153.3	1168.7	19257	1168.6	19361.6	1169.4	19412.2	1168.7	19428.2
GR	1168.7	19474.2	1168.9	19549.8	1170.6	19636.8	1169.2	19637.4	1173	19703.5
GR	1173.6	19713.9	1172.3	19724.4	1171.1	19760.2	1168.4	19774.2	1168.8	19835.1
GR	1168.4	19851.4	1181.8	19867.3	1182.2	19884.5	1184.8	19907.6	1201.6	19950.6
GR	1202.4	19965.7	1198.5	19974.9	1193.1	19990.9	1194.5	20033.7	1189.9	20061.5
GR	1189.2	20111.3	1196.5	20135.6	1196.8	20186.5	1192.9	20196	1190.8	20209.4
GR	1190.8	20231	1192.3	20245.5	1195.4	20257.9	1195	20279	1190.9	20291.2
GR	1190.9	20371.8	1196.4	20396.8	1198.5	20440.3	1199.3	20444.2	1198.8	20519.4
GR	1198.5	20601.3	1199.1	20661.4	1201.2	20676.2	1201.3	20718.5	1200.5	20729.9
GR	1201.2	20754.7	1199.5	20792.3	1200.1	20830.8	1198.8	20892.9	1199.5	20954.2
GR	1200.5	21039.8	1203.7	21042.5	1206.2	21060.1	1205.4	21063.8	1200.5	21071.4
GR	1200.6	21118.5	1201.2	21197.6	1201.6	21234.8	1200.7	21260.1	1201.6	21334
GR	1201.1	21435.8	1201	21509.6	1197.7	21601	1196.8	21662.9	1197.6	21746.1
GR	1197.6	21762.1	1200.1	21799.7	1199	21871.1	1200.8	21924.6		

NH	5	0.032	18228.4	0.028	18335.5	0.028	20237.2	0.031	21188.1	0.032
NH	21595									
ET		7.1	9.1				18335.5	20237.2	18428.5	20039.0
X1	225.95	94	18462.5	20028.3	470	510	509.99			
GR	1203.7	17840.6	1202.4	17848.9	1193.6	17889.2	1193.7	17922.2	1194	17963.8
GR	1193.7	18003.5	1193.3	18049.4	1194.4	18075.7	1196.9	18116.2	1197	18196.1
GR	1196	18228.4	1194.6	18269	1193.2	18321.5	1192.9	18335.5	1190.1	18375.5
GR	1182.4	18405.1	1183	18428.5	1181.5	18445	1177.9	18462.5	1176.1	18485.6
GR	1176.8	18517.9	1176.6	18533.3	1175.3	18553.3	1176.3	18604.6	1178	18637.4
GR	1176	18671.4	1175.9	18692.9	1167.9	18708.4	1168.7	18708.7	1167.9	18717.5
GR	1167.9	18817.2	1168	18863.1	1168.6	18952	1168.8	19096.8	1168.8	19116.2
GR	1172.1	19129	1172.9	19130.4	1174.6	19160.5	1175.5	19215.6	1174.7	19255.3
GR	1175.1	19282.8	1173.9	19324	1172.5	19402.1	1173.3	19480.7	1173.4	19487.4
GR	1173.5	19546.6	1173.2	19561.6	1171.5	19597	1171.8	19766.1	1172	19774.5
GR	1172.2	19849.9	1172.6	19953.3	1173	20020.4	1173	20028.3	1183.6	20039.7
GR	1183.9	20085.7	1184.1	20114.6	1196.9	20181	1208.9	20237.2	1206.8	20284.1
GR	1208.4	20295.6	1203.3	20308.8	1195.4	20337	1194.8	20347.3	1194.6	20393
GR	1194.6	20446.4	1194.6	20457.2	1194.6	20542.6	1195.3	20585.5	1198.7	20639.1
GR	1198.6	20647.5	1200.8	20699.8	1201.6	20747.8	1201.5	20820.4	1201.6	20865.5
GR	1202.1	20977.3	1202.1	20982.5	1201.9	21042.6	1201.8	21084.5	1199.8	21122.5
GR	1199.8	21145.3	1200.5	21188.1	1200.5	21201.5	1198.1	21246.4	1196.8	21266.9
GR	1197.8	21298.1	1197.5	21304.9	1198.3	21344.9	1198.8	21373.7	1200.5	21418.9
GR	1199	21475.2	1199.6	21525.8	1200	21556.4	1202.2	21595		

Separate files were run from Sec. 225.95 to Sec. 226.89 to analyze
the split flow around the island under Alma School Bridge.
Qmc =147500 cfs (Split A) Qoverflow = 72500 cfs (Split B)

NH	4	0.028	19322.6	0.028	20431.8	0.028	20903.8	0.032	21292	
QT	2	147500	147500							
ET		7.1	9.1				19322.6	20431.8	19384.7	20261.8
X1	226.04	61	19384.7	20261.8	484	480	476.46			
GR	1190.7	19322.6	1189.8	19330.3	1189.1	19348.5	1185	19384.7	1185	19388
GR	1184.7	19422.5	1184.8	19427	1184.1	19433.8	1183.1	19465.4	1180.9	19474.7
GR	1177.6	19481.8	1174.3	19487	1173.9	19516.1	1174.4	19546	1173.3	19554.1
GR	1177.3	19578.1	1176.4	19677.9	1176.1	19713.4	1175.5	19740.7	1174.3	19803.7
GR	1173.5	19852.7	1173.6	19865	1174.4	19915.2	1173.1	19968.4	1173.5	19986.1
GR	1174.1	20226.7	1174.6	20231.5	1186.4	20261.8	1182.7	20271.6	1182.7	20278.9
GR	1183.2	20323.1	1183.4	20350.9	1197.6	20397.2	1208.9	20431.8	1207.8	20455.3
GR	1208.3	20494.1	1210.1	20512.3	1207.1	20520	1202.5	20536.8	1202.7	20559.4
GR	1202.7	20593.7	1203	20606.2	1202.5	20646.2	1202.3	20721.5	1202.4	20732.8
GR	1202	20792.8	1202.5	20851.4	1203.7	20901	1203.7	20903.8	1201.8	20944.3
GR	1199.6	20978.5	1197.3	21014.7	1197.4	21049.3	1197.4	21091.9	1199.9	21127.4
GR	1200.7	21138	1200.8	21147.2	1200.5	21186.3	1200.6	21206.2	1201.5	21261.6
GR	1201.7	21292								

NH	4	0.028	19593.2	0.028	20570.5	0.028	20626.6	0.032	21539.6	
ET		7.1	9.1				19593.2	20570.5	19616.4	20439.1
X1	226.13	60	19616.4	20439.1	510	500	502.01			
GR	1170.5	19437.3	1170.7	19485.6	1172.2	19504.1	1195.1	19553.4	1197.4	19593.2
GR	1185	19616.4	1175	19633	1175.1	19634.4	1174.6	19634.6	1174.2	19647
GR	1175	19647.9	1174.1	19649.3	1174.1	19651.3	1174.7	19652.3	1177.6	19671.2
GR	1177.4	19743.2	1177.3	19758.5	1177.3	19820.9	1176.9	19854.6	1175.8	19902.4
GR	1175.7	19926.4	1175.1	19957.4	1175.4	20107.7	1175.4	20182.2	1174.9	20223.3
GR	1175.4	20226.9	1176.7	20230.3	1182.3	20263.7	1183.8	20312.9	1183	20329.7
GR	1181.3	20345.9	1182	20382.2	1185.2	20439.1	1187	20474.8	1197.3	20524
GR	1207.3	20570.5	1207.3	20626.6	1200	20643.6	1194.2	20663.5	1193.7	20687.1
GR	1202.3	20743.5	1200.4	20811.7	1200.5	20871	1200.3	20920.2	1200.3	20939.3
GR	1200.5	20993.3	1201	21057	1200.2	21085.4	1200.7	21141.6	1200.8	21146.2
GR	1199.6	21208	1198.8	21227.7	1201.7	21263.7	1201.7	21319.4	1201.8	21376.1
GR	1201.6	21430.6	1201.1	21432.8	1201.2	21445.1	1201.8	21532.8	1202.2	21539.6
NH	2	0.028	19603.5	0.028	20608.2					
ET		7.1	9.1				19603.5	20608.2	19656.4	20440
X1	226.23	36	19656.4	20316.6	400	630	492.85			
GR	1172.3	19327.9	1172.5	19354.8	1172.5	19507.5	1172.5	19559.6	1172.8	19569.4
GR	1178.2	19577.6	1195.5	19603.5	1194.5	19620.9	1192.8	19643	1184.4	19656.4
GR	1183.6	19658	1178.5	19679.1	1178.6	19679.2	1178.6	19699.7	1178.6	19818.4
GR	1178.6	19842.2	1178.6	19887.8	1178.7	19921.7	1177.6	20113.2	1177.9	20135.2
GR	1178.7	20240.4	1179	20252.9	1178.7	20253.2	1181.4	20280.2	1184.7	20316.6
GR	1185.9	20328.3	1185.9	20344.6	1186	20373.1	1185.8	20381.7	1185.6	20439.4
GR	1186.1	20464.8	1186.5	20496.5	1186.2	20541.5	1186.1	20556.6	1191.5	20568.2
GR	1210.9	20608.2								
NH	3	0.028	19598.4	0.028	20580.5	0.032	21305.9			
ET		7.1	9.1				19598.4	20580.5	19633.4	20520.9
X1	226.35	46	19633.4	20520.9	470	770	666.57			
GR	1173.4	19477.2	1173.4	19478.6	1179.8	19487.8	1194.4	19507.4	1201.1	19533.2
GR	1201.9	19538.7	1202.2	19547.6	1202	19590.8	1204.3	19598.4	1199.6	19623
GR	1189.4	19633.4	1189	19635.3	1180.3	19702.2	1180.6	19722.8	1180.8	19974.1
GR	1180.2	19983.4	1182.9	20006.6	1184.5	20049.5	1184.8	20084.8	1183.2	20121.1
GR	1183.6	20122	1184.6	20188.7	1185.2	20414.8	1185.2	20456.4	1185.5	20504.6
GR	1185.7	20520.9	1207.3	20575.1	1209.5	20580.5	1204.6	20626.8	1203	20642
GR	1203	20647.6	1203	20714.5	1203	20738.2	1203.5	20817.4	1203.9	20885.1
GR	1203.7	20954.1	1203.4	21007.9	1203.1	21022.9	1204.1	21080.2	1203.7	21102.6
GR	1204	21105.1	1203	21151.8	1203.8	21197.6	1203.3	21239.4	1204.7	21284.3
GR	1205.1	21305.9								
NH	4	0.029	19319.7	0.028	19554.4	0.028	20592.3	0.032	21453.5	
ET		7.1	9.1				19554.4	20592.3	19628.3	20533.2
X1	226.48	51	19628.3	20533.2	550	994	763.51			
GR	1202.8	19057.9	1204.8	19157.6	1205.9	19268.4	1205.4	19298.9	1205.8	19319.7
GR	1206.2	19382.8	1206.1	19487.9	1205.8	19531.8	1204.6	19554.4	1203.8	19612.5
GR	1196	19628.3	1185.3	19650	1182.1	19671.1	1182.4	19681.3	1182.2	19793.3
GR	1181.8	19861.5	1182.8	19882.7	1183.6	19886.2	1183.2	19891.3	1183.7	19924.7
GR	1185.6	19949.7	1187.6	20029.1	1188.3	20086.5	1187.7	20119.4	1187.2	20120

```
GR   1187.8    20137.4     1187.5    20318.7     1188.5    20469.4     1188.7    20519.1       1196    20533.2
GR   1203.5    20556.3     1203.8    20592.3     1203.5    20663.4     1202.9    20689.2     1204.7    20698.9
GR   1204.6    20787.2     1203.2    20834.8     1203.5    20903.5     1203.6    20913.2     1204.3    20988.1
GR   1203.9    21060.7     1203.9    21128.6     1204.8    21172.6     1207.4    21256.2     1207.4    21258.9
GR   1202.4      21271       1207    21288.1     1206.8      21353     1206.8    21357.8     1207.6    21429.4
GR   1207.8    21453.5

NH        4      0.029    19382.8      0.028    19554.4      0.028    20592.3      0.032    21453.5

ET                 7.1        9.1                                    19554.4    20592.3    19639.4    20533.2
X1   226.49         46    19639.4    20533.2          1          1          1
GR   1206.2    19382.8     1206.1    19487.9     1205.8    19531.8     1204.6    19554.4     1203.8    19612.5
GR   1191.4    19639.4     1186.0      19650     1186.0    19671.1     1186.0    19681.3     1186.0    19793.3
GR   1186.0    19861.5     1186.0    19882.7     1186.0    19886.2     1186.0    19891.3     1186.0    19924.7
GR   1186.0    19949.7     1187.6    20029.1     1188.3    20086.5     1187.7    20119.4     1187.2      20120
GR   1187.8    20137.4     1187.5    20318.7     1188.5    20469.4     1188.7    20519.1       1196    20533.2
GR   1203.5    20556.3     1203.8    20592.3     1203.5    20663.4     1202.9    20689.2     1204.7    20698.9
GR   1204.6    20787.2     1203.2    20834.8     1203.5    20903.5     1203.6    20913.2     1204.3    20988.1
GR   1203.9    21060.7     1203.9    21128.6     1204.8    21172.6     1207.4    21256.2     1207.4    21258.9
GR   1202.4      21271       1207    21288.1     1206.8      21353     1206.8    21357.8     1207.6    21429.4
GR   1207.8    21453.5
```

Downstream face of Alma School Rd Bridges

All data used to model this bridge was taken from survey notes and
from as-built plans dated 7-80

```
NH        4      0.029    19487.9      0.028    19554.4      0.028    20592.3      0.032    21453.5

ET                 7.1        9.1                                    19554.4    20592.3    19639.4    20533.2
X1   226.50         46    19639.4    20533.2         10         10         10
GR   1206.2    19382.8     1206.1    19487.9     1205.8    19531.8     1204.6    19554.4     1203.8    19612.5
GR   1191.4    19639.4     1186.0      19650     1186.0    19671.1     1186.0    19681.3     1186.0    19793.3
GR   1186.0    19861.5     1186.0    19882.7     1186.0    19886.2     1186.0    19891.3     1186.0    19924.7
GR   1186.0    19949.7     1187.6    20029.1     1188.3    20086.5     1187.7    20119.4     1187.2      20120
GR   1187.8    20137.4     1187.5    20318.7     1188.5    20469.4     1188.7    20519.1       1196    20533.2
GR   1203.5    20556.3     1203.8    20592.3     1203.5    20663.4     1202.9    20689.2     1204.7    20698.9
GR   1204.6    20787.2     1203.2    20834.8     1203.5    20903.5     1203.6    20913.2     1204.3    20988.1
GR   1203.9    21060.7     1203.9    21128.6     1204.8    21172.6     1207.4    21256.2     1207.4    21258.9
GR   1202.4      21271       1207    21288.1     1206.8      21353     1206.8    21357.8     1207.6    21429.4
GR   1207.8    21453.5
```

12 degree skew angle (cosine 12 degrees = 0.9781)

```
NC    0.028      0.032      0.028
ET                 7.1        9.1                                        19615.6    20548.2    19615.6    20548.2
                Downstream Face of Alma School Road Bridge
X1   226.51         77    19615.6    20548.2          2          2          2     0.9781
X2                                                                                            0.9781
BT      -19      19030       1204       1204    19615.5    1206.13    1206.13    19615.5    1206.13    1202.48
BT             19670.8    1206.22    1202.57    19729.6    1206.26    1202.61    19788.4    1206.26    1202.61
BT             19847.6     1206.3    1202.65    19905.5    1206.31    1202.66    19963.3    1206.27    1202.62
BT             20022.4     1206.2    1202.55    20081.3    1206.15     1202.5    20139.1    1206.05     1202.4
BT             20197.8    1205.92    1202.27    20257.6     1205.8    1202.15      20315    1205.63    1201.98
BT             20372.7     1205.5    1201.85      20434    1205.38    1201.73    20489.6    1205.09    1201.44
BT             20548.1    1204.81    1201.16
GR    1204      19030    1206.13    19615.5    1202.48    19615.6    1194.51    19615.7    1190.16    19629.5
GR  1187.9     19670.8    1202.57    19670.8    1202.57    19673.3    1187.89    19673.3    1186.93    19729.6
GR  1202.6     19729.6     1202.6    19732.1    1186.93    19732.1    1186.07    19757.1    1186.00    19788.4
GR  1202.6     19788.4    1202.61    19790.9    1186.00    19790.9    1186.00    19829.4    1186.00    19847.6
GR  1202.7     19847.6     1202.7    19850.1    1186.00    19850.1    1186.00    19863.9     1186.0    19905.5
GR  1202.7     19905.5     1202.7      19908     1186.0      19908     1186.0    19922.2     1186.0    19951.8
GR  1186.0     19963.3    1202.62    19963.3    1202.62    19965.8    1186.00    19965.8    1186.29    20022.4
GR  1202.6     20022.4     1202.6    20024.9    1186.29    20024.9    1187.03    20051.5    1187.08    20081.3
GR  1202.5     20081.3     1202.5    20083.8    1187.08    20083.8    1186.63    20139.1     1202.4    20139.1
GR  1202.4     20141.6    1186.63    20141.6    1187.14    20197.8    1202.27    20197.8    1202.27    20200.3
GR  1187.1     20200.3     1187.7    20257.6    1202.15    20257.6    1202.15    20260.1    1187.68    20260.1
GR  1186.8       20315       1202      20315       1202    20317.5    1186.83    20317.5    1187.56    20372.7
GR  1201.9     20372.7     1201.9    20375.2    1187.56    20375.2       1187      20434    1201.73      20434
GR  1201.7     20436.5       1187    20436.5    1187.64    20459.6     1186.2    20489.6    1201.44    20489.6
GR  1201.4     20492.1     1186.2    20492.1    1187.68    20520.2    1193.39    20548.1    1201.16    20548.2
GR  1204.8     20548.3       1204      20760

ET                 7.1        9.1                                        19615.6    20548.2    19615.6    20548.2
                Upstream Face of Alma School Road bridge
X1   226.52         77    19615.6    20548.2         84         84         84     0.9781
X2                                                                                            0.9781
BT      -19      19030       1204       1204    19615.5    1206.13    1206.13    19615.5    1206.13    1202.48
BT             19670.8    1206.22    1202.57    19729.6    1206.26    1202.61    19788.4    1206.26    1202.61
BT             19847.6     1206.3    1202.65    19905.5    1206.31    1202.66    19963.3    1206.27    1202.62
BT             20022.4     1206.2    1202.55    20081.3    1206.15     1202.5    20139.1    1206.05     1202.4
BT             20197.8    1205.92    1202.27    20257.6     1205.8    1202.15      20315    1205.63    1201.98
BT             20372.7     1205.5    1201.85      20434    1205.38    1201.73    20489.6    1205.09    1201.44
BT             20548.1    1204.81    1201.16
GR    1204      19030    1206.13    19615.5    1202.48    19615.6    1194.51    19615.7    1190.16    19629.5
GR  1187.9     19670.8    1202.57    19670.8    1202.57    19673.3    1187.89    19673.3    1186.93    19729.6
GR  1202.6     19729.6     1202.6    19732.1    1186.93    19732.1    1186.07    19757.1    1186.00    19788.4
GR  1202.6     19788.4    1202.61    19790.9    1186.00    19790.9    1186.00    19829.4    1186.00    19847.6
GR  1202.7     19847.6     1202.7    19850.1    1186.00    19850.1    1186.00    19863.9    1186.00    19905.5
GR  1202.7     19905.5     1202.7      19908     1186.0      19908     1186.0    19922.2     1186.0    19951.8
GR  1186.0     19963.3    1202.62    19963.3    1202.62    19965.8    1186.00    19965.8    1186.29    20022.4
GR  1202.6     20022.4     1202.6    20024.9    1186.29    20024.9    1187.03    20051.5    1187.08    20081.3
GR  1202.5     20081.3     1202.5    20083.8    1187.08    20083.8    1186.63    20139.1     1202.4    20139.1
GR  1202.4     20141.6    1186.63    20141.6    1187.14    20197.8    1202.27    20197.8    1202.27    20200.3
GR  1187.1     20200.3     1187.7    20257.6    1202.15    20257.6    1202.15    20260.1    1187.68    20260.1
GR  1186.8       20315       1202      20315       1202    20317.5    1186.83    20317.5    1187.56    20372.7
GR  1201.9     20372.7     1201.9    20375.2    1187.56    20375.2       1187      20434    1201.73      20434
```

GR	1201.7	20436.5	1187	20436.5	1187.64	20459.6	1186.2	20489.6	1201.44	20489.6
GR	1201.4	20492.1	1186.2	20492.1	1187.68	20520.2	1193.39	20548.1	1201.16	20548.2
GR	1204.8	20548.3	1204	20760						

Upstream face of Alma School Rd Bridge

NH	3	0.029	19522.9	0.028	20594.3	0.032	20976.5			
ET		7.1	9.1				19522.9	20594.3	19644.6	20532.1
X1	226.53	40	19644.6	20532.1	2	2	2			
GR	1207.3	19400.7	1208.3	19413.5	1209.1	19437.4	1209.9	19470.5	1212	19522.9
GR	1211.8	19539.6	1206.3	19582.3	1203	19614.7	1188.3	19644.6	1186	19653.3
GR	1186.0	19685.6	1186.0	19697.2	1186.0	19724.9	1186.0	19901.4	1186.0	19903.5
GR	1186.0	19935.8	1186.0	19968.1	1186.0	19972.2	1187.9	20054.4	1188	20058.9
GR	1188.1	20107	1188.1	20107.1	1187.6	20144.4	1186.3	20145.7	1187.7	20508.1
GR	1187.9	20519	1194.9	20532.1	1202.8	20554.6	1204.2	20571.1	1204.5	20594.3
GR	1203.7	20692.8	1203.3	20729.5	1203.9	20736.7	1203.6	20756.4	1203.6	20799.1
GR	1204.8	20834	1203.2	20847.8	1203	20900.8	1203.5	20925.7	1203.9	20976.5
NH	3	0.028	19623.6	0.028	20581.5	0.032	21318.1			
ET		7.1	9.1				19549.9	20581.5	19623.6	20542.5
X1	226.61	40	19623.6	20542.5	560	360	478.1			
GR	1213.2	19483.8	1213.4	19549.9	1212.4	19581.4	1197.5	19610.7	1194.6	19619.8
GR	1190.6	19623.6	1188.3	19650.1	1188.2	19726.3	1187.0	19791.6	1187.0	19803.2
GR	1187.0	19883.3	1187.0	19964.1	1187.0	19991.7	1187.0	20038.5	1187.0	20063.8
GR	1187.0	20064.4	1187.0	20152.2	1187.0	20232.2	1188.2	20333.6	1188.5	20515.4
GR	1190	20542.5	1202.9	20571.1	1205.6	20581.5	1205.3	20676.4	1205.8	20765
GR	1207.4	20777	1204.5	20783.9	1200.5	20797.8	1201.5	20801.4	1203.3	20879.2
GR	1204.1	20903.5	1203.7	20927	1205.3	20950.3	1206.4	21025.9	1199.3	21086.6
GR	1200.4	21161	1201.8	21224.7	1206.9	21255.6	1208.6	21307	1208.4	21318.1
NH	3	0.031	19621.8	0.028	20724.5	0.032	21674.9			
ET		7.1	9.1				19491.0	20724.5	19621.8	20560.2
X1	226.70	55	19621.8	20560.2	490	510	503.99			
GR	1205.2	19345.1	1205.6	19395.9	1205.7	19443.8	1205.8	19491.0	1206.4	19531.6
GR	1204.9	19584.1	1204.4	19593	1191.8	19621.8	1190.4	19639.9	1189.5	19664.4
GR	1189.6	19702.3	1189.2	19759.1	1188.3	19767.6	1189.7	19797.4	1188	19861
GR	1188.0	19870.8	1188.0	19871.6	1188.0	20148.3	1190.4	20560.2	1189.9	20561.9
GR	1190.7	20591.4	1190.5	20594.8	1192.8	20675.2	1193.1	20687.5	1203.4	20724.5
GR	1196.6	20744.3	1196.5	20783.1	1197	20799.3	1202	20840.1	1198.3	20878.9
GR	1195.1	20903.1	1195.3	20915.8	1189.4	20948	1188.9	20971.4	1191.7	21016.3
GR	1194.3	21030.4	1195.1	21046.5	1204.8	21098.9	1206.7	21109.5	1207.4	21157.1
GR	1207.7	21170.9	1208.4	21212	1207.8	21239	1206.8	21246.3	1199.2	21270.6
GR	1197.8	21295.6	1197.9	21303.4	1198.9	21365.1	1199.6	21411.3	1208.8	21447.3
GR	1205.5	21474.7	1208.5	21506.6	1208.6	21515.6	1208.5	21579.6	1209.9	21674.9

NH	5	0.028	19309.8	0.031	19441.4	0.031	19606.8	0.028	20598	0.032
NH	21791									
ET		7.1	9.1				19441.4	20598.0	19621.0	20537.0
X1	226.80	70	19621.0	20537.0	560	480	487.43			
GR	1204.9	19289.4	1205.2	19309.8	1205	19352.7	1205.2	19398	1205.2	19399.9
GR	1205	19436	1205.1	19441.4	1204.8	19484	1204.2	19500.3	1204.2	19526.5
GR	1204.5	19544.7	1204	19577.8	1203.3	19606.8	1194.2	19621	1193.6	19621.4
GR	1193.1	19628.3	1191.8	19665.2	1192.2	19666.9	1191.7	19698.9	1192.5	20222.1
GR	1192.9	20527.5	1192.8	20535.4	1193.2	20536.6	1192.7	20537	1205.7	20585.8
GR	1206.4	20589.8	1206.8	20598	1203.7	20641.3	1203.6	20649.8	1202.6	20711.9
GR	1202.2	20771.2	1201.9	20775.1	1200.3	20806.1	1195	20869.6	1195.1	20882.9
GR	1195.6	20935.9	1195.7	20944.5	1195.6	20972.8	1192.1	20992.5	1192	21007.1
GR	1192.3	21020.1	1192.8	21028.7	1201.5	21071.5	1204.1	21090.1	1206.1	21161
GR	1206.4	21170.5	1206.4	21184.9	1206.2	21271.6	1206.6	21311.6	1207.3	21334.3
GR	1207.3	21346.4	1206.7	21356.8	1202.6	21372.6	1200.1	21381	1199.5	21407.5
GR	1199.3	21410	1200.4	21434	1200.7	21436.3	1206.7	21465.8	1207.6	21517.2
GR	1207.8	21532.9	1208.5	21564.4	1210	21638.9	1210.5	21684.1	1210.3	21700.8
GR	1209.8	21714.6	1208.2	21730.5	1207.8	21748.7	1208.9	21772.5	1210.8	21791

NH	3	0.028	19026.7	0.028	20593.8	0.032	21751.8			
ET		7.1	9.1				19600.0	20593.8	19600.1	20464.2
X1	226.89	96	19600.1	20464.2	550	525	510.72			
GR	1210.8	18699.3	1210.7	18704	1210.4	18760	1210.2	18812.2	1210.6	18825.2
GR	1209.3	18833.5	1210.5	18839.9	1210.1	18881.5	1210	18884.7	1210	18885.9
GR	1209.9	18900.2	1206.3	18960	1205.9	18965	1204.2	19008.2	1204.4	19026.7
GR	1202.5	19043.1	1197.3	19073.7	1195	19098.5	1193.6	19101.3	1193.6	19131
GR	1192.9	19351.9	1193.3	19352.3	1193.4	19357.5	1194.3	19389.5	1194.3	19392.7
GR	1194.3	19393.6	1194.3	19399.7	1193.7	19428	1193.2	19437.3	1192.5	19447.7
GR	1192.7	19448.7	1193.5	19456.5	1193.4	19486.1	1193.4	19491.2	1193.1	19600.1
GR	1192.8	19840.5	1192.9	19851.8	1193.6	20155.5	1193.7	20191	1193.7	20277.3
GR	1194.1	20461.8	1194.1	20464.2	1198.9	20506.8	1202.7	20534	1205.7	20552
GR	1205.8	20553.4	1207.2	20593.8	1205.3	20640.7	1204.4	20656.9	1204.5	20665.3
GR	1204	20691.7	1204.2	20701.6	1203.6	20722.5	1203.9	20741.1	1205.4	20776.1
GR	1205.8	20783	1205.8	20783.7	1205.8	20791.9	1205.8	20826.9	1206	20838.5
GR	1206.1	20855.5	1206.7	20894.8	1210.3	20924.6	1210.6	20926.4	1210.8	20929
GR	1210.9	20936	1211.4	21005.5	1211.2	21018.4	1211.1	21025.6	1209.9	21059.1
GR	1210.2	21081.5	1210.2	21113.8	1210.2	21155	1209.7	21178.6	1209.5	21235.1
GR	1209.2	21247.9	1209.2	21256.3	1209	21261.9	1209.6	21334.4	1209.5	21340.6
GR	1209.5	21345	1209.8	21399.5	1210.3	21437.5	1210.4	21455.1	1210.7	21460.8
GR	1210.5	21528.7	1209.6	21547.4	1208.9	21559	1209	21575.1	1209	21579.2
GR	1208.9	21584.7	1208.8	21613.8	1209.3	21642.8	1210.2	21683.1	1210.9	21714.4
GR	1211.1	21751.8								

Split flow starts at Sec. 226.89 for Alma School Bridge and ends at
Sec. 225.76 - Q upstream to Granite Reef Dam is 220000 cfs

QT	2	220000	220000							
NH	3	0.031	19356.4	0.028	20574.1	0.032	21859.4			
ET		7.1	9.1				19356.4	20574.1	19395.3	20492.4
X1	226.99	96	19395.3	20492.4	170	490	492.08			
GR	1209.4	18363.1	1209	18395.6	1209	18401.2	1208.7	18434.8	1208.1	18452
GR	1207.9	18482.1	1208.1	18515.9	1208.5	18520.3	1209	18569.9	1209.4	18588.5
GR	1210	18595.7	1217.7	18683.9	1216	18695.7	1208.7	18708.4	1208.1	18722.1
GR	1208.2	18756.7	1208.4	18786.4	1208.2	18867.7	1207.6	18890.7	1206.9	18938.3
GR	1205.9	19001.2	1205.6	19002.6	1205.7	19004.4	1204.7	19037	1206.3	19054.8
GR	1209	19091.8	1208.7	19169.5	1208.5	19173.3	1203.7	19255.9	1200.2	19305.4
GR	1200.1	19306.1	1204.1	19326.7	1205.4	19337.4	1208.5	19351.6	1208.5	19356.4
GR	1207.5	19362.5	1206.5	19379.1	1200.5	19395.3	1194.3	19414.1	1194.6	19416.8
GR	1194.6	19453.4	1193.9	19524	1193.9	19529.1	1193.8	20095.1	1193.8	20212.5
GR	1193.8	20367.5	1193.7	20423	1195	20441	1195.5	20470.9	1199.6	20492.4
GR	1206.9	20532.5	1212.6	20574.1	1210.4	20583	1207.6	20592.4	1209.6	20613.5
GR	1212.7	20658.2	1214.4	20686.5	1217.2	20734.7	1217.9	20737.5	1217.1	20774.9
GR	1216.6	20786.2	1214.5	20827.4	1214.1	20840.4	1212.6	20857.8	1213.7	20893.9
GR	1213.9	20907.7	1213.4	20964	1213.1	21020.4	1208	21051.2	1209.5	21098.4
GR	1209.5	21112.5	1210	21120.2	1213.9	21185.1	1212.5	21194.8	1213.5	21209.7
GR	1212.1	21249.7	1211.8	21260.3	1213.4	21300.4	1214.2	21326.5	1214.1	21375.4
GR	1214.1	21394.8	1213.4	21430.3	1213	21466.9	1213.1	21495	1212.4	21529.4
GR	1210.4	21570.9	1209.3	21584.3	1209.5	21595.1	1209.7	21645.2	1209.8	21681.2
GR	1210.2	21698	1210.9	21729.2	1210.1	21763.2	1211	21792.1	1210.9	21833.7
GR	1212.1	21859.4								
ET		7.1	9.1				19475	20579	19650	20520.0
NH	3	0.03	19598.4	0.028	20588.8	0.032	21544.1			
X1	227.08	96	19699.1	20433.7	585	500	504.96			
GR	1212.5	18806.6	1212.3	18812.6	1210.7	18907.8	1210.1	18984.8	1209	19010.2
GR	1216.1	19028.4	1216.5	19030	1214.7	19070.7	1209	19077.5	1209.2	19091.4
GR	1209.2	19128.9	1208.8	19166.3	1209.8	19226.8	1210	19241	1218.9	19252.7
GR	1219.3	19254.9	1213.4	19301.3	1211.8	19312.2	1210.1	19319.1	1209.7	19337.5
GR	1209.8	19367.2	1209.6	19420.1	1209.6	19421	1209.9	19465.5	1209.9	19465.7
GR	1209.8	19527	1210	19531.3	1210.9	19574.1	1211.4	19598.4	1208.5	19602.9
GR	1194.1	19639	1194.1	19677.6	1194.3	19691.1	1195.3	19694.8	1195.6	19699.1
GR	1194.7	19700.2	1194.2	19704.7	1194.4	19726.1	1194.9	19921.6	1194.5	19935.8
GR	1194.5	19964	1194.2	20088.5	1194.2	20090	1196.1	20096.8	1195.7	20127.5
GR	1194.2	20146.2	1194.2	20165.4	1194.6	20173.5	1194.2	20203.2	1194.2	20240.9
GR	1194.4	20246	1195	20373	1194.7	20384.7	1198.4	20400.9	1200.2	20414.9
GR	1199.1	20420.6	1200.9	20433.7	1201.1	20447.4	1200.2	20489.6	1199.8	20518
GR	1199.9	20537.4	1208.9	20571.6	1215	20588.8	1212.3	20615.3	1212.4	20618
GR	1213.1	20663.3	1216.5	20713.5	1217.3	20735.3	1216.4	20762.4	1217.4	20772.9
GR	1215.7	20795.5	1214.3	20806.9	1214.5	20812.2	1212.8	20875.4	1212.9	20885
GR	1212	20902.2	1212.1	20912.2	1211.2	20951.7	1211.2	20957.4	1211.4	21013.1
GR	1211.2	21047.8	1209.7	21086.2	1211	21096	1212.2	21149	1213.7	21180.5
GR	1213.6	21210.4	1212.4	21229.4	1210.8	21266.5	1210	21309.1	1209.5	21350.5
GR	1208.8	21378.1	1209.3	21431.3	1208	21455	1212	21490.1	1212.5	21497.2
GR	1213	21544.1								

NH	3	0.03	19582.3	0.028	20583.2	0.032	22652.2			
ET		7.1	9.1				19582.3	20583.2	19600.0	20565
X1	227.18	96	19611.0	20546.1	500	505	509.22			
GR	1214.2	18653.9	1214.7	18735.4	1214.4	18808.3	1214.4	18866.3	1214.3	18881.6
GR	1213.7	19038.7	1212.4	19096.3	1212.4	19157.5	1212.2	19228.9	1212.2	19231.5
GR	1213.3	19351.8	1213.3	19354.9	1207.1	19372.8	1197.2	19405.9	1197.4	19406.7
GR	1195.1	19413.3	1194.6	19452	1195.8	19463.6	1195.9	19471.4	1200	19483.3
GR	1210.2	19507.1	1211	19512.5	1208	19547.4	1207.9	19572.9	1212.5	19582.3
GR	1211	19588.4	1201.8	19611	1194.6	19649.7	1194.7	19842.7	1194.5	19898.6
GR	1194.6	20015.1	1194.6	20178	1195.9	20197.8	1196.8	20233.3	1199.1	20298.1
GR	1200.4	20332.4	1200.5	20386.7	1201.8	20410	1201.5	20426.7	1205.2	20438.6
GR	1201.8	20447.1	1199.1	20452.3	1201.4	20510.7	1201.9	20546.1	1214.1	20575.5
GR	1216.5	20583.2	1215	20640.8	1218.1	20672.9	1217.5	20686	1219.3	20751.5
GR	1220.8	20808.6	1217.5	20845.6	1217.3	20863.7	1218.8	20895.4	1222	20919.6
GR	1221.3	20996.5	1219.9	21043.3	1220.1	21097.8	1221	21108.8	1220.4	21120.1
GR	1218.2	21133.6	1214.2	21152.1	1212.4	21188.4	1212.6	21238.3	1211.4	21271.1
GR	1212.3	21307.1	1210.7	21371.8	1211.8	21423.4	1213.7	21471.8	1212	21506.8
GR	1207.7	21556.2	1206.3	21557.8	1206.1	21563.9	1209	21609	1208.9	21634.6
GR	1207.8	21723.3	1211.5	21756	1212	21770.4	1213.5	21835.5	1213.6	21899.4
GR	1211.8	21956.1	1212.9	22002.8	1212.1	22054.9	1214.1	22094.3	1214.3	22151.4
GR	1213.4	22165.3	1212.5	22223.9	1213	22307.6	1213.8	22373.3	1213.7	22433
GR	1213.7	22475.3	1213.3	22547.6	1213.2	22605.9	1215.2	22634	1210.5	22645.3
GR	1210.5	22652.2								

NH	3	0.028	19556.7	0.028	20636.5	0.032	22107.2			
ET		7.1	9.1				19556.7	20636.5	19563.0	20600
X1	227.27	95	19563.0	20583.2	780	170	498.96			
GR	1217.3	19509.1	1217.4	19518.9	1217.7	19556.7	1212.9	19563	1194.1	19600.6
GR	1193.7	19601.1	1194.4	19781.3	1194.4	19890.4	1194.8	20100.6	1194.9	20107.6
GR	1194.9	20171.2	1194.9	20172.2	1194.4	20172.3	1197.2	20180.4	1198.2	20182.1
GR	1198.1	20190.6	1198.1	20221.7	1198.8	20291.1	1199.4	20363.2	1199.4	20378.1
GR	1199.5	20400.4	1201.3	20484	1201.8	20519.2	1201.6	20538.3	1201.3	20557.6
GR	1205.5	20572.4	1207.9	20583.2	1213.6	20607.1	1219.9	20636.5	1219.2	20652.9
GR	1219.8	20698.7	1219.9	20718.4	1219.4	20733.5	1217.7	20760.3	1216.7	20779.1
GR	1215.2	20799.6	1215.2	20840.2	1215	20853.4	1214.3	20862.6	1213.7	20872.8
GR	1216.1	20974.7	1216.5	20985	1216.5	20985.7	1217.5	21021.1	1217.7	21026.5
GR	1217.7	21038.6	1218.4	21073.4	1220.6	21108.5	1220.3	21116.8	1219.5	21137.8
GR	1219	21149.5	1216.3	21179.1	1213.5	21202.3	1213.1	21210.3	1212.1	21246.7
GR	1211.7	21275	1211.6	21282.8	1211	21319.7	1210.9	21331.9	1210.6	21342.4
GR	1209.8	21376.3	1209.7	21405.3	1209.5	21410.9	1209.4	21422.6	1209.7	21439.7
GR	1211	21486.9	1211.2	21494.9	1211.2	21495.9	1208.7	21528.8	1210.9	21561.1
GR	1211	21562.6	1210.6	21620	1210	21661.6	1208.3	21677.6	1211	21698.3
GR	1212	21705.4	1212.2	21714	1212.9	21744.9	1211.7	21800.1	1211.4	21805.4
GR	1209.9	21837.3	1209.8	21846	1211.3	21876.7	1212.9	21895.9	1213.1	21912.5
GR	1213.2	21917.5	1210	21949.4	1206.8	21981.8	1207.9	21999.1	1208.8	22015.7
GR	1209.1	22022.4	1210.9	22046.1	1211.1	22051.3	1211.4	22053.3	1215.5	22107.2

Remove vertical ineffective flow area below EL. 1200 between Sta 19125 and Sta 19400.7. This area is an inlet from the channel that would contribute to more coneyance in the left overbank than would truly exist

NH	3	0.03	19489.2	0.028	20492.2	0.032	22225.6			
ET		7.1	9.1				18950.0	20492.2	19222	20418
X1	227.37	95	19489.2	20418	590	425	509.52			
GR	1217.8	18504.3	1217.6	18527.7	1216.6	18573.4	1216.2	18591	1214.2	18623.6
GR	1213.7	18663.4	1212.6	18687.2	1212.5	18745.9	1212.5	18759.9	1211.3	18826.1
GR	1211.1	18867.1	1211	18896.7	1210.4	18955.8	1209.6	19006.2	1209.7	19047.6
GR	1208.1	19089.6	1207.9	19112.9	1200	19139.3	1200	19147.6	1200	19160.3
GR	1200	19220	1200	19258.9	1200	19282	1200	19321.2	1200	19331.9
GR	1200	19343.9	1200	19363	1200	19376.3	1200	19381.8	1200	19389.7
GR	1206.2	19416.5	1208.1	19439.9	1210.8	19451.1	1211.9	19489.2	1201.5	19503.7
GR	1194	19508.5	1194.1	19515.1	1194	19667.6	1194.1	19971.1	1195.5	20013.7
GR	1198.9	20051.9	1201.9	20105	1201.6	20167	1199.5	20211.9	1198.7	20252.3
GR	1199.1	20277.6	1198.3	20309.7	1198.7	20372.2	1210.3	20418	1215.7	20441
GR	1217.7	20492.2	1218.4	20508.3	1219.4	20562.5	1219.9	20586.1	1218.5	20645.6
GR	1218.2	20666.3	1217.5	20709.8	1214.7	20763.5	1214.1	20787.5	1212.6	20827.7
GR	1212.5	20849.9	1213.7	20865.9	1213.2	20885.8	1212.4	20929.8	1211.8	20942.5
GR	1211.9	20988.4	1212	21031.9	1212.4	21106.3	1212.4	21110.3	1211.3	21158.1
GR	1210.3	21183.8	1210.1	21227.6	1209.8	21277.9	1208.5	21326.3	1207.7	21379.1
GR	1208.6	21432.8	1209	21478.3	1208.4	21520.3	1208.6	21570.8	1210	21616.9
GR	1210.9	21644.1	1210	21695.4	1210.7	21708.1	1214	21754.1	1214.3	21783.3
GR	1214.2	21824.9	1215	21889.7	1215.5	21912.3	1214.4	21970.6	1214.4	22012.6
GR	1214.4	22059.9	1214.6	22065.6	1216.7	22147.8	1217.2	22161.9	1220.4	22225.6

NH	3	0.03	19537.7	0.028	20537.3	0.032	22146.6			
ET		7.1	9.1				18450.0	20537.3	19090	20442.8
X1	227.46	96	19537.7	20442.8	370	550	506.97			
GR	1214	17260	1212	17390	1212	17510	1212	17710	1212	18210
GR	1212	18400	1212	18850	1213.2	18982.2	1214	19044.7	1211.6	19081.4
GR	1211.6	19083.2	1214	19098.2	1211.9	19112.1	1211.7	19121.7	1215.7	19129.2
GR	1220.4	19141.4	1218.6	19152.6	1218.2	19159.4	1215.5	19170.1	1209.3	19188.4
GR	1208.9	19207.4	1209.7	19248.5	1209.2	19259.5	1209.2	19300.9	1209.2	19317.9
GR	1209.8	19331.2	1210	19360.3	1209.5	19383.5	1207.5	19422.8	1206	19439.2
GR	1206	19488.8	1207	19500.6	1206.2	19500.9	1207.6	19502.6	1210.5	19509.5
GR	1208.5	19521	1209.9	19537.7	1203.3	19545.6	1194.6	19578.4	1194.1	19581.3
GR	1194.1	19584.9	1194.2	19669.4	1194.3	19752.4	1194.3	19815	1194.8	20097.5
GR	1194.9	20109.3	1195	20261.3	1195.1	20282.9	1199.2	20315.6	1199.4	20323.2
GR	1199.4	20362.3	1199.4	20375.3	1199.2	20418.4	1209.7	20436.7	1210.6	20442.8
GR	1214.2	20475.7	1215.5	20492.4	1216.1	20537.3	1214	20584.8	1213.7	20613.1
GR	1213.6	20635.1	1214.4	20657.2	1216.8	20738.9	1216.8	20741.9	1216.9	20777.4
GR	1217.5	20844.5	1217	20867.3	1213.2	20942.9	1211.6	20976	1211.7	20990.5
GR	1212.5	21038.5	1212.3	21066.8	1211.7	21123.5	1211.2	21154.1	1210.7	21189.5
GR	1210.3	21257.5	1210.5	21278	1212.5	21361.7	1212.7	21382	1213.2	21414
GR	1213.3	21484.4	1213.8	21524.9	1214	21558.3	1214.2	21581	1214.6	21651.6
GR	1214.9	21679.8	1215.2	21710.9	1215.2	21738	1215.3	21780	1216	21887.3
GR	1216	21929.1	1216.3	21963	1216.6	22046.6	1216.7	22050.8	1217	22104.7
GR	1217.2	22146.6								

Note: The X5 card at this section is used to match water surface elevations with the effective FIS dated December 3, 1993 at cross section CM (river mile 28.440).

```
NH        3     0.032   19355.5     0.028   20597.9     0.032   21468.6
ET              7.1       9.1                                   18100.0   20597.9   18957.2   20525.0
            Downstream of Country Club Drive Bridge
X1   227.56       96   19406.8   20480.0        90       385     490.8
X5        2   1217.3    1218.3
GR     1214    16930      1212     17360      1212     18510      1209   19017.6    1205.1   19024.3
GR   1203.6  19032.4    1198.8   19063.9    1198.9   19073.7    1198.9   19086.2    1203.6   19109.7
GR   1201.7  19121.9    1202.9   19130.3    1204.8   19159.6    1205.3   19186.9    1205.3   19187.9
GR   1204.8    19218    1204.5   19236.6    1203.9   19270.9    1203.9   19279.4    1204.4     19307
GR   1204.4    19313    1204.3   19316.2    1206.3   19347.7    1206.3   19355.5    1206.1   19380.9
GR   1204.5  19392.1      1205   19406.8    1204.4   19413.3      1202   19427.9    1200.4   19441.3
GR   1198.5  19457.7    1198.5   19459.9    1198.4   19462.9    1198.1   19477.6    1201.3   19501.7
GR   1201.4  19506.1    1201.8   19509.3    1200.8   19544.8    1199.5   19571.8    1199.4   19580.1
GR   1199.4    19591      1199   19598.4    1197.7   19621.9    1195.6   19669.2    1195.6   19670.4
GR   1195.7  19677.6    1194.6   19709.3    1194.7   19738.7    1195.9   19765.5    1196.6   19777.5
GR   1195.7  19811.8    1195.3   19817.7      1195   20011.2    1195.2   20373.3    1195.2   20414.3
GR   1195.6  20416.8    1196.1   20423.3    1198.9   20458.9    1206.5     20480    1209.1   20485.6
GR   1210.3  20500.3    1211.7   20521.4      1213   20540.4    1214.8   20568.7    1215.4   20597.9
GR   1214.4    20639    1214.1   20645.2    1214.4   20656.7    1214.2   20693.4    1215.9     20710
GR   1215.5  20727.3    1215.4   20754.3    1215.1   20766.2    1213.2   20780.5    1212.7   20799.9
GR   1212.5  20822.4    1212.7   20911.9    1212.8   20951.8    1213.2   20974.3    1213.4   20997.1
GR   1213.5  21018.2    1213.9   21028.8    1214.8   21045.3    1215.2   21071.6    1218.6   21136.3
GR   1217.3  21162.3    1216.2   21187.9    1215.9   21191.2      1216   21214.4    1216.4   21309.3
GR   1216.6  21325.6    1216.5   21335.5    1216.5   21341.6      1216   21414.7    1215.8     21441
GR   1216.2  21468.6
```

SECNO	DEPTH	CWSEL	CRIWS	WSELK	EG	HV	HL	OLOSS	L-BANK ELEV
Q	QLOB	QCH	QROB	ALOB	ACH	AROB	VOL	TWA	R-BANK ELEV
TIME	VLOB	VCH	VROB	XNL	XNCH	XNR	WTN	ELMIN	SSTA
SLOPE	XLOBL	XLCH	XLOBR	ITRIAL	IDC	ICONT	CORAR	TOPWID	ENDST

*PROF 1

CRITICAL DEPTH TO BE CALCULATED AT ALL CROSS SECTIONS

CCHV= .100 CEHV= .300

*SECNO 223.100

Upstream of McClintock Road Bridge

223.100	19.63	1166.93	1160.51	1166.93	1169.18	2.25	.00	.00	1159.07
215000.0	1341.4	213658.6	.0	279.4	17701.9	.0	.0	.0	1171.79
.00	4.80	12.07	.00	.045	.035	.000	.000	1147.30	9925.44
.001793	0.	0.	0.	0	13	0	.00	1061.05	10986.49

*SECNO 223.190

3265 DIVIDED FLOW

3370 NORMAL BRIDGE, NRD= 2 MIN ELTRD= 1206.00 MAX ELLC= 1190.50

3470 ENCROACHMENT STATIONS= 19450.0 20482.7 TYPE= 1 TARGET= 1032.699

223.190	26.09	1168.09	1158.41	.00	1170.11	2.02	.91	.02	1148.00
215000.0	2670.4	212329.6	.0	413.9	18528.6	.0	218.9	11.8	1168.00
.01	6.45	11.46	.01	.045	.035	.045	.000	1142.00	19450.00
.001732	620.	515.	430.	2	19	0	.00	925.92	20421.07

*SECNO 223.290

3265 DIVIDED FLOW

3301 HV CHANGED MORE THAN HVINS

3370 NORMAL BRIDGE, NRD= 2 MIN ELTRD= 1197.04 MAX ELLC= 1181.54

3470 ENCROACHMENT STATIONS= 19560.0 20435.2 TYPE= 1 TARGET= 875.199

223.290	27.21	1167.21	1159.98	.00	1170.49	3.28	.00	.38	1145.30
215000.0	3140.4	211843.1	16.5	408.1	14496.1	14.8	218.9	11.8	1166.10
.01	7.69	14.61	1.11	.050	.035	.050	.000	1140.00	19560.00
.003059	0.	0.	0.	2	12	0	.00	737.63	20342.61

SECNO	DEPTH	CWSEL	CRIWS	WSELK	EG	HV	HL	OLOSS	L-BANK ELEV
Q	QLOB	QCH	QROB	ALOB	ACH	AROB	VOL	TWA	R-BANK ELEV
TIME	VLOB	VCH	VROB	XNL	XNCH	XNR	WTN	ELMIN	SSTA
SLOPE	XLOBL	XLCH	XLOBR	ITRIAL	IDC	ICONT	CORAR	TOPWID	ENDST

*SECNO 223.380

3265 DIVIDED FLOW

3370 NORMAL BRIDGE, NRD= 2 MIN ELTRD= 1192.23 MAX ELLC= 1176.70

3470 ENCROACHMENT STATIONS= 19573.8 20351.0 TYPE= 1 TARGET= 777.199

223.380	36.66	1168.66	1159.24	.00	1171.92	3.26	1.43	.00	1168.30
215000.0	.1	214963.0	36.9	.1	14838.2	19.4	383.3	19.4	1166.00
.02	.47	14.49	1.90	.050	.035	.050	.000	1132.00	19638.95
.002873	480.	481.	480.	2	20	0	.00	638.77	20320.55

*SECNO 223.480

3265 DIVIDED FLOW

3301 HV CHANGED MORE THAN HVINS

3370 NORMAL BRIDGE, NRD= 2 MIN ELTRD= 1193.41 MAX ELLC= 1177.90

3470 ENCROACHMENT STATIONS= 19488.8 20431.4 TYPE= 1 TARGET= 942.600

223.480	38.84	1170.84	1158.36	.00	1173.38	2.54	1.39	.07	1169.30
215000.0	15.8	214903.3	80.9	12.9	16807.0	58.7	575.6	28.2	1169.60
.03	1.22	12.79	1.38	.050	.035	.050	.000	1132.00	19545.01
.002415	450.	528.	610.	2	15	0	.00	807.85	20396.52

*SECNO 223.580

3265 DIVIDED FLOW

3301 HV CHANGED MORE THAN HVINS

3302 WARNING: CONVEYANCE CHANGE OUTSIDE OF ACCEPTABLE RANGE, KRATIO = .67

SECNO	DEPTH	CWSEL	CRIWS	WSELK	EG	HV	HL	OLOSS	L-BANK ELEV
Q	QLOB	QCH	QROB	ALOB	ACH	AROB	VOL	TWA	R-BANK ELEV
TIME	VLOB	VCH	VROB	XNL	XNCH	XNR	WTN	ELMIN	SSTA
SLOPE	XLOBL	XLCH	XLOBR	ITRIAL	IDC	ICONT	CORAR	TOPWID	ENDST

3370 NORMAL BRIDGE, NRD= 2 MIN ELTRD= 1194.47 MAX ELLC= 1178.90

3470 ENCROACHMENT STATIONS= 19704.5 20470.0 TYPE= 1 TARGET= 765.500

223.580	33.07	1171.07	1165.25	.00	1175.76	4.69	1.74	.65	1169.70
215000.0	.0	214745.0	255.0	.0	12344.4	107.3	744.4	36.9	1171.80
.04	.00	17.40	2.38	.000	.035	.050	.000	1138.00	19704.50
.005415	490.	501.	510.	3	16	0	.00	699.77	20470.00

*SECNO 223.670

3265 DIVIDED FLOW

3301 HV CHANGED MORE THAN HVINS

3302 WARNING: CONVEYANCE CHANGE OUTSIDE OF ACCEPTABLE RANGE, KRATIO = 2.30

3370 NORMAL BRIDGE, NRD= 2 MIN ELTRD= 1195.85 MAX ELLC= 1180.38

3470 ENCROACHMENT STATIONS= 19365.3 20364.5 TYPE= 1 TARGET= 999.199

223.670	43.02	1175.72	1157.88	.00	1177.09	1.37	.99	.33	1169.70
215000.0	42.9	214957.1	.0	25.0	22858.9	.0	947.2	45.8	100000.00
.06	1.72	9.40	.00	.050	.035	.000	.000	1132.70	19478.01
.001020	500.	500.	500.	3	15	0	.00	841.89	20364.50

*SECNO 223.770

3265 DIVIDED FLOW

3302 WARNING: CONVEYANCE CHANGE OUTSIDE OF ACCEPTABLE RANGE, KRATIO = 1.60

3370 NORMAL BRIDGE, NRD= 2 MIN ELTRD= 1196.83 MAX ELLC= 1181.35

SECNO	DEPTH	CWSEL	CRIWS	WSELK	EG	HV	HL	OLOSS	L-BANK ELEV
Q	QLOB	QCH	QROB	ALOB	ACH	AROB	VOL	TWA	R-BANK ELEV
TIME	VLOB	VCH	VROB	XNL	XNCH	XNR	WTN	ELMIN	SSTA
SLOPE	XLOBL	XLCH	XLOBR	ITRIAL	IDC	ICONT	CORAR	TOPWID	ENDST

3470 ENCROACHMENT STATIONS= 19456.0 22288.3 TYPE= 1 TARGET= -19456.000

223.770	42.45	1176.55	1155.02	.00	1177.44	.89	.30	.05	1170.00
215000.0	27.5	211689.5	3283.0	25.2	27813.4	2049.0	1250.1	58.8	1175.10
.07	1.09	7.61	1.60	.050	.030	.050	.000	1134.10	19467.30
.000398	500.	500.	500.	2	12	0	.00	1431.74	20956.45

*SECNO 223.860

3265 DIVIDED FLOW

3370 NORMAL BRIDGE, NRD= 2 MIN ELTRD= 1211.80 MAX ELLC= 1196.80

3470 ENCROACHMENT STATIONS= 19333.1 20791.7 TYPE= 1 TARGET= 1458.600

223.860	40.86	1176.86	1157.77	.00	1177.62	.76	.17	.01	1173.20
215000.0	186.9	212467.0	2346.1	136.2	30106.4	1456.7	1591.7	74.6	1172.00
.09	1.37	7.06	1.61	.050	.030	.050	.000	1136.00	19346.37
.000326	485.	483.	485.	2	19	0	.00	1400.41	20791.70

*SECNO 223.960

3470 ENCROACHMENT STATIONS= 19582.7 20899.6 TYPE= 1 TARGET= 1316.900

223.960	37.02	1177.02	1157.43	.00	1177.79	.76	.16	.00	1173.00
215000.0	9.9	212646.6	2343.5	13.3	30185.4	1428.0	1965.5	90.4	1174.50
.11	.75	7.04	1.64	.050	.035	.050	.000	1140.00	19596.79
.000306	515.	514.	515.	2	18	0	.00	1288.41	20885.20

*SECNO 224.050

3470 ENCROACHMENT STATIONS= 19700.3 20800.0 TYPE= 1 TARGET= 1099.699

224.050	35.87	1176.97	1161.41	.00	1178.09	1.12	.19	.11	1170.00
220000.0	49.4	218808.0	1142.6	36.1	25712.6	428.2	2294.3	103.6	1168.70
.13	1.37	8.51	2.67	.050	.035	.050	.000	1141.10	19781.93
.000513	490.	495.	500.	2	11	0	.00	1018.06	20800.00

*SECNO 224.080

224.080	25.25	1177.25	1162.89	.00	1178.26	1.00	.16	.01	1152.00
220000.0	671.0	218077.3	1251.8	257.2	27022.3	411.5	2490.3	111.4	1152.00
.14	2.61	8.07	3.04	.050	.035	.050	.000	1152.00	19869.63
.000488	317.	317.	317.	2	17	0	.00	1122.95	20992.59

SECNO	DEPTH	CWSEL	CRIWS	WSELK	EG	HV	HL	OLOSS	L-BANK ELEV
Q	QLOB	QCH	QROB	ALOB	ACH	AROB	VOL	TWA	R-BANK ELEV
TIME	VLOB	VCH	VROB	XNL	XNCH	XNR	WTN	ELMIN	SSTA
SLOPE	XLOBL	XLCH	XLOBR	ITRIAL	IDC	ICONT	CORAR	TOPWID	ENDST

*SECNO 224.090

3265 DIVIDED FLOW

3370 NORMAL BRIDGE, NRD= 12 MIN ELTRD= 1206.20 MAX ELLC= 1212.40

224.090	25.15	1177.15	1163.43	.00	1178.30	1.15	.00	.04	1152.00
220000.0	893.3	217440.1	1666.6	255.1	25153.0	408.2	2490.9	111.4	1152.00
.14	3.50	8.64	4.08	.050	.035	.050	.000	1152.00	19869.71
.000883	1.	1.	1.	2	18	0	.00	1052.74	20992.46

*SECNO 224.110

3265 DIVIDED FLOW

3370 NORMAL BRIDGE, NRD= 11 MIN ELTRD= 1206.20 MAX ELLC= 1218.20

224.110	25.24	1177.24	1163.40	.00	1178.39	1.15	.08	.00	1152.00
220000.0	1141.5	217717.1	1141.5	311.1	25213.8	311.1	2549.0	113.7	1152.00
.14	3.67	8.63	3.67	.050	.035	.050	.000	1152.00	19925.64
.000837	98.	98.	98.	1	22	0	.00	1048.72	21034.36

*SECNO 224.120

224.120	25.39	1177.39	1162.97	.00	1178.40	1.02	.00	.01	1152.00
220000.0	887.6	218224.9	887.6	314.9	26893.7	314.9	2549.6	113.8	1152.00
.14	2.82	8.11	2.82	.050	.035	.050	.000	1152.00	19925.49
.000489	1.	1.	1.	2	14	0	.00	1109.02	21034.51

*SECNO 224.150

224.150	25.69	1177.69	1162.09	.00	1178.47	.78	.04	.02	1152.00
220000.0	794.1	218411.7	794.1	322.6	30816.4	322.6	2619.4	116.6	1152.00
.15	2.46	7.09	2.46	.050	.035	.050	.000	1152.00	19835.19
.000367	103.	103.	103.	2	18	0	.00	1249.63	21084.81

*SECNO 224.160

SECNO	DEPTH	CWSEL	CRIWS	WSELK	EG	HV	HL	OLOSS	L-BANK ELEV
Q	QLOB	QCH	QROB	ALOB	ACH	AROB	VOL	TWA	R-BANK ELEV
TIME	VLOB	VCH	VROB	XNL	XNCH	XNR	WTN	ELMIN	SSTA
SLOPE	XLOBL	XLCH	XLOBR	ITRIAL	IDC	ICONT	CORAR	TOPWID	ENDST

3265 DIVIDED FLOW

3302 WARNING: CONVEYANCE CHANGE OUTSIDE OF ACCEPTABLE RANGE, KRATIO = .68

3370 NORMAL BRIDGE, NRD= 11 MIN ELTRD= 1199.20 MAX ELLC= 1199.20

224.160	25.48	1177.48	1163.18	.00	1178.56	1.08	.00	.09	1152.00
220000.0	1134.8	218865.2	.0	317.4	26238.5	.0	2620.0	116.6	1183.00
.15	3.58	8.34	.00	.050	.035	.000	.000	1152.00	19835.39
.000784	1.	1.	1.	2	15	0	.00	1054.59	20945.98

*SECNO 224.170

3265 DIVIDED FLOW

3370 NORMAL BRIDGE, NRD= 11 MIN ELTRD= 1199.20 MAX ELLC= 1195.10

224.170	25.63	1177.63	1163.22	.00	1178.69	1.06	.13	.00	1152.00
220000.0	1128.8	218871.0	.1	321.1	26389.6	1.1	2727.0	120.8	1152.00
.15	3.52	8.29	.10	.050	.035	.050	.000	1152.00	19835.25
.000752	175.	175.	175.	2	15	0	.00	1054.73	20945.98

*SECNO 224.180

3302 WARNING: CONVEYANCE CHANGE OUTSIDE OF ACCEPTABLE RANGE, KRATIO = 1.46

224.180	25.97	1177.97	1162.10	.00	1178.73	.76	.00	.03	1152.00
220000.0	802.5	218394.9	802.5	329.5	31144.8	329.5	2727.7	120.8	1152.00
.15	2.44	7.01	2.44	.050	.035	.050	.000	1152.00	19834.92
.000355	1.	1.	1.	2	18	0	.00	1250.16	21085.08

*SECNO 224.210

224.210	25.95	1177.95	1162.41	.00	1178.79	.83	.04	.02	1152.00
220000.0	828.8	218342.3	828.8	325.9	29715.6	325.9	2799.8	123.7	1152.00
.16	2.54	7.35	2.54	.050	.035	.050	.000	1152.00	19889.88
.000390	101.	101.	101.	2	18	0	.00	1195.23	21085.12

SECNO	DEPTH	CWSEL	CRIWS	WSELK	EG	HV	HL	OLOSS	L-BANK ELEV
Q	QLOB	QCH	QROB	ALOB	ACH	AROB	VOL	TWA	R-BANK ELEV
TIME	VLOB	VCH	VROB	XNL	XNCH	XNR	WTN	ELMIN	SSTA
SLOPE	XLOBL	XLCH	XLOBR	ITRIAL	IDC	ICONT	CORAR	TOPWID	ENDST

*SECNO 224.220

3265 DIVIDED FLOW

3370 NORMAL BRIDGE, NRD= 12 MIN ELTRD= 1193.90 MAX ELLC= 1192.20

224.220	25.88	1177.88	1162.85	.00	1178.82	.94	.00	.03	1152.00
220000.0	1089.5	217714.4	1196.2	324.0	27843.7	347.5	2800.5	123.7	1152.00
.16	3.36	7.82	3.44	.050	.035	.050	.000	1152.00	19889.96
.000684	1.	1.	1.	2	18	0	.00	1127.90	21086.86

*SECNO 224.250

3265 DIVIDED FLOW

3370 NORMAL BRIDGE, NRD= 14 MIN ELTRD= 1190.40 MAX ELLC= 1186.40

224.250	25.84	1177.84	1163.61	.00	1178.98	1.14	.10	.06	1184.60
220000.0	381.4	216160.0	3458.5	181.1	25106.5	754.0	2883.1	127.0	1152.00
.16	2.11	8.61	4.59	.050	.035	.050	.000	1152.00	19883.92
.000885	132.	132.	132.	2	19	0	.00	1046.44	21008.36

*SECNO 224.260

224.260	26.01	1178.01	1163.13	.00	1178.99	.99	.00	.01	1152.00
220000.0	1115.6	216335.0	2549.4	381.8	26915.8	763.6	2883.7	127.0	1152.00
.16	2.92	8.04	3.34	.050	.035	.050	.000	1152.00	19885.64
.000465	1.	1.	1.	2	14	0	.00	1123.08	21008.72

CCHV= .100 CEHV= .300

*SECNO 224.340

3280 CROSS SECTION 224.34 EXTENDED .45 FEET

3470 ENCROACHMENT STATIONS= 19679.2 21402.1 TYPE= 1 TARGET= 1722.900

224.340	23.15	1178.45	1166.29	.00	1179.10	.64	.07	.03	1164.20
220000.0	39682.7	139972.0	40345.3	7110.1	21099.5	6190.3	3015.8	133.0	1163.60
.17	5.58	6.63	6.52	.030	.030	.030	.000	1155.30	19684.48
.000302	150.	180.	250.	2	18	0	.00	1717.62	21402.10

```
 SECNO     DEPTH     CWSEL     CRIWS     WSELK     EG        HV        HL        OLOSS     L-BANK ELEV
 Q         QLOB      QCH       QROB      ALOB      ACH       AROB      VOL       TWA       R-BANK ELEV
 TIME      VLOB      VCH       VROB      XNL       XNCH      XNR       WTN       ELMIN     SSTA
 SLOPE     XLOBL     XLCH      XLOBR     ITRIAL    IDC       ICONT     CORAR     TOPWID    ENDST

*SECNO 224.430

3470 ENCROACHMENT STATIONS=    19633.8   21493.8  TYPE=      1  TARGET=     1860.000
  224.430     20.07   1178.47   1169.85       .00   1179.37       .90       .19       .08   1166.40
 220000.0   49365.1  124017.4   46617.5    7209.5   15786.9    5975.8    3365.2     152.5   1164.30
      .19      6.85      7.86      7.80      .030      .030      .030      .000   1158.40  19668.29
 .000571      480.      494.      440.         2         8         0       .00   1825.51  21493.80

*SECNO 224.530

3470 ENCROACHMENT STATIONS=    18454.1   21756.9  TYPE=      1  TARGET=     3302.801
  224.530     18.43   1179.03   1169.96       .00   1179.64       .61       .24       .03   1166.70
 220000.0   47670.5   85652.3   86677.3    8624.5   13452.9   13311.4    3738.5     176.3   1167.10
      .21      5.53      6.37      6.51      .030      .030      .030      .000   1160.60  19483.18
 .000395      510.      506.      500.         2        14         0       .00   2273.72  21756.90

*SECNO 224.620

3265 DIVIDED FLOW

3470 ENCROACHMENT STATIONS=    18816.8   21400.0  TYPE=      1  TARGET=     2583.199
  224.620     18.19   1178.99   1172.25       .00   1180.04      1.05       .27       .13   1170.80
 220000.0   32387.7  156353.1   31259.2    5428.0   18248.1    3664.7    4102.1     201.3   1165.70
      .23      5.97      8.57      8.53      .030      .030      .030      .000   1160.80  19364.28
 .000756      505.      505.      505.         2        14         0       .00   2023.69  21400.00

*SECNO 224.710

3470 ENCROACHMENT STATIONS=    18800.0   21300.0  TYPE=      1  TARGET=     2500.000
  224.710     17.58   1179.38   1171.10       .00   1180.39      1.01       .34       .00   1172.50
 220000.0     131.4  194342.6   25526.0      49.3   24046.6    3246.4    4414.6     222.9   1163.40
      .24      2.66      8.08      7.86      .030      .030      .030      .000   1161.80  19620.97
 .000640      620.      492.      440.         2        11         0       .00   1679.03  21300.00

CCHV=     .100 CEHV=     .300
*SECNO 224.810

3470 ENCROACHMENT STATIONS=    18800.0   21140.0  TYPE=      1  TARGET=     2340.000
```

SECNO	DEPTH	CWSEL	CRIWS	WSELK	EG	HV	HL	OLOSS	L-BANK ELEV
Q	QLOB	QCH	QROB	ALOB	ACH	AROB	VOL	TWA	R-BANK ELEV
TIME	VLOB	VCH	VROB	XNL	XNCH	XNR	WTN	ELMIN	SSTA
SLOPE	XLOBL	XLCH	XLOBR	ITRIAL	IDC	ICONT	CORAR	TOPWID	ENDST
224.810	17.63	1179.73	1171.75	.00	1180.72	.99	.33	.00	1169.60
220000.0	2481.3	156301.1	61217.6	673.6	19711.0	7471.9	4735.6	243.8	1164.10
.26	3.68	7.93	8.19	.030	.030	.030	.000	1162.10	19235.66
.000649	560.	510.	490.	1	11	0	.00	1904.33	21140.00

1490 NH CARD USED
*SECNO 224.900

3265 DIVIDED FLOW

3301 HV CHANGED MORE THAN HVINS

3302 WARNING: CONVEYANCE CHANGE OUTSIDE OF ACCEPTABLE RANGE, KRATIO = .47

3470 ENCROACHMENT STATIONS= 18750.0 20450.0 TYPE= 1 TARGET= 1700.000

224.900	16.83	1178.73	1176.55	.00	1181.98	3.25	.59	.68	1174.20
220000.0	2692.3	211324.6	5983.1	437.0	14388.7	777.9	4980.4	263.2	1176.60
.27	6.16	14.69	7.69	.030	.030	.030	.000	1161.90	18901.67
.002899	515.	495.	470.	3	15	0	.00	1531.52	20450.00

1490 NH CARD USED
*SECNO 225.000

3265 DIVIDED FLOW

3470 ENCROACHMENT STATIONS= 18700.0 19847.7 TYPE= 1 TARGET= 1147.699

225.000	18.22	1180.02	1177.54	.00	1183.48	3.46	1.43	.06	1174.10
220000.0	18008.3	201991.7	.0	1445.0	13343.0	.0	5153.6	278.3	100000.00
.28	12.46	15.14	.00	.030	.030	.000	.000	1161.80	18705.31
.002881	500.	496.	500.	2	11	0	.00	1118.53	19847.70

1490 NH CARD USED
*SECNO 225.100

3301 HV CHANGED MORE THAN HVINS

SECNO	DEPTH	CWSEL	CRIWS	WSELK	EG	HV	HL	OLOSS	L-BANK ELEV
Q	QLOB	QCH	QROB	ALOB	ACH	AROB	VOL	TWA	R-BANK ELEV
TIME	VLOB	VCH	VROB	XNL	XNCH	XNR	WTN	ELMIN	SSTA
SLOPE	XLOBL	XLCH	XLOBR	ITRIAL	IDC	ICONT	CORAR	TOPWID	ENDST

3302 WARNING: CONVEYANCE CHANGE OUTSIDE OF ACCEPTABLE RANGE, KRATIO = 1.51

3470 ENCROACHMENT STATIONS= 18469.0 19750.0 TYPE= 1 TARGET= 1281.000

225.100	20.10	1182.40	1176.43	.00	1184.55	2.15	.94	.13	1175.00
220000.0	17463.0	202537.0	.0	2208.5	16821.2	.0	5352.9	292.0	100000.00
.29	7.91	12.04	.00	.030	.030	.000	.000	1162.30	18551.30
.001261	530.	511.	520.	3	15	0	.00	1198.69	19750.00

1490 NH CARD USED
*SECNO 225.190

3470 ENCROACHMENT STATIONS= 18650.0 19830.0 TYPE= 1 TARGET= 1180.000

225.190	20.21	1182.81	1177.56	.00	1185.34	2.53	.68	.11	1178.60
220000.0	23929.4	196070.5	.2	2845.2	14849.2	.7	5563.3	305.2	1162.80
.30	8.41	13.20	.21	.030	.030	.030	.000	1162.60	18680.96
.001449	480.	502.	485.	2	15	0	.00	1119.11	19800.07

1490 NH CARD USED
*SECNO 225.280

3265 DIVIDED FLOW

3470 ENCROACHMENT STATIONS= 18630.0 20030.0 TYPE= 1 TARGET= 1400.000

225.280	20.49	1183.49	1179.44	.00	1186.15	2.66	.77	.04	1176.80
220000.0	27759.3	147029.9	45210.8	3341.8	10794.1	3292.2	5757.9	318.8	1175.80
.31	8.31	13.62	13.73	.030	.030	.030	.000	1163.00	18693.86
.001775	490.	488.	430.	2	15	0	.00	1314.09	20030.00

1490 NH CARD USED
*SECNO 225.380

3470 ENCROACHMENT STATIONS= 18817.8 19845.8 TYPE= 1 TARGET= 1028.000

225.380	21.74	1184.14	1178.75	.00	1187.09	2.95	.85	.09	1173.30
220000.0	834.9	210561.3	8603.7	141.9	15081.6	958.5	5947.4	331.1	1176.10
.32	5.89	13.96	8.98	.030	.030	.030	.000	1162.40	18888.52
.001648	400.	519.	400.	2	15	0	.00	951.38	19839.89

SECNO	DEPTH	CWSEL	CRIWS	WSELK	EG	HV	HL	OLOSS	L-BANK ELEV
Q	QLOB	QCH	QROB	ALOB	ACH	AROB	VOL	TWA	R-BANK ELEV
TIME	VLOB	VCH	VROB	XNL	XNCH	XNR	WTN	ELMIN	SSTA
SLOPE	XLOBL	XLCH	XLOBR	ITRIAL	IDC	ICONT	CORAR	TOPWID	ENDST

1490 NH CARD USED
*SECNO 225.480

3301 HV CHANGED MORE THAN HVINS

3470 ENCROACHMENT STATIONS= 18589.5 19774.3 TYPE= 1 TARGET= 1184.801

225.480	25.13	1185.43	1178.69	.00	1187.84	2.41	.70	.05	1184.20
220000.0	41.5	219954.1	4.4	31.5	17671.3	3.1	6144.2	342.6	1184.00
.34	1.32	12.45	1.41	.028	.028	.028	.000	1160.30	18665.97
.001172	505.	507.	460.	2	15	0	.00	1031.98	19697.95

1490 NH CARD USED
*SECNO 225.570

3301 HV CHANGED MORE THAN HVINS

3470 ENCROACHMENT STATIONS= 18700.7 19789.6 TYPE= 1 TARGET= 1088.900

225.570	28.84	1186.74	1177.10	.00	1188.33	1.59	.41	.08	1182.00
220000.0	52.6	219947.4	.0	23.1	21747.8	.0	6359.6	354.2	100000.00
.35	2.27	10.11	.00	.028	.028	.000	.000	1157.90	18710.66
.000669	495.	475.	450.	2	19	0	.00	1078.94	19789.60

1490 NH CARD USED
*SECNO 225.660

3470 ENCROACHMENT STATIONS= 18727.9 19790.8 TYPE= 1 TARGET= 1062.900

225.660	28.23	1187.03	1176.93	.00	1188.70	1.67	.34	.02	1181.80
220000.0	425.5	219574.5	.0	158.5	21154.3	.0	6613.2	366.7	100000.00
.36	2.69	10.38	.00	.028	.028	.000	.000	1158.80	18744.78
.000660	525.	513.	520.	2	14	0	.00	1046.02	19790.80

1490 NH CARD USED
*SECNO 225.760

3470 ENCROACHMENT STATIONS= 18673.2 19822.4 TYPE= 1 TARGET= 1149.201

225.760	22.19	1187.19	1179.76	.00	1189.17	1.98	.38	.09	1165.50
220000.0	2189.8	217701.7	108.5	314.8	19215.1	36.8	6839.5	378.6	1182.10
.37	6.96	11.33	2.95	.028	.028	.028	.000	1165.00	18691.47
.000961	440.	483.	485.	2	11	0	.00	1105.37	19796.84

SECNO	DEPTH	CWSEL	CRIWS	WSELK	EG	HV	HL	OLOSS	L-BANK ELEV
Q	QLOB	QCH	QROB	ALOB	ACH	AROB	VOL	TWA	R-BANK ELEV
TIME	VLOB	VCH	VROB	XNL	XNCH	XNR	WTN	ELMIN	SSTA
SLOPE	XLOBL	XLCH	XLOBR	ITRIAL	IDC	ICONT	CORAR	TOPWID	ENDST

1490 NH CARD USED
*SECNO 225.850

3301 HV CHANGED MORE THAN HVINS

3302 WARNING: CONVEYANCE CHANGE OUTSIDE OF ACCEPTABLE RANGE, KRATIO = 1.85

3470 ENCROACHMENT STATIONS= 18202.9 19950.6 TYPE= 1 TARGET= 1747.699

225.850	22.08	1188.88	1176.90	.00	1189.55	.67	.25	.13	1167.00
220000.0	59710.2	159539.4	750.4	8864.1	24403.8	264.1	7162.7	395.7	1181.80
.40	6.74	6.54	2.84	.028	.028	.028	.000	1166.80	18204.12
.000282	630.	510.	505.	2	14	0	.00	1713.93	19918.05

1490 NH CARD USED
*SECNO 225.950

3302 WARNING: CONVEYANCE CHANGE OUTSIDE OF ACCEPTABLE RANGE, KRATIO = .70

3470 ENCROACHMENT STATIONS= 18335.5 20237.2 TYPE= 1 TARGET= 1901.699

225.950	20.91	1188.81	1180.67	.00	1189.87	1.06	.20	.12	1177.90
220000.0	2190.5	215696.2	2113.3	489.5	25938.4	549.0	7512.7	415.8	1173.00
.41	4.47	8.32	3.85	.028	.028	.028	.000	1167.90	18380.46
.000583	470.	510.	510.	2	14	0	.00	1758.56	20139.03

1490 NH CARD USED
*SECNO 226.040

3301 HV CHANGED MORE THAN HVINS

3302 WARNING: CONVEYANCE CHANGE OUTSIDE OF ACCEPTABLE RANGE, KRATIO = .34

3470 ENCROACHMENT STATIONS= 19322.6 20431.8 TYPE= 1 TARGET= 1109.201

226.040	14.96	1188.06	1185.43	.00	1190.80	2.74	.43	.50	1185.00
147500.0	138.7	144069.1	3292.1	41.5	10759.5	467.7	7721.9	430.9	1186.40
.42	3.34	13.39	7.04	.028	.028	.028	.000	1173.10	19357.63
.002266	484.	476.	480.	3	14	0	.00	1008.48	20366.11

SECNO	DEPTH	CWSEL	CRIWS	WSELK	EG	HV	HL	OLOSS	L-BANK ELEV
Q	QLOB	QCH	QROB	ALOB	ACH	AROB	VOL	TWA	R-BANK ELEV
TIME	VLOB	VCH	VROB	XNL	XNCH	XNR	WTN	ELMIN	SSTA
SLOPE	XLOBL	XLCH	XLOBR	ITRIAL	IDC	ICONT	CORAR	TOPWID	ENDST

1490 NH CARD USED
*SECNO 226.130

3301 HV CHANGED MORE THAN HVINS

3470 ENCROACHMENT STATIONS= 19593.2 20570.5 TYPE= 1 TARGET= 977.301

226.130	18.02	1188.52	1187.79	.00	1192.74	4.22	1.49	.45	1185.00
147500.0	52.8	146902.9	544.3	11.6	8894.5	92.0	7838.7	441.8	1185.20
.43	4.55	16.52	5.91	.028	.028	.028	.000	1170.50	19609.81
.004084	510.	502.	500.	2	8	0	.00	872.27	20482.08

1490 NH CARD USED
*SECNO 226.230

3301 HV CHANGED MORE THAN HVINS

7185 MINIMUM SPECIFIC ENERGY
3720 CRITICAL DEPTH ASSUMED

3470 ENCROACHMENT STATIONS= 19603.5 20608.2 TYPE= 1 TARGET= 1004.699

226.230	18.06	1190.36	1190.36	.00	1195.13	4.77	2.11	.16	1184.40
147500.0	184.9	137268.3	10046.8	28.3	7633.1	1071.3	7940.8	452.3	1184.70
.44	6.53	17.98	9.38	.028	.028	.028	.000	1172.30	19646.89
.004402	400.	493.	630.	0	5	0	.00	918.85	20565.75

1490 NH CARD USED
*SECNO 226.350

3301 HV CHANGED MORE THAN HVINS

3470 ENCROACHMENT STATIONS= 19598.4 20580.5 TYPE= 1 TARGET= 982.100

226.350	20.87	1194.27	1192.71	.00	1197.82	3.55	2.57	.12	1189.40
147500.0	53.6	146735.4	711.1	12.0	9682.6	91.9	8083.8	466.7	1185.70
.45	4.45	15.15	7.74	.028	.028	.028	.000	1173.40	19628.45
.003374	470.	667.	770.	3	8	0	.00	913.93	20542.38

1490 NH CARD USED

SECNO	DEPTH	CWSEL	CRIWS	WSELK	EG	HV	HL	OLOSS	L-BANK ELEV
Q	QLOB	QCH	QROB	ALOB	ACH	AROB	VOL	TWA	R-BANK ELEV
TIME	VLOB	VCH	VROB	XNL	XNCH	XNR	WTN	ELMIN	SSTA
SLOPE	XLOBL	XLCH	XLOBR	ITRIAL	IDC	ICONT	CORAR	TOPWID	ENDST

*SECNO 226.480

3470 ENCROACHMENT STATIONS= 19554.4 20592.3 TYPE= 1 TARGET= 1037.900

226.480	15.06	1196.86	1195.53	.00	1200.49	3.62	2.65	.02	1196.00
147500.0	1.3	147496.7	2.0	.8	9654.2	1.2	8254.4	482.7	1196.00
.47	1.68	15.28	1.75	.028	.028	.028	.000	1181.80	19626.55
.003554	550.	764.	994.	3	14	0	.00	909.32	20535.87

1490 NH CARD USED
*SECNO 226.490

3301 HV CHANGED MORE THAN HVINS

7185 MINIMUM SPECIFIC ENERGY
3720 CRITICAL DEPTH ASSUMED

3470 ENCROACHMENT STATIONS= 19554.4 20592.3 TYPE= 1 TARGET= 1037.900

226.490	10.67	1196.67	1196.67	.00	1201.41	4.75	.00	.34	1191.40
147500.0	211.8	147287.0	1.3	30.1	8419.6	.7	8254.6	482.7	1196.00
.47	7.03	17.49	1.83	.028	.028	.028	.000	1186.00	19627.97
.005487	1.	1.	1.	0	19	0	.00	907.29	20535.26

1490 NH CARD USED
*SECNO 226.500

3301 HV CHANGED MORE THAN HVINS

3470 ENCROACHMENT STATIONS= 19554.4 20592.3 TYPE= 1 TARGET= 1037.900

226.500	11.69	1197.69	1196.68	.00	1201.55	3.86	.05	.09	1191.40
147500.0	285.4	147202.2	12.4	42.8	9325.6	4.4	8256.6	482.9	1196.00
.47	6.67	15.78	2.86	.028	.028	.028	.000	1186.00	19625.77
.003899	10.	10.	10.	10	5	0	.00	912.61	20538.38

*SECNO 226.510

3265 DIVIDED FLOW

SECNO	DEPTH	CWSEL	CRIWS	WSELK	EG	HV	HL	OLOSS	L-BANK ELEV
Q	QLOB	QCH	QROB	ALOB	ACH	AROB	VOL	TWA	R-BANK ELEV
TIME	VLOB	VCH	VROB	XNL	XNCH	XNR	WTN	ELMIN	SSTA
SLOPE	XLOBL	XLCH	XLOBR	ITRIAL	IDC	ICONT	CORAR	TOPWID	ENDST

3370 NORMAL BRIDGE, NRD= 19 MIN ELTRD= 1204.00 MAX ELLC= 1202.66

3470 ENCROACHMENT STATIONS= 19615.6 20548.2 TYPE= 1 TARGET= 932.600

Downstream Face of Alma School Road Bridge

226.510	11.55	1197.55	1196.64	.00	1201.62	4.08	.01	.06	100000.00
147500.0	.0	147500.0	.0	.0	9104.4	.0	8257.0	483.0	1201.16
.47	.00	16.20	.00	.000	.028	.000	.000	1186.00	19615.60
.006241	2.	2.	2.	2	12	0	.00	862.63	20514.91

*SECNO 226.520

3265 DIVIDED FLOW

3301 HV CHANGED MORE THAN HVINS

3370 NORMAL BRIDGE, NRD= 19 MIN ELTRD= 1204.00 MAX ELLC= 1202.66

3470 ENCROACHMENT STATIONS= 19615.6 20548.2 TYPE= 1 TARGET= 932.600

Upstream Face of Alma School Road bridge

226.520	12.99	1198.99	1196.64	.00	1202.15	3.15	.43	.09	100000.00
147500.0	.0	147500.0	.0	.0	10347.9	.0	8275.8	484.6	1201.16
.47	.00	14.25	.00	.000	.028	.000	.000	1186.00	19615.60
.004283	84.	84.	84.	4	12	0	.00	862.65	20514.92

1490 NH CARD USED

*SECNO 226.530

3301 HV CHANGED MORE THAN HVINS

3302 WARNING: CONVEYANCE CHANGE OUTSIDE OF ACCEPTABLE RANGE, KRATIO = 1.48

3470 ENCROACHMENT STATIONS= 19522.9 20594.3 TYPE= 1 TARGET= 1071.400

226.530	13.67	1199.67	1196.26	.00	1202.21	2.55	.01	.06	1188.30
147500.0	912.2	146457.8	130.0	131.4	11409.0	32.3	8276.3	484.7	1194.90
.47	6.94	12.84	4.02	.028	.028	.028	.000	1186.00	19621.48
.001950	2.	2.	2.	3	15	0	.00	924.19	20545.67

SECNO	DEPTH	CWSEL	CRIWS	WSELK	EG	HV	HL	OLOSS	L-BANK ELEV
Q	QLOB	QCH	QROB	ALOB	ACH	AROB	VOL	TWA	R-BANK ELEV
TIME	VLOB	VCH	VROB	XNL	XNCH	XNR	WTN	ELMIN	SSTA
SLOPE	XLOBL	XLCH	XLOBR	ITRIAL	IDC	ICONT	CORAR	TOPWID	ENDST

1490 NH CARD USED
*SECNO 226.610

3470 ENCROACHMENT STATIONS= 19549.9 20581.5 TYPE= 1 TARGET= 1031.600

226.610	13.87	1200.87	1196.90	.00	1203.09	2.22	.85	.03	1190.60
147500.0	506.4	146177.1	816.4	86.6	12183.6	131.1	8407.9	495.0	1190.00
.48	5.85	12.00	6.23	.028	.028	.028	.000	1187.00	19604.06
.001629	560.	478.	360.	2	15	0	.00	962.55	20566.61

1490 NH CARD USED
*SECNO 226.700

3470 ENCROACHMENT STATIONS= 19491.0 20724.5 TYPE= 1 TARGET= 1233.500

226.700	14.15	1202.15	1197.61	.00	1203.87	1.73	.73	.05	1191.80
147500.0	596.7	133410.3	13493.0	122.5	12453.0	1513.9	8561.2	507.1	1190.40
.49	4.87	10.71	8.91	.031	.028	.028	.000	1188.00	19598.14
.001297	490.	504.	510.	2	19	0	.00	1121.87	20720.01

1490 NH CARD USED
*SECNO 226.800

3301 HV CHANGED MORE THAN HVINS

7185 MINIMUM SPECIFIC ENERGY
3720 CRITICAL DEPTH ASSUMED

3470 ENCROACHMENT STATIONS= 19441.4 20598.0 TYPE= 1 TARGET= 1156.600

226.800	9.85	1201.55	1201.55	.00	1206.13	4.58	1.14	.86	1194.20
147500.0	350.9	145630.7	1518.5	42.1	8447.0	147.0	8688.3	518.7	1192.70
.50	8.33	17.24	10.33	.028	.028	.028	.000	1191.70	19609.53
.005462	560.	487.	480.	0	19	0	.00	960.68	20570.22

1490 NH CARD USED
*SECNO 226.890

3301 HV CHANGED MORE THAN HVINS

3302 WARNING: CONVEYANCE CHANGE OUTSIDE OF ACCEPTABLE RANGE, KRATIO = 1.45

SECNO	DEPTH	CWSEL	CRIWS	WSELK	EG	HV	HL	OLOSS	L-BANK ELEV
Q	QLOB	QCH	QROB	ALOB	ACH	AROB	VOL	TWA	R-BANK ELEV
TIME	VLOB	VCH	VROB	XNL	XNCH	XNR	WTN	ELMIN	SSTA
SLOPE	XLOBL	XLCH	XLOBR	ITRIAL	IDC	ICONT	CORAR	TOPWID	ENDST

3470 ENCROACHMENT STATIONS= 19600.0 20593.8 TYPE= 1 TARGET= 993.801

226.890	12.66	1205.16	1202.90	.00	1208.14	2.98	1.85	.16	1193.10
147500.0	.7	142420.9	5078.4	1.2	10188.5	505.2	8801.8	529.9	1194.10
.51	.58	13.98	10.05	.028	.028	.028	.000	1192.50	19600.00
.002585	550.	511.	525.	3	8	0	.00	948.73	20548.73

1490 NH CARD USED
*SECNO 226.990

3301 HV CHANGED MORE THAN HVINS

3470 ENCROACHMENT STATIONS= 19356.4 20574.1 TYPE= 1 TARGET= 1217.699

226.990	11.97	1205.67	1204.83	.00	1210.25	4.58	1.63	.48	1200.50
220000.0	219.0	219075.4	705.6	36.1	12735.3	101.3	8934.7	541.7	1199.60
.52	6.06	17.20	6.97	.028	.028	.028	.000	1193.70	19381.33
.004004	170.	492.	490.	3	11	0	.00	1144.43	20525.76

1490 NH CARD USED
*SECNO 227.080

3301 HV CHANGED MORE THAN HVINS

7185 MINIMUM SPECIFIC ENERGY
3720 CRITICAL DEPTH ASSUMED

3470 ENCROACHMENT STATIONS= 19475.0 20579.0 TYPE= 1 TARGET= 1104.000

227.080	13.68	1207.78	1207.78	.00	1213.69	5.91	2.19	.40	1195.60
220000.0	19601.4	188758.5	11640.1	1046.6	9477.7	886.0	9076.4	554.0	1200.90
.53	18.73	19.92	13.14	.028	.028	.028	.000	1194.10	19604.72
.004665	585.	505.	500.	0	8	0	.00	962.61	20567.33

1490 NH CARD USED
*SECNO 227.180
3280 CROSS SECTION 227.18 EXTENDED 1.33 FEET

3301 HV CHANGED MORE THAN HVINS

SECNO	DEPTH	CWSEL	CRIWS	WSELK	EG	HV	HL	OLOSS	L-BANK ELEV
Q	QLOB	QCH	QROB	ALOB	ACH	AROB	VOL	TWA	R-BANK ELEV
TIME	VLOB	VCH	VROB	XNL	XNCH	XNR	WTN	ELMIN	SSTA
SLOPE	XLOBL	XLCH	XLOBR	ITRIAL	IDC	ICONT	CORAR	TOPWID	ENDST

3302 WARNING: CONVEYANCE CHANGE OUTSIDE OF ACCEPTABLE RANGE, KRATIO = 1.43

3470 ENCROACHMENT STATIONS= 19582.3 20583.2 TYPE= 1 TARGET= 1000.898

227.180	17.33	1211.83	1208.66	.00	1215.52	3.69	1.61	.22	1201.80
220000.0	915.1	218253.6	831.3	124.2	14123.5	118.8	9226.9	565.4	1201.90
.54	7.37	15.45	6.99	.028	.028	.028	.000	1194.50	19585.02
.002279	500.	509.	505.	4	8	0	.00	985.01	20570.03

1490 NH CARD USED
*SECNO 227.270

3301 HV CHANGED MORE THAN HVINS

3470 ENCROACHMENT STATIONS= 19556.7 20636.5 TYPE= 1 TARGET= 1079.801

227.270	20.30	1214.00	1208.15	.00	1216.48	2.48	.84	.12	1212.90
220000.0	.9	219676.9	322.2	.8	17381.1	78.2	9408.9	576.9	1207.90
.55	1.11	12.64	4.12	.028	.028	.028	.000	1193.70	19561.55
.001305	780.	499.	170.	2	15	0	.00	1047.45	20609.00

1490 NH CARD USED
*SECNO 227.370

3301 HV CHANGED MORE THAN HVINS

3470 ENCROACHMENT STATIONS= 18950.0 20492.2 TYPE= 1 TARGET= 1542.199

227.370	21.65	1215.65	1207.94	.00	1217.08	1.43	.50	.10	1211.90
220000.0	44256.4	175576.8	166.9	6023.5	17373.2	61.0	9653.6	592.2	1210.30
.56	7.35	10.11	2.73	.030	.028	.028	.000	1194.00	18950.00
.000740	590.	510.	425.	2	19	0	.00	1490.80	20440.80

1490 NH CARD USED
*SECNO 227.460

3265 DIVIDED FLOW

SECNO	DEPTH	CWSEL	CRIWS	WSELK	EG	HV	HL	OLOSS	L-BANK ELEV
Q	QLOB	QCH	QROB	ALOB	ACH	AROB	VOL	TWA	R-BANK ELEV
TIME	VLOB	VCH	VROB	XNL	XNCH	XNR	WTN	ELMIN	SSTA
SLOPE	XLOBL	XLCH	XLOBR	ITRIAL	IDC	ICONT	CORAR	TOPWID	ENDST

3470 ENCROACHMENT STATIONS= 18450.0 20537.3 TYPE= 1 TARGET= 2087.301

227.460	21.74	1215.84	1208.02	.00	1217.53	1.70	.37	.08	1209.90
220000.0	21143.4	198449.7	406.9	4961.0	18173.0	133.7	9908.3	610.3	1210.60
.57	4.26	10.92	3.04	.030	.028	.028	.000	1194.10	18450.00
.000783	370.	507.	550.	2	14	0	.00	2028.33	20517.55

1490 NH CARD USED
*SECNO 227.560
WATER EL=X5 CARD= 1217.300
3280 CROSS SECTION 227.56 EXTENDED 1.10 FEET

3301 HV CHANGED MORE THAN HVINS

3302 WARNING: CONVEYANCE CHANGE OUTSIDE OF ACCEPTABLE RANGE, KRATIO = 1.44

3470 ENCROACHMENT STATIONS= 18100.0 20597.9 TYPE= 1 TARGET= 2497.900
Downstream of Country Club Drive Bridge

227.560	22.70	1217.30	1207.49	.00	1218.10	.80	.23	.09	1205.00
220000.0	44317.6	173928.4	1754.0	10852.3	22333.2	552.4	10155.9	624.7	1206.50
.59	4.08	7.79	3.18	.032	.028	.028	.000	1194.60	18100.00
.000377	90.	491.	385.	0	11	0	.00	2497.90	20597.90

T1 RED MOUNTAIN PHASE II EXISTING CONDITION MODEL
T2 BASED ON MCFCD PRELIMINARY SALT RIVER MODELS R4A.DAT & R5A.DAT
T3 BASE MODEL PREPARED BY MICHAEL BAKER JR. ENGINEERS, INC.

J1	ICHECK	INQ	NINV	IDIR	STRT	METRIC	HVINS	Q	WSEL	FQ
		3						215000	1166.93	

J2	NPROF	IPLOT	PRFVS	XSECV	XSECH	FN	ALLDC	IBW	CHNIM	ITRACE
	2	0	-1				-1	-6		

SECNO	DEPTH	CWSEL	CRIWS	WSELK	EG	HV	HL	OLOSS	L-BANK ELEV
Q	QLOB	QCH	QROB	ALOB	ACH	AROB	VOL	TWA	R-BANK ELEV
TIME	VLOB	VCH	VROB	XNL	XNCH	XNR	WTN	ELMIN	SSTA
SLOPE	XLOBL	XLCH	XLOBR	ITRIAL	IDC	ICONT	CORAR	TOPWID	ENDST

*PROF 2

CRITICAL DEPTH TO BE CALCULATED AT ALL CROSS SECTIONS

CCHV= .100 CEHV= .300
*SECNO 223.100

3470 ENCROACHMENT STATIONS= 9973.0 11001.0 TYPE= 1 TARGET= 1028.000
Upstream of McClintock Road Bridge

223.100	19.63	1166.93	1160.47	1166.93	1169.22	2.29	.00	.00	1159.07
215000.0	.0	215000.0	.0	.0	17701.9	.0	.0	.0	100000.00
.00	.00	12.15	.00	.000	.035	.000	.000	1147.30	9973.00
.001834	0.	0.	0.	0	13	0	.00	1013.49	10986.49

*SECNO 223.190

3265 DIVIDED FLOW

3370 NORMAL BRIDGE, NRD= 2 MIN ELTRD= 1206.00 MAX ELLC= 1190.50

3470 ENCROACHMENT STATIONS= 19450.0 20420.3 TYPE= 1 TARGET= 970.301

223.190	26.15	1168.15	1158.41	1168.09	1170.16	2.01	.91	.03	1148.00
215000.0	2669.1	212330.9	.0	415.2	18588.3	.0	217.3	11.5	100000.00
.01	6.43	11.42	.00	.045	.035	.000	.000	1142.00	19450.00
.001715	620.	515.	430.	2	19	0	.00	925.15	20420.30

*SECNO 223.290

3265 DIVIDED FLOW

3301 HV CHANGED MORE THAN HVINS

3370 NORMAL BRIDGE, NRD= 2 MIN ELTRD= 1197.04 MAX ELLC= 1181.54

3470 ENCROACHMENT STATIONS= 19560.0 20340.0 TYPE= 1 TARGET= 780.000

SECNO	DEPTH	CWSEL	CRIWS	WSELK	EG	HV	HL	OLOSS	L-BANK ELEV
Q	QLOB	QCH	QROB	ALOB	ACH	AROB	VOL	TWA	R-BANK ELEV
TIME	VLOB	VCH	VROB	XNL	XNCH	XNR	WTN	ELMIN	SSTA
SLOPE	XLOBL	XLCH	XLOBR	ITRIAL	IDC	ICONT	CORAR	TOPWID	ENDST
223.290	27.28	1167.28	1159.98	1167.21	1170.54	3.26	.00	.38	1145.30
215000.0	3137.7	211841.6	20.6	409.5	14544.6	16.4	217.3	11.5	1166.10
.01	7.66	14.56	1.26	.050	.035	.050	.000	1140.00	19560.00
.003029	0.	0.	0.	2	12	0	.00	735.02	20340.00

*SECNO 223.380

3265 DIVIDED FLOW

3370 NORMAL BRIDGE, NRD= 2 MIN ELTRD= 1192.23 MAX ELLC= 1176.70

3470 ENCROACHMENT STATIONS= 19639.8 20320.0 TYPE= 1 TARGET= 680.199

223.380	36.71	1168.71	1159.24	1168.66	1171.95	3.24	1.41	.00	1168.30
215000.0	.0	214960.2	39.8	.0	14871.3	20.1	382.1	19.1	1166.00
.02	.00	14.45	1.98	.000	.035	.050	.000	1132.00	19639.80
.002856	480.	481.	480.	2	20	0	.00	637.37	20320.00

*SECNO 223.480

3265 DIVIDED FLOW

3301 HV CHANGED MORE THAN HVINS

3370 NORMAL BRIDGE, NRD= 2 MIN ELTRD= 1193.41 MAX ELLC= 1177.90

3470 ENCROACHMENT STATIONS= 19561.8 20396.5 TYPE= 1 TARGET= 834.699

223.480	38.88	1170.88	1158.36	1170.84	1173.41	2.53	1.38	.07	1169.30
215000.0	.0	214913.6	86.4	.0	16833.6	61.4	574.7	27.8	1169.60
.03	.00	12.77	1.41	.000	.035	.050	.000	1132.00	19561.80
.002408	450.	528.	610.	2	15	0	.00	791.04	20396.50

*SECNO 223.580

3265 DIVIDED FLOW

SECNO	DEPTH	CWSEL	CRIWS	WSELK	EG	HV	HL	OLOSS	L-BANK ELEV
Q	QLOB	QCH	QROB	ALOB	ACH	AROB	VOL	TWA	R-BANK ELEV
TIME	VLOB	VCH	VROB	XNL	XNCH	XNR	WTN	ELMIN	SSTA
SLOPE	XLOBL	XLCH	XLOBR	ITRIAL	IDC	ICONT	CORAR	TOPWID	ENDST

3301 HV CHANGED MORE THAN HVINS

3302 WARNING: CONVEYANCE CHANGE OUTSIDE OF ACCEPTABLE RANGE, KRATIO = .67

3370 NORMAL BRIDGE, NRD= 2 MIN ELTRD= 1194.47 MAX ELLC= 1178.90

3470 ENCROACHMENT STATIONS= 19704.5 20349.1 TYPE= 1 TARGET= 644.600

223.580	33.09	1171.09	1165.20	1171.07	1175.79	4.70	1.74	.65	1169.70
215000.0	.0	215000.0	.0	.0	12358.7	.0	743.1	35.8	100000.00
.04	.00	17.40	.00	.000	.035	.000	.000	1138.00	19704.50
.005409	490.	501.	510.	3	16	0	.00	598.84	20348.04

*SECNO 223.670

3265 DIVIDED FLOW

3301 HV CHANGED MORE THAN HVINS

3302 WARNING: CONVEYANCE CHANGE OUTSIDE OF ACCEPTABLE RANGE, KRATIO = 2.30

3370 NORMAL BRIDGE, NRD= 2 MIN ELTRD= 1195.85 MAX ELLC= 1180.38

3470 ENCROACHMENT STATIONS= 19486.3 20364.5 TYPE= 1 TARGET= 878.199

223.670	43.05	1175.75	1157.88	1175.72	1177.12	1.37	.99	.33	1169.70
215000.0	.0	215000.0	.0	.0	22887.8	.0	945.4	44.0	100000.00
.06	.00	9.39	.00	.000	.035	.000	.000	1132.70	19486.30
.001023	500.	500.	500.	3	15	0	.00	833.60	20364.50

*SECNO 223.770

3265 DIVIDED FLOW

SECNO	DEPTH	CWSEL	CRIWS	WSELK	EG	HV	HL	OLOSS	L-BANK ELEV
Q	QLOB	QCH	QROB	ALOB	ACH	AROB	VOL	TWA	R-BANK ELEV
TIME	VLOB	VCH	VROB	XNL	XNCH	XNR	WTN	ELMIN	SSTA
SLOPE	XLOBL	XLCH	XLOBR	ITRIAL	IDC	ICONT	CORAR	TOPWID	ENDST

3302 WARNING: CONVEYANCE CHANGE OUTSIDE OF ACCEPTABLE RANGE, KRATIO = 1.57

3370 NORMAL BRIDGE, NRD= 2 MIN ELTRD= 1196.83 MAX ELLC= 1181.35

3470 ENCROACHMENT STATIONS= 19475.0 20389.7 TYPE= 1 TARGET= 914.699

223.770	42.45	1176.55	1155.02	1176.55	1177.47	.93	.31	.04	1170.00
215000.0	.0	215000.0	.0	.0	27807.6	.0	1236.4	53.8	100000.00
.07	.00	7.73	.00	.000	.030	.000	.000	1134.10	19475.00
.000414	500.	500.	500.	2	12	0	.00	870.10	20389.70

*SECNO 223.860

3265 DIVIDED FLOW

3370 NORMAL BRIDGE, NRD= 2 MIN ELTRD= 1211.80 MAX ELLC= 1196.80

3470 ENCROACHMENT STATIONS= 19380.3 20491.9 TYPE= 1 TARGET= 1111.600

223.860	40.88	1176.88	1157.77	1176.86	1177.67	.79	.18	.01	1173.20
215000.0	.0	215000.0	.0	.0	30134.2	.0	1557.7	64.5	100000.00
.09	.00	7.13	.00	.000	.030	.000	.000	1136.00	19380.30
.000336	485.	483.	485.	1	19	0	.00	1066.69	20491.90

*SECNO 223.960

3470 ENCROACHMENT STATIONS= 19603.4 20600.5 TYPE= 1 TARGET= 997.100

223.960	37.05	1177.05	1157.43	1177.02	1177.84	.79	.17	.00	1173.00
215000.0	.0	215000.0	.0	.0	30209.5	.0	1913.9	76.7	100000.00
.11	.00	7.12	.00	.000	.035	.000	.000	1140.00	19603.40
.000315	515.	514.	515.	2	18	0	.00	997.10	20600.50

*SECNO 224.050

3470 ENCROACHMENT STATIONS= 19792.3 20750.5 TYPE= 1 TARGET= 958.199

224.050	35.90	1177.00	1161.41	1176.97	1178.14	1.13	.20	.10	1170.00
220000.0	.0	220000.0	.0	.0	25746.9	.0	2232.1	87.8	100000.00
.13	.00	8.54	.00	.000	.035	.000	.000	1141.10	19792.30
.000528	490.	495.	500.	2	11	0	.00	958.20	20750.50

SECNO	DEPTH	CWSEL	CRIWS	WSELK	EG	HV	HL	OLOSS	L-BANK ELEV
Q	QLOB	QCH	QROB	ALOB	ACH	AROB	VOL	TWA	R-BANK ELEV
TIME	VLOB	VCH	VROB	XNL	XNCH	XNR	WTN	ELMIN	SSTA
SLOPE	XLOBL	XLCH	XLOBR	ITRIAL	IDC	ICONT	CORAR	TOPWID	ENDST

*SECNO 224.080

3470 ENCROACHMENT STATIONS= 19869.7 20992.5 TYPE= 1 TARGET= 1122.801

224.080	25.31	1177.31	1162.89	1177.25	1178.31	1.00	.16	.01	1152.00
220000.0	673.0	218070.9	1256.1	258.4	27085.2	413.4	2426.7	95.4	1152.00
.14	2.60	8.05	3.04	.050	.035	.050	.000	1152.00	19869.70
.000484	317.	317.	317.	2	17	0	.00	1122.80	20992.50

*SECNO 224.090

3265 DIVIDED FLOW

3370 NORMAL BRIDGE, NRD= 12 MIN ELTRD= 1206.20 MAX ELLC= 1212.40

3470 ENCROACHMENT STATIONS= 19869.8 20992.4 TYPE= 1 TARGET= 1122.600

224.090	25.21	1177.21	1163.43	1177.15	1178.36	1.14	.00	.04	1152.00
220000.0	896.6	217430.7	1672.8	256.3	25212.2	410.1	2427.3	95.4	1152.00
.14	3.50	8.62	4.08	.050	.035	.050	.000	1152.00	19869.80
.000877	1.	1.	1.	2	18	0	.00	1052.60	20992.40

*SECNO 224.110

3265 DIVIDED FLOW

3370 NORMAL BRIDGE, NRD= 11 MIN ELTRD= 1206.20 MAX ELLC= 1218.20

3470 ENCROACHMENT STATIONS= 19925.7 21034.3 TYPE= 1 TARGET= 1108.602

224.110	25.30	1177.30	1163.40	1177.24	1178.44	1.14	.08	.00	1152.00
220000.0	1145.5	217709.2	1145.4	312.5	25272.4	312.5	2485.6	97.8	1152.00
.14	3.67	8.61	3.67	.050	.035	.050	.000	1152.00	19925.70
.000831	98.	98.	98.	1	22	0	.00	1048.60	21034.30

*SECNO 224.120

3470 ENCROACHMENT STATIONS= 19925.5 21034.5 TYPE= 1 TARGET= 1109.000

224.120	25.44	1177.44	1162.98	1177.39	1178.45	1.01	.00	.01	1152.00
220000.0	890.0	218220.0	889.9	316.4	26954.5	316.4	2486.2	97.8	1152.00
.14	2.81	8.10	2.81	.050	.035	.050	.000	1152.00	19925.50
.000486	1.	1.	1.	2	14	0	.00	1109.00	21034.50

SECNO	DEPTH	CWSEL	CRIWS	WSELK	EG	HV	HL	OLOSS	L-BANK ELEV
Q	QLOB	QCH	QROB	ALOB	ACH	AROB	VOL	TWA	R-BANK ELEV
TIME	VLOB	VCH	VROB	XNL	XNCH	XNR	WTN	ELMIN	SSTA
SLOPE	XLOBL	XLCH	XLOBR	ITRIAL	IDC	ICONT	CORAR	TOPWID	ENDST

*SECNO 224.150

3470 ENCROACHMENT STATIONS= 19835.2 21084.8 TYPE= 1 TARGET= 1249.602

224.150	25.75	1177.75	1162.10	1177.69	1178.52	.77	.04	.02	1152.00
220000.0	796.3	218407.6	796.2	324.0	30883.5	324.0	2556.1	100.6	1152.00
.15	2.46	7.07	2.46	.050	.035	.050	.000	1152.00	19835.20
.000365	103.	103.	103.	2	18	0	.00	1249.60	21084.80

*SECNO 224.160

3265 DIVIDED FLOW

3302 WARNING: CONVEYANCE CHANGE OUTSIDE OF ACCEPTABLE RANGE, KRATIO = .68

3370 NORMAL BRIDGE, NRD= 11 MIN ELTRD= 1199.20 MAX ELLC= 1199.20

3470 ENCROACHMENT STATIONS= 19835.4 20945.9 TYPE= 1 TARGET= 1110.500

224.160	25.54	1177.54	1163.18	1177.48	1178.61	1.07	.00	.09	1152.00
220000.0	1138.4	218861.6	.0	318.8	26296.0	.0	2556.8	100.6	100000.00
.15	3.57	8.32	.00	.050	.035	.000	.000	1152.00	19835.40
.000779	1.	1.	1.	2	15	0	.00	1054.50	20945.90

*SECNO 224.170

3265 DIVIDED FLOW

3370 NORMAL BRIDGE, NRD= 11 MIN ELTRD= 1199.20 MAX ELLC= 1195.10

3470 ENCROACHMENT STATIONS= 19835.3 20945.9 TYPE= 1 TARGET= 1110.600

224.170	25.69	1177.69	1163.22	1177.63	1178.75	1.06	.14	.00	1152.00
220000.0	1146.6	218853.4	.0	322.5	26449.3	.0	2664.0	104.9	100000.00
.15	3.56	8.27	.00	.050	.035	.000	.000	1152.00	19835.30
.000765	175.	175.	175.	2	15	0	.00	1054.60	20945.90

SECNO	DEPTH	CWSEL	CRIWS	WSELK	EG	HV	HL	OLOSS	L-BANK ELEV
Q	QLOB	QCH	QROB	ALOB	ACH	AROB	VOL	TWA	R-BANK ELEV
TIME	VLOB	VCH	VROB	XNL	XNCH	XNR	WTN	ELMIN	SSTA
SLOPE	XLOBL	XLCH	XLOBR	ITRIAL	IDC	ICONT	CORAR	TOPWID	ENDST

*SECNO 224.180

3302 WARNING: CONVEYANCE CHANGE OUTSIDE OF ACCEPTABLE RANGE, KRATIO = 1.47

3470 ENCROACHMENT STATIONS= 19835.5 21084.9 TYPE= 1 TARGET= 1249.400

224.180	26.02	1178.02	1162.09	1177.97	1178.78	.76	.00	.03	1152.00
220000.0	807.3	218387.3	805.5	330.8	31212.2	330.9	2664.7	104.9	1152.00
.15	2.44	7.00	2.43	.050	.035	.050	.000	1152.00	19835.50
.000352	1.	1.	1.	2	18	0	.00	1249.40	21084.90

*SECNO 224.210

3470 ENCROACHMENT STATIONS= 19889.9 21084.9 TYPE= 1 TARGET= 1195.000

224.210	26.01	1178.01	1162.41	1177.95	1178.84	.83	.04	.02	1152.00
220000.0	831.0	218336.9	832.0	327.3	29779.8	327.2	2736.9	107.7	1152.00
.16	2.54	7.33	2.54	.050	.035	.050	.000	1152.00	19889.90
.000387	101.	101.	101.	2	18	0	.00	1195.00	21084.90

*SECNO 224.220

3265 DIVIDED FLOW

3370 NORMAL BRIDGE, NRD= 12 MIN ELTRD= 1193.90 MAX ELLC= 1192.20

3470 ENCROACHMENT STATIONS= 19890.5 21086.7 TYPE= 1 TARGET= 1196.199

224.220	25.93	1177.93	1162.85	1177.88	1178.87	.94	.00	.03	1152.00
220000.0	1096.1	217702.9	1201.0	325.2	27904.4	349.0	2737.6	107.8	1152.00
.16	3.37	7.80	3.44	.050	.035	.050	.000	1152.00	19890.50
.000679	1.	1.	1.	2	18	0	.00	1127.20	21086.70

*SECNO 224.250

3265 DIVIDED FLOW

3370 NORMAL BRIDGE, NRD= 14 MIN ELTRD= 1190.40 MAX ELLC= 1186.40

SECNO	DEPTH	CWSEL	CRIWS	WSELK	EG	HV	HL	OLOSS	L-BANK ELEV
Q	QLOB	QCH	QROB	ALOB	ACH	AROB	VOL	TWA	R-BANK ELEV
TIME	VLOB	VCH	VROB	XNL	XNCH	XNR	WTN	ELMIN	SSTA
SLOPE	XLOBL	XLCH	XLOBR	ITRIAL	IDC	ICONT	CORAR	TOPWID	ENDST

3470 ENCROACHMENT STATIONS= 19884.2 21008.3 TYPE= 1 TARGET= 1124.102

224.250	25.90	1177.90	1163.61	1177.84	1179.03	1.13	.10	.06	1184.60
220000.0	383.2	216145.4	3471.4	182.0	25161.3	757.3	2820.4	111.0	1152.00
.16	2.11	8.59	4.58	.050	.035	.050	.000	1152.00	19884.20
.000879	132.	132.	132.	2	19	0	.00	1046.10	21008.30

*SECNO 224.260

3470 ENCROACHMENT STATIONS= 19885.9 21008.5 TYPE= 1 TARGET= 1122.600

224.260	26.06	1178.06	1163.13	1178.01	1179.05	.98	.00	.01	1152.00
220000.0	1120.4	216319.3	2560.4	383.4	26973.0	766.8	2821.1	111.1	1152.00
.16	2.92	8.02	3.34	.050	.035	.050	.000	1152.00	19885.90
.000462	1.	1.	1.	2	14	0	.00	1122.60	21008.50

CCHV= .100 CEHV= .300
*SECNO 224.340

3470 ENCROACHMENT STATIONS= 19855.0 21109.1 TYPE= 1 TARGET= 1254.100

224.340	22.69	1177.99	1168.07	1178.45	1179.21	1.22	.09	.07	1164.20
220000.0	32801.4	187198.6	.0	4344.0	20641.9	.0	2929.8	115.9	100000.00
.17	7.55	9.07	.00	.030	.030	.000	.000	1155.30	19855.00
.000593	150.	180.	250.	2	11	0	.00	1254.10	21109.10

*SECNO 224.430

3470 ENCROACHMENT STATIONS= 19800.0 21156.4 TYPE= 1 TARGET= 1356.400

224.430	19.68	1178.08	1171.56	1178.47	1179.72	1.63	.38	.12	1166.40
220000.0	57830.6	162169.4	.0	6089.0	15435.9	.0	3191.7	130.6	100000.00
.18	9.50	10.51	.00	.030	.030	.000	.000	1158.40	19800.00
.001073	480.	494.	440.	2	11	0	.00	1356.40	21156.40

*SECNO 224.530

3470 ENCROACHMENT STATIONS= 19815.0 21220.0 TYPE= 1 TARGET= 1405.000

224.530	18.07	1178.67	1172.31	1179.03	1180.27	1.60	.55	.00	1166.70
220000.0	43700.4	136713.8	39585.8	4690.0	13156.4	3901.4	3443.3	146.7	1167.10
.19	9.32	10.39	10.15	.030	.030	.030	.000	1160.60	19815.00
.001084	510.	506.	500.	2	14	0	.00	1405.00	21220.00

```
 SECNO     DEPTH     CWSEL     CRIWS     WSELK     EG        HV        HL        OLOSS     L-BANK ELEV
 Q         QLOB      QCH       QROB      ALOB      ACH       AROB      VOL       TWA       R-BANK ELEV
 TIME      VLOB      VCH       VROB      XNL       XNCH      XNR       WTN       ELMIN     SSTA
 SLOPE     XLOBL     XLCH      XLOBR     ITRIAL    IDC       ICONT     CORAR     TOPWID    ENDST


*SECNO 224.620

3265 DIVIDED FLOW


3470 ENCROACHMENT STATIONS=    19770.0   21270.0  TYPE=      1  TARGET=     1500.000
  224.620     18.44   1179.24   1172.91   1178.99   1180.81      1.58       .54       .00   1170.80
 220000.0   15024.6  190968.8   14006.7    2032.1   18533.3    1488.3    3697.2     163.4   1165.70
      .21      7.39     10.30      9.41      .030      .030      .030      .000   1160.80  19770.00
 .001072      505.      505.      505.         2        14         0       .00   1489.68  21270.00


*SECNO 224.710

3301 HV CHANGED MORE THAN HVINS


3302 WARNING:  CONVEYANCE CHANGE OUTSIDE OF ACCEPTABLE RANGE,  KRATIO =  1.42


3470 ENCROACHMENT STATIONS=    19635.3   21300.0  TYPE=      1  TARGET=     1664.699
  224.710     18.54   1180.34   1171.13   1179.38   1181.24       .90       .36       .07   1172.50
 220000.0        .0  194370.1   25629.9        .0   25452.6    3438.0    3984.8     181.4   1163.40
      .23       .00      7.64      7.45      .000      .030      .030      .000   1161.80  19635.30
 .000533      620.      492.      440.         2         8         0       .00   1664.70  21300.00


CCHV=     .100 CEHV=     .300
*SECNO 224.810

3470 ENCROACHMENT STATIONS=    19365.0   21140.0  TYPE=      1  TARGET=     1775.000
  224.810     18.53   1180.63   1171.74   1179.73   1181.51       .89       .27       .00   1169.60
 220000.0    2373.3  156647.8   60978.9     548.3   20821.4    7866.2    4322.7     201.5   1164.10
      .24      4.33      7.52      7.75      .030      .030      .030      .000   1162.10  19365.00
 .000543      560.      510.      490.         2        11         0       .00   1775.00  21140.00


1490 NH CARD USED
*SECNO 224.900

3301 HV CHANGED MORE THAN HVINS
```

SECNO	DEPTH	CWSEL	CRIWS	WSELK	EG	HV	HL	OLOSS	L-BANK ELEV
Q	QLOB	QCH	QROB	ALOB	ACH	AROB	VOL	TWA	R-BANK ELEV
TIME	VLOB	VCH	VROB	XNL	XNCH	XNR	WTN	ELMIN	SSTA
SLOPE	XLOBL	XLCH	XLOBR	ITRIAL	IDC	ICONT	CORAR	TOPWID	ENDST

3302 WARNING: CONVEYANCE CHANGE OUTSIDE OF ACCEPTABLE RANGE, KRATIO = .49

3470 ENCROACHMENT STATIONS= 19025.7 20450.0 TYPE= 1 TARGET= 1424.301

224.900	17.84	1179.74	1176.39	1178.73	1182.58	2.84	.48	.59	1174.20
220000.0	.0	212519.4	7480.6	.0	15515.1	1086.0	4580.6	219.4	1176.60
.25	.00	13.70	6.89	.000	.030	.030	.000	1161.90	19025.70
.002295	515.	495.	470.	3	15	0	.00	1424.30	20450.00

1490 NH CARD USED
*SECNO 225.000

3265 DIVIDED FLOW

3470 ENCROACHMENT STATIONS= 18830.0 19930.0 TYPE= 1 TARGET= 1100.000

225.000	18.73	1180.53	1177.30	1180.02	1183.87	3.33	1.14	.15	1174.10
220000.0	2093.5	205394.9	12511.7	240.8	13839.3	1029.7	4761.3	233.7	1170.90
.26	8.70	14.84	12.15	.030	.028	.030	.000	1161.80	18830.00
.002287	500.	496.	500.	2	11	0	.00	1079.22	19930.00

1490 NH CARD USED
*SECNO 225.100

3301 HV CHANGED MORE THAN HVINS

3470 ENCROACHMENT STATIONS= 18750.0 19750.0 TYPE= 1 TARGET= 1000.000

225.100	20.05	1182.35	1176.35	1182.40	1184.86	2.51	.91	.08	1175.00
220000.0	5033.6	214966.4	.0	662.7	16783.0	.0	4952.8	246.0	100000.00
.28	7.60	12.81	.00	.030	.030	.000	.000	1162.30	18750.00
.001432	530.	511.	520.	2	15	0	.00	1000.00	19750.00

1490 NH CARD USED
*SECNO 225.190

3470 ENCROACHMENT STATIONS= 18775.0 19800.0 TYPE= 1 TARGET= 1025.000

225.190	20.32	1182.92	1177.66	1182.81	1185.70	2.78	.76	.08	1178.60
220000.0	15393.0	204607.0	.0	1894.2	14937.3	.0	5149.6	257.6	100000.00
.29	8.13	13.70	.00	.030	.030	.000	.000	1162.60	18775.00
.001599	480.	502.	485.	2	15	0	.00	1025.00	19800.00

SECNO	DEPTH	CWSEL	CRIWS	WSELK	EG	HV	HL	OLOSS	L-BANK ELEV
Q	QLOB	QCH	QROB	ALOB	ACH	AROB	VOL	TWA	R-BANK ELEV
TIME	VLOB	VCH	VROB	XNL	XNCH	XNR	WTN	ELMIN	SSTA
SLOPE	XLOBL	XLCH	XLOBR	ITRIAL	IDC	ICONT	CORAR	TOPWID	ENDST

1490 NH CARD USED
*SECNO 225.280

3265 DIVIDED FLOW

3470 ENCROACHMENT STATIONS= 18750.0 20030.0 TYPE= 1 TARGET= 1280.000

225.280	20.87	1183.87	1179.47	1183.49	1186.51	2.64	.79	.01	1176.80
220000.0	24978.5	149305.9	45715.6	3111.8	11042.6	3361.6	5339.8	270.3	1175.80
.30	8.03	13.52	13.60	.030	.030	.030	.000	1163.00	18750.00
.001696	490.	488.	430.	2	15	0	.00	1263.26	20030.00

1490 NH CARD USED
*SECNO 225.380

3470 ENCROACHMENT STATIONS= 18888.6 19839.5 TYPE= 1 TARGET= 950.900

225.380	22.15	1184.55	1178.75	1184.14	1187.36	2.81	.80	.05	1173.30
220000.0	900.4	210210.2	8889.4	152.7	15421.1	1002.9	5532.4	282.4	1176.10
.31	5.90	13.63	8.86	.030	.030	.030	.000	1162.40	18888.60
.001525	400.	519.	400.	2	15	0	.00	950.90	19839.50

1490 NH CARD USED
*SECNO 225.480

3470 ENCROACHMENT STATIONS= 18666.0 19697.9 TYPE= 1 TARGET= 1031.900

225.480	25.44	1185.74	1178.69	1185.43	1188.06	2.32	.65	.05	1184.20
220000.0	78.5	219914.1	7.4	47.1	17968.8	4.4	5733.2	293.9	1184.00
.32	1.67	12.24	1.66	.028	.028	.028	.000	1160.30	18666.00
.001108	505.	507.	460.	2	15	0	.00	1031.90	19697.90

1490 NH CARD USED
*SECNO 225.570

3301 HV CHANGED MORE THAN HVINS

3470 ENCROACHMENT STATIONS= 18720.4 19789.6 TYPE= 1 TARGET= 1069.199

225.570	29.08	1186.98	1177.10	1186.74	1188.54	1.55	.40	.08	1182.00
220000.0	.0	220000.0	.0	.0	22003.1	.0	5951.6	305.4	100000.00
.33	.00	10.00	.00	.000	.028	.000	.000	1157.90	18720.40
.000648	495.	475.	450.	2	19	0	.00	1069.20	19789.60

SECNO	DEPTH	CWSEL	CRIWS	WSELK	EG	HV	HL	OLOSS	L-BANK ELEV
Q	QLOB	QCH	QROB	ALOB	ACH	AROB	VOL	TWA	R-BANK ELEV
TIME	VLOB	VCH	VROB	XNL	XNCH	XNR	WTN	ELMIN	SSTA
SLOPE	XLOBL	XLCH	XLOBR	ITRIAL	IDC	ICONT	CORAR	TOPWID	ENDST

1490 NH CARD USED
*SECNO 225.660

3470 ENCROACHMENT STATIONS= 18802.5 19790.8 TYPE= 1 TARGET= 988.301

225.660	28.45	1187.25	1176.93	1187.03	1188.90	1.65	.33	.03	1181.80
220000.0	.0	220000.0	.0	.0	21373.9	.0	6206.9	317.5	100000.00
.35	.00	10.29	.00	.000	.028	.000	.000	1158.80	18802.50
.000645	525.	513.	520.	2	14	0	.00	988.30	19790.80

1490 NH CARD USED
*SECNO 225.760

3470 ENCROACHMENT STATIONS= 18720.5 19782.4 TYPE= 1 TARGET= 1061.900

225.760	22.39	1187.39	1179.82	1187.19	1189.38	1.99	.38	.10	1165.50
220000.0	.0	220000.0	.0	.0	19422.0	.0	6433.0	328.8	100000.00
.36	.00	11.33	.00	.000	.028	.000	.000	1165.00	18720.50
.000980	440.	483.	485.	2	11	0	.00	1061.90	19782.40

1490 NH CARD USED
*SECNO 225.850

3301 HV CHANGED MORE THAN HVINS

3302 WARNING: CONVEYANCE CHANGE OUTSIDE OF ACCEPTABLE RANGE, KRATIO = 1.42

3470 ENCROACHMENT STATIONS= 18555.0 19867.3 TYPE= 1 TARGET= 1312.301

225.850	21.91	1188.71	1178.30	1188.88	1189.81	1.10	.34	.09	1167.00
220000.0	15180.3	204819.7	.0	1934.2	24193.4	.0	6702.1	342.9	100000.00
.37	7.85	8.47	.00	.028	.028	.000	.000	1166.80	18555.00
.000483	630.	510.	505.	2	11	0	.00	1312.30	19867.30

1490 NH CARD USED
*SECNO 225.950

3470 ENCROACHMENT STATIONS= 18428.5 20039.0 TYPE= 1 TARGET= 1610.500

225.950	21.11	1189.01	1180.67	1188.81	1190.08	1.07	.27	.00	1177.90
220000.0	1315.2	218205.5	479.3	274.6	26260.8	118.1	7010.1	359.9	1173.00
.39	4.79	8.31	4.06	.028	.028	.028	.000	1167.90	18428.50
.000573	470.	510.	510.	2	14	0	.00	1610.50	20039.00

SECNO	DEPTH	CWSEL	CRIWS	WSELK	EG	HV	HL	OLOSS	L-BANK ELEV
Q	QLOB	QCH	QROB	ALOB	ACH	AROB	VOL	TWA	R-BANK ELEV
TIME	VLOB	VCH	VROB	XNL	XNCH	XNR	WTN	ELMIN	SSTA
SLOPE	XLOBL	XLCH	XLOBR	ITRIAL	IDC	ICONT	CORAR	TOPWID	ENDST

1490 NH CARD USED
*SECNO 226.040

3301 HV CHANGED MORE THAN HVINS

3302 WARNING: CONVEYANCE CHANGE OUTSIDE OF ACCEPTABLE RANGE, KRATIO = .33

3470 ENCROACHMENT STATIONS= 19384.7 20261.8 TYPE= 1 TARGET= 877.102

226.040	15.09	1188.19	1185.37	1188.06	1191.05	2.86	.43	.54	1185.00
147500.0	.0	147500.0	.0	.0	10865.9	.0	7215.3	373.5	100000.00
.40	.00	13.57	.00	.000	.028	.000	.000	1173.10	19384.70
.002316	484.	476.	480.	3	11	0	.00	877.10	20261.80

1490 NH CARD USED
*SECNO 226.130

3301 HV CHANGED MORE THAN HVINS

3470 ENCROACHMENT STATIONS= 19616.4 20439.1 TYPE= 1 TARGET= 822.699

226.130	18.33	1188.83	1187.70	1188.52	1192.87	4.04	1.47	.35	1185.00
147500.0	.0	147500.0	.0	.0	9145.5	.0	7330.6	383.3	100000.00
.41	.00	16.13	.00	.000	.028	.000	.000	1170.50	19616.40
.003798	510.	502.	500.	2	8	0	.00	822.70	20439.10

1490 NH CARD USED
*SECNO 226.230

3301 HV CHANGED MORE THAN HVINS

7185 MINIMUM SPECIFIC ENERGY
3720 CRITICAL DEPTH ASSUMED

3470 ENCROACHMENT STATIONS= 19656.4 20440.0 TYPE= 1 TARGET= 783.600

226.230	17.89	1190.19	1190.19	1190.36	1195.57	5.38	2.15	.40	1184.40
147500.0	.0	141981.7	5518.3	.0	7522.0	546.7	7428.8	392.6	1184.70
.42	.00	18.88	10.09	.000	.028	.028	.000	1172.30	19656.40
.005004	400.	493.	630.	0	5	0	.00	783.60	20440.00

SECNO	DEPTH	CWSEL	CRIWS	WSELK	EG	HV	HL	OLOSS	L-BANK ELEV
Q	QLOB	QCH	QROB	ALOB	ACH	AROB	VOL	TWA	R-BANK ELEV
TIME	VLOB	VCH	VROB	XNL	XNCH	XNR	WTN	ELMIN	SSTA
SLOPE	XLOBL	XLCH	XLOBR	ITRIAL	IDC	ICONT	CORAR	TOPWID	ENDST

1490 NH CARD USED
*SECNO 226.350

3301 HV CHANGED MORE THAN HVINS

3470 ENCROACHMENT STATIONS= 19633.4 20520.9 TYPE= 1 TARGET= 887.500

226.350	21.71	1195.11	1192.73	1194.27	1198.21	3.11	2.41	.23	1189.40
147500.0	.0	147500.0	.0	.0	10426.9	.0	7571.0	405.5	100000.00
.43	.00	14.15	.00	.000	.028	.000	.000	1173.40	19633.40
.002724	470.	667.	770.	3	8	0	.00	887.50	20520.90

1490 NH CARD USED
*SECNO 226.480

3470 ENCROACHMENT STATIONS= 19628.3 20533.2 TYPE= 1 TARGET= 904.898

226.480	15.35	1197.15	1195.51	1196.86	1200.59	3.44	2.27	.10	1196.00
147500.0	.0	147500.0	.0	.0	9907.1	.0	7749.2	421.2	100000.00
.44	.00	14.89	.00	.000	.028	.000	.000	1181.80	19628.30
.003271	550.	764.	994.	3	14	0	.00	904.90	20533.20

1490 NH CARD USED
*SECNO 226.490

3301 HV CHANGED MORE THAN HVINS

7185 MINIMUM SPECIFIC ENERGY
3720 CRITICAL DEPTH ASSUMED

3470 ENCROACHMENT STATIONS= 19639.4 20533.2 TYPE= 1 TARGET= 893.799

226.490	10.66	1196.66	1196.66	1196.67	1201.43	4.77	.00	.40	1191.40
147500.0	.0	147500.0	.0	.0	8411.5	.0	7749.4	421.3	100000.00
.44	.00	17.54	.00	.000	.028	.000	.000	1186.00	19639.40
.005570	1.	1.	1.	0	19	0	.00	893.80	20533.20

1490 NH CARD USED
*SECNO 226.500

3301 HV CHANGED MORE THAN HVINS

SECNO	DEPTH	CWSEL	CRIWS	WSELK	EG	HV	HL	OLOSS	L-BANK ELEV
Q	QLOB	QCH	QROB	ALOB	ACH	AROB	VOL	TWA	R-BANK ELEV
TIME	VLOB	VCH	VROB	XNL	XNCH	XNR	WTN	ELMIN	SSTA
SLOPE	XLOBL	XLCH	XLOBR	ITRIAL	IDC	ICONT	CORAR	TOPWID	ENDST

3470 ENCROACHMENT STATIONS= 19639.4 20533.2 TYPE= 1 TARGET= 893.799

226.500	11.68	1197.68	1196.67	1197.69	1201.57	3.89	.05	.09	1191.40
147500.0	.0	147500.0	.0	.0	9320.1	.0	7751.5	421.5	100000.00
.44	.00	15.83	.00	.000	.028	.000	.000	1186.00	19639.40
.003968	10.	10.	10.	10	5	0	.00	893.80	20533.20

*SECNO 226.510

3265 DIVIDED FLOW

3370 NORMAL BRIDGE, NRD= 19 MIN ELTRD= 1204.00 MAX ELLC= 1202.66

3470 ENCROACHMENT STATIONS= 19615.6 20548.2 TYPE= 1 TARGET= 932.600

Downstream Face of Alma School Road Bridge

226.510	11.57	1197.57	1196.64	1197.55	1201.63	4.06	.01	.05	100000.00
147500.0	.0	147500.0	.0	.0	9127.3	.0	7751.9	421.5	1201.16
.44	.00	16.16	.00	.000	.028	.000	.000	1186.00	19615.60
.006195	2.	2.	2.	2	12	0	.00	862.63	20514.91

*SECNO 226.520

3265 DIVIDED FLOW

3301 HV CHANGED MORE THAN HVINS

3370 NORMAL BRIDGE, NRD= 19 MIN ELTRD= 1204.00 MAX ELLC= 1202.66

3470 ENCROACHMENT STATIONS= 19615.6 20548.2 TYPE= 1 TARGET= 932.600

Upstream Face of Alma School Road bridge

226.520	13.00	1199.00	1196.64	1198.99	1202.15	3.15	.43	.09	100000.00
147500.0	.0	147500.0	.0	.0	10353.5	.0	7770.7	423.2	1201.16
.45	.00	14.25	.00	.000	.028	.000	.000	1186.00	19615.60
.004277	84.	84.	84.	4	12	0	.00	862.65	20514.92

SECNO	DEPTH	CWSEL	CRIWS	WSELK	EG	HV	HL	OLOSS	L-BANK ELEV
Q	QLOB	QCH	QROB	ALOB	ACH	AROB	VOL	TWA	R-BANK ELEV
TIME	VLOB	VCH	VROB	XNL	XNCH	XNR	WTN	ELMIN	SSTA
SLOPE	XLOBL	XLCH	XLOBR	ITRIAL	IDC	ICONT	CORAR	TOPWID	ENDST

1490 NH CARD USED
*SECNO 226.530

3301 HV CHANGED MORE THAN HVINS

3302 WARNING: CONVEYANCE CHANGE OUTSIDE OF ACCEPTABLE RANGE, KRATIO = 1.44

3470 ENCROACHMENT STATIONS= 19644.6 20532.1 TYPE= 1 TARGET= 887.500

226.530	13.57	1199.57	1196.27	1199.67	1202.21	2.63	.01	.05	1188.30
147500.0	.0	147500.0	.0	.0	11326.0	.0	7771.2	423.2	100000.00
.45	.00	13.02	.00	.000	.028	.000	.000	1186.00	19644.60
.002075	2.	2.	2.	3	15	0	.00	887.50	20532.10

1490 NH CARD USED
*SECNO 226.610

3470 ENCROACHMENT STATIONS= 19623.6 20542.5 TYPE= 1 TARGET= 918.900

226.610	13.86	1200.86	1196.89	1200.87	1203.14	2.28	.90	.04	1190.60
147500.0	.0	147500.0	.0	.0	12170.2	.0	7900.1	433.1	100000.00
.46	.00	12.12	.00	.000	.028	.000	.000	1187.00	19623.60
.001716	560.	478.	360.	2	15	0	.00	918.90	20542.50

1490 NH CARD USED
*SECNO 226.700

3470 ENCROACHMENT STATIONS= 19621.8 20560.2 TYPE= 1 TARGET= 938.398

226.700	13.72	1201.72	1198.03	1202.15	1204.05	2.33	.89	.01	1191.80
147500.0	.0	147500.0	.0	.0	12047.2	.0	8040.2	443.9	100000.00
.47	.00	12.24	.00	.000	.028	.000	.000	1188.00	19621.80
.001824	490.	504.	510.	2	15	0	.00	938.40	20560.20

1490 NH CARD USED
*SECNO 226.800

3301 HV CHANGED MORE THAN HVINS

7185 MINIMUM SPECIFIC ENERGY
3720 CRITICAL DEPTH ASSUMED

SECNO	DEPTH	CWSEL	CRIWS	WSELK	EG	HV	HL	OLOSS	L-BANK ELEV
Q	QLOB	QCH	QROB	ALOB	ACH	AROB	VOL	TWA	R-BANK ELEV
TIME	VLOB	VCH	VROB	XNL	XNCH	XNR	WTN	ELMIN	SSTA
SLOPE	XLOBL	XLCH	XLOBR	ITRIAL	IDC	ICONT	CORAR	TOPWID	ENDST

3470 ENCROACHMENT STATIONS= 19621.0 20537.0 TYPE= 1 TARGET= 916.000

226.800	9.92	1201.62	1201.62	1201.55	1206.28	4.66	1.44	.70	1194.20
147500.0	.0	147500.0	.0	.0	8513.9	.0	8155.2	454.2	100000.00
.48	.00	17.32	.00	.000	.028	.000	.000	1191.70	19621.00
.005588	560.	487.	480.	0	15	0	.00	916.00	20537.00

1490 NH CARD USED
*SECNO 226.890

3301 HV CHANGED MORE THAN HVINS

3470 ENCROACHMENT STATIONS= 19600.1 20464.2 TYPE= 1 TARGET= 864.100

226.890	12.66	1205.16	1202.99	1205.16	1208.41	3.25	1.99	.14	1193.10
147500.0	.0	147500.0	.0	.0	10192.8	.0	8264.9	464.7	100000.00
.49	.00	14.47	.00	.000	.028	.000	.000	1192.50	19600.10
.002868	550.	511.	525.	3	8	0	.00	864.10	20464.20

1490 NH CARD USED
*SECNO 226.990

3301 HV CHANGED MORE THAN HVINS

3470 ENCROACHMENT STATIONS= 19395.3 20492.4 TYPE= 1 TARGET= 1097.100

226.990	12.32	1206.02	1204.80	1205.67	1210.39	4.37	1.64	.34	1200.50
220000.0	.0	220000.0	.0	.0	13114.5	.0	8396.5	475.7	100000.00
.49	.00	16.78	.00	.000	.028	.000	.000	1193.70	19395.30
.003714	170.	492.	490.	3	11	0	.00	1097.10	20492.40

1490 NH CARD USED
*SECNO 227.080

3301 HV CHANGED MORE THAN HVINS

7185 MINIMUM SPECIFIC ENERGY
3720 CRITICAL DEPTH ASSUMED

3470 ENCROACHMENT STATIONS= 19650.0 20520.0 TYPE= 1 TARGET= 870.000

SECNO	DEPTH	CWSEL	CRIWS	WSELK	EG	HV	HL	OLOSS	L-BANK ELEV
Q	QLOB	QCH	QROB	ALOB	ACH	AROB	VOL	TWA	R-BANK ELEV
TIME	VLOB	VCH	VROB	XNL	XNCH	XNR	WTN	ELMIN	SSTA
SLOPE	XLOBL	XLCH	XLOBR	ITRIAL	IDC	ICONT	CORAR	TOPWID	ENDST
227.080	13.95	1208.05	1208.05	1207.78	1214.36	6.31	2.13	.58	1195.60
220000.0	12290.6	198570.3	9139.1	675.3	9680.4	654.1	8537.0	487.2	1200.90
.50	18.20	20.51	13.97	.028	.028	.028	.000	1194.10	19650.00
.004812	585.	505.	500.	0	8	0	.00	870.00	20520.00

1490 NH CARD USED
*SECNO 227.180
3280 CROSS SECTION 227.18 EXTENDED 2.36 FEET

3301 HV CHANGED MORE THAN HVINS

3302 WARNING: CONVEYANCE CHANGE OUTSIDE OF ACCEPTABLE RANGE, KRATIO = 1.62

3470 ENCROACHMENT STATIONS= 19600.0 20565.0 TYPE= 1 TARGET= 965.000

227.180	18.36	1212.86	1208.71	1211.83	1216.10	3.24	1.43	.31	1201.80
220000.0	666.4	218376.1	957.6	97.0	15084.9	133.0	8690.7	497.9	1201.90
.51	6.87	14.48	7.20	.028	.028	.028	.000	1194.50	19600.00
.001832	500.	509.	505.	4	5	0	.00	965.00	20565.00

1490 NH CARD USED
*SECNO 227.270

3301 HV CHANGED MORE THAN HVINS

3470 ENCROACHMENT STATIONS= 19563.0 20600.0 TYPE= 1 TARGET= 1037.000

227.270	20.89	1214.59	1208.15	1214.00	1216.91	2.31	.72	.09	1212.90
220000.0	.0	219643.0	357.0	.0	17979.8	78.8	8881.4	509.3	1207.90
.52	.00	12.22	4.53	.000	.028	.028	.000	1193.70	19563.00
.001168	780.	499.	170.	2	15	0	.00	1037.00	20600.00

1490 NH CARD USED
*SECNO 227.370

3301 HV CHANGED MORE THAN HVINS

SECNO	DEPTH	CWSEL	CRIWS	WSELK	EG	HV	HL	OLOSS	L-BANK ELEV
Q	QLOB	QCH	QROB	ALOB	ACH	AROB	VOL	TWA	R-BANK ELEV
TIME	VLOB	VCH	VROB	XNL	XNCH	XNR	WTN	ELMIN	SSTA
SLOPE	XLOBL	XLCH	XLOBR	ITRIAL	IDC	ICONT	CORAR	TOPWID	ENDST

3470 ENCROACHMENT STATIONS= 19222.0 20418.0 TYPE= 1 TARGET= 1196.000

227.370	21.70	1215.70	1208.20	1215.65	1217.48	1.78	.52	.05	1211.90
220000.0	28056.6	191943.4	.0	3407.2	17418.8	.0	9111.8	522.6	100000.00
.54	8.23	11.02	.00	.030	.028	.000	.000	1194.00	19222.00
.000883	590.	510.	425.	2	19	0	.00	1196.00	20418.00

1490 NH CARD USED
*SECNO 227.460

3265 DIVIDED FLOW

3470 ENCROACHMENT STATIONS= 19090.0 20442.8 TYPE= 1 TARGET= 1352.801

227.460	21.99	1216.09	1208.02	1215.84	1217.91	1.83	.42	.01	1209.90
220000.0	14959.5	205040.4	.0	2817.0	18398.8	.0	9346.7	536.1	100000.00
.55	5.31	11.14	.00	.030	.028	.000	.000	1194.10	19090.00
.000809	370.	507.	550.	2	14	0	.00	1315.22	20442.80

1490 NH CARD USED
*SECNO 227.560
WATER EL=X5 CARD= 1218.300
3280 CROSS SECTION 227.56 EXTENDED 2.10 FEET

3301 HV CHANGED MORE THAN HVINS

3302 WARNING: CONVEYANCE CHANGE OUTSIDE OF ACCEPTABLE RANGE, KRATIO = 1.48

3470 ENCROACHMENT STATIONS= 18957.2 20525.0 TYPE= 1 TARGET= 1567.801
Downstream of Country Club Drive Bridge

227.560	23.70	1218.30	1207.48	1217.30	1219.20	.90	.24	.09	1205.00
220000.0	32319.7	186237.4	1442.9	6167.8	23406.4	362.6	9593.1	548.3	1206.50
.57	5.24	7.96	3.98	.032	.028	.028	.000	1194.60	18957.20
.000370	90.	491.	385.	0	11	0	.00	1567.80	20525.00

THIS RUN EXECUTED 11SEP95 07:53:35

****
HEC-2 WATER SURFACE PROFILES

Version 4.6.2; May 1991
****

NOTE- ASTERISK (*) AT LEFT OF CROSS-SECTION NUMBER INDICATES MESSAGE IN SUMMARY OF ERRORS LIST

ASE MODEL PREPARED BY MI

SUMMARY PRINTOUT

	SECNO	CWSEL	VLOB	VCH	VROB	QLOB	QCH	QROB	Q	TOPWID	SSTA	ENDST
	223.100	1166.93	4.80	12.07	.00	1341.37	213658.60	.00	215000.00	1061.05	9925.44	10986.49
	223.100	1166.93	.00	12.15	.00	.00	215000.00	.00	215000.00	1013.49	9973.00	10986.49
	223.190	1168.09	6.45	11.46	.01	2670.39	212329.60	.00	215000.00	925.92	19450.00	20421.07
	223.190	1168.15	6.43	11.42	.00	2669.09	212330.90	.00	215000.00	925.15	19450.00	20420.30
	223.290	1167.21	7.69	14.61	1.11	3140.42	211843.10	16.50	215000.00	737.63	19560.00	20342.61
	223.290	1167.28	7.66	14.56	1.26	3137.72	211841.60	20.63	215000.00	735.02	19560.00	20340.00
	223.380	1168.66	.47	14.49	1.90	.07	214963.00	36.90	215000.00	638.77	19638.95	20320.55
	223.380	1168.71	.00	14.45	1.98	.00	214960.20	39.82	215000.00	637.37	19639.80	20320.00
	223.480	1170.84	1.22	12.79	1.38	15.84	214903.30	80.88	215000.00	807.85	19545.01	20396.52
	223.480	1170.88	.00	12.77	1.41	.00	214913.60	86.41	215000.00	791.04	19561.80	20396.50
*	223.580	1171.07	.00	17.40	2.38	.00	214745.00	255.02	215000.00	699.77	19704.50	20470.00
*	223.580	1171.09	.00	17.40	.00	.00	215000.00	.00	215000.00	598.84	19704.50	20348.04
*	223.670	1175.72	1.72	9.40	.00	42.86	214957.10	.00	215000.00	841.89	19478.01	20364.50
*	223.670	1175.75	.00	9.39	.00	.00	215000.00	.00	215000.00	833.60	19486.30	20364.50
*	223.770	1176.55	1.09	7.61	1.60	27.52	211689.50	3282.95	215000.00	1431.74	19467.30	20956.45
*	223.770	1176.55	.00	7.73	.00	.00	215000.00	.00	215000.00	870.10	19475.00	20389.70
	223.860	1176.86	1.37	7.06	1.61	186.90	212467.00	2346.07	215000.00	1400.41	19346.37	20791.70
	223.860	1176.88	.00	7.13	.00	.00	215000.00	.00	215000.00	1066.69	19380.30	20491.90
	223.960	1177.02	.75	7.04	1.64	9.93	212646.60	2343.45	215000.00	1288.41	19596.79	20885.20
	223.960	1177.05	.00	7.12	.00	.00	215000.00	.00	215000.00	997.10	19603.40	20600.50
	224.050	1176.97	1.37	8.51	2.67	49.38	218808.00	1142.61	220000.00	1018.06	19781.93	20800.00
	224.050	1177.00	.00	8.54	.00	.00	220000.00	.00	220000.00	958.20	19792.30	20750.50

	SECNO	CWSEL	VLOB	VCH	VROB	QLOB	QCH	QROB	Q	TOPWID	SSTA	ENDST
	224.080	1177.25	2.61	8.07	3.04	671.00	218077.30	1251.78	220000.00	1122.95	19869.63	20992.59
	224.080	1177.31	2.60	8.05	3.04	673.02	218070.90	1256.14	220000.00	1122.80	19869.70	20992.50
	224.090	1177.15	3.50	8.64	4.08	893.32	217440.10	1666.56	220000.00	1052.74	19869.71	20992.46
	224.090	1177.21	3.50	8.62	4.08	896.56	217430.70	1672.76	220000.00	1052.60	19869.80	20992.40
	224.110	1177.24	3.67	8.63	3.67	1141.46	217717.10	1141.46	220000.00	1048.72	19925.64	21034.36
	224.110	1177.30	3.67	8.61	3.67	1145.49	217709.20	1145.37	220000.00	1048.60	19925.70	21034.30
	224.120	1177.39	2.82	8.11	2.82	887.55	218224.90	887.55	220000.00	1109.02	19925.49	21034.51
	224.120	1177.44	2.81	8.10	2.81	890.03	218220.00	889.94	220000.00	1109.00	19925.50	21034.50
	224.150	1177.69	2.46	7.09	2.46	794.14	218411.70	794.14	220000.00	1249.63	19835.19	21084.81
	224.150	1177.75	2.46	7.07	2.46	796.26	218407.60	796.18	220000.00	1249.60	19835.20	21084.80
*	224.160	1177.48	3.58	8.34	.00	1134.80	218865.20	.00	220000.00	1054.59	19835.39	20945.98
*	224.160	1177.54	3.57	8.32	.00	1138.40	218861.60	.00	220000.00	1054.50	19835.40	20945.90
	224.170	1177.63	3.52	8.29	.10	1128.84	218871.00	.10	220000.00	1054.73	19835.25	20945.98
	224.170	1177.69	3.56	8.27	.00	1146.58	218853.40	.00	220000.00	1054.60	19835.30	20945.90
*	224.180	1177.97	2.44	7.01	2.44	802.54	218394.90	802.54	220000.00	1250.16	19834.92	21085.08
*	224.180	1178.02	2.44	7.00	2.43	807.26	218387.30	805.48	220000.00	1249.40	19835.50	21084.90
	224.210	1177.95	2.54	7.35	2.54	828.83	218342.30	828.83	220000.00	1195.23	19889.88	21085.12
	224.210	1178.01	2.54	7.33	2.54	831.03	218336.90	832.03	220000.00	1195.00	19889.90	21084.90
	224.220	1177.88	3.36	7.82	3.44	1089.49	217714.40	1196.16	220000.00	1127.90	19889.96	21086.86
	224.220	1177.93	3.37	7.80	3.44	1096.08	217702.90	1201.00	220000.00	1127.20	19890.50	21086.70
	224.250	1177.84	2.11	8.61	4.59	381.44	216160.00	3458.49	220000.00	1046.44	19883.92	21008.36
	224.250	1177.90	2.11	8.59	4.58	383.17	216145.40	3471.44	220000.00	1046.10	19884.20	21008.30
	224.260	1178.01	2.92	8.04	3.34	1115.56	216335.00	2549.40	220000.00	1123.08	19885.64	21008.72
	224.260	1178.06	2.92	8.02	3.34	1120.39	216319.30	2560.38	220000.00	1122.60	19885.90	21008.50
	224.340	1178.45	5.58	6.63	6.52	39682.74	139972.00	40345.25	220000.00	1717.62	19684.48	21402.10
	224.340	1177.99	7.55	9.07	.00	32801.44	187198.60	.00	220000.00	1254.10	19855.00	21109.10
	224.430	1178.47	6.85	7.86	7.80	49365.09	124017.40	46617.54	220000.00	1825.51	19668.29	21493.80
	224.430	1178.08	9.50	10.51	.00	57830.62	162169.40	.00	220000.00	1356.40	19800.00	21156.40
	224.530	1179.03	5.53	6.37	6.51	47670.48	85652.26	86677.26	220000.00	2273.72	19483.18	21756.90
	224.530	1178.67	9.32	10.39	10.15	43700.43	136713.80	39585.80	220000.00	1405.00	19815.00	21220.00
	224.620	1178.99	5.97	8.57	8.53	32387.67	156353.10	31259.24	220000.00	2023.69	19364.28	21400.00
	224.620	1179.24	7.39	10.30	9.41	15024.56	190968.80	14006.67	220000.00	1489.68	19770.00	21270.00
	224.710	1179.38	2.66	8.08	7.86	131.37	194342.60	25526.00	220000.00	1679.03	19620.97	21300.00
*	224.710	1180.34	.00	7.64	7.45	.00	194370.10	25629.92	220000.00	1664.70	19635.30	21300.00

	SECNO	CWSEL	VLOB	VCH	VROB	QLOB	QCH	QROB	Q	TOPWID	SSTA	ENDST
	224.810	1179.73	3.68	7.93	8.19	2481.32	156301.10	61217.61	220000.00	1904.33	19235.66	21140.00
	224.810	1180.63	4.33	7.52	7.75	2373.33	156647.80	60978.89	220000.00	1775.00	19365.00	21140.00
*	224.900	1178.73	6.16	14.69	7.69	2692.34	211324.60	5983.08	220000.00	1531.52	18901.67	20450.00
*	224.900	1179.74	.00	13.70	6.89	.00	212519.40	7480.60	220000.00	1424.30	19025.70	20450.00
	225.000	1180.02	12.46	15.14	.00	18008.35	201991.70	.00	220000.00	1118.53	18705.31	19847.70
	225.000	1180.53	8.70	14.84	12.15	2093.47	205394.90	12511.68	220000.00	1079.22	18830.00	19930.00
*	225.100	1182.40	7.91	12.04	.00	17463.01	202537.00	.00	220000.00	1198.69	18551.30	19750.00
	225.100	1182.35	7.60	12.81	.00	5033.55	214966.40	.00	220000.00	1000.00	18750.00	19750.00
	225.190	1182.81	8.41	13.20	.21	23929.37	196070.50	.16	220000.00	1119.11	18680.96	19800.07
	225.190	1182.92	8.13	13.70	.00	15393.03	204607.00	.00	220000.00	1025.00	18775.00	19800.00
	225.280	1183.49	8.31	13.62	13.73	27759.35	147029.90	45210.77	220000.00	1314.09	18693.86	20030.00
	225.280	1183.87	8.03	13.52	13.60	24978.52	149305.90	45715.58	220000.00	1263.26	18750.00	20030.00
	225.380	1184.14	5.89	13.96	8.98	834.94	210561.30	8603.74	220000.00	951.38	18888.52	19839.89
	225.380	1184.55	5.90	13.63	8.86	900.39	210210.20	8889.42	220000.00	950.90	18888.60	19839.50
	225.480	1185.43	1.32	12.45	1.41	41.54	219954.10	4.39	220000.00	1031.98	18665.97	19697.95
	225.480	1185.74	1.67	12.24	1.66	78.49	219914.10	7.37	220000.00	1031.90	18666.00	19697.90
	225.570	1186.74	2.27	10.11	.00	52.61	219947.40	.00	220000.00	1078.94	18710.66	19789.60
	225.570	1186.98	.00	10.00	.00	.00	220000.00	.00	220000.00	1069.20	18720.40	19789.60
	225.660	1187.03	2.69	10.38	.00	425.48	219574.50	.00	220000.00	1046.02	18744.78	19790.80
	225.660	1187.25	.00	10.29	.00	.00	220000.00	.00	220000.00	988.30	18802.50	19790.80
	225.760	1187.19	6.96	11.33	2.95	2189.83	217701.70	108.50	220000.00	1105.37	18691.47	19796.84
	225.760	1187.39	.00	11.33	.00	.00	220000.00	.00	220000.00	1061.90	18720.50	19782.40
*	225.850	1188.88	6.74	6.54	2.84	59710.18	159539.40	750.40	220000.00	1713.93	18204.12	19918.05
*	225.850	1188.71	7.85	8.47	.00	15180.32	204819.70	.00	220000.00	1312.30	18555.00	19867.30
*	225.950	1188.81	4.47	8.32	3.85	2190.49	215696.20	2113.31	220000.00	1758.56	18380.46	20139.03
	225.950	1189.01	4.79	8.31	4.06	1315.22	218205.50	479.27	220000.00	1610.50	18428.50	20039.00
*	226.040	1188.06	3.34	13.39	7.04	138.71	144069.10	3292.14	147500.00	1008.48	19357.63	20366.11
*	226.040	1188.19	.00	13.57	.00	.00	147500.00	.00	147500.00	877.10	19384.70	20261.80
	226.130	1188.52	4.55	16.52	5.91	52.82	146902.90	544.27	147500.00	872.27	19609.81	20482.08
	226.130	1188.83	.00	16.13	.00	.00	147500.00	.00	147500.00	822.70	19616.40	20439.10
*	226.230	1190.36	6.53	17.98	9.38	184.89	137268.30	10046.83	147500.00	918.85	19646.89	20565.75
*	226.230	1190.19	.00	18.88	10.09	.00	141981.70	5518.32	147500.00	783.60	19656.40	20440.00
	226.350	1194.27	4.45	15.15	7.74	53.58	146735.40	711.06	147500.00	913.93	19628.45	20542.38
	226.350	1195.11	.00	14.15	.00	.00	147500.00	.00	147500.00	887.50	19633.40	20520.90

	SECNO	CWSEL	VLOB	VCH	VROB	QLOB	QCH	QROB	Q	TOPWID	SSTA	ENDST
	226.480	1196.86	1.68	15.28	1.75	1.28	147496.70	2.02	147500.00	909.32	19626.55	20535.87
	226.480	1197.15	.00	14.89	.00	.00	147500.00	.00	147500.00	904.90	19628.30	20533.20
*	226.490	1196.67	7.03	17.49	1.83	211.75	147287.00	1.26	147500.00	907.29	19627.97	20535.26
*	226.490	1196.66	.00	17.54	.00	.00	147500.00	.00	147500.00	893.80	19639.40	20533.20
	226.500	1197.69	6.67	15.78	2.86	285.36	147202.20	12.45	147500.00	912.61	19625.77	20538.38
	226.500	1197.68	.00	15.83	.00	.00	147500.00	.00	147500.00	893.80	19639.40	20533.20
	226.510	1197.55	.00	16.20	.00	.00	147500.00	.00	147500.00	862.63	19615.60	20514.91
	226.510	1197.57	.00	16.16	.00	.00	147500.00	.00	147500.00	862.63	19615.60	20514.91
	226.520	1198.99	.00	14.25	.00	.00	147500.00	.00	147500.00	862.65	19615.60	20514.92
	226.520	1199.00	.00	14.25	.00	.00	147500.00	.00	147500.00	862.65	19615.60	20514.92
*	226.530	1199.67	6.94	12.84	4.02	912.18	146457.80	130.03	147500.00	924.19	19621.48	20545.67
*	226.530	1199.57	.00	13.02	.00	.00	147500.00	.00	147500.00	887.50	19644.60	20532.10
	226.610	1200.87	5.85	12.00	6.23	506.44	146177.10	816.42	147500.00	962.55	19604.06	20566.61
	226.610	1200.86	.00	12.12	.00	.00	147500.00	.00	147500.00	918.90	19623.60	20542.50
	226.700	1202.15	4.87	10.71	8.91	596.72	133410.30	13492.96	147500.00	1121.87	19598.14	20720.01
	226.700	1201.72	.00	12.24	.00	.00	147500.00	.00	147500.00	938.40	19621.80	20560.20
*	226.800	1201.55	8.33	17.24	10.33	350.87	145630.70	1518.45	147500.00	960.68	19609.53	20570.22
*	226.800	1201.62	.00	17.32	.00	.00	147500.00	.00	147500.00	916.00	19621.00	20537.00
*	226.890	1205.16	.58	13.98	10.05	.69	142420.90	5078.38	147500.00	948.73	19600.00	20548.73
	226.890	1205.16	.00	14.47	.00	.00	147500.00	.00	147500.00	864.10	19600.10	20464.20
	226.990	1205.67	6.06	17.20	6.97	218.99	219075.40	705.58	220000.00	1144.43	19381.33	20525.76
	226.990	1206.02	.00	16.78	.00	.00	220000.00	.00	220000.00	1097.10	19395.30	20492.40
*	227.080	1207.78	18.73	19.92	13.14	19601.39	188758.50	11640.14	220000.00	962.61	19604.72	20567.33
*	227.080	1208.05	18.20	20.51	13.97	12290.60	198570.30	9139.08	220000.00	870.00	19650.00	20520.00
*	227.180	1211.83	7.37	15.45	6.99	915.11	218253.60	831.32	220000.00	985.01	19585.02	20570.03
*	227.180	1212.86	6.87	14.48	7.20	666.39	218376.10	957.56	220000.00	965.00	19600.00	20565.00
	227.270	1214.00	1.11	12.64	4.12	.89	219676.90	322.18	220000.00	1047.45	19561.55	20609.00
	227.270	1214.59	.00	12.22	4.53	.00	219643.00	356.97	220000.00	1037.00	19563.00	20600.00
	227.370	1215.65	7.35	10.11	2.73	44256.36	175576.80	166.90	220000.00	1490.80	18950.00	20440.80
	227.370	1215.70	8.23	11.02	.00	28056.59	191943.40	.00	220000.00	1196.00	19222.00	20418.00
	227.460	1215.84	4.26	10.92	3.04	21143.38	198449.70	406.93	220000.00	2028.33	18450.00	20517.55
	227.460	1216.09	5.31	11.14	.00	14959.55	205040.40	.00	220000.00	1315.22	19090.00	20442.80
*	227.560	1217.30	4.08	7.79	3.18	44317.64	173928.40	1753.98	220000.00	2497.90	18100.00	20597.90
*	227.560	1218.30	5.24	7.96	3.98	32319.74	186237.40	1442.89	220000.00	1567.80	18957.20	20525.00

ASE MODEL PREPARED BY MI

SUMMARY PRINTOUT

	SECNO	CWSEL	CRIWS	EG	ELMIN	DEPTH	10*KS	K*CHSL	XLCH	SHEAR	FRCH
	223.100	1166.93	1160.51	1169.18	1147.30	19.63	17.93	.00	.00	1.95	.51
	223.100	1166.93	1160.47	1169.22	1147.30	19.63	18.34	.00	.00	2.00	.51
	223.190	1168.09	1158.41	1170.11	1142.00	26.09	17.32	-10.30	514.62	2.11	.46
	223.190	1168.15	1158.41	1170.16	1142.00	26.15	17.15	-10.30	514.62	2.09	.46
	223.290	1167.21	1159.98	1170.49	1140.00	27.21	30.59	-2000.00	.00	3.75	.58
	223.290	1167.28	1159.98	1170.54	1140.00	27.28	30.29	-2000.00	.00	3.73	.58
	223.380	1168.66	1159.24	1171.92	1132.00	36.66	28.73	-16.64	480.81	3.99	.54
	223.380	1168.71	1159.24	1171.95	1132.00	36.71	28.56	-16.64	480.81	3.98	.54
	223.480	1170.84	1158.36	1173.38	1132.00	38.84	24.15	.00	527.72	3.32	.48
	223.480	1170.88	1158.36	1173.41	1132.00	38.88	24.08	.00	527.72	3.31	.48
*	223.580	1171.07	1165.25	1175.76	1138.00	33.07	54.15	11.97	501.29	6.47	.70
*	223.580	1171.09	1165.20	1175.79	1138.00	33.09	54.09	11.97	501.29	6.48	.70
*	223.670	1175.72	1157.88	1177.09	1132.70	43.02	10.20	-10.60	500.21	1.66	.32
*	223.670	1175.75	1157.88	1177.12	1132.70	43.05	10.23	-10.60	500.21	1.66	.32
*	223.770	1176.55	1155.02	1177.44	1134.10	42.45	3.98	2.80	500.00	.76	.24
*	223.770	1176.55	1155.02	1177.47	1134.10	42.45	4.14	2.80	500.00	.79	.25
	223.860	1176.86	1157.77	1177.62	1136.00	40.86	3.26	3.93	483.09	.55	.24
	223.860	1176.88	1157.77	1177.67	1136.00	40.88	3.36	3.93	483.09	.57	.24
	223.960	1177.02	1157.43	1177.79	1140.00	37.02	3.06	7.78	514.21	.58	.23
	223.960	1177.05	1157.43	1177.84	1140.00	37.05	3.15	7.78	514.21	.59	.23
	224.050	1176.97	1161.41	1178.09	1141.10	35.87	5.13	2.22	495.40	.86	.29
	224.050	1177.00	1161.41	1178.14	1141.10	35.90	5.28	2.22	495.40	.88	.29
	224.080	1177.25	1162.89	1178.26	1152.00	25.25	4.88	34.38	317.00	.77	.28
	224.080	1177.31	1162.89	1178.31	1152.00	25.31	4.84	34.38	317.00	.76	.28
	224.090	1177.15	1163.43	1178.30	1152.00	25.15	8.83	.00	1.00	1.30	.31
	224.090	1177.21	1163.43	1178.36	1152.00	25.21	8.77	.00	1.00	1.29	.31
	224.110	1177.24	1163.40	1178.39	1152.00	25.24	8.37	.00	98.00	1.24	.31
	224.110	1177.30	1163.40	1178.44	1152.00	25.30	8.31	.00	98.00	1.24	.31
	224.120	1177.39	1162.97	1178.40	1152.00	25.39	4.89	.00	1.00	.78	.28
	224.120	1177.44	1162.98	1178.45	1152.00	25.44	4.86	.00	1.00	.77	.28
	224.150	1177.69	1162.09	1178.47	1152.00	25.69	3.67	.00	103.00	.59	.25
	224.150	1177.75	1162.10	1178.52	1152.00	25.75	3.65	.00	103.00	.59	.25

	SECNO	CWSEL	CRIWS	EG	ELMIN	DEPTH	10*KS	K*CHSL	XLCH	SHEAR	FRCH
*	224.160	1177.48	1163.18	1178.56	1152.00	25.48	7.84	.00	1.00	1.18	.30
*	224.160	1177.54	1163.18	1178.61	1152.00	25.54	7.79	.00	1.00	1.18	.30
	224.170	1177.63	1163.22	1178.69	1152.00	25.63	7.52	.00	175.00	1.14	.30
	224.170	1177.69	1163.22	1178.75	1152.00	25.69	7.65	.00	175.00	1.16	.30
*	224.180	1177.97	1162.10	1178.73	1152.00	25.97	3.55	.00	1.00	.57	.24
*	224.180	1178.02	1162.09	1178.78	1152.00	26.02	3.52	.00	1.00	.57	.24
	224.210	1177.95	1162.41	1178.79	1152.00	25.95	3.90	.00	101.00	.63	.25
	224.210	1178.01	1162.41	1178.84	1152.00	26.01	3.87	.00	101.00	.63	.25
	224.220	1177.88	1162.85	1178.82	1152.00	25.88	6.84	.00	1.00	1.04	.28
	224.220	1177.93	1162.85	1178.87	1152.00	25.93	6.79	.00	1.00	1.03	.28
	224.250	1177.84	1163.61	1178.98	1152.00	25.84	8.85	.00	132.00	1.32	.31
	224.250	1177.90	1163.61	1179.03	1152.00	25.90	8.79	.00	132.00	1.32	.31
	224.260	1178.01	1163.13	1178.99	1152.00	26.01	4.65	.00	1.00	.75	.28
	224.260	1178.06	1163.13	1179.05	1152.00	26.06	4.62	.00	1.00	.75	.28
	224.340	1178.45	1166.29	1179.10	1155.30	23.15	3.02	18.33	180.00	.40	.25
	224.340	1177.99	1168.07	1179.21	1155.30	22.69	5.93	18.33	180.00	.78	.35
	224.430	1178.47	1169.85	1179.37	1158.40	20.07	5.71	6.28	493.66	.61	.33
	224.430	1178.08	1171.56	1179.72	1158.40	19.68	10.73	6.28	493.66	1.13	.45
	224.530	1179.03	1169.96	1179.64	1160.60	18.43	3.95	4.35	506.30	.41	.28
	224.530	1178.67	1172.31	1180.27	1160.60	18.07	10.84	4.35	506.30	1.09	.46
	224.620	1178.99	1172.25	1180.04	1160.80	18.19	7.56	.40	504.94	.75	.38
	224.620	1179.24	1172.91	1180.81	1160.80	18.44	10.72	.40	504.94	1.07	.45
	224.710	1179.38	1171.10	1180.39	1161.80	17.58	6.40	2.03	491.63	.66	.35
*	224.710	1180.34	1171.13	1181.24	1161.80	18.54	5.33	2.03	491.63	.58	.32
	224.810	1179.73	1171.75	1180.72	1162.10	17.63	6.49	.59	509.81	.64	.35
	224.810	1180.63	1171.74	1181.51	1162.10	18.53	5.43	.59	509.81	.56	.32
*	224.900	1178.73	1176.55	1181.98	1161.90	16.83	28.99	-.40	494.86	2.33	.72
*	224.900	1179.74	1176.39	1182.58	1161.90	17.84	22.95	-.40	494.86	1.99	.65
	225.000	1180.02	1177.54	1183.48	1161.80	18.22	28.81	-.20	496.25	2.42	.73
	225.000	1180.53	1177.30	1183.87	1161.80	18.73	22.87	-.20	496.25	1.99	.70
*	225.100	1182.40	1176.43	1184.55	1162.30	20.10	12.61	.98	511.45	1.42	.50
	225.100	1182.35	1176.35	1184.86	1162.30	20.05	14.32	.98	511.45	1.61	.53
	225.190	1182.81	1177.56	1185.34	1162.60	20.21	14.49	.60	502.05	1.68	.54
	225.190	1182.92	1177.66	1185.70	1162.60	20.32	15.99	.60	502.05	1.87	.56

	SECNO	CWSEL	CRIWS	EG	ELMIN	DEPTH	10*KS	K*CHSL	XLCH	SHEAR	FRCH
	225.280	1183.49	1179.44	1186.15	1163.00	20.49	17.75	.82	487.64	1.86	.59
	225.280	1183.87	1179.47	1186.51	1163.00	20.87	16.96	.82	487.64	1.82	.57
	225.380	1184.14	1178.75	1187.09	1162.40	21.74	16.48	-1.16	518.68	1.90	.57
	225.380	1184.55	1178.75	1187.36	1162.40	22.15	15.25	-1.16	518.68	1.79	.55
	225.480	1185.43	1178.69	1187.84	1160.30	25.13	11.72	-4.14	507.13	1.32	.52
	225.480	1185.74	1178.69	1188.06	1160.30	25.44	11.08	-4.14	507.13	1.27	.50
	225.570	1186.74	1177.10	1188.33	1157.90	28.84	6.69	-5.05	475.36	.85	.40
	225.570	1186.98	1177.10	1188.54	1157.90	29.08	6.48	-5.05	475.36	.83	.39
	225.660	1187.03	1176.93	1188.70	1158.80	28.23	6.60	1.76	512.77	.88	.40
	225.660	1187.25	1176.93	1188.90	1158.80	28.45	6.45	1.76	512.77	.87	.39
	225.760	1187.19	1179.76	1189.17	1165.00	22.19	9.61	12.84	482.78	1.09	.47
	225.760	1187.39	1179.82	1189.38	1165.00	22.39	9.80	12.84	482.78	1.12	.47
*	225.850	1188.88	1176.90	1189.55	1166.80	22.08	2.82	3.53	509.56	.35	.26
*	225.850	1188.71	1178.30	1189.81	1166.80	21.91	4.83	3.53	509.56	.60	.34
*	225.950	1188.81	1180.67	1189.87	1167.90	20.91	5.83	2.16	509.99	.60	.36
	225.950	1189.01	1180.67	1190.08	1167.90	21.11	5.73	2.16	509.99	.60	.36
*	226.040	1188.06	1185.43	1190.80	1173.10	14.96	22.66	10.91	476.46	1.73	.67
*	226.040	1188.19	1185.37	1191.05	1173.10	15.09	23.16	10.91	476.46	1.79	.68
	226.130	1188.52	1187.79	1192.74	1170.50	18.02	40.84	-5.18	502.01	2.76	.89
	226.130	1188.83	1187.70	1192.87	1170.50	18.33	37.98	-5.18	502.01	2.63	.85
*	226.230	1190.36	1190.36	1195.13	1172.30	18.06	44.02	3.65	492.85	3.18	.93
*	226.230	1190.19	1190.19	1195.57	1172.30	17.89	50.04	3.65	492.85	3.56	.99
	226.350	1194.27	1192.71	1197.82	1173.40	20.87	33.74	1.65	666.57	2.30	.81
	226.350	1195.11	1192.73	1198.21	1173.40	21.71	27.24	1.65	666.57	2.00	.73
	226.480	1196.86	1195.53	1200.49	1181.80	15.06	35.54	11.00	763.51	2.37	.82
	226.480	1197.15	1195.51	1200.59	1181.80	15.35	32.71	11.00	763.51	2.23	.79
*	226.490	1196.67	1196.67	1201.41	1186.00	10.67	54.87	4199.95	1.00	3.23	1.00
*	226.490	1196.66	1196.66	1201.43	1186.00	10.66	55.70	4199.95	1.00	3.27	1.01
	226.500	1197.69	1196.68	1201.55	1186.00	11.69	38.99	.00	10.00	2.54	.86
	226.500	1197.68	1196.67	1201.57	1186.00	11.68	39.68	.00	10.00	2.58	.86
	226.510	1197.55	1196.64	1201.62	1186.00	11.55	62.41	.00	2.00	3.94	.90
	226.510	1197.57	1196.64	1201.63	1186.00	11.57	61.95	.00	2.00	3.92	.89
	226.520	1198.99	1196.64	1202.15	1186.00	12.99	42.83	.00	84.00	3.08	.74
	226.520	1199.00	1196.64	1202.15	1186.00	13.00	42.77	.00	84.00	3.07	.74

	SECNO	CWSEL	CRIWS	EG	ELMIN	DEPTH	10*KS	K*CHSL	XLCH	SHEAR	FRCH
*	226.530	1199.67	1196.26	1202.21	1186.00	13.67	19.50	.00	2.00	1.56	.63
*	226.530	1199.57	1196.27	1202.21	1186.00	13.57	20.75	.00	2.00	1.65	.64
	226.610	1200.87	1196.90	1203.09	1187.00	13.87	16.29	2.09	478.10	1.35	.58
	226.610	1200.86	1196.89	1203.14	1187.00	13.86	17.16	2.09	478.10	1.42	.59
	226.700	1202.15	1197.61	1203.87	1188.00	14.15	12.97	1.98	503.99	1.07	.52
	226.700	1201.72	1198.03	1204.05	1188.00	13.72	18.24	1.98	503.99	1.46	.60
*	226.800	1201.55	1201.55	1206.13	1191.70	9.85	54.62	7.59	487.43	3.14	1.00
*	226.800	1201.62	1201.62	1206.28	1191.70	9.92	55.88	7.59	487.43	3.24	1.00
*	226.890	1205.16	1202.90	1208.14	1192.50	12.66	25.85	1.57	510.72	1.90	.72
	226.890	1205.16	1202.99	1208.41	1192.50	12.66	28.68	1.57	510.72	2.11	.74
	226.990	1205.67	1204.83	1210.25	1193.70	11.97	40.04	2.44	492.08	2.90	.89
	226.990	1206.02	1204.80	1210.39	1193.70	12.32	37.14	2.44	492.08	2.77	.86
*	227.080	1207.78	1207.78	1213.69	1194.10	13.68	46.65	.79	504.96	3.76	.98
*	227.080	1208.05	1208.05	1214.36	1194.10	13.95	48.12	.79	504.96	3.96	1.00
*	227.180	1211.83	1208.66	1215.52	1194.50	17.33	22.79	.79	509.22	2.15	.70
*	227.180	1212.86	1208.71	1216.10	1194.50	18.36	18.32	.79	509.22	1.84	.64
	227.270	1214.00	1208.15	1216.48	1193.70	20.30	13.05	-1.60	498.96	1.39	.54
	227.270	1214.59	1208.15	1216.91	1193.70	20.89	11.68	-1.60	498.96	1.28	.51
	227.370	1215.65	1207.94	1217.08	1194.00	21.65	7.40	.59	509.52	.86	.41
	227.370	1215.70	1208.20	1217.48	1194.00	21.70	8.83	.59	509.52	1.03	.45
	227.460	1215.84	1208.02	1217.53	1194.10	21.74	7.83	.20	506.97	.98	.43
	227.460	1216.09	1208.02	1217.91	1194.10	21.99	8.09	.20	506.97	1.03	.44
*	227.560	1217.30	1207.49	1218.10	1194.60	22.70	3.77	1.02	490.80	.49	.30
*	227.560	1218.30	1207.48	1219.20	1194.60	23.70	3.70	1.02	490.80	.50	.30

SUMMARY OF ERRORS AND SPECIAL NOTES

```
WARNING SECNO=    223.580  PROFILE=  1  CONVEYANCE CHANGE OUTSIDE ACCEPTABLE RANGE
WARNING SECNO=    223.580  PROFILE=  2  CONVEYANCE CHANGE OUTSIDE ACCEPTABLE RANGE

WARNING SECNO=    223.670  PROFILE=  1  CONVEYANCE CHANGE OUTSIDE ACCEPTABLE RANGE
WARNING SECNO=    223.670  PROFILE=  2  CONVEYANCE CHANGE OUTSIDE ACCEPTABLE RANGE

WARNING SECNO=    223.770  PROFILE=  1  CONVEYANCE CHANGE OUTSIDE ACCEPTABLE RANGE
WARNING SECNO=    223.770  PROFILE=  2  CONVEYANCE CHANGE OUTSIDE ACCEPTABLE RANGE

WARNING SECNO=    224.160  PROFILE=  1  CONVEYANCE CHANGE OUTSIDE ACCEPTABLE RANGE
WARNING SECNO=    224.160  PROFILE=  2  CONVEYANCE CHANGE OUTSIDE ACCEPTABLE RANGE

WARNING SECNO=    224.180  PROFILE=  1  CONVEYANCE CHANGE OUTSIDE ACCEPTABLE RANGE
WARNING SECNO=    224.180  PROFILE=  2  CONVEYANCE CHANGE OUTSIDE ACCEPTABLE RANGE

WARNING SECNO=    224.710  PROFILE=  2  CONVEYANCE CHANGE OUTSIDE ACCEPTABLE RANGE

WARNING SECNO=    224.900  PROFILE=  1  CONVEYANCE CHANGE OUTSIDE ACCEPTABLE RANGE
WARNING SECNO=    224.900  PROFILE=  2  CONVEYANCE CHANGE OUTSIDE ACCEPTABLE RANGE

WARNING SECNO=    225.100  PROFILE=  1  CONVEYANCE CHANGE OUTSIDE ACCEPTABLE RANGE

WARNING SECNO=    225.850  PROFILE=  1  CONVEYANCE CHANGE OUTSIDE ACCEPTABLE RANGE
WARNING SECNO=    225.850  PROFILE=  2  CONVEYANCE CHANGE OUTSIDE ACCEPTABLE RANGE

WARNING SECNO=    225.950  PROFILE=  1  CONVEYANCE CHANGE OUTSIDE ACCEPTABLE RANGE

WARNING SECNO=    226.040  PROFILE=  1  CONVEYANCE CHANGE OUTSIDE ACCEPTABLE RANGE
WARNING SECNO=    226.040  PROFILE=  2  CONVEYANCE CHANGE OUTSIDE ACCEPTABLE RANGE

CAUTION SECNO=    226.230  PROFILE=  1  CRITICAL DEPTH ASSUMED
CAUTION SECNO=    226.230  PROFILE=  1  MINIMUM SPECIFIC ENERGY
CAUTION SECNO=    226.230  PROFILE=  2  CRITICAL DEPTH ASSUMED
CAUTION SECNO=    226.230  PROFILE=  2  MINIMUM SPECIFIC ENERGY

CAUTION SECNO=    226.490  PROFILE=  1  CRITICAL DEPTH ASSUMED
CAUTION SECNO=    226.490  PROFILE=  1  MINIMUM SPECIFIC ENERGY
CAUTION SECNO=    226.490  PROFILE=  2  CRITICAL DEPTH ASSUMED
CAUTION SECNO=    226.490  PROFILE=  2  MINIMUM SPECIFIC ENERGY

WARNING SECNO=    226.530  PROFILE=  1  CONVEYANCE CHANGE OUTSIDE ACCEPTABLE RANGE
WARNING SECNO=    226.530  PROFILE=  2  CONVEYANCE CHANGE OUTSIDE ACCEPTABLE RANGE

CAUTION SECNO=    226.800  PROFILE=  1  CRITICAL DEPTH ASSUMED
CAUTION SECNO=    226.800  PROFILE=  1  MINIMUM SPECIFIC ENERGY
CAUTION SECNO=    226.800  PROFILE=  2  CRITICAL DEPTH ASSUMED
CAUTION SECNO=    226.800  PROFILE=  2  MINIMUM SPECIFIC ENERGY

WARNING SECNO=    226.890  PROFILE=  1  CONVEYANCE CHANGE OUTSIDE ACCEPTABLE RANGE

CAUTION SECNO=    227.080  PROFILE=  1  CRITICAL DEPTH ASSUMED
```

```
CAUTION SECNO=    227.080  PROFILE=  1  MINIMUM SPECIFIC ENERGY
CAUTION SECNO=    227.080  PROFILE=  2  CRITICAL DEPTH ASSUMED
CAUTION SECNO=    227.080  PROFILE=  2  MINIMUM SPECIFIC ENERGY

WARNING SECNO=    227.180  PROFILE=  1  CONVEYANCE CHANGE OUTSIDE ACCEPTABLE RANGE
WARNING SECNO=    227.180  PROFILE=  2  CONVEYANCE CHANGE OUTSIDE ACCEPTABLE RANGE

NOTE    SECNO=    227.560  PROFILE=  1  WSEL BASED ON X5 CARD
WARNING SECNO=    227.560  PROFILE=  1  CONVEYANCE CHANGE OUTSIDE ACCEPTABLE RANGE
NOTE    SECNO=    227.560  PROFILE=  2  WSEL BASED ON X5 CARD
WARNING SECNO=    227.560  PROFILE=  2  CONVEYANCE CHANGE OUTSIDE ACCEPTABLE RANGE
```

FLOODWAY DATA, ASE MODEL PREPARED BY MI
PROFILE NO. 2

STATION	FLOODWAY WIDTH	FLOODWAY SECTION AREA	FLOODWAY MEAN VELOCITY	WATER SURFACE ELEVATION WITH FLOODWAY	WATER SURFACE ELEVATION WITHOUT FLOODWAY	DIFFERENCE
223.100	1013.	17702.	12.1	1166.9	1166.9	.0
223.190	970.	19004.	11.3	1168.2	1168.1	.1
223.290	780.	14970.	14.4	1167.3	1167.2	.1
223.380	680.	14891.	14.4	1168.8	1168.7	.1
223.480	835.	16895.	12.7	1170.8	1170.8	.0
223.580	644.	12359.	17.4	1171.1	1171.1	.0
223.670	878.	22888.	9.4	1175.7	1175.7	.0
223.770	915.	27808.	7.7	1176.6	1176.6	.0
223.860	1112.	30134.	7.1	1176.9	1176.9	.0
223.960	997.	30209.	7.1	1177.0	1177.0	.0
224.050	958.	25747.	8.5	1177.0	1177.0	.0
224.080	1123.	27757.	7.9	1177.4	1177.3	.1
224.090	1123.	25879.	8.5	1177.3	1177.2	.1
224.110	1109.	25897.	8.5	1177.3	1177.2	.1
224.120	1109.	27587.	8.0	1177.5	1177.4	.1
224.150	1250.	31532.	7.0	1177.8	1177.7	.1
224.160	1110.	26615.	8.3	1177.6	1177.5	.1
224.170	1111.	26772.	8.2	1177.7	1177.6	.1
224.180	1249.	31874.	6.9	1178.1	1178.0	.1
224.210	1195.	30434.	7.2	1178.1	1178.0	.1
224.220	1196.	28579.	7.7	1178.0	1177.9	.1
224.250	1124.	26101.	8.4	1177.9	1177.8	.1
224.260	1123.	28123.	7.8	1178.1	1178.0	.1
224.340	1254.	24986.	8.8	1178.0	1178.5	-.5
224.430	1356.	21525.	10.2	1178.1	1178.5	-.4
224.530	1405.	21748.	10.1	1178.6	1179.0	-.4
224.620	1500.	22054.	10.0	1179.2	1179.0	.2
224.710	1665.	28891.	7.6	1180.4	1179.4	1.0
224.810	1775.	29236.	7.5	1180.6	1179.7	.9
224.900	1424.	16601.	13.3	1179.7	1178.7	1.0
225.000	1100.	15110.	14.6	1180.5	1180.0	.5
225.100	1000.	17446.	12.6	1182.4	1182.4	.0
225.190	1025.	16832.	13.1	1182.9	1182.8	.1
225.280	1280.	17516.	12.6	1183.9	1183.5	.4
225.380	951.	16577.	13.3	1184.5	1184.1	.4
225.480	1032.	18020.	12.2	1185.7	1185.4	.3
225.570	1069.	22003.	10.0	1186.9	1186.7	.2
225.660	988.	21374.	10.3	1187.2	1187.0	.2
225.760	1062.	19422.	11.3	1187.4	1187.2	.2
225.850	1312.	26128.	8.4	1188.7	1188.9	-.2
225.950	1610.	26654.	8.3	1189.0	1188.8	.2
226.040	877.	10866.	13.6	1188.2	1188.1	.1

FLOODWAY DATA, ASE MODEL PREPARED BY MI
PROFILE NO. 2

STATION	FLOODWAY WIDTH	FLOODWAY SECTION AREA	FLOODWAY MEAN VELOCITY	WATER SURFACE ELEVATION WITH FLOODWAY	WATER SURFACE ELEVATION WITHOUT FLOODWAY	DIFFERENCE
226.130	823.	9145.	16.1	1188.8	1188.5	.3
226.230	784.	8069.	18.3	1190.2	1190.4	-.2
226.350	887.	10427.	14.1	1195.1	1194.3	.8
226.480	905.	9907.	14.9	1197.2	1196.9	.3
226.490	894.	8411.	17.5	1196.7	1196.7	.0
226.500	894.	9320.	15.8	1197.7	1197.7	.0
226.510	899.	9127.	16.2	1197.5	1197.5	.0
226.520	899.	10354.	14.2	1199.0	1199.0	.0
226.530	887.	11326.	13.0	1199.6	1199.7	-.1
226.610	919.	12170.	12.1	1200.9	1200.9	.0
226.700	938.	12047.	12.2	1201.7	1202.1	-.4
226.800	916.	8514.	17.3	1201.6	1201.5	.1
226.890	864.	10193.	14.5	1205.2	1205.2	.0
226.990	1097.	13115.	16.8	1206.0	1205.7	.3
227.080	870.	11010.	20.0	1208.1	1207.8	.3
227.180	965.	15315.	14.4	1212.8	1211.8	1.0
227.270	1037.	18059.	12.2	1214.6	1214.0	.6
227.370	1196.	20826.	10.6	1215.7	1215.6	.1
227.460	1353.	21216.	10.4	1216.1	1215.8	.3
227.560	1568.	29937.	7.3	1218.3	1217.3	1.0

MT-2 FORM 4, ITEM 3

Salt River - South Alma School Road Split
Existing Condition HEC-2 Model

File name: SPLITB.OUT

```
*******************************************
*  HEC-2 WATER SURFACE PROFILES           *
*                                         *
*  Version   4.6.2;  May 1991             *
*                                         *
*  RUN DATE    12SEP95    TIME   09:37:42 *
*******************************************
```

```
****************************************
*  U.S. ARMY CORPS OF ENGINEERS        *
*  HYDROLOGIC ENGINEERING CENTER       *
*  609 SECOND STREET, SUITE D          *
*  DAVIS, CALIFORNIA 95616-4687        *
*          (916) 756-1104              *
****************************************
```

```
X     X  XXXXXXX   XXXXX              XXXXX
X     X  X        X     X            X     X
X     X  X        X                        X
XXXXXXX  XXXX     X          XXXXX    XXXXX
X     X  X        X                  X
X     X  X        X     X            X
X     X  XXXXXXX   XXXXX             XXXXXXX
```

THIS RUN EXECUTED 12SEP95 09:37:42

```
************************************
 HEC-2 WATER SURFACE PROFILES

 Version   4.6.2;  May 1991
************************************
```

T1 SALT RIVER, SOUTH BRANCH NEAR ALMA SCHOOL ROAD
T2 BASED ON FCDMC PRELIMINARY SALT RIVER MODELS R4A.DAT & R5A.DAT
T3 BASE MODEL PREPARED BY MICHAEL BAKER JR. ENGINEERS, INC.
T4 REVISED BY WOOD, PATEL & ASSOCIATES, INC. August 1995

100-YEAR FLOW = 72,500 CFS (PRE-ROOSEVELT DAM CONDITION)

EXISTING CONDITION MODEL, FLOODPLAIN AND FLOODWAY

FILE SPLITB.DAT

J1	ICHECK	INQ	NINV	IDIR	STRT	METRIC	HVINS	Q	WSEL	FQ
	0	2	0	0	0.0	0	0.0	220000.0	1188.81	

J2	NPROF	IPLOT	PRFVS	XSECV	XSECH	FN	ALLDC	IBW	CHNIM	ITRACE
	1	0	-1	0.0	0.0	0.0	-1.0	-6.0	0.0	

J3 VARIABLE CODES FOR SUMMARY PRINTOUT

38	42	1	43	26	51	4	8	10	53
54	13	15		150		200			

This flow and WSEL at this section match those of section 225.95 of file SALTLOMR.

NC	0.0	0.0	0.0	0.1	0.3					
NH	5	0.032	18228.4	0.028	18335.5	0.028	20237.2	0.031	21188.1	0.032
NH	21595.									
ET		7.1	9.1				18335.5	20237.2	18428.5	20039.7
X1	225.95	94	18428.5	20039.7	0.0	0.0	0.0	1.0	0.0	
GR	1203.7	17840.6	1202.4	17848.9	1193.6	17889.2	1193.7	17922.2	1194.0	17963.8
GR	1193.7	18003.5	1193.3	18049.4	1194.4	18075.7	1196.9	18116.2	1197.0	18196.1
GR	1196.0	18228.4	1194.6	18269.0	1193.2	18321.5	1192.9	18335.5	1190.1	18375.5
GR	1182.4	18405.1	1183.0	18428.5	1181.5	18445.0	1177.9	18462.5	1176.1	18485.6
GR	1176.8	18517.9	1176.6	18533.3	1175.3	18553.3	1176.3	18604.6	1178.0	18637.4
GR	1176.0	18671.4	1175.9	18692.9	1167.9	18708.4	1168.7	18708.7	1167.9	18717.5
GR	1167.9	18817.2	1168.0	18863.1	1168.6	18952.0	1168.8	19096.8	1168.8	19116.2
GR	1172.1	19129.0	1172.9	19130.4	1174.6	19160.5	1175.5	19215.6	1174.7	19255.3
GR	1175.1	19282.8	1173.9	19324.0	1172.5	19402.1	1173.3	19480.7	1173.4	19487.4
GR	1173.5	19546.6	1173.2	19561.6	1171.5	19597.0	1171.8	19766.1	1172.0	19774.5

```
GR   1172.2    19849.9     1172.6    19953.3      1173.0     20020.4      1173.0     20028.3      1183.6     20039.7
GR   1183.9    20085.7     1184.1    20114.6      1196.9     20181.0      1208.9     20237.2      1206.8     20284.1
GR   1208.4    20295.6     1203.3    20308.8      1195.4     20337.0      1194.8     20347.3      1194.6     20393.0
GR   1194.6    20446.4     1194.6    20457.2      1194.6     20542.6      1195.3     20585.5      1198.7     20639.1
GR   1198.6    20647.5     1200.8    20699.8      1201.6     20747.8      1201.5     20820.4      1201.6     20865.5
GR   1202.1    20977.3     1202.1    20982.5      1201.9     21042.6      1201.8     21084.5      1199.8     21122.5
GR   1199.8    21145.3     1200.5    21188.1      1200.5     21201.5      1198.1     21246.4      1196.8     21266.9
GR   1197.8    21298.1     1197.5    21304.9      1198.3     21344.9      1198.8     21373.7      1200.5     21418.9
GR   1199.0    21475.2     1199.6    21525.8      1200.0     21556.4      1202.2     21595.0

NH        1       0.028    19322.6
```

Flow in south split is 72500 cfs; flow in main (north) channel is 147500 cfs. The flow split was determined by matching energy grade elevations at section 226.89.

```
QT        2    72500.0    72500.0
ET                 7.1        9.1                                      18000.0     19322.6     18304.5     19170.0
X1   226.04         36    18304.5    18894.7       920.0       480.0     476.46         1.0         0.0
GR   1193.2    18218.0     1192.4    18233.8      1192.8     18247.6      1191.8     18287.0      1184.8     18304.5
GR   1180.9    18318.6     1177.5    18347.5      1174.5     18388.8      1172.7     18426.1      1173.2     18435.0
GR   1172.8    18468.8     1171.2    18491.7      1171.7     18494.6      1171.7     18506.8      1171.7     18552.0
GR   1171.8    18561.4     1171.8    18594.4      1170.7     18804.6      1170.7     18825.8      1182.5     18862.3
GR   1183.7    18894.7     1199.3    18930.5      1194.4     18942.7      1194.9     18956.4      1189.5     18992.3
GR   1189.5    18993.7     1169.5    19060.0      1169.3     19074.1      1168.4     19207.2      1168.4     19211.5
GR   1169.4    19214.6     1181.4    19235.1      1188.9     19246.2      1189.7     19251.8      1190.6     19296.5
GR   1190.7    19322.6

NH        1       0.028    19593.2
ET                 7.1        9.1                                      17850.0     19100.0     18151.2       18890
X1   226.13         40    18151.2    18774.9       510.0       500.0     502.01         1.0         0.0
GR   1190.7    18007.0     1190.0    18069.5      1190.0     18121.5      1189.5     18147.2      1188.4     18151.2
GR   1178.1    18168.9     1177.2    18204.8      1172.4     18213.2      1172.6     18256.4      1173.0     18340.7
GR   1172.2    18362.9     1173.0    18403.5      1173.0     18405.0      1173.0     18426.6      1173.0     18447.3
GR   1173.0    18499.7     1173.0    18538.4      1173.0     18572.4      1173.0     18661.7      1173.0     18668.6
GR   1173.0    18774.9     1173.0    18821.8      1173.0     18843.7      1173.0     18848.8      1171.5     18876.1
GR   1170.6    18876.4     1170.7    18925.4      1170.7     18929.6      1171.1     19032.6      1171.0     19140.5
GR   1171.6    19157.7     1171.2    19255.2      1170.7     19306.5      1171.3     19354.4      1171.8     19366.1
GR   1170.5    19437.3     1170.7    19485.6      1172.2     19504.1      1195.1     19553.4      1197.4     19593.2

NH        1       0.028    19603.5
ET                 7.1        9.1                                      18060.0     18910.8     18127.1     18690.0
X1   226.23         67    18127.1    18658.7          270         270     270.0         1.0         0.0
GR   1204.2    17743.6     1191.9    17776.7      1190.6     17813.8      1190.1     17827.3      1188.8     17871.1
GR   1188.8    17877.4     1188.5    17916.5      1187.7     17942.6      1187.6     17969.4      1187.5     17973.1
GR   1189.3    17979.5     1190.1    17984.0      1188.6     17991.3      1187.8     17993.2      1187.9     18001.4
GR   1188.4    18051.2     1191.5    18059.4      1184.3     18074.3      1184.4     18093.6      1186.4     18103.8
GR   1186.5    18106.5     1187.0    18127.1      1186.8     18142.8      1185.6     18208.7      1185.3     18223.2
GR   1181.8    18234.6     1181.2    18239.8      1180.1     18287.5      1180.0     18290.9     1179.02     18344.8
GR   1178.8    18359.2    1177.87    18408.1     1177.35     18437.0     1176.56     18480.3     1175.86     18519.3
GR   1175.2    18554.1    1174.80    18577.7      1174.5     18594.2      1174.7     18658.7      1174.7     18692.9
GR   1174.8    18734.4     1174.8    18749.9      1175.0     18796.6      1175.5     18799.4      1176.4     18835.0
GR   1176.9    18843.3     1177.0    18851.6      1178.9     18889.7      1179.6     18910.8      1179.6     18953.7
GR   1179.8    18975.1     1180.1    19006.5      1180.3     19029.6      1180.6     19046.8      1180.6     19075.0
```

GR	1181.0	19078.5	1170.8	19096.4	1171.5	19100.9	1171.8	19210.2	1172.0	19274.6
GR	1172.3	19327.9	1172.5	19354.8	1172.5	19507.5	1172.5	19559.6	1172.8	19569.4
GR	1178.2	19577.6	1195.5	19603.5						
NH	1	0.028	19598.4							
ET		7.1	9.1				18050	18572.1	18100.0	18572.1
X1	226.35	59	18134.0	18572.1	150	240	200.0	1.0	0.0	
GR	1195.3	17801.4	1192.9	17812.7	1191.5	17823.9	1191.2	17859.1	1192.1	17899.8
GR	1190.9	17918.1	1189.1	17926.5	1189.0	17932.0	1188.8	17996.3	1188.5	18046.6
GR	1188.5	18068.6	1189.2	18086.1	1189.0	18091.9	1187.2	18134.0	1183.7	18147.0
GR	1182.2	18167.7	1179.4	18184.0	1179.3	18223.9	1178.6	18265.3	1178.4	18309.3
GR	1178.5	18326.0	1177.4	18344.3	1177.3	18388.0	1176.9	18431.1	1176.4	18469.8
GR	1176.3	18535.4	1176.2	18542.6	1178.1	18554.3	1180.5	18560.6	1183.6	18565.7
GR	1184.1	18572.1	1180.1	18591.0	1178.8	18592.7	1176.9	18597.0	1175.7	18643.3
GR	1175.5	18660.7	1172.0	18694.7	1171.3	18736.1	1172.5	18745.3	1172.5	18750.4
GR	1172.3	18881.4	1172.7	18909.7	1172.3	18942.1	1171.7	18947.4	1172.1	18981.1
GR	1171.6	19026.5	1171.8	19034.3	1172.5	19265.7	1172.5	19308.0	1172.9	19335.6
GR	1173.4	19477.2	1173.4	19478.6	1179.8	19487.8	1194.4	19507.4	1201.1	19533.2
GR	1201.9	19538.7	1202.2	19547.6	1202.0	19590.8	1204.3	19598.4		
NH	2	0.028	19319.7	0.028	19382.8					
ET		7.1	9.1				17912.9	18393.7	17925.0	18310.0
X1	226.48	51	17940.6	18286.9	309.0	989.0	234.0	1.0	0.0	
GR	1204.1	17345.9	1204.8	17430.4	1202.5	17436.1	1202.4	17534.9	1202.4	17538.7
GR	1202.7	17599.2	1203.7	17611.9	1205.0	17613.0	1204.3	17625.1	1204.9	17654.1
GR	1204.8	17689.8	1203.3	17728.1	1202.9	17760.4	1203.5	17850.7	1203.9	17912.9
GR	1191.8	17933.5	1186.9	17940.6	1182.7	17957.6	1181.4	17960.0	1179.4	18021.5
GR	1179.4	18021.8	1178.6	18212.3	1179.3	18212.6	1186.1	18235.4	1186.2	18254.9
GR	1188.1	18259.6	1187.7	18268.8	1186.0	18283.7	1186.2	18286.9	1185.3	18290.3
GR	1200.0	18316.1	1202.9	18322.5	1204.3	18393.7	1202.2	18411.3	1202.9	18449.3
GR	1202.5	18483.7	1201.7	18561.0	1202.1	18632.7	1201.6	18694.6	1203.0	18739.3
GR	1202.7	18789.3	1201.8	18812.1	1202.2	18830.9	1202.0	18923.1	1202.1	18980.8
GR	1202.8	19057.9	1204.8	19157.6	1205.9	19268.4	1205.4	19298.9	1205.8	19319.7
GR	1206.2	19382.8								
NH	2	0.028	19319.7	0.028	19382.8					
ET		7.1	9.1				17912.9	18393.7	17925.0	18310.0
X1	226.49	51	17933.5	18290.3	1	1	1	1.0	0.0	
GR	1204.1	17345.9	1204.8	17430.4	1202.5	17436.1	1202.4	17534.9	1202.4	17538.7
GR	1202.7	17599.2	1203.7	17611.9	1205.0	17613.0	1204.3	17625.1	1204.9	17654.1
GR	1204.8	17689.8	1203.3	17728.1	1202.9	17760.4	1203.5	17850.7	1203.9	17912.9
GR	1191.8	17933.5	1188.0	17940.6	1188.0	17957.6	1188.0	17960.0	1188.0	18056.0
GR	1185.0	18059.0	1185.0	18141.0	1188.0	18144.0	1188.0	18235.4	1188.0	18254.9
GR	1188.1	18259.6	1188.0	18268.8	1188.0	18283.7	1188.0	18286.9	1188.0	18290.3
GR	1200.0	18316.1	1202.9	18322.5	1204.3	18393.7	1202.2	18411.3	1202.9	18449.3
GR	1202.5	18483.7	1201.7	18561.0	1202.1	18632.7	1201.6	18694.6	1203.0	18739.3
GR	1202.7	18789.3	1201.8	18812.1	1202.2	18830.9	1202.0	18923.1	1202.1	18980.8
GR	1202.8	19057.9	1204.8	19157.6	1205.9	19268.4	1205.4	19298.9	1205.8	19319.7
GR	1206.2	19382.8								

```
NH        2     0.028    19319.7     0.028    19382.8
  ALMA SCHOOL ROAD BRIDGE
ET                7.1        9.1                                  17912.8    18393.8    17925.0    18310.0
        ALMA SCHOOL ROAD BRIDGE
X1   226.50         51    17933.5    18290.3       15.0       15.0       15.0        1.0        0.0
X3     0.0        0.0        0.0        0.0        0.0        0.0        0.0        0.0        0.0
GR   1204.1    17345.9     1204.8    17430.4     1202.5    17436.1     1202.4    17534.9     1202.4    17538.7
GR   1202.7    17599.2     1203.7    17611.9     1205.0    17613.0     1204.3    17625.1     1204.9    17654.1
GR   1204.8    17689.8     1203.3    17728.1     1202.9    17760.4     1203.5    17850.7     1203.9    17912.9
GR   1191.8    17933.5     1188.0    17940.6     1188.0    17957.6     1188.0    17960.0     1188.0    18056.0
GR   1185.0    18059.0     1185.0    18141.0     1188.0    18144.0     1188.0    18235.4     1188.0    18254.9
GR   1188.1    18259.6     1188.0    18268.8     1188.0    18283.7     1188.0    18286.9     1188.0    18290.3
GR   1200.0    18316.1     1202.9    18322.5     1204.3    18393.7     1202.2    18411.3     1202.9    18449.3
GR   1202.5    18483.7     1201.7    18561.0     1202.1    18632.7     1201.6    18694.6     1203.0    18739.3
GR   1202.7    18789.3     1201.8    18812.1     1202.2    18830.9     1202.0    18923.1     1202.1    18980.8
GR   1202.8    19057.9     1204.8    19157.6     1205.9    19268.4     1205.4    19298.9     1205.8    19319.7
GR   1206.2    19382.8

NC    0.028     0.028      0.028       0.0        0.0
ET                7.1        9.1                                  17915.6    18322.6    17915.6    18322.6
X1   226.51         40    17915.6    18322.6       1.0        1.0        1.0        1.0        0.0
X3     0.0        0.0        0.0        0.0        0.0        0.0        0.0        0.0        0.0
BT     -12    17370.0     1204.0     1204.0    17590.0     1204.0     1204.0    17915.5    1205.74    1205.74
BT            17915.5    1205.74    1202.09    17971.2    1205.98    1202.33    18030.0    1206.19    1202.54
BT            18088.7     1206.3     1202.6    18147.2    1206.26    1202.61    18205.7    1206.18    1202.53
BT            18264.2    1205.97     1202.3    18322.5     1205.7    1202.05    18322.5     1205.7     1205.7
GR   1204.0    17370.0     1204.0    17590.0    1205.74    17915.5    1202.09    17915.6    1196.84    17915.7
GR   1188.0    17962.5    1188.00    17971.2    1202.33    17971.2    1202.33    17973.7    1188.00    17973.7
GR   1188.0    18030.0    1202.54    18030.0    1202.54    18032.5     1188.0    18032.5     1185.0    18058.5
GR   1185.0    18088.7    1202.62    18088.7    1202.62    18091.2     1185.0    18091.2     1185.0    18147.2
GR   1202.6    18147.2     1202.6    18149.7     1188.0    18149.7    1188.00    18188.7    1188.00    18205.7
GR   1202.5    18205.7     1202.5    18208.2    1188.00    18208.2    1188.00    18213.5    1188.00    18264.2
GR   1202.3    18264.2    1202.32    18266.7    1188.00    18266.7    1188.00    18297.5    1196.26    18311.5
GR   1198.7    18322.5     1202.1    18322.6     1205.7    18322.7     1204.0    18560.0     1204.0    19240.0

NC    0.028     0.028      0.028       0.0        0.0
ET                7.1        9.1                                  17915.6    18322.6    17915.6    18322.6
X1   226.52         40    17915.6    18322.6       84.0       84.0       84.0        1.0        0.0
X3                0.0
BT     -12    17370.0     1204.0     1204.0    17590.0     1204.0     1204.0    17915.5    1205.74    1205.74
BT            17915.5    1205.74    1202.09    17971.2    1205.98    1202.33    18030.0    1206.19    1202.54
BT            18088.7     1206.3     1202.6    18147.2    1206.26    1202.61    18205.7    1206.18    1202.53
BT            18264.2    1205.97     1202.3    18322.5     1205.7    1202.05    18322.5     1205.7     1205.7
GR   1204.0    17370.0     1204.0    17590.0    1205.74    17915.5    1202.09    17915.6    1196.84    17915.7
GR   1188.0    17962.5    1188.00    17971.2    1202.33    17971.2    1202.33    17973.7    1188.00    17973.7
GR   1188.0    18030.0    1202.54    18030.0    1202.54    18032.5     1185.0    18032.5     1185.0    18058.5
GR   1185.0    18088.7    1202.62    18088.7    1202.62    18091.2     1185.0    18091.2     1185.0    18147.2
GR   1202.6    18147.2     1202.6    18149.7     1188.0    18149.7    1188.00    18188.7    1188.00    18205.7
GR   1202.5    18205.7     1202.5    18208.2    1188.00    18208.2    1188.00    18213.5    1188.00    18264.2
GR   1202.3    18264.2    1202.32    18266.7    1188.00    18266.7    1188.00    18297.5    1196.26    18311.5
GR   1198.7    18322.5     1202.1    18322.6     1205.7    18322.7     1204.0    18560.0     1204.0    19240.0
```

NH	1	0.028	19522.9							
ET		7.1	9.1				17899.8	18325.5	17925.0	18310.0
X1	226.53	60	17931.6	18288.5	1.0	1.0	1.0	1.0	0.0	
GR	1203.0	17546.3	1203.2	17577.3	1203.3	17661.8	1203.3	17689.5	1201.7	17704.7
GR	1201.8	17732.1	1203.0	17746.1	1202.7	17801.3	1203.8	17825.7	1204.5	17871.9
GR	1205.1	17899.8	1204.8	17905.5	1201.5	17910.5	1202.9	17911.1	1201.8	17913.9
GR	1189.3	17931.6	1188.00	17955.6	1188.0	17995.0	1188.0	18040.0	1185.0	18049.0
GR	1185.0	18107.8	1185.0	18176.3	1188.0	18185.7	1188.0	18218.8	1188.0	18258.6
GR	1188.7	18288.5	1188.0	18291.6	1194.4	18307.2	1203.1	18322.7	1204.0	18325.5
GR	1203.6	18377.0	1202.5	18509.4	1203.1	18521.2	1203.4	18585.4	1203.5	18606.5
GR	1203.4	18677.5	1203.4	18702.5	1203.0	18735.8	1203.0	18747.2	1203.6	18807.7
GR	1204.4	18828.8	1206.3	18926.4	1207.6	18983.2	1207.5	18996.9	1207.5	19141.4
GR	1207.5	19145.6	1207.5	19181.3	1206.7	19219.8	1204.6	19237.6	1202.8	19238.8
GR	1203.7	19284.4	1203.9	19306.3	1204.3	19339.1	1206.3	19346.9	1206.4	19377.7
GR	1207.3	19400.7	1208.3	19413.5	1209.1	19437.4	1209.9	19470.5	1212.0	19522.9
NH	1	0.028	19449.9							
ET		7.1	9.1				17800.0	18750.2	17800	18416
X1	226.58	90	17885.1	18188.6	450.0	450.0	450.0	1.0	0.0	
X3		1185.87								
GR	1205.9	17263.7	1205.5	17287.8	1205.3	17314.2	1206.7	17356.2	1206.7	17370.8
GR	1204.9	17448.3	1204.3	17469.9	1204.2	17504.0	1202.9	17575.1	1202.1	17616.0
GR	1202.3	17674.1	1201.9	17684.3	1201.7	17708.4	1201.3	17729.6	1201.1	17799.9
GR	1200.7	17835.5	1200.0	17842.6	1199.5	17855.1	1200.1	17877.2	1200.4	17880.0
GR	1200.1	17885.1	1199.7	17885.4	1190.1	17904.6	1181.4	17925.1	1180.7	17928.5
GR	1179.7	17930.2	1179.8	17942.1	1179.4	17943.9	1179.6	18030.2	1179.8	18093.5
GR	1179.0	18103.1	1179.9	18110.1	1181.4	18135.1	1188.3	18150.1	1189.0	18171.5
GR	1189.5	18174.4	1193.8	18188.6	1196.5	18199.7	1197.4	18202.3	1197.9	18251.8
GR	1197.6	18278.2	1197.1	18311.0	1196.4	18315.6	1199.4	18333.3	1200.5	18357.8
GR	1201.5	18402.8	1202.8	18438.4	1202.9	18459.0	1202.9	18490.5	1202.8	18515.6
GR	1202.9	18523.4	1203.7	18562.2	1203.7	18568.8	1203.2	18571.7	1204.6	18617.2
GR	1204.7	18626.8	1205.3	18654.2	1205.9	18675.4	1206.9	18706.9	1213.4	18727.2
GR	1214.1	18750.2	1211.9	18773.8	1211.0	18813.2	1211.0	18825.2	1210.7	18850.7
GR	1210.1	18882.4	1212.0	18899.2	1212.4	18910.9	1209.1	18923.2	1207.9	18950.7
GR	1207.8	18958.6	1207.0	18970.4	1207.3	18983.5	1206.7	19021.8	1206.5	19028.8
GR	1218.1	19045.4	1228.4	19062.3	1228.0	19069.0	1228.2	19083.1	1225.3	19097.8
GR	1220.5	19122.0	1203.4	19157.3	1203.6	19177.8	1203.8	19184.0	1203.6	19198.3
GR	1203.5	19227.4	1203.8	19258.4	1203.7	19267.3	1210.3	19300.5	1219.6	19353.4
NH	2	0.028	18230.1	0.031	19549.9					
ET		7.1	9.1				17550.0	18800.0	17915.0	18366.5
X1	226.61	57	17930.8	18230.1	950.0	360.0	600.0	1.0	0.0	
X3		1187.03								
GR	1207.8	17550.0	1207.2	17647.2	1206.7	17717.6	1205.9	17790.0	1193.0	17816.8
GR	1189.5	17889.1	1188.0	17930.8	1187.7	17988.5	1185.3	17992.6	1182.0	17994.4
GR	1180.3	17994.5	1180.6	17996.8	1180.0	18092.3	1180.6	18093.8	1180.3	18168.1
GR	1180.5	18177.1	1203.0	18230.1	1203.6	18260.5	1213.4	18279.5	1212.0	18303.2
GR	1203.6	18312.8	1202.9	18317.4	1202.4	18356.0	1204.7	18368.5	1222.5	18397.5
GR	1205.1	18437.3	1204.5	18486.7	1206.5	18533.8	1218.4	18560.4	1214.7	18580.6
GR	1214.7	18583.8	1205.8	18608.2	1205.0	18622.9	1206.5	18698.6	1208.4	18723.1
GR	1207.9	18772.1	1209.5	18799.3	1208.6	18818.5	1208.0	18868.4	1209.6	18871.8
GR	1208.7	18942.8	1209.3	18978.9	1207.1	19001.4	1206.6	19064.5	1204.5	19139.1
GR	1203.2	19175.2	1204.1	19252.7	1205.2	19260.4	1207.9	19270.6	1208.4	19291.1

GR	1209.8	19301.6	1211.1	19358.3	1211.0	19388.0	1211.9	19397.9	1213.6	19451.8
GR	1213.2	19483.8	1213.4	19549.9						
NH	2	0.028	18900.3	0.031	19491.0					
ET		7.1	9.1				18310.1	19000.0	18310.1	18879.0
X1	226.70	44	18339.9	18859.2	640.0	495.0	650.0	1.0	0.0	
X3		1188.29								
GR	1208.4	18246.6	1207.0	18271.6	1206.0	18310.1	1193.0	18339.9	1191.4	18347.0
GR	1190.0	18355.8	1188.7	18371.3	1184.8	18419.6	1183.9	18442.8	1184.3	18443.8
GR	1182.6	18556.1	1182.0	18628.4	1182.9	18630.6	1183.7	18635.7	1190.6	18688.9
GR	1190.3	18724.7	1191.6	18757.0	1193.2	18764.0	1195.7	18779.2	1198.6	18793.6
GR	1198.0	18830.1	1200.8	18841.7	1203.1	18859.2	1203.7	18871.2	1208.7	18891.3
GR	1210.2	18900.3	1209.4	18919.0	1208.6	18923.3	1209.7	18928.4	1208.0	18962.6
GR	1207.0	19004.4	1207.1	19007.1	1210.8	19027.4	1210.5	19034.9	1210.8	19052.1
GR	1205.8	19062.7	1206.0	19080.4	1204.1	19152.9	1204.5	19218.6	1204.0	19277.2
GR	1205.2	19345.1	1205.6	19395.9	1205.7	19443.8	1205.8	19491.0		
NH	2	0.028	19227.0	0.031	19441.4					
ET		7.1	9.1				18684.9	19440.0	18684.9	19400.0
X1	226.80	32	18684.9	19309.8	560.0	480.0	570.0	1.0	0.0	
X3		1189.39								
GR	1210.7	18517.6	1210.2	18590.0	1210.2	18591.2	1208.5	18678.9	1205.8	18684.9
GR	1188.2	18724.9	1188.9	18727.7	1189.0	18729.8	1188.6	18790.3	1188.1	18895.9
GR	1188.0	18897.7	1190.6	18911.8	1191.7	18940.6	1190.7	18977.1	1190.6	18980.7
GR	1190.4	19009.0	1190.7	19011.1	1190.5	19014.4	1191.0	19029.1	1190.3	19109.1
GR	1190.5	19182.7	1191.1	19188.4	1203.1	19225.3	1203.7	19227.0	1203.8	19232.2
GR	1204.9	19289.4	1205.2	19309.8	1205.0	19352.7	1205.2	19398.0	1205.2	19399.9
GR	1205.0	19436.0	1205.1	19441.4						
NH	3	0.028	19026.7	0.028	20553.4	0.032	21751.8			
ET		7.1	9.1				18699.3	19600.0	19101.3	19600.0
X1	226.89	96	19101.3	19599.9	600.0	525.0	570.0	1.0	0.0	
GR	1210.8	18699.3	1210.7	18704.0	1210.4	18760.0	1210.2	18812.2	1210.6	18825.2
GR	1209.3	18833.5	1210.5	18839.9	1210.1	18881.5	1210.0	18884.7	1210.0	18885.9
GR	1209.9	18900.2	1206.3	18960.0	1205.9	18965.0	1204.2	19008.2	1204.4	19026.7
GR	1202.5	19043.1	1197.3	19073.7	1195.0	19098.5	1193.6	19101.3	1193.6	19131.0
GR	1192.9	19351.9	1193.3	19352.3	1193.4	19357.5	1194.3	19389.5	1194.3	19392.7
GR	1194.3	19393.6	1194.3	19399.7	1193.7	19428.0	1193.2	19437.3	1192.5	19447.7
GR	1192.7	19448.7	1193.5	19456.5	1193.4	19486.1	1193.4	19491.2	1193.1	19599.9
GR	1192.8	19840.5	1192.9	19851.8	1193.6	20155.5	1193.7	20191.0	1193.7	20277.3
GR	1194.1	20461.8	1194.1	20464.2	1198.9	20506.8	1202.7	20534.0	1205.7	20552.0
GR	1205.8	20553.4	1207.2	20593.8	1205.3	20640.7	1204.4	20656.9	1204.5	20665.3
GR	1204.0	20691.7	1204.2	20701.6	1203.6	20722.5	1203.9	20741.1	1205.4	20776.1
GR	1205.8	20783.0	1205.8	20783.7	1205.8	20791.9	1205.8	20826.9	1206.0	20838.5
GR	1206.1	20855.5	1206.7	20894.8	1210.3	20924.6	1210.6	20926.4	1210.8	20929.0
GR	1210.9	20936.0	1211.4	21005.5	1211.2	21018.4	1211.1	21025.6	1209.9	21059.1
GR	1210.2	21081.5	1210.2	21113.8	1210.2	21155.0	1209.7	21178.6	1209.5	21235.1
GR	1209.2	21247.9	1209.2	21256.3	1209.0	21261.9	1209.6	21334.4	1209.5	21340.6
GR	1209.5	21345.0	1209.8	21399.5	1210.3	21437.5	1210.4	21455.1	1210.7	21460.8
GR	1210.5	21528.7	1209.6	21547.4	1208.9	21559.0	1209.0	21575.1	1209.0	21579.2
GR	1208.9	21584.7	1208.8	21613.8	1209.3	21642.8	1210.2	21683.1	1210.9	21714.4
GR	1211.1	21751.8								

SECNO	DEPTH	CWSEL	CRIWS	WSELK	EG	HV	HL	OLOSS	L-BANK ELEV
Q	QLOB	QCH	QROB	ALOB	ACH	AROB	VOL	TWA	R-BANK ELEV
TIME	VLOB	VCH	VROB	XNL	XNCH	XNR	WTN	ELMIN	SSTA
SLOPE	XLOBL	XLCH	XLOBR	ITRIAL	IDC	ICONT	CORAR	TOPWID	ENDST

*PROF 1

CRITICAL DEPTH TO BE CALCULATED AT ALL CROSS SECTIONS

CCHV= .100 CEHV= .300
1490 NH CARD USED
*SECNO 225.950

3470 ENCROACHMENT STATIONS= 18335.5 20237.2 TYPE= 1 TARGET= 1901.699

225.950	20.91	1188.81	1180.67	.00	1189.86	1.05	.00	.00	1183.00
220000.0	831.7	217644.9	1523.4	222.0	26328.1	429.3	.0	.0	1183.60
.00	3.75	8.27	3.55	.028	.028	.028	.000	1167.90	18380.46
.000589	0.	0.	0.	0	13	0	.00	1758.57	20139.03

1490 NH CARD USED
*SECNO 226.040

3265 DIVIDED FLOW

3301 HV CHANGED MORE THAN HVINS

3302 WARNING: CONVEYANCE CHANGE OUTSIDE OF ACCEPTABLE RANGE, KRATIO = .53

3470 ENCROACHMENT STATIONS= 18000.0 19322.6 TYPE= 1 TARGET= 1322.600

226.040	21.31	1189.71	1178.64	.00	1190.14	.43	.21	.06	1184.80
72500.0	42.2	48854.3	23603.6	30.1	9509.2	4283.8	224.6	14.7	1183.70
.03	1.40	5.14	5.51	.028	.028	.028	.000	1168.40	18292.23
.000232	920.	476.	480.	2	8	0	.00	877.62	19252.26

1490 NH CARD USED
*SECNO 226.130

3470 ENCROACHMENT STATIONS= 17850.0 19100.0 TYPE= 1 TARGET= 1250.000

226.130	19.44	1189.94	1178.39	.00	1190.25	.31	.10	.01	1188.40
72500.0	3.8	44936.8	27559.4	8.9	10264.4	5998.9	397.8	25.4	1173.00
.06	.43	4.38	4.59	.028	.028	.028	.000	1170.50	18124.68
.000164	510.	502.	500.	2	22	0	.00	975.32	19100.00

SECNO	DEPTH	CWSEL	CRIWS	WSELK	EG	HV	HL	OLOSS	L-BANK ELEV
Q	QLOB	QCH	QROB	ALOB	ACH	AROB	VOL	TWA	R-BANK ELEV
TIME	VLOB	VCH	VROB	XNL	XNCH	XNR	WTN	ELMIN	SSTA
SLOPE	XLOBL	XLCH	XLOBR	ITRIAL	IDC	ICONT	CORAR	TOPWID	ENDST

1490 NH CARD USED
*SECNO 226.230

3301 HV CHANGED MORE THAN HVINS

3302 WARNING: CONVEYANCE CHANGE OUTSIDE OF ACCEPTABLE RANGE, KRATIO = .44

3470 ENCROACHMENT STATIONS= 18060.0 18910.8 TYPE= 1 TARGET= 850.801

226.230	18.75	1189.55	1183.96	.00	1190.54	.99	.09	.20	1187.00
72500.0	917.0	41455.8	30127.2	237.2	5583.1	3429.7	476.9	31.1	1174.70
.07	3.87	7.43	8.78	.028	.028	.028	.000	1170.80	18063.44
.000852	270.	270.	270.	2	20	0	.00	847.36	18910.80

1490 NH CARD USED
*SECNO 226.350

3301 HV CHANGED MORE THAN HVINS

7185 MINIMUM SPECIFIC ENERGY
3720 CRITICAL DEPTH ASSUMED

3470 ENCROACHMENT STATIONS= 18050.0 18572.1 TYPE= 1 TARGET= 522.100

226.350	16.52	1187.82	1187.82	.00	1192.63	4.81	.37	1.14	1187.20
72500.0	8.3	72491.7	.0	4.5	4120.3	.0	509.0	34.1	100000.00
.07	1.83	17.59	.00	.028	.028	.000	.000	1171.30	18119.45
.005637	150.	200.	240.	0	11	0	.00	452.65	18572.10

1490 NH CARD USED
*SECNO 226.480

3301 HV CHANGED MORE THAN HVINS

7185 MINIMUM SPECIFIC ENERGY
3720 CRITICAL DEPTH ASSUMED

3470 ENCROACHMENT STATIONS= 17912.9 18393.7 TYPE= 1 TARGET= 480.799

226.480	13.40	1192.00	1192.00	.00	1197.43	5.43	1.28	.19	1186.90
72500.0	120.2	71806.5	573.3	18.8	3825.3	60.6	531.2	36.5	1186.20
.07	6.38	18.77	9.46	.028	.028	.028	.000	1178.60	17933.16
.005140	309.	234.	989.	0	15	0	.00	368.89	18302.05

SECNO	DEPTH	CWSEL	CRIWS	WSELK	EG	HV	HL	OLOSS	L-BANK ELEV
Q	QLOB	QCH	QROB	ALOB	ACH	AROB	VOL	TWA	R-BANK ELEV
TIME	VLOB	VCH	VROB	XNL	XNCH	XNR	WTN	ELMIN	SSTA
SLOPE	XLOBL	XLCH	XLOBR	ITRIAL	IDC	ICONT	CORAR	TOPWID	ENDST

1490 NH CARD USED
*SECNO 226.490
7185 MINIMUM SPECIFIC ENERGY
3720 CRITICAL DEPTH ASSUMED

3470 ENCROACHMENT STATIONS= 17912.9 18393.7 TYPE= 1 TARGET= 480.799

226.490	13.11	1198.11	1198.11	.00	1203.34	5.22	.01	.02	1191.80
72500.0	251.8	71092.9	1155.3	33.9	3849.5	110.0	531.2	36.5	1188.00
.07	7.42	18.47	10.51	.028	.028	.028	.000	1185.00	17922.75
.005144	1.	1.	1.	0	8	0	.00	389.29	18312.04

1490 NH CARD USED
*SECNO 226.500

3301 HV CHANGED MORE THAN HVINS

3470 ENCROACHMENT STATIONS= 17912.8 18393.8 TYPE= 1 TARGET= 481.000
ALMA SCHOOL ROAD BRIDGE

226.500	14.29	1199.29	1198.09	.00	1203.50	4.21	.06	.10	1191.80
72500.0	333.1	70867.4	1299.5	47.7	4268.8	137.0	532.7	36.6	1188.00
.07	6.98	16.60	9.49	.028	.028	.028	.000	1185.00	17920.75
.003621	15.	15.	15.	10	5	0	.00	393.82	18314.57

*SECNO 226.510

3265 DIVIDED FLOW

3370 NORMAL BRIDGE, NRD= 12 MIN ELTRD= 1204.00 MAX ELLC= 1205.70

3470 ENCROACHMENT STATIONS= 17915.6 18322.6 TYPE= 1 TARGET= 407.000

226.510	14.15	1199.15	1198.32	.00	1203.57	4.42	.00	.06	1202.09
72500.0	.0	72500.0	.0	.0	4299.0	.0	532.8	36.6	100000.00
.07	.00	16.86	.00	.000	.028	.000	.000	1185.00	17915.66
.006366	1.	1.	1.	2	16	0	.00	391.86	18322.51

*SECNO 226.520

SECNO	DEPTH	CWSEL	CRIWS	WSELK	EG	HV	HL	OLOSS	L-BANK ELEV
Q	QLOB	QCH	QROB	ALOB	ACH	AROB	VOL	TWA	R-BANK ELEV
TIME	VLOB	VCH	VROB	XNL	XNCH	XNR	WTN	ELMIN	SSTA
SLOPE	XLOBL	XLCH	XLOBR	ITRIAL	IDC	ICONT	CORAR	TOPWID	ENDST

3265 DIVIDED FLOW

3301 HV CHANGED MORE THAN HVINS

3370 NORMAL BRIDGE, NRD= 12 MIN ELTRD= 1204.00 MAX ELLC= 1205.70

3470 ENCROACHMENT STATIONS= 17915.6 18322.6 TYPE= 1 TARGET= 407.000

226.520	15.84	1200.84	1198.22	.00	1204.11	3.27	.42	.12	1202.09
72500.0	.0	72500.0	.0	.0	4999.3	.0	541.8	37.4	100000.00
.07	.00	14.50	.00	.000	.028	.000	.000	1185.00	17915.62
.004103	84.	84.	84.	4	16	0	.00	391.94	18322.56

1490 NH CARD USED
*SECNO 226.530

3301 HV CHANGED MORE THAN HVINS

3302 WARNING: CONVEYANCE CHANGE OUTSIDE OF ACCEPTABLE RANGE, KRATIO = 1.50

3470 ENCROACHMENT STATIONS= 17899.8 18325.5 TYPE= 1 TARGET= 425.699

226.530	16.43	1201.43	1197.60	.00	1204.16	2.73	.00	.05	1189.30
72500.0	684.5	69490.2	2325.3	104.2	5176.8	244.2	541.9	37.4	1188.70
.07	6.57	13.42	9.52	.028	.028	.028	.000	1185.00	17914.42
.001815	1.	1.	1.	3	15	0	.00	405.30	18319.72

1490 NH CARD USED
*SECNO 226.580

3470 ENCROACHMENT STATIONS= 17800.0 18750.2 TYPE= 1 TARGET= 950.199

226.580	16.13	1202.00	1199.83	.00	1205.19	3.18	.89	.14	1200.10
72500.0	512.0	67106.6	4881.4	141.5	4539.7	765.1	598.6	42.7	1193.80
.08	3.62	14.78	6.38	.028	.028	.028	.000	1185.87	17800.00
.002147	450.	450.	450.	3	11	0	.00	616.55	18416.55

SECNO	DEPTH	CWSEL	CRIWS	WSELK	EG	HV	HL	OLOSS	L-BANK ELEV
Q	QLOB	QCH	QROB	ALOB	ACH	AROB	VOL	TWA	R-BANK ELEV
TIME	VLOB	VCH	VROB	XNL	XNCH	XNR	WTN	ELMIN	SSTA
SLOPE	XLOBL	XLCH	XLOBR	ITRIAL	IDC	ICONT	CORAR	TOPWID	ENDST

1490 NH CARD USED
*SECNO 226.610

3265 DIVIDED FLOW

3301 HV CHANGED MORE THAN HVINS

3470 ENCROACHMENT STATIONS= 17550.0 18800.0 TYPE= 1 TARGET= 1250.000

226.610	17.37	1204.40	1198.56	.00	1206.28	1.88	.96	.13	1188.00
72500.0	17396.3	54861.1	242.6	1738.6	4851.2	118.3	687.4	50.5	1203.00
.10	10.01	11.31	2.05	.028	.028	.031	.000	1187.03	17793.11
.001124	950.	600.	360.	3	19	0	.00	523.94	18366.88

1490 NH CARD USED
*SECNO 226.700

3301 HV CHANGED MORE THAN HVINS

3470 ENCROACHMENT STATIONS= 18310.1 19000.0 TYPE= 1 TARGET= 689.900

226.700	17.36	1205.65	1198.83	.00	1206.95	1.30	.62	.06	1193.00
72500.0	897.4	71521.0	81.6	183.5	7783.8	34.7	796.6	58.5	1203.10
.12	4.89	9.19	2.35	.028	.028	.028	.000	1188.29	18310.89
.000814	640.	650.	495.	2	14	0	.00	568.16	18879.06

1490 NH CARD USED
*SECNO 226.800
3280 CROSS SECTION 226.80 EXTENDED 1.14 FEET

3470 ENCROACHMENT STATIONS= 18684.9 19440.0 TYPE= 1 TARGET= 755.100

226.800	16.85	1206.24	1199.10	.00	1207.41	1.18	.45	.01	1205.80
72500.0	.0	72288.5	211.5	.0	8296.7	148.0	904.0	67.0	1205.20
.14	.00	8.71	1.43	.000	.026	.031	.000	1189.39	18684.90
.000758	560.	570.	480.	2	11	0	.00	755.10	19440.00

1490 NH CARD USED

SECNO	DEPTH	CWSEL	CRIWS	WSELK	EG	HV	HL	OLOSS	L-BANK ELEV
Q	QLOB	QCH	QROB	ALOB	ACH	AROB	VOL	TWA	R-BANK ELEV
TIME	VLOB	VCH	VROB	XNL	XNCH	XNR	WTN	ELMIN	SSTA
SLOPE	XLOBL	XLCH	XLOBR	ITRIAL	IDC	ICONT	CORAR	TOPWID	ENDST

*SECNO 226.890

3470 ENCROACHMENT STATIONS= 18699.3 19600.0 TYPE= 1 TARGET= 900.699

226.890	13.96	1206.46	1201.93	.00	1208.10	1.63	.55	.14	1193.60
72500.0	4366.2	68133.3	.5	643.2	6523.5	1.3	1006.3	76.1	1193.10
.15	6.79	10.44	.40	.028	.028	.028	.000	1192.50	18957.29
.001257	600.	570.	525.	2	11	0	.00	642.71	19600.00

T1 SALT/GILA FLOOD DELINEATION
T2 100-YEAR FLOOD
T3 REACH 5: Split B X-sec's 225.95 - 226.89

J1	ICHECK	INQ	NINV	IDIR	STRT	METRIC	HVINS	Q	WSEL	FQ
	0	3	0	0	0.0	0	0.0	220000.0	1189.01	

J2	NPROF	IPLOT	PRFVS	XSECV	XSECH	FN	ALLDC	IBW	CHNIM	ITRACE
	2	0	-1	0.0	0.0	0.0	-1.0	-6.0	0.0	15

SECNO	DEPTH	CWSEL	CRIWS	WSELK	EG	HV	HL	OLOSS	L-BANK ELEV
Q	QLOB	QCH	QROB	ALOB	ACH	AROB	VOL	TWA	R-BANK ELEV
TIME	VLOB	VCH	VROB	XNL	XNCH	XNR	WTN	ELMIN	SSTA
SLOPE	XLOBL	XLCH	XLOBR	ITRIAL	IDC	ICONT	CORAR	TOPWID	ENDST

*PROF 2

CRITICAL DEPTH TO BE CALCULATED AT ALL CROSS SECTIONS

CCHV= .100 CEHV= .300
1490 NH CARD USED
*SECNO 225.950

3470 ENCROACHMENT STATIONS= 18428.5 20039.7 TYPE= 1 TARGET= 1611.199

225.950	21.11	1189.01	1180.67	1188.81	1190.07	1.06	.00	.00	1183.00
220000.0	.0	220000.0	.0	.0	26650.3	.0	.0	.0	100000.00
.00	.00	8.26	.00	.000	.028	.000	.000	1167.90	18428.50
.000583	0.	0.	0.	0	13	0	.00	1611.20	20039.70

FLOW DISTRIBUTION FOR SECNO= 225.95 CWSEL= 1189.01

STA= 18429. 20040.
PER Q= 100.0
AREA= 26650.3
VEL= 8.3
DEPTH= 16.5

1490 NH CARD USED
*SECNO 226.040

3265 DIVIDED FLOW

3301 HV CHANGED MORE THAN HVINS

3302 WARNING: CONVEYANCE CHANGE OUTSIDE OF ACCEPTABLE RANGE, KRATIO = .46

3470 ENCROACHMENT STATIONS= 18304.5 19170.0 TYPE= 1 TARGET= 865.500

226.040	21.44	1189.84	1179.20	1189.71	1190.35	.51	.23	.05	1184.80
72500.0	.0	55493.2	17006.8	.0	9585.7	3018.5	214.8	13.1	1183.70
.02	.00	5.79	5.63	.000	.028	.028	.000	1168.40	18304.50
.000294	920.	476.	480.	2	11	0	.00	784.24	19170.00

SECNO	DEPTH	CWSEL	CRIWS	WSELK	EG	HV	HL	OLOSS	L-BANK ELEV
Q	QLOB	QCH	QROB	ALOB	ACH	AROB	VOL	TWA	R-BANK ELEV
TIME	VLOB	VCH	VROB	XNL	XNCH	XNR	WTN	ELMIN	SSTA
SLOPE	XLOBL	XLCH	XLOBR	ITRIAL	IDC	ICONT	CORAR	TOPWID	ENDST

FLOW DISTRIBUTION FOR SECNO= 226.04 CWSEL= 1189.84

STA=	18305.	18895.	18909.	19060.	19074.	19170.
PER Q=	76.5	.1	4.0	2.7	16.7	
AREA=	9585.7	43.2	686.3	288.2	2000.7	
VEL=	5.8	1.8	4.2	6.8	6.0	
DEPTH=	16.2	3.1	4.5	20.4	20.9	

1490 NH CARD USED
*SECNO 226.130

3470 ENCROACHMENT STATIONS= 18151.2 18890.0 TYPE= 1 TARGET= 738.801

226.130	19.47	1189.97	1179.85	1189.94	1190.51	.54	.15	.01	1188.40
72500.0	.0	60882.5	11617.5	.0	10283.6	2006.6	358.1	21.9	1173.00
.05	.00	5.92	5.79	.000	.028	.028	.000	1170.50	18151.20
.000300	510.	502.	500.	2	18	0	.00	738.80	18890.00

FLOW DISTRIBUTION FOR SECNO= 226.13 CWSEL= 1189.97

STA=	18151.	18775.	18822.	18844.	18849.	18876.	18876.	18890.
PER Q=	84.0	6.7	3.1	.7	4.2	.0	1.3	
AREA=	10283.6	795.8	371.6	86.6	483.7	5.7	263.2	
VEL=	5.9	6.1	6.1	6.1	6.2	3.0	3.7	
DEPTH=	16.5	17.0	17.0	17.0	17.7	18.9	19.4	

1490 NH CARD USED
*SECNO 226.230

3301 HV CHANGED MORE THAN HVINS

3302 WARNING: CONVEYANCE CHANGE OUTSIDE OF ACCEPTABLE RANGE, KRATIO = .32

3470 ENCROACHMENT STATIONS= 18127.1 18690.0 TYPE= 1 TARGET= 562.900

226.230	17.89	1188.69	1186.73	1189.55	1191.32	2.64	.19	.63	1187.00
72500.0	.0	66771.2	5728.8	.0	5127.5	437.9	413.5	25.9	1174.70
.05	.00	13.02	13.08	.000	.028	.028	.000	1170.80	18127.10
.002949	270.	270.	270.	3	12	0	.00	562.90	18690.00

SECNO	DEPTH	CWSEL	CRIWS	WSELK	EG	HV	HL	OLOSS	L-BANK ELEV
Q	QLOB	QCH	QROB	ALOB	ACH	AROB	VOL	TWA	R-BANK ELEV
TIME	VLOB	VCH	VROB	XNL	XNCH	XNR	WTN	ELMIN	SSTA
SLOPE	XLOBL	XLCH	XLOBR	ITRIAL	IDC	ICONT	CORAR	TOPWID	ENDST

FLOW DISTRIBUTION FOR SECNO= 226.23 CWSEL= 1188.69

STA=	18127.	18659.	18690.
PER Q=	92.1	7.9	
AREA=	5127.5	437.9	
VEL=	13.0	13.1	
DEPTH=	9.6	14.0	

1490 NH CARD USED
*SECNO 226.350

3301 HV CHANGED MORE THAN HVINS

3470 ENCROACHMENT STATIONS= 18100.0 18572.1 TYPE= 1 TARGET= 472.100

226.350	16.87	1188.17	1187.81	1187.82	1192.63	4.47	.76	.55	1187.20
72500.0	25.5	72474.5	.0	11.0	4272.9	.0	436.3	28.3	100000.00
.06	2.32	16.96	.00	.028	.028	.000	.000	1171.30	18111.30
.004996	150.	200.	240.	3	11	0	.00	460.80	18572.10

FLOW DISTRIBUTION FOR SECNO= 226.35 CWSEL= 1188.17

STA=	18111.	18134.	18572.
PER Q=	.0	100.0	
AREA=	11.0	4272.9	
VEL=	2.3	17.0	
DEPTH=	.5	9.8	

1490 NH CARD USED
*SECNO 226.480

3301 HV CHANGED MORE THAN HVINS

7185 MINIMUM SPECIFIC ENERGY
3720 CRITICAL DEPTH ASSUMED

3470 ENCROACHMENT STATIONS= 17925.0 18310.0 TYPE= 1 TARGET= 385.000

226.480	13.40	1192.00	1192.00	1192.00	1197.43	5.43	1.20	.29	1186.90
72500.0	120.3	71806.4	573.4	18.8	3825.6	60.6	458.8	30.6	1186.20
.06	6.38	18.77	9.46	.028	.028	.028	.000	1178.60	17933.16
.005138	309.	234.	989.	0	15	0	.00	368.89	18302.05

SECNO	DEPTH	CWSEL	CRIWS	WSELK	EG	HV	HL	OLOSS	L-BANK ELEV
Q	QLOB	QCH	QROB	ALOB	ACH	AROB	VOL	TWA	R-BANK ELEV
TIME	VLOB	VCH	VROB	XNL	XNCH	XNR	WTN	ELMIN	SSTA
SLOPE	XLOBL	XLCH	XLOBR	ITRIAL	IDC	ICONT	CORAR	TOPWID	ENDST

FLOW DISTRIBUTION FOR SECNO= 226.48 CWSEL= 1192.00

STA=	17933.	17941.	18287.	18302.
PER Q=	.2	99.0	.8	
AREA=	18.8	3825.6	60.6	
VEL=	6.4	18.8	9.5	
DEPTH=	2.5	11.0	4.0	

1490 NH CARD USED
*SECNO 226.490
7185 MINIMUM SPECIFIC ENERGY
3720 CRITICAL DEPTH ASSUMED

3470 ENCROACHMENT STATIONS= 17925.0 18310.0 TYPE= 1 TARGET= 385.000

226.490	13.11	1198.11	1198.11	1198.11	1203.33	5.23	.01	.02	1191.80
72500.0	250.8	71069.3	1179.9	32.4	3846.7	108.8	458.9	30.7	1188.00
.06	7.75	18.48	10.84	.028	.028	.028	.000	1185.00	17925.00
.005153	1.	1.	1.	0	8	0	.00	385.00	18310.00

FLOW DISTRIBUTION FOR SECNO= 226.49 CWSEL= 1198.11

STA=	17925.	17934.	18290.	18310.
PER Q=	.3	98.0	1.6	
AREA=	32.4	3846.7	108.8	
VEL=	7.7	18.5	10.8	
DEPTH=	3.8	10.8	5.5	

1490 NH CARD USED
*SECNO 226.500

3301 HV CHANGED MORE THAN HVINS

3470 ENCROACHMENT STATIONS= 17925.0 18310.0 TYPE= 1 TARGET= 385.000
ALMA SCHOOL ROAD BRIDGE

226.500	14.26	1199.26	1198.08	1199.29	1203.50	4.24	.06	.10	1191.80
72500.0	307.4	70874.4	1318.3	42.2	4258.7	131.6	460.4	30.8	1188.00
.06	7.28	16.64	10.02	.028	.028	.028	.000	1185.00	17925.00
.003651	15.	15.	15.	10	5	0	.00	385.00	18310.00

SECNO	DEPTH	CWSEL	CRIWS	WSELK	EG	HV	HL	OLOSS	L-BANK ELEV
Q	QLOB	QCH	QROB	ALOB	ACH	AROB	VOL	TWA	R-BANK ELEV
TIME	VLOB	VCH	VROB	XNL	XNCH	XNR	WTN	ELMIN	SSTA
SLOPE	XLOBL	XLCH	XLOBR	ITRIAL	IDC	ICONT	CORAR	TOPWID	ENDST

FLOW DISTRIBUTION FOR SECNO= 226.50 CWSEL= 1199.26

STA=	17925.	17934.	18290.	18310.
PER Q=	.4	97.8	1.8	
AREA=	42.2	4258.7	131.6	
VEL=	7.3	16.6	10.0	
DEPTH=	5.0	11.9	6.7	

*SECNO 226.510

3265 DIVIDED FLOW

3370 NORMAL BRIDGE, NRD= 12 MIN ELTRD= 1204.00 MAX ELLC= 1205.70

3470 ENCROACHMENT STATIONS= 17915.6 18322.6 TYPE= 1 TARGET= 407.000

226.510	14.13	1199.13	1198.32	1199.15	1203.56	4.44	.00	.06	1202.09
72500.0	.0	72500.0	.0	.0	4288.0	.0	460.5	30.8	100000.00
.06	.00	16.91	.00	.000	.028	.000	.000	1185.00	17915.66
.006414	1.	1.	1.	2	16	0	.00	391.86	18322.51

FLOW DISTRIBUTION FOR SECNO= 226.51 CWSEL= 1199.13

STA=	17916.	18323.
PER Q=	100.0	
AREA=	4288.0	
VEL=	16.9	
DEPTH=	10.9	

*SECNO 226.520

3265 DIVIDED FLOW

3301 HV CHANGED MORE THAN HVINS

3370 NORMAL BRIDGE, NRD= 12 MIN ELTRD= 1204.00 MAX ELLC= 1205.70

```
 SECNO     DEPTH     CWSEL     CRIWS     WSELK     EG        HV        HL        OLOSS     L-BANK ELEV
 Q         QLOB      QCH       QROB      ALOB      ACH       AROB      VOL       TWA       R-BANK ELEV
 TIME      VLOB      VCH       VROB      XNL       XNCH      XNR       WTN       ELMIN     SSTA
 SLOPE     XLOBL     XLCH      XLOBR     ITRIAL    IDC       ICONT     CORAR     TOPWID    ENDST


3470 ENCROACHMENT STATIONS=    17915.6   18322.6  TYPE=      1  TARGET=      407.000
  226.520     15.84   1200.84   1198.22   1200.84   1204.11      3.27       .43       .12   1202.09
  72500.0       .0   72500.0       .0        .0    4998.3        .0     469.4      31.6 100000.00
      .06       .00     14.50       .00      .000      .028      .000      .000   1185.00  17915.62
 .004105       84.       84.       84.         4        16         0       .00    391.94  18322.56


FLOW DISTRIBUTION FOR SECNO=    226.52          CWSEL=   1200.84

STA=   17916.   18323.
  PER Q=    100.0
   AREA=   4998.3
    VEL=     14.5
  DEPTH=     12.8

1490 NH CARD USED
*SECNO 226.530

3302 WARNING:  CONVEYANCE CHANGE OUTSIDE OF ACCEPTABLE RANGE,  KRATIO =  1.48


3470 ENCROACHMENT STATIONS=    17925.0   18310.0  TYPE=      1  TARGET=      385.000
  226.530     16.34   1201.34   1197.57   1201.43   1204.16      2.82       .00       .05   1189.30
  72500.0     380.3   69934.8    2184.9      64.1    5147.7     215.9     469.5      31.6   1188.70
      .06      5.93     13.59     10.12      .028      .028      .028      .000   1185.00  17925.00
 .001873        1.        1.        1.         2        15         0       .00    385.00  18310.00


FLOW DISTRIBUTION FOR SECNO=    226.53          CWSEL=   1201.34

STA=   17925.   17932.   18289.   18310.
  PER Q=       .5     96.5      3.0
   AREA=     64.1   5147.7    215.9
    VEL=      5.9     13.6     10.1
  DEPTH=      9.7     14.4     10.0

1490 NH CARD USED
*SECNO 226.580

3470 ENCROACHMENT STATIONS=    17800.0   18416.0  TYPE=      1  TARGET=      616.000
```

SECNO	DEPTH	CWSEL	CRIWS	WSELK	EG	HV	HL	OLOSS	L-BANK ELEV
Q	QLOB	QCH	QROB	ALOB	ACH	AROB	VOL	TWA	R-BANK ELEV
TIME	VLOB	VCH	VROB	XNL	XNCH	XNR	WTN	ELMIN	SSTA
SLOPE	XLOBL	XLCH	XLOBR	ITRIAL	IDC	ICONT	CORAR	TOPWID	ENDST
226.580	16.10	1201.97	1199.80	1202.00	1205.18	3.20	.91	.12	1200.10
72500.0	499.5	67159.7	4840.8	138.9	4530.4	758.1	525.6	36.7	1193.80
.07	3.60	14.82	6.39	.028	.028	.028	.000	1185.87	17800.00
.002165	450.	450.	450.	3	11	0	.00	615.71	18415.71

FLOW DISTRIBUTION FOR SECNO= 226.58 CWSEL= 1201.97

STA=	17800.	17885.	18189.	18278.	18416.
PER Q=	.7	92.6	4.0	2.7	
AREA=	138.9	4530.4	414.1	344.0	
VEL=	3.6	14.8	6.9	5.7	
DEPTH=	1.6	14.9	4.6	2.5	

1490 NH CARD USED
*SECNO 226.610

3265 DIVIDED FLOW

3301 HV CHANGED MORE THAN HVINS

3470 ENCROACHMENT STATIONS= 17915.0 18366.5 TYPE= 1 TARGET= 451.500

226.610	15.89	1202.92	1199.85	1204.40	1206.77	3.85	1.40	.19	1188.00
72500.0	2396.9	70092.0	11.1	231.2	4407.5	11.1	594.4	43.1	1203.00
.08	10.37	15.90	1.00	.028	.028	.031	.000	1187.03	17915.00
.002523	950.	600.	360.	2	15	0	.00	356.45	18358.82

FLOW DISTRIBUTION FOR SECNO= 226.61 CWSEL= 1202.92

STA=	17915.	17931.	18230.	18359.
PER Q=	3.3	96.7	.0	
AREA=	231.2	4407.5	11.1	
VEL=	10.4	15.9	1.0	
DEPTH=	14.6	14.7	.1	

1490 NH CARD USED
*SECNO 226.700

SECNO	DEPTH	CWSEL	CRIWS	WSELK	EG	HV	HL	OLOSS	L-BANK ELEV
Q	QLOB	QCH	QROB	ALOB	ACH	AROB	VOL	TWA	R-BANK ELEV
TIME	VLOB	VCH	VROB	XNL	XNCH	XNR	WTN	ELMIN	SSTA
SLOPE	XLOBL	XLCH	XLOBR	ITRIAL	IDC	ICONT	CORAR	TOPWID	ENDST

3280 CROSS SECTION 226.70 EXTENDED .85 FEET

3301 HV CHANGED MORE THAN HVINS

3302 WARNING: CONVEYANCE CHANGE OUTSIDE OF ACCEPTABLE RANGE, KRATIO = 1.96

3470 ENCROACHMENT STATIONS= 18310.1 18879.0 TYPE= 1 TARGET= 568.900

226.700	18.36	1206.65	1198.81	1205.65	1207.79	1.13	.75	.27	1193.00
72500.0	1000.0	71353.8	146.2	213.1	8302.1	54.5	692.8	49.9	1203.10
.10	4.69	8.59	2.68	.028	.028	.028	.000	1188.29	18310.10
.000654	640.	650.	495.	3	14	0	.00	568.90	18879.00

FLOW DISTRIBUTION FOR SECNO= 226.70 CWSEL= 1206.65

STA=	18310.	18340.	18859.	18879.
PER Q=	1.4	98.4	.2	
AREA=	213.1	8302.1	54.5	
VEL=	4.7	8.6	2.7	
DEPTH=	7.2	16.0	2.8	

1490 NH CARD USED
*SECNO 226.800
3280 CROSS SECTION 226.80 EXTENDED 2.04 FEET

3470 ENCROACHMENT STATIONS= 18684.9 19400.0 TYPE= 1 TARGET= 715.100

226.800	17.74	1207.13	1199.08	1206.24	1208.16	1.03	.36	.01	1205.80
72500.0	.0	72149.1	350.9	.0	8858.9	183.4	807.8	58.2	1205.20
.12	.00	8.14	1.91	.000	.026	.031	.000	1189.39	18684.90
.000619	560.	570.	480.	2	11	0	.00	715.10	19400.00

FLOW DISTRIBUTION FOR SECNO= 226.80 CWSEL= 1207.13

STA=	18685.	19227.	19310.	19353.	19398.	19400.
PER Q=	98.8	.7	.2	.2	.0	
AREA=	8639.4	219.5	87.3	92.2	3.9	
VEL=	8.3	2.3	1.9	1.9	1.8	
DEPTH=	15.9	2.7	2.0	2.0	1.9	

SECNO	DEPTH	CWSEL	CRIWS	WSELK	EG	HV	HL	OLOSS	L-BANK ELEV
Q	QLOB	QCH	QROB	ALOB	ACH	AROB	VOL	TWA	R-BANK ELEV
TIME	VLOB	VCH	VROB	XNL	XNCH	XNR	WTN	ELMIN	SSTA
SLOPE	XLOBL	XLCH	XLOBR	ITRIAL	IDC	ICONT	CORAR	TOPWID	ENDST

1490 NH CARD USED
*SECNO 226.890

3301 HV CHANGED MORE THAN HVINS

3470 ENCROACHMENT STATIONS= 19101.3 19600.0 TYPE= 1 TARGET= 498.699

226.890	14.62	1207.12	1202.03	1206.46	1208.86	1.74	.49	.21	1193.60
72500.0	.0	72499.5	.5	.0	6852.8	1.4	911.7	66.1	1193.10
.14	.00	10.58	.40	.000	.028	.028	.000	1192.50	19101.30
.001252	600.	570.	525.	2	11	0	.00	498.70	19600.00

FLOW DISTRIBUTION FOR SECNO= 226.89 CWSEL= 1207.12

STA=	19101.	19600.	19600.
PER Q=	100.0	.0	
AREA=	6852.8	1.4	
VEL=	10.6	.4	
DEPTH=	13.7	14.0	

THIS RUN EXECUTED 12SEP95 09:37:52

****
HEC-2 WATER SURFACE PROFILES

Version 4.6.2; May 1991
****

NOTE- ASTERISK (*) AT LEFT OF CROSS-SECTION NUMBER INDICATES MESSAGE IN SUMMARY OF ERRORS LIST

ASE MODEL PREPARED BY MI

SUMMARY PRINTOUT

	SECNO	ELMIN	CWSEL	Q	VCH	DIFWSX	TOPWID	DEPTH	HV	SSTA	ENDST	QLOB	QROB
	225.950	1167.90	1188.81	220000.00	8.27	.00	1758.57	20.91	1.05	18380.46	20139.03	831.70	1523.43
	225.950	1167.90	1189.01	220000.00	8.26	.00	1611.20	21.11	1.06	18428.50	20039.70	.00	.00
*	226.040	1168.40	1189.71	72500.00	5.14	.90	877.62	21.31	.43	18292.23	19252.26	42.15	23603.58
*	226.040	1168.40	1189.84	72500.00	5.79	.83	784.24	21.44	.51	18304.50	19170.00	.00	17006.83
	226.130	1170.50	1189.94	72500.00	4.38	.23	975.32	19.44	.31	18124.68	19100.00	3.82	27559.40
	226.130	1170.50	1189.97	72500.00	5.92	.13	738.80	19.47	.54	18151.20	18890.00	.00	11617.48
*	226.230	1170.80	1189.55	72500.00	7.43	-.39	847.36	18.75	.99	18063.44	18910.80	916.97	30127.24
*	226.230	1170.80	1188.69	72500.00	13.02	-1.28	562.90	17.89	2.64	18127.10	18690.00	.00	5728.82
*	226.350	1171.30	1187.82	72500.00	17.59	-1.72	452.65	16.52	4.81	18119.45	18572.10	8.28	.00
	226.350	1171.30	1188.17	72500.00	16.96	-.52	460.80	16.87	4.47	18111.30	18572.10	25.50	.00
*	226.480	1178.60	1192.00	72500.00	18.77	4.18	368.89	13.40	5.43	17933.16	18302.05	120.21	573.32
*	226.480	1178.60	1192.00	72500.00	18.77	3.83	368.89	13.40	5.43	17933.16	18302.05	120.25	573.36
*	226.490	1185.00	1198.11	72500.00	18.47	6.12	389.29	13.11	5.22	17922.75	18312.04	251.80	1155.26
*	226.490	1185.00	1198.11	72500.00	18.48	6.11	385.00	13.11	5.23	17925.00	18310.00	250.82	1179.89
	226.500	1185.00	1199.29	72500.00	16.60	1.18	393.82	14.29	4.21	17920.75	18314.57	333.11	1299.52
	226.500	1185.00	1199.26	72500.00	16.64	1.16	385.00	14.26	4.24	17925.00	18310.00	307.38	1318.27
	226.510	1185.00	1199.15	72500.00	16.86	-.14	391.86	14.15	4.42	17915.66	18322.51	.00	.00
	226.510	1185.00	1199.13	72500.00	16.91	-.14	391.86	14.13	4.44	17915.66	18322.51	.00	.00
	226.520	1185.00	1200.84	72500.00	14.50	1.69	391.94	15.84	3.27	17915.62	18322.56	.00	.00
	226.520	1185.00	1200.84	72500.00	14.50	1.71	391.94	15.84	3.27	17915.62	18322.56	.00	.00
*	226.530	1185.00	1201.43	72500.00	13.42	.59	405.30	16.43	2.73	17914.42	18319.72	684.53	2325.29
*	226.530	1185.00	1201.34	72500.00	13.59	.50	385.00	16.34	2.82	17925.00	18310.00	380.25	2184.94

SECNO	ELMIN	CWSEL	Q	VCH	DIFWSX	TOPWID	DEPTH	HV	SSTA	ENDST	QLOB	QROB
226.580	1185.87	1202.00	72500.00	14.78	.57	616.55	16.13	3.18	17800.00	18416.55	512.02	4881.36
226.580	1185.87	1201.97	72500.00	14.82	.63	615.71	16.10	3.20	17800.00	18415.71	499.51	4840.76
226.610	1187.03	1204.40	72500.00	11.31	2.40	523.94	17.37	1.88	17793.11	18366.88	17396.34	242.61
226.610	1187.03	1202.92	72500.00	15.90	.94	356.45	15.89	3.85	17915.00	18358.82	2396.91	11.13
226.700	1188.29	1205.65	72500.00	9.19	1.25	568.16	17.36	1.30	18310.89	18879.06	897.38	81.62
* 226.700	1188.29	1206.65	72500.00	8.59	3.74	568.90	18.36	1.13	18310.10	18879.00	1000.00	146.17
226.800	1189.39	1206.24	72500.00	8.71	.58	755.10	16.85	1.18	18684.90	19440.00	.00	211.55
226.800	1189.39	1207.13	72500.00	8.14	.48	715.10	17.74	1.03	18684.90	19400.00	.00	350.91
226.890	1192.50	1206.46	72500.00	10.44	.23	642.71	13.96	1.63	18957.29	19600.00	4366.21	.52
226.890	1192.50	1207.12	72500.00	10.58	-.01	498.70	14.62	1.74	19101.30	19600.00	.00	.54

ASE MODEL PREPARED BY MI

SUMMARY PRINTOUT TABLE 150

	SECNO	XLCH	ELTRD	ELLC	ELMIN	Q	CWSEL	CRIWS	EG	10*KS	VCH	AREA	.01K
	225.950	.00	.00	.00	1167.90	220000.00	1188.81	1180.67	1189.86	5.89	8.27	26979.41	90652.87
	225.950	.00	.00	.00	1167.90	220000.00	1189.01	1180.67	1190.07	5.83	8.26	26650.28	91091.00
*	226.040	476.46	.00	.00	1168.40	72500.00	1189.71	1178.64	1190.14	2.32	5.14	13823.20	47625.11
*	226.040	476.46	.00	.00	1168.40	72500.00	1189.84	1179.20	1190.35	2.94	5.79	12604.23	42252.29
	226.130	502.01	.00	.00	1170.50	72500.00	1189.94	1178.39	1190.25	1.64	4.38	16272.18	56621.94
	226.130	502.01	.00	.00	1170.50	72500.00	1189.97	1179.85	1190.51	3.00	5.92	12290.18	41852.66
*	226.230	270.00	.00	.00	1170.80	72500.00	1189.55	1183.96	1190.54	8.52	7.43	9249.92	24833.27
*	226.230	270.00	.00	.00	1170.80	72500.00	1188.69	1186.73	1191.32	29.49	13.02	5565.40	13350.33
*	226.350	200.00	.00	.00	1171.30	72500.00	1187.82	1187.82	1192.63	56.37	17.59	4124.78	9656.64
	226.350	200.00	.00	.00	1171.30	72500.00	1188.17	1187.81	1192.63	49.96	16.96	4283.90	10257.25
*	226.480	234.00	.00	.00	1178.60	72500.00	1192.00	1192.00	1197.43	51.40	18.77	3904.76	10112.86
*	226.480	234.00	.00	.00	1178.60	72500.00	1192.00	1192.00	1197.43	51.38	18.77	3905.02	10113.98
*	226.490	1.00	.00	.00	1185.00	72500.00	1198.11	1198.11	1203.34	51.44	18.47	3993.35	10108.29
*	226.490	1.00	.00	.00	1185.00	72500.00	1198.11	1198.11	1203.33	51.53	18.48	3987.88	10099.46
	226.500	15.00	.00	.00	1185.00	72500.00	1199.29	1198.09	1203.50	36.21	16.60	4453.60	12047.89
	226.500	15.00	.00	.00	1185.00	72500.00	1199.26	1198.08	1203.50	36.51	16.64	4432.51	11999.22
	226.510	1.00	1204.00	1205.70	1185.00	72500.00	1199.15	1198.32	1203.57	63.66	16.86	4298.95	9086.44
	226.510	1.00	1204.00	1205.70	1185.00	72500.00	1199.13	1198.32	1203.56	64.14	16.91	4288.00	9052.25
	226.520	84.00	1204.00	1205.70	1185.00	72500.00	1200.84	1198.22	1204.11	41.03	14.50	4999.28	11319.14
	226.520	84.00	1204.00	1205.70	1185.00	72500.00	1200.84	1198.22	1204.11	41.05	14.50	4998.28	11315.83
*	226.530	1.00	.00	.00	1185.00	72500.00	1201.43	1197.60	1204.16	18.15	13.42	5525.10	17017.84
*	226.530	1.00	.00	.00	1185.00	72500.00	1201.34	1197.57	1204.16	18.73	13.59	5427.74	16751.97
	226.580	450.00	.00	.00	1185.87	72500.00	1202.00	1199.83	1205.19	21.47	14.78	5446.29	15647.04
	226.580	450.00	.00	.00	1185.87	72500.00	1201.97	1199.80	1205.18	21.65	14.82	5427.42	15581.32
	226.610	600.00	.00	.00	1187.03	72500.00	1204.40	1198.56	1206.28	11.24	11.31	6708.08	21628.34
	226.610	600.00	.00	.00	1187.03	72500.00	1202.92	1199.85	1206.77	25.23	15.90	4649.87	14433.95
	226.700	650.00	.00	.00	1188.29	72500.00	1205.65	1198.83	1206.95	8.14	9.19	8002.05	25403.79
*	226.700	650.00	.00	.00	1188.29	72500.00	1206.65	1198.81	1207.79	6.54	8.59	8569.71	28351.43
	226.800	570.00	.00	.00	1189.39	72500.00	1206.24	1199.10	1207.41	7.58	8.71	8444.64	26340.32
	226.800	570.00	.00	.00	1189.39	72500.00	1207.13	1199.08	1208.16	6.19	8.14	9042.28	29134.04
	226.890	570.00	.00	.00	1192.50	72500.00	1206.46	1201.93	1208.10	12.57	10.44	7168.00	20449.31
	226.890	570.00	.00	.00	1192.50	72500.00	1207.12	1202.03	1208.86	12.52	10.58	6854.21	20493.16

ASE MODEL PREPARED BY MI

SUMMARY PRINTOUT TABLE 150

	SECNO	Q	CWSEL	DIFWSP	DIFWSX	DIFKWS	TOPWID	XLCH
	225.950	220000.00	1188.81	.00	.00	.00	1758.57	.00
	225.950	220000.00	1189.01	.20	.00	.20	1611.20	.00
*	226.040	72500.00	1189.71	.00	.90	.00	877.62	476.46
*	226.040	72500.00	1189.84	.13	.83	.13	784.24	476.46
	226.130	72500.00	1189.94	.00	.23	.00	975.32	502.01
	226.130	72500.00	1189.97	.03	.13	.03	738.80	502.01
*	226.230	72500.00	1189.55	.00	-.39	.00	847.36	270.00
*	226.230	72500.00	1188.69	-.86	-1.28	-.86	562.90	270.00
*	226.350	72500.00	1187.82	.00	-1.72	.00	452.65	200.00
	226.350	72500.00	1188.17	.35	-.52	.35	460.80	200.00
*	226.480	72500.00	1192.00	.00	4.18	.00	368.89	234.00
*	226.480	72500.00	1192.00	.00	3.83	.00	368.89	234.00
*	226.490	72500.00	1198.11	.00	6.12	.00	389.29	1.00
*	226.490	72500.00	1198.11	-.01	6.11	-.01	385.00	1.00
	226.500	72500.00	1199.29	.00	1.18	.00	393.82	15.00
	226.500	72500.00	1199.26	-.03	1.16	-.03	385.00	15.00
	226.510	72500.00	1199.15	.00	-.14	.00	391.86	1.00
	226.510	72500.00	1199.13	-.03	-.14	-.03	391.86	1.00
	226.520	72500.00	1200.84	.00	1.69	.00	391.94	84.00
	226.520	72500.00	1200.84	.00	1.71	.00	391.94	84.00
*	226.530	72500.00	1201.43	.00	.59	.00	405.30	1.00
*	226.530	72500.00	1201.34	-.09	.50	-.09	385.00	1.00
	226.580	72500.00	1202.00	.00	.57	.00	616.55	450.00
	226.580	72500.00	1201.97	-.03	.63	-.03	615.71	450.00
	226.610	72500.00	1204.40	.00	2.40	.00	523.94	600.00
	226.610	72500.00	1202.92	-1.48	.94	-1.48	356.45	600.00
	226.700	72500.00	1205.65	.00	1.25	.00	568.16	650.00
*	226.700	72500.00	1206.65	1.00	3.74	1.00	568.90	650.00
	226.800	72500.00	1206.24	.00	.58	.00	755.10	570.00
	226.800	72500.00	1207.13	.90	.48	.90	715.10	570.00
	226.890	72500.00	1206.46	.00	.23	.00	642.71	570.00
	226.890	72500.00	1207.12	.66	-.01	.66	498.70	570.00

SUMMARY OF ERRORS AND SPECIAL NOTES

```
WARNING SECNO=    226.040  PROFILE=  1  CONVEYANCE CHANGE OUTSIDE ACCEPTABLE RANGE
WARNING SECNO=    226.040  PROFILE=  2  CONVEYANCE CHANGE OUTSIDE ACCEPTABLE RANGE

WARNING SECNO=    226.230  PROFILE=  1  CONVEYANCE CHANGE OUTSIDE ACCEPTABLE RANGE
WARNING SECNO=    226.230  PROFILE=  2  CONVEYANCE CHANGE OUTSIDE ACCEPTABLE RANGE

CAUTION SECNO=    226.350  PROFILE=  1  CRITICAL DEPTH ASSUMED
CAUTION SECNO=    226.350  PROFILE=  1  MINIMUM SPECIFIC ENERGY

CAUTION SECNO=    226.480  PROFILE=  1  CRITICAL DEPTH ASSUMED
CAUTION SECNO=    226.480  PROFILE=  1  MINIMUM SPECIFIC ENERGY
CAUTION SECNO=    226.480  PROFILE=  2  CRITICAL DEPTH ASSUMED
CAUTION SECNO=    226.480  PROFILE=  2  MINIMUM SPECIFIC ENERGY

CAUTION SECNO=    226.490  PROFILE=  1  CRITICAL DEPTH ASSUMED
CAUTION SECNO=    226.490  PROFILE=  1  MINIMUM SPECIFIC ENERGY
CAUTION SECNO=    226.490  PROFILE=  2  CRITICAL DEPTH ASSUMED
CAUTION SECNO=    226.490  PROFILE=  2  MINIMUM SPECIFIC ENERGY

WARNING SECNO=    226.530  PROFILE=  1  CONVEYANCE CHANGE OUTSIDE ACCEPTABLE RANGE
WARNING SECNO=    226.530  PROFILE=  2  CONVEYANCE CHANGE OUTSIDE ACCEPTABLE RANGE

WARNING SECNO=    226.700  PROFILE=  2  CONVEYANCE CHANGE OUTSIDE ACCEPTABLE RANGE
```

FLOODWAY DATA, ASE MODEL PREPARED BY MI
PROFILE NO. 2

STATION	------- FLOODWAY ------- WIDTH	SECTION AREA	MEAN VELOCITY	WATER SURFACE ELEVATION WITH FLOODWAY	WITHOUT FLOODWAY	DIFFERENCE
225.950	1611.	26650.	8.3	1189.0	1188.8	.2
226.040	865.	12604.	5.8	1189.8	1189.7	.1
226.130	739.	12290.	5.9	1189.9	1189.9	.0
226.230	563.	5565.	13.0	1188.6	1189.5	-.9
226.350	461.	4284.	16.9	1188.1	1187.8	.3
226.480	369.	3905.	18.6	1192.0	1192.0	.0
226.490	385.	3988.	18.2	1198.1	1198.1	.0
226.500	385.	4433.	16.4	1199.3	1199.3	.0
226.510	407.	4288.	16.9	1199.2	1199.2	.0
226.520	407.	4998.	14.5	1200.8	1200.8	.0
226.530	385.	5428.	13.4	1201.3	1201.4	-.1
226.580	616.	5427.	13.4	1202.0	1202.0	.0
226.610	444.	4650.	15.6	1202.9	1204.4	-1.5
226.700	569.	8570.	8.5	1206.7	1205.7	1.0
226.800	715.	9042.	8.0	1207.1	1206.2	.9
226.890	499.	6854.	10.6	1207.2	1206.5	.7

MT-2 FORM 4, ITEM 3

HEC-2 Input/Output on Diskette

MT-2 Form 4, item 5.1.c:

Occurrence of Critical Depth

Critical depth messages appear at several isolated cross sections in the HEC-2 models. This occurs specifically at sections 226.23, 226.49, 226.800, and 227.080 in the main Salt River model and at sections 226.35, 226.48, and 226.49 in the south Alma School split model. At locations where critical depth occurs, FEMA 37 guidelines state that water surface profiles, tables and maps for natural streams should be prepared using the critical depth water surface elevations. Since the Salt River is a natural stream, the critical depth water surface elevations have been used at each of the above cross sections. No supercritical HEC-2 files were prepared.

MT-2 FORM 4, ITEM 6c

Flood Profiles

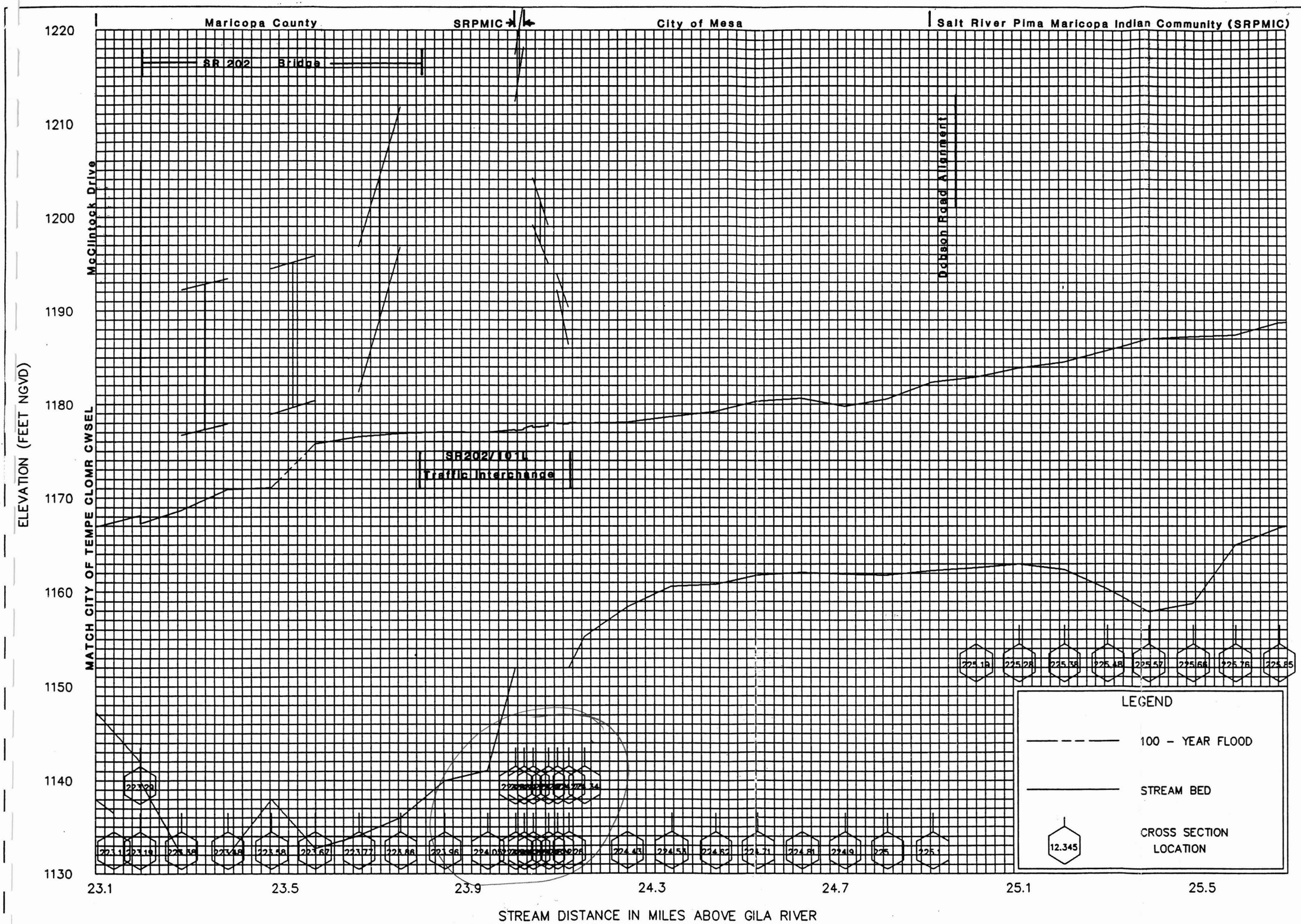

FLOOD PROFILES

SALT RIVER

FEDERAL EMERGENCY MANAGEMENT AGENCY

MARICOPA COUNTY, AZ
AND INCORPORATED AREAS

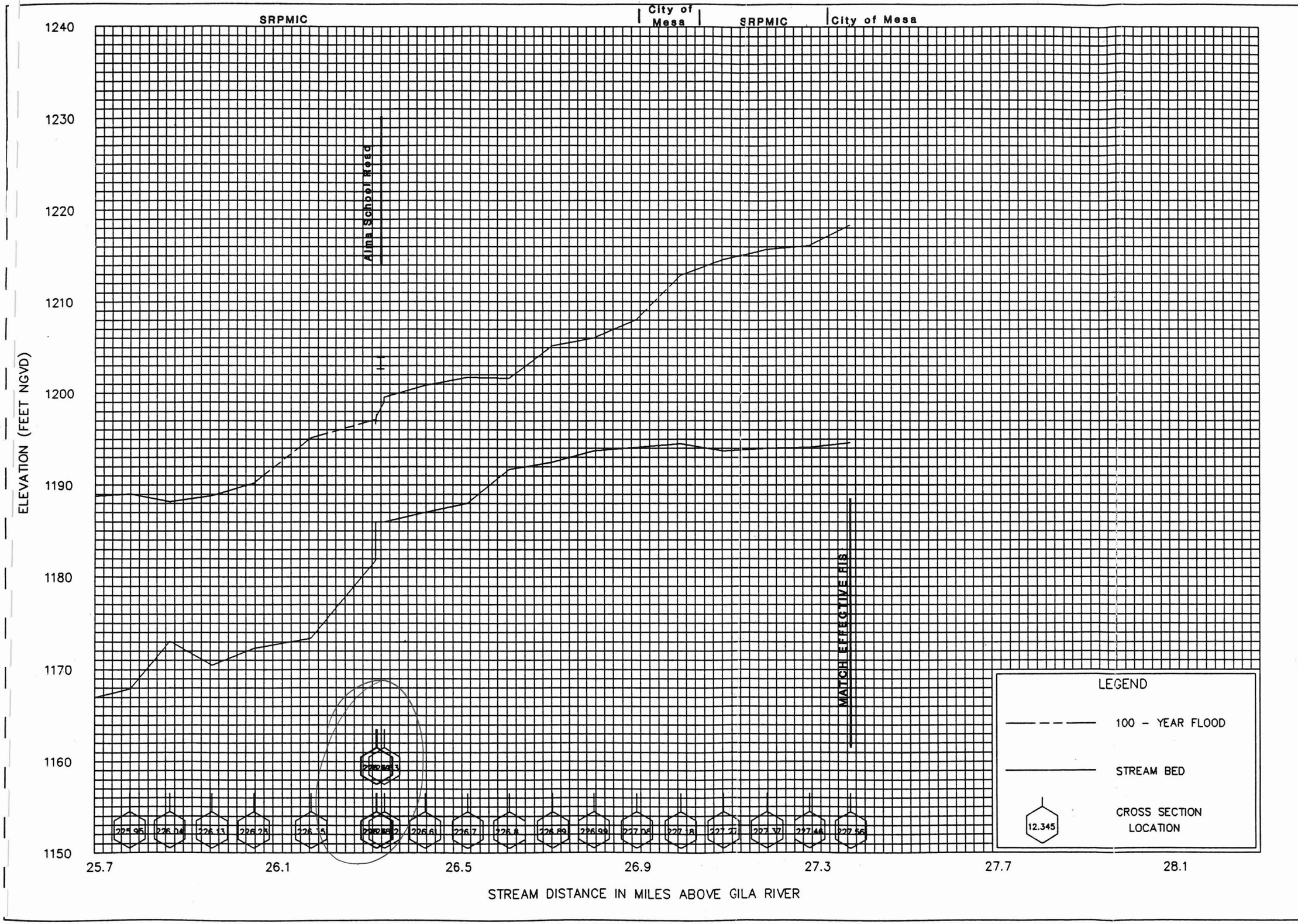

FLOOD PROFILES

SALT RIVER

FEDERAL EMERGENCY MANAGEMENT AGENCY

MARICOPA COUNTY, AZ
AND INCORPORATED AREAS

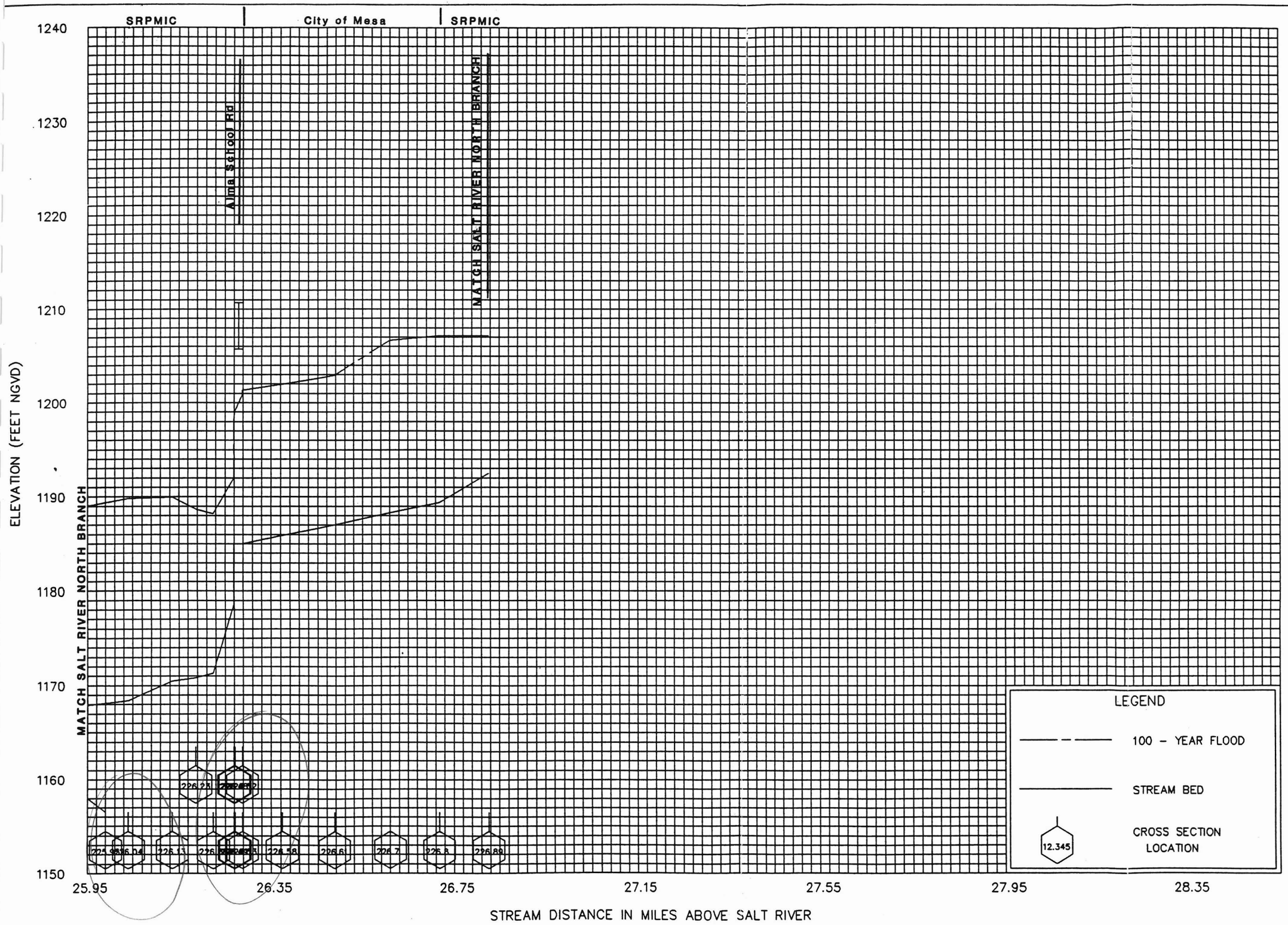

FLOOD PROFILES

SALT RIVER - SOUTH ALMA SCHOOL SPLIT

FEDERAL EMERGENCY MANAGEMENT AGENCY

MARICOPA COUNTY, AZ
AND INCORPORATED AREAS

MT-2 FORM 4, ITEM 6d

Floodway Tables

FLOODING SOURCE		FLOODWAY			BASE FLOOD WATER SURFACE ELEVATION (2)			
CROSS SECTION	DISTANCE (1)	WIDTH (FEET)	SECTION AREA (SQUARE FEET)	MEAN VELOCITY (FEET PER SECOND)	REGULATORY	WITHOUT FLOODWAY	WITH FLOODWAY	INCREASE
	23.100	1013	17702	12.1	1166.9	1166.9	1166.9	0.0
	23.190	970	19004	11.3	1168.1	1168.1	1168.2	0.1
CD	23.290	780	14970	14.4	1167.2	1167.2	1167.3	0.1
	23.380	680	14891	14.4	1168.7	1168.7	1168.8	0.1
	23.480	835	16895	12.7	1170.8	1170.8	1170.8	0.0
	23.580	644	12359	17.4	1171.1	1171.1	1171.1	0.0
	23.670	878	22888	9.4	1175.7	1175.7	1175.7	0.0
CE	23.770	915	27808	7.7	1176.6	1176.6	1176.6	0.0
	23.860	1112	30134	7.1	1176.9	1176.9	1176.9	0.0
	23.960	997	30209	7.1	1177.0	1177.0	1177.0	0.0
	24.050	958	25747	8.5	1177.0	1177.0	1177.0	0.0
	24.080	1123	27757	7.9	1177.3	1177.3	1177.4	0.1

(1) Miles above confluence with Gila River
(2) Feet NGVD 1929

FEDERAL EMERGENCY MANAGEMENT AGENCY

MARICOPA COUNTY, AZ
AND INCORPORATED AREAS

FLOODWAY DATA

SALT RIVER

FLOODING SOURCE		FLOODWAY			BASE FLOOD WATER SURFACE ELEVATION (2)			
CROSS SECTION	DISTANCE (1)	WIDTH (FEET)	SECTION AREA (SQUARE FEET)	MEAN VELOCITY (FEET PER SECOND)	REGULATORY	WITHOUT FLOODWAY	WITH FLOODWAY	INCREASE
	24.090	1123	25879	8.5	1177.2	1177.2	1177.3	0.1
	24.110	1109	25897	8.5	1177.2	1177.2	1177.3	0.1
	24.120	1109	27587	8.0	1177.4	1177.4	1177.5	0.1
	24.150	1250	31532	7.0	1177.7	1177.7	1177.8	0.1
	24.160	1110	26615	8.3	1177.5	1177.5	1177.6	0.1
	24.170	1111	26772	8.2	1177.6	1177.6	1177.7	0.1
	24.180	1249	31874	6.9	1178.0	1178.0	1178.1	0.1
CF	24.210	1195	30434	7.2	1178.0	1178.0	1178.1	0.1
	24.220	1196	28579	7.7	1177.9	1177.9	1178.0	0.1
	24.250	1124	26101	8.4	1177.8	1177.8	1177.9	0.1
	24.260	1123	28123	7.8	1178.0	1178.0	1178.1	0.1
	24.340	1254	24986	8.8	1178.5	1178.5	1178.5	0.0

(1) Miles above confluence with Gila River
(2) Feet NGVD 1929

FLOODING SOURCE		FLOODWAY			BASE FLOOD WATER SURFACE ELEVATION (2)			
CROSS SECTION	DISTANCE (1)	WIDTH (FEET)	SECTION AREA (SQUARE FEET)	MEAN VELOCITY (FEET PER SECOND)	REGULATORY	WITHOUT FLOODWAY	WITH FLOODWAY	INCREASE
	24.430	1356	21525	10.2	1178.5	1178.5	1178.5	0.0
	24.530	1405	21748	10.1	1179.0	1179.0	1179.0	0.0
CG	24.620	1500	22054	10.0	1179.0	1179.0	1179.2	0.2
	24.710	1665	28891	7.6	1179.4	1179.4	1180.4	1.0
	24.810	1775	29236	7.5	1179.7	1179.7	1180.6	0.9
	24.900	1424	16601	13.3	1178.7	1178.7	1179.7	1.0
	25.000	1100	15110	14.6	1180.0	1180.0	1180.5	0.5
	25.100	1000	17446	12.6	1182.4	1182.4	1182.4	0.0
CH	25.190	1025	16832	13.1	1182.8	1182.8	1182.9	0.1
	25.280	1280	17516	12.6	1183.5	1183.5	1183.9	0.4
	25.380	951	16577	13.3	1184.1	1184.1	1184.5	0.4
	25.480	1032	18020	12.2	1185.4	1185.4	1185.7	0.3

(1) Miles above confluence with Gila River
(2) Feet NGVD 1929

FEDERAL EMERGENCY MANAGEMENT AGENCY

MARICOPA COUNTY, AZ
AND INCORPORATED AREAS

FLOODWAY DATA

SALT RIVER

FLOODING SOURCE		FLOODWAY			BASE FLOOD WATER SURFACE ELEVATION (2)			
CROSS SECTION	DISTANCE (1)	WIDTH (FEET)	SECTION AREA (SQUARE FEET)	MEAN VELOCITY (FEET PER SECOND)	REGULATORY	WITHOUT FLOODWAY	WITH FLOODWAY	INCREASE
	25.570	1069	22003	10.0	1186.7	1186.7	1186.9	0.2
CI	25.660	988	21374	10.3	1187.0	1187.0	1187.2	0.2
	25.760	1062	19422	11.3	1187.2	1187.2	1187.4	0.2
	25.850	1312	26128	8.4	1188.9	1188.9	1188.9	0.0
	25.950	1610	26654	8.3	1188.8	1188.8	1189.0	0.2
	26.040	877	10866	13.6	1188.1	1188.1	1188.2	0.1
	26.130	823	9145	16.1	1188.5	1188.5	1188.8	0.3
CJ	26.230	784	8069	18.3	1190.4	1190.4	1190.4	0.0
	26.350	887	10427	14.1	1194.3	1194.3	1195.1	0.8
	26.480	905	9907	14.9	1196.9	1196.9	1197.2	0.3
	26.490	894	8411	17.5	1196.7	1196.7	1196.7	0.0
	26.500	894	9320	15.8	1197.7	1197.7	1197.7	0.0

(1) Miles above confluence with Gila River
(2) Feet NGVD 1929

FEDERAL EMERGENCY MANAGEMENT AGENCY

MARICOPA COUNTY, AZ
AND INCORPORATED AREAS

FLOODWAY DATA

SALT RIVER

FLOODING SOURCE		FLOODWAY			BASE FLOOD WATER SURFACE ELEVATION (2)			
CROSS SECTION	DISTANCE (1)	WIDTH (FEET)	SECTION AREA (SQUARE FEET)	MEAN VELOCITY (FEET PER SECOND)	REGULATORY	WITHOUT FLOODWAY	WITH FLOODWAY	INCREASE
	26.510	899	9127	16.2	1197.5	1197.5	1197.5	0.0
	26.520	899	10354	14.2	1199.0	1199.0	1199.0	0.0
	26.530	887	11326	13.0	1199.7	1199.7	1199.7	0.0
	26.610	919	12170	12.1	1200.9	1200.9	1200.9	0.0
CK	26.700	938	12047	12.2	1202.1	1202.1	1202.1	0.0
	26.800	916	8514	17.3	1201.5	1201.5	1201.6	0.1
	26.890	864	10193	14.5	1205.2	1205.2	1205.2	0.0
	26.990	1097	13115	16.8	1205.7	1205.7	1206.0	0.3
	27.080	870	11010	20.0	1207.8	1207.8	1208.1	0.3
CL	27.180	965	15315	14.4	1211.8	1211.8	1212.8	1.0
	27.270	1037	18059	12.2	1214.0	1214.0	1214.6	0.6
	27.370	1196	20826	10.6	1215.6	1215.6	1215.7	0.1

(1) Miles above confluence with Gila River
(2) Feet NGVD 1929

FEDERAL EMERGENCY MANAGEMENT AGENCY

MARICOPA COUNTY, AZ
AND INCORPORATED AREAS

FLOODWAY DATA

SALT RIVER

FLOODING SOURCE		FLOODWAY			BASE FLOOD WATER SURFACE ELEVATION (2)			
CROSS SECTION	DISTANCE (1)	WIDTH (FEET)	SECTION AREA (SQUARE FEET)	MEAN VELOCITY (FEET PER SECOND)	REGULATORY	WITHOUT FLOODWAY	WITH FLOODWAY	INCREASE
	27.460	1353	21216	10.4	1215.8	1215.8	1216.1	0.3
CM	27.560	1568	29937	7.3	1217.3	1217.3	1218.3	1.0

(1) Miles above confluence with Gila River
(2) Feet NGVD 1929

FEDERAL EMERGENCY MANAGEMENT AGENCY

MARICOPA COUNTY, AZ
AND INCORPORATED AREAS

FLOODWAY DATA

SALT RIVER

FLOODING SOURCE		FLOODWAY			BASE FLOOD WATER SURFACE ELEVATION (2)			
CROSS SECTION	DISTANCE (1)	WIDTH (FEET)	SECTION AREA (SQUARE FEET)	MEAN VELOCITY (FEET PER SECOND)	REGULATORY	WITHOUT FLOODWAY	WITH FLOODWAY	INCREASE
CJ	25.950	1611	26650	8.3	1188.8	1188.8	1189.0	0.2
	26.040	865	12604	5.8	1189.7	1189.7	1189.8	0.1
	26.130	739	12290	5.9	1189.9	1189.9	1189.9	0.0
	26.230	563	5565	13.0	1189.5	1189.5	1189.5	0.0
	26.350	461	4284	16.9	1187.8	1187.8	1188.1	0.3
	26.480	369	3905	18.6	1192.0	1192.0	1192.0	0.0
	26.490	385	3988	18.2	1198.1	1198.1	1198.1	0.0
	26.500	385	4433	16.4	1199.3	1199.3	1199.3	0.0
	26.510	385	4172	17.4	1199.2	1199.2	1199.2	0.0
	26.520	385	4892	14.8	1200.8	1200.8	1200.8	0.0
	26.530	385	5498	13.2	1201.4	1201.4	1201.5	0.1
	26.580	616	5541	13.1	1202.0	1202.0	1202.2	0.2

(1) Miles above confluence with Gila River
(2) Feet NGVD 1929

FLOODING SOURCE		FLOODWAY			BASE FLOOD WATER SURFACE ELEVATION (2)			
CROSS SECTION	DISTANCE (1)	WIDTH (FEET)	SECTION AREA (SQUARE FEET)	MEAN VELOCITY (FEET PER SECOND)	REGULATORY	WITHOUT FLOODWAY	WITH FLOODWAY	INCREASE
	26.610	444	4680	15.5	1204.4	1204.4	1204.4	0.0
CK	26.700	569	8589	8.4	1205.7	1205.7	1206.7	1.0
	26.800	715	9064	8.0	1206.2	1206.2	1207.1	0.9
	26.890	499	6869	10.6	1206.5	1206.5	1207.2	0.7

(1) Miles above confluence with Gila River
(2) Feet NGVD 1929

FEDERAL EMERGENCY MANAGEMENT AGENCY

MARICOPA COUNTY, AZ
AND INCORPORATED AREAS

FLOODWAY DATA

SALT RIVER - SOUTH ALMA SCHOOL SPLIT

FEDERAL EMERGENCY MANAGEMENT AGENCY **RIVERINE/COASTAL MAPPING FORM**	*O.M.B. Burden No. 3067-0148* *Expires July 31, 1997*	*FEMA USE ONLY*

PUBLIC BURDEN DISCLOSURE NOTICE

Public reporting burden for this form is estimated to average 1.5 hours per response. The burden estimate includes the time for reviewing instructions, searching existing data sources, gathering and maintaining the needed data, and completing and reviewing the form. Send comments regarding the accuracy of the burden estimate and any suggestions for reducing this burden, to: Information Collections Management, Federal Emergency Management Agency, 500 C Street, S.W., Washington, DC 20472; and to the Office of Management and Budget, Paperwork Reduction Project (3067-0148), Washington, DC 20503.

Community Name: City of Tempe, City of Mesa, and Unincorporated Areas of Maricopa County, Arizona

Flooding Source: Salt River

Project Name/Identifier: Red Mountain Freeway

1. MAPPING CHANGES

1. A topographic work map of suitable scale, contour interval, and planimetric definition must be submitted showing *(indicate N/A when not applicable):*

		Included		
A.	Revised approximate 100-year floodplain boundaries (Zone A)	☐ Yes	☐ No	■ N/A
B.	Revised detailed 100- and 500-year floodplain boundaries	■ Yes	☐ No	☐ N/A
C.	Revised 100-year floodway boundaries	■ Yes	☐ No	☐ N/A
D.	Location and alignment of all cross sections used in the revised hydraulic model with stationing control indicated	■ Yes	☐ No	☐ N/A
E.	Stream alignments, road and dam alignments	■ Yes	☐ No	☐ N/A
F.	Current community boundaries	■ Yes	☐ No	☐ N/A
G.	Effective 100- and 500-year floodplain and 100-year floodway boundaries from the FIRM/FBFM reduced or enlarged to the scale of the topographic work map	■ Yes	☐ No	☐ N/A
H.	Tie-ins between the effective and revised 100- and 500-year floodplains and 100-year floodway boundaries	■ Yes	☐ No	☐ N/A
I.	The requestor's property boundaries and community easements	■ Yes	☐ No	☐ N/A
J.	The signed certification of a registered professional engineer	■ Yes	☐ No	☐ N/A
K.	Location and description of reference marks	■ Yes	☐ No	☐ N/A
L.	Vertical datum (example: NGVD, NAVD etc.)	■ Yes	☐ No	☐ N/A
M.	Coastal zone designations tie into adjacent areas not being revised	☐ Yes	☐ No	■ N/A
N.	Location and alignment of all coastal transects used to revise the coastal analyses	☐ Yes	☐ No	■ N/A

If any of the items above are marked no or N/A, please explain: A: No Zone A regions in revised reach. M and N: Not a coastal analysis.

2. What is the source and date of the updated topographic information *(example: orthophoto maps, July 1985; field survey, May 1979, beach profiles, June 1987, etc.)*? See Work Maps

3. What is the scale and contour interval of the following workmaps?
   a. Effective FIS 1"=400' scale 5-foot Contour interval
   b. Revision Request 1"=400' scale 4-foot Contour interval

   NOTE: Revised topographic information must be of equal or greater detail.

4. Attach an annotated FIRM and FBFM at the scale of the effective FIRM and FBFM showing the revised 100-year and 500-year floodplains and the 100-year floodway boundaries and how they tie into those shown on the effective FIRM and FBFM downstream and upstream of the revision or adjacent to the area of revision for coastal studies. Attach additional pages if needed. See attached annotated FIRM's.

5. Flood Boundaries and 100-year water surface elevations:

Has the 100-year floodplain been shifted or increased or the 100-year water surface elevation increased at any location on property other than the requestor's or community's ? ☐ Yes ☐ No

If yes, please give the location of shift or increase and an explanation for the increase.

Some shifting of the floodplain has occurred due to gravel mining operations.

a. Have the affected property owners been notified of this shift or increase and the effect it will have on their property? ..... ☐ Yes ■ No

If yes, please attach letters from these property owners stating they have no objections to the revised flood boundaries if a LOMR is being requested.

b. What is the number of insurable structures that will be impacted by this shift or increase? 0

6. Have the floodway boundaries shifted or increased at any location compared to those shown on the effective FBFM or FIRM? ..... ■ Yes ☐ No

If yes, explain:

Shifting of floodway boundaries has occurred due to gravel mining operations.

7. If a V- zone has been designated, has it been delineated to extend landward to the heel of the primary frontal dune? N/A - not a costal analysis ☐ Yes ☐ No

If no, explain:

8. Manual or digital map submission:

☐ Manual

☐ Digital

Digital map submissions may be used to update digital FIRMs (DFIRMs). For updating DFIRMs, these submissions must be coordinated with FEMA Headquarters as far in advance of submission as possible.

2. EARTH FILL PLACEMENT

1. The fill is: ☐ Existing ☐ Proposed N/A - no fill has been placed.

2. Has fill been/will be placed in the regulatory floodway? ..... ☐ Yes ■ No
   If yes, please attach completed Riverine Hydraulic Analysis Form.

3. Has fill been/will be placed in floodway fringe *(area between the floodway and 100-year floodplain boundaries)*? ..... ☐ Yes ■ No

   If yes, then complete A, B, C, and D below.

   A. Are fill slopes for granular materials steeper than one vertical on one-and-one-half horizontal? ..... ☐ Yes ☐ No

   If yes, justify steeper slopes_____

   B. Is adequate erosion protection provided for fill slopes exposed to moving flood waters? *(Slopes exposed to flows with velocities of up to 5 feet per second (fps) during the 100-year flood must, at a minimum, be protected by a cover of grass, vines, weeds, or similar vegetation; slopes exposed to flows with velocities greater than 5 fps during the 100-year flood must, at a minimum, be protected by stone or rock riprap.)* ..... ☐ Yes ☐ No

   If no, describe erosion protection provided_____

   C. Has all fill placed in revised 100-year floodplain been compacted to 95 percent of the maximum density obtainable with the Standard Proctor Test Method or acceptable equivalent method? ☐ Yes ☐ No

   D. Can structures conceivably be constructed on the fill at any time in the future? ☐ Yes ☐ No

   If yes, provide certification of fill compaction (item C. above) by the community's NFIP permit official, a registered professional engineer, or an accredited soils engineer.

4. Has fill been/will be placed in a V-zone? ☐ Yes ☐ No

   If yes, is the fill protected from erosion by a flood control structure such as a revetment or seawall? ☐ Yes ☐ No

   If yes, attach the coastal structures form.

MT-2 FORM 5, ITEM 1

Topographic Work Maps

NOTE:
The base maps for this floodplain and floodway delineation were prepared by Michael Baker Jr., Inc. of Phoenix, AZ. Baker prepared the topographic mapping, cross section alignments, and preliminary HEC-2 model under contract with the Flood Control District of Maricopa County as part of a restudy of the Salt River between the confluence with the Gila River and Granite Reef Dam. Due to internal Flood Control District reasons, Baker's contract with the Flood Control District has been temporarily placed on hold, so Wood, Patel & Associates, Inc. has completed the Baker model and performed the floodplain and floodway delineation between McClintock Road and Country Club Drive.

Registered Professional Engineer (Civil) CERTIFICATE NO. 10512 ASHOK C. PATEL Date Signed 7/19/95 ARIZONA, U.S.A.

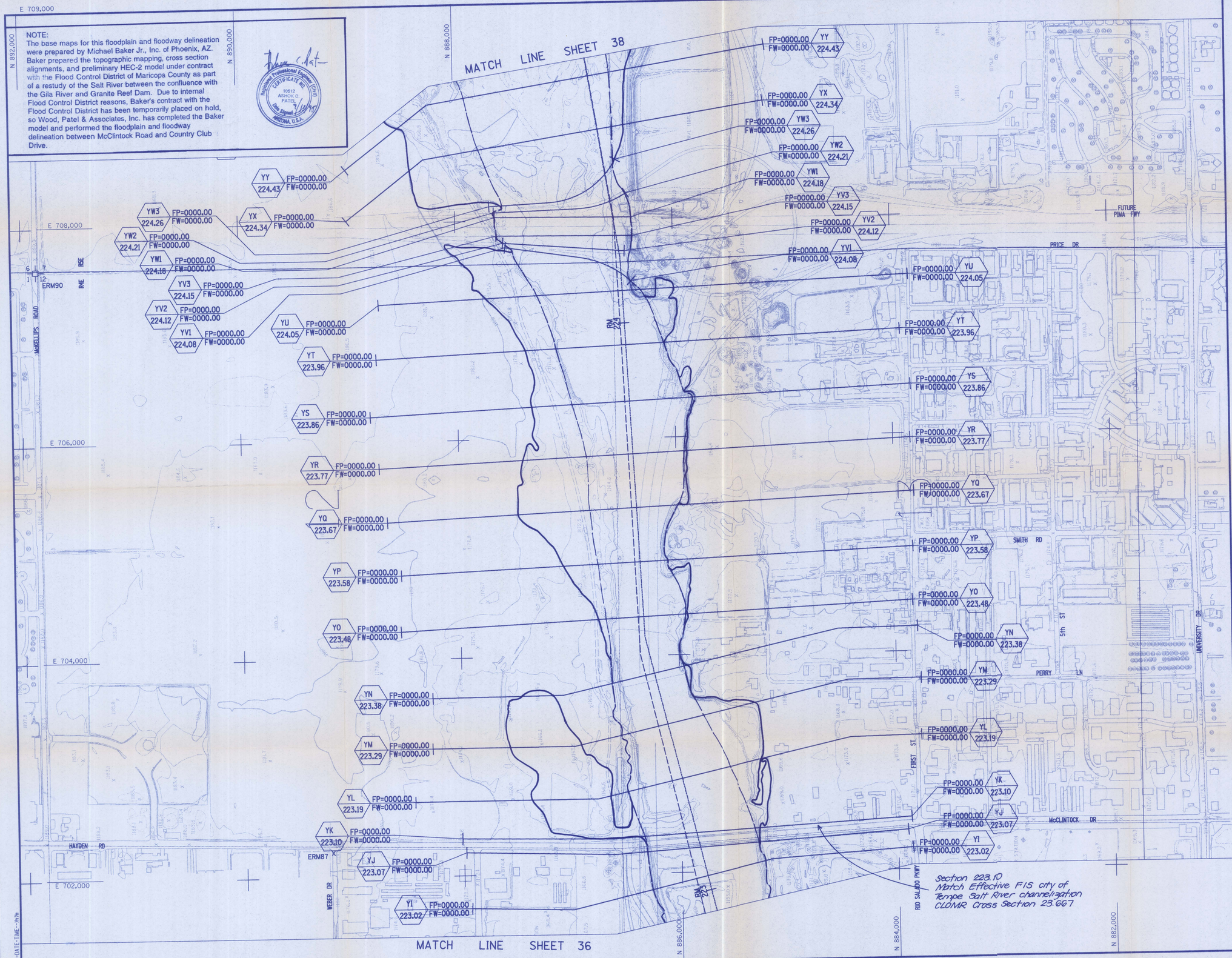

FLOOD CONTROL DISTRICT OF MARICOPA COUNTY

FLOOD DELINEATION STUDY OF SALT - GILA RIVERS

F.C.D. CONTRACT NO. 90-59 & 92-01

LEGEND

100-YR FLOODPLAIN BOUNDARY	
FLOODWAY BOUNDARY	
HYDRAULIC BASE LINE WITH RIVER MILE	RM 12.0 — RM 13.0
STATION 200+00	
CROSS SECTION	A 161.17 — FP=100 Yr WSE, FW=Floodway WSE — A 161.17
ELEVATION REFERENCE MARK	ERM3 X
BASE FLOOD ELEVATIONS	1221
ZONE DESIGNATIONS	ZONE AE
CORPORATE LIMITS	Corporate Limits
BENCH MARK LOCATION	BM 144 △
APPROXIMATE SECTION CORNER	20 21 29 28
MAIN CHANNEL LIMITS	

ELEVATION REFERENCE MARKS

NOTE: ALL ELEVATIONS ARE BASED ON NATIONAL GEODETIC VERTICAL DATUM OF 1983

I.D. *	ELEV (FT)	DESCRIPTION/LOCATION
87	1180.62	A BC in a HH in the intersection of Hayden Rd. and Weber Rd. This point is the E quarter corner of Sec. 11, T 1 N, R 4 E of the G&SRB&M, Maricopa County, Arizona.
90	1190.35	A BC in a HH in the intersection of McKellips Rd. and Pima Rd. This point is the SW corner of Sec. 6, T 1 N, R 5 E of the G&SRB&M, Maricopa County, Arizona.

PRELIMINARY FOR INTERNAL USE ONLY

INDEX MAP

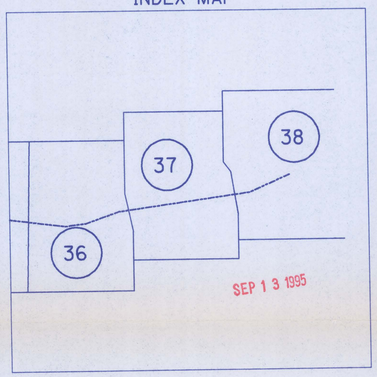

N

400 0' 400 800

SCALE: 1"= 400'
CONTOUR INTERVAL = 4 FEET

MICHAEL BAKER JR INC.

	BY	DATE
DESIGN	RLD	-
DESIGN CHK.	TEK	-
PLANS	SSO	-
PLANS CHK.	RLD/TEK	-
SUBMITTED BY:		DATE:

FLOOD CONTROL DISTRICT OF MARICOPA COUNTY

RECOMMENDED BY: DATE

APPROVED BY: DATE

CHIEF ENGINEER AND GENERAL MANAGER

SHEET 37 OF 46

ADMJMRB REV. DEC. 10, 1991

%%—DATE-TIME—%%

x42a/usr3/fcd/fcdsht37.dgn

AERIAL MAPPING COMPANY, MCLAIN,HARBORS CO. INC. BAKER ENGINEERS.
SURVEYING COMPANY, JAYKIM ENGINEERS & GREINER ENGINEERS.
FLIGHT DATES 13 DEC. 1991 ; 13 JAN. 1992 ; 23 JAN. 1992

THIS MAP WAS PREPARED BY PHOTOGRAMMETRIC METHODS TO NATIONAL MAP ACCURACY STANDARDS
1"=400' HORIZONTAL SCALE AND 4' CONTOUR INTERVALS AND BASED ON GROUND CONTROL SURVEY
DATA PROVIDED BY JAYKIM ENGINEERS & GREINER ENGINEERS

FLOOD CONTROL DISTRICT OF MARICOPA COUNTY

FLOOD DELINEATION STUDY OF SALT - GILA RIVERS

F.C.D. CONTRACT NO. 90-59 & 92-01

NOTE:
The base maps for this floodplain and floodway delineation were prepared by Michael Baker Jr., Inc. of Phoenix, AZ. Baker prepared the topographic mapping, cross section alignments, and preliminary HEC-2 model under contract with the Flood Control District of Maricopa County as part of a restudy of the Salt River between the confluence with the Gila River and Granite Reef Dam. Due to internal Flood Control District reasons, Baker's contract with the Flood Control District has been temporarily placed on hold, so Wood, Patel & Associates, Inc. has completed the Baker model and performed the floodplain and floodway delineation between McClintock Road and Country Club Drive.

Registered Professional Engineer (Civil) CERTIFICATE NO. 10512 ASHOK C. PATEL Date Signed 9/15/95 ARIZONA, U.S.A.

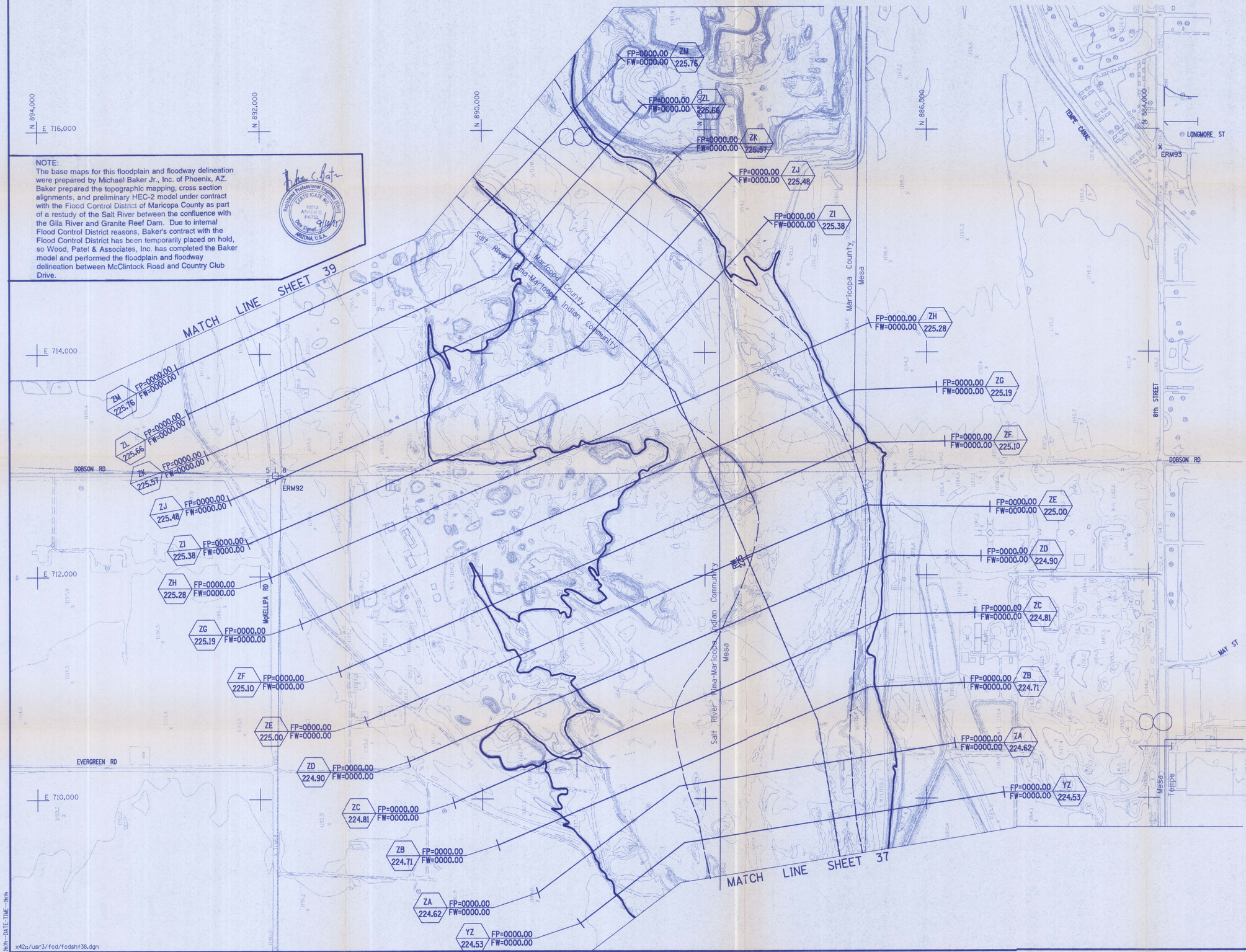

x42a/usr3/fcd/fcdsht38.dgn

AERIAL MAPPING COMPANY, MCLAIN,HARBORS CO. INC. BAKER ENGINEERS.
SURVEYING COMPANY, JAYKIM ENGINEERS & GREINER ENGINEERS.
FLIGHT DATES 13 DEC. 1991 ; 13 JAN. 1992 ; 23 JAN. 1992

THIS MAP WAS PREPARED BY PHOTOGRAMMETRIC METHODS TO NATIONAL MAP ACCURACY STANDARDS
1"=400' HORIZONTAL SCALE AND 4' CONTOUR INTERVALS AND BASED ON GROUND CONTROL SURVEY
DATA PROVIDED BY JAYKIM ENGINEERS & GREINER ENGINEERS

LEGEND

100-YR FLOODPLAIN BOUNDARY	
FLOODWAY BOUNDARY	
HYDRAULIC BASE LINE WITH RIVER MILE	RM 12.0 — RM 13.0
STATION 200+00	
CROSS SECTION	A 1 B,L,17 — FP=100 Yr WSE / FW=Floodway WSE — A 1 B,L,17
ELEVATION REFERENCE MARK	ERM3 X
BASE FLOOD ELEVATIONS	1221
ZONE DESIGNATIONS	ZONE AE
CORPORATE LIMITS	Corporate Limits
BENCH MARK LOCATION	BM 144 △
APPROXIMATE SECTION CORNER	20 21 / 29 28
MAIN CHANNEL LIMITS	

ELEVATION REFERENCE MARKS

NOTE: ALL ELEVATIONS ARE BASED ON NATIONAL GEODETIC VERTICAL DATUM OF 1983

I.D. *	ELEV (FT)	DESCRIPTION/LOCATION
92	1196.26	A BC in a HH in the intersection of McKellips Rd. and Dobson Rd. This point is the NE corner of Sec. 7, T 1 N, R 5 E of the G&SRB&M, Maricopa County, Arizona.
93	1214.57	A BC in a HH at the centerline intersection of 8th St. and Longmore St. This point is approximately 100 feet E of the center of Sec. 17, T 1 N, R 5 E of the G&SRB&M, Maricopa County, Arizona.

PRELIMINARY FOR INTERNAL USE ONLY

INDEX MAP

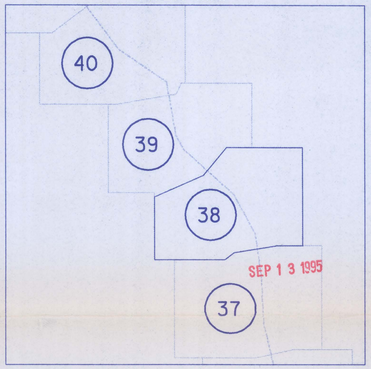

400 0' 400 800
SCALE: 1"= 400'
CONTOUR INTERVAL = 4 FEET

MICHAEL BAKER JR INC.

	BY	DATE
DESIGN	RLD	-
DESIGN CHK.	TEK	-
PLANS	SSO	-
PLANS CHK.	RLD/TEK	-
SUBMITTED BY:		DATE:

FLOOD CONTROL DISTRICT OF MARICOPA COUNTY

RECOMMENDED BY: DATE

APPROVED BY: DATE

CHIEF ENGINEER AND GENERAL MANAGER

SHEET 38 OF 46

ADM.MRB REV. DEC. 10, 1991

%%n-DATE-TIME-%%n

NOTE:
The base maps for this floodplain and floodway delineation were prepared by Michael Baker Jr., Inc. of Phoenix, AZ. Baker prepared the topographic mapping, cross section alignments, and preliminary HEC-2 model under contract with the Flood Control District of Maricopa County as part of a restudy of the Salt River between the confluence with the Gila River and Granite Reef Dam. Due to internal Flood Control District reasons, Baker's contract with the Flood Control District has been temporarily placed on hold, so Wood, Patel & Associates, Inc. has completed the Baker model and performed the floodplain and floodway delineation between McClintock Road and Country Club Drive.

Registered Professional Engineer (Civil) CERTIFICATE NO. 10512 ASHOK C. PATEL Date Signed 9/13/95 ARIZONA, U.S.A.

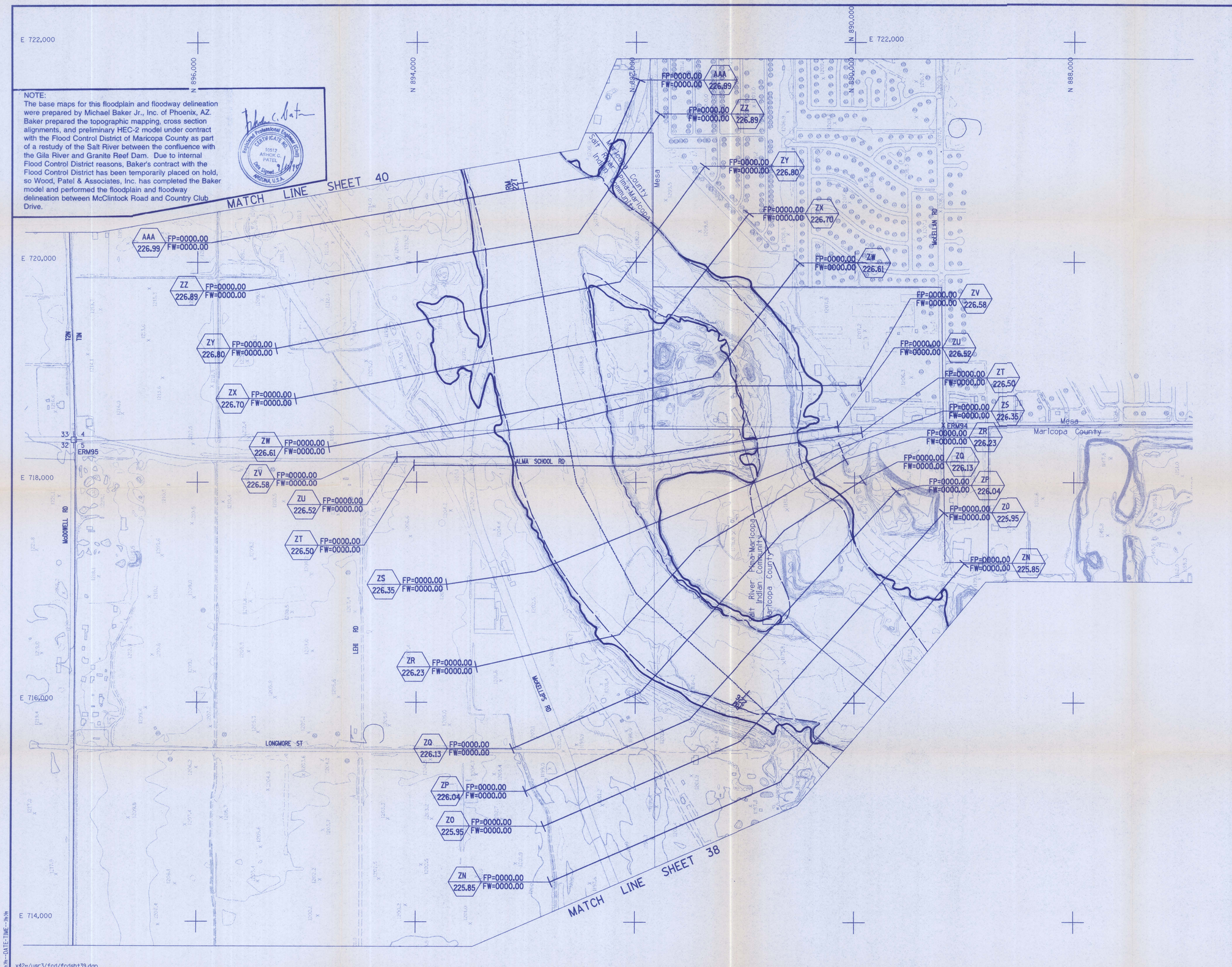

FLOOD CONTROL DISTRICT OF MARICOPA COUNTY

FLOOD DELINEATION STUDY OF SALT - GILA RIVERS

F.C.D. CONTRACT NO. 90-59 & 92-01

LEGEND

100-YR FLOODPLAIN BOUNDARY	
FLOODWAY BOUNDARY	
HYDRAULIC BASE LINE WITH RIVER MILE	RM 12.0 — RM 13.0
STATION 200+00	
CROSS SECTION	A 61.1 — FP=100 Yr WSE / FW=Floodway WSE — A 61.1
ELEVATION REFERENCE MARK	ERM3 X
BASE FLOOD ELEVATIONS	1221
ZONE DESIGNATIONS	ZONE AE
CORPORATE LIMITS	Corporate Limits
BENCH MARK LOCATION	BM 144 △
APPROXIMATE SECTION CORNER	20 21 / 29 28
MAIN CHANNEL LIMITS	

ELEVATION REFERENCE MARKS

NOTE: ALL ELEVATIONS ARE BASED ON NATIONAL GEODETIC VERTICAL DATUM OF 1983

I.D. *	ELEV (FT)	DESCRIPTION/LOCATION
94	1204.35	A BC in a HH in the intersection of McLellan Rd. and Alma School Rd. This point is the one quarter corner between Sec. 8 and 9 of T 1 N, R 5 E of the G&SRB&M Maricopa County, Arizona.
95	1218.72	A BC in a HH in the intersection of Alma School Rd. and McDowell Rd. This point is the SE corner of Sec. 32, T 2 N, R 5 E of the G&SRB&M, Maricopa County, Arizona.

PRELIMINARY FOR INTERNAL USE ONLY

INDEX MAP

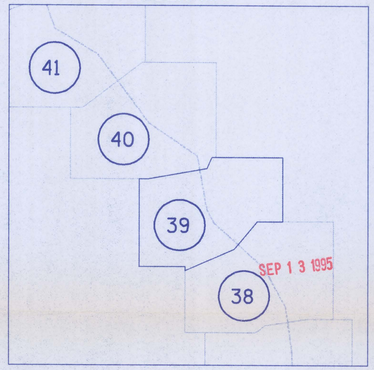

400 0' 400 800
SCALE: 1"= 400'
CONTOUR INTERVAL = 4 FEET

MICHAEL BAKER JR INC.

	BY	DATE
DESIGN	RLD	-
DESIGN CHK.	TEK	-
PLANS	SSO	-
PLANS CHK.	RLD/TEK	-
SUBMITTED BY:		DATE:

FLOOD CONTROL DISTRICT OF MARICOPA COUNTY

RECOMMENDED BY: _____ DATE

APPROVED BY: _____ DATE

CHIEF ENGINEER AND GENERAL MANAGER

SHEET 39 OF 46

ADM,MRB REV. DEC. 10, 1991

%%n--DATE-TIME--%%m

x42a:/usr3/fcd/fcdsht39.dgn

AERIAL MAPPING COMPANY, MCLAIN,HARBORS CO. INC. BAKER ENGINEERS.
SURVEYING COMPANY, JAYKIM ENGINEERS & GREINER ENGINEERS.
FLIGHT DATES 13 DEC. 1991 ; 15 JAN. 1992 ; 23 JAN. 1992

THIS MAP WAS PREPARED BY PHOTOGRAMMETRIC METHODS TO NATIONAL MAP ACCURACY STANDARDS
1"=400' HORIZONTAL SCALE AND 4' CONTOUR INTERVALS AND BASED ON GROUND CONTROL SURVEY
DATA PROVIDED BY JAYKIM ENGINEERS & GREINER ENGINEERS

FLOOD CONTROL DISTRICT OF MARICOPA COUNTY

FLOOD DELINEATION STUDY OF SALT - GILA RIVERS

F.C.D. CONTRACT NO. 90-59 & 92-01

NOTE:
The base maps for this floodplain and floodway delineation were prepared by Michael Baker Jr., Inc. of Phoenix, AZ. Baker prepared the topographic mapping, cross section alignments, and preliminary HEC-2 model under contract with the Flood Control District of Maricopa County as part of a restudy of the Salt River between the confluence with the Gila River and Granite Reef Dam. Due to internal Flood Control District reasons, Baker's contract with the Flood Control District has been temporarily placed on hold, so Wood, Patel & Associates, Inc. has completed the Baker model and performed the floodplain and floodway delineation between McClintock Road and Country Club Drive.

Registered Professional Engineer (Civil) CERTIFICATE NO. 9 Date Signed 9/12/91 ARIZONA, U.S.A.

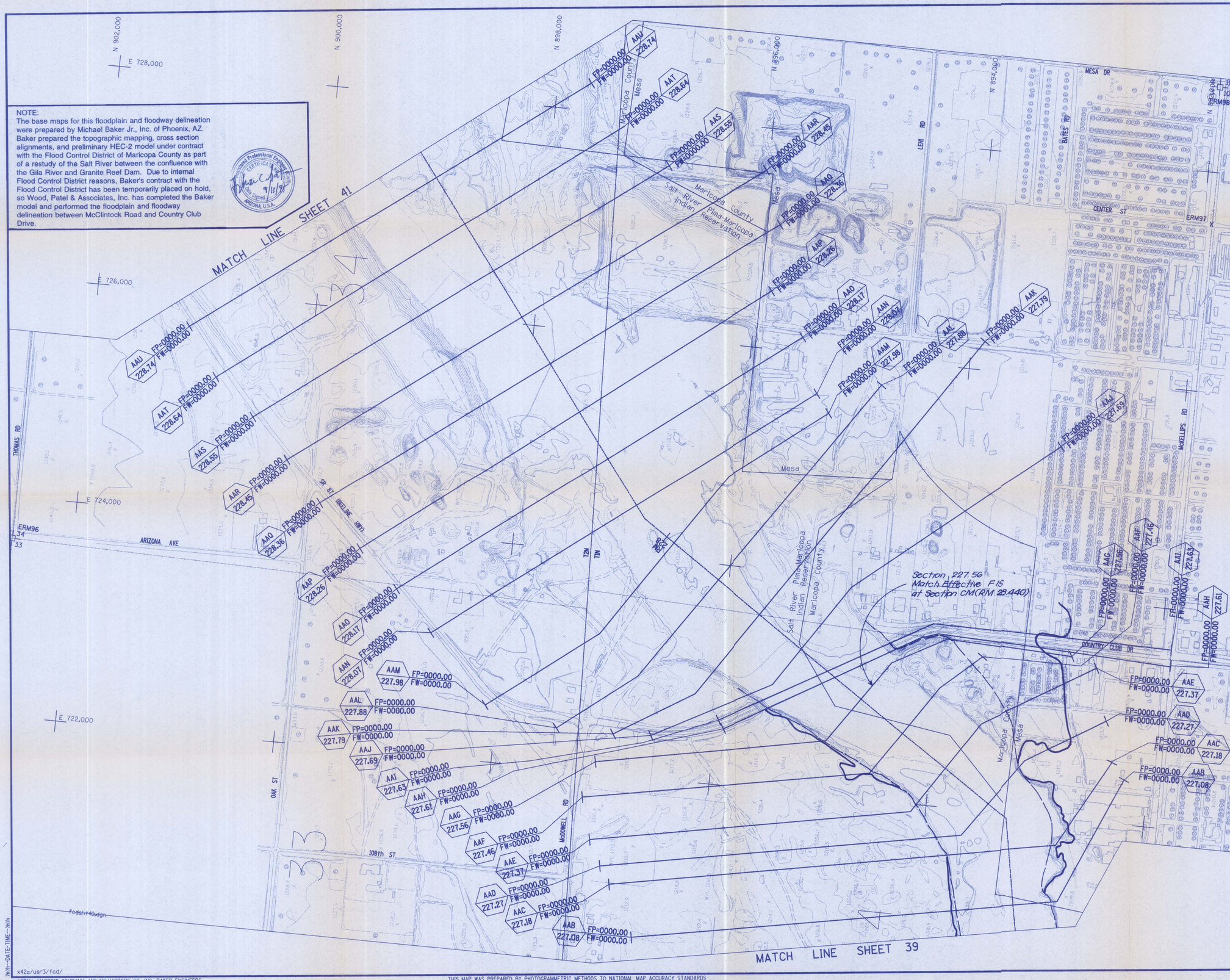

LEGEND

100-YR FLOODPLAIN BOUNDARY	
FLOODWAY BOUNDARY	
HYDRAULIC BASE LINE WITH RIVER MILE	RM 12.0 — RM 13.0
STATION 200+00	
CROSS SECTION	A 161.17 | FP=100 Yr WSE / FW=Floodway WSE | A 161.17
ELEVATION REFERENCE MARK	ERM3 X
BASE FLOOD ELEVATIONS	1221
ZONE DESIGNATIONS	ZONE AE
CORPORATE LIMITS	Corporate Limits
BENCH MARK LOCATION	BM 144
APPROXIMATE SECTION CORNER	20 21 / 29 28
MAIN CHANNEL LIMITS	

ELEVATION REFERENCE MARKS

NOTE: ALL ELEVATIONS ARE BASED ON NATIONAL GEODETIC VERTICAL DATUM OF 1983

I.D. *	ELEV (FT)	DESCRIPTION/LOCATION
96	1244.28	A BC in a HH in the intersection of Thomas Rd. and Arizona Ave. This point is the NE corner of Sec. 33, T 2 N, R 5 E of the G&SRB&M, Maricopa County, Arizona.
97	1219.19	A BC in a HH in the intersection of Center St. and McKellips Rd. This point is the N quarter corner of Sec. 10, T 1 N, R 5 E of the G&SRB&M, Maricopa County, Arizona.
98	1224.71	A BC in a HH in the intersection of Mesa Dr. and McKellips Rd. This point is the NE corner of Sec. 10, T 1 N, R 5 E of the G&SRB&M, Maricopa County, Arizona.

PRELIMINARY FOR INTERNAL USE ONLY

INDEX MAP

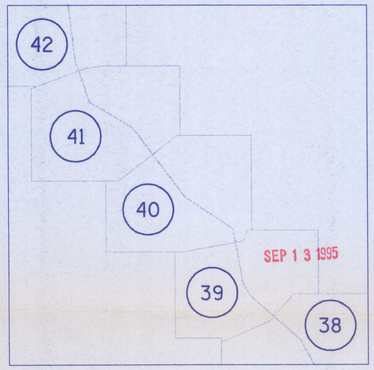

400 0' 400 800
SCALE: 1"= 400'
CONTOUR INTERVAL = 4 FEET

MICHAEL BAKER JR INC.

	BY	DATE
DESIGN	RLD	-
DESIGN CHK.	TEK	-
PLANS	SSO	-
PLANS CHK.	RLD/TEK	-
SUBMITTED BY:		DATE:

FLOOD CONTROL DISTRICT OF MARICOPA COUNTY

RECOMMENDED BY: DATE

APPROVED BY: DATE

CHIEF ENGINEER AND GENERAL MANAGER

SHEET 40 OF 46

ADMJMRB REV. DEC. 10, 1991

%%n--DATE-TIME--%%n

x42a/usr3/fcd/

fcdsht40.dgn

AERIAL MAPPING COMPANY, MCLAINHARBORS CO. INC. BAKER ENGINEERS.
SURVEYING COMPANY, JAYKIM ENGINEERS & GREINER ENGINEERS.
FLIGHT DATES 13 DEC. 1991 ; 13 JAN. 1992 ; 23 JAN. 1992

THIS MAP WAS PREPARED BY PHOTOGRAMMETRIC METHODS TO NATIONAL MAP ACCURACY STANDARDS
1"=400' HORIZONTAL SCALE AND 4' CONTOUR INTERVALS AND BASED ON GROUND CONTROL SURVEY
DATA PROVIDED BY JAYKIM ENGINEERS & GREINER ENGINEERS

MT-2 FORM 5, ITEM 4

Annotated Flood Insurance Rate Maps

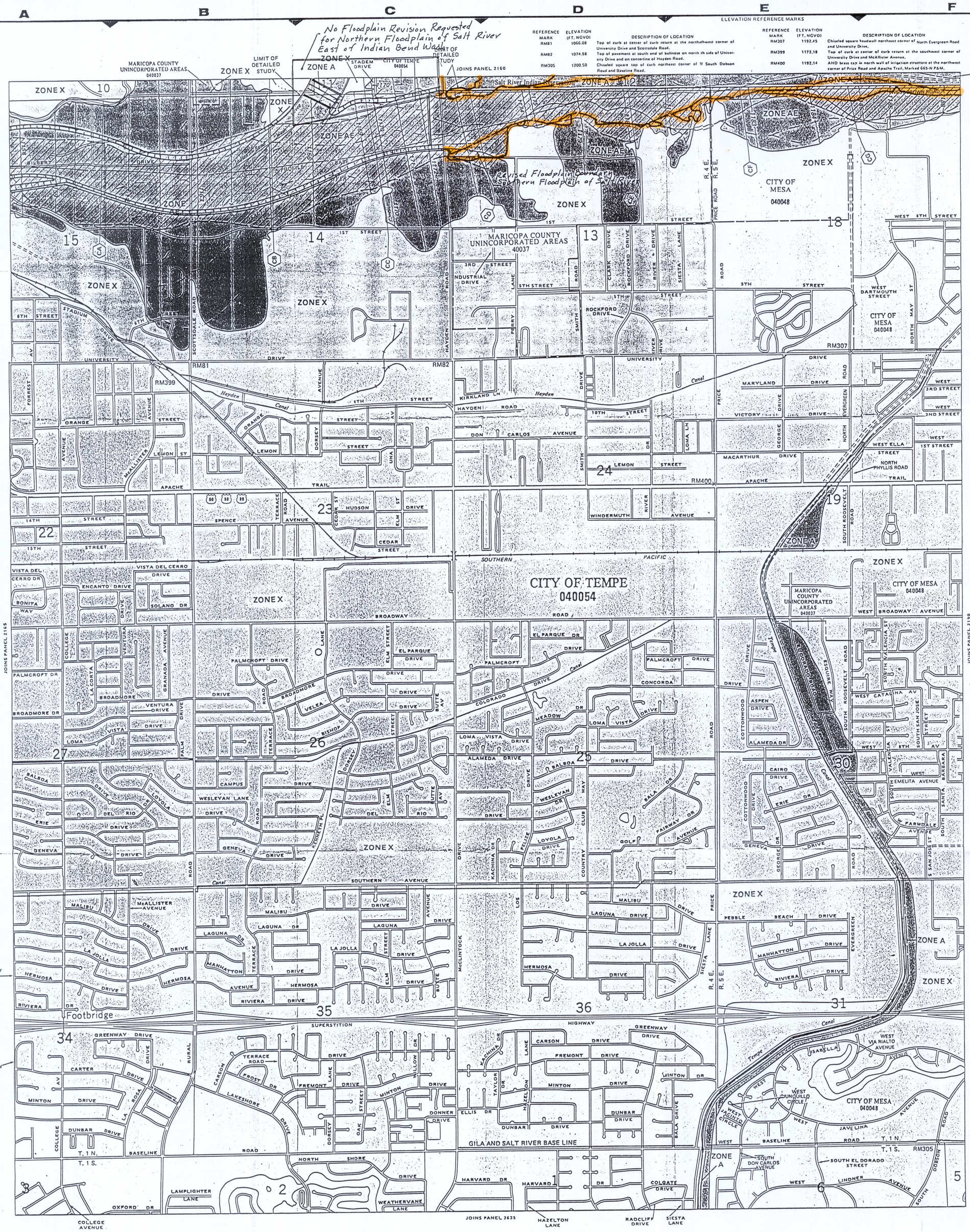

ELEVATION REFERENCE MARKS

REFERENCE MARK	ELEVATION (FT. NGVD)	DESCRIPTION OF LOCATION
RM81	1066.08	Top of curb at center of curb return at the northwhwest corner of University Drive and Scottsdale Road.
RM82	1074.58	Top of pavement at south end of bullnose on north th side of University Drive and on centerline of Hayden Road.
RM305	1200.50	Chiseled square top of curb northeast corner of ¶ South Dobson Road and Baseline Road.
RM307	1192.45	Chiseled square headwall northeast corner of North Evergreen Road and University Drive.
RM399	1172.18	Top of curb at center of curb return at the southwest corner of University Drive and McAllister Avenue.
RM400	1192.14	AHD brass cap in north wall of irrigation structure at the northwest corner of Price Road and Apache Trail, Marked 665-N P&M.

LEGEND

SPECIAL FLOOD HAZARD AREAS INUNDATED BY 100-YEAR FLOOD

- **ZONE A** No base flood elevations determined.
- **ZONE AE** Base flood elevations determined.
- **ZONE AH** Flood depths of 1 to 3 feet (usually areas of ponding); base flood elevations determined.
- **ZONE AO** Flood depths of 1 to 3 feet (usually sheet flow on sloping terrain); average depths determined. For areas of alluvial fan flooding, velocities also determined.
- **ZONE A99** To be protected from 100-year flood by Federal flood protection system under construction; no base elevations determined.
- **ZONE V** Coastal flood with velocity hazard (wave action); no base flood elevations determined.
- **ZONE VE** Coastal flood with velocity hazard (wave action); base flood elevations determined.

FLOODWAY AREAS IN ZONE AE

OTHER FLOOD AREAS

- **ZONE X** Areas of 500-year flood; areas of 100-year flood with average depths of less than 1 foot or with drainage areas less than 1 square mile; and areas protected by levees from 100-year flood.

OTHER AREAS

- **ZONE X** Areas determined to be outside 500-year flood plain.
- **ZONE D** Areas in which flood hazards are undetermined.

Flood Boundary

Floodway Boundary

Zone D Boundary

Boundary Dividing Special Flood Hazard Zones, and Boundary Dividing Areas of Different Coastal Base Flood Elevations Within Special Flood Hazard Zones.

~~~ 513 ~~~ Base Flood Elevation Line; Elevation In Feet*

(D)———(D) Cross Section Line

(EL 987) Base Flood Elevation In Feet Where Uniform Within Zone*

RM7X Elevation Reference Mark

*Referenced to the National Geodetic Vertical Datum of 1929

NOTES

This map is for use in administering the National Flood Insurance Program; it does not necessarily identify all areas subject to flooding, particularly from local drainage sources of small size, or all planimetric features outside Special Flood Hazard Areas.

Areas of special flood hazard (100-year flood) include Zones A, A1-30, AE, AH, AO, A99, V, V1-30 AND VE.

Certain areas not in Special Flood Hazard Areas may be protected by flood control structures.

Boundaries of the floodways were computed at cross sections and interpolated between cross sections. The floodways were based on hydraulic considerations with regard to requirements of the Federal Emergency Management Agency.

Floodway widths in some areas may be too narrow to show to scale. Floodway widths are provided in the Flood Insurance Study Report.

Coastal base flood elevations apply only landward of the shoreline.

Corporate limits shown are current as of the date of this map. The user should contact appropriate community officials to determine if corporate limits have changed subsequent to the issuance of the map.

For community map revision history prior to countywide mapping, see Section 6.0 of the Flood Insurance Study Report.

For adjoining map panels see separately printed Map Index

MAP REPOSITORY

Refer to Repository Listing on Index Map

EFFECTIVE DATE OF COUNTYWIDE FLOOD INSURANCE RATE MAP:

APRIL 15, 1988

EFFECTIVE DATE (S) OF REVISION (S) TO THIS PANEL:

Map revised September 4, 1991 to update corporate limits, to change base flood elevations, to add base flood elevations, to add special flood hazard areas, to change special flood hazard areas, to change zone designations, to update map format, to add roads and road names and to incorporate previously issued letter of map revision.

To determine if flood insurance is available, contact an insurance agent or call the National Flood Insurance Program at (800) 638-6620.

APPROXIMATE SCALE IN FEET

1000 0 1000

NATIONAL FLOOD INSURANCE PROGRAM

FIRM
FLOOD INSURANCE RATE MAP

MARICOPA COUNTY, ARIZONA AND INCORPORATED AREAS

PANEL 2170 OF 4350

CONTAINS:

COMMUNITY	NUMBER	PANEL	SUFFIX
MARICOPA COUNTY, UNINCORPORATED AREAS	040037	2170	E
MESA, CITY OF	040048	2170	E
TEMPE, CITY OF	040054	2170	E

MAP NUMBER
04013C2170E

MAP REVISED:
SEPTEMBER 4, 1991

Federal Emergency Management Agency
~~~

ELEVATION REFERENCE MARKS

REFERENCE MARK	ELEVATION (FT, NGVD)	DESCRIPTION OF LOCATION
RM83	1174.96	Top of pavement at centerline intersection of Hayden Road and Princess Drive West.

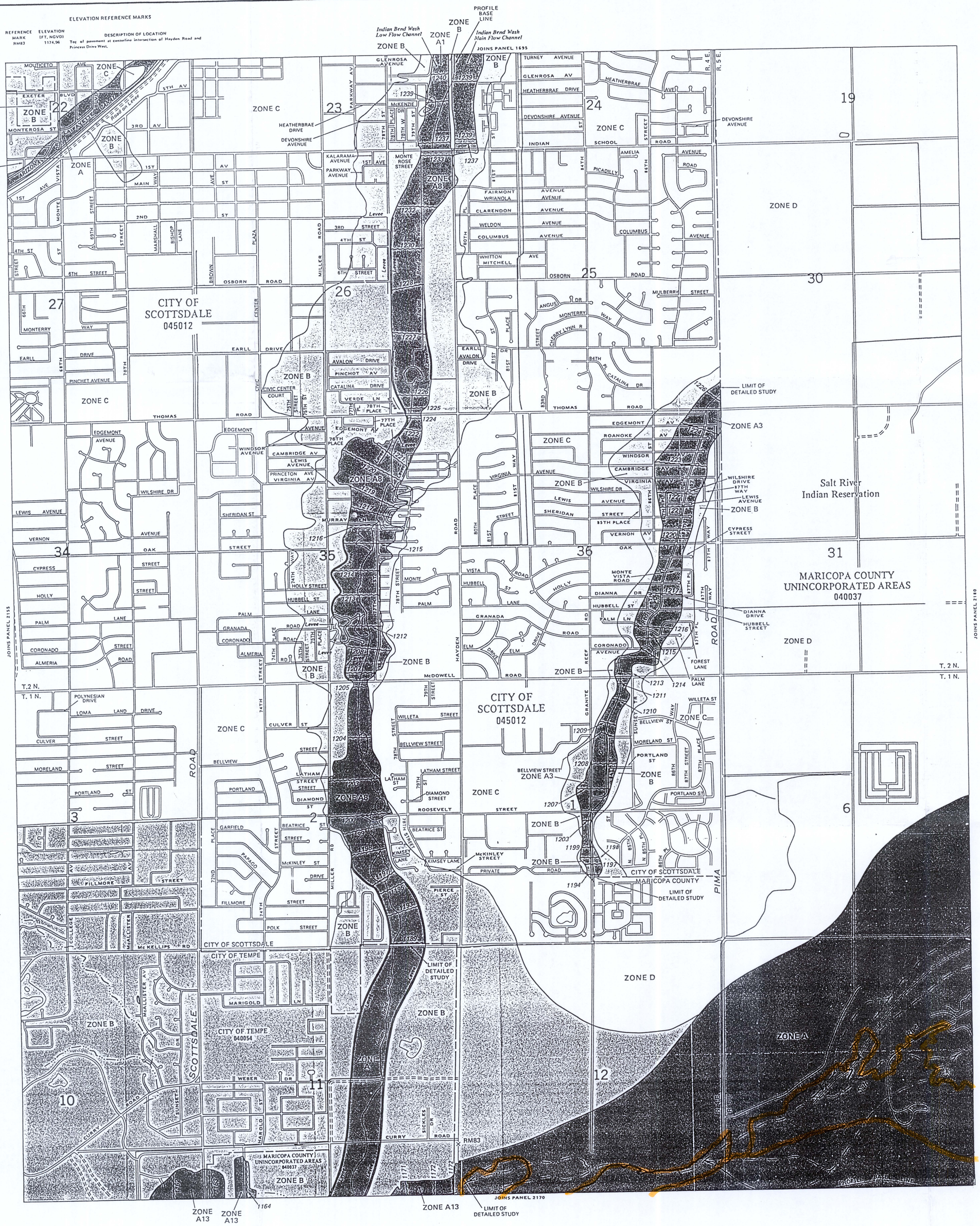

KEY TO MAP

500-Year Flood Boundary	
100-Year Flood Boundary	
Zone Designations	ZONE B / ZONE A / ZONE B
100-Year Flood Boundary	
500-Year Flood Boundary	
Base Flood Elevation Line With Elevation In Feet**	513
Base Flood Elevation in Feet Where Uniform Within Zone**	(EL 987)
Elevation Reference Mark	RM7×
Zone D Boundary	
River Mile	•M1.5

**Referenced to the National Geodetic Vertical Datum of 1929

EXPLANATION OF ZONE DESIGNATIONS

ZONE	EXPLANATION
A	Areas of 100-year flood; base flood elevations and flood hazard factors not determined.
A0	Areas of 100-year shallow flooding where depths are between one (1) and three (3) feet; average depths of inundation are shown, but no flood hazard factors are determined.
AH	Areas of 100-year shallow flooding where depths are between one (1) and three (3) feet; base flood elevations are shown, but no flood hazard factors are determined.
A1-A30	Areas of 100-year flood; base flood elevations and flood hazard factors determined.
A99	Areas of 100-year flood to be protected by flood protection system under construction; base flood elevations and flood hazard factors not determined.
B	Areas between limits of the 100-year flood and 500-year flood; or certain areas subject to 100-year flooding with average depths less than one (1) foot or where the contributing drainage area is less than one square mile; or areas protected by levees from the base flood. (Medium shading)
C	Areas of minimal flooding. (No shading)
D	Areas of undetermined, but possible, flood hazards.
V	Areas of 100-year coastal flood with velocity (wave action); base flood elevations and flood hazard factors not determined.
V1-V30	Areas of 100-year coastal flood with velocity (wave action); base flood elevations and flood hazard factors determined.

NOTES TO USER

This map is for use in administering the National Flood Insurance Program; it does not necessarily identify all areas subject to flooding, particularly from local drainage sources of small size, or all planimetric features outside Special Flood Hazard Areas.

Certain areas not in the Special Flood Hazard Areas (zones A and V) may be protected by flood control structures.

Coastal base flood elevations apply only landward of the shoreline.

Corporate limits shown are current as of the date of this map. The user should contact appropriate community officials to determine if corporate limits have changed subsequent to the issuance of the map.

For community map revision history prior to countywide mapping, see Section 5.4 of the Flood Insurance Study Report.

For adjoining map panels, see separately printed Map Index.

EFFECTIVE DATE OF COUNTYWIDE FLOOD INSURANCE RATE MAP:

APRIL 15, 1988

EFFECTIVE DATE (S) OF REVISION (S) TO THIS PANEL:

Refer to the FLOOD INSURANCE RATE MAP EFFECTIVE date shown on this map to determine when actuarial rates apply to structures in the zones where elevations or depths have been established.

To determine if flood insurance is available in this community, contact your insurance agent, or call the National Flood Insurance Program, at (800) 638-6620.

APPROXIMATE SCALE IN FEET

1000 0 1000

NATIONAL FLOOD INSURANCE PROGRAM

FIRM
FLOOD INSURANCE RATE MAP

MARICOPA COUNTY, ARIZONA AND INCORPORATED AREAS

PANEL 2160 OF 4350

CONTAINS:

COMMUNITY	NUMBER	PANEL	SUFFIX
MARICOPA COUNTY, UNINCORPORATED AREAS	040037	2160	D
SCOTTSDALE, CITY OF	045012	2160	D
TEMPE, CITY OF	040054	2160	D

MAP NUMBER
04013C2160 D

EFFECTIVE DATE:
APRIL 15, 1988

Federal Emergency Management Agency

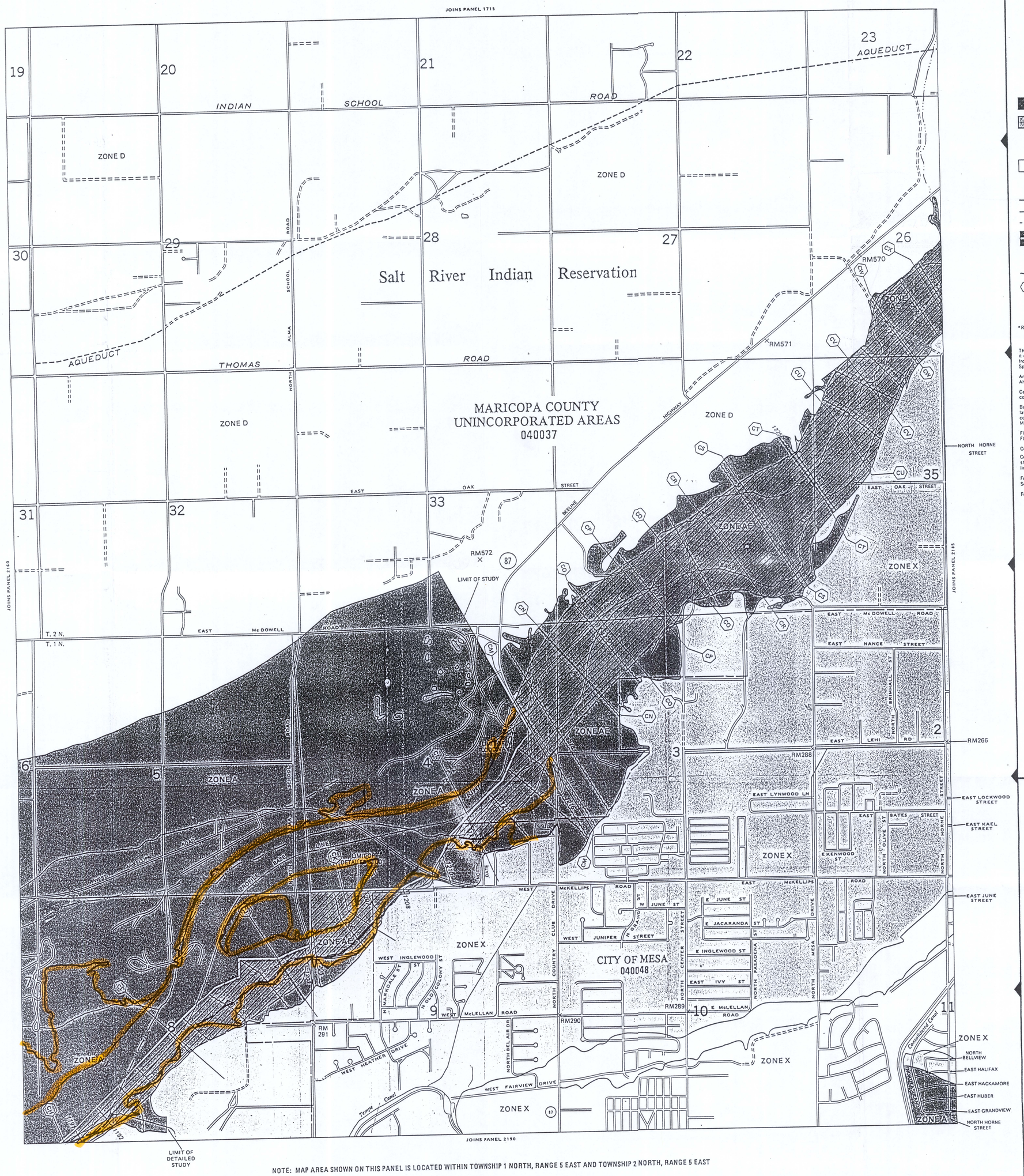

NOTE: MAP AREA SHOWN ON THIS PANEL IS LOCATED WITHIN TOWNSHIP 1 NORTH, RANGE 5 EAST AND TOWNSHIP 2 NORTH, RANGE 5 EAST

ELEVATION REFERENCE MARKS

REFERENCE MARK	ELEVATION (FT.NGVD)	DESCRIPTION OF LOCATION
RM266	1234.94	Chiseled square top of curb northeast corner of North Horne Street and East Lehi Road.
RM288	1230.00	Chiseled square headwall southwest corner of North Mesa Drive and East Lehi Road.
RM289	1220.27	Chiseled square top of curb east side of North Center Street and East McLellan Road.
RM290	1212.83	Chiseled square top of curb northeast corner of North Country Club Drive and West McLellan Road.
RM291	1205.46	Chiseled square top of curb southeast corner of North Alma School Road and West McLellan Road.
RM570	1,260.31	B&N No. 15, a No. 4 rebar with aluminum cap stamped B.N.15 1,260.31 on north right-of-way fence S.R. 87, S.R. 87 M.P. 180.00.
RM571	1,252.54	B&N No. 16, a No. 4 rebar with aluminum cap stamped B.N.16 1,252.54 at east right-of-way fence S.R. 87, S.R. 87 M.P. 179.41.
RM572	1,221.58	B&N No. 17, a No. 4 rebar with aluminum cap stamped B.N.17 1,221.58 65 northwest of north end cross section Pt. No. 135 on cross section line extended S.R. 87 M.P. 178.02.

LEGEND

SPECIAL FLOOD HAZARD AREAS INUNDATED BY 100-YEAR FLOOD

- ZONE A — No base flood elevations determined.
- ZONE AE — Base flood elevations determined.
- ZONE AH — Flood depths of 1 to 3 feet (usually areas of ponding); base flood elevations determined.
- ZONE AO — Flood depths of 1 to 3 feet (usually sheet flow on sloping terrain); average depths determined. For areas of alluvial fan flooding, velocities also determined.
- ZONE A99 — To be protected from 100-year flood by Federal flood protection system under construction; no base elevations determined.
- ZONE V — Coastal flood with velocity hazard (wave action); no base flood elevations determined.
- ZONE VE — Coastal flood with velocity hazard (wave action); base flood elevations determined.

FLOODWAY AREAS IN ZONE AE

OTHER FLOOD AREAS

- ZONE X — Areas of 500-year flood; areas of 100-year flood with average depths of less than 1 foot or with drainage areas less than 1 square mile; and areas protected by levees from 100-year flood.

OTHER AREAS

- ZONE X — Areas determined to be outside 500-year flood plain.
- ZONE D — Areas in which flood hazards are undetermined.

Flood Boundary

Floodway Boundary

Zone D Boundary

Boundary Dividing Special Flood Hazard Zones, and Boundary Dividing Areas of Different Coastal Base Flood Elevations Within Special Flood Hazard Zones.

513 — Base Flood Elevation Line; Elevation in Feet*

D — D — Cross Section Line

(EL 987) — Base Flood Elevation in Feet Where Uniform Within Zone*

RM7 X — Elevation Reference Mark

*Referenced to the National Geodetic Vertical Datum of 1929

NOTES

This map is for use in administering the National Flood Insurance Program; it does not necessarily identify all areas subject to flooding, particularly from local drainage sources of small size, or all planimetric features outside Special Flood Hazard Areas.

Areas of special flood hazard (100-year flood) include Zones A, A1-30, AE, AH, AO, A99, V, V1-30 AND VE.

Certain areas not in Special Flood Hazard Areas may be protected by flood control structures.

Boundaries of the floodways were computed at cross sections and interpolated between cross sections. The floodways were based on hydraulic considerations with regard to requirements of the Federal Emergency Management Agency.

Floodway widths in some areas may be too narrow to show to scale. Floodway widths are provided in the Flood Insurance Study Report.

Coastal base flood elevations apply only landward of the shoreline.

Corporate limits shown are current as of the date of this map. The user should contact appropriate community officials to determine if corporate limits have changed subsequent to the issuance of the map.

For community map revision history prior to countywide mapping, see Section 6.0 of the Flood Insurance Study Report.

For adjoining map panels see separately printed Map Index

MAP REPOSITORY

Refer to Repository Listing on Index Map

EFFECTIVE DATE OF
COUNTYWIDE FLOOD INSURANCE RATE MAP.
APRIL 15, 1988

EFFECTIVE DATE (S) OF REVISION (S) TO THIS PANEL.
Map revised September 4, 1991 to update corporate limits, to change base flood elevations, to add base flood elevations, to add special flood hazard areas, to change special flood hazard areas, to change zone designations, to update map format, to add roads and road names and to incorporate previously issued letter of map revision.

To determine if flood insurance is available, contact an insurance agent or call the National Flood Insurance Program at (800) 638-6620.

APPROXIMATE SCALE IN FEET
1000 0 1000

NATIONAL FLOOD INSURANCE PROGRAM

FIRM
FLOOD INSURANCE RATE MAP

MARICOPA COUNTY, ARIZONA AND INCORPORATED AREAS

PANEL 2180 OF 4350

CONTAINS:

COMMUNITY	NUMBER	PANEL	SUFFIX
MARICOPA COUNTY, UNINCORPORATED AREAS	040037	2180	E
MESA, CITY OF	040048	2180	E

MAP NUMBER
04013C2180 E

MAP REVISED:
SEPTEMBER 4, 1991

Federal Emergency Management Agency

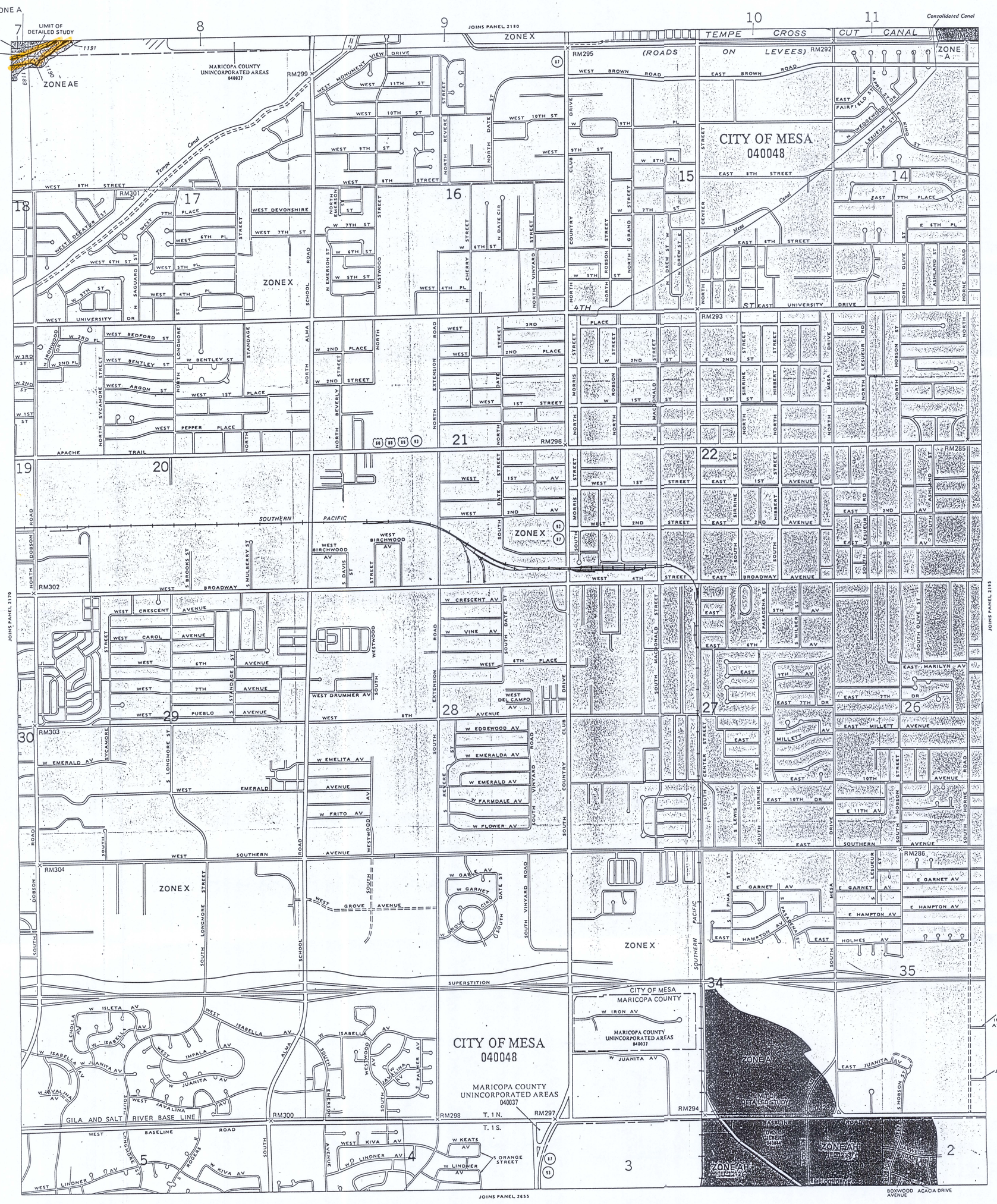

ELEVATION REFERENCE MARKS

REFERENCE MARK	ELEVATION (FT. NGVD)	DESCRIPTION OF LOCATION
RM284	1256.68	Chiseled square irrigation works at Consolidated Canal and North Horne Road.
RM285	1236.40	Chiseled square top of curb northwest corner of North Horne Road and Apache Trail (East Main Street).
RM286	1220.57	Chiseled square top of curb southwest corner of South Hobson Street and East Southern Avenue.
RM 287	1211.35	Brass cap at northeast corner of intersection of Baseline Road and McQueen Road.
RM292	1255.67	B.C. bridge at North Mesa Drive and Tempe Crosscut Canal.
RM293	1243.58	Chiseled square top of curb northwest corner North Center Street and West University Drive.
RM294	1212.38	Chiseled square irrigation works northwest corner of South Center Street and West Baseline Road.
RM295	1251.96	Chiseled square southeast corner bridge at Tempe Crosscut Canal and North Country Club Drive.
RM296	1238.55	Chiseled square top of curb northwest corner of Country Club Drive and (West Main Street) Apache Trail.
RM297	1210.77	Brass cap top of curb northwest corner of South Country Club Drive and West Baseline Road.
RM298	1209.70	"X" on irrigation works northwest corner of South Extension Road and West Baseline Road.
RM299	1205.68	Chiseled square on sidewalk of northwest corner of bridge on North Alma School Road and Tempe Canal.
RM300	1206.51	Chiseled square headwall northeast corner of South Alma School Road and West Baseline Road.
RM301	1205.79	Chiseled square irrigation box on southwest corner at Tempe Canal and West Eighth Street.
RM302	1211.63	Chiseled square top of curb northwest corner of North Dobson Road and West Broadway Avenue.
RM303	1204.69	Chiseled square top of curb northwest corner of South Dobson Road and West 8th Avenue.
RM304	1201.46	Chiseled square top of curb southeast corner of South Dobson Road and West Southern Avenue.

LEGEND

SPECIAL FLOOD HAZARD AREAS INUNDATED BY 100-YEAR FLOOD

- ZONE A — No base flood elevations determined.
- ZONE AE — Base flood elevations determined.
- ZONE AH — Flood depths of 1 to 3 feet (usually areas of ponding); base flood elevations determined.
- ZONE AO — Flood depths of 1 to 3 feet (usually sheet flow on sloping terrain); average depths determined. For areas of alluvial fan flooding, velocities also determined.
- ZONE A99 — To be protected from 100-year flood by Federal flood protection system under construction; no base elevations determined.
- ZONE V — Coastal flood with velocity hazard (wave action); no base flood elevations determined.
- ZONE VE — Coastal flood with velocity hazard (wave action); base flood elevations determined.

FLOODWAY AREAS IN ZONE AE

OTHER FLOOD AREAS

- ZONE X — Areas of 500-year flood; areas of 100-year flood with average depths of less than 1 foot or with drainage areas less than 1 square mile; and areas protected by levees from 100 year flood.

OTHER AREAS

- ZONE X — Areas determined to be outside 500-year flood plain.
- ZONE D — Areas in which flood hazards are undetermined.

Flood Boundary

Floodway Boundary

Zone D Boundary

Boundary Dividing Special Flood Hazard Zones, and Boundary Dividing Areas of Different Coastal Base Flood Elevations Within Special Flood Hazard Zones.

513 — Base Flood Elevation Line; Elevation in Feet*

D — D — Cross Section Line

(EL 987) — Base Flood Elevation in Feet Where Uniform Within Zone*

RM7X — Elevation Reference Mark

*Referenced to the National Geodetic Vertical Datum of 1929

NOTES

This map is for use in administering the National Flood Insurance Program; it does not necessarily identify all areas subject to flooding, particularly from local drainage sources of small size, or all planimetric features outside Special Flood Hazard Areas.

Areas of special flood hazard (100-year flood) include Zones A, A1-30, AE, AH, AO, A99, V, V1-30 AND VE.

Certain areas not in Special Flood Hazard Areas may be protected by flood control structures.

Boundaries of the floodways were computed at cross sections and interpolated between cross sections. The floodways were based on hydraulic considerations with regard to requirements of the Federal Emergency Management Agency.

Floodway widths in some areas may be too narrow to show to scale. Floodway widths are provided in the Flood Insurance Study Report.

Coastal base flood elevations apply only landward of the shoreline.

Corporate limits shown are current as of the date of this map. The user should contact appropriate community officials to determine if corporate limits have changed subsequent to the issuance of the map.

For community map revision history prior to countywide mapping, see Section 6.0 of the Flood Insurance Study Report.

APRIL 15, 1988

For adjoining map panels see separately printed Map Index

MAP REPOSITORY

Refer to Repository Listing on Index Map

EFFECTIVE DATE OF COUNTYWIDE FLOOD INSURANCE RATE MAP:

APRIL 15, 1988

EFFECTIVE DATE (S) OF REVISION (S) TO THIS PANEL:

Map revised DECEMBER 3, 1993 to change base flood elevations, to add base flood elevations, to add special flood hazard areas, to change special flood hazard areas, to change zone designations, to update map format, to add roads and road names, to reflect updated topographic information, and to incorporate previously issued letters of map revision.

To determine if flood insurance is available, contact an insurance agent or call the National Flood Insurance Program at (800) 638-6620.

APPROXIMATE SCALE IN FEET

1000 0 1000

NATIONAL FLOOD INSURANCE PROGRAM

FIRM

FLOOD INSURANCE RATE MAP

MARICOPA COUNTY, ARIZONA AND INCORPORATED AREAS

PANEL 2190 OF 4350

CONTAINS:

COMMUNITY	NUMBER	PANEL	SUFFIX
GILBERT, TOWN OF	040044	2190	E
MARICOPA COUNTY, UNINCORPORATED AREAS	040037	2190	E
MESA, CITY OF	040048	2190	E

MAP NUMBER 04013C2190 E

MAP REVISED: DECEMBER 3, 1993

Federal Emergency Management Agency

NOTE: MAP AREA SHOWN ON THIS PANEL IS LOCATED WITHIN TOWNSHIP 1 NORTH, RANGE 5 EAST AND TOWNSHIP 1 SOUTH, RANGE 5 EAST

FEDERAL EMERGENCY MANAGEMENT AGENCY **BRIDGE/CULVERT FORM**	*O.M.B. Burden No. 3067-0148* *Expires July 31, 1997*	**FEMA USE ONLY**

PUBLIC BURDEN DISCLOSURE NOTICE

Public reporting burden for this form is estimated to average 2 hours per response. The burden estimate includes the time for reviewing instructions, searching existing data sources, gathering and maintaining the needed data, and completing and reviewing the form. Send comments regarding the accuracy of the burden estimate and any suggestions for reducing this burden, to: Information Collections Management, Federal Emergency Management Agency, 500 C Street, S.W., Washington, DC 20472; and to the Office of Management and Budget, Paperwork Reduction Project (3067-0148), Washington, DC 20503.

Community Name: City of Tempe, Arizona; Maricopa County, Arizona; Salt River Pima-Maricopa Indian Community

Flooding Source: Salt River

Project Name/Identifier: Floodplain/Floodway Delineation

1. IDENTIFIER

1. Name of roadway, railroad, etc.: Salt River Bridge, McClintock Dr. - SR 101L
2. Location of bridge/culvert along flooding source (in terms of stream distance or cross-section identifier):
   Between river mile 23.81 and river mile 24.94 (effective FIS)
3. This revision reflects *(check one of the following)*:
   - ■ New bridge/culvert not modeled in the FIS
   - ☐ Modified bridge/culvert previously modeled in the FIS
   - ☐ New analysis of bridge/culvert previously modeled in the FIS

   (Explain why new analysis was performed)

2. BACKGROUND

Provide the following information about the structure:

1 Dimension, material, and shape (e.g. two 10 x 5 feet reinforced concrete box culvert; three 30-foot span bridge with 2 rows of two 3- foot diameter circular piers; 40-foot wide ogee shape spillway) westbound: 39-span precast Type VI AASHTO girder bridge with 6'-10' diameter circular piers in 2 rows
eastbound: same description

2. Entrance geometry of culvert/type of bridge opening (e.g. 30° - 75° wing walls with square top edge, sloping embankments and vertical abutments) N/A - only piers in floodplain

3. Hydraulic model used to analyze the structure (*e.g., HEC-2 with special bridge routine, WSPRO, HY8*)
   HEC-2 normal bridge

   If different than hydraulic analysis for the flooding source, justify why the hydraulic analysis used for the flooding source could not analyze the structure(s). *(Attach justification)*

Note: If any items do not apply to submitted hydraulic analysis, indicate by N/A
*** One form per new/revised bridge/culvert**

3. ANALYSIS

Sketch the downstream face of the structure together with the road profile. Show, at a minimum, the maximum low chord elevation, invert elevation, minimum top of road elevation, and ineffective flow widths.

See attached plans.

Sketch the upstream face of the structure together with the road profile. Show, at a minimum, the maximum low chord elevation, invert elevation, and minimum top of road elevation.

See attached plans.

Sketch the plan view of the structure(s) Show, at a minimum, the skew angle, cross-section locations, distances between cross sections, and length of structure (s).

Please refer to attached plans and work map.

← flow

Attach plans of the structure (s) certified by a registered Professional Engineer.

Culvert length or bridge width (ft)	N/A due to highly skewed alignment of bridge
Calculated culvert/bridge area (ft ^{2}) by the hydraulic model, if applicable	N/A
Total culvert/bridge area (ft ^{2})	N/A

Elevations Above Which Flow is Effective for Overbanks

	Left Overbank	Right Overbank
Upstream face		
Downstream face	N/A - see work maps and cross-section plots	

Minimum Top of Road Elevation

	Left Overbank	Right Overbank
Upstream face	N/A	
Downstream face		

100-Year Elevations	Water Surface Elevations	Energy Gradient Elevations
Upstream face	N/A	
Downstream face		

Discharge	Low Flow	Pressure Flow	Weir Flow	Total Flow
Amount of flow through/over the structure (s) (cfs)	215,000 cfs to 220,000 cfs	-	-	215,000 cfs to 220,000 cfs

The maximum depth of flow over the roadway/railroad (ft.) ..... N/A - no weir flow

Weir length (ft.) ..... _____

Top Widths	Total Floodplain Width	Total Effective Flow Width	Floodway Width
Upstream face	N/A - see HEC-2 output		
Downstream face	N/A		

3. ANALYSIS (Cont'd)

Loss Coefficients

Entrance loss coefficient	N/A
Manning's "n" value assigned to the structure(s)	N/A
Friction loss coefficient through structure (s)	0.035
Other loss coefficients (e.g., bend manhole, etc.)	None
Total loss coefficient	-
Weir coefficient	-
Pier coefficient	piers modeled with GR cards
Contraction loss coefficient	0.1
Expansion loss coefficient	0.3

4. SEDIMENT TRANSPORT CONSIDERATIONS

1. A. Is there any indication from historical records that sediment transport (*including scour and deposition*) can affect the 100-year water surface elevations? ..... ☐ Yes ■ No

   B Based on the conditions (*such as geomorphology, vegetative cover and development of the watershed and stream bed, and bank conditions*), is there a potential for debris and sediment transport (*including scour and deposition*) to affect the 100-year water surface elevations and/or conveyance capacity through the bridge/culvert? ..... ☐ Yes ■ No

2. If the answer to either 1A or 1B is yes:

   A. What is the estimated sediment (*bed material*) load?
   _____cfs (*attach gradation curve*)

   Explain method used to estimate the sediment transport and the depth of scour and/or deposition_____

   B. Will sediment accumulate anywhere through the bridge/culvert? ☐ Yes ☐ No

   If yes, explain the impact on the conveyance capacity through the bridge/culvert?_____

5. FLOODWAY ANALYSIS

Explain method of bridge encroachment (floodway run) Since this bridge consists of only piers in the river floodplain, no special floodway encroachment methods were used.

Comments *(explain any unusual situations)*:

Attach analysis.

FEDERAL EMERGENCY MANAGEMENT AGENCY **BRIDGE/CULVERT FORM**	*O.M.B. Burden No. 3067-0148* *Expires July 31, 1997*	FEMA USE ONLY

PUBLIC BURDEN DISCLOSURE NOTICE

Public reporting burden for this form is estimated to average 2 hours per response. The burden estimate includes the time for reviewing instructions, searching existing data sources, gathering and maintaining the needed data, and completing and reviewing the form. Send comments regarding the accuracy of the burden estimate and any suggestions for reducing this burden, to: Information Collections Management, Federal Emergency Management Agency, 500 C Street, S.W., Washington, DC 20472; and to the Office of Management and Budget, Paperwork Reduction Project (3067-0148), Washington, DC 20503.

Community Name: Maricopa County, Arizona, City of Mesa, Arizona; Salt River Pima-Maricopa Indian Community

Flooding Source: Salt River

Project Name/Identifier: Floodplain/Floodway Delineation

1. IDENTIFIER

1. Name of roadway, railroad, etc.: SR202/SR101L traffic interchange
2. Location of bridge/culvert along flooding source (in terms of stream distance or cross-section identifier): River mile 24.94 (effective FIS)
3. This revision reflects *(check one of the following)*:
   - ■ New bridge/culvert not modeled in the FIS
   - ☐ Modified bridge/culvert previously modeled in the FIS
   - ☐ New analysis of bridge/culvert previously modeled in the FIS

   (Explain why new analysis was performed) _____

2. BACKGROUND

Provide the following information about the structure:

1. Dimension, material, and shape (e.g. two 10 x 5 feet reinforced concrete box culvert; three 30-foot span bridge with 2 rows of two 3- foot diameter circular piers; 40-foot wide ogee shape spillway) _____
2. Entrance geometry of culvert/type of bridge opening (e.g. 30° - 75° wing walls with square top edge, sloping embankments and vertical abutments) sloping embankments tie in to natural channel banks.
3. Hydraulic model used to analyze the structure (*e.g., HEC-2 with special bridge routine, WSPRO, HY8*) HEC-2

If different than hydraulic analysis for the flooding source, justify why the hydraulic analysis used for the flooding source could not analyze the structure(s). *(Attach justification)*

Note: If any items do not apply to submitted hydraulic analysis, indicate by N/A
*** One form per new/revised bridge/culvert**

3. ANALYSIS

Sketch the downstream face of the structure together with the road profile. Show, at a minimum, the maximum low chord elevation, invert elevation, minimum top of road elevation, and ineffective flow widths.

See attached plans.

Sketch the upstream face of the structure together with the road profile. Show, at a minimum, the maximum low chord elevation, invert elevation, and minimum top of road elevation.

See attached plans.

Sketch the plan view of the structure(s) Show, at a minimum, the skew angle, cross-section locations, distances between cross sections, and length of structure (s).

Please refer to attached plans and work map.

← flow

Attach plans of the structure (s) certified by a registered Professional Engineer.

Culvert length or bridge width (ft)	Several bridges with piers; N/A
Calculated culvert/bridge area (ft²) by the hydraulic model, if applicable	N/A
Total culvert/bridge area (ft²)	N/A

Elevations Above Which Flow is Effective for Overbanks

	Left Overbank	Right Overbank
Upstream face		
Downstream face	N/A - entire flow passes under bridge See attached cross-section plots	

Minimum Top of Road Elevation

	Left Overbank	Right Overbank
Upstream face		
Downstream face	N/A	

100-Year Elevations	Water Surface Elevations	Energy Gradient Elevations
Upstream face		
Downstream face	N/A	

Discharge	Low Flow	Pressure Flow	Weir Flow	Total Flow
Amount of flow through/over the structure (s) (cfs)	220,000 cfs			220,000 cfs

The maximum depth of flow over the roadway/railroad (ft.) ..... N/A - no weir flow

Weir length (ft.) ..... N/A

Top Widths	Total Floodplain Width	Total Effective Flow Width	Floodway Width
Upstream face	N/A - see HEC-2 output		
Downstream face	N/A		

3. ANALYSIS (Cont'd)

Loss Coefficients

Entrance loss coefficient	N/A
Manning's "n" value assigned to the structure(s)	N/A
Friction loss coefficient through structure (s)	0.035
Other loss coefficients (e.g., bend manhole, etc.)	None
Total loss coefficient	-
Weir coefficient	-
Pier coefficient	piers modeled with GR cards
Contraction loss coefficient	0.1
Expansion loss coefficient	0.3

4. SEDIMENT TRANSPORT CONSIDERATIONS

1. A. Is there any indication from historical records that sediment transport (*including scour and deposition*) can affect the 100-year water surface elevations? ..... ☐ Yes ■ No

   B Based on the conditions (*such as geomorphology, vegetative cover and development of the watershed and stream bed, and bank conditions*), is there a potential for debris and sediment transport (*including scour and deposition*) to affect the 100-year water surface elevations and/or conveyance capacity through the bridge/culvert? ..... ☐ Yes ■ No

2. If the answer to either 1A or 1B is yes:

   A. What is the estimated sediment (*bed material*) load?
   _____cfs (*attach gradation curve*)

   Explain method used to estimate the sediment transport and the depth of scour and/or deposition_____

   B. Will sediment accumulate anywhere through the bridge/culvert? ☐ Yes ☐ No

   If yes, explain the impact on the conveyance capacity through the bridge/culvert?_____

5. FLOODWAY ANALYSIS

Explain method of bridge encroachment (floodway run) Since these bridges consist of only piers in the river floodplain, no special floodway encroachment methods were used.

Comments (*explain any unusual situations*):

Attach analysis.

FEDERAL EMERGENCY MANAGEMENT AGENCY **BRIDGE/CULVERT FORM**	*O.M.B. Burden No. 3067-0148* *Expires July 31, 1997*	**FEMA USE ONLY**

PUBLIC BURDEN DISCLOSURE NOTICE

Public reporting burden for this form is estimated to average 2 hours per response. The burden estimate includes the time for reviewing instructions, searching existing data sources, gathering and maintaining the needed data, and completing and reviewing the form. Send comments regarding the accuracy of the burden estimate and any suggestions for reducing this burden, to: Information Collections Management, Federal Emergency Management Agency, 500 C Street, S.W., Washington, DC 20472; and to the Office of Management and Budget, Paperwork Reduction Project (3067-0148), Washington, DC 20503.

Community Name: City of Mesa, Arizona; Salt River Pima-Maricopa Indian Community

Flooding Source: Salt River

Project Name/Identifier: Floodplain/Floodway Delineation

1. IDENTIFIER

1. Name of roadway, railroad, etc.: Alma School Road, north bridge over Salt River
2. Location of bridge/culvert along flooding source (in terms of stream distance or cross-section identifier): river mile 27.42 (effective FIS)
3. This revision reflects *(check one of the following)*:
   - ☐ New bridge/culvert not modeled in the FIS
   - ☐ Modified bridge/culvert previously modeled in the FIS
   - ■ New analysis of bridge/culvert previously modeled in the FIS

   (Explain why new analysis was performed) part of re-study of Salt River portion of Maricopa County FIS

2. BACKGROUND

Provide the following information about the structure:

1 Dimension, material, and shape (e.g. two 10 x 5 feet reinforced concrete box culvert; three 30-foot span bridge with 2 rows of two 3- foot diameter circular piers; 40-foot wide ogee shape spillway) 16-span prestressed box beam bridge; 936.16' total length; 15 stem wall piers at 12° skew

2. Entrance geometry of culvert/type of bridge opening (e.g. 30° - 75° wing walls with square top edge, sloping embankments and vertical abutments) sloping riprap embankments (part of spur dike)

3. Hydraulic model used to analyze the structure (*e.g., HEC-2 with special bridge routine, WSPRO, HY8*) HEC-2 normal bridge routine

   If different than hydraulic analysis for the flooding source, justify why the hydraulic analysis used for the flooding source could not analyze the structure(s). *(Attach justification)*

   N/A

Note: If any items do not apply to submitted hydraulic analysis, indicate by N/A
*** One form per new/revised bridge/culvert**

Sketch the downstream face of the structure together with the road profile. Show, at a minimum, the maximum low chord elevation, invert elevation, minimum top of road elevation, and ineffective flow widths.

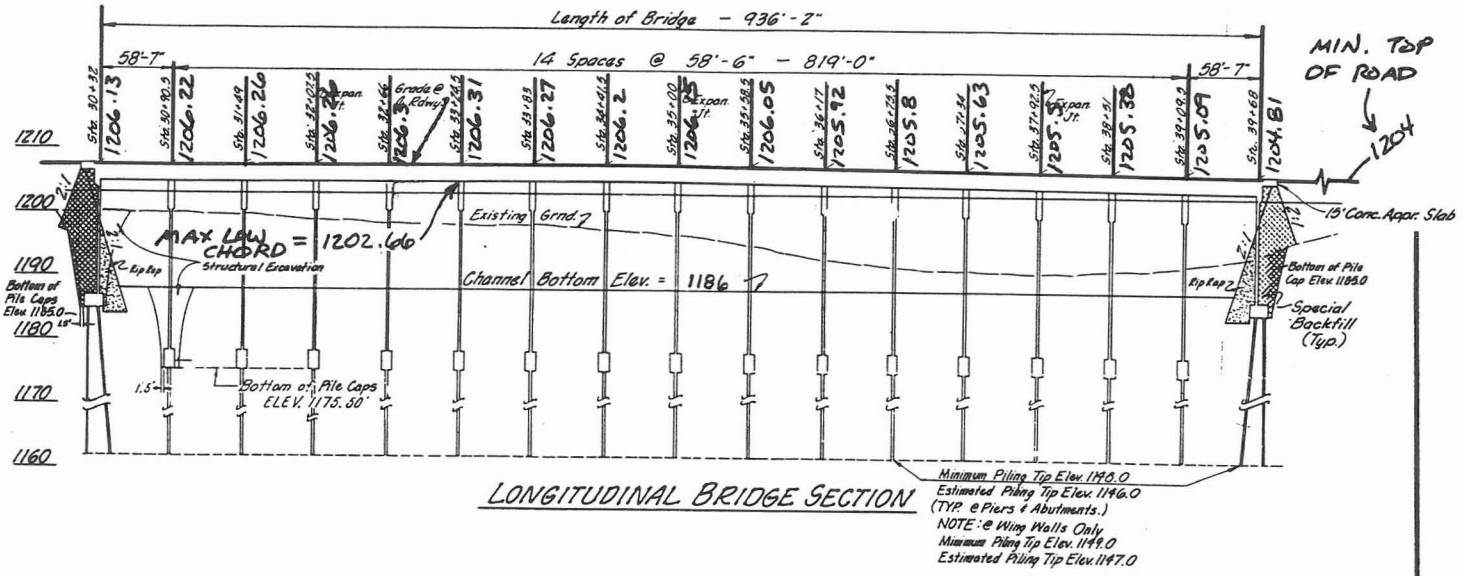

Sketch the upstream face of the structure together with the road profile. Show, at a minimum, the maximum low chord elevation, invert elevation, and minimum top of road elevation.

Same as downstream face.

Sketch the plan view of the structure(s) Show, at a minimum, the skew angle, cross-section locations, distances between cross sections, and length of structure (s).

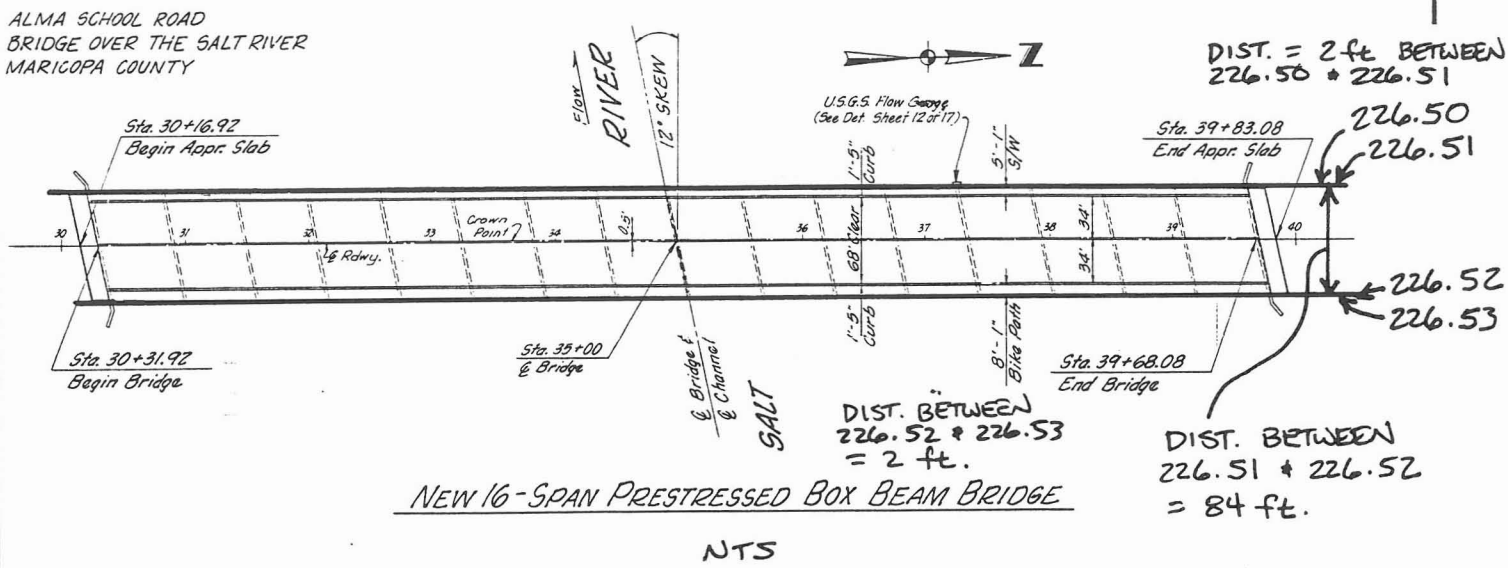

NEW 16-SPAN PRESTRESSED BOX BEAM BRIDGE

NTS

Attach plans of the structure (s) certified by a registered Professional Engineer.

See attached plans

Culvert length or bridge width (ft)	936.16 ft.
Calculated culvert/bridge area (ft²) by the hydraulic model, if applicable	10348 ft.^{2}
Total culvert/bridge area (ft²)	11326.0 ft.^{2}

Elevations Above Which Flow is Effective for Overbanks

	Left Overbank	Right Overbank
Upstream face	1204	1204
Downstream face	1204	1204

Minimum Top of Road Elevation

	Left Overbank	Right Overbank
Upstream face	1204	1204
Downstream face	1204	1204

100-Year Elevations	Water Surface Elevations	Energy Gradient Elevations
Upstream face	1199.67	1202.21
Downstream face	1197.69	1201.55

Discharge	Low Flow	Pressure Flow	Weir Flow	Total Flow
Amount of flow through/over the structure (s) (cfs)	147,500	0	0	147,500

The maximum depth of flow over the roadway/railroad (ft.) ..... N/A

Weir length (ft.) ..... N/A

Top Widths	Total Floodplain Width	Total Effective Flow Width	Floodway Width
Upstream face	862.6	912.18	862.6
Downstream face	862.6	912.18 (distance between ineffective flow encroachment stations* 0.9781 for 12° skew)	862.6

Loss Coefficients

Entrance loss coefficient	N/A - normal bridge method
Manning's "n" value assigned to the structure(s)	0.028
Friction loss coefficient through structure (s)	N/A - normal bridge method
Other loss coefficients (e.g., bend manhole, etc.)	N/A - normal bridge method
Total loss coefficient	N/A - normal bridge method
Weir coefficient	N/A - no overflow
Pier coefficient	N/A - normal bridge method
Contraction loss coefficient	0.1
Expansion loss coefficient	0.3

4. SEDIMENT TRANSPORT CONSIDERATIONS

1. A. Is there any indication from historical records that sediment transport (*including scour and deposition*) can affect the 100-year water surface elevations? ..... ☐ Yes ■ No

   B Based on the conditions (*such as geomorphology, vegetative cover and development of the watershed and stream bed, and bank conditions*), is there a potential for debris and sediment transport (*including scour and deposition*) to affect the 100-year water surface elevations and/or conveyance capacity through the bridge/culvert? ..... ☐ Yes ■ No

2. If the answer to either 1A or 1B is yes:

   A. What is the estimated sediment (*bed material*) load?
   _____cfs (*attach gradation curve*)

   Explain method used to estimate the sediment transport and the depth of scour and/or deposition_____

   B. Will sediment accumulate anywhere through the bridge/culvert? ☐ Yes ☐ No

   If yes, explain the impact on the conveyance capacity through the bridge/culvert?_____

5. FLOODWAY ANALYSIS

Explain method of bridge encroachment (floodway run) Floodway stations were set at the channel bank stations (at the intersection of the bridge low chord and the riprap embankment). This corresponds well with the upstream and downstream natural channel width.

Comments *(explain any unusual situations)*:

Attach analysis. See HEC-2 analysis.

FEDERAL EMERGENCY MANAGEMENT AGENCY **BRIDGE/CULVERT FORM**	*O.M.B. Burden No. 3067-0148* *Expires July 31, 1997*	**FEMA USE ONLY**

PUBLIC BURDEN DISCLOSURE NOTICE

Public reporting burden for this form is estimated to average 2 hours per response. The burden estimate includes the time for reviewing instructions, searching existing data sources, gathering and maintaining the needed data, and completing and reviewing the form. Send comments regarding the accuracy of the burden estimate and any suggestions for reducing this burden, to: Information Collections Management, Federal Emergency Management Agency, 500 C Street, S.W., Washington, DC 20472; and to the Office of Management and Budget, Paperwork Reduction Project (3067-0148), Washington, DC 20503.

Community Name: Maricopa County, Arizona; Salt River Pima-Maricopa Indian Community

Flooding Source: Salt River - South Alma School Road split

Project Name/Identifier: Floodplain/Floodway Delineation

1. IDENTIFIER

1. Name of roadway, railroad, etc.: Alma School Road - south bridge over Salt River
2. Location of bridge/culvert along flooding source (in terms of stream distance or cross-section identifier): river mile 27.42 (effective FIS)
3. This revision reflects *(check one of the following)*:
   - ☐ New bridge/culvert not modeled in the FIS
   - ☐ Modified bridge/culvert previously modeled in the FIS
   - ■ New analysis of bridge/culvert previously modeled in the FIS

   (Explain why new analysis was performed) part of re-study of Salt River portion of Maricopa County FIS

2. BACKGROUND

Provide the following information about the structure:

1 Dimension, material, and shape (e.g. two 10 x 5 feet reinforced concrete box culvert; three 30-foot span bridge with 2 rows of two 3- foot diameter circular piers; 40-foot wide ogee shape spillway) 7-span prestressed box beam bridge; 2.5'-diameter piers

2. Entrance geometry of culvert/type of bridge opening (e.g. 30° - 75° wing walls with square top edge, sloping embankments and vertical abutments) sloping riprap embankments, vertical abutments

3. Hydraulic model used to analyze the structure (*e.g., HEC-2 with special bridge routine, WSPRO, HY8*) HEC-2 normal bridge

If different than hydraulic analysis for the flooding source, justify why the hydraulic analysis used for the flooding source could not analyze the structure(s). *(Attach justification)*
Effective FIS model is not available; therefore it is not known what method was used in the effective model.

Note: If any items do not apply to submitted hydraulic analysis, indicate by N/A
*** One form per new/revised bridge/culvert**

Sketch the downstream face of the structure together with the road profile. Show, at a minimum, the maximum low chord elevation, invert elevation, minimum top of road elevation, and ineffective flow widths.

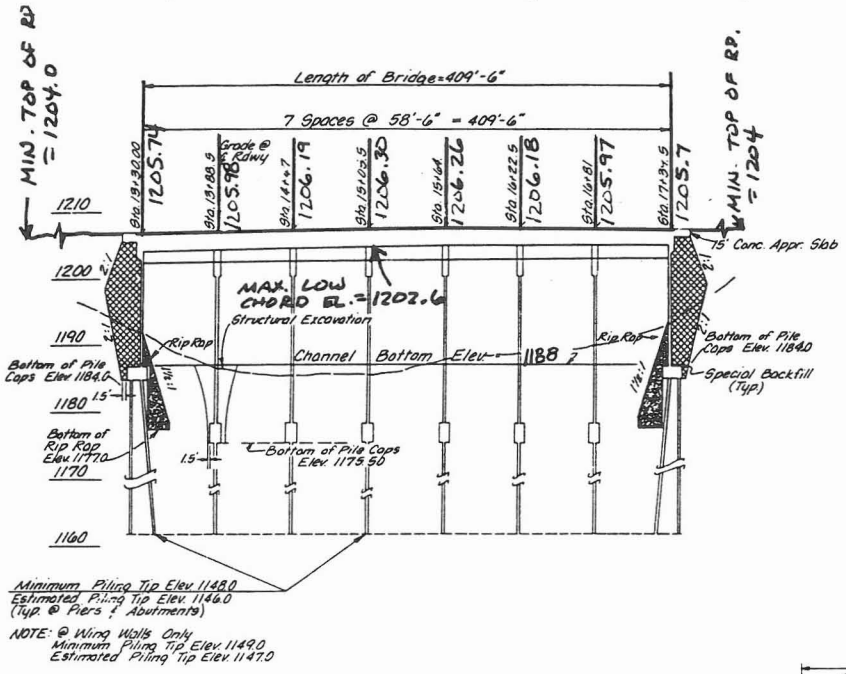

LONGITUDINAL BRIDGE SECTION

NTS

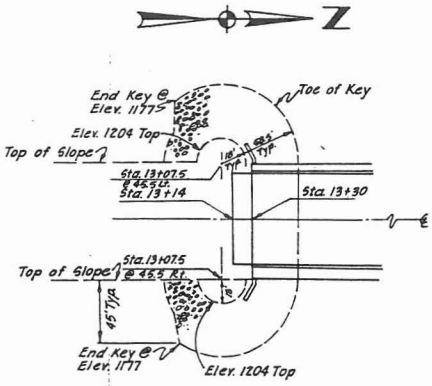

PLAN VIEW TYPICAL BOTH ENDS

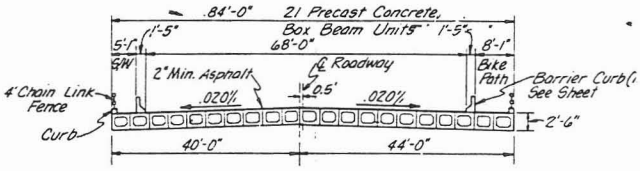

TYPICAL BRIDGE SECTION

Sketch the upstream face of the structure together with the road profile. Show, at a minimum, the maximum low chord elevation, invert elevation, and minimum top of road elevation.

Same as downstream face.

Sketch the plan view of the structure(s) Show, at a minimum, the skew angle, cross-section locations, distances between cross sections, and length of structure (s).

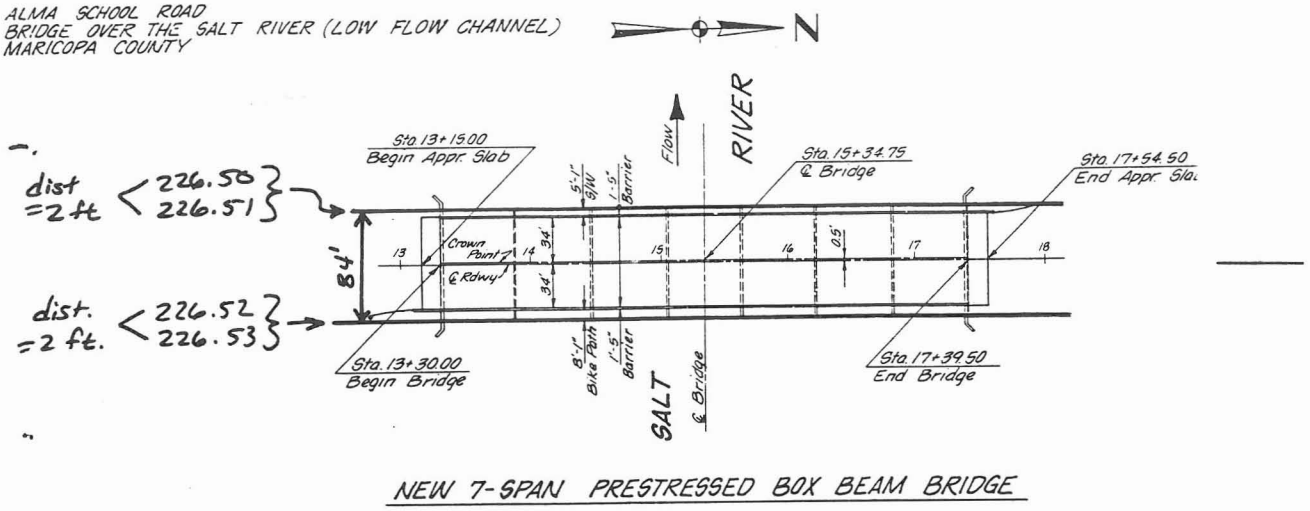

Attach plans of the structure (s) certified by a registered Professional Engineer.

Culvert length or bridge width (ft)	67 ft.
Calculated culvert/bridge area (ft ^{2}) by the hydraulic model, if applicable	4299 ft.^{2}
Total culvert/bridge area (ft ^{2})	6913 ft.^{2}

Elevations Above Which Flow is Effective for Overbanks

	Left Overbank	Right Overbank
Upstream face	1204.0	1204.0
Downstream face	1204.0	1204.0

Minimum Top of Road Elevation

	Left Overbank	Right Overbank
Upstream face	1204.0	1204.0
Downstream face	1204.0	1204.0

100-Year Elevations	Water Surface Elevations	Energy Gradient Elevations
Upstream face	1200.84	1204.11
Downstream face	1199.15	1203.57

Discharge	Low Flow	Pressure Flow	Weir Flow	Total Flow
Amount of flow through/over the structure (s) (cfs)	72,500	–	–	72,500

The maximum depth of flow over the roadway/railroad (ft.) ..... no weir flow

Weir length (ft.) ..... N/A

Top Widths	Total Floodplain Width	Total Effective Flow Width	Floodway Width
Upstream face	392	392	392
Downstream face	392	392	392

Loss Coefficients

Entrance loss coefficient	N/A - normal bridge method
Manning's "n" value assigned to the structure(s)	0.028
Friction loss coefficient through structure (s)	0.028
Other loss coefficients (e.g., bend manhole, etc.)	-
Total loss coefficient	0.028
Weir coefficient	N/A
Pier coefficient	N/A - normal bridge method
Contraction loss coefficient	0.1
Expansion loss coefficient	0.3

4. SEDIMENT TRANSPORT CONSIDERATIONS

1. A. Is there any indication from historical records that sediment transport (*including scour and deposition*) can affect the 100-year water surface elevations? ..... ☐ Yes ■ No

   B Based on the conditions (*such as geomorphology, vegetative cover and development of the watershed and stream bed, and bank conditions*), is there a potential for debris and sediment transport (*including scour and deposition*) to affect the 100-year water surface elevations and/or conveyance capacity through the bridge/culvert? ..... ☐ Yes ■ No

2. If the answer to either 1A or 1B is yes:

   A. What is the estimated sediment (*bed material*) load?
   _____cfs (*attach gradation curve*)

   Explain method used to estimate the sediment transport and the depth of scour and/or deposition_____

   B. Will sediment accumulate anywhere through the bridge/culvert? ☐ Yes ☐ No

   If yes, explain the impact on the conveyance capacity through the bridge/culvert?_____

5. FLOODWAY ANALYSIS

Explain method of bridge encroachment (floodway run) At bridge sections 226.51 and 226.52, bank stations were set at the intersection of the low chord and the abutment. Floodway stations were also set at these locations.

Comments *(explain any unusual situations)*:

Attach analysis.

MT-2 FORM 7, ITEM 3

Design Plans
Salt River Bridge EB & WB
McClintock Drive - SR101L

Note: As-built plans not yet available

F.H.W.A. REGION	STATE	PROJECT NO.	SHEET NO.	TOTAL SHEETS	AS BUILTS
9	ARIZ	RAM 600-5-508 202 L MA 8	86	296	

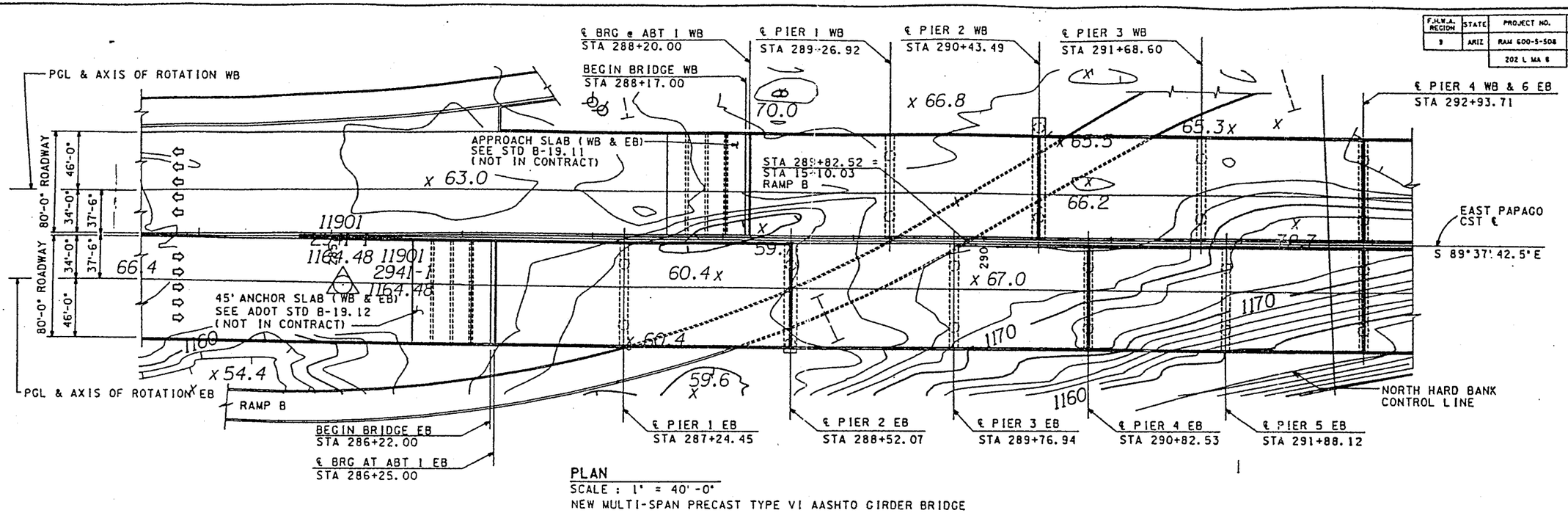

PLAN
SCALE : 1" = 40'-0"
NEW MULTI-SPAN PRECAST TYPE VI AASHTO GIRDER BRIDGE

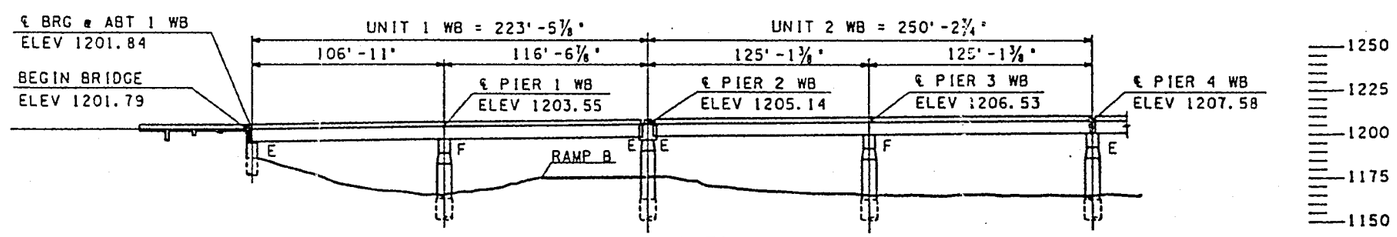

WESTBOUND ELEVATION
SCALE : 1" = 40'-0"

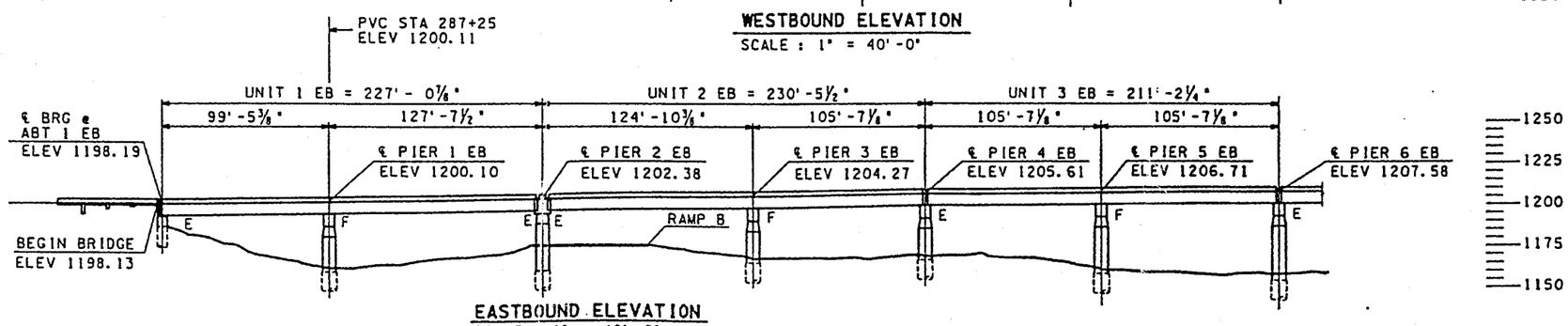

EASTBOUND ELEVATION
SCALE : 1" = 40'-0"

NOTES:

1. FOR HORIZONTAL AND VERTICAL CURVES DATA SEE DRAWINGS S-2.2 AND S-2.4.
2. FOR MINIMUM HORIZONTAL AND VERTICAL CLEARANCES, SEE DWG S-2.5
3. FOR DRAINAGE PLAN AND NOTES SEE DRAWING S-2.122.
4. FOR RAMP B LIGHTING PLAN SEE LIGHTING DRAWINGS
5. FOR McCLINTOCK DRIVE LIGHTING PLAN SEE DRAWING S-2.97.
6. FOR MAINLINE LUMINAIRE POLES, SIGNS, AND FMS PLATFORM LOCATIONS SEE GIRDER LAYOUT DRAWINGS.
7. APPROACH AND ANCHOR SLABS ARE NOT INCLUDED ON THIS CONTRACT.
8. THE CONTRACTOR SHALL VERIFY THE LOCATION OF EXISTING UTILITIES IN THE VICINITY OF THE STRUCTURE.

KEY PLAN

		DATE
DESIGN	DRS	8/90
DRAWN	AJM	8/90
CHECKED	DNH	7/92

TYLIN INTERNATIONAL
Civil and Structural Engineers

ARIZONA DEPARTMENT OF TRANSPORTATION
HIGHWAYS DIVISION
STRUCTURES SECTION

STA 286 +
SALT RIVER BRIDGE EB & WB
PLAN AND ELEVATION 1

202 ROUTE	8.17 MILEPOST	2268/2269 STRUCTURE NO.	LOCATION McCLINTOCK DRIVE - SR 101L

DWG NO. S-2.6

TRACS NO. H2151 01C

__ OF __

F.H.W.A. REGION	STATE	PROJECT NO.	SHEET NO.	TOTAL SHEETS	AS BUILTS
9	ARIZ	RAM 600-5-506	87	276	
		202 L MA 8			

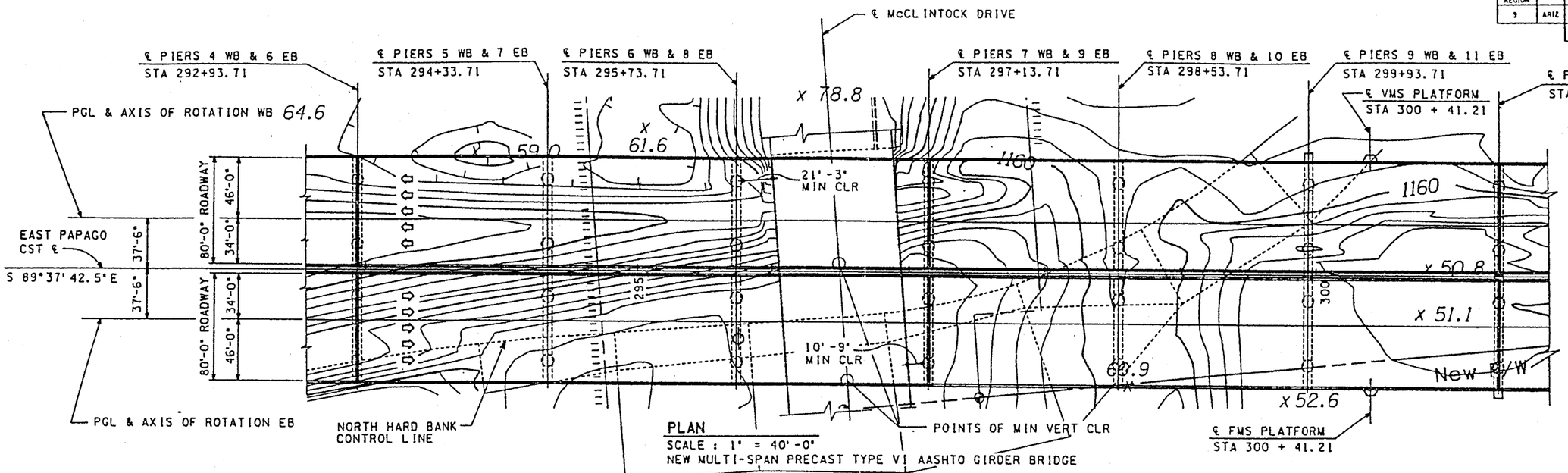

PLAN
SCALE : 1" = 40'-0"
NEW MULTI-SPAN PRECAST TYPE VI AASHTO GIRDER BRIDGE

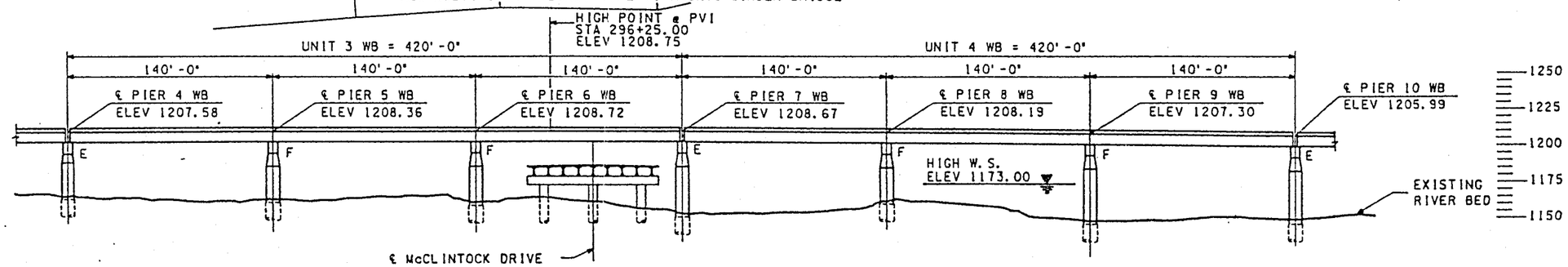

WESTBOUND ELEVATION
SCALE : 1" = 40'-0"

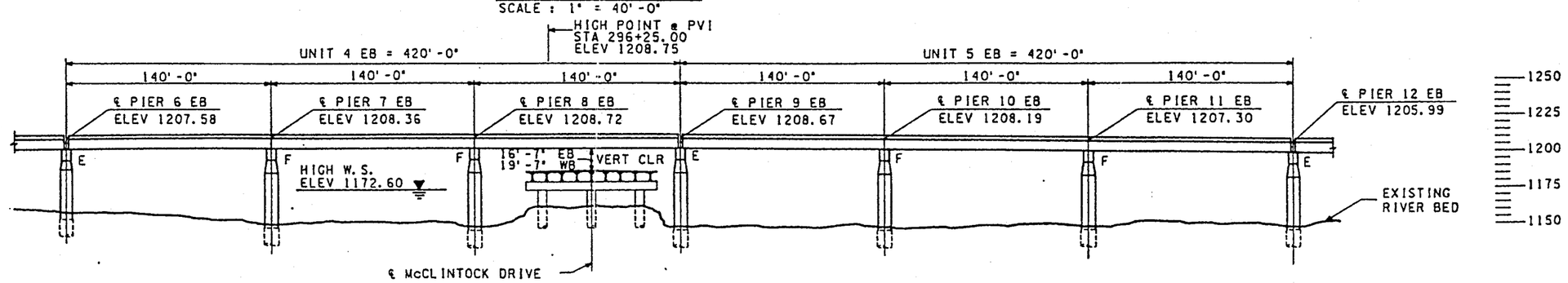

EASTBOUND ELEVATION
SCALE : 1" = 40'-0"

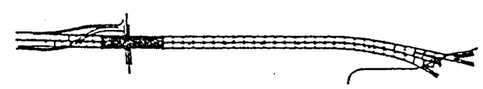

KEY PLAN

		DATE
DESIGN	DRS	6/90
DRAWN	AJM	8/90
CHECKED	DNH	7/92

T·Y·LIN INTERNATIONAL
Civil and Structural Engineers

ARIZONA DEPARTMENT OF TRANSPORTATION
HIGHWAYS DIVISION
STRUCTURES SECTION

STA 286 +
SALT RIVER BRIDGE EB & WB
PLAN AND ELEVATION 2

202 ROUTE	8.17 MILEPOST	2268/2269 STRUCTURE NO.	LOCATION McCLINTOCK DRIVE - SR 101L

DWG NO. S-2.7

TRACS NO. H2151 01C

— OF —

F.H.W.A. REGION	STATE	PROJECT NO.	SHEET NO.	TOTAL SHEETS	AS BUILTS
9	ARIZ	RAM 600-5-508	88	276	
		202 L MA 8			

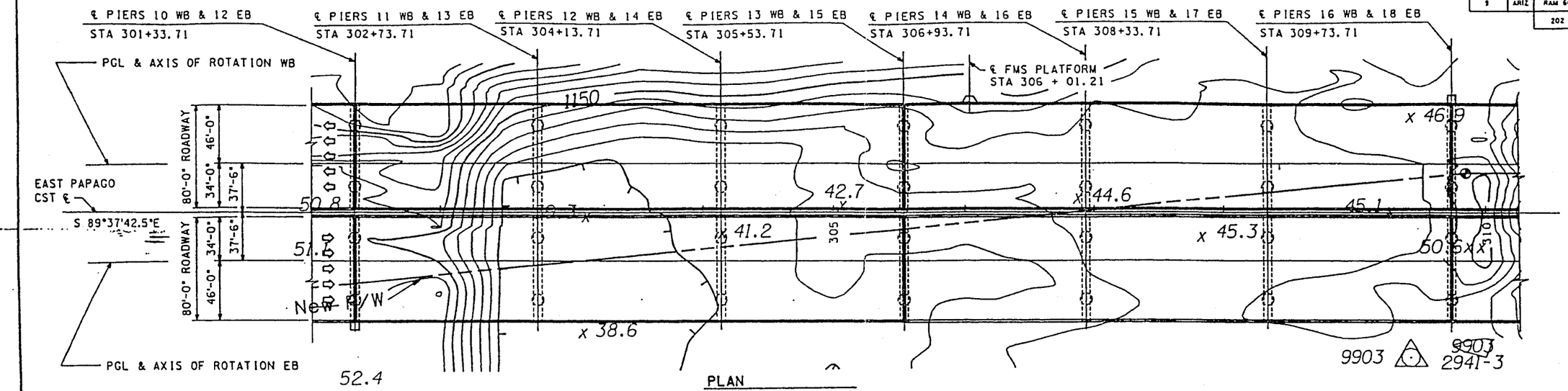

PLAN
SCALE : 1" = 40'-0"
NEW MULTI-SPAN PRECAST TYPE VI AASHTO GIRDER BRIDGE

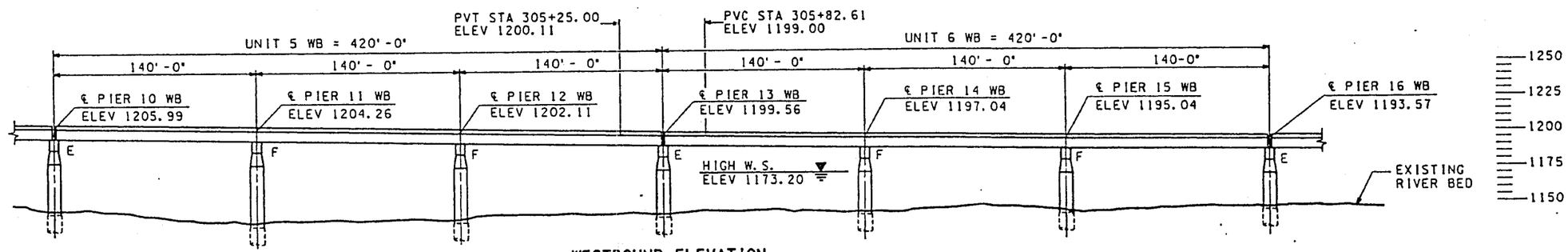

WESTBOUND ELEVATION
SCALE : 1" = 40'-0"

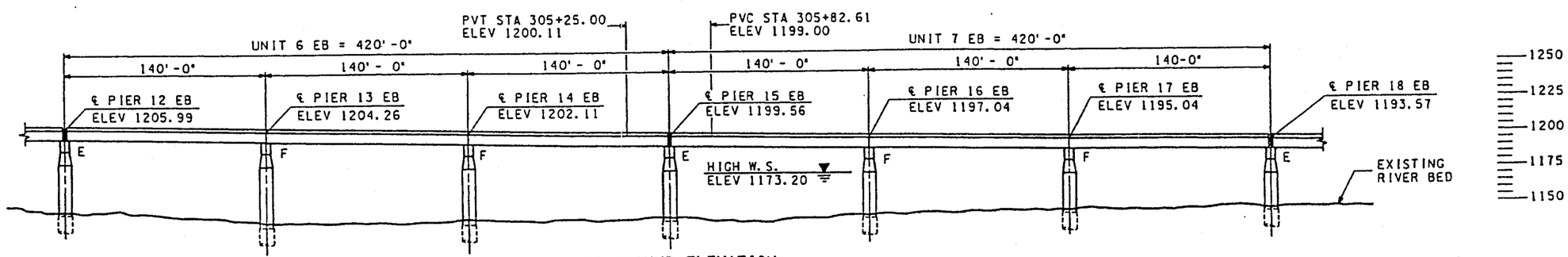

EASTBOUND ELEVATION
SCALE : 1" = 40'-0"

KEY PLAN

		DATE
DESIGN	DRS	8/90
DRAWN	AJM	8/90
CHECKED	DHM	7/92

TYLIN INTERNATIONAL
Civil and Structural Engineers

ARIZONA DEPARTMENT OF TRANSPORTATION
HIGHWAYS DIVISION
STRUCTURES SECTION

STA 286 +
SALT RIVER BRIDGE EB & WB
PLAN AND ELEVATION 3

202 ROUTE	8.17 MILEPOST	2268/2269 STRUCTURE NO.	LOCATION McCLINTOCK DRIVE - SR 101L

DWG NO. S-2.8

TRACS NO. H2151 01C

__ OF __

MARK	BY	DATE	DESCRIPTION OF REVISIONS

F.H.W.A. REGION	STATE	PROJECT NO.	SHEET NO.	TOTAL SHEETS	AS BUILTS
9	ARIZ	RAM 600-5-506	89	296	
		202 L MA 8			

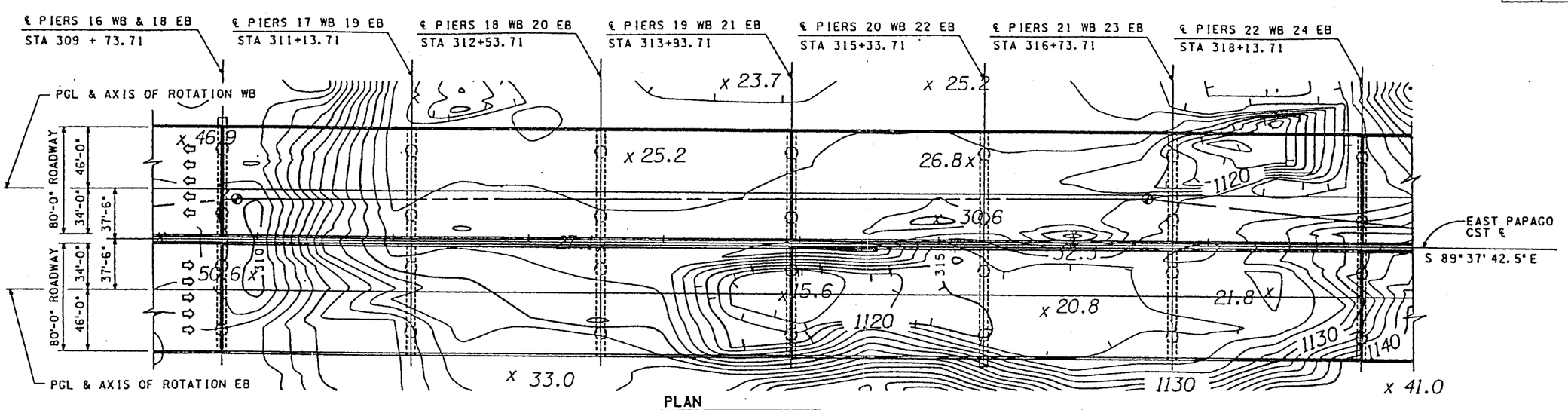

PLAN
SCALE : 1" = 40'-0"
NEW MULTI-SPAN PRECAST TYPE VI AASHTO GIRDER BRIDGE

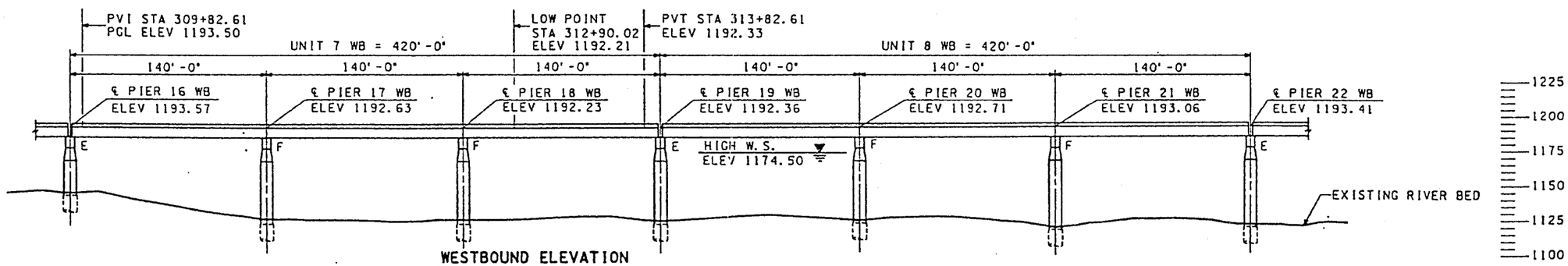

WESTBOUND ELEVATION
SCALE : 1" = 40'-0"

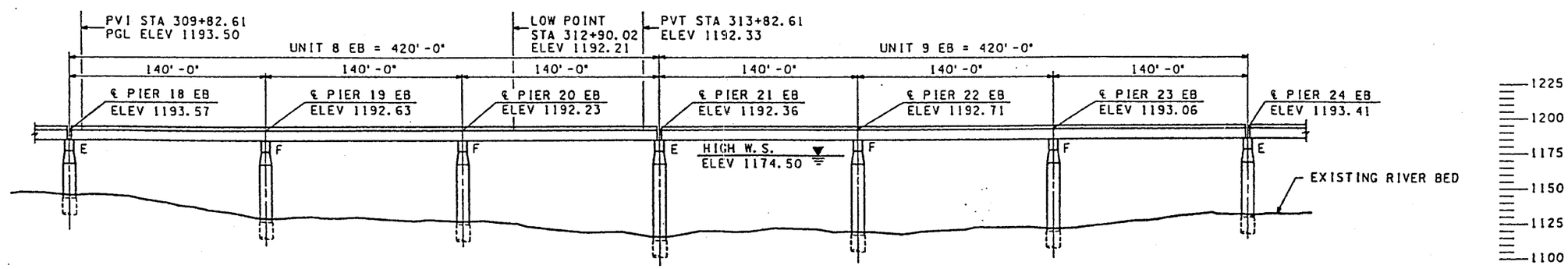

EASTBOUND ELEVATION
SCALE : 1" = 40'-0"

KEY PLAN

		DATE
DESIGN	DRS	8/90
DRAWN	AJM	8/90
CHECKED	DHH	7/92

TYLIN INTERNATIONAL
Civil and Structural Engineers

ARIZONA DEPARTMENT OF TRANSPORTATION
HIGHWAYS DIVISION
STRUCTURES SECTION

STA 286 +
SALT RIVER BRIDGE EB & WB
PLAN AND ELEVATION 4

202 ROUTE	8.17 MILEPOST	2268/2269 STRUCTURE NO.	LOCATION McCLINTOCK DRIVE - SR 101L

DWG NO. S-2.9

TRACS NO. H2151 01C

__ OF __

NO.	DESCRIPTION OF REVISIONS	MADE BY	DATE

F.H.W.A. REGION	STATE	PROJECT NO.	SHEET NO.	TOTAL SHEETS	AS BUILTS
9	ARIZ	RAM 600-5-508	90	296	
		202 L MA 8			

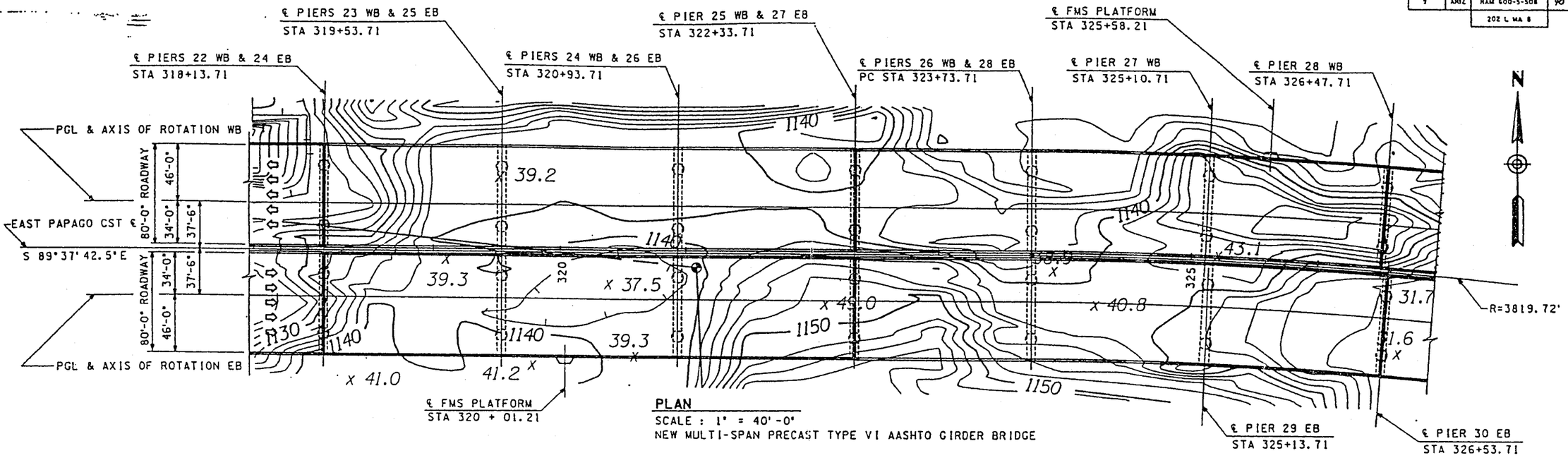

PLAN
SCALE : 1" = 40'-0"
NEW MULTI-SPAN PRECAST TYPE VI AASHTO GIRDER BRIDGE

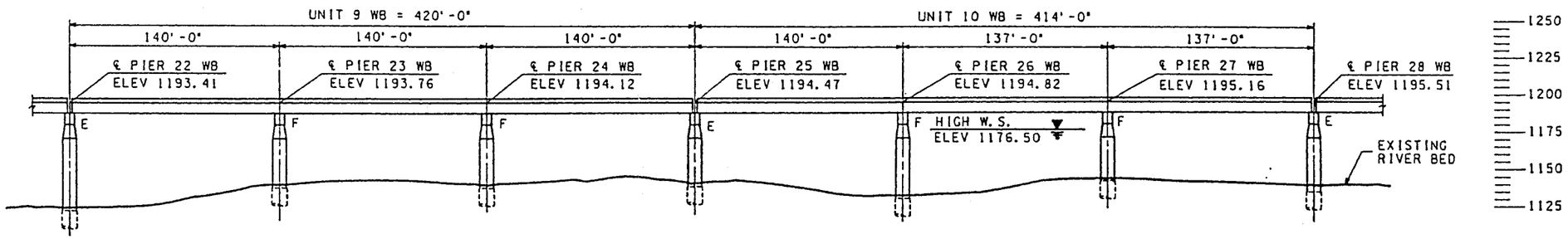

WESTBOUND ELEVATION
SCALE : 1" = 40'-0"

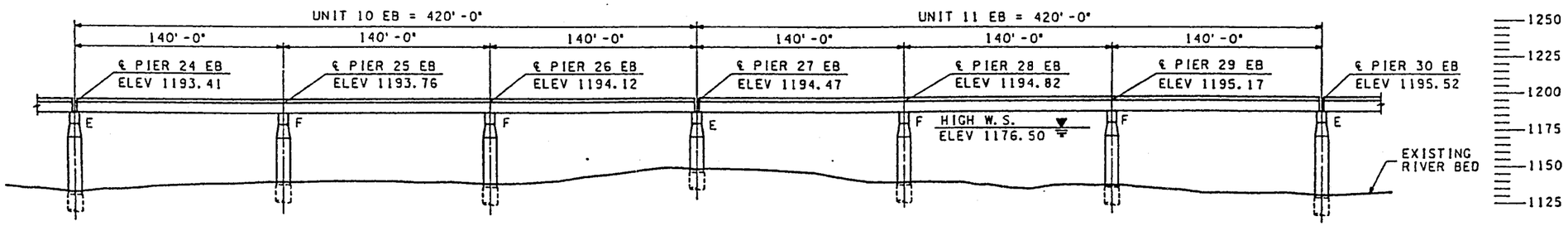

EASTBOUND ELEVATION
SCALE : 1" = 40'-0"

KEY PLAN

		DATE
DESIGN	DRS	8/90
DRAWN	AJM	8/90
CHECKED	DNH	7/92

TYLIN INTERNATIONAL
Civil and Structural Engineers

202 ROUTE	8.17 MILEPOST	2268/2269 STRUCTURE NO.

ARIZONA DEPARTMENT OF TRANSPORTATION
HIGHWAYS DIVISION
STRUCTURES SECTION
STA 286 +
SALT RIVER BRIDGE EB & WB
PLAN AND ELEVATION 5

LOCATION
McCLINTOCK DRIVE - SR 101L

DWG NO. S-2.10

TRACS NO. H2151 01C

__ OF __

S1APES.DGN 01-23-92

F.H.W.A. REGION	STATE	PROJECT NO.	SHEET NO.	TOTAL SHEETS	AS BUILTS
9	ARIZ	RAM 600-5-508 202 L MA 8	71	296	

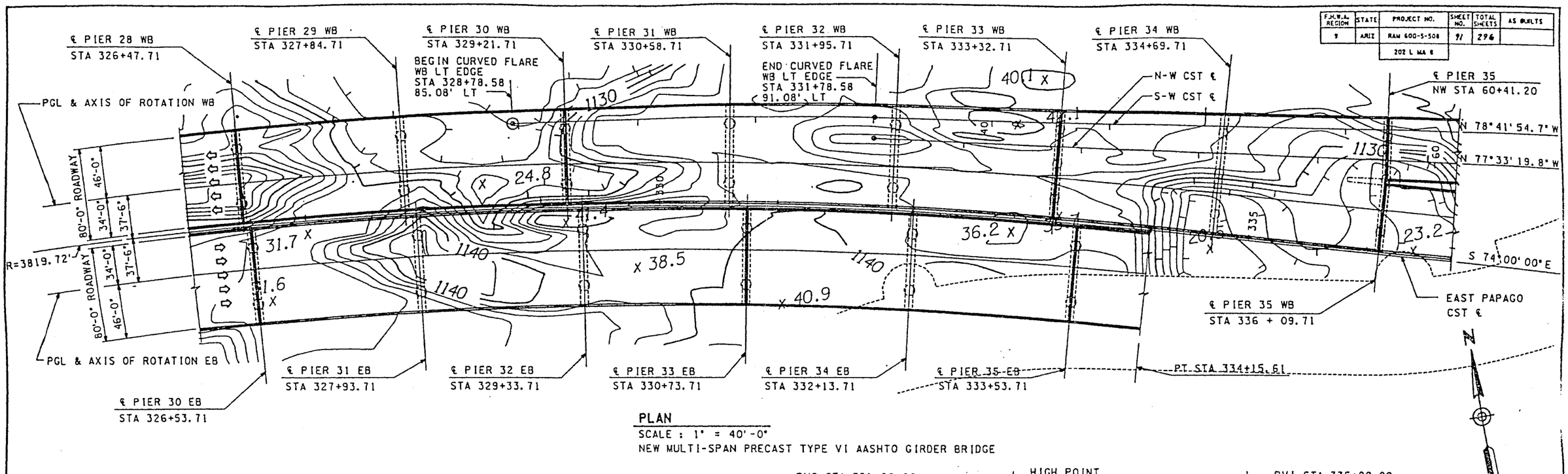

PLAN

SCALE : 1" = 40'-0"

NEW MULTI-SPAN PRECAST TYPE VI AASHTO GIRDER BRIDGE

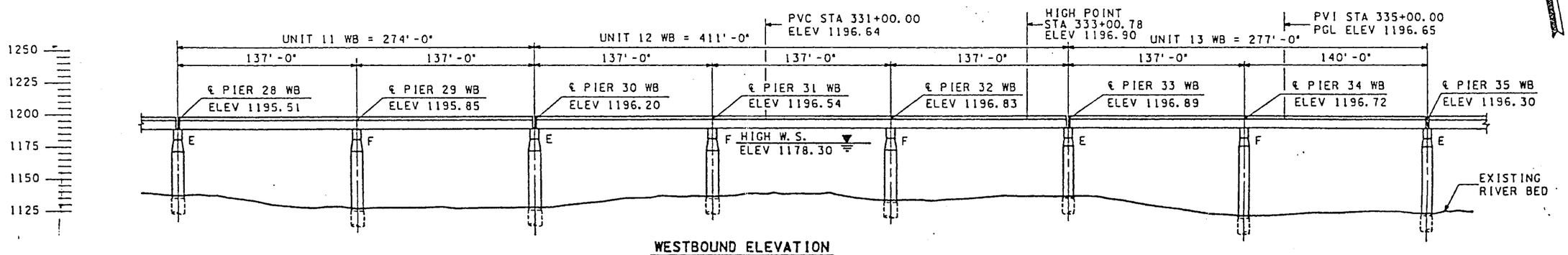

WESTBOUND ELEVATION

SCALE : 1" = 40'-0"

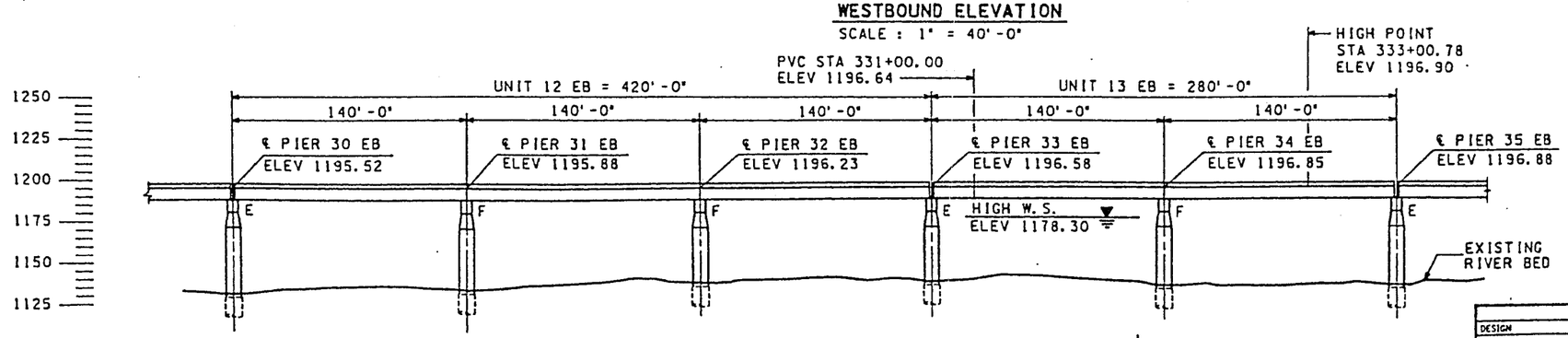

EASTBOUND ELEVATION

SCALE : 1" = 40'-0"

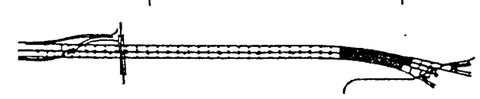

KEY PLAN

		DATE
DESIGN	DRS	8/90
DRAWN	AJM	8/90
CHECKED	DNH	7/92

TY·LIN INTERNATIONAL
Civil and Structural Engineers

ARIZONA DEPARTMENT OF TRANSPORTATION
HIGHWAYS DIVISION
STRUCTURES SECTION
STA 286 +
SALT RIVER BRIDGE EB & WB
PLAN AND ELEVATION 6

202 ROUTE	8.17 MILEPOST	2268/2269 STRUCTURE NO.	LOCATION McCLINTOCK DRIVE - SR 101L

DWG NO. S-2.11

TRACS NO. H2151 01C

__ OF __

F.H.W.A. REGION	STATE	PROJECT NO.	SHEET NO.	TOTAL SHEETS	AS BUILTS
9	ARIZ	RAM 600-S-508	92	296	
		202 L MA 8			

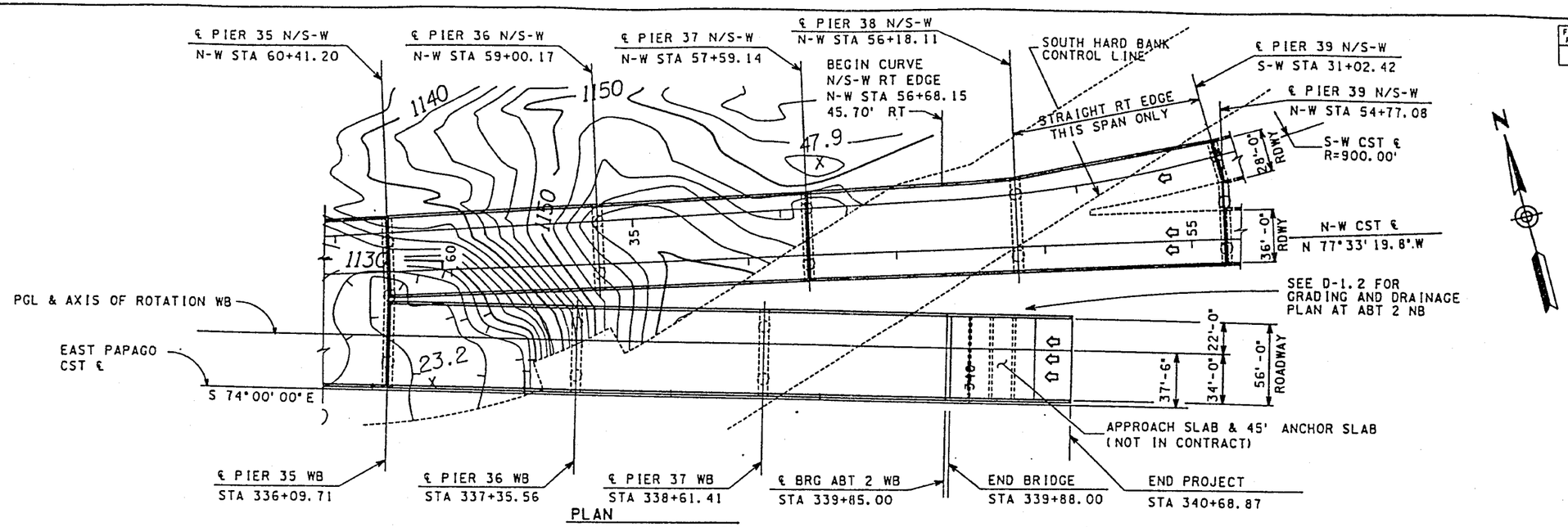

PLAN
SCALE : 1" = 40'-0"
NEW MULTI-SPAN PRECAST TYPE VI AASHTO GIRDER BRIDGE

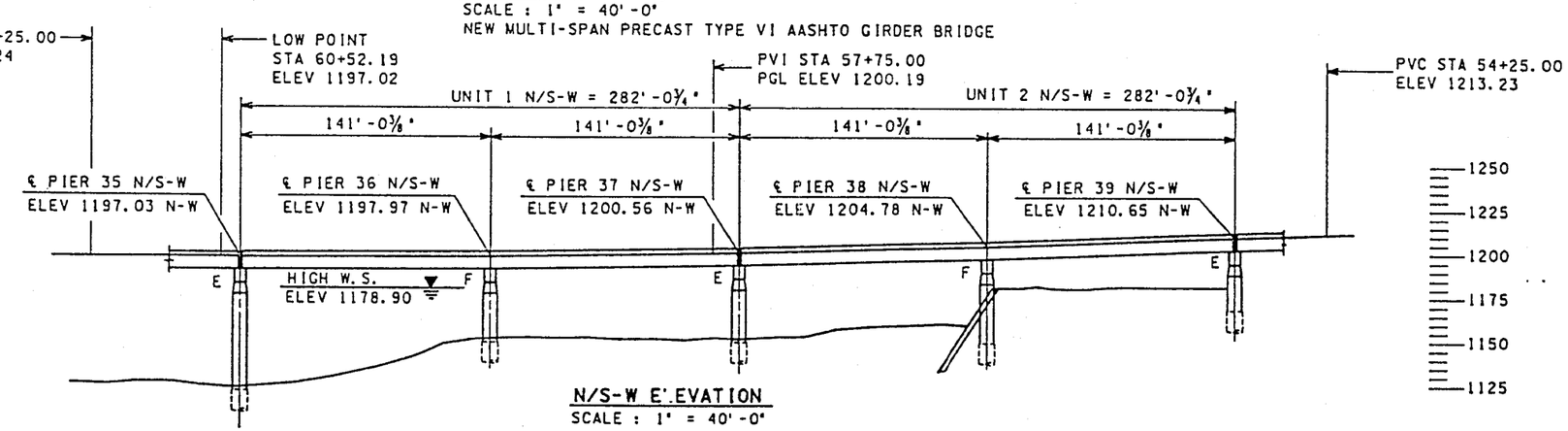

N/S-W ELEVATION
SCALE : 1" = 40'-0"

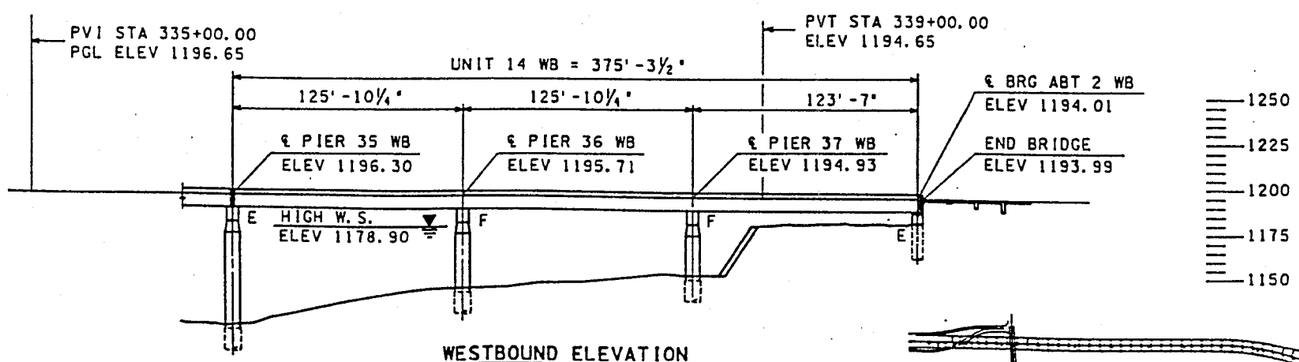

WESTBOUND ELEVATION
SCALE : 1" = 40'-0"

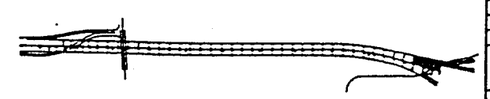

KEY PLAN

		DATE
DESIGN	DRS	8/90
DRAWN	AJM	8/90
CHECKED	DMH	7/92

T.Y.LIN INTERNATIONAL
Civil and Structural Engineers

ARIZONA DEPARTMENT OF TRANSPORTATION
HIGHWAYS DIVISION
STRUCTURES SECTION
STA 286 +
SALT RIVER BRIDGE EB & WB
PLAN AND ELEVATION 7

202 ROUTE	8.17 MILEPOST	2268/2269 STRUCTURE NO.	LOCATION McCLINTOCK DRIVE - SR 101L

DWG NO. S-2.12

TRACS NO. H2151 01C

___ OF ___

DATE	BY	DESCRIPTION OF REVISIONS

TO ACCOMPANY CHANGE ORDER NO. 1

F.H.W.A. REGION	STATE	PROJECT NO.	SHEET NO.	TOTAL SHEETS	AS BUILTS
9	ARIZ	RAM 600-5-508	93	296	
		202 L MA 8			

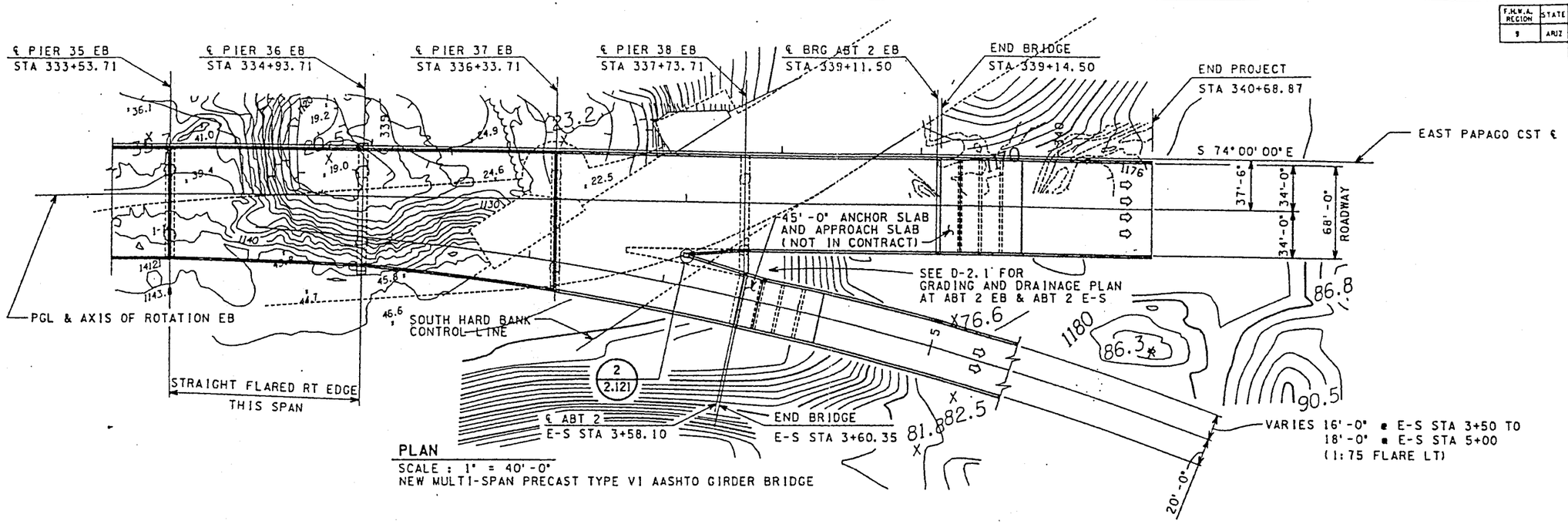

PLAN

SCALE : 1" = 40'-0"

NEW MULTI-SPAN PRECAST TYPE VI AASHTO GIRDER BRIDGE

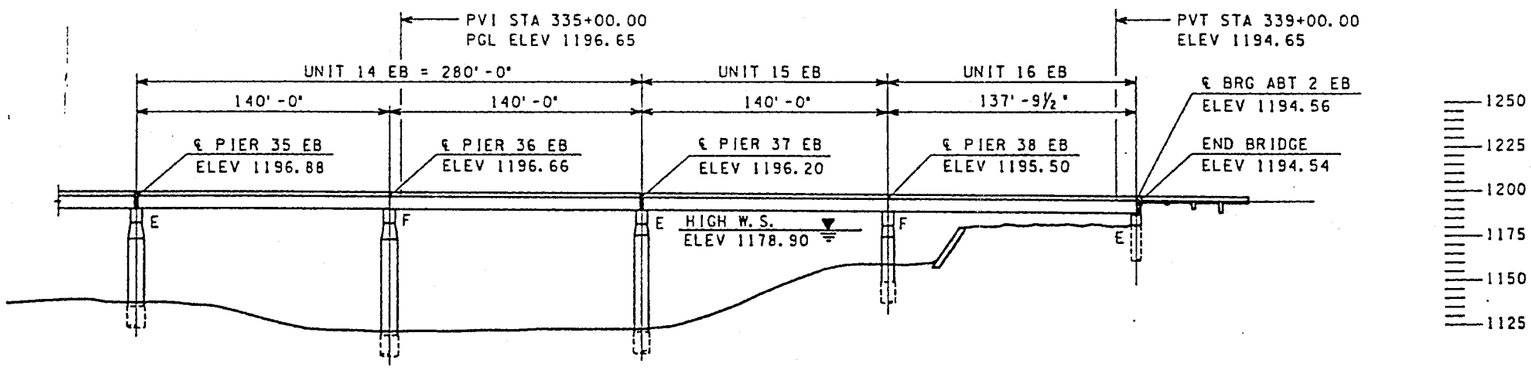

DEVELOPED EASTBOUND ELEVATION

SCALE : 1" = 40'-0"

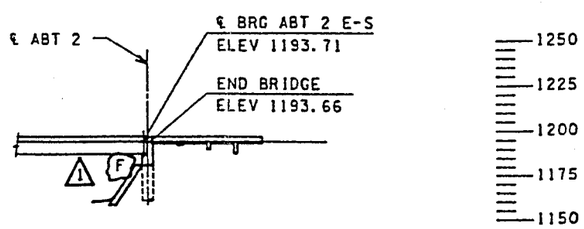

DEVELOPED PARTIAL E-S ELEVATION

SCALE : 1" = 40'-0"

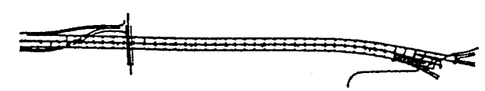

KEY PLAN

		DATE
DESIGN	DRS	8/90
DRAWN	AJM	8/90
CHECKED	DMM	7/92

T'LIN INTERNATIONAL
Civil and Structural Engineers

ARIZONA DEPARTMENT OF TRANSPORTATION
HIGHWAYS DIVISION
STRUCTURES SECTION

STA 286 +
SALT RIVER BRIDGE EB & WB
PLAN AND ELEVATION 8

202 ROUTE	8.17 MILEPOST	2268/2269 STRUCTURE NO.	LOCATION McCLINTOCK DRIVE - SR 101L

DWG NO. S-2

TRACS NO. H2151 01C

__ OF

TO ACCOMPANY CHANGE ORDER NO.

F.H.W.A. REGION	STATE	PROJECT NO.	SHEET NO.	TOTAL SHEETS	AS BUILTS
9	ARIZ	RAM 600-5-508	120	296	
		202 L MA 8			

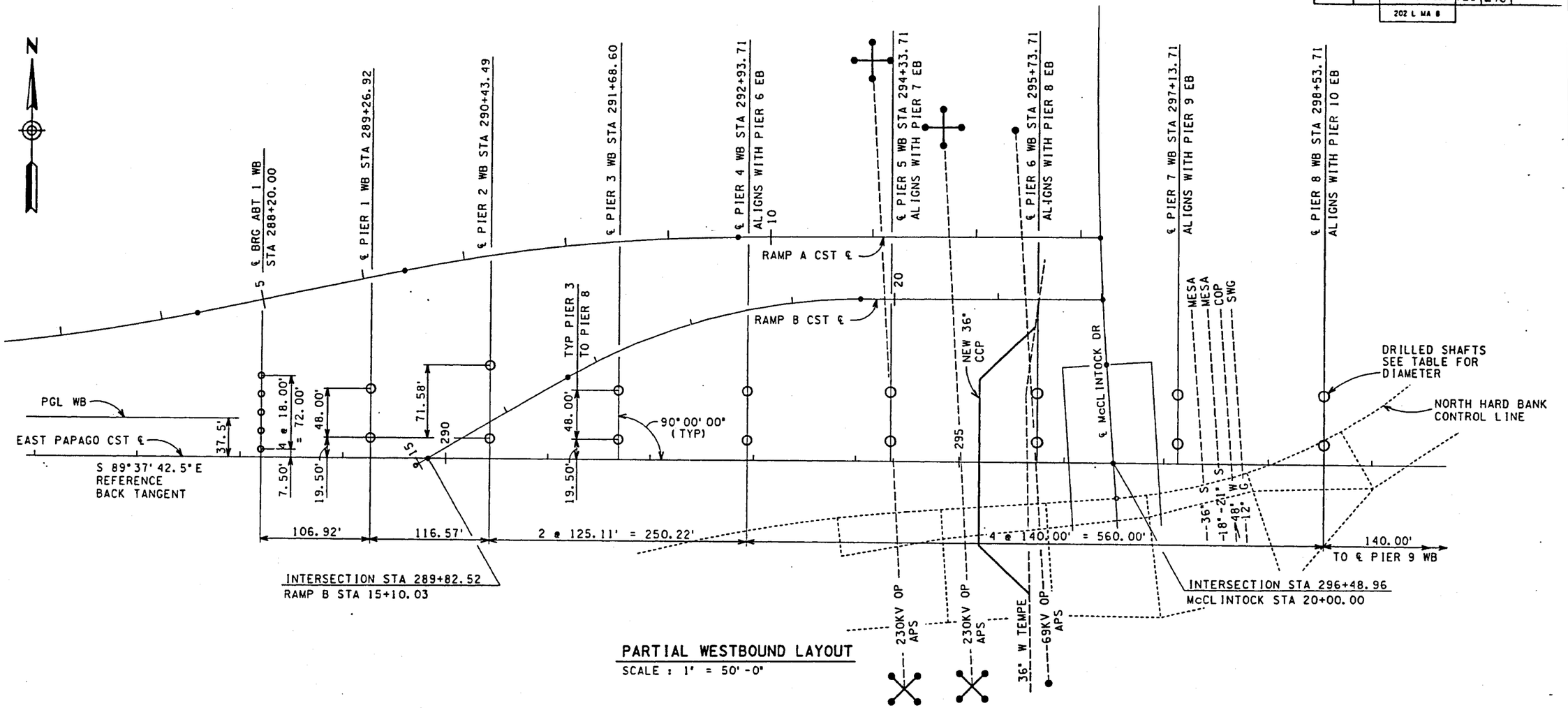

PARTIAL WESTBOUND LAYOUT

SCALE : 1" = 50'-0"

DRILLED SHAFT ELEVATIONS (FT)		ABT 1 WB	PIER 1 WB	PIER 2 WB	PIER 3 WB	PIER 4 WB	PIER 5 WB	PIER 6 WB	PIER 7 WB	PIER 8 WB
			DRILLED SHAFTS - HOLLOW COLUMN ALTERNATE							
	TOP	1183.00	1168.00	1168.00	1168.00	1168.00	1155.00	1155.00	1155.50	1155.50
	TIP	1045.00	1032.00	1012.00	1029.00	1026.00	1028.00	1028.00	1023.00	1027.00
CAPACITY (KIPS)		1229	2500	3350	2650	2800	3000	3000	3100	2900
DIAMETER		6'-0"	9'-0"				10'-0"			

DRILLED SHAFT ELEVATIONS (FT)		ABT 1 WB	PIER 1 WB	PIER 2 WB	PIER 3 WB	PIER 4 WB	PIER 5 WB	PIER 6 WB	PIER 7 WB	PIER 8 WB
			DRILLED SHAFTS - SOLID COLUMN ALTERNATE							
	TOP	1183.00	1163.00	1163.00	1163.00	1163.00	1161.00	1159.00	1151.00	1160.00
	TIP	1040.00	1018.00	1018.00	1017.00	1017.00	1024.00	1024.00	1019.00	1019.00
CAPACITY (KIPS)		1365	3100	3100	3100	3100	3200	3200	3100	3100
DIAMETER		6'-0"	9'-0"				10'-0"			

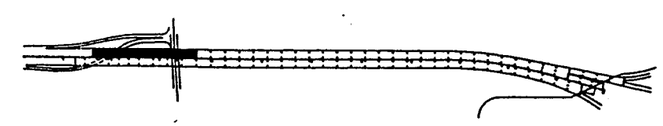

KEY PLAN

MARK	DESCRIPTION OF REVISIONS	MARK BY	DATE
2	VE #1	DNH	6/17/93
1	VE #1	DNH	7/1/93
0	CHANGE ORDER NO.	DNH	9/17/93

		DATE
DESIGN	DNH	6/93
DRAWN	CW	7/90
CHECKED	CLM	6/93

TY·LIN INTERNATIONAL
Civil and Structural Engineers

ARIZONA DEPARTMENT OF TRANSPORTATION
HIGHWAYS DIVISION
STRUCTURES SECTION

STA. 286 +
SALT RIVER BRIDGE EB & WB
DRILLED SHAFT LAYOUT 1

202	8.17	2268/2269
ROUTE	MILEPOST	STRUCTURE NO.

LOCATION
McCLINTOCK DRIVE - SR 101L

DWG NO. C

TRACS NO. H2151 01C

F.H.W.A. REGION	STATE	PROJECT NO.	SHEET NO.	TOTAL SHEETS	AS BUILT
9	ARIZ	RAM 600-5-508	127	296	
		202 L MA 8			

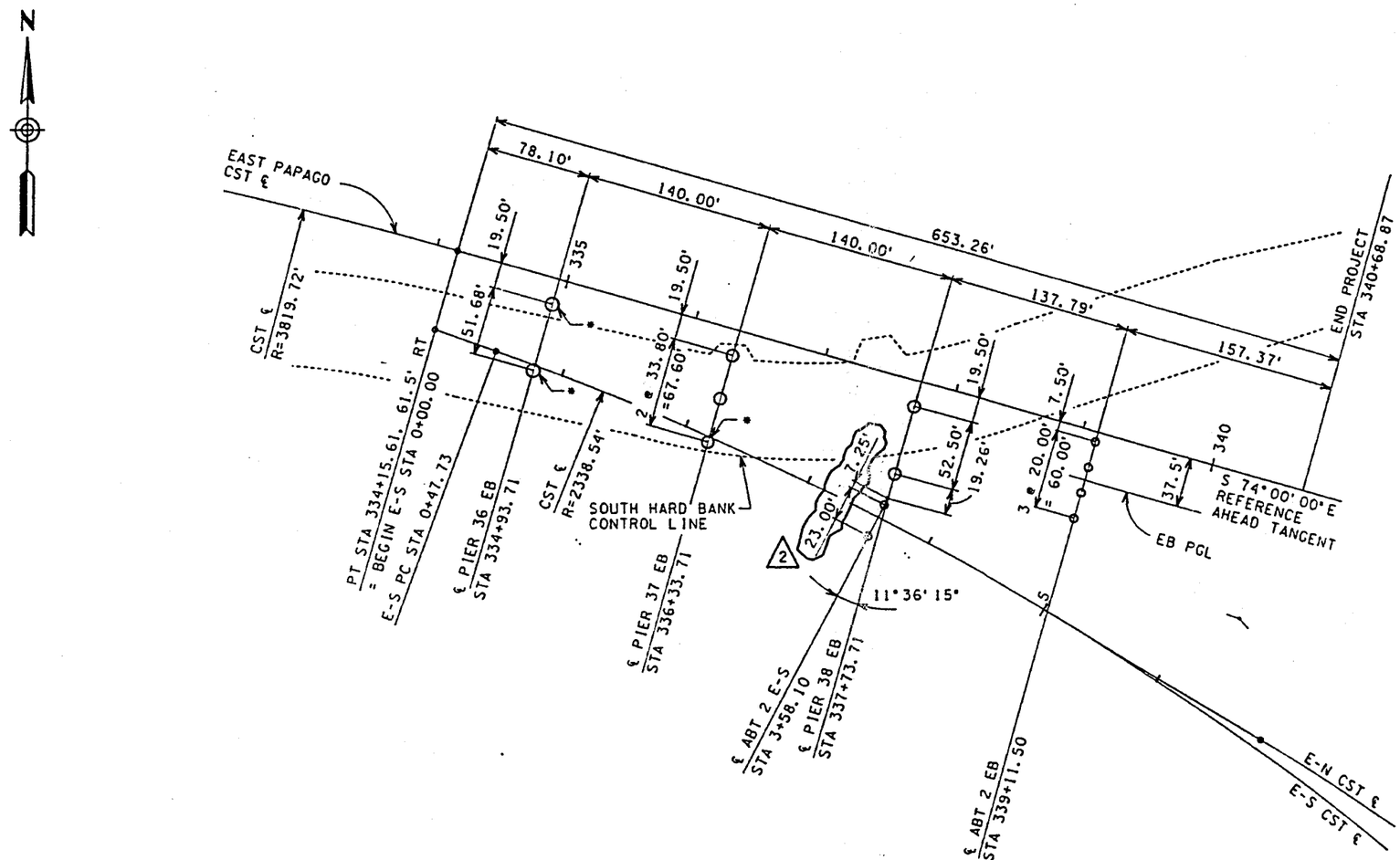

PARTIAL EASTBOUND LAYOUT

SCALE : 1" = 50'-0"

• INDICATES DRILLED SHAFTS WITH ELECTRICAL GROUND WIRE. SEE S-2.141 FOR DETAILS.

1 3

DRILLED SHAFTS - HOLLOW COLUMN ALTERNATE		PIER 36 EB	PIER 37 EB	PIER 38 EB	ABT 2 E-S	ABT 2 EB
DRILLED SHAFT ELEVATIONS (FT)	TOP	1134.00	1134.00	1149.00	1177.00	1180.00
	TIP	1018.00	1026.00	1022.00	1045.00	1045.00
CAPACITY (KIPS)		3400	2700	3000	1228	1228
DIAMETER		10'-0"	9'-0"		6'-0"	

DRILLED SHAFTS - SOLID COLUMN ALTERNATE		PIER 36 EB	PIER 37 EB	PIER 38 EB	ABT 2 E-S	ABT 2 EB
DRILLED SHAFT ELEVATIONS (FT)	TOP	1119.00	1121.00	1149.00	1178.00	1180.50
	TIP	1003.00	985.00	1006.00	1030.00	1030.00
CAPACITY (KIPS)		3700	3800	3400	1310	1310
DIAMETER		10'-0"	9'-0"		6'-0"	

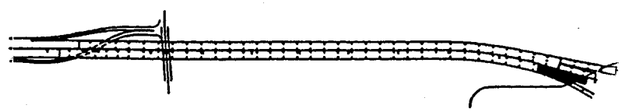

KEY PLAN

		DATE
DESIGN	DNH	5/93
DRAWN	CW	7/90
CHECKED	CLM	6/93

ARIZONA DEPARTMENT OF TRANSPORTATION
HIGHWAYS DIVISION
STRUCTURES SECTION

FLUOR INTERNATIONAL
Civil and Structural Engineers

STA. 286 +
SALT RIVER BRIDGE EB & WB
DRILLED SHAFT LAYOUT 8

202 ROUTE	8.17 MILEPOST	2268/2269 STRUCTURE NO.	LOCATION McCLINTOCK DRIVE - SR 101L

DWG NO.

TRACS NO. H2151 01C

NO.	DESCRIPTION OF REVISIONS	DRAWN BY	DATE
1	VE #1	DNH	11/93
2	VE #2	DNH	11/93
3	VE #3	DNH	11/93
4	VE #4	DNH	11/93

F.H.W.A. REGION	STATE	PROJECT NO.	SHEET NO.	TOTAL SHEETS	AS BUILTS
9	ARIZ	RAM 600-5-508	121	296	
		202 L MA 8			

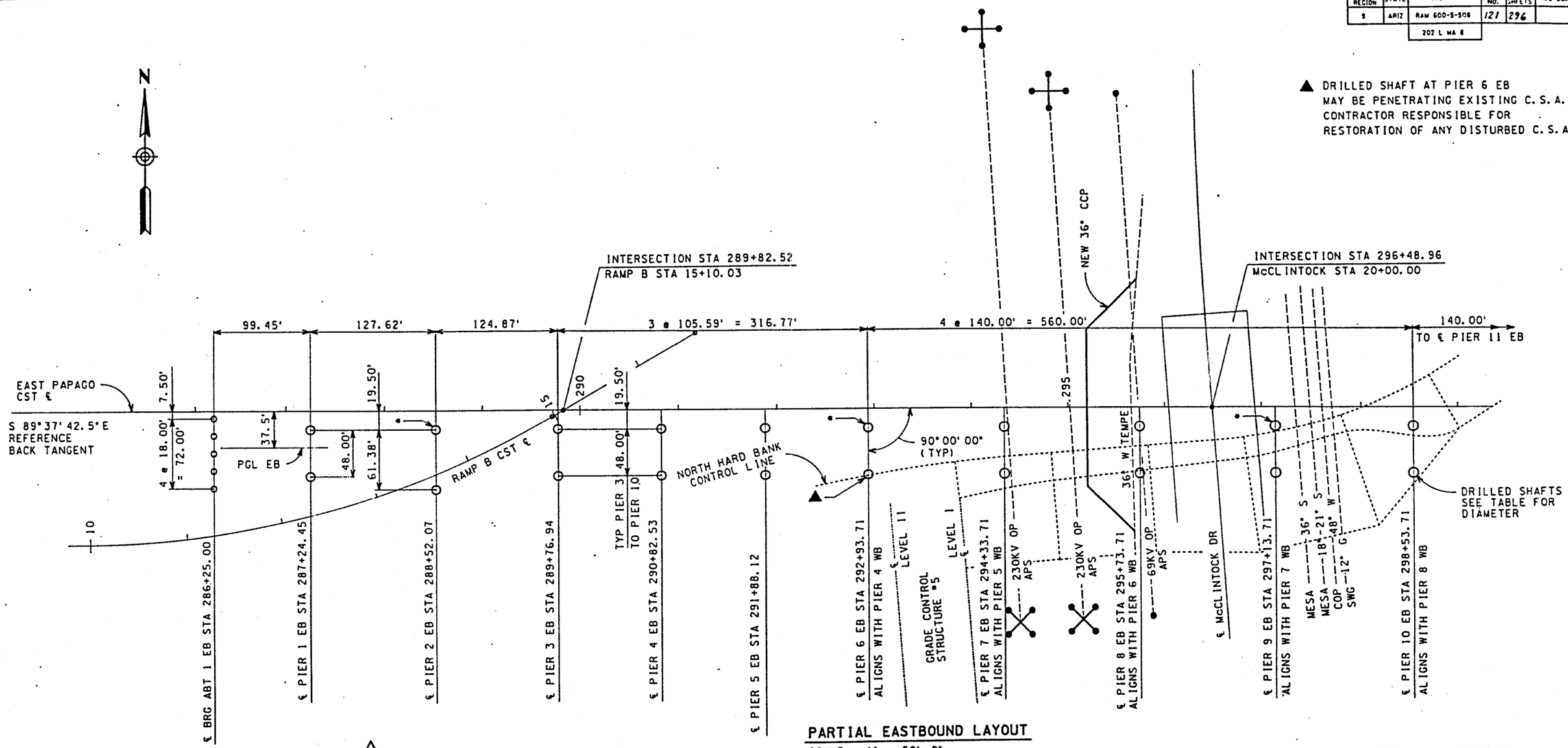

PARTIAL EASTBOUND LAYOUT

SCALE : 1" = 50'-0"

* INDICATES DRILLED SHAFTS WITH ELECTRICAL GROUND WIRE. SEE S-2.141 FOR DETAILS.

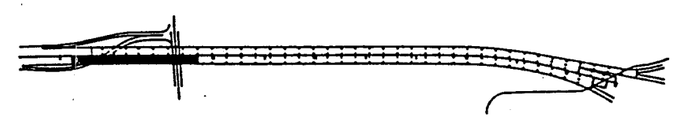

KEY PLAN

		DRILLED SHAFTS - HOLLOW COLUMN ALTERNATE										
		ABT 1 EB	PIER 1 EB	PIER 2 EB	PIER 3 EB	PIER 4 EB	PIER 5 EB	PIER 6 EB	PIER 7 EB	PIER 8 EB	PIER 9 EB	PIER 10 EB
DRILLED SHAFT ELEVATIONS (FT)	TOP	1181.00	1168.00	1168.00	1168.00	1168.00 LT 1164.00 RT	1168.00 LT 1156.00 RT	1162.00 LT 1145.00 RT	1155.00 LT 1145.00 RT	1155.00 LT 1145.00 RT	1146.00	1146.00
	TIP	1045.00	1032.00	1017.00	1032.00	1036.00	1035.00	1030.00	1028.00	1028.00	1023.00	1027.00
CAPACITY (KIPS)		1229	2500	3150	2500	2350	2400	2600	3000	3000	3300	2900
DIAMETER		6'-0"	9'-0"						10'-0"			

		DRILLED SHAFTS - SOLID COLUMN ALTERNATE										
		ABT 1 EB	PIER 1 EB	PIER 2 EB	PIER 3 EB	PIER 4 EB	PIER 5 EB	PIER 6 EB	PIER 7 EB	PIER 8 EB	PIER 9 EB	PIER 10 EB
DRILLED SHAFT ELEVATIONS (FT)	TOP	1181.00	1159.00	1160.00	1165.00	1166.00	1158.00	1154.00	1148.00	1146.00	1146.00	1146.00
	TIP	1040.00	1018.00	1018.00	1018.00	1032.00	1017.00	1017.00	1025.00	1025.00	1020.00	1020.00
CAPACITY (KIPS)		1365	3100	3100	3100	2800	3100	3100	3200	3200	3300	3300
DIAMETER		6'-0"	9'-0"						10'-0"			

		DATE
DESIGN	DHH	6/93
DRAWN	CW	7/90
CHECKED	CLM	6/93

T·Y·LIN INTERNATIONAL
Civil and Structural Engineers

ARIZONA DEPARTMENT OF TRANSPORTATION
HIGHWAYS DIVISION
STRUCTURES SECTION

STA. 286 +
SALT RIVER BRIDGE EB & WB
DRILLED SHAFT LAYOUT 2

ROUTE	MILEPOST	STRUCTURE NO.	LOCATION
202	8.17	2268/2269	McCLINTOCK DRIVE - SR 101L

DWG NO. S-2.41

TRACS NO. H2151 01C

OF

TO ACCOMPANY CHANGE ORDER NO. 1

F.H.W.A. REGION	STATE	PROJECT NO.	SHEET NO.	TOTAL SHEETS	AS BUILTS
9	ARIZ	RAM 600-5-508 202 L MA 8	122	296	

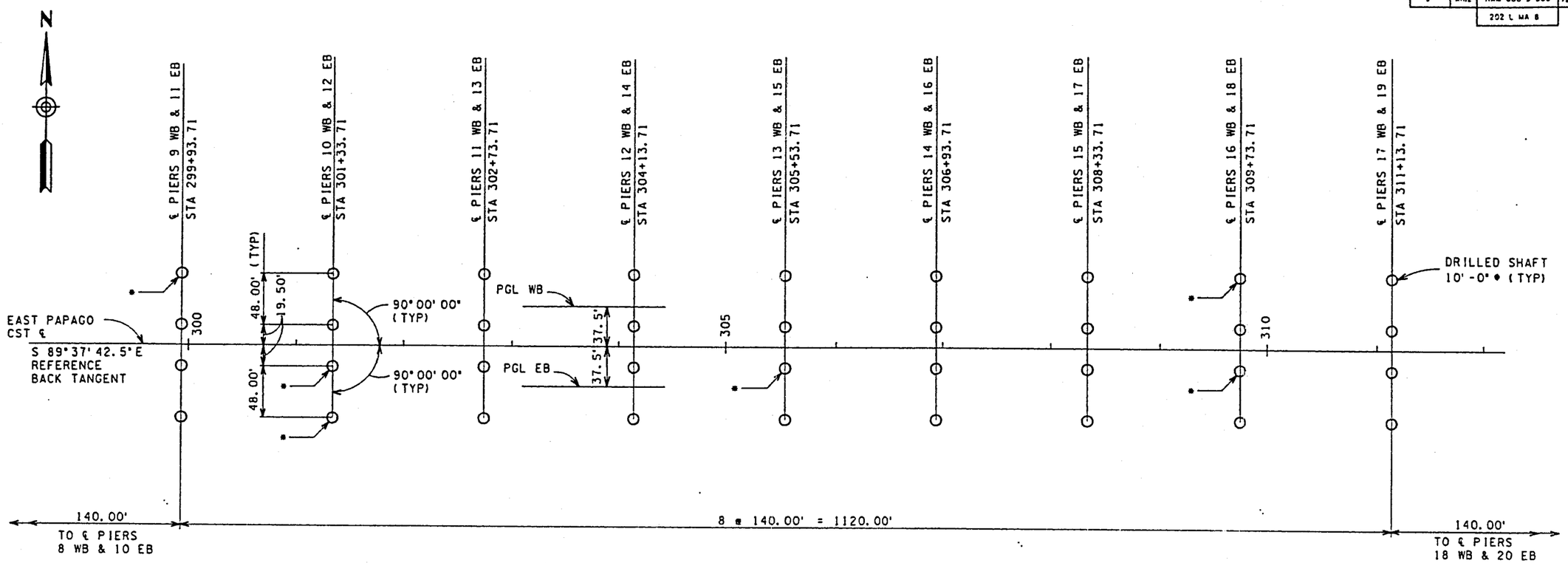

PARTIAL WESTBOUND AND EASTBOUND LAYOUT

SCALE : 1" = 50'-0"

1 2 3

		DRILLED SHAFTS - HOLLOW COLUMN ALTERNATE								
DRILLED SHAFT ELEVATIONS (FT)	PIER	9 WB	10 WB	11 WB	12 WB	13 WB	14 WB	15 WB	16 WB	17 WB
	TOP	1147.00	1147.00	1137.00	1137.00	1140.00	1140.00	1143.00	1143.00	1134.00
	TIP	1025.00	1028.00	1025.00	1025.00	1025.00	1025.00	1025.00	1021.00	1025.00
CAPACITY (KIPS)	WB	3000	2850	2850	2850	2850	2850	2850	3000	2850
DRILLED SHAFT ELEVATIONS (FT)	PIER	11 EB	12 EB	13 EB	14 EB	15 EB	16 EB	17 EB	18 EB	19 EB
	TOP	1147.00	1147.00	1137.00	1137.00	1140.00	1140.00	1143.00	1143.00	1134.00
	TIP	1027.00	1025.00	1025.00	1025.00	1025.00	1025.00	1025.00	1025.00	1025.00
CAPACITY (KIPS)	EB	2900	3000	2850	2850	2850	2850	2850	2850	2850

		DRILLED SHAFTS - SOLID COLUMN ALTERNATE								
DRILLED SHAFT ELEVATIONS (FT)	PIER	9 WB	10 WB	11 WB	12 WB	13 WB	14 WB	15 WB	16 WB	17 WB
	TOP	1146.00	1146.00	1137.00	1139.00	1142.00	1143.00	1143.00	1145.00	1123.00
	TIP	1019.00	1019.00	1017.00	1017.00	1017.00	1017.00	1017.00	1017.00	1011.00
CAPACITY (KIPS)	WB	3000	3000	3200	3200	3200	3200	3200	3200	3300
DRILLED SHAFT ELEVATIONS (FT)	PIER	11 EB	12 EB	13 EB	14 EB	15 EB	16 EB	17 EB	18 EB	19 EB
	TOP	1151.00	1149.00	1137.00	1138.00	1139.00	1141.00	1143.00	1144.00	1127.00
	TIP	1020.00	1020.00	1017.00	1017.00	1017.00	1017.00	1017.00	1017.00	1011.00
CAPACITY (KIPS)	EB	3000	3000	3200	3200	3200	3200	3200	3200	3300

♦ INDICATES DRILLED SHAFTS WITH ELECTRICAL GROUND WIRE. SEE S-2.141 FOR DETAILS.

KEY PLAN

NO.	DESCRIPTION OF REVISIONS	DATE	BY
1		8/18/93	MHO
2		8/18/93	MHO
3		8/18/93	MHO
4		8/18/93	DNH

		DATE
DESIGN	DNH	6/93
DRAWN	CW	7/90
CHECKED	CLM	6/93

T·Y·LIN INTERNATIONAL
Civil and Structural Engineers

ARIZONA DEPARTMENT OF TRANSPORTATION
HIGHWAYS DIVISION
STRUCTURES SECTION

STA 286 +
SALT RIVER BRIDGE EB & WB .
DRILLED SHAFT LAYOUT 3

202	8.17	2268/2269
ROUTE	MILEPOST	STRUCTURE NO.

LOCATION
McCLINTOCK DRIVE - SR 101L

DWG NO. S-2.42

TRACS NO. H2151 01C

— OF —

F.H.W.A. REGION	STATE	PROJECT NO.	SHEET NO.	TOTAL SHEETS	AS BUILT
9	ARIZ	RAM 600-5-508	183	296	
		202 L MA 8			

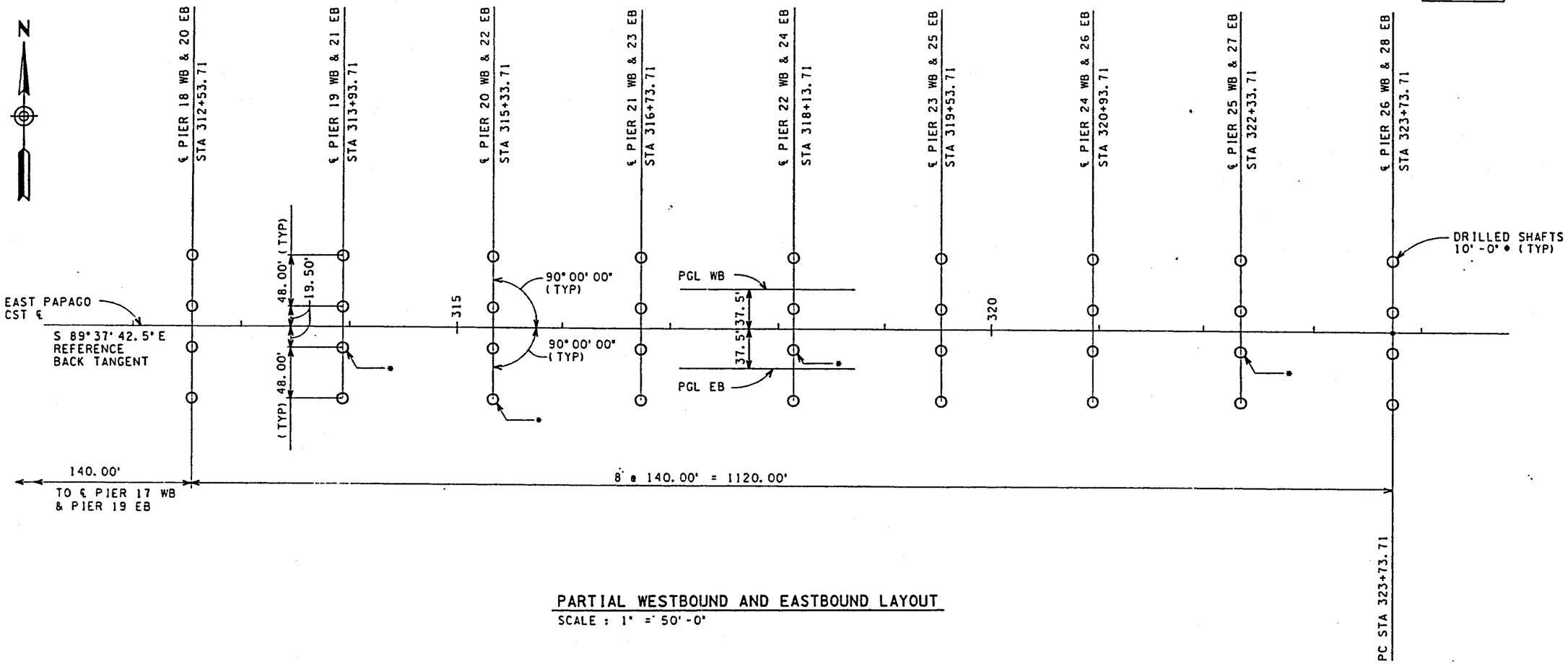

PARTIAL WESTBOUND AND EASTBOUND LAYOUT

SCALE : 1" = 50'-0"

△1 △2

DRILLED SHAFTS - HOLLOW COLUMN ALTERNATE										
DRILLED SHAFT ELEVATIONS (FT)	PIER	18 WB	19 WB	20 WB	21 WB	22 WB	23 WB	24 WB	25 WB	26 WB
	TOP	1134.00	1134.00	1134.00	1134.00	1134.00	1136.00	1136.00	1138.00	1138.00
	TIP	1025.00	1025.00	1025.00	1025.00	1025.00	1027.00	1027.00	1027.00	1027.00
CAPACITY (KIPS)	WB	2850	2850	2850	2850	2850	2777	2777	2777	2800
DRILLED SHAFT ELEVATIONS (FT)	PIER	20 EB	21 EB	22 EB	23 EB	24 EB	25 EB	26 EB	27 EB	28 EB
	TOP	1134.00	1134.00	1134.00	1134.00	1134.00	1136.00	1136.00	1138.00	1138.00
	TIP	1025.00	1025.00	1021.00	1025.00	1025.00	1027.00	1027.00	1027.00	1027.00
CAPACITY (KIPS)	EB	2850	2850	3000	2850	2850	2777	2777	2777	2800

DRILLED SHAFTS - SOLID COLUMN ALTERNATE										
DRILLED SHAFT ELEVATIONS (FT)	PIER	18 WB	19 WB	20 WB	21 WB	22 WB	23 WB	24 WB	25 WB	26 WB
	TOP	1123.00	1123.00	1124.00	1119.00	1121.00	1137.00	1137.00	1138.00	1130.00
	TIP	1010.00	1012.00	1012.00	1012.00	1012.00	1019.00	1019.00	1019.00	1014.00
CAPACITY (KIPS)	WB	3300	3300	3300	3300	3300	3200	3200	3200	3600
DRILLED SHAFT ELEVATIONS (FT)	PIER	20 EB	21 EB	22 EB	23 EB	24 EB	25 EB	26 EB	27 EB	28 EB
	TOP	1125.00	1114.00	1118.00	1120.00	1130.00	1138.00	1136.00	1146.00	1138.00
	TIP	1009.00	997.00	1005.00	1006.00	1006.00	1016.00	1016.00	1016.00	1016.00
CAPACITY (KIPS)	EB	3300	3700	3500	3500	3500	3600	3600	3600	3600

* INDICATES DRILLED SHAFTS WITH ELECTRICAL GROUND WIRE. SEE S-2.141 FOR DETAILS.

KEY PLAN

		DATE
DESIGN	DNH	6/93
DRAWN	CW	7/90
CHECKED	CLM	6/93

T·Y·LIN INTERNATIONAL
Civil and Structural Engineers

ARIZONA DEPARTMENT OF TRANSPORTATION
HIGHWAYS DIVISION
STRUCTURES SECTION

STA. 286 +
SALT RIVER BRIDGE EB & WB
DRILLED SHAFT LAYOUT 4

202 ROUTE	8.17 MILEPOST	2268/2269 STRUCTURE NO.	LOCATION McCLINTOCK DRIVE - SR 101L

DWG NO. S-2

TRACS NO. H2151 01C

01

F.H.W.A. REGION	STATE	PROJECT NO.	SHEET NO.	TOTAL SHEETS	AS BUILTS
9	ARIZ	RAM 600-5-508	124	296	
		202 L MA 8			

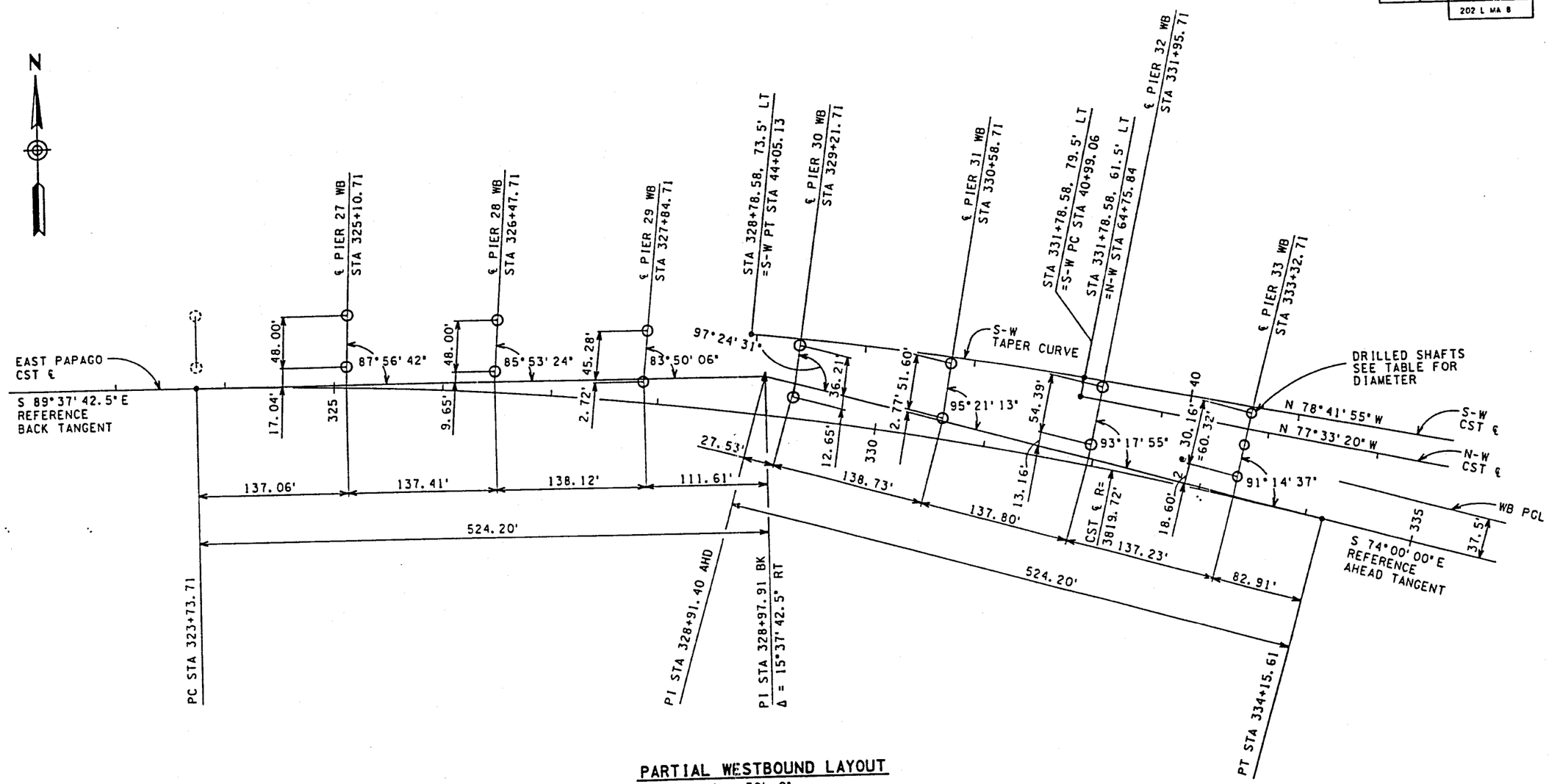

PARTIAL WESTBOUND LAYOUT

SCALE : 1" = 50'-0"

1 2

		DRILLED SHAFTS - HOLLOW COLUMN ALTERNATE						
DRILLED SHAFT ELEVATIONS (FT)	PIER	27 WB	28 WB	29 WB	30 WB	31 WB	32 WB	33 WB
	TOP	1136.00	1136.00	1134.00	1134.00	1134.00	1134.00	1134.00
	TIP	1027.00	1027.00	1027.00	1016.00	1015.00	1015.00	1022.00
CAPACITY (KIPS)		2800	2800	2800	3300	3350	3350	2700
DIAMETER		10'-0"						9'-0"

		DRILLED SHAFTS - SOLID COLUMN ALTERNATE						
DRILLED SHAFT ELEVATIONS (FT)	PIER	27 WB	28 WB	29 WB	30 WB	31 WB	32 WB	33 WB
	TOP	1142.00	1135.00	1125.00	1126.00	1135.00	1135.00	1135.00
	TIP	1019.00	1019.00	1007.00	1010.00	1014.00	1014.00	1002.00
CAPACITY (KIPS)		3200	3200	3700	3700	3600	3600	3600
DIAMETER		10'-0"						9'-0"

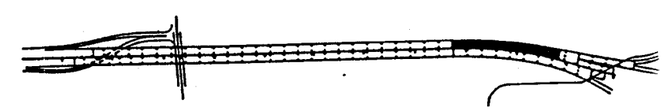

KEY PLAN

		DATE
DESIGN	DNH	6/93
DRAWN	CW	7/90
CHECKED	CLM	6/93

T-LIN INTERNATIONAL
Civil and Structural Engineers

ARIZONA DEPARTMENT OF TRANSPORTATION
HIGHWAYS DIVISION
STRUCTURES SECTION

STA. 286 +
SALT RIVER BRIDGE EB & WB
DRILLED SHAFT LAYOUT 5

202 ROUTE	8.17 MILEPOST	2268/2269 STRUCTURE NO.	LOCATION McCLINTOCK DRIVE - SR 101L

DWG NO. S-7

TRACS NO. H2151 01C

MARK	BY	DATE
	DNH	4/27/93
	DNH	1/7/03

DESCRIPTION OF REVISIONS

TO ACCOMPANY CHANGE ORDER NO. 1

F.H.W.A. REGION	STATE	PROJECT NO.	SHEET NO.	TOTAL SHEETS	AC PLATES
9	ARIZ	RAM 600-5-508	125	296	
		202 L MA 6			

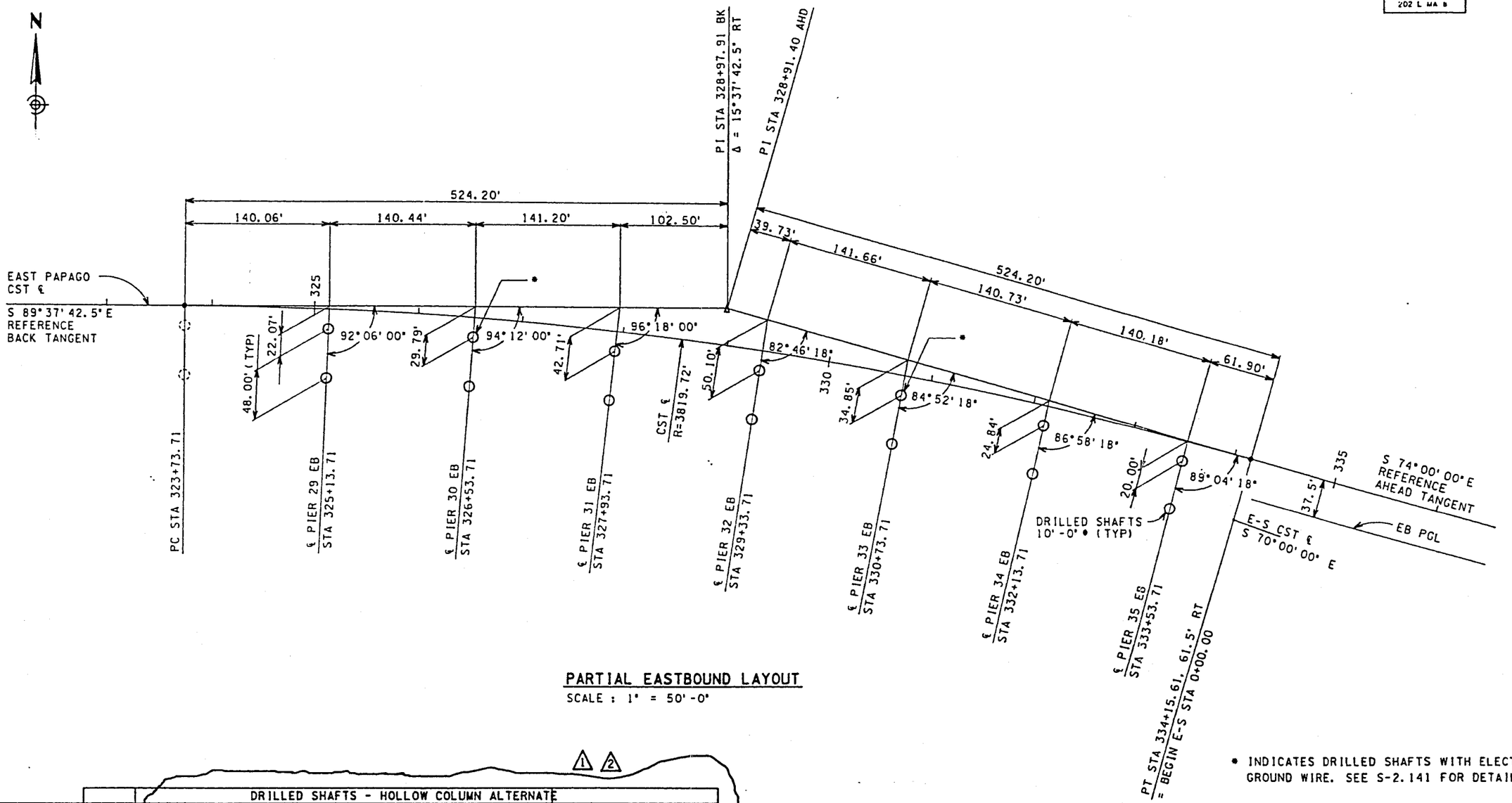

PARTIAL EASTBOUND LAYOUT

SCALE : 1" = 50'-0"

* INDICATES DRILLED SHAFTS WITH ELECTRICAL GROUND WIRE. SEE S-2.141 FOR DETAILS.

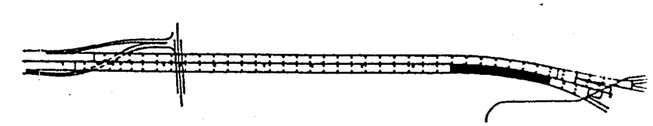

KEY PLAN

1 2

	PIER	29 EB	30 EB	31 EB	32 EB	33 EB	34 EB	35 EB
DRILLED SHAFT ELEVATIONS (FT)	TOP	1136.00	1136.00	1134.00	1134.00	1134.00	1134.00	1134.00
	TIP	1027.00	1027.00	1027.00	1027.00	1027.00	1027.00	1022.00
CAPACITY (KIPS)		2800	2800	2800	2800	2800	2800	3050

DRILLED SHAFTS - HOLLOW COLUMN ALTERNATE

	PIER	29 EB	30 EB	31 EB	32 EB	33 EB	34 EB	35 EB
DRILLED SHAFT ELEVATIONS (FT)	TOP	1136.00	1129.00	1132.00	1136.00	1137.00	1135.00	1135.00
	TIP	1012.00	1014.00	1011.00	1011.00	1011.00	1011.00	1011.00
CAPACITY (KIPS)		3600	3600	3600	3600	3600	3600	3600

DRILLED SHAFTS - SOLID COLUMN ALTERNATE

		DATE
DESIGN	DNH	6/93
DRAWN	CW	7/90
CHECKED	CLM	6/93

T·Y·LIN INTERNATIONAL
Civil and Structural Engineers

ARIZONA DEPARTMENT OF TRANSPORTATION
HIGHWAYS DIVISION
STRUCTURES SECTION

STA. 286 +
SALT RIVER BRIDGE EB & WB
DRILLED SHAFT LAYOUT 6

ROUTE	MILEPOST	STRUCTURE NO.	LOCATION
202	8.17	2268/2269	McCLINTOCK DRIVE - SR 101L

DWG NO. S-2

TRACS NO. H2151 01C

OF

NO.	DATE	DESCRIPTION OF REVISIONS	MADE BY	CHECKED BY
1	6/93		DNH	DNH
2	7/93		DNH	DNH

TO ACCOMPANY CHANGE ORDER NO. 1

F.H.W.A. REGION	STATE	PROJECT NO.	SHEET NO.	TOTAL SHEETS	AS BUILTS
9	ARIZ	RAM 600-5 SCB 202 L MA 8	126	296	

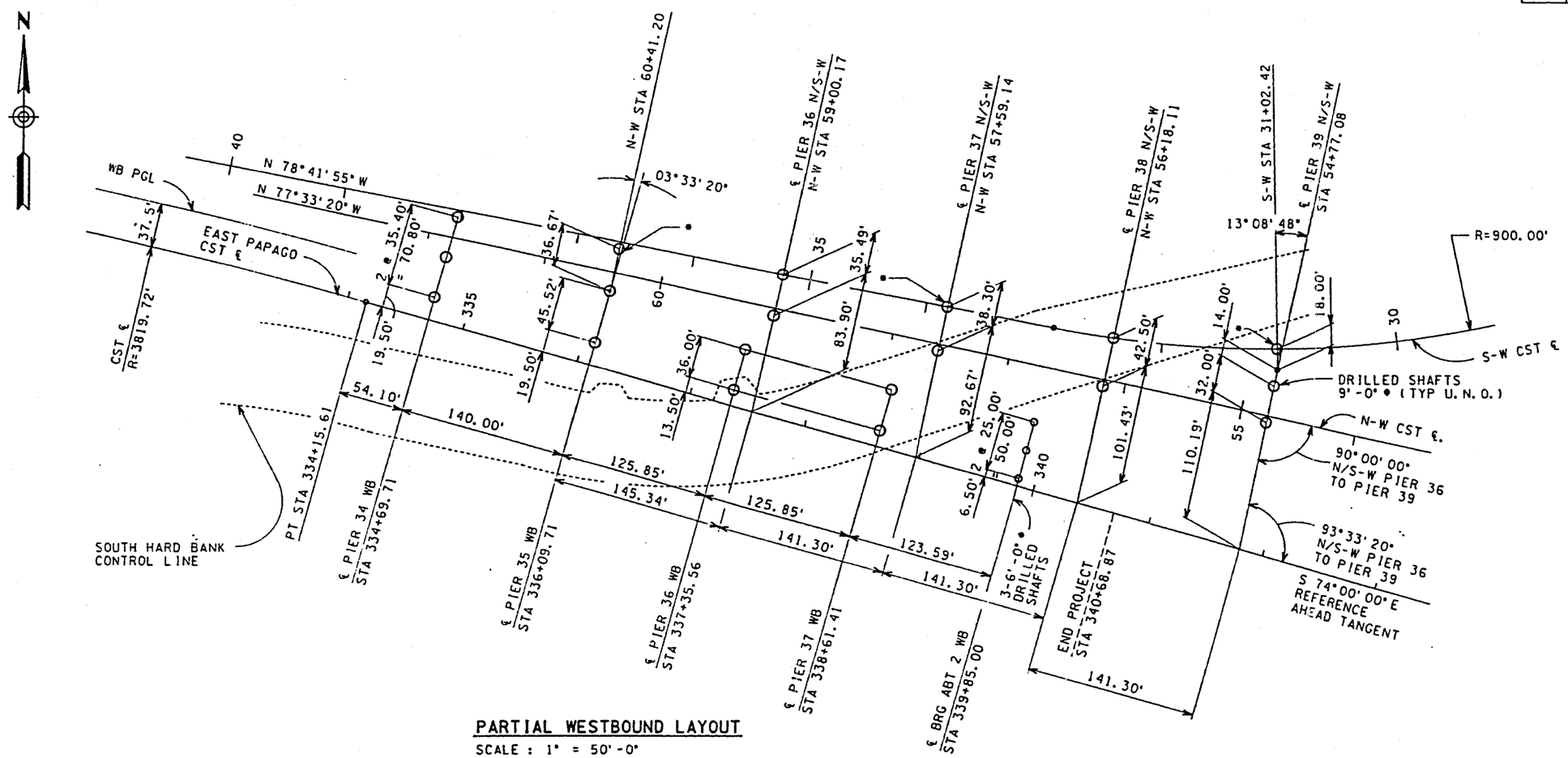

PARTIAL WESTBOUND LAYOUT

SCALE : 1" = 50'-0"

1 2

DRILLED SHAFTS - HOLLOW COLUMN ALTERNATE								
		PIER 34 WB	PIER 35 WB	PIER 36 WB	PIER 37 WB			ABT 2 WB
DRILLED SHAFT ELEVATIONS (FT)	TOP	1134.00	1134.00	1142.00	1149.00	—	—	1179.00
	TIP	1026.00	1026.00	1031.00	1033.00	—	—	1040.00
CAPACITY (KIPS)	WB	2700	2700	2500	2500	—	—	1380
				PIER 36 N/S-W	PIER 37 N/S-W	PIER 38 N/S-W	PIER 39 N/S-W	
DRILLED SHAFT ELEVATIONS (FT)	TOP	—	—	1149.00	1149.00	1149.00	1168.00	
	TIP	—	—	1031.00	1026.00	1027.00	1022.00	
CAPACITY (KIPS)	N/S-W	—	—	2500	2700	2700	3000	

DRILLED SHAFTS - SOLID COLUMN ALTERNATE								
		PIER 34 WB	PIER 35 WB	PIER 36 WB	PIER 37 WB			ABT 2 WB
DRILLED SHAFT ELEVATIONS (FT)	TOP	1119.00	1121.00	1142.00	1149.00	—	—	1180.00
	TIP	985.00	988.00	1007.00	1005.00	—	—	1030.00
CAPACITY (KIPS)	WB	3800	3800	3100	3200	—	—	1310
				PIER 36 N/S-W	PIER 37 N/S-W	PIER 38 N/S-W	PIER 39 N/S-W	
DRILLED SHAFT ELEVATIONS (FT)	TOP	—	—	1149.00	1149.00	1149.00	1168.00	
	TIP	—	—	1007.00	1005.00	1005.00	1005.00	
CAPACITY (KIPS)	N/S-W	—	—	3100	3200	3200	3200	

● INDICATES DRILLED SHAFTS WITH ELECTRICAL GROUND WIRE. SEE S-2.141 FOR DETAILS.

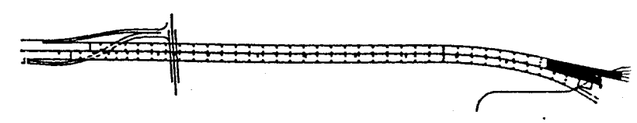

KEY PLAN

		DATE
DESIGN	DNH	5/93
DRAWN	CW	7/90
CHECKED	CLM	6/93

TYLIN INTERNATIONAL
Civil and Structural Engineers

ARIZONA DEPARTMENT OF TRANSPORTATION
HIGHWAYS DIVISION
STRUCTURES SECTION

STA. 286 +
SALT RIVER BRIDGE EB & WB
DRILLED SHAFT LAYOUT 7

ROUTE	MILEPOST	STRUCTURE NO.	LOCATION
202	8.17	2268/2269	McCLINTOCK DRIVE - SR 101L

DWG NO. S

TRACS NO. H2151 01C

MARK	DESCRIPTION OF REVISIONS	MADE BY	DATE
1	VE #1	DNH	7/16/93
2	VE #1	DNH	11/16/93

MT-2 FORM 7, ITEM 3

Design Plans
Red Mountain Traffic Interchange

Note: As-built plans not yet available

F.H.W.A. REGION	STATE	PROJECT NO.	SHEET NO.	TOTAL SHEETS	AS BUILT
9	ARIZ				

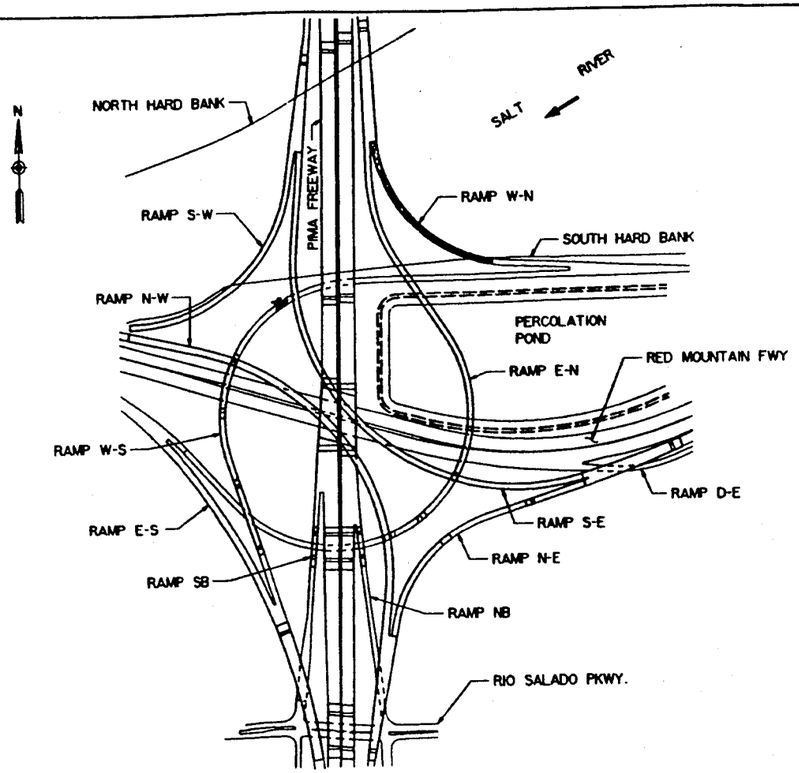

LOCATION PLAN

INDEX OF DRAWINGS

S-8.1			LOCATION PLAN, INDEX, QUANTITIES & NOTES
S-8.2			GENERAL PLAN
S-8.3,		S-8.4	PLAN AND SECTIONS
S-8.5	TO	S-8.7	FOUNDATION DATA
S-8.8,		S-8.9	FOUNDATION PLAN
S-8.10			FOUNDATION DETAILS
S-8.11,		S-8.12	ABUTMENT
S-8.13	TO	S-8.18	PIERS
S-8.19			ARCHITECTURAL DETAILS
S-8.20,		S-8.21	FRAMING PLAN
S-8.22	TO	S-8.27	DIAPHRAGMS
S-8.28,		S-8.29	TYPICAL SECTIONS
S-8.30,		S-8.31	P/T BOX DETAILS
S-8.32,		S-8.33	GIRDER DETAILS
S-8.34			DECK REINFORCEMENT & PLACING SEQUENCE
S-8.35			MISCELLANEOUS DETAILS
S-8.36,		S-8.37	EXPANSION JOINT DETAILS
S-8.38			LIGHTING SUPPORT
S-8.39,		S-8.40	DECK DRAIN DETAILS
S-8.41			SLOPE PAVING & CONCRETE SLAB

LEGEND:

A / 1.7 — Letter Denoting Section or Detail; Dwg. No. Where Section or Detail Shown or Referred. S-series Unless Otherwise Noted. "-" if Shown on Same Sheet

DRAWINGS ARE NOT TO BE SCALED

GENERAL NOTES

Construction Specifications - Arizona Department of Transportation Standard Specifications for Road and Bridge Construction, 1990.

Design Specification - AASHTO Standard Specifications for Highway Bridges, 1989 with 1990 and 1991 Interim Specifications.

AASHTO Standard Specifications for Seismic Design of Highway Bridges, Supplement A, 1991 Interim Specifications.

Dead Load - Dead load includes allowance of 25 lbs per square foot for future wearing surface.

Loading Class - HS20-44 or Alternate Military loading with no reduction in load intensity for superstructure for multiple lane loadings.

Seismic Performance category A with vertical restrainers designed for 10 percent of dead load.

All concrete shall be class "S" unless otherwise noted.

Reinforcing steel shall conform to ASTM Specification A615, except reinforcing bars which are to be welded shall conform to A706. Bar sizes #6 and smaller shall be designed as Grade 40 but may be furnished as Grade 40 or Grade 60. Bar sizes #7 and larger shall be designed and furnished as Grade 60.

All bend dimensions for reinforcing steel shall be out to out of bars. All placement dimensions for reinforcing steel shall be to center of bars unless otherwise noted. Use Standard hooks unless otherwise noted.

Concrete clear cover shown for reinforcing steel is in accordance with AASHTO criteria, unless otherwise noted. Where clear cover is not shown use 2".

Stresses:

Concrete Superstructure
- P/T Box Girder except Barriers ..... f'c = 4,500 psi
- AASHTO Girder except Barriers & Girders f'c = 4,500 psi
  - (Deck fc = 1,400 psi)
- Abutments, Piers & Drilled Shafts ..... f'c = 3,500 psi
- AASHTO Girders ..... f'c = See Dwg. No. S-8.32
- All other Class "S" Concrete ..... f'c = 3,000 psi

Steel
- Grade 40 reinforcing steel ..... fs = 20,000 psi
- Grade 60 reinforcing steel ..... fs = 24,000 psi
- Prestressing steel ..... f's = 270,000 psi
- All deck steel ..... fs = 20,000 psi

Barriers shall not be slip formed.

Chamfer all exposed corners 3/4" as per Std. B-19.10 unless otherwise noted.

Inventory Rating (Working Stress Method) HS20.1.

Operating Rating (Working Stress Method) HS30.5.

A.D.O.T. Structures Standards, 1988 Edition B-18.10, B-19.10, B-19.11, B19.12, B-19.20, B-19.30, B-19.40, B-21.18, and B-24.20.

APPROXIMATE QUANTITIES

ITEM	STRUCTURAL EXCAVATION	STRUCTURE BACKFILL	CLASS "S" CONCRETE f'c=3,000psi	CLASS "S" CONCRETE f'c=3,500psi	CLASS "S" CONCRETE f'c=4,500psi	REINFORCING STEEL	PRESTRESSING CIP CONCRETE	AASHTO TYPE VI GIRDERS	DECK JOINT ASSEMBLY	DECK DRAIN ASSEMBLY	DRILLED SHAFTS 60" DIA. NO.	DRILLED SHAFTS 60" DIA. L.F.	DRILLED SHAFTS 120" DIA. NO.	DRILLED SHAFTS 120" DIA. L.F.	VERTICAL RESTRAINERS	SLOPE PAVING
	C.Y.	C.Y.	C.Y.	C.Y.	C.Y.	LBS.	LUMP SUM	EA.	L.F.	L.S.					EA.	S.Y.
Abutment #1	60	460		58.5		7255			28		2	194				46
Pier #1	20			101.0		20185							1	114	8	
Pier #2	20			114.1		22860							1	105		
Pier #3	20			116.5		23195							1	105		
Pier #4	20			117.9		23360							1	105	8	
Pier #5	20			119.4		23625							1	105		
Pier #6	20			120.0		23695							1	105		
Superstructure					1196.6	309090	1	24	84*	1						
Bridge Barrier			176.8			16865										
Approach Slab			15.9			2500										
Anchor Slab			71.8			7410										
Concrete Slab	605		26.7			520										
Total	785	460	2912	747.4	1196.6	480560	1	24	112	1	2	194	6	639	16	46
As-Built Total																

* See Dwg. No. S-8.36 for Breakdown.

	NAME	DATE
DESIGN	B Yach	8-91
DRAWN	E Fatilis	8-91
CHECKED	A Wojtkiewicz	10-91

Parsons Brinckerhoff © 100 YEARS

ARIZONA DEPARTMENT OF TRANSPORTATION
HIGHWAYS DIVISION
STRUCTURES SECTION

STA 21+
RAMP W-N
LOC. PLAN, INDEX, QTY. & NOTES

LOCATION: RED MOUNTAIN TRAFFIC INT.

ROUTE | MILEPOST | 2346 STRUCTURE NO.

NOT FOR CONSTRUCTION

DWG. NO. S-8.1

___ OF ___

ERIETTA 30.17.1 PS30 B10LP B10LP 30-JUL-'92-11.58.10 STRUC

F.H.W.A. REGION	STATE	PROJECT NO.	SHEET NO.	TOTAL SHEETS	AS BUILT
9	ARIZ				

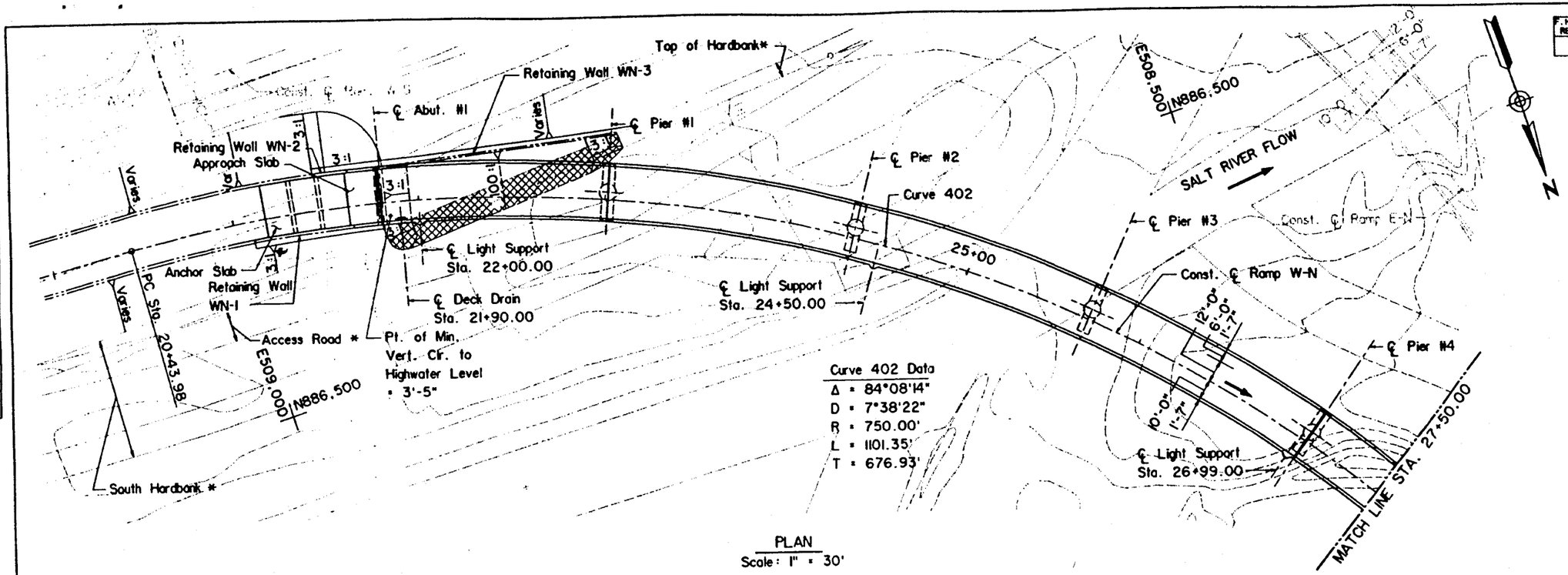

Curve 402 Data
Δ = 84°08'14"
D = 7°38'22"
R = 750.00'
L = 1101.35'
T = 676.93'

PLAN
Scale: 1" = 30'

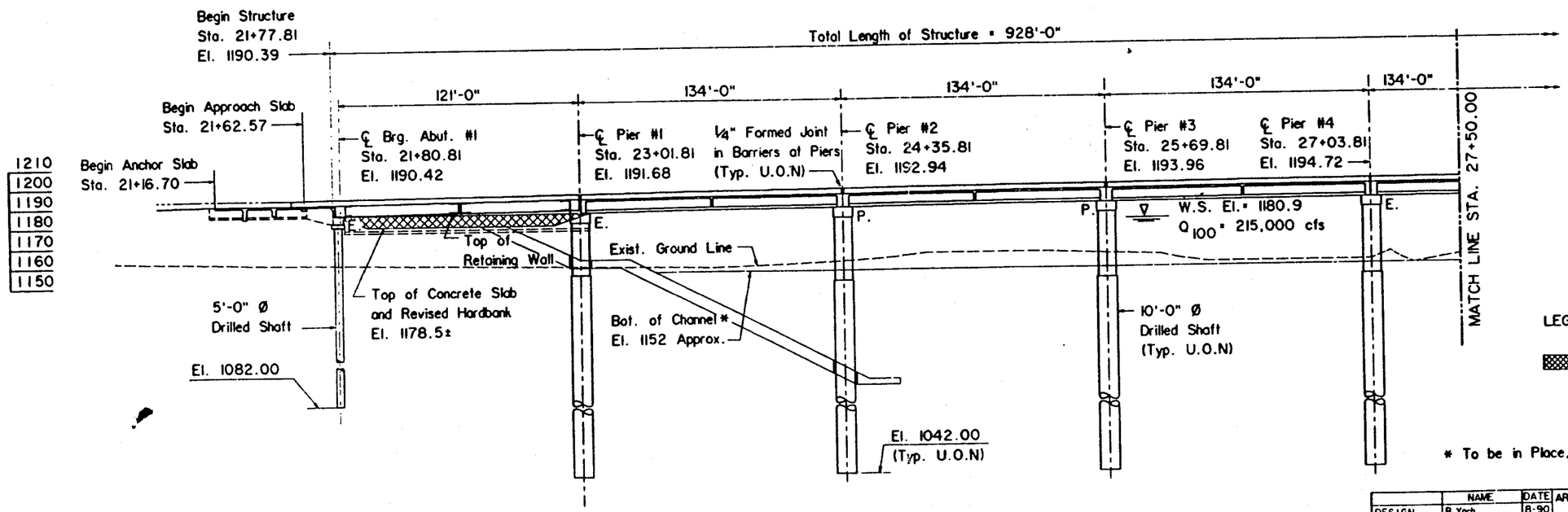

LONGITUDINAL SECTION ALONG CONST. ℄ RAMP W-N
Scale: 1" = 30'

LEGEND:

Portion of Hardbank to be Removed.

* To be in Place, by Others.

	NAME	DATE
DESIGN	B. Yach	8-90
DRAWN	E. Falifis	8-90
CHECKED	A S W/D F G	10-91

Parsons Brinckerhoff ® 100 YEARS

ARIZONA DEPARTMENT OF TRANSPORTATION
HIGHWAYS DIVISION
STRUCTURES SECTION

STA 2+

RAMP W-N
PLAN AND SECTION

LOCATION: RED MOUNTAIN TRAFFIC INT.

ROUTE | MILEPOST | 2346 STRUCTURE NO.

NOT FOR CONSTRUCTION

DWG. NO. S-B 3

___OF___

ERIETTA 5017: PS30 8-8PSA 8-8PSA 30JUL92-12.11.20 STRUC

F.H.W.A. REGION	STATE	PROJECT NO.	SHEET NO.	TOTAL SHEETS	AS BUILT
9	ARIZ				

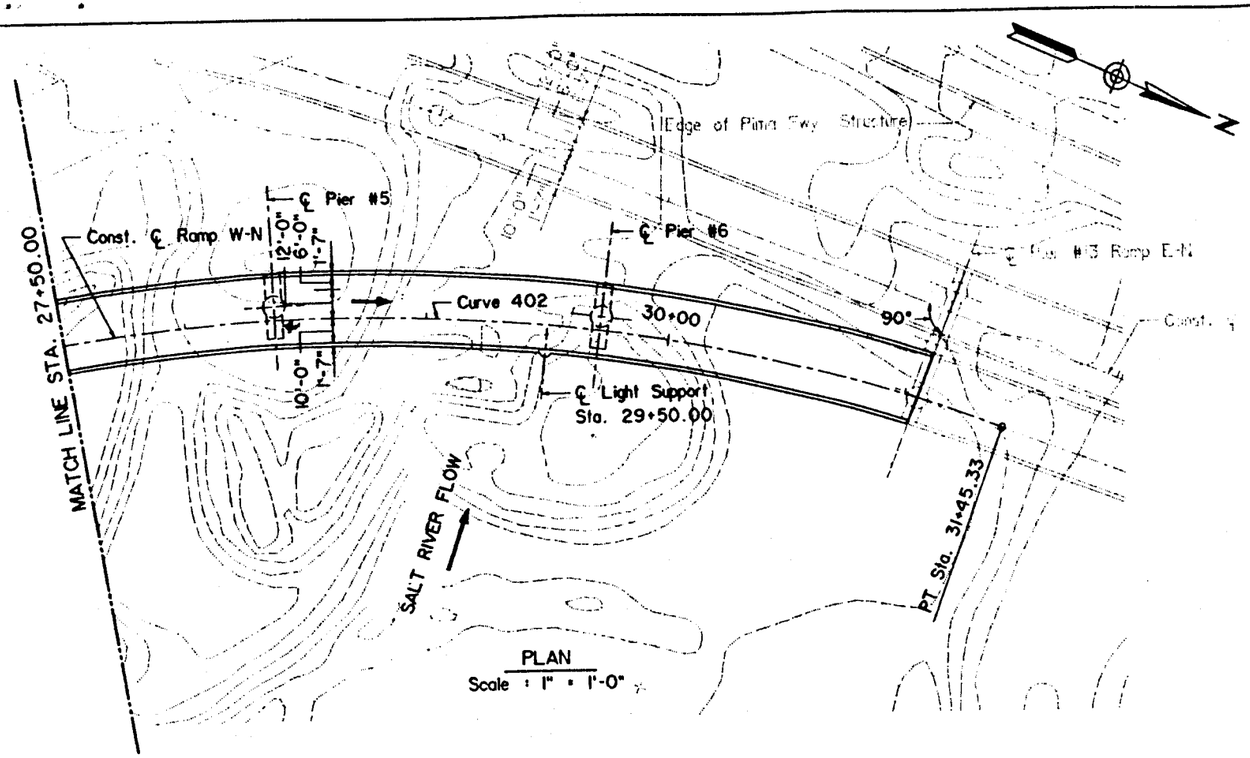

PLAN
Scale : 1" = 1'-0"

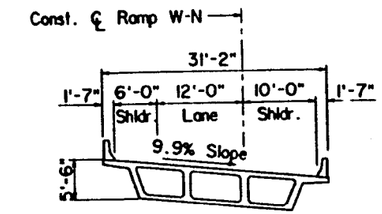

TYPICAL SECTION ABUT. #1 TO PIER #1
Scale : 1" = 10'

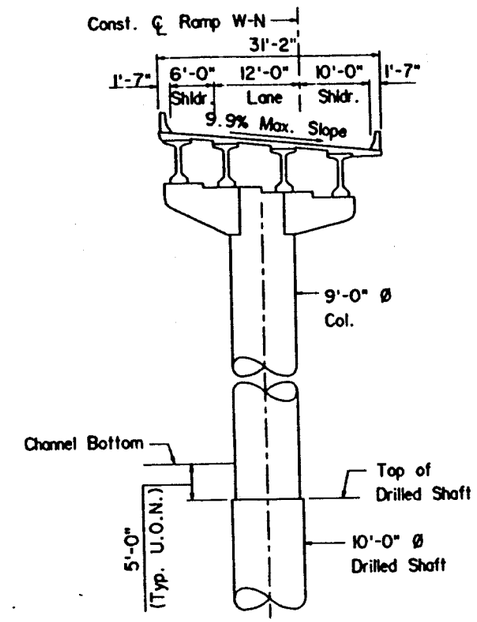

TYPICAL SECTION PIER #1 THRU PIER #6
Scale : 1" = 10'

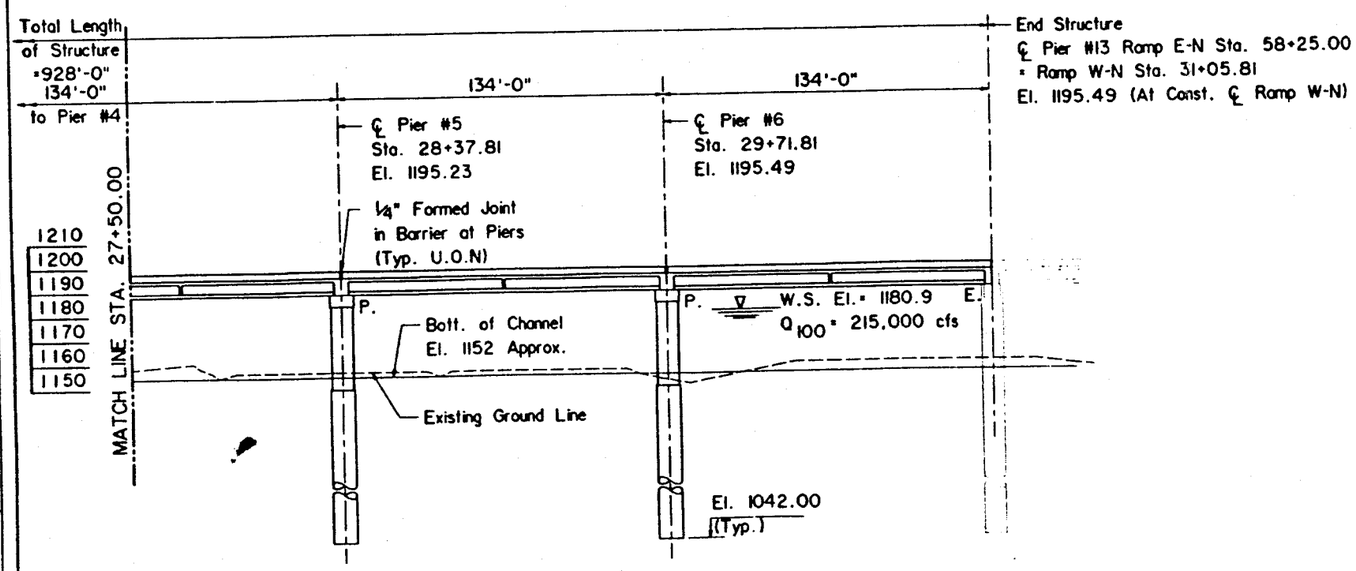

LONGITUDINAL SECTION ALONG CONST. ℄ RAMP W-N
Scale: 1" = 30'

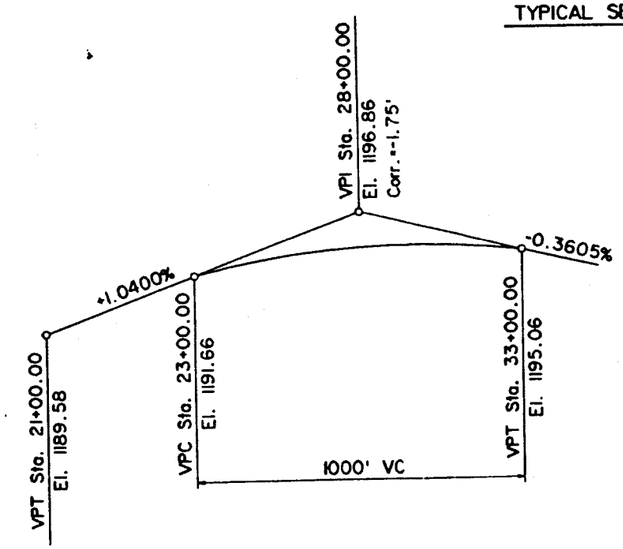

RAMP W-N CONST. ℄ AND PROFILE GRADE

	NAME	DATE
DESIGN	A. Seyedmadani	8-90
DRAWN	E. Fofrin	8-90
CHECKED	A.S. W/D.F.G	10-91

Parsons Brinckerhoff ® 100 YEARS

ARIZONA DEPARTMENT OF TRANSPORTATION
HIGHWAYS DIVISION
STRUCTURES SECTION

STA 21+
RAMP W-N
PLAN AND SECTIONS

LOCATION
RED MOUNTAIN TRAFFIC INT.

ROUTE | MILEPOST | 2346 STRUCTURE NO.

NOT FOR CONSTRUCTION

DWG. NO. S-8 4

___OF___

SURVEY NO. | F.H. SHED PLANS | REVISIONS | LOCATION | DATE

ERIETTA 30171 P530 B10P58 B10P58 90.A.Y92-12.13.00 STRUC

F.H.W.A. REGION	STATE	PROJECT NO.	SHEET NO.	TOTAL SHEETS	AS BUILT
9	ARIZ				

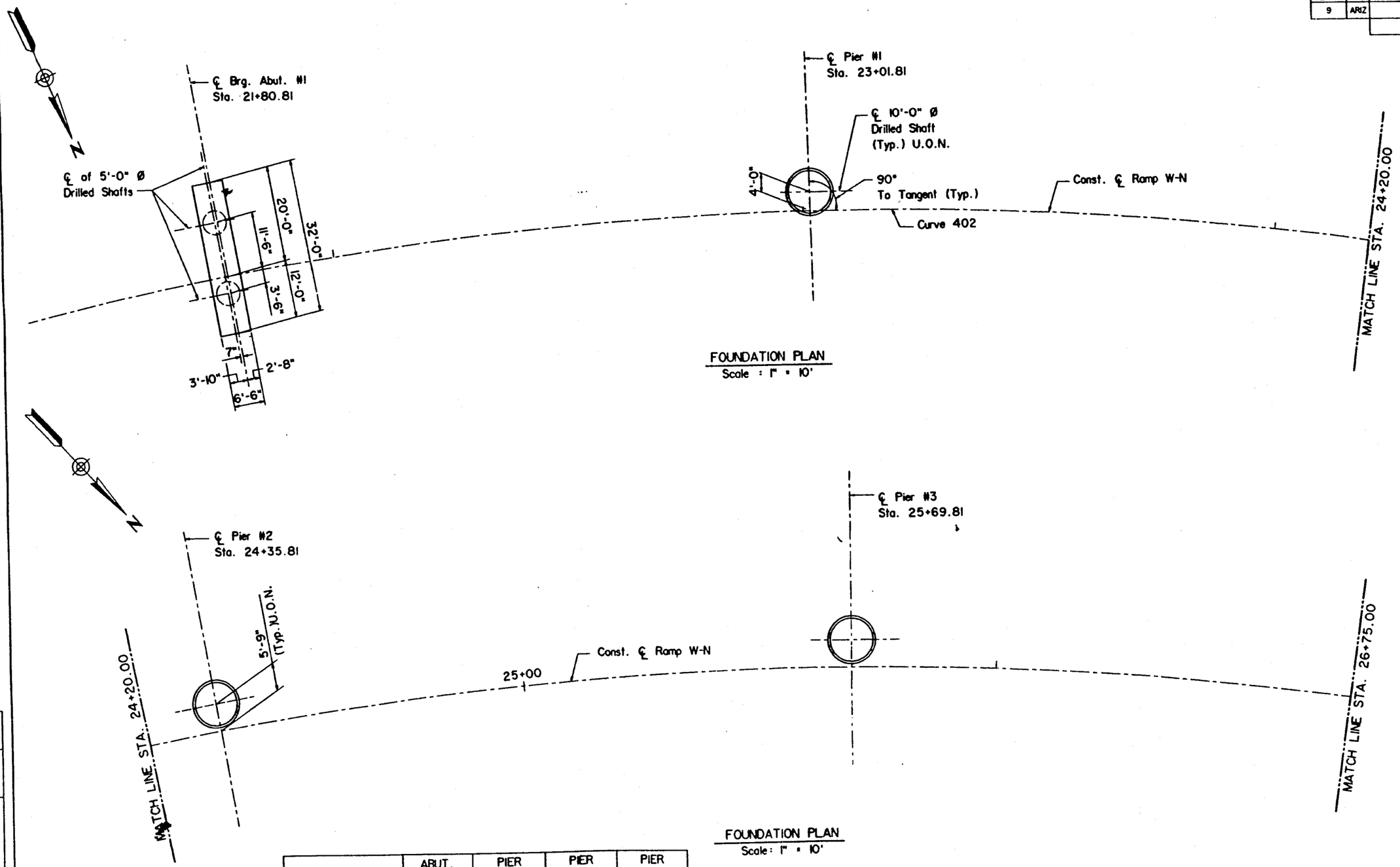

FOUNDATION PLAN
Scale : 1" = 10'

FOUNDATION PLAN
Scale: 1" = 10'

	ABUT. #1	PIER #1	PIER #2	PIER #3
TOP SHAFT EL.	1179.00	1156.00	1147.00	1147.00
BOTTOM SHAFT EL.	1082.00	1042.00	1042.00	1042.00
CAPACITY (Kips)	495.00	2340.00	2340.00	2340.00

	NAME	DATE
DESIGN	B. Yach	8-91
DRAWN	E. Fafitis	8-91
CHECKED	A. Seyedmadani	1-92

Parsons Brinckerhoff © 100 YEARS

ARIZONA DEPARTMENT OF TRANSPORTATION
HIGHWAYS DIVISION
STRUCTURES SECTION

STA 21+
RAMP W-N
FOUNDATION PLAN - SHEET 1

ROUTE | MILEPOST | 2346 STRUCTURE NO. | LOCATION RED MOUNTAIN TRAFFIC INT.

NOT FOR CONSTRUCTION

DWG. NO. S-8.8

___OF___

SURVEY NO. | FINISHED PLANS | REVISIONS | LOCATION | DATE

ERIETTA 3017: P320 B18FP1 B18FP1 30JUY92-11.44.30 STRUC

F.H.W.A. REGION	STATE	PROJECT NO.	SHEET NO.	TOTAL SHEETS	AS BUILT
9	ARIZ				

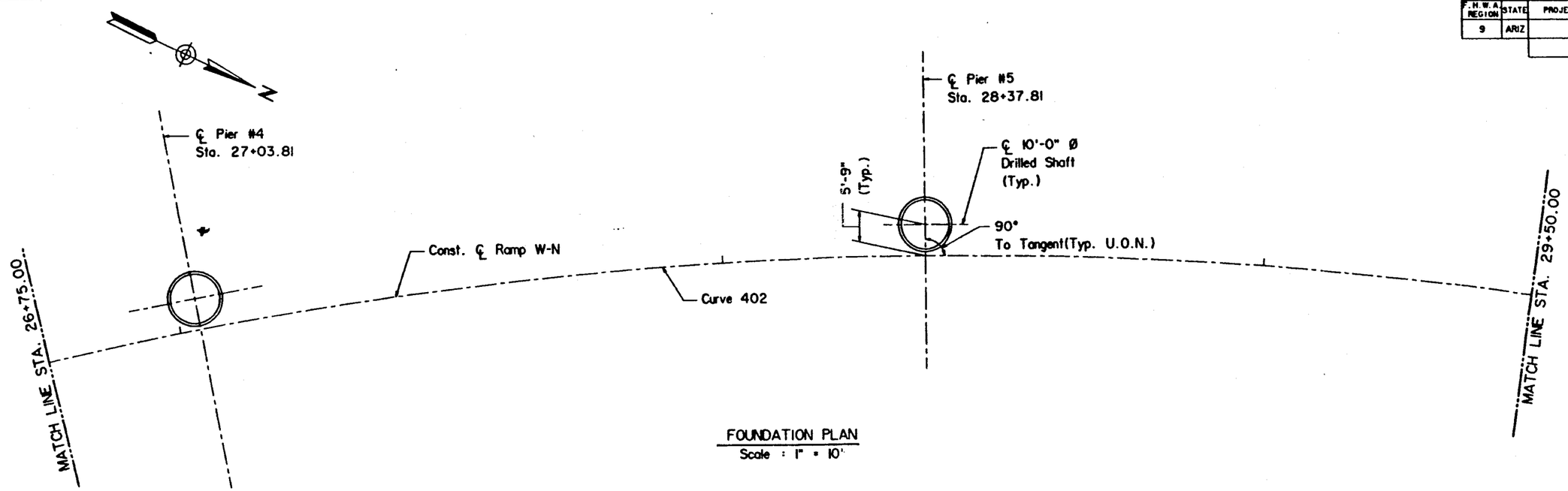

FOUNDATION PLAN
Scale : 1" = 10'

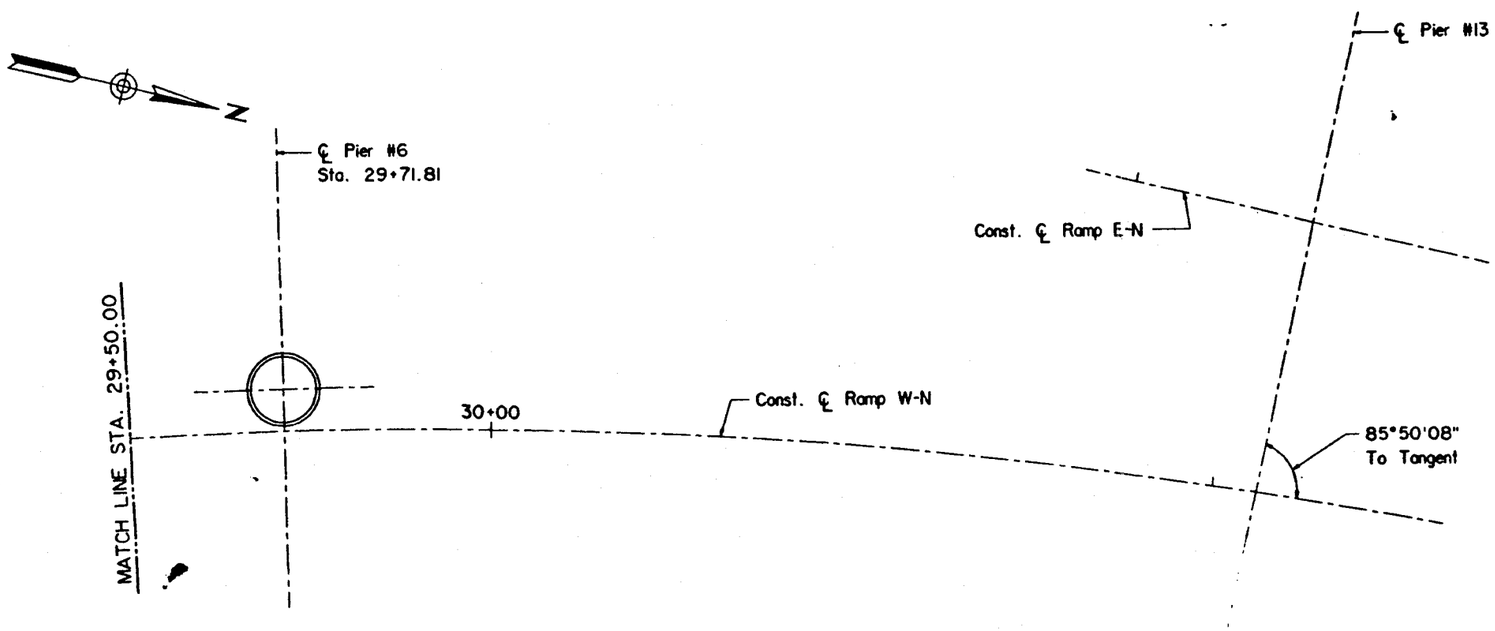

FOUNDATION PLAN
Scale : 1" = 10'

	PIER #4	PIER #5	PIER #6
TOP SHAFT EL.	1147.00	1147.00	1147.00
BOTTOM SHAFT EL.	1042.00	1042.00	1042.00
CAPACITY (Kips)	2340.00	2340.00	2340.00

	NAME	DATE
DESIGN	A. Wojakiewicz	8-91
DRAWN	E. Fafitis	8-91
CHECKED	B. Yach	1-92

Parsons Brinckerhoff ® 100 YEARS

ARIZONA DEPARTMENT OF TRANSPORTATION
HIGHWAYS DIVISION
STRUCTURES SECTION

STA. 21+
RAMP W-N
FOUNDATION PLAN - SHEET 2

NOT FOR CONSTRUCTION

ROUTE	MILEPOST	STRUCTURE NO.	LOCATION
		2346	RED MOUNTAIN TRAFFIC INT.

DWG. NO. S-8.9

___ OF ___

DATE	REV #	REVISION	DSGNR	DRWN	CHK	APPD

SURVEY NO.	FINISHED PLANS	REV'S	LOCATION	DATE

ERICTTA 30171 P330 B18FP2 B18FP2 30JLYB2-11,45,40 STRUC

F.H.W.A. REGION	STATE	PROJECT NO.	SHEET NO.	TOTAL SHEETS	AS BUILT
9	ARIZ				

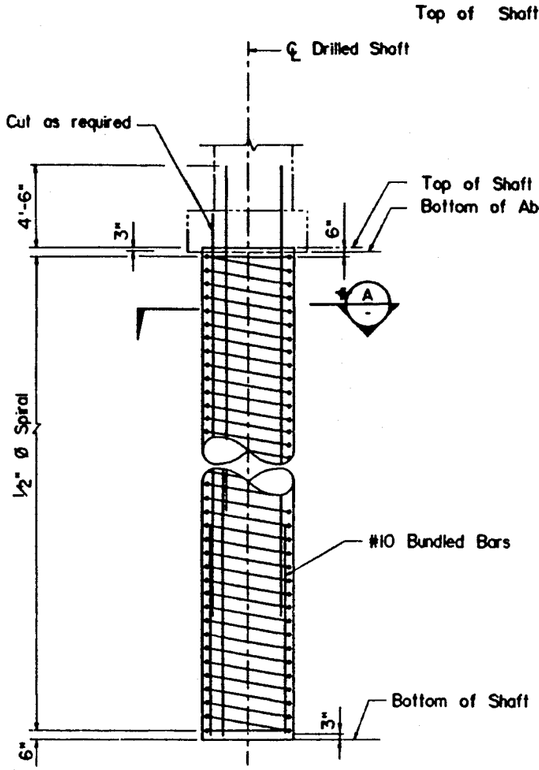

ABUT. #1 DRILLED SHAFT DETAIL
Scale: ½" = 1'-0"

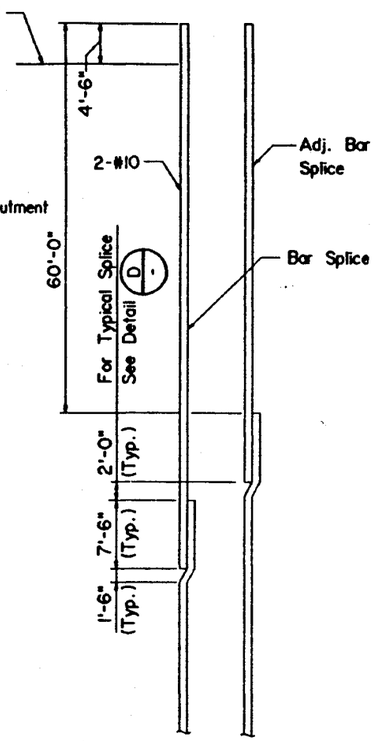

RESTRICTION ON SPLICE ABUT. #1
N.T.S.

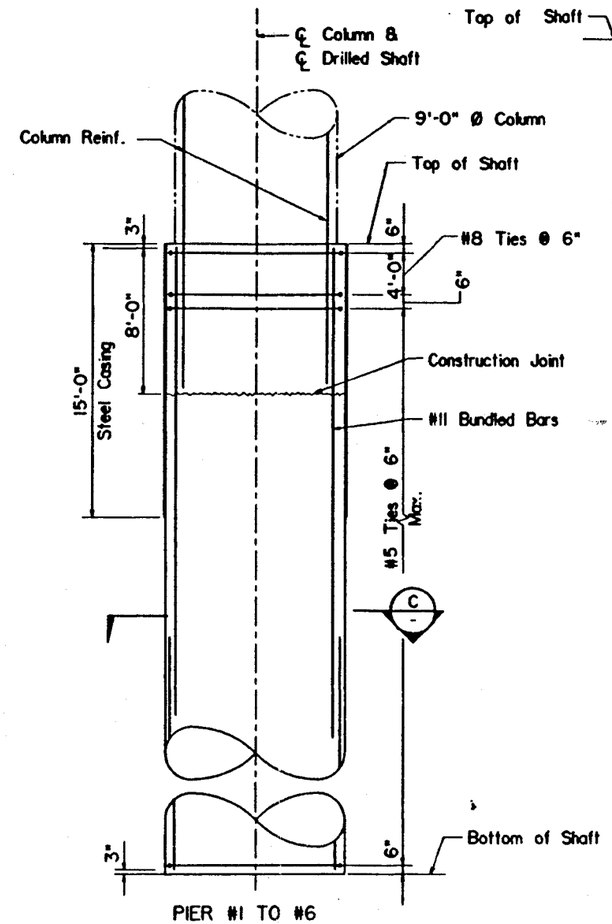

PIER #1 TO #6
DRILLED SHAFT DETAIL
Scale : ¼" = 1'-0"

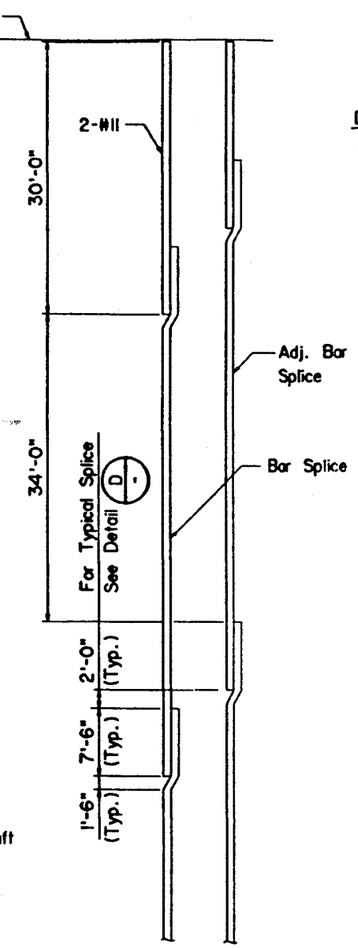

RESTRICTION ON SPLICE
PIER #1 TO #6
N.T.S.

DRILLED SHAFT NOTES:

1. Once concrete is poured in a drilled shaft no new drilling is permitted within 4 dia. measured center to center, until 48 hours after the concreting of the drilled shaft.
2. Tie laps shall be 1/4 turn min. long.
3. Drilled shaft top and bottom elevations are tabulated on the Foundation Plan drawings.
4. Steel pipes for testing shall be placed as shown from the bottom of reinforcing cage to 1'-0" above the top of the drilled shaft. Pipes shall have a cap at the bottom end and a threaded cap at the top end. Pipes shall be securely tied to the reinforcing cage.
5. For limits of Structural Excavation and Structure Backfill, see ADOT Std. Dwgs. No. B-19.30 and B-19.40.
6. See Specifications for Steel Casing.

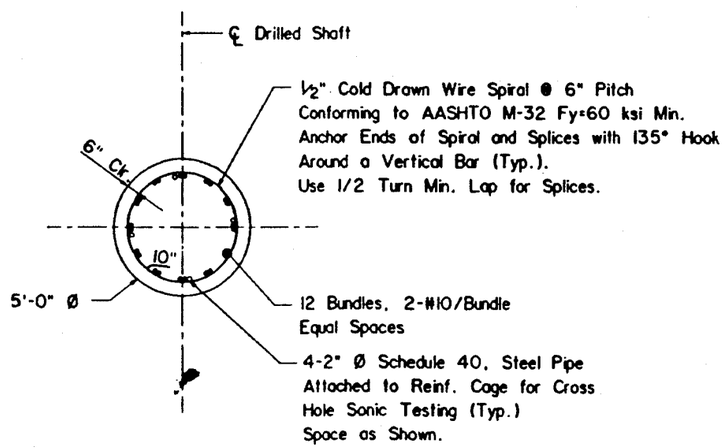

SECTION A
Scale: ⅜" = 1'-0"

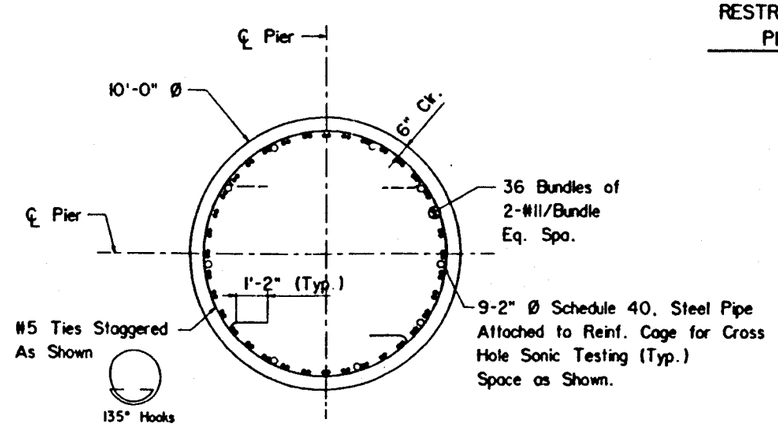

SECTION C
Scale: ⅜" = 1'-0"

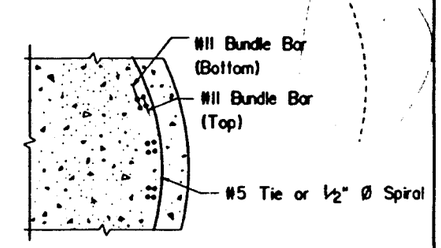

TYPICAL SPLICE DETAIL D
N.T.S.

	NAME	DATE
DESIGN	A Wojakiewicz	10-91
DRAWN	E Falitis	10-91
CHECKED	A Seyedmadani	1-92

Parsons Brinckerhoff ® 100 YEARS

ARIZONA DEPARTMENT OF TRANSPORTATION
HIGHWAYS DIVISION
STRUCTURES SECTION

STA 21+
RAMP W-N
FOUNDATION DETAILS

ROUTE	MILEPOST	STRUCTURE NO.
		2346

LOCATION
RED MOUNTAIN TRAFFIC INT.

NOT FOR CONSTRUCTION

DWG. NO. S-8.10

___OF___

R1ETTA 30172 P330 B18FNDE B18FNDE 30JUL1992-11.43.10 STRUC

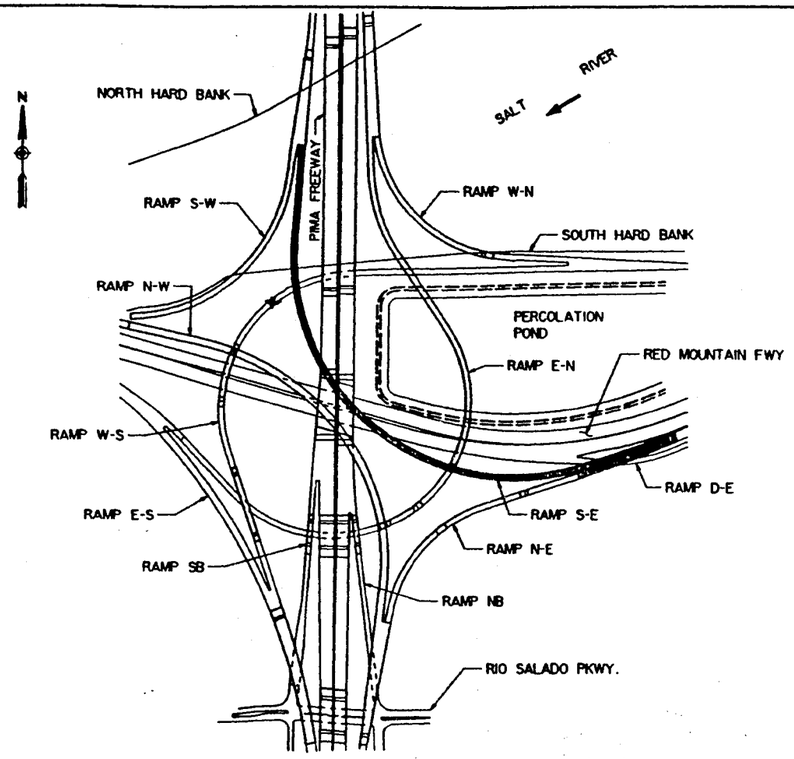

LOCATION PLAN

INDEX OF DRAWINGS

S-7.1			LOCATION PLAN, INDEX, QUANTITIES & NOTES
S-7.2			GENERAL PLAN
S-7.3	TO	S-7.6	PLAN & SECTION
S-7.7			TYPICAL SECTIONS & PROFILES
S-7.8	TO	S-7.15	FOUNDATION DATA
S-7.16	TO	S-7.24	FOUNDATION PLAN & DETAILS
S-7.25,		S-7.26	ABUTMENT
S-7.27	TO	S-7.42	PIERS
S-7.43			ARCHITECTURAL DETAILS
S-7.44	TO	S-7.51	FRAMING PLAN & DETAILS
S-7.52	TO	S-7.59	END DIAPHRAGMS
S-7.60	TO	S-7.63	TYPICAL SECTIONS
S-7.64			DECK REINFORCEMENT
S-7.65	TO	S-7.73	HINGE DETAILS
S-7.74			PRESTRESSING DETAILS
S-7.75	TO	S-7.79	FRAME DETAILS
S-7.80	TO	S-7.82	GIRDER DETAILS
S-7.83			BEARING DETAILS
S-7.84	TO	S-7.86	EXPANSION JOINTS
S-7.87			FMS PLATFORM
S-7.88			LIGHTING SUPPORTS
S-7.89	TO	S-7.90	DECK DRAINS

LEGEND: A/1.7 — Letter Denoting Section or Detail; Dwg. No. Where Section or Detail Shown or Referred. S-series Unless Otherwise Noted. Blank if Shown on Same Sheet

DRAWINGS ARE NOT TO BE SCALED *See Dwg. No. S-7.85 for Breakdown.

APPROXIMATE QUANTITIES

ITEM	STRUCT. EXC.	STRUCT. BACKFILL	CLASS "S" CONCRETE f'c=3,000psi	f'c=3,500psi	f'c=4,500psi	f'c=5,000psi	REINFORCING STEEL	PRESTRESSING CIP CONCRETE	DECK JOINT ASSEMBLY	DECK DRAIN ASSEMBLY	DRILLED SHAFTS 48" DIA		120" DIA.		AASHTO TYPE VI GIRDERS	BEARINGS	VERTICAL RESTRAINERS
	C.Y.	C.Y.	C.Y.	C.Y.	C.Y.	C.Y.	LBS.	L.S.	L.F.	L.S.	NO.	L.F.	NO.	L.F.	EA.	EA.	EA.
Pier #1	20			177.1			34265						1	115			
Pier #2	20			185.3			35465						1	115			
Pier #3	20			192.6			36785		28				1	115			8
Pier #4	20			201.9			38570						1	115			
Pier #5	20			218.4			28915		28				1	148		4	4
Pier #6	715			200.1			61155										
Pier #7	665			190.6			49880										
Pier #8	1005	875		221.7			71435										
Pier #9	510	400		210.3			68965										
Pier #10	355	265		197.3			60630										
Pier #11	665	545		223.2			75400										
Pier #12	500			187.4			50200										
Pier #13	345	270		162.9			34020										
Pier #14	405	320		175.9			45630										
Pier #15	595			181.6			48360										
Pier #16	425			151.9			32125										
Pier #17	425			160.1			40300										
Pier #18	610	450		249.5			55605										
Pier #19	305	230		109.9			25470										
Pier #20	655			234.9			49105										
Abutment #2	370	3820		272.5			23540		52		10	408				8	
Superstructure					794.8	7681.9	1831160	1	112	1					20		
Bridge Barrier			633.1				60390									16	16
Approach Slab			28.9				4560										
Anchor Slab			126.0				16895										
Total	8650	7175	788.0	4105.1	794.8	7681.9	2878825	1	220	1	10	408	5	608	20	28	28
As-Built Total																	

F.H.W.A. REGION	STATE	PROJECT NO.	SHEET NO.	TOTAL SHEETS	AS BUILT
9	ARIZ				

GENERAL NOTES

Construction Specifications - Arizona Department of Transportation Standard Specifications for Road and Bridge Construction, 1990.

Design Specification - AASHTO Standard Specifications for Highway Bridges, 1989 with 1990 and 1991 Interim Specifications.

AASHTO Standard Specifications for Seismic Design of Highway Bridges, Supplement A, 1991 Interim Specifications.

Dead Load - Dead load includes allowance of 25 lbs per square foot for future wearing surface and 5 lbs per square foot for top slab stay-in-place forms.

Loading Class - HS20-44 or Alternate Military loading with no reduction in load intensity for superstructure for multiple lane loadings.

Composite Design - Dead Load Carried by AASHTO Girders only.

Seismic Performance category A with vertical restrainers designed for 10 percent of dead load.

All concrete shall be class "S" unless otherwise noted.

Reinforcing steel shall conform to ASTM Specification A615, except reinforcing bars which are to be welded shall conform to A706.
Bar sizes #6 and smaller shall be designed as Grade 40 but may be furnished as Grade 40 or Grade 60. Bar sizes #7 and larger shall be designed and furnished as Grade 60.

All bend dimensions for reinforcing steel shall be out to out of bars.
All placement dimensions for reinforcing steel shall be to center of bars unless otherwise noted. Use Standard Hooks unless otherwise noted.

Concrete clear cover shown for reinforcing steel is in accordance with AASHTO criteria, unless otherwise noted.
Where clear cover is not shown use 2".

Stresses:

Concrete Superstructure

P/T Box Girder except Barriers	f'c =	5,000 psi
AASHTO Girder except Barriers and Girders.	f'c =	4,500 psi
(Deck	fc =	1,400 psi)
Abutments, Piers and Drilled Shafts	f'c =	3,500 psi
AASHTO Girders	f'c =	6,500 psi
All other Class "S" Concrete	f'c =	3,000 psi

Steel

Grade 40 reinforcing steel	fs =	20,000 psi
Grade 60 reinforcing steel	fs =	24,000 psi
Prestressing steel	f's =	270,000 psi
All deck steel	fs =	20,000 psi

Barriers shall be constructed after post-tensioning, but may be constructed prior to falsework removal.
Slip forming of barriers is not permitted.

Chamfer all exposed corners 3/4" as per Std. B-19.10 unless otherwise noted.

Inventory Rating (Working Stress Method) HS20.1 .

Operating Rating (Working Stress Method) HS30.5

A.D.O.T. Structures Standards, 1988 Edition B-18.10, B-19.10, B-19.11, B-19.12, B-19.30, B-19.40, B-12.18 and B-24.20.

	NAME	DATE
DESIGN	D. Church	12-91
DRAWN	J. DeBusso	12-91
CHECKED	W. Voelimy	12-91

Parsons Brinckerhoff © 100 YEARS

ARIZONA DEPARTMENT OF TRANSPORTATION
HIGHWAYS DIVISION
STRUCTURES SECTION

STA 30+
RAMP S-E
LOC. PLAN, INDEX QTY. & NOTES

ROUTE | MILEPOST | STRUCTURE NO. 2343 | LOCATION: RED MOUNTAIN TRAFFIC INT.

NOT FOR CONSTRUCTION

DWG. NO. S-7.1

___ OF ___

F.H.W.A. REGION	STATE	PROJECT NO.	SHEET NO.	TOTAL SHEETS	AS BUILT
9	ARIZ				

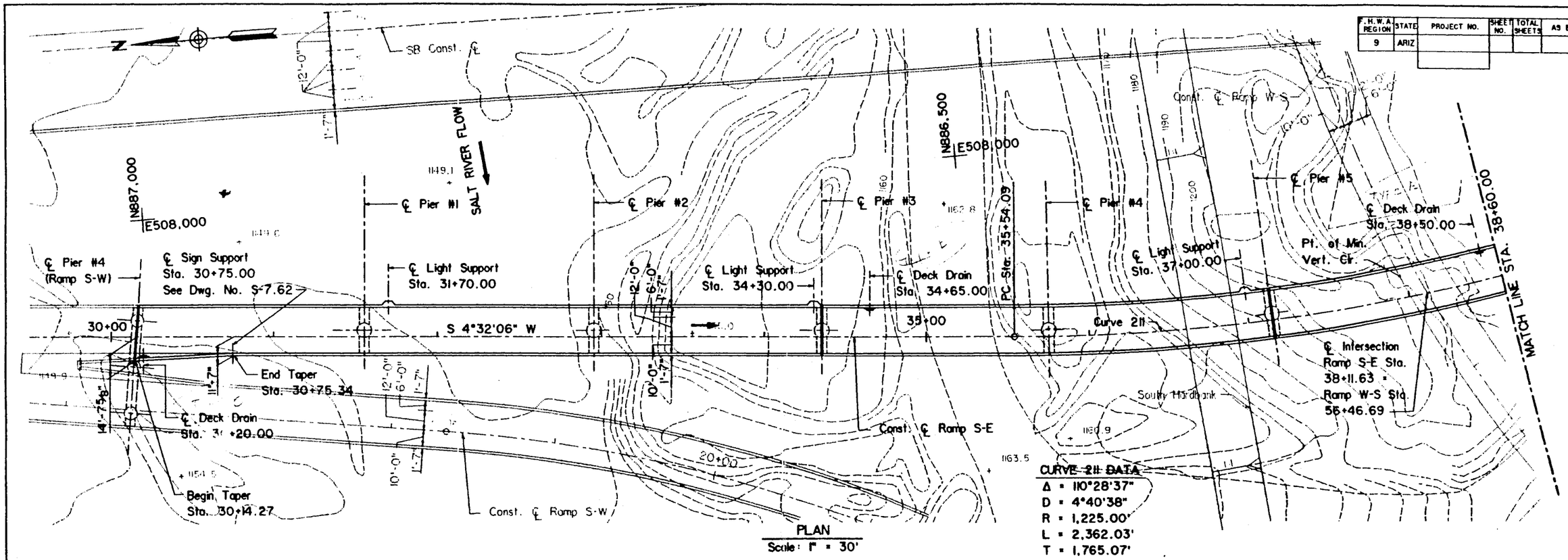

PLAN
Scale: 1" = 30'

CURVE 211 DATA

Δ = 110°28'37"
D = 4°40'38"
R = 1,225.00'
L = 2,362.03'
T = 1,765.07'

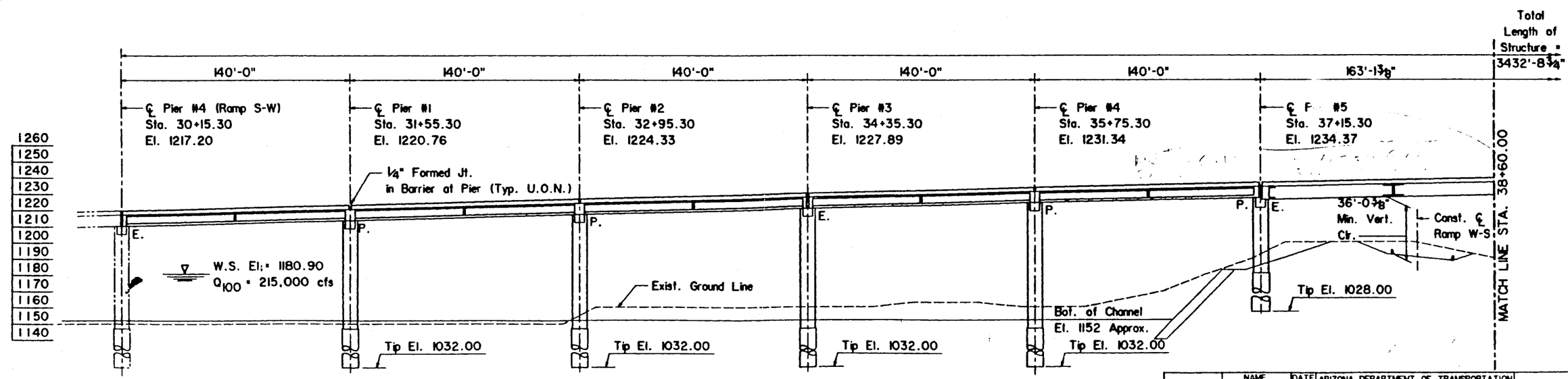

LONGITUDINAL SECTION ALONG CONST. ℄ RAMP S-E
Scale: 1" = 30'

	NAME	DATE
DESIGN	W. Voelmy	8-90
DRAWN	J DeBusso	8-90
CHECKED	D. Gronsky	9-90

Parsons Brinckerhoff ® 100 YEARS

ARIZONA DEPARTMENT OF TRANSPORTATION
HIGHWAYS DIVISION
STRUCTURES SECTION

STA 30+
RAMP S-E
PLAN AND SECTION

LOCATION: RED MOUNTAIN TRAFFIC INT.

ROUTE | MILEPOST | 2343 STRUCTURE NO.

NOT FOR CONSTRUCTION

DWG. NO. S-7.3

___ OF

SURVEY NO.	FINISHED PLANS	REVISTIC	LOCATION	DATE

DATE	REV. #	REVISION	DRAWN	CHECKED	APPD

F.H.W.A. REGION	STATE	PROJECT NO.	SHEET NO.	TOTAL SHEETS	AS BUILT
9	ARIZ				

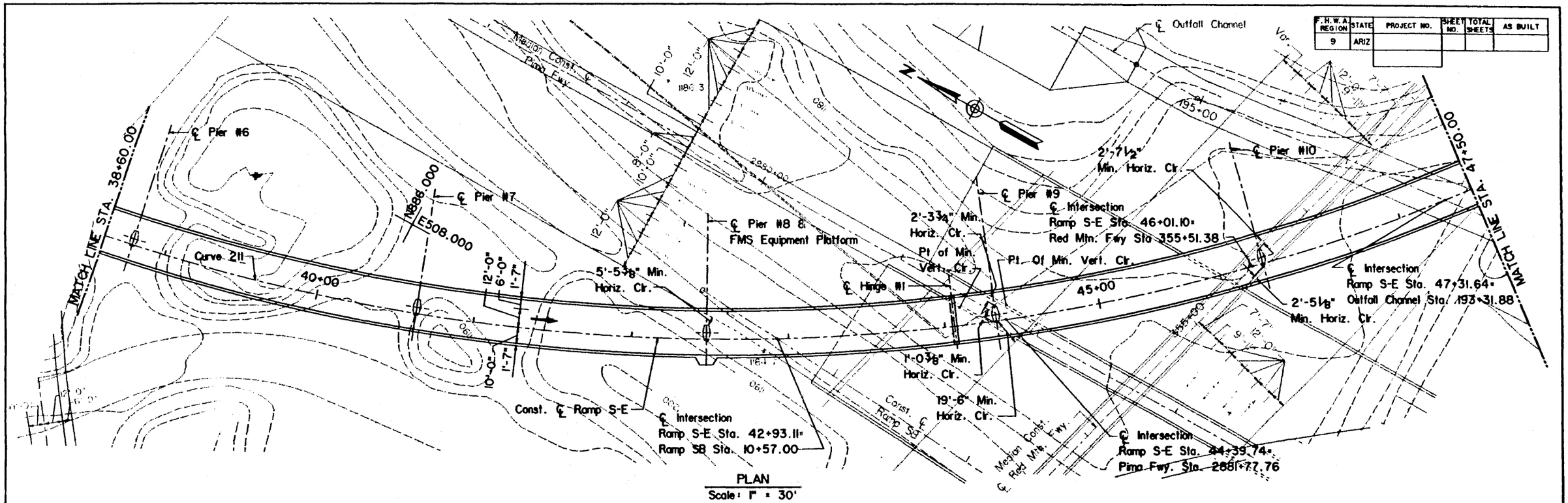

PLAN
Scale: 1" = 30'

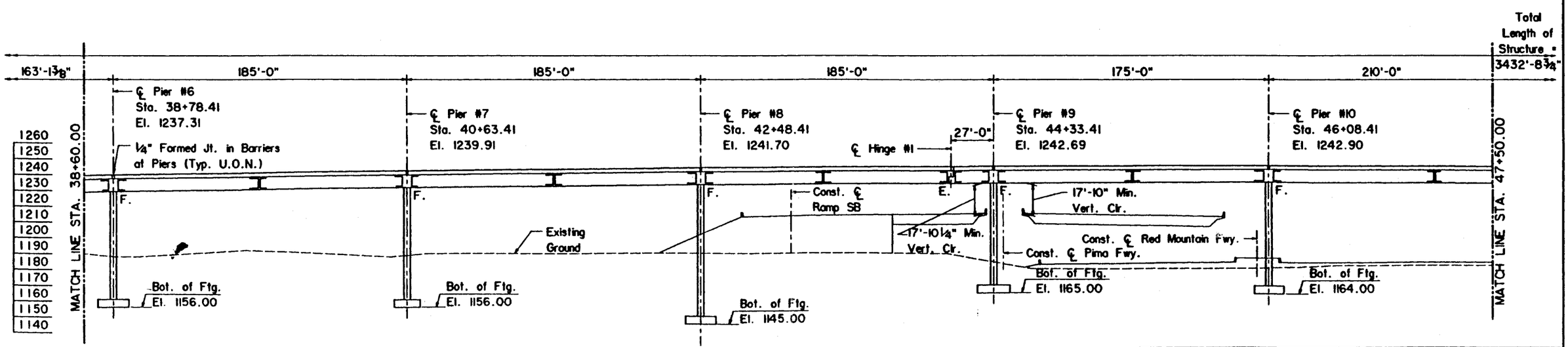

LONGITUDINAL SECTION ALONG CONST. ℄ RAMP S-E
Scale: 1" = 30'

	NAME	DATE
DESIGN	O. Olden	8-90
DRAWN	J. DeBusso	8-90
CHECKED	D. Gransky	9-90

Parsons Brinckerhoff ® 100 YEARS

ROUTE	MILEPOST	2343 STRUCTURE NO.

ARIZONA DEPARTMENT OF TRANSPORTATION
HIGHWAYS DIVISION
STRUCTURES SECTION

STA. 30+
RAMP S-E
PLAN AND SECTION

LOCATION
RED MOUNTAIN TRAFFIC INT.

NOT FOR CONSTRUCTION

DWG. NO. S-7.4

OF

F.H.W.A. REGION	STATE	PROJECT NO.	SHEET NO.	TOTAL SHEETS	AS BUILT
9	ARIZ				

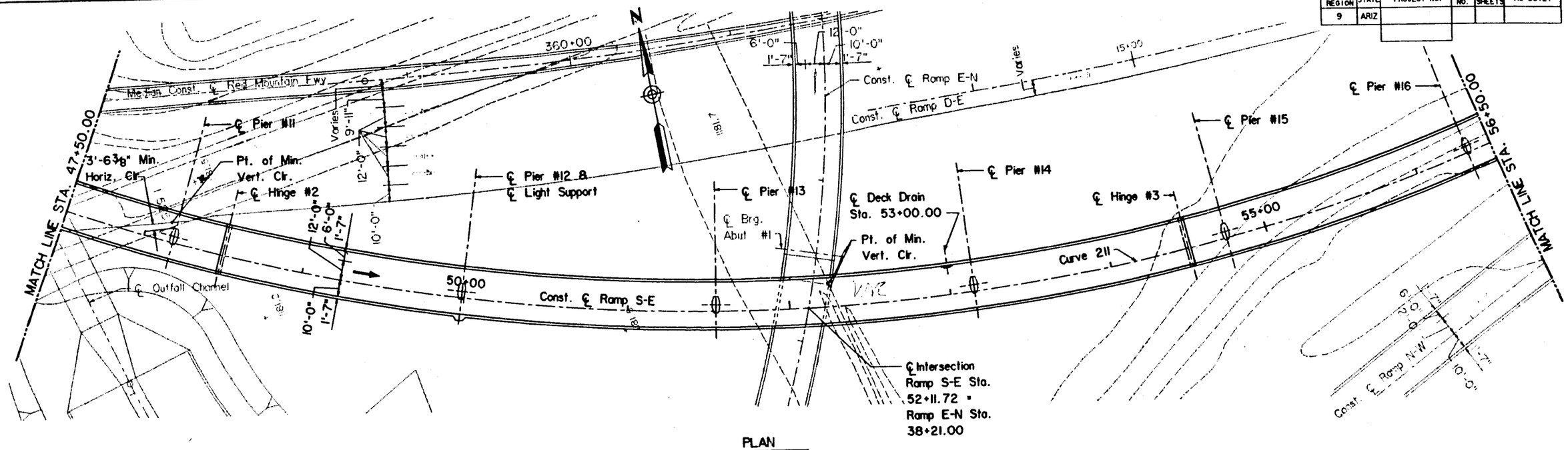

PLAN
Scale: 1" = 30'

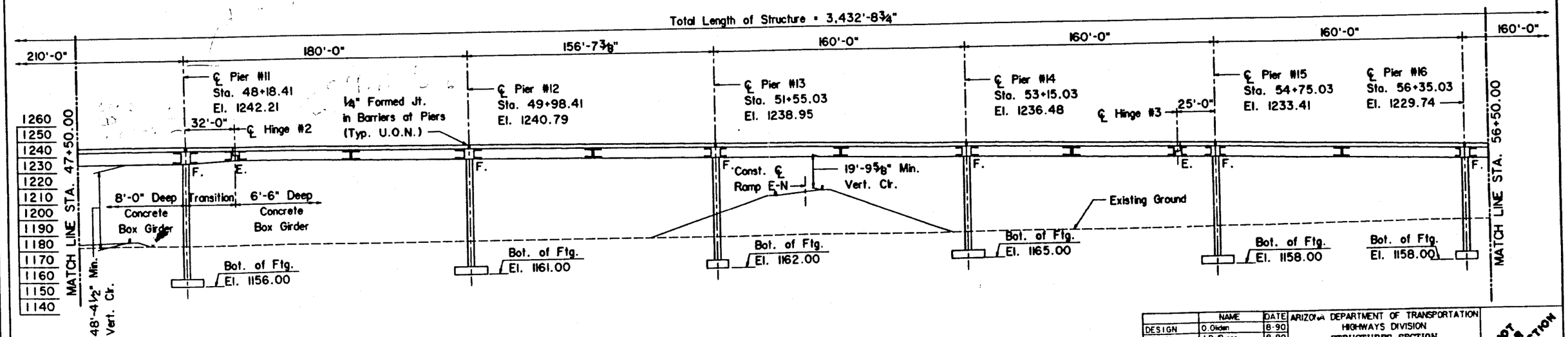

LONGITUDINAL SECTION ALONG CONST. ℄ RAMP S-E
Scale: 1" = 30'

	NAME	DATE
DESIGN	O. Olden	8-90
DRAWN	J. DeBusso	8-90
CHECKED	D. Gronsky	9-90

Parsons Brinckerhoff ® 100 YEARS

ROUTE	MILEPOST	2343 STRUCTURE NO.

ARIZONA DEPARTMENT OF TRANSPORTATION
HIGHWAYS DIVISION
STRUCTURES SECTION
STA. 30+
RAMP S-E
PLAN AND SECTION
LOCATION
RED MOUNTAIN TRAFFIC INT.

NOT FOR CONSTRUCTION

DWG. NO. S-7.5

___ OF ___

F.H.W.A. REGION	STATE	PROJECT NO.	SHEET NO.	TOTAL SHEETS	AS BUILT
9	ARIZ				

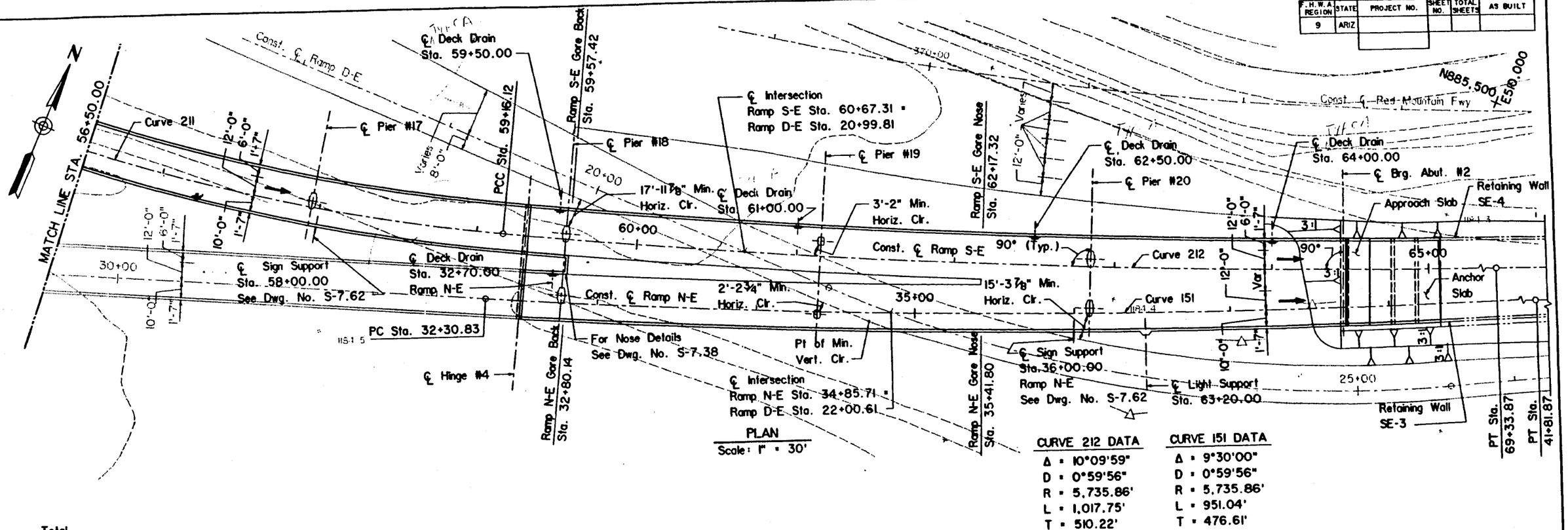

PLAN
Scale: 1" = 30'

CURVE 212 DATA	CURVE 151 DATA
Δ = 10°09'59"	Δ = 9°30'00"
D = 0°59'56"	D = 0°59'56"
R = 5,735.86'	R = 5,735.86'
L = 1,017.75'	L = 951.04'
T = 510.22'	T = 476.61'

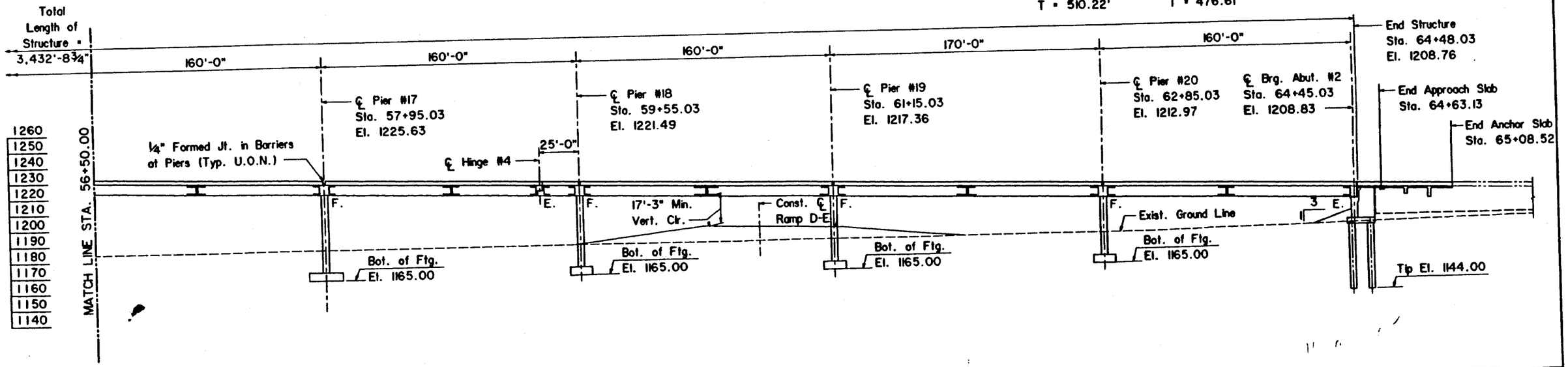

LONGITUDINAL SECTION ALONG CONST. ℄ RAMP S-E
Scale: 1" = 30'

	NAME	DATE
DESIGN	OAO/WV	8-90
DRAWN	J DeBusso	8-90
CHECKED	D. Gromsky	9-90

Parsons Brinckerhoff ® 100 YEARS

ARIZONA DEPARTMENT OF TRANSPORTATION
HIGHWAYS DIVISION
STRUCTURES SECTION
STA. 30+
RAMP S-E
PLAN AND SECTION

ROUTE | MILEPOST | 2343 STRUCTURE NO.
LOCATION: RED MOUNTAIN TRAFFIC INT.

NOT FOR CONSTRUCTION

DWG. NO. S-7.6

___ OF ___

ERIETTA 3017: [8530] 8130 50 8130 50 29.A.Y02-13.35.90 STRUC

F.H.W.A. REGION	STATE	PROJECT NO.	SHEET NO.	TOTAL SHEETS	AS BUILT
9	ARIZ				

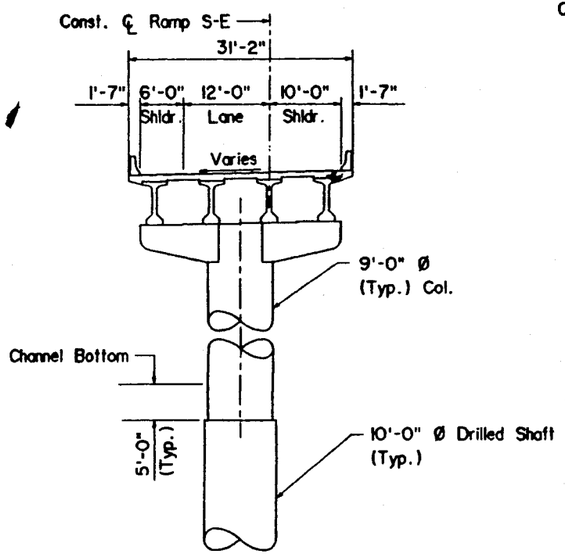

TYPICAL SECTION (PIERS #1 THRU #5)
AASHTO Grider Type VI
Scale: 1"=10'

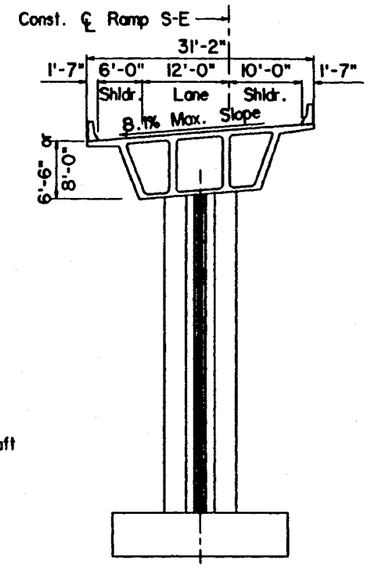

TYPICAL SECTION (PIERS #6 THRU #17)
Box Girder
Scale: 1"=10'

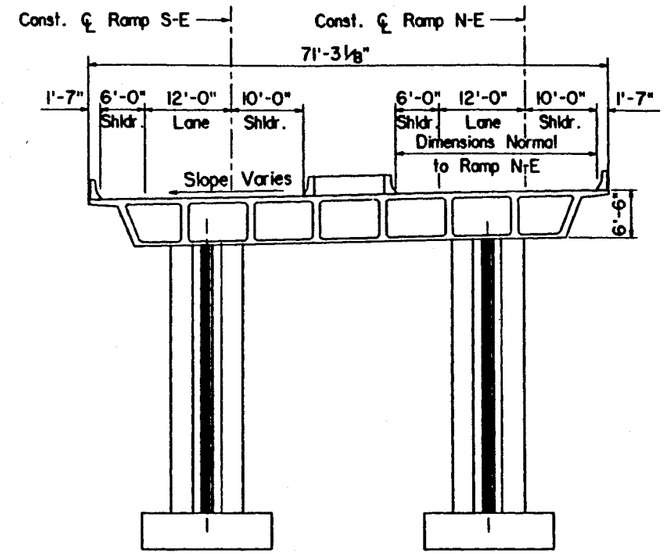

SECTION AT PIER #18
Scale: 1"=10'

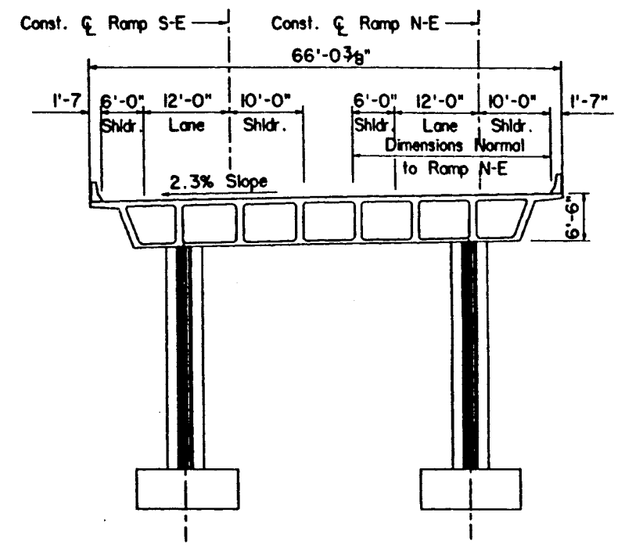

SECTION AT PIER #19
Scale: 1"=10'

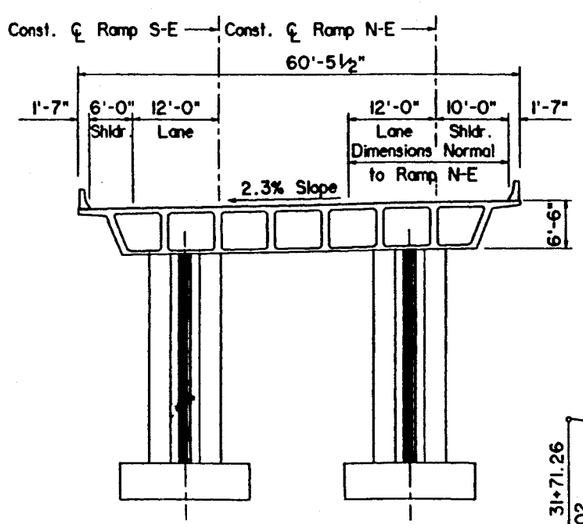

SECTION AT PIER #20
Scale: 1"=10'

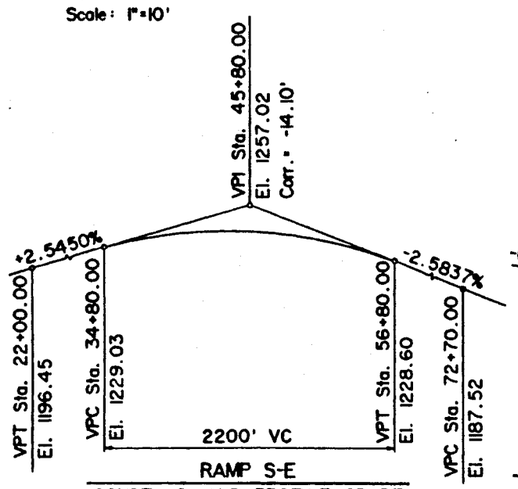

RAMP S-E
CONST. ℄ AND PROFILE GRADE

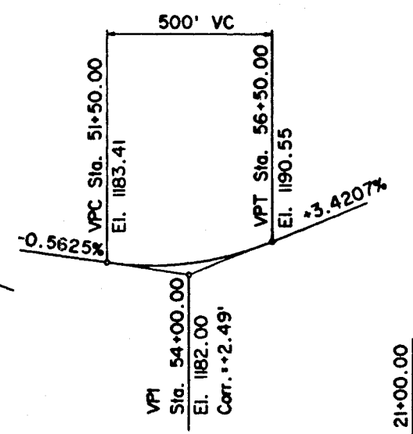

RAMP W-S
CONST. ℄ AND PROFILE GRADE

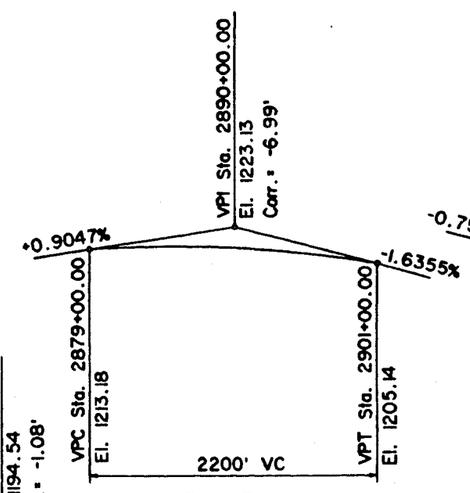

PIMA FWY.
CONST. ℄ AND PROFILE GRADE

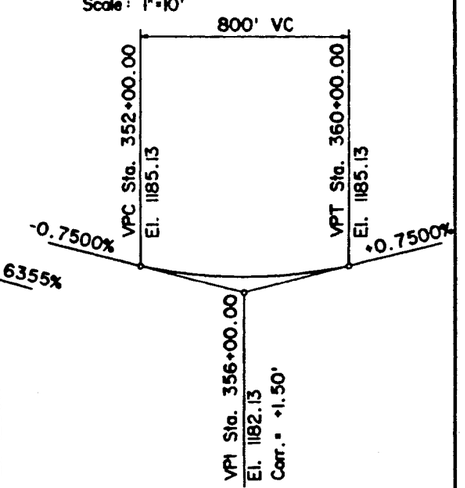

RED MOUNTAIN FWY.
CONST. ℄ AND PROFILE GRADE

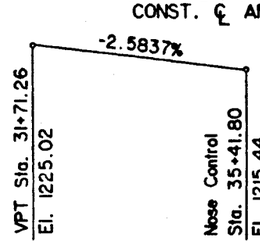

RAMP N-E
CONST. ℄ AND PROFILE GRADE

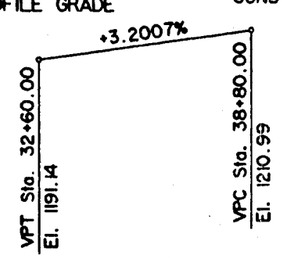

RAMP E-N
CONST. ℄ AND PROFILE GRADE

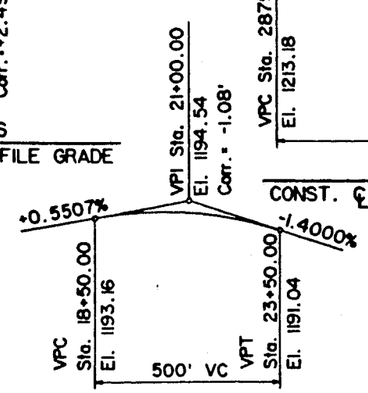

RAMP D-E
CONST. ℄ AND PROFILE GRADE

	NAME	DATE
DESIGN	O. Olden	8-90
DRAWN	J. DeBusso	8-90
CHECKED	D. Gronsky	11-91

Parsons Brinckerhoff ® 100 YEARS

ARIZONA DEPARTMENT OF TRANSPORTATION
HIGHWAYS DIVISION
STRUCTURES SECTION

STA. 30+
RAMP S-E
TYPICAL SECTIONS

LOCATION: RED MOUNTAIN TRAFFIC INT.

ROUTE | MILEPOST | 2343 STRUCTURE NO.

NOT FOR CONSTRUCTION

DWG. NO. S-7 7

OF

F.H.W.A. REGION	STATE	PROJECT NO.	SHEET NO.	TOTAL SHEETS	AS BUILT
9	ARIZ				

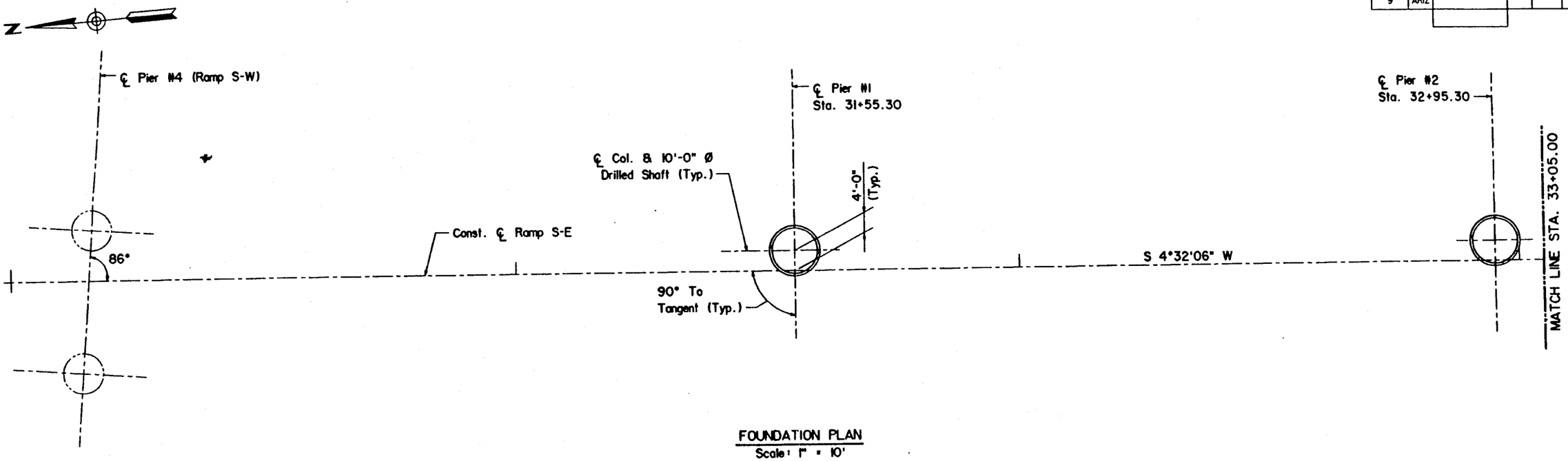

FOUNDATION PLAN
Scale: 1" = 10'

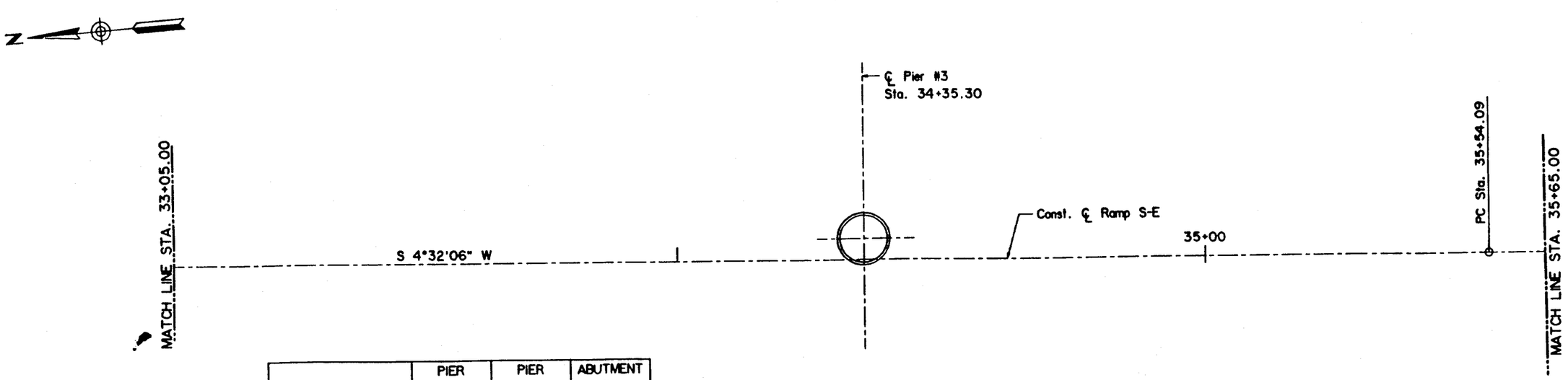

	PIER #1,2,3,4	PIER #5	ABUTMENT #2
TOP OF SHAFT EL.	1147.00	1176.00	1184.75
BOT. OF SHAFT EL.	1032.00	1028.00	1144.00
CAPACITY KIPS	2700	2900	680

NOTE:
For Notes See Dwg. No. S-7.17.

FOUNDATION PLAN
Scale: 1" = 10'

	NAME	DATE
DESIGN	W. Voelmy	10-91
DRAWN	E. Follis	10-91
CHECKED	O. Olden	2-92

Parsons Brinckerhoff ® 100 YEARS

ARIZONA DEPARTMENT OF TRANSPORTATION
HIGHWAYS DIVISION
STRUCTURES SECTION
STA. 30+
RAMP S-E
FOUNDATION PLAN - SHEET 1

LOCATION: RED MOUNTAIN TRAFFIC INT.

ROUTE | MILEPOST | 2343 STRUCTURE NO.

NOT FOR CONSTRUCTION

DWG. NO. S 7 16

OF

F.H.W.A. REGION	STATE	PROJECT NO.	SHEET NO.	TOTAL SHEETS	AS BUILT
9	ARIZ				

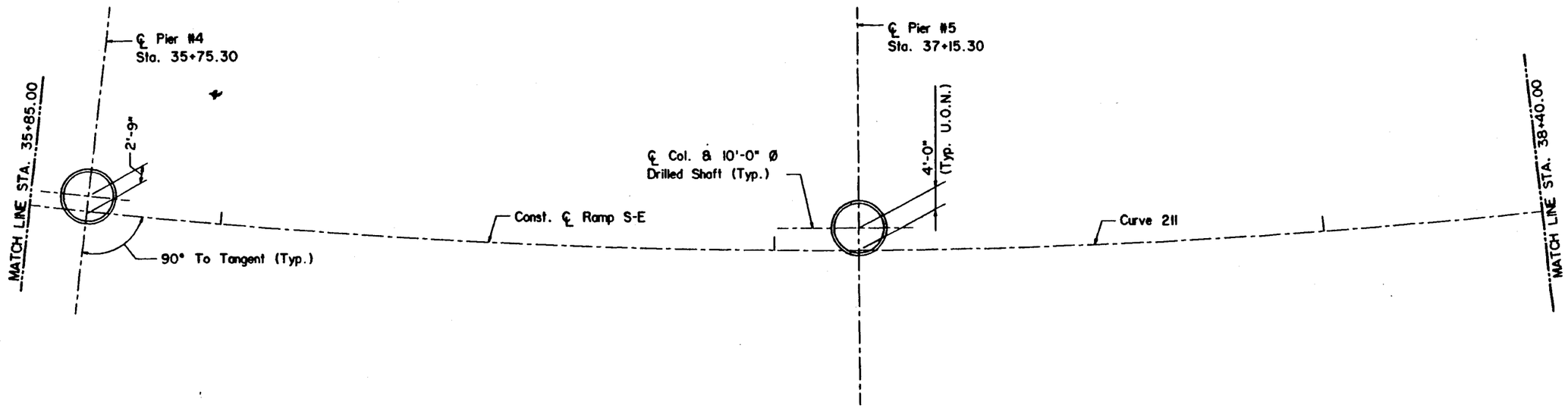

FOUNDATION PLAN
Scale: 1" = 10'

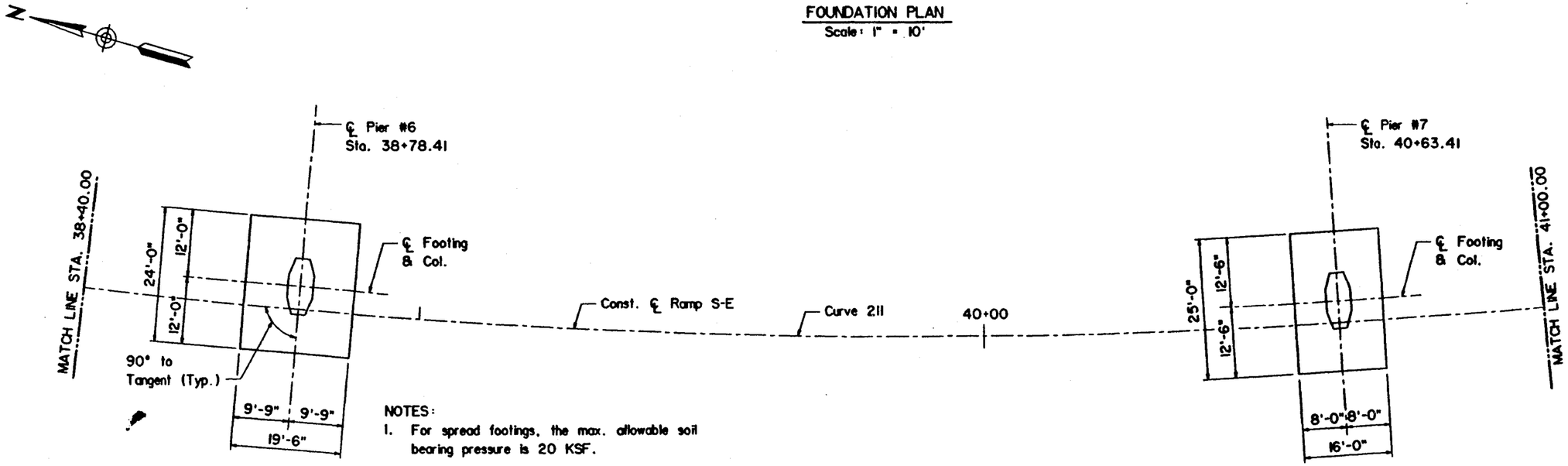

FOUNDATION PLAN
Scale: 1" = 10'

NOTES:

1. For spread footings, the max. allowable soil bearing pressure is 20 KSF.
2. For Limits of Structural Excavation and Structure Backfill see ADOT Std. Dwg. B-19.30.
3. For Pier #4 & #5 Top & Bottom Elevations and Capacities See Dwg. No. S-7.16.
4. See special provisions if ground water is encountered.

	NAME	DATE
DESIGN	W. Hsia	10-91
DRAWN	E. Fafitis	10-91
CHECKED	O. Olden	2-92

Parsons Brinckerhoff ® 100 YEARS

ARIZONA DEPARTMENT OF TRANSPORTATION
HIGHWAYS DIVISION
STRUCTURES SECTION
STA. 30+
RAMP S-E
FOUNDATION PLAN - SHEET 2

NOT FOR CONSTRUCTION

ROUTE	MILEPOST	STRUCTURE NO.
		2343

LOCATION
RED MOUNTAIN TRAFFIC INT.

DWG. NO. S-7.17

OF

F.H.W.A. REGION	STATE	PROJECT NO.	SHEET NO.	TOTAL SHEETS	AS BUILT
9	ARIZ				

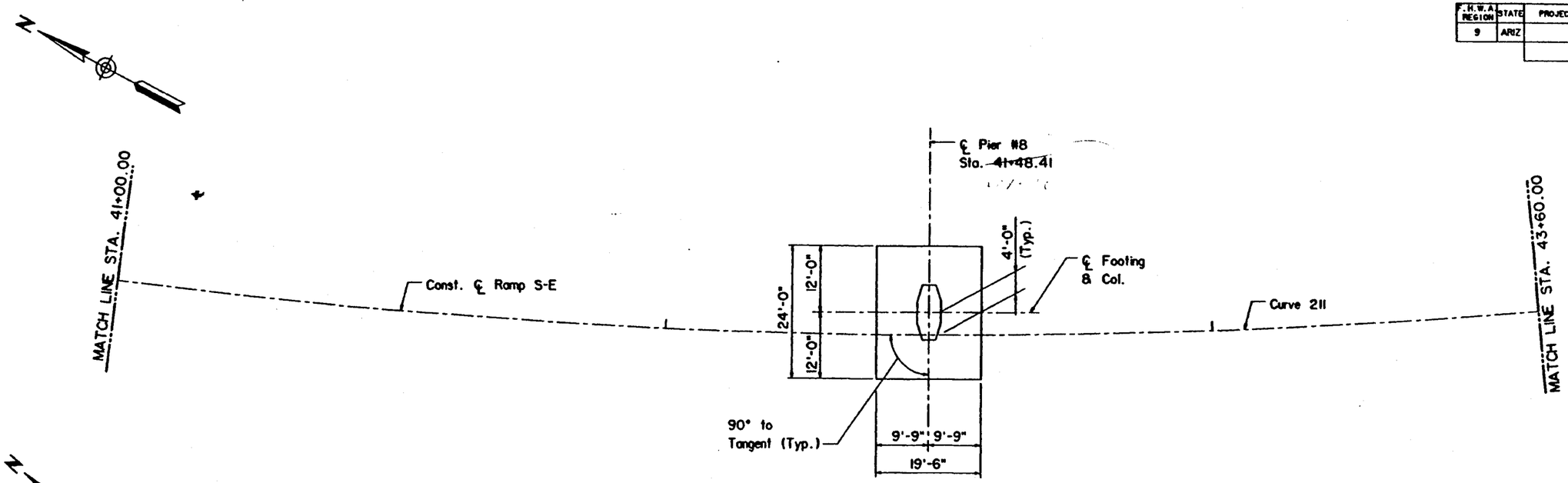

FOUNDATION PLAN
Scale: 1" = 10'

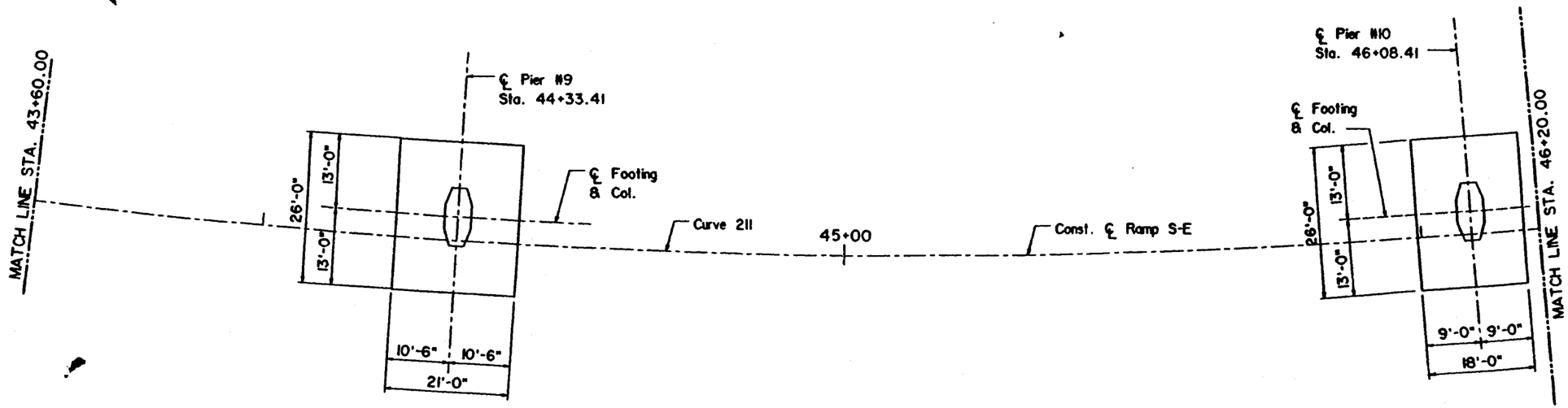

FOUNDATION PLAN
Scale: 1" = 10'

NOTE:
For Notes see Dwg. No. S-7.17

	NAME	DATE
DESIGN	W. Hsia	10-91
DRAWN	E. Follin	10-91
CHECKED	D. Olden	2-92

Parsons Brinckerhoff ® 100 YEARS

ARIZONA DEPARTMENT OF TRANSPORTATION
HIGHWAYS DIVISION
STRUCTURES SECTION
STA 30+
RAMP S-E
FOUNDATION PLAN - SHEET 3

ROUTE | MILEPOST | 2343 STRUCTURE NO.
LOCATION: RED MOUNTAIN TRAFFIC INT.

NOT FOR CONSTRUCTION

DWG. NO. S-7.18

___OF___

SURVEY NO. | FINISHED PLANS | REVISIONS | LOCATION | DATE
DESIGN | DRAWN | CHKD | APPD

F.H.W.A. REGION	STATE	PROJECT NO.	SHEET NO.	TOTAL SHEETS	AS BUILT
9	ARIZ				

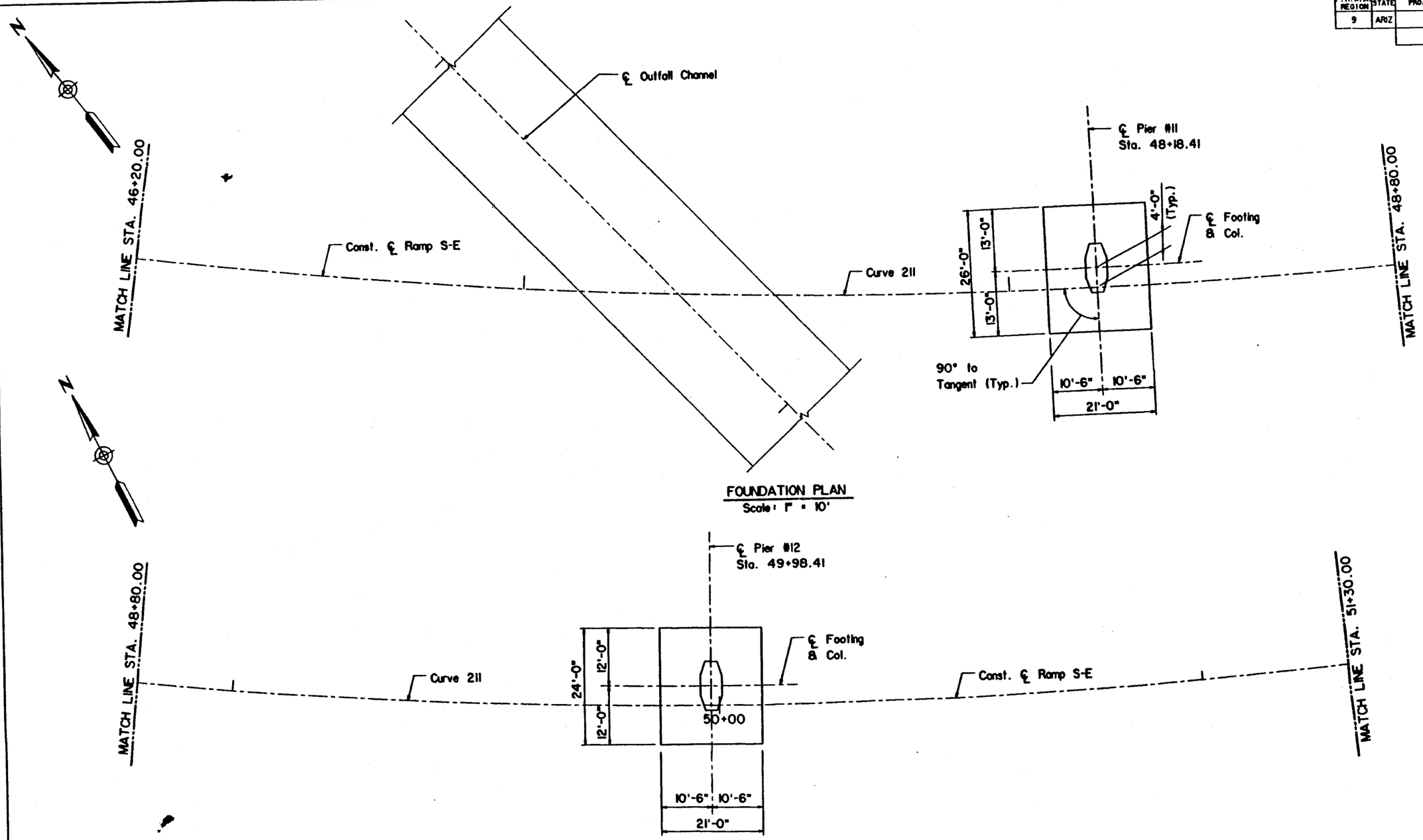

NOTE:
For Notes, See Dwg. No. S-7.17

	NAME	DATE
DESIGN	W. Hsia	10-91
DRAWN	E. Fotitis	10-91
CHECKED	O. Olden	2-92

Parsons Brinckerhoff ® 100 YEARS

ARIZONA DEPARTMENT OF TRANSPORTATION
HIGHWAYS DIVISION
STRUCTURES SECTION

STA. 30+
RAMP S-E
FOUNDATION PLAN - SHEET 4

LOCATION
RED MOUNTAIN TRAFFIC INT.

ROUTE | MILEPOST | 2343 STRUCTURE NO.

NOT FOR CONSTRUCTION

DWG. NO. S-7.19

OF

F.H.W.A. REGION	STATE	PROJECT NO.	SHEET NO.	TOTAL SHEETS	AS BUILT
9	ARIZ				

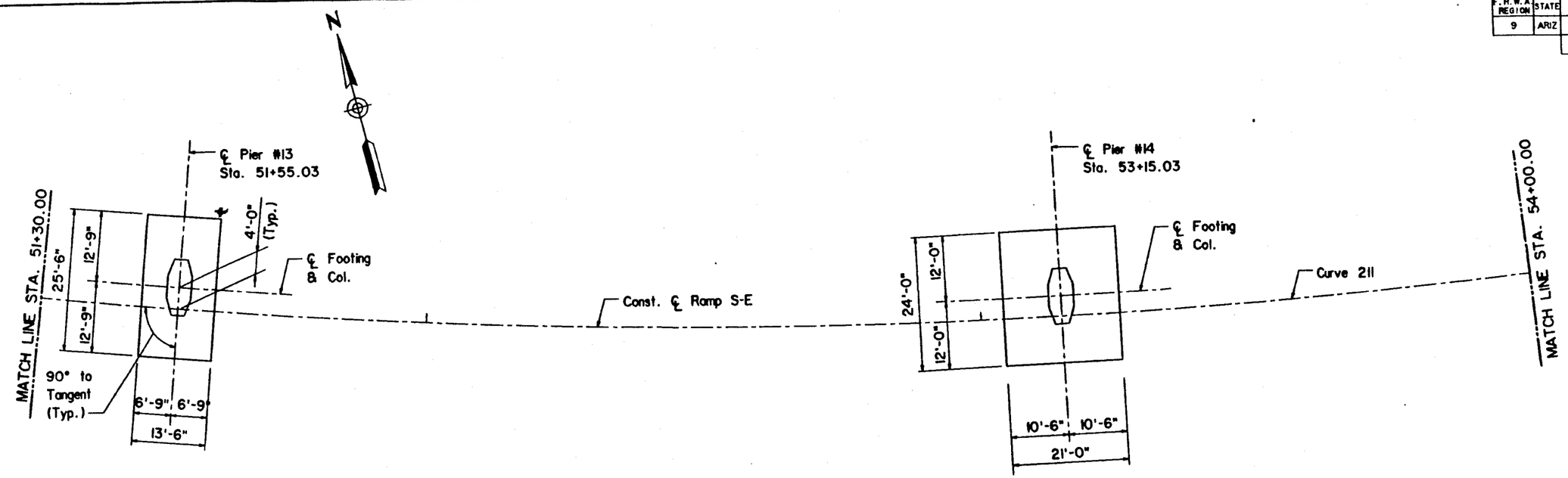

FOUNDATION PLAN
Scale: 1" = 10'

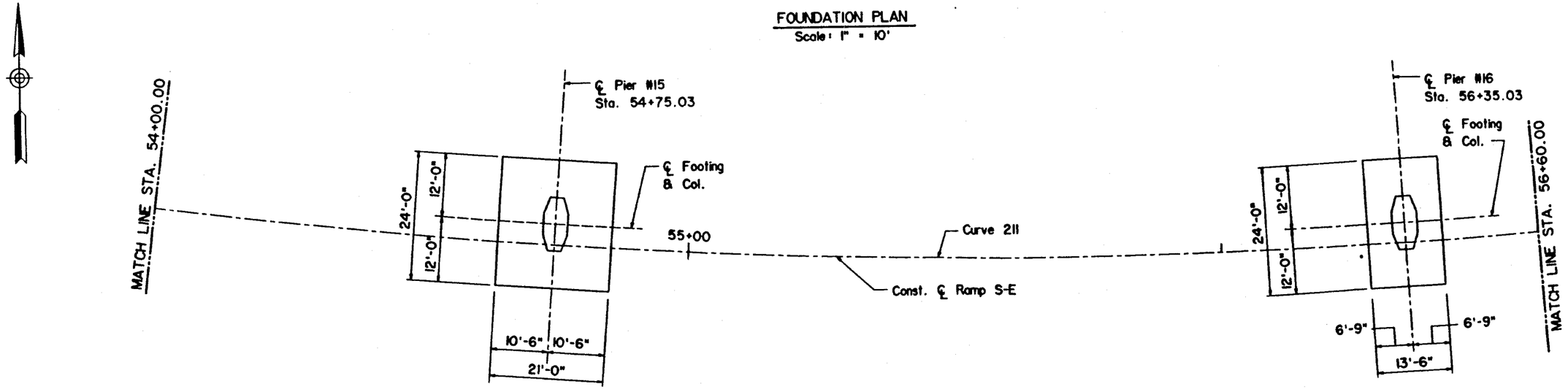

FOUNDATION PLAN
Scale: 1" = 10'

NOTE:
For Notes See Dwg. No. S-7.17

	NAME	DATE
DESIGN	W. Hsia	10-91
DRAWN	E. Fallis	10-91
CHECKED	O. Olden	2-92

Parsons Brinckerhoff ® 100 YEARS

ARIZONA DEPARTMENT OF TRANSPORTATION
HIGHWAYS DIVISION
STRUCTURES SECTION
STA. 30+
RAMP S-E
FOUNDATION PLAN - SHEET 5

LOCATION
RED MOUNTAIN TRAFFIC INT.

ROUTE | MILEPOST | 2343 STRUCTURE NO.

NOT FOR CONSTRUCTION

DWG. NO. S-7.20

___OF___

F.H.W.A. REGION	STATE	PROJECT NO.	SHEET NO.	TOTAL SHEETS	AS BUILT
9	ARIZ				

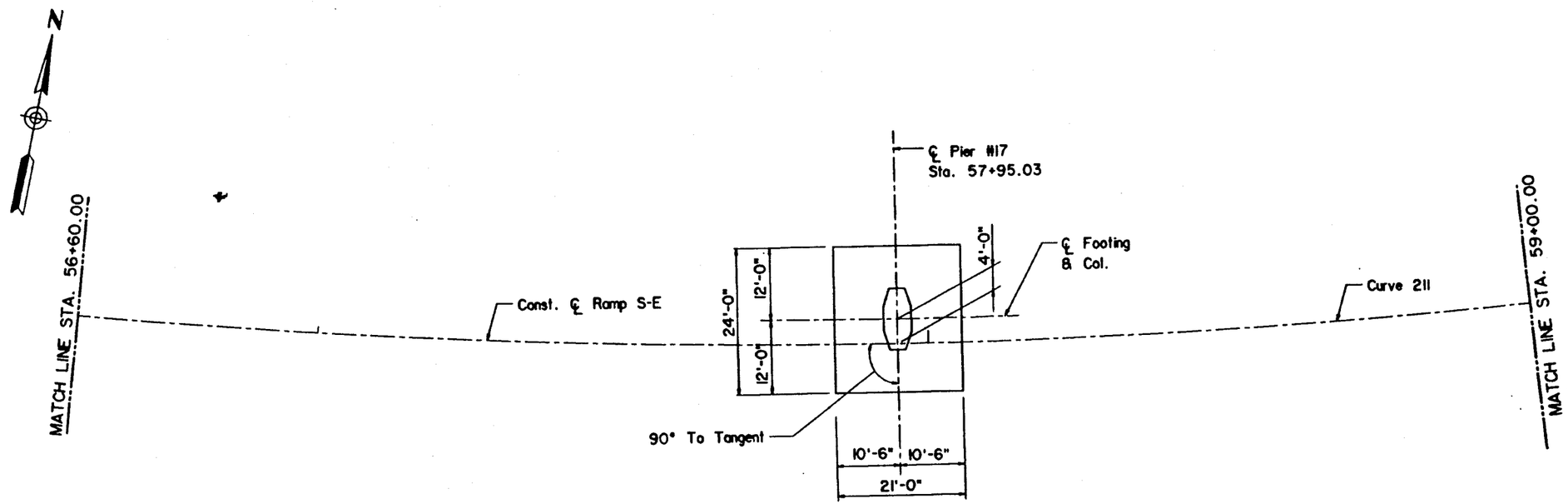

FOUNDATION PLAN
Scale : 1" = 10'

NOTE:
For Notes See Dwg. No. S-7.17

	NAME	DATE
DESIGN	W. Hala	10-91
DRAWN	E. Fotitis	10-91
CHECKED	O. Olden	2-92

Parsons Brinckerhoff ® 100 YEARS

ARIZONA DEPARTMENT OF TRANSPORTATION
HIGHWAYS DIVISION
STRUCTURES SECTION

STA. 30+
RAMP S-E
FOUNDATION PLAN - SHEET 6

LOCATION
RED MOUNTAIN TRAFFIC INT.

NOT FOR CONSTRUCTION

ROUTE | MILEPOST | 2343 STRUCTURE NO.

DWG. NO. S 7 21

OF

F.H.W.A. REGION	STATE	PROJECT NO.	SHEET NO.	TOTAL SHEETS	AS BUILT
9	ARIZ				

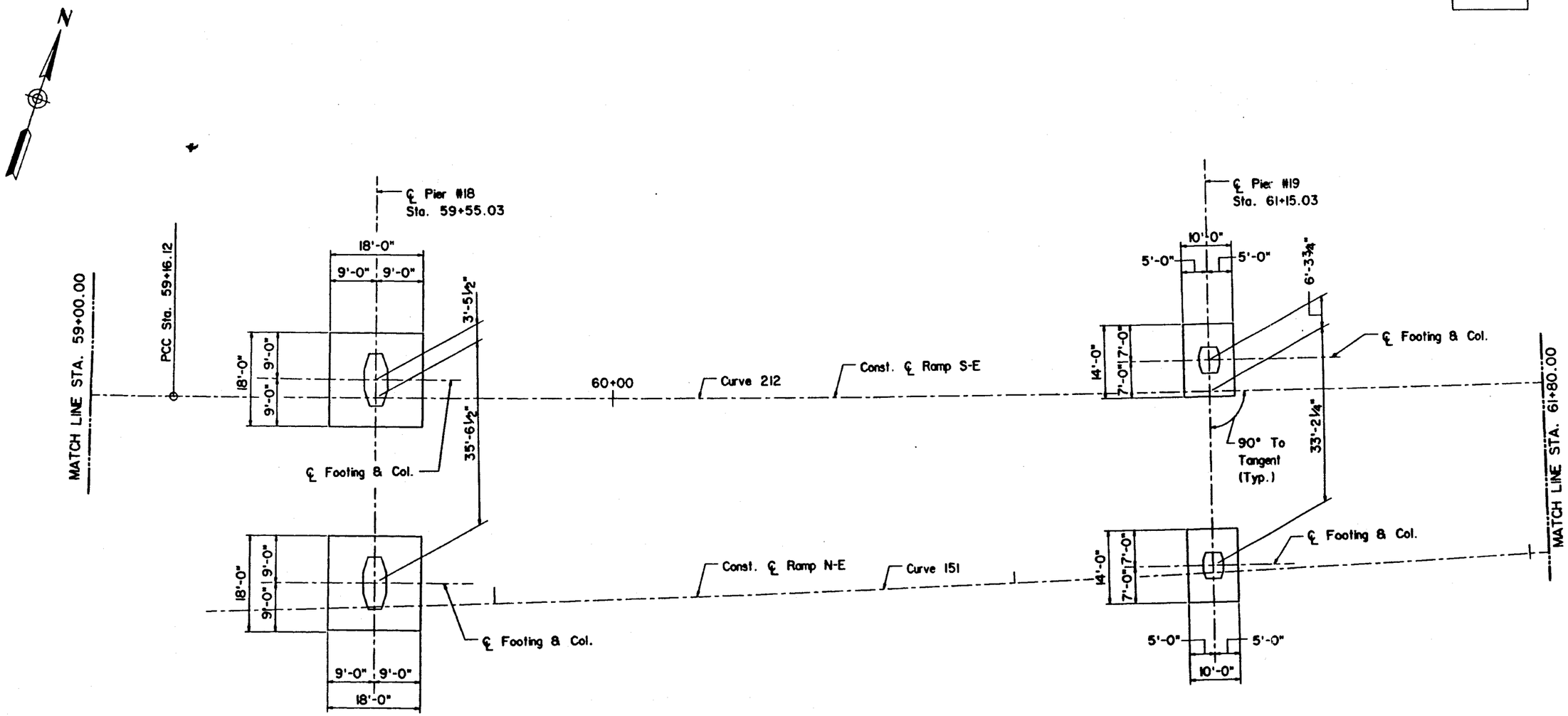

FOUNDATION PLAN
Scale : 1" = 10'

NOTE:
For Notes See Dwg. No. S-7.17

	NAME	DATE
DESIGN	A. Madani	10-91
DRAWN	E. Fallis	10-91
CHECKED	A. Athalye	5-92

Parsons Brinckerhoff ® 100 YEARS

ARIZONA DEPARTMENT OF TRANSPORTATION
HIGHWAYS DIVISION
STRUCTURES SECTION
STA. 30+
RAMP S-E
FOUNDATION PLAN - SHEET 7

ROUTE | MILEPOST | 2343 STRUCTURE NO.

LOCATION
RED MOUNTAIN TRAFFIC INT.

NOT FOR CONSTRUCTION

DWG. NO. S-7.22

OF

F.H.W.A. REGION	STATE	PROJECT NO.	SHEET NO.	TOTAL SHEETS	AS BUILT
9	ARIZ				

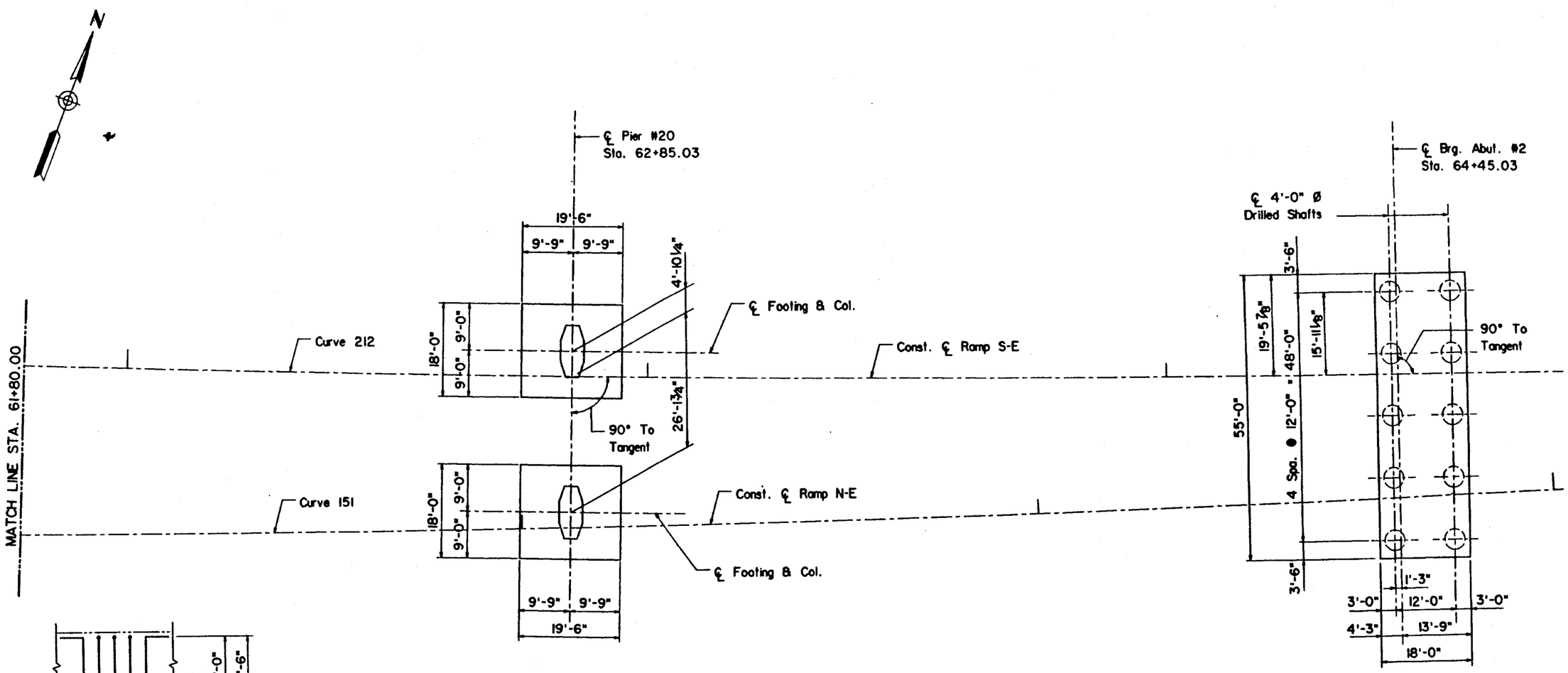

FOUNDATION PLAN
Scale : 1" = 10'

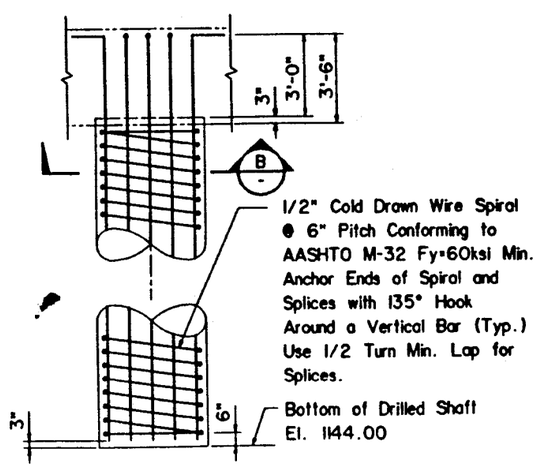

ABUTMENT DRILLED SHAFT DETAIL (TYP.)
Scale: ⅜" = 1'-0"

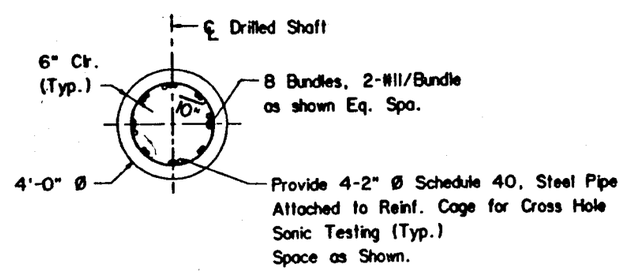

SECTION B
Scale: ⅜" = 1'-0"

NOTE:
For Notes See Dwg. No. S-7.17 & S-7.24.

	NAME	DATE
DESIGN	A. Seyedmadani	10-91
DRAWN	E. Fatlitis	10-91
CHECKED	A. Athalye	5-92

Parsons Brinckerhoff ® 100 YEARS

ARIZONA DEPARTMENT OF TRANSPORTATION
HIGHWAYS DIVISION
STRUCTURES SECTION
STA. 30+
RAMP S-E
FOUNDATION PLAN - SHEET 8

NOT FOR CONSTRUCTION

ROUTE | MILEPOST | 2343 STRUCTURE NO.
LOCATION: RED MOUNTAIN TRAFFIC INT.
DWG. NO. S-7.23

OF

DATE | REV # | REVISION | DSGN | DRWN | CHKD | APPD

SURVEY NO. | FINISHED PLANS | REVISI | LOCATION | DATE

ERIETTA 5017: [9530] 013FNB 013FNB 29-JUL-92-12.33.40 STRUC

F.H.W.A. REGION	STATE	PROJECT NO.	SHEET NO.	TOTAL SHEETS	AS BUILT
9	ARIZ				

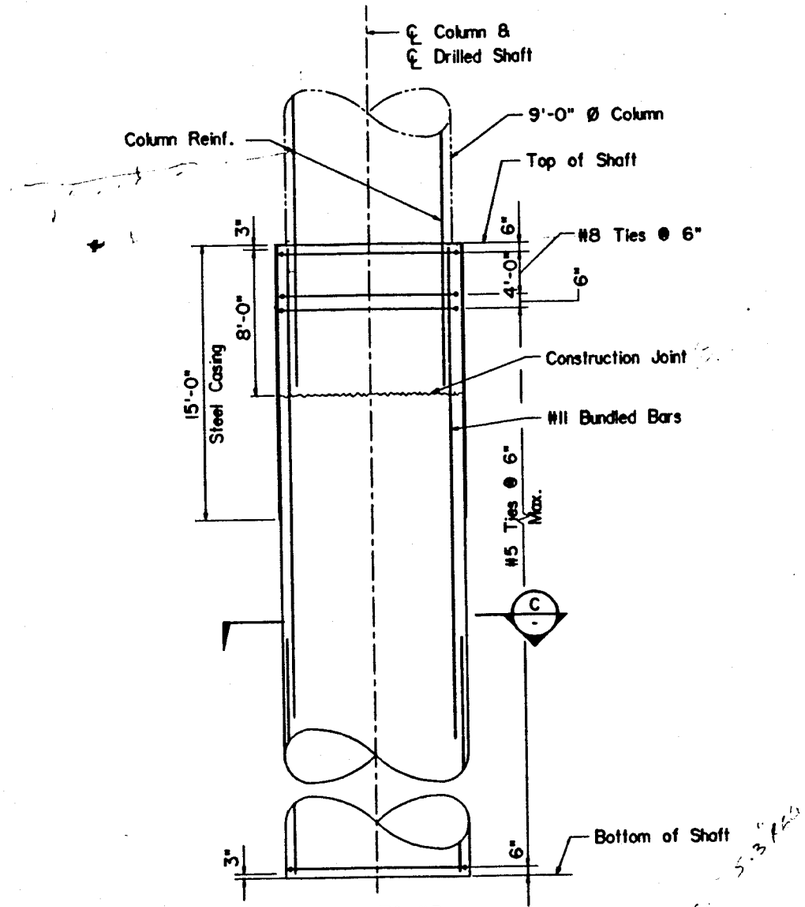

PIER #1 TO #5
DRILLED SHAFT DETAIL
Scale : 1/4" = 1'-0"

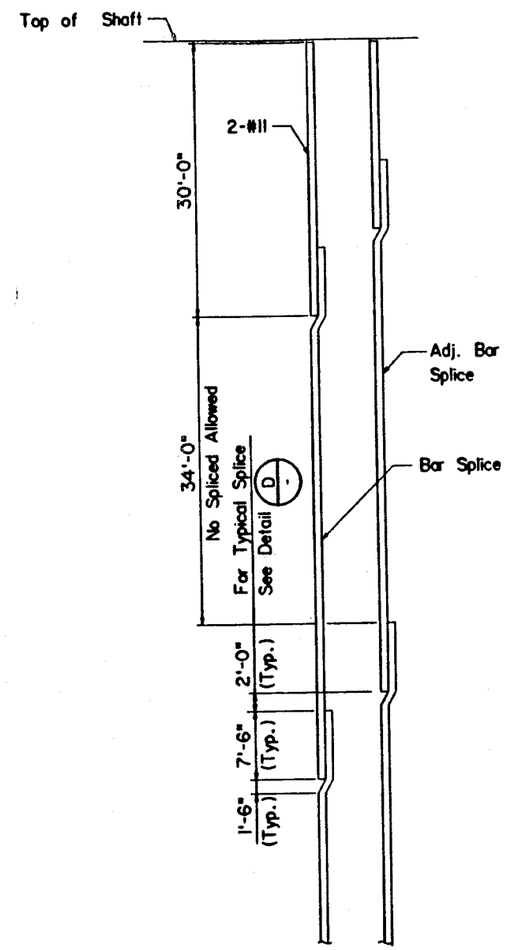

RESTRICTION ON SPLICE
PIER #1 TO #5
N.T.S.

8 @ - #10 7.52" c to c - 5.3" ℄
AB = 33.1"

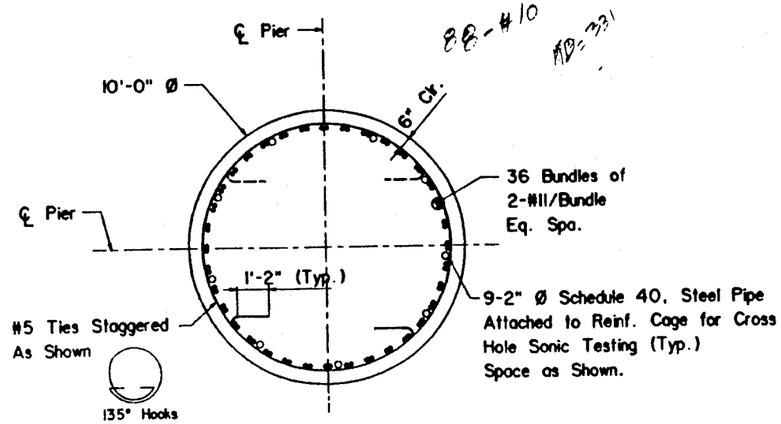

SECTION C
Scale: 3/8" = 1'-0"

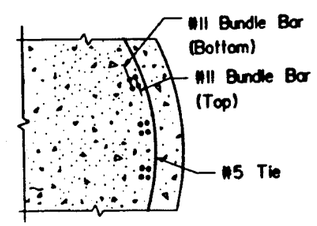

TYPICAL SPLICE DETAIL D
N.T.S.

DRILLED SHAFT NOTES:

1. Once concrete is poured in a drilled shaft no new drilling is permitted within 4 dia. measured center to center, until 48 hours after the concreting of the drilled shaft.
2. Tie laps shall be 1/4 turn min. long.
3. Drilled shaft top and bottom elevations are tabulated on the Foundation Plan drawings.
4. Steel pipes for testing shall be placed as shown from the bottom of reinforcing cage to 1'-0" above the top of the construction joint of the drilled shaft. Pipes shall have a cap at the bottom end and a threaded cap at the top end. Pipes shall be securely tied to the reinforcing cage.
5. For limits of Structural Excavation and Structure Backfill, see ADOT Std. Dwgs. No. B-19.30 and B-19.40.
6. See specification for steel casing.

	NAME	DATE
DESIGN	A. Wojkiewicz	10-91
DRAWN	E. Fafitis	10-91
CHECKED	A. Seyedmadani	2-92

Parsons Brinckerhoff ® 100 YEARS

ARIZONA DEPARTMENT OF TRANSPORTATION
HIGHWAYS DIVISION
STRUCTURES SECTION
STA. 30+
RAMP S-E
FOUNDATION DETAILS

ROUTE | MILEPOST | 2343 STRUCTURE NO.
LOCATION: RED MOUNTAIN TRAFFIC INT.

NOT FOR CONSTRUCTION

DWG. NO. 5 7 24

___ OF ___

F.H.W.A. REGION	STATE	PROJECT NO.	SHEET NO.	TOTAL SHEETS	AS BUILT
9	ARIZ	RAM 600-1-525			
		IOIL MA 52			

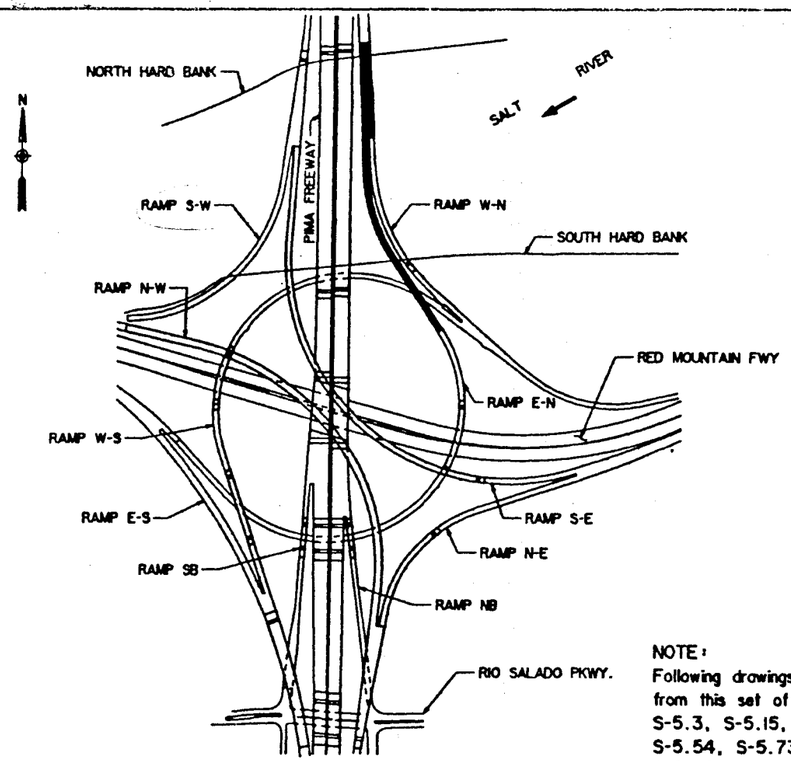

LOCATION PLAN

INDEX OF DRAWINGS

S-5.1	LOCATION PLAN, INDEX, QUANTITIES & NOTES
S-5.2	GENERAL PLAN
S-5.4 TO S-5.5	PLAN & SECTION
S-5.6	TYPICAL SECTIONS & PROFILES
S-5.7 TO S-5.14	FOUNDATION DATA
S-5.16 TO S-5.21	FOUNDATION PLAN & DETAILS
S-5.22 TO S-5.25	ABUTMENTS
S-5.26 TO S-5.43	PIERS
S-5.44, S-5.45	ARCHITECTURAL DETAILS
S-5.47 TO S-5.52	FRAMING PLAN
S-5.53 TO S-5.64	END DIAPHRAGMS
S-5.65 TO S-5.70	TYPICAL SECTIONS
S-5.71 TO S-5.72	DECK REINFORCEMENT
S-5.76	RESTRAINER DETAILS
S-5.77	P/T BOX DETAILS
S-5.80	FRAME DETAILS
S-5.81 TO S-5.83	GIRDER DETAILS
S-5.84	BEARING DETAILS
S-5.85 TO S-5.87	EXPANSION JOINTS
S-5.88	FMS PLATFORM
S-5.89	LIGHTING SUPPORT
S-5.90, S-5.91	DECK DRAINS
S-5.92	ABUT. #1 SLOPE PAVING

NOTE:
Following drawings have been removed from this set of plans:
S-5.3, S-5.15, S-5.27, S-5.41, S-5.42, S-5.46, S-5.54, S-5.73 to S-5.75, S-5.78, S-5.79, S-5.93.

LEGEND: (A / 1.7) — Letter Denoting Section or Detail; Dwg. No. Where Section or Detail Shown or Referred. S-series Unless Otherwise Noted. "-" if Shown on Same Sheet

DRAWINGS ARE NOT TO BE SCALED

GENERAL NOTES

Construction Specifications - Arizona Department of Transportation Standard Specifications for Road and Bridge Construction, 1990.
Design Specification - AASHTO Standard Specifications for Highway Bridges, 15th Ed. 1992 with 1993 Interim Specifications.
Dead Load - Dead load includes allowance of 25 lbs per square foot for future wearing surface and 5 lbs per square foot for top slab stay-in-place forms.
Loading Class - HS20-44 or Alternate Military loading with no reduction in load intensity for superstructure for multiple lane loadings.
Composite Design - Dead Load carried by AASHTO girders only.
Seismic Performance category A with vertical restrainers designed for 10 percent of dead load.
All concrete shall be class "S" unless otherwise noted.
Reinforcing steel shall conform to ASTM Specification A615, except reinforcing bars which are to be welded shall conform to A706.
All reinforcing shall be furnished as Grade 60.
All bend dimensions for reinforcing steel shall be out to out of bars.
All placement dimensions for reinforcing steel shall be to center of bars unless otherwise noted. Use standard hooks unless otherwise noted.
Concrete clear cover shown for reinforcing steel is in accordance with AASHTO criteria, unless otherwise noted.
Where clear cover is not shown, use 2".

Stresses:

Concrete Superstructure

P/T Box Girder except barriers	f'c =	5,000 psi
Deck slab over AASHTO girders	f'c =	4,500 psi
	f c =	1,400 psi
Abutments, Piers and Drilled Shafts	f'c =	3,500 psi
AASHTO Girders	f'c =	See Dwg. No. S-5.81
Barrier and all other Class "S" Concrete ...	f'c =	3,000 psi

Steel

Grade 60 Transverse Deck reinforcing steel	fs =	20,000 psi
Prestressing steel	f's =	270,000 psi
All other Grade 60 reinforcing steel ...	fs =	24,000 psi

Barriers shall be constructed after post-tensioning, but may be constructed prior to falsework removal.
Slip forming of barriers is not permitted.
Chamfer all exposed corners 3/4" as per Std. B-19.10 unless otherwise noted.
Inventory Rating (Working Stress Method) HS20.1

Operating Rating (Working Stress Method) HS30.5

A.D.O.T. Structures Standards, 1992 Edition B-18.10, B-19.10, B-19.11, B-19.12, B-19.13, B-19.30, B-19.40 and B-21.18.

APPROXIMATE QUANTITIES

ITEM	STRUCT. EXC.	STRUCT. BACKFILL	CLASS "S" CONCRETE			REINFORCING STEEL	(1)	DECK JT. ASSEMBLY	(2)	DRILLED SHAFT						AASHTO TYPE III GIRDERS	BEARINGS	(3)	BRIDGE BARRIER	APPROACH SLABS	ANCHOR SLABS	SLOPE PAVING
										60" DIA.		96" DIA.		120" DIA.								
	C.Y.	C.Y.	C.Y.	C.Y.	C.Y.	LBS.	L.S.	L.F.	L.S.	NO.	L.F	NO.	L.F.	NO.	L.F	L.F.	EA.	EA.	L.F.	S.F.	S.F.	S.Y.
Abutment #1	217	875	163			22820		28		3	178						4					1100
Pier #6			140			39495																
Pier #7	100		133			32365																
Pier #8			151			27440		28						1	107		4	8				
Pier #9			143			27020								1	104							
Pier #10			137			26220								1	104							
Pier #11			132			25320		28						1	104			8				
Pier #12			126			25125								1	104							
Pier #13			277			42725		28				3	330					18				
Pier #14			208			42010						2	260									
Pier #15			202			37645						2	262					18				
Abutment #2	220	1695	174			26100		53				2	255					8				
Superstructure				1673	992	656030	1	*56	1													
Bridge Barrier																			5434			
Approach Slabs																				1264		
Anchor Slabs																					3612	
Total	537	2570	1986	1673	992	1030315	1	221	1	3	178	9	1107	5	523	6158	8**	60	5434	1264	3612	1100
As-Built Total																						

(1) = PRESTRESSING OF CIP CONCRETE
(2) = DECK DRAIN ASSEMBLY
(3) = VERTICAL, EXPANSION RESTRAINERS
* See Dwg. No. S-5.86 for Breakdown
** See Dwg. No. S-5.84 for Breakdown

	NAME	DATE	ARIZONA DEPARTMENT OF TRANSPORTATION HIGHWAYS DIVISION STRUCTURES SECTION	PRELIMINARY 95% Review NOT FOR CONSTRUCTION OR RECORDING
DESIGN	D.Church/RBB	12-91		
DRAWN	JAD/EF	2/94		
CHECKED	W.Elliott/ASW	2/94	STA. 46+ RAMP E-N LOC.PLAN.INDEX QTY. & NOTES	
Parsons Brinckerhoff ® 100 YEARS				
ROUTE	MILEPOST	2346 STRUCTURE NO.	LOCATION RED MOUNTAIN TRAFFIC INT.	DWG. NO. S-5.1

TRACS NO. H 2414 01 C

F.H.W.A. REGION	STATE	PROJECT NO.	SHEET NO.	TOTAL SHEETS	AS BUILT
9	ARIZ	RAM 600-1-525			
		IOIL MA 52			

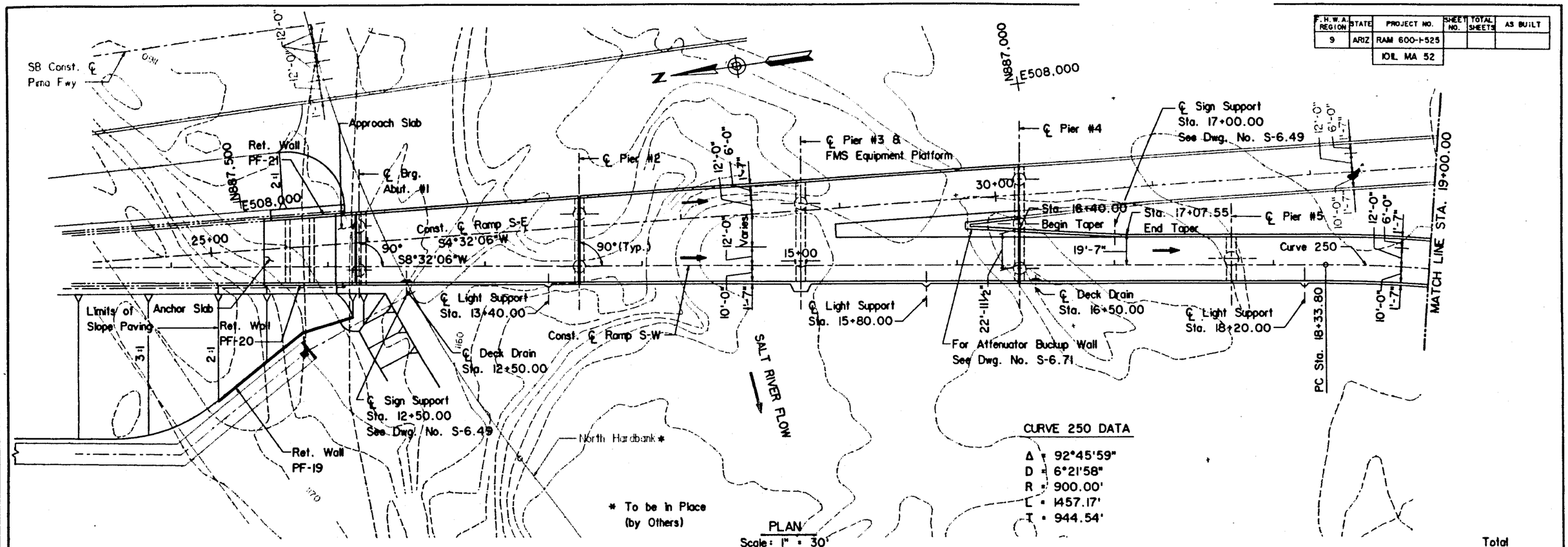

LONGITUDINAL SECTION ALONG CONST. ℄ RAMP S-W
Scale: 1" = 30'

	NAME	DATE
DESIGN	A.Seyedmadani	9-90
DRAWN	J.DeBusso/E.F.	12-90
CHECKED	A.S.W/D.F.G	12-94

Parsons Brinckerhoff ® 100 YEARS

ROUTE | MILEPOST | 2344 STRUCTURE NO.

ARIZONA DEPARTMENT OF TRANSPORTATION
HIGHWAYS DIVISION
STRUCTURES SECTION

STA. 11+
RAMP S-W
PLAN AND SECTION

LOCATION
RED MOUNTAIN TRAFFIC INT.

PRELIMINARY
95%
Review
NOT FOR CONSTRUCTION OR RECORDING

DWG. NO. S-6.3

TRACS NO. H 2414 01 C

172 OF 266

EXHETTA 2017: 1430 B1SP3A B1SP3A B1SP3A 04JAN00-17:01:00 STRUC Plot Type = SUBMITTAL

F.H.W.A. REGION	STATE	PROJECT NO.	SHEET NO.	TOTAL SHEETS	AS BUILT
9	ARIZ	RAM 600-I-525			
		101L MA 52			

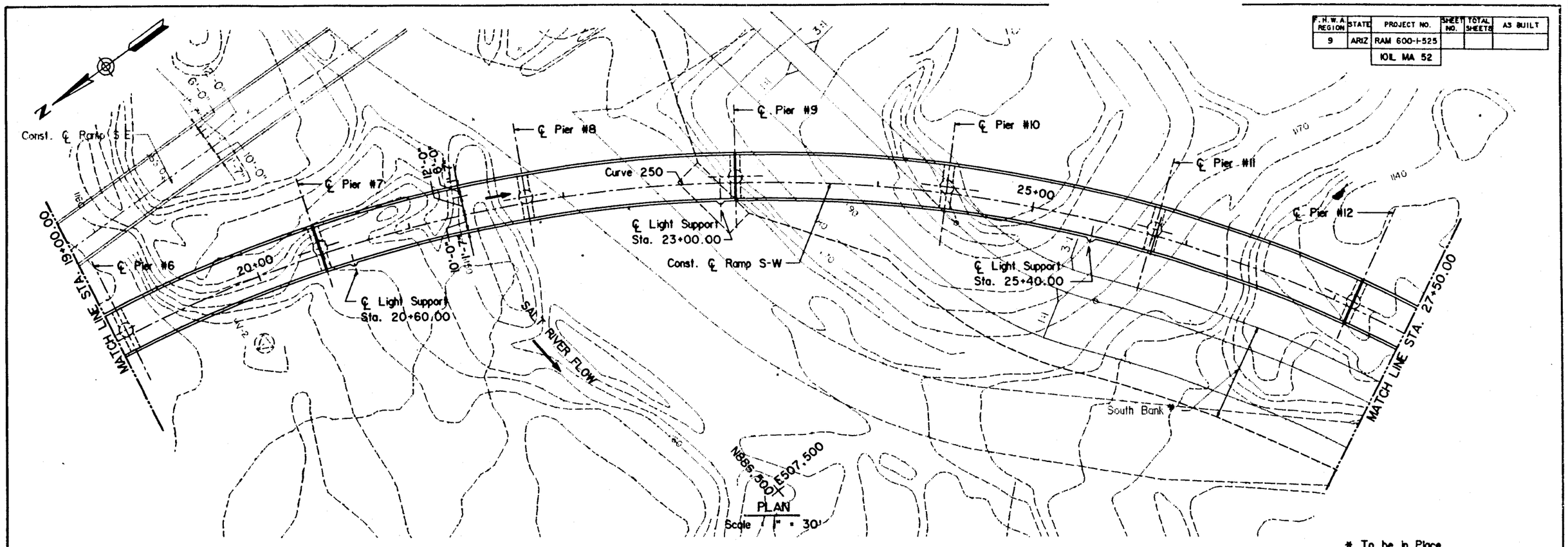

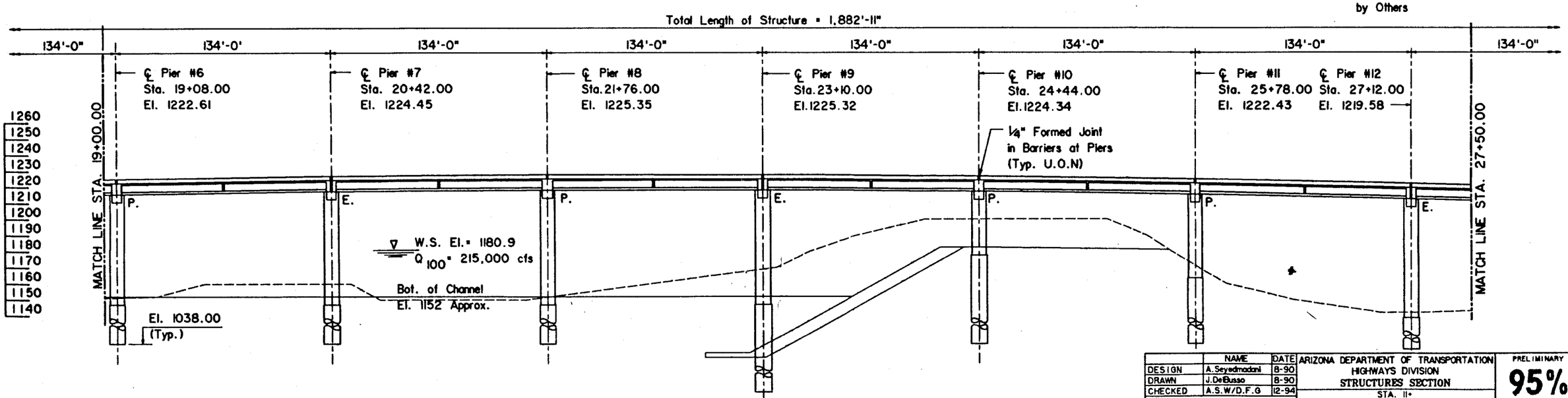

LONGITUDINAL SECTION ALONG CONST. ℄ RAMP S-W

Scale: 1" = 30'

	NAME	DATE
DESIGN	A. Seyedmadani	8-90
DRAWN	J. DeBusso	8-90
CHECKED	A.S.W/D.F.G	12-94

Parsons Brinckerhoff ® 100 YEARS

ARIZONA DEPARTMENT OF TRANSPORTATION
HIGHWAYS DIVISION
STRUCTURES SECTION

STA. II+
RAMP S-W
PLAN AND SECTION

LOCATION
RED MOUNTAIN TRAFFIC INT.

ROUTE | MILEPOST | 2344 STRUCTURE NO.

PRELIMINARY
95%
Review
NOT FOR CONSTRUCTION OR RECORDING

DWG. NO. S-6.4

TRACS NO. H 2414 01 C

CRIETTA 3017: 01P30 01P30 01P30 04JAN06-17.01.00 STRUC Plot Type = SUBMITTAL

F.H.W.A. REGION	STATE	PROJECT NO.	SHEET NO.	TOTAL SHEETS	AS BUILT
9	ARIZ	RAM 600-1-525			
		101L MA 52			

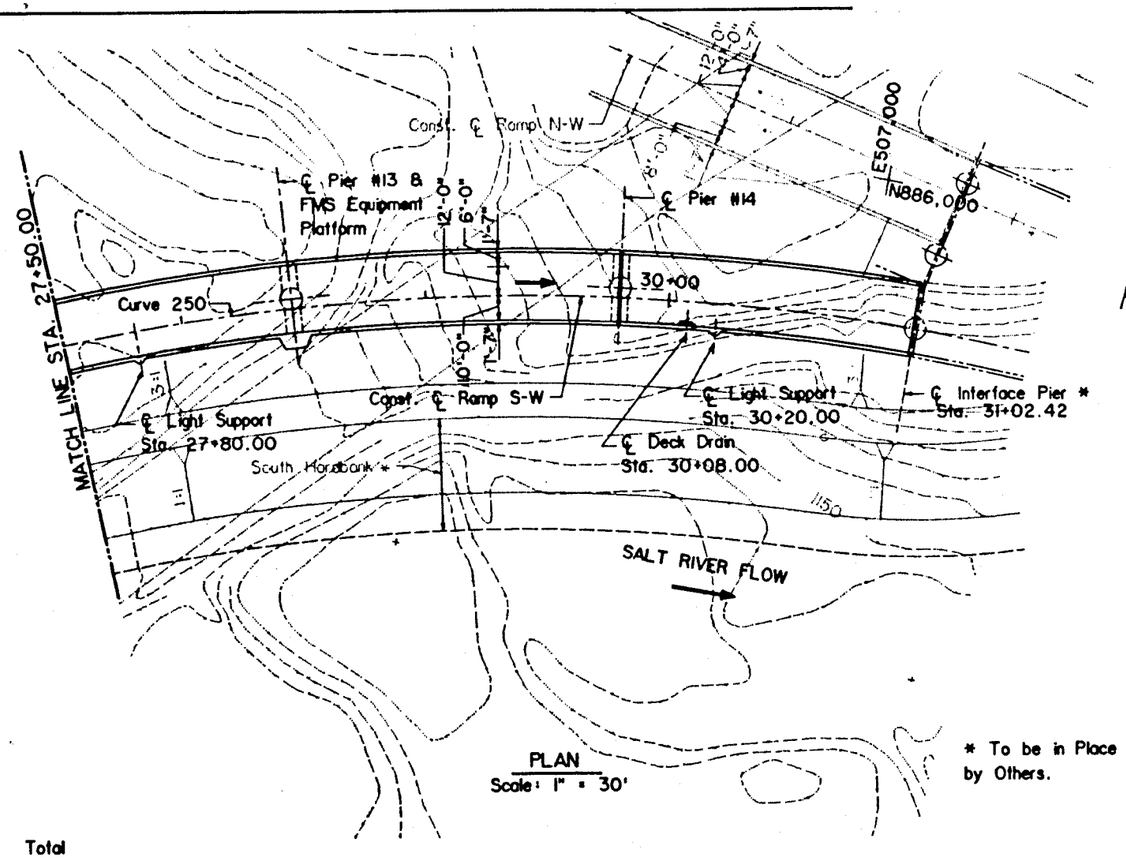

PLAN
Scale: 1" = 30'

* To be in Place by Others.

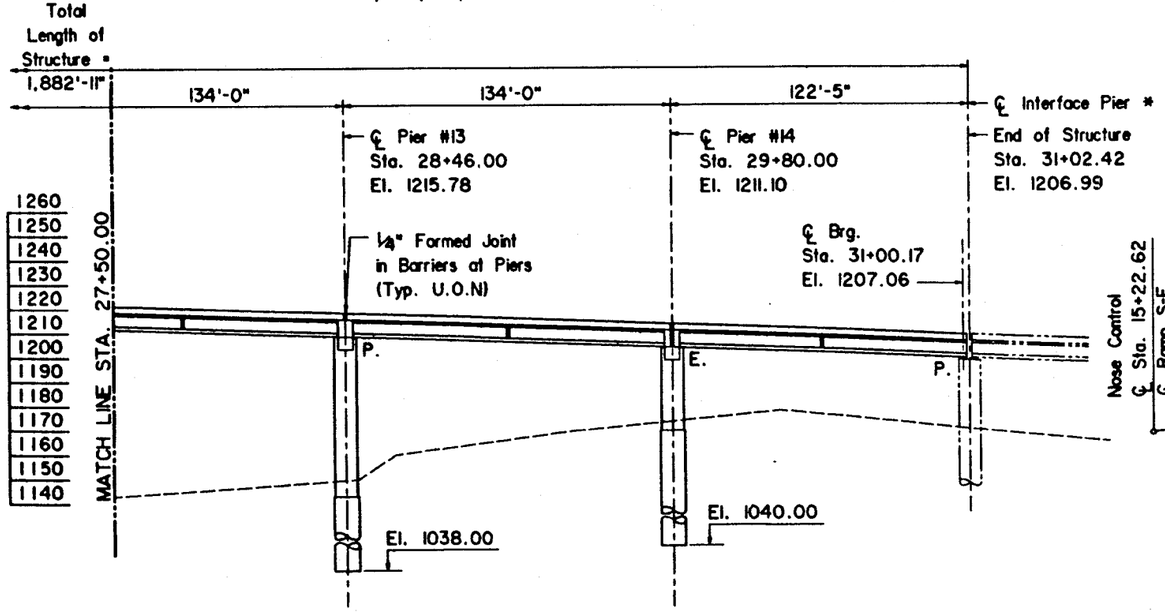

LONGITUDINAL SECTION ALONG CONST. ℄ RAMP S-W
Scale: 1" = 30'

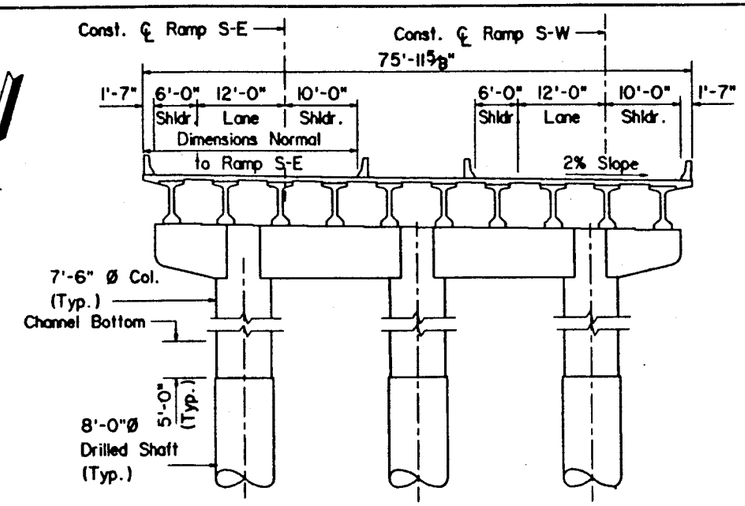

SECTION AT PIER #4
Scale: 1" = 10'

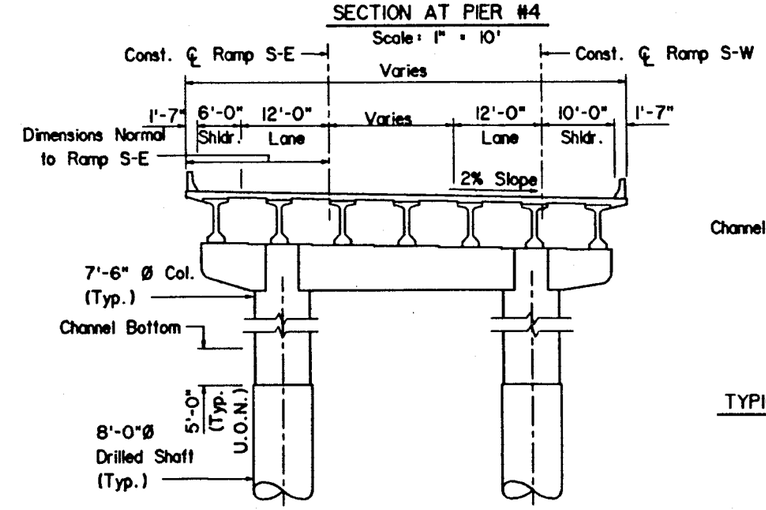

TYPICAL SECTION AT PIER #2 THRU #3
Scale: 1" = 10'

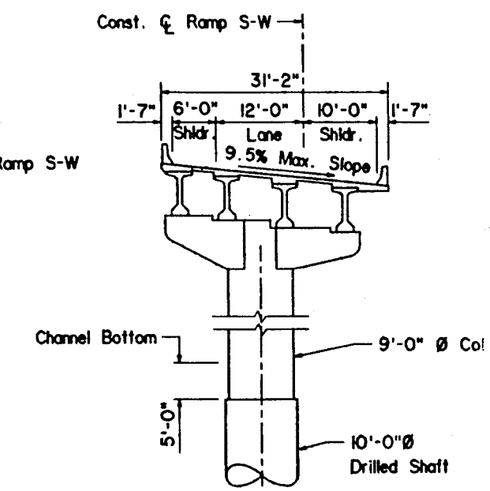

TYPICAL SECTION AT PIER #5 THRU PIER #
Scale: 1" = 10'

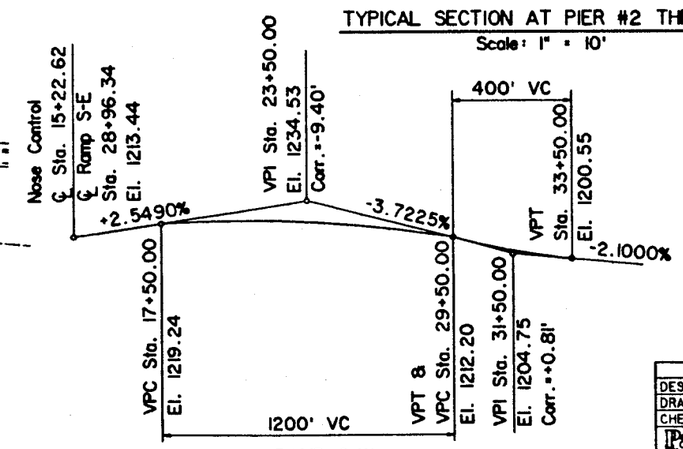

RAMP S-W
CONST. ℄ AND PROFILE GRADE

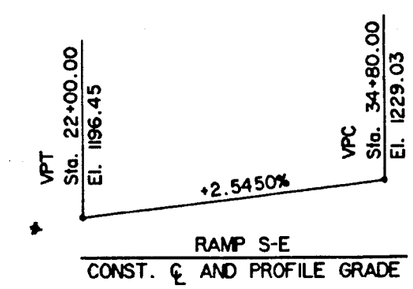

RAMP S-E
CONST. ℄ AND PROFILE GRADE

	NAME	DATE
DESIGN	A. Seyedmadani	8-90
DRAWN	J. DeBusso	8-90
CHECKED	A.S.W/D.F.G	12-94

Parsons Brinckerhoff ® 100 YEARS

ARIZONA DEPARTMENT OF TRANSPORTATION
HIGHWAYS DIVISION
STRUCTURES SECTION

STA. 11+
RAMP S-W
PLAN AND SECTIONS

ROUTE | MILEPOST | 2344 STRUCTURE NO.
LOCATION: RED MOUNTAIN TRAFFIC INT.

PRELIMINARY 95% Review
NOT FOR CONSTRUCTION OR RECORDING

DWG. NO. S-

TRACS NO. H 2414 01 C

74 OF 3

ERIETTA 2017: 01SP06 01SP0C 01SP0C 04JAN06-17.02.00 STRUC Plot Type = SUBMITTAL

F.H.W.A. REGION	STATE	PROJECT NO.	SHEET NO.	TOTAL SHEETS	AS BUILT
9	ARIZ	RAM 600-1-525			
		10IL MA 52			

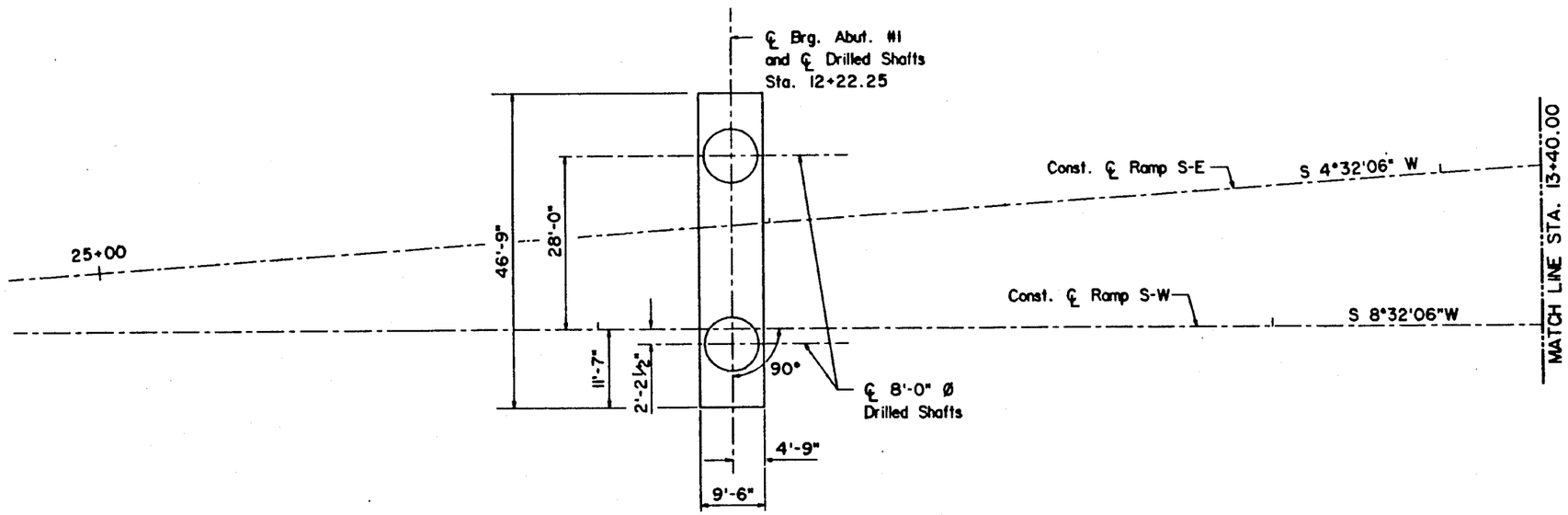

FOUNDATION PLAN
Scale: 1" = 10'

	ABUTMENT #1
TOP OF SHAFT EL.	1176.5
BOT. OF SHAFT EL.	1050.0
CAPACITY (kips)	1500.0

	NAME	DATE
DESIGN	W.V.E./R.B.	12-94
DRAWN	E.Faffits	12-94
CHECKED	A.Seyedmadani	12-94

Parsons Brinckerhoff ® 100 YEARS

ARIZONA DEPARTMENT OF TRANSPORTATION
HIGHWAYS DIVISION
STRUCTURES SECTION

STA. 11+
RAMP S-W
FOUNDATION PLAN - SHEET 1

LOCATION
RED MOUNTAIN TRAFFIC INT.

ROUTE | MILEPOST | 2344 STRUCTURE NO.

PRELIMINARY
95%
Review
NOT FOR CONSTRUCTION OR RECORDING

DWG. NO. S-6.12

TRACS NO. H 2414 01 C

181 OF 266

DRETTA 3017: [redacted] DISWP: DISWP: DISWP: 04JAN95-15:40:00 STRUC Plot Type = SUBMITTAL

F.H.W.A. REGION	STATE	PROJECT NO.	SHEET NO.	TOTAL SHEETS	AS BUILT
9	ARIZ	RAM 600-1-525			
		IOIL MA 52			

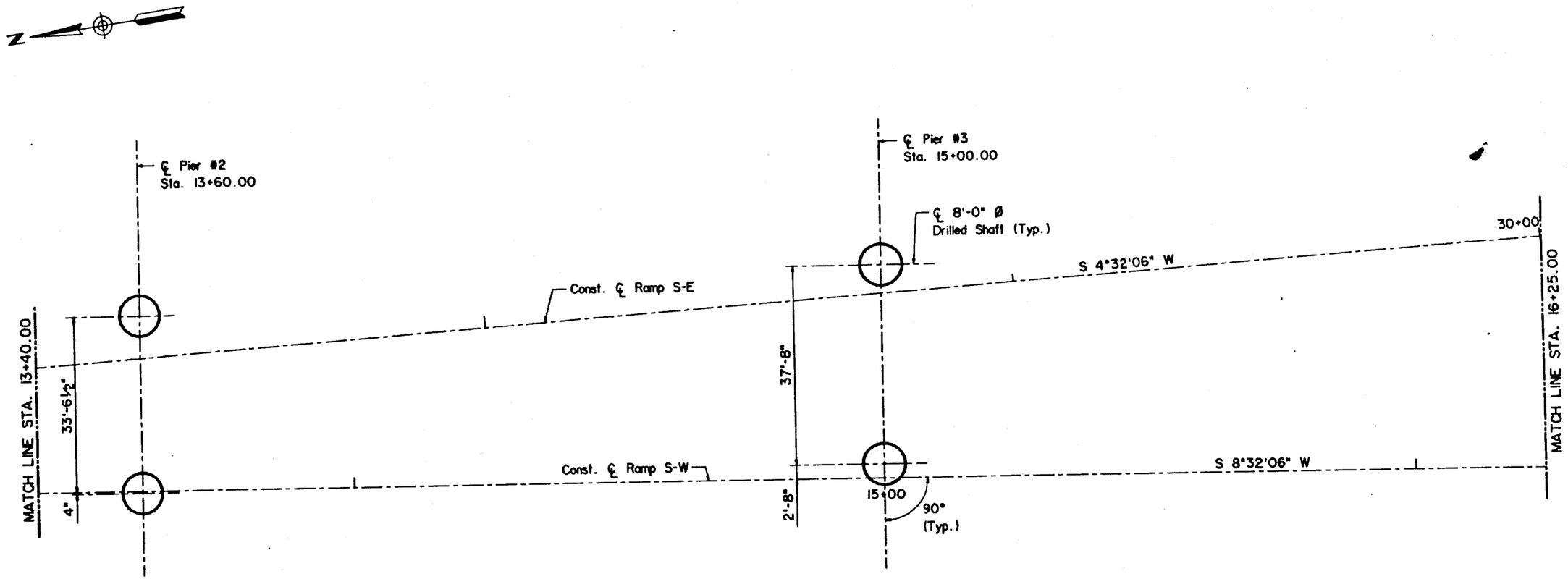

FOUNDATION PLAN
Scale: 1" = 10'

	PIER #2	PIER #3
TOP OF SHAFT EL.	1147.00	1147.00
BOT. OF SHAFT EL.	1021.00	1011.00
CAPACITY kips	2,700	3,060

	NAME	DATE
DESIGN	W.Elliott	8-91
DRAWN	E.Fafitis	8-91
CHECKED	A.Seyedmadani	12-94

Parsons Brinckerhoff ® 100 YEARS

ARIZONA DEPARTMENT OF TRANSPORTATION
HIGHWAYS DIVISION
STRUCTURES SECTION

STA. 11+
RAMP S-W
FOUNDATION PLAN - SHEET 2

LOCATION
RED MOUNTAIN TRAFFIC INT.

PRELIMINARY
95%
Review
NOT FOR CONSTRUCTION OR RECORDING

DWG. NO. S-6.13

ROUTE	MILEPOST	STRUCTURE NO.
		2344

TRACS NO. H 2414 01 C

182 OF 266

ERNETTA 2017: 0:00 01SEP22 01SEP22 01SEP22 04JAN06-16.40.10 STRUC

Plot Type = SUBMITTAL

F.H.W.A. REGION	STATE	PROJECT NO.	SHEET NO.	TOTAL SHEETS	AS BUILT
9	ARIZ	RAM 600-I-525			
		101L MA 52			

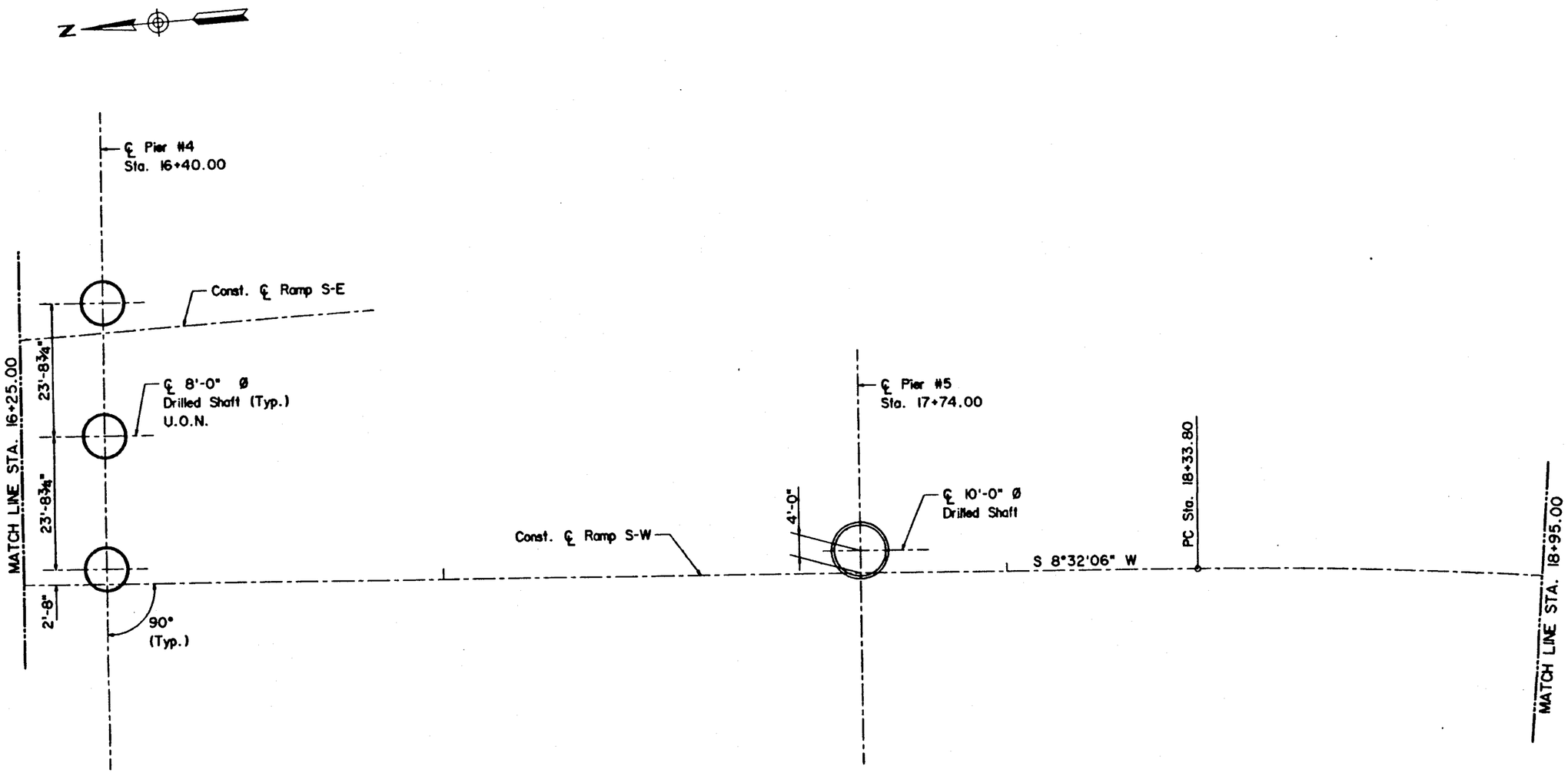

	PIER #4	PIER #5
TOP OF SHAFT EL.	1147.00	1147.00
BOT. OF SHAFT EL.	1025.00	1038.00
CAPACITY kips	2,580	2,640

FOUNDATION PLAN
Scale : 1" = 10'

	NAME	DATE
DESIGN	A.S.W./W.V.E.	8-91
DRAWN	E.Fafitis	8-91
CHECKED	A.Seyedmadani	12-94

Parsons Brinckerhoff ® 100 YEARS

ROUTE | MILEPOST | 2344 STRUCTURE NO.

ARIZONA DEPARTMENT OF TRANSPORTATION
HIGHWAYS DIVISION
STRUCTURES SECTION

STA. 11+
RAMP S-W
FOUNDATION PLAN - SHEET 3

LOCATION
RED MOUNTAIN TRAFFIC INT.

PRELIMINARY
95%
Review
NOT FOR CONSTRUCTION OR RECORDING

DWG. NO. S-6.14

TRACS NO. H 2414 01 C

183 OF 266

Plot Type = SUBMITTAL

F.H.W.A. REGION	STATE	PROJECT NO.	SHEET NO.	TOTAL SHEETS	AS BUILT
9	ARIZ	RAM 600-1-525			
		10IL MA 52			

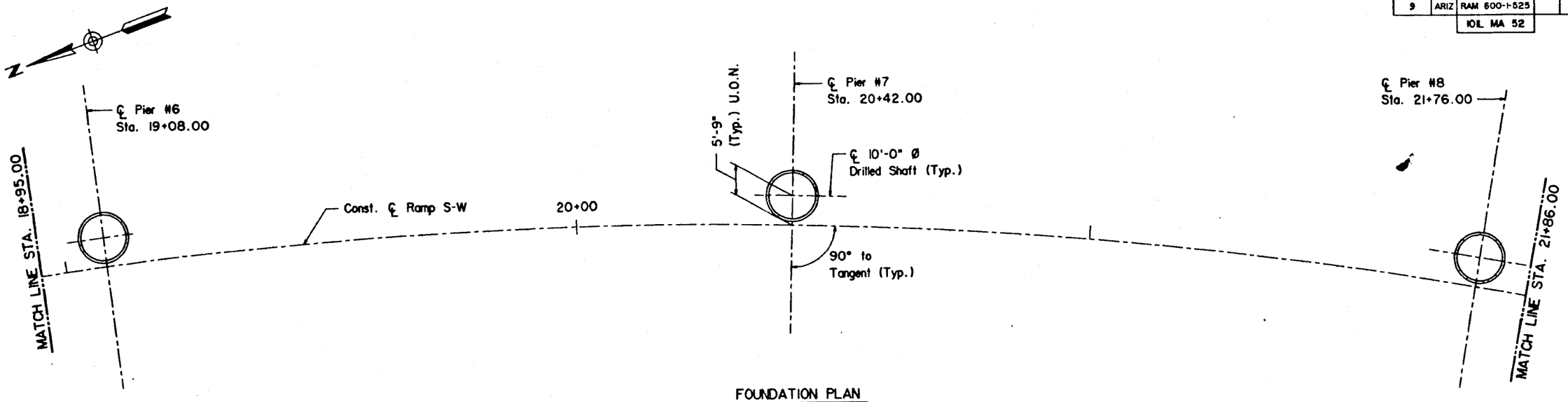

FOUNDATION PLAN
Scale : 1" = 10'

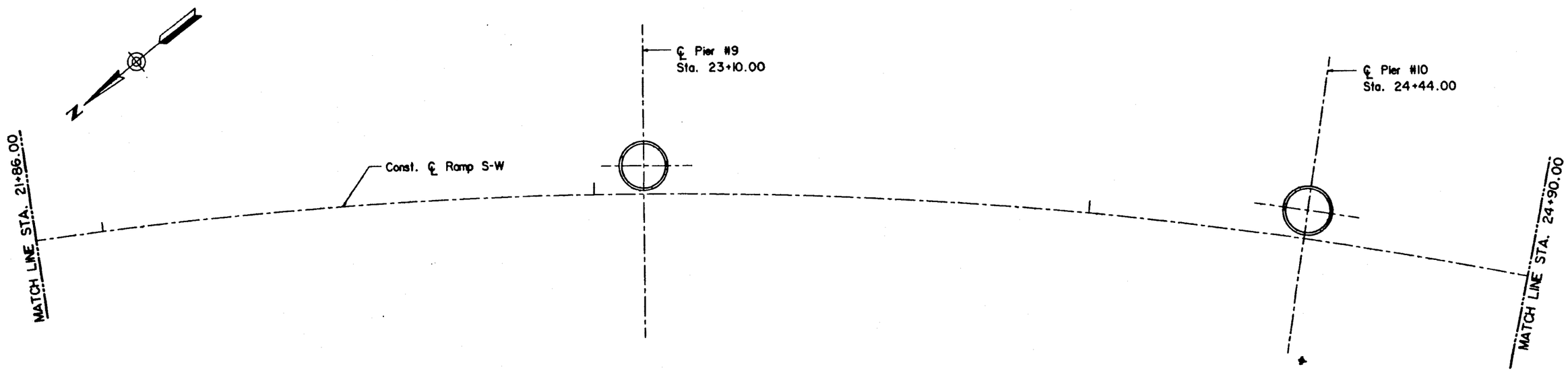

	PIER #6,7,8,9	PIER #10
TOP OF SHAFT EL.	1147.00	1181.00
BOT. OF SHAFT EL.	1038.00	1038.00
CAPACITY kips	2,640	2,640

FOUNDATION PLAN
Scale : 1" = 10"

	NAME	DATE
DESIGN	A. Wojakiewicz	8-91
DRAWN	E. Fofitis	8-91
CHECKED	A. Seyedmadani	12-94

Parsons Brinckerhoff ® 100 YEARS

ARIZONA DEPARTMENT OF TRANSPORTATION
HIGHWAYS DIVISION
STRUCTURES SECTION

STA. 11+
RAMP S-W
FOUNDATION PLAN - SHEET 4

LOCATION
RED MOUNTAIN TRAFFIC INT.

ROUTE | MILEPOST | 2344 STRUCTURE NO.

PRELIMINARY
95%
Review
NOT FOR CONSTRUCTION OR RECORDING

DWG. NO. S

TRACS NO. H 2414 01 C

184 OF

CRETTA 2017: [redacted] 01WP4 01WP4 01WP4 04JAN00-10:40:50 STRUC

Plot Type = SUBMITTAL

F.H.W.A. REGION	STATE	PROJECT NO.	SHEET NO.	TOTAL SHEETS	AS BUILT
9	ARIZ	RAM 600-1-525			
		101L MA 52			

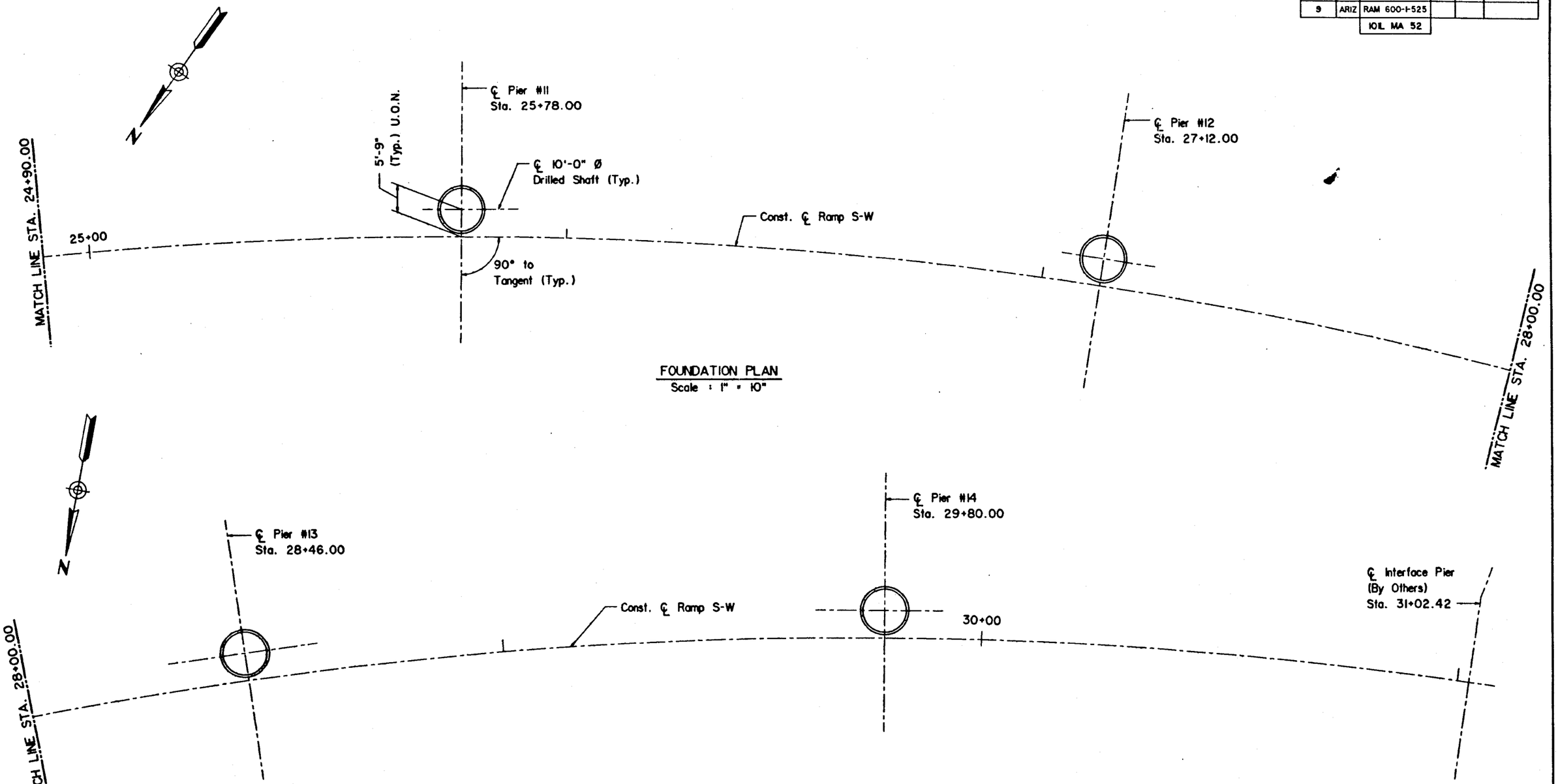

FOUNDATION PLAN
Scale : 1" = 10"

FOUNDATION PLAN
Scale : 1" = 10'

	PIER #11	PIER #12	PIER #13	PIER #14
TOP OF SHAFT EL.	1165.00	1162.00	1160.00	1170.00
BOT. OF SHAFT EL.	1038.00	1038.00	1038.00	1040.00
CAPACITY kips	2,640	2,640	2,640	2,400

	NAME	DATE
DESIGN	A. Wojckiewicz	8-91
DRAWN	E. Fatifis	8-91
CHECKED	A. Seyedmadani	12-94

Parsons Brinckerhoff ® 100 YEARS

ARIZONA DEPARTMENT OF TRANSPORTATION
HIGHWAYS DIVISION
STRUCTURES SECTION

STA. 11+
RAMP S-W
FOUNDATION PLAN - SHEET 5

LOCATION
RED MOUNTAIN TRAFFIC INT.

ROUTE | MILEPOST | 2344 STRUCTURE NO.

PRELIMINARY
95%
Review
NOT FOR CONSTRUCTION OR RECORDING

DWG. NO. S-6.16

TRACS NO. H 2414 01 C

CRETTA 2017: BIFPS BIFPS BIFPS BIFPS 04JAN96-10.50.00 STRUC Plot Type = SUBMITTAL

F.H.W.A. REGION	STATE	PROJECT NO.	SHEET NO.	TOTAL SHEETS	AS BUILT
9	ARIZ	RAM 600-1-525			
		101L MA 52			

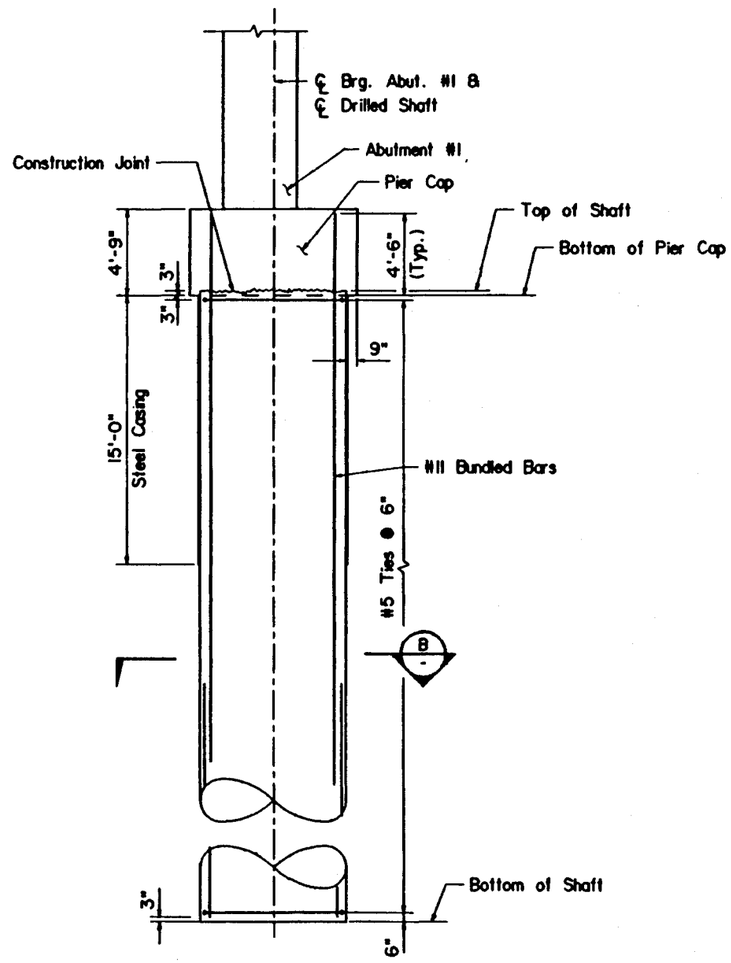

ABUT. #1 DRILLED SHAFT DETAIL
Scale: 1/4" = 1'-0"

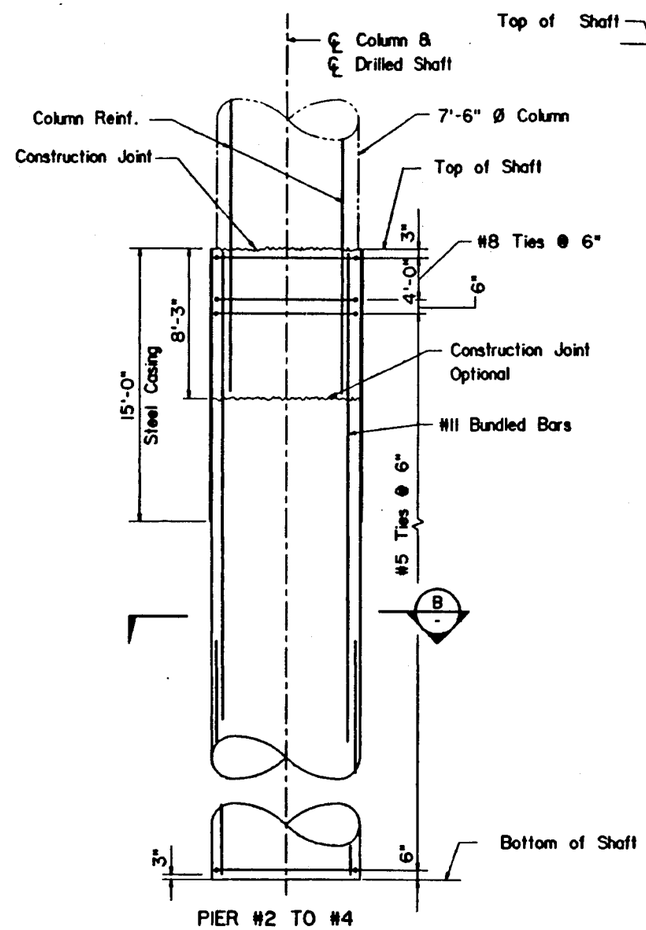

PIER #2 TO #4
DRILLED SHAFT DETAIL
Scale : 1/4" = 1'-0"

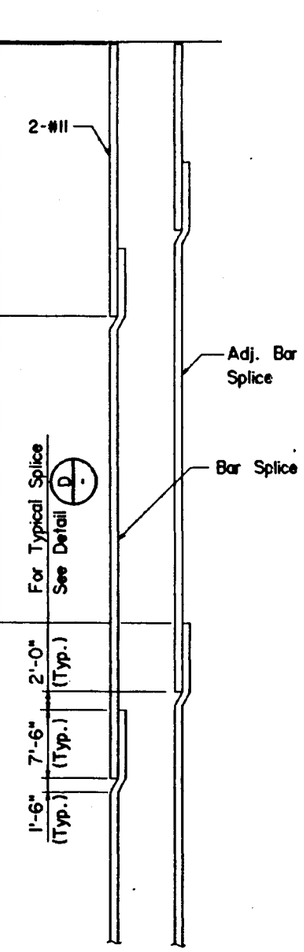

RESTRICTION ON SPLICE
ABUTMENT #1 TO PIER #14
N.T.S.

DRILLED SHAFT NOTES:

1. Once concrete is poured in a drilled shaft no new drilling is permitted within 4 dia. measured center to center, until 48 hours after the concreting of the drilled shaft.
2. Tie laps shall be 1/4 turn min. in length. Laps for Spirals shall be 1/2 turn min. in length.
3. Drilled shaft top and bottom elevations are tabulated on the Foundation Plan drawings.
4. Steel pipes for testing shall be placed as shown from the bottom of reinforcing cage to 1'-0" above the top of the Abutment drilled shaft and 1'-0" above the construction joint in the Pier drilled shaft. Pipes shall have a cap at the bottom end and a threaded cap at the top end. Pipes shall be securely tied to the reinforcing cage.
5. For limits of Structural Excavation and Structure Backfill, see ADOT Std. Dwgs. No. B-19.30 and B-19.40.
6. See Specifications for Steel Casing.

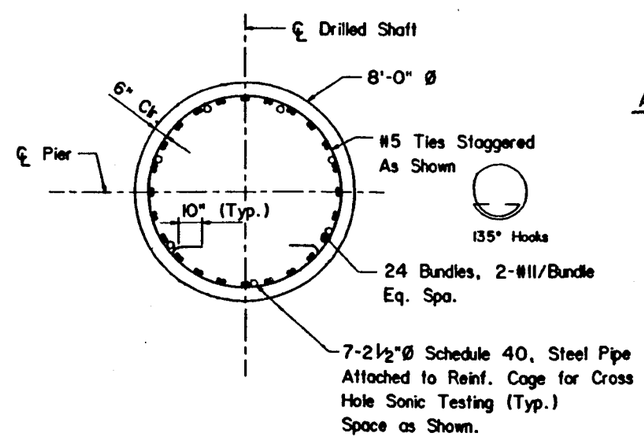

SECTION B
Scale: 3/8" = 1'-0"

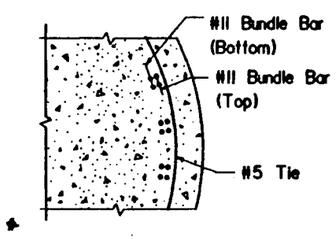

TYPICAL SPLICE DETAIL D
N.T.S.

	NAME	DATE
DESIGN	A. Wojakiewicz	9-91
DRAWN	E. Fafitis	9-91
CHECKED	A. Seyedmadani	12-94

Parsons Brinckerhoff ® 100 YEARS

ARIZONA DEPARTMENT OF TRANSPORTATION
HIGHWAYS DIVISION
STRUCTURES SECTION

STA. 11+
RAMP S-W
FOUNDATION DETAILS

LOCATION: RED MOUNTAIN TRAFFIC INT.

ROUTE | MILEPOST | 2344 STRUCTURE NO.

PRELIMINARY
95%
Review
NOT FOR CONSTRUCTION OR RECORDING

DWG. NO. S-8.17

TRACS NO. H 2414 01 C

186 OF 261

ERICTA 3017: [illegible] Plot Type = SUBMITTAL

F.H.W.A. REGION	STATE	PROJECT NO.	SHEET NO.	TOTAL SHEETS	AS BUILT
9	ARIZ	RAM 600-1-525			
		IOIL MA 52			

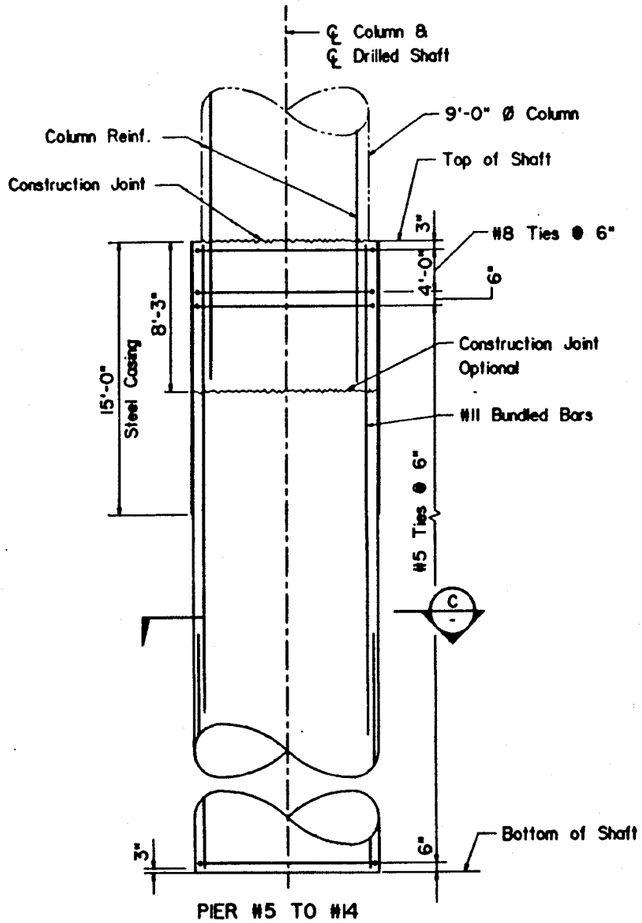

PIER #5 TO #14
DRILLED SHAFT DETAIL
Scale : 1/4" = 1'-0"

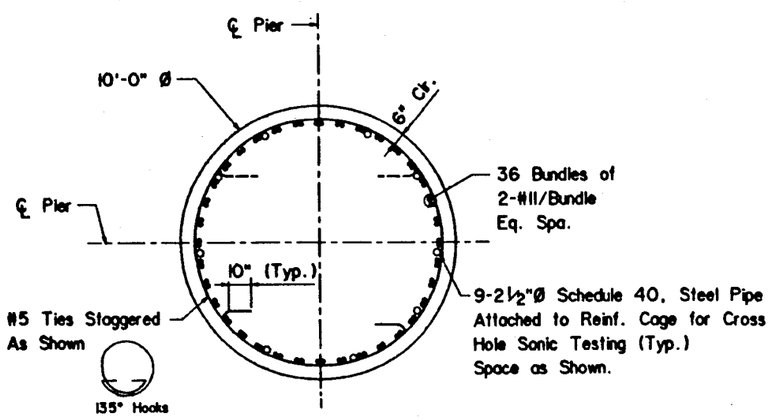

SECTION C
Scale: 3/8" = 1'-0"

NOTE:
For Notes and Splice Restriction See
Dwg. No. S-6.17

	NAME	DATE
DESIGN	A. Wojskiewicz	9-91
DRAWN	E. Fafitis	9-91
CHECKED	A. Seyedmadani	12-94

Parsons Brinckerhoff ® 100 YEARS

ARIZONA DEPARTMENT OF TRANSPORTATION
HIGHWAYS DIVISION
STRUCTURES SECTION

STA. 11+
RAMP S-W
FOUNDATION DETAILS

LOCATION
RED MOUNTAIN TRAFFIC INT.

ROUTE | MILEPOST | 2344 STRUCTURE NO.

PRELIMINARY
95%
Review
NOT FOR CONSTRUCTION OR RECORDING

DWG. NO. S-6.18

TRACS NO. H 2414 01 C

187 OF 266

Plot Type = SUBMITTAL

F.H.W.A. REGION	STATE	PROJECT NO.	SHEET NO.	TOTAL SHEETS	AS BUILT
9	ARIZ	RAM 600-1-525			
		IOIL MA 52			

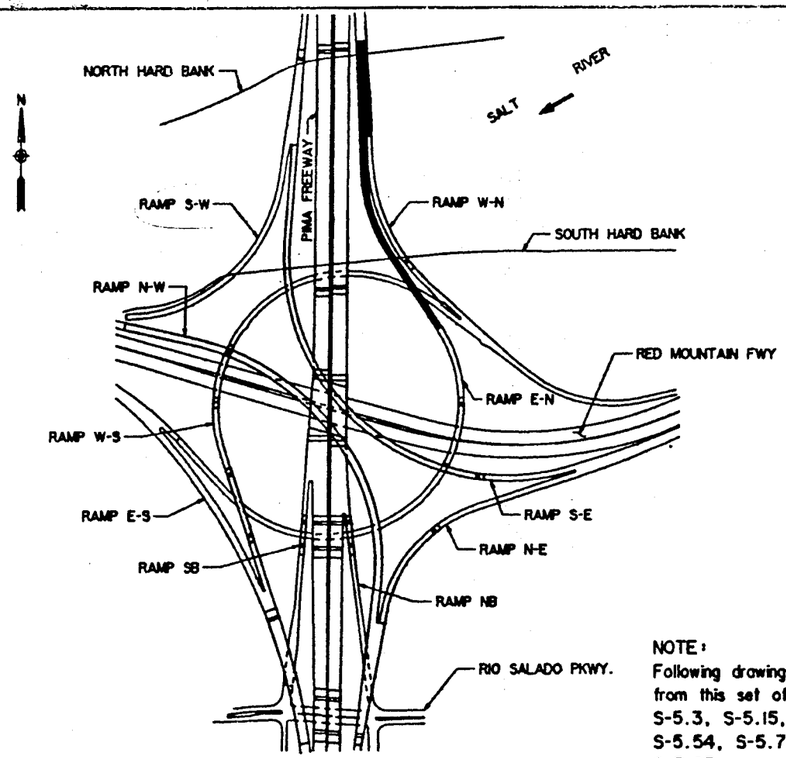

LOCATION PLAN

INDEX OF DRAWINGS

S-5.1	LOCATION PLAN, INDEX, QUANTITIES & NOTES
S-5.2	GENERAL PLAN
S-5.4 TO S-5.5	PLAN & SECTION
S-5.6	TYPICAL SECTIONS & PROFILES
S-5.7 TO S-5.14	FOUNDATION DATA
S-5.16 TO S-5.21	FOUNDATION PLAN & DETAILS
S-5.22 TO S-5.25	ABUTMENTS
S-5.26 TO S-5.43	PIERS
S-5.44, S-5.45	ARCHITECTURAL DETAILS
S-5.47 TO S-5.52	FRAMING PLAN
S-5.53 TO S-5.64	END DIAPHRAGMS
S-5.65 TO S-5.70	TYPICAL SECTIONS
S-5.71 TO S-5.72	DECK REINFORCEMENT
S-5.76	RESTRAINER DETAILS
S-5.77	P/T BOX DETAILS
S-5.80	FRAME DETAILS
S-5.81 TO S-5.83	GIRDER DETAILS
S-5.84	BEARING DETAILS
S-5.85 TO S-5.87	EXPANSION JOINTS
S-5.88	FMS PLATFORM
S-5.89	LIGHTING SUPPORT
S-5.90, S-5.91	DECK DRAINS
S-5.92	ABUT. #1 SLOPE PAVING

NOTE:
Following drawings have been removed from this set of plans:
S-5.3, S-5.15, S-5.27, S-5.41, S-5.42, S-5.46, S-5.54, S-5.73 to S-5.75, S-5.78, S-5.79, S-5.93.

LEGEND: (A-/1.7) — Letter Denoting Section or Detail; Dwg. No. Where Section or Detail Shown or Referred. S-series Unless Otherwise Noted. "-" if Shown on Same Sheet

DRAWINGS ARE NOT TO BE SCALED

GENERAL NOTES

Construction Specifications - Arizona Department of Transportation Standard Specifications for Road and Bridge Construction, 1990.
Design Specification - AASHTO Standard Specifications for Highway Bridges, 15th Ed. 1992 with 1993 Interim Specifications.
Dead Load - Dead load includes allowance of 25 lbs per square foot for future wearing surface and 5 lbs per square foot for top slab stay-in-place forms.
Loading Class - HS20-44 or Alternate Military loading with no reduction in load intensity for superstructure for multiple lane loadings.
Composite Design - Dead Load carried by AASHTO girders only.
Seismic Performance category A with vertical restrainers designed for 10 percent of dead load.
All concrete shall be class "S" unless otherwise noted.
Reinforcing steel shall conform to ASTM Specification A615, except reinforcing bars which are to be welded shall conform to A706.
All reinforcing shall be furnished as Grade 60.
All bend dimensions for reinforcing steel shall be out to out of bars.
All placement dimensions for reinforcing steel shall be to center of bars unless otherwise noted. Use standard hooks unless otherwise noted.
Concrete clear cover shown for reinforcing steel is in accordance with AASHTO criteria, unless otherwise noted.
Where clear cover is not shown, use 2".

Stresses:

Concrete Superstructure

P/T Box Girder except barriers	f'c =	5,000 psi
Deck slab over AASHTO girders	f'c =	4,500 psi
	f c =	1,400 psi
Abutments, Piers and Drilled Shafts	f'c =	3,500 psi
AASHTO Girders	f'c =	See Dwg. No. S-5.81
Barrier and all other Class "S" Concrete ...	f'c =	3,000 psi

Steel

Grade 60 Transverse Deck reinforcing steel	fs =	20,000 psi
Prestressing steel	f's =	270,000 psi
All other Grade 60 reinforcing steel ...	fs =	24,000 psi

Barriers shall be constructed after post-tensioning, but may be constructed prior to falsework removal.
Slip forming of barriers is not permitted.
Chamfer all exposed corners 3/4" as per Std. B-19.10 unless otherwise noted.
Inventory Rating (Working Stress Method) HS20.1

Operating Rating (Working Stress Method) HS30.5

A.D.O.T. Structures Standards, 1992 Edition B-18.10, B-19.10, B-19.11, B-19.12, B-19.13, B-19.30, B-19.40 and B-21.18.

APPROXIMATE QUANTITIES

ITEM	STRUCT. EXC.	STRUCT. BACKFILL	CLASS "S" CONCRETE			REINFORCING STEEL	(1)	DECK JT. ASSEMBLY	(2)	DRILLED SHAFT						AASHTO TYPE III GIRDERS	BEARINGS	(3)	BRIDGE BARRIER	APPROACH SLABS	ANCHOR SLABS	SLOPE PAVING
										60" DIA.		96" DIA.		120" DIA.								
			f'c=3,500psi	f'c=4,500psi	f'c=5,000psi					NO.	L.F	NO.	L.F.	NO.	L.F							
	C.Y.	C.Y.	C.Y.	C.Y.	C.Y.	LBS.	L.S.	L.F.	L.S.							L.F.	EA.	EA.	L.F.	S.F.	S.F.	S.Y.
Abutment #1	217	875	163			22820		28		3	178						4					1100
Pier #6			140			39495																
Pier #7	100		133			32365																
Pier #8			151			27440		28						1	107		4	8				
Pier #9			143			27020								1	104							
Pier #10			137			26220								1	104							
Pier #11			132			25320		28						1	104			8				
Pier #12			126			25125								1	104							
Pier #13			277			42725		28				3	330					18				
Pier #14			208			42010						2	260									
Pier #15			202			37645						2	262					18				
Abutment #2	220	1695	174			26100		53				2	255					8				
Superstructure				1673	992	656030	1	*56	1													
Bridge Barrier																			5434			
Approach Slabs																				1264		
Anchor Slabs																					3612	
Total	537	2570	1986	1673	992	1030315	1	221	1	3	178	9	1107	5	523	6158	8**	60	5434	1264	3612	1100
As-Built Total																						

(1) = PRESTRESSING OF CIP CONCRETE
(2) = DECK DRAIN ASSEMBLY
(3) = VERTICAL, EXPANSION RESTRAINERS
* See Dwg. No. S-5.86 for Breakdown
** See Dwg. No. S-5.84 for Breakdown

	NAME	DATE	ARIZONA DEPARTMENT OF TRANSPORTATION HIGHWAYS DIVISION STRUCTURES SECTION	PRELIMINARY 95% Review NOT FOR CONSTRUCTION OR RECORDING
DESIGN	D.Church/RBB	12-91		
DRAWN	JAD/EF	2/94		
CHECKED	W.Elliott/ASW	2/94	STA. 46+ RAMP E-N LOC.PLAN, INDEX QTY. & NOTES	
Parsons Brinckerhoff ® 100 YEARS				
ROUTE / MILEPOST	2346 STRUCTURE NO.		LOCATION RED MOUNTAIN TRAFFIC INT.	DWG. NO. S-5.1

TRACS NO. H 2414 01 C

F.H.W.A. REGION	STATE	PROJECT NO.	SHEET NO.	TOTAL SHEETS	AS BUILT
9	ARIZ	RAM 600-1-525			
		101L MA 52			

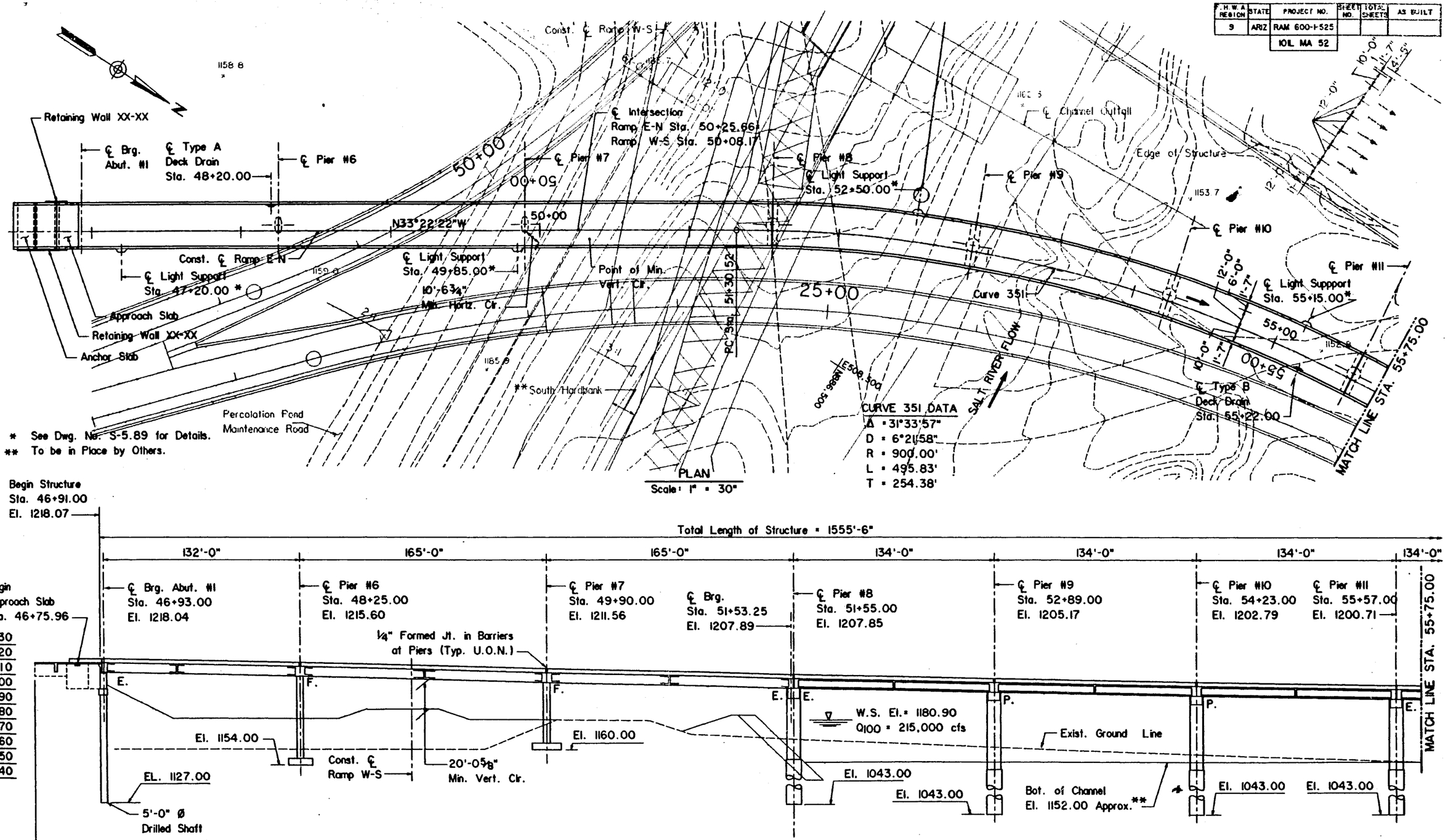

	NAME	DATE
DESIGN	NAS/RBB	12-94
DRAWN	JAD/EF	12-94
CHECKED	WVE/DFG/BAY	12-94

Parsons Brinckerhoff ® 100 YEARS

ARIZONA DEPARTMENT OF TRANSPORTATION
HIGHWAYS DIVISION
STRUCTURES SECTION

STA. 38+
RAMP E-N
PLAN AND SECTION-SHEET 2

LOCATION
RED MOUNTAIN TRAFFIC INT.

ROUTE | MILEPOST | 2346 STRUCTURE NO.

PRELIMINARY
95%
Review
NOT FOR CONSTRUCTION OR RECORDING

DWG. NO. S-5.4

TRACS NO. H 2414 01 C

BENTLEY 2017: [redacted] 01-4PSB 01-4PSB 01-4PSB 05JAN95-09:51:30 STRUC Plot Type = SUBMITTAL

F.H.W.A. REGION	STATE	PROJECT NO.	SHEET NO.	TOTAL SHEETS	AS BUILT
9	ARIZ	RAM 600-1-525			
		MOBILE MMA 550			

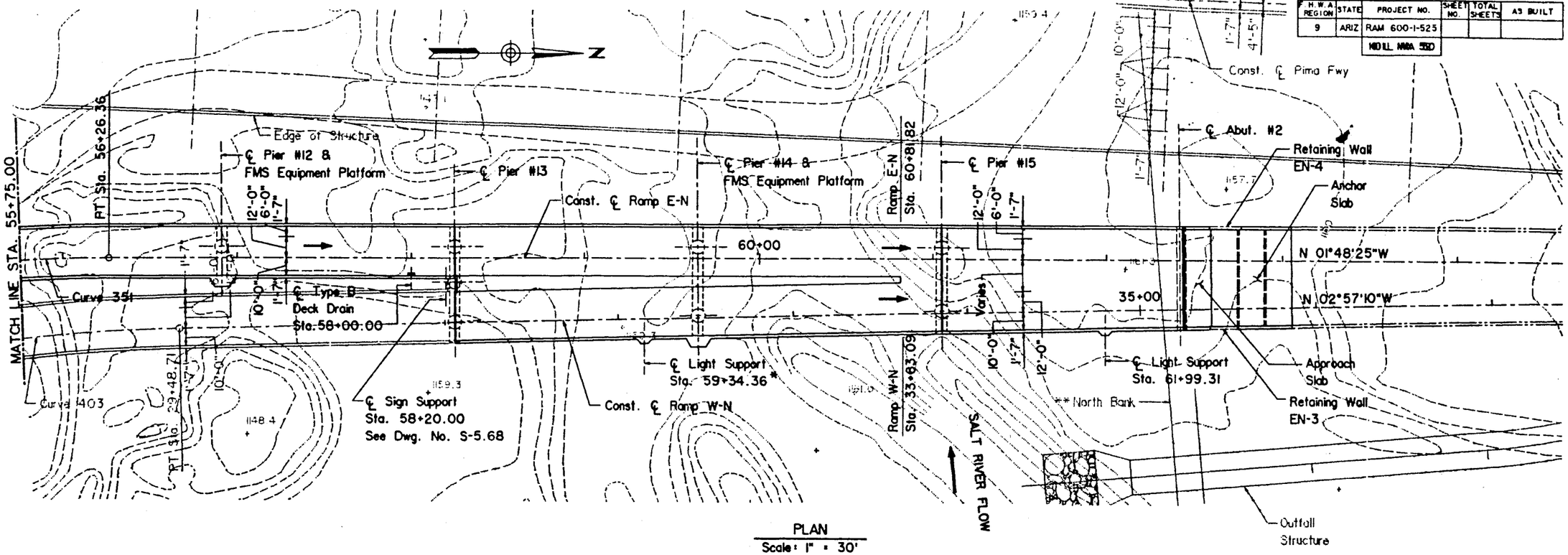

PLAN
Scale: 1" = 30'

* See Dwg. No. S-5.89 for Details.
** To be in Place by Others.

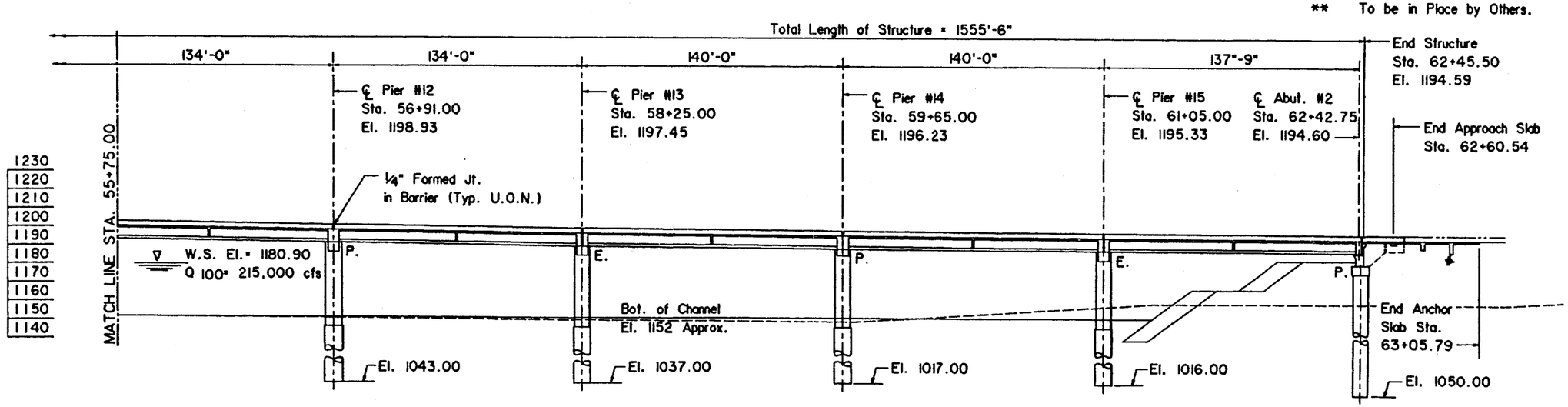

NOTE:
Total Scour Depth used for Design Flood is 38 Ft. and Super Flood is 45 Ft.

LONGITUDINAL SECTION ALONG CONST. ℄ RAMP E-N
Scale: 1" = 30'

	NAME	DATE
DESIGN	W.Elliott/RBB	12-94
DRAWN	JAD/TU	12-94
CHECKED	A.Wojdkiewicz	12-94

Parsons Brinckerhoff ® 100 YEARS

ARIZONA DEPARTMENT OF TRANSPORTATION
HIGHWAYS DIVISION
STRUCTURES SECTION

STA. 46+
RAMP E-N
PLAN AND SECTION-SHEET 3

PRELIMINARY
95%
Review
NOT FOR CONSTRUCTION

F.H.W.A. REGION	STATE	PROJECT NO.	SHEET NO.	TOTAL SHEETS	AS BUILT
9	ARIZ	RAM 600-1-525			
		IOIL MA 52			

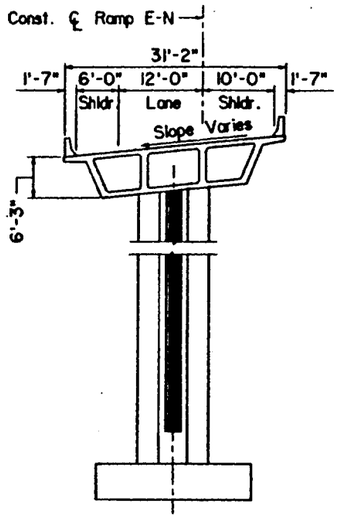

TYPICAL SECTION AT PIER #6 & #7 (AS NOTED)
Scale: 1" = 10'

TYPICAL SECTION AT PIER #8 THRU #12
Scale: 1" = 10'

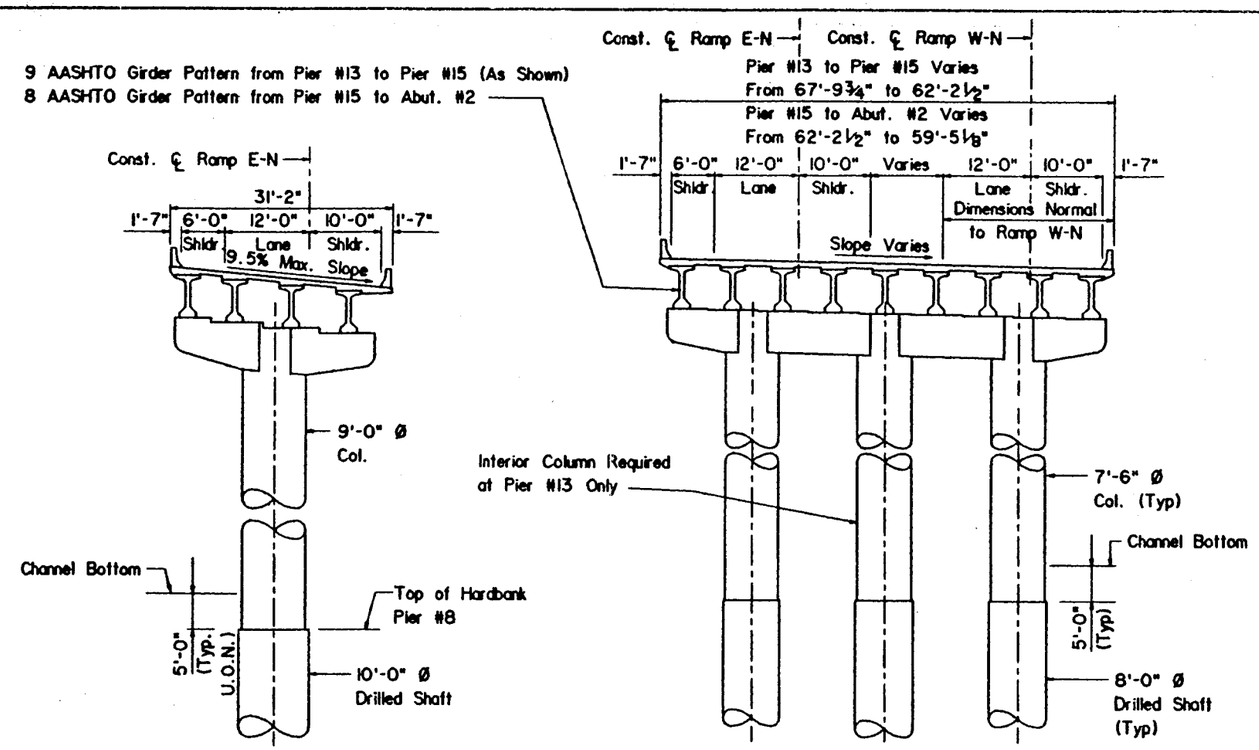

TYPICAL SECTION AT PIER #13 THRU ABUT. #2 (AS NOTED)
Scale: 1" = 10'

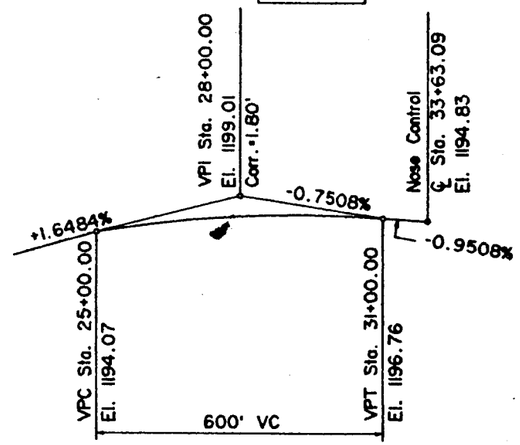

RAMP W-N
CONST. ℄ AND PROFILE GRADE

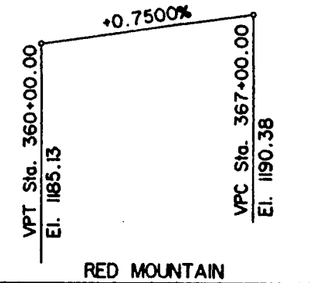

RED MOUNTAIN
CONST. ℄ AND PROFILE GRADE

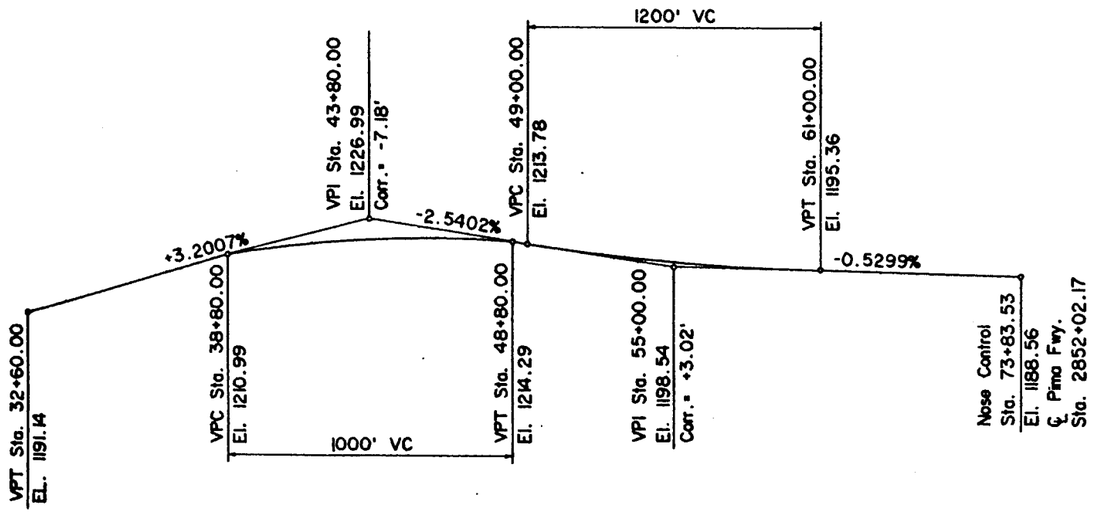

RAMP E-N
CONST. ℄ AND PROFILE GRADE

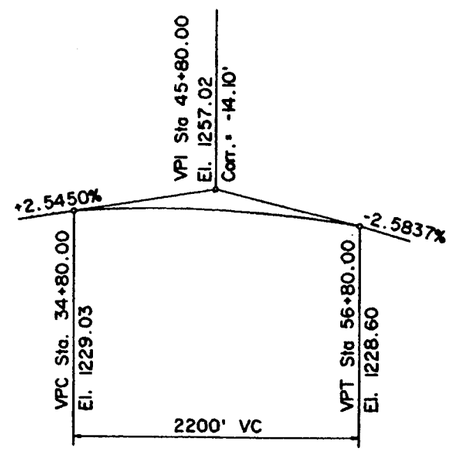

RAMP S-E
CONST. ℄ AND PROFILE GRADE

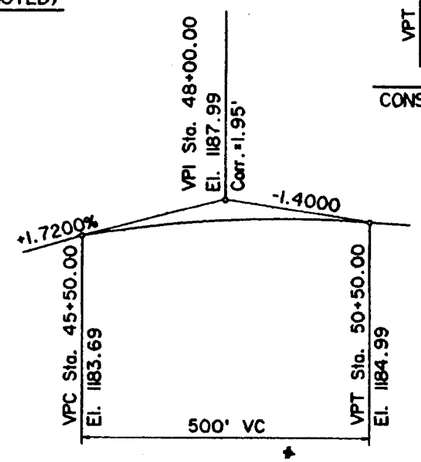

RAMP W-S
CONST. ℄ AND PROFILE GRADE

	NAME	DATE
DESIGN	O. Olidan	7-90
DRAWN	J. DeBusso	7-90
CHECKED	W.V.E./D.F.G.	12-94

Parsons Brinckerhoff ® 100 YEARS

ARIZONA DEPARTMENT OF TRANSPORTATION
HIGHWAYS DIVISION
STRUCTURES SECTION

STA. 46+
RAMP E-N
TYPICAL SECTIONS

LOCATION
RED MOUNTAIN TRAFFIC INT.

ROUTE	MILEPOST	STRUCTURE NO.
		2346

PRELIMINARY
95%
Review
NOT FOR CONSTRUCTION OR RECORDING

DWG. NO. S-5.

TRACS NO. H 2414 01 C

ENGETTA 3017: B14CRS B14CRS B14CRS 03JAN95-09:32:00 STRUC
Plot Type = SUBMITTAL

F.H.W.A. REGION	STATE	PROJECT NO.	SHEET NO.	TOTAL SHEETS	AS BUILT
9	ARIZ	RAM 600-1-525			
		IOIL "MA 52			

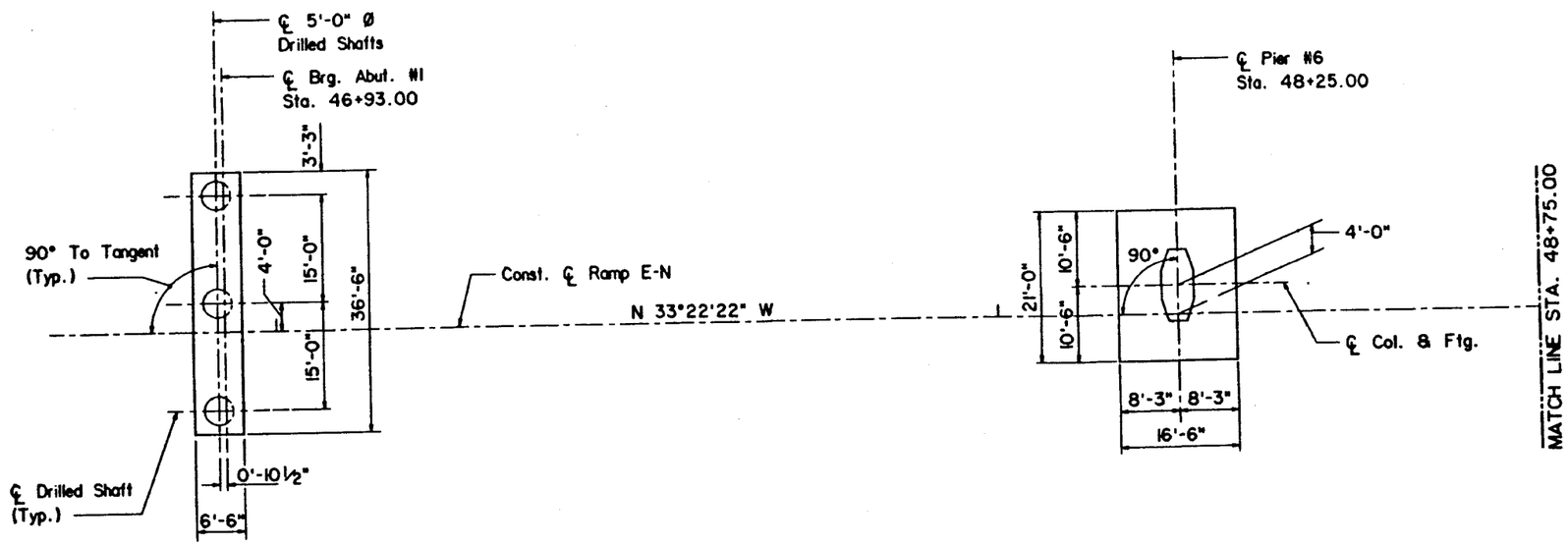

FOUNDATION PLAN
Scale: 1" = 10'

NOTE:
For Notes See Dwg. No. S-5.20

	ABUT. #1
TOP OF SHAFT EL.	1186.25
BOT. OF SHAFT EL.	1127.00
CAPACITY KIPS	430

NOTE:
Foundation Plan Sheet 1 has been deleted.

	NAME	DATE
DESIGN	R. Brantley/NAS	12-94
DRAWN	R. Corabiłkas/EF	01-95
CHECKED	A. Wojakiewicz	01-95

Parsons Brinckerhoff ® 100 YEARS

ARIZONA DEPARTMENT OF TRANSPORTATION
HIGHWAYS DIVISION
STRUCTURES SECTION

STA. 46+
RAMP E-N
FOUNDATION PLAN SHEET 2

ROUTE	MILEPOST	STRUCTURE NO.
		2346

LOCATION
RED MOUNTAIN TRAFFIC INT.

PRELIMINARY
95%
Review
NOT FOR CONSTRUCTION OR RECORDING

DWG. NO. S-5.16

TRACS NO. H 2414 01 C

SHEETS 2017: [redacted] FNBPL2 FNBPL2 FNBPL2 06JAN96-08:56:10 STRUC Plot Type = SUBMITTAL

F.H.W.A. REGION	STATE	PROJECT NO.	SHEET NO.	TOTAL SHEETS	AS BUILT
9	ARIZ	RAM 600-1-525			
		101L MA 52			

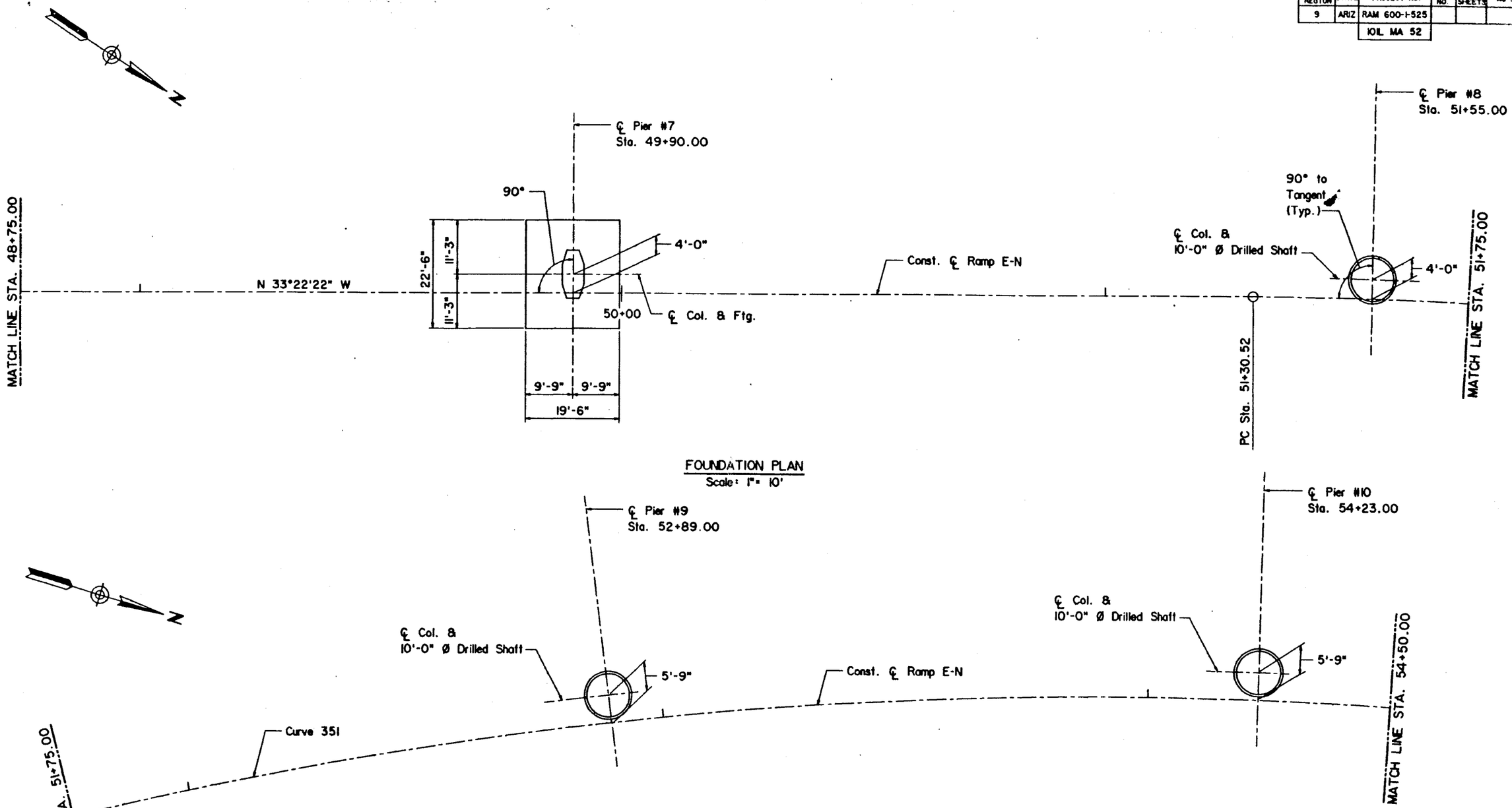

FOUNDATION PLAN
Scale: 1" = 10'

FOUNDATION PLAN
Scale: 1" = 10'

NOTE:
For Notes See Dwg. No. S-5.20

	PIER #8	PIER #9	PIER #10
TOP OF SHAFT EL.	1150.00	1147.00	1147.00
BOT. OF SHAFT EL.	1043.00	1043.00	1043.00
CAPACITY KIPS	2460	2460	2460

	NAME	DATE
DESIGN	W.V/W.K.H	9-91
DRAWN	R. Carabillas	9-91
CHECKED	O. Olden	2-92

Parsons Brinckerhoff ® 100 YEARS

ARIZONA DEPARTMENT OF TRANSPORTATION
HIGHWAYS DIVISION
STRUCTURES SECTION

STA. 46+
RAMP E-N
FOUNDATION PLAN SHEET 3

ROUTE | MILEPOST | 2346 STRUCTURE NO.
LOCATION: RED MOUNTAIN TRAFFIC INT.

PRELIMINARY
95% Review
NOT FOR CONSTRUCTION OR RECORDING

DWG. NO. S-5.17

TRACS NO. H 2414 01 C

CERETTA 2017: [redacted] FNBPLS FNBPLS FNBPLS OBJANBS-OB.80.20 STRUC Plot Type = SUBMITTAL

F.H.W.A. REGION	STATE	PROJECT NO.	SHEET NO.	TOTAL SHEETS	AS BUILT
9	ARIZ	RAM 600-1-525			
		IOIL MA 52			

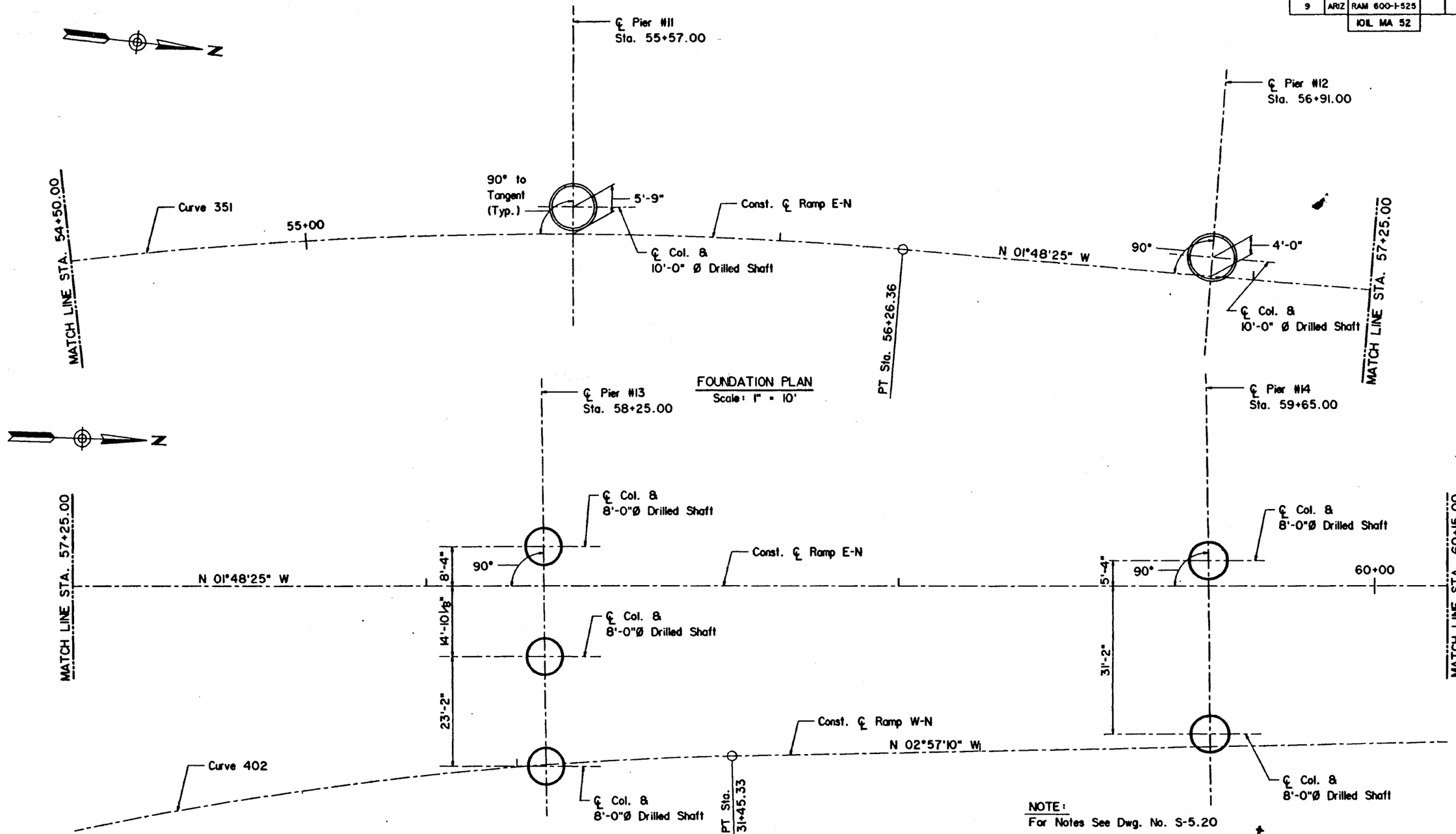

FOUNDATION PLAN
Scale: 1" = 10'

NOTE:
For Notes See Dwg. No. S-5.20

	PIER #11	PIER #12	PIER #13	PIER #14
TOP OF SHAFT EL.	1147.00	1147.00	1147.00	1147.00
BOT. OF SHAFT EL.	1043.00	1043.00	1037.00	1017.00
CAPACITY KIPS	2460	2460	2200	2830

FOUNDATION PLAN
Scale: 1" = 10'

	NAME	DATE
DESIGN	W. Voelmy	8-91
DRAWN	R. Carabillas	8-91
CHECKED	W. Elliott	5-92

Parsons Brinckerhoff ® 100 YEARS

ARIZONA DEPARTMENT OF TRANSPORTATION
HIGHWAYS DIVISION
STRUCTURES SECTION

STA. 46+
RAMP E-N
FOUNDATION PLAN SHEET 4

LOCATION
RED MOUNTAIN TRAFFIC INT.

ROUTE | MILEPOST | 2346 STRUCTURE NO.

PRELIMINARY
95%
Review
NOT FOR CONSTRUCTION OR RECORDING

DWG. NO. S-5.18

TRACS NO. H 2414 01 C

GINETTA 2017: H:\BB\H2414 F\BPL4 F\BPL4 F\BPL4 08JAN95-08:37:00 STRUC Plot Type = SUBMITTAL

F.H.W.A. REGION	STATE	PROJECT NO.	SHEET NO.	TOTAL SHEETS
9	ARIZ	RAM 600-1-525		
		IOIL MA 52		

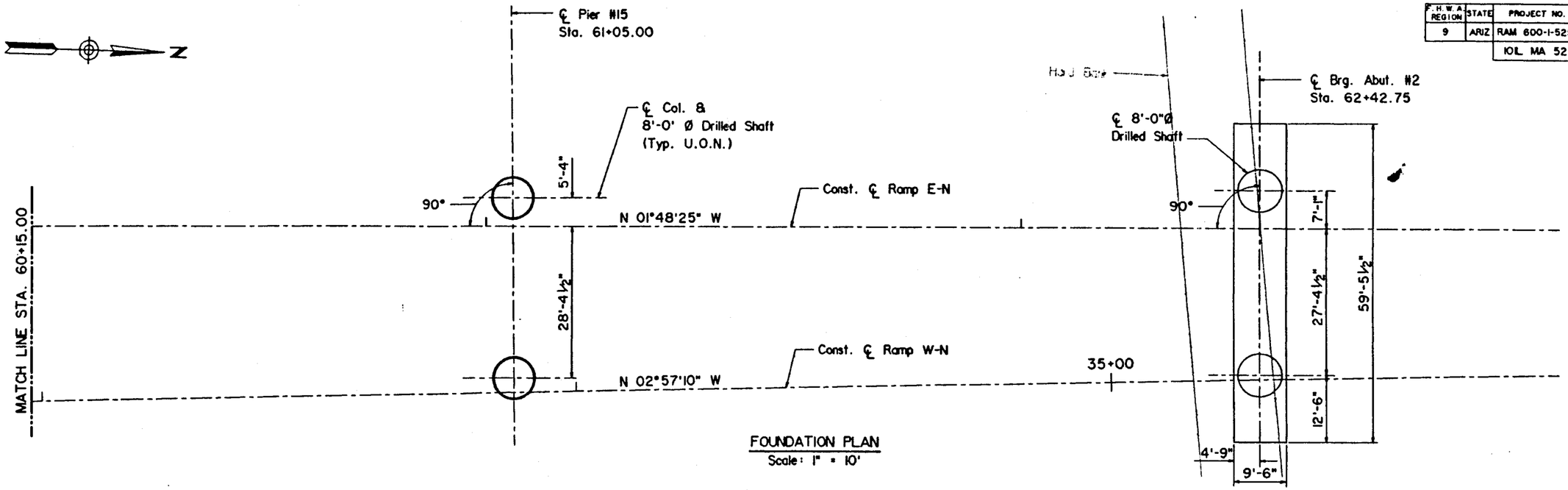

FOUNDATION PLAN
Scale: 1" = 10'

	PIER #15	ABUTMENT #2
TOP OF SHAFT EL.	1147.00	1177.62
BOT. OF SHAFT EL.	1016.00	1050.00
CAPACITY KIPS	2645	1500

NOTE:
For Notes See Dwg. No. S-5.20

	NAME	DATE
DESIGN	W. Elliott	8-91
DRAWN	R. Carabillo	8-91
CHECKED	A.G.A/W.V.E	5-92

Parsons Brinckerhoff ® 100 YEARS

ARIZONA DEPARTMENT OF TRANSPORTATION
HIGHWAYS DIVISION
STRUCTURES SECTION

STA. 46+
RAMP E-N
FOUNDATION PLAN SHEET 5

LOCATION
RED MOUNTAIN TRAFFIC INT.

ROUTE	MILEPOST	STRUCTURE NO.
		2346

PREL
9
Re
NO
CONS
OR RI
DWG. N

SURVEY NO.	FINISHED PLANS	REVISIONS	LOCATION	DATE

DATE	REV. #	REVISION	CHKD	APPD
			DRWN	
			D.S.&M.	

DATE	REV. #	REVISION	CHKD	APPD
			DRWN	
			D.S.&M.	

ERIETTA 3017: MASS FNDPLS FNDPLS FNDPLS DBJAMES-08.27.90 STRUC Plot Type = SUBMITTAL

F.H.W.A. REGION	STATE	PROJECT NO.	SHEET NO.	TOTAL SHEETS	AS BUILT
9	ARIZ	RAM 600-1-525			
		10IL MA 52			

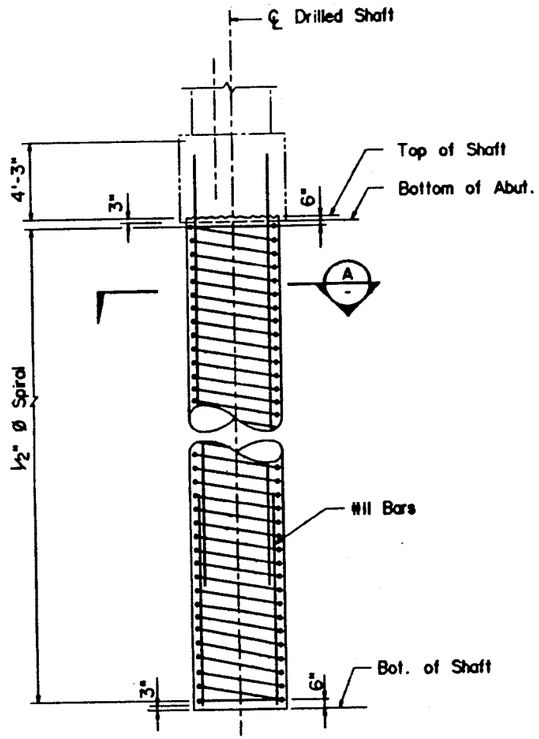

ABUT. #1 DRILLED SHAFT DETAIL
Scale: ¼" = 1'-0"

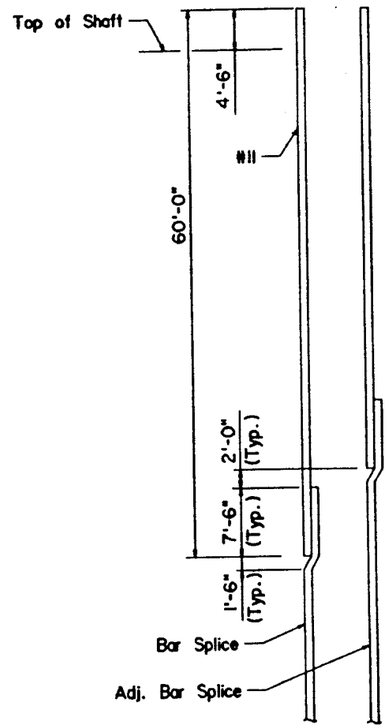

RESTRICTION ON SPLICE
ABUT. #1 AND #2
N.T.S.

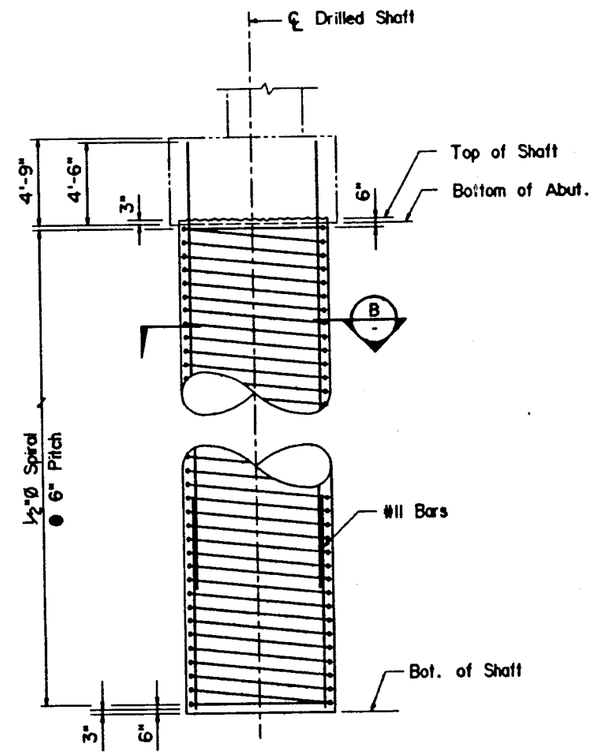

ABUT. #2 DRILLED SHAFT DETAIL
Scale: ¼" = 1'-0"

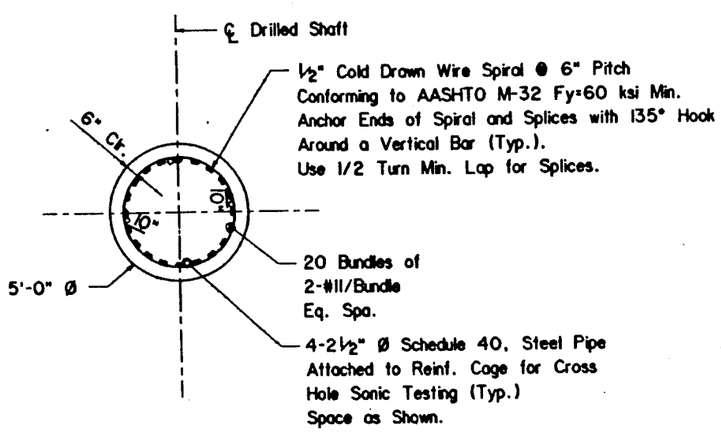

SECTION A
Scale: ⅜" = 1'-0"

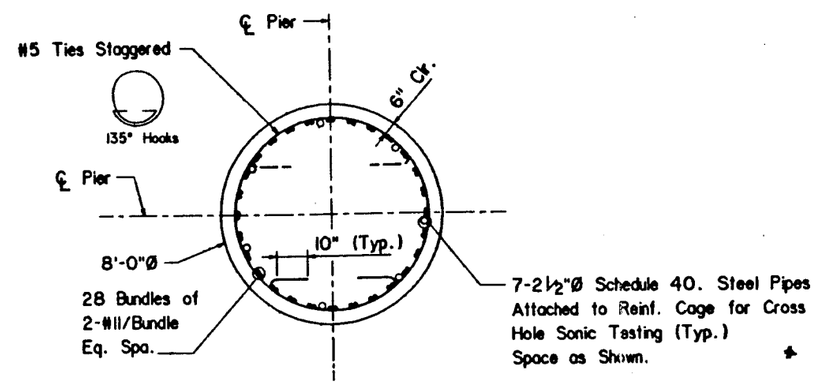

SECTION B
Scale: ⅜" = 1'-0"

DRILLED SHAFT NOTES:

1. Once concrete is poured in a drilled shaft, no new drilling is permitted within 4 shaft dia. measured center to center until 48 hours after the concreting of the drilled shaft.
2. Drilled shaft top and bottom elevations are tabulated on the Foundation Plan Dwgs.
3. Steel pipes for testing shall be placed as shown from the bottom of reinforcing cage to 1'-0" above the top of abutment drilled shaft and 1'-0" above the construction joint of the pier drilled shaft. Pipes shall have a cap at the bottom end and a threaded cap at the top end. Pipes shall be securely tied to the reinforcing cage.
4. For limits of Structural Excavation and Structure Backfill, see ADOT Std. Dwgs. No. B-19.30 and B-19.40.
5. See specifications for steel casing.

	NAME	DATE
DESIGN	R.Brantley	10-91
DRAWN	E.Fafitis	10-91
CHECKED	W.V.E./A.A.	2-92

Parsons Brinckerhoff ® 100 YEARS

ARIZONA DEPARTMENT OF TRANSPORTATION
HIGHWAYS DIVISION
STRUCTURES SECTION

STA. 46+
RAMP E-N
FOUNDATION DETAILS - SHEET 1

LOCATION
RED MOUNTAIN TRAFFIC INT.

ROUTE | MILEPOST | 2346 STRUCTURE NO.

PRELIMINARY
95%
Review
NOT FOR CONSTRUCTION OR RECORDING

DWG. NO. 3-5.

TRACS NO. H 2414 01 C

10 OF 2

Plot Type = SUBMITTAL

F.H.W.A. REGION	STATE	PROJECT NO.	SHEET NO.	TOTAL SHEETS	AS BUILT
9	ARIZ	RAM 600-1-525			
		IOIL MA 52			

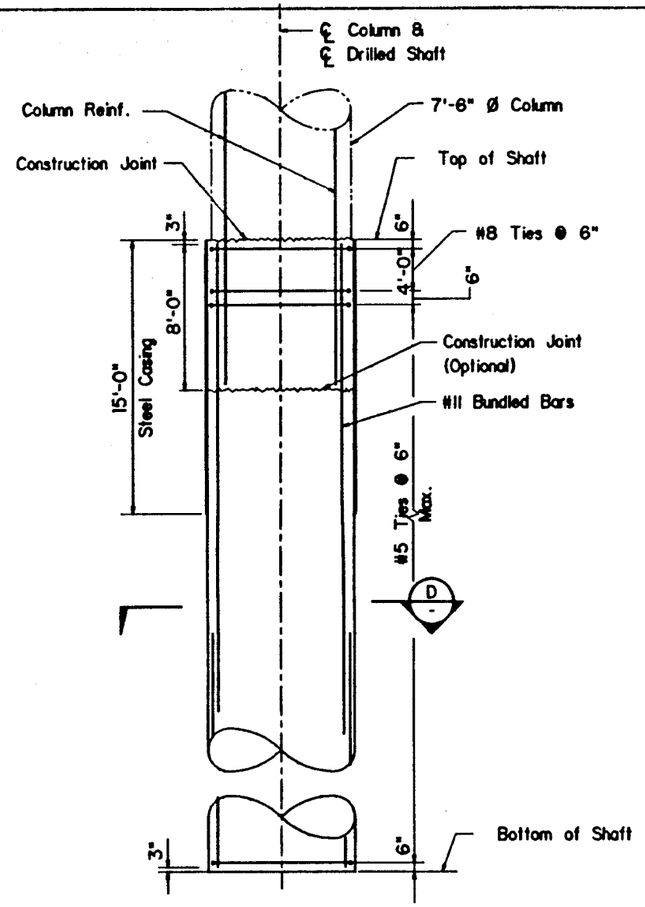

PIER #13 TO #15
DRILLED SHAFT DETAIL
Scale : 1/4" = 1'-0"

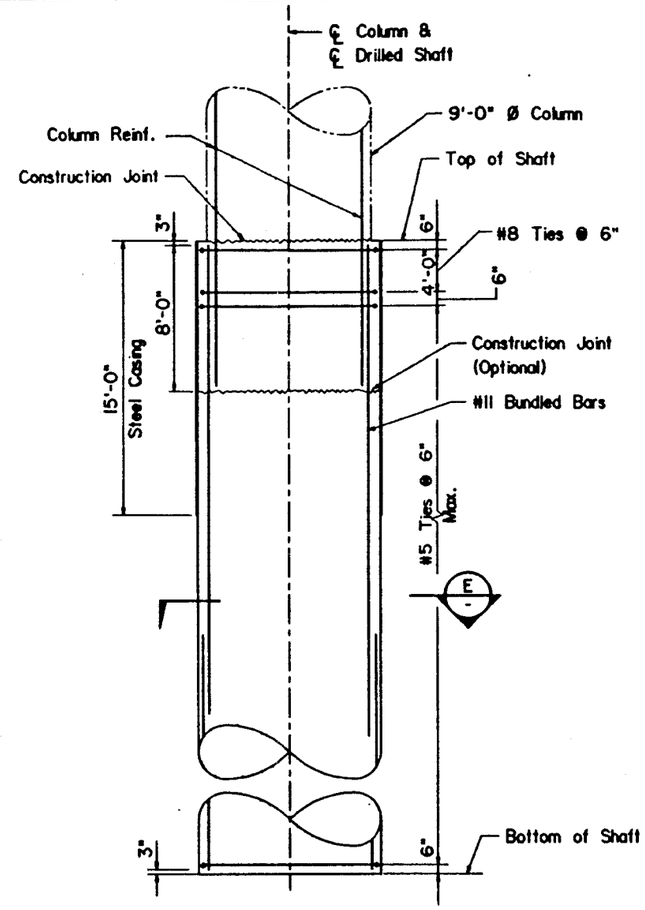

PIER #8 TO #12
DRILLED SHAFT DETAIL
Scale : 1/4" = 1'-0"

NOTES:

1. For Drilled Shaft Notes, See Dwg. No. S-5.20

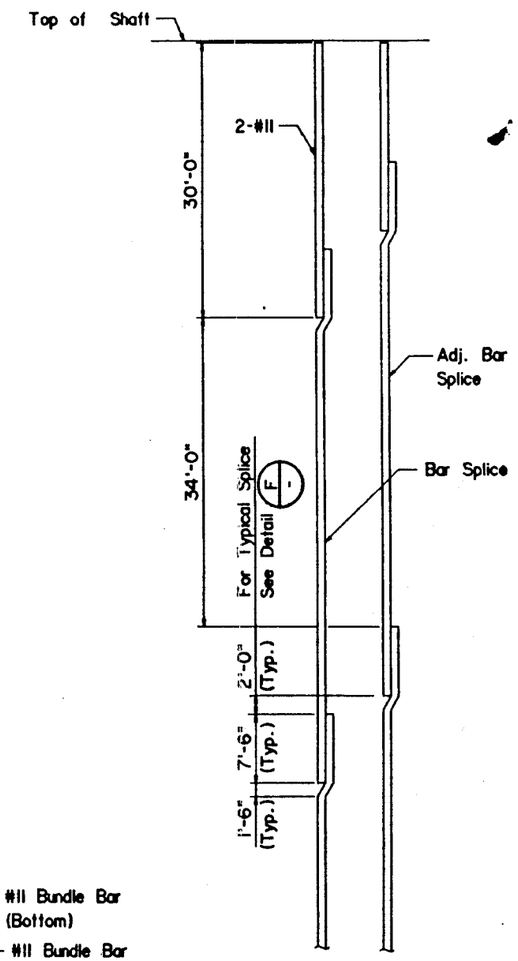

RESTRICTION ON SPLICE
PIERS #8 TO #15
N.T.S.

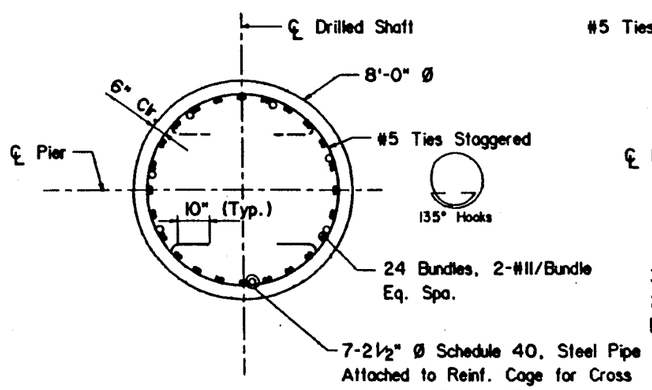

SECTION D
Scale: 3/8" = 1'-0"

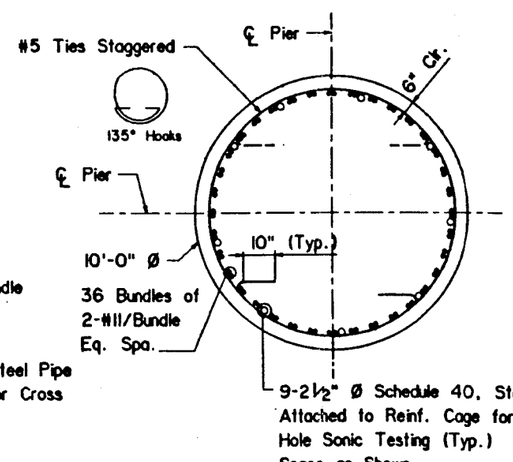

SECTION E
Scale: 3/8" = 1'-0"

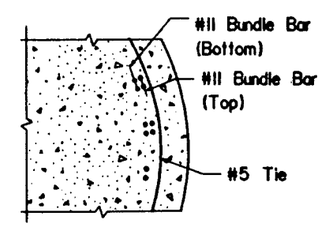

TYPICAL SPLICE DETAIL F
N.T.S.

	NAME	DATE
DESIGN	A. Wojakiewicz	10-91
DRAWN	E. Fafitis	10-91
CHECKED	A. Seyedmadani	2-92

Parsons Brinckerhoff ® 100 YEARS

ARIZONA DEPARTMENT OF TRANSPORTATION
HIGHWAYS DIVISION
STRUCTURES SECTION

STA. 46+
RAMP E-N
FOUNDATION DETAILS - SHEET 2

LOCATION
RED MOUNTAIN TRAFFIC INT.

ROUTE | MILEPOST | 2346 STRUCTURE NO.

PRELIMINARY
95%
Review
NOT FOR CONSTRUCTION OR RECORDING

DWG. NO. S-5.21

TRACS NO. H 2414 01 C

108 OF 266

ERICTIA 3017: 09:50 B14/1N02 B14/1N02 B14/1N02 05JAN96-09:30:30 STRUC

Plot Type = SUBMITTAL

PIMA FREEWAY
PIMA, RED MOUNTAIN TI PH II-1ST-MC
MARICOPA COUNTY

F.H.W.A. REGION	STATE	PROJECT NO.	SHEET NO.	TOTAL SHEETS	AS BUILT
9	ARIZ.	RAM 600-1-536	C4	64	

101L MA 052

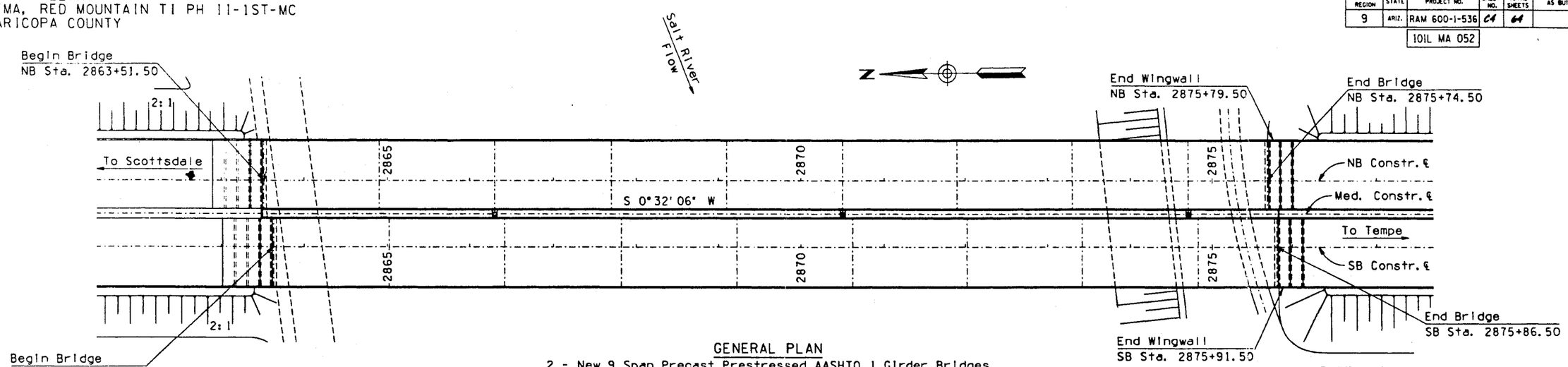

GENERAL PLAN
2 - New 9 Span Precast Prestressed AASHTO I Girder Bridges
Scale: 1" = 60'

NOTE:
AASHTO Type VI Girders Spans #1 Thru #8
AASHTO Type IV Girders Span #9.

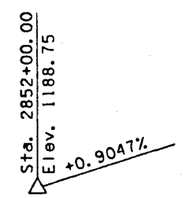

ROADWAY PROFILE GRADE LINE
Not to Scale

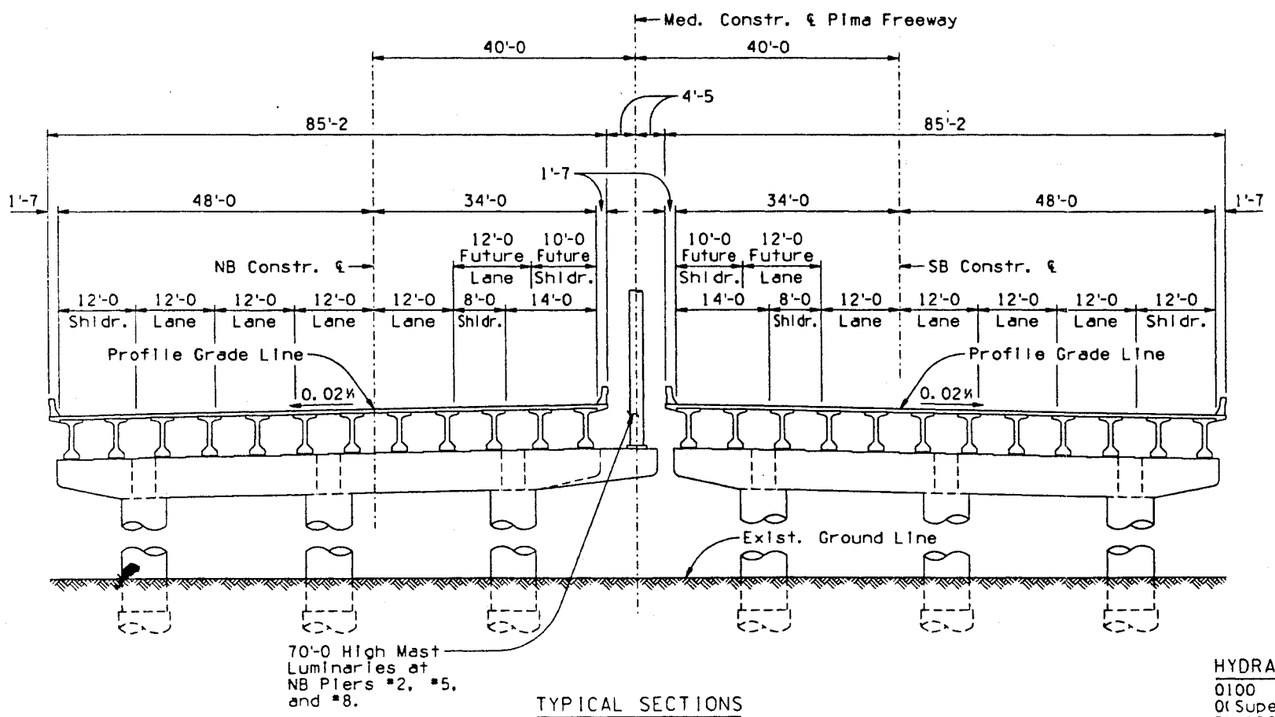

TYPICAL SECTIONS
Type VI Girder shown, Type IV Girder similar
Scale: 1/12" = 1'-0

REDUCED SIZE DO NOT SCALE

HYDRAULIC DATA:

Q100	=	215,000	cfs
Q(Superflood)	=	250,000	cfs
DHW100	=	1,181.80	ft
Hw (Superflood)	=	1,183.00	ft

SHEET LIST

TITLE	SHEET NO.
FACE SHEET	C1
ADOT STANDARD DRAWINGS	C2-C3
GENERAL PLAN & INDEX 1	C4
LOCATION PLAN & SECTION 2-3	C5-C6
GENERAL NOTES AND QUANTITIES 4	C7
FOUNDATION DATA SHEETS 5-10	C8-C13
FOUNDATION LAYOUT SHEETS 11-12	C14-C15
DRILLED SHAFT DETAILS 13-15	C16-C18
NB ABUT. #1 PLAN AND ELEVATION 16	C19
SB ABUT. #1 PLAN AND ELEVATION 17	C20
ABUTMENT #1 DETAILS 18	C21
ABUT. #1 W.W. & RET. WALL DETS. 19-20	C22-C23
NB ABUTMENT #2 PLAN 21	C24
NB ABUTMENT #2 ELEVATION 22	C25
SB ABUTMENT #2 PLAN 23	C26
SB ABUTMENT #2 ELEVATION 24	C27
ABUTMENT #2 DETAILS 25	C28
ABUT. #2 W.W. & RET. WALL DETS. 26	C29
FIXED PIER CAP DETAILS 27-29	C30-C32
EXPANSION PIER CAP DETAILS 30-32	C33-C35
TRANSITION PIER CAP DETAILS 33-35	C36-C38
PIER CAP EXTENSION DETAILS 36	C39
BRG. PAD & RESTRAINER DETAILS 37	C40
GIRDER DETAILS 38-39	C41-C42
DECK PLAN #1 40	C43
DECK PLAN #2 41	C44
DECK PLAN #3 42	C45
DECK PLAN #4 43	C46
DECK PLAN #5 44	C47
TYPICAL SECTION SPANS #1 - #8 45	C48
TYPICAL SECTION SPAN #9 46	C49
ABUTMENT DIAPHRAGM DETAILS 47	C50
FIXED PIER DIAPHRAGM DETAILS 48	C51
EXPANSION PIER DIAPHRAGM DETAILS 49	C52
TRANS. PIER DIAPHRAGM DETAILS 50	C53
INTERMEDIATE DIAPHRAGM DETAILS 51	C54
MISCELLANEOUS DETAILS 52-53	C55-C56
STRIP SEAL JOINT DETAILS 54	C57
CAMBER DETAILS 55	C58
NB SCREED ELEVATION SHEETS 56-58	C59-C61
SB SCREED ELEVATION SHEETS 59-61	C62-C64

BRIDGE DESIGN SECTION 'A'		DATE
DESIGN	S. HAYATSHAHI	3/93
DESIGN CK'D	J. PYNE	4/94
DRAWN	P. CROOKS	4/94
DWG CK'D	T. SISLEY	4/94
APPROVED PROJ. ENGINEER	C. CHYAN	4/94
APPROVED DESIGN LEADER	J. BYNE	6/94

ARIZONA DEPARTMENT OF TRANSPORTATION
HIGHWAYS DIVISION
BRIDGE GROUP

STA 2863+
SALT RIVER BRIDGE
GENERAL PLAN

LOCATION: PIMA, RED MT TI PH II-1ST-MC

BRIDGE ENGINEER

ROUTE	MILEPOST	STRUCTURE NO.
101L		2341/2342

SHEET 1 OF 61

TRACS NO. H 2413 02C

/usr3/br10/s2341gp.dgn
17-JUN-1994 15:28

VIEW NAME:

DESCRIPTION OF REVISIONS	MADE BY	DATE

F.H.W.A. REGION	STATE	PROJECT NO.	SHEET NO.	TOTAL SHEETS	AS BUILT
9	ARIZ.	RAM-600-1-536 C.5	64		

101L MA 052

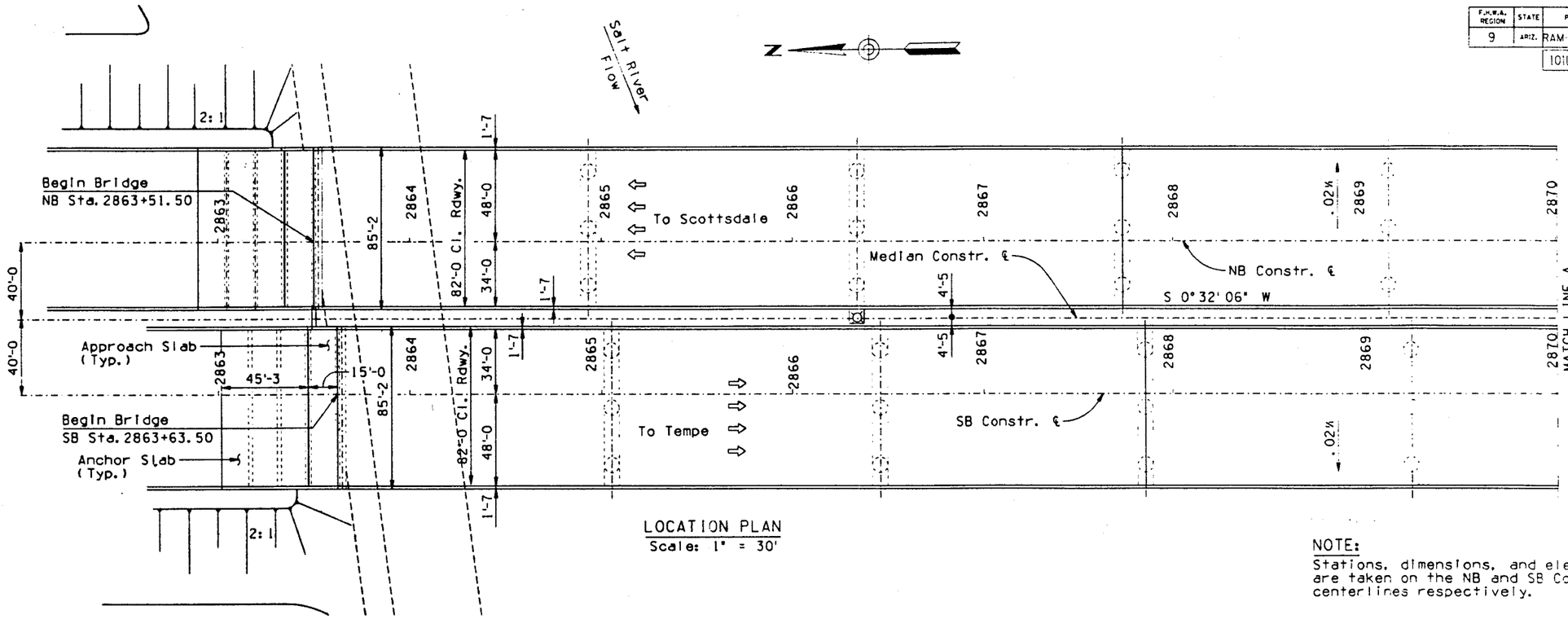

LOCATION PLAN
Scale: 1" = 30'

NOTE:
Stations, dimensions, and elevations are taken on the NB and SB Construction centerlines respectively.

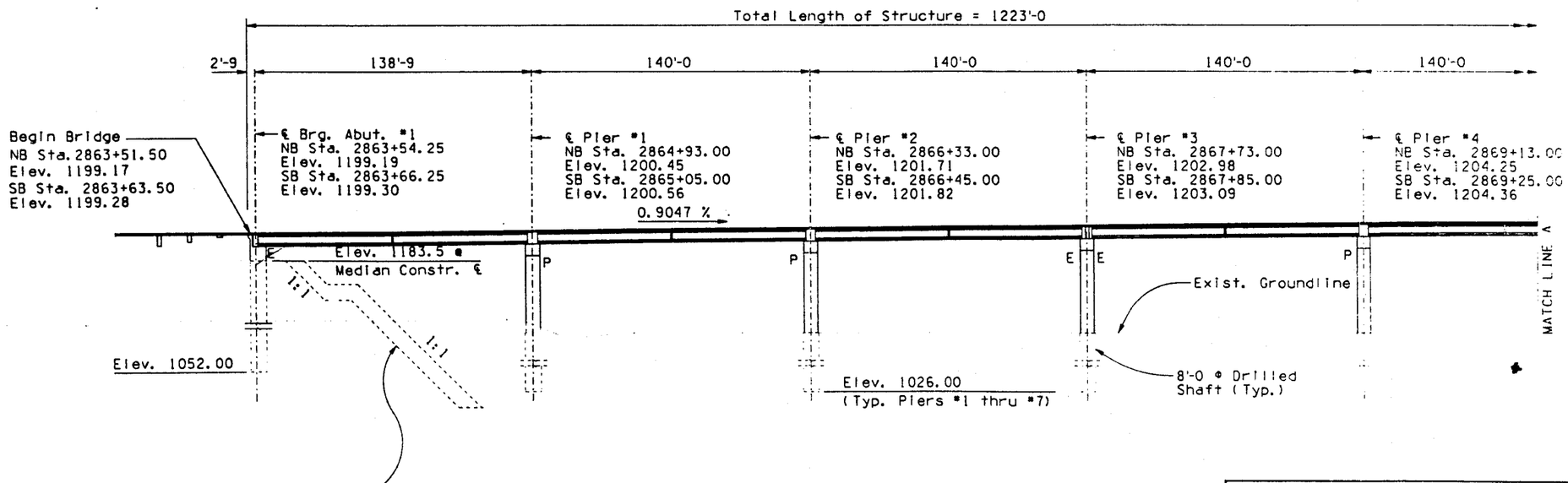

SECTION AT CONSTRUCTION ℄
NB bridge shown, SB bridge similar
Scale: 1" = 30'

REDUCED SIZE DO NOT SCALE

BRIDGE DESIGN SECTION 'A'		DATE
DESIGN	S. HAYATS-AHI	4/94
DESIGN CK'D	J. PYNE	4/94
DRAWN	L. GENES	10/92
DWG CK'D	T. SISLEY	4/94
APPROVED-PROJ. ENGINEER	C. CHYAN	4/94
APPROVED-DESIGN LEADER	J. Pyne	7/94

ARIZONA DEPARTMENT OF TRANSPORTATION
HIGHWAYS DIVISION
BRIDGE GROUP

STA. 2863+
SALT RIVER BRIDGE
LOCATION PLAN & SECTION

ROUTE	MILEPOST	STRUCTURE NO.	LOCATION
101L		2341/2342	PIMA, RED MT TI PH-II-1ST MC

BRIDGE ENGINEER
SHEET 2 OF 6.

TRACS NO. H 2413 02C

/usr3/br105/s2341lpl.dgn
06-JUL-1994 14:40
VIEW NAME:

___ OF ___

F.H.W.A. REGION	STATE	PROJECT NO.	SHEET NO.	TOTAL SHEETS	AS BUILT
9	ARIZ.	RAM 600-1-536	C6	64	
		101L MA 052			

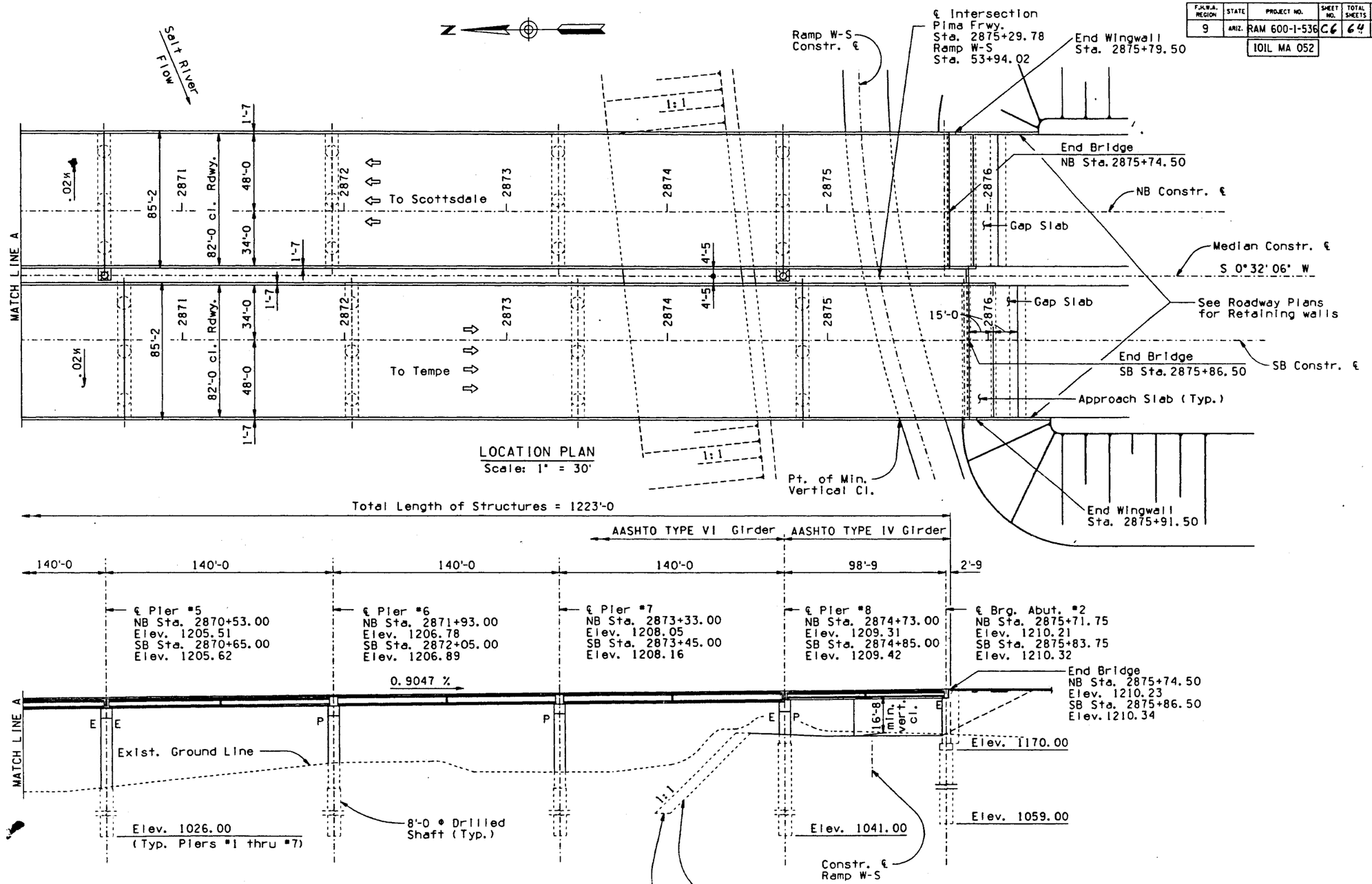

SECTION AT CONSTRUCTION ℄
NB bridge shown, SB bridge similar
Scale: 1" = 30'

NOTE:
Stations, dimensions, and elevations are taken on the NB and SB Construction centerlines respectively.

REDUCED SIZE DO NOT SCALE

BRIDGE DESIGN SECTION 'A'		DATE
DESIGN	S. HAYATSHAHI	4/94
DESIGN CKD	J. PYNE	4/94
DRAWN	L. GENES	10/92
DWG CKD	T. SISLEY	4/94
APPROVED-PROJ. ENGINEER	C. CHYAN	4/94
APPROVED-DESIGN LEADER	J. Pyne	7/94

ARIZONA DEPARTMENT OF TRANSPORTATION
HIGHWAYS DIVISION
BRIDGE GROUP

STA. 2863+
SALT RIVER BRIDGE
LOCATION PLAN & SECTION

ROUTE	MILEPOST	STRUCTURE NO.	LOCATION
101L		2341/2342	PIMA, RED MT TI PH-II-1ST MC

BRIDGE ENGINEER

SHEET 3 OF 61

TRACS NO. H 2413 02C

___ OF ___

/usr3/br105/s2341lp2.dgn
06-JUL-1994 14:41
VIEW NAME: BR

F.H.W.A. REGION	STATE	PROJECT NO.	SHEET NO.	TOTAL SHEETS	AS BUILT
9	ARIZ.	RAM 600-1-536	C14	61	

101L MA 052

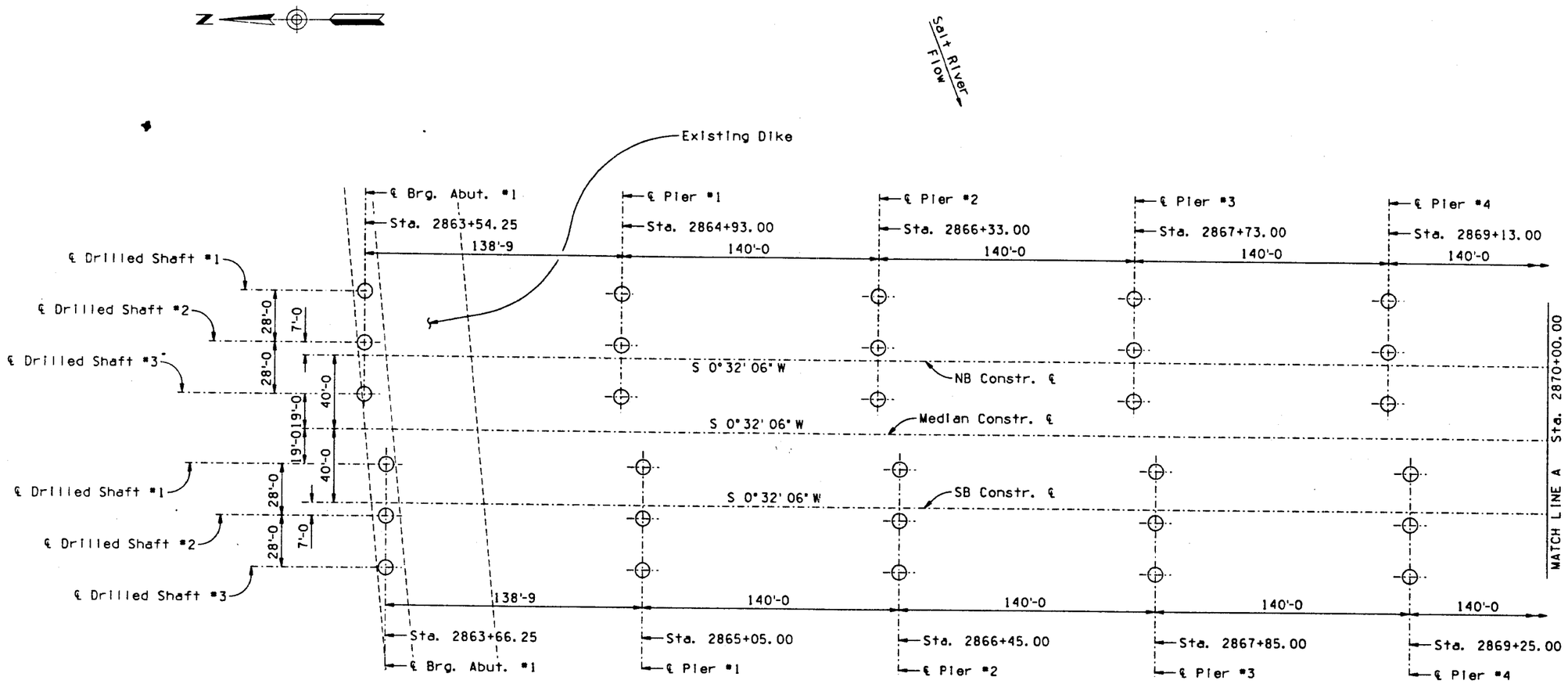

PARTIAL FOUNDATION PLAN
Scale: 1" = 30'

REDUCED SIZE DO NOT SCALE

BRIDGE DESIGN SECTION 'A'		DATE
DESIGN	S. HAYATSHAHI	3/94
DESIGN CK'D	C. CHYAN	4/94
DRAWN	R. CROOKS	3/94
DWG CK'D	T. SISLEY	3/94
APPROVED-PROJ. ENGINEER	C. CHYAN	6/94
APPROVED-DESIGN LEADER	J. Pyne	6/94

ARIZONA DEPARTMENT OF TRANSPORTATION
HIGHWAYS DIVISION
BRIDGE GROUP

STA. 2863+
SALT RIVER BRIDGE
FOUNDATION LAYOUT SHEET

ROUTE	MILEPOST	STRUCTURE NO.	LOCATION
101L		2341/2342	PIMA, RED MT TI PH II-IST-MC

BRIDGE ENGINEER

SHEET 11 OF 61

TRACS NO. H2413 02C

___ OF ___

/usr3/br10/s2341f11.dgn
17-JUN-1994 15:27
VIEW NAME:

F.H.W.A. REGION	STATE	PROJECT NO.	SHEET NO.	TOTAL SHEETS	AS BUILT
9	ARIZ.	RAM 600-1-536	015	64	
		101L MA 052			

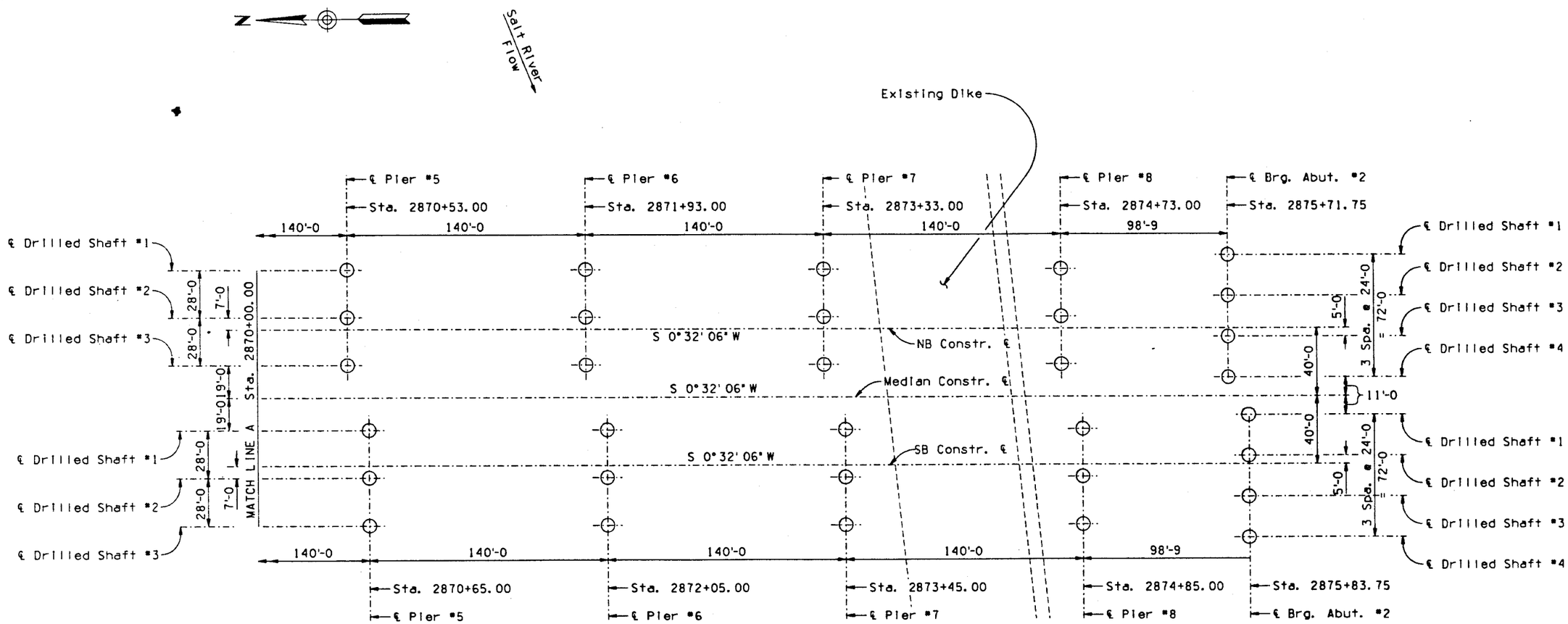

PARTIAL FOUNDATION PLAN

Scale: 1" = 30'

REDUCED SIZE DO NOT SCALE

BRIDGE DESIGN SECTION 'A'		DATE
DESIGN	S. MAYATSHAMI	3/94
DESIGN CK'D	C. CHYAN	5/94
DRAWN	R. CROOKS	3/94
DWG CK'D	T. SISLEY	3/94
APPROVED-PROJ. ENGINEER	C. CHYAN	6/94
APPROVED-DESIGN LEADER	J. Byne	6/94

ARIZONA DEPARTMENT OF TRANSPORTATION
HIGHWAYS DIVISION
BRIDGE GROUP

STA. 2863+
SALT RIVER BRIDGE
FOUNDATION LAYOUT SHEET

ROUTE	MILEPOST	STRUCTURE NO.	LOCATION
101L		2341/2342	PIMA, RED MT TI PH II-IST-MC

BRIDGE ENGINEER

SHEET 12 OF 61

TRACS NO. H2413 02C

/usr3/br10/s2341f12.dgn
17-JUN-1994 15:26

VIEW NAME:

OF

F.H.W.A. REGION	STATE	PROJECT NO.	SHEET NO.	TOTAL SHEETS	AS BUILT
9	ARIZ.	RAM 600-1-536	C16	64	
		101L MA 052			

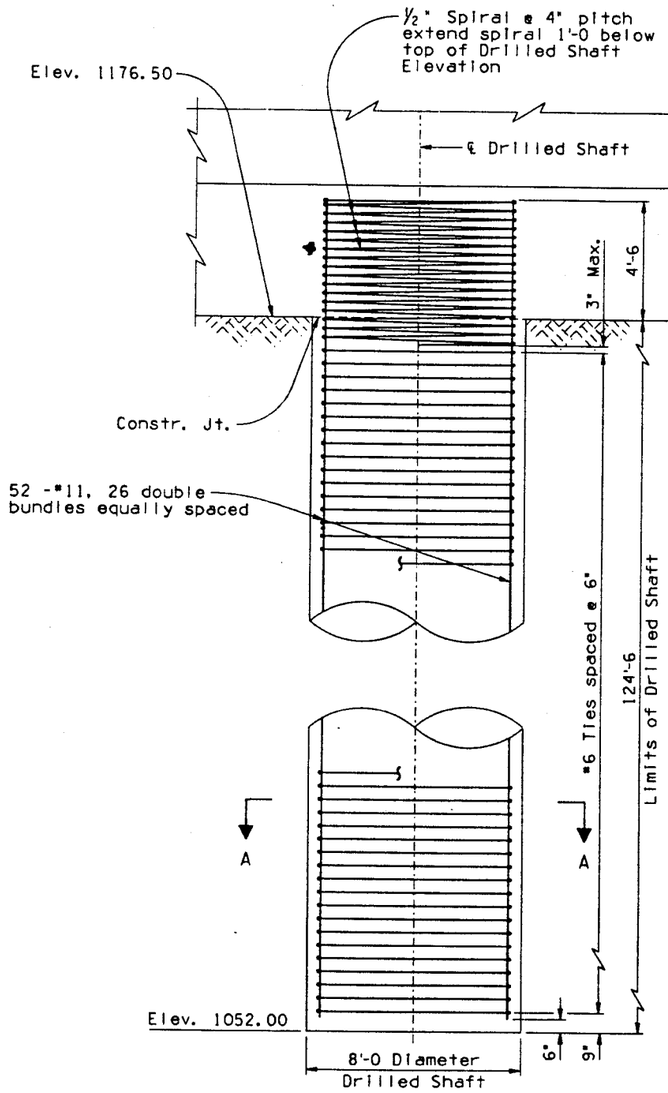

ABUTMENT #1 ELEVATION

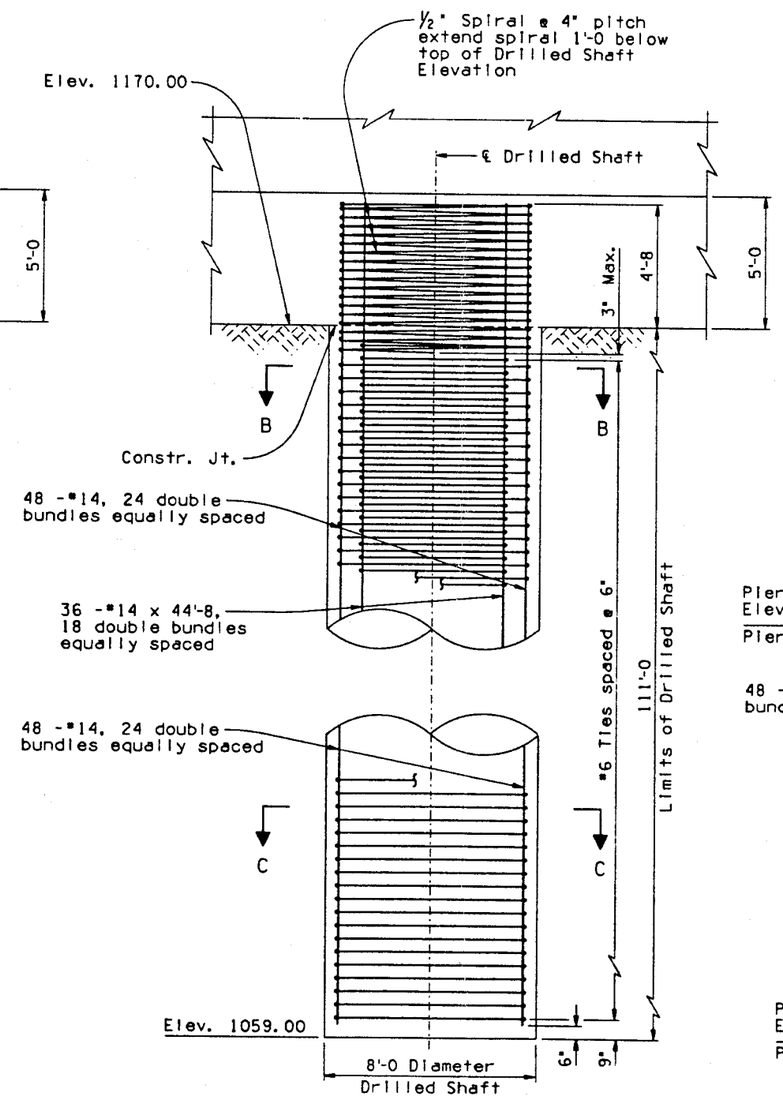

ABUTMENT #2 ELEVATION

DRILLED SHAFT ELEVATIONS

Scale: ⅜" = 1'-0

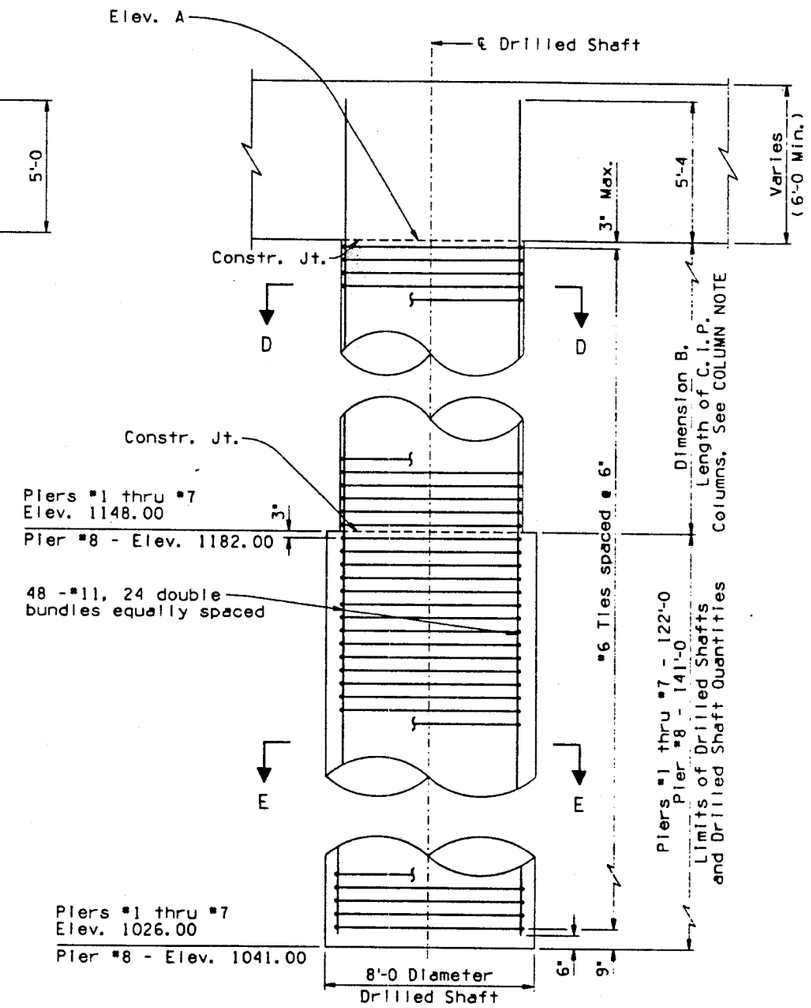

PIER ELEVATION

NOTE:

For SECTIONS A-A thru E-E see Sheet 14 of 61. For Elev. A and Dimension B see COLUMN ELEVATIONS AND DIMENSIONS TABLE sheet 15 of 61.

MECHANICAL SPLICE NOTES:

#14 reinforcing steel shall be mechanically spliced. #11 reinforcing steel shall be lap spliced as shown in the SPLICE DETAIL on Sheet 15 of 61. All mechanical splices shall conform to the requirements for mechanical connections in Section 605-3.02 of the Standard Specifications.

COLUMN NOTE:

Limits of formed Columns and Column Quantities. Column quantities include all reinforcing steel extended up from the Drilled Shafts.

REDUCED SIZE DO NOT SCALE

BRIDGE DESIGN SECTION 'A'		DATE
DESIGN	S. HAYATSHAHI	5/94
DESIGN CKD	C. CHYAN	5/94
DRAWN	R. CROOKS	5/94
DWG CKD	T. SISLEY	5/94
APPROVED-PROJ. ENGINEER	C. CHYAN	6/94
APPROVED-DESIGN LEADER	J. Pyne	7/94

ARIZONA DEPARTMENT OF TRANSPORTATION
HIGHWAYS DIVISION
BRIDGE GROUP

STA. 2863+
SALT RIVER BRIDGE
DRILLED SHAFT DETAILS

ROUTE	MILEPOST	STRUCTURE NO.	LOCATION
101L		2341/2342	PIMA, RED MT TI PH II-IST-MC

BRIDGE ENGINEER

TRACS NO. H2413 02C

SHEET 13 OF 61

/usr3/br105/s2341dsl.dgn VIEW NAME:
06-JUL-1994 14:39

F.H.W.A. REGION	STATE	PROJECT NO.	SHEET NO.	TOTAL SHEETS	AS BUILT
9	ARIZ.	RAM 600-1-536	017	64	
		101L MA 052			

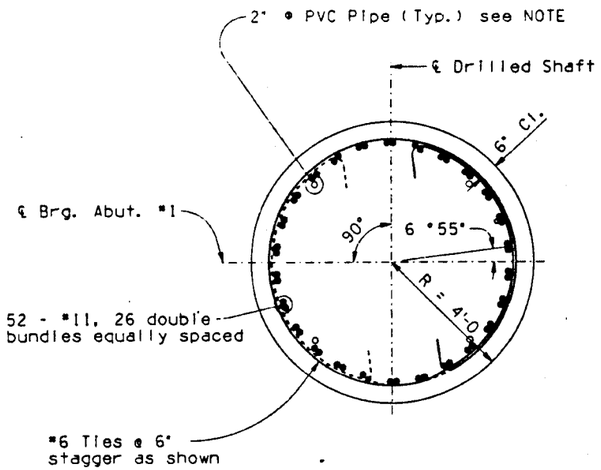

SECTION A-A
Scale: ½" = 1'-0

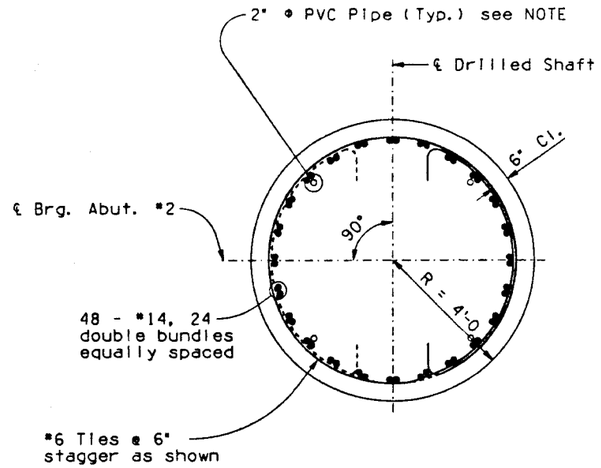

SECTION C-C
Scale: ½" = 1'-0

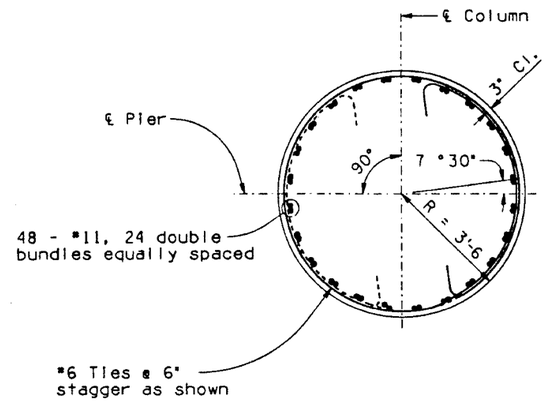

SECTION D-D
Scale: ½" = 1'-0

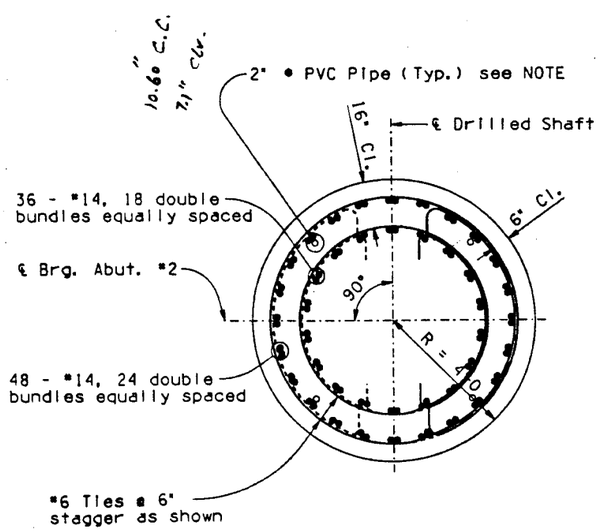

SECTION B-B
Scale: ½" = 1'-0

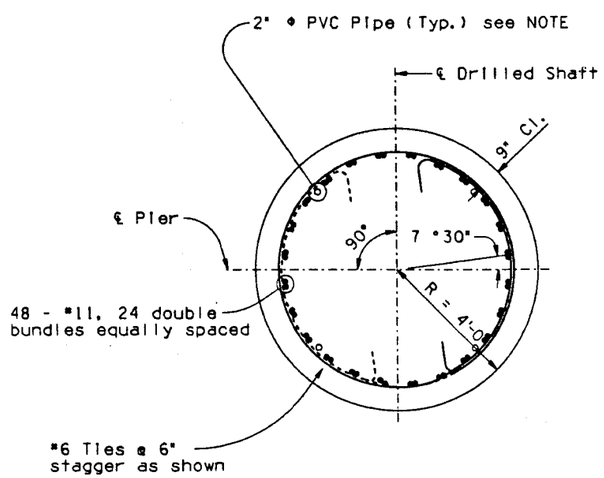

SECTION E-E
Scale: ½" = 1'-0

DRILLED SHAFT NOTES:

Excavation of the adjacent drilled shaft will not be permitted until 48 hours after the adjacent drilled shaft has been poured. An adjacent drilled shaft is any shaft within four diameters measured center to center.

SPIRAL REINFORCING NOTES:

Spiral reinforcment shall be ½" diameter cold drawn steel wire conforming to AASHTO M32 except the minimum tensile strength equals 60,000 psi.

Anchorage of the spiral reinforcment shall be provided by 1½ extra turns of the spiral at the end of the spiral unit.

Splices in the spiral reinforcment shall be lap splices of 48 bar diameters, but not less than 12 inches or shall be welded.

NOTE:

Each drilled shaft constructed under slurry conditions shall have 4 - 2" Φ schedule 40 rigid PVC pipes (one placed in each quadrant as shown). The pipes shall run from the bottom of the drilled shaft to 1'-0 above the top of the drilled shaft. Glue a cap to the bottom end of the PVC pipe and place a threaded cap on the top end of the PVC pipe. The PVC pipe shall be securely attached to the #6 ties. The PVC pipes may be omitted for drilled shafts constructed under dry conditions.

The contractor shall orient the drilled shaft reinforcment cage as shown, to avoid conflict with the reinforcment in the bottom of the cap.

REDUCED SIZE DO NOT SCALE

BRIDGE DESIGN SECTION 'A'		DATE
DESIGN	S. HAYATSHAHI	5/94
DESIGN CK'D	C. CHYAN	5/94
DRAWN	R. CROOKS	5/94
DWG CK'D	T. SISLEY	5/94
APPROVED-PROJ. ENGINEER	C. CHYAN	6/94
APPROVED-DESIGN LEADER	J. Pyne	6/94

ARIZONA DEPARTMENT OF TRANSPORTATION
HIGHWAYS DIVISION
BRIDGE GROUP

STA. 2863+
SALT RIVER BRIDGE
DRILLED SHAFT DETAILS

ROUTE	MILEPOST	STRUCTURE NO.	LOCATION
101L		2341/2342	PIMA, RED MT TI PH II-IST-MC

BRIDGE ENGINEER

SHEET 14 OF 61

TRACS NO. H2413 02C

___ OF ___

/usr3/br10/s2341ds2.dgn
17-JUN-1994 15:33
VIEW NAME:

F.H.W.A. REGION	STATE	PROJECT NO.	SHEET NO.	TOTAL SHEETS	AS BUILT
9	ARIZ.	RAM 600-1-536	68	61	

101L MA 052

COLUMN ELEVATIONS AND DIMENSIONS TABLE

NORTHBOUND

	Pier #1		Pier #2		Pier #3		Pier #4		Pier #5		Pier #6		Pier #7		Pier #8	
	Elev. A	Dim. B	Elev. A	Dim. B	Elev. A	Dim. B	Elev. A	Dim. B	Elev. A	Dim. B	Elev. A	Dim. B	Elev. A	Dim. B	Elev. A	Dim. B
Column #1	1186.76	38'-9 1/8	1188.01	40'-0 1/8	1189.03	41'-0 3/8	1190.57	42'-6 7/8	1191.56	43'-6 3/4	1193.06	45'-0 3/4	1194.34	46'-4 1/8	1195.32	13'-3 7/8
Column #2	1187.31	39'-3 3/4	1188.57	40'-6 7/8	1189.59	41'-7 1/8	1191.12	43'-1 1/2	1192.12	44'-1 3/8	1193.62	45'-7 1/2	1194.91	46'-10 7/8	1195.88	13'-10 1/2
Column #3	1187.85	39'-10 1/4	1189.12	41'-1 1/2	1190.14	42'-1 5/8	1191.67	43'-8	1192.67	44'-8	1194.18	46'-2 1/8	1195.47	47'-5 5/8	1196.43	14'-5 1/2

SOUTHBOUND

	Pier #1		Pier #2		Pier #3		Pier #4		Pier #5		Pier #6		Pier #7		Pier #8	
	Elev. A	Dim. B	Elev. A	Dim. B	Elev. A	Dim. B	Elev. A	Dim. B	Elev. A	Dim. B	Elev. A	Dim. B	Elev. A	Dim. B	Elev. A	Dim. B
Column #1	1187.96	39'-11 1/2	1189.23	41'-2 3/4	1190.24	42'-2 7/8	1191.78	43'-9 3/8	1192.78	44'-9 3/8	1194.29	46'-3 1/2	1195.56	47'-6 3/4	1196.53	14'-6 3/8
Column #2	1187.41	39'-4 7/8	1188.68	40'-8 1/8	1189.69	41'-8 1/4	1191.23	43'-2 3/4	1192.22	44'-2 5/8	1193.74	45'-8 7/8	1195.01	47'-0 1/8	1195.98	13'-11 3/4
Column #3	1186.85	38'-10 1/4	1188.12	40'-1 1/2	1189.14	41'-1 5/8	1190.67	42'-8	1191.65	43'-7 3/4	1193.19	45'-2 1/4	1194.45	46'-5 3/8	1195.43	13'-3 7/8

SPLICE NOTE:

The reinforcing shall not be spliced within the required lap length of the adjacent reinforcing.

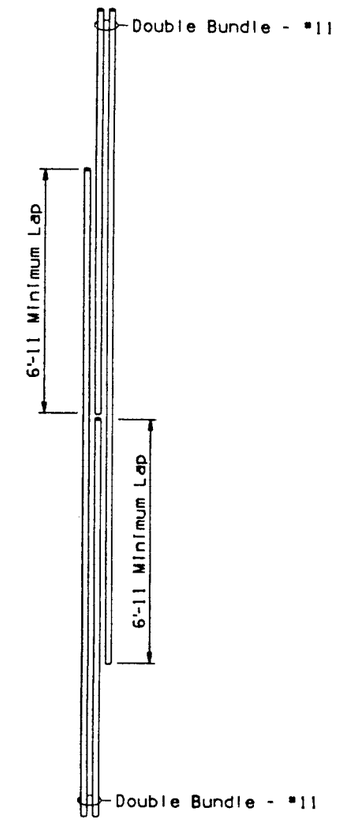

SPLICE DETAIL
Scale: 1/2" = 1'-0

REDUCED SIZE DO NOT SCALE

BRIDGE DESIGN SECTION 'A'		DATE
DESIGN	S. HAYATSHAHI	5/94
DESIGN CK'D	C. CHYAN	5/94
DRAWN	R. CROOKS	5/94
DWG CK'D	T. SISLEY	5/94
APPROVED-PROJ. ENGINEER	C. CHYAN	6/94
APPROVED-DESIGN LEADER	J. Pyne	6/94

ARIZONA DEPARTMENT OF TRANSPORTATION
HIGHWAYS DIVISION
BRIDGE GROUP

STA. 2863+
SALT RIVER BRIDGE
DRILLED SHAFT DETAILS

ROUTE	MILEPOST	STRUCTURE NO.	LOCATION
101L		2341/2342	PIMA, RED MT TI PH II-IST-MC

BRIDGE ENGINEER

SHEET 15 OF 61

TRACS NO. H2413 02C

___ OF ___

/usr3/br10/s2341ds3.dgn
20-JUN-1994 09:07

VIEW NAME:

MT-2 FORM 7, ITEM 3

As-Built Plans
Alma School Road Bridge Over Salt River

ALMA SCHOOL ROAD
BRIDGE OVER THE SALT RIVER
MARICOPA COUNTY

F.H.W.A. Region	State	Project No	Sheet No	Total Sheets
9	Ariz.	66400	15	307-2

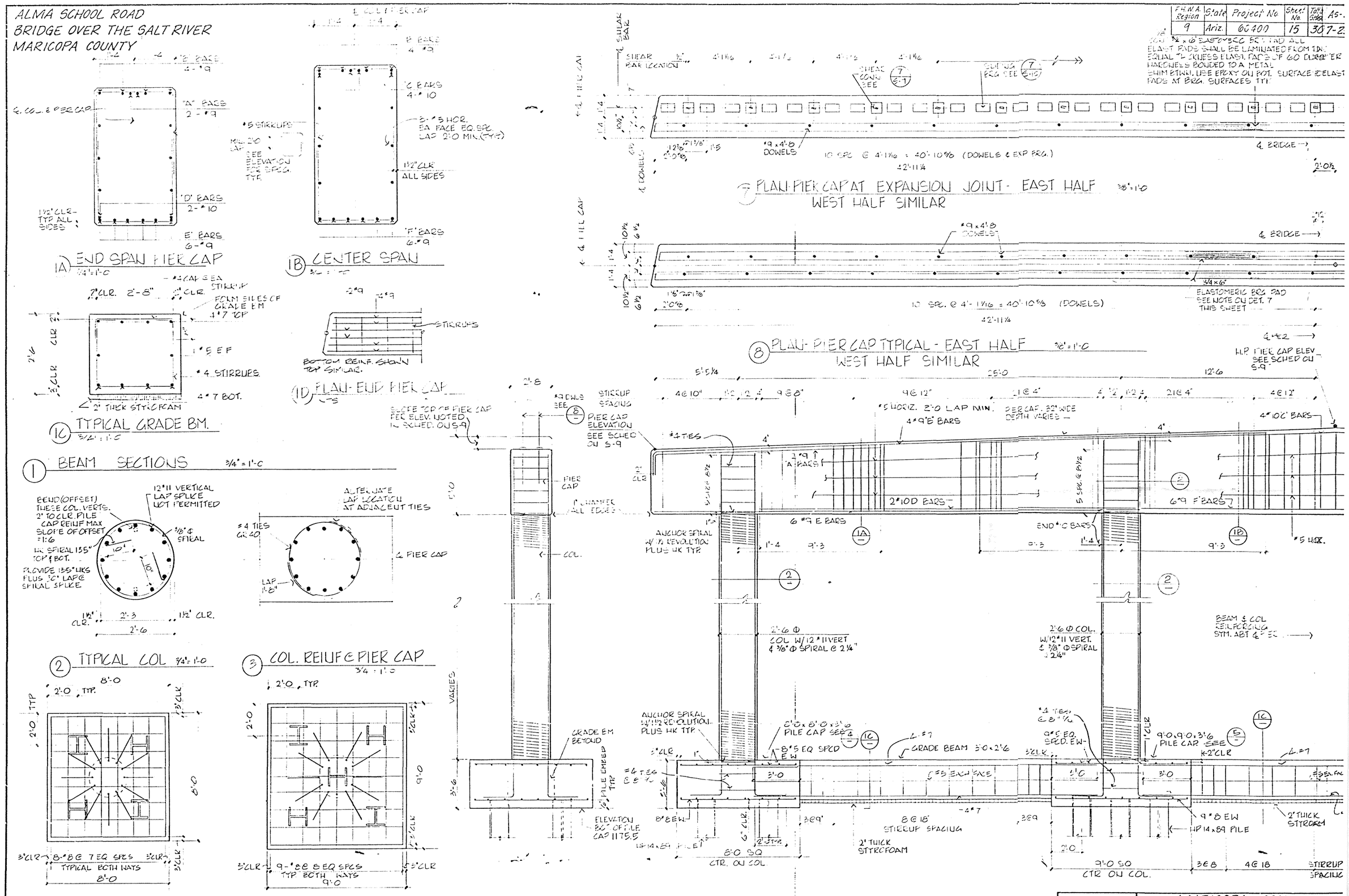

MARICOPA COUNTY HIGHWAY DEPARTMENT

SCALE: As Shown | DRAWN BY
DATE: 7-79 | REVISED:

STA. 35+ ALMA SCHOOL RD
BRIDGE OVER SALT RIVER

ADAM, HAMLYN, ANDERSON ENGRS. PHOENIX, ARIZONA

DRAWN BY
57 of

ALMA SCHOOL ROAD
BRIDGE OVER THE SALT RIVER
MARICOPA COUNTY

F.H.W.A. Region	State	Project No.	Sheet No.	Total Sheets	As-Built
9	Ariz.	60400	4	30	7-25-2

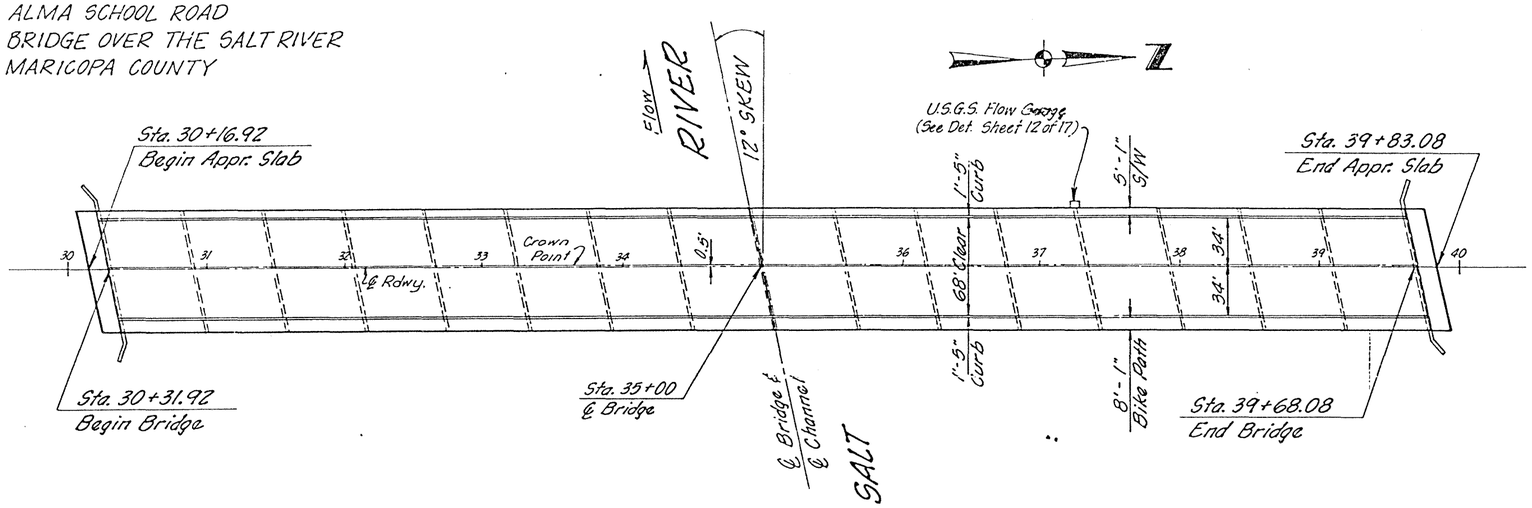

NEW 16-SPAN PRESTRESSED BOX BEAM BRIDGE

Scale: 1" = 50'

GENERAL NOTES

Construction: Uniform Standard Specifications For Public Works Construction Of Maricopa Association Of Governments 1974 w/ Supplements To Date.

Design: AASHTO Standards Specifications For Highway Bridges 1977 And Interim Specifications Bridges 1978 w/ Revisions To Date.

Box Beam Design: Simple Span For All Loads.

Loading Class: HS-20-44

Concrete: (Strength Design)

Prestressed Concrete –	f'c = 5000 psi.
Columns - Class 'AA' –	f'c = 4000 psi
Pier Caps & Walls –	f'c = 3500 psi
Other Than Above Class 'A' –	f'c = 3000 psi

Prestressing Steel-Minimum Ultimate f's:
Wire - 270,000 psi.
Strand - 1/2" Ø = 41,3000 # (A=0.155 in.2)

Reinforced Steel Shall Conform To The Following ASTM Specifications:
Spirals - ASTM - A82
Stirrups - ASTM - A615 Gr. 40
All Other Reinforcement - ASTM - A615 Gr. 60

Structural Steel And Steel Piles Shall Conform To ASTM A 36.

Pile Points Shall Be As Manufactured By Associated Pile & Fitting Corp. APF "Hard Bite" HP 77750 Driving Point Or Approved Equal.

All Piles Shall Be Driven To Minimum Ultimate Capacity Of 150 Tons As Determined By The Hiley Formula.

All Dimensions For Reinforcing Steel Shall Be To Center Of Bars And Shall Provide 2" Minimum Clear Cover Unless Otherwise Noted.

Dimensions Shall Not Be Scaled From Drawings.

Construction Tolerances: Dimensional Tolerances Shall Not Exceed Those Recomended In The A.A.S.H.T.O. Interim Manual For Inspection Of Prestressed Concrete Bridge Members.

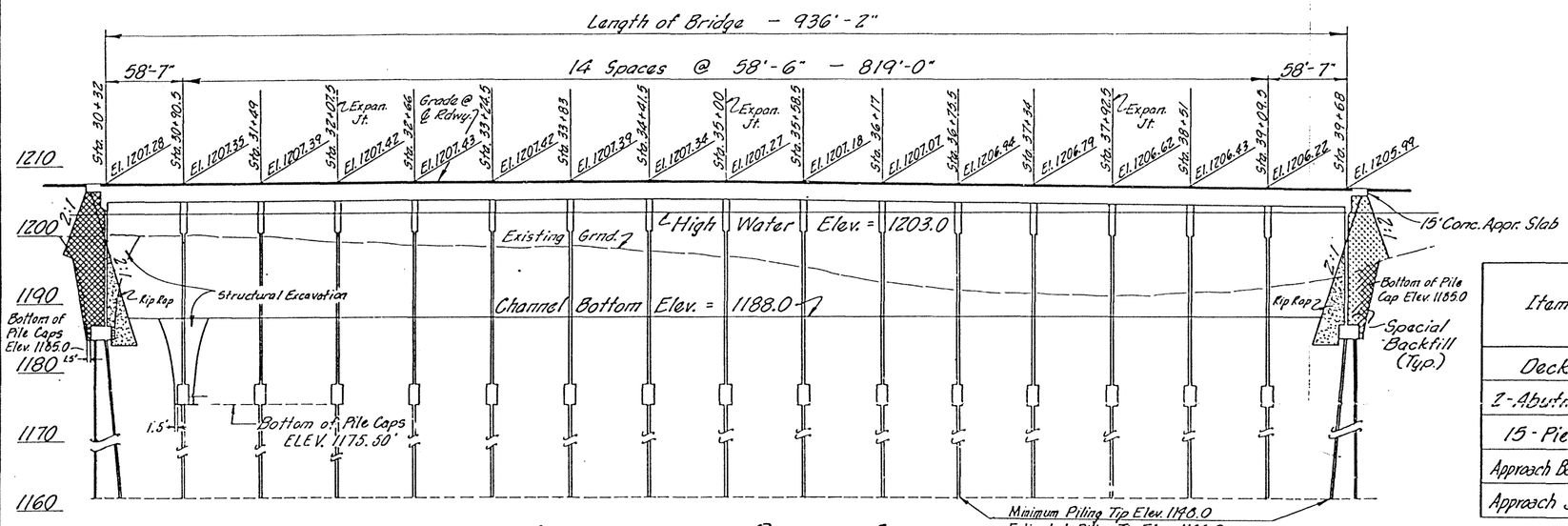

LONGITUDINAL BRIDGE SECTION

Scale: Horiz. 1" = 50'
Vert. 1" = 10'

SUMMARY OF ESTIMATED QUANTITIES

Item	HP14x89 Piling L.F.	Exp. Joint L.F.	Conc. Class 'AA' C.Y.	Conc. Class 'AB' C.Y.	Conc. Class 'A' C.Y.	* Reinf. Steel lbs.	Precast Prestress. Conc. Members Each	Chain Link Fence L.F.	Guage Station L.S.
Deck	–	240	–	–	267	23290	336	1870'	[illegible]
2-Abutments	4880	–	–	291	275	68520	–	–	–
15-Piers	8100	–	221	581	768	312330	–	–	–
Approach Barrier	–	–	–	–	5	1120	–	–	–
Approach Slab	–	–	–	–	100	16470	–	–	–

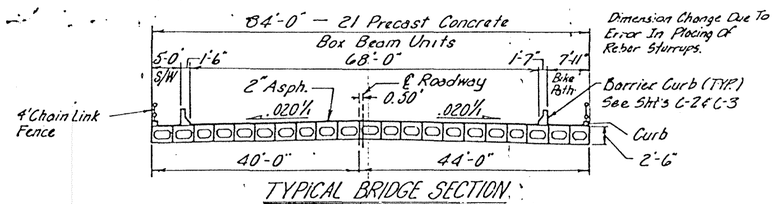

Dimension Change Due To Error In Placing Of Rebar Stirrups.

TYPICAL BRIDGE SECTION

7-25-80

MARICOPA COUNTY
HIGHWAY DEPARTMENT

SCALE: As Shown	LOCATION PLAN	DRAWN BY: J.H.
DATE: 7-79		REVISED:

STA. 35+ ALMA SCHOOL ROAD
BRIDGE OVER SALT RIVER

ADAM, HAMLYN, ANDERSON ENGRS.
PHOENIX, ARIZONA

DRAWING NO. 51 of 11.

BRUNING 44 132

MT-2 FORM 7, ITEM 3

As-Built Plans
Alma School Road South Bridge Over Salt River

ALMA SCHOOL ROAD
BRIDGE OVER THE SALT RIVER (LOW FLOW CHANNEL)
MARICOPA COUNTY

F.H.W.A. Region	State	Project No.	Sheet No.	Total Sheets	As Built
9	Ariz.	6040!	22	30	11-10-80

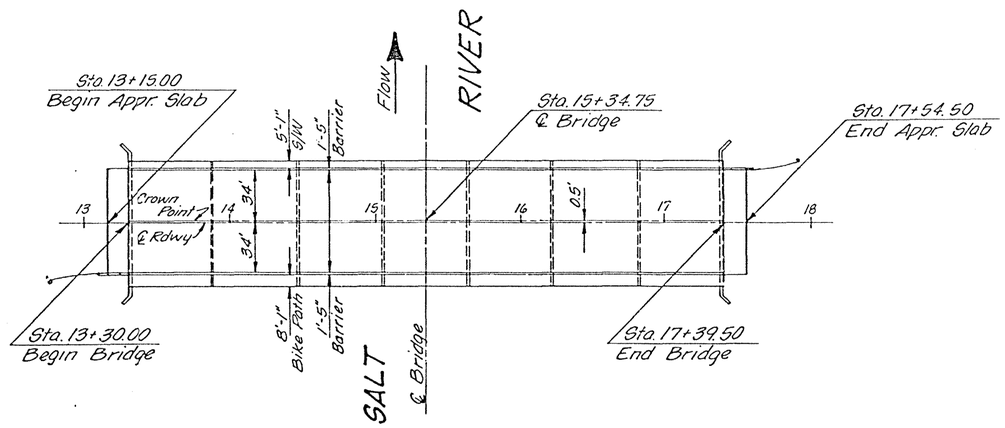

NEW 7-SPAN PRESTRESSED BOX BEAM BRIDGE

Scale: 1" = 50'

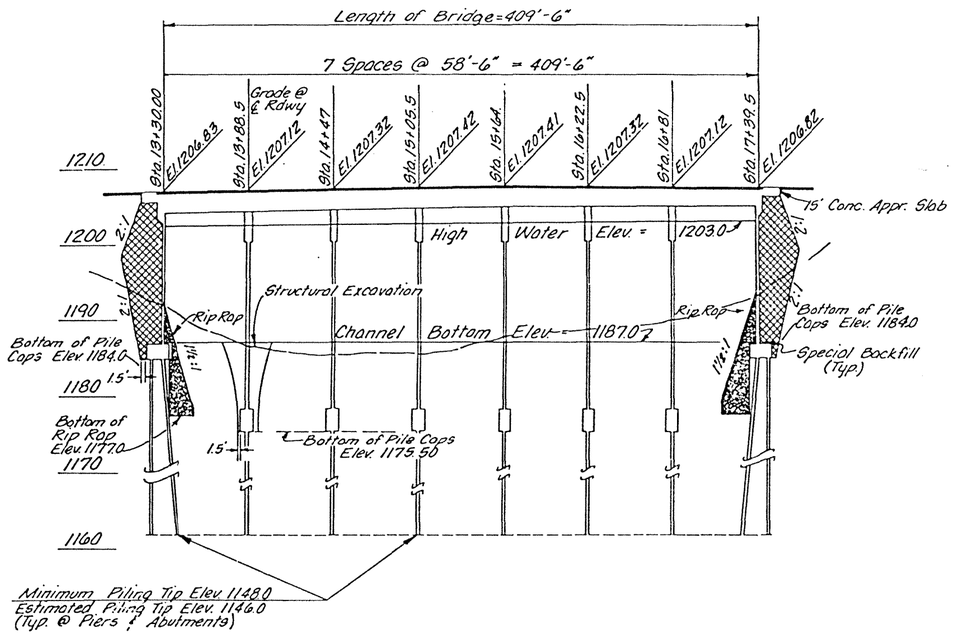

LONGITUDINAL BRIDGE SECTION

Scale: Horiz. 1" = 50'
Vert. 1" = 10'

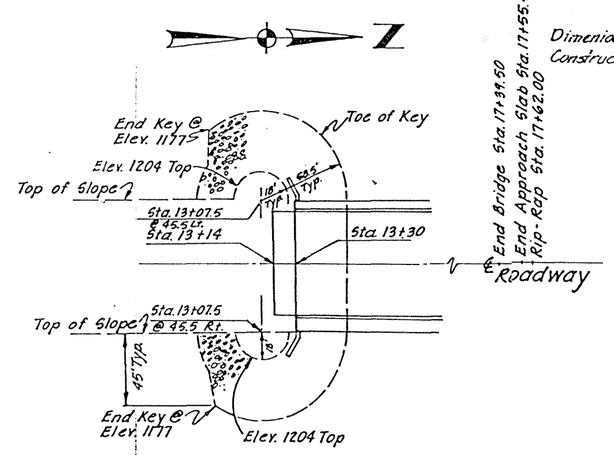

PLAN VIEW TYPICAL BOTH ENDS

Scale: 1" = 50'

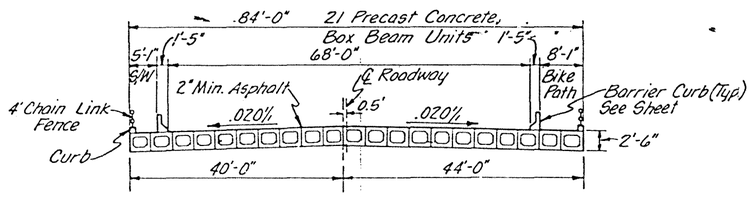

TYPICAL BRIDGE SECTION

GENERAL NOTES

Construction: Uniform Standard Specifications For Public Works Construction Of Maricopa Association Of Governments 1974 w/ Supplements To Date.

Design: AASHTO Standards Specifications For Highway Bridge 1977 And Interim Specifications Bridges 1978 w/ Revisions To Date.

Box Beam Design: Simple Span For All Loads.

Loading Class: HS-20-44

Concrete: (Strength Design)

Prestressed Concrete -	f'c = 5000 psi.
Columns - Class "AA" -	f'c = 4000 psi
Pier Caps & Walls -	f'c = 3500 psi
Other Than Above Class "A" -	f'c = 3000 psi

Prestressing Steel - Minimum Ultimate f's:
Wire - 270,000 psi.
Strand - 1/2" ϕ = 41,3000 # (A = 0.153 in.2)

Reinforced Steel Shall Conform To The Following ASTM Specifications:
Spirals - ASTM - A 82
Stirrups - ASTM - A615 Gr. 40
All Other Reinforcement - ASTM - A615 Gr. 60

Structural Steel And Steel Piles Shall Conform To ASTM A 36.

Pile Points Shall Be As Manufactured By Associated Pile & Fitting Corp. APF "Hard Bite" HP 77750 Driving Point Or Approved Equal.

All Piles Shall Be Driven To Minimum Ultimate Capacity Of 150 Tons As Determined By The Hiley Formula.

All Dimensions For Reinforcing Steel Shall Be To Center Of Bar. And Shall Provide 2" Minimum Clear Cover Unless Otherwise Noted.

Dimensions Shall Not Be Scaled From Drawings.

Construction Tolerances: Dimensional Tolerances Shall Not Exceed Those Recomended In The A.A.S.H.T.O. Interim Manual For Inspection Of Prestressed Concrete Bridge Members.

AS BUILT
DATE 11-10-80

DATE	ISSUED	BY:
6/2/80	Piles	
6/23/80	Reinf. Stl.	Prest. B

MARICOPA COUNTY
HIGHWAY DEPARTMENT

SCALE: As Shown
DATE: 5-80
LOCATION PLAN
DRAWN: L.D.
REVISE:

STA. 13+ ALMA SCHOOL ROAD
BRIDGE OVER SALT RIVER

ADAM, HAMLYN, ANDERSON ENGRS.
PHOENIX, ARIZONA

DRAWG. No. S1 of 9

ALMA SCHOOL ROAD
BRIDGE OVER THE SALT RIVER (LOW FLOW CHANNEL)
MARICOPA COUNTY

F.H.W.A. Region	State	Project No.	Sheet No.	Total Sheets	As-Bit
9	Ariz.	60401	26	30	11-1-80

Unless Noted Otherwise, All Elast. Pads shall be Laminated from Two Equal Thickness Elast. Pads of 60 Durom. for Hardness, Bonded to a Metal Shim Between. Use Epoxy on Bottom Surface of Elast. Pads at Brg. Surface Only.

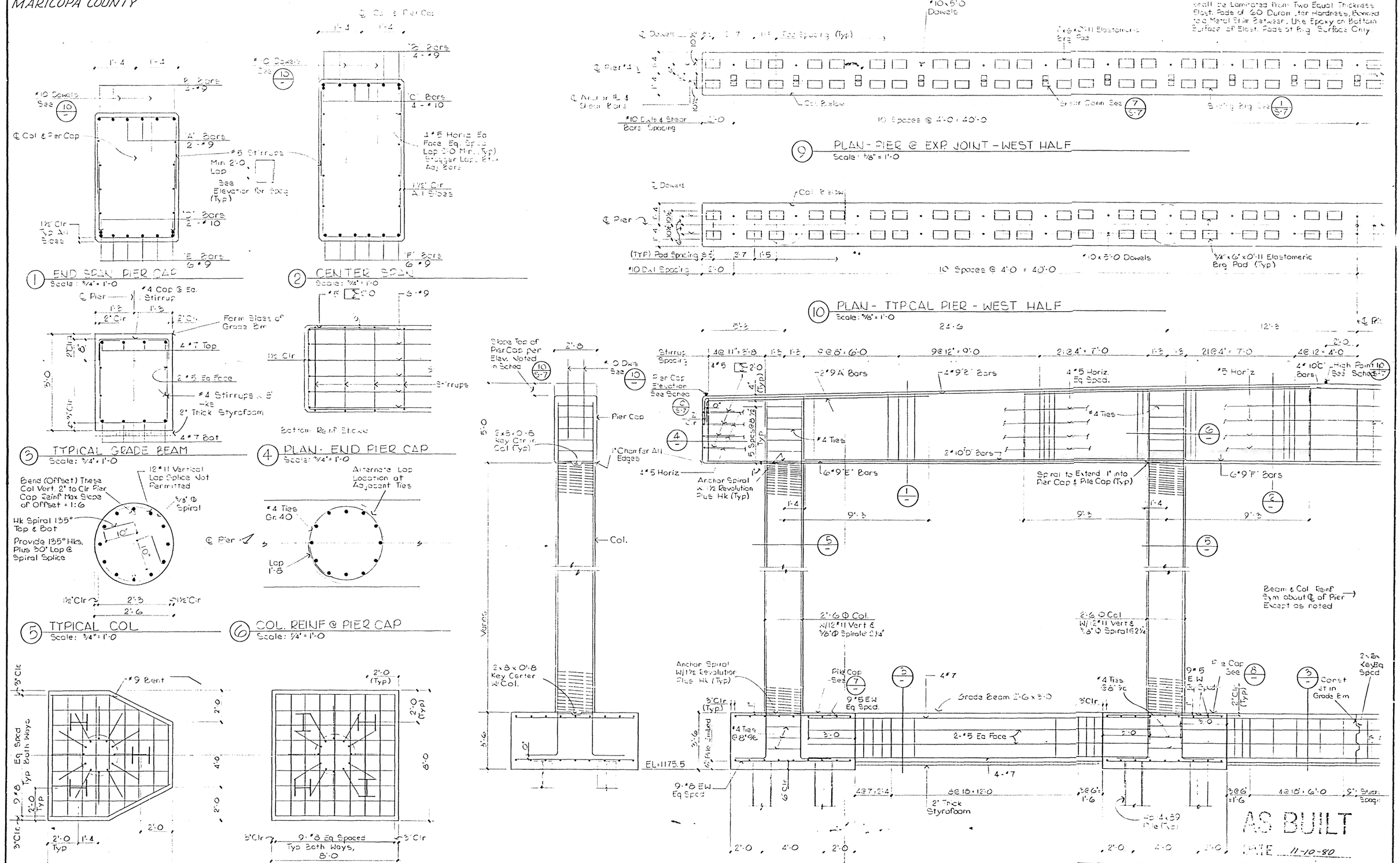

DATE	ISSUED FOR
8/18/80	Bids
9/19/80	Bid Issue (Mod. Only)
10/28/80	Bid Issue / Proceed Bids

MARICOPA COUNTY HIGHWAY DEPARTMENT

SCALE: As Shown | DRAWN BY: M.
DATE: | TYPICAL PIER DETAILS | REVISED:

STA. 13+ ALMA SCHOOL ROAD
BRIDGE OVER SALT RIVER

ADAM, HAMLYN, ANDERSON ENGRS.
PHOENIX, ARIZONA

DRAWING: S5 of 9