Red Mountain Freeway (202L)
(University Drive - Southern Avenue)

Final
DRAINAGE REPORT
Volume 1 of 2

TRACS No. H5783 01C

APRIL 2005

Submitted to:

ADOT

Submitted by:

PB PARSONS BRINCKERHOFF

RED MOUNTAIN FREEWAY (202L)

(UNIVERSITY DRIVE – SOUTHERN AVENUE)

TRACS No. H5783 01C

FINAL DRAINAGE REPORT

VOLUME 1 OF 2

April 2005

Submitted to:

ADOT

Submitted by:

PARSONS BRINCKERHOFF

TABLE OF CONTENTS

1.0 INTRODUCTION 1
1.1 PROJECT LOCATION 1
1.2 PROJECT DESCRIPTION 1
1.3 PURPOSE OF DRAINAGE REPORT 4
1.4 DRAINAGE PLANS 4
2.0 OFF-SITE HYDROLOGY 5
2.1 INITIAL DRAINAGE REPORT 5
2.2 HYDROLOGY FROM INITIAL DRAINAGE REPORT 5
2.2.1 Watershed Characteristics 5
2.2.2 Land Use Characteristics 5
2.2.3 Existing Watershed Facilities 5
2.3 EXISTING DRAINAGE FACILITIES 6
2.4 HYDROLOGIC CRITERIA AND METHODOLOGIES 7
2.5 PREVIOUS HYDROLOGIC INVESTIGATIONS 8
2.5.1 Updates By Initial Drainage Report 8
2.5.2 Hydrologic Modeling Refinements 9
2.6 OFF-SITE HYDROLOGY MODIFICATION 10
3.0 ON-SITE DRAINAGE 11
3.1 GENERAL DISCUSSION 11
3.2 DESIGN CRITERIA 11
3.3 METHODOLOGY 13
3.3.1 Hydrology 13
3.3.2 Hydraulics 14
3.4 DESIGN APPROACH 15
3.5 PROPOSED ON-SITE DRAINAGE SYSTEMS 15
3.6 FINAL DESIGN ISSUES 16
4.0 OFF-SITE DRAINAGE 18
4.1 GENERAL DISCUSSION 18
4.2 DESIGN CRITERIA 18
4.2.1 Channel Design Criteria 18
4.2.2 Culvert Design Criteria 18
4.3 DESIGN DISCHARGES 19
4.4 HYDRAULIC ANALYSES 19
4.5 OFF-SITE DRAINAGE SYSTEM ELEMENTS 20
4.5.1 Baffle Chute Drop Structure at Southern Avenue Detention Basin 20
4.5.2 East Channel 21
4.5.3 Broadway Road Box Culvert 23
4.5.4 West Channel 23
5.0 CONCLUSIONS 24
6.0 REFERENCES 25

LIST OF TABLES

Table 1 - Summary of 100-Year Peak Flows 10
Table 2 - Summary of Off-Site Local Drainage Systems 20
Table 3 - East Channel Cross Culverts 21
Table 4 - East Channel Side Culverts 22

LIST OF FIGURES

Figure 1 - Vicinity Map 2
Figure 2 - Location Map 3

APPENDICES

APPENDIX A DRAINAGE PLANS
(Located in Volume 1 of the Report)

APPENDIX B OFF-SITE HYDROLOGY
- HEC-1 SCHEMATIC, UPDATED NORTHEAST REGION
- HEC-1 OUTPUT (NE200250)

APPENDIX C ON-SITE DRAINAGE AREA PLANS

APPENDIX D ON-SITE DRAINAGE CALCULATIONS
- PAVEMENT DRAINAGE CALCULATIONS
- CURB OPENING HYDRAULICS
- STORM DRAIN HYDRAULICS (STORMCAD)

APPENDIX E OFF-SITE HYDRAULICS
- HYDRAULIC CALCULATIONS FOR BAFFLE CHUTE DROP STRUCTURE
- EAST CHANNEL HEC-RAS MODEL
- BROADWAY ROAD BOX CULVERT HEC-RAS MODEL
- WEST CHANNEL HEC-RAS MODEL

APPENDIX F OFF-SITE LOCAL DRAINAGE CALCULATIONS
- OFF-SITE DRAINAGE AREA MAPS
- HYDROLOGIC AND HYDRAULIC CALCULATIONS FOR OFF-SITE LOCAL DRAINAGE

(Appendices B thru F are Located in Volume 2 of the Report)

1.0 INTRODUCTION

1.1 PROJECT LOCATION

This segment of the Red Mountain Freeway, extending from approximately University Drive to Southern Avenue, is located west of Ellsworth Road within the City of Mesa in Maricopa County, Arizona. A project Vicinity Map is provided in Figure 1 and a project Location Map is showed in Figure 2.

1.2 PROJECT DESCRIPTION

The Red Mountain Freeway (SR 202L) is part of the Maricopa Association of Governments (MAG) Regional Freeway System and will connect Interstate 10 (I-10) to the Superstition Freeway (US 60) through the East Valley. The completed freeway will serve the cities of Phoenix (COP), Tempe (COT) and Mesa (COM), the Salt River Pima Maricopa Indian Community, and unincorporated portions of Maricopa County.

This project segment of SR 202L begins at University Drive and extends south approximately two miles to Southern Avenue. The freeway mainline will consist of six basic through lanes, three in each direction of travel, separated by an open median. The open median will accommodate a future HOV lane in each direction.

The freeway mainline profile is partially depressed below existing grade at University Drive and transitions to become fully depressed at Apache Trail Boulevard (Main Street), Broadway Road, and Pueblo Avenue. The freeway profile then transitions to become fully elevated over Southern Avenue.

Full-diamond traffic interchanges (TIs) will be provided at University Drive and Broadway Road. Auxiliary lanes will be provided in both directions of travel between the University Drive and Broadway Road traffic interchanges. The ramps to the north of University Drive will be constructed with the adjacent Power Road to University Drive segment of the Red Mountain Freeway (TRACS No. H5782 01C). A two-lane collector road will be provided in each direction between University Drive and Broadway Road. Traffic access from Apache Trail Boulevard to the Red Mountain Freeway will be provided via the collector roads. The crossroads will be widened through the freeway crossings to match the interchange geometry and to provide the turning lanes necessary to satisfy traffic operational requirements. Several existing local streets will be impacted by the freeway construction and will require modification.

The bridges included in this project are the University Drive TI Underpass, the Apache Trail Boulevard Underpass, and the Broadway Road TI Underpass. The Southern Avenue Overpasses will be constructed with the adjacent SR 202L / US 60 System TI Phase II project (TRACS No. H5686 04C). Currently, there are no plans to construct Pueblo Avenue as an underpass although the mainline profile is designed to accommodate a possible future structure. Retaining walls and sound walls will be required at several locations within the project limits.

Off-site drainage flows will be collected between University Drive and Southern Avenue primarily in a channel (East Channel) to be located along the east side of the freeway. On-site drainage will utilize a conventional storm drain system with gravity flows to the south. Utility relocations will also be fairly extensive within the freeway corridor and along the local street alignments, including a 230 kV power line.

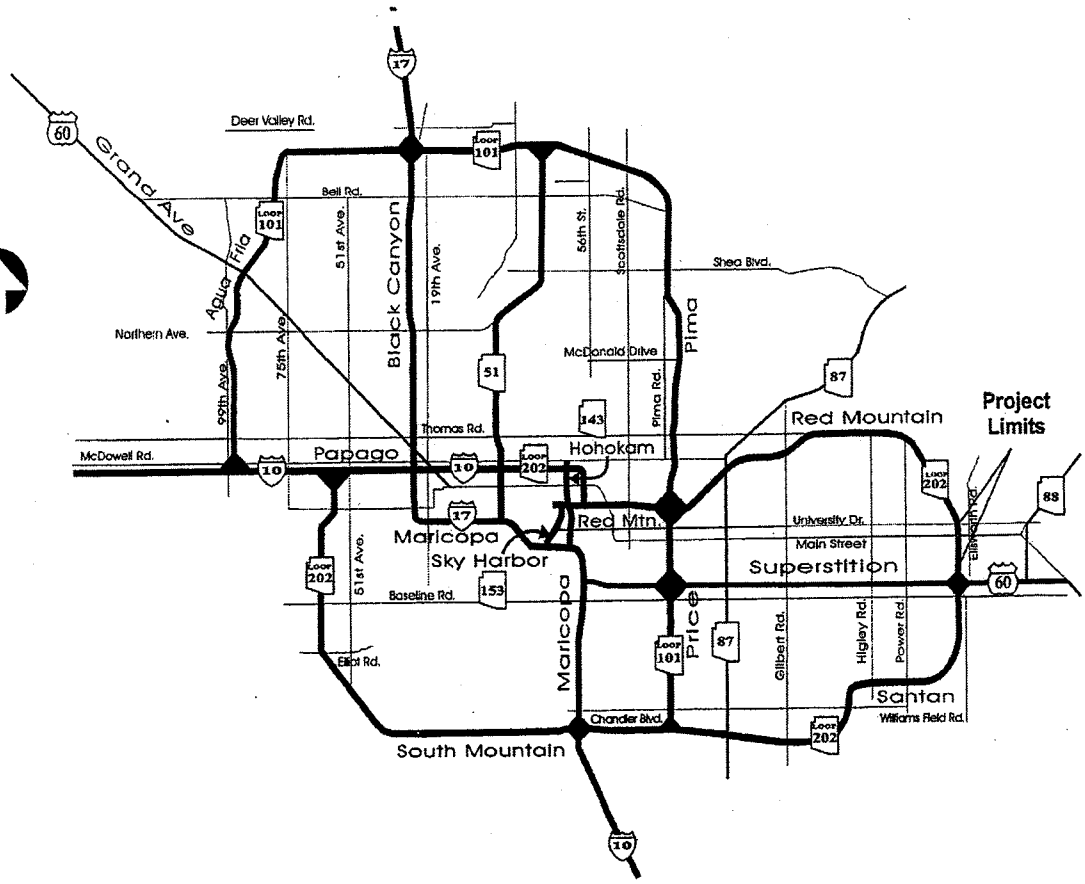

RED MOUNTAIN FREEWAY (202L)
UNIVERSITY DRIVE TO SOUTHERN AVENUE

Figure 1: Vicinity Map

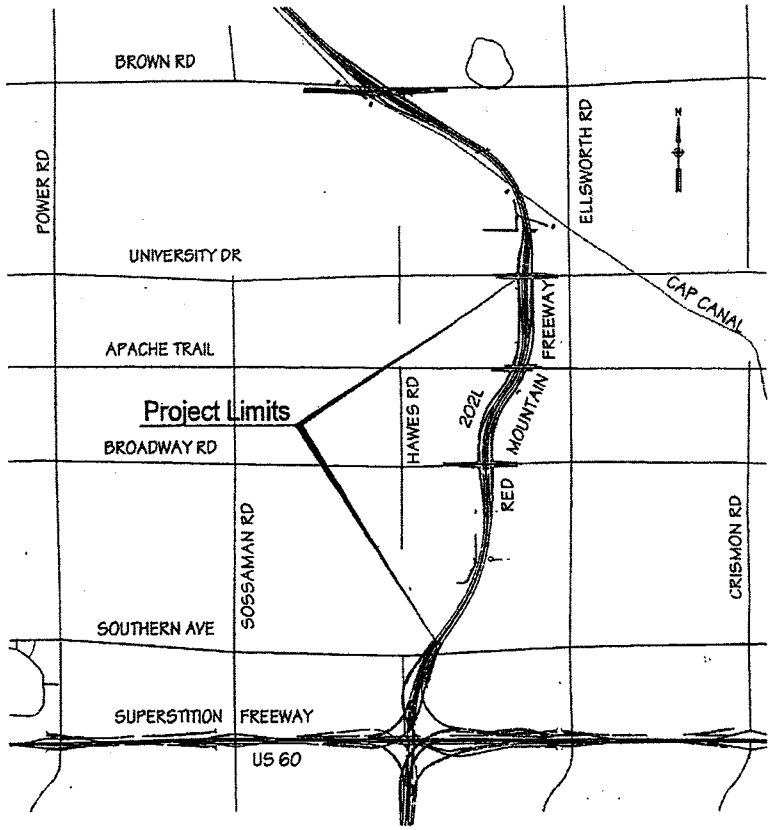

Figure 2: Location Map

Currently, the Red Mountain Freeway has been constructed from I-10 to the Higley Road traffic interchange near Thomas Road. The adjacent SR 202L segments (Phase II of the SR 202L / US 60 System TI and Power Road to University Drive) are scheduled to be either completed or under construction concurrently with this segment. The entire Red Mountain Freeway is currently programmed to be completed by the end of year 2007. The University Drive TI may possibly serve as an end-of-freeway condition until the construction of the Power Road to University Drive segment is completed.

1.3 PURPOSE OF DRAINAGE REPORT

This report addresses the proposed drainage facilities included in the University Drive to Southern Avenue segement of Red Mountain Freeway. The report documents the procedures, methodologies, criteria, and computations utilized in the hydrologic and hydraulic analyses and design of the proposed off-site and on-site drainage facilities for the project. Supporting tables, calculation sheets and drawings are included in the Appendices of this report.

1.4 DRAINAGE PLANS

The off-site and on-site drainage plans for this segment of the Red Mountain Freeway from University Drive to Southern Avenue are presented in Appendix A.

2.0 OFF-SITE HYDROLOGY

2.1 INITIAL DRAINAGE REPORT

The analysis of the existing off-site drainage characteristics and the development of the proposed hydrologic model were completed by the ADOT General Consultant as part of the Stage II design of the project. The project off-site hydrology was addressed in Chapter 2.0 Off-Site Hydrology of the "Red Mountain Freeway (202L), Initial Drainage Report, University Drive to Southern Avenue," Volumes I and 2, developed by DMJM+Harris, dated October 2003 (Initial Drainage Report).

2.2 HYDROLOGY FROM INITIAL DRAINAGE REPORT

The off-site hydrology from the Initial Drainage Report was developed by modified the regional hydrologic models from the Flood Control District of Maricopa County (FCDMC) as part of the East Mesa Area Drainage Master Plan (EMADMP). Summary of the off-site hydrology from Initial Drainage Report is included in following subsections:

2.2.1 Watershed Characteristics

The majority of the off-site watershed affected by this project is located within the City of Mesa. A small unincorporated area of Maricopa County is also within the watershed and is located north of US 60 between Emelita Avenue and Corabell Avenue, from Hawes Road to Crismon Road.

2.2.2 Land Use Characteristics

The off-site watershed consists of various types of land uses. Land use types and densities vary widely within the watershed; they include a considerable number of small lot and medium density residential land uses, mobile home parks, and retirement communities. Many vacant properties are planned for commercial or residential development in the future. Along the Red Mountain Freeway corridor, several residential developments are located adjacent to or within the project limits. Many of the vacant properties within the SR 202L corridor have been, or are in the process of being acquired by ADOT for the freeway construction.

The overall topography of the watershed is relatively flat except in the upper portions. The direction of surface runoff is generally from the northeast to the southwest. Within the developed areas, the majority of the runoff follows the local streets to existing storm drains, channels or retention/detention basins.

2.2.3 Existing Watershed Facilities

The off-site hydrologic analysis focuses primarily on the Northeast region that affects by the proposed construction of this SR 202L segment. The Northeast region is located north of US 60, east of the Sossaman Channel, and extends northeast of the (Central Arizona Project (CAP) Canal to the Signal Butte Floodway and Floodwater Retarding Structure (FRS). The eastern limit of this region is approximately one mile east of Crismon Road and extends in a northwesterly direction to the drainage basin divide. The outfall location for the Northeast region is the Sossaman Channel at the US 60 crossing, approximately 1/4 mile east of Sossaman Road.

The watershed for this region generally flows in a southwesterly direction and is bisected by the CAP Canal. Several regional detention basins have been constructed near the CAP by the FCDMC. Four basins are located adjacent to the CAP Canal, and one basin (Parkwood Ranch Basin) is located approximately ¼ of a mile south of the canal. Downstream of the detention facilities, several existing and planned stormwater conveyance facilities parallel existing arterial roadways, as runoff is conveyed through the remainder of the region.

Runoff from the eastern portion of the Northeast region is conveyed generally in a southwesterly direction until it is intercepted and conveyed south by open channels located adjacent to Ellsworth Road and Crismon Road. At Crismon Road, runoff collected by the ADOT drainage channel is conveyed under Crismon Road through a double 10' x 6' box culvert and continues west in a concrete lined channel to an ADOT detention basin located northeast of the Ellsworth Road/US60 TI. Runoff conveyed south along the east side of Ellsworth Road is also directed to the 617 acre-foot ADOT detention basin. This on-line detention basin attenuates peak flow from 2,473 cfs (existing 100-year inflow) to 17 cfs; with discharge to a 48-inch diameter RCP beneath Ellsworth Road.

West of Ellsworth Road, the ADOT off-site basin and channel system consists of a concrete lined channel with a series of on-line and off-line detention basins located immediately north of US60. There are a total of four basins, currently under construction as part of the SR 202L / US 60 Traffic Interchange project. The basins discharge back into the US 60 drainage channel west of Hawes Road prior to the confluence with the Sossaman Channel.

Appendix B includes an exhibit contained drainage sub-basins and HEC-1 Schematic for the Updated Northeast Region from the Initial Drainage Report. The HEC-1 schematic was modified from the previous hydrologic model for the EMADMP due to the proposed Red Mountain Freeway.

2.3 EXISTING DRAINAGE FACILITIES

The proposed freeway construction between University Drive and Southern Avenue has directed impact to three existing drainage facilities in the project watershed. They are CAP Detention Basin 2, Broadway Road Channel, and an earthen channel south of Apache Trail Boulevard.

CAP Detention Basin 2

Recently, FCDMC complete the construction of CAP Detention Basin 2 which is located immediately downstream of the CAP Canal, north of University Drive, and east of Ellsworth Road. This detention basin retains the discharge from the chute through the CAP Canal, routes the outflow toward south along 93rd Street through a 30-inch pipe to Apache Trail Boulevard, and then southwesterly to the existing concrete channel along the north side of Broadway Road.

The CAP Basin 2 is designed for the build-out condition in the watershed, which means the retention requirements are met by the development. According to FCDMC, the watershed for CAP Basin 2 is almost completely built out, and therefore the basin will not be overtopped during the 100-year flood event but it should discharge south through the 30-inch pipe. Due to the completion of this basin, the existing four barrel 10'x4' box

culvert under Ellsworth Road will not carry any overflow from the CAP Canal chute and it will only intercept flows from a couple small off-site areas and the Ellsworth Road pavement drainage south of University Drive to the proposed freeway alignment.

A drainage channel was proposed in the ADOT acquired parcel and will convey flow from the existing four barrel 10'x4' box culvert into the new concrete channel (East Channel) along the east side of the freeway. East Channel is a collector channel which will intercept the off-site flows from the project watershed east of the freeway.

Broadway Road Channel

An existing concrete channel, along the north side of Broadway Road (Broadway Road Channel), intercepts the runoff and conveys flow toward the west where they combine with additional runoff at the Hawes Road Channel. Runoff is then carried southward to Southern Avenue where the flows are split. The flow split structure conveys the majority of the Hawes Road Channel flows westward along Southern Avenue in a double 10' x 6' box culvert to the Sossaman Channel. The Sossaman Channel flows southward to US 60. An FCDMC regional off-line detention basin is located immediately upstream from US 60 and is intended to detain peak discharges in excess of the capacity of the US 60 culvert crossing. The remainder of the Hawes Road Channel flows, after the flow split at Southern Avenue, continue southward in an improved channel to the ADOT US 60 drainage channel. The flows are then conveyed westward to the Sossaman Channel. The Sossaman Channel crosses US 60 in a six barrel 12'x 6' box culvert.

A portion of the existing Broadway Road Channel will be removed due to the proposed freeway. A new concrete channel (East Channel) will be constructed along the east side of the freeway to convey the off-site flows from the project watershed to the new Southern Avenue Detention Basin, which will be constructed under the adjacent SR 202L / US 60 System TI Phase II project.

Earthen Channel South of Apache Trail Boulevard

An existing earthen channel is located just downstream of the existing 6'x3' box culvert under Apache Trail Boulevard (Main Street), which intercepts runoff from the area north of Apache Trail Boulevard and conveys flow southerly to the Broadway Road Channel.

A new West Channel will be proposed for this project to connect this earthen channel to the Broadway Road Channel due to the proposed freeway.

2.4 HYDROLOGIC CRITERIA AND METHODOLOGIES

The general hydrologic criteria implemented with this project are the same as those used with the previous hydrologic modeling performed by the FCDMC as part of the East Mesa Area Drainage Master Plan (EMADMP) and the Initial Drainage Report

The hydrologic models used in this project were developed using the U.S. Army Corps of Engineers' HEC-1 flood hydrograph package. The models were prepared according to the methodology presented in the *Drainage Design Manual for Maricopa County, Arizona, Volume 1, Hydrology*. The 100-year, 24-hour precipitation data was based upon the *Precipitation Frequency Atlas for Arizona* (NOAA, 1973). The rainfall was applied uniformly over the watersheds with depth-area reduction factors based upon Maricopa County methodology. Runoff parameters were based on soil data from the

Soil Survey of Eastern Maricopa and Northern Pinal Counties Areas, Arizona (USDA, 1974) and Maricopa County soils maps. The different land uses for the interim (year 2002) and future conditions (build-out) models were assigned as they are currently planned according to Maricopa County and the local municipalities.

As outlined in the *Drainage Design Manual for Maricopa County*, the Green and Ampt methodology was used to determine rainfall losses and the S-Graph methodology was used for hydrograph generation. Muskingum-Cunge or normal-depth routing was used for the majority of the sub-basin hydrograph routing operations.

2.5 PREVIOUS HYDROLOGIC INVESTIGATIONS

The EMADMP was completed by the FCDMC in 1998. This study includes many of the existing drainage facilities in the east Mesa area, along with the existing US 60 off-site drainage facilities. An associated EMADMP Recommended Design Report, prepared for the FCDMC, identifies various stormwater management facilities recommended for implementation in this watershed. A preliminarily design was completed for these drainage facilities using hydrology which assumed an ultimate "build-out" land use condition. However, the study overlooked the impact of the freeway construction within the study area.

For the Northeast region, the baseline hydrologic model included land use projections to the year 2002. Where future development is anticipated, modifications were made to the baseline models to include the simulation of retention basins expected to be built with the planned residential developments. This baseline hydrologic model also included several proposed FCDMC and Mesa capital improvements projects, and the planned CAP stormwater detention basins.

2.5.1 Updates By Initial Drainage Report

In the Initial Drainage Report, the majority of the updates made to the baseline hydrologic model for the Northeast region (NE2002) were required to reflect the proposed Red Mountain Freeway and the SR 202L / US 60 Traffic Interchange.

Within the Northeast region, the proposed 202L will bisect or modify various sub-basins included in the baseline hydrologic model. For all off-site (outside of the freeway corridor) sub-basins with areas to be modified, it was assumed that the same percentages of land uses will occur within the updated sub-basin as with the baseline conditions. For these sub-basins, revised runoff parameters were calculated considering the adjusted area. The corresponding unit hydrographs were inserted into the updated HEC-1 model (NE2002TI).

For the sub-basins within the 202L corridor (on-site), the hydrologic modeling parameters were obtained from rational method calculations. This information was used by calculating a basin area equal to the runoff coefficient multiplied by the actual area coupled with a 100 percent impervious variable to approximate synthetic SCS hydrographs. These hydrographs, for the appropriate design storm, were then input into the hydrologic model for each of the four on-site sub-basins.

Within the Northeast region, the baseline hydrologic model provided by the FCDMC (NE2002) was modified to incorporate the re-delineation and rerouting of the various sub-basins affected by the Red Mountain Freeway construction. Since the 202L will be

depressed between University Drive and Emilita Drive, the runoff was rerouted in a channel located along the eastern side of the 202L to convey runoff south to Southern Avenue.

This concept of routing off-site runoff along the east side of the freeway via a new concrete lined channel (East Channel) is consistent with the 1988 Red Mountain Freeway Design Concept Report. At Southern Avenue, flow from the East Channel is conveyed to a proposed detention basin located at the northeast corner of Southern Avenue and the SR 202L to be constructed as part of the SR 202L / US 60 TI Phase II project. Stormwater outflow from this detention basin (Southern Avenue Detention Basin) will be conveyed in a box culvert to the west side of the SR 202L and to the south of Southern Avenue, where the box culvert will discharge into an open channel. The channel will convey flows westerly toward Hawes Road. The open channel along Southern Avenue is a key element of the off-site drainage system since it is designed as a combined outfall with the SR 202L on-site drainage system north of Southern Avenue.

2.5.2 Hydrologic Modeling Refinements

Several refinements were made to the previously developed "2002" hydrologic model as part of the development of the Stage II Design for the proposed Red Mountain Freeway from University Drive to Southern Avenue. Hydrologically, these refinements include adding additional concentration points along the freeway corridor to assist with the design of various improvements.

Sub-basin 18D was further subdivided so that peak flow rates could be estimated at University Drive and Apache Trail Boulevard (Main Street). These elements include specific hydrologic modeling parameters as well as hydraulic elements to ensure proper hydrologic function. The original hydrologic model combined runoff from the east (basins 17A and 17B) at Apache Trail. The FCDMC provided as-built construction drawings for their CAP Detention Basin 2. Upon review of this information as well as local mapping, the confluence of this eastern runoff with the East Channel along the east side of the freeway was found to occur approximately 1,700 feet south of Apache Trail Boulevard. The hydrologic model was adjusted to reflect this condition.

An additional concentration point was added at Broadway Road to help segregate runoff flowing south in the East Channel from the runoff coming from the east at that location. From this location, runoff continues south in the East Channel to the Southern Avenue Detention Basin.

One observation made from the model refinements is that peak flows on the west side of the Red Mountain Freeway near Hawes Road and Broadway Road differ from those of the previous model. It was found that the original hydrologic model received from FCDMC for the year 2002 contained an error. The original model mentioned that 53 percent of sub-basin 18C (now 18C, 18D, 18E and 18F) had retention associated with its development. However, the DI and DQ records diverted the entire sub-basin runoff. With the new model, this situation was corrected and there was a resulting increase in flow. Due to the effects of the interception of runoff by the east channel and the rerouting of flow near Hawes Road and Southern Avenue, the resulting peak flow discharging west along Southern Avenue of 1,148 cfs is still less than the original model's discharge of 1,790 cfs at C31. The twin 10' x 6' RCB located west of Hawes Road along the north side of Southern Avenue has a capacity of approximately 2,200 cfs (S=0.6768%).

Hydrologic model refinements were also made on the west side of the Red Mountain Freeway. New sub-basins 18D and 24A were created and routed south to Broadway Road where a relatively small drainage area is trapped between existing developments and the freeway. The West Channel conveys this runoff to Broadway Road where it is intercepted by a new culvert that will convey flows to the west into an existing concrete channel located along the north side of Broadway Road.

Channel routing elements were adjusted where necessary to reflect the shorter lengths between the additional concentration point locations. Other adjustments, such as modifying channel routing configurations, were not made to the hydrologic model except as appropriate.

2.6 OFF-SITE HYDROLOGY MODIFICATION

The design of the SR 202L/US60 Traffic Interchange resulted in one minor modification to the HEC-1 model from the Initial Drainage Report, due to the final design of the Southern Avenue Detention Basin of the SR 202L / US 60 TI Phase II project.

The HEC-1 schematic for the Updated Northeast Region and the refined hydrologic model (NE200250) input with the summary output are presented in Appendix B. Table 1 presents a summary of the revised 100-year peak discharges as well as a comparison with the peak discharges developed as part of the analysis for the Final Design phase of the SR 202L / US 60 Traffic Interchange. It should be noted that the only deviation from the Initial Drainage Report is the peak flow for R202S which was changed from 715 cfs to 712 cfs due to the final configuration of the Southern Avenue Detention Basin.

Table 1 - Summary of 100-Year Peak Flows

Drainage Basin or Concentration Point	Description of Concentration Point Location	202L/US60 Final Peak Flow (cfs)	New 100-Yr Peak Flow (cfs)
18F	University Drive, East of Red Mountain Freeway	N/A	96
C18E (C17C)	Apache Trail (Main Street), East of Red Mountain Freeway	703	213
C23A	East Channel Confluence, South of Apache Trail	N/A	616
C23B	North of Broadway Road, East of Red Mountain Freeway	N/A	792
22AT23	Broadway Road Culvert, East of Red Mountain Freeway	622	622
C23C (C23)	South of Broadway Road, East of Red Mountain Freeway	1,311	1,187
C24A	North of Broadway Road, West of Red Mountain Freeway	N/A	135
C24C (C24)	Hawes Road and Broadway Road	528	699
C31A1	East Channel, North of Southern Avenue Detention Basin	N/A	1,253
C31A2(C31A)	Southern Avenue Detention Basin Inflow	1,864	1,775
R202S	Southern Avenue Detention Basin Outflow	719	712*

Note: Concentration point labels shown in parentheses correspond to the SR 202L / US 60 Traffic Interchange Phase II model for equitable comparison purposes with the new hydrologic model.

3.0 ON-SITE DRAINAGE

3.1 GENERAL DISCUSSION

This section of the report summarizes the design criteria, approach, assumptions and analytical results supporting the design of the proposed on-site drainage system for the segment of the Red Mountain Freeway between University Drive and Southern Avenue. In addition to the freeway mainline, drainage systems were also developed for the following roadways:

- University Drive - Including Ramps C and D
- Eastbound Collector Road 1 - From University Drive to Apache Trail Blvd.
- Westbound Collector Road 1 - From University Drive to Apache Trail Blvd.
- Apache Trail Boulevard
- Eastbound Collector Road 2 - From Apache Trail Blvd. to Broadway Road
- Westbound Collector Road 2 - From Apache Trail Blvd. to Broadway Road
- Broadway Road - Including Ramps A, B, C and D

3.2 DESIGN CRITERIA

The criteria summarized below were applied to the design of the on-site drainage systems for this segment of the Red Mountain Freeway and are documented in the ADOT *Roadway Design Guidelines* (RDG), Chapter 600, Highway Drainage Design (English Unit Equivalencies) May 1996:

- The 10-year design storm is used for at-grade and elevated sections of the SR 202L freeway, crossroad ramps, collector roads and crossroads.
- The 50-year design storm is used for the depressed sections of the freeway and crossroad ramps.
- The design hydraulic grade line is designed to be a minimum of six inches below the elevation of the catch basin grate for the selected design storm.
- For roadways with more than one lane in each direction, the allowable spread criteria, based on the 10-year storm, does not exceed the combined width of the roadway gutter, shoulder, parking lane and/or distress lane and one-half of the adjacent lane.
- The allowable spread criteria for the 50-year storm event does not exceed the width of the roadway gutter, shoulder, parking lane and/or distress lane plus the adjacent lane for roadways consisting of more than one lane.
- The allowable ponding or flow depth is dependent upon the type of curb. For Types B and D curb and gutter (ADOT Standard Drawing C-5.10), the allowable depth is six inches. For a Type C curb and gutter, the allowable depth is three

inches. When barrier or retaining wall is used, the spread criteria typically control the location of catch basins.

- Inlet capture ratios comply with Table 606.2 of the RDG.
- Specific restrictions for the various types of inlets as presented in subsection 606.2.13 of the RDG apply.
- The minimum pipe size used for storm drains is 24 inches.
- The desirable "self cleaning" velocity is three feet per second (fps), based on a pipe flowing full, in the design of storm drains. The minimum "'self cleaning" velocity based on a pipe flowing full is two fps.
- The design provides one 12-foot dry lane on the crossroad ramps for the design storm.
- The on-site drainage system is designed to accommodate the current open median and future HOV lanes.
- The on-site drainage system is designed to accommodate additional runoff resulting from the future construction of one lane in the eastbound direction north of Broadway Road.
- The trunk lines are located a minimum of ten feet outside the future lanes, with the exception of areas underneath the bridges at University Drive, Apache Drive, and Broadway Road. The purpose of this exception was to minimize the bridge lengths and abutment foundation depths. The project team decided that the trunk lines in these locations should be a clear distance of four feet from the ultimate back of curb location. The team also decided that rubber gasket reinforced concrete pipe should be used adjacent to bridge abutments.

The following pipe design criteria as presented in the ADOT *Pipe Selection Guidelines and Procedures* document dated May 1996 are used:

- Pipe roughness values of 0.012 shall be used for all pipes except for non-reinforced cast-in-place concrete pipe (NRCIPCP), which has a pipe roughness value of 0.014.
- Approved pipe types are reinforced concrete pipe (RCP), non-reinforced concrete pipe (NRCP), non-reinforced cast-in-place concrete pipe (NRCIPCP) and corrugated high-density polyethylene plastic pipe (CHDPEPP) Class S up to 42 inches in diameter in fills less than ten feet.

ADOT's Drainage Section has issued a verbal directive regarding the placement of catch basins along the ramp transitions and the use of curbs on the inside shoulders through roadway super-elevation sections.

- The transition point has been established at 300 feet from the nose of the gore to switch from ramp design criteria to multi-lane design criteria for placement of catch basins.

- The use of ADOT Type C curbs on the inside shoulder along the super-elevation sections of the freeway will no longer be required when a ditch is present in the median. Pavement runoff will be allowed to flow overland into the median during the interim period prior to construction of the HOV lanes. This approach has been confirmed in writing by the ADOT Roadway Drainage Section as well as the ADOT Roadway Plan Review Section.

The criteria presented in the *Urban Drainage Design Manual, Hydraulic Engineering Circular No. 22*, FHWA, November 1996 (HY-22) also apply to this segment of the Red Mountain Freeway.

The following criteria were used in the selection of the catch basin types within the project limits:

- ADOT standard freeway catch basins (C-15.91 and C-15.92) are used on the freeway mainline and crossroad ramps. Slotted drains are used to optimize the efficiency of the catch basins.

- ADOT standard curb opening (C-15.20) Type 3 catch basins are used on the crossroads for bicycle safety.

- ADOT median catch basins (C-1 5.80) are used in unpaved medians and swales.

There are several key locations where catch basins are required to maintain safe driving conditions. Catch basins are placed at the back of gores, the low points in sag vertical curves and at roadway super elevation transitions to limit concentrated flow crossing a travel lane to 0.3 cubic feet per second. The spacing of pavement inlets and length of slotted drains have been designed to provide 80 % flow interception, with the remainder of the flow bypassing to the next downstream catch basin.

3.3 METHODOLOGY

The design methodologies used in support of the on-site drainage systems are summarized in the following sections.

3.3.1 Hydrology

The procedures presented in the ADOT *Highway Drainage Design Manual* (HDDM), Hydrology, March 1993 were used to compute peak flows based on the Rational Method. The analysis presented with this submittal uses site specific Intensity-Duration-Frequency (I-D-F) curves for the 10-year and 50-year design storms. The Rational Method is based on the following (Equation 2-1 of the HDDM):

$$Q = CiA$$

Where:
Q = the peak discharge, cubic feet per second
C = runoff coefficient, dimensionless
i = the average rainfall intensity, inches/hour (based on the selected rainfall return period)
A = the contributing drainage area, acres

The following runoff coefficients were used for the 10-year and 50-year design storm events:

Paved surfaces: 0.95

Non-paved surfaces: 0.70

The rainfall intensity is estimated based on a specific time of concentration at the point of interest. The time of concentration is calculated using Equation 2-2 from the HDDM:

$$T_c = 11.4L^{0.5} K_b^{0.52} S^{-0.31} i^{-0.38}$$

Where:
- T_c = time of concentration, hours (the minimum has been established at ten minutes)
- L = the length of the longest flow path, miles
- K_b = the watershed resistance coefficient (Table 2-1 of the HDDM)
- S = the slope of the longest flow path, ft/mile
- i = the average rainfall intensity, in/hr (the same 'i' as used in Equation 2-1 of the HDDM)

Defining the time of concentration and resulting rainfall intensity is an iterative procedure. The procedure begins by assuming an initial time of concentration, identifying the corresponding rainfall intensity from the IDF graph and calculating the time of concentration using the equation presented above. The computed time of concentration is then compared with the assumed time of concentration. If the two values differ significantly, a new time of concentration and corresponding rainfall intensity are assumed and the time of concentration is calculated. This process is repeated until an acceptable convergence is achieved. The resulting time of concentration then defines the rainfall intensity for input into the Rational Method equation. This procedure typically defaults to the minimum 10-minute time of concentration for most roadway catch basins.

3.3.2 Hydraulics

A spreadsheet was used to help determine catch basin locations based on criteria set forth in the ADOT HDDM and as outlined in Section 3.2 of this report. Defining the ultimate location of freeway catch basins requires developing an iterative solution process. As the location of the catch basin changes, the area changes which in turn changes the design discharge. The instantaneous longitudinal and transverse roadway slopes are also subject to change with changing catch basin locations, which in turn affects the interception efficiency of the catch basin.

Haestad® StormCAD software was used to size the new storm drain pipes for this segment of the Red Mountain Freeway. At the upstream end of the storm drain system, flow from the Power Road to University Drive segment will enter this project. Design coordination was made with the designer of the Power Road to University Drive segment to determine the design discharge and time of concentration at the upstream connection point.

3.4 DESIGN APPROACH

The following items summarize the key assumptions and general design approach for the on-site drainage systems:

- In anticipation of the future HOV lane construction in the median of the Red Mountain Freeway, the storm drain laterals are designed to accommodate future flows from the HOV lanes. In the interim condition, ADOT C-15.80 median catch basins are located in the open median where ditches are present. The interim median inlets are offset slightly from the median construction centerline so that when the ultimate HOV lanes are constructed, ADOT C-15.92 inlets can be built by modifying the C-15.80 inlets.

- The on-site storm drain systems were designed with capacity to convey the additional runoff from the addition of one general-purpose lane in the eastbound direction between University Drive and Southern Avenue. The new storm drain trunk line west of the freeway is offset 22 feet from the proposed gutter to account for the future mainline widening.

- The on-site drainage system for this segment of the freeway is designed to collect and convey both the on and off-road flows originating within the new right-of-way corridor. The off-road catch basins connect to storm drain laterals that convey the flows either to the east channel or to adjacent new storm drain trunk lines.

The drainage area contributing to each catch basin has been delineated based on examination of the roadway plans, profiles, and cross sections. The contributing drainage areas shown on the On-Site Drainage Area Plans are presented in Appendix C. The pavement drainage systems are designed to intercept 100% of the runoff from either the 10-year or 50-year design storms. The storm drain trunk lines are designed to carry runoff from the 50-year design storms.

The tailwater elevations used in the StormCAD analyses for the on-site drainage systems are based on the computed water surface elevation in the drainage channel on the south side of Southern Avenue.

3.5 PROPOSED ON-SITE DRAINAGE SYSTEMS

The proposed on-site drainage systems for this segment of the Red Mountain Freeway are separated into three major systems based on their discharge locations. They are listed below.

1. The depressed freeway from north of University Drive to Broadway Road.
2. The depressed freeway from Broadway Road to north of Southern Avenue.
3. The elevated freeway from north of Southern Avenue to Southern Avenue.

Runoff generated within the depressed freeway from north of University Drive to north of Southern Avenue is conveyed in two parallel reinforced concrete pipes (RCP) to the drainage channel located on the south side of Southern Avenue. The two RCP's combine at north of Southern Avenue with a new junction structure and connect to a

10'x 6' reinforced concrete box (RCB) which will be constructed under the SR 202L / US 60 TI Phase II project. The flow in this RCB will combine with the Southern Avenue Detention Basin box culvert outlet and drain into the existing Hawes Road Channel.

Runoff generated within the elevated freeway from north of Southern Avenue to Southern Avenue is conveyed into the proposed East Channel by 24" RCP laterals.

The layouts of the proposed on-site drainage systems can be seen on the plans presented in Appendix A. The on-site drainage area plans are included in Appendix C.

3.6 FINAL DESIGN ISSUES

The following final design issues identified in the Initial Drainage Report have been addressed as described below:

- The location, type and quantity of concrete barriers to be installed on the freeway (if any) have been accounted for in the design of the onsite drainage system. As such, the spacing and number of catch basins indicated on the Stage II plans have been adjusted.

- The location of the trunk line has been set based on the future lane widening in the eastbound direction, generally from the north end of the project to just north of Broadway Road. An offset of 22 feet from the eastbound mainline gutter flowline has been used where future lane widening is to occur. South of Broadway Road, no future lane widening is proposed, so the trunk line location has been revised from the location in the Stage II plans to a distance 10 feet behind the gutter flowline.

- As stated previously in this report, the new storm drain trunk line will continue beyond the project limits north of University Drive and south of Southern Avenue. Coordination with the design consultants for the adjacent segments of the freeway is ongoing to ensure a compatible on-site drainage system is developed.

- Profile modifications made to the 10' x 6' RCBC that discharges the on-site storm water from the depressed freeway to the drainage channel on the south side of Southern Avenue have been accounted for in the StormCAD model.

Below are locations where modifications to the local roadways will be made to accommodate the new freeway. The impact on the local drainage systems is discussed.

- The segments of 90th Street to the north of Baltimore Street and to the south of Albany Street will be terminated. A new curb return and gutter will be provided at both locations. The impact to the local drainage system will be minimal. Drainage along 90th Street from Baltimore Street South to Albany Street will remain unchanged along the east side of the roadway. 90th Street will continue to be drained by curb openings on the east side allowing pavement drainage to flow into a longitudinal ditch. This flow will be conveyed to the south along 90th Street. The flow will then be conveyed through a pipe beneath the sound wall at Albany Street, in a ditch parallel to EB Collector Rd #1, and then to the drainage

system at Apache Trail Blvd. There will also be a curb opening provided for nuisance flow at the Albany Street intersection curb return.

- Roadway drainage on the crossroads catch basins were designed based on ADOT criteria and the 10-year storm within the access control limits. Where roadway improvements are proposed outside of these limits, catch basins are designed based on the same criteria even though they are within the City of Mesa's jurisdiction. The additional drainage is designed to outfall to existing City of Mesa storm drain systems or to the East Channel. The construction and type of catch basins used will conform to ADOT standards within the access control limits and MAG standards outside of these limits.

On-site drainage calculations contained the pavement drainage calculations, curb opening hydraulics and the StormCAD analytical results are included in Appendix D.

4.0 OFF-SITE DRAINAGE

4.1 GENERAL DISCUSSION

The purpose of the off-site drainage system is to protect the freeway from the stormwater generated by the contributing watershed that impacts or is impacted by the freeway. Potential impacts to downstream areas, as a result of the proposed freeway construction are also evaluated where appropriate.

In describing the off-site drainage systems, discussions have been divided into regions and also by improvement location. The proposed hydrologic conditions and proposed stormwater facilities have been discussed earlier in this report; however, this section will focus to a greater extent on the proposed off-site facilities associated with the Red Mountain Freeway from University Drive to Southern Avenue.

4.2 DESIGN CRITERIA

The design criteria summarized below was applied to the off-site channel and detention basin designs. The majority of the criteria outlined below is found in the ADOT *Roadway Design Guidelines (RDG), May 1996.* Additional design criteria were taken from the Flood Control District of Maricopa County's *Drainage Design Manual for Maricopa County, Arizona, Volume II Hydraulics, November 1991* (revised January 1996).

4.2.1 Channel Design Criteria

Side Slopes

Aggregate and unlined channels - 3H: 1V; unlined channels adjacent to a roadway without barrier protection - 4:1 (H:V); concrete lined channels- 1.5:1 (H:V) maximum, 2.0:1 (H:V) preferred.

Bottom Width

- Channels adjacent to a roadway without barrier protection - eight feet preferred minimum and four feet absolute minimum.
- Concrete lined channels - eight feet minimum.

Freeboard

- For water surface elevations below natural ground, the minimum freeboard from the maximum 100-year water surface elevation to the surrounding natural ground shall be one foot.
- For water surface elevations above natural ground, the minimum freeboard from the maximum 100-year water surface elevation to the embankment crest elevation shall be two feet.

4.2.2 Culvert Design Criteria

- Box culvert height – four feet minimum.
- Box culvert width –six feet minimum.

- Pipe culvert diameter – minimum of 24 inches.
- Headwater level: for 100-year flood, water levels should not significantly increase the flood damage potential on areas outside of ADOT right-of-way.
- Headwater depth to culvert height ratio should not exceed 1.5.
- Culvert with a span or diameter great than or equal to 4 feet should have concrete headwalls.

4.2.3 Energy Dissipators

A baffled chute drop structure was designed in accordance with the U.S. Department of the Interior Bureau of Reclamation (USBR) *Hydraulic Design of Stilling Basins and Energy Dissipators.* The baffled chute drop structure is proposed as the spillway drop at the entrance of the new East Channel into the Southern Avenue Detention Basin.

4.2.4 Maintenance Access

- As a minimum, one continuous 12-foot wide maintenance access road is required along the top of channel.
- An access ramp from the maintenance road to the channel bottom shall be provided at strategic locations, preferably near cross roads.

Per ADOT's RDG, off-site channels are to be designed in a manner to provide for the 50-year frequency storm with freeboard. The 100-year storm must be checked to verify that the flows are contained within the right-of-way and do not create any adverse conditions upon adjacent properties. The size of off-site stormwater facilities is often governed by minimum bottom widths and minimum box culvert heights. The difference between the 50 and 100-year discharges often does not result in significantly different facility sizes. For these reasons the offsite drainage system for the Red Mountain has been designed for the 100-year frequency storm.

4.3 DESIGN DISCHARGES

The design discharges for the off-site channel and cross culverts are presented in the Off-Site Hydrology section of this report. The HEC-1 summary outputs and hydrologic calculations or supporting documentation are presented in Appendix B.

4.4 HYDRAULIC ANALYSES

For the drainage channel systems on the east side and west side of the freeway, hydraulic models were developed for the proposed East and West Channels using the U.S. Army Corps of Engineers HEC-RAS computer software (Version 3.1.2). The hydraulic models were run in a mixed flow condition that includes both subcritical and supercritical flow regimes. The input and output summaries for the final hydraulic models are included in Appendix E of this report.

For the design of several of the culverts and storm drain pipes which discharge from existing channels, swales, or existing retention/detention basins to the East Channel, hydraulic calculations were performed using Haestad CulvertMaster software. Where specific hydrologic model concentration points did not exist, peak flows were estimated using Rational Method or HEC-1. Table 2 summarizes the proposed off-site local drainage systems based on the hydrologic and hydraulic analyses. Hydrologic and hydraulic calculations of these systems are included in Appendix F.

Table 2 - Summary of Off-Site Local Drainage Systems

East Channel Centerline Stationing	Structure ID	Dimension of Structure	Location of Structures	Drainage Sub-Basins ID	100-Yr Peak Discharges (cfs)
12+60.00	Culvert #1	6' x 6' RCB	Just north of Sunland Ave.	31A7	102
17+20.00	Pipe # 821	24" RCP	Between Sunland Ave and Pueblo Ave	31A6	19
21+78.00	Pipe #820	48" RCP	Between Sunland Ave and Pueblo Ave	31A5	29
25+77.00	Culver # 3	8' x 4' RCB	Just south of Pueblo Ave.	31A4	172
36+80.00	Pipe # 822	36" RCP	Between Pueblo Ave and Corabell Ave	31A3	27
39+05.64	Culvert # 4	6' x 6' RCB	Just south of Corabell Ave.	31 A2	155
46+50.00	Pipe # 824	12" RCP	Between Corabell Ave and Broadway Rd	31A1	5
54+11.00	Pipe # 825	30" RCP	Just north of Broadway Rd	23-1	16
66+12.00	Culvert #6	2- 8' x 6' RCB	Between Broadway Rd and Apache Trail Blvd.	HEC-1 17CT23	569
98+00.00	Pipe # 830	3 - 36" RCP	Between Apache Trail Blvd. and University Dr	18E	71

4.5 OFF-SITE DRAINAGE SYSTEM ELEMENTS

4.5.1 Baffle Chute Drop Structure at Southern Avenue Detention Basin

A baffled chute drop structure at the East Channel's entrance to the Southern Avenue Detention Basin was proposed following the design guidelines of the USBR *Hydraulic Design of Stilling Basins and Energy Dissipators.* It is sixty feet wide with a longitudinal slope of approximately 33%. The drop structure includes eight rows of baffle blocks with each block being 30" high and 45" wide.

The Southern Avenue Detention Basin and outlet structure construction are to be constructed as part of Phase II of the SR 202L / US 60 System TI project (TRACS No. H5686 04C).

A detail is presented on Detail D21 of the plans contained in Appendix A that shows this baffled chute drop structure configuration. The calculations of this baffled chute structure are included in Appendix E.

4.5.2 East Channel

East Channel is a concrete lined channel that is located on the east side of the freeway that extends from the Southern Avenue Detention Basin to north of University Drive. The East Channel has been designed based on the design criteria listed in Section 4.2.

Immediately above the baffled chute drop structure is a rectangular concrete lined channel having a 60-foot wide bottom width. It is on a relatively flat slope to promote uniform flow conditions above the drop structure. From Station 16+12 to 18+52 (East Channel construction centerline) the channel transitions to a trapezoidal configuration with a twelve-foot bottom width and 2H:1V side slopes.

There are several box culvert crossings of the East Channel that occur at each of the crossroads in the project limits. Each crossing includes vertical wall transitions into and out of each culvert. Access ramps are provided at the end of these transitions to provide access for maintenance vehicles. Table 3 presents the roadway cross culverts along the East Channel.

Table 3 - East Channel Cross Culverts

East Channel Construction Centerline Stationing	Location of Culvert	Culvert Size
25+60.00 to 26+90.00	Pueblo Avenue	3 - 10'x 6' RCB
51+68.39 to 54+11.89	Broadway Road	2 - 8x 6' RCB
81+60.00 to 84+00.00	Apache Trail Blvd. (Main Street)	8'x 6' RCB
107+90.00 to 109+97.12	University Drive	8'x 4' RCB

East Channel is primarily composed of a concrete lined trapezoidal channel with 2H:1V side slopes. The drainage plans contained in Appendix A, present the specific channel sizes. South of Broadway Road, the majority of the channel has a 12-foot bottom width, 2H:1V side slopes and a depth of eight feet. North of Broadway Road the east channel transitions to a configuration having a 10-foot bottom width, 2H:1V side slopes and a depth of 6 to 6.5 feet.

North of Apache Trail Boulevard (Main Street), where right-of-way is very limited, the channel configuration changes to have a bottom width of eight feet, side slopes of 1.5H:1V and a depth of four feet. From Station 91+10 to 95+00 the channel will have a concrete lining height one foot higher on the left side compared to the right side. This is necessary to convey the design peak flow in the limited right-of-way and to avoid having a more costly rectangular configuration. At this location a retaining wall is also necessary between the East Channel and the adjacent collector road. Once above Station 99+00, where more right-of-way is available, the channel transitions back to 2H:1V side slopes.

North of University Drive, peak flows decrease to the extent that the East Channel has only a four-foot bottom width, 2H:1V side slopes and a depth of four feet. At the upstream terminus of the concrete channel, dumped riprap is used to transition to a temporary natural channel configuration. This temporary channel or swale extends approximately 700 feet to the north to intercept flow from the east and convey it to the East Channel. This channel will be extended north to the CAP Canal under the Power Road to University Drive segment of the Red Mountain Freeway project in 2006 (TRACS No. H5782 01C).

East Channel plan and profile sheets are presented in Appendix A. The results of the HEC-RAS model are included in Appendix E.

Off-Site Local Drainage

At numerous locations along the East Channel, runoff is received from off-site local drainage areas to the east of the freeway. Several of these off-site local drainage areas are significant; and coupled with the East Channel's backwater effects. Use of box culverts is necessary at these locations. Table 4 presents these side culvert locations.

Table 4 - East Channel Side Culverts

East Channel Construction Centerline Stationing	Location of Culvert	Culvert Size
12+46.60 to 12+60.00	North of Sunland Avenue	6'x 6' RCB
25+77.00 to 25+98.00	South of Pueblo Avenue	8'x 4' RCB
39+05.64 to 39+41.00	South of Corabell Avenue	6'x 4' RCB
65+84.58 to 66+12.20	East Tributary North of Broadway Road	2 - 8'x 6' RCB

Several other locations exist where other off-site local drainage is intercepted and conveyed to the East Channel. These locations are generally of less significance and are conveyed with the use of reinforced concrete pipes. Appendix F shows these off-site local drainage areas.

North of Sunland Avenue there are two existing retention/detention basins which will be partially filled by the freeway and the East Channel constructions. To maintain their general functions of these two existing basins, at approximately Station 17+20 and Station 21+78, a 24" RCP and a 48" RCP have been designed to drain the flows from the existing retention/detention basins to the East Channel. A 10-foot emergency spillway has been designed for larger storm event.

At Station 36+80 and at Station 54+11, two small retention basin exist that will be partially filled by the freeway construction. To maintain their general functions, a 36" RCP and a 30" RCP are proposed to drain the basins. Reconstruction of a small concrete channel that feeds into the basin at Station 36+80 is also required.

At Station 46+40 and at Station 89+40, small drain lines exist from adjacent retention basins that will need to be extended to the east channel. At approximately Station 95+25, two 30" RCP's exist that will require the removal of a headwall and the pipe extension to the East Channel.

At Station 98+00, a new drainage channel and three 36" pipes have been designed to drain the local drainage area 18E1, which is bounded by Ellsworth Road to the east, University Drive to the north, an existing subdivision perimeter wall to the south, and East Channel to the west.

The hydrologic and hydraulic calculations of off-site local drainage areas for the locations described above are included in Appendix F. The local drainage systems have been designed to prevent the Red Mountain Freeway construction from having any adverse impacts upon adjacent properties during the 100-year storm event.

Storm drains that provide for crossroad drainage from the east will outlet to the East Channel. This condition will occur at Pueblo Avenue, Broadway Road, Apache Trail Boulevard and University Drive. At each of these crossroads, the peak flow is relatively

small and pipe diameters are only 24 inches. The drainage plans contained crossroad storm drains are included in Appendix A. The crossroad pavement drainage calculations are provided in Appendix D.

4.5.3 Broadway Road Box Culvert

Along the north side of Broadway Road, an existing concrete lined channel conveys runoff from the east to the west. This channel was originally planned to be enlarged by the FCDMC in their EMADMP. Since the Red Mountain Freeway is depressed at this location, the Broadway Road Channel must be intercepted and conveyed south to the East Channel. In addition, the Broadway Road Channel must be enclosed in a box culvert due to the required widening of Broadway Road to facilitate traffic requirements with the limited right-of-way available.

The Broadway Road box culvert will converge with the East Channel on the south side of Broadway Road at Station 51+88.39. This East Channel station equates to the Broadway Road box culvert stationing of 109+02.18. At this confluence, progressing upstream, the Broadway Road box culvert curves to the east and follows the existing channel alignment along the north side of Broadway Road. The box culvert consists of 848 lineal feet of two barrel 8' x 6' RCB that extends to the east side of 90th Street. The Broadway Road box culvert was shown as a curvilinear culvert in the State II plans, however, this has been modified for constructability purposes by utilizing approximately 40' straight segments, with 15 degree bends. The existing two barrel 8x 4' RCB under 90th Street is to be removed. East of 90th Street, an 26-foot long concrete vertical wall transition is proposed to connect back into the existing concrete lined channel from the east.

Broadway Road box culvert plan and profile sheets are presented in Appendix A. The results of the HEC-RAS model are included in Appendix E.

4.5.4 West Channel

Along the west side of the freeway, north of the Broadway Road Channel is a natural drainageway that intercepts runoff from north of Apache Trail Boulevard and conveys it south between the existing subdivisions and the eastbound collector road. This flow concentration on the north side of the Broadway Road Channel is currently causing its failure.

Field investigation found that the existing channel upstream of Broadway Road varies in cross section, capacity and condition. In addition, homes to the west have varying types of fence/wall configurations with some residents having block walls which others have chain link and/or wooden fences. When flows exceed the capacity of the existing channel, flows have the potential to breakout to the west, onto existing homeowner's property. A HEC-RAS analysis of the existing channel between the proposed ADOT R/W and Apache Trail Boulevard was performed to evaluate the capacity of the existing channel in this reach. Based on this analysis, the existing channel has limited capacity upstream of the proposed ADOT R/W. The existing channel will be improved upstream to Balsam Avenue, which is to the limits of R/W that ADOT purchased for the project. A parcel north of this location is currently in the early planning stages for development. The developer of this parcel will need to consider the limited capacity of the channel and evaluate improvements so that adjacent properties will not be adversely impacted. The proposed channel improvements will improve the conveyance of the upstream channel

within ADOT R/W. The proposed improvements will reduce potential flooding in the project limits, but they will not alleviate the existing upstream flooding problem.

West Channel has a trapezoidal configuration with an 8-foot bottom width, 1H:1V side slopes and a depth of approximately 3 feet. The channel begins at the Balmsam Road alignment and extends south approximately 566 feet toward Broadway Road with a longitudinal slope of approximately 0.9 percent.

Sound walls have been proposed adjacent to the R/W, north and west of the Broadway Road Channel. West Channel must be converted to a new 60" storm drain pipe under the new sound wall via a drop inlet. This pipe extends approximately 600 feet north of Broadway Road to intercept off-site flows at this location. Maintenance access will be provided with a 14-ft opening and gate.

The 60" pipe culvert enters a junction structure located on the north side of Broadway Road. The pipe size is then increased to 66" at this junction structure and then the 66" pipe conveys flows to the west, paralleling the north right-of-way line of Broadway Road, for approximately 700 feet.

Similar to the east side of the freeway, Broadway Road will also be widened on the west side. The existing concrete lined channel along the north side of Broadway Road will be impacted by this widening. At Sta 213+80 (Drainage Cst. Centerline), a tributary channel converges from the north. The existing Broadway Road Channel will need to be reconstructed. Relocating the channel closer to the north right-of-way line, as shown in the Phase II plans, is not feasible based on the size and configuration channel required in comparison to the available width between the proposed roadway limits and the adjacent property owner walls to the north. Therefore, the existing channel will be replaced with a two barrel 8' x 4' RCB for approximately 272 feet. This culvert will be extended between the tributary at Sta 214+06 until it joins the existing two barrel 8' x 4' RCB located under the private driveway entrance.

West Channel plan and profile sheets are presented in Appendix A. The results of the HEC-RAS model are included in Appendix E.

5.0 CONCLUSIONS

The design of the on-site and off-site drainage systems for the Red Mountain Freeway from University Drive to Southern Avenue has been performed with the intent of providing a quality stormwater management system for ADOT, other agencies and the traveling public. The design of these drainage improvements is consistent with the concepts and design guidelines presented in the Final Drainage Reports for the SR 202L / US 60 Traffic Interchange.

6.0 REFERENCES

Arizona Department of Transportation, *Highway Drainage Design Manual, Volume I* -Hydrology, March 1993.

Arizona Department of Transportation, Roadway Engineering Group *Roadway Design Guidelines,* May 1996.

Arizona Department of Transportation, Intermodal Transportation Division, Pipe *Selection Guidelines and Procedures,* February 1, 19,96, with March 21, 1996 revisions.

DMJM+HARRIS, *202LIUS60 Traffic Interchange, Phase I Initial Drainage Report (Stage II Design),* February 2002.

Arizona Department of Transportation, *202LIUS60 Traffic Interchange, Phase II Initial Drainage Report (Stage II Design),* prepared by DMJM+HARRIS, August 2002.

Federal Highways Administration, *Urban Drainage Design Manual Hydraulic Engineering Circular No. 22,* November 1996 (HY-22).

Flood Control District of Maricopa County, *Drainage Design Manual for Maricopa, County, Arizona,* Volume I *Hydrology,* June 1992, revised January 1995.

Flood Control District of Maricopa County, *Drainage Design Manual for Maricopa County, Arizona,* Volume I/ Hydraulics, November 1991, revised September 1992.

Flood Control District of Maricopa County, *East Mesa Area Drainage Master Plan, Hydrologic Analysis,* October 1998.

Flood Control District of Maricopa County, *East Mesa Area Drainage Master Plan, Recommended Design Report, July 1998.*

Federal Highways Administration, *HEC No. 14* Hydraulic *Design of Energy Dissipaters for Culverts, and Channels.*

U. S. Army Corps of Engineers, *HEC-1 Flood Hydrograph Package User's Manual,* Hydrologic Engineering Center, September 1990,

U. S. Army Corps of Engineers, *HEC-RAS River Analysis System User's Manual,* Version 3.1.2, April 2004.

U. S. Bureau of Reclamation, *Hydraulic Design of Stilling Basins and Energy Dissipaters.*

APPENDIX A

DRAINAGE PLANS

NOTE:
THE ZEROS IN PARENTHESIS (0, 0.0 & 0.00) IN THE HEADING OF SOME OF THE COLUMNS ARE THE RECOMMENDED PRECISION OF THE VALUE TO BE ENTERED IN THE COLUMN.

NOTE:
FOR PIPE CULVERT PLACEMENT SEE STANDARD DRAWING C-13.15

NOTE:
PIPE OPTIONS SELECTED ARE THOSE REQUIRED TO MEET MINIMUM SERVICE LIFE.
SHADED PIPE OPTION FIELDS ARE NOT ALLOWABLE ALTERNATES.

CSP - CORRUGATED STEEL PIPE
CAP - CORRUGATED ALUMINUM PIPE
RCP - REINFORCED CONCRETE PIPE
NRCP - NON-REINFORCED CONCRETE PIPE
NRCIPCP - NON-REINFORCED CAST-IN-PLACE CONCRETE PIPE
CHDPEPP - CORRUGATED HIGH DENSTIY POLYETHYLENE PLASTIC PIPE

F.H.W.A. REGION	STATE	PROJECT NO.	SHEET NO.	TOTAL SHEETS	AS BUILT
9	ARIZ.	202-B(002)B			
		202L MA 027			

DESCRIPTION							CSP								CAP			RCP	NRCP	NRCIPCP	CHDPEPP	END TREATMENT														QUANTITIES				REMARKS
			In.	In.	Ft.	Degree	In.	Coating							In.				In.			Each														Cubic Yard				
																						End Sec		Catch basin, Manhole, Headwall & Junction Structure															
																							Ea			Ft.			Grate											
																														Ft.										
Station	Plan Ref No.	Controlling Fill Height Range	Size, Corrugated	Size, Smooth	Length (0)	Skew (0)	Corrugation	Wall Thickness (0.00)	Zinc	Bit. Coated Zinc	Aluminum	Bit. Coated Aluminum	Corrugation	Wall Thickness (0.00)	Uncoated	Bit. Coated	Class - Non Trench	Class - Trench	Class	Min Wall Thickness (0)	AASHTO M-294 Type C	AASHTO M-294 Type S	C-13.20 & C-13.25	Detail -	Size, (in) Manhole	Standard or Detail	S-Single / D-Double	Location	H (0.0)	L Wing (0.0)	L 18" Slotted Drn (0)	L 24" Slotted Drn (0)	Type	Elev. (0.00)	Depth	L (0.0)	Pipe Exc (0)	Pipe Bkfl (0) C-13.15	Drn Exc (0)	Berm/Dike Emb (0)	
Sta 1310+00, 202L MED CST ℄	100	5		36	330											IV	IV								C-13.76		RT									1026	136			PIPE 100 to MH 101; PIPE 100 is not to be constructed w/ bridge abutment
Sta 1313+25, 202L MED CST ℄	101	5		36	281											IV	IV		4					30	C-18.10		RT	14.8								995	116			MH 101 to MH 102
Sta 1316+00, 202L MED CST ℄	102	5		42	660											IV	IV		4					30	C-18.10		RT	17.2								3065	391			MH 102 to MH 103
Sta 1322+58, 202L MED CST ℄	103	5		48	92											IV	IV		5					30	C-18.10		RT	16.0								488	61			MH 103 to MH 104
Sta 1323+31, 202L MED CST ℄	104	5		48	334											IV	IV		5					30	C-18.10		RT	16.6								1329	223			MH 104 to MH 105
Sta 1326+64, 202L MED CST ℄	105	4		48	312											III	III							30	C-18.10		RT	10.8								1131	203			MH 105 to MH 106
Sta 1330+12, 202L MED CST ℄	106	4		48	359											III	III							30	C-18.10		RT	11.1								1302	234			MH 106 to MH 107
Sta 1333+65, 202L MED CST ℄	107	1		54	337											II	II		6		X			30	C-18.10		RT	9.5								1236	238			MH 107 to MH 108
Sta 1337+17, 202L MED CST ℄	108	4		60	251											III	III							30	C-18.10		RT	11.1								1004	203			MH 108 to MH 109; PIPE 108 is not to be constructed w/ bridge abutment
Sta 1339+79, 202L MED CST ℄	109	4		60	280											III	III		6					30	C-18.10		RT	11.2								1260	227			MH 109 to MH 110
Sta 1342+71, 202L MED CST ℄	110	4		60	287											III	III		6					30	C-18.10		RT	13.1								1483	232			MH 110 to MH 111
Sta 1345+64, 202L MED CST ℄	111	5		60	331											IV	IV		6					30	C-18.10		RT	14.7								1958	274			MH 111 to MH 112
Sta 1348+92, 202L MED CST ℄	112	6		60	361											IV	IV		6					30	C-18.10		RT	17.4								2440	299			MH 112 to MH 113
Sheet Total																								12																	

NOTE:
Existing structure callout stations, offsets and elevations are approximate.

FILL HEIGHT RANGE TABLE (Ft.)

RANGE NO.		1	2	3	4	5	6	7	8	9	10	11	12
FILL	>	1	3	5	8	11	15	20	25	30	40	55	70
HEIGHT (Ft.)	≤	3	5	8	11	15	20	25	30	40	55	70	90

◒ SHOULD FIELD CONDITIONS VARY FROM THE RANGE INDICATED, CONTACT DESIGN FOR RE-EVALUATION OF PIPE DESIGN REQUIREMENTS.

◪ PIPE CORRUGATION			
A	2⅔x½	D	6x2
B	3x1	E	3x1 or 9x2½
C	9x2½		

NOTE:
NRCIPCP may be used only where it is listed as an acceptable alternate. NRCIPCP shall be used only in TRENCH CONDITION. In no case shall NRCIPCP be used in a non-trench or over excavated condition.

	NAME	DATE
DESIGN	RPC	04-05
DRAWN	CPG	04-05
CHECKED	BGS	04-05

PARSONS BRINCKERHOFF

ARIZONA DEPARTMENT OF TRANSPORTATION
INTERMODAL TRANSPORTATION DIVISION

NEW PIPE SUMMARY SHEET

PRELIMINARY 95% REVIEW NOT FOR CONSTRUCTION OR RECORDING

ROUTE 202L | LOCATION RED MTN FWY, UNIVERSITY DR - SOUTHERN AVE

DWG NO. G-4.01

TRACS NO. H 5783 01C | 202-B(002)B | ___ OF ___

Wed Mar 30 09:23:12 2005 H:\RedMtn-Univ-Southern\Drng\psum01.dgn

NOTE:
THE ZEROS IN PARENTHESIS (0, 0.0 & 0.00) IN THE HEADING OF SOME OF THE COLUMNS ARE THE RECOMMENDED PRECISION OF THE VALUE TO BE ENTERED IN THE COLUMN.

NOTE:
FOR PIPE CULVERT PLACEMENT SEE STANDARD DRAWING C-13.15

NOTE:
PIPE OPTIONS SELECTED ARE THOSE REQUIRED TO MEET MINIMUM SERVICE LIFE.
SHADED PIPE OPTION FIELDS ARE NOT ALLOWABLE ALTERNATES.

CSP - CORRUGATED STEEL PIPE
CAP - CORRUGATED ALUMINUM PIPE
RCP - REINFORCED CONCRETE PIPE
NRCP - NON-REINFORCED CONCRETE PIPE
NRCIPCP - NON-REINFORCED CAST-IN-PLACE CONCRETE PIPE
CHDPEPP - CORRUGATED HIGH DENSTIY POLYETHYLENE PLASTIC PIPE

F.H.W.A. REGION	STATE	PROJECT NO.	SHEET NO.	TOTAL SHEETS	AS BUILT
9	ARIZ.	202-B(002)B			
		202L MA 027			

Station	Plan Ref No.	◉ Controlling Fill Height Range	Size, Corrugated (In.)	Size, Smooth (In.)	Length (0) (Ft.)	Skew (0) (Degree)	◪ Corrugation	Wall Thickness (0.00)	CSP Zinc	CSP Bit. Coated	CAP Aluminum	CAP Bit. Coated	◪ Corrugation	Wall Thickness (0.00)	RCP Uncoated	RCP Bit. Coated	NRCP Class - Non Trench	NRCP Class - Trench	NRCIPCP Class	NRCIPCP Min Wall Thickness (0) (In.)	CHDPEPP AASHTO M-294 Type C	CHDPEPP AASHTO M-294 Type S	End Sec (Each) C-13.20 & C-13.25	End Sec Detail -	End Sec Size, (In) Manhole	End Sec Standard or Detail	Catch basin, Manhole, Headwall & Junction Structure (Ea) S-Single / D-Double	Location	H (0.0) (Ft.)	L Wing (0.0) (Ft.)	L 18" Slotted Drn (0) (Ft.)	L 24" Slotted Drn (0) (Ft.)	Type	Grate Elev. (0.00) (Ft.)	Grate Depth (Ft.)	Grate L (0.0) (Ft.)	Inlet Depression (In.)	Pipe Exc (0) (Ft.)	Pipe Bkfl (0) C-13.15 (Ft.)	Drn Exc (0) (Ft.)	Berm/Dike Emb (0) (Ft.)	REMARKS
Sta 1353+05, 202L MED CST ℄	113	6		60	131												IV	IV	6					30	C-18.10		RT	19.5									908	108			MH 113 to MH 114
Sta 1353+54, 202L MED CST ℄	114	5		60	255												IV	IV	6					30	C-18.10		RT	18.3									1594	211			MH 114 to MH 115
Sta 1356+00, 202L MED CST ℄	115	5		60	305												IV	IV	6					30	C-18.10		RT	16.8									1804	252			MH 115 to MH 116
Sta 1358+95, 202L MED CST ℄	116	5		60	425												IV	IV	6					30	C-18.10		RT	15.7									2514	352			MH 116 to MH 117
Sta 1363+05, 202L MED CST ℄	117	4		66	377												III	III	7					30	C-18.10		RT	16.9									2208	337			MH 117 to MH 118
Sta 1366+71, 202L MED CST ℄	118	4		72	244												III	III						30	C-18.10		RT	13.7									1286	239			MH 118 to MH 119; PIPE 118 is not to be constructed w/ bridge abutment
Sta 1369+15, 202L MED CST ℄	119	1		78	235												II	II	8					30	C-18.10		RT	11.0									1084	254			MH 119 to MH 120
Sta 1371+50, 202L MED CST ℄	120	1		78	349												II	II	8					30	C-18.10		RT	11.0									1610	377			MH 120 to MH 121
Sta 1375+75, 202L MED CST ℄	121	5		78	159												IV	IV	8					30	C-18.10		RT	10.0									1148	172			MH 121 to MH 123
Sta 1376+38, 202L MED CST ℄	123	4		78	447												III	III	8					30	C-18.10		RT	17.1									2780	483			MH 123 to MH 124
Sta 1380+90, 202L MED CST ℄	124	4		78	313												III	III	8					30	C-18.10		RT	12.5									1821	338			MH 124 to MH 125
Sta 1384+12, 202L MED CST ℄	125	4		78	315												III	III	8					30	C-18.10		RT	13.2									1959	340			MH 125 to MH 126
Sheet Total																								12																	

NOTE:
Existing structure callout stations, offsets and elevations are approximate.

FILL HEIGHT RANGE TABLE (Ft.)													
RANGE NO.		1	2	3	4	5	6	7	8	9	10	11	12
FILL	>	1	3	5	8	11	15	20	25	30	40	55	70
HEIGHT (Ft.)	≤	3	5	8	11	15	20	25	30	40	55	70	90

◉ SHOULD FIELD CONDITIONS VARY FROM THE RANGE INDICATED, CONTACT DESIGN FOR RE-EVALUATION OF PIPE DESIGN REQUIREMENTS.

◪ PIPE CORRUGATION			
A	2⅔x½	D	6x2
B	3x1	E	3x1 or 9x2½
C	9x2½		

NOTE:
NRCIPCP may be used only where it is listed as an acceptable alternate. NRCIPCP shall be used only in TRENCH CONDITION. In no case shall NRCIPCP be used in a non-trench or over excavated condition.

	NAME	DATE
DESIGN	RPC	04-05
DRAWN	CPG	04-05
CHECKED	BGS	04-05

PB PARSONS BRINCKERHOFF

ARIZONA DEPARTMENT OF TRANSPORTATION
INTERMODAL TRANSPORTATION DIVISION

NEW PIPE SUMMARY SHEET

ROUTE 202L
LOCATION RED MTN FWY, UNIVERSITY DR - SOUTHERN AVE

PRELIMINARY 95% REVIEW
NOT FOR CONSTRUCTION OR RECORDING

DWG NO. G-4.02

TRACS NO. H 5783 01C
202-B(002)B
___ OF ___

Wed Mar 30 09:23:01 2005
H:\RedMtn-Univ-Southern\Drng\psum02.dgn

NOTE:
THE ZEROS IN PARENTHESIS (0, 0.0 & 0.00) IN THE HEADING OF SOME OF THE COLUMNS ARE THE RECOMMENDED PRECISION OF THE VALUE TO BE ENTERED IN THE COLUMN.

NOTE:
FOR PIPE CULVERT PLACEMENT SEE STANDARD DRAWING C-13.15

NOTE:
PIPE OPTIONS SELECTED ARE THOSE REQUIRED TO MEET MINIMUM SERVICE LIFE.
SHADED PIPE OPTION FIELDS ARE NOT ALLOWABLE ALTERNATES.

CSP - CORRUGATED STEEL PIPE
CAP - CORRUGATED ALUMINUM PIPE
RCP - REINFORCED CONCRETE PIPE
NRCP - NON-REINFORCED CONCRETE PIPE
NRCIPCP - NON-REINFORCED CAST-IN-PLACE CONCRETE PIPE
CHDPEPP - CORRUGATED HIGH DENSTIY POLYETHYLENE PLASTIC PIPE

F.H.W.A. REGION	STATE	PROJECT NO.	SHEET NO.	TOTAL SHEETS	AS BUILT
9	ARIZ.	202-B(002)B			
		202L MA 027			

Station	Plan Ref No.	Controlling Fill Height Range	Size, Corrugated (In.)	Size, Smooth (In.)	Length (0) (Ft.)	Skew (0) (Degree)	Corrugation	Wall Thickness (0.00)	Zinc Coating	Bit. Coated Zinc Coating	Aluminum Coating	Bit. Coated Aluminum Coating	Corrugation	Wall Thickness (0.00)	Uncoated	Bit. Coated	Class - Non Trench	Class - Trench	Class	Min Wall Thickness (0)	AASHTO M-294 Type C	AASHTO M-294 Type S	C-13.20 & C-13.25	Detail -	Size, (In) Manhole	Standard or Detail	S-Single / D-Double	Location	H (0.0)	L Wing (0.0)	L 18" Slotted Drn (0)	L 24" Slotted Drn (0)	Type	Elev. (0.00)	Grate Depth (Ft.)	Inlet Depression L (0.0) (In.)	Pipe Exc (0) (Cubic Yard)	Pipe Bk-fl (0) C-13.15 (Cubic Yard)	Drn Exc (0) (Cubic Yard)	Berm/Dike Emb (0) (Cubic Yard)	REMARKS
Sta 1387+35, 202L MED CST ℄	126	4		78	327												III	III		8				30	C-18.10		RT	13.8								2034	353			MH 126 to MH 127
Sta 1390+70, 202L MED CST ℄	127	4		84	415												III	III		8				30	C-18.10		RT	11.8								2613	481			MH 127 to MH 128
Sta 1394+95, 202L MED CST ℄	128	4		84	386												III	III		8				30	C-18.10		RT	12.1								2754	447			MH 128 to MH 129
Sta 1398+90, 202L MED CST ℄	129	5		84	361												IV	IV		8				30	C-18.10		RT	15.3								3294	425			MH 129 to MH 130
Sta 1402+60, 202L MED CST ℄	130	6		84	347												IV	IV		8				30	DET D31		RT	20.2								3755	409			MH 130 to MH 131
Sta 1406+15, 202L MED CST ℄	131	7		84	375												SPECIAL							30	DET D31		RT	26.3								4861	455			MH 131 to MH 132
Sta 1410+00, 202L MED CST ℄	132	8		84	358												SPECIAL							30	DET D31		RT	29.4								5492	434			MH 132 to MH 133; Special Design Pipe in "Trench" only
Sta 1413+65, 202L MED CST ℄	133	9		84	576												SPECIAL							30	DET D31		RT	36.3								11136	729			MH 133 to JS 134 (DETAIL D30); Special Design Pipe in "Trench" only
Sta 1376+40, 202L MED CST ℄	152	1		36	349												II	II	2	4		X		30	C-18.10		RT	6.2								513	139			MH 152 to MH 153
Sta 1378+30, 202L MED CST ℄	153	1		36	107												II	II	2	4		X		30	C-18.10		RT	6.0								157	43			MH 153 to MH 154; Protect-in-Place PIPE 153 during construction
Sta 1380+90, 202L MED CST ℄	154	1		36	315												II	II	2	4		X		30	C-18.10		RT	5.2								430	126			MH 154 to MH 155
Sheet Total																								11																	

NOTE:
Existing structure callout stations, offsets and elevations are approximate.

FILL HEIGHT RANGE TABLE (Ft.)

RANGE NO.		1	2	3	4	5	6	7	8	9	10	11	12
FILL	>	1	3	5	8	11	15	20	25	30	40	55	70
HEIGHT (Ft.)	≤	3	5	8	11	15	20	25	30	40	55	70	90

SHOULD FIELD CONDITIONS VARY FROM THE RANGE INDICATED, CONTACT DESIGN FOR RE-EVALUATION OF PIPE DESIGN REQUIREMENTS.

PIPE CORRUGATION

A	2⅔x½	D	6x2
B	3x1	E	3x1 or 9x2½
C	9x2½		

NOTE:
NRCIPCP may be used only where it is listed as an acceptable alternate. NRCIPCP shall be used only in TRENCH CONDITION. In no case shall NRCIPCP be used in a non-trench or over excavated condition.

	NAME	DATE
DESIGN	RPC	04-05
DRAWN	CPG	04-05
CHECKED	BGS	04-05

PARSONS BRINCKERHOFF

ARIZONA DEPARTMENT OF TRANSPORTATION
INTERMODAL TRANSPORTATION DIVISION

NEW PIPE SUMMARY SHEET

PRELIMINARY 95% REVIEW
NOT FOR CONSTRUCTION OR RECORDING

ROUTE 202L
LOCATION RED MTN FWY, UNIVERSITY DR - SOUTHERN AVE

DWG NO. G-4.03

TRACS NO. H 5783 01C
202-B(002)B
___ OF ___

Wed Mar 30 09:22:49 2005
H:\RedMtn-Univ-Southern\Drng\psum03.dgn

NOTE:
THE ZEROS IN PARENTHESIS (0, 0.0 & 0.00) IN THE HEADING OF SOME OF THE COLUMNS ARE THE RECOMMENDED PRECISION OF THE VALUE TO BE ENTERED IN THE COLUMN.

NOTE:
FOR PIPE CULVERT PLACEMENT SEE STANDARD DRAWING C-13.15

NOTE:
PIPE OPTIONS SELECTED ARE THOSE REQUIRED TO MEET MINIMUM SERVICE LIFE.
SHADED PIPE OPTION FIELDS ARE NOT ALLOWABLE ALTERNATES.

NRCP NRCIPCP CHDPEPP

CSP - CORRUGATED STEEL PIPE
CAP - CORRUGATED ALUMINUM PIPE
RCP - REINFORCED CONCRETE PIPE
NRCP - NON-REINFORCED CONCRETE PIPE
NRCIPCP - NON-REINFORCED CAST-IN-PLACE CONCRETE PIPE
CHDPEPP - CORRUGATED HIGH DENSTIY POLYETHYLENE PLASTIC PIPE

F.H.W.A. REGION	STATE	PROJECT NO.	SHEET NO.	TOTAL SHEETS	AS BUILT
9	ARIZ.	202-B(002)B			
		202L MA 027			

DESCRIPTION							CSP				CAP			RCP	NRCP	NRCIPCP	CHDPEPP	END TREATMENT															QUANTITIES				
			In.	In.	Ft.	Degree	In.	Coating			In.				In.			Each															Cubic Yard				
																		End Sec	Catch basin, Manhole, Headwall & Junction Structure																	
																			Ea		Ft.				Grate												
																										Ft.											
Station	Plan Ref No.	Controlling Fill Height Range	Size, Corrugated	Size, Smooth	Length (0)	Skew (0)	Corrugation	Wall Thickness (0.00)	Zinc	Bit. Coated Zinc	Aluminum	Bit. Coated Aluminum	Corrugation	Wall Thickness (0.00)	Uncoated	Bit. Coated	Class - Non Trench	Class - Trench	Class	Min Wall Thickness (0)	AASHTO M-294 Type C	AASHTO M-294 Type S	C-13.20 & C-13.25 Detail -	Size, (In) Manhole	Standard or Detail	S-Single / D-Double	Location	H (0.0)	L Wing (0.0)	L 18" Slotted Drn (0)	L 24" Slotted Drn (0)	Type	Elev. (0.00)	Depth	L (0.0)	Inlet Depression In.	Inlet Depression Ft.	Pipe Exc (0)	Pipe Bk fl (0) C-13.15	Drn Exc (0)	Berm/Dike Emb (0)	REMARKS
Sta 1384+12, 202L MED CST ℄	155	1		42	316											II	II	1	4		X			30	C-18.10		RT	5.9									629	179			MH 155 to MH 156
Sta 1387+35, 202L MED CST ℄	156	1		42	328											II	II		4		X			30	C-18.10		RT	6.4									696	186			MH 156 to MH 157
Sta 1390+70, 202L MED CST ℄	157	1		48	416											II	II		5		X			30	C-18.10		RT	7.1									1026	271			MH 157 to MH 158
Sta 1394+95, 202L MED CST ℄	158	4		54	386											III	III		6					30	C-18.10		RT	8.9									1458	286			MH 158 to MH 159
Sta 1398+90, 202L MED CST ℄	159	5		60	362											IV	IV		6					30	C-18.10		RT	13.5									1991	293			MH 159 to MH 160
Sta 1402+60, 202L MED CST ℄	160	6		60	347											IV	IV		6					30	C-18.10		RT	18.5									2429	281			MH 160 to MH 161
Sta 1406+15, 202L MED CST ℄	161	7		60	377											V	V							30	DET D31		RT	22.2									3249	312			MH 161 to MH 162
Sta 1410+00, 202L MED CST ℄	162	8		66	359											V	V							30	DET D31		RT	27.7									3292	327			MH 162 to MH 163
Sta 1413+65, 202L MED CST ℄	163	9		66	576												V							30	DET D31		RT	32.0									4660	525			MH 163 to JS 134 (DETAIL D30)
Sheet Total																								9																	

NOTE:
Existing structure callout stations, offsets and elevations are approximate.

FILL HEIGHT RANGE TABLE (Ft.)

RANGE NO.		1	2	3	4	5	6	7	8	9	10	11	12
FILL	>	1	3	5	8	11	15	20	25	30	40	55	70
HEIGHT (Ft.)	≤	3	5	8	11	15	20	25	30	40	55	70	90

◒ SHOULD FIELD CONDITIONS VARY FROM THE RANGE INDICATED, CONTACT DESIGN FOR RE-EVALUATION OF PIPE DESIGN REQUIREMENTS.

PIPE CORRUGATION

A	2⅔x½	D	6x2
B	3x1	E	3x1 or 9x2½
C	9x2½		

NOTE:
NRCIPCP may be used only where it is listed as an acceptable alternate. NRCIPCP shall be used only in TRENCH CONDITION. In no case shall NRCIPCP be used in a non-trench or over excavated condition.

	NAME	DATE
DESIGN	RPC	04-05
DRAWN	CPG	04-05
CHECKED	BGS	04-05

PB PARSONS BRINCKERHOFF

ARIZONA DEPARTMENT OF TRANSPORTATION
INTERMODAL TRANSPORTATION DIVISION

NEW PIPE SUMMARY SHEET

PRELIMINARY 95% REVIEW NOT FOR CONSTRUCTION OR RECORDING

ROUTE 202L
LOCATION RED MTN FWY, UNIVERSITY DR - SOUTHERN AVE

DWG NO. G-4.04

TRACS NO. H 5783 01C
202-B(002)B
___ OF ___

Wed Mar 30 09:22:37 2005
H:\RedMtn-Univ-Southern\Drng\psum04.dgn

NOTE:
THE ZEROS IN PARENTHESIS (0, 0.0 & 0.00) IN THE HEADING OF SOME OF THE COLUMNS ARE THE RECOMMENDED PRECISION OF THE VALUE TO BE ENTERED IN THE COLUMN.

NOTE:
FOR PIPE CULVERT PLACEMENT SEE STANDARD DRAWING C-13.15

NOTE:
PIPE OPTIONS SELECTED ARE THOSE REQUIRED TO MEET MINIMUM SERVICE LIFE.
SHADED PIPE OPTION FIELDS ARE NOT ALLOWABLE ALTERNATES.

CSP - CORRUGATED STEEL PIPE
CAP - CORRUGATED ALUMINUM PIPE
RCP - REINFORCED CONCRETE PIPE
NRCP - NON-REINFORCED CONCRETE PIPE
NRCIPCP - NON-REINFORCED CAST-IN-PLACE CONCRETE PIPE
CHDPEPP - CORRUGATED HIGH DENSTIY POLYETHYLENE PLASTIC PIPE

F.H.W.A. REGION	STATE	PROJECT NO.	SHEET NO.	TOTAL SHEETS	AS BUILT
9	ARIZ.	202-B(002)B			
		202L MA 027			

DESCRIPTION							CSP							CAP					RCP	NRCP	NRCIPCP	CHDPEPP	END TREATMENT													QUANTITIES				
			In.	In.	Ft.	Degree	In.	Coating						In.							In.		Each													Cubic Yard				
																							End Sec	Catch basin, Manhole, Headwall & Junction Structure															
																								Ea			Ft.			Grate										
																														Ft.										
Station	Plan Ref No.	◐ Controlling Fill Height Range	Size, Corrugated	Size, Smooth	Length (0)	Skew (0)	◪ Corrugation	Wall Thickness (0.00)	Zinc	Bit. Coated Zinc	Aluminum	Bit. Coated Aluminum	◪ Corrugation	Wall Thickness (0.00)	Uncoated	Bit. Coated	Class - Non Trench	Class - Trench	Class	Min Wall Thickness (0)	AASHTO M-294 Type C	AASHTO M-294 Type S	C-13.20 & C-13.25	Detail -	Size, (In) Manhole	Standard or Detail	S-Single / D-Double	Location	H (0.0)	L Wing (0.0)	L 18" Slotted Drn (0)	L 24" Slotted Drn (0)	Type	Elev. (0.00)	Depth	L (0.0)	Pipe Exc (0)	Pipe Bk-fl (0) C-13.15	Drn Exc (0)	Berm/Dike Emb (0)	REMARKS
Sta 1409+70, 202 Med Cst ℄	175	4		24	170												III	III			X				C-13.76		LT	3.6					1465.40			227	48			PIPE 175 TO East Channel; Detail D22
Sta 1410+00, 202 Med Cst ℄	176	1		24	91												III	III	3		X				C-13.76		RT									99	26			PIPE 176 TO CB 177
Sta 1410+00, 202 Med Cst ℄	177	1		24	8												III	III	3		3				C-15.91		RT	5.0		30			1468.00			8	2			CB 177 TO MH 162
Sta 1411+58, 202 Med Cst ℄	178	6		24	224												IV	IV					1		C-15.80		LT	5.0					1470.50			403	66			CB 178 TO Basin; Median Dike C-03.10
Sta 1415+65, 202 Med Cst ℄	179	1		24	140												III	III	3		X		1		C-15.92		LT	5.0		15			1475.40			163	40			CB 179 TO Detention Basin
Sta 1416+71, 202 Med Cst ℄	181	1		24	152												III	III	3		X		1		C-15.92		LT	6.5		20			1475.00			177	43			CB 181 TO Detention Basin
Sta 1417+25, 202 Med Cst ℄	182	1		24	105												III	III	3		X				C-15.80		LT	5.0					1474.75			144	30			CB 182 TO CB 181; Median Dike C-03.10
Sta 28+89, EBCR 1 Cst ℄	183			24	25																		2		na		RT													PIPE 183 Under Sound Wall
Sta 1310+95, 202 Med Cst ℄	200	4		24	88												III	III			X				C-15.80		RT	3.7					1525.50			113	25			CB 200 TO PIPE 100
Sheet Total																							5							65										

NOTE:
Existing structure callout stations, offsets and elevations are approximate.

FILL HEIGHT RANGE TABLE (Ft.)													
RANGE NO.		1	2	3	4	5	6	7	8	9	10	11	12
FILL	>	1	3	5	8	11	15	20	25	30	40	55	70
HEIGHT (Ft.)	≤	3	5	8	11	15	20	25	30	40	55	70	90

◐ SHOULD FIELD CONDITIONS VARY FROM THE RANGE INDICATED, CONTACT DESIGN FOR RE-EVALUATION OF PIPE DESIGN REQUIREMENTS.

◪ PIPE CORRUGATION			
A	2⅔x½	D	6x2
B	3x1	E	3x1 or 9x2½
C	9x2½		

NOTE:
NRCIPCP may be used only where it is listed as an acceptable alternate. NRCIPCP shall be used only in TRENCH CONDITION. In no case shall NRCIPCP be used in a non-trench or over excavated condition.

	NAME	DATE
DESIGN	RPC	04-05
DRAWN	CPG	04-05
CHECKED	BGS	04-05

PB PARSONS BRINCKERHOFF

ARIZONA DEPARTMENT OF TRANSPORTATION
INTERMODAL TRANSPORTATION DIVISION

NEW PIPE SUMMARY SHEET

PRELIMINARY 95% REVIEW
NOT FOR CONSTRUCTION OR RECORDING

ROUTE 202L
LOCATION RED MTN FWY, UNIVERSITY DR - SOUTHERN AVE

DWG NO. G-4.05

TRACS NO. H 5783 01C
202-B(002)B
___ OF ___

Wed Mar 30 09:22:25 2005
H:\RedMtn-Univ-Southern\Drng\psum05.dgn

NOTE:
THE ZEROS IN PARENTHESIS (0, 0.0 & 0.00) IN THE HEADING OF SOME OF THE COLUMNS ARE THE RECOMMENDED PRECISION OF THE VALUE TO BE ENTERED IN THE COLUMN.

NOTE:
FOR PIPE CULVERT PLACEMENT SEE STANDARD DRAWING C-13.15

NOTE:
PIPE OPTIONS SELECTED ARE THOSE REQUIRED TO MEET MINIMUM SERVICE LIFE.
SHADED PIPE OPTION FIELDS ARE NOT ALLOWABLE ALTERNATES.

CSP - CORRUGATED STEEL PIPE
CAP - CORRUGATED ALUMINUM PIPE
RCP - REINFORCED CONCRETE PIPE
NRCP - NON-REINFORCED CONCRETE PIPE
NRCIPCP - NON-REINFORCED CAST-IN-PLACE CONCRETE PIPE
CHDPEPP - CORRUGATED HIGH DENSTIY POLYETHYLENE PLASTIC PIPE

F.H.W.A. REGION	STATE	PROJECT NO.	SHEET NO.	TOTAL SHEETS	AS BUILT
9	ARIZ.	202-B(002)B			
		202L MA 027			

DESCRIPTION							CSP									CAP					RCP			NRCP	NRCIPCP	CHDPEPP	END TREATMENT																QUANTITIES	
				In.	In.	Ft.	Degree	In.	Coating							In.								In.			Each																	Cubic Yard	
																												Catch basin, Manhole, Headwall & Junction Structure																	
																											Ea				Ft.			Grate											
																																			Ft.										
Station	Plan Ref No.	Controlling Fill Height Range	Size, Corrugated	Size, Smooth	Length (0)	Skew (0)	Corrugation	Wall Thickness (0.00)	Zinc	Bit. Coated Zinc	Aluminum	Bit. Coated Aluminum	Corrugation	Wall Thickness (0.00)	Uncoated	Bit. Coated	Class - Non Trench	Class - Trench	Class	Min Wall Thickness (0)	AASHTO M-294 Type C	AASHTO M-294 Type S	C-13.20 & C-13.25	Detail -	Size, (in) Manhole	End Sec	Standard or Detail	S-Single / D-Double	Location	H (0.0)	L Wing (0.0)	L 18" Slotted Drn (0)	L 24" Slotted Drn (0)	Type	Elev. (0.00)	Depth	L (0.0)	Inlet Depression	Pipe Exc (0)	Pipe Bk+fl (0) C-13.15	Drn Exc (0)	Berm/Dike Emb (0)	REMARKS
Sta 1316+00, 202 Med Cst ℄	201	1		24	79											III	III	3			X					C-15.91			LT	4.7	15			1519.36			95	22			CB 201 TO CB 202
Sta 1316+00, 202 Med Cst ℄	202	5		24	89											IV	IV									C-15.80			RT	6.6				1520.58			184	26			CB 202 TO MH102; Median Dike C-03.10
Sta 1318+36, 202 Med Cst ℄	203	1		24	157											III	III	3			X					C-15.91			LT	4.4	10			1518.60			196	45			CB 203 TO CB 205
Sta 1318+36, 202 Med Cst ℄	205	4		24	11											III	III				X					C-15.81			RT	8.1				1521.47			23	3			CB 205 TO PIPE 102
Sta 1322+50, 202 Med Cst ℄	206	3		24	90											II	II	2			X					C-15.80			RT	6.1				1515.16			125	25			CB 206 TO MH 103; Median Dike C-03.10
Sta 1326+60, 202 Med Cst ℄	207	1		24	39											III	III	3			X					C-15.91			RT	5.0	20			1508.82			34	11			CB 207 TO CB 550
Sta 1323+66, 202 Med Cst ℄	208	1		24	118											III	III	3			X					C-15.91			LT	5.2	15			1515.24			129	33			CB 208 TO CB 209
Sta 1322+45, 202 Med Cst ℄	209	3		24	79											II	II	2			X					C-15.91			LT	6.7	15			1515.92			106	22			CB 209 TO CB 206
Sta 1327+11, 202 Med Cst ℄	210	1		24	165											III	III	3			X					C-15.80			LT	6.0				1513.50			173	47			CB 210 TO CB 207
Sta 1330+10, 202 Med Cst ℄	211	1		24	20											III	III	3			X					C-15.91			RT	5.0	10			1501.72			23	6			CB 211 TO MH 106
Sta 1330+00, 202 Med Cst ℄	212	1		24	108											III	III	3			X					C-15.81			LT	5.0				1509.75			121	31			CB 212 TO CB 213
Sta 1330+05, 202 Med Cst ℄	213	1		24	83											III	III	3			X					C-15.80			RT	5.0				1503.30			97	24			CB 213 TO CB 211; Median Dike C-03.10
Sheet Total																															85												

NOTE:
Existing structure callout stations, offsets and elevations are approximate.

FILL HEIGHT RANGE TABLE (Ft.)

RANGE NO.		1	2	3	4	5	6	7	8	9	10	11	12
FILL	>	1	3	5	8	11	15	20	25	30	40	55	70
HEIGHT (Ft.)	≤	3	5	8	11	15	20	25	30	40	55	70	90

SHOULD FIELD CONDITIONS VARY FROM THE RANGE INDICATED, CONTACT DESIGN FOR RE-EVALUATION OF PIPE DESIGN REQUIREMENTS.

PIPE CORRUGATION

A	2⅔x½	D	6x2
B	3x1	E	3x1 or 9x2½
C	9x2½		

NOTE:
NRCIPCP may be used only where it is listed as an acceptable alternate. NRCIPCP shall be used only in TRENCH CONDITION. In no case shall NRCIPCP be used in a non-trench or over excavated condition.

	NAME	DATE
DESIGN	RPC	04-05
DRAWN	CPG	04-05
CHECKED	BGS	04-05

PB PARSONS BRINCKERHOFF

ARIZONA DEPARTMENT OF TRANSPORTATION
INTERMODAL TRANSPORTATION DIVISION

NEW PIPE SUMMARY SHEET

PRELIMINARY 95% REVIEW NOT FOR CONSTRUCTION OR RECORDING

ROUTE 202L | LOCATION RED MTN FWY, UNIVERSITY DR - SOUTHERN AVE

DWG NO. C-4.06

TRACS NO. H 5783 01C | 202-B(002)B | ___ OF ___

Wed Mar 30 09:22:12 2005 H:\RedMtn-Univ-Southern\Drng\psum06.dgn

NOTE:
THE ZEROS IN PARENTHESIS (0, 0.0 & 0.00) IN THE HEADING OF SOME OF THE COLUMNS ARE THE RECOMMENDED PRECISION OF THE VALUE TO BE ENTERED IN THE COLUMN.

NOTE:
FOR PIPE CULVERT PLACEMENT SEE STANDARD DRAWING C-13.15

NOTE:
PIPE OPTIONS SELECTED ARE THOSE REQUIRED TO MEET MINIMUM SERVICE LIFE.
SHADED PIPE OPTION FIELDS ARE NOT ALLOWABLE ALTERNATES.

CSP - CORRUGATED STEEL PIPE
CAP - CORRUGATED ALUMINUM PIPE
RCP - REINFORCED CONCRETE PIPE
NRCP - NON-REINFORCED CONCRETE PIPE
NRCIPCP - NON-REINFORCED CAST-IN-PLACE CONCRETE PIPE
CHDPEPP - CORRUGATED HIGH DENSTIY POLYETHYLENE PLASTIC PIPE

F.H.W.A. REGION	STATE	PROJECT NO.	SHEET NO.	TOTAL SHEETS	AS BUILT
9	ARIZ.	202-B(002)B			
		202L MA 027			

Station	Plan Ref No.	● Controlling Fill Height Range	Size, Corrugated (In.)	Size, Smooth (In.)	Length (0) (Ft.)	Skew (0) (Degree)	◪ Corrugation	Wall Thickness (0.00)	Zinc (Coating)	Bit. Coated Zinc (Coating)	Aluminum (Coating)	Bit. Coated Aluminum (Coating)	◪ Corrugation	Wall Thickness (0.00)	Uncoated (In.)	Bit. Coated (In.)	Class - Non Trench (In.)	Class - Trench (In.)	Class (In.)	Min Wall Thickness (0) (In.)	AASHTO M-294 Type C (RCP)	AASHTO M-294 Type S (RCP)	C-13.20 & C-13.25 (NRCP)	Detail - (NRCIPCP)	Size, (In) Manhole (CHDPEPP)	Standard or Detail (End Sec)	S-Single / D-Double (Each)	Location (Ea)	H (0.0) (Catch basin, Manhole, Headwall & Junction Structure)	L Wing (0.0) (Ft.)	L 18" Slotted Drn (0) (Ft.)	L 24" Slotted Drn (0) (Ft.)	Type (Grate)	Elev. (0.00) (Ft.)	Depth (Ft.)	L (0.0) (Ft.)	Inlet Depression (In.)	Pipe Exc (0) (Cubic Yard)	Pipe Bk-fl (0) C-13.15 (Cubic Yard)	Drn Exc (0) (Cubic Yard)	Berm/Dike Emb (0) (Cubic Yard)	REMARKS
Sta 1331+70, 202 Med Cst ℄	214	1		24	27												III	III	3		X				C-15.91		RT	5.0		10			1498.47			30	8			CB 214 TO PIPE 106
	215																																								
Sta 1336+60, 202 Med Cst ℄	216	1		24	109												III	III	3		X				C-15.81		LT	6.0					1497.30			125	31			CB 216 TO CB 217
Sta 1337+00, 202 Med Cst ℄	217	1		24	80												III	III	3		X				C-15.80		RT	5.0					1491.75			93	23			CB 217 TO CB 218
Sta 1337+15, 202 Med Cst ℄	218	1		24	15												III	III	3		X				C-15.91		RT	5.0		15			1489.84			18	4			CB 218 TO MH 108
Sta 1341+30, 202 Med Cst ℄	219	4		24	181												III	III			X				C-15.81		LT	6.4					1493.60			208	51			CB 219 TO CB 220
Sta 1341+30, 202 Med Cst ℄	220	4		24	21												III	III			X				C-15.91		RT	5.2		15			1486.82			27	6			CB 220 TO PIPE 109
Sta 1343+60, 202 Med Cst ℄	221	1		24	201												III	III	3		X				C-15.80		RT	5.0					1487.68			198	57			CB 221 TO CB 226;Median Dike C-03.10
Sta 1343+50, 202 Med Cst ℄	222	4		24	21												III	III			X				C-15.91		RT	5.0		30			1486.14			26	6			CB 222 TO PIPE 110; 15' Slotted Drain On Each Side of Inlet
Sta 1345+64, 202 Med Cst ℄	225	1		24	101												III	III	3		X				C-15.81		LT	5.0					1489.20			104	29			CB 225 TO CB 226
Sta 1345+64, 202 Med Cst ℄	226	1		24	78												III	III	3		X				C-15.80		RT	4.0					1486.39			82	22			CB 226 TO CB227; Median Dike C-03.10
Sta 1345+64, 202 Med Cst ℄	227	4		24	20												III	III			X				C-15.91		RT	5.6					1486.96			30	6			CB 227 TO MH 111
Sheet Total																														70											

NOTE:
Existing structure callout stations, offsets and elevations are approximate.

FILL HEIGHT RANGE TABLE (Ft.)

RANGE NO.		1	2	3	4	5	6	7	8	9	10	11	12
FILL	>	1	3	5	8	11	15	20	25	30	40	55	70
HEIGHT (Ft.)	≤	3	5	8	11	15	20	25	30	40	55	70	90

● SHOULD FIELD CONDITIONS VARY FROM THE RANGE INDICATED, CONTACT DESIGN FOR RE-EVALUATION OF PIPE DESIGN REQUIREMENTS.

◪ PIPE CORRUGATION			
A	2⅔x½	D	6x2
B	3x1	E	3x1 or 9x2½
C	9x2½		

NOTE:
NRCIPCP may be used only where it is listed as an acceptable alternate. NRCIPCP shall be used only in TRENCH CONDITION. In no case shall NRCIPCP be used in a non-trench or over excavated condition.

	NAME	DATE
DESIGN	RPC	04-05
DRAWN	CPG	04-05
CHECKED	BGS	04-05

PB PARSONS BRINCKERHOFF

ARIZONA DEPARTMENT OF TRANSPORTATION
INTERMODAL TRANSPORTATION DIVISION

NEW PIPE SUMMARY SHEET

PRELIMINARY 95% REVIEW NOT FOR CONSTRUCTION OR RECORDING

ROUTE 202L
LOCATION RED MTN FWY, UNIVERSITY DR - SOUTHERN AVE

DWG NO. G-4.07

TRACS NO. H 5783 01C
202-B(002)B
___ OF ___

Wed Mar 30 09:21:59 2005
H:\RedMtn-Univ-Southern\Drng\psum07.dgn

NOTE:
THE ZEROS IN PARENTHESIS (0, 0.0 & 0.00) IN THE HEADING OF SOME OF THE COLUMNS ARE THE RECOMMENDED PRECISION OF THE VALUE TO BE ENTERED IN THE COLUMN.

NOTE:
FOR PIPE CULVERT PLACEMENT SEE STANDARD DRAWING C-13.15

NOTE:
PIPE OPTIONS SELECTED ARE THOSE REQUIRED TO MEET MINIMUM SERVICE LIFE.
SHADED PIPE OPTION FIELDS ARE NOT ALLOWABLE ALTERNATES.

CSP - CORRUGATED STEEL PIPE
CAP - CORRUGATED ALUMINUM PIPE
RCP - REINFORCED CONCRETE PIPE
NRCP - NON-REINFORCED CONCRETE PIPE
NRCIPCP - NON-REINFORCED CAST-IN-PLACE CONCRETE PIPE
CHDPEPP - CORRUGATED HIGH DENSTIY POLYETHYLENE PLASTIC PIPE

F.H.W.A. REGION	STATE	PROJECT NO.	SHEET NO.	TOTAL SHEETS	AS BUILT
9	ARIZ.	202-B(002)B			
		202L MA 027			

Station	Plan Ref No.	Controlling Fill Height Range	Size, Corrugated (In.)	Size, Smooth (In.)	Length (0) (Ft.)	Skew (0) (Degree)	Corrugation	Wall Thickness (0.00)	Zinc Coating	Bit. Coated Zinc Coating	Aluminum	Bit. Coated Aluminum	Corrugation	Wall Thickness (0.00)	Uncoated	Bit. Coated	Class - Non Trench	Class - Trench	Class	Min Wall Thickness (0) (In.)	AASHTO M-294 Type C	AASHTO M-294 Type S	C-13.20 & C-13.25	Detail -	Size, (In) Manhole	Standard or Detail	End Sec (Each)	S-Single / D-Double	Location	H (0.0)	L Wing (0.0)	L 18" Slotted Drn (0) (Ft.)	L 24" Slotted Drn (0) (Ft.)	Type	Elev. (0.00)	Grate Depth (In.)	Grate L (0.0) (Ft.)	Inlet Depression	Pipe Exc (0)	Pipe Bkfl (0) C-13.15	Drn Exc (0)	Berm/Dike Emb (0) (Cubic Yard)	REMARKS
Sta 1349+10, 202 Med Cst ℄	228	4		24	92												III	III			X				C-15.91			LT	6.8		5				1483.22			133	26			CB 228 TO CB 229
Sta 1349+10, 202 Med Cst ℄	229	4		24	102												III	III			X				C-15.80			RT	8.2						1484.28			179	29			CB 229 TO MH112; Median Dike C-03.10
Sta 1351+10, 202 Med Cst ℄	230	4		24	14												III	III			X				C-15.81			RT	4.0						1487.95			20	4			CB 230 TO PIPE 112
Sta 1356+00, 202 Med Cst ℄	231	4		24	76												III	III			X				C-15.80			RT	3.7						1478.62			91	22			CB 231 TO CB232; Median Dike C-03.10
Sta 1356+00, 202 Med Cst ℄	232	4		24	7												III	III			X				C-15.81			RT	7.9						1482.42			12	2			CB 232 TO MH 115
Sta 1358+95, 202 Med Cst ℄	233	4		24	157												III	III			X				C-15.91			LT	5.0		5				1473.09			236	45			CB 233 TO CB 234
Sta 1358+95, 202 Med Cst ℄	234	4		24	9												III	III			X				C-15.81			RT	11.2						1478.74			20	3			CB 234 TO MH 116
Sta 1363+05, 202 Med Cst ℄	235	1		24	78												III	III	3		X				C-15.91			LT	5.0		5				1468.39			103	22			CB 235 TO CB 241
Sta 1363+05, 202 Med Cst ℄	236	5		24	14												IV	IV							C-15.81			RT	10.8						1473.50			30	4			CB 236 TO MH 117
Sta 1365+20, 202 Med Cst ℄	237	4		24	83												III	III			X				C-15.80			RT	5.0						1467.55			141	24			CB237 TO PIPE117; Median Dike C-03.10
Sta 1366+95, 202 Med Cst ℄	238	1		24	78												III	III	3		X				C-15.91			LT	4.7		15				1466.17			85	22			CB 238 TO CB 239
Sta 1366+95, 202 Med Cst ℄	239	1		24	90												III	III	3		X				C-15.80			RT	4.5						1465.79			113	26			CB 239 TO MH 118
Sta 1367+05, 202 Med Cst ℄	240			24	8																				C-15.81			RT	5.0						1468.50							CB 240 TO PIPE 118
Sheet Total																															30												

NOTE:
Existing structure callout stations, offsets and elevations are approximate.

FILL HEIGHT RANGE TABLE (Ft.)

RANGE NO.		1	2	3	4	5	6	7	8	9	10	11	12
FILL	>	1	3	5	8	11	15	20	25	30	40	55	70
HEIGHT (Ft.)	≤	3	5	8	11	15	20	25	30	40	55	70	90

SHOULD FIELD CONDITIONS VARY FROM THE RANGE INDICATED, CONTACT DESIGN FOR RE-EVALUATION OF PIPE DESIGN REQUIREMENTS.

PIPE CORRUGATION

A	2⅔x½	D	6x2
B	3x1	E	3x1 or 9x2½
C	9x2½		

NOTE:
NRCIPCP may be used only where it is listed as an acceptable alternate. NRCIPCP shall be used only in TRENCH CONDITION. In no case shall NRCIPCP be used in a non-trench or over excavated condition.

	NAME	DATE
DESIGN	RPC	04-05
DRAWN	CPG	04-05
CHECKED	BGS	04-05

PARSONS BRINCKERHOFF

ARIZONA DEPARTMENT OF TRANSPORTATION
INTERMODAL TRANSPORTATION DIVISION

NEW PIPE SUMMARY SHEET

PRELIMINARY 95% REVIEW NOT FOR CONSTRUCTION OR RECORDING

ROUTE 202L
LOCATION RED MTN FWY, UNIVERSITY DR - SOUTHERN AVE

DWG NO. G-4.08

TRACS NO. H 5783 01C
202-B(002)B
___ OF ___

Wed Mar 30 09:21:47 2005
H:\RedMtn-Univ-Southern\Drng\psum08.dgn

NOTE:
THE ZEROS IN PARENTHESIS (0, 0.0 & 0.00) IN THE HEADING OF SOME OF THE COLUMNS ARE THE RECOMMENDED PRECISION OF THE VALUE TO BE ENTERED IN THE COLUMN.

NOTE:
FOR PIPE CULVERT PLACEMENT SEE STANDARD DRAWING C-13.15

NOTE:
PIPE OPTIONS SELECTED ARE THOSE REQUIRED TO MEET MINIMUM SERVICE LIFE.
SHADED PIPE OPTION FIELDS ARE NOT ALLOWABLE ALTERNATES.

CSP - CORRUGATED STEEL PIPE
CAP - CORRUGATED ALUMINUM PIPE
RCP - REINFORCED CONCRETE PIPE
NRCP - NON-REINFORCED CONCRETE PIPE
NRCIPCP - NON-REINFORCED CAST-IN-PLACE CONCRETE PIPE
CHDPEPP - CORRUGATED HIGH DENSTIY POLYETHYLENE PLASTIC PIPE

F.H.W.A. REGION	STATE	PROJECT NO.	SHEET NO.	TOTAL SHEETS	AS BUILT
9	ARIZ.	202-B(002)B			
		202L MA 027			

DATE-	LOCATION-	REVISIONS-	FINISHED PLANS-	SURVEY NO.	DATE-	LOCATION-	REVISIONS-	FINISHED PLANS-	SURVEY NO.

Station	Plan Ref No.	Controlling Fill Height Range	Size, Corrugated (In.)	Size, Smooth (In.)	Length (0) (Ft.)	Skew (0) (Degree)	Corrugation	Wall Thickness (0.00)	Zinc (In.)	Bit. Coated Zinc (Coating)	Aluminum (In.)	Bit. Coated Aluminum (Coating)	Corrugation	Wall Thickness (0.00)	Uncoated (In.)	Bit. Coated (Coating)	Class - Non Trench (In.)	Class - Trench (In.)	Class (In.)	Min Wall Thickness (0) (In.)	AASHTO M-294 Type C (RCP)	AASHTO M-294 Type S (RCP)	C-13.20 & C-13.25 (NRCP)	Detail - (NRCIPCP)	Size, (In) Manhole (In.)	Standard or Detail (CHDPEPP)	S-Single / D-Double (End Sec)	Location (Each)	H (0.0) (Ea)	L Wing (0.0) (Ea)	L 18" Slotted Drn (0) (Ft.)	L 24" Slotted Drn (0) (Ft.)	Type (Grate)	Elev. (0.00) (Ft.)	Depth (In.)	L (0.0) (Ft.)	Inlet Depression Pipe Exc (0) (Cubic Yard)	Pipe Bkfl (0) C-13.15 (Cubic Yard)	Drn Exc (0) (Cubic Yard)	Berm/Dike Emb (0) (Cubic Yard)	REMARKS
Sta 1363+05, 202 Med Cst ℄	241	4		24	76												III	III				X				C-15.80		RT	6.6					1469.75			129	22			CB 241 TO CB 236
Sta 1371+50, 202 Med Cst ℄	242	1		24	158												III	III	3			X				C-15.91		LT	5.2		10			1464.41			171	45			CB 242 TO CB 243
Sta 1371+50, 202 Med Cst ℄	243	1		24	7												III	III	3			X				C-15.91		RT	5.5		10			1463.15			8	2			CB 243 TO MH 120
Sta 1373+80, 202 Med Cst ℄	245	1		24	7												III	III	3			X				C-15.91		RT	5.0		10			1462.22			8	2			CB 245 TO PIPE 120
Sta 1376+40, 202 Med Cst ℄	247	1		24	158												III	III	3			X				C-15.91		LT	5.3		25			1462.43			176	45			CB 247 TO CB 248
Sta 1376+40, 202 Med Cst ℄	248	1		24	8												III	III	3			X				C-15.91		RT	5.5		10			1461.17			9	2			CB 248 TO MH 152
Sta 1377+00, 202 Med Cst ℄	249	1		24	57												III	III	3			X				C-15.91		LT	5.2					1462.63			55	16			CB 249 TO CB 247
Sta 1380+86, 202 Med Cst ℄	250	1		24	90												III	III	3			X			30	C-18.10		LT	5.0								90	26			MH 250 TO CB 251
Sta 1380+91, 202 Med Cst ℄	251	1		24	78												III	III	3			X				C-15.80		RT	5.0					1460.00			85	22			CB 251 TO CB 253; Median Dike C-03.10
Sta 1379+80, 202 Med Cst ℄	252	1		24	107												III	III	3			X				C-15.81		LT	4.6					1463.70			105	30			CB 252 TO MH 250
Sta 1380+96, 202 Med Cst ℄	253	1		24	40												III	III	3			X				C-15.91		RT	5.5		15			1458.65			40	11			CB 253 TO CB 677
Sta 1383+40, 202 Med Cst ℄	254	1		24	11												III	III	3			X				C-15.91		RT	5.0		5			1456.80			11	3			CB 254 TO PIPE 154
Sheet Total																									1						85										

NOTE:
Existing structure callout stations, offsets and elevations are approximate.

FILL HEIGHT RANGE TABLE (Ft.)

RANGE NO.		1	2	3	4	5	6	7	8	9	10	11	12
FILL	>	1	3	5	8	11	15	20	25	30	40	55	70
HEIGHT (Ft.)	≤	3	5	8	11	15	20	25	30	40	55	70	90

◒ SHOULD FIELD CONDITIONS VARY FROM THE RANGE INDICATED, CONTACT DESIGN FOR RE-EVALUATION OF PIPE DESIGN REQUIREMENTS.

PIPE CORRUGATION			
A	2⅔x½	D	6x2
B	3x1	E	3x1 or 9x2½
C	9x2½		

NOTE:
NRCIPCP may be used only where it is listed as an acceptable alternate. NRCIPCP shall be used only in TRENCH CONDITION. In no case shall NRCIPCP be used in a non-trench or over excavated condition.

	NAME	DATE
DESIGN	RPC	04-05
DRAWN	CPG	04-05
CHECKED	BGS	04-05

PB PARSONS BRINCKERHOFF

ARIZONA DEPARTMENT OF TRANSPORTATION
INTERMODAL TRANSPORTATION DIVISION

NEW PIPE SUMMARY SHEET

PRELIMINARY 95% REVIEW
NOT FOR CONSTRUCTION OR RECORDING

ROUTE 202L
LOCATION RED MTN FWY, UNIVERSITY DR - SOUTHERN AVE

DWG NO. G-4.09

TRACS NO. H 5783 01C
202-B(002)B
___ OF ___

Wed Mar 30 09:21:35 2005
H:\RedMtn-Univ-Southern\Drng\psum09.dgn

NOTE:
THE ZEROS IN PARENTHESIS (0, 0.0 & 0.00) IN THE HEADING OF SOME OF THE COLUMNS ARE THE RECOMMENDED PRECISION OF THE VALUE TO BE ENTERED IN THE COLUMN.

NOTE:
FOR PIPE CULVERT PLACEMENT SEE STANDARD DRAWING C-13.15

NOTE:
PIPE OPTIONS SELECTED ARE THOSE REQUIRED TO MEET MINIMUM SERVICE LIFE.
SHADED PIPE OPTION FIELDS ARE NOT ALLOWABLE ALTERNATES.

CSP - CORRUGATED STEEL PIPE
CAP - CORRUGATED ALUMINUM PIPE
RCP - REINFORCED CONCRETE PIPE
NRCP - NON-REINFORCED CONCRETE PIPE
NRCIPCP - NON-REINFORCED CAST-IN-PLACE CONCRETE PIPE
CHDPEPP - CORRUGATED HIGH DENSTIY POLYETHYLENE PLASTIC PIPE

F.H.W.A. REGION	STATE	PROJECT NO.	SHEET NO.	TOTAL SHEETS	AS BUILT
9	ARIZ.	202-B(002)B			
		202L MA 027			

Station	Plan Ref No.	Controlling Fill Height Range	Size, Corrugated (In.)	Size, Smooth (In.)	Length (0) (Ft.)	Skew (0) (Degree)	CSP Corrugation	CSP Wall Thickness (0.00)	CSP Zinc Coating	CSP Bit. Coated Zinc Coating	CAP Aluminum Coating	CAP Bit. Coated Aluminum Coating	CAP Corrugation	CAP Wall Thickness (0.00)	CAP Uncoated Coating	CAP Bit. Coated Coating	RCP Class - Non Trench	RCP Class - Trench	RCP Class	NRCP Min Wall Thickness (0) (In.)	NRCIPCP AASHTO M-294 Type C	NRCIPCP AASHTO M-294 Type S	CHDPEPP C-13.20 & C-13.25	End Sec Detail - Size, (In) Manhole	End Sec Standard or Detail	End Sec S-Single / D-Double	End Sec Location	End Sec H (0.0)	End Sec L Wing (0.0)	End Sec L 18" Slotted Drn (0)	End Sec L 24" Slotted Drn (0)	End Sec Type	End Sec Elev. (0.00)	Inlet Depression Grate Depth (In.)	Inlet Depression Grate L (0.0) (Ft.)	Inlet Depression Pipe Exc (0) (Ft.)	Inlet Depression Pipe Bk-fl (0) C-13.15	Inlet Depression Drn Exc (0)	Inlet Depression Berm/Dike Emb (0)	REMARKS
Sta 1384+10, 202 Med Cst ℄	255	1		24	8												III	III	3			X				C-15.91		RT	5.0					1456.67			8	2			CB 255 TO MH 155
Sta 1384+70, 202 Med Cst ℄	256	1		24	12												III	III	3			X				C-15.91		RT	5.0		10			1456.06			12	3			CB 256 TO PIPE 155
Sta 1386+20, 202 Med Cst ℄	257	1		24	91												III	III	3			X				C-15.80		RT	5.5					1457.63			102	26			CB257 TO CB 256; Median Dike C-03.10
Sta 1388+70, 202 Med Cst ℄	258	1		24	11												III	III	3			X				C-15.91		RT	5.0		10			1455.11			12	3			CB 258 TO PIPE 156
Sta 1390+70, 202 Med Cst ℄	259	1		24	8												III	III	3			X				C-15.91		RT	5.0		5			1454.31			8	2			CB 259 TO MH 157
Sta 1391+75, 202 Med Cst ℄	260	1		24	91												III	III	3			X				C-15.80		RT	5.5					1455.43			99	26			CB 260 TO CB261; Median Dike C-03.10
Sta 1391+88, 202 Med Cst ℄	261	1		24	12												III	III	3			X				C-15.91		RT	5.0		10			1453.88			13	3			CB 261 TO PIPE 157
Sta 1393+45, 202 Med Cst ℄	262	1		24	106												III	III	3			X				C-15.81		LT	5.0					1459.28			106	30			CB 262 TO MH 290
Sta 1393+01, 202 Med Cst ℄	263	1		24	42												III	III	3			X				C-15.81		LT	4.0					1459.25			36	12			CB 263 TO CB 262
Sta 1393+02, 202 Med Cst ℄	264	1		24	40												III	III	3			X				C-15.80		RT	4.5					1455.17			40	11			CB 264 TO MH 290; 15' Slotted Drain on each side of Inlet
Sta 1393+42, 202 Med Cst ℄	265	1		24	12												III	III	3			X				C-15.91		RT	4.7		20			1453.66			12	3			CB 265 TO PIPE 157; 10' Slotted Drain on each side of Inlet
Sta 1394+95, 202 Med Cst ℄	266	1		24	90												III	III	3			X				C-15.80		RT	5.0					1455.39			96	26			CB 266 TO CB267; Median Dike C-03.10
Sta 1394+95, 202 Med Cst ℄	267	1		24	8												III	III	3			X				C-15.91		RT	5.0		15			1453.88			9	2			CB 267 TO MH 158
Sheet Total																															70										

QUANTITIES: Cubic Yard

NOTE:
Existing structure callout stations, offsets and elevations are approximate.

FILL HEIGHT RANGE TABLE (Ft.)

RANGE NO.		1	2	3	4	5	6	7	8	9	10	11	12
FILL	>	1	3	5	8	11	15	20	25	30	40	55	70
HEIGHT (Ft.)	≤	3	5	8	11	15	20	25	30	40	55	70	90

◒ SHOULD FIELD CONDITIONS VARY FROM THE RANGE INDICATED, CONTACT DESIGN FOR RE-EVALUATION OF PIPE DESIGN REQUIREMENTS.

◪ PIPE CORRUGATION			
A	2⅔x½	D	6x2
B	3x1	E	3x1 or 9x2½
C	9x2½		

NOTE:
NRCIPCP may be used only where it is listed as an acceptable alternate. NRCIPCP shall be used only in TRENCH CONDITION. In no case shall NRCIPCP be used in a non-trench or over excavated condition.

	NAME	DATE
DESIGN	RPC	04-05
DRAWN	CPG	04-05
CHECKED	BGS	04-05

PARSONS BRINCKERHOFF

ARIZONA DEPARTMENT OF TRANSPORTATION
INTERMODAL TRANSPORTATION DIVISION

NEW PIPE SUMMARY SHEET

PRELIMINARY 95% REVIEW
NOT FOR CONSTRUCTION OR RECORDING

ROUTE 202L
LOCATION RED MTN FWY, UNIVERSITY DR - SOUTHERN AVE

DWG NO. G-4.10

TRACS NO. H 5783 01C | 202-B(002)B | ___ OF ___

Wed Mar 30 09:21:23 2005 H:\RedMtn-Univ-Southern\Drng\psum10.dgn

NOTE:
THE ZEROS IN PARENTHESIS (0, 0.0 & 0.00) IN THE HEADING OF SOME OF THE COLUMNS ARE THE RECOMMENDED PRECISION OF THE VALUE TO BE ENTERED IN THE COLUMN.

NOTE:
FOR PIPE CULVERT PLACEMENT SEE STANDARD DRAWING C-13.15

NOTE:
PIPE OPTIONS SELECTED ARE THOSE REQUIRED TO MEET MINIMUM SERVICE LIFE.
SHADED PIPE OPTION FIELDS ARE NOT ALLOWABLE ALTERNATES.

CSP - CORRUGATED STEEL PIPE
CAP - CORRUGATED ALUMINUM PIPE
RCP - REINFORCED CONCRETE PIPE
NRCP - NON-REINFORCED CONCRETE PIPE
NRCIPCP - NON-REINFORCED CAST-IN-PLACE CONCRETE PIPE
CHDPEPP - CORRUGATED HIGH DENSTIY POLYETHYLENE PLASTIC PIPE

F.H.W.A. REGION	STATE	PROJECT NO.	SHEET NO.	TOTAL SHEETS	AS BUILT
9	ARIZ.	202-B(002)B			
		202L MA 027			

DESCRIPTION							CSP			CAP		RCP	NRCP	NRCIPCP	CHDPEPP	END TREATMENT														QUANTITIES	
				In.	In.	Ft.	Degree	In.	Coating		In.				In.	Each															
																End Sec	Catch basin, Manhole, Headwall & Junction Structure													Cubic Yard	
																	Ea			Ft.			Grate								
																								Ft.							
Station	Plan Ref No.	Controlling Fill Height Range	Size, Corrugated	Size, Smooth	Length (0)	Skew (0)	Corrugation	Wall Thickness (0.00)	Zinc	Bit. Coated Zinc	Aluminum	Bit. Coated Aluminum	Corrugation	Wall Thickness (0.00)	Uncoated	Bit. Coated	Class - Non Trench	Class - Trench	Class	Min Wall Thickness (0)	AASHTO M-294 Type C	AASHTO M-294 Type S	C-13.20 & C-13.25	Detail -	Size, (in) Manhole	Standard or Detail	S-Single / D-Double	Location	H (0.0)	L Wing (0.0)	L 18" Slotted Drn (0)	L 24" Slotted Drn (0)	Type	Elev. (0.00)	Depth	L (0.0)	Inlet Depression In.	Inlet Depression Ft.	Pipe Exc (0)	Pipe Bk-fl (0) C-13.15	Drn Exc (0)	Berm/Dike Emb (0)	REMARKS
Sta 1397+40, 202 Med Cst ℄	268	1		24	12											III	III	3			X				C-15.91		RT	5.0		15			1455.10			16	3				CB 268 TO PIPE 158
Sta 1398+90, 202 Med Cst ℄	269	1		24	204											III	III	3			X				C-15.81		LT	6.0					1462.20			211	58				CB 269 TO MH 159
Sta 1402+50, 202 Med Cst ℄	271	1		24	91											III	III	3			X				C-15.80		RT	5.0					1461.20			99	26				CB 271 TO CB272; Median Dike C-03.10
Sta 1402+60, 202 Med Cst ℄	272	1		24	9											III	III	3			X				C-15.91		RT	5.0		25			1460.25			9	3				CB 272 TO MH 160
STA 1394+05, 202 MED CST ℄	273	5		24	80											IV	IV								C-15.80		RT	6.0					1476.40			185	24				CB 273 TO PIPE 127; Type A Dike C-03.10
Sta 1410+00, 202 Med Cst ℄	274	7		24	103											V	V								C-15.80		RT	5.0					1462.75			154	32				CB 274 TO MH132; Type A Dike C-03.10
STA 1417+35, 202 MED CST ℄	275			24																					C-15.81		RT	5.0					1476.52								CB 275 TO Pipe 133
Sta 1333+65, 202 Med Cst ℄	282	4		24	101											III	III				X				C-13.76		RT									135	29				PIPE 282 TO MH 107
Sta 1339+85, 202 Med Cst ℄	283	4		24	97											III	III				X				C-13.76		RT									129	28				PIPE 283 TO MH 109
Sheet Total																														40											

NOTE:
Existing structure callout stations, offsets and elevations are approximate.

FILL HEIGHT RANGE TABLE (Ft.)

RANGE NO.		1	2	3	4	5	6	7	8	9	10	11	12
FILL	>	1	3	5	8	11	15	20	25	30	40	55	70
HEIGHT (Ft.)	≤	3	5	8	11	15	20	25	30	40	55	70	90

SHOULD FIELD CONDITIONS VARY FROM THE RANGE INDICATED, CONTACT DESIGN FOR RE-EVALUATION OF PIPE DESIGN REQUIREMENTS.

PIPE CORRUGATION

A	2⅔x½	D	6x2
B	3x1	E	3x1 or 9x2½
C	9x2½		

NOTE:
NRCIPCP may be used only where it is listed as an acceptable alternate. NRCIPCP shall be used only in TRENCH CONDITION. In no case shall NRCIPCP be used in a non-trench or over excavated condition.

	NAME	DATE
DESIGN	RPC	04-05
DRAWN	CPG	04-05
CHECKED	BGS	04-05

PB PARSONS BRINCKERHOFF

ARIZONA DEPARTMENT OF TRANSPORTATION
INTERMODAL TRANSPORTATION DIVISION

NEW PIPE SUMMARY SHEET

PRELIMINARY 95% REVIEW
NOT FOR CONSTRUCTION OR RECORDING

ROUTE 202L
LOCATION RED MTN FWY, UNIVERSITY DR - SOUTHERN AVE

DWG NO. G-4.11

TRACS NO. H 5783 01C
202-B(002)B
___ OF ___

Wed Mar 30 09:21:12 2005
H:\RedMtn-Univ-Southern\Drng\psum11.dgn

NOTE:
THE ZEROS IN PARENTHESIS (0, 0.0 & 0.00) IN THE HEADING OF SOME OF THE COLUMNS ARE THE RECOMMENDED PRECISION OF THE VALUE TO BE ENTERED IN THE COLUMN.

NOTE:
FOR PIPE CULVERT PLACEMENT SEE STANDARD DRAWING C-13.15

NOTE:
PIPE OPTIONS SELECTED ARE THOSE REQUIRED TO MEET MINIMUM SERVICE LIFE.
SHADED PIPE OPTION FIELDS ARE NOT ALLOWABLE ALTERNATES.

CSP - CORRUGATED STEEL PIPE
CAP - CORRUGATED ALUMINUM PIPE
RCP - REINFORCED CONCRETE PIPE
NRCP - NON-REINFORCED CONCRETE PIPE
NRCIPCP - NON-REINFORCED CAST-IN-PLACE CONCRETE PIPE
CHDPEPP - CORRUGATED HIGH DENSTIY POLYETHYLENE PLASTIC PIPE

F.H.W.A. REGION	STATE	PROJECT NO.	SHEET NO.	TOTAL SHEETS	AS BUILT
9	ARIZ.	202-B(002)B			
		202L MA 027			

DESCRIPTION							CSP			CAP			RCP	NRCP	NRCIPCP	CHDPEPP	END TREATMENT														QUANTITIES	
			In.	In.	Ft.	Degree	In.	Coating		In.					In.		Each															
																	End Sec	Catch basin, Manhole, Headwall & Junction Structure													Cubic Yard	
																		Ea				Ft.			Grate							
																									Ft.							
Station	Plan Ref No.	● Controlling Fill Height Range	Size, Corrugated	Size, Smooth	Length (0)	Skew (0)	◪ Corrugation	Wall Thickness (0.00)	Zinc	Bit. Coated Zinc	Aluminum	Bit. Coated Aluminum	◪ Corrugation	Wall Thickness (0.00)	Uncoated	Bit. Coated	Class - Non Trench	Class - Trench	Class	Min Wall Thickness (0)	AASHTO M-294 Type C	AASHTO M-294 Type S	C-13.20 & C-13.25	Detail -	Size, (In) Manhole	Standard or Detail	S-Single / D-Double	Location	H (0.0)	L Wing (0.0)	L 18" Slotted Drn (0)	L 24" Slotted Drn (0)	Type	Elev. (0.00)	Depth	L (0.0)	Inlet Depression	Pipe Exc (0)	Pipe Bk-fi (0) C-13.15	Drn Exc (0)	Berm/Dike Emb (0)	REMARKS
Sta 1382+15, 202 Med Cst ℄	289	1		24	104												III	III	3			X				C-13.76		RT										121	30			PIPE 289 TO CB 254
Sta 1393+43, 202 Med Cst ℄	290	1		24	87												III	III	3			X			30	C-18.10		RT	5.5									94	25			CB 290 TO CB 255
Sta 1388+60, 202 Med Cst ℄	291	1		24	91												III	III	3			X				C-13.76		RT										99	26			PIPE 291 TO CB 258
Sta 1390+85, 202 Med Cst ℄	292	1		24	91												III	III	3			X				C-13.76		RT										102	26			PIPE 292 TO CB 259
Sta 16+00, EBCR 1 Cst ℄	300	5		24	111												IV	IV								C-15.20	S	RT	5.0	19.5							194	33			CB 300 TO PIPE 102
Sta 19+20, EBCR 1 Cst ℄	301	1		24	161												III	III	3			X				C-15.20	S	RT	6.0	11.5							174	46			CB 301 TO CB 302
Sta 20+84, EBCR 1 Cst ℄	302	1		24	58												III	III	3			X				C-15.20	S	RT	6.0	11.5							63	16			CB 302 TO CB 303
Sta 21+45, EBCR 1 Cst ℄	303	1		24	62												III	III	3			X				C-15.20	D	RT	6.5	3.5							75	18			CB 303 TO MH 104; 3.5' DBL WING
Sta 22+05, EBCR 1 Cst ℄	304	1		24	57												III	III	3			X				C-15.20	S	RT	6.0	7.5							60	16			CB 304 TO CB 303
Sta 28+05, EBCR 1 Cst ℄	305	1		24	153												III	III	3			X				C-15.20	S	RT	5.0	11.5							196	43			CB 305 TO MH 106
Sheet Total																									1																	

NOTE:
Existing structure callout stations, offsets and elevations are approximate.

FILL HEIGHT RANGE TABLE (Ft.)

RANGE NO.		1	2	3	4	5	6	7	8	9	10	11	12
FILL	>	1	3	5	8	11	15	20	25	30	40	55	70
HEIGHT (Ft.)	≤	3	5	8	11	15	20	25	30	40	55	70	90

● SHOULD FIELD CONDITIONS VARY FROM THE RANGE INDICATED, CONTACT DESIGN FOR RE-EVALUATION OF PIPE DESIGN REQUIREMENTS.

◪ PIPE CORRUGATION			
A	2⅔x½	D	6x2
B	3x1	E	3x1 or 9x2½
C	9x2½		

NOTE:
NRCIPCP may be used only where it is listed as an acceptable alternate. NRCIPCP shall be used only in TRENCH CONDITION. In no case shall NRCIPCP be used in a non-trench or over excavated condition.

	NAME	DATE
DESIGN	RPC	04-05
DRAWN	CPG	04-05
CHECKED	BGS	04-05

PB PARSONS BRINCKERHOFF

ARIZONA DEPARTMENT OF TRANSPORTATION
INTERMODAL TRANSPORTATION DIVISION

NEW PIPE SUMMARY SHEET

PRELIMINARY 95% REVIEW NOT FOR CONSTRUCTION OR RECORDING

ROUTE 202L | LOCATION RED MTN FWY, UNIVERSITY DR - SOUTHERN AVE

DWG NO. G-4.12

TRACS NO. H 5783 01C | 202-B(002)B | ___ OF ___

Wed Mar 30 09:21:00 2005 H:\RedMtn-Univ-Southern\Drng\psum12.dgn

NOTE:
THE ZEROS IN PARENTHESIS (0, 0.0 & 0.00) IN THE HEADING OF SOME OF THE COLUMNS ARE THE RECOMMENDED PRECISION OF THE VALUE TO BE ENTERED IN THE COLUMN.

NOTE:
FOR PIPE CULVERT PLACEMENT SEE STANDARD DRAWING C-13.15

NOTE:
PIPE OPTIONS SELECTED ARE THOSE REQUIRED TO MEET MINIMUM SERVICE LIFE.
SHADED PIPE OPTION FIELDS ARE NOT ALLOWABLE ALTERNATES.

CSP - CORRUGATED STEEL PIPE
CAP - CORRUGATED ALUMINUM PIPE
RCP - REINFORCED CONCRETE PIPE
NRCP - NON-REINFORCED CONCRETE PIPE
NRCIPCP - NON-REINFORCED CAST-IN-PLACE CONCRETE PIPE
CHDPEPP - CORRUGATED HIGH DENSTIY POLYETHYLENE PLASTIC PIPE

F.H.W.A. REGION	STATE	PROJECT NO.	SHEET NO.	TOTAL SHEETS	AS BUILT
9	ARIZ.	202-B(002)B			
		202L MA 027			

Station	Plan Ref No.	Controlling Fill Height Range	Size, Corrugated (In.)	Size, Smooth (In.)	Length (0) (Ft.)	Skew (0) (Degree)	CSP Corrugation	CSP Wall Thickness (0.00) (In.)	CSP Zinc Coating	CSP Bit. Coated Zinc Coating	CAP Aluminum Coating	CAP Bit. Coated Aluminum Coating	CAP Corrugation	CAP Wall Thickness (0.00) (In.)	RCP Uncoated	RCP Bit. Coated	RCP Class - Non Trench	RCP Class - Trench	RCP Class	RCP Min Wall Thickness (0) (In.)	NRCP AASHTO M-294 Type C	NRCP AASHTO M-294 Type S	NRCIPCP C-13.20 & C-13.25	CHDPEPP Detail -	End Sec (Each)	Size, (In) Manhole or Standard Detail	Catch basin, Manhole, Headwall & Junction Structure: S-Single / D-Double	Location	H (0.0)	L Wing (0.0) (Ea)	L 18" Slotted Drn (0) (Ft.)	L 24" Slotted Drn (0) (Ft.)	Type	Elev. (0.00)	Grate Depth (In.)	Grate L (0.0) (Ft.)	Inlet Depression Pipe Exc (0) (Cubic Yard)	Inlet Depression Pipe Bk-fl (0) C-13.15 (Cubic Yard)	Inlet Depression Drn Exc (0) (Cubic Yard)	Inlet Depression Berm/Dike Emb (0) (Cubic Yard)	REMARKS
Sta 32+40, EBCR 1 Cst ℄	306	1		24	91												III	III	3			X				C-15.20	S	RT	5.5	7.5								88	26			CB 306 TO CB 307
Sta 33+35 EBCR 1 Cst ℄	307	1		24	85												III	III	3			X				C-15.20	D	RT	6.0	3.5								99	24			CB 307 TO CB 308; 3.5' DBL WING
Sta 34+23, EBCR 1 Cst ℄	308	3		24	149												II	II	2			X				C-15.20	S	RT	7.5	3.5								195	41			CB 308 TO MH 108
Sta 34+75, EBCR 1 Cst ℄	309	1		24	49												III	III	3			X				C-15.20	S	RT	6.5	7.5								57	14			CB 309 TO CB 308
Sta 11+33, EBCR1 Cst ℄	320	3		24	50												II	II	2			X			30	C-18.10		LT	10.0									71	14			MH 320 TO MH 101
Sta 15+95, EBCR 2 Cst ℄	350	1		24	97												III	III	3			X				C-15.20	S	RT	6.0	19.5								113	28			CB 350 TO MH 111
Sta 18+30, EBCR 2 Cst ℄	351	1		24	65												III	III	3			X				C-15.20	S	RT	6.0	7.5								66	18			CB 351 TO CB 352
Sta 18+98, EBCR 2 Cst ℄	352	1		24	117												III	III	3			X				C-15.20	S	RT	6.0	7.5								127	33			CB 352 TO MH 112
Sta 32+73, EBCR 2 Cst ℄	353	1		24	25												III	III	3			X				C-15.20	S	LT	6.0	19.5								24	7			CB 353 TO CB 626
Sta 33+75, EBCR 2 Cst ℄	354	4		24	106												III	III				X				C-15.91		LT	6.0						1483.09			133	30			CB 354 TO PIPE 116
Sta 34+28, EBCR 2 Cst ℄	355	1		24	50												III	III	3							C-15.91		LT	5.0		10				1483.14			52	14			CB 355 TO CB 354
Sta 37+55, EBCR 2 Cst ℄	356			24	104																					C-15.20	S	RT	5.0	7.5												CB 356 TO CB 357
Sta 38+61, EBCR 2 Cst ℄	357			24	75																					C-15.20	S	RT	7.0	3.5												CB 357 TO OFFSITE PIPE 752
Sheet Total																									1						10											

NOTE:
Existing structure callout stations, offsets and elevations are approximate.

FILL HEIGHT RANGE TABLE (Ft.)

RANGE NO.		1	2	3	4	5	6	7	8	9	10	11	12
FILL	>	1	3	5	8	11	15	20	25	30	40	55	70
HEIGHT (Ft.)	≤	3	5	8	11	15	20	25	30	40	55	70	90

◒ SHOULD FIELD CONDITIONS VARY FROM THE RANGE INDICATED, CONTACT DESIGN FOR RE-EVALUATION OF PIPE DESIGN REQUIREMENTS.

PIPE CORRUGATION			
A	2⅔x½	D	6x2
B	3x1	E	3x1 or 9x2½
C	9x2½		

NOTE:
NRCIPCP may be used only where it is listed as an acceptable alternate. NRCIPCP shall be used only in TRENCH CONDITION. In no case shall NRCIPCP be used in a non-trench or over excavated condition.

	NAME	DATE
DESIGN	RPC	04-05
DRAWN	CPG	04-05
CHECKED	BGS	04-05

PB PARSONS BRINCKERHOFF

ARIZONA DEPARTMENT OF TRANSPORTATION
INTERMODAL TRANSPORTATION DIVISION

NEW PIPE SUMMARY SHEET

PRELIMINARY 95% REVIEW NOT FOR CONSTRUCTION OR RECORDING

ROUTE 202L | LOCATION RED MTN FWY, UNIVERSITY DR - SOUTHERN AVE

DWG NO. G-4.13

TRACS NO. H 5783 01C | 202-B(002)B | ___ OF ___

Wed Mar 30 09:20:48 2005 H:\RedMtn-Univ-Southern\Drng\psum13.dgn

NOTE:
THE ZEROS IN PARENTHESIS (0, 0.0 & 0.00) IN THE HEADING OF SOME OF THE COLUMNS ARE THE RECOMMENDED PRECISION OF THE VALUE TO BE ENTERED IN THE COLUMN.

NOTE:
FOR PIPE CULVERT PLACEMENT SEE STANDARD DRAWING C-13.15

NOTE:
PIPE OPTIONS SELECTED ARE THOSE REQUIRED TO MEET MINIMUM SERVICE LIFE.
SHADED PIPE OPTION FIELDS ARE NOT ALLOWABLE ALTERNATES.

CSP - CORRUGATED STEEL PIPE
CAP - CORRUGATED ALUMINUM PIPE
RCP - REINFORCED CONCRETE PIPE
NRCP - NON-REINFORCED CONCRETE PIPE
NRCIPCP - NON-REINFORCED CAST-IN-PLACE CONCRETE PIPE
CHDPEPP - CORRUGATED HIGH DENSTIY POLYETHYLENE PLASTIC PIPE

F.H.W.A. REGION	STATE	PROJECT NO.	SHEET NO.	TOTAL SHEETS	AS BUILT
9	ARIZ.	202-B(002)B			
		202L MA 027			

Station	Plan Ref No.	Controlling Fill Height Range	Size, Corrugated (In.)	Size, Smooth (In.)	Length (0) (Ft.)	Skew (0) (Degree)	Corrugation	Wall Thickness (0.00)	Zinc	Bit. Coated Zinc	Aluminum	Bit. Coated Aluminum	Corrugation	Wall Thickness (0.00)	Uncoated	Bit. Coated	Class - Non Trench	Class - Trench	Class	Min Wall Thickness (0)	AASHTO M-294 Type C	AASHTO M-294 Type S	C-13.20 & C-13.25	Detail -	Size, (In) Manhole	Standard or Detail	S-Single / D-Double	Location	H (0.0)	L Wing (0.0)	L 18" Slotted Drn (0)	L 24" Slotted Drn (0)	Type	Elev. (0.00)	Inlet Depression Depth (In.)	Inlet Depression L (0.0) (Ft.)	Pipe Exc (0)	Pipe Bkfl (0) C-13.15	Drn Exc (0)	Berm/Dike Emb (0)	REMARKS
Sta 27+23, EBCR 2 Cst ℄	358	1		24	72												III	III	3		X				C-15.81		RT	5.0								78	20			CB 358 TO CB 627
Sta 34+24, EBCR 2 Cst ℄	359	1		24	55												III	III	3		X				C-15.81		RT	5.0								54	16			CB 359 TO CB 355
Sta 12+70, WBCR 1 Cst ℄	400	1		24	102												III	III	3		X				C-15.20	S	LT	5.5	7.5							94	29			CB 400 TO CB 401
Sta 13+75, WBCR 1 Cst ℄	401	1		24	36												III	III	3		X				C-15.20	S	LT	7.5	7.5							38	10			CB 401 TO East Channel; Detail D22
Sta 15+75, WBCR 1 Cst ℄	402	1		24	78												III	III	3		X				C-15.91		RT	4.3		10			1543.63			72	22			CB 402 TO East Channel; Detail D22
Sta 22+62, WBCR 1 Cst ℄	403	3		24	72												II	II	2		X				C-15.20	S	RT	7.2	3.5							94	20			CB 403 TO MH 409
Sta 23+25, WBCR 1 Cst ℄	404	1		24	60												III	III	3		X				C-15.20	D	RT	6.2	3.5							68	17			CB 404 TO CB 403; 3.5' DBL WING
Sta 23+87, WBCR 1 Cst ℄	405	1		24	59												III	III	3		X				C-15.20	S	RT	6.0	3.5							61	17			CB 405 TO MH 404
Sta 33+12, WBCR 1 Cst ℄	406	1		24	37												III	III	3		X				C-15.92		RT	4.1		15			1519.99			35	11			CB 406 TO MH 411; PROTECT IN PLACE DURING CONSTRUCTION
Sta 33+93, WBCR 1 Cst ℄	407	1		24	36												III	III	3		X				C-15.92		RT	4.1		30			1519.73			33	10			CB 407 TO CB 412; 15' Slotted Drain Each Side of Inlet
Sta 34+75, WBCR 1 Cst ℄	408	1		24	40												III	III	3		X				C-15.92		RT	4.1		20			1520.27			39	11			CB 408 TO MH 413
Sta 21+90, WBCR 1 Cst ℄	409	1		24	128												III	III	3		X			30	C-18.10		RT	7.5								140	35			MH 409 TO CB 208
Sta 20+35, WBCR 1 Cst ℄	410	4		24	213												III	III			X				C-15.81		LT	4.5					1535.20			372	63			CB 410 TO CB 209
Sheet Total																								1						75											

NOTE:
Existing structure callout stations, offsets and elevations are approximate.

FILL HEIGHT RANGE TABLE (Ft.)

RANGE NO.		1	2	3	4	5	6	7	8	9	10	11	12
FILL	>	1	3	5	8	11	15	20	25	30	40	55	70
HEIGHT (Ft.)	≤	3	5	8	11	15	20	25	30	40	55	70	90

◒ SHOULD FIELD CONDITIONS VARY FROM THE RANGE INDICATED, CONTACT DESIGN FOR RE-EVALUATION OF PIPE DESIGN REQUIREMENTS.

PIPE CORRUGATION

A	2⅔x½	D	6x2
B	3x1	E	3x1 or 9x2½
C	9x2½		

NOTE:
NRCIPCP may be used only where it is listed as an acceptable alternate. NRCIPCP shall be used only in TRENCH CONDITION. In no case shall NRCIPCP be used in a non-trench or over excavated condition.

	NAME	DATE
DESIGN	RPC	04-05
DRAWN	CPG	04-05
CHECKED	BGS	04-05

PARSONS BRINCKERHOFF

ARIZONA DEPARTMENT OF TRANSPORTATION
INTERMODAL TRANSPORTATION DIVISION

NEW PIPE SUMMARY SHEET

PRELIMINARY 95% REVIEW NOT FOR CONSTRUCTION OR RECORDING

ROUTE 202L
LOCATION RED MTN FWY, UNIVERSITY DR - SOUTHERN AVE

DWG NO. G-4.14

TRACS NO. H 5783 01C
202-B(002)B
___ OF ___

Wed Mar 30 09:20:36 2005
H:\RedMtn-Univ-Southern\Drng\psum14.dgn

NOTE:
THE ZEROS IN PARENTHESIS (0, 0.0 & 0.00) IN THE HEADING OF SOME OF THE COLUMNS ARE THE RECOMMENDED PRECISION OF THE VALUE TO BE ENTERED IN THE COLUMN.

NOTE:
FOR PIPE CULVERT PLACEMENT SEE STANDARD DRAWING C-13.15

NOTE:
PIPE OPTIONS SELECTED ARE THOSE REQUIRED TO MEET MINIMUM SERVICE LIFE.
SHADED PIPE OPTION FIELDS ARE NOT ALLOWABLE ALTERNATES.

CSP - CORRUGATED STEEL PIPE
CAP - CORRUGATED ALUMINUM PIPE
RCP - REINFORCED CONCRETE PIPE
NRCP - NON-REINFORCED CONCRETE PIPE
NRCIPCP - NON-REINFORCED CAST-IN-PLACE CONCRETE PIPE
CHDPEPP - CORRUGATED HIGH DENSTIY POLYETHYLENE PLASTIC PIPE

F.H.W.A. REGION	STATE	PROJECT NO.	SHEET NO.	TOTAL SHEETS	AS BUILT
9	ARIZ.	202-B(002)B			
		202L MA 027			

Station	Plan Ref No.	Controlling Fill Height Range	Size, Corrugated (In.)	Size, Smooth (In.)	Length (0) (Ft.)	Skew (0) (Degree)	Corrugation	Wall Thickness (0.00)	Zinc (In.)	Bit. Coated Zinc (Coating)	Aluminum (In.)	Bit. Coated Aluminum (Coating)	Corrugation	Wall Thickness (0.00)	Uncoated (In.)	Bit. Coated (Coating)	Class - Non Trench (In.)	Class - Trench (In.)	Class (In.)	Min Wall Thickness (0) (In.)	AASHTO M-294 Type C (RCP)	AASHTO M-294 Type S (RCP)	C-13.20 & C-13.25 (NRCP)	Detail - (NRCIPCP)	Size, (In) Manhole (CHDPEPP)	Standard or Detail (End Sec)	S-Single / D-Double (Each)	Location (Ea)	H (0.0) (Catch basin, Manhole, Headwall & Junction Structure)	L Wing (0.0) (Ft.)	L 18" Slotted Drn (0) (Ft.)	L 24" Slotted Drn (0) (Ft.)	Type (Grate)	Elev. (0.00)	Depth (Ft.)	L (0.0) (Ft.)	Inlet Depression (In.)	Pipe Exc (0) (Cubic Yard)	Pipe Bkfl (0) C-13.15 (Cubic Yard)	Drn Exc (0) (Cubic Yard)	Berm/Dike Emb (0) (Cubic Yard)	REMARKS
Sta 33+12, WBCR 1 Cst ℄	411	1		24	81												III	III	3		X			30	C-18.10		LT	5.0					1520.75			78	23			MH 411 TO CB 412
Sta 33+93, WBCR 1 Cst ℄	412	1		24	70												III	III	3		X				C-15.81		LT	5.2					1520.58			72	20			CB 412 TO MH 413
Sta 34+64, WBCR 1 Cst ℄	413	3		24	35												II	II	2		X			30	C-18.10		LT	5.7					1520.70			44	10			MH 413 TO East Channel; Detail D22
Sta 15+50, WBCR 2 Cst ℄	450	1		24	66												III	III	3		X				C-15.92		RT	5.0		10			1514.60			63	19			CB 450 TO CB 451
Sta 16+19, WBCR 2 Cst ℄	451	1		24	68												III	III	3		X				C-15.92		RT	5.0					1514.13			74	19			CB 451 TO East Channel; Detail D22
Sta 21+80, WBCR 2 Cst ℄	452	1		24	41												III	III			X				C-15.20	S	LT	5.5	11.5							34	12			CB 452 TO East Channel; Detail D22
Sta 31+62, WBCR 2 Cst ℄	453	1		24	132												III	III	3		X				C-15.20	S	LT	7.0	19.5							154	38			CB 453 TO CB 233
Sta 32+50, WBCR 2 Cst ℄	454	1		24	85												III	III	3		X				C-15.20	D	LT	6.2	3.5							95	24			CB 454 TO CB 453; 3.5' DBL WING
Sta 33+37, WBCR 2 Cst ℄	455	1		24	84												III	III	3		X				C-15.20	S	LT	5.8	19.5							85	24			CB 455 TO CB 454
Sta 38+50, WBCR 2 Cst ℄	456	1		24	112												III	III	3		X				C-15.92		RT	5.0					1491.47			121	32			CB 456 TO CB 238
Sheet Total																								2						10											

NOTE:
Existing structure callout stations, offsets and elevations are approximate.

FILL HEIGHT RANGE TABLE (Ft.)

RANGE NO.		1	2	3	4	5	6	7	8	9	10	11	12
FILL	>	1	3	5	8	11	15	20	25	30	40	55	70
HEIGHT (Ft.)	≤	3	5	8	11	15	20	25	30	40	55	70	90

SHOULD FIELD CONDITIONS VARY FROM THE RANGE INDICATED, CONTACT DESIGN FOR RE-EVALUATION OF PIPE DESIGN REQUIREMENTS.

PIPE CORRUGATION			
A	2⅔x½	D	6x2
B	3x1	E	3x1 or 9x2½
C	9x2½		

NOTE:
NRCIPCP may be used only where it is listed as an acceptable alternate. NRCIPCP shall be used only in TRENCH CONDITION. In no case shall NRCIPCP be used in a non-trench or over excavated condition.

	NAME	DATE
DESIGN	RPC	04-05
DRAWN	CPG	04-05
CHECKED	BGS	04-05

PARSONS BRINCKERHOFF

ARIZONA DEPARTMENT OF TRANSPORTATION
INTERMODAL TRANSPORTATION DIVISION

NEW PIPE SUMMARY SHEET

PRELIMINARY 95% REVIEW NOT FOR CONSTRUCTION OR RECORDING

ROUTE 202L | LOCATION RED MTN FWY, UNIVERSITY DR - SOUTHERN AVE

DWG NO. G-4.15

TRACS NO. H 5783 01C | 202-B(002)B | ___ OF ___

Wed Mar 30 09:20:16 2005 H:\RedMtn-Univ-Southern\Drng\psum15.dgn

NOTE:
THE ZEROS IN PARENTHESIS (0, 0.0 & 0.00) IN THE HEADING OF SOME OF THE COLUMNS ARE THE RECOMMENDED PRECISION OF THE VALUE TO BE ENTERED IN THE COLUMN.

NOTE:
FOR PIPE CULVERT PLACEMENT SEE STANDARD DRAWING C-13.15

NOTE:
PIPE OPTIONS SELECTED ARE THOSE REQUIRED TO MEET MINIMUM SERVICE LIFE.
SHADED PIPE OPTION FIELDS ARE NOT ALLOWABLE ALTERNATES.

CSP - CORRUGATED STEEL PIPE
CAP - CORRUGATED ALUMINUM PIPE
RCP - REINFORCED CONCRETE PIPE
NRCP - NON-REINFORCED CONCRETE PIPE
NRCIPCP - NON-REINFORCED CAST-IN-PLACE CONCRETE PIPE
CHDPEPP - CORRUGATED HIGH DENSTIY POLYETHYLENE PLASTIC PIPE

F.H.W.A. REGION	STATE	PROJECT NO.	SHEET NO.	TOTAL SHEETS	AS BUILT
9	ARIZ.	202-B(002)B			
		202L MA 027			

Station	Plan Ref No.	Controlling Fill Height Range	Size, Corrugated (In.)	Size, Smooth (In.)	Length (0) (Ft.)	Skew (0) (Degree)	CSP Corrugation	CSP Wall Thickness (0.00) (In.)	CSP Coating: Zinc	CSP Coating: Bit. Coated Zinc	CSP Coating: Aluminum	CAP Coating: Bit. Coated Aluminum	CAP Corrugation	CAP Wall Thickness (0.00) (In.)	RCP Uncoated	RCP Bit. Coated	NRCP Class - Non Trench	NRCIPCP Class - Trench	CHDPEPP Class	Min Wall Thickness (0) (In.)	AASHTO M-294 Type C	AASHTO M-294 Type S	C-13.20 & C-13.25	Detail - End Sec	Size, (In) Manhole	Standard or Detail	S-Single / D-Double	Location	H (0.0)	L Wing (0.0)	L 18" Slotted Drn (0)	L 24" Slotted Drn (0)	Type	Elev. (0.00)	Grate Depth (Ft.)	Inlet Depression L (0.0) (Ft.)	Pipe Exc (0)	Pipe Bkfl (0) C-13.15	Drn Exc (0)	Berm/Dike Emb (0)	REMARKS
Sta 20+55, Univ-C Cst ℄	500	2		24	12												II	II	I			X				C-15.91		RT	6.0		35			1515.36			15	3			CB 500 TO CB 210
Sta 21+06, Univ-D Cst ℄	550	1		24	9												III	III	3			X				C-15.91		RT	4.7		5			1507.11			10	3			CB 550 TO MH 105
Sta 16+55, Broadway-A Cst ℄	600	1		24	62												III	III	3			X				C-15.91		LT	5.5		5			1478.61			65	18			CB 600 TO CB 601
Sta 15+90, Broadway-A Cst ℄	601	1		24	62												III	III	3			X				C-15.91		LT	6.0		10			1478.46			69	18			CB 601 TO CB 602; 5' Slotted Drain on Each Side of Inlet
Sta 15+25, Broadway-A Cst ℄	602	5		24	212												IV	IV								C-15.91		LT	7.0		20			1478.67			443	63			CB 602 TO MH 114
Sta 21+15, Broadway-B Cst ℄	625	1		24	93												III	III	3			X				C-15.91		LT	5.0					1484.10			107	26			CB 625 TO MH 116
Sta 23+75, Broadway-B Cst ℄	626	1		24	85												III	III	3			X				C-15.91		LT	5.2		5			1483.19			88	24			CB 626 TO CB 354
Sta 18+30, Broadway-B Cst ℄	627	1		24	93												III	III	3			X				C-15.81		RT	5.0					1487.24			109	26			CB 627 TO MH 115
Sta 21+10, Broadway-B Cst ℄	628	1		24	29												III	III	3			X				C-15.81		RT	4.5								28	8			CB 628 TO CB 625
Sheet Total																															80										

NOTE:
Existing structure callout stations, offsets and elevations are approximate.

FILL HEIGHT RANGE TABLE (Ft.)

RANGE NO.		1	2	3	4	5	6	7	8	9	10	11	12
FILL	>	1	3	5	8	11	15	20	25	30	40	55	70
HEIGHT (Ft.)	≤	3	5	8	11	15	20	25	30	40	55	70	90

SHOULD FIELD CONDITIONS VARY FROM THE RANGE INDICATED, CONTACT DESIGN FOR RE-EVALUATION OF PIPE DESIGN REQUIREMENTS.

PIPE CORRUGATION

A	2⅔x½	D	6x2
B	3x1	E	3x1 or 9x2½
C	9x2½		

NOTE:
NRCIPCP may be used only where it is listed as an acceptable alternate. NRCIPCP shall be used only in TRENCH CONDITION. In no case shall NRCIPCP be used in a non-trench or over excavated condition.

	NAME	DATE
DESIGN	RPC	04-05
DRAWN	CPG	04-05
CHECKED	BGS	04-05

PB PARSONS BRINCKERHOFF

ARIZONA DEPARTMENT OF TRANSPORTATION
INTERMODAL TRANSPORTATION DIVISION

NEW PIPE SUMMARY SHEET

PRELIMINARY 95% REVIEW NOT FOR CONSTRUCTION OR RECORDING

ROUTE 202L | LOCATION RED MTN FWY, UNIVERSITY DR - SOUTHERN AVE

DWG NO. G-4.16

TRACS NO. H 5783 01C | 202-B(002)B | ___ OF ___

Wed Mar 30 09:20:05 2005 H:\RedMtn-Univ-Southern\Drng\psum16.dgn

NOTE:
THE ZEROS IN PARENTHESIS (0, 0.0 & 0.00) IN THE HEADING OF SOME OF THE COLUMNS ARE THE RECOMMENDED PRECISION OF THE VALUE TO BE ENTERED IN THE COLUMN.

NOTE:
FOR PIPE CULVERT PLACEMENT SEE STANDARD DRAWING C-13.15

NOTE:
PIPE OPTIONS SELECTED ARE THOSE REQUIRED TO MEET MINIMUM SERVICE LIFE.
SHADED PIPE OPTION FIELDS ARE NOT ALLOWABLE ALTERNATES.

CSP - CORRUGATED STEEL PIPE
CAP - CORRUGATED ALUMINUM PIPE
RCP - REINFORCED CONCRETE PIPE
NRCP - NON-REINFORCED CONCRETE PIPE
NRCIPCP - NON-REINFORCED CAST-IN-PLACE CONCRETE PIPE
CHDPEPP - CORRUGATED HIGH DENSTIY POLYETHYLENE PLASTIC PIPE

F.H.W.A. REGION	STATE	PROJECT NO.	SHEET NO.	TOTAL SHEETS	AS BUILT
9	ARIZ.	202-B(002)B			
		202L MA 027			

Station	Plan Ref No.	● Controlling Fill Height Range	Size, Corrugated (In.)	Size, Smooth (In.)	Length (0) (Ft.)	Skew (0) (Degree)	◪ Corrugation (In.)	Wall Thickness (0.00)	Zinc (Coating)	Bit. Coated Zinc (Coating)	Aluminum (Coating)	Bit. Coated Aluminum (Coating)	◪ Corrugation (In.)	Wall Thickness (0.00)	Uncoated (CAP)	Bit. Coated (CAP)	Class - Non Trench (CAP)	Class - Trench (CAP)	Class (CAP)	Min Wall Thickness (0) (CAP)	AASHTO M-294 Type C (RCP)	AASHTO M-294 Type S (RCP)	C-13.20 & C-13.25 (NRCP)	Detail - (NRCIPCP)	Size, (In) Manhole (CHDPEPP)	Standard or Detail (CHDPEPP)	End Sec (Each)	S-Single / D-Double (Catch basin, Manhole, Headwall & Junction Structure)	Location (Ea)	H (0.0) (Ft.)	L Wing (0.0) (Ft.)	L 18" Slotted Drn (0) (Ft.)	L 24" Slotted Drn (0) (Ft.)	Type (Grate)	Elev. (0.00) (Ft.)	Depth (Ft.)	L (0.0) (Ft.)	Inlet Depression Pipe Exc (0) (Cubic Yard)	Pipe Bkfl (0) C-13.15 (Cubic Yard)	Drn Exc (0) (Cubic Yard)	Berm/Dike Emb (0) (Cubic Yard)	REMARKS
Sta 17+60, Broadway-C Cst ℄	650	1		24	77											III	III	3			X				C-15.92		RT	5.5		25				1476.61			80	22			CB 650 TO CB 651
Sta 18+40, Broadway-C Cst ℄	651	1		24	61											III	III	3			X				C-15.92		RT	6.0		25				1474.48			66	17			CB 651 TO CB 247
Sta 22+91, Broadway-C Cst ℄	652	1		24	11											III	III	3			X				C-15.91		RT	5.0		10				1464.33			11	3			CB 652 TO MH 250
Sta 18+40, Broadway-C Cst ℄	653	1		24	43											III	III	3			X				C-15.81		LT	4.0						1475.00			42	12			CB 653 TO CB 651
Sta 22+90, Broadway-C Cst ℄	654	1		24	41											III	III	3			X				C-15.81		LT	5.0						1465.64			39	12			CB 654 TO CB 652
Sta 15+40, Broadway-D Cst ℄	675	1		24	90											III	III	3			X				C-15.91		RT	5.0						1476.63			105	26			CB 675 TO PIPE 120
Sta 19+70, Broadway-D Cst ℄	676	4		24	11											III	III				X				C-15.91		RT	5.0						1464.24			17	3			CB 676 TO PIPE 123
Sheet Total																															60										

NOTE:
Existing structure callout stations, offsets and elevations are approximate.

FILL HEIGHT RANGE TABLE (Ft.)

RANGE NO.		1	2	3	4	5	6	7	8	9	10	11	12
FILL	>	1	3	5	8	11	15	20	25	30	40	55	70
HEIGHT (Ft.)	≤	3	5	8	11	15	20	25	30	40	55	70	90

● SHOULD FIELD CONDITIONS VARY FROM THE RANGE INDICATED, CONTACT DESIGN FOR RE-EVALUATION OF PIPE DESIGN REQUIREMENTS.

◪ PIPE CORRUGATION

A	2⅔x½	D	6x2
B	3x1	E	3x1 or 9x2½
C	9x2½		

NOTE:
NRCIPCP may be used only where it is listed as an acceptable alternate. NRCIPCP shall be used only in TRENCH CONDITION. In no case shall NRCIPCP be used in a non-trench or over excavated condition.

	NAME	DATE
DESIGN	RPC	04-05
DRAWN	CPG	04-05
CHECKED	BGS	04-05

PB PARSONS BRINCKERHOFF

ARIZONA DEPARTMENT OF TRANSPORTATION
INTERMODAL TRANSPORTATION DIVISION

NEW PIPE SUMMARY SHEET

PRELIMINARY 95% REVIEW
NOT FOR CONSTRUCTION OR RECORDING

ROUTE 202L
LOCATION RED MTN FWY, UNIVERSITY DR - SOUTHERN AVE

DWG NO. G-4.17

TRACS NO. H 5783 01C
202-B(002)B
___ OF ___

Wed Mar 30 09:19:53 2005
H:\RedMtn-Univ-Southern\Drng\psum17.dgn

F.H.W.A. REGION	STATE	PROJECT NO.	SHEET NO.	TOTAL SHEETS	AS BUILT
9	ARIZ.	202-B(002)B			

202L MA 027

NOTE:
THE ZEROS IN PARENTHESIS (0, 0.0 & 0.00) IN THE HEADING OF SOME OF THE COLUMNS ARE THE RECOMMENDED PRECISION OF THE VALUE TO BE ENTERED IN THE COLUMN.

NOTE:
FOR PIPE CULVERT PLACEMENT SEE STANDARD DRAWING C-13.15

NOTE:
PIPE OPTIONS SELECTED ARE THOSE REQUIRED TO MEET MINIMUM SERVICE LIFE.
SHADED PIPE OPTION FIELDS ARE NOT ALLOWABLE ALTERNATES.

CSP - CORRUGATED STEEL PIPE
CAP - CORRUGATED ALUMINUM PIPE
RCP - REINFORCED CONCRETE PIPE
NRCP - NON-REINFORCED CONCRETE PIPE
NRCIPCP - NON-REINFORCED CAST-IN-PLACE CONCRETE PIPE
CHDPEPP - CORRUGATED HIGH DENSTIY POLYETHYLENE PLASTIC PIPE

DESCRIPTION							CSP						CAP				RCP		NRCP	NRCIPCP	CHDPEPP		END TREATMENT														QUANTITIES				
Station	Plan Ref No.	Controlling Fill Height Range	Size, Corrugated (In.)	Size, Smooth (In.)	Length (0) (Ft.)	Skew (0) (Degree)	Corrugation	Wall Thickness (0.00) (In.)	Zinc	Bit. Coated Zinc	Aluminum	Bit. Coated Aluminum	Corrugation	Wall Thickness (0.00) (In.)	Uncoated	Bit. Coated	Class - Non Trench	Class - Trench	Class	Min Wall Thickness (0) (In.)	AASHTO M-294 Type C	AASHTO M-294 Type S	End Sec C-13.20 & C-13.25 (Each)	Detail -	Size, (In) Manhole	Standard or Detail	S-Single / D-Double (Ea)	Location	H (0.0) (Ft.)	L Wing (0.0) (Ft.)	L 18" Slotted Drn (0) (Ft.)	L 24" Slotted Drn (0) (Ft.)	Grate Type	Grate Elev. (0.00) (Ft.)	Inlet Depression Depth (In.)	Inlet Depression L (0.0) (Ft.)	Pipe Exc (0) (Cubic Yard)	Pipe Bkfl (0) C-13.15 (Cubic Yard)	Drn Exc (0) (Cubic Yard)	Berm/Dike Emb (0) (Cubic Yard)	REMARKS
Sta 23+00, Broadway-D Cst ℄	677	1		24	9												III	III	3			X				C-15.91		RT	5.0					1457.54			9	3			CB 677 TO MH 154
Sta 23+70, Broadway-D Cst ℄	678	1		24	87												III	III	3			X				C-15.91		RT	5.0					1457.10			83	25			CB 678 TO CB 679
Sta 24+60, Broadway-D Cst ℄	679	1		24	13												III	III	3			X				C-15.91		RT	5.3					1456.94			13	4			CB 679 TO PIPE 154
Sta 21+55, Broadway-D Cst ℄	680	5		24	90												IV	IV								C-15.80		RT	6.0					1482.50			216	27			CB680 TO PIPE123; Type A Dike C-03.10
Sta 23+90, University Cst ℄	700	1		24	127												III	III	3			X				C-15.20	S	RT	5.0	7.5					1	7.5	138	36			CB 700 TO CB 701
Sta 23+90, University Cst ℄	701	1		24	12												III	III	3			X				C-15.20	S	LT	6.0	11.5					1	11.5	15	3			CB 701 TO MH 712
Sta 21+51, University Cst ℄	702	1		24	128												III	III	3			X				C-15.20	S	RT	5.2	11.5					1	11.5	134	36			CB 702 TO CB 703
Sta 21+63, University Cst ℄	703	5		24	67												IV	IV								C-15.20	S	LT	15.2	11.5					1	11.5	121	20			CB 703 TO MH 320
Sta 14+90, University Cst ℄	704	1		24	63												III	III	3			X				MAG		RT	4.7								53	18			CB 704 TO CB 706; MAG DET 532, V=H
Sheet Total																																									

NOTE:
Existing structure callout stations, offsets and elevations are approximate.

FILL HEIGHT RANGE TABLE (Ft.)													
RANGE NO.		1	2	3	4	5	6	7	8	9	10	11	12
FILL	>	1	3	5	8	11	15	20	25	30	40	55	70
HEIGHT (Ft.)	≤	3	5	8	11	15	20	25	30	40	55	70	90

SHOULD FIELD CONDITIONS VARY FROM THE RANGE INDICATED, CONTACT DESIGN FOR RE-EVALUATION OF PIPE DESIGN REQUIREMENTS.

PIPE CORRUGATION			
A	$2\frac{2}{3} \times \frac{1}{2}$	D	6x2
B	3x1	E	3x1 or $9 \times 2\frac{1}{2}$
C	$9 \times 2\frac{1}{2}$		

NOTE:
NRCIPCP may be used only where it is listed as an acceptable alternate. NRCIPCP shall be used only in TRENCH CONDITION. In no case shall NRCIPCP be used in a non-trench or over excavated condition.

	NAME	DATE
DESIGN	RPC	04-05
DRAWN	CPG	04-05
CHECKED	BGS	04-05

PARSONS BRINCKERHOFF

ARIZONA DEPARTMENT OF TRANSPORTATION
INTERMODAL TRANSPORTATION DIVISION

NEW PIPE SUMMARY SHEET

PRELIMINARY 95% REVIEW NOT FOR CONSTRUCTION OR RECORDING

ROUTE 202L
LOCATION RED MTN FWY, UNIVERSITY DR - SOUTHERN AVE
DWG NO. G-4.18

TRACS NO. H 5783 01C
202-B(002)B
____ OF ____

Wed Mar 30 09:19:42 2005
H:\RedMtn-Univ-Southern\Drng\psum18.dgn

DATE- LOCATION- REVISIONS- FINISHED PLANS- SURVEY NO.

NOTE:
THE ZEROS IN PARENTHESIS (0, 0.0 & 0.00) IN THE HEADING OF SOME OF THE COLUMNS ARE THE RECOMMENDED PRECISION OF THE VALUE TO BE ENTERED IN THE COLUMN.

NOTE:
FOR PIPE CULVERT PLACEMENT SEE STANDARD DRAWING C-13.15

NOTE:
PIPE OPTIONS SELECTED ARE THOSE REQUIRED TO MEET MINIMUM SERVICE LIFE.
SHADED PIPE OPTION FIELDS ARE NOT ALLOWABLE ALTERNATES.

CSP - CORRUGATED STEEL PIPE
CAP - CORRUGATED ALUMINUM PIPE
RCP - REINFORCED CONCRETE PIPE
NRCP - NON-REINFORCED CONCRETE PIPE
NRCIPCP - NON-REINFORCED CAST-IN-PLACE CONCRETE PIPE
CHDPEPP - CORRUGATED HIGH DENSTIY POLYETHYLENE PLASTIC PIPE

F.H.W.A. REGION	STATE	PROJECT NO.	SHEET NO.	TOTAL SHEETS	AS BUILT
9	ARIZ.	202-B(002)B			
		202L MA 027			

Station	Plan Ref No.	◉ Controlling Fill Height Range	Size, Corrugated (In.)	Size, Smooth (In.)	Length (0) (Ft.)	Skew (0) (Degree)	◪ Corrugation	Wall Thickness (0.00)	Zinc (Coating)	Bit. Coated Zinc (Coating)	Aluminum (Coating)	Bit. Coated Aluminum (Coating)	◪ Corrugation	Wall Thickness (0.00)	Uncoated (CSP)	Bit. Coated (CSP)	Class - Non Trench (CAP)	Class - Trench (CAP)	Class (RCP)	Min Wall Thickness (0) (RCP)	AASHTO M-294 Type C (NRCP)	AASHTO M-294 Type S (NRCP)	C-13.20 & C-13.25 (NRCIPCP)	Detail - (NRCIPCP)	Size, (In) Manhole (CHDPEPP)	Standard or Detail (End Sec)	S-Single / D-Double (Each)	Location (Ea)	H (0.0) (Catch basin, Manhole, Headwall & Junction Structure)	L Wing (0.0) (Ft.)	L 18" Slotted Drn (0) (Ft.)	L 24" Slotted Drn (0) (Ft.)	Type (Grate)	Elev. (0.00) (Grate)	Depth (Ft.)	L (0.0) (Ft.)	Inlet Depression Pipe Exc (0) (Cubic Yard)	Pipe Bkfl (0) C-13.15 (Cubic Yard)	Drn Exc (0) (Cubic Yard)	Berm/Dike Emb (0) (Cubic Yard)	REMARKS
Sta 14+90, University Cst ℄	705	2		24	10												II	II	I			X				MAG		LT	5.5								11	3			CB 705 TO PIPE 711; MAG 532, V=H
Sta 14+20, University Cst ℄	706	1		24	118												III	III	3			X				MAG		RT	4.9								116	34			CB 706 TO CB 707; MAG DET 532, V=H
Sta 14+10, University Cst ℄	707	1		24	11												III	III	3			X				MAG		LT	5.6								12	3			CB 707 TO PIPE 711; MAG DET 532, V=H
Sta 13+75, University Cst ℄	708	1		24	38												III	III	3			X				MAG		RT	4.6								32	11			MH 708 TO CB 706; MAG DET 532, V=H
Sta 13+50, University Cst ℄	709	1		24	12												III	III	3			X				MAG		LT	5.1								12	3			CB 709 TO MH 711; MAG DET 532, V=H
Sta 14+19, University Cst ℄	710	1		24	10												III	III	3			X				MAG		RT	4.6						1551.50		9	3			CB 710 TO CB 706; MAG DET 535, V=H
Sta 13+50, University Cst ℄	711	1		24	361												III	III	3			X		30		MAG		LT	5.3						1552.24		421	103			MH 711 TO RCBC; MAG 520, 522; Detail D23
Sta 23+90, University Cst ℄	712	5		24	248												IV	IV						30	C-18.10			LT	6.9						1548.15		404	73			MH 712 TO MH 320
Sheet Total																								2														1017	233			

NOTE:
Existing structure callout stations, offsets and elevations are approximate.

FILL HEIGHT RANGE TABLE (Ft.)

RANGE NO.		1	2	3	4	5	6	7	8	9	10	11	12
FILL	>	1	3	5	8	11	15	20	25	30	40	55	70
HEIGHT (Ft.)	≤	3	5	8	11	15	20	25	30	40	55	70	90

◉ SHOULD FIELD CONDITIONS VARY FROM THE RANGE INDICATED, CONTACT DESIGN FOR RE-EVALUATION OF PIPE DESIGN REQUIREMENTS.

◪ PIPE CORRUGATION

A	2⅔x½	D	6x2
B	3x1	E	3x1 or 9x2½
C	9x2½		

NOTE:
NRCIPCP may be used only where it is listed as an acceptable alternate. NRCIPCP shall be used only in TRENCH CONDITION. In no case shall NRCIPCP be used in a non-trench or over excavated condition.

	NAME	DATE
DESIGN	RPC	04-05
DRAWN	CPG	04-05
CHECKED	BGS	04-05

PB PARSONS BRINCKERHOFF

ARIZONA DEPARTMENT OF TRANSPORTATION
INTERMODAL TRANSPORTATION DIVISION

NEW PIPE SUMMARY SHEET

PRELIMINARY 95% REVIEW
NOT FOR CONSTRUCTION OR RECORDING

ROUTE 202L
LOCATION RED MTN FWY, UNIVERSITY DR - SOUTHERN AVE

DWG NO. G-4.19

TRACS NO. H 5783 01C
202-B(002)B
___ OF ___

Wed Mar 30 09:19:32 2005
H:\RedMtn-Univ-Southern\Drng\psum19.dgn

NOTE:
THE ZEROS IN PARENTHESIS (0, 0.0 & 0.00) IN THE HEADING OF SOME OF THE COLUMNS ARE THE RECOMMENDED PRECISION OF THE VALUE TO BE ENTERED IN THE COLUMN.

NOTE:
FOR PIPE CULVERT PLACEMENT SEE STANDARD DRAWING C-13.15

NOTE:
PIPE OPTIONS SELECTED ARE THOSE REQUIRED TO MEET MINIMUM SERVICE LIFE.
SHADED PIPE OPTION FIELDS ARE NOT ALLOWABLE ALTERNATES.

CSP - CORRUGATED STEEL PIPE
CAP - CORRUGATED ALUMINUM PIPE
RCP - REINFORCED CONCRETE PIPE
NRCP - NON-REINFORCED CONCRETE PIPE
NRCIPCP - NON-REINFORCED CAST-IN-PLACE CONCRETE PIPE
CHDPEPP - CORRUGATED HIGH DENSTIY POLYETHYLENE PLASTIC PIPE

F.H.W.A. REGION	STATE	PROJECT NO.	SHEET NO.	TOTAL SHEETS	AS BUILT
9	ARIZ.	202-B(002)B			
		202L MA 027			

Station	Plan Ref No.	Controlling Fill Height Range	Size, Corrugated (In.)	Size, Smooth (In.)	Length (0) (Ft.)	Skew (0) (Degree)	Corrugation	Wall Thickness (0.00)	Zinc Coating	Bit. Coated Zinc Coating	Aluminum Coating	Bit. Coated Aluminum Coating	Corrugation	Wall Thickness (0.00)	Uncoated	Bit. Coated	Class - Non Trench (In.)	Class - Trench (In.)	Class	Min Wall Thickness (0) (In.)	AASHTO M-294 Type C	AASHTO M-294 Type S	C-13.20 & C-13.25	Detail -	Size, (In) Manhole	Standard or Detail	End Sec (Each)	S-Single / D-Double	Location	H (0.0)	L Wing (0.0)	L 18" Slotted Drn (0)	L 24" Slotted Drn (0)	Type	Elev. (0.00)	Grate Depth (Ft.)	Grate L (0.0) (Ft.)	Inlet Depression Pipe Exc (0) (In.)	Inlet Depression Pipe Bk-fl (0) C-13.15 (Ft.)	Drn Exc (0)	Berm/Dike Emb (0)	REMARKS
Sta 24+27, Apache Trail Cst ℄	726	1		24	12												III	III	3			X				MAG		RT	5.0									11	3			CB 726 TO MH 728; MAG DET 532, V=H
Sta 24+27, Apache Trail Cst ℄	727	1		24	137												III	III	3			X				C-15.20	S	LT	4.5	3.5						1		126	39			CB 727 TO CB 726
Sta 24+27, Apache Trail Cst ℄	728			EXST																					30	MAG		RT	5.0													MH ON EXST SD; MAG 520, 522
Sta 22+51, Apache Trail Cst ℄	729			30	17																					B-11.11		RT													HEADWALL TO MH 730; PIPE WITH BARRIER GATE C-13.75
Sta 22+73, Apache Trail Cst ℄	730			EXST																					30	C-18.10		RT	5.7													MH 730 ON EXST SD PIPE
Sta 21+53, Apache Trail Cst ℄	731	1		24	132												III	III	3			X				C-15.20	S	RT	5.0	11.5						1		139	38			CB 731 TO CB 732
Sta 22+15, Apache Trail Cst ℄	732	5		24	18												IV	IV								C-15.20	S	LT	6.0	11.5						1		39	5			CB 732 TO MH 109
Sta 16+65, Apache Trail Cst ℄	733	1		24	23												III	III	3			X				C-15.20	S	RT	5.5	19.5						1		25	7			CB 733 TO RCBC; Detail D23
Sta 17+10, Apache Trail Cst ℄	734	3		24	10												II	II	2			X				C-15.80		LT	7.5						1522.00			15	3			CB 734 TO RCBC; Detail D23
Sta 17+25, Apache Trail Cst ℄	735	3		24	13												II	II	2			X				C-15.20	S	LT	7.5	11.5						1		19	4			CB 735 TO RCBC; Detail D23
Sta 22+15, Apache Trail Cst ℄	736	4		24	64												III	III				X			30	C-18.10		LT	11.4									117	18			MH 736 TO MH 109
Sheet Total																									3																		

NOTE:
Existing structure callout stations, offsets and elevations are approximate.

FILL HEIGHT RANGE TABLE (Ft.)

RANGE NO.		1	2	3	4	5	6	7	8	9	10	11	12
FILL	>	1	3	5	8	11	15	20	25	30	40	55	70
HEIGHT (Ft.)	≤	3	5	8	11	15	20	25	30	40	55	70	90

◒ SHOULD FIELD CONDITIONS VARY FROM THE RANGE INDICATED, CONTACT DESIGN FOR RE-EVALUATION OF PIPE DESIGN REQUIREMENTS.

◪ PIPE CORRUGATION			
A	2⅔x½	D	6x2
B	3x1	E	3x1 or 9x2½
C	9x2½		

NOTE:
NRCIPCP may be used only where it is listed as an acceptable alternate. NRCIPCP shall be used only in TRENCH CONDITION. In no case shall NRCIPCP be used in a non-trench or over excavated condition.

	NAME	DATE
DESIGN	RPC	04-05
DRAWN	CPG	04-05
CHECKED	BGS	04-05

PARSONS BRINCKERHOFF

ARIZONA DEPARTMENT OF TRANSPORTATION
INTERMODAL TRANSPORTATION DIVISION

NEW PIPE SUMMARY SHEET

PRELIMINARY 95% REVIEW
NOT FOR CONSTRUCTION OR RECORDING

ROUTE 202L
LOCATION RED MTN FWY, UNIVERSITY DR - SOUTHERN AVE

DWG NO. G-4.20

TRACS NO. H 5783 01C
202-B(002)B
___ OF ___

Wed Mar 30 09:19:18 2005
H:\RedMtn-Univ-Southern\Drng\psum20.dgn

NOTE:
THE ZEROS IN PARENTHESIS (0, 0.0 & 0.00) IN THE HEADING OF SOME OF THE COLUMNS ARE THE RECOMMENDED PRECISION OF THE VALUE TO BE ENTERED IN THE COLUMN.

NOTE:
FOR PIPE CULVERT PLACEMENT SEE STANDARD DRAWING C-13.15

NOTE:
PIPE OPTIONS SELECTED ARE THOSE REQUIRED TO MEET MINIMUM SERVICE LIFE.
SHADED PIPE OPTION FIELDS ARE NOT ALLOWABLE ALTERNATES.

NRCP - NRCIPCP - CHDPEPP

CSP - CORRUGATED STEEL PIPE
CAP - CORRUGATED ALUMINUM PIPE
RCP - REINFORCED CONCRETE PIPE
NRCP - NON-REINFORCED CONCRETE PIPE
NRCIPCP - NON-REINFORCED CAST-IN-PLACE CONCRETE PIPE
CHDPEPP - CORRUGATED HIGH DENSTIY POLYETHYLENE PLASTIC PIPE

F.H.W.A. REGION	STATE	PROJECT NO.	SHEET NO.	TOTAL SHEETS	AS BUILT
9	ARIZ.	202-B(002)B			
		202L MA 027			

DESCRIPTION							CSP										CAP			RCP	NRCP	NRCIPCP	CHDPEPP	END TREATMENT																QUANTITIES	
				In.	In.	Ft. / Degree	In.	Coating									In.						In.	Each																	Cubic Yard	
																								End Sec	Catch basin, Manhole, Headwall & Junction Structure																	
																									Ea				Ft.			Grate	Ft.									
																																		Inlet Depression								
																																			In.	Ft.						
Station	Plan Ref No.	⬡ Controlling Fill Height Range	Size, Corrugated	Size, Smooth	Length (0)	Skew (0)	◪ Corrugation	Wall Thickness (0.00)	Zinc	Blt. Coated Zinc	Aluminum	Blt. Coated Aluminum	◪ Corrugation	Wall Thickness (0.00)	Uncoated	Blt. Coated	Class - Non Trench	Class - Trench	Class	Min Wall Thickness (0)	AASHTO M-294 Type C	AASHTO M-294 Type S	C-13.20 & C-13.25 Detail -	Size, (in) Manhole	Standard or Detail	S-Single / D-Double	Location	H (0.0)	L Wing (0.0)	L 18" Slotted Drn (0)	L 24" Slotted Drn (0)	Type	Elev. (0.00)	Depth	L (0.0)	Pipe Exc (0)	Pipe Bkfl (0)	Drn Exc (0)	Berm/Dike Emb (0)	REMARKS
Sta 200+43.26 W. Cst ℄	752	1		60	624											II	II		6						D43											1768	505			Drop Structure to
to Sta 206+67.26																																									JCT 753
Sta 206+72.54 W. Cst ℄	753	2		66	158											II	II		6.5						D42											196	141			JCT 753 to
to Sta 208+29.80																																									MH 754
Sta 208+29.80 W. Cst ℄	754	2		66	372											II	II		6.5					24	C-18.10			8.8				1486.56			990	332			MH 754 to
to Sta 212+01.86																																									MH 755
Sta 212+01.86 W. Cst ℄	755	1		66	206											II	II		6.5					24	C-18.10			7.4				1482.58			603	184			MH 755 to
to Sta 214+21.90																									D41																JCT 756
Sta 9+68.71, 46.2' Rt BDWY	757	1		24	10											III	III		3			X			C-15.80		Rt	4.0				1496.45			10	3			CB 757 to
to Sta 9+68.71, 56.8' Rt																																									CBC
Sta 10+28.89, 92.2' Rt BDWY	758	2		24	20											II	II		1			X			C-15.20	S	Rt	5.0	3.5			1498.61	1	13.0	20	6			CB 758 to
to Sta 10+32.40, 72.2' Rt																																									CBC
Sta 10+85.11, 54.1' Rt BDWY	759	1		24	4											III	III		3			X			C-15.20	D	Rt	5.0	19.5			1495.30	1	21.0	4	1			CB 759 to
to Sta 10+85.00, 45.6' Rt																																									CBC
Sta 12+75.00, 47.73' Lt BDWY	760	1		24	102											III	III		3			X			C-15.20	D	Lt	4.3	19.5			1494.36	1	49.0	83	29			CB760 to
to Sta 12+75.00, 52.1' Rt																																									CBC
Sta 17+02.50, 70.5' Rt BDWY	761	3		24	26											II	II		2			X			C-15.20	S	Rt	5.0	19.5			1491.90	1	21.0	26	7			CB 761 to
to Sta 17+29.10, 70.6' Rt																																									CBC
Sheet Total																								2												3700	1208			

FILL HEIGHT RANGE TABLE (Ft.)													
RANGE NO.		1	2	3	4	5	6	7	8	9	10	11	12
FILL	>	1	3	5	8	11	15	20	25	30	40	55	70
HEIGHT (Ft.)	≤	3	5	8	11	15	20	25	30	40	55	70	90

⬡ SHOULD FIELD CONDITIONS VARY FROM THE RANGE INDICATED, CONTACT DESIGN FOR RE-EVALUATION OF PIPE DESIGN REQUIREMENTS.

◪ PIPE CORRUGATION			
A	2⅔x½	D	6x2
B	3x1	E	3x1 or 9x2½
C	9x2½		

	NAME	DATE
DESIGN	JP/ML	04/05
DRAWN	MRT	04/05
CHECKED	JH	04/05

J2 engineering and environmental design
8222 south 48th street, suite 135
phoenix, arizona 85044
phone: 602.438.2222
www.j2design.us

ARIZONA DEPARTMENT OF TRANSPORTATION
INTERMODAL TRANSPORTATION DIVISION

NEW PIPE SUMMARY SHEET

PRELIMINARY
95%
REVIEW
NOT FOR CONSTRUCTION OR RECORDING

ROUTE: 202L
LOCATION: RED MTN FWY, UNIVERSITY DR - SOUTHERN AVE

DWG NO. G-4.21

TRACS NO. H 5783 01C

202-B(002)B

52 OF ___

REV. DATE: 01-05-2000

Plotted By: MRT p:\040024\j2cad\sheets\rmus_j2ps01.dgn 3/29/2005 8:22:43 AM

NOTE:
THE ZEROS IN PARENTHESIS (0, 0.0 & 0.00) IN THE HEADING OF SOME OF THE COLUMNS ARE THE RECOMMENDED PRECISION OF THE VALUE TO BE ENTERED IN THE COLUMN.

NOTE:
FOR PIPE CULVERT PLACEMENT SEE STANDARD DRAWING C-13.15

NOTE:
PIPE OPTIONS SELECTED ARE THOSE REQUIRED TO MEET MINIMUM SERVICE LIFE.
SHADED PIPE OPTION FIELDS ARE NOT ALLOWABLE ALTERNATES.

CSP - CORRUGATED STEEL PIPE
CAP - CORRUGATED ALUMINUM PIPE
RCP - REINFORCED CONCRETE PIPE
NRCP - NON-REINFORCED CONCRETE PIPE
NRCIPCP - NON-REINFORCED CAST-IN-PLACE CONCRETE PIPE
CHDPEPP - CORRUGATED HIGH DENSTIY POLYETHYLENE PLASTIC PIPE

F.H.W.A. REGION	STATE	PROJECT NO.	SHEET NO.	TOTAL SHEETS	AS BUILT
9	ARIZ.	202-B(002)B			
		202L MA 027			

Station	Plan Ref No.	⬡ Controlling Fill Height Range	Size, Corrugated (In.)	Size, Smooth (In.)	Length (0) (Ft.)	Skew (0) (Degree)	◪ Corrugation	Wall Thickness (0.00)	Zinc (In.)	Bit. Coated Zinc	Aluminum (In.)	Bit. Coated Aluminum	◪ Corrugation	Wall Thickness (0.00)	Uncoated (Coating)	Bit. Coated	Class - Non Trench (In.)	Class - Trench	Class	Min Wall Thickness (0) (In.)	AASHTO M-294 Type C	AASHTO M-294 Type S	AASHTO M-294 Type S (NRCIPCP)	C-13.20 & C-13.25	Detail -	Size, (In) Manhole	Standard or Detail (Each)	End Sec (Ea)	S-Single / D-Double	Location	H (0.0) (Ft.)	L Wing (0.0) (Ft.)	L 18' Slotted Drn (0) (Ft.)	L 24' Slotted Drn (0) (Ft.)	Type (Grate)	Elev. (0.00)	Depth (Ft.)	L (0.0) (Ft.)	Inlet Depression (In.)	Pipe Exc (0) (Ft.)	Pipe Bkfl (0) (Ft.)	Drn Exc (0) (Ft.)	Berm/Dike Emb (0) (Ft.)	REMARKS
Sta 16+62.84, 68.5' Lt BDWY	762	1		24	8											III	III	3			X					C-15.20	S	Lt	5.0	7.5				1492.01	1	17.0	8	2			CB 762 to
to Sta 17+09.40, 60.9' Lt																																											CBC
Sta 21+66.56, 91.7' Lt BDWY	763	5		24	84											IV	IV						24	C-18.10				Lt	13.0					1487.67			284	24			MH 763 to
to Sta 20+86.28, 122.1' Lt																																											MH 119
Sta 21+66.46, 61.0' Lt BDWY	764	4		24	26											III	III				X					C-15.20	S	Lt	7.0	11.5				1489.08	1	21.0	29	7			CB 764 to
to Sta 21+66.56, 91.7' Lt																																											MH 763
Sta 21+67.98, 61.0' Rt BDWY	765	4		24	128											III	III				X					C-15.20	S	Rt	4.0	11.5				1489.13	1	21.0	64	36			CB 765 to
to Sta 21+66.46, 61.0' Lt																																											CB 764
Sta 24+60.22, 54.4' Rt BDWY	766	3		24	10											II	II	2			X					C-15.20	S	Rt	5.6	3.5				1486.36	1	13.0	0	3			CB 766 to
to Sta 24+60.46, 66.9' Rt																																											MH 754
Sta 24+62.2, 65.3' Lt BDWY	767	1		24	124											III	III	3			X					C-15.20	S	Lt	4.0	7.5				1486.06	1	17.0	83	35			CB 767 to
to Sta 24+60.22 54.4' Rt																																											CB 766
Sta 28+32.98, 45.6' Rt BDWY	768	1		24	22											III	III	3			X					C-15.20	S	Rt	4.8	3.5				1482.16	1	13.0	11	6			CB 768 to
to Sta 28+32.99, 71.4' Rt																																											MH 755
Sta 28+33.53, 45.6' Lt BDWY	769	1		24	96											III	III	3			X					C-15.20	S	Lt	4.0	7.5				1482.16	1	17.0	68	27			CB 769 to
to Sta 28+33.00, 45.6' Rt																																											CB 768
Sta 33+12.00, 45.6' Rt BDWY	770	1		24	2											III	III	3			X					C-15.20	S	Rt	4.0	11.5				1478.03	1	21.0	0	2			CB 770 to
to Sta 33+12.00, 52.3' Rt																																											CBC
Sheet Total																							1															547	142			

FILL HEIGHT RANGE TABLE (Ft.)													
RANGE NO.		1	2	3	4	5	6	7	8	9	10	11	12
FILL	>	1	3	5	8	11	15	20	25	30	40	55	70
HEIGHT (Ft.)	≤	3	5	8	11	15	20	25	30	40	55	70	90

⬡ SHOULD FIELD CONDITIONS VARY FROM THE RANGE INDICATED, CONTACT DESIGN FOR RE-EVALUATION OF PIPE DESIGN REQUIREMENTS.

◪ PIPE CORRUGATION			
A	2⅔x½	D	6x2
B	3x1	E	3x1 or 9x2½
C	9x2½		

NOTE:
* SEE PLAN AND PROFIE SHEETS FOR PIPE CLASS

	NAME	DATE
DESIGN	JP/ML	04/05
DRAWN	MRT	04/05
CHECKED	JH	04/05

J2 engineering and environmental design
8222 south 48th street, suite 135
phoenix, arizona 85044
phone 602.438.2222
www.j2design.us

ARIZONA DEPARTMENT OF TRANSPORTATION
INTERMODAL TRANSPORTATION DIVISION

NEW PIPE SUMMARY SHEET

ROUTE 202L
LOCATION RED MTN FWY, UNIVERSITY DR - SOUTHERN AVE

TRACS NO. H 5783 01C
202-B(002)B

PRELIMINARY
95%
REVIEW
NOT FOR CONSTRUCTION OR RECORDING

DWG NO. G-4.22
53 OF ___

REV. DATE: 01-05-2000

Plotted By: MRT P:\040024\J2Cad\Sheets\RMUS_J2ps02.dgn 3/29/2005 8:31:12 AM

NOTE:
THE ZEROS IN PARENTHESIS (0, 0.0 & 0.00) IN THE HEADING OF SOME OF THE COLUMNS ARE THE RECOMMENDED PRECISION OF THE VALUE TO BE ENTERED IN THE COLUMN.

NOTE:
FOR PIPE CULVERT PLACEMENT SEE STANDARD DRAWING C-13.15

NOTE:
PIPE OPTIONS SELECTED ARE THOSE REQUIRED TO MEET MINIMUM SERVICE LIFE.
SHADED PIPE OPTION FIELDS ARE NOT ALLOWABLE ALTERNATES.

CSP - CORRUGATED STEEL PIPE
CAP - CORRUGATED ALUMINUM PIPE
RCP - REINFORCED CONCRETE PIPE
NRCP - NON-REINFORCED CONCRETE PIPE
NRCIPCP - NON-REINFORCED CAST-IN-PLACE CONCRETE PIPE
CHDPEPP - CORRUGATED HIGH DENSTIY POLYETHYLENE PLASTIC PIPE

F.H.W.A. REGION	STATE	PROJECT NO.	SHEET NO.	TOTAL SHEETS	AS BUILT
9	ARIZ.	202-B(002)B			
		202L MA 027			

DESCRIPTION							CSP								CAP			RCP	NRCP	NRCIPCP	CHDPEPP	END TREATMENT													QUANTITIES				
				In.	In.	Ft. / Degree	In.	Coating							In.				In.			Each													Cubic Yard				
																						End Sec	Catch basin, Manhole, Headwall & Junction Structure															
																							Ea			Ft.		Grate											
																													Ft.										
Station	Plan Ref No.	Controlling Fill Height Range	Size, Corrugated	Size, Smooth	Length (0)	Skew (0)	Corrugation	Wall Thickness (0.00)	Zinc	Bit. Coated Zinc	Aluminum	Bit. Coated Aluminum	Corrugation	Wall Thickness (0.00)	Uncoated	Bit. Coated	Class - Non Trench	Class - Trench	Class	Min Wall Thickness (0)	AASHTO M-294 Type C	AASHTO M-294 Type S	C-13.20 & C-13.25	Detail -	Size, (In) Manhole	Standard or Detail	S-Single / D-Double	Location	H (0.0)	L Wing (0.0)	L 18" Slotted Drn (0)	L 24" Slotted Drn (0)	Type	Elev. (0.00)	Depth	L (0.0)	Pipe Exc (0)	Pipe Bk-fl (0) C-13.15	Drn Exc (0)	Berm/Dike Emb (0)	REMARKS
Sta 21+88.16, E Channel Cst ℄	820	1		48	36											II	II	2			X	1			D24											94	19			
Sta 17+11.06, E Channel Cst ℄	821	2		24	36											II	II	2			X	1			D24											37	7			
Sta 36+80.76, E Channel Cst ℄	822	1		36	35											II	II	2			X				D24											56	10			
Sta 46+31.85, E Channel Cst ℄	824	2		12	68											II	II	2			X	1			D24											55	11			
Sta 53+87.96, E Channel Cst ℄	825	1		30	75											II	II	2			X	1			D23											97	18			
Sta 89+11.36, E Channel Cst ℄	826	1		12	38											II	II	2			X				D24											30	6			
Sta 95+23.17, E Channel Cst ℄	828	1		2-30	36											II	II	2			X				D24											48	12			
Sta 97+95.00, E Channel Cst ℄	830	1		3-36	87											II	II	2			X				D24											148	40			
Sheet Total																																					565	123			

NOTE:
Existing structure callout stations, offsets and elevations are approximate.

FILL HEIGHT RANGE TABLE (Ft.)													
RANGE NO.		1	2	3	4	5	6	7	8	9	10	11	12
FILL	>	1	3	5	8	11	15	20	25	30	40	55	70
HEIGHT (Ft.)	≤	3	5	8	11	15	20	25	30	40	55	70	90

◒ SHOULD FIELD CONDITIONS VARY FROM THE RANGE INDICATED, CONTACT DESIGN FOR RE-EVALUATION OF PIPE DESIGN REQUIREMENTS.

PIPE CORRUGATION			
A	2⅔x½	D	6x2
B	3x1	E	3x1 or 9x2½
C	9x2½		

NOTE:
NRCIPCP may be used only where it is listed as an acceptable alternate. NRCIPCP shall be used only in TRENCH CONDITION. In no case shall NRCIPCP be used in a non-trench or over excavated condition.

	NAME	DATE
DESIGN	RPC	04-05
DRAWN	CPG	04-05
CHECKED	BGS	04-05

PB PARSONS BRINCKERHOFF

ARIZONA DEPARTMENT OF TRANSPORTATION
INTERMODAL TRANSPORTATION DIVISION

NEW PIPE SUMMARY SHEET

PRELIMINARY 95% REVIEW
NOT FOR CONSTRUCTION OR RECORDING

ROUTE 202L
LOCATION RED MTN FWY, UNIVERSITY DR - SOUTHERN AVE

TRACS NO. H 5783 01C
202-B(002)B

DWG NO. G-4.23
___ OF ___

Wed Mar 30 09:23:23 2005
H:\RedMtn-Univ-Southern\Drng\psum21.dgn

F.H.W.A. REGION	STATE	PROJECT NO.	SHEET NO.	TOTAL SHEETS	AS BUILT
9	ARIZ.	202-B(002)B			
		202L MA 027			

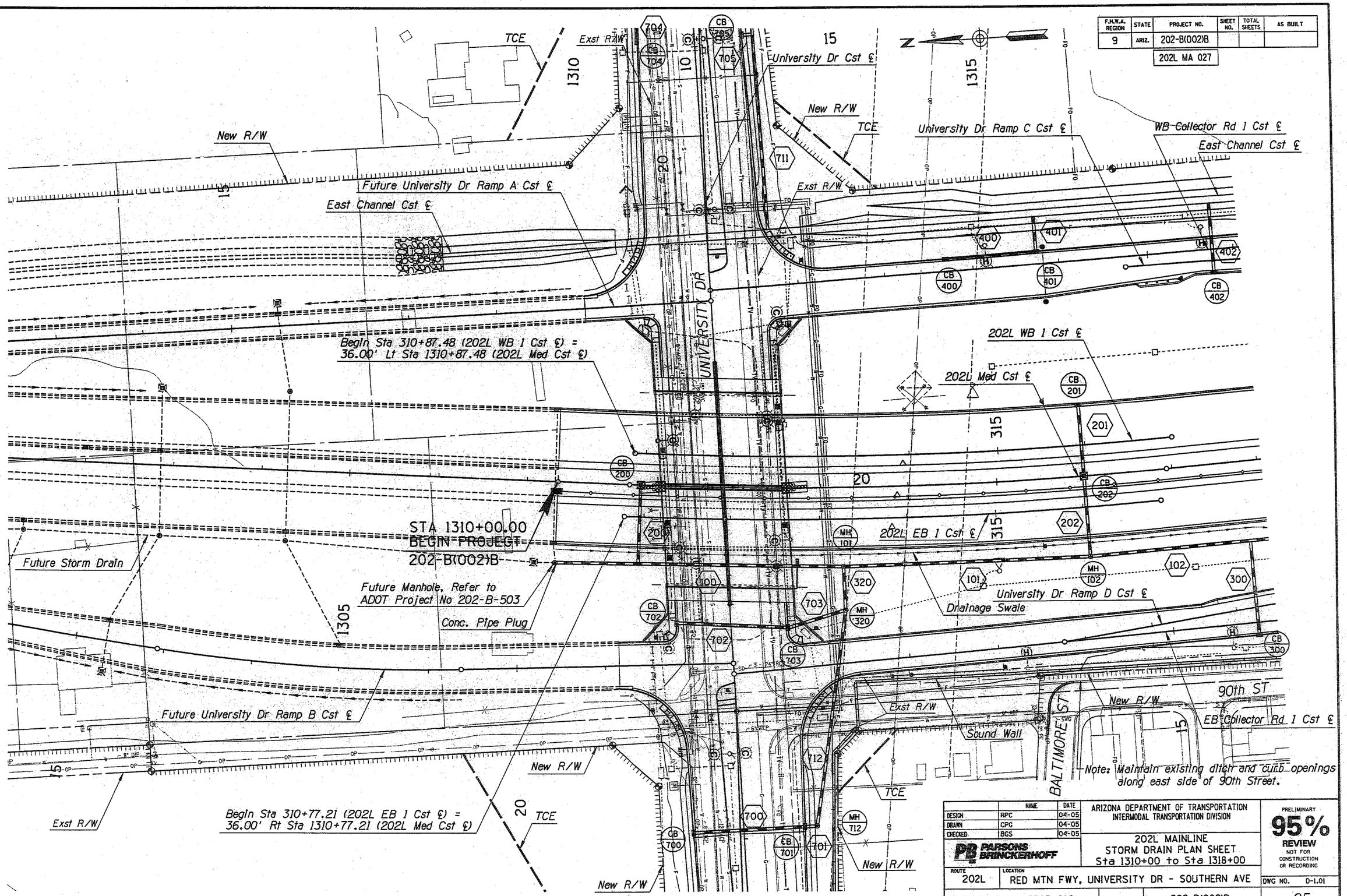

	NAME	DATE
DESIGN	RPC	04-05
DRAWN	CPG	04-05
CHECKED	BGS	04-05

PARSONS BRINCKERHOFF

ARIZONA DEPARTMENT OF TRANSPORTATION
INTERMODAL TRANSPORTATION DIVISION

202L MAINLINE
STORM DRAIN PLAN SHEET
Sta 1310+00 to Sta 1318+00

PRELIMINARY
95%
REVIEW
NOT FOR CONSTRUCTION OR RECORDING

ROUTE 202L | LOCATION RED MTN FWY, UNIVERSITY DR - SOUTHERN AVE | DWG NO. D-1.01

TRACS NO. H 5783 01C | 202-B(002)B | ___ OF ___

Tue Mar 29 11:11:15 2005 H:\RedMtn-Univ-Southern\Drng\dp101.dgn

F.H.W.A. REGION	STATE	PROJECT NO.	SHEET NO.	TOTAL SHEETS	AS BUILT
9	ARIZ.	202-B(002)B			
		202L MA 027			

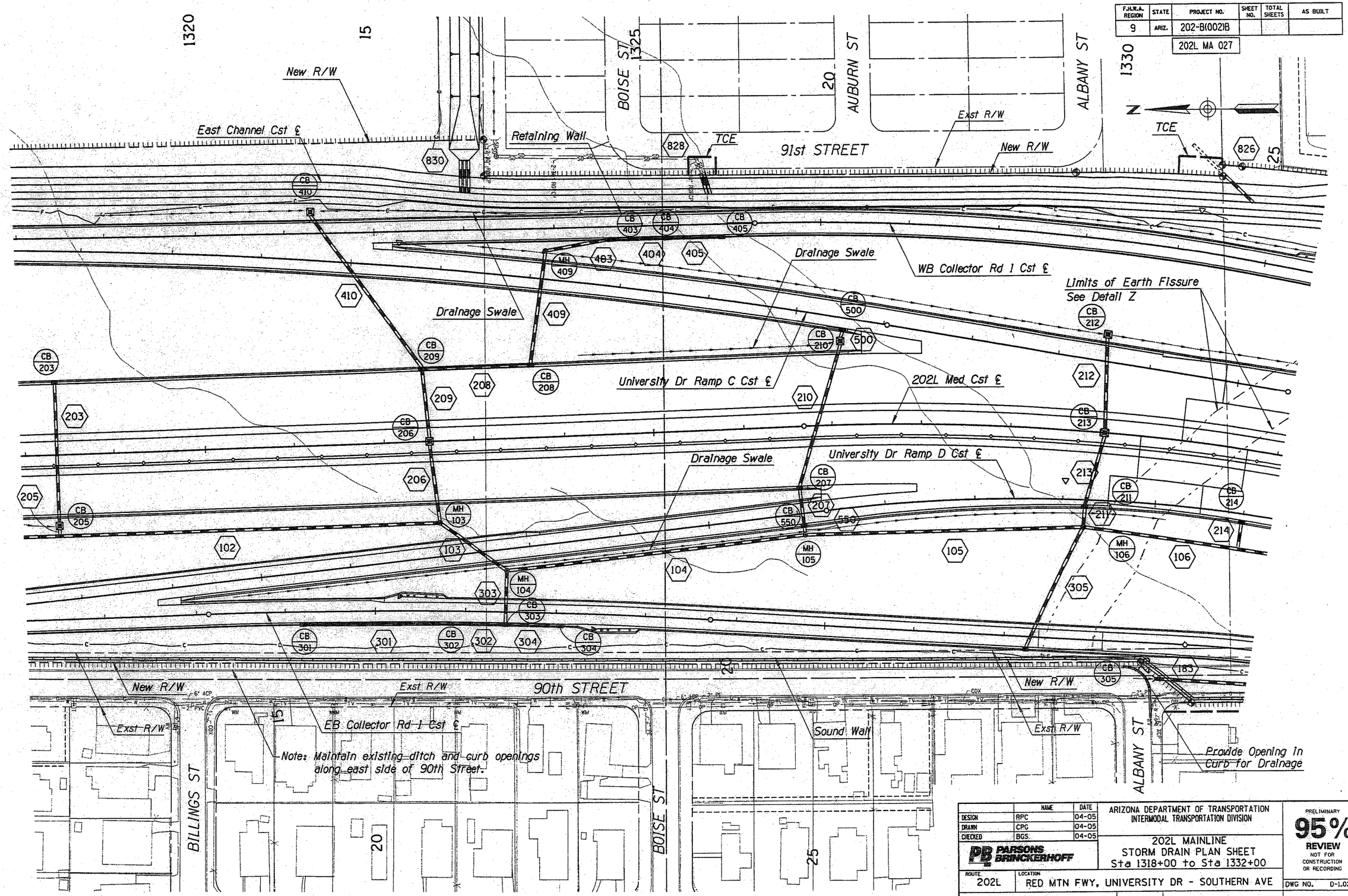

	NAME	DATE
DESIGN	RPC	04-05
DRAWN	CPG	04-05
CHECKED	BGS	04-05

PARSONS BRINCKERHOFF

ARIZONA DEPARTMENT OF TRANSPORTATION
INTERMODAL TRANSPORTATION DIVISION

202L MAINLINE
STORM DRAIN PLAN SHEET
Sta 1318+00 to Sta 1332+00

PRELIMINARY
95%
REVIEW
NOT FOR CONSTRUCTION OR RECORDING

ROUTE 202L | LOCATION RED MTN FWY, UNIVERSITY DR - SOUTHERN AVE | DWG NO. D-1.02

TRACS NO. H 5783 01C | 202-B(002)B | ___ OF ___

Tue Mar 29 11:11:37 2005 H:\RedMtn-Univ-Southern\Drng\dp102.dgn

F.H.W.A. REGION	STATE	PROJECT NO.	SHEET NO.	TOTAL SHEETS	AS BUILT
9	ARIZ.	202-B(002)B			

202L MA 027

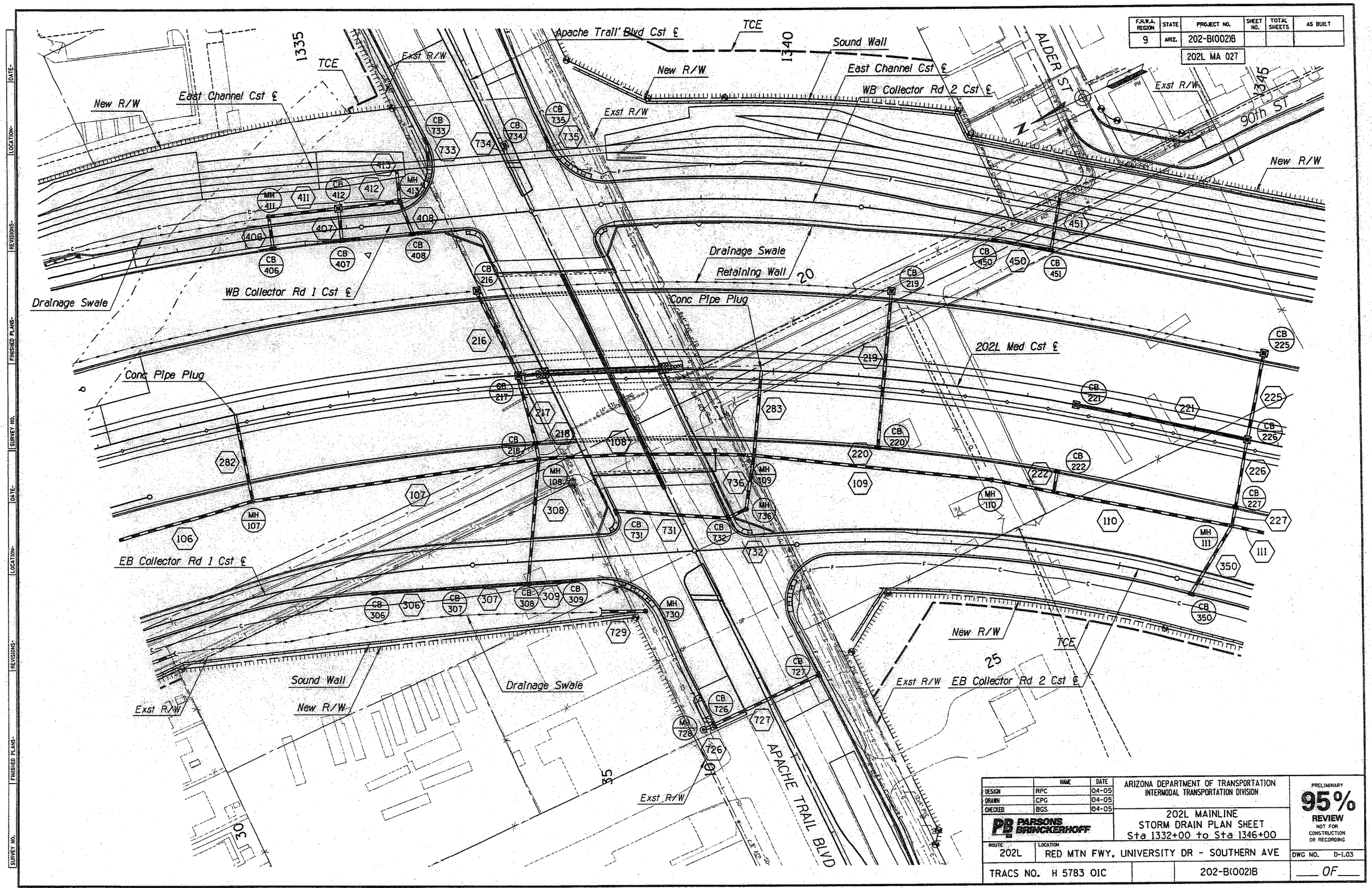

	NAME	DATE
DESIGN	RPC	04-05
DRAWN	CPG	04-05
CHECKED	BGS	04-05

PARSONS BRINCKERHOFF

ARIZONA DEPARTMENT OF TRANSPORTATION
INTERMODAL TRANSPORTATION DIVISION

202L MAINLINE
STORM DRAIN PLAN SHEET
Sta 1332+00 to Sta 1346+00

PRELIMINARY
95%
REVIEW
NOT FOR CONSTRUCTION OR RECORDING

ROUTE 202L | LOCATION RED MTN FWY, UNIVERSITY DR - SOUTHERN AVE

DWG NO. D-1.03

TRACS NO. H 5783 OIC | 202-B(002)B | ___ OF ___

DATE | LOCATION | REVISIONS | FINISHED PLANS | SURVEY NO.

Tue Mar 29 11:11:57 2005 H:\RedMtn-Univ-Southern\Drng\dp103.dgn

F.H.W.A. REGION	STATE	PROJECT NO.	SHEET NO.	TOTAL SHEETS	AS BUILT
9	ARIZ.	202-B(002)B			
		202L MA 027			

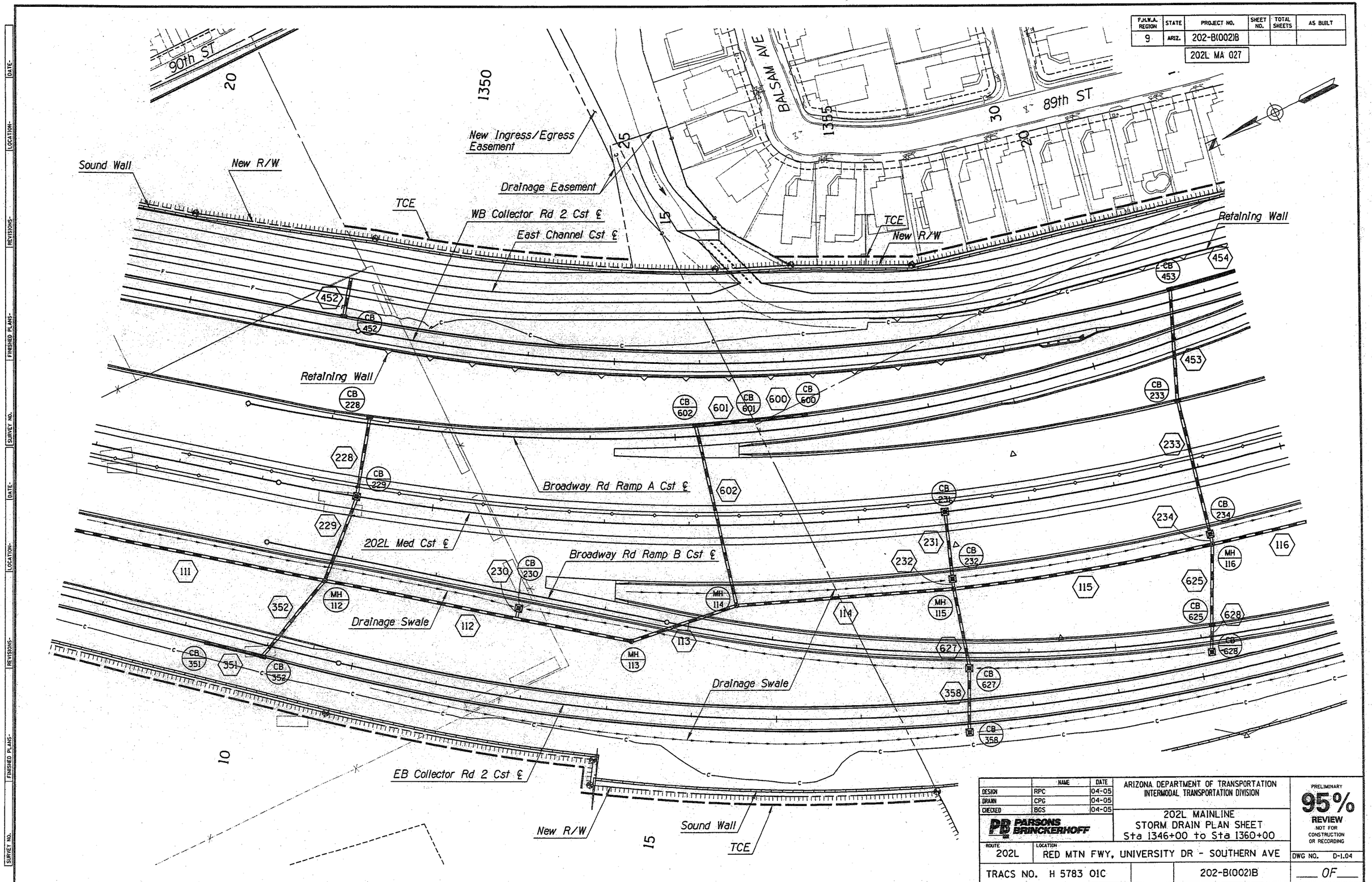

	NAME	DATE
DESIGN	RPC	04-05
DRAWN	CPG	04-05
CHECKED	BGS	04-05

PARSONS BRINCKERHOFF

ARIZONA DEPARTMENT OF TRANSPORTATION
INTERMODAL TRANSPORTATION DIVISION

202L MAINLINE
STORM DRAIN PLAN SHEET
Sta 1346+00 to Sta 1360+00

PRELIMINARY
95%
REVIEW
NOT FOR CONSTRUCTION OR RECORDING

ROUTE 202L
LOCATION RED MTN FWY, UNIVERSITY DR - SOUTHERN AVE

DWG NO. D-1.04

TRACS NO. H 5783 01C

202-B(002)B

___ OF ___

Tue Mar 29 11:12:21 2005 H:\RedMtn-Univ-Southern\Drng\dp104.dgn

F.H.W.A. REGION	STATE	PROJECT NO.	SHEET NO.	TOTAL SHEETS	AS BUILT
9	ARIZ.	202-B(002)B			
		202L MA 027			

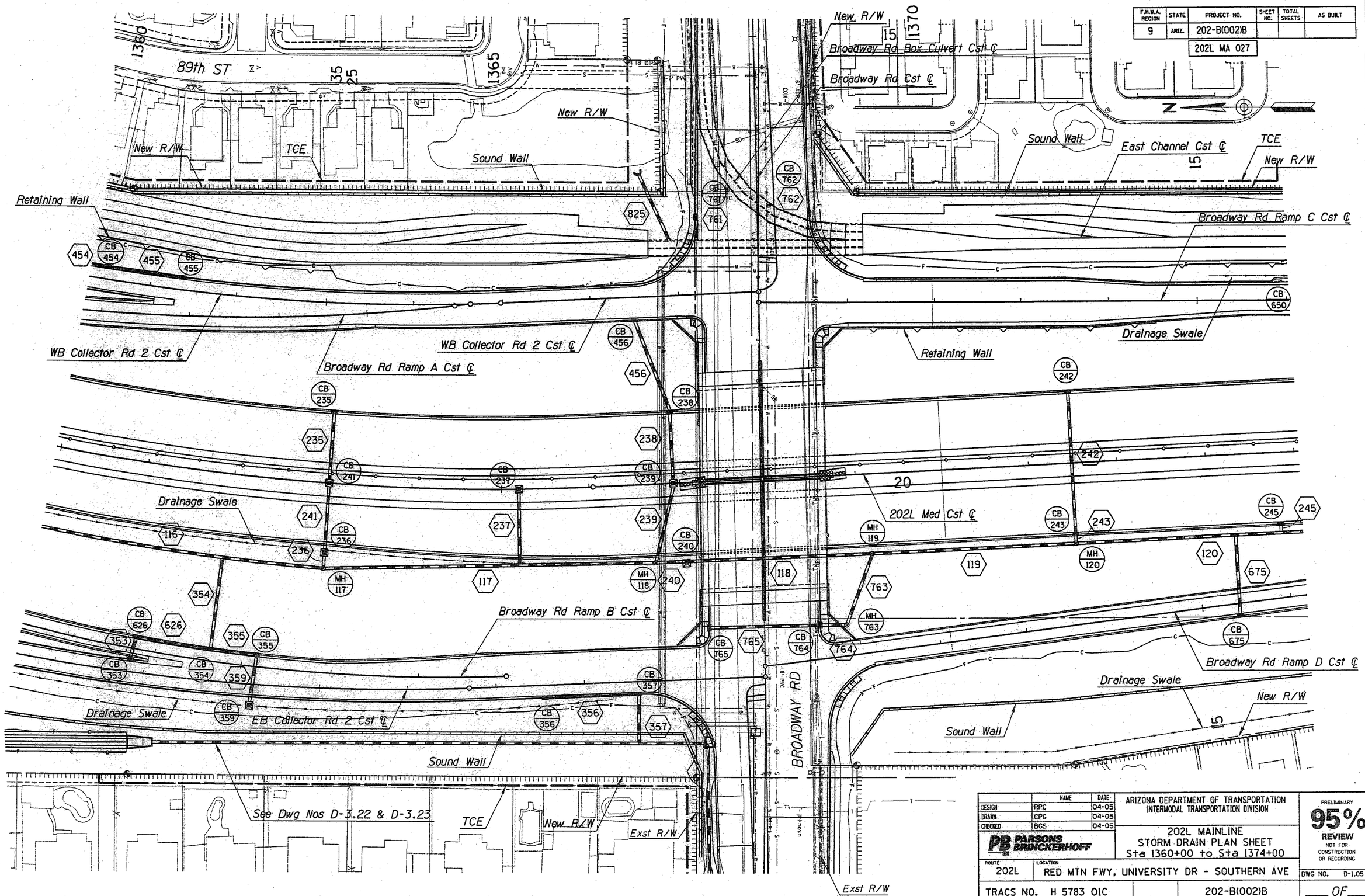

	NAME	DATE
DESIGN	RPC	04-05
DRAWN	CPG	04-05
CHECKED	BGS	04-05

PARSONS BRINCKERHOFF

ARIZONA DEPARTMENT OF TRANSPORTATION
INTERMODAL TRANSPORTATION DIVISION

202L MAINLINE
STORM DRAIN PLAN SHEET
Sta 1360+00 to Sta 1374+00

PRELIMINARY
95%
REVIEW
NOT FOR CONSTRUCTION OR RECORDING

ROUTE 202L
LOCATION RED MTN FWY, UNIVERSITY DR - SOUTHERN AVE
DWG NO. D-1.05

TRACS NO. H 5783 01C
202-B(002)B
___ OF ___

Tue Mar 29 11:12:40 2005
H:\RedMtn-Univ-Southern\Drng\dp105.dgn

F.H.W.A. REGION	STATE	PROJECT NO.	SHEET NO.	TOTAL SHEETS	AS BUILT
9	ARIZ.	202-B(002)B			

202L MA 027

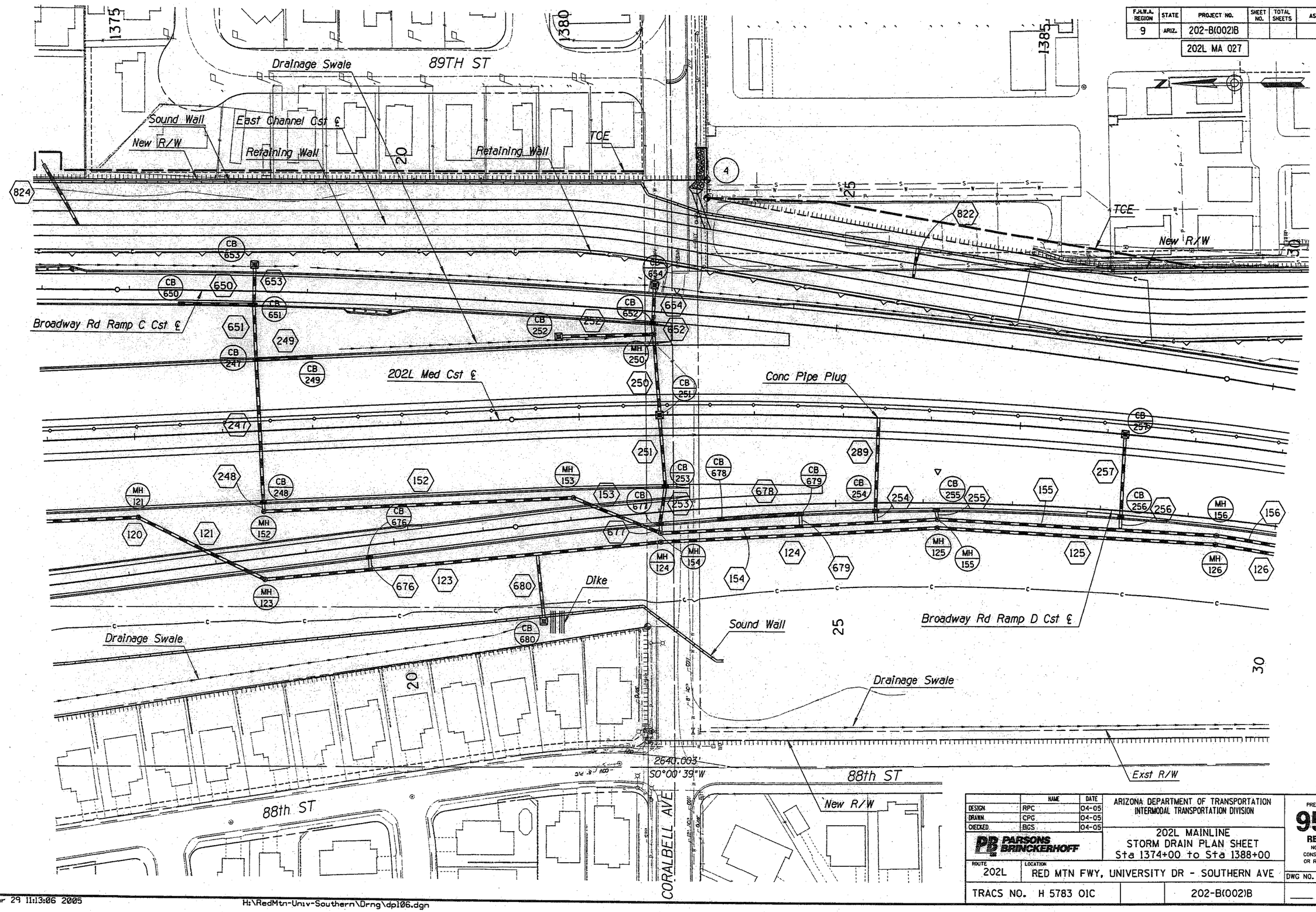

	NAME	DATE
DESIGN	RPC	04-05
DRAWN	CPG	04-05
CHECKED	BGS	04-05

PARSONS BRINCKERHOFF

ARIZONA DEPARTMENT OF TRANSPORTATION
INTERMODAL TRANSPORTATION DIVISION

202L MAINLINE
STORM DRAIN PLAN SHEET
Sta 1374+00 to Sta 1388+00

PRELIMINARY
95%
REVIEW
NOT FOR CONSTRUCTION OR RECORDING

ROUTE	LOCATION
202L	RED MTN FWY, UNIVERSITY DR - SOUTHERN AVE

DWG NO. D-1.06

TRACS NO. H 5783 01C | 202-B(002)B | ___ OF ___

Tue Mar 29 11:13:06 2005

H:\RedMtn-Univ-Southern\Drng\dp106.dgn

F.H.W.A. REGION	STATE	PROJECT NO.	SHEET NO.	TOTAL SHEETS	AS BUILT
9	ARIZ.	202-B(002)B			
		202L MA 027			

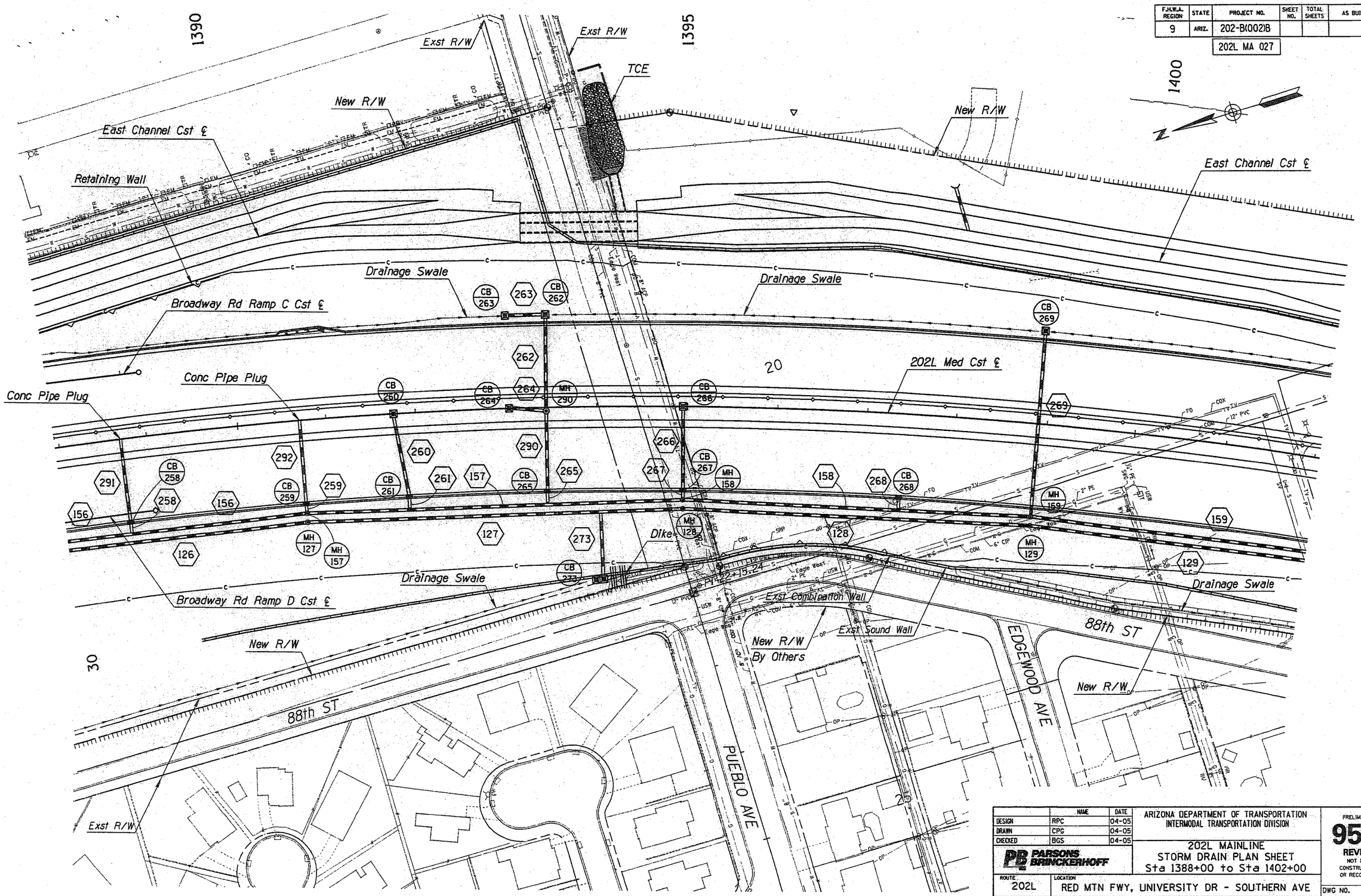

	NAME	DATE
DESIGN	RPC	04-05
DRAWN	CPG	04-05
CHECKED	BGS	04-05

PARSONS BRINCKERHOFF

ARIZONA DEPARTMENT OF TRANSPORTATION
INTERMODAL TRANSPORTATION DIVISION

202L MAINLINE
STORM DRAIN PLAN SHEET
Sta 1388+00 to Sta 1402+00

PRELIMINARY
95%
REVIEW
NOT FOR CONSTRUCTION OR RECORDING

ROUTE 202L
LOCATION RED MTN FWY, UNIVERSITY DR - SOUTHERN AVE

DWG NO. D-1.07

TRACS NO. H 5783 01C

202-B(002)B

___ OF ___

Tue Mar 29 11:13:28 2005

H:\RedMtn-Univ-Southern\Drng\dp107.dgn

F.H.W.A. REGION	STATE	PROJECT NO.	SHEET NO.	TOTAL SHEETS	AS BUILT
9	ARIZ.	202-B(002)B			

202L MA 027

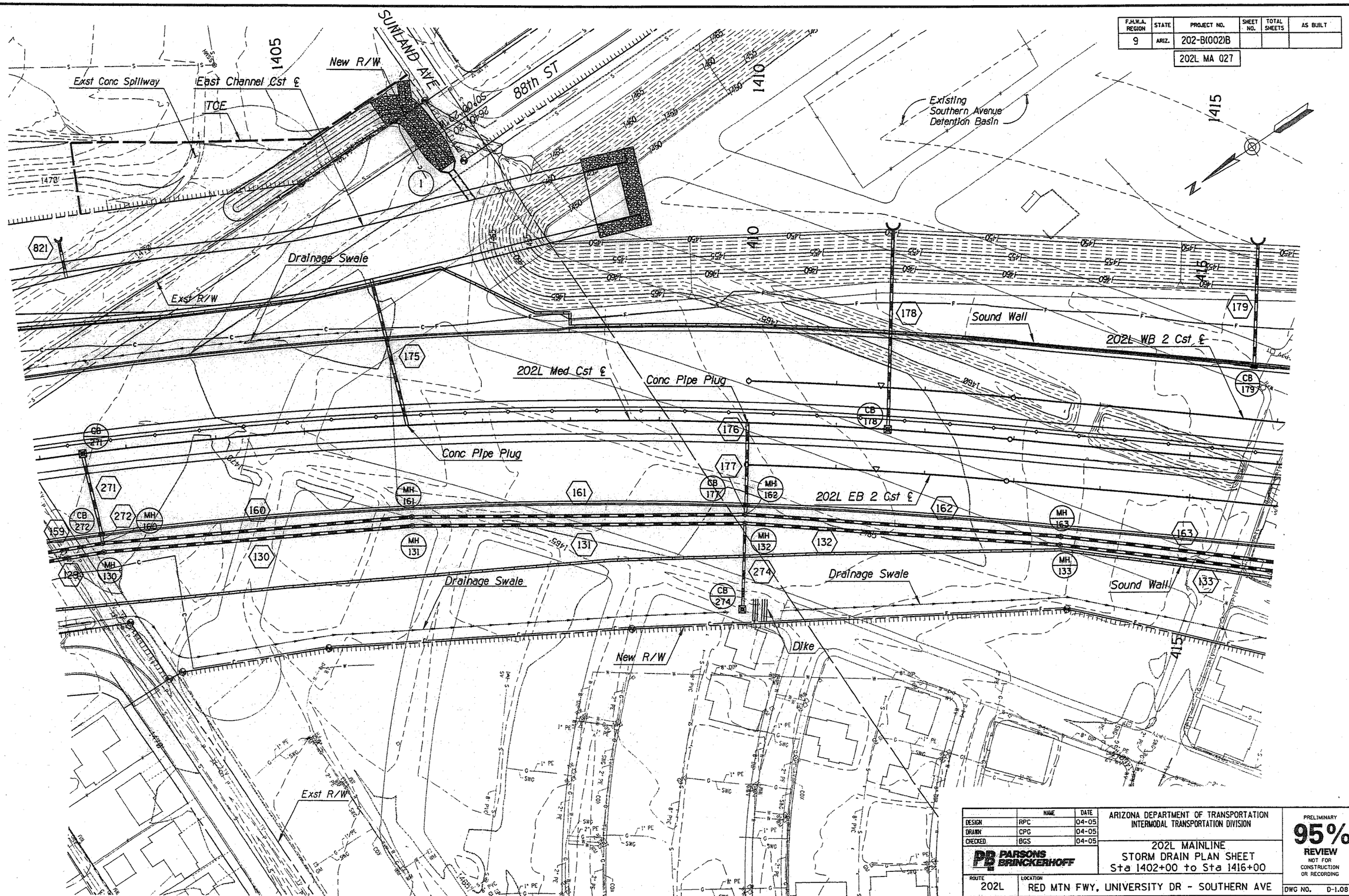

	NAME	DATE
DESIGN	RPC	04-05
DRAWN	CPG	04-05
CHECKED	BGS	04-05

PARSONS BRINCKERHOFF

ARIZONA DEPARTMENT OF TRANSPORTATION
INTERMODAL TRANSPORTATION DIVISION

202L MAINLINE
STORM DRAIN PLAN SHEET
Sta 1402+00 to Sta 1416+00

PRELIMINARY
95%
REVIEW
NOT FOR CONSTRUCTION OR RECORDING

ROUTE: 202L
LOCATION: RED MTN FWY, UNIVERSITY DR - SOUTHERN AVE

DWG NO. D-1.08

TRACS NO. H 5783 01C

202-B(002)B

___ OF ___

SURVEY NO. | FINISHED PLANS- | REVISIONS- | LOCATION- | DATE-

Tue Mar 29 11:13:56 2005 H:\RedMtn-Univ-Southern\Drng\dp108.dgn

F.H.W.A. REGION	STATE	PROJECT NO.	SHEET NO.	TOTAL SHEETS	AS BUILT
9	ARIZ.	202-B(002)B			

202L MA 027

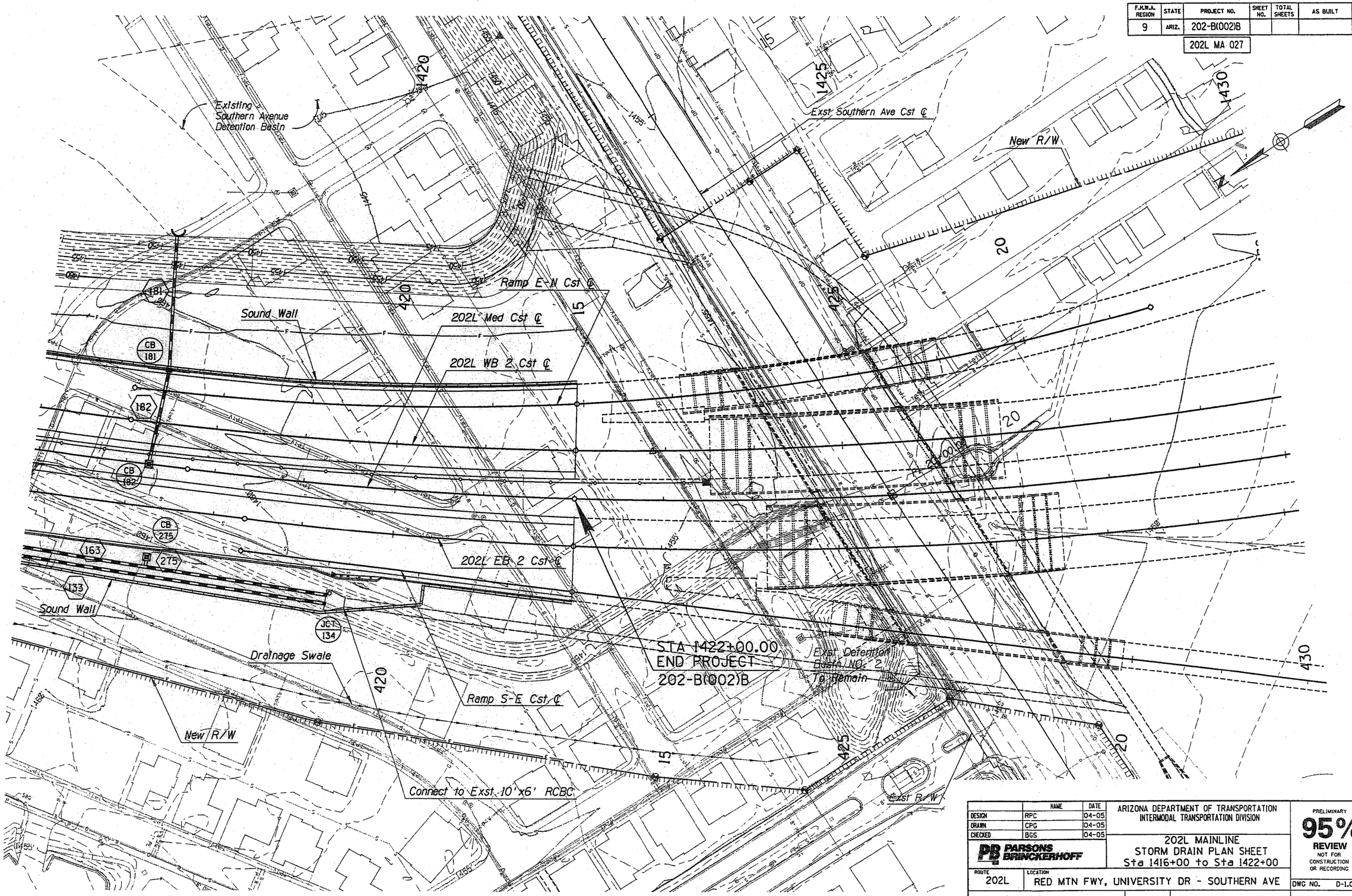

	NAME	DATE
DESIGN	RPC	04-05
DRAWN	CPG	04-05
CHECKED	BGS	04-05

PARSONS BRINCKERHOFF

ARIZONA DEPARTMENT OF TRANSPORTATION
INTERMODAL TRANSPORTATION DIVISION

202L MAINLINE
STORM DRAIN PLAN SHEET
Sta 1416+00 to Sta 1422+00

PRELIMINARY
95%
REVIEW
NOT FOR CONSTRUCTION OR RECORDING

ROUTE: 202L
LOCATION: RED MTN FWY, UNIVERSITY DR - SOUTHERN AVE

DWG NO. D-1.09

TRACS NO. H 5783 01C

202-B(002)B

___ OF ___

SURVEY NO. | FINISHED PLANS- | REVISIONS- | LOCATION- | DATE-

Tue Mar 29 11:14:16 2005 H:\RedMtn-Univ-Southern\Drng\dp109.dgn

F.H.W.A. REGION	STATE	PROJECT NO.	SHEET NO.	TOTAL SHEETS	AS BUILT
9	ARIZ.	202-B(002)B			

202L MA 027

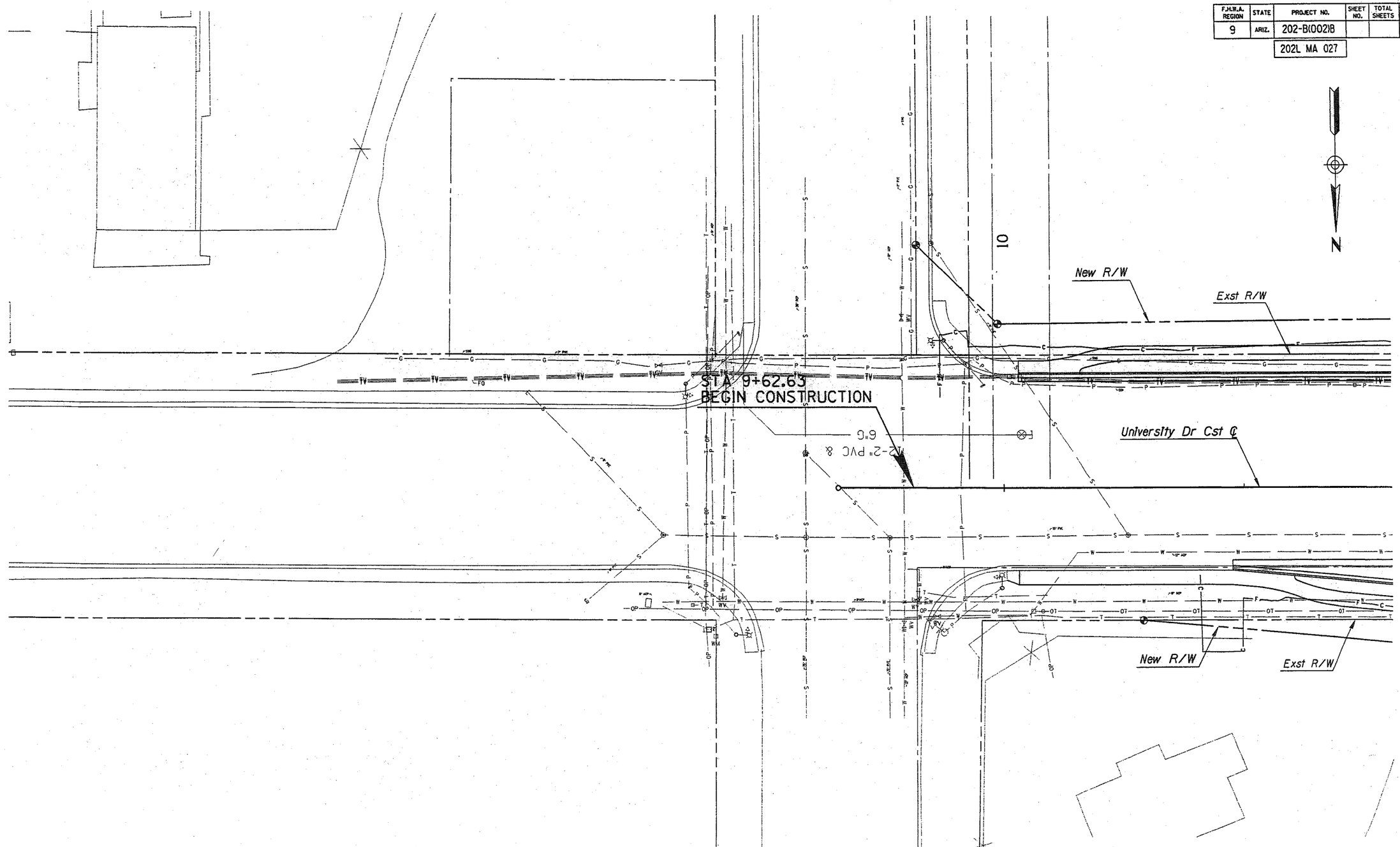

	NAME	DATE
DESIGN	RPC	04-05
DRAWN	CPG	04-05
CHECKED	BGS	04-05

PARSONS BRINCKERHOFF

ARIZONA DEPARTMENT OF TRANSPORTATION
INTERMODAL TRANSPORTATION DIVISION

UNIVERSITY DRIVE
STORM DRAIN PLAN
Sta 9+63.63 to Sta 11+60

PRELIMINARY
95%
REVIEW
NOT FOR CONSTRUCTION OR RECORDING

ROUTE 202L

LOCATION RED MTN FWY, UNIVERSITY DR - SOUTHERN AVE

DWG NO. D-1.10

TRACS NO. H 5783 01C

202-B(002)B

___ OF ___

DATE- LOCATION- REVISIONS- FINISHED PLANS- SURVEY NO.

DATE- LOCATION- REVISIONS- FINISHED PLANS- SURVEY NO.

Tue Mar 29 11:39:48 2005

H:\RedMtn-Univ-Southern\Drng\univ-dp101.dgn

F.H.W.A. REGION	STATE	PROJECT NO.	SHEET NO.	TOTAL SHEETS	AS BUILT
9	ARIZ.	202-B(002)B			
		202L MA 027			

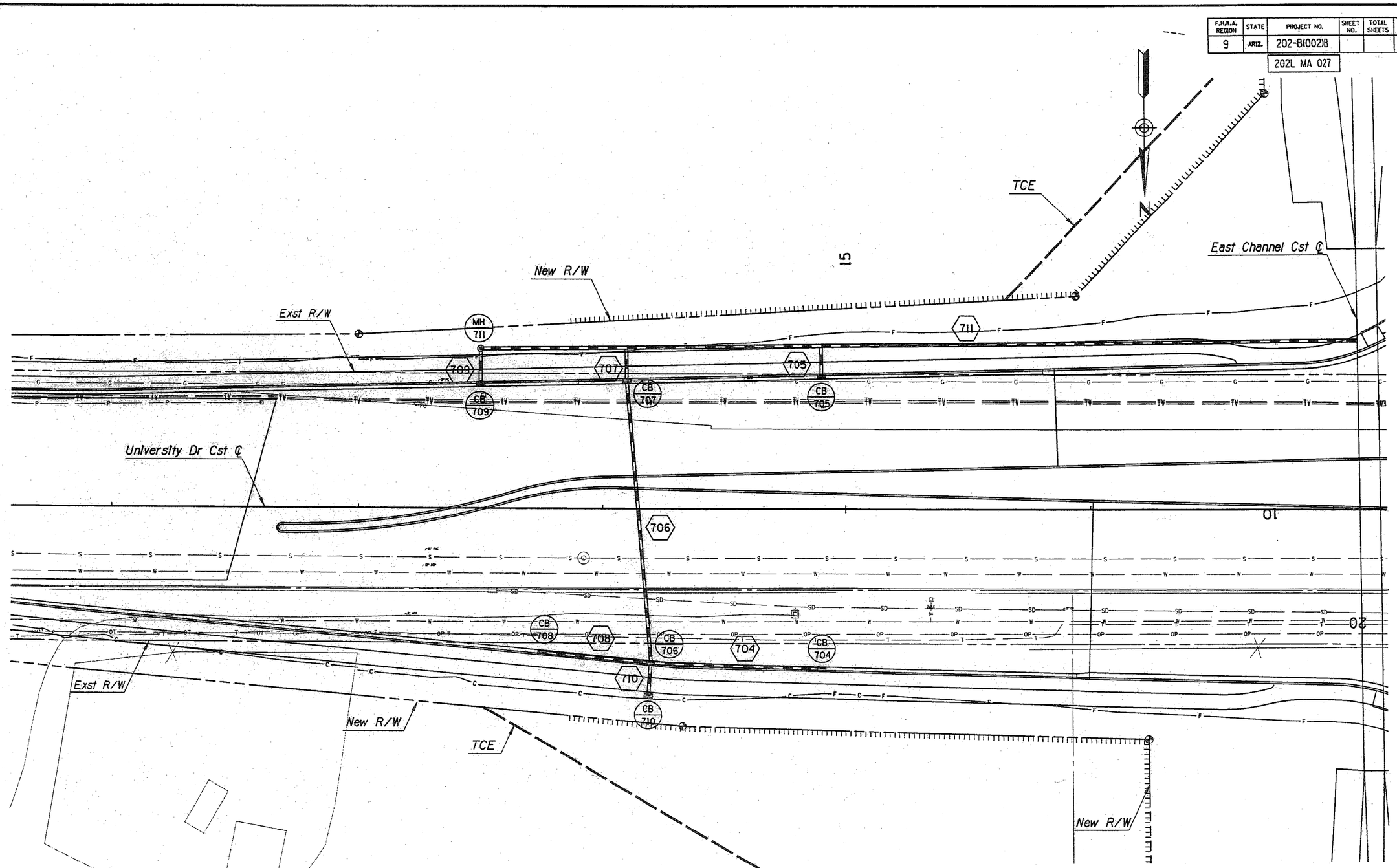

	NAME	DATE
DESIGN	RPC	04-05
DRAWN	CPG	04-05
CHECKED	BGS	04-05

PARSONS BRINCKERHOFF

ARIZONA DEPARTMENT OF TRANSPORTATION
INTERMODAL TRANSPORTATION DIVISION

UNIVERSITY DRIVE
STORM DRAIN PLAN
Sta 11+60 to Sta 17+20

PRELIMINARY
95%
REVIEW
NOT FOR CONSTRUCTION OR RECORDING

ROUTE 202L

LOCATION RED MTN FWY, UNIVERSITY DR - SOUTHERN AVE

DWG NO. D-1.11

TRACS NO. H 5783 01C

202-B(002)B

___ OF ___

Tue Mar 29 11:40:09 2005

H:\RedMtn-Univ-Southern\Drng\univ-dp102.dgn

F.H.W.A. REGION	STATE	PROJECT NO.	SHEET NO.	TOTAL SHEETS	AS BUILT
9	ARIZ.	202-B(002)B			

202L MA 027

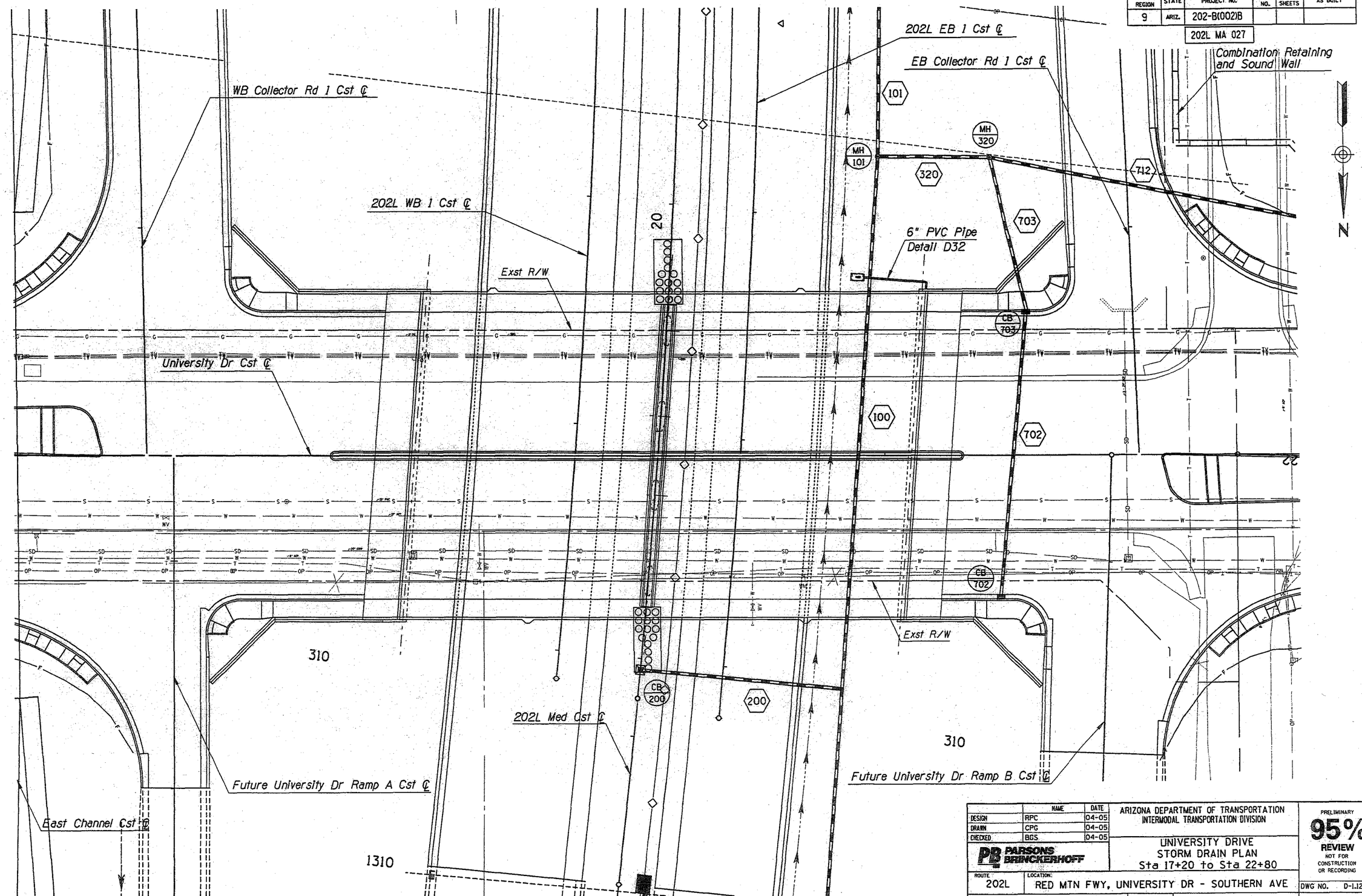

	NAME	DATE
DESIGN	RPC	04-05
DRAWN	CPG	04-05
CHECKED	BGS	04-05

PARSONS BRINCKERHOFF

ARIZONA DEPARTMENT OF TRANSPORTATION
INTERMODAL TRANSPORTATION DIVISION

UNIVERSITY DRIVE
STORM DRAIN PLAN
Sta 17+20 to Sta 22+80

PRELIMINARY
95%
REVIEW
NOT FOR CONSTRUCTION OR RECORDING

ROUTE: 202L
LOCATION: RED MTN FWY, UNIVERSITY DR - SOUTHERN AVE

DWG NO. D-1.12

TRACS NO. H 5783 01C

202-B(002)B

___ OF ___

Tue Mar 29 11:40:31 2005 H:\RedMtn-Univ-Southern\Drng\univ-dp103.dgn

F.H.W.A. REGION	STATE	PROJECT NO.	SHEET NO.	TOTAL SHEETS	AS BUILT
9	ARIZ.	202-B(002)B			

202L MA 027

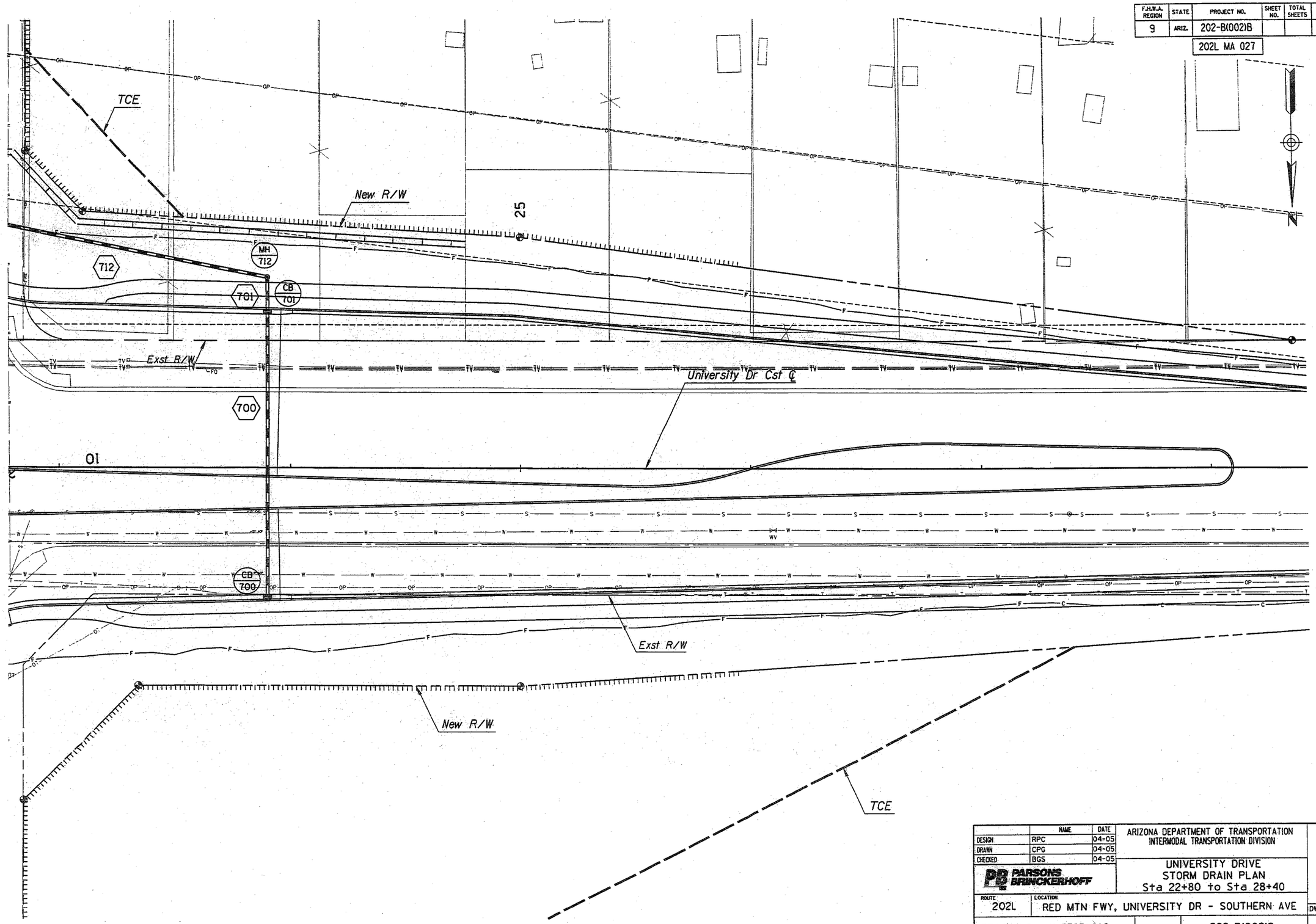

	NAME	DATE
DESIGN	RPC	04-05
DRAWN	CPG	04-05
CHECKED	BGS	04-05

PARSONS BRINCKERHOFF

ARIZONA DEPARTMENT OF TRANSPORTATION
INTERMODAL TRANSPORTATION DIVISION

UNIVERSITY DRIVE
STORM DRAIN PLAN
Sta 22+80 to Sta 28+40

PRELIMINARY
95%
REVIEW
NOT FOR CONSTRUCTION OR RECORDING

ROUTE 202L
LOCATION RED MTN FWY, UNIVERSITY DR - SOUTHERN AVE

DWG NO. D-1.13

TRACS NO. H 5783 01C

202-B(002)B

___ OF ___

Tue Mar 29 11:40:52 2005 H:\RedMtn-Univ-Southern\Drng\univ-dpl04.dgn

F.H.W.A. REGION	STATE	PROJECT NO.	SHEET NO.	TOTAL SHEETS	AS BUILT
9	ARIZ.	202-B(002)B			

202L MA 027

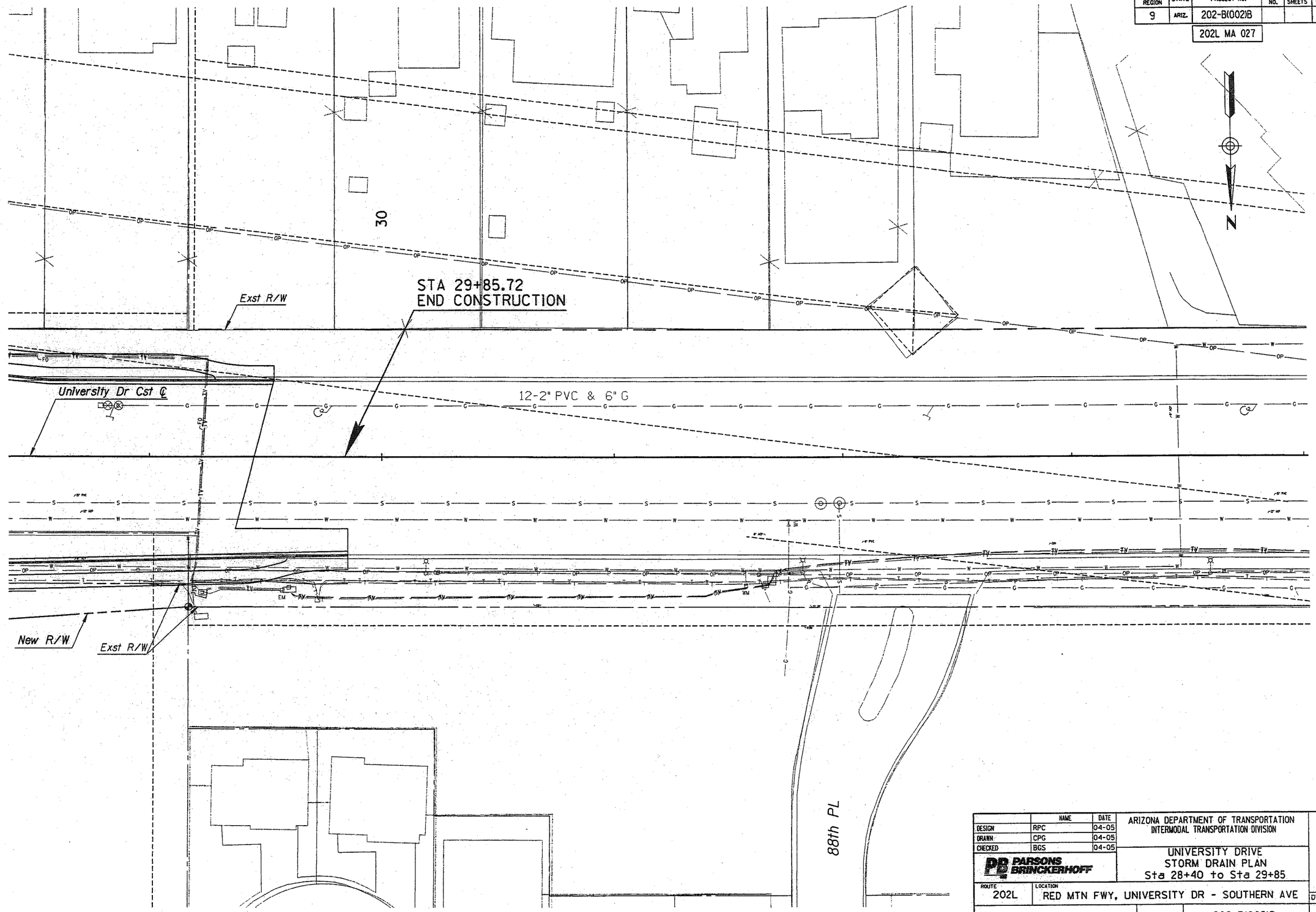

	NAME	DATE
DESIGN	RPC	04-05
DRAWN	CPG	04-05
CHECKED	BGS	04-05

PARSONS BRINCKERHOFF

ARIZONA DEPARTMENT OF TRANSPORTATION
INTERMODAL TRANSPORTATION DIVISION

UNIVERSITY DRIVE
STORM DRAIN PLAN
Sta 28+40 to Sta 29+85

PRELIMINARY
95%
REVIEW
NOT FOR CONSTRUCTION OR RECORDING

ROUTE 202L
LOCATION RED MTN FWY, UNIVERSITY DR - SOUTHERN AVE

DWG NO. D-1.14

TRACS NO. H 5783 01C

202-B(002)B

___ OF ___

Tue Mar 29 11:41:14 2005 H:\RedMtn-Univ-Southern\Drng\univ-dp105.dgn

F.H.W.A. REGION	STATE	PROJECT NO.	SHEET NO.	TOTAL SHEETS	AS BUILT
9	ARIZ.	202-B(002)B			

202L MA 027

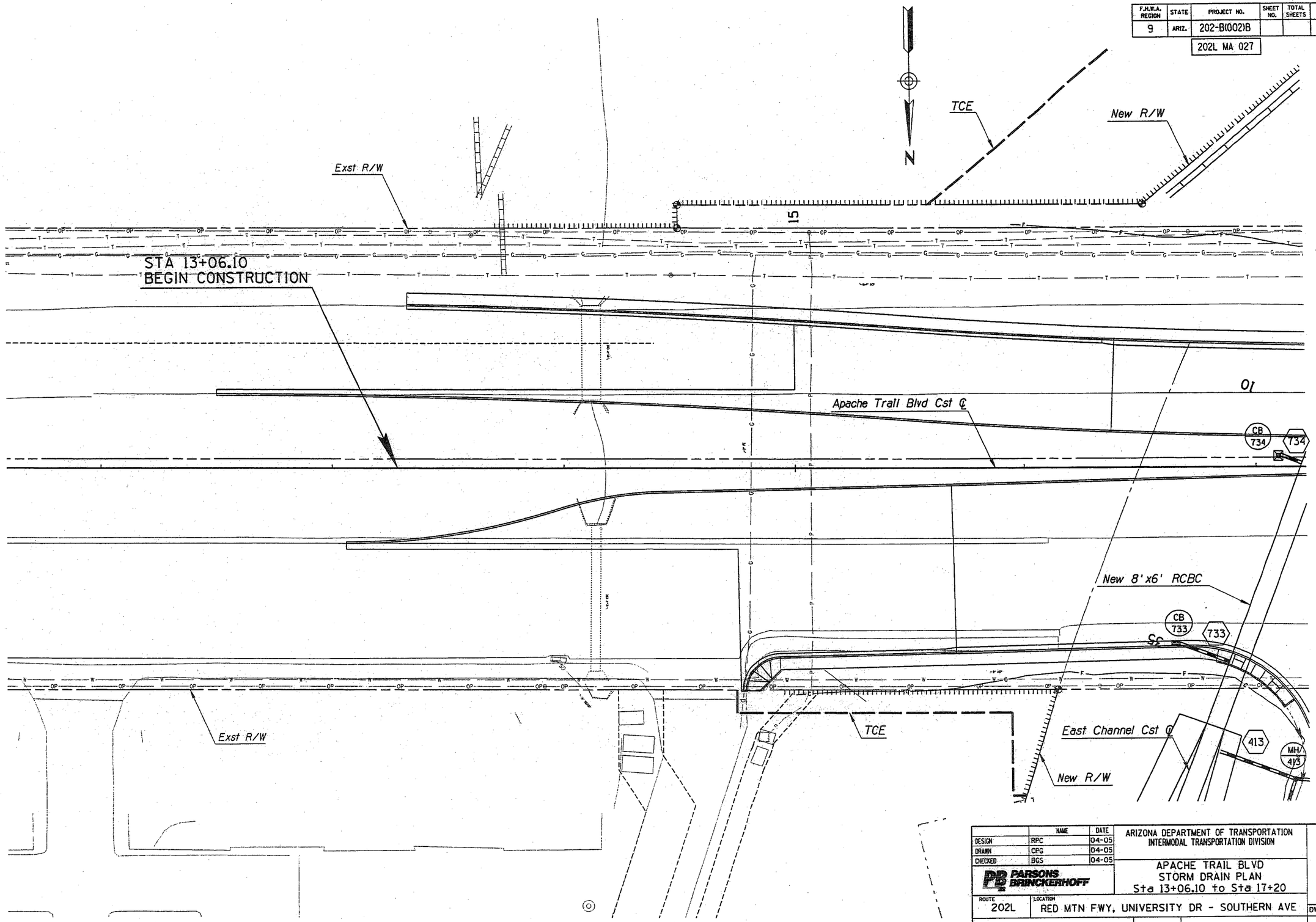

	NAME	DATE
DESIGN	RPC	04-05
DRAWN	CPG	04-05
CHECKED	BGS	04-05

PARSONS BRINCKERHOFF

ARIZONA DEPARTMENT OF TRANSPORTATION
INTERMODAL TRANSPORTATION DIVISION

APACHE TRAIL BLVD
STORM DRAIN PLAN
Sta 13+06.10 to Sta 17+20

PRELIMINARY
95%
REVIEW
NOT FOR CONSTRUCTION OR RECORDING

ROUTE: 202L
LOCATION: RED MTN FWY, UNIVERSITY DR - SOUTHERN AVE

DWG NO. D-1.15

TRACS NO. H 5783 01C

202-B(002)B

___ OF ___

SURVEY NO. | FINISHED PLANS- | REVISIONS- | LOCATION- | DATE-

Tue Mar 29 11:05:32 2005 H:\RedMtn-Univ-Southern\Drng\apache-dp101.dgn

F.H.W.A. REGION	STATE	PROJECT NO.	SHEET NO.	TOTAL SHEETS	AS BUILT
9	ARIZ.	202-B(002)B			

202L MA 027

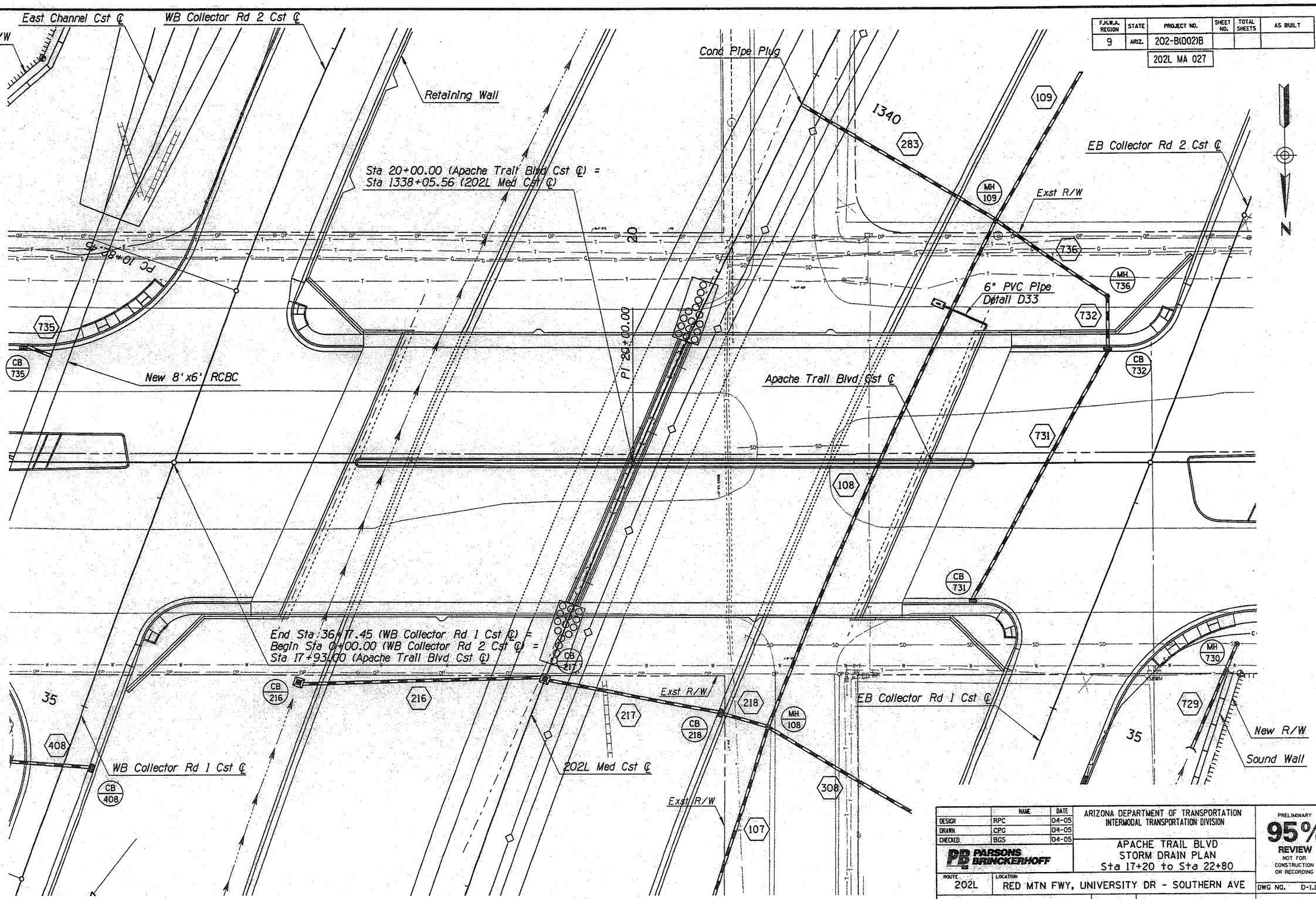

	NAME	DATE
DESIGN	RPC	04-05
DRAWN	CPG	04-05
CHECKED	BGS	04-05

PARSONS BRINCKERHOFF

ARIZONA DEPARTMENT OF TRANSPORTATION
INTERMODAL TRANSPORTATION DIVISION

APACHE TRAIL BLVD
STORM DRAIN PLAN
Sta 17+20 to Sta 22+80

PRELIMINARY
95%
REVIEW
NOT FOR CONSTRUCTION OR RECORDING

ROUTE: 202L
LOCATION: RED MTN FWY, UNIVERSITY DR - SOUTHERN AVE

DWG NO. D-1.16

TRACS NO. H 5783 01C

202-B(002)B

___ OF ___

Tue Mar 29 11:05:52 2005

H:\RedMtn-Univ-Southern\Drng\apache-dp102.dgn

F.H.W.A. REGION	STATE	PROJECT NO.	SHEET NO.	TOTAL SHEETS	AS BUILT
9	ARIZ.	202-B(002)B			

202L MA 027

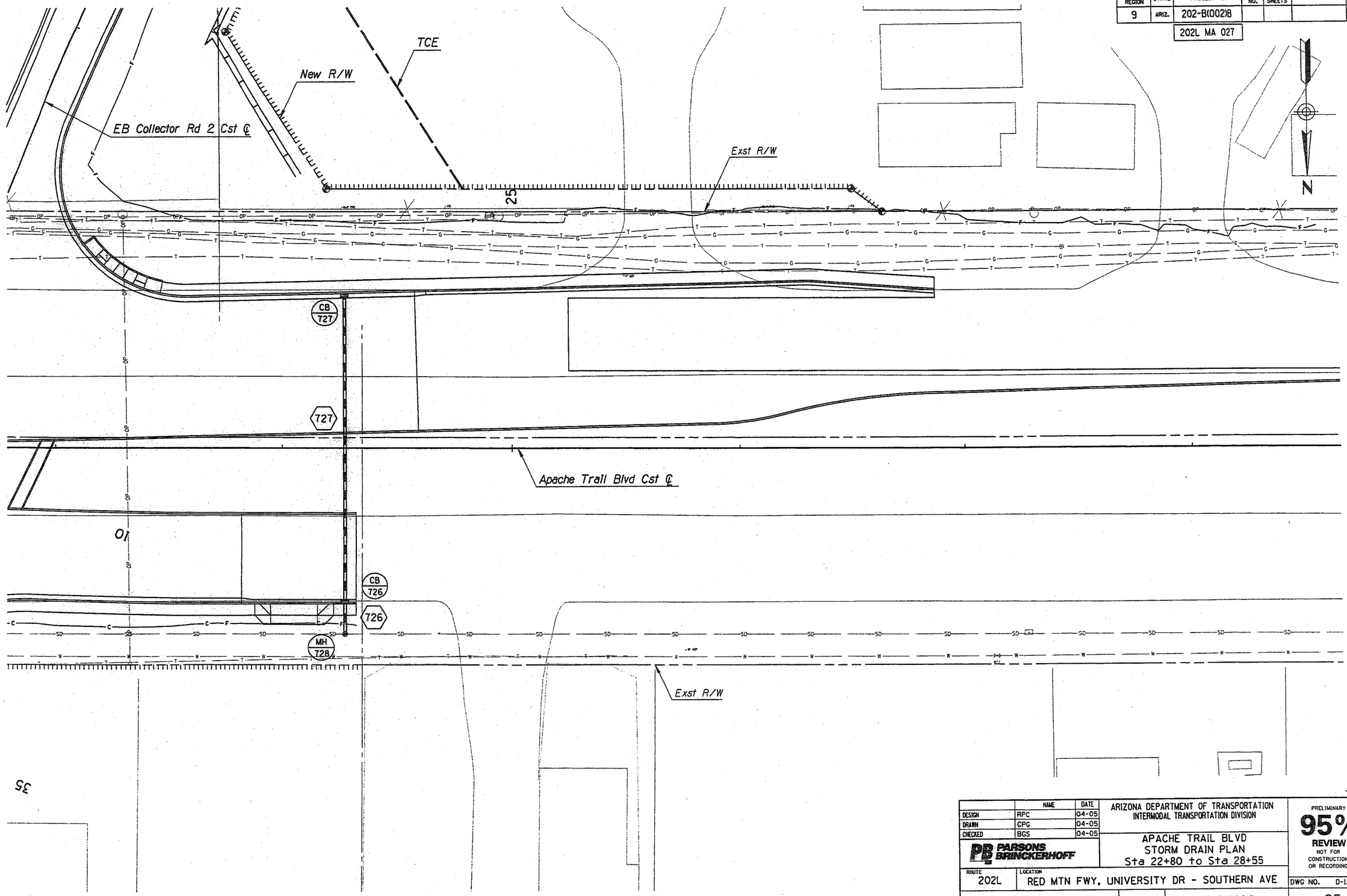

	NAME	DATE
DESIGN	RPC	04-05
DRAWN	CPG	04-05
CHECKED	BGS	04-05

PB PARSONS BRINCKERHOFF

ARIZONA DEPARTMENT OF TRANSPORTATION
INTERMODAL TRANSPORTATION DIVISION

APACHE TRAIL BLVD
STORM DRAIN PLAN
Sta 22+80 to Sta 28+55

PRELIMINARY
95%
REVIEW
NOT FOR CONSTRUCTION OR RECORDING

ROUTE 202L
LOCATION RED MTN FWY, UNIVERSITY DR - SOUTHERN AVE

DWG NO. D-1.17

TRACS NO. H 5783 01C

202-B(002)B

___ OF ___

Tue Mar 29 11:06:13 2005

H:\RedMtn-Univ-Southern\Drng\apache-dp103.dgn

F.H.W.A. REGION	STATE	PROJECT NO.	SHEET NO.	TOTAL SHEETS	AS BUILT
9	ARIZ.	202-B(002)B			
		202L MA 027			

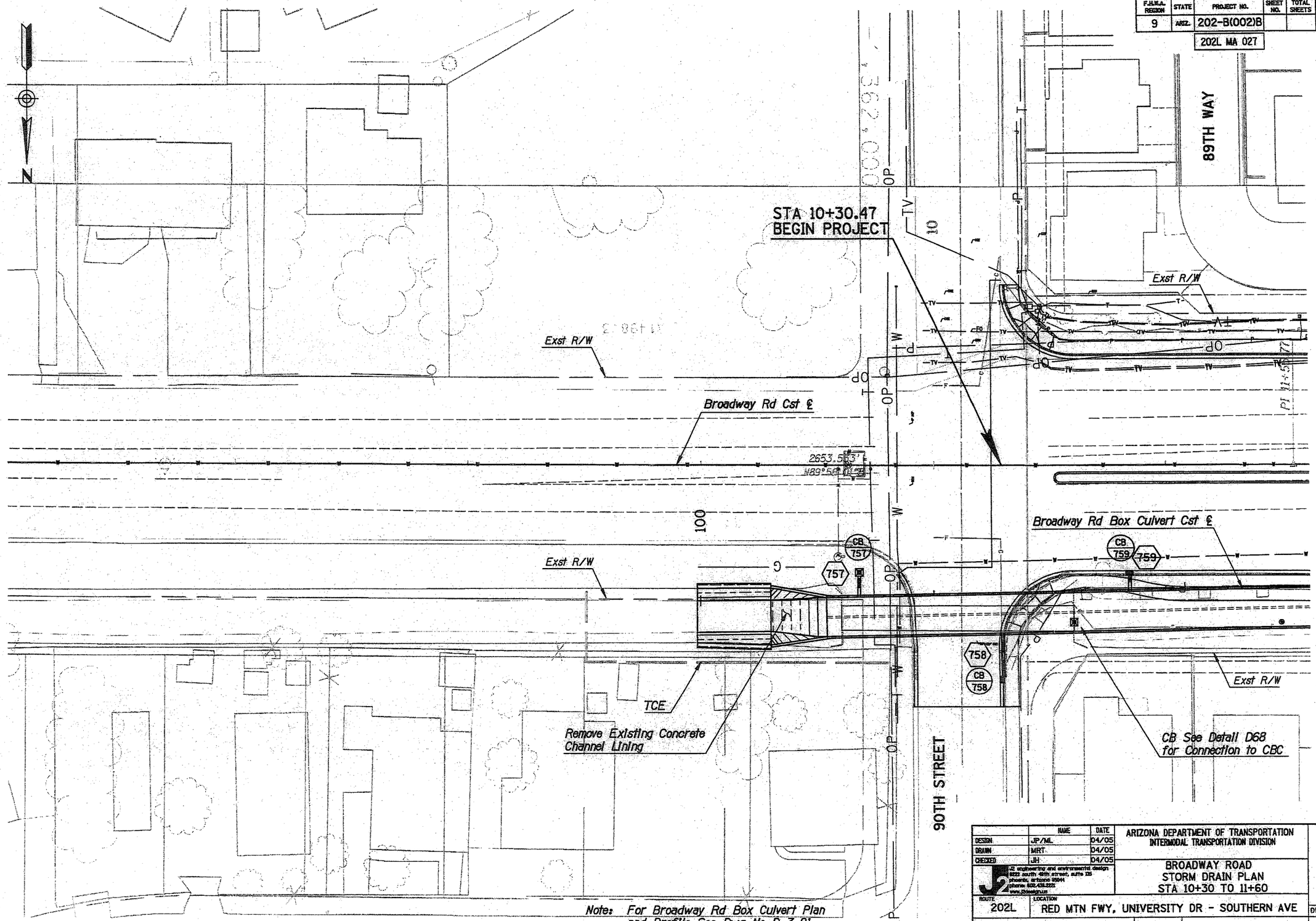

	NAME	DATE
DESIGN	JP/ML	04/05
DRAWN	MRT	04/05
CHECKED	JH	04/05

J2 engineering and environmental design
8222 south 48th street, suite 135
phoenix, arizona 85044
phone: 602.438.2221
www.j2designgroup

ARIZONA DEPARTMENT OF TRANSPORTATION
INTERMODAL TRANSPORTATION DIVISION

BROADWAY ROAD
STORM DRAIN PLAN
STA 10+30 TO 11+60

PRELIMINARY
95%
REVIEW
NOT FOR CONSTRUCTION OR RECORDING

ROUTE: 202L
LOCATION: RED MTN FWY, UNIVERSITY DR - SOUTHERN AVE

DWG NO. D-1.18

TRACS NO. H 5783 01C

202-B(002)B

___ OF ___

Plotted By: MRT p:\040024\j2cad\sheets\rmus_j2_sd01.dgn 3/29/2005 8:22:52 AM

F.H.W.A. REGION	STATE	PROJECT NO.	SHEET NO.	TOTAL SHEETS	AS BUILT
9	ARIZ.	202-B(002)B			

202L MA 027

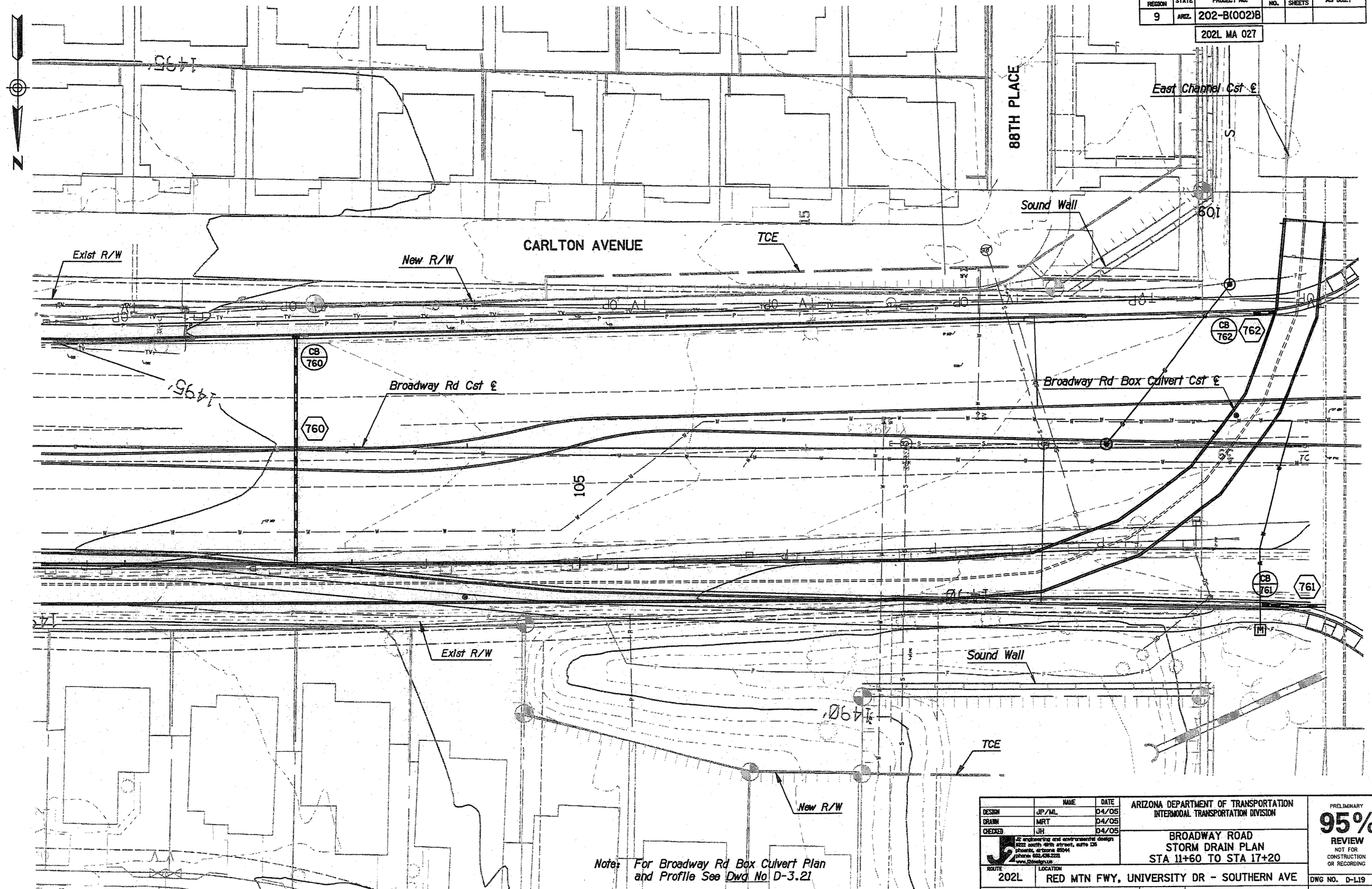

	NAME	DATE
DESIGN	JP/ML	04/05
DRAWN	MRT	04/05
CHECKED	JH	04/05

J2 engineering and environmental design
8222 south 48th street, suite 135
phoenix, arizona 85044
phone 602.438.2221
www.j2design.us

ARIZONA DEPARTMENT OF TRANSPORTATION
INTERMODAL TRANSPORTATION DIVISION

BROADWAY ROAD
STORM DRAIN PLAN
STA 11+60 TO STA 17+20

PRELIMINARY
95%
REVIEW
NOT FOR CONSTRUCTION OR RECORDING

ROUTE	LOCATION
202L	RED MTN FWY, UNIVERSITY DR - SOUTHERN AVE

DWG NO. D-1.19

TRACS NO. H 5783 01C

202-B(002)B

___ OF ___

DATE- | LOCATION- | REVISIONS- | FINISHED PLANS- | SURVEY NO.

Plotted By: MRT p:\040024\j2cad\sheets\rmus_j2_sd02.dgn 3/29/2005 8:23:11 AM

F.H.W.A. REGION	STATE	PROJECT NO.	SHEET NO.	TOTAL SHEETS	AS BUILT
9	ARIZ.	202-B(002)B			

202L MA 027

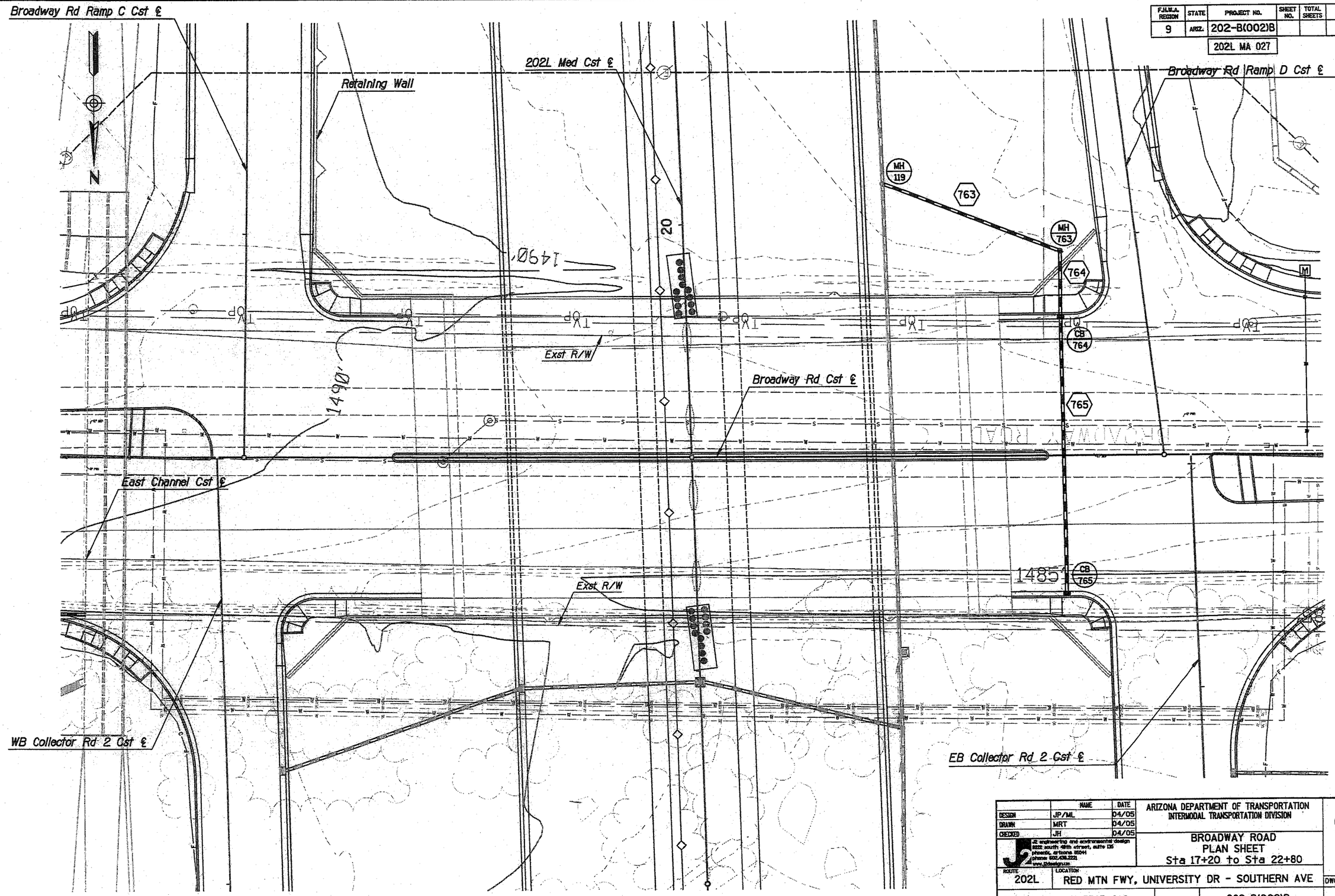

	NAME	DATE
DESIGN	JP/ML	04/05
DRAWN	MRT	04/05
CHECKED	JH	04/05

J2 engineering and environmental design
8222 south 48th street, suite 135
phoenix, arizona 85044
phone 602.438.2221
www.j2design.com

ARIZONA DEPARTMENT OF TRANSPORTATION
INTERMODAL TRANSPORTATION DIVISION

BROADWAY ROAD
PLAN SHEET
Sta 17+20 to Sta 22+80

PRELIMINARY
95%
REVIEW
NOT FOR CONSTRUCTION OR RECORDING

ROUTE: 202L
LOCATION: RED MTN FWY, UNIVERSITY DR - SOUTHERN AVE

DWG NO. D-L20

TRACS NO. H 5783 01C

202-B(002)B

___ OF ___

Plotted By: MRT p:\040024\j2cad\sheets\rmus_j2_sd03.dgn 3/29/2005 8:23:32 AM

F.H.W.A. REGION	STATE	PROJECT NO.	SHEET NO.	TOTAL SHEETS	AS BUILT
9	ARIZ.	202-B(002)B			
		202L MA 027			

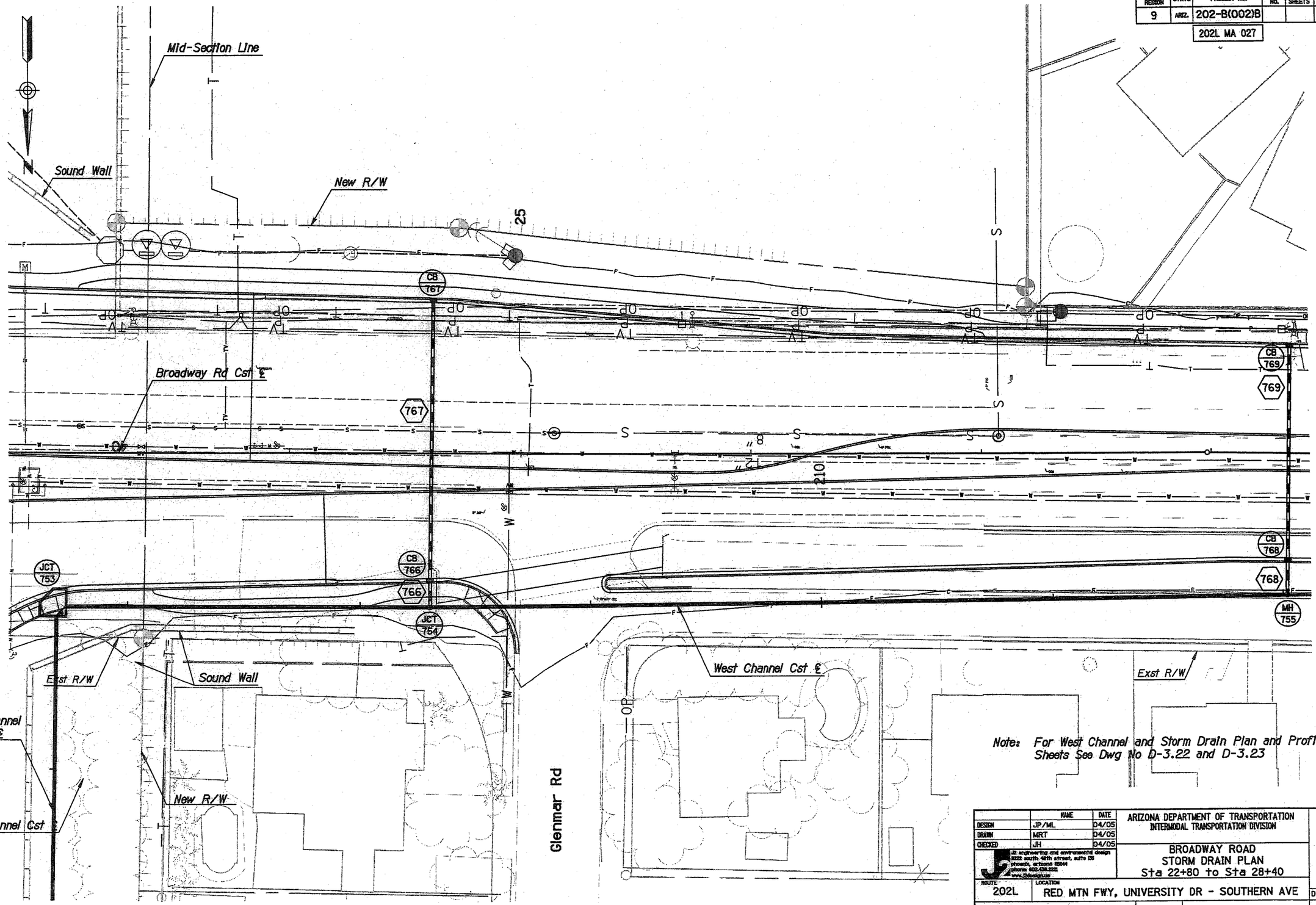

Note: For West Channel and Storm Drain Plan and Profile Sheets See Dwg No D-3.22 and D-3.23

	NAME	DATE
DESIGN	JP/ML	04/05
DRAWN	MRT	04/05
CHECKED	JH	04/05

J2 engineering and environmental design
9222 south 48th street, suite 135
phoenix, arizona 85044
phone 602.438.2221
www.j2designgroup

ARIZONA DEPARTMENT OF TRANSPORTATION
INTERMODAL TRANSPORTATION DIVISION

BROADWAY ROAD
STORM DRAIN PLAN
Sta 22+80 to Sta 28+40

PRELIMINARY
95%
REVIEW
NOT FOR CONSTRUCTION OR RECORDING

ROUTE: 202L
LOCATION: RED MTN FWY, UNIVERSITY DR - SOUTHERN AVE

DWG NO. D-L21

TRACS NO. H 5783 01C

202-B(002)B

___ OF ___

Plotted By: MRT p:\040024\j2cad\sheets\rmus_j2_sd04.dgn 3/29/2005 8:23:41 AM

F.H.W.A. REGION	STATE	PROJECT NO.	SHEET NO.	TOTAL SHEETS	AS BUILT
9	ARIZ.	202-B(002)B			
		202L MA 027			

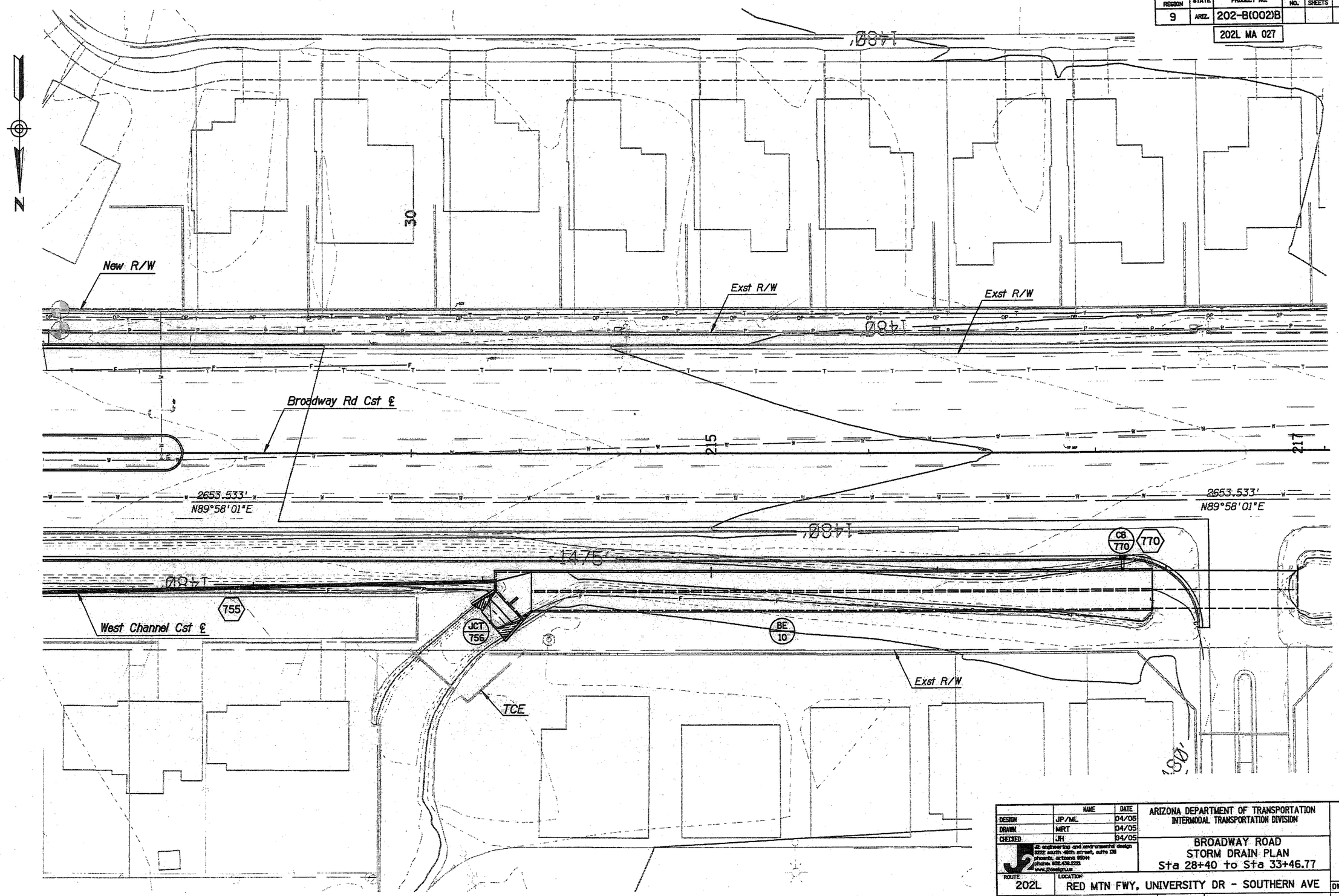

	NAME	DATE
DESIGN	JP/ML	04/05
DRAWN	MRT	04/05
CHECKED	JH	04/05

j2 engineering and environmental design
3222 south 48th street, suite 135
phoenix, arizona 85044
phone: 602.438.2221
www.j2design.us

ARIZONA DEPARTMENT OF TRANSPORTATION
INTERMODAL TRANSPORTATION DIVISION

BROADWAY ROAD
STORM DRAIN PLAN
Sta 28+40 to Sta 33+46.77

PRELIMINARY
95%
REVIEW
NOT FOR CONSTRUCTION OR RECORDING

ROUTE	LOCATION	DWG NO.
202L	RED MTN FWY, UNIVERSITY DR - SOUTHERN AVE	D-1.22

TRACS NO. H 5783 01C | 202-B(002)B | ___ OF ___

Plotted By: MRT p:\040024\j2cad\sheets\rmus_j2_sd05.dgn 3/29/2005 8:23:59 AM

F.H.W.A. REGION	STATE	PROJECT NO.	SHEET NO.	TOTAL SHEETS	AS BUILT
9	ARIZ.	202-B(002)B			

202L MA 027

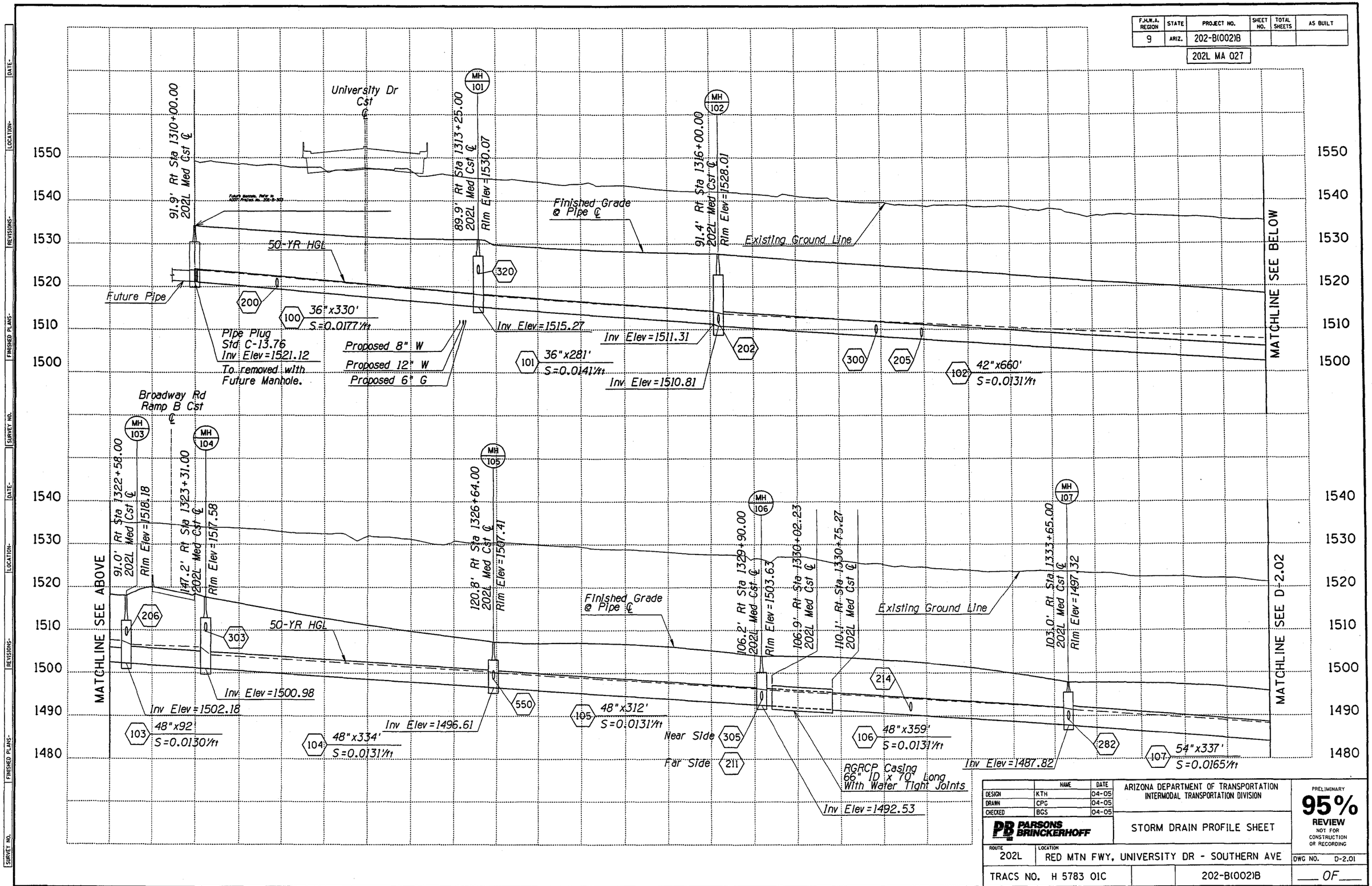

	NAME	DATE
DESIGN	KTH	04-05
DRAWN	CPG	04-05
CHECKED	BGS	04-05

PARSONS BRINCKERHOFF

ARIZONA DEPARTMENT OF TRANSPORTATION
INTERMODAL TRANSPORTATION DIVISION

STORM DRAIN PROFILE SHEET

PRELIMINARY 95% REVIEW NOT FOR CONSTRUCTION OR RECORDING

ROUTE 202L | LOCATION RED MTN FWY, UNIVERSITY DR - SOUTHERN AVE

DWG NO. D-2.01

TRACS NO. H 5783 01C | 202-B(002)B | ___ OF ___

Tue Mar 29 11:17:28 2005 H:\RedMtn-Univ-Southern\Drng\dpr101.dgn

F.H.W.A. REGION	STATE	PROJECT NO.	SHEET NO.	TOTAL SHEETS	AS BUILT
9	ARIZ.	202-B(002)B			

202L MA 027

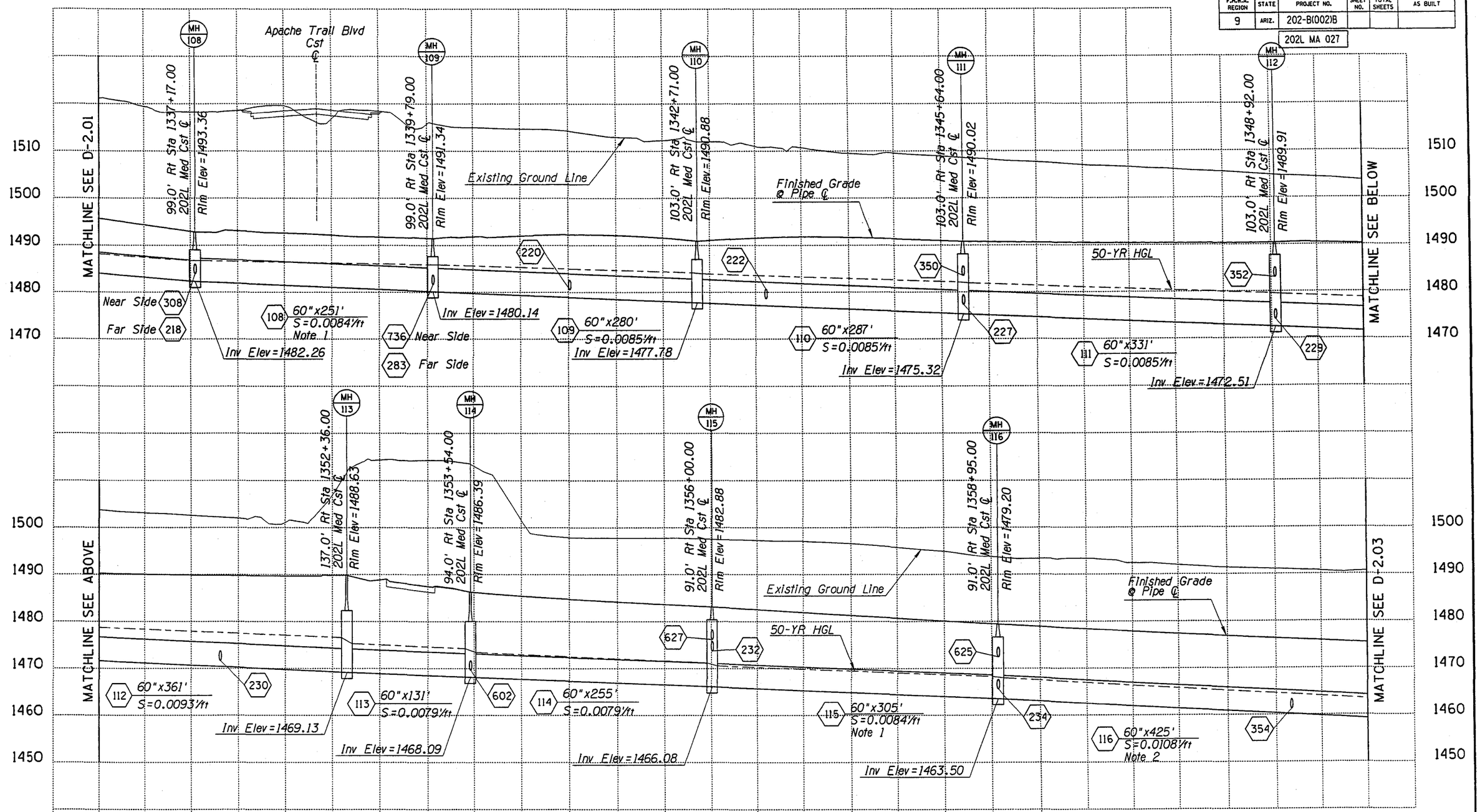

Note:

1. Pull pipe along curve in order to maintain constant offset.

2. Pull pipe along curve in order to maintain curve and offsets.

	NAME	DATE
DESIGN	KTH	04-05
DRAWN	CPG	04-05
CHECKED	BGS	04-05

PB PARSONS BRINCKERHOFF

ARIZONA DEPARTMENT OF TRANSPORTATION
INTERMODAL TRANSPORTATION DIVISION

STORM DRAIN PROFILE SHEET

PRELIMINARY
95%
REVIEW
NOT FOR CONSTRUCTION OR RECORDING

ROUTE 202L | LOCATION RED MTN FWY, UNIVERSITY DR - SOUTHERN AVE

DWG NO. D-2.02

TRACS NO. H 5783 01C | 202-B(002)B | ___ OF ___

Tue Mar 29 11:17:44 2005 H:\RedMtn-Univ-Southern\Drng\dpr102.dgn

F.H.W.A. REGION	STATE	PROJECT NO.	SHEET NO.	TOTAL SHEETS	AS BUILT
9	ARIZ.	202-B(002)B			

202L MA 027

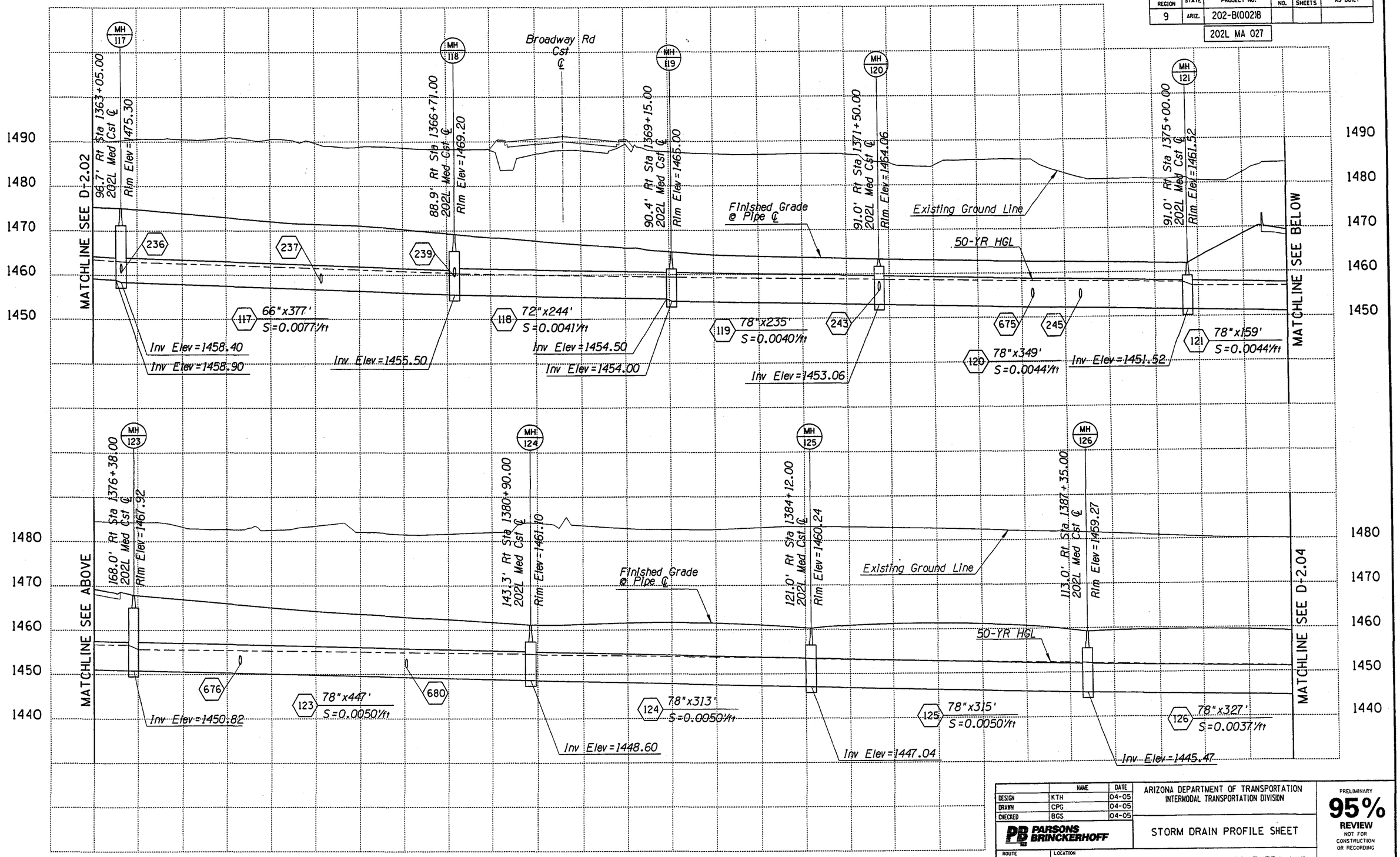

	NAME	DATE
DESIGN	KTH	04-05
DRAWN	CPG	04-05
CHECKED	BGS	04-05

PB PARSONS BRINCKERHOFF

ARIZONA DEPARTMENT OF TRANSPORTATION
INTERMODAL TRANSPORTATION DIVISION

STORM DRAIN PROFILE SHEET

PRELIMINARY
95%
REVIEW
NOT FOR CONSTRUCTION OR RECORDING

ROUTE: 202L
LOCATION: RED MTN FWY, UNIVERSITY DR - SOUTHERN AVE

DWG NO. D-2.03

TRACS NO. H 5783 01C

202-B(002)B

___ OF ___

DATE- LOCATION- REVISIONS- FINISHED PLANS- SURVEY NO.

Tue Mar 29 11:18:00 2005 H:\RedMtn-Univ-Southern\Drng\dpr103.dgn

F.H.W.A. REGION	STATE	PROJECT NO.	SHEET NO.	TOTAL SHEETS	AS BUILT
9	ARIZ.	202-B(002)B			

202L MA 027

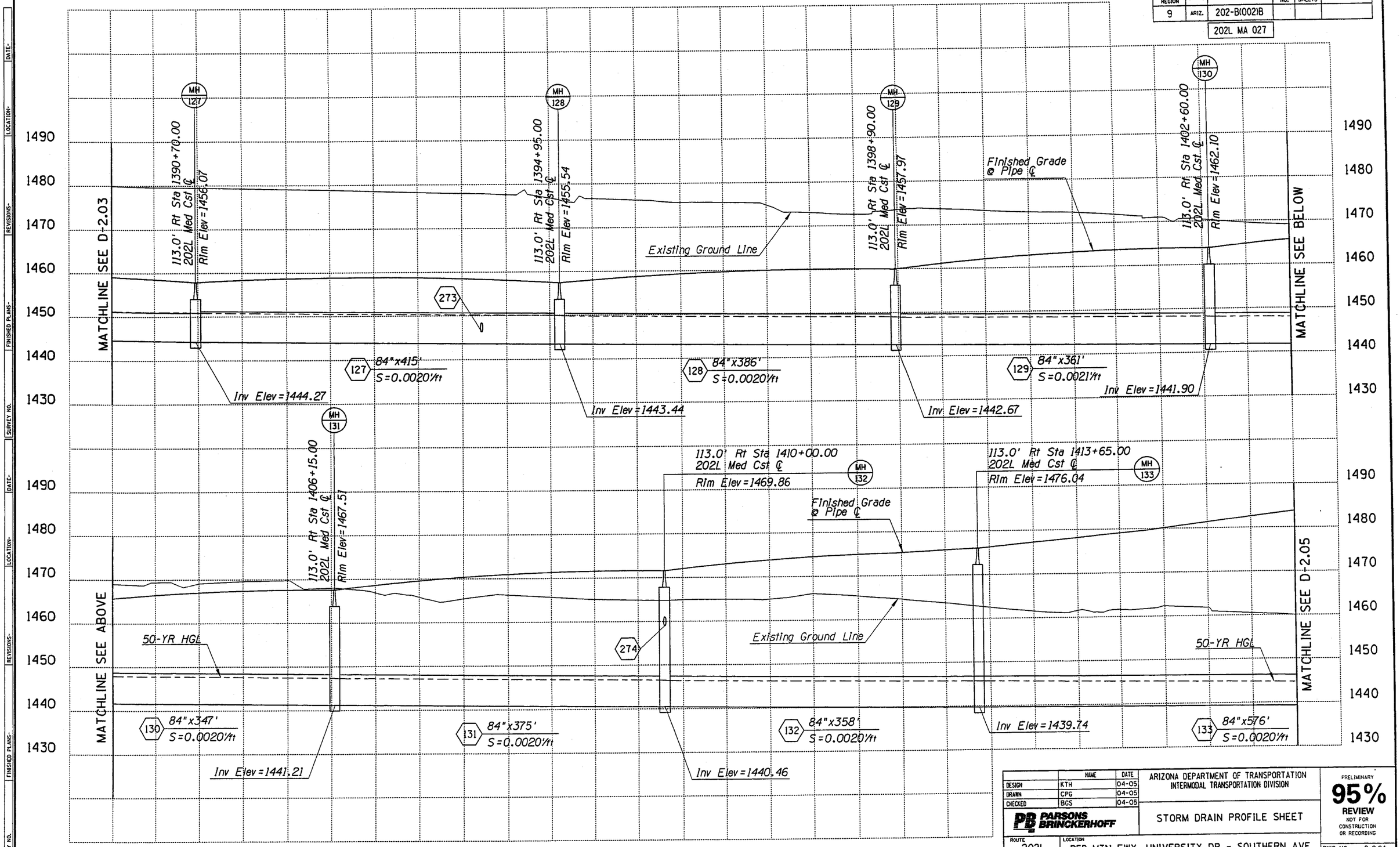

	NAME	DATE
DESIGN	KTH	04-05
DRAWN	CPG	04-05
CHECKED	BGS	04-05

PARSONS BRINCKERHOFF

ARIZONA DEPARTMENT OF TRANSPORTATION
INTERMODAL TRANSPORTATION DIVISION

STORM DRAIN PROFILE SHEET

PRELIMINARY 95% REVIEW NOT FOR CONSTRUCTION OR RECORDING

ROUTE 202L

LOCATION RED MTN FWY, UNIVERSITY DR - SOUTHERN AVE

DWG NO. D-2.04

TRACS NO. H 5783 01C

202-B(002)B

___ OF ___

Tue Mar 29 11:18:15 2005

H:\RedMtn-Univ-Southern\Drng\dpr104.dgn

F.H.W.A. REGION	STATE	PROJECT NO.	SHEET NO.	TOTAL SHEETS	AS BUILT
9	ARIZ.	202-B(002)B			
		202L MA 027			

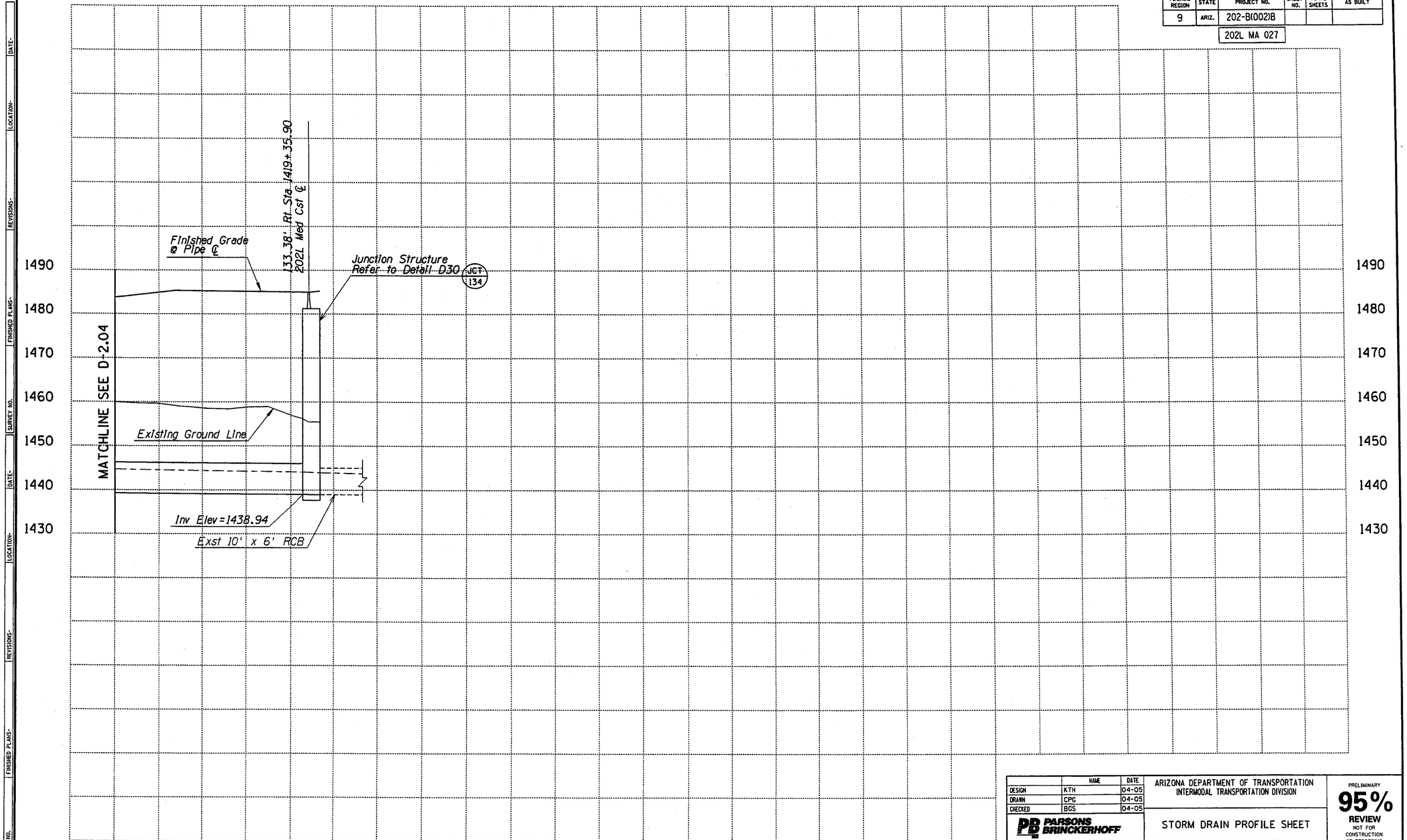

	NAME	DATE
DESIGN	KTH	04-05
DRAWN	CPG	04-05
CHECKED	BGS	04-05

PARSONS BRINCKERHOFF

ARIZONA DEPARTMENT OF TRANSPORTATION
INTERMODAL TRANSPORTATION DIVISION

STORM DRAIN PROFILE SHEET

PRELIMINARY
95%
REVIEW
NOT FOR CONSTRUCTION OR RECORDING

ROUTE: 202L
LOCATION: RED MTN FWY, UNIVERSITY DR - SOUTHERN AVE

DWG NO. D-2.05

TRACS NO. H 5783 01C

202-B(002)B

___ OF ___

DATE- | LOCATION- | REVISIONS- | FINISHED PLANS- | SURVEY NO.

Tue Mar 29 11:18:31 2005 H:\RedMtn-Univ-Southern\Drng\dpr105.dgn

F.H.W.A. REGION	STATE	PROJECT NO.	SHEET NO.	TOTAL SHEETS	AS BUILT
9	ARIZ.	202-B(002)B			

202L MA 027

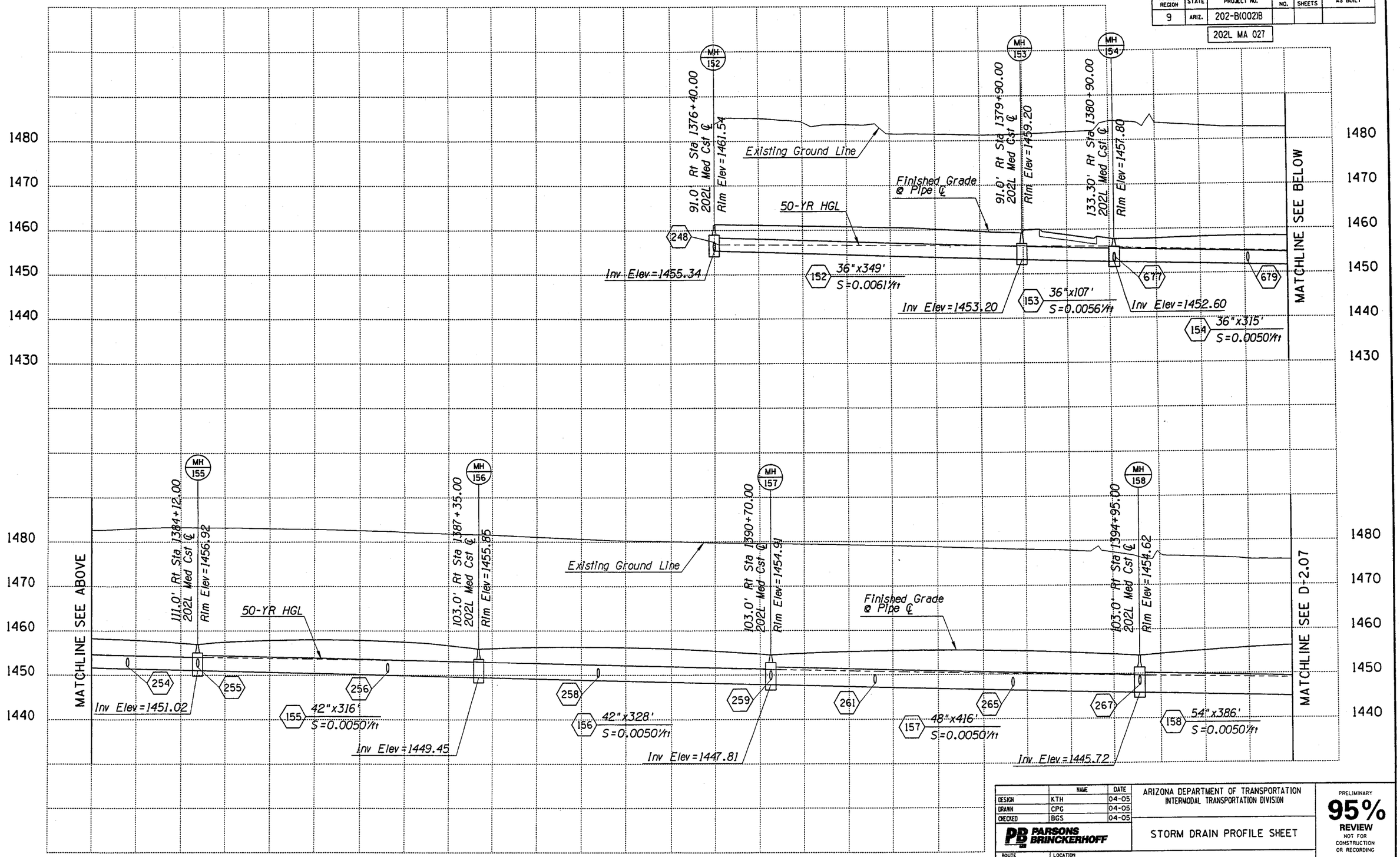

	NAME	DATE
DESIGN	KTH	04-05
DRAWN	CPG	04-05
CHECKED	BGS	04-05

PARSONS BRINCKERHOFF

ARIZONA DEPARTMENT OF TRANSPORTATION
INTERMODAL TRANSPORTATION DIVISION

STORM DRAIN PROFILE SHEET

PRELIMINARY 95% REVIEW NOT FOR CONSTRUCTION OR RECORDING

ROUTE 202L | LOCATION RED MTN FWY, UNIVERSITY DR - SOUTHERN AVE

DWG NO. D-2.06

TRACS NO. H 5783 01C | 202-B(002)B | ___ OF ___

DATE- | LOCATION- | REVISIONS- | FINISHED PLANS- | SURVEY NO.

Tue Mar 29 11:18:44 2005 H:\RedMtn-Univ-Southern\Drng\dpr106.dgn

F.H.W.A. REGION	STATE	PROJECT NO.	SHEET NO.	TOTAL SHEETS	AS BUILT
9	ARIZ.	202-B(002)B			

202L MA 027

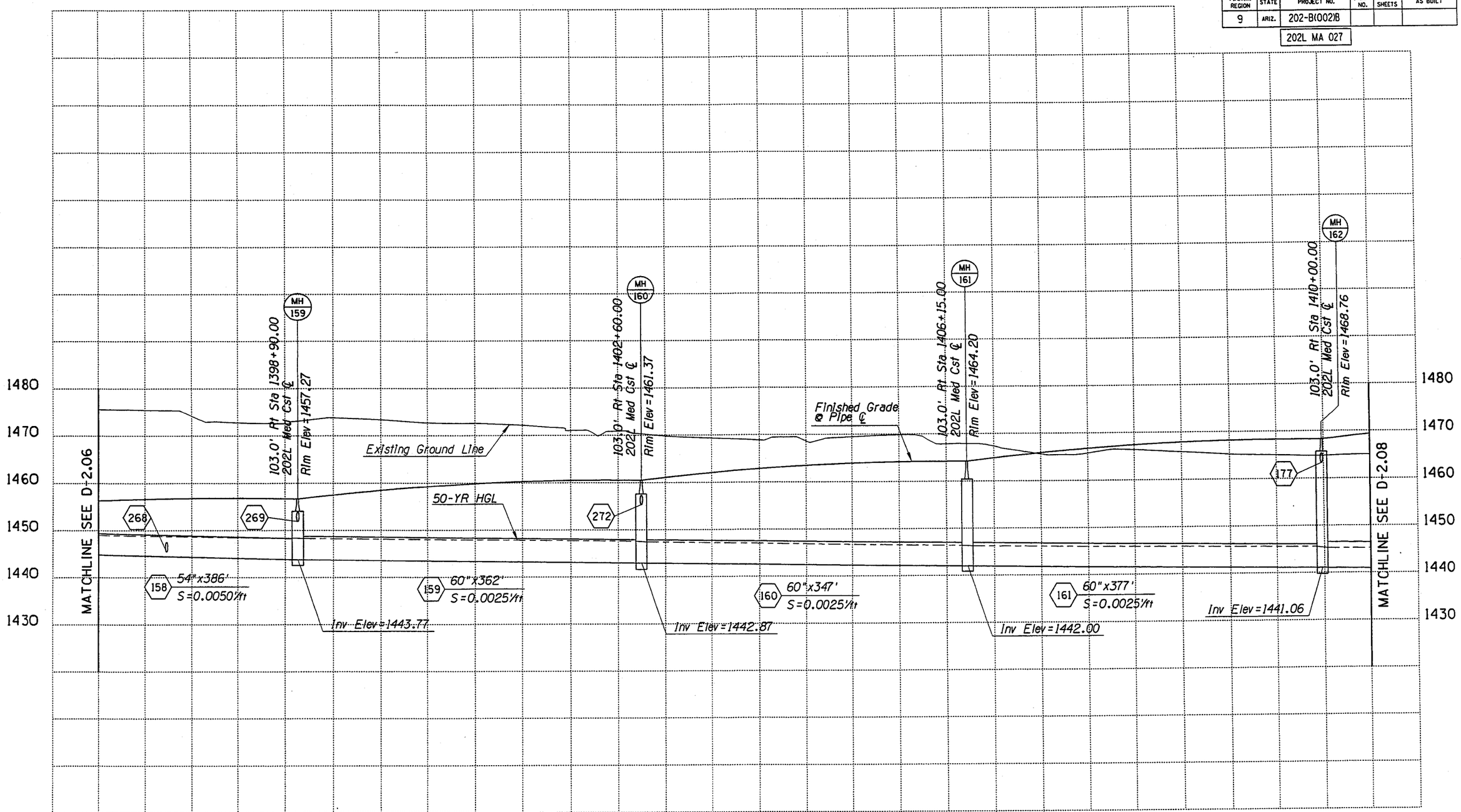

	NAME	DATE
DESIGN	KTH	04-05
DRAWN	CPG	04-05
CHECKED	BGS	04-05

PARSONS BRINCKERHOFF

ARIZONA DEPARTMENT OF TRANSPORTATION
INTERMODAL TRANSPORTATION DIVISION

STORM DRAIN PROFILE SHEET

PRELIMINARY
95%
REVIEW
NOT FOR CONSTRUCTION OR RECORDING

ROUTE 202L
LOCATION RED MTN FWY, UNIVERSITY DR - SOUTHERN AVE

DWG NO. D-2.07

TRACS NO. H 5783 01C

202-B(002)B

___ OF ___

SURVEY NO. | FINISHED PLANS- | REVISIONS- | LOCATION- | DATE-

Tue Mar 29 11:19:00 2005 H:\RedMtn-Univ-Southern\Drng\dpr107.dgn

F.H.W.A. REGION	STATE	PROJECT NO.	SHEET NO.	TOTAL SHEETS	AS BUILT
9	ARIZ.	202-B(002)B			

202L MA 027

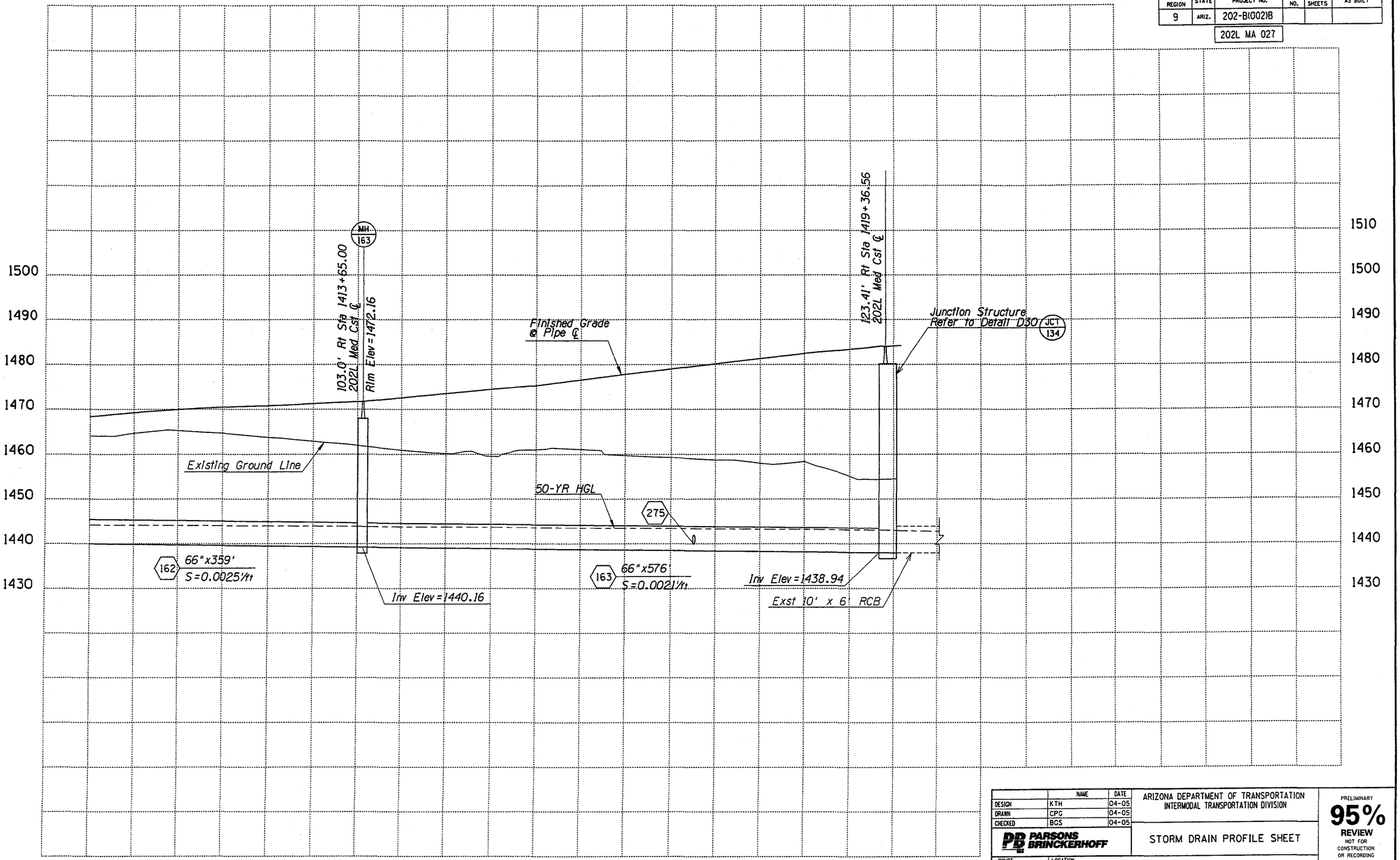

	NAME	DATE
DESIGN	KTH	04-05
DRAWN	CPC	04-05
CHECKED	BGS	04-05

PARSONS BRINCKERHOFF

ARIZONA DEPARTMENT OF TRANSPORTATION
INTERMODAL TRANSPORTATION DIVISION

STORM DRAIN PROFILE SHEET

PRELIMINARY
95%
REVIEW
NOT FOR CONSTRUCTION OR RECORDING

ROUTE 202L | LOCATION RED MTN FWY, UNIVERSITY DR - SOUTHERN AVE | DWG NO. D-2.08

TRACS NO. H 5783 01C | 202-B(002)B | ___ OF ___

Tue Mar 29 11:19:13 2005 H:\RedMtn-Univ-Southern\Drng\dpr108.dgn

F.H.W.A. REGION	STATE	PROJECT NO.	SHEET NO.	TOTAL SHEETS	AS BUILT
9	ARIZ.	202-B(002)B			

202L MA 027

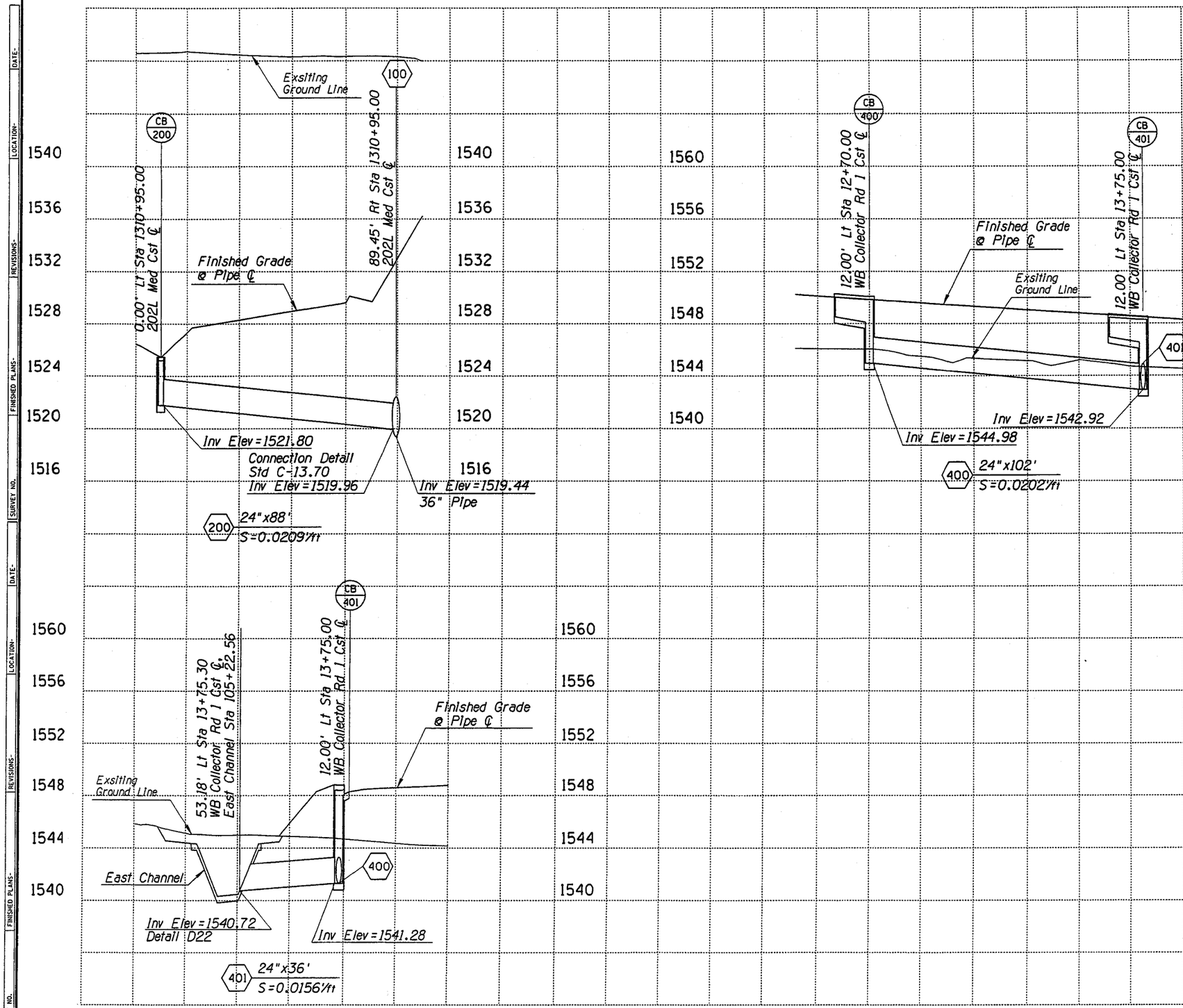

	NAME	DATE
DESIGN	KTH	04-05
DRAWN	CPG	04-05
CHECKED	BGS	04-05

PARSONS BRINCKERHOFF

ARIZONA DEPARTMENT OF TRANSPORTATION
INTERMODAL TRANSPORTATION DIVISION

STORM DRAIN PROFILE SHEET

PRELIMINARY 95% REVIEW NOT FOR CONSTRUCTION OR RECORDING

ROUTE 202L

LOCATION RED MTN FWY, UNIVERSITY DR - SOUTHERN AVE

DWG NO. D-2.09

TRACS NO. H 5783 01C

202-B(002)B

___ OF ___

Tue Mar 29 11:14:42 2005 H:\RedMtn-Univ-Southern\Drng\dpr01.dgn

F.H.W.A. REGION	STATE	PROJECT NO.	SHEET NO.	TOTAL SHEETS	AS BUILT
9	ARIZ.	202-B(002)B			

202L MA 027

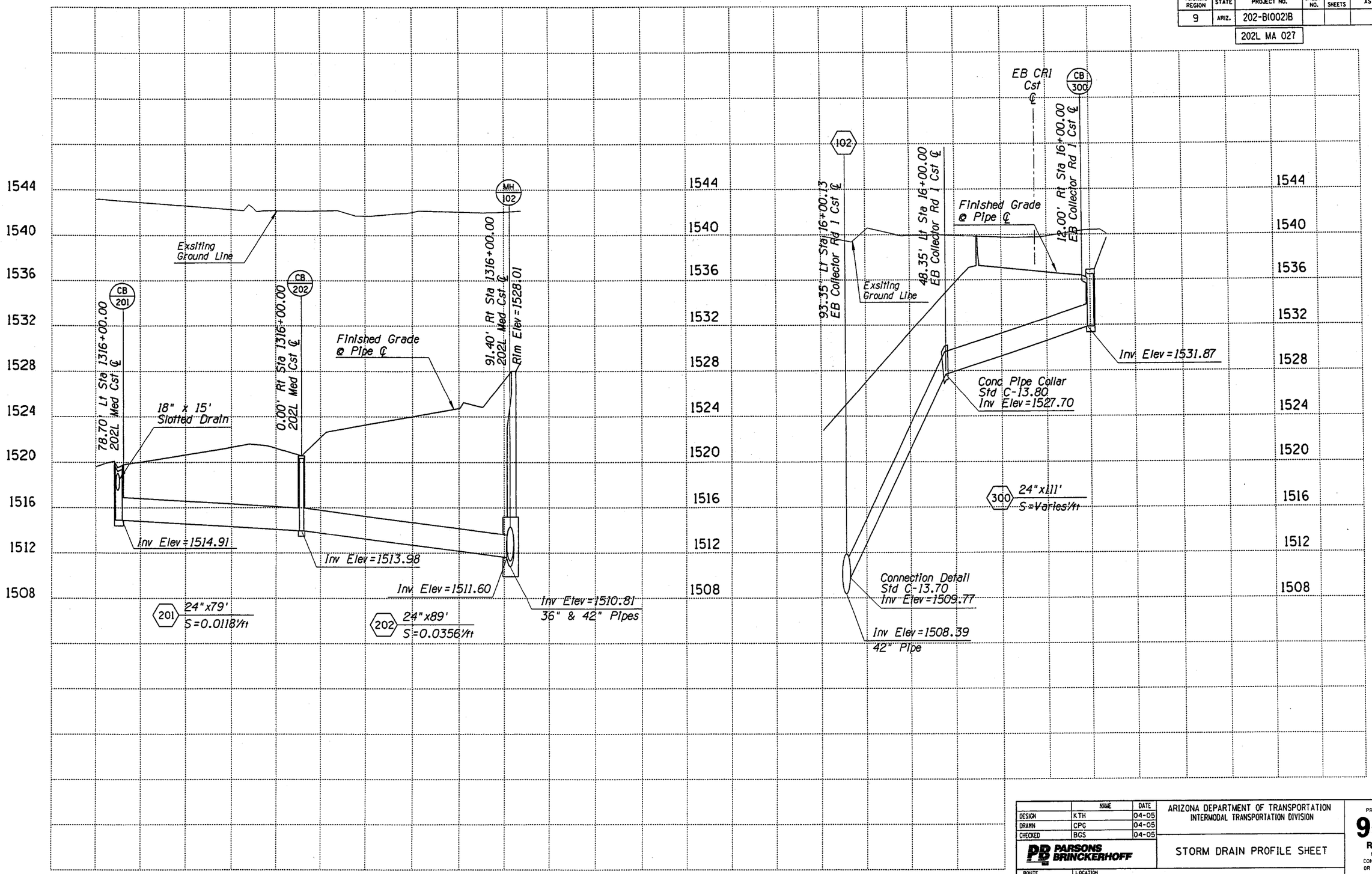

	NAME	DATE
DESIGN	KTH	04-05
DRAWN	CPG	04-05
CHECKED	BGS	04-05

PARSONS BRINCKERHOFF

ARIZONA DEPARTMENT OF TRANSPORTATION
INTERMODAL TRANSPORTATION DIVISION

STORM DRAIN PROFILE SHEET

PRELIMINARY
95%
REVIEW
NOT FOR CONSTRUCTION OR RECORDING

ROUTE: 202L
LOCATION: RED MTN FWY, UNIVERSITY DR - SOUTHERN AVE

DWG NO. D-2.10

TRACS NO. H 5783 01C

202-B(002)B

___ OF ___

SURVEY NO. | FINISHED PLANS- | REVISIONS- | LOCATION- | DATE-

Tue Mar 29 11:14:59 2005 H:\RedMtn-Univ-Southern\Drng\dpr02.dgn

F.H.W.A. REGION	STATE	PROJECT NO.	SHEET NO.	TOTAL SHEETS	AS BUILT
9	ARIZ.	202-B(002)B			

202L MA 027

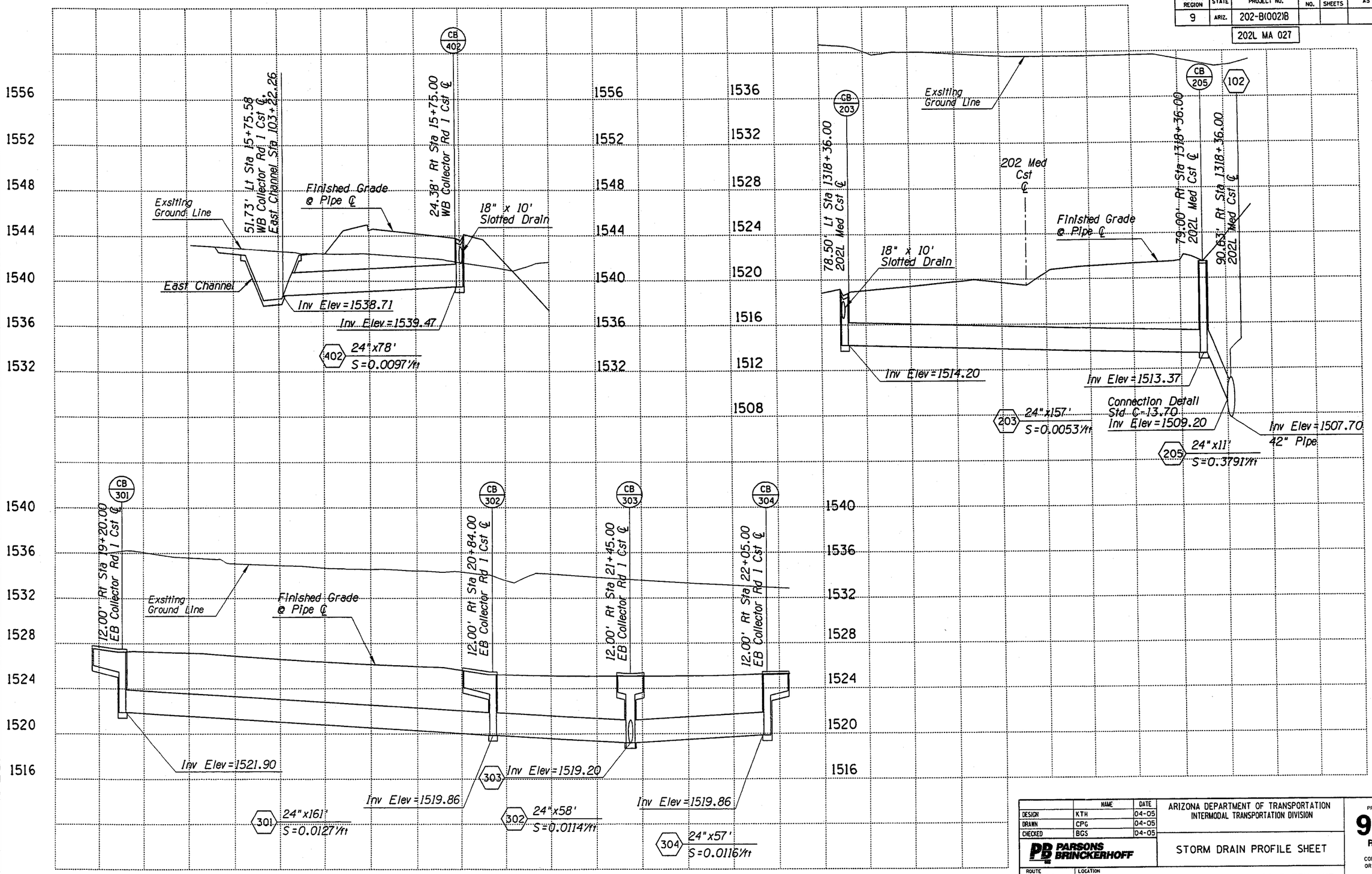

	NAME	DATE
DESIGN	KTH	04-05
DRAWN	CPG	04-05
CHECKED	BGS	04-05

PARSONS BRINCKERHOFF

ARIZONA DEPARTMENT OF TRANSPORTATION
INTERMODAL TRANSPORTATION DIVISION

STORM DRAIN PROFILE SHEET

PRELIMINARY 95% REVIEW NOT FOR CONSTRUCTION OR RECORDING

ROUTE 202L | LOCATION RED MTN FWY. UNIVERSITY DR - SOUTHERN AVE

DWG NO. D-2.11

TRACS NO. H 5783 01C | 202-B(002)B | ___ OF ___

Tue Mar 29 11:15:14 2005 H:\RedMtn-Univ-Southern\Drng\dpr03.dgn

F.H.W.A. REGION	STATE	PROJECT NO.	SHEET NO.	TOTAL SHEETS	AS BUILT
9	ARIZ.	202-B(002)B			

202L MA 027

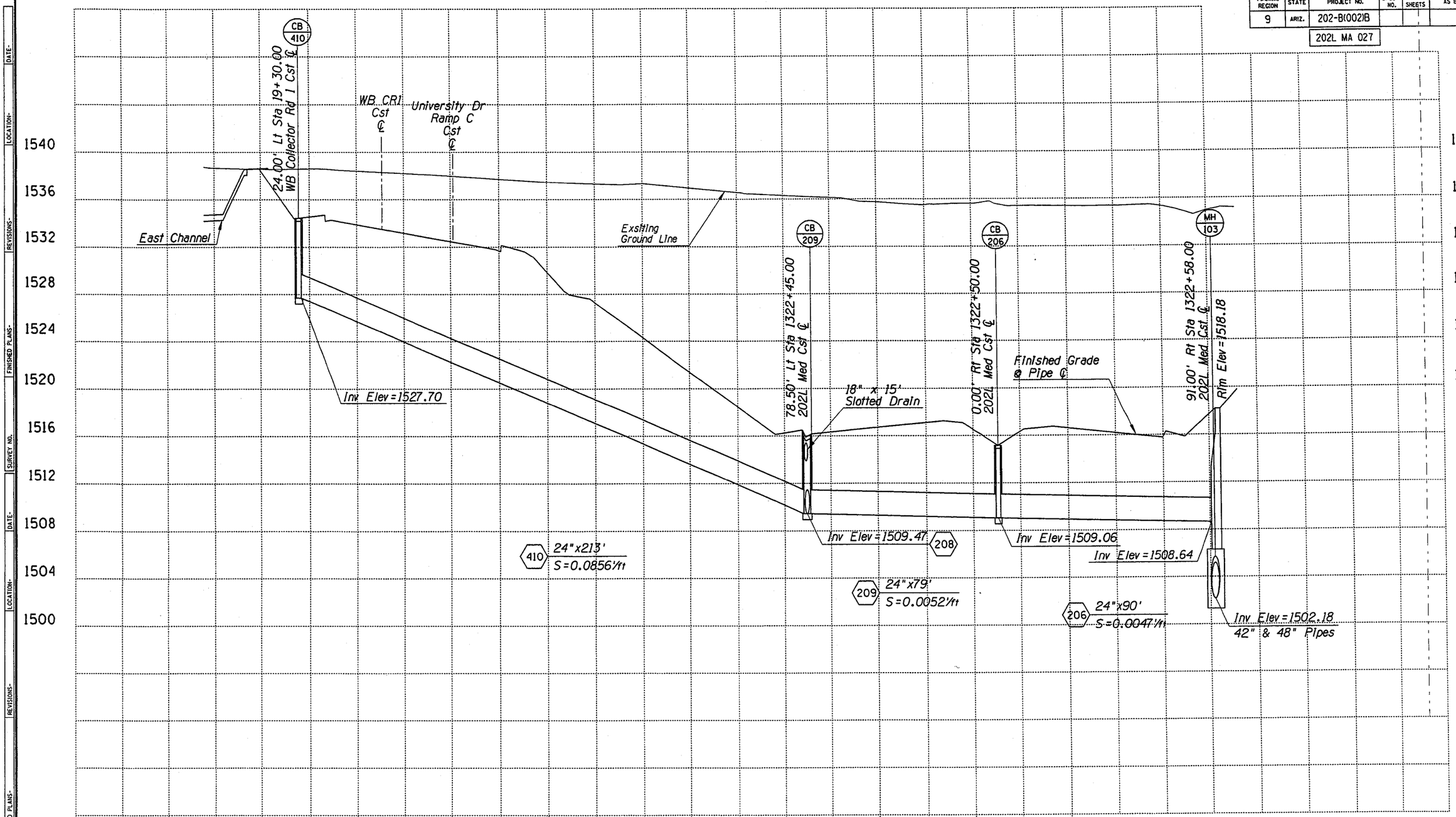

	NAME	DATE
DESIGN	KTH	04-05
DRAWN	CPG	04-05
CHECKED	BGS	04-05

PARSONS BRINCKERHOFF

ARIZONA DEPARTMENT OF TRANSPORTATION
INTERMODAL TRANSPORTATION DIVISION

STORM DRAIN PROFILE SHEET

PRELIMINARY
95%
REVIEW
NOT FOR CONSTRUCTION OR RECORDING

ROUTE: 202L
LOCATION: RED MTN FWY, UNIVERSITY DR - SOUTHERN AVE
DWG NO. D-2.12

TRACS NO. H 5783 01C
202-B(002)B
___ OF ___

Tue Mar 29 11:15:31 2005
H:\RedMtn-Univ-Southern\Drng\dpr04.dgn

F.H.W.A. REGION	STATE	PROJECT NO.	SHEET NO.	TOTAL SHEETS	AS BUILT
9	ARIZ.	202-B(002)B			
		202L MA 027			

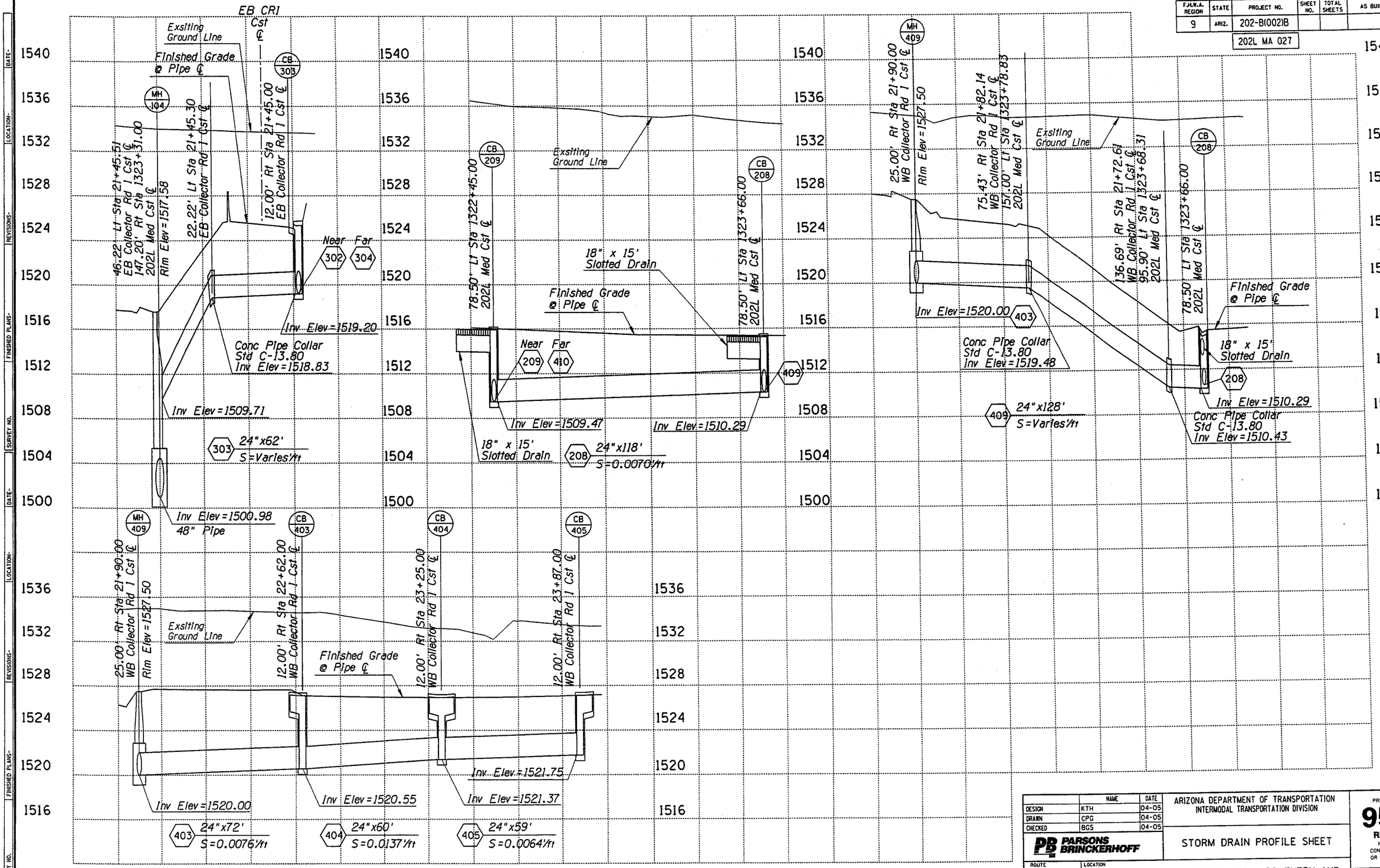

	NAME	DATE
DESIGN	KTH	04-05
DRAWN	CPG	04-05
CHECKED	BGS	04-05

PARSONS BRINCKERHOFF

ARIZONA DEPARTMENT OF TRANSPORTATION
INTERMODAL TRANSPORTATION DIVISION

STORM DRAIN PROFILE SHEET

PRELIMINARY
95%
REVIEW
NOT FOR CONSTRUCTION OR RECORDING

ROUTE 202L | LOCATION RED MTN FWY, UNIVERSITY DR - SOUTHERN AVE

DWG NO. D-2.13

TRACS NO. H 5783 01C | 202-B(002)B | ___ OF ___

Tue Mar 29 11:15:44 2005 H:\RedMtn-Univ-Southern\Drng\dpr05.dgn

F.H.W.A. REGION	STATE	PROJECT NO.	SHEET NO.	TOTAL SHEETS	AS BUILT
9	ARIZ.	202-B(002)B			

202L MA 027

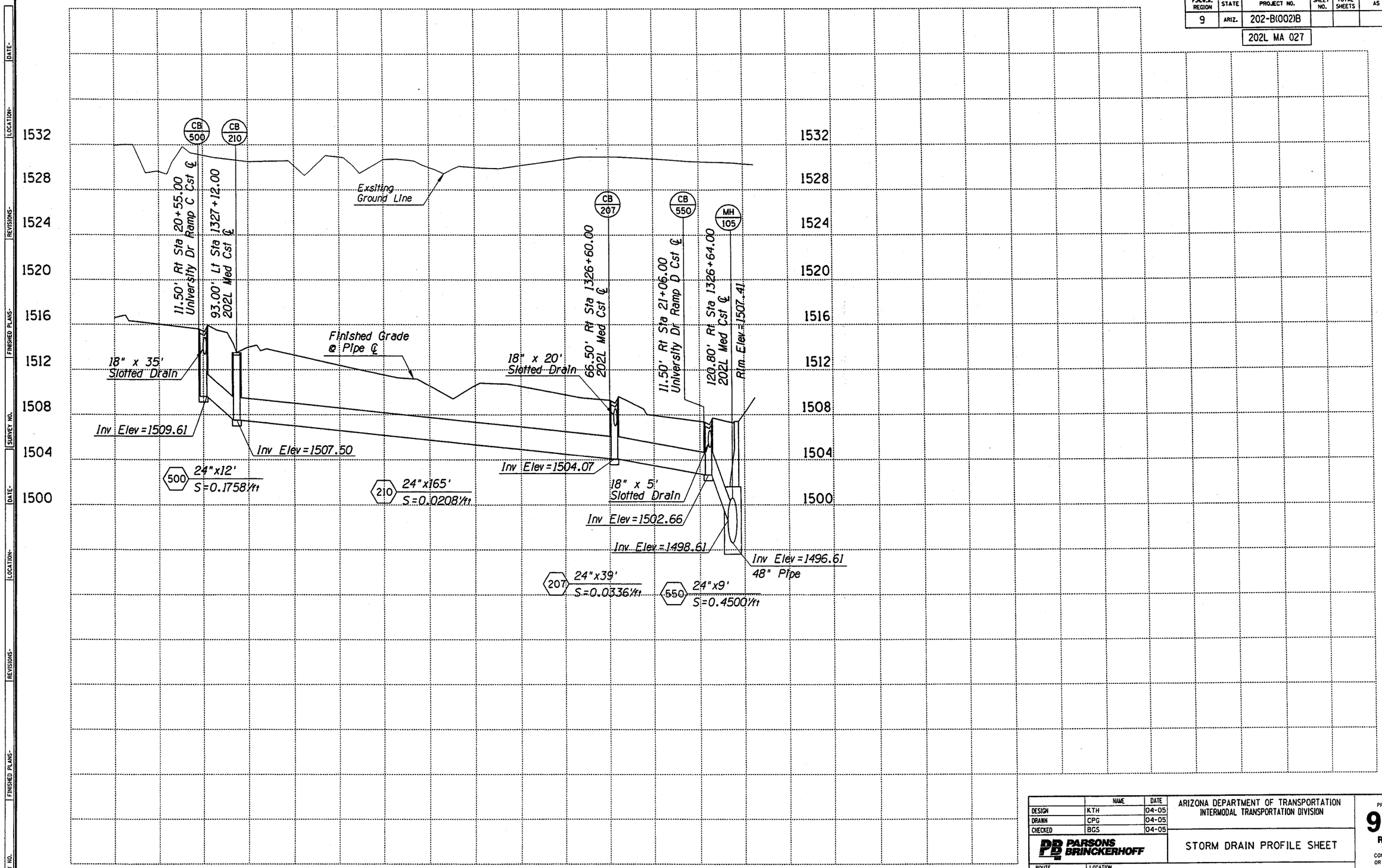

	NAME	DATE
DESIGN	KTH	04-05
DRAWN	CPG	04-05
CHECKED	BGS	04-05

PARSONS BRINCKERHOFF

ARIZONA DEPARTMENT OF TRANSPORTATION
INTERMODAL TRANSPORTATION DIVISION

STORM DRAIN PROFILE SHEET

PRELIMINARY 95% REVIEW NOT FOR CONSTRUCTION OR RECORDING

ROUTE 202L | LOCATION RED MTN FWY, UNIVERSITY DR - SOUTHERN AVE

DWG NO. D-2.14

TRACS NO. H 5783 01C | 202-B(002)B | ___ OF ___

Tue Mar 29 11:16:05 2005 H:\RedMtn-Univ-Southern\Drng\dpr06.dgn

F.H.W.A. REGION	STATE	PROJECT NO.	SHEET NO.	TOTAL SHEETS	AS BUILT
9	ARIZ.	202-B(002)B			
		202L MA 027			

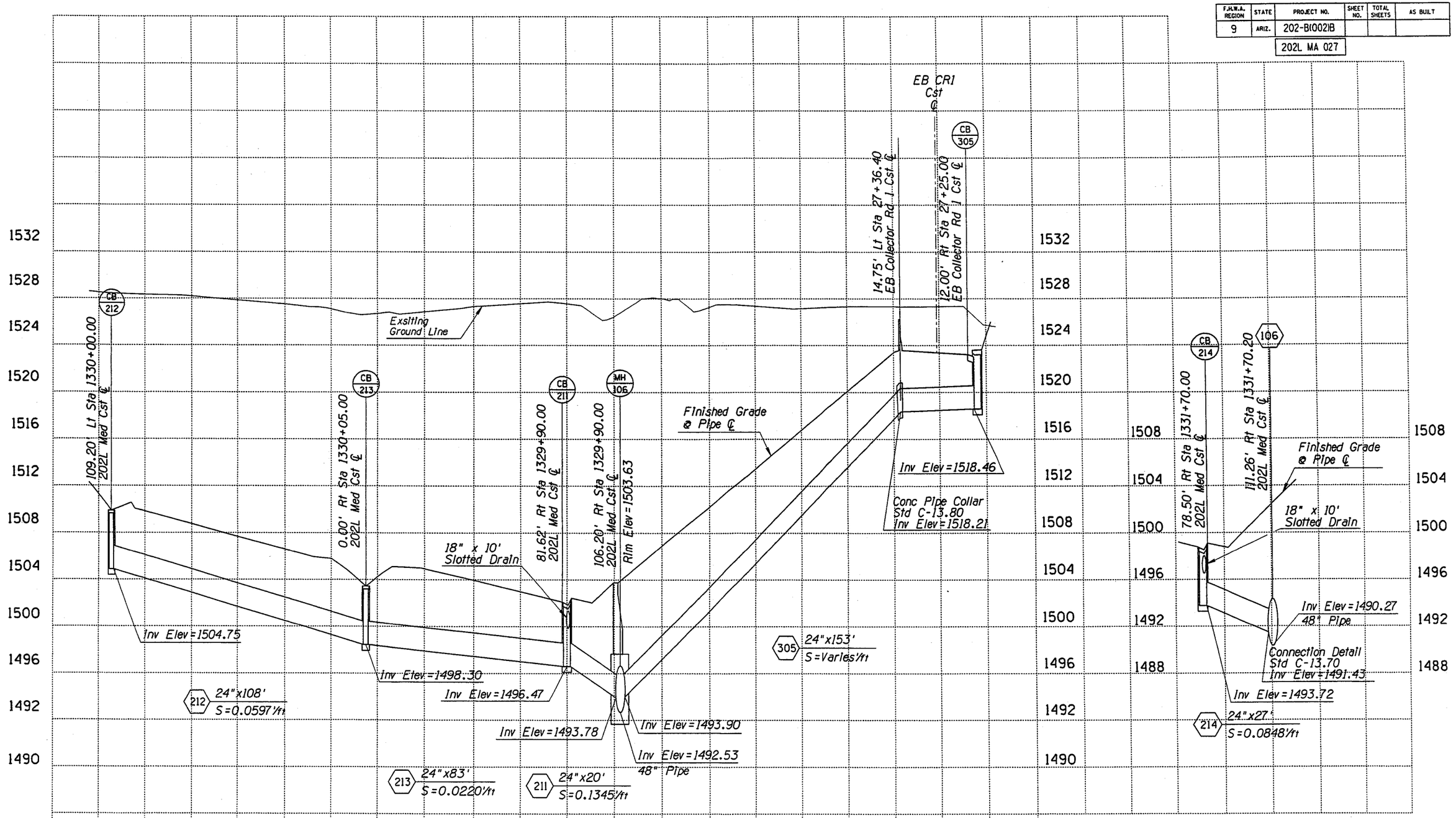

	NAME	DATE
DESIGN	KTH	04-05
DRAWN	CPG	04-05
CHECKED	BGS	04-05

PARSONS BRINCKERHOFF

ARIZONA DEPARTMENT OF TRANSPORTATION
INTERMODAL TRANSPORTATION DIVISION

STORM DRAIN PROFILE SHEET

PRELIMINARY 95% REVIEW NOT FOR CONSTRUCTION OR RECORDING

ROUTE 202L | LOCATION RED MTN FWY, UNIVERSITY DR - SOUTHERN AVE | DWG NO. D-2.15

TRACS NO. H 5783 01C | 202-B(002)B | ___ OF ___

Tue Mar 29 11:16:18 2005 H:\RedMtn-Univ-Southern\Drng\dpr07.dgn

F.H.W.A. REGION	STATE	PROJECT NO.	SHEET NO.	TOTAL SHEETS	AS BUILT
9	ARIZ.	202-B(002)B			

202L MA 027

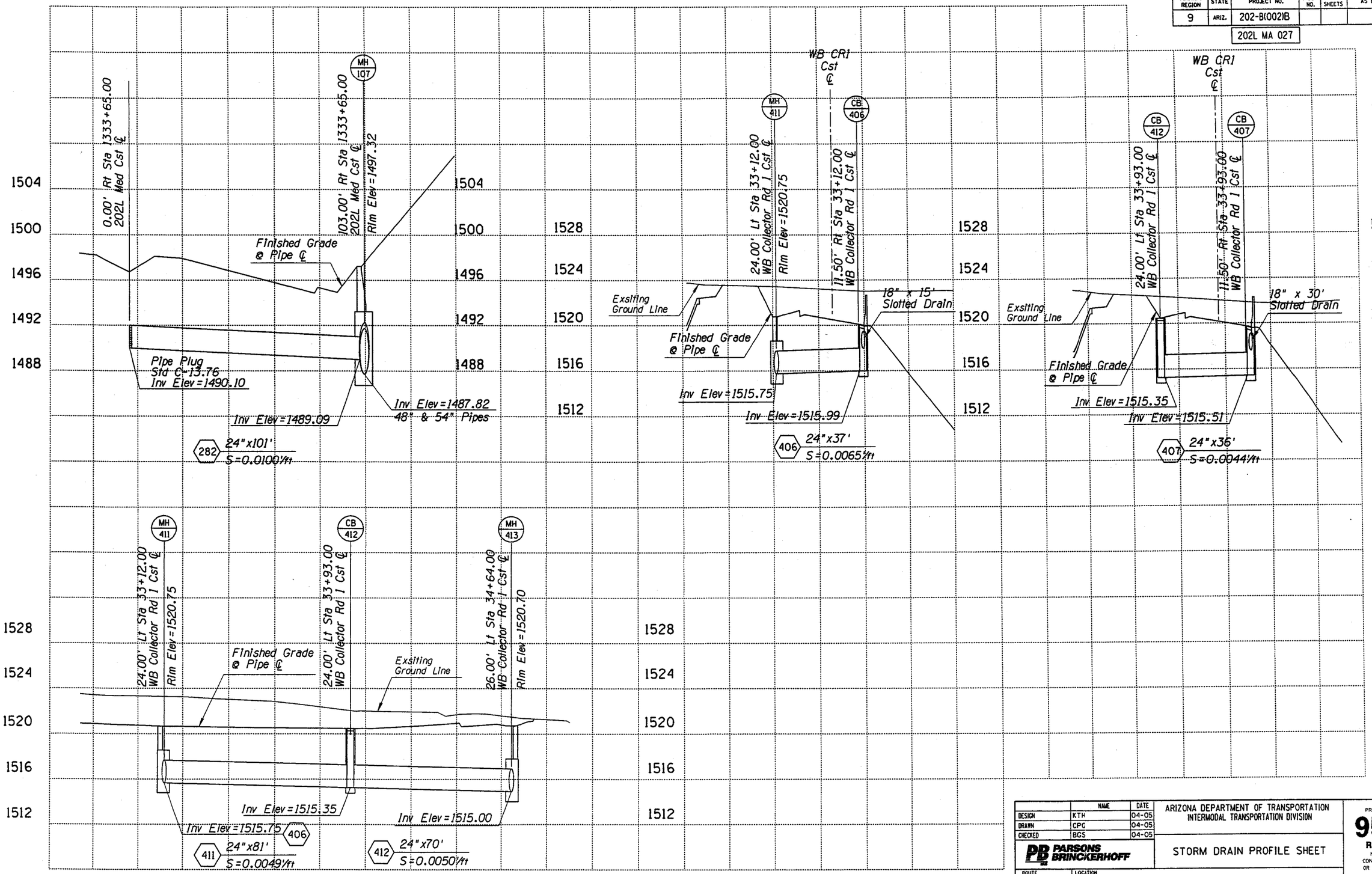

	NAME	DATE
DESIGN	KTH	04-05
DRAWN	CPG	04-05
CHECKED	BGS	04-05

PARSONS BRINCKERHOFF

ARIZONA DEPARTMENT OF TRANSPORTATION
INTERMODAL TRANSPORTATION DIVISION

STORM DRAIN PROFILE SHEET

PRELIMINARY 95% REVIEW NOT FOR CONSTRUCTION OR RECORDING

ROUTE 202L | LOCATION RED MTN FWY, UNIVERSITY DR - SOUTHERN AVE

DWG NO. D-2.16

TRACS NO. H 5783 01C | 202-B(002)B | ___ OF ___

Tue Mar 29 11:16:34 2005 H:\RedMtn-Univ-Southern\Drng\dpr08.dgn

F.H.W.A. REGION	STATE	PROJECT NO.	SHEET NO.	TOTAL SHEETS	AS BUILT
9	ARIZ.	202-B(002)B			
		202L MA 027			

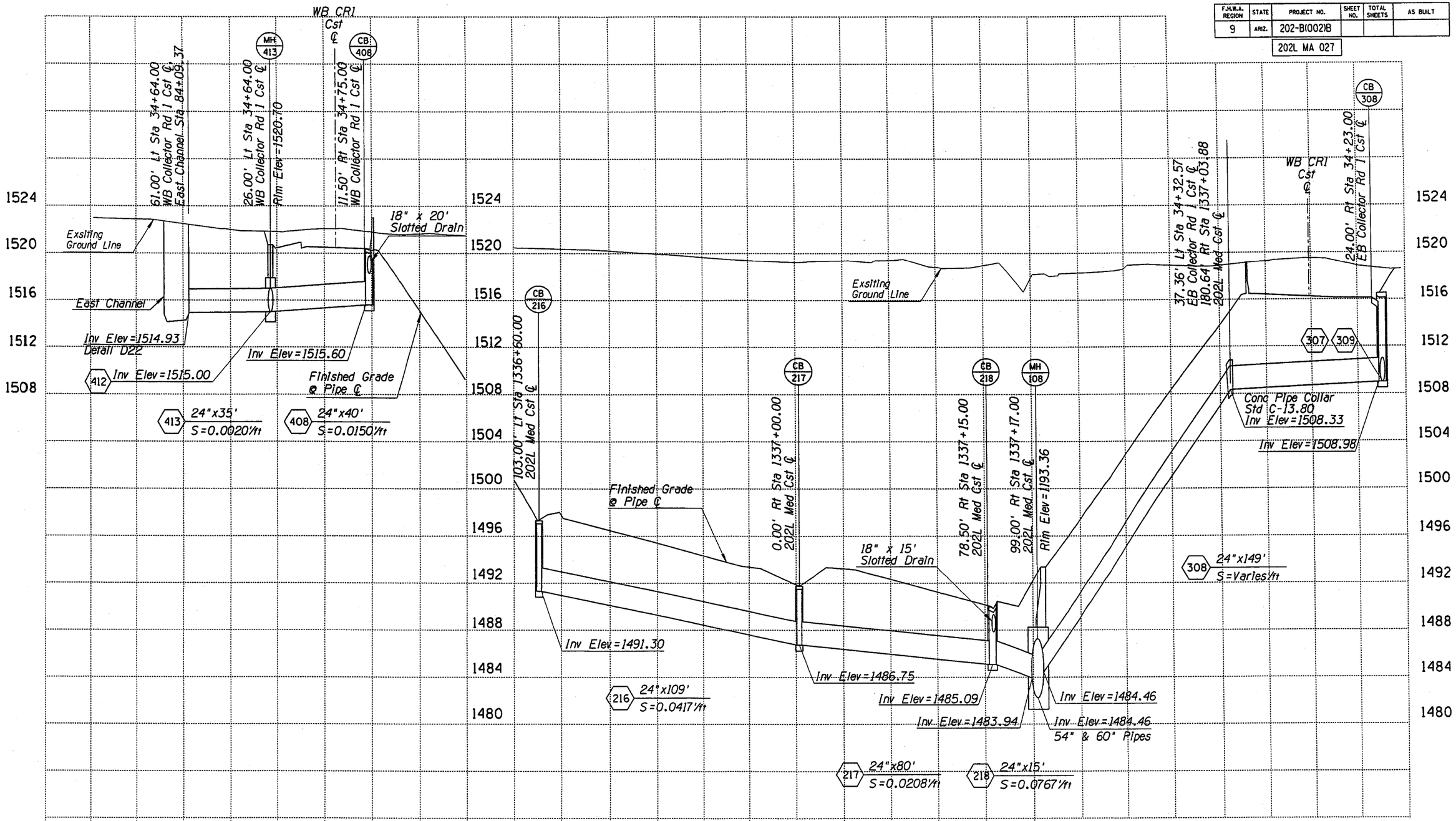

	NAME	DATE
DESIGN	KTH	04-05
DRAWN	CPG	04-05
CHECKED	BGS	04-05

PARSONS BRINCKERHOFF

ARIZONA DEPARTMENT OF TRANSPORTATION
INTERMODAL TRANSPORTATION DIVISION

STORM DRAIN PROFILE SHEET

PRELIMINARY 95% REVIEW NOT FOR CONSTRUCTION OR RECORDING

ROUTE 202L | LOCATION RED MTN FWY, UNIVERSITY DR - SOUTHERN AVE

DWG NO. D-2.17

TRACS NO. H 5783 01C | 202-B(002)B | ___ OF ___

SURVEY NO. | FINISHED PLANS- | REVISIONS- | LOCATION- | DATE-

Tue Mar 29 11:16:54 2005 H:\RedMtn-Univ-Southern\Drng\dpr09.dgn

F.H.W.A. REGION	STATE	PROJECT NO.	SHEET NO.	TOTAL SHEETS	AS BUILT
9	ARIZ.	202-B(002)B			
		202L MA 027			

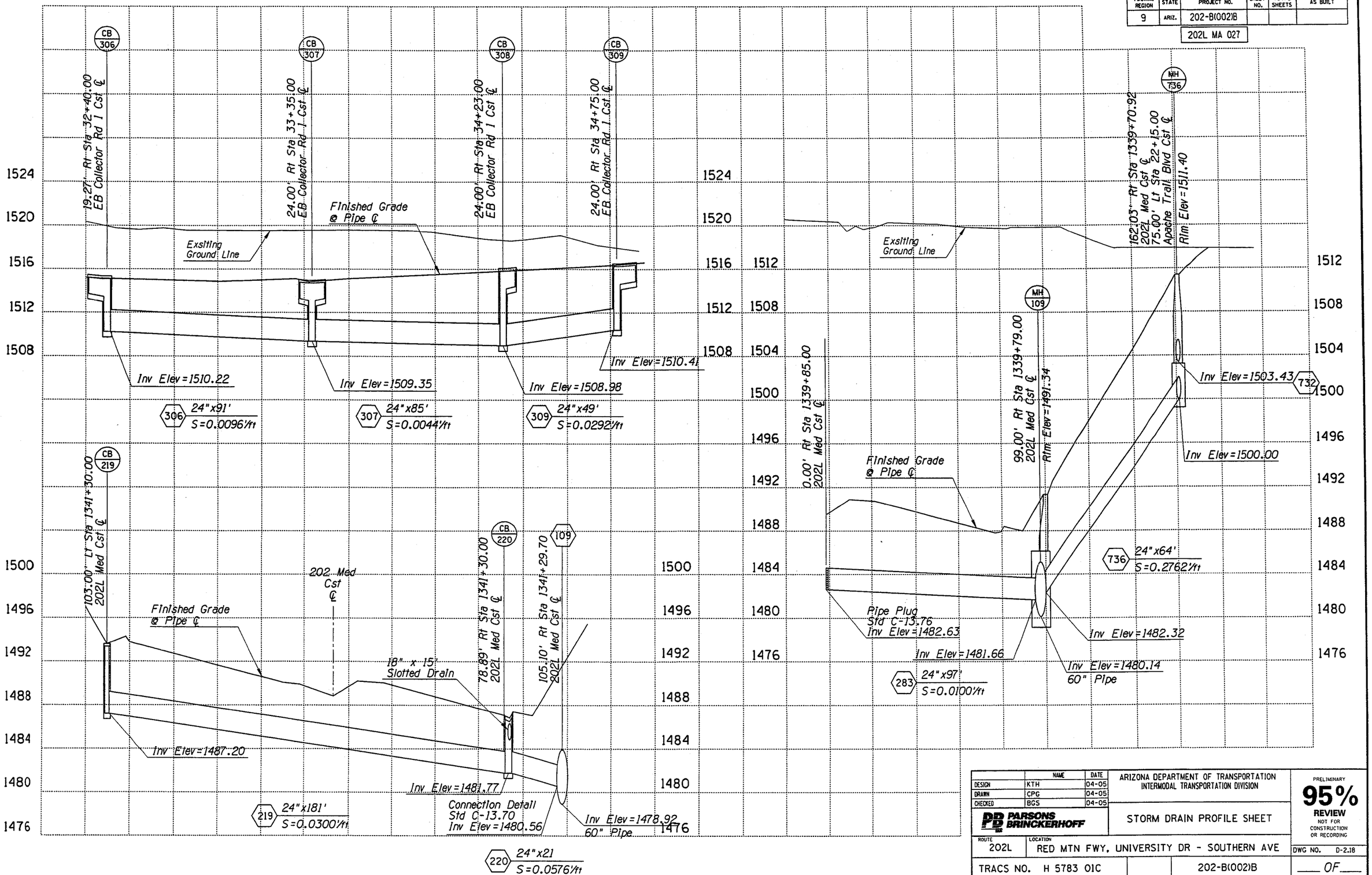

	NAME	DATE
DESIGN	KTH	04-05
DRAWN	CPG	04-05
CHECKED	BGS	04-05

PARSONS BRINCKERHOFF

ARIZONA DEPARTMENT OF TRANSPORTATION
INTERMODAL TRANSPORTATION DIVISION

STORM DRAIN PROFILE SHEET

PRELIMINARY
95%
REVIEW
NOT FOR CONSTRUCTION OR RECORDING

ROUTE 202L
LOCATION RED MTN FWY, UNIVERSITY DR - SOUTHERN AVE

DWG NO. D-2.18

TRACS NO. H 5783 01C

202-B(002)B

___ OF ___

Tue Mar 29 11:17:10 2005

H:\RedMtn-Univ-Southern\Drng\dpr10.dgn

F.H.W.A. REGION	STATE	PROJECT NO.	SHEET NO.	TOTAL SHEETS	AS BUILT
9	ARIZ.	202-B(002)B			

202L MA 027

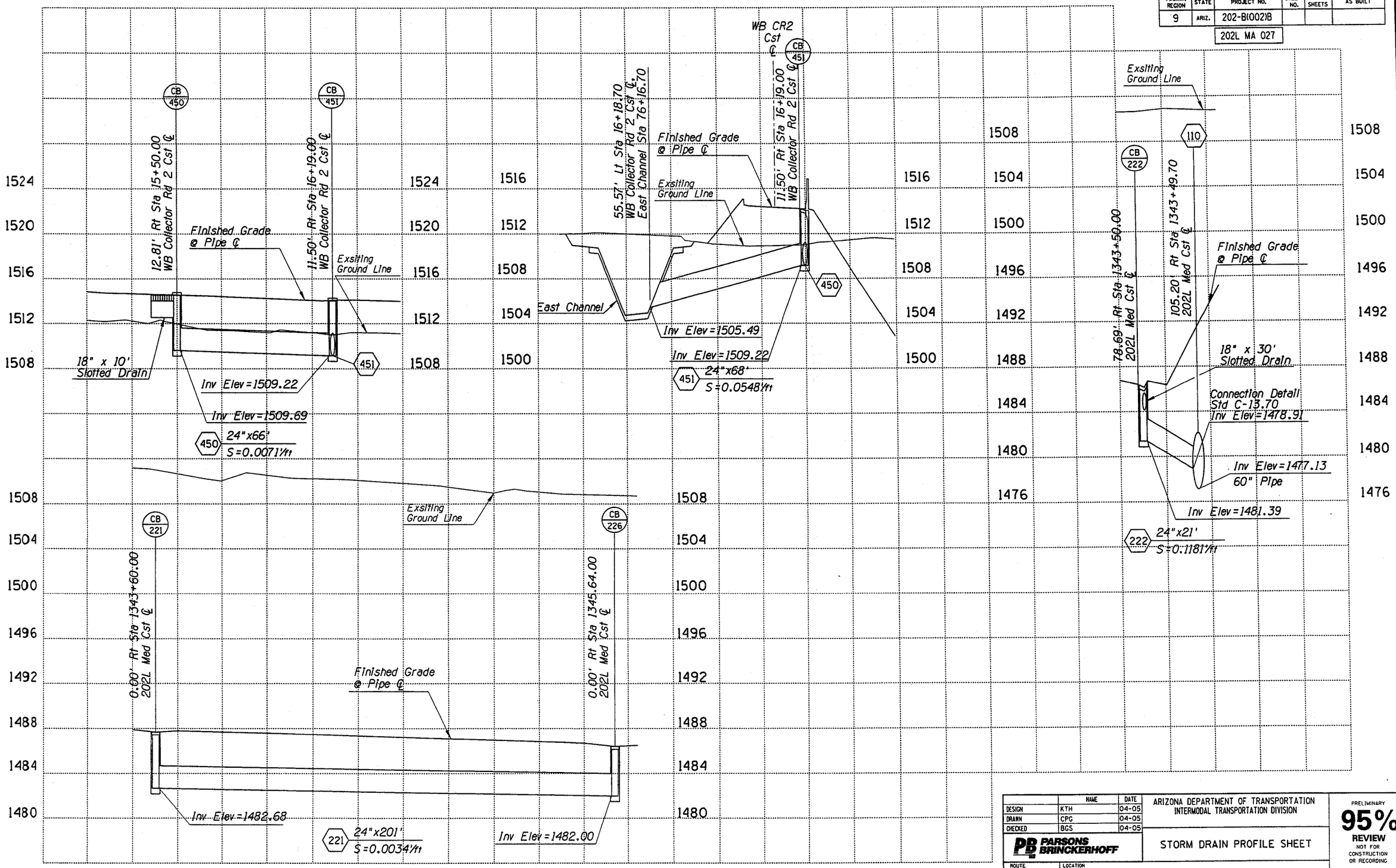

	NAME	DATE
DESIGN	KTH	04-05
DRAWN	CPG	04-05
CHECKED	BGS	04-05

PB PARSONS BRINCKERHOFF

ARIZONA DEPARTMENT OF TRANSPORTATION
INTERMODAL TRANSPORTATION DIVISION

STORM DRAIN PROFILE SHEET

PRELIMINARY 95% REVIEW NOT FOR CONSTRUCTION OR RECORDING

ROUTE 202L | LOCATION RED MTN FWY, UNIVERSITY DR - SOUTHERN AVE

DWG NO. D-2.19

TRACS NO. H 5783 01C | 202-B(002)B | ___ OF ___

SURVEY NO. | FINISHED PLANS- | REVISIONS- | LOCATION- | DATE-

Tue Mar 29 11:19:26 2005 H:\RedMtn-Univ-Southern\Drng\dpr11.dgn

F.H.W.A. REGION	STATE	PROJECT NO.	SHEET NO.	TOTAL SHEETS	AS BUILT
9	ARIZ.	202-B(002)B			

202L MA 027

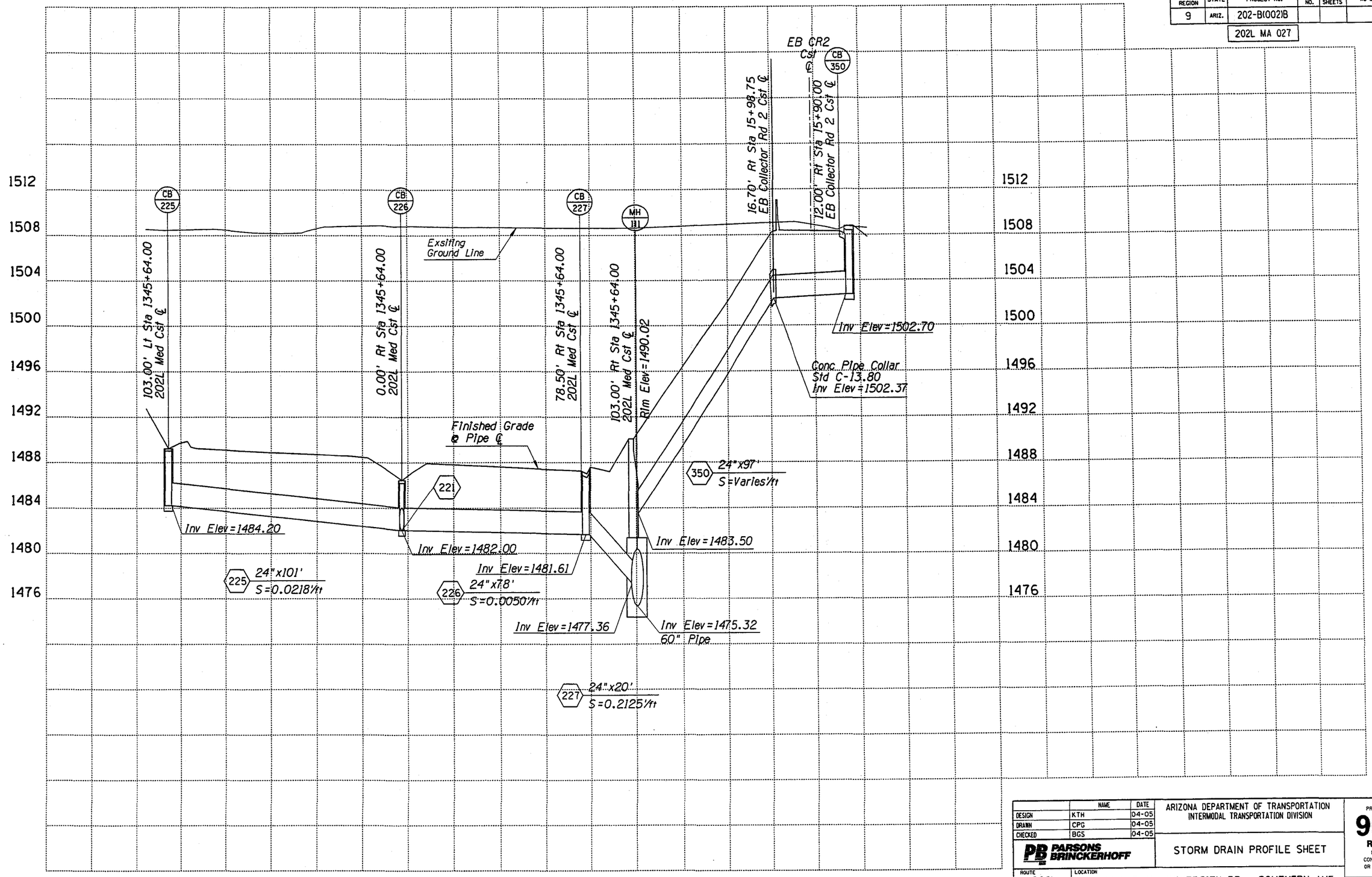

	NAME	DATE
DESIGN	KTH	04-05
DRAWN	CPG	04-05
CHECKED	BGS	04-05

PB PARSONS BRINCKERHOFF

ARIZONA DEPARTMENT OF TRANSPORTATION
INTERMODAL TRANSPORTATION DIVISION

STORM DRAIN PROFILE SHEET

PRELIMINARY 95% REVIEW NOT FOR CONSTRUCTION OR RECORDING

ROUTE 202L | LOCATION RED MTN FWY, UNIVERSITY DR - SOUTHERN AVE

DWG NO. D-2.20

TRACS NO. H 5783 01C | 202-B(002)B | ___ OF ___

SURVEY NO. | FINISHED PLANS- | REVISIONS- | LOCATION- | DATE- | SURVEY NO. | FINISHED PLANS- | REVISIONS- | LOCATION- | DATE-

Tue Mar 29 11:19:46 2005 H:\RedMtn-Univ-Southern\Drng\dpr12.dgn

F.H.W.A. REGION	STATE	PROJECT NO.	SHEET NO.	TOTAL SHEETS	AS BUILT
9	ARIZ.	202-B(002)B			

202L MA 027

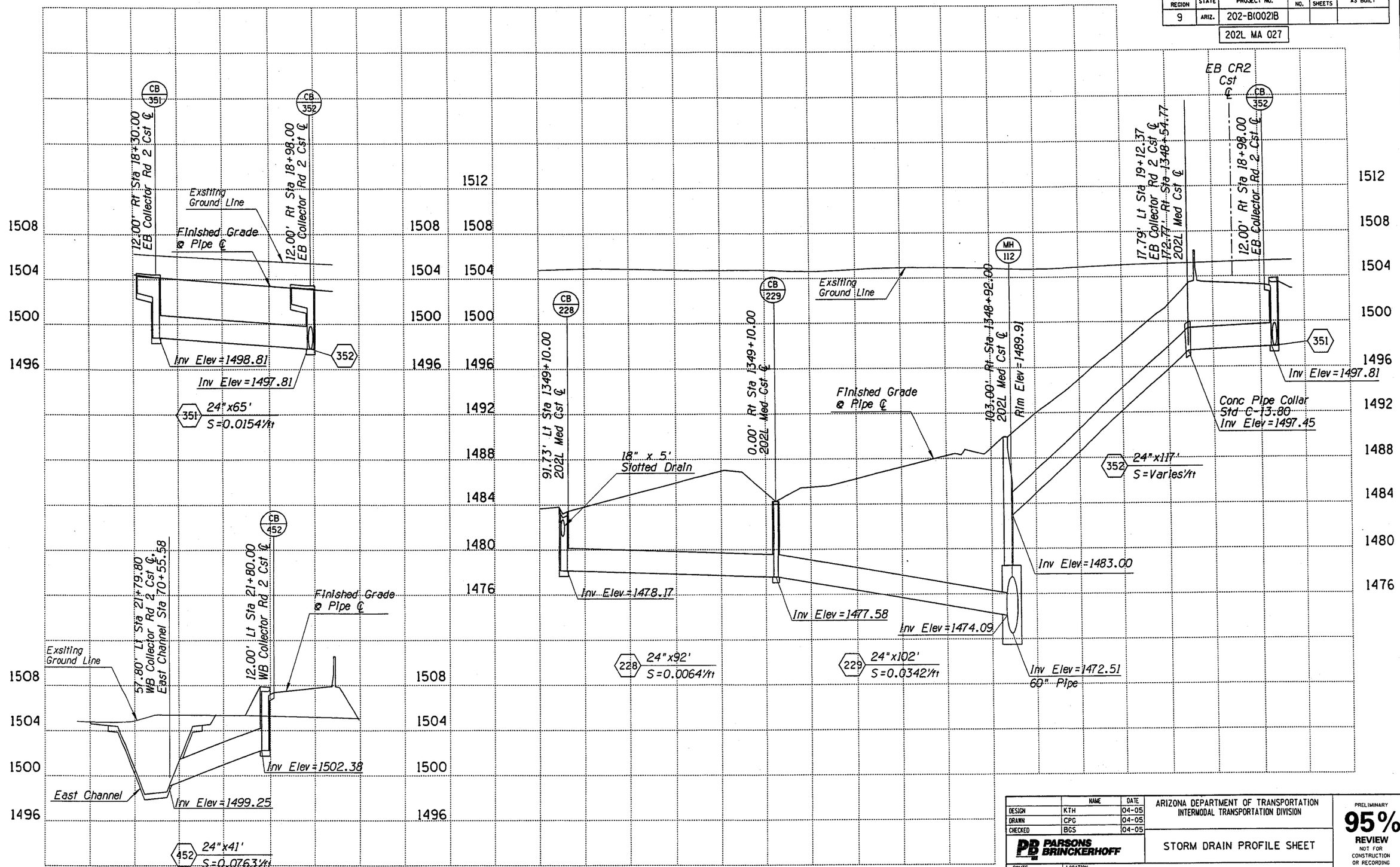

	NAME	DATE
DESIGN	KTH	04-05
DRAWN	CPG	04-05
CHECKED	BGS	04-05

PARSONS BRINCKERHOFF

ARIZONA DEPARTMENT OF TRANSPORTATION
INTERMODAL TRANSPORTATION DIVISION

STORM DRAIN PROFILE SHEET

PRELIMINARY 95% REVIEW
NOT FOR CONSTRUCTION OR RECORDING

ROUTE 202L | LOCATION RED MTN FWY, UNIVERSITY DR - SOUTHERN AVE

DWG NO. D-2.21

TRACS NO. H 5783 01C | 202-B(002)B | ___ OF ___

Tue Mar 29 11:19:59 2005 H:\RedMtn-Univ-Southern\Drng\dpr13.dgn

F.H.W.A. REGION	STATE	PROJECT NO.	SHEET NO.	TOTAL SHEETS	AS BUILT
9	ARIZ.	202-B(002)B			

202L MA 027

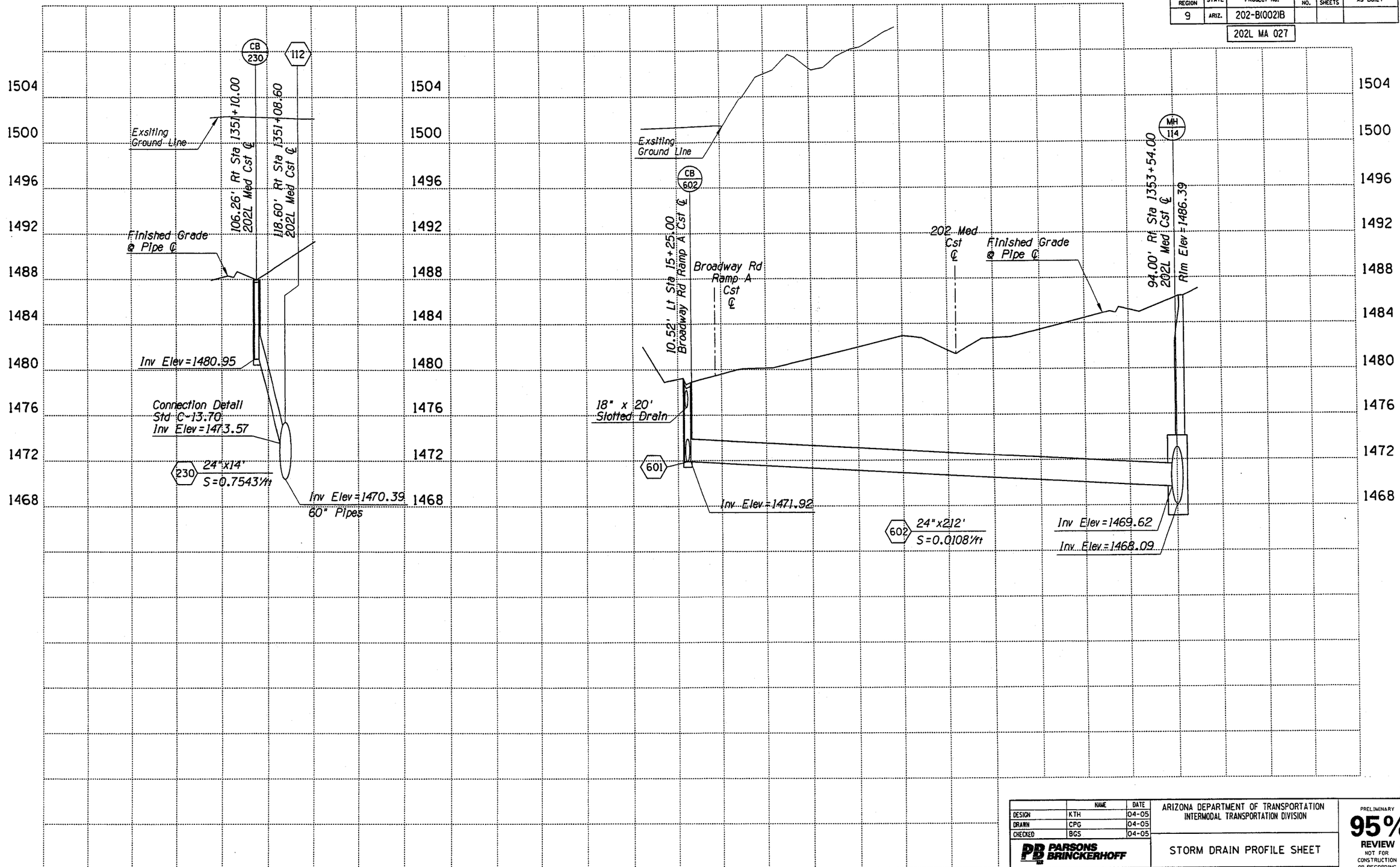

	NAME	DATE
DESIGN	KTH	04-05
DRAWN	CPG	04-05
CHECKED	BGS	04-05

PARSONS BRINCKERHOFF

ARIZONA DEPARTMENT OF TRANSPORTATION
INTERMODAL TRANSPORTATION DIVISION

STORM DRAIN PROFILE SHEET

PRELIMINARY 95% REVIEW NOT FOR CONSTRUCTION OR RECORDING

ROUTE 202L | LOCATION RED MTN FWY, UNIVERSITY DR - SOUTHERN AVE

DWG NO. D-2.22

TRACS NO. H 5783 01C | 202-B(002)B | ___ OF ___

DATE- LOCATION- REVISIONS- FINISHED PLANS- SURVEY NO.

Tue Mar 29 11:20:23 2005 H:\RedMtn-Univ-Southern\Drng\dpr14.dgn

F.H.W.A. REGION	STATE	PROJECT NO.	SHEET NO.	TOTAL SHEETS	AS BUILT
9	ARIZ.	202-B(002)B			

202L MA 027

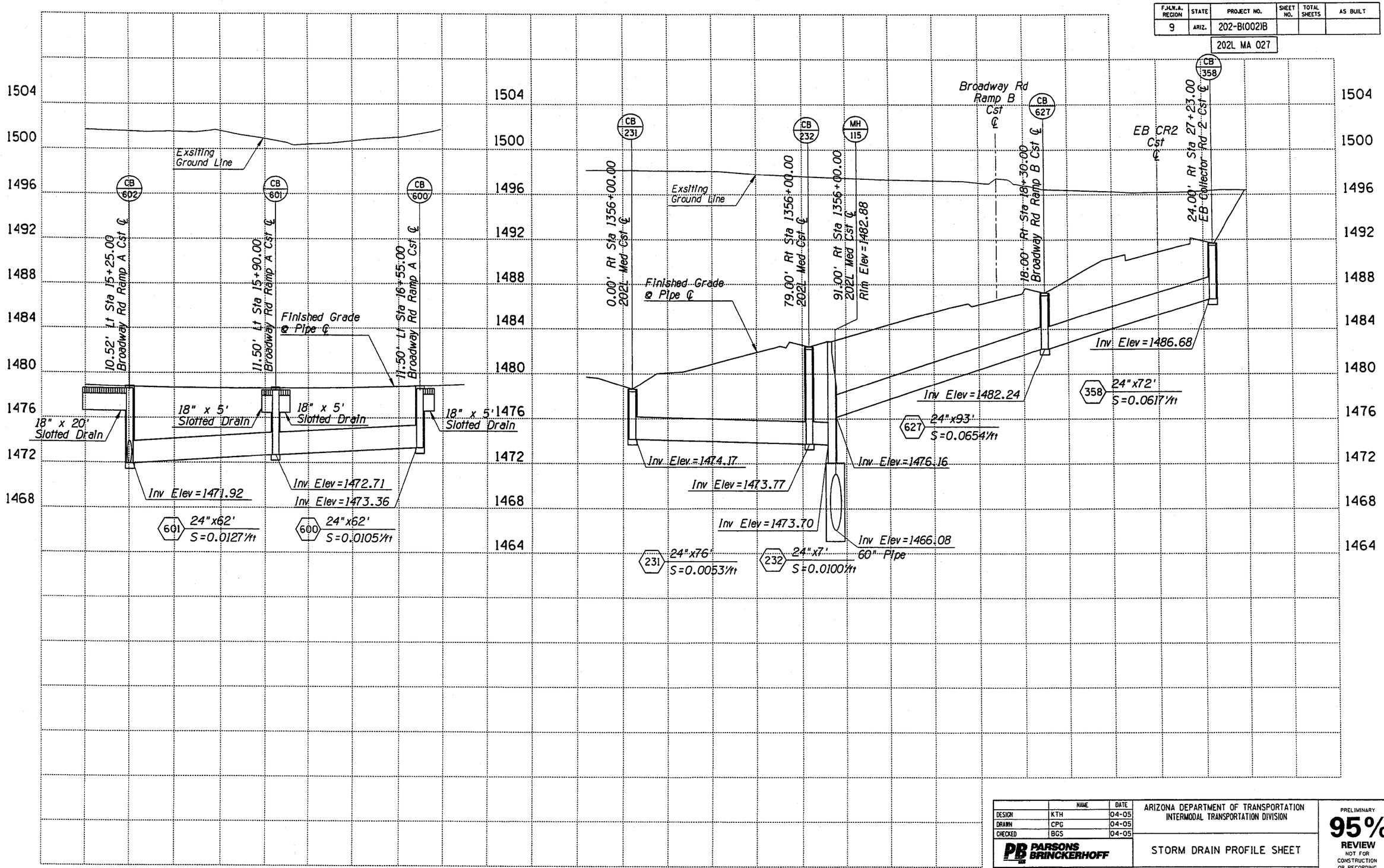

	NAME	DATE
DESIGN	KTH	04-05
DRAWN	CPG	04-05
CHECKED	BGS	04-05

PARSONS BRINCKERHOFF

ARIZONA DEPARTMENT OF TRANSPORTATION
INTERMODAL TRANSPORTATION DIVISION

STORM DRAIN PROFILE SHEET

PRELIMINARY 95% REVIEW NOT FOR CONSTRUCTION OR RECORDING

ROUTE 202L | LOCATION RED MTN FWY, UNIVERSITY DR - SOUTHERN AVE | DWG NO. D-2.23

TRACS NO. H 5783 01C | 202-B(002)B | ___ OF ___

Tue Mar 29 11:20:39 2005 H:\RedMtn-Univ-Southern\Drng\dpr15.dgn

F.H.W.A. REGION	STATE	PROJECT NO.	SHEET NO.	TOTAL SHEETS	AS BUILT
9	ARIZ.	202-B(002)B			
		202L MA 027			

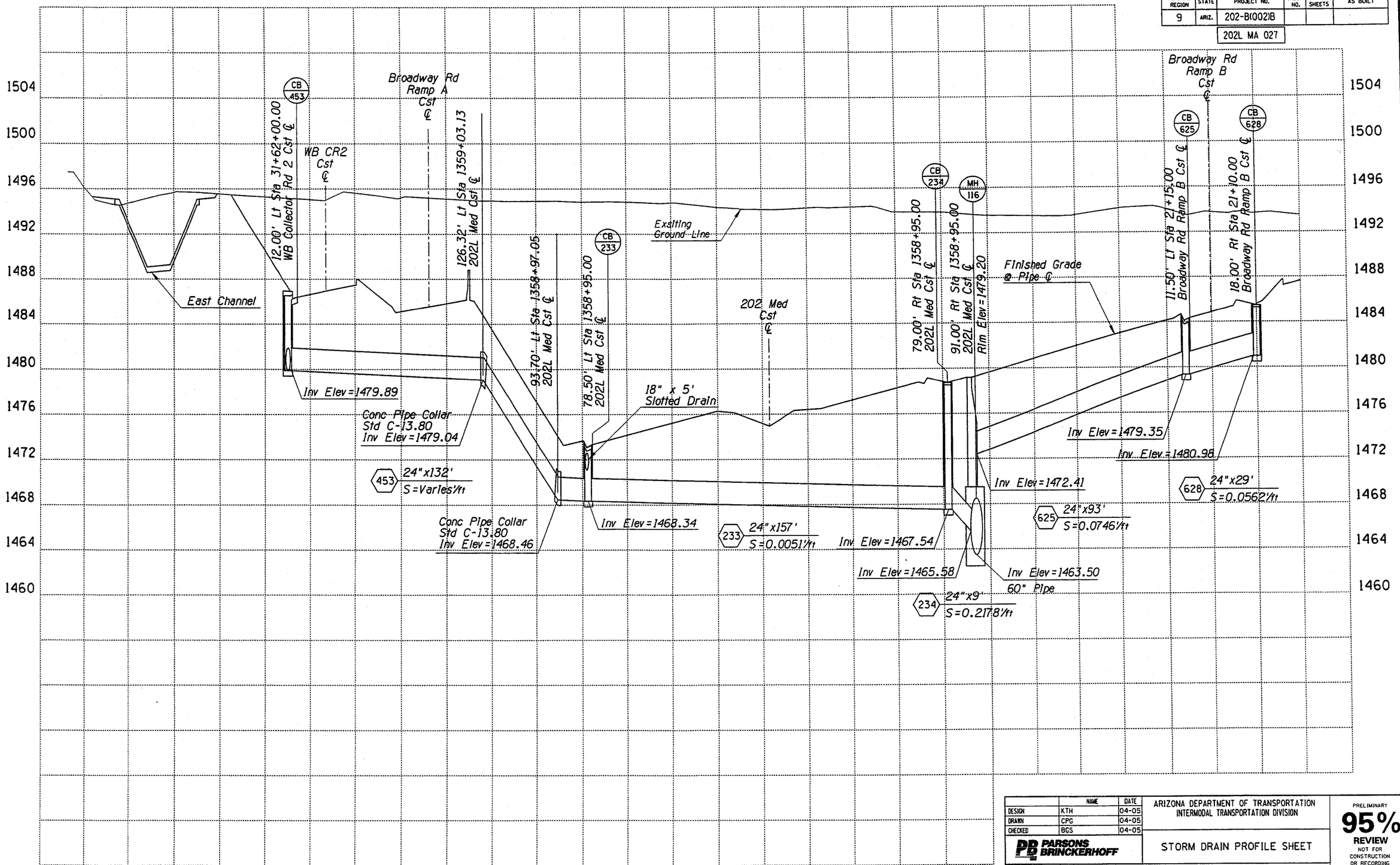

	NAME	DATE
DESIGN	KTH	04-05
DRAWN	CPG	04-05
CHECKED	BGS	04-05

PARSONS BRINCKERHOFF

ARIZONA DEPARTMENT OF TRANSPORTATION
INTERMODAL TRANSPORTATION DIVISION

STORM DRAIN PROFILE SHEET

PRELIMINARY 95% REVIEW NOT FOR CONSTRUCTION OR RECORDING

ROUTE 202L | LOCATION RED MTN FWY, UNIVERSITY DR - SOUTHERN AVE | DWG NO. D-2.24

TRACS NO. H 5783 01C | 202-B(002)B | ___ OF ___

DATE- LOCATION- REVISIONS- FINISHED PLANS- SURVEY NO.

Tue Mar 29 11:20:56 2005 H:\RedMtn-Univ-Southern\Drng\dpr16.dgn

F.H.W.A. REGION	STATE	PROJECT NO.	SHEET NO.	TOTAL SHEETS	AS BUILT
9	ARIZ.	202-B(002)B			

202L MA 027

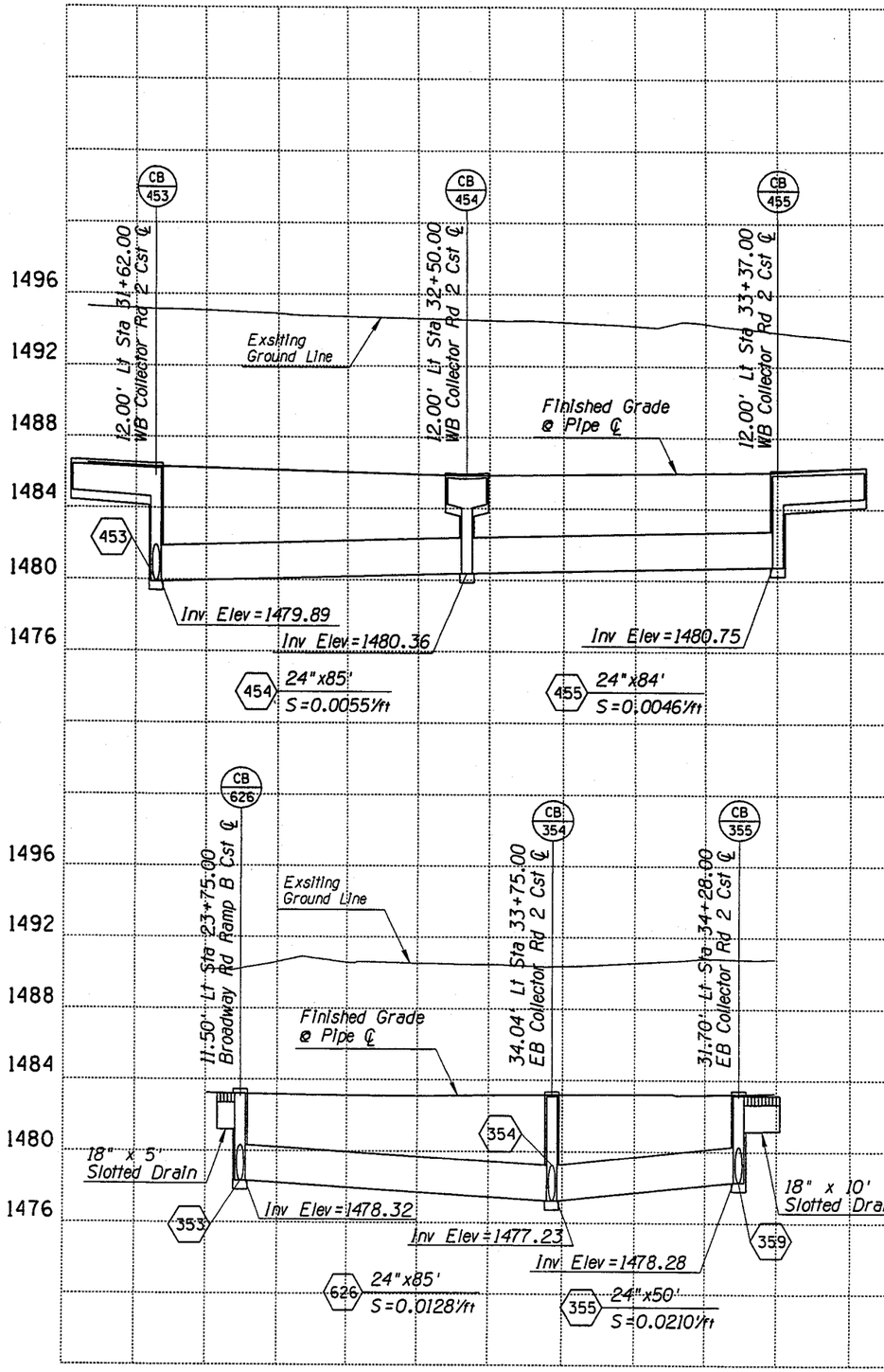

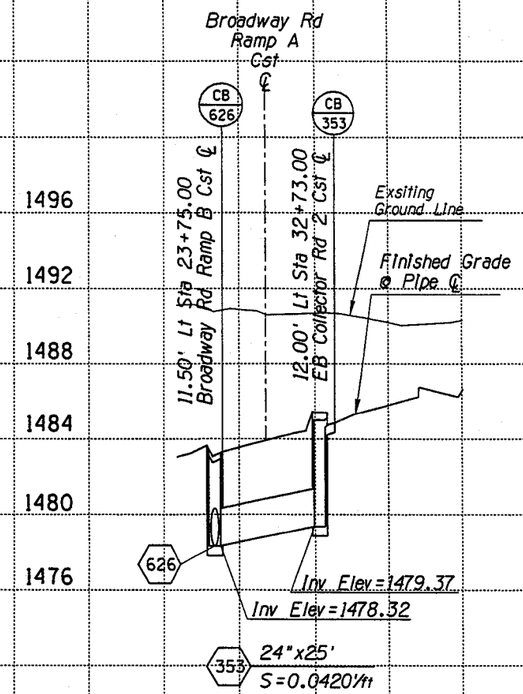

	NAME	DATE
DESIGN	KTH	04-05
DRAWN	CPG	04-05
CHECKED	BGS	04-05

PARSONS BRINCKERHOFF

ARIZONA DEPARTMENT OF TRANSPORTATION
INTERMODAL TRANSPORTATION DIVISION

STORM DRAIN PROFILE SHEET

PRELIMINARY 95% REVIEW NOT FOR CONSTRUCTION OR RECORDING

ROUTE 202L | LOCATION RED MTN FWY, UNIVERSITY DR - SOUTHERN AVE

DWG NO. D-2.25

TRACS NO. H 5783 01C | 202-B(002)B | ___ OF ___

Tue Mar 29 11:21:10 2005 H:\RedMtn-Univ-Southern\Drng\dpr17.dgn

F.H.W.A. REGION	STATE	PROJECT NO.	SHEET NO.	TOTAL SHEETS	AS BUILT
9	ARIZ.	202-B(002)B			

202L MA 027

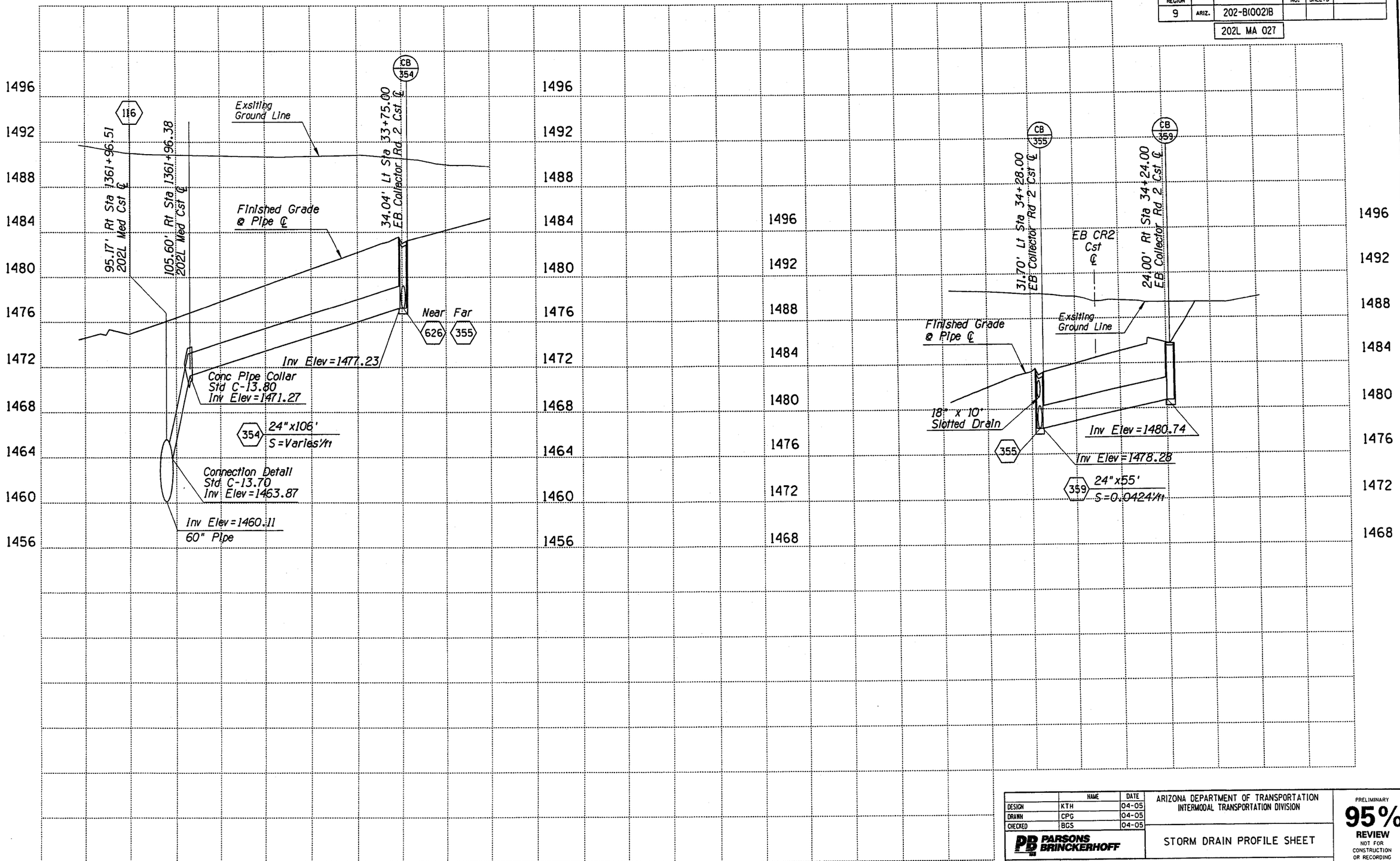

	NAME	DATE
DESIGN	KTH	04-05
DRAWN	CPG	04-05
CHECKED	BGS	04-05

PARSONS BRINCKERHOFF

ARIZONA DEPARTMENT OF TRANSPORTATION
INTERMODAL TRANSPORTATION DIVISION

STORM DRAIN PROFILE SHEET

PRELIMINARY
95%
REVIEW
NOT FOR CONSTRUCTION OR RECORDING

ROUTE 202L
LOCATION RED MTN FWY, UNIVERSITY DR - SOUTHERN AVE

DWG NO. D-2.26

TRACS NO. H 5783 01C

202-B(002)B

___ OF ___

Tue Mar 29 11:21:30 2005 H:\RedMtn-Univ-Southern\Drng\dpr18.dgn

F.H.W.A. REGION	STATE	PROJECT NO.	SHEET NO.	TOTAL SHEETS	AS BUILT
9	ARIZ.	202-B(002)B			

202L MA 027

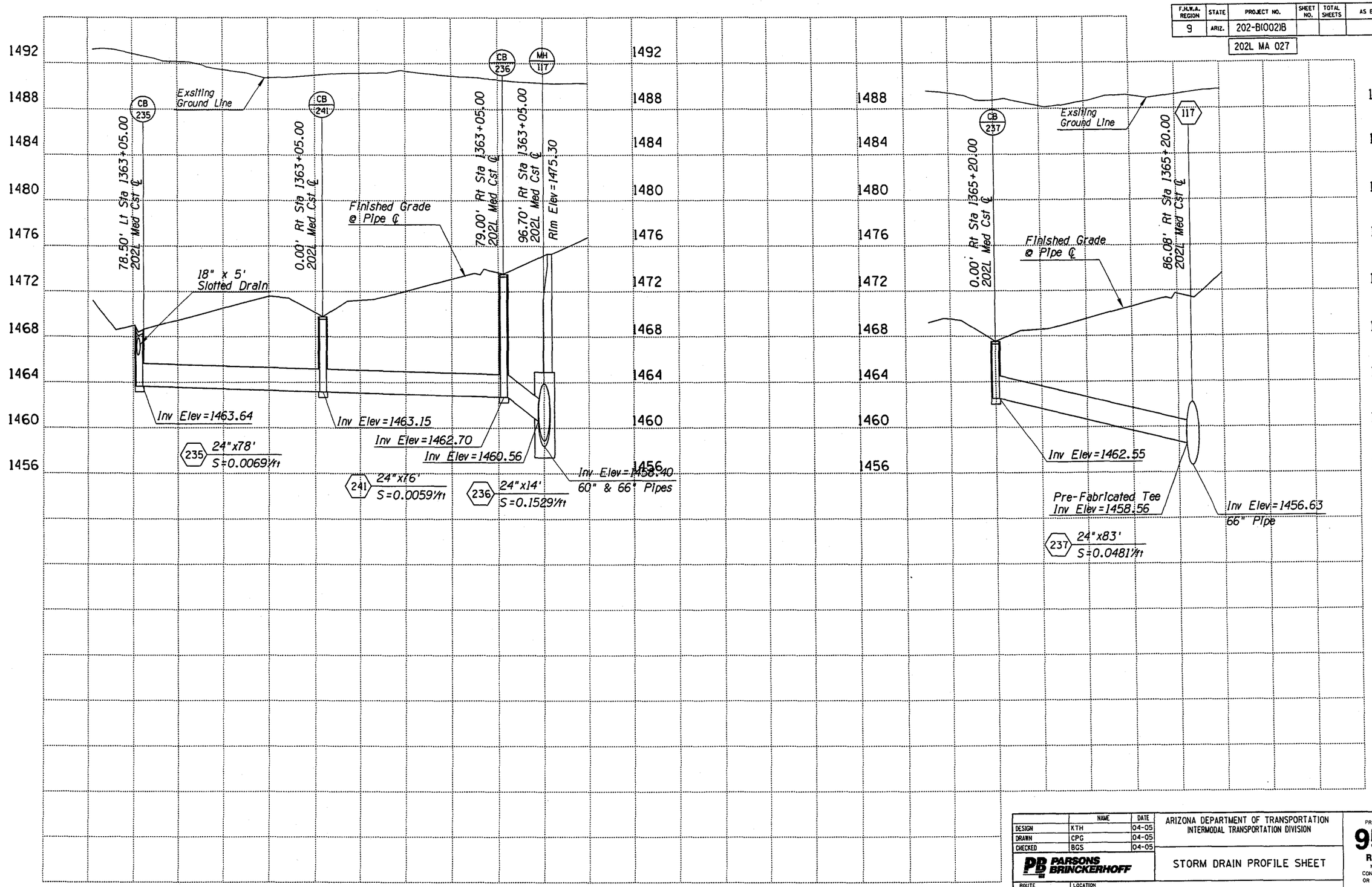

	NAME	DATE
DESIGN	KTH	04-05
DRAWN	CPG	04-05
CHECKED	BGS	04-05

PARSONS BRINCKERHOFF

ARIZONA DEPARTMENT OF TRANSPORTATION
INTERMODAL TRANSPORTATION DIVISION

STORM DRAIN PROFILE SHEET

PRELIMINARY 95% REVIEW NOT FOR CONSTRUCTION OR RECORDING

ROUTE 202L | LOCATION RED MTN FWY. UNIVERSITY DR - SOUTHERN AVE

DWG NO. D-2.27

TRACS NO. H 5783 01C | 202-B(002)B | ___ OF ___

SURVEY NO. | FINISHED PLANS- | REVISIONS- | LOCATION- | DATE-

Tue Mar 29 11:21:46 2005 H:\RedMtn-Univ-Southern\Drng\dpr19.dgn

F.H.W.A. REGION	STATE	PROJECT NO.	SHEET NO.	TOTAL SHEETS	AS BUILT
9	ARIZ.	202-B(002)B			

202L MA 027

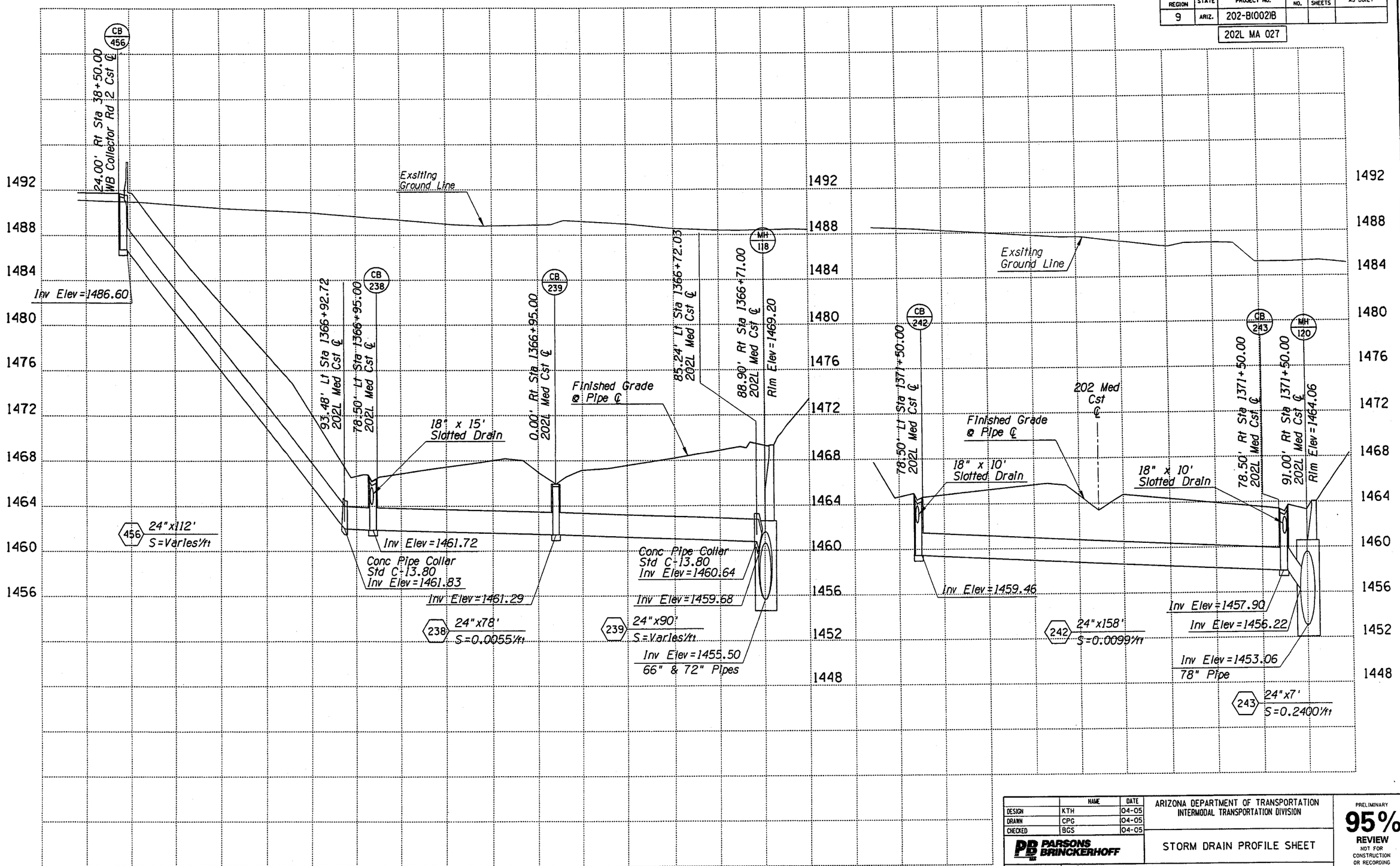

	NAME	DATE
DESIGN	KTH	04-05
DRAWN	CPG	04-05
CHECKED	BGS	04-05

PARSONS BRINCKERHOFF

ARIZONA DEPARTMENT OF TRANSPORTATION
INTERMODAL TRANSPORTATION DIVISION

STORM DRAIN PROFILE SHEET

PRELIMINARY
95%
REVIEW
NOT FOR CONSTRUCTION OR RECORDING

ROUTE 202L
LOCATION RED MTN FWY, UNIVERSITY DR - SOUTHERN AVE

DWG NO. D-2.28

TRACS NO. H 5783 01C

202-B(002)B

___ OF ___

DATE- LOCATION- REVISIONS- FINISHED PLANS- SURVEY NO.

Tue Mar 29 11:22:02 2005 H:\RedMtn-Univ-Southern\Drng\dpr20.dgn

F.H.W.A. REGION	STATE	PROJECT NO.	SHEET NO.	TOTAL SHEETS	AS BUILT
9	ARIZ.	202-B(002)B			
		202L MA 027			

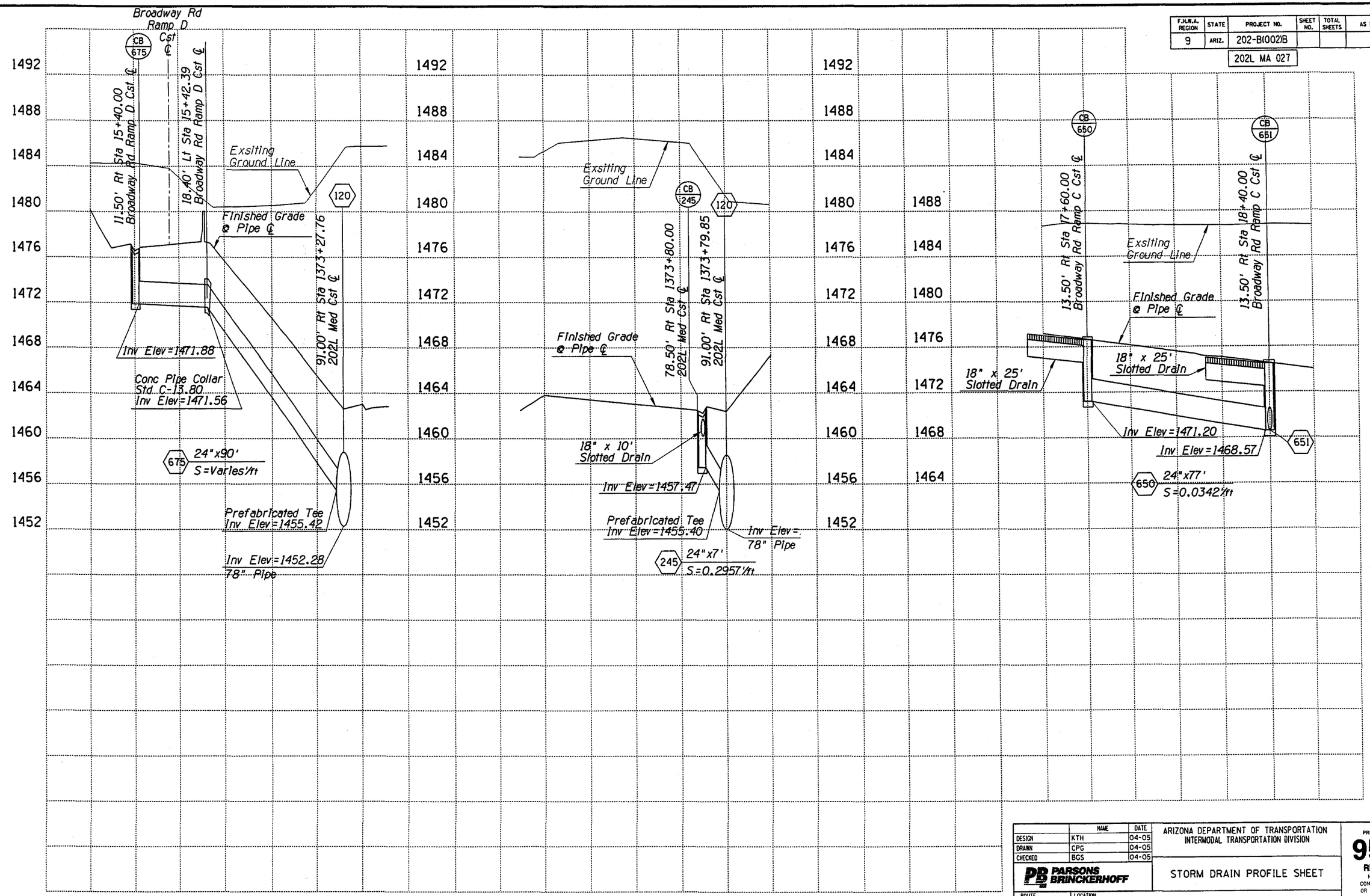

	NAME	DATE
DESIGN	KTH	04-05
DRAWN	CPG	04-05
CHECKED	BGS	04-05

PARSONS BRINCKERHOFF

ARIZONA DEPARTMENT OF TRANSPORTATION
INTERMODAL TRANSPORTATION DIVISION

STORM DRAIN PROFILE SHEET

PRELIMINARY
95%
REVIEW
NOT FOR CONSTRUCTION OR RECORDING

ROUTE 202L | LOCATION RED MTN FWY, UNIVERSITY DR - SOUTHERN AVE

DWG NO. D-2.29

TRACS NO. H 5783 01C | 202-B(002)B | ___ OF ___

Tue Mar 29 11:22:18 2005 H:\RedMtn-Univ-Southern\Drng\dpr21.dgn

F.H.W.A. REGION	STATE	PROJECT NO.	SHEET NO.	TOTAL SHEETS	AS BUILT
9	ARIZ.	202-B(002)B			

202L MA 027

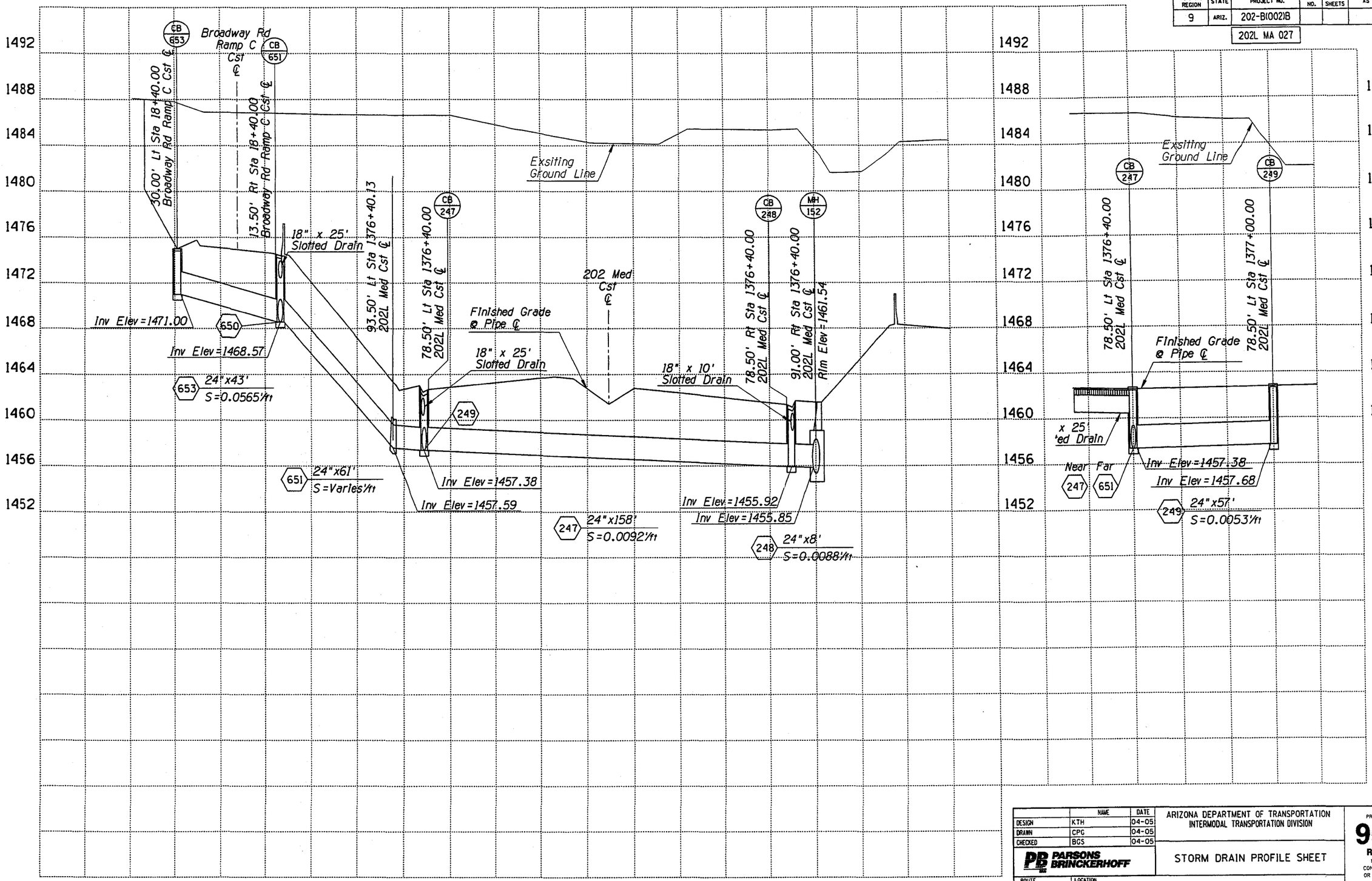

	NAME	DATE
DESIGN	KTH	04-05
DRAWN	CPG	04-05
CHECKED	BGS	04-05

PB PARSONS BRINCKERHOFF

ARIZONA DEPARTMENT OF TRANSPORTATION
INTERMODAL TRANSPORTATION DIVISION

STORM DRAIN PROFILE SHEET

PRELIMINARY 95% REVIEW NOT FOR CONSTRUCTION OR RECORDING

ROUTE 202L | LOCATION RED MTN FWY, UNIVERSITY DR - SOUTHERN AVE

DWG NO. D-2.30

TRACS NO. H 5783 01C | 202-B(002)B | ___ OF ___

Tue Mar 29 11:22:36 2005 H:\RedMtn-Univ-Southern\Drng\dpr22.dgn

F.H.W.A. REGION	STATE	PROJECT NO.	SHEET NO.	TOTAL SHEETS	AS BUILT
9	ARIZ.	202-B(002)B			
		202L MA 027			

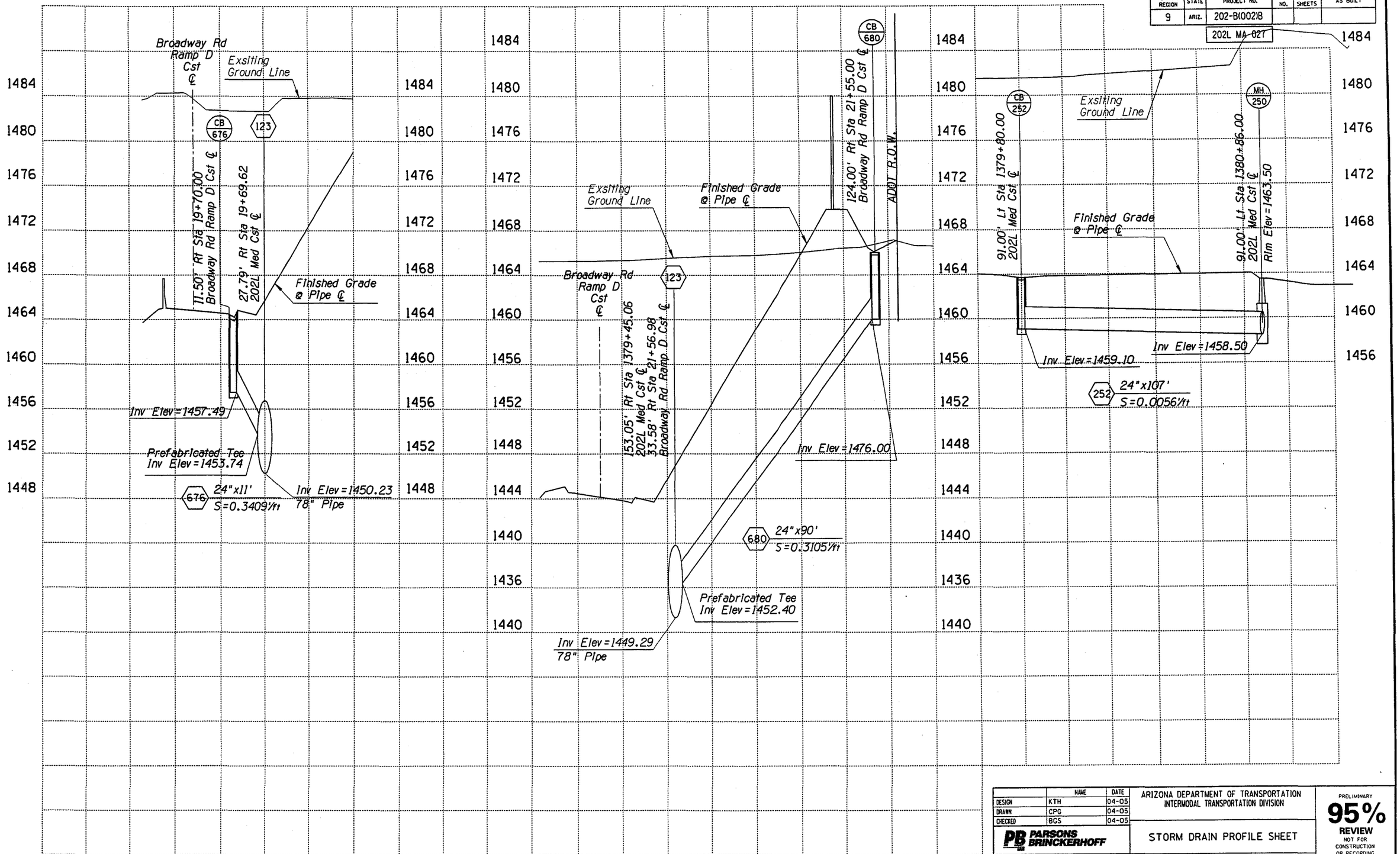

	NAME	DATE
DESIGN	KTH	04-05
DRAWN	CPG	04-05
CHECKED	BGS	04-05

PB PARSONS BRINCKERHOFF

ARIZONA DEPARTMENT OF TRANSPORTATION
INTERMODAL TRANSPORTATION DIVISION

STORM DRAIN PROFILE SHEET

PRELIMINARY 95% REVIEW
NOT FOR CONSTRUCTION OR RECORDING

ROUTE 202L | LOCATION RED MTN FWY, UNIVERSITY DR - SOUTHERN AVE

DWG NO. D-2.31

TRACS NO. H 5783 01C | 202-B(002)B | ___ OF ___

DATE- LOCATION- REVISIONS- FINISHED PLANS- SURVEY NO.

Tue Mar 29 11:22:51 2005 H:\RedMtn-Univ-Southern\Drng\dpr23.dgn

F.H.W.A. REGION	STATE	PROJECT NO.	SHEET NO.	TOTAL SHEETS	AS BUILT
9	ARIZ.	202-B(002)B			
		202L MA 027			

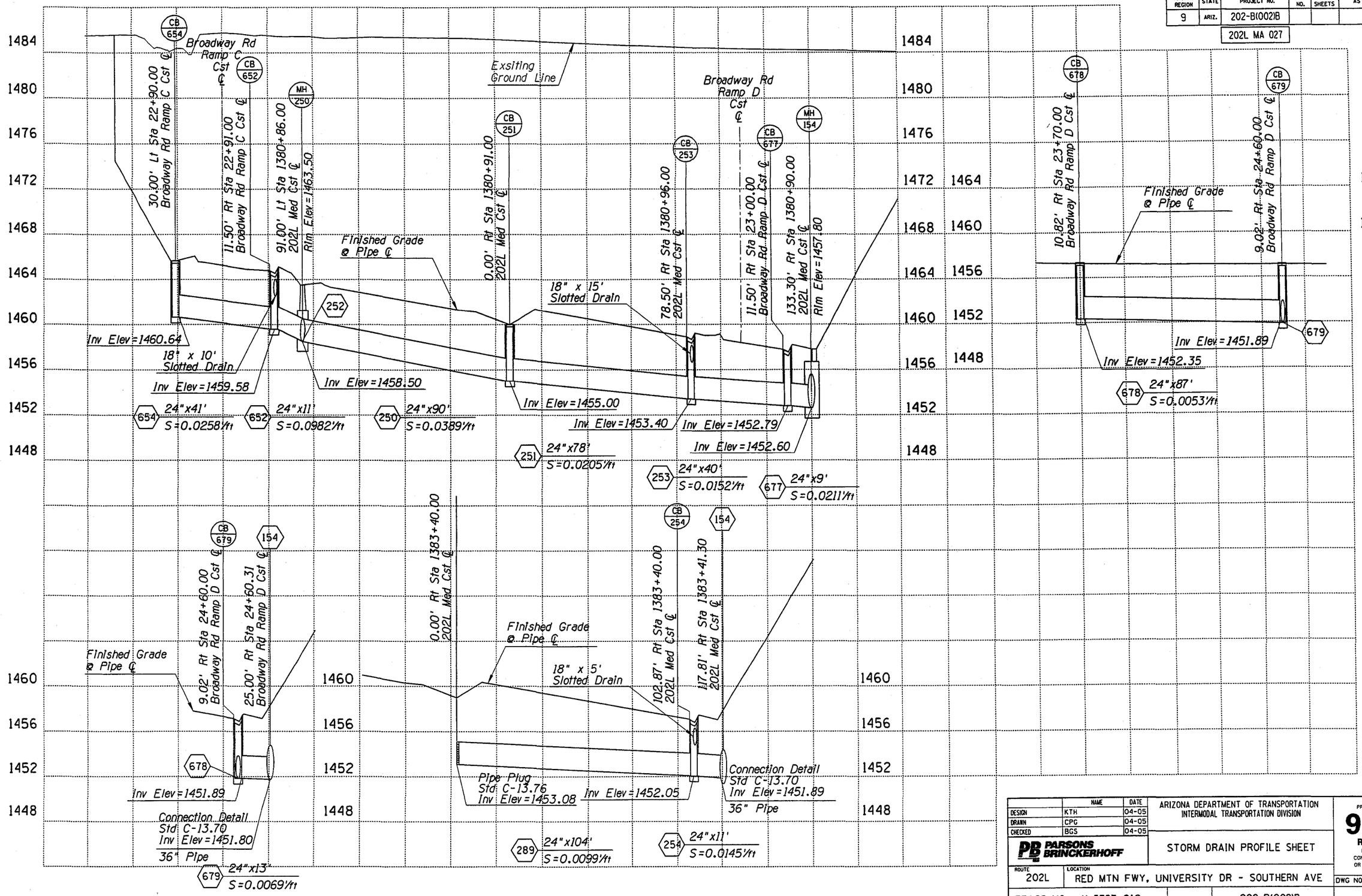

	NAME	DATE
DESIGN	KTH	04-05
DRAWN	CPG	04-05
CHECKED	BGS	04-05

PB PARSONS BRINCKERHOFF

ARIZONA DEPARTMENT OF TRANSPORTATION
INTERMODAL TRANSPORTATION DIVISION

STORM DRAIN PROFILE SHEET

PRELIMINARY 95% REVIEW NOT FOR CONSTRUCTION OR RECORDING

ROUTE 202L | LOCATION RED MTN FWY, UNIVERSITY DR - SOUTHERN AVE

DWG NO. D-2.32

TRACS NO. H 5783 01C | 202-B(002)B | ___ OF ___

Tue Mar 29 11:23:09 2005 H:\RedMtn-Univ-Southern\Drng\dpr24.dgn

F.H.W.A. REGION	STATE	PROJECT NO.	SHEET NO.	TOTAL SHEETS	AS BUILT
9	ARIZ.	202-B(002)B			
		202L MA 027			

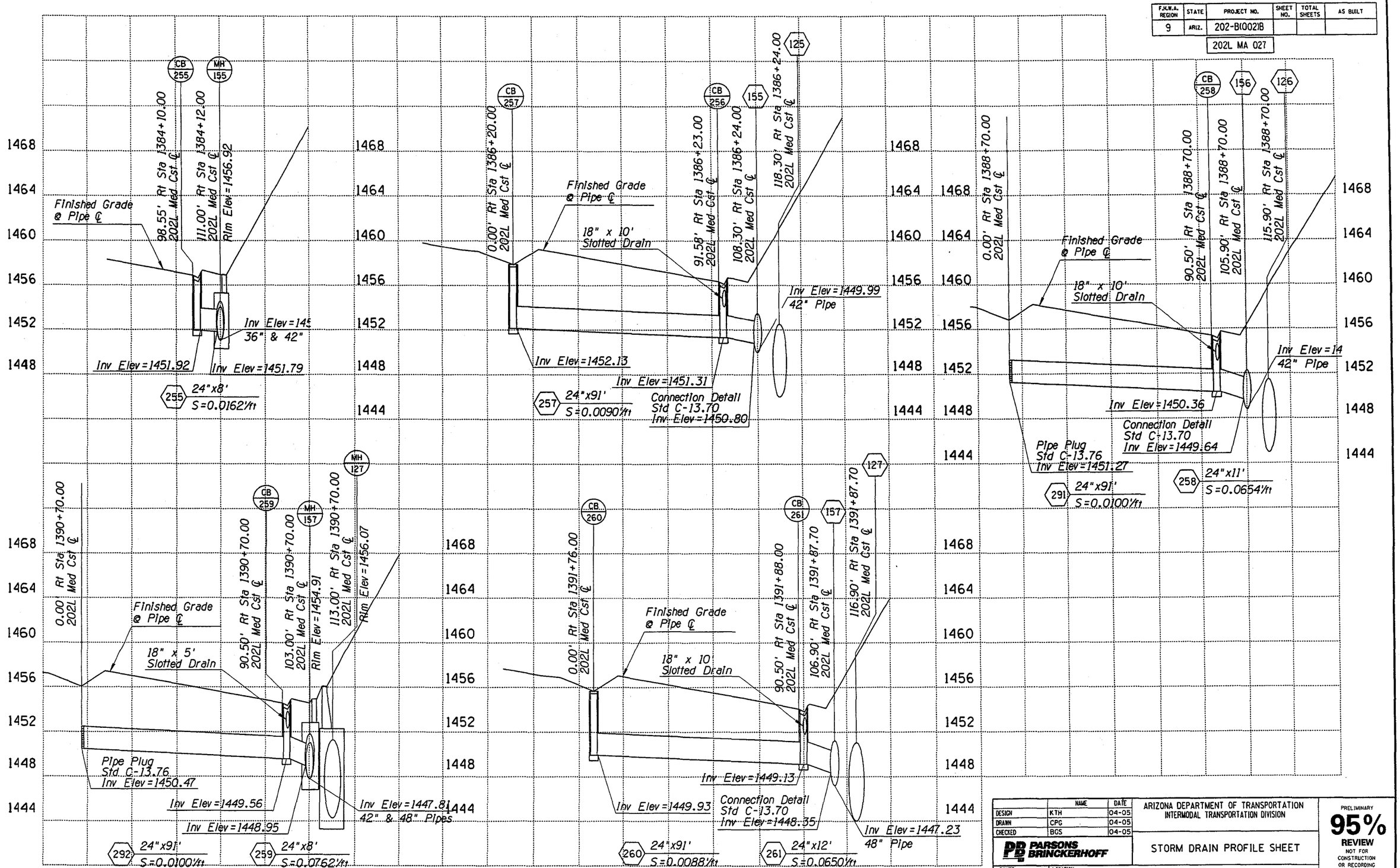

	NAME	DATE
DESIGN	KTH	04-05
DRAWN	CPG	04-05
CHECKED	BGS	04-05

ARIZONA DEPARTMENT OF TRANSPORTATION
INTERMODAL TRANSPORTATION DIVISION

PARSONS BRINCKERHOFF

STORM DRAIN PROFILE SHEET

PRELIMINARY 95% REVIEW NOT FOR CONSTRUCTION OR RECORDING

ROUTE 202L
LOCATION RED MTN FWY, UNIVERSITY DR - SOUTHERN AVE

DWG NO. D-2.33

TRACS NO. H 5783 01C

202-B(002)B

___ OF ___

Tue Mar 29 11:23:30 2005 H:\RedMtn-Univ-Southern\Drng\dpr25.dgn

F.H.W.A. REGION	STATE	PROJECT NO.	SHEET NO.	TOTAL SHEETS	AS BUILT
9	ARIZ.	202-B(002)B			

202L MA 027

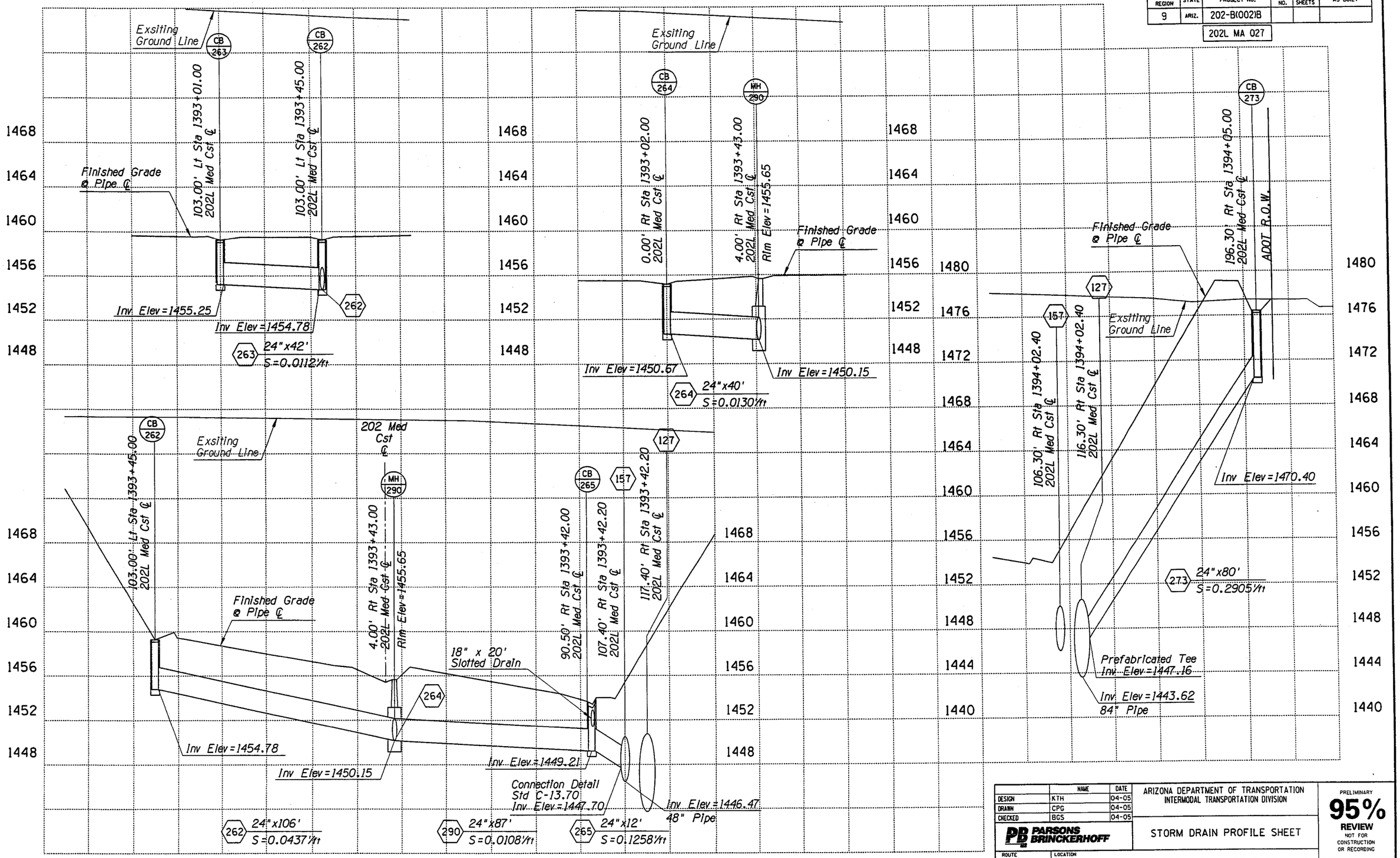

	NAME	DATE
DESIGN	KTH	04-05
DRAWN	CPG	04-05
CHECKED	BGS	04-05

PARSONS BRINCKERHOFF

ARIZONA DEPARTMENT OF TRANSPORTATION
INTERMODAL TRANSPORTATION DIVISION

STORM DRAIN PROFILE SHEET

PRELIMINARY **95%** REVIEW
NOT FOR CONSTRUCTION OR RECORDING

ROUTE 202L

LOCATION RED MTN FWY, UNIVERSITY DR - SOUTHERN AVE

DWG NO. D-2.34

TRACS NO. H 5783 01C

202-B(002)B

___ OF ___

Tue Mar 29 11:23:54 2005 H:\RedMtn-Univ-Southern\Drng\dpr26.dgn

F.H.W.A. REGION	STATE	PROJECT NO.	SHEET NO.	TOTAL SHEETS	AS BUILT
9	ARIZ.	202-B(002)B			

202L MA 027

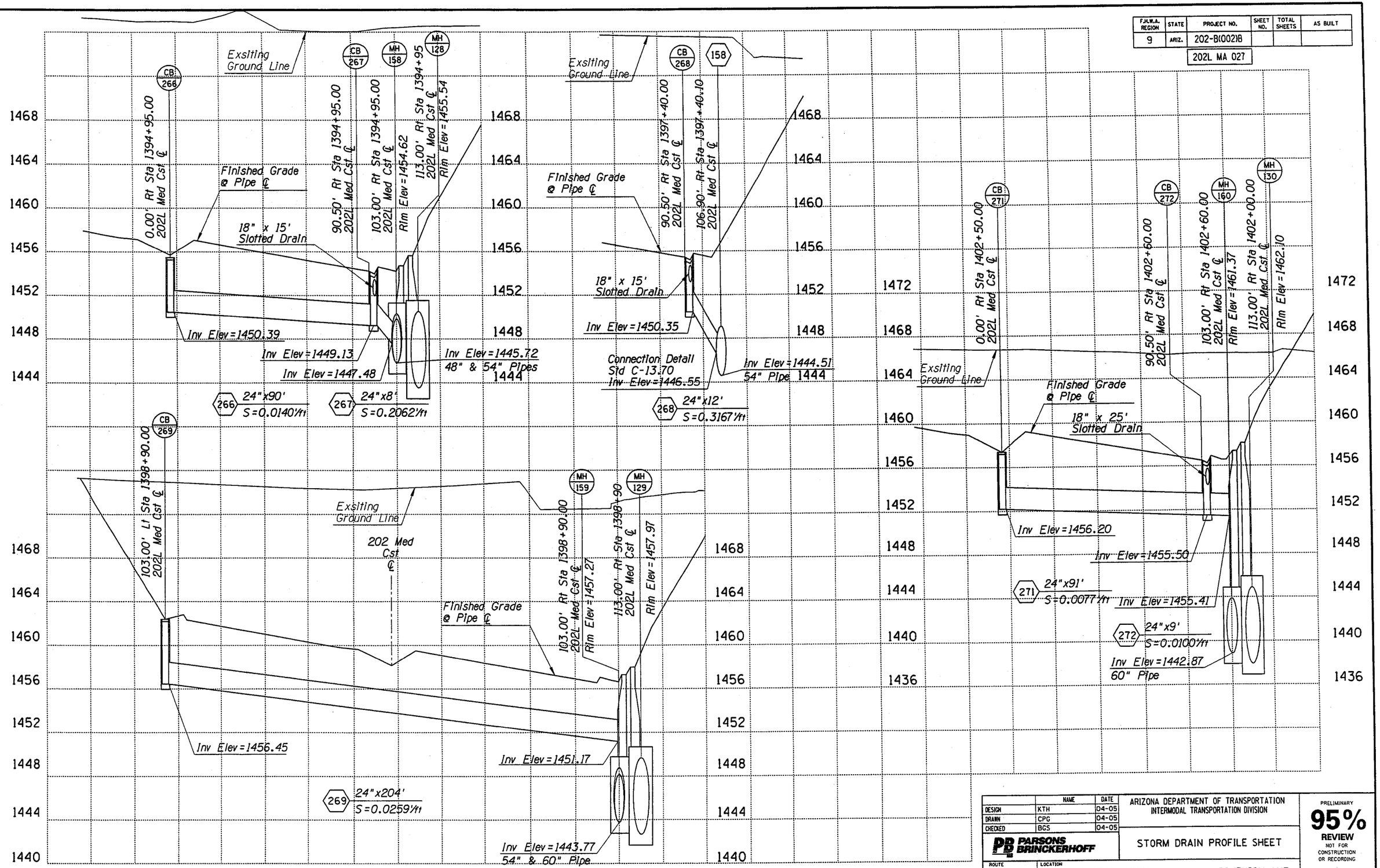

	NAME	DATE
DESIGN	KTH	04-05
DRAWN	CPG	04-05
CHECKED	BGS	04-05

PARSONS BRINCKERHOFF

ARIZONA DEPARTMENT OF TRANSPORTATION
INTERMODAL TRANSPORTATION DIVISION

STORM DRAIN PROFILE SHEET

PRELIMINARY 95% REVIEW NOT FOR CONSTRUCTION OR RECORDING

ROUTE 202L | LOCATION RED MTN FWY, UNIVERSITY DR - SOUTHERN AVE

DWG NO. D-2.35

TRACS NO. H 5783 01C | 202-B(002)B | ___ OF ___

SURVEY NO. | FINISHED PLANS- | REVISIONS- | LOCATION- | DATE-

Tue Mar 29 11:24:14 2005 H:\RedMtn-Univ-Southern\Drng\dpr27.dgn

F.H.W.A. REGION	STATE	PROJECT NO.	SHEET NO.	TOTAL SHEETS	AS BUILT
9	ARIZ.	202-B(002)B			

202L MA 027

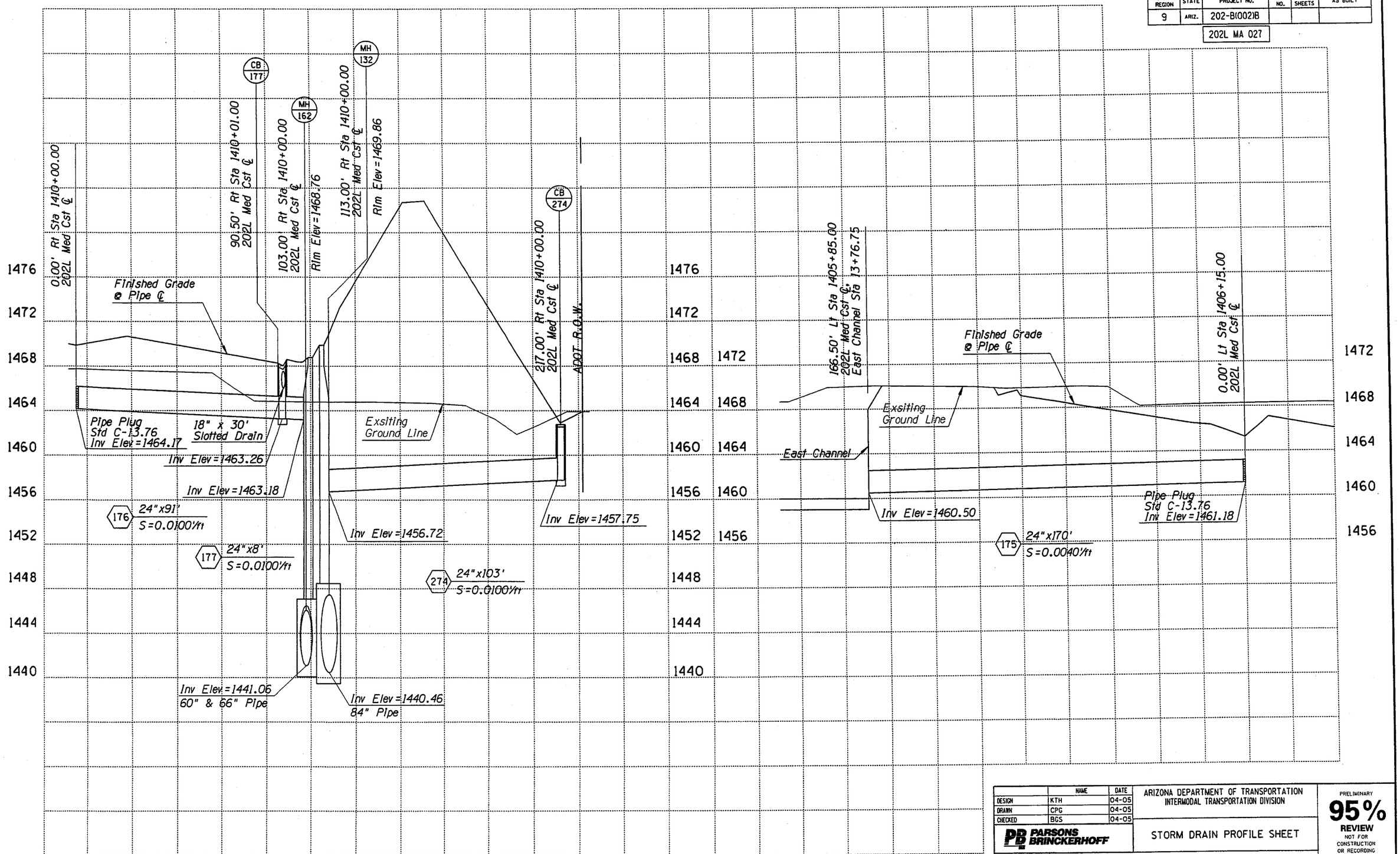

	NAME	DATE
DESIGN	KTH	04-05
DRAWN	CPG	04-05
CHECKED	BGS	04-05

PARSONS BRINCKERHOFF

ARIZONA DEPARTMENT OF TRANSPORTATION
INTERMODAL TRANSPORTATION DIVISION

STORM DRAIN PROFILE SHEET

PRELIMINARY
95%
REVIEW
NOT FOR CONSTRUCTION OR RECORDING

ROUTE 202L
LOCATION RED MTN FWY, UNIVERSITY DR - SOUTHERN AVE

DWG NO. D-2.36

TRACS NO. H 5783 01C

202-B(002)B

___ OF ___

Tue Mar 29 11:24:35 2005 H:\RedMtn-Univ-Southern\Drng\dpr28.dgn

F.H.W.A. REGION	STATE	PROJECT NO.	SHEET NO.	TOTAL SHEETS	AS BUILT
9	ARIZ.	202-B(002)B			

202L MA 027

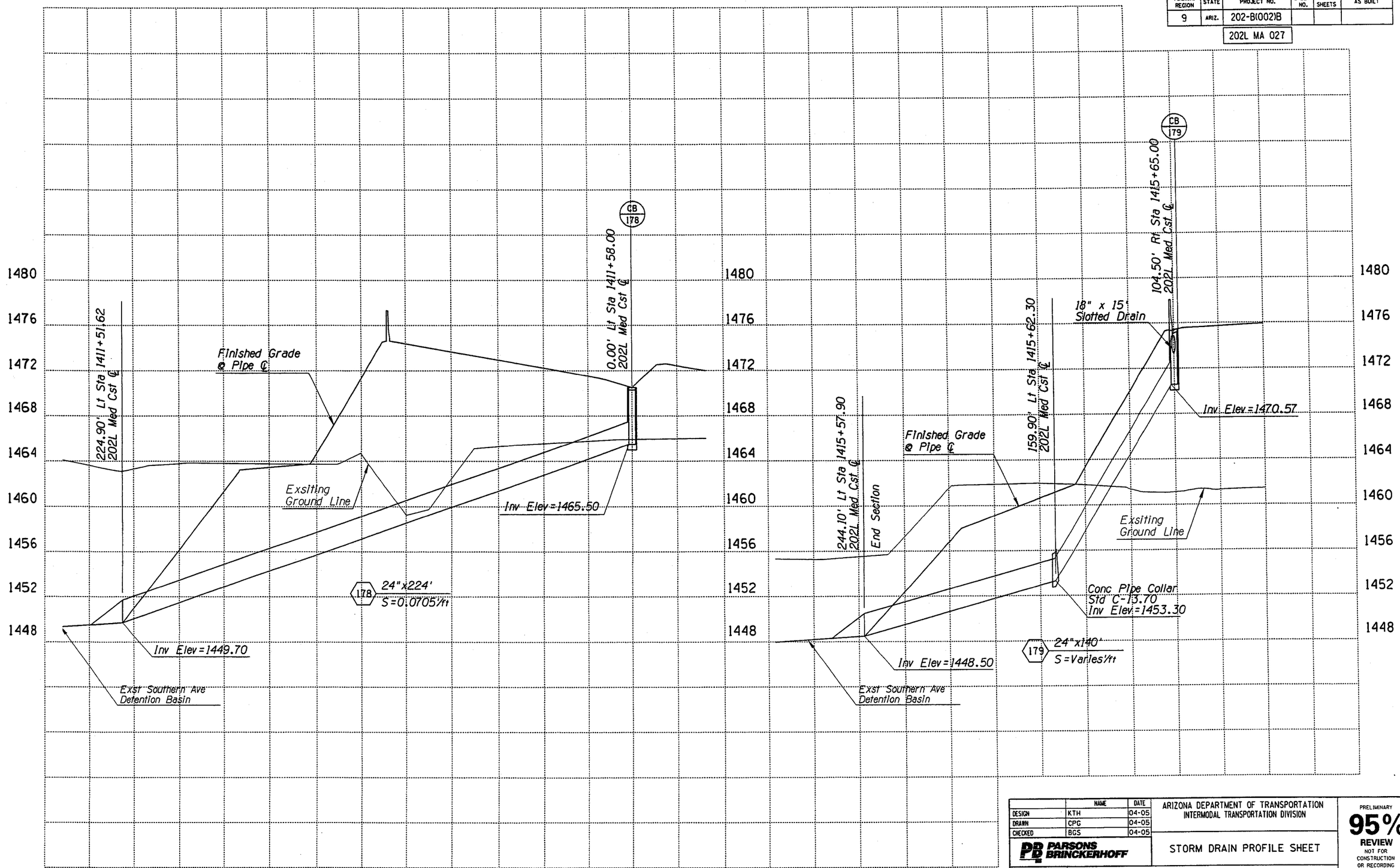

	NAME	DATE
DESIGN	KTH	04-05
DRAWN	CPG	04-05
CHECKED	BGS	04-05

PARSONS BRINCKERHOFF

ARIZONA DEPARTMENT OF TRANSPORTATION
INTERMODAL TRANSPORTATION DIVISION

STORM DRAIN PROFILE SHEET

PRELIMINARY
95%
REVIEW
NOT FOR CONSTRUCTION OR RECORDING

ROUTE 202L | LOCATION RED MTN FWY, UNIVERSITY DR - SOUTHERN AVE | DWG NO. D-2.37

TRACS NO. H 5783 01C | 202-B(002)B | ___ OF ___

SURVEY NO. | FINISHED PLANS- | REVISIONS- | LOCATION- | DATE-

Tue Mar 29 11:24:50 2005 H:\RedMtn-Univ-Southern\Drng\dpr29.dgn

F.H.W.A. REGION	STATE	PROJECT NO.	SHEET NO.	TOTAL SHEETS	AS BUILT
9	ARIZ.	202-B(002)B			

202L MA 027

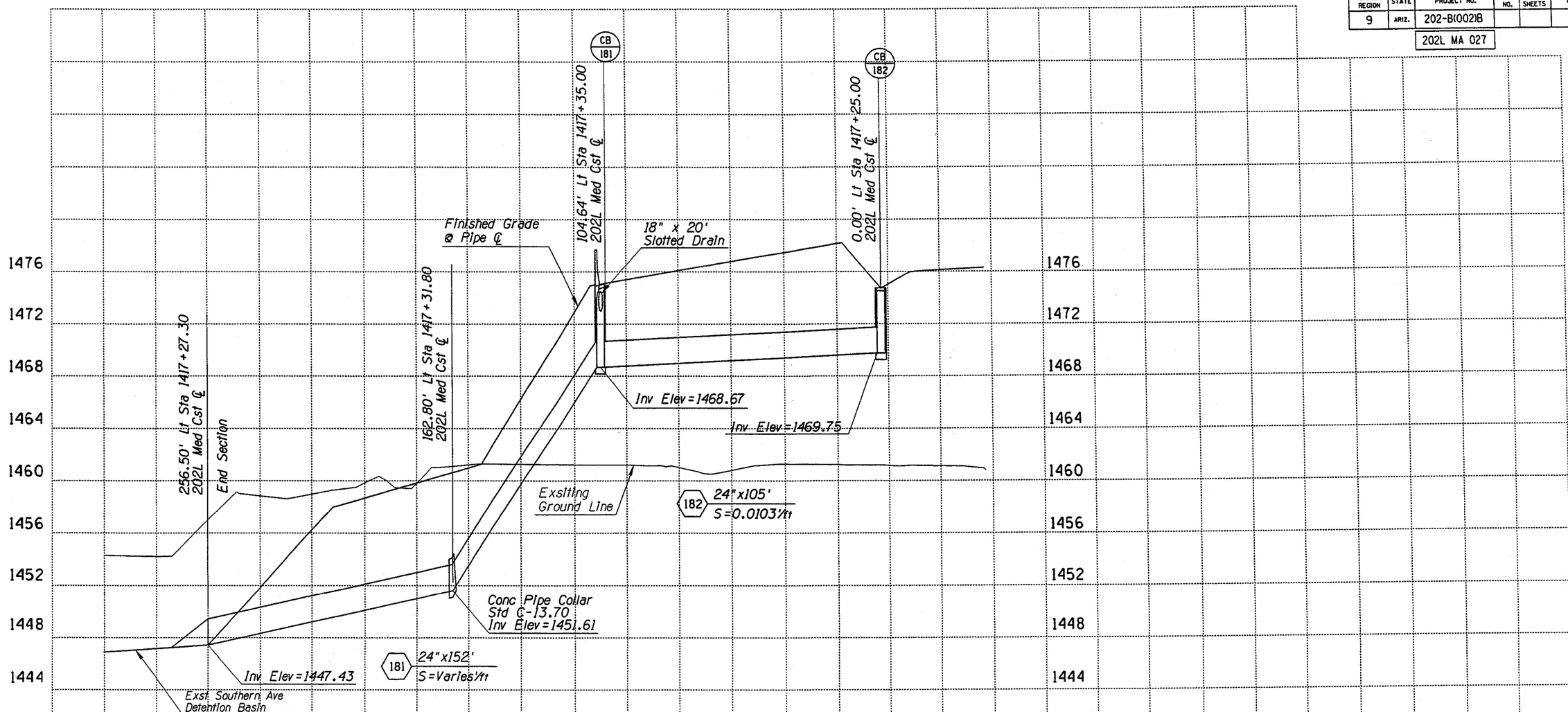

	NAME	DATE
DESIGN	KTH	04-05
DRAWN	CPG	04-05
CHECKED	BGS	04-05

PARSONS BRINCKERHOFF

ARIZONA DEPARTMENT OF TRANSPORTATION
INTERMODAL TRANSPORTATION DIVISION

STORM DRAIN PROFILE SHEET

PRELIMINARY 95% REVIEW NOT FOR CONSTRUCTION OR RECORDING

ROUTE 202L | LOCATION RED MTN FWY, UNIVERSITY DR - SOUTHERN AVE

DWG NO. D-2.38

TRACS NO. H 5783 01C | 202-B(002)B | ___ OF ___

DATE- LOCATION- REVISIONS- FINISHED PLANS- SURVEY NO.

Tue Mar 29 11:25:06 2005 H:\RedMtn-Univ-Southern\Drng\dpr30.dgn

F.H.W.A. REGION	STATE	PROJECT NO.	SHEET NO.	TOTAL SHEETS	AS BUILT
9	ARIZ.	202-B(002)B			

202L MA 027

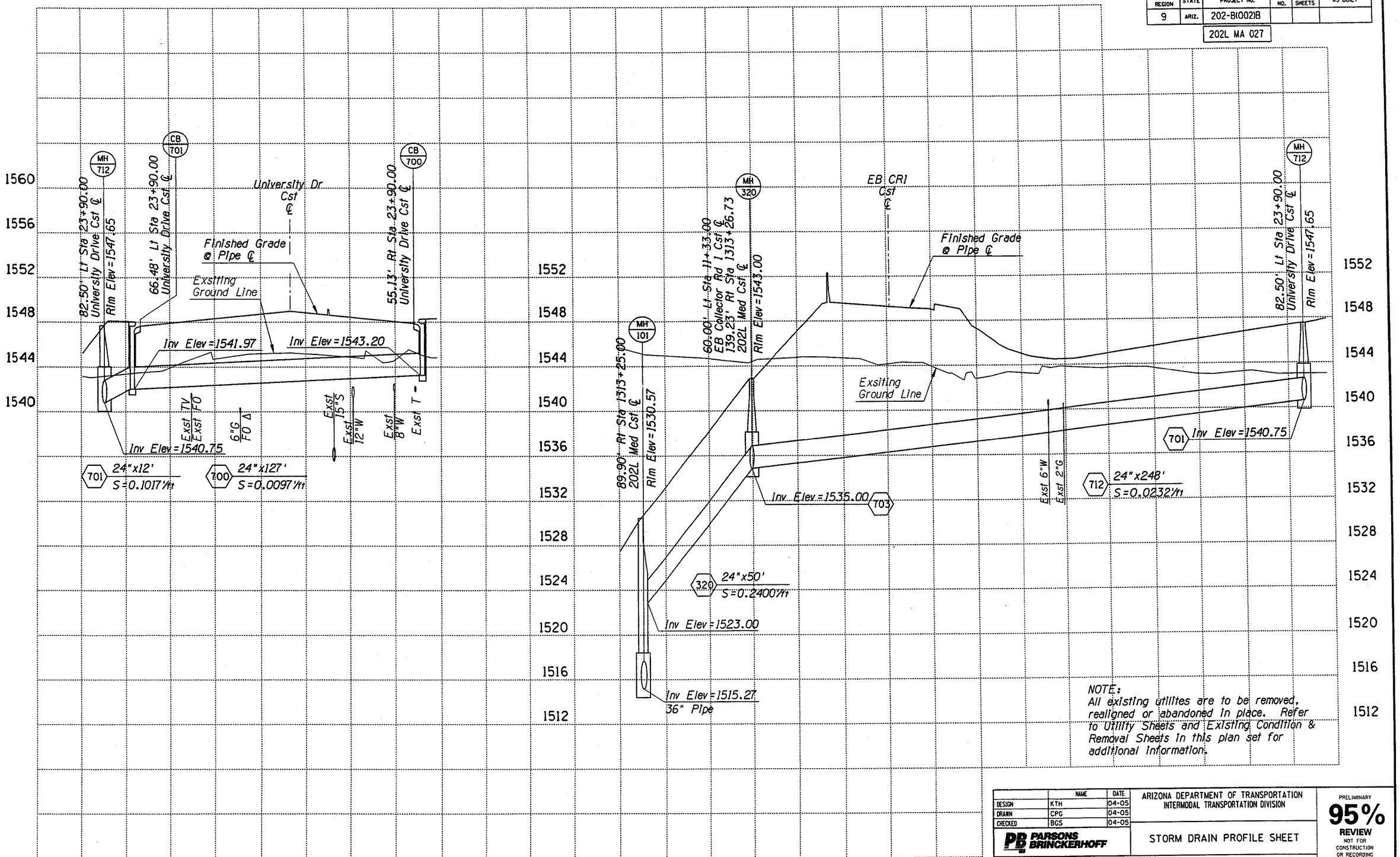

NOTE:
All existing utilities are to be removed, realigned or abandoned in place. Refer to Utility Sheets and Existing Condition & Removal Sheets in this plan set for additional information.

	NAME	DATE
DESIGN	KTH	04-05
DRAWN	CPG	04-05
CHECKED	BGS	04-05

PARSONS BRINCKERHOFF

ARIZONA DEPARTMENT OF TRANSPORTATION
INTERMODAL TRANSPORTATION DIVISION

STORM DRAIN PROFILE SHEET

PRELIMINARY 95% REVIEW NOT FOR CONSTRUCTION OR RECORDING

ROUTE 202L | LOCATION RED MTN FWY, UNIVERSITY DR - SOUTHERN AVE

DWG NO. D-2.39

TRACS NO. H 5783 01C | 202-B(002)B | ___ OF ___

Tue Mar 29 11:41:35 2005 H:\RedMtn-Univ-Southern\Drng\Univ-dpr01.dgn

F.H.W.A. REGION	STATE	PROJECT NO.	SHEET NO.	TOTAL SHEETS	AS BUILT
9	ARIZ.	202-B(002)B			

202L MA 027

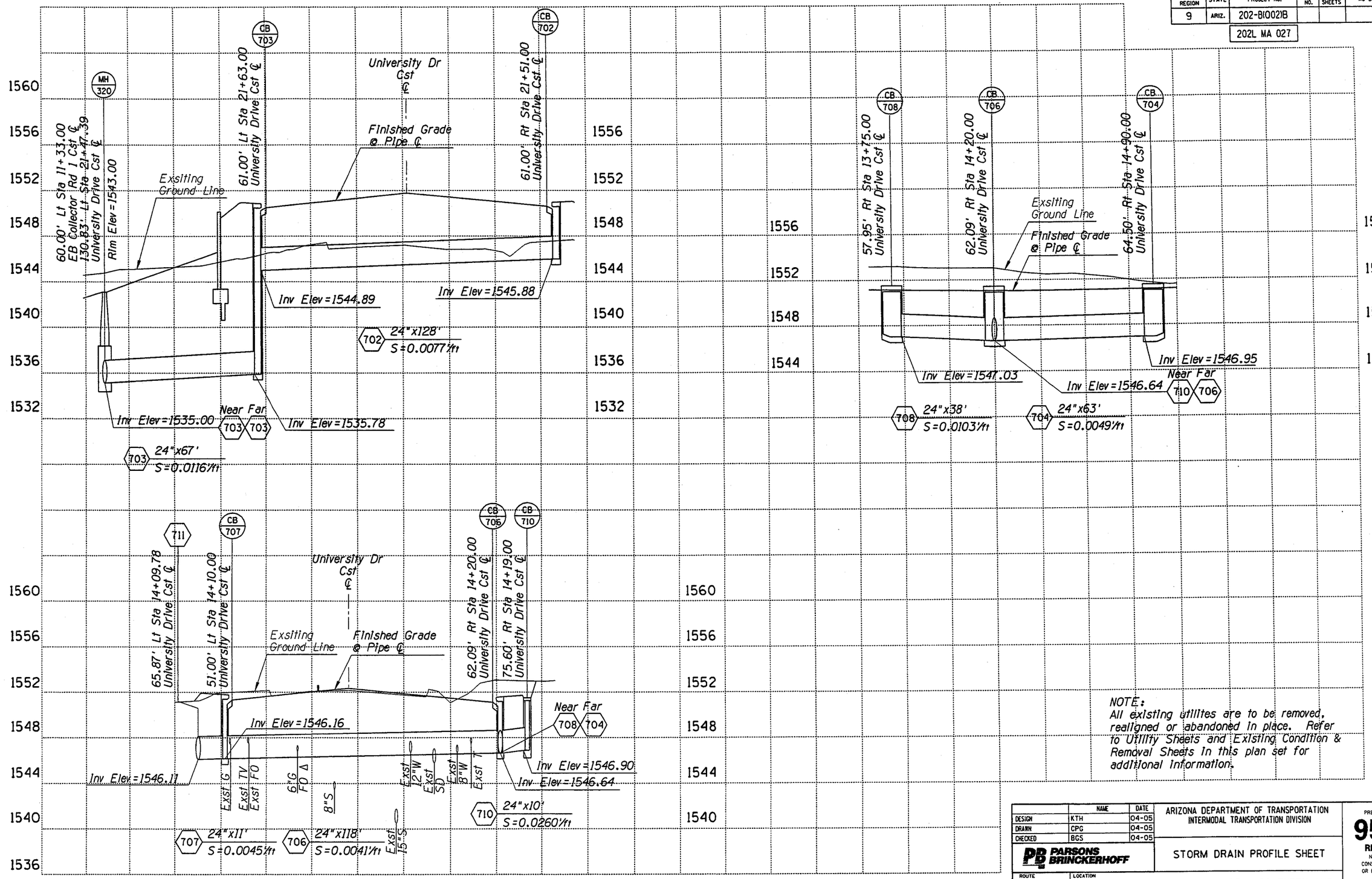

NOTE:
All existing utilities are to be removed, realigned or abandoned in place. Refer to Utility Sheets and Existing Condition & Removal Sheets in this plan set for additional information.

	NAME	DATE
DESIGN	KTH	04-05
DRAWN	CPG	04-05
CHECKED	BGS	04-05

PARSONS BRINCKERHOFF

ARIZONA DEPARTMENT OF TRANSPORTATION
INTERMODAL TRANSPORTATION DIVISION

STORM DRAIN PROFILE SHEET

PRELIMINARY 95% REVIEW NOT FOR CONSTRUCTION OR RECORDING

ROUTE 202L | LOCATION RED MTN FWY, UNIVERSITY DR - SOUTHERN AVE

DWG NO. D-2.40

TRACS NO. H 5783 01C | 202-B(002)B | ___ OF ___

DATE- LOCATION- REVISIONS- FINISHED PLANS- SURVEY NO.

Tue Mar 29 11:41:50 2005 H:\RedMtn-Univ-Southern\Drng\Univ-dpr02.dgn

F.H.W.A. REGION	STATE	PROJECT NO.	SHEET NO.	TOTAL SHEETS	AS BUILT
9	ARIZ.	202-B(002)B			

202L MA 027

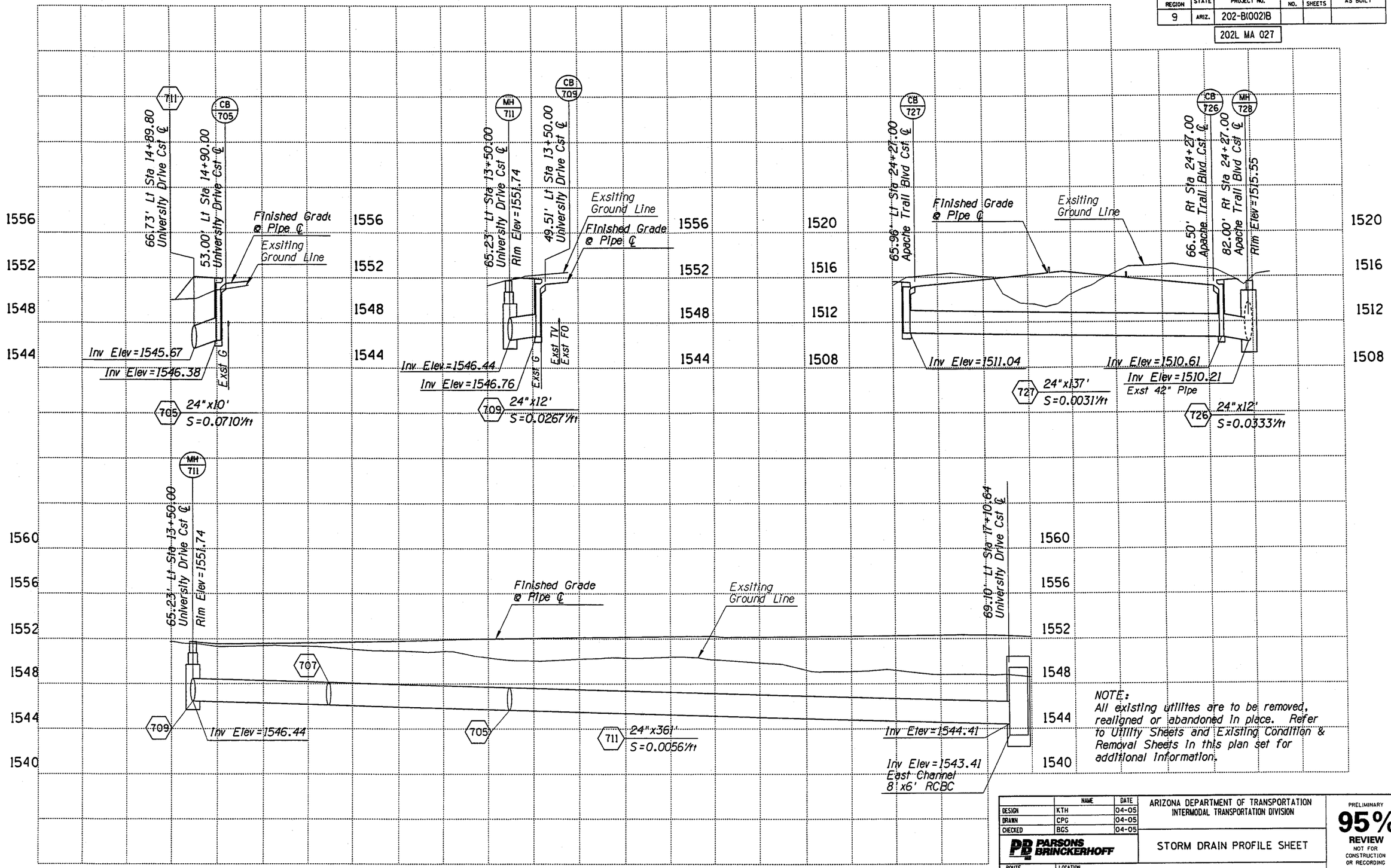

NOTE:
All existing utilities are to be removed, realigned or abandoned in place. Refer to Utility Sheets and Existing Condition & Removal Sheets in this plan set for additional information.

	NAME	DATE
DESIGN	KTH	04-05
DRAWN	CPG	04-05
CHECKED	BGS	04-05

PARSONS BRINCKERHOFF

ARIZONA DEPARTMENT OF TRANSPORTATION
INTERMODAL TRANSPORTATION DIVISION

STORM DRAIN PROFILE SHEET

PRELIMINARY 95% REVIEW NOT FOR CONSTRUCTION OR RECORDING

ROUTE 202L | LOCATION RED MTN FWY, UNIVERSITY DR - SOUTHERN AVE

DWG NO. D-2.41

TRACS NO. H 5783 01C | 202-B(002)B | ___ OF ___

Tue Mar 29 11:42:08 2005 H:\RedMtn-Univ-Southern\Drng\Univ-dpr03.dgn

F.H.W.A. REGION	STATE	PROJECT NO.	SHEET NO.	TOTAL SHEETS	AS BUILT
9	ARIZ.	202-B(002)B			

202L MA 027

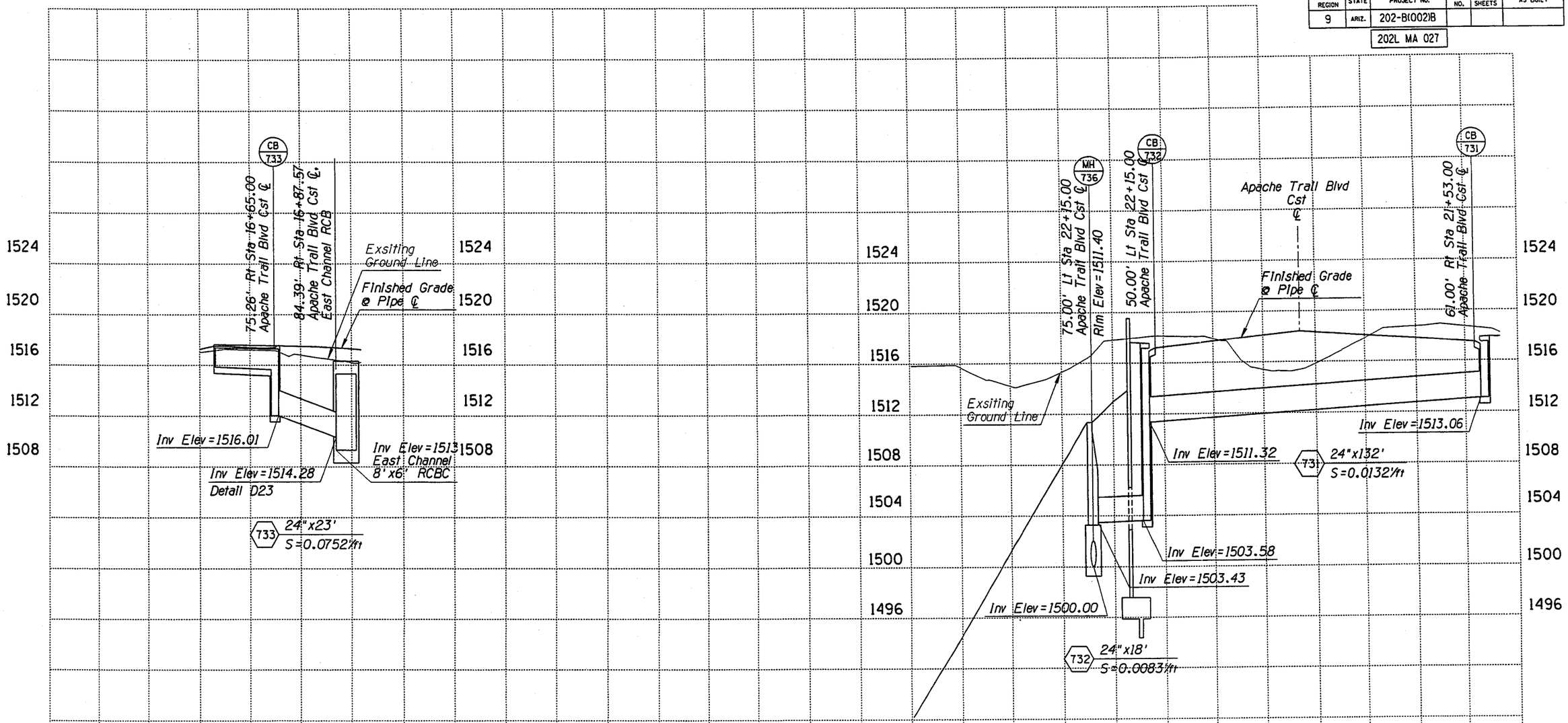

NOTE:
All existing utilites are to be removed, realigned or abandoned in place. Refer to Utility Sheets and Existing Condition & Removal Sheets in this plan set for additional information.

	NAME	DATE
DESIGN	KTH	04-05
DRAWN	CPG	04-05
CHECKED	BGS	04-05

PARSONS BRINCKERHOFF

ARIZONA DEPARTMENT OF TRANSPORTATION
INTERMODAL TRANSPORTATION DIVISION

STORM DRAIN PROFILE SHEET

PRELIMINARY 95% REVIEW NOT FOR CONSTRUCTION OR RECORDING

ROUTE 202L | LOCATION RED MTN FWY, UNIVERSITY DR - SOUTHERN AVE | DWG NO. D-2.42

TRACS NO. H 5783 01C | 202-B(002)B | ___ OF ___

Tue Mar 29 11:06:33 2005 H:\RedMtn-Univ-Southern\Drng\Apache-dpr01.dgn

F.H.W.A. REGION	STATE	PROJECT NO.	SHEET NO.	TOTAL SHEETS	AS BUILT
9	ARIZ.	202-B(002)B			

202L MA 027

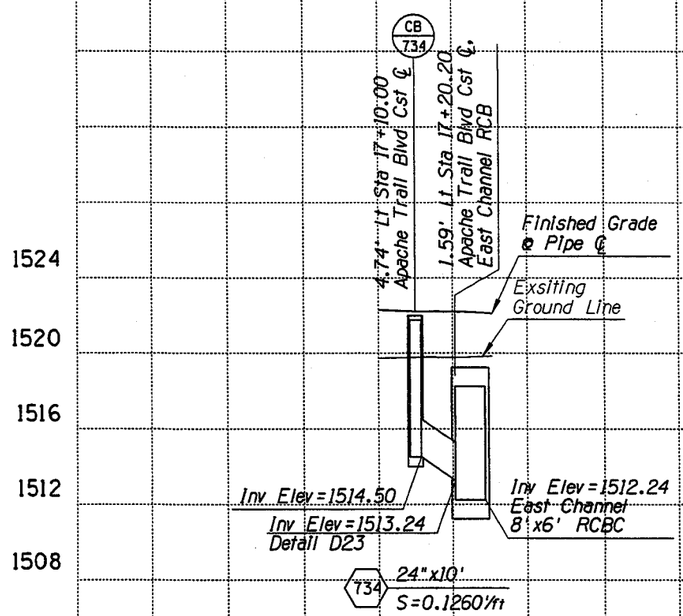

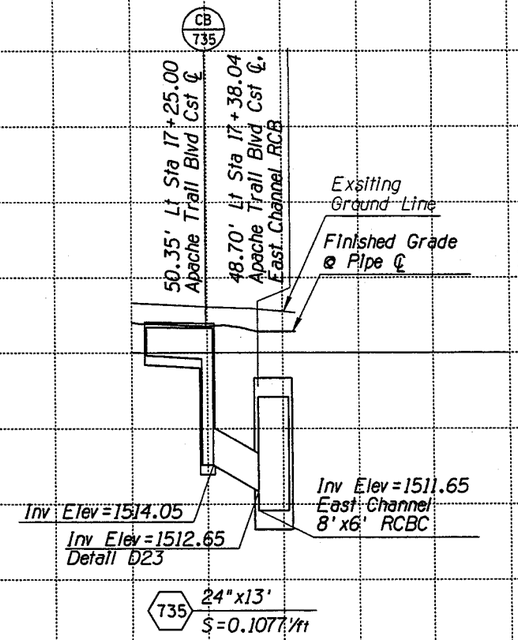

NOTE:
All existing utilites are to be removed, realigned or abandoned in place. Refer to Utility Sheets and Existing Condition & Removal Sheets in this plan set for additional information.

	NAME	DATE
DESIGN	KTH	04-05
DRAWN	CPG	04-05
CHECKED	BGS	04-05

PARSONS BRINCKERHOFF

ARIZONA DEPARTMENT OF TRANSPORTATION
INTERMODAL TRANSPORTATION DIVISION

STORM DRAIN PROFILE SHEET

PRELIMINARY 95% REVIEW NOT FOR CONSTRUCTION OR RECORDING

ROUTE 202L | LOCATION RED MTN FWY, UNIVERSITY DR - SOUTHERN AVE

DWG NO. D-2.43

TRACS NO. H 5783 01C | 202-B(002)B | ___ OF ___

Tue Mar 29 11:06:48 2005 H:\RedMtn-Univ-Southern\Drng\Apache-dpr02.dgn

F.H.W.A. REGION	STATE	PROJECT NO.	SHEET NO.	TOTAL SHEETS	AS BUILT
9	ARIZ.	202-B(002)B			

202L MA 027

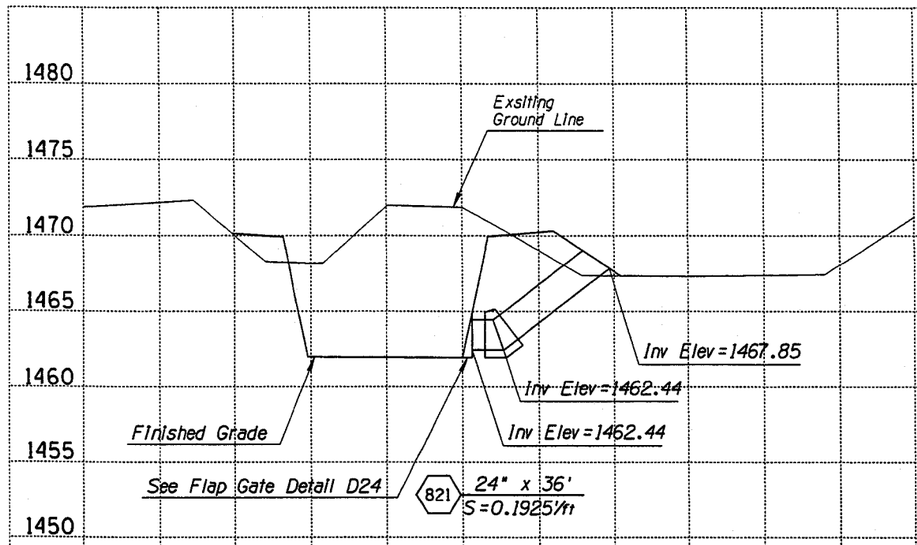

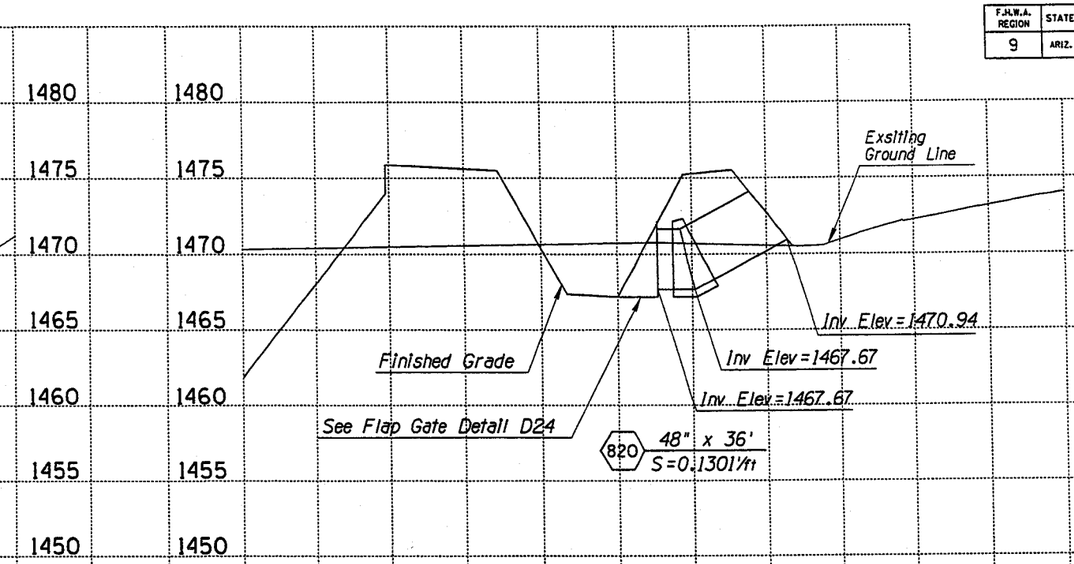

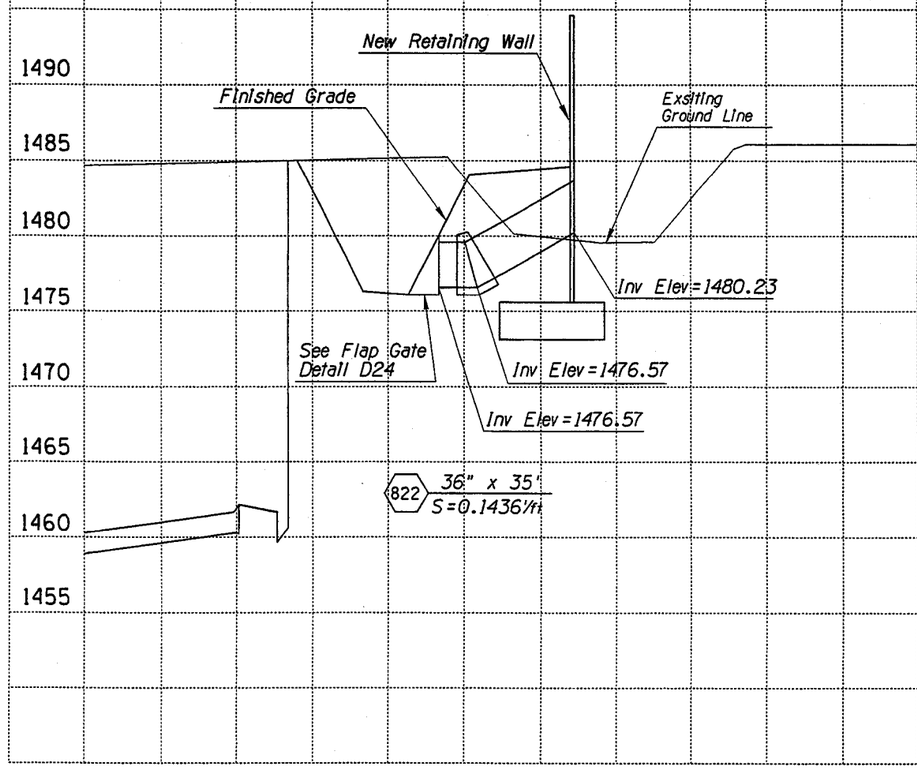

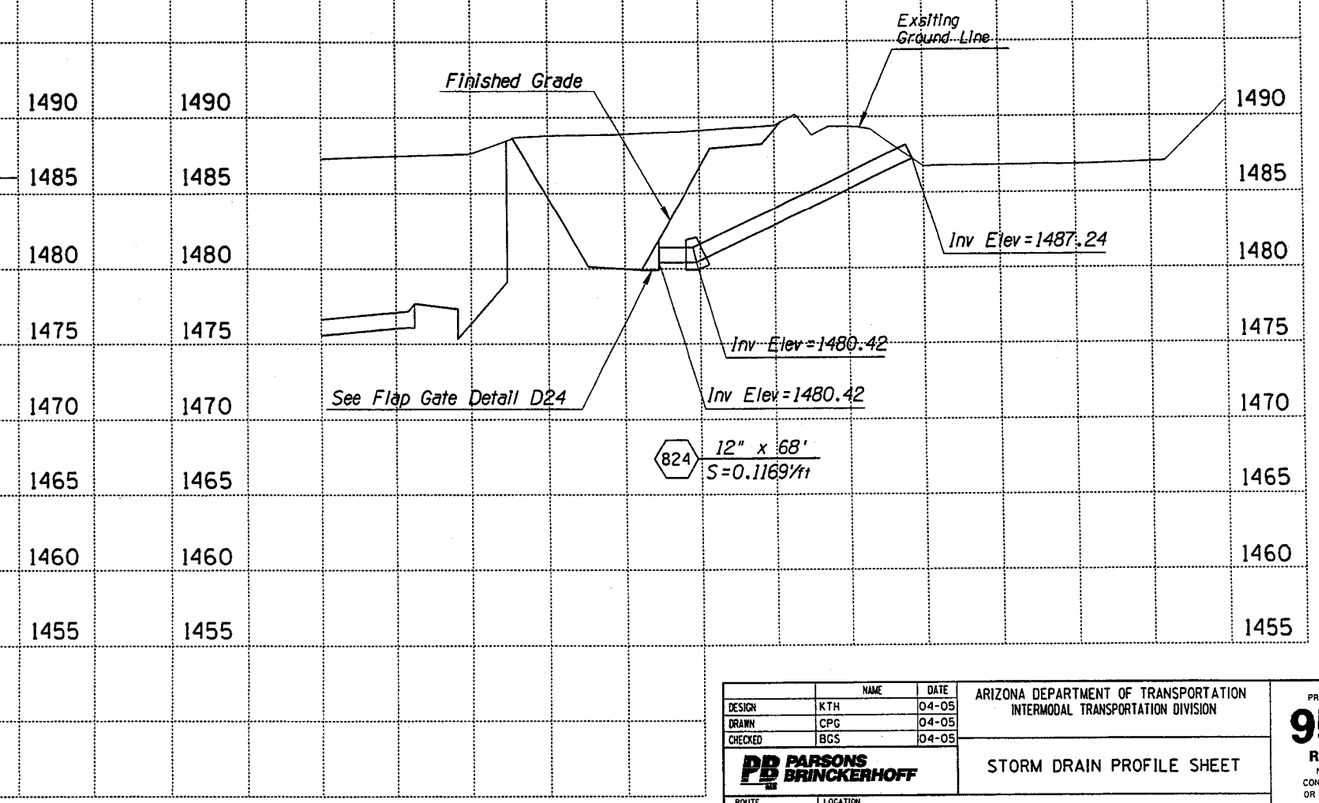

	NAME	DATE
DESIGN	KTH	04-05
DRAWN	CPG	04-05
CHECKED	BGS	04-05

PARSONS BRINCKERHOFF

ARIZONA DEPARTMENT OF TRANSPORTATION
INTERMODAL TRANSPORTATION DIVISION

STORM DRAIN PROFILE SHEET

PRELIMINARY 95% REVIEW
NOT FOR CONSTRUCTION OR RECORDING

ROUTE 202L
LOCATION RED MTN FWY, UNIVERSITY DR - SOUTHERN AVE

DWG NO. D-2.44

TRACS NO. H 5783 01C

202-B(002)B

___ OF ___

DATE- LOCATION- REVISIONS- FINISHED PLANS- SURVEY NO.

Tue Mar 29 11:25:19 2005 H:\RedMtn-Univ-Southern\Drng\dpr31.dgn

F.H.W.A. REGION	STATE	PROJECT NO.	SHEET NO.	TOTAL SHEETS	AS BUILT
9	ARIZ.	202-B(002)B			
		202L MA 027			

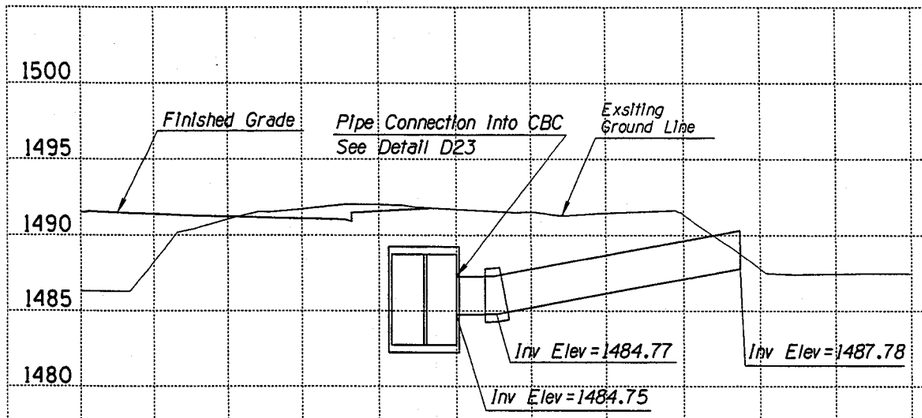

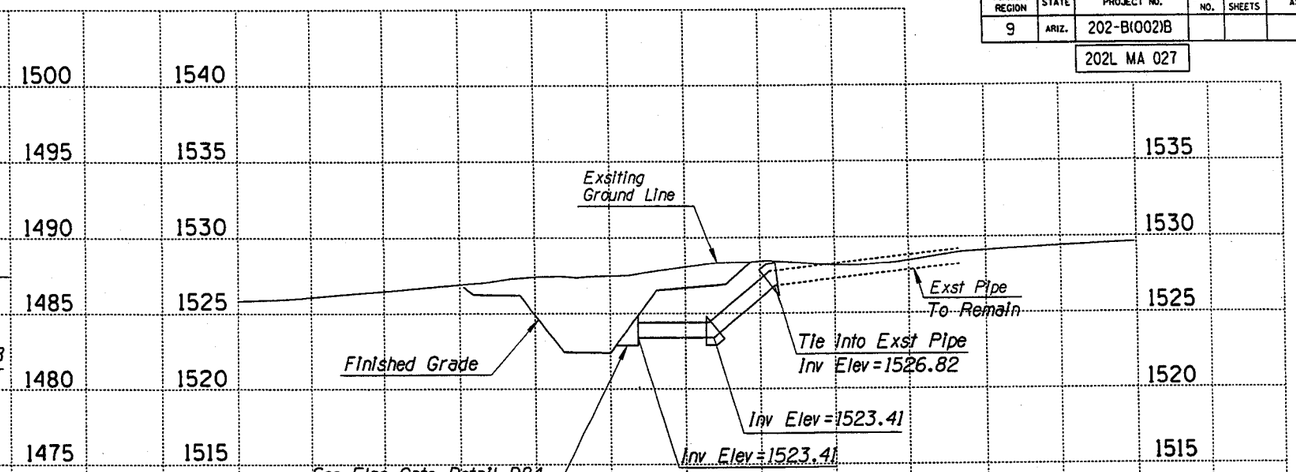

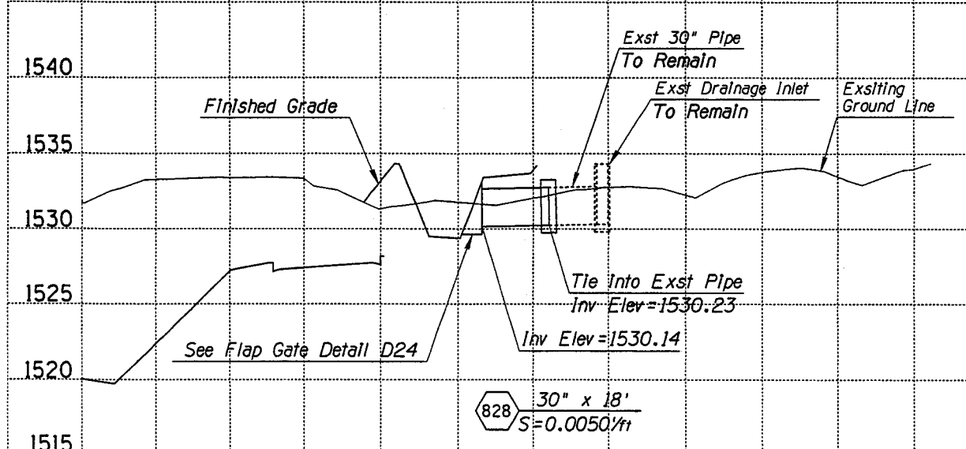

	NAME	DATE
DESIGN	KTH	04-05
DRAWN	CPG	04-05
CHECKED	BGS	04-05

PARSONS BRINCKERHOFF

ARIZONA DEPARTMENT OF TRANSPORTATION
INTERMODAL TRANSPORTATION DIVISION

STORM DRAIN PROFILE SHEET

PRELIMINARY
95%
REVIEW
NOT FOR CONSTRUCTION OR RECORDING

ROUTE	LOCATION
202L	RED MTN FWY, UNIVERSITY DR - SOUTHERN AVE

DWG NO. D-2.45

TRACS NO. H 5783 01C | 202-B(002)B | ___ OF ___

DATE- LOCATION- REVISIONS- FINISHED PLANS- SURVEY NO.

F.H.W.A. REGION	STATE	PROJECT NO.	SHEET NO.	TOTAL SHEETS	AS BUILT
9	ARIZ.	202-B(002)			
		202L MA 027			

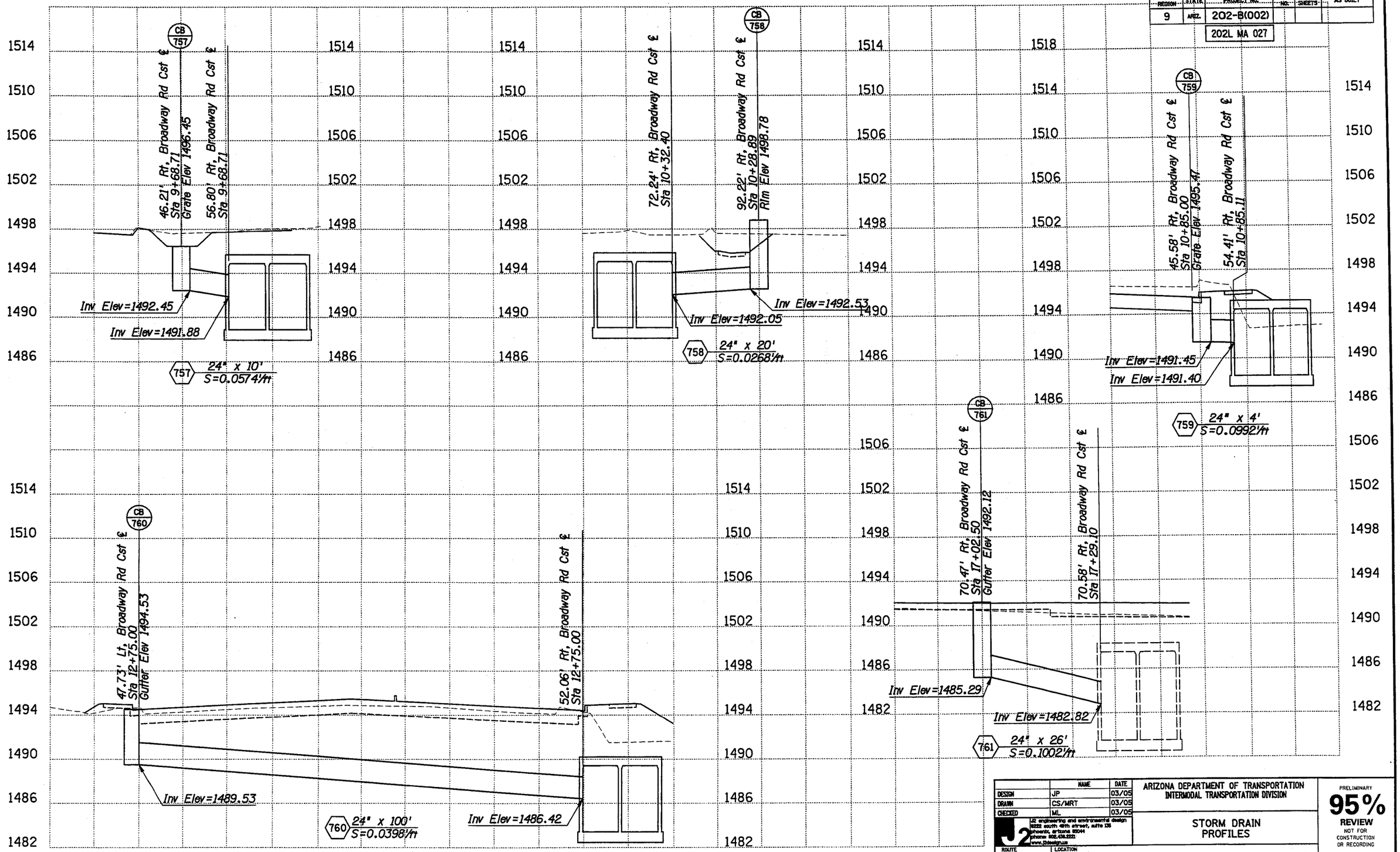

	NAME	DATE
DESIGN	JP	03/05
DRAWN	CS/MRT	03/05
CHECKED	ML	03/05

J2 engineering and environmental design
3222 south 48th street, suite 135
phoenix, arizona 85044
phone 602.438.2221
www.j2design.net

ARIZONA DEPARTMENT OF TRANSPORTATION
INTERMODAL TRANSPORTATION DIVISION

STORM DRAIN PROFILES

PRELIMINARY
95%
REVIEW
NOT FOR CONSTRUCTION OR RECORDING

ROUTE: 202L
LOCATION: RED MTN FWY, UNIVERSITY DR - SOUTHERN AVE

DWG NO. D-2.51

TRACS NO. H 5783 01C

202-B(002)

___ OF ___

Plotted By: MRT p:\040024\j2cad\sheets\rmus_j2sdp01.dgn 3/29/2005 8:24:02 AM

F.H.W.A. REGION	STATE	PROJECT NO.	SHEET NO.	TOTAL SHEETS	AS BUILT
9	ARIZ.	202-B(002)			
		202L MA 027			

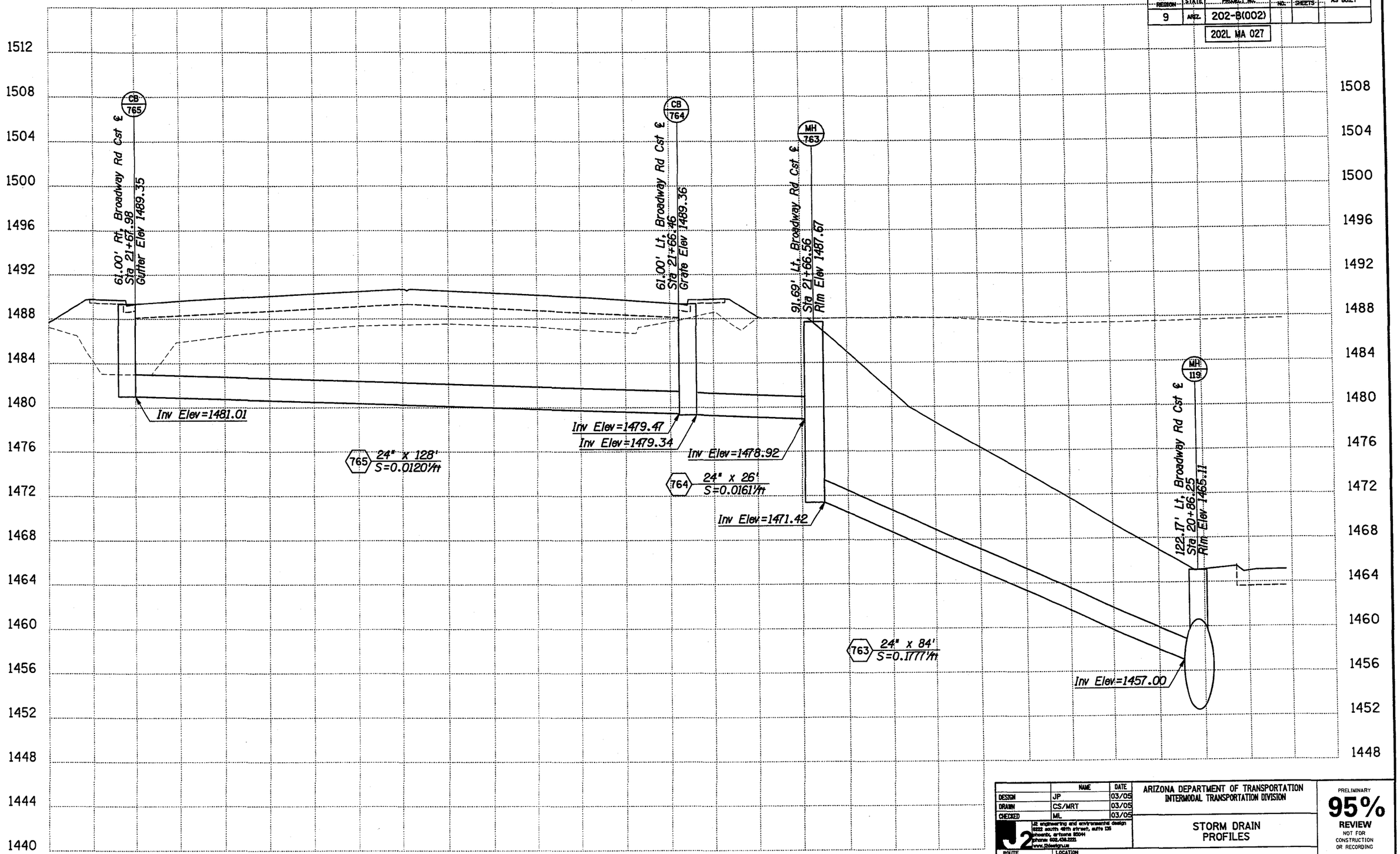

	NAME	DATE
DESIGN	JP	03/05
DRAWN	CS/MRT	03/05
CHECKED	ML	03/05

J2 engineering and environmental design
8222 south 48th street, suite 135
phoenix, arizona 85044
phone: 602.454.3221
www.j2design.us

ARIZONA DEPARTMENT OF TRANSPORTATION
INTERMODAL TRANSPORTATION DIVISION

STORM DRAIN PROFILES

PRELIMINARY
95%
REVIEW
NOT FOR CONSTRUCTION OR RECORDING

ROUTE: 202L
LOCATION: RED MTN FWY, UNIVERSITY DR - SOUTHERN AVE

DWG NO. D-2.52

TRACS NO. H 5783 01C

202-B(002)

___ OF ___

Plotted By: MRT p:\040024\j2cad\sheets\rmus_j2sdp02.dgn 3/29/2005 8:24:03 AM

F.H.W.A. REGION	STATE	PROJECT NO.	SHEET NO.	TOTAL SHEETS	AS BUILT
9	ARIZ.	202-B(002)			

202L MA 027

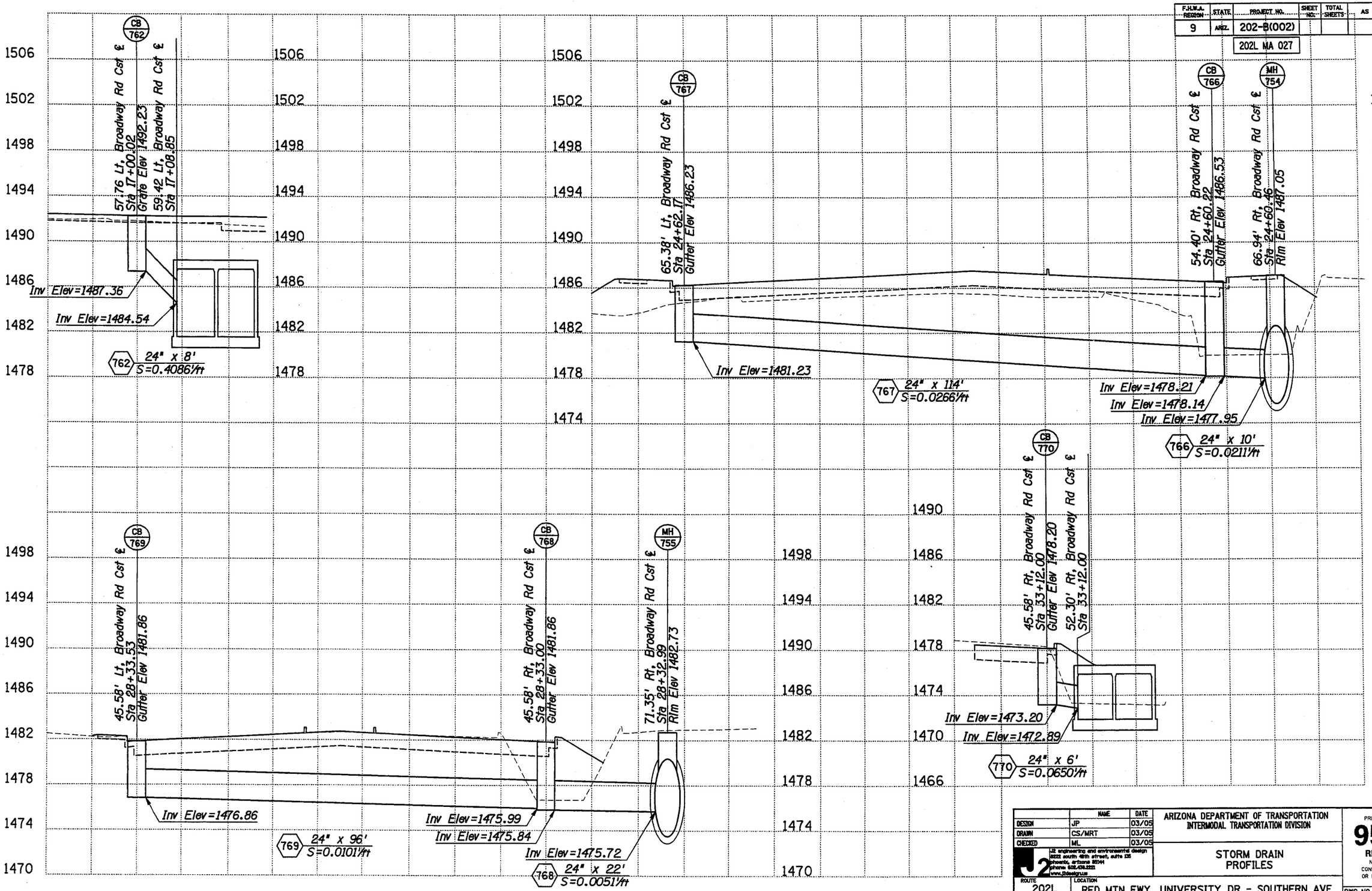

	NAME	DATE
DESIGN	JP	03/05
DRAWN	CS/MRT	03/05
CHECKED	ML	03/05

J2 engineering and environmental design
8222 south 48th street, suite 135
phoenix, arizona 85044
phone: 602.438.2222
www.j2design.us

ARIZONA DEPARTMENT OF TRANSPORTATION
INTERMODAL TRANSPORTATION DIVISION

STORM DRAIN PROFILES

PRELIMINARY
95%
REVIEW
NOT FOR CONSTRUCTION OR RECORDING

ROUTE	LOCATION	DWG NO.
202L	RED MTN FWY, UNIVERSITY DR - SOUTHERN AVE	D-2.53

TRACS NO. H 5783 01C | 202-B(002) | ___ OF ___

Plotted By: MRT P:\040024\J2Cad\Sheets\RMUS_j2sdp03.dgn 3/29/2005 8:35:39 AM

F.H.W.A. REGION	STATE	PROJECT NO.	SHEET NO.	TOTAL SHEETS	AS BUILT
9	ARIZ.	202-B(002)B			
		202L MA 027			

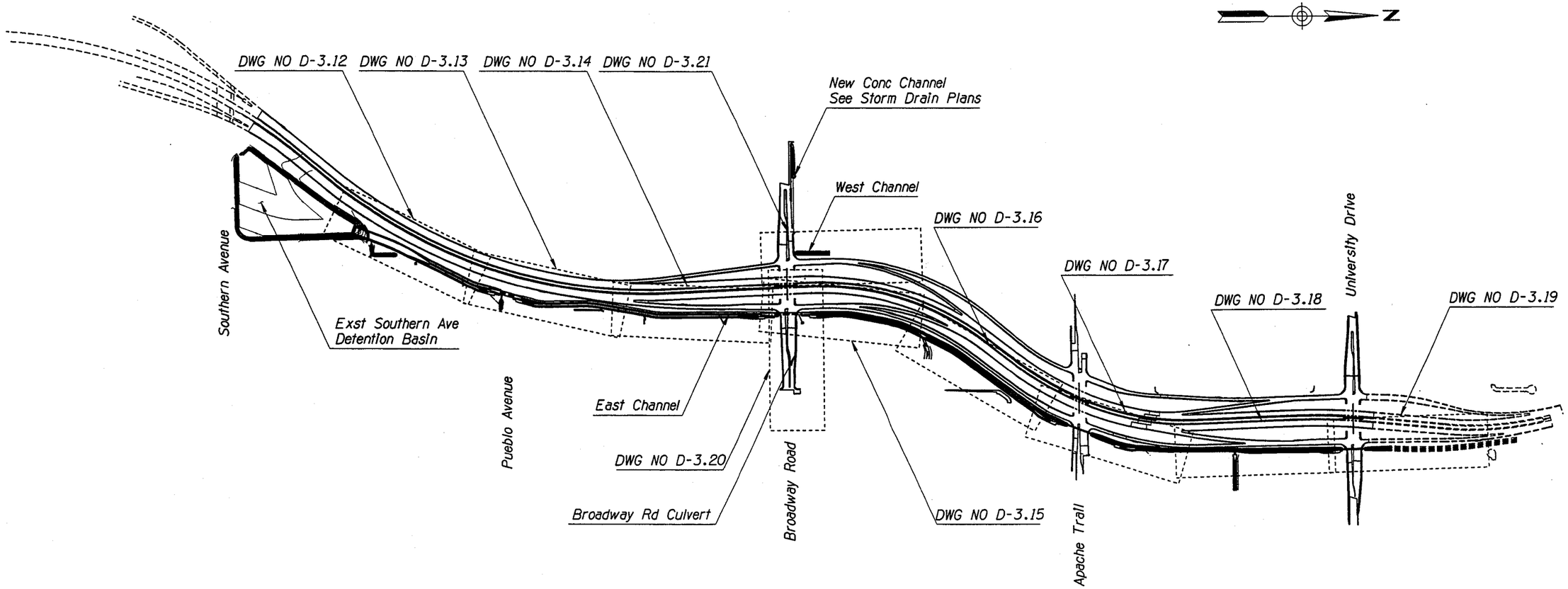

	NAME	DATE
DESIGN	RPC	04-05
DRAWN	CPG	04-05
CHECKED	BGS	04-05

PB PARSONS BRINCKERHOFF

ARIZONA DEPARTMENT OF TRANSPORTATION
INTERMODAL TRANSPORTATION DIVISION

OFF-SITE DRAINAGE LAYOUT PLAN

PRELIMINARY
95%
REVIEW
NOT FOR CONSTRUCTION OR RECORDING

ROUTE 202L
LOCATION RED MTN FWY, UNIVERSITY DR - SOUTHERN AVE

DWG NO. D-3.01

TRACS NO. H 5783 01C
202-B(002)B
___ OF ___

DATE- LOCATION- REVISIONS- FINISHED PLANS- SURVEY NO.

Tue Mar 29 11:35:08 2005 H:\RedMtn-Univ-Southern\Drng\drngkeymap.dgn

F.H.W.A. REGION	STATE	PROJECT NO.	SHEET NO.	TOTAL SHEETS	AS BUILT
9	ARIZ.	202-B(002)B			
		202L MA 027			

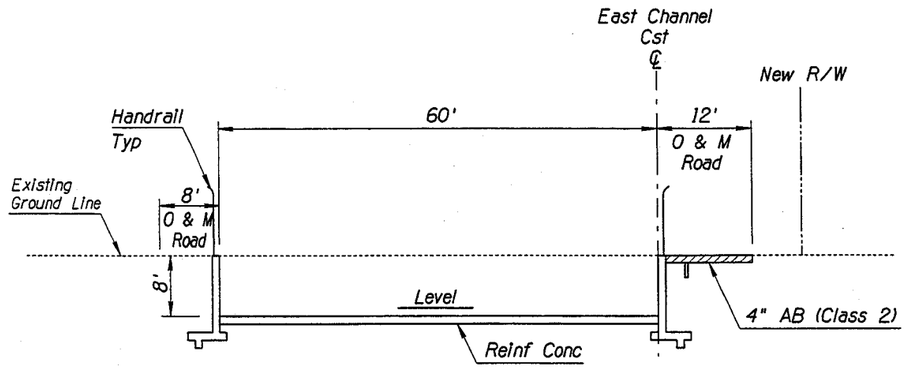

TYPICAL RECTANGULAR CHANNEL SECTION

Sta 11+15.00 to Sta 16+12.00

Notes:

1. See Detail D16 for Rectanglar Channel Structural Details.
2. See East Channel Typical Structural Sections, Detail D17, for channel lining information.
3. For Channel Geometry at Ramps, See Details D13 & D14.
4. For Channel Geometry at Transitions, See Detail D16.
5. For East Channel Depths, See Plan & Profile Sheets D-3.13 to D-3.20.
6. Maintenance Roads Continue through Ramp Transitions.

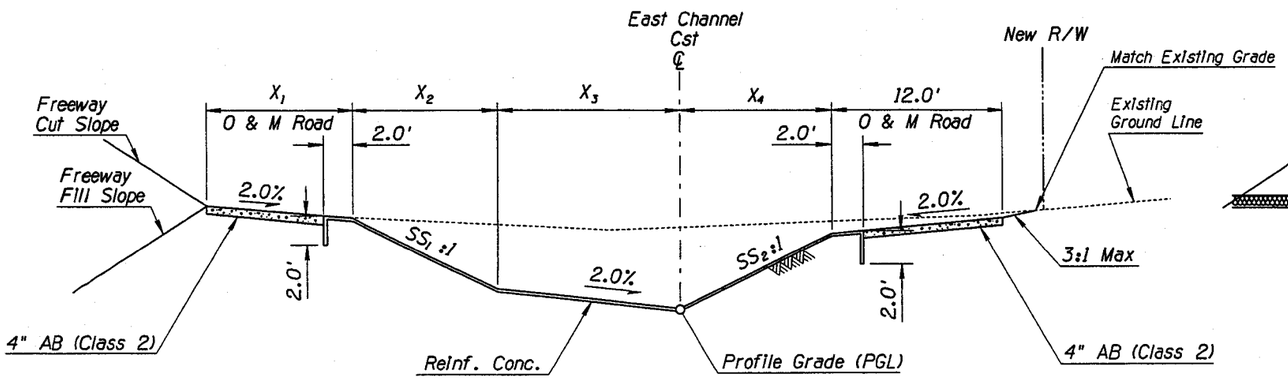

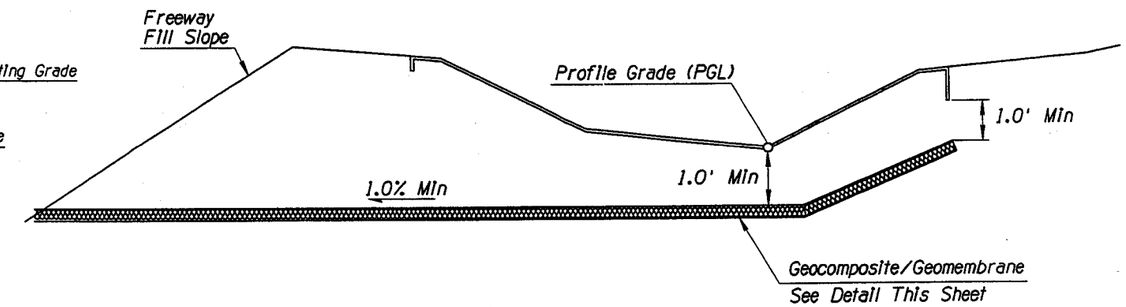

EAST CHANNEL WITH GEOCOMPOSITE/GEOMEMBRANE

Sta 85+00.00 to Sta 86+40.00

Station	X_1	X_2	X_3	X_4	SS_1 :1	SS_2 :1
18+53.20 to 20+00.00	8.0	15.52	12.0	16.00	2	2
20+00.00 to 22+00.00	8.0	15.52-16.52	12.0	16.00-17.00	2	2
22+00.00 to 24+50.00	8.0	16.52	12.0	17.00	2	2
27+80.00 to 51+50.00	0.0	15.52	12.0	16.00	2	2
55+50.00 to 64+50.00	8.0	11.60	10.0	12.00	2	2
64+50.00 to 65+12.46	8.0	11.60-12.60	10.0	12.00-13.00	2	2
65+12.46 to 65+69.37	8.0	12.60	10.0-22.0	13.00-0.00	2	2-0
65+69.37 to 66+01.46	8.0	12.60	22.0	0.00	2	0
66+01.46 to 66+35.29	8.0	12.60	22.0-10.0	0.00-13.00	2	0-2
66+35.29 to 80+33.80	8.0	12.60	10.0	13.00	2	2
84+90.00 to 90+61.08	8.0	7.60	8.0	8.00	2	2
90+61.08 to 90+91.08	8.0-1.0	7.60-7.20	8.0	8.00-6.00	2-1.5	2-1.5
90+91.08 to 95+00.00	1.0	7.20	8.0	6.00	1.5	1.5
95+00.00 to 95+30.00	1.0	7.20-5.76	8.0	6.00	1.5	1.5
95+30.00 to 98+59.41	1.0	5.76	8.0	6.00	1.5	1.5
98+59.41 to 98+89.41	1.0-8.0	5.76-7.68	8.0	8.00	1.5-2	1.5-2
98+89.41 to 107+10.93	8.0	7.68	8.0	8.00	2	2
110+90.00 to 112+00.00	8.0	7.83	4.0	8.00	2	2

TYPICAL EAST CHANNEL SECTION

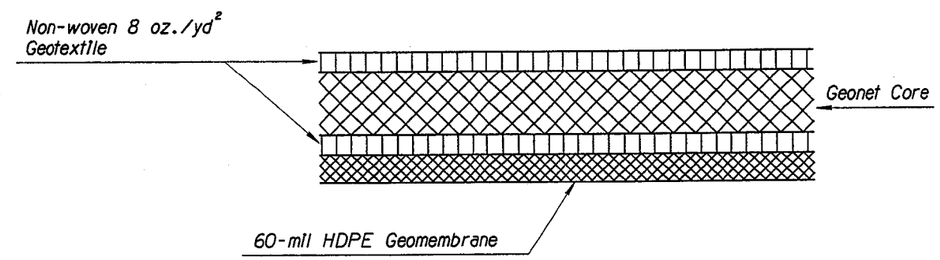

GEOCOMPOSITE/GEOMEMBRANE DETAIL

	NAME	DATE
DESIGN	RPC	04-05
DRAWN	CPG	04-05
CHECKED	BGS	04-05

PB PARSONS BRINCKERHOFF

ARIZONA DEPARTMENT OF TRANSPORTATION
INTERMODAL TRANSPORTATION DIVISION

EAST CHANNEL TYPICAL SECTIONS

PRELIMINARY 95% REVIEW NOT FOR CONSTRUCTION OR RECORDING

ROUTE 202L | LOCATION RED MTN FWY, UNIVERSITY DR - SOUTHERN AVE

DWG NO. D-3.10

TRACS NO. H 5783 01C | 202-B(002)B | ___ OF ___

DATE- | LOCATION- | REVISIONS- | FINISHED PLANS- | SURVEY NO.

F.H.W.A. REGION	STATE	PROJECT NO.	SHEET NO.	TOTAL SHEETS	AS BUILT
9	ARIZ.	202-B(002)B			
		202L MA 027			

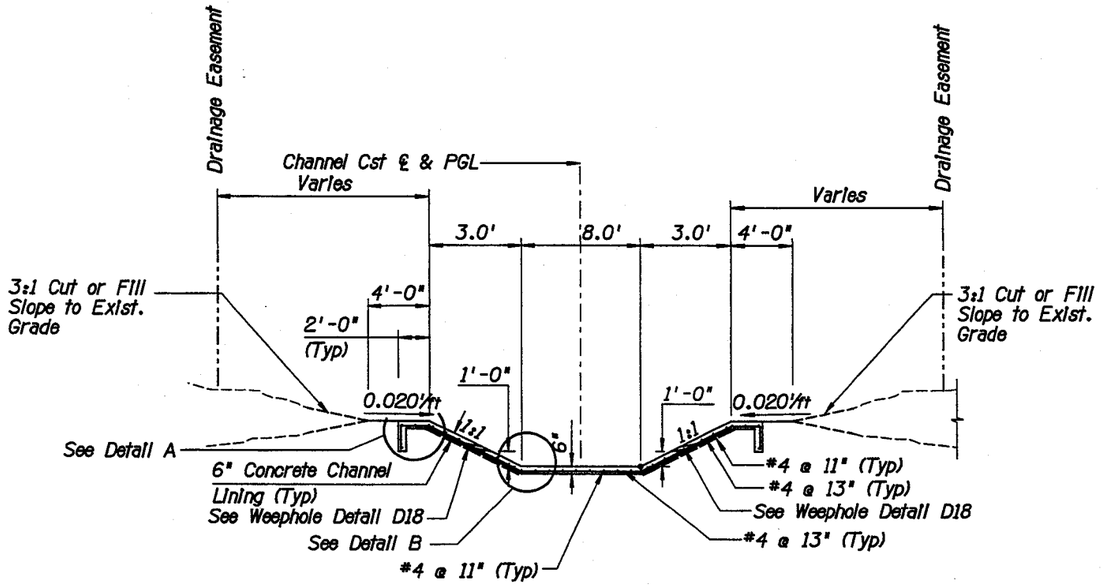

TYPICAL CHANNEL SECTION (WEST CHANNEL)

Station

Sta. 194+47.84 to Sta. 200+15+83

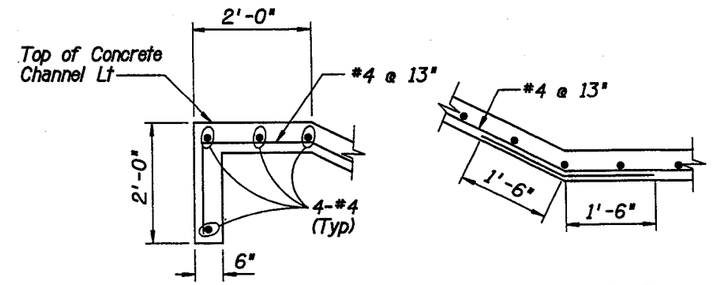

DETAIL A

DETAIL B

Notes:

1. Top of channel lining Lt is to be a minimum of 6" below existing ground at R/W line.
2. All concrete shall be Class S (f'_c=3000 psi)
3. All reinforced steel shall conform to ASTM A615/A615M-96a, Grade 60.
4. All reinforcing steel shall have a minimum 2" clear cover to grade and 2" to exposed surfaces unless otherwise noted.
5. Channel lining shall be continuously reinforced without expansion or tooled joints except as follows: Construction joints shall be located at the end of a day's pour or when concrete placement stops for more than forty-five (45) minutes and between longitudinal paving strips. Longitudinal construction joints shall be located one foot up each side slope. Reinforcing steel shall be continuous through lining construction joints and through joints with box culverts and other hydraulic structures unless noted otherwise.
6. Anchor slabs shall be installed in the locations shown on the plans.
7. Weep holes 10' on center typ.

	NAME	DATE
DESIGN	JP/ML	04/05
DRAWN	MRT	04/05
CHECKED	JH	04/05

J2 engineering and environmental design
8222 south 48th street, suite 135
phoenix, arizona 85044
phone 602.438.2221
www.j2designgroup.com

ARIZONA DEPARTMENT OF TRANSPORTATION
INTERMODAL TRANSPORTATION DIVISION

TYPICAL CHANNEL SECTION

PRELIMINARY
95%
REVIEW
NOT FOR CONSTRUCTION OR RECORDING

ROUTE 202L
LOCATION RED MTN FWY, UNIVERSITY DR - SOUTHERN AVE

DWG NO. D-3.11

TRACS NO. H 5783 01C

202-B(002)B

___ OF ___

SURVEY NO. | FINISHED PLANS- | REVISIONS- | LOCATION- | DATE-

Plotted By: MRT P:\040024\J2Cad\Sheets\RMUS_j2dt00.dgn 3/29/2005 8:39:44 AM

F.H.W.A. REGION	STATE	PROJECT NO.	SHEET NO.	TOTAL SHEETS	AS BUILT
9	ARIZ.	202-B(002)B			

202L MA 027

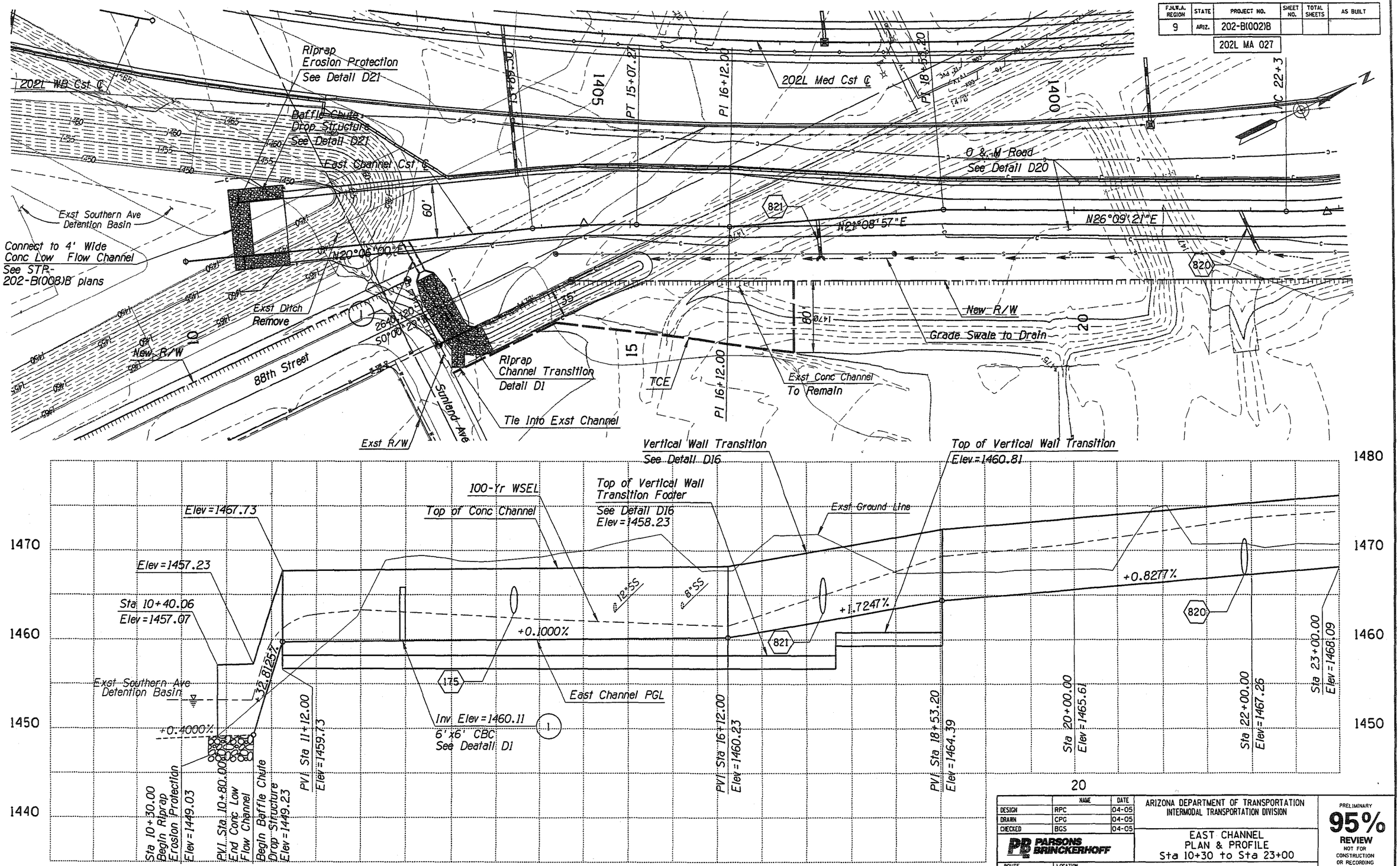

	NAME	DATE
DESIGN	RPC	04-05
DRAWN	CPG	04-05
CHECKED	BGS	04-05

PARSONS BRINCKERHOFF

ARIZONA DEPARTMENT OF TRANSPORTATION
INTERMODAL TRANSPORTATION DIVISION

EAST CHANNEL
PLAN & PROFILE
Sta 10+30 to Sta 23+00

PRELIMINARY
95%
REVIEW
NOT FOR CONSTRUCTION OR RECORDING

ROUTE 202L
LOCATION RED MTN FWY, UNIVERSITY DR - SOUTHERN AVE
DWG NO. D-3.12

TRACS NO. H 5783 01C
202-B(002)B
___ OF ___

Tue Mar 29 11:07:03 2005
H:\RedMtn-Univ-Southern\Drng\chp101.dgn

F.H.W.A. REGION	STATE	PROJECT NO.	SHEET NO.	TOTAL SHEETS	AS BUILT
9	ARIZ.	202-B(002)B			
		202L MA 027			

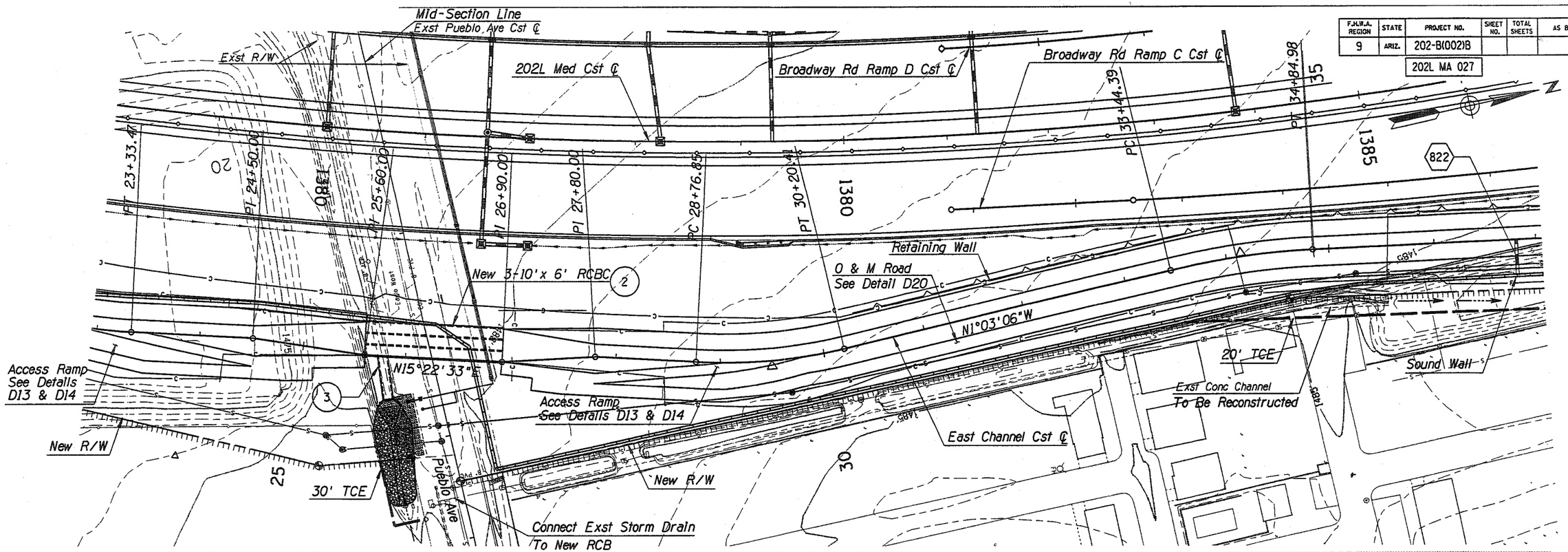

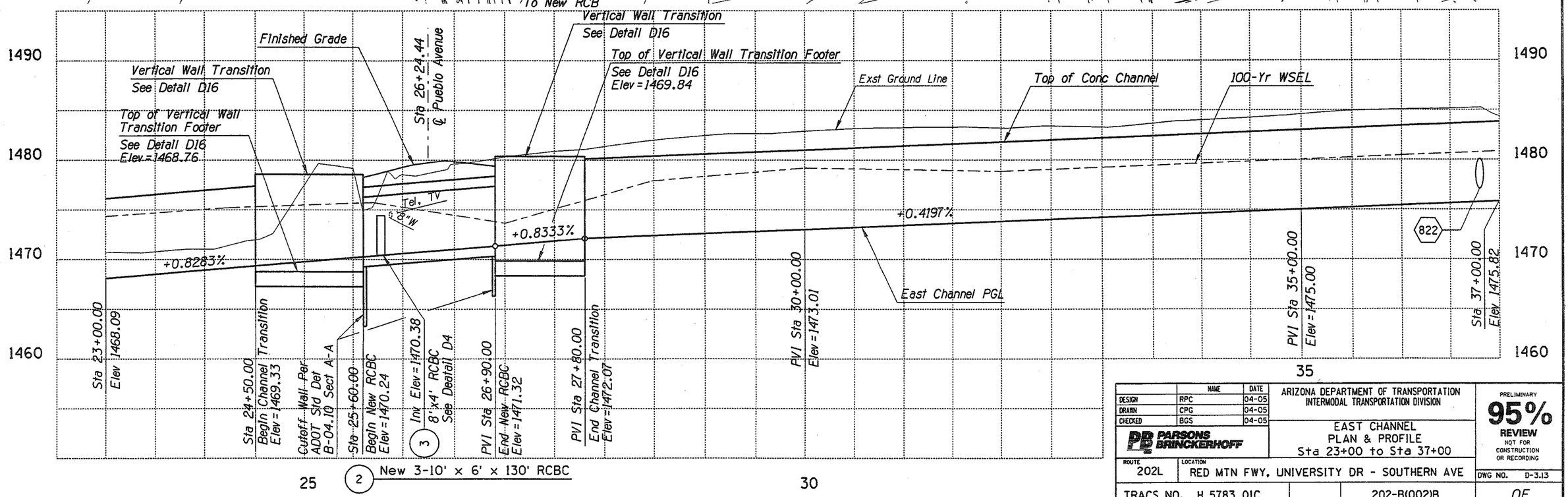

	NAME	DATE
DESIGN	RPC	04-05
DRAWN	CPG	04-05
CHECKED	BGS	04-05

PARSONS BRINCKERHOFF

ARIZONA DEPARTMENT OF TRANSPORTATION
INTERMODAL TRANSPORTATION DIVISION

EAST CHANNEL
PLAN & PROFILE
Sta 23+00 to Sta 37+00

PRELIMINARY
95%
REVIEW
NOT FOR CONSTRUCTION OR RECORDING

ROUTE 202L | LOCATION RED MTN FWY, UNIVERSITY DR - SOUTHERN AVE | DWG NO. D-3.13

TRACS NO. H 5783 01C | 202-B(002)B | ___ OF ___

DATE- | LOCATION- | REVISIONS- | FINISHED PLANS- | SURVEY NO.

Tue Mar 29 11:07:30 2005 H:\RedMtn-Univ-Southern\Drng\chp102.dgn

F.H.W.A. REGION	STATE	PROJECT NO.	SHEET NO.	TOTAL SHEETS	AS BUILT
9	ARIZ.	202-B(002)B			

202L MA 027

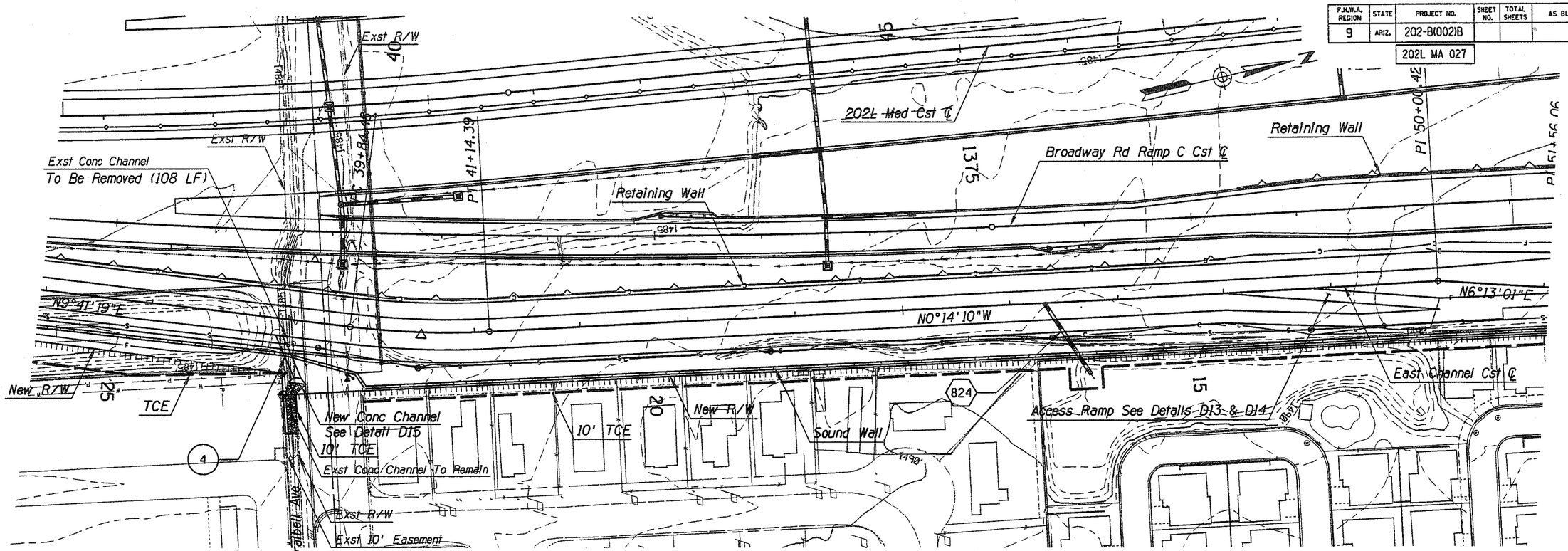

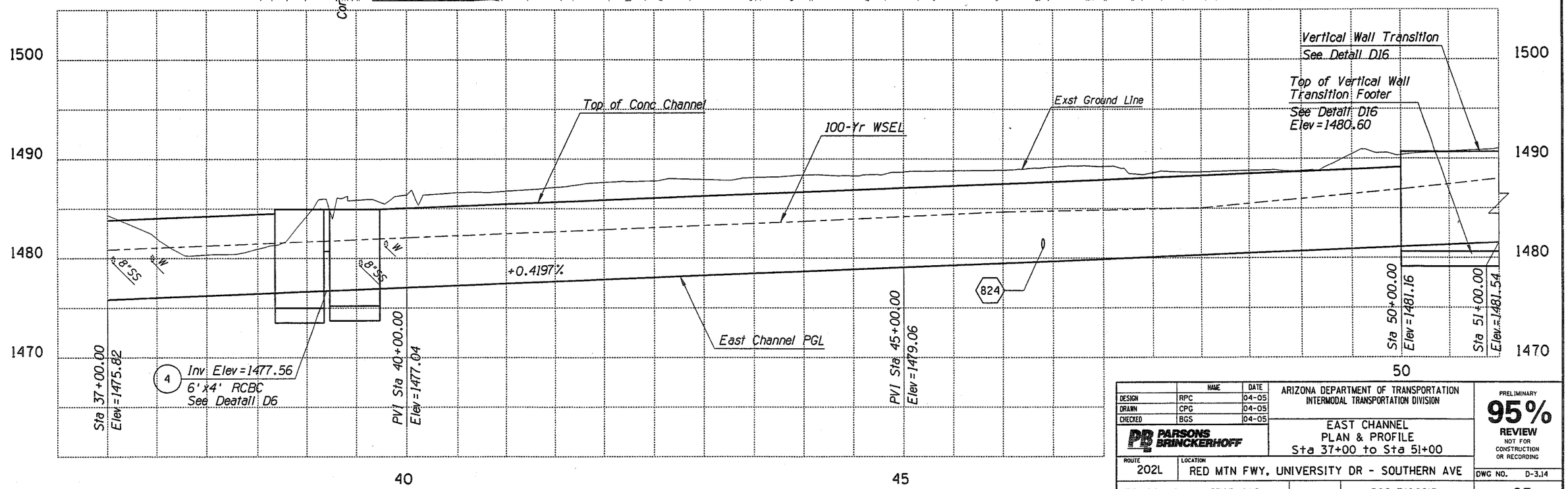

	NAME	DATE
DESIGN	RPC	04-05
DRAWN	CPG	04-05
CHECKED	BGS	04-05

PARSONS BRINCKERHOFF

ARIZONA DEPARTMENT OF TRANSPORTATION
INTERMODAL TRANSPORTATION DIVISION

EAST CHANNEL
PLAN & PROFILE
Sta 37+00 to Sta 51+00

PRELIMINARY
95%
REVIEW
NOT FOR CONSTRUCTION OR RECORDING

ROUTE 202L | LOCATION RED MTN FWY, UNIVERSITY DR - SOUTHERN AVE

DWG NO. D-3.14

TRACS NO. H 5783 01C | 202-B(002)B | ___ OF ___

SURVEY NO. | FINISHED PLANS- | REVISIONS- | LOCATION- | DATE-

Tue Mar 29 11:07:57 2005 H:\RedMtn-Univ-Southern\Drng\chpl03.dgn

F.H.W.A. REGION	STATE	PROJECT NO.	SHEET NO.	TOTAL SHEETS	AS BUILT
9	ARIZ.	202-B(002)B			
		202L MA 027			

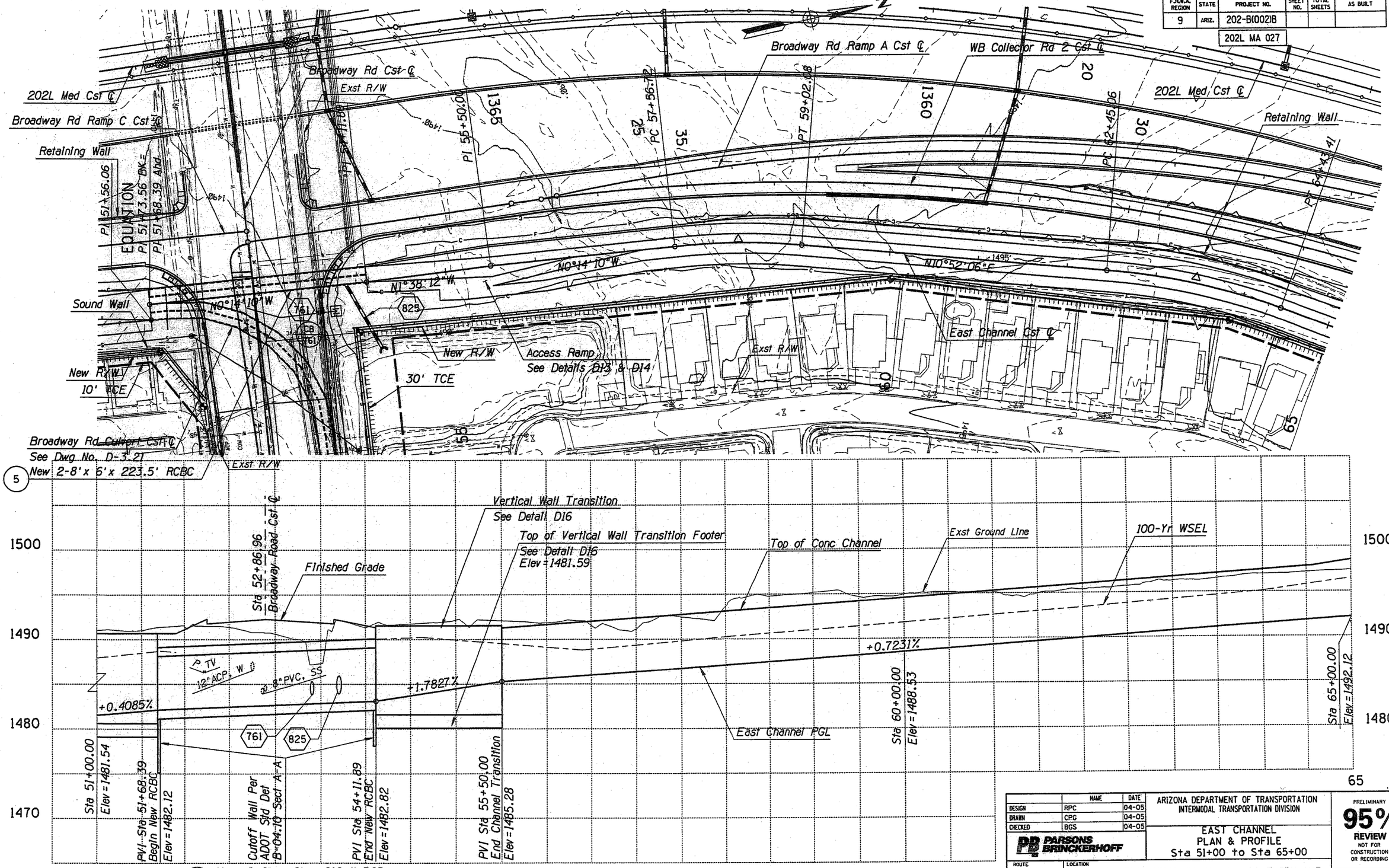

	NAME	DATE
DESIGN	RPC	04-05
DRAWN	CPG	04-05
CHECKED	BGS	04-05

PARSONS BRINCKERHOFF

ARIZONA DEPARTMENT OF TRANSPORTATION
INTERMODAL TRANSPORTATION DIVISION

EAST CHANNEL
PLAN & PROFILE
Sta 51+00 to Sta 65+00

PRELIMINARY
95%
REVIEW
NOT FOR CONSTRUCTION OR RECORDING

ROUTE 202L | LOCATION RED MTN FWY, UNIVERSITY DR - SOUTHERN AVE | DWG NO. D-3.15

TRACS NO. H 5783 01C | 202-B(002)B | ___ OF ___

Tue Mar 29 11:08:23 2005 H:\RedMtn-Univ-Southern\Drng\chp104.dgn

F.H.W.A. REGION	STATE	PROJECT NO.	SHEET NO.	TOTAL SHEETS	AS BUILT
9	ARIZ.	202-B(002)B			

202L MA 027

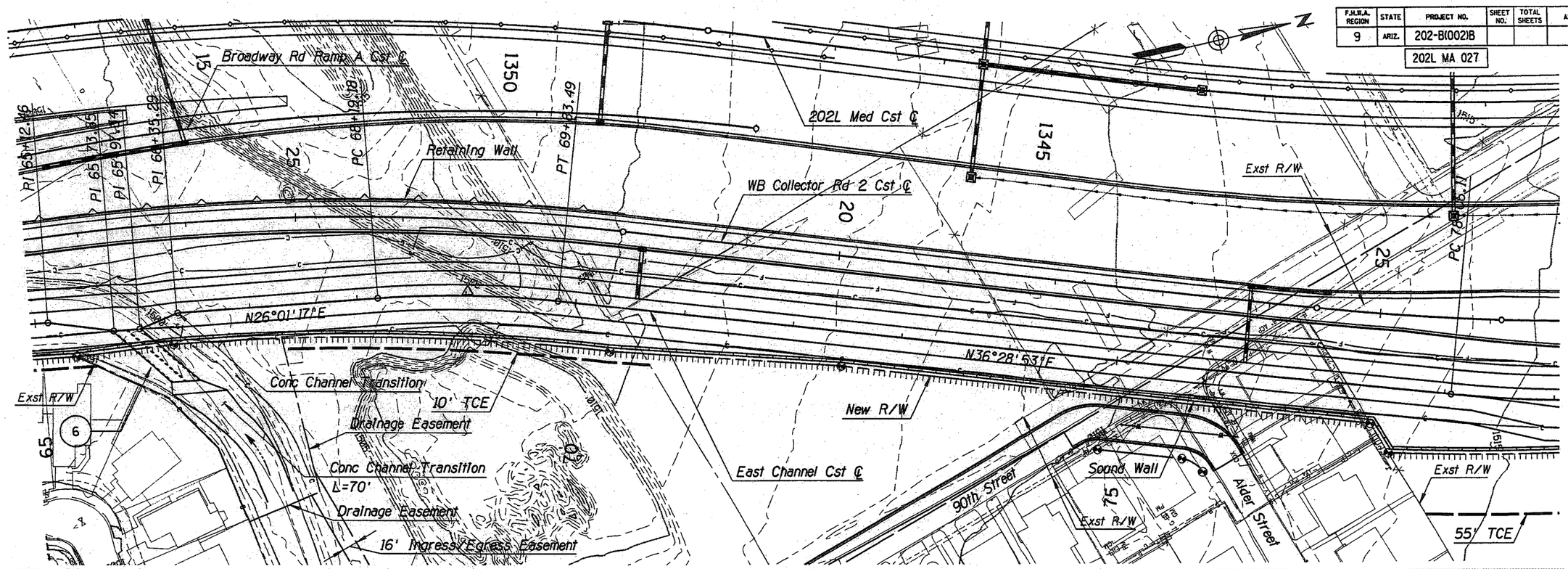

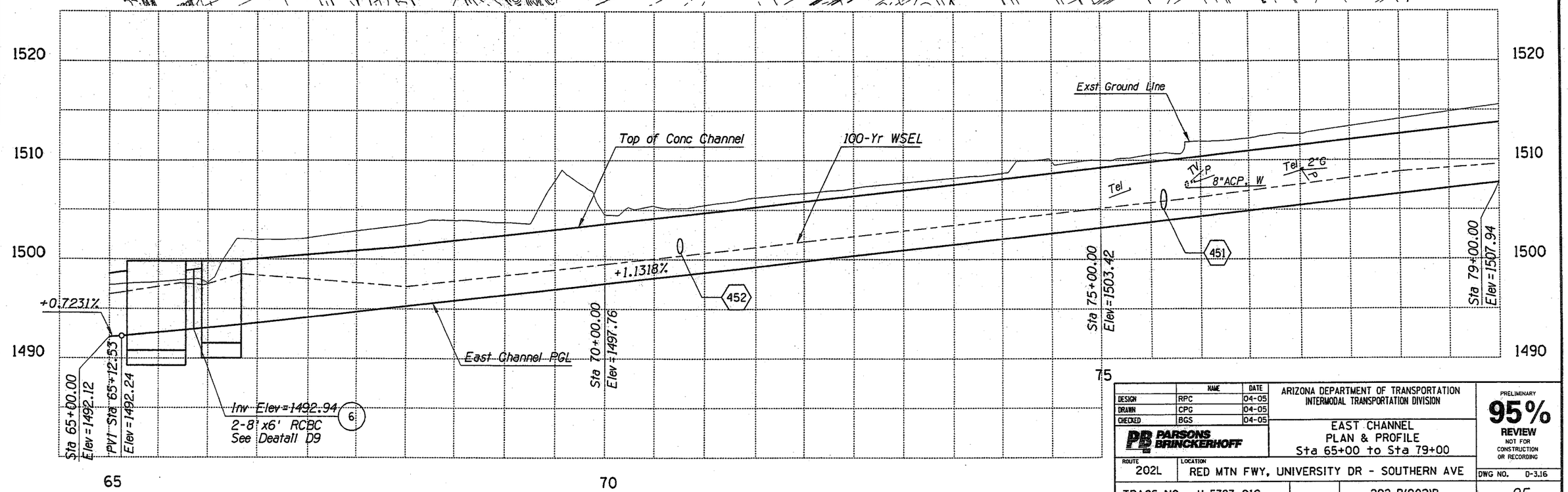

	NAME	DATE
DESIGN	RPC	04-05
DRAWN	CPG	04-05
CHECKED	BGS	04-05

PARSONS BRINCKERHOFF

ARIZONA DEPARTMENT OF TRANSPORTATION
INTERMODAL TRANSPORTATION DIVISION

EAST CHANNEL
PLAN & PROFILE
Sta 65+00 to Sta 79+00

PRELIMINARY
95%
REVIEW
NOT FOR CONSTRUCTION OR RECORDING

ROUTE 202L
LOCATION RED MTN FWY, UNIVERSITY DR - SOUTHERN AVE

DWG NO. D-3.16

TRACS NO. H 5783 01C

202-B(002)B

___ OF ___

Tue Mar 29 11:08:50 2005 H:\RedMtn-Univ-Southern\Drng\chpl05.dgn

F.H.W.A. REGION	STATE	PROJECT NO.	SHEET NO.	TOTAL SHEETS	AS BUILT
9	ARIZ.	202-B(002)B			
		202L MA 027			

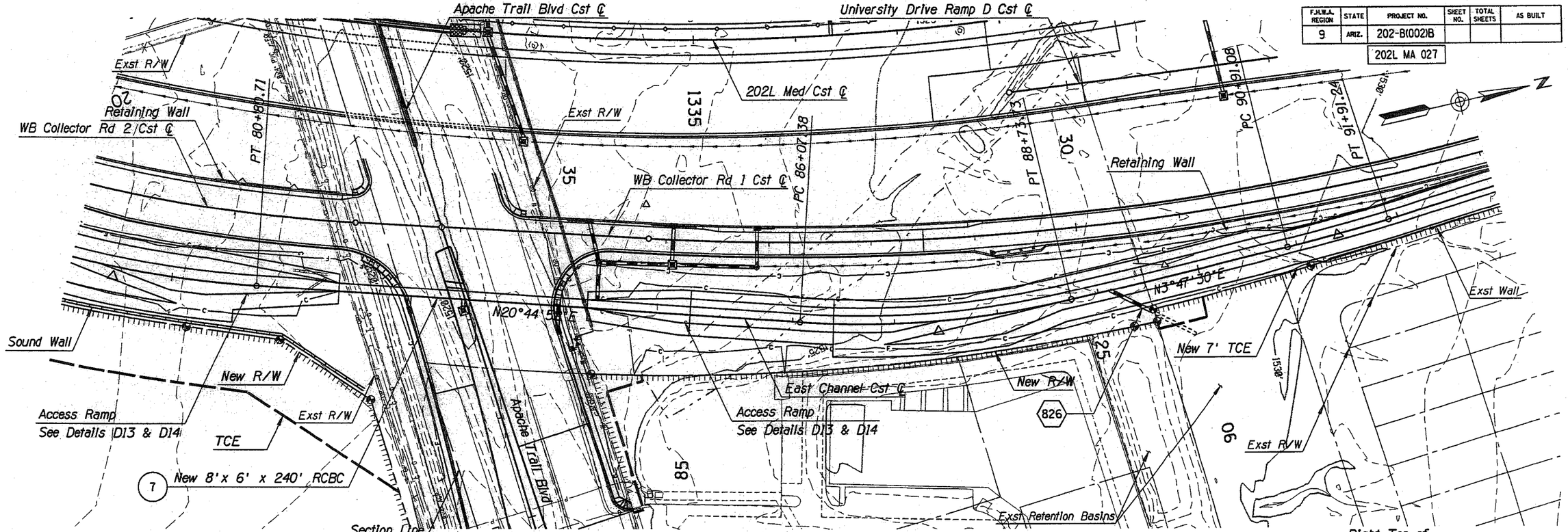

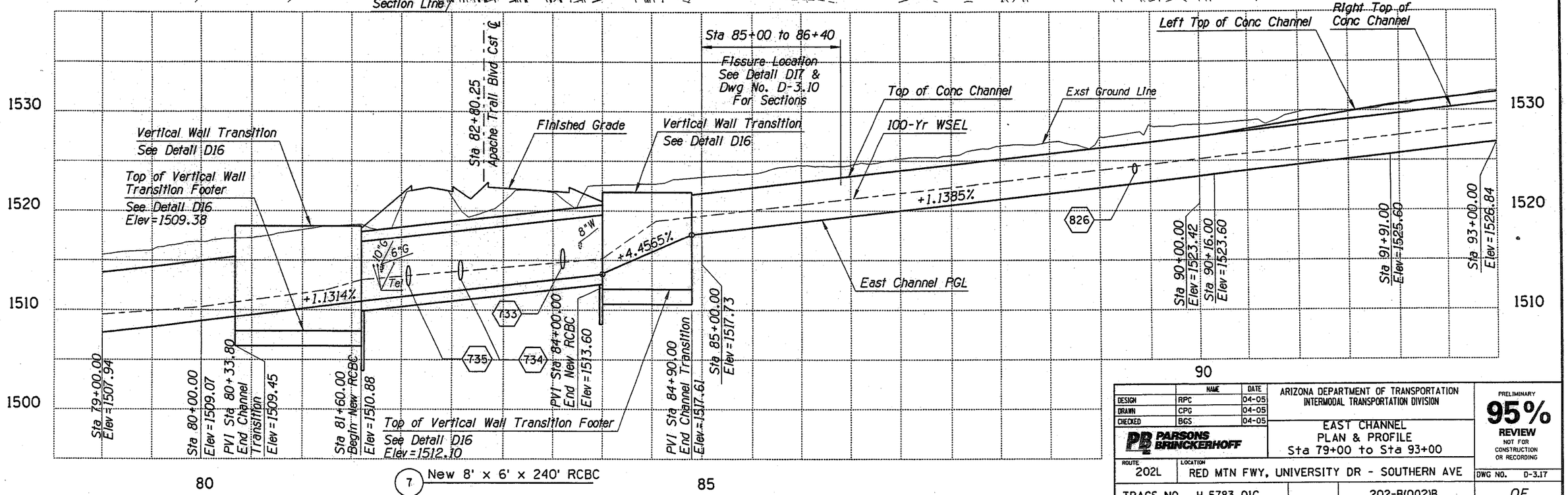

	NAME	DATE
DESIGN	RPC	04-05
DRAWN	CPG	04-05
CHECKED	BGS	04-05

PARSONS BRINCKERHOFF

ARIZONA DEPARTMENT OF TRANSPORTATION
INTERMODAL TRANSPORTATION DIVISION

EAST CHANNEL
PLAN & PROFILE
Sta 79+00 to Sta 93+00

PRELIMINARY
95%
REVIEW
NOT FOR CONSTRUCTION OR RECORDING

ROUTE 202L | LOCATION RED MTN FWY, UNIVERSITY DR - SOUTHERN AVE | DWG NO. D-3.17

TRACS NO. H 5783 01C | 202-B(002)B | ___ OF ___

Tue Mar 29 11:09:17 2005 H:\RedMtn-Univ-Southern\Drng\chp106.dgn

F.H.W.A. REGION	STATE	PROJECT NO.	SHEET NO.	TOTAL SHEETS	AS BUILT
9	ARIZ.	202-B(002)B			

202L MA 027

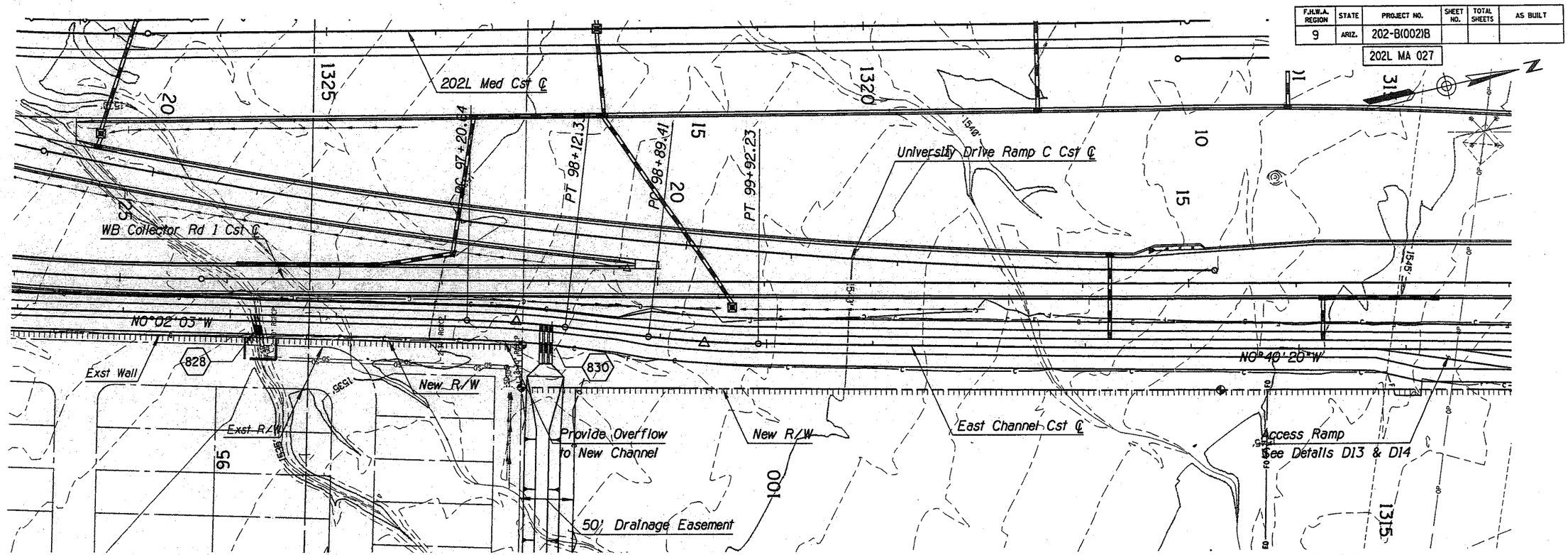

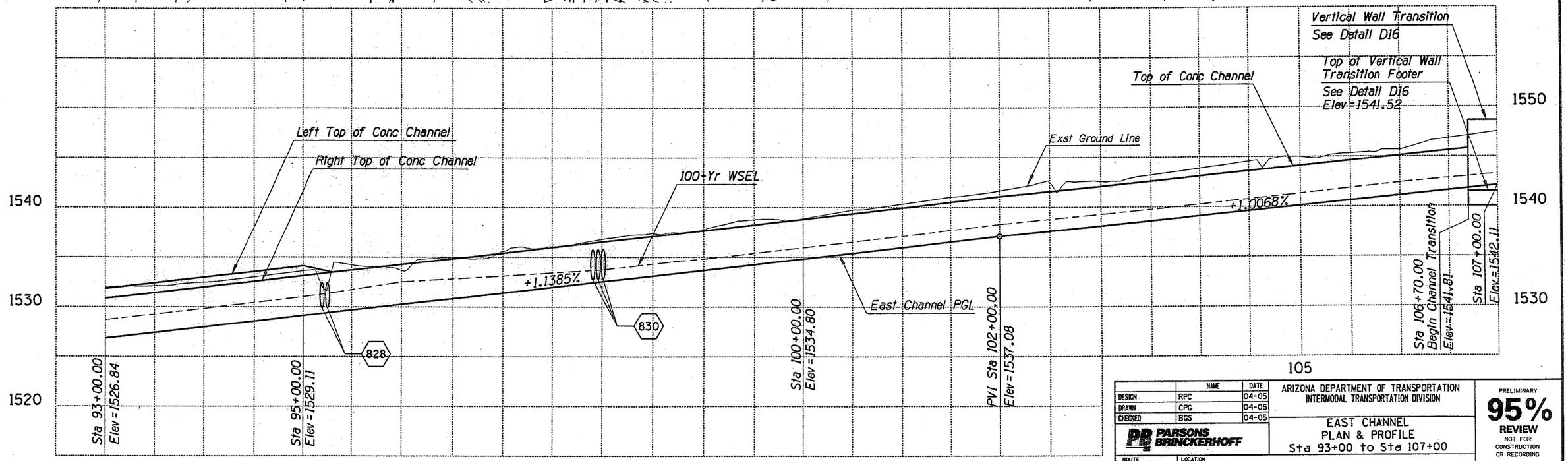

	NAME	DATE
DESIGN	RPC	04-05
DRAWN	CPG	04-05
CHECKED	BGS	04-05

PARSONS BRINCKERHOFF

ARIZONA DEPARTMENT OF TRANSPORTATION
INTERMODAL TRANSPORTATION DIVISION

EAST CHANNEL
PLAN & PROFILE
Sta 93+00 to Sta 107+00

PRELIMINARY
95%
REVIEW
NOT FOR CONSTRUCTION OR RECORDING

ROUTE 202L
LOCATION RED MTN FWY, UNIVERSITY DR - SOUTHERN AVE

DWG NO. D-3.18

TRACS NO. H 5783 01C

202-B(002)B

___ OF ___

SURVEY NO. | FINISHED PLANS | REVISIONS | LOCATION | DATE

Tue Mar 29 11:09:44 2005 H:\RedMtn-Univ-Southern\Drng\chp107.dgn

F.H.W.A. REGION	STATE	PROJECT NO.	SHEET NO.	TOTAL SHEETS	AS BUILT
9	ARIZ.	202-B(002)B			

202L MA 027

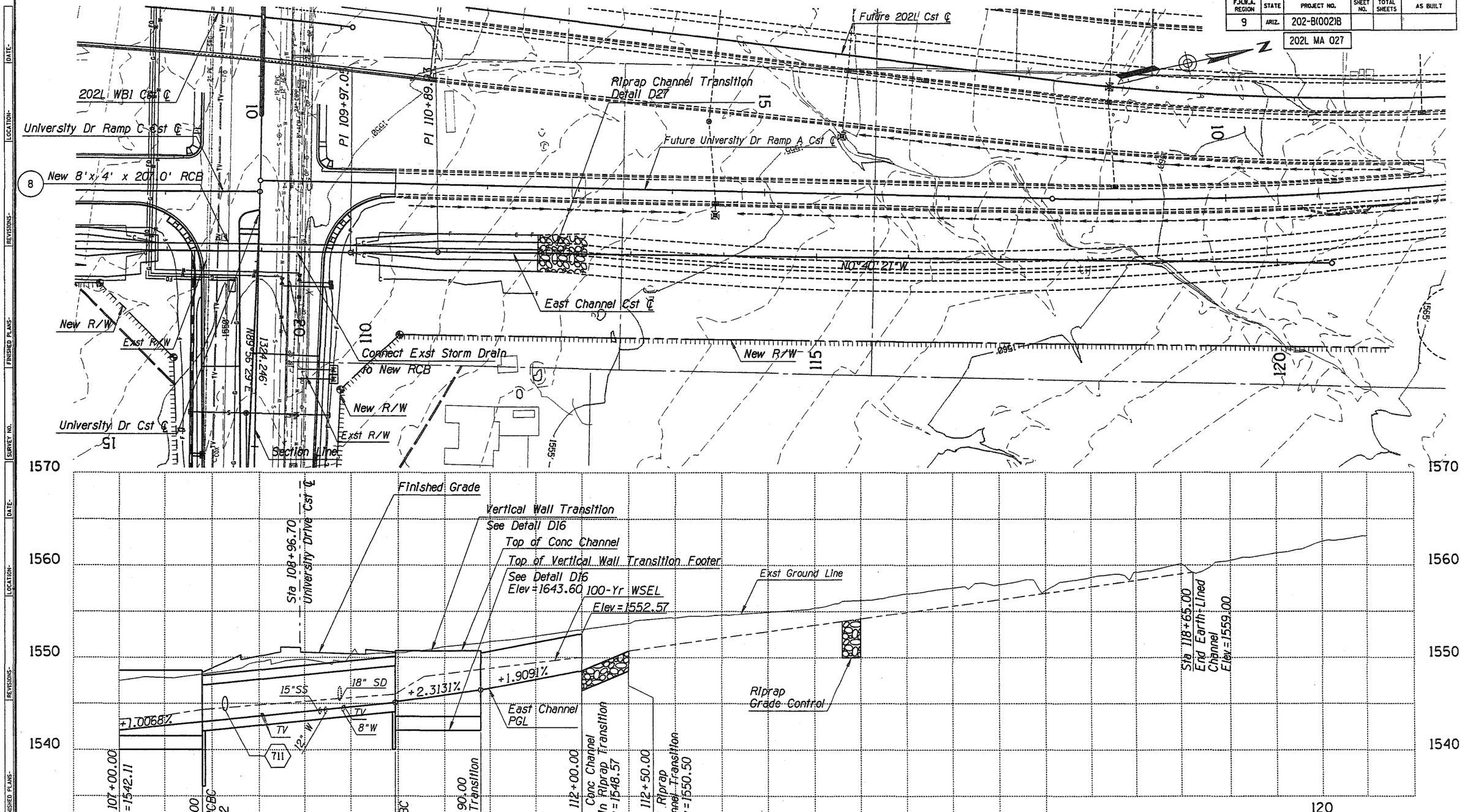

	NAME	DATE
DESIGN	RPC	04-05
DRAWN	CPG	04-05
CHECKED	BGS	04-05

PARSONS BRINCKERHOFF

ARIZONA DEPARTMENT OF TRANSPORTATION
INTERMODAL TRANSPORTATION DIVISION

EAST CHANNEL
PLAN & PROFILE
Sta 107+00 to Sta 118+65

PRELIMINARY
95%
REVIEW
NOT FOR CONSTRUCTION OR RECORDING

ROUTE 202L
LOCATION RED MTN FWY, UNIVERSITY DR - SOUTHERN AVE

DWG NO. D-3.19

TRACS NO. H 5783 01C

202-B(002)B

___ OF ___

Tue Mar 29 11:10:10 2005

H:\RedMtn-Univ-Southern\Drng\chp108.dgn

F.H.W.A. REGION	STATE	PROJECT NO.	SHEET NO.	TOTAL SHEETS	AS BUILT
9	ARIZ.	202-B(002)			

202L MA 027

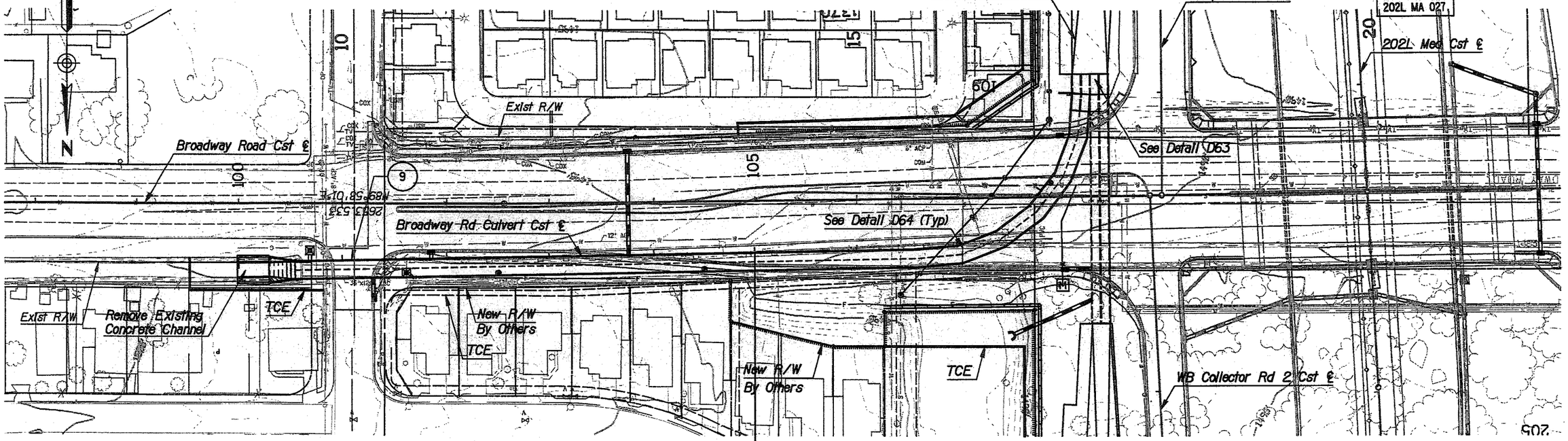

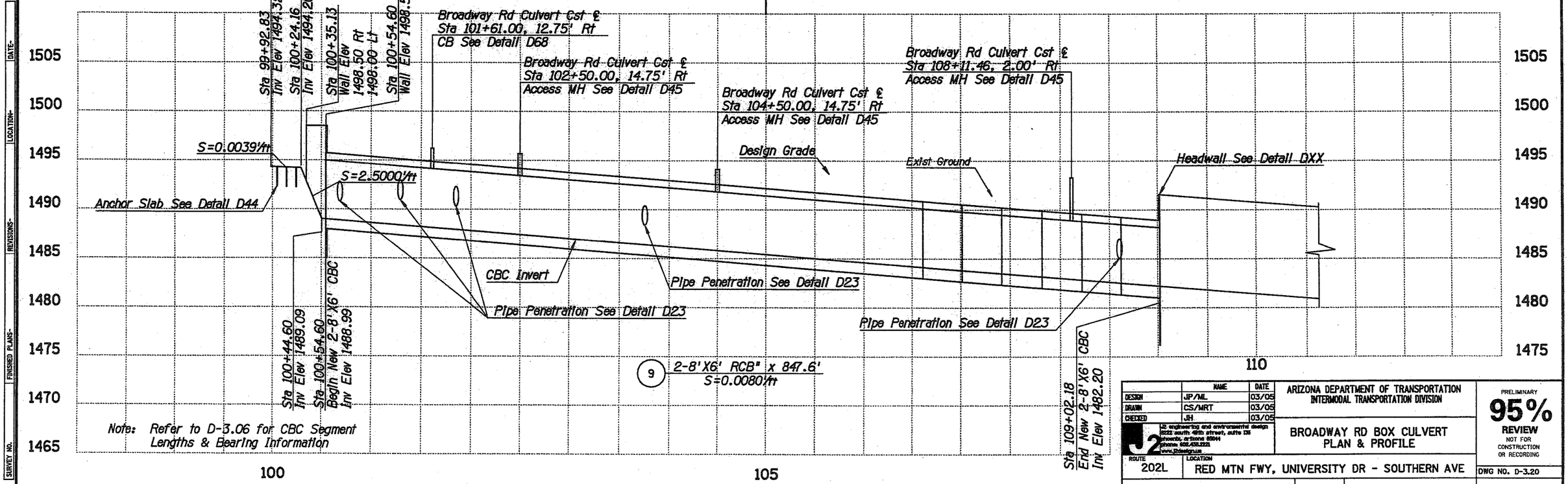

Note: Refer to D-3.06 for CBC Segment Lengths & Bearing Information

	NAME	DATE
DESIGN	JP/ML	03/05
DRAWN	CS/MRT	03/05
CHECKED	JH	03/05

J2 engineering and environmental design
8222 south 48th street, suite 136
phoenix, arizona 85044
phone: 602.438.2223
www.j2design.us

ARIZONA DEPARTMENT OF TRANSPORTATION
INTERMODAL TRANSPORTATION DIVISION

BROADWAY RD BOX CULVERT
PLAN & PROFILE

PRELIMINARY
95%
REVIEW
NOT FOR CONSTRUCTION OR RECORDING

ROUTE: 202L
LOCATION: RED MTN FWY, UNIVERSITY DR - SOUTHERN AVE

DWG NO. D-3.20

TRACS NO. H 5783 01C

202-B(002)

___ OF ___

Plotted By: MRT p:\040024\j2cad\sheets\rmus_j2pp01.dgn 3/29/2005 8:42:03 AM

F.H.W.A. REGION	STATE	PROJECT NO.	SHEET NO.	TOTAL SHEETS	AS BUILT
9	ARIZ.	202-B(002)			
		202L MA 027			

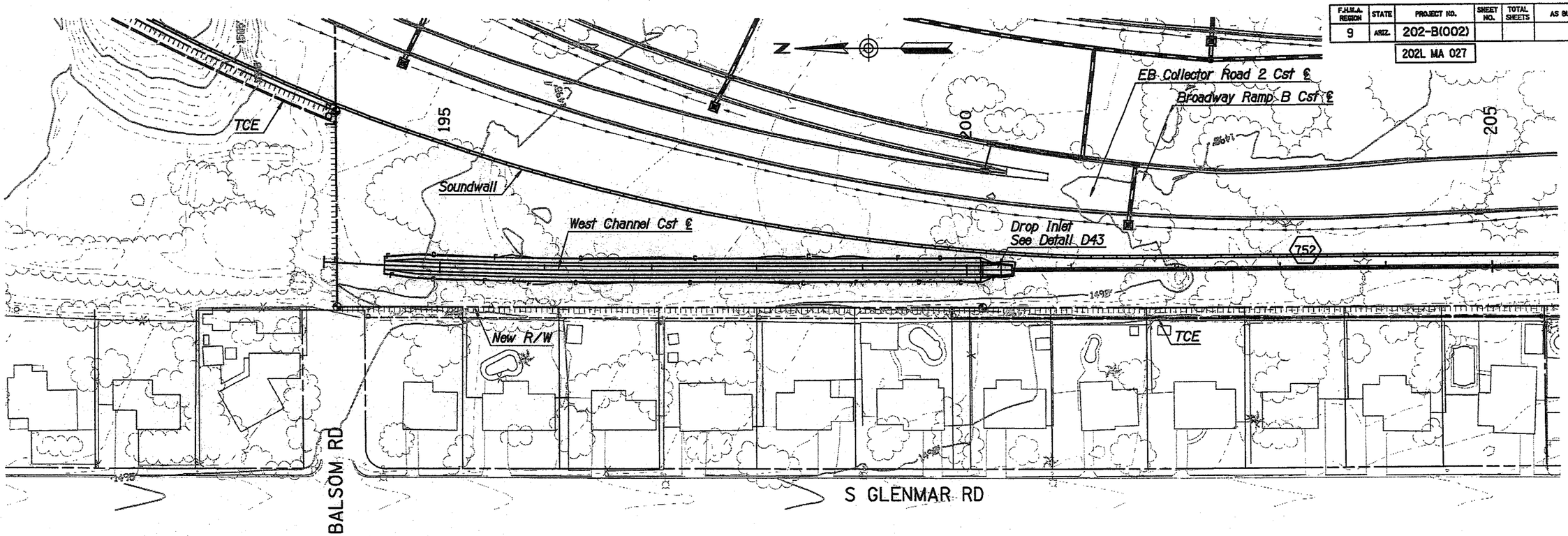

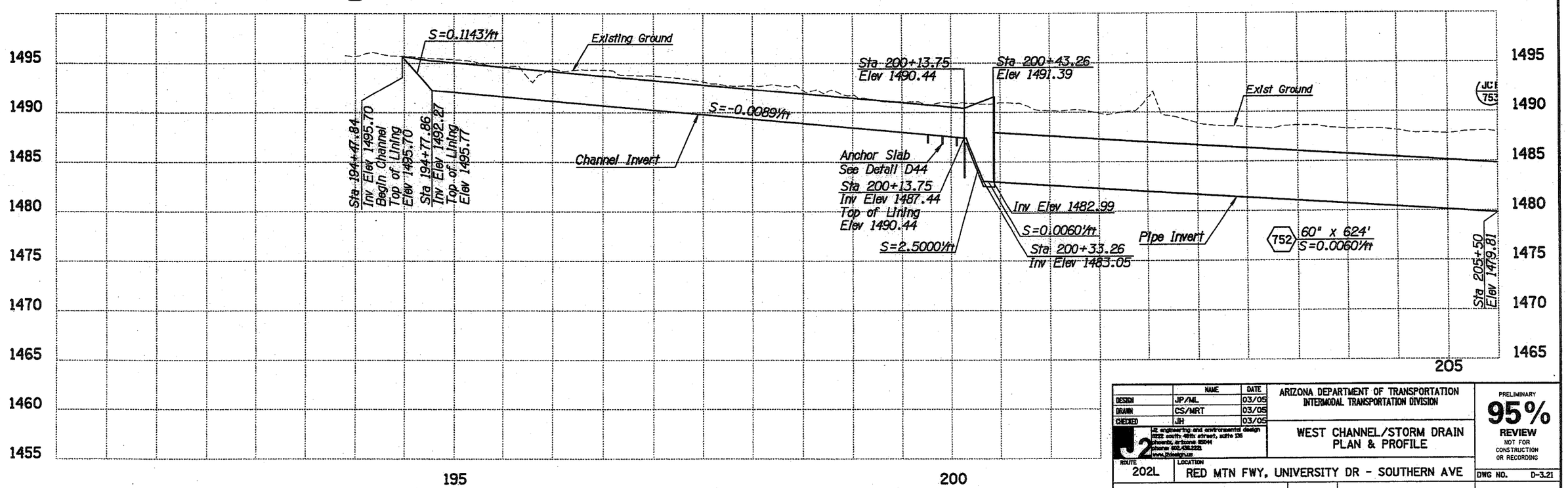

	NAME	DATE
DESIGN	JP/ML	03/05
DRAWN	CS/MRT	03/05
CHECKED	JH	03/05

J2 engineering and environmental design
8222 south 48th street, suite 136
phoenix, arizona 85044
phone: 602.438.2223
www.j2design.com

ARIZONA DEPARTMENT OF TRANSPORTATION
INTERMODAL TRANSPORTATION DIVISION

WEST CHANNEL/STORM DRAIN
PLAN & PROFILE

PRELIMINARY
95%
REVIEW
NOT FOR CONSTRUCTION OR RECORDING

ROUTE 202L
LOCATION RED MTN FWY, UNIVERSITY DR - SOUTHERN AVE

DWG NO. D-3.21

TRACS NO. H 5783 01C

202-B(002)

___ OF ___

Plotted By: MRT p:\040024\j2cad\sheets\rmus_j2pp02.dgn 3/29/2005 8:42:16 AM

F.H.W.A. REGION	STATE	PROJECT NO.	SHEET NO.	TOTAL SHEETS	AS BUILT
9	ARIZ.	202-B(002)			

202L MA 027

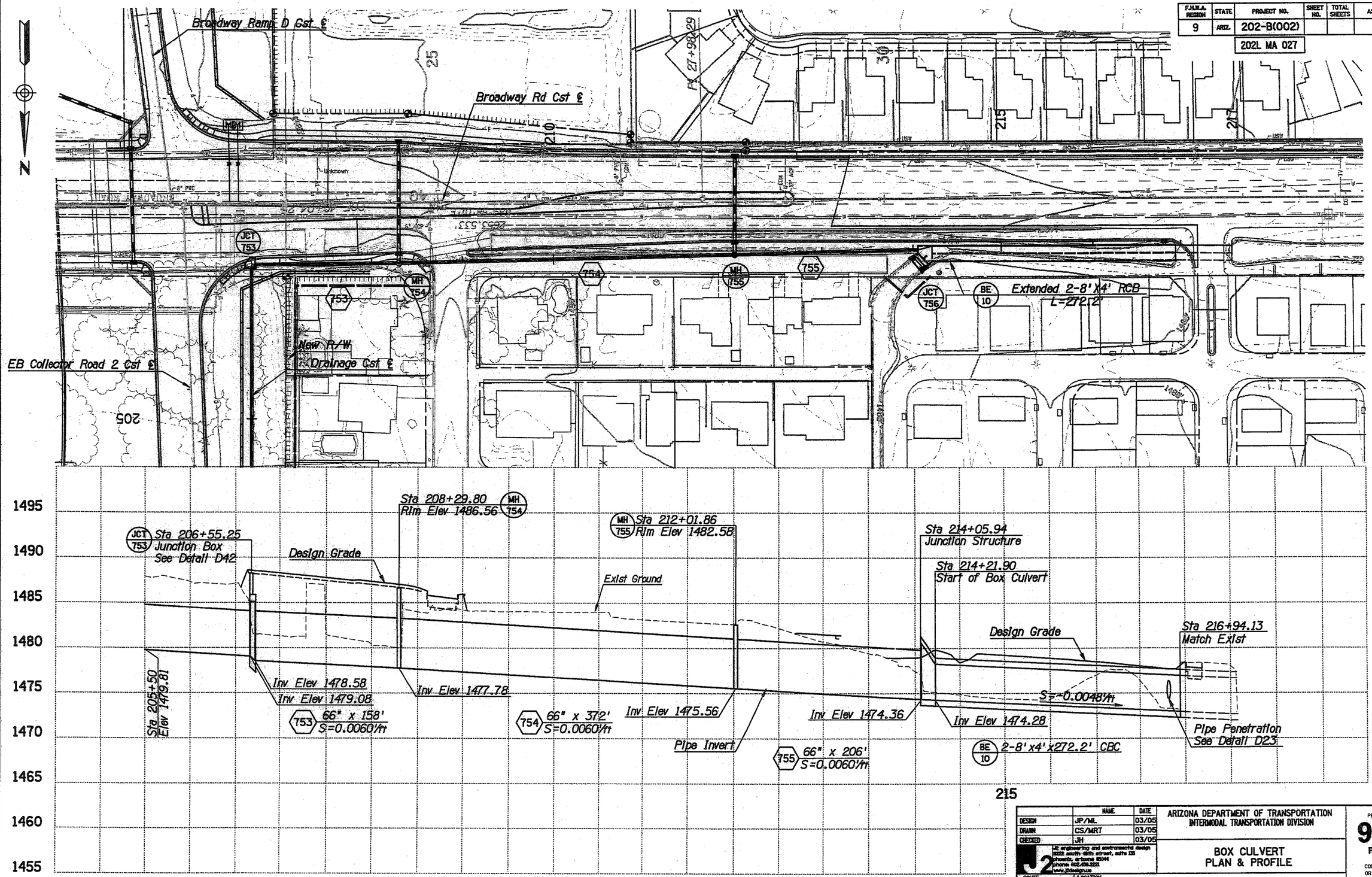

	NAME	DATE
DESIGN	JP/ML	03/05
DRAWN	CS/MRT	03/05
CHECKED	JH	03/05

J2 engineering and environmental design
2222 south 48th street, suite 235
phoenix, arizona 85044
phone: 602.438.2221
www.j2designpus

ARIZONA DEPARTMENT OF TRANSPORTATION
INTERMODAL TRANSPORTATION DIVISION

BOX CULVERT
PLAN & PROFILE

PRELIMINARY
95%
REVIEW
NOT FOR CONSTRUCTION OR RECORDING

ROUTE: 202L
LOCATION: RED MTN FWY, UNIVERSITY DR - SOUTHERN AVE

DWG NO. D-3.22

TRACS NO. H 5783 01C

202-B(002)

___ OF ___

Plotted By: MRT p:\040024\j2cad\sheets\rmus_j2pp03.dgn 3/29/2005 8:42:33 AM

F.H.W.A. REGION	STATE	PROJECT NO.	SHEET NO.	TOTAL SHEETS	AS BUILT
9	ARIZ.	202-B(002)B			
		202L MA 027			

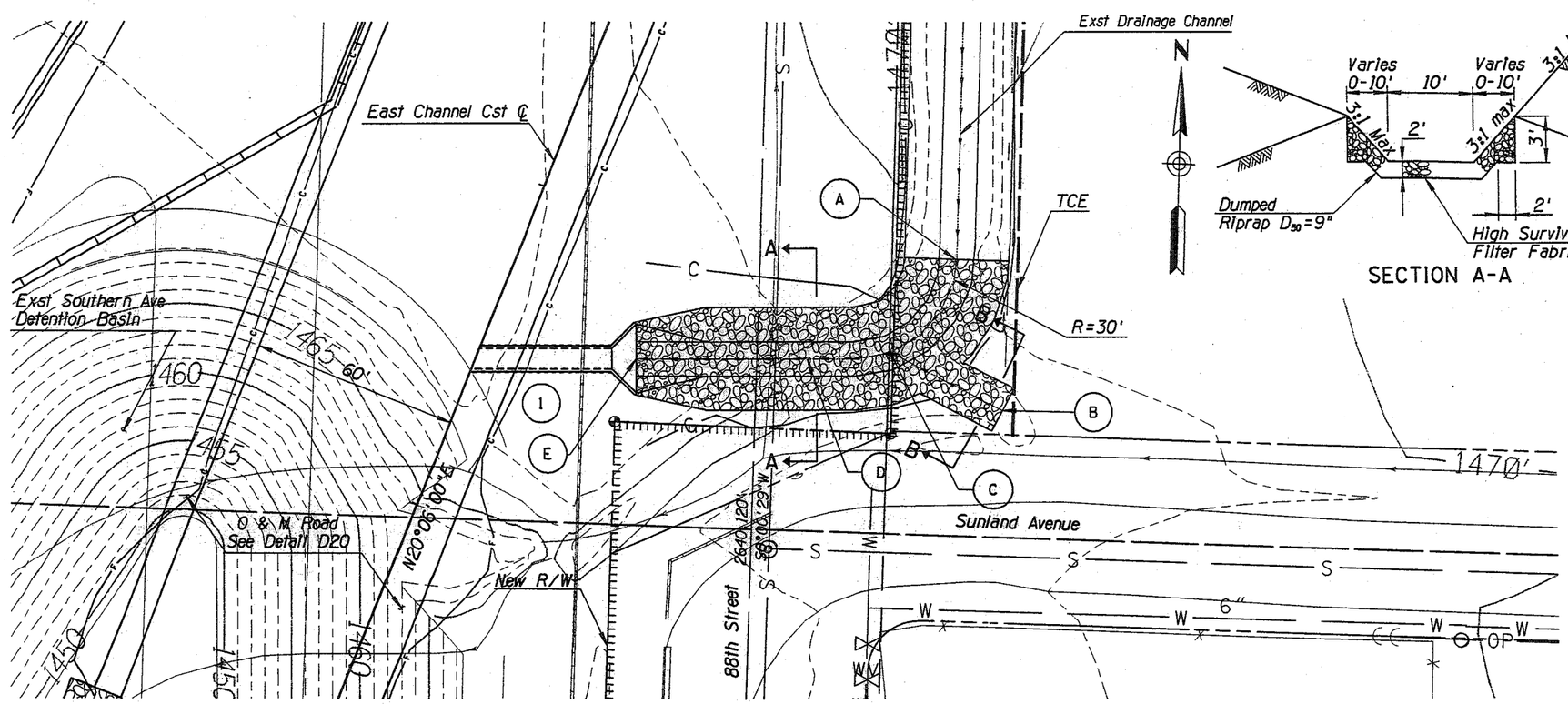

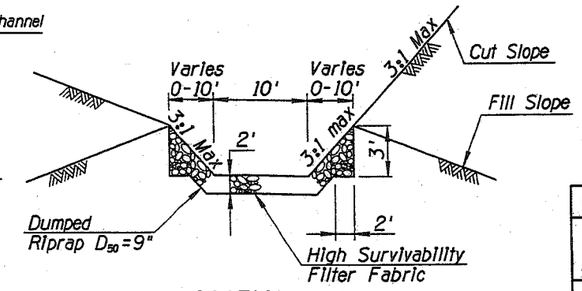

SECTION A-A

◯ CONTROL POINT LOCATIONS			
	East Channel Cst ℄		
Point No	Station	Offset	Elev
A	13+25.45	118.9' Rt	1466.45
B	12+89.40	147.3' Rt	1467.52
C	12+43.23	111.68' Rt	1464.70
D	12+87.34	102.00' Rt	1464.13
E	12+63.65	43.56' Rt	1460.91

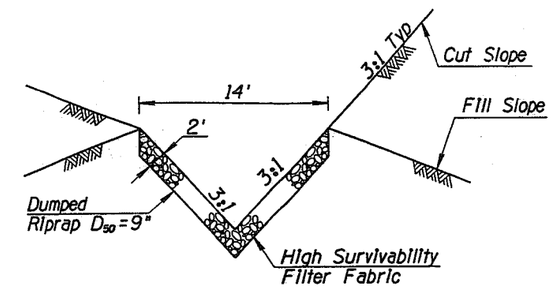

SECTION B-B

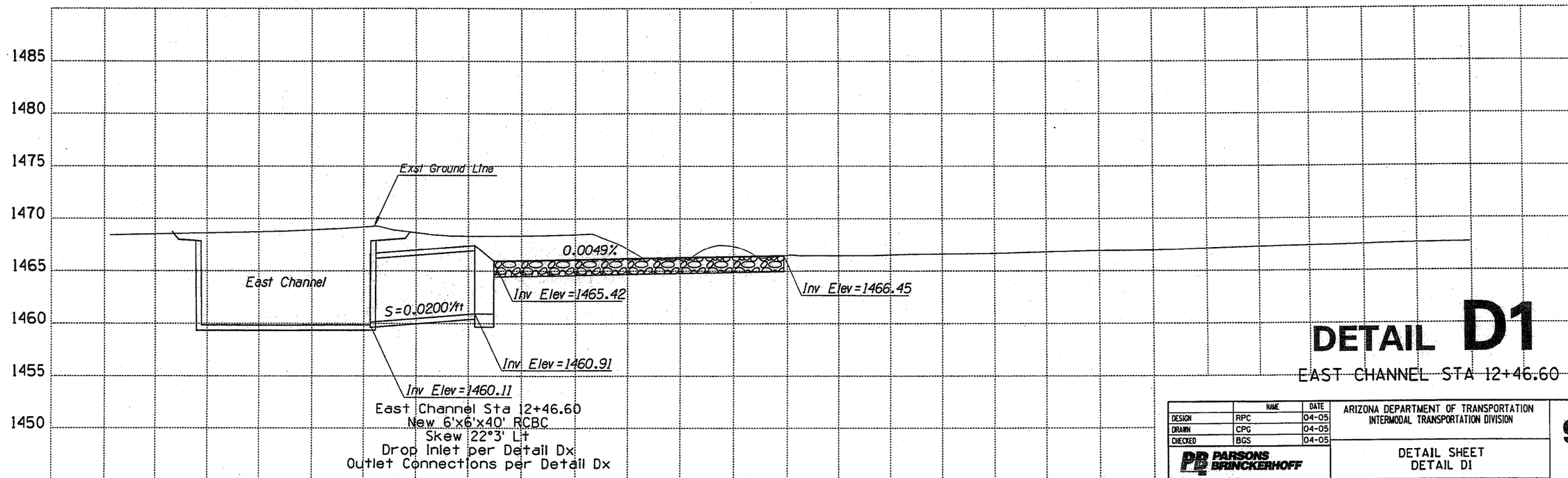

DETAIL D1

EAST CHANNEL STA 12+46.60

	NAME	DATE
DESIGN	RPC	04-05
DRAWN	CPG	04-05
CHECKED	BGS	04-05

PARSONS BRINCKERHOFF

ARIZONA DEPARTMENT OF TRANSPORTATION
INTERMODAL TRANSPORTATION DIVISION

DETAIL SHEET
DETAIL D1

PRELIMINARY
95%
REVIEW
NOT FOR CONSTRUCTION OR RECORDING

ROUTE 202L
LOCATION RED MTN FWY, UNIVERSITY DR - SOUTHERN AVE
DWG NO. D-4.01

TRACS NO. H 5783 01C
202-B(002)B
___ OF ___

DATE- LOCATION- REVISIONS- FINISHED PLANS- SURVEY NO.

Tue Mar 29 11:25:58 2005 H:\RedMtn-Univ-Southern\Drng\drdet01.dgn

F.H.W.A. REGION	STATE	PROJECT NO.	SHEET NO.	TOTAL SHEETS	AS BUILT
9	ARIZ.	202-B(002)B			

202L MA 027

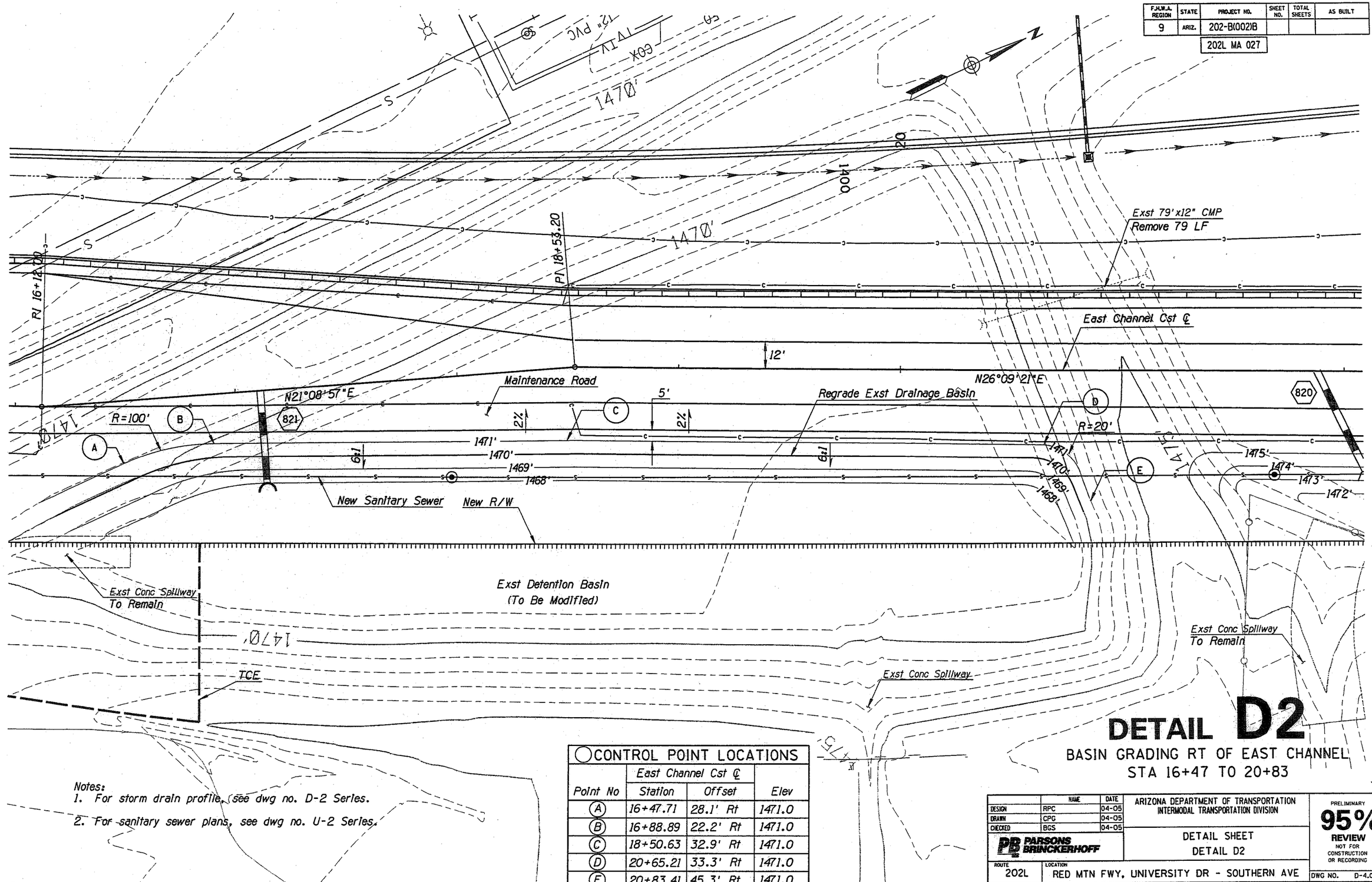

Notes:
1. For storm drain profile, see dwg no. D-2 Series.
2. For sanitary sewer plans, see dwg no. U-2 Series.

CONTROL POINT LOCATIONS

Point No	East Channel Cst ℄ Station	Offset	Elev
A	16+47.71	28.1' Rt	1471.0
B	16+88.89	22.2' Rt	1471.0
C	18+50.63	32.9' Rt	1471.0
D	20+65.21	33.3' Rt	1471.0
E	20+83.41	45.3' Rt	1471.0

DETAIL D2

BASIN GRADING RT OF EAST CHANNEL
STA 16+47 TO 20+83

	NAME	DATE
DESIGN	RPC	04-05
DRAWN	CPG	04-05
CHECKED	BGS	04-05

PB PARSONS BRINCKERHOFF

ARIZONA DEPARTMENT OF TRANSPORTATION
INTERMODAL TRANSPORTATION DIVISION

DETAIL SHEET
DETAIL D2

PRELIMINARY 95% REVIEW
NOT FOR CONSTRUCTION OR RECORDING

ROUTE 202L | LOCATION RED MTN FWY, UNIVERSITY DR - SOUTHERN AVE

DWG NO. D-4.02

TRACS NO. H 5783 01C | 202-B(002)B | ___ OF ___

Tue Mar 29 11:26:25 2005 H:\RedMtn-Univ-Southern\Drng\drdet02.dgn

F.H.W.A. REGION	STATE	PROJECT NO.	SHEET NO.	TOTAL SHEETS	AS BUILT
9	ARIZ.	202-B(002)B			

202L MA 027

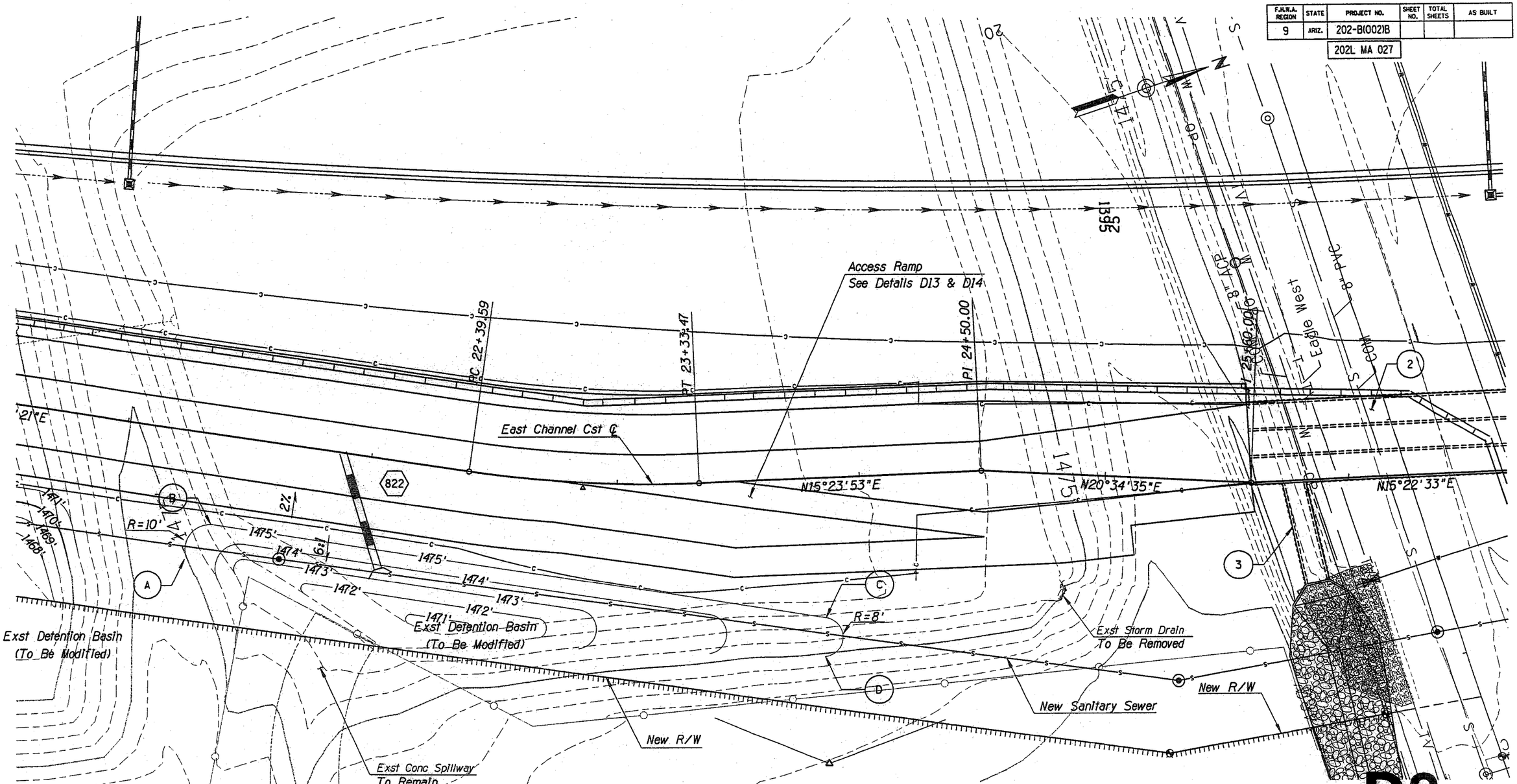

DETAIL D3

BASIN GRADING RT OF EAST CHANNEL
STA 21+78 TO 23+90

Notes:
1. For storm drain profile, see dwg no. D-2 Series.
2. For sanitary sewer plans, see dwg no. U-2 Series.

CONTROL POINT LOCATIONS			
	East Channel Cst ℄		
Point No	Station	Offset	Elev
A	21+30.68	52.3' Rt	1475.0
B	21+39.04	36.7' Rt	1475.0
C	23+83.50	57.10' Rt	1475.0
D	23+82.51	72.9' Rt	1475.0

	NAME	DATE
DESIGN	RPC	04-05
DRAWN	CPG	04-05
CHECKED	BGS	04-05

PARSONS BRINCKERHOFF

ARIZONA DEPARTMENT OF TRANSPORTATION
INTERMODAL TRANSPORTATION DIVISION

DETAIL D3

PRELIMINARY
95%
REVIEW
NOT FOR CONSTRUCTION OR RECORDING

ROUTE 202L
LOCATION RED MTN FWY, UNIVERSITY DR - SOUTHERN AVE

DWG NO. D-4.03

TRACS NO. H 5783 01C

202-B(002)B

___ OF ___

SURVEY NO. | FINISHED PLANS- | REVISIONS- | LOCATION- | DATE-

Tue Mar 29 11:26:53 2005 H:\RedMtn-Univ-Southern\Drng\drdet03.dgn

F.H.W.A. REGION	STATE	PROJECT NO.	SHEET NO.	TOTAL SHEETS	AS BUILT
9	ARIZ.	202-B(002)B			
		202L MA 027			

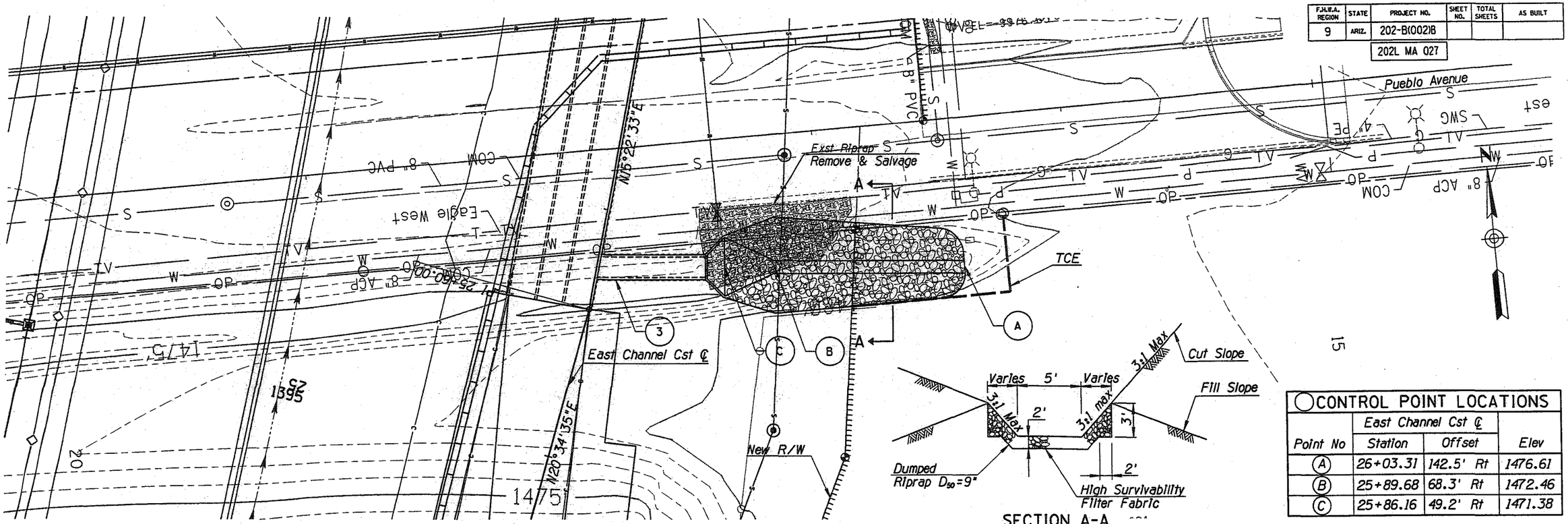

CONTROL POINT LOCATIONS			
	East Channel Cst ℄		
Point No	Station	Offset	Elev
A	26+03.31	142.5' Rt	1476.61
B	25+89.68	68.3' Rt	1472.46
C	25+86.16	49.2' Rt	1471.38

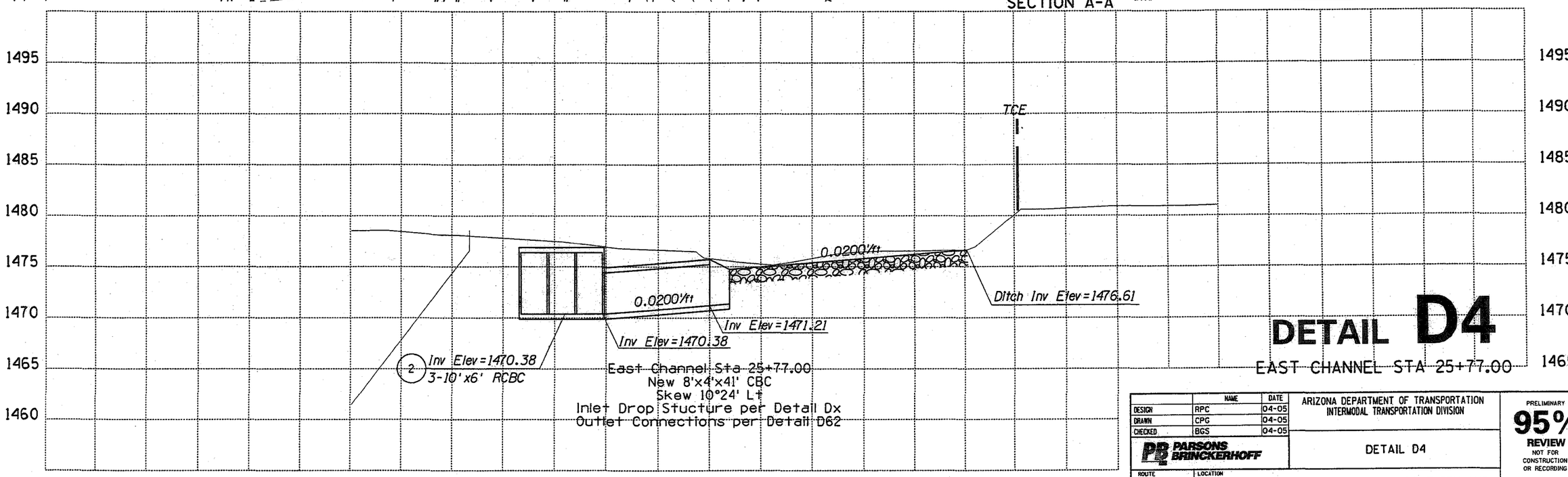

DETAIL D4

EAST CHANNEL STA 25+77.00

	NAME	DATE
DESIGN	RPC	04-05
DRAWN	CPG	04-05
CHECKED	BGS	04-05

PARSONS BRINCKERHOFF

ARIZONA DEPARTMENT OF TRANSPORTATION
INTERMODAL TRANSPORTATION DIVISION

DETAIL D4

PRELIMINARY 95% REVIEW NOT FOR CONSTRUCTION OR RECORDING

ROUTE 202L | LOCATION RED MTN FWY, UNIVERSITY DR - SOUTHERN AVE

DWG NO. D-4.04

TRACS NO. H 5783 01C | 202-B(002)B | ___ OF ___

Tue Mar 29 11:27:20 2005 H:\RedMtn-Univ-Southern\Drng\drdet04.dgn

F.H.W.A. REGION	STATE	PROJECT NO.	SHEET NO.	TOTAL SHEETS	AS BUILT
9	ARIZ.	202-B(002)B			
		202L MA 027			

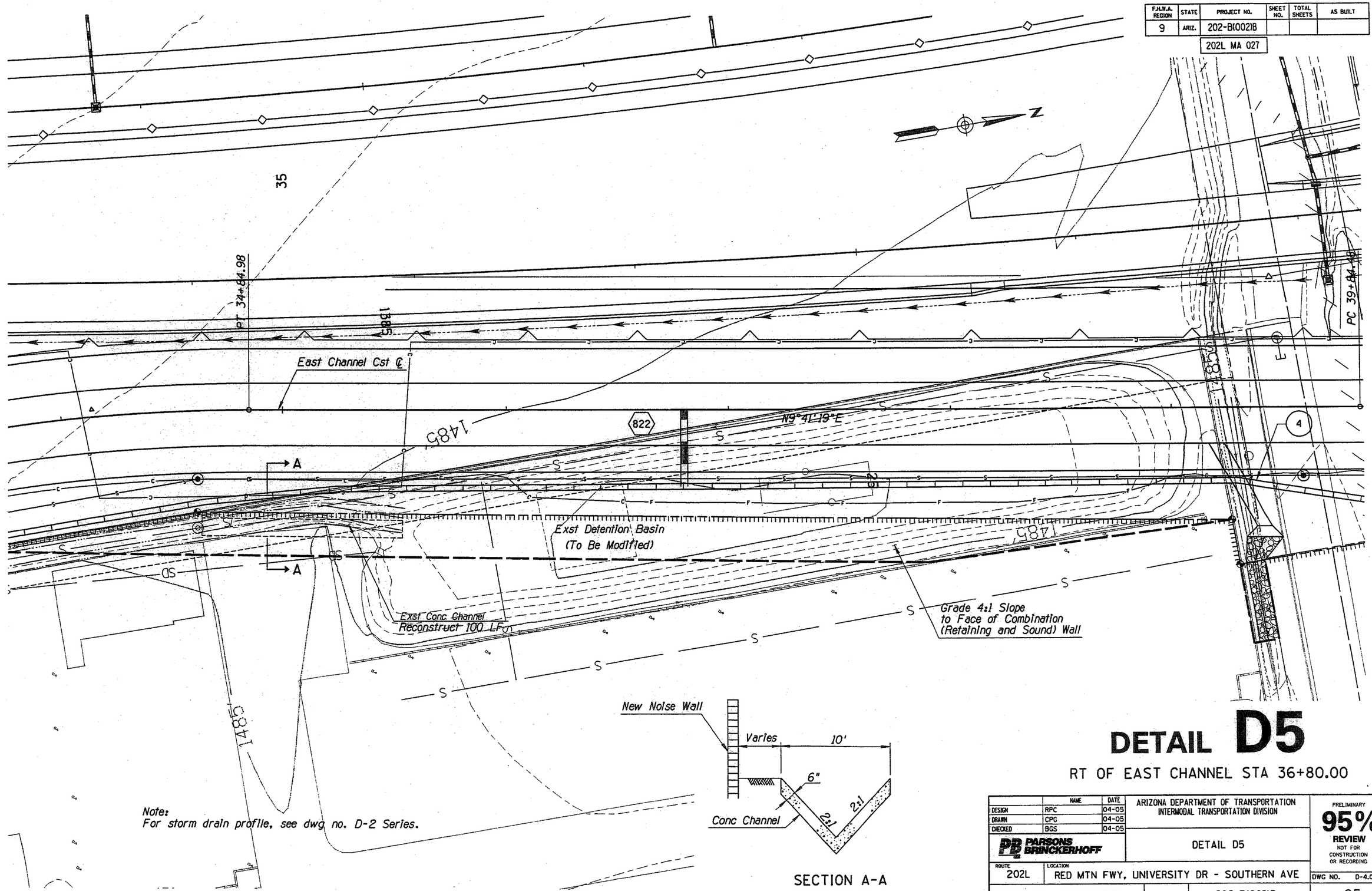

Note:
For storm drain profile, see dwg no. D-2 Series.

DETAIL D5

RT OF EAST CHANNEL STA 36+80.00

	NAME	DATE
DESIGN	RPC	04-05
DRAWN	CPG	04-05
CHECKED	BGS	04-05

PARSONS BRINCKERHOFF

ARIZONA DEPARTMENT OF TRANSPORTATION
INTERMODAL TRANSPORTATION DIVISION

DETAIL D5

PRELIMINARY 95% REVIEW
NOT FOR CONSTRUCTION OR RECORDING

ROUTE 202L | LOCATION RED MTN FWY, UNIVERSITY DR - SOUTHERN AVE

DWG NO. D-4.05

TRACS NO. H 5783 01C | 202-B(002)B | ___ OF ___

Tue Mar 29 11:27:47 2005 H:\RedMtn-Univ-Southern\Drng\drdet05.dgn

F.H.W.A. REGION	STATE	PROJECT NO.	SHEET NO.	TOTAL SHEETS	AS BUILT
9	ARIZ.	202-B(002)B			

202L MA 027

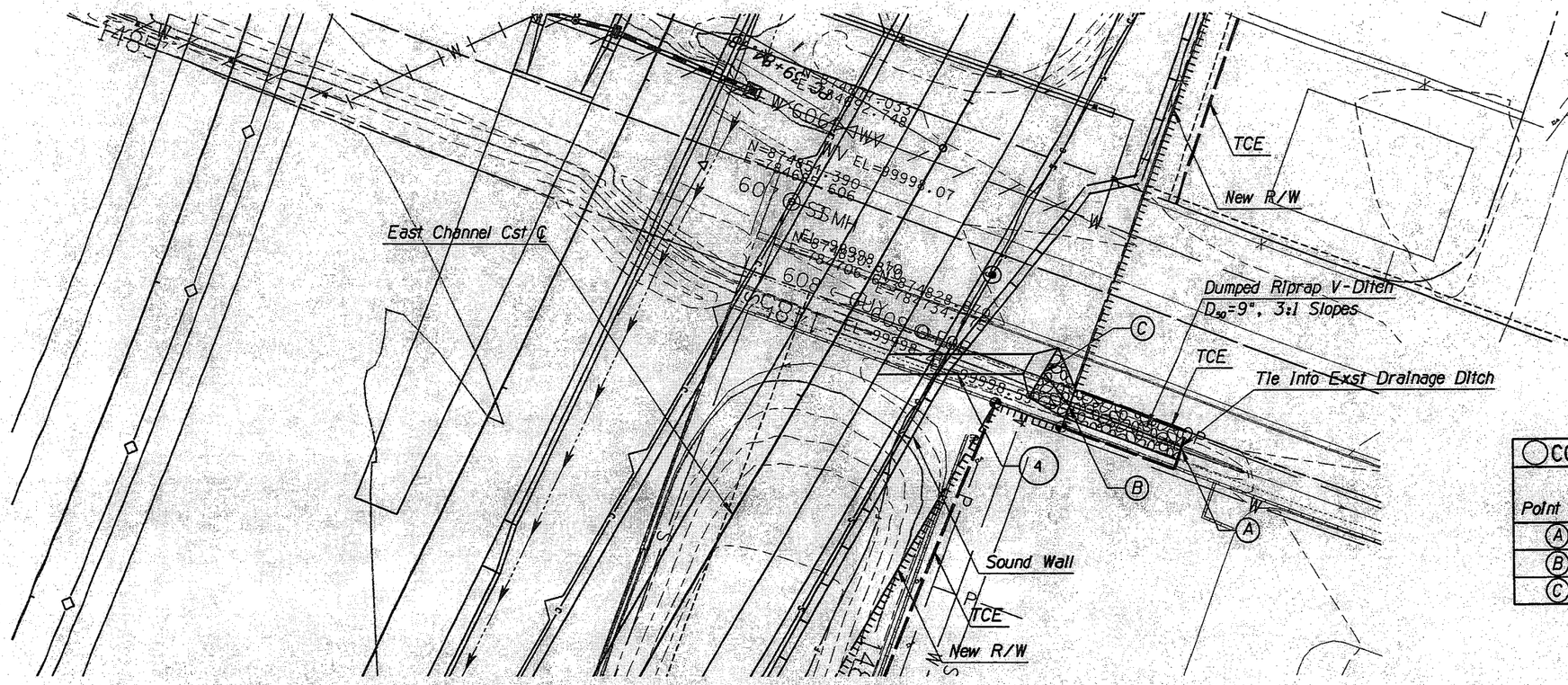

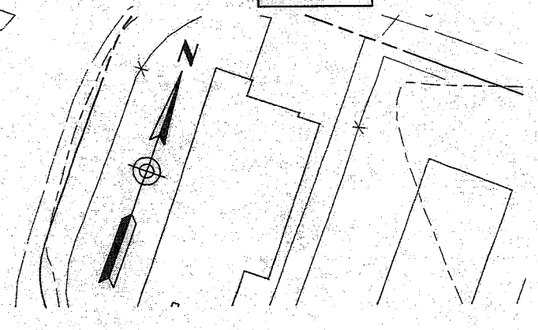

○ CONTROL POINT LOCATIONS			
	East Channel Cst ℄		
Point No	Station	Offset	Elev
A	39+43.21	105.02' Rt	1484.73
B	39+36.86	69.18' Rt	1484.49
C	39+41.81	58.16' Rt	1484.45

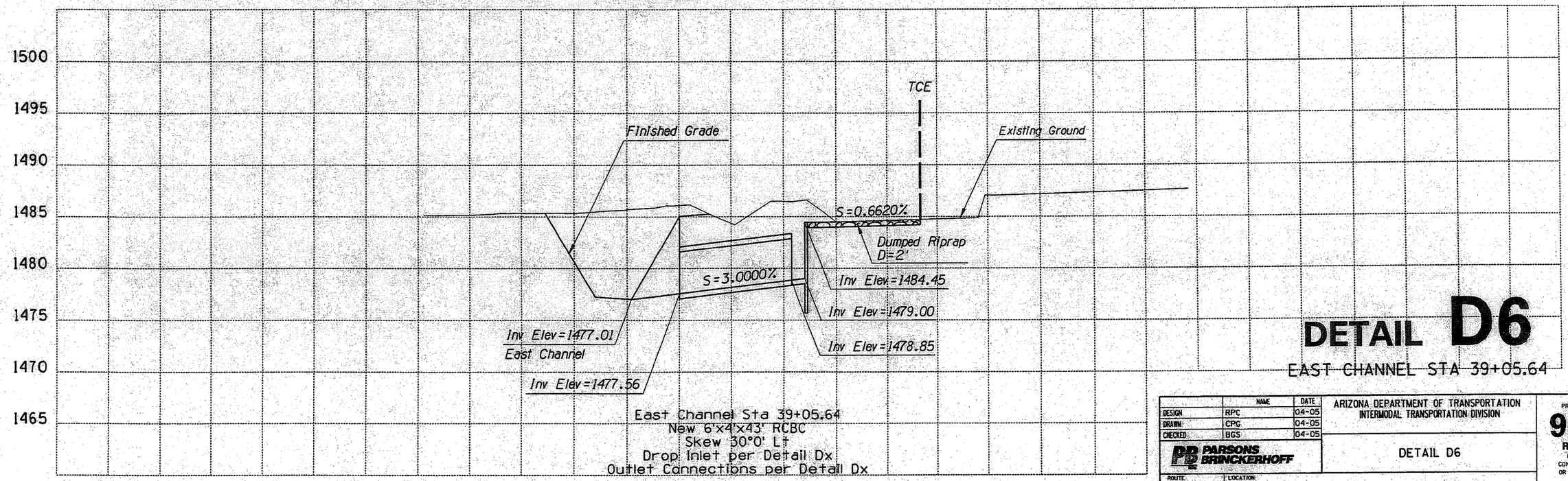

East Channel Sta 39+05.64
New 6'x4'x43' RCBC
Skew 30°0' Lt
Drop Inlet per Detail Dx
Outlet Connections per Detail Dx

DETAIL D6

EAST CHANNEL STA 39+05.64

	NAME	DATE
DESIGN	RPC	04-05
DRAWN	CPC	04-05
CHECKED	BGS	04-05

PARSONS BRINCKERHOFF

ARIZONA DEPARTMENT OF TRANSPORTATION
INTERMODAL TRANSPORTATION DIVISION

DETAIL D6

PRELIMINARY 95% REVIEW NOT FOR CONSTRUCTION OR RECORDING

ROUTE 202L | LOCATION RED MTN FWY, UNIVERSITY DR - SOUTHERN AVE | DWG NO. D-4.06

TRACS NO. H 5783 01C | 202-B(002)B | ___ OF ___

DATE- LOCATION- REVISIONS- FINISHED PLANS- SURVEY NO.

Tue Mar 29 11:28:17 2005 H:\RedMtn-Univ-Southern\Drng\drdet06.dgn

F.H.W.A. REGION	STATE	PROJECT NO.	SHEET NO.	TOTAL SHEETS	AS BUILT
9	ARIZ.	202-B(002)B			

202L MA 027

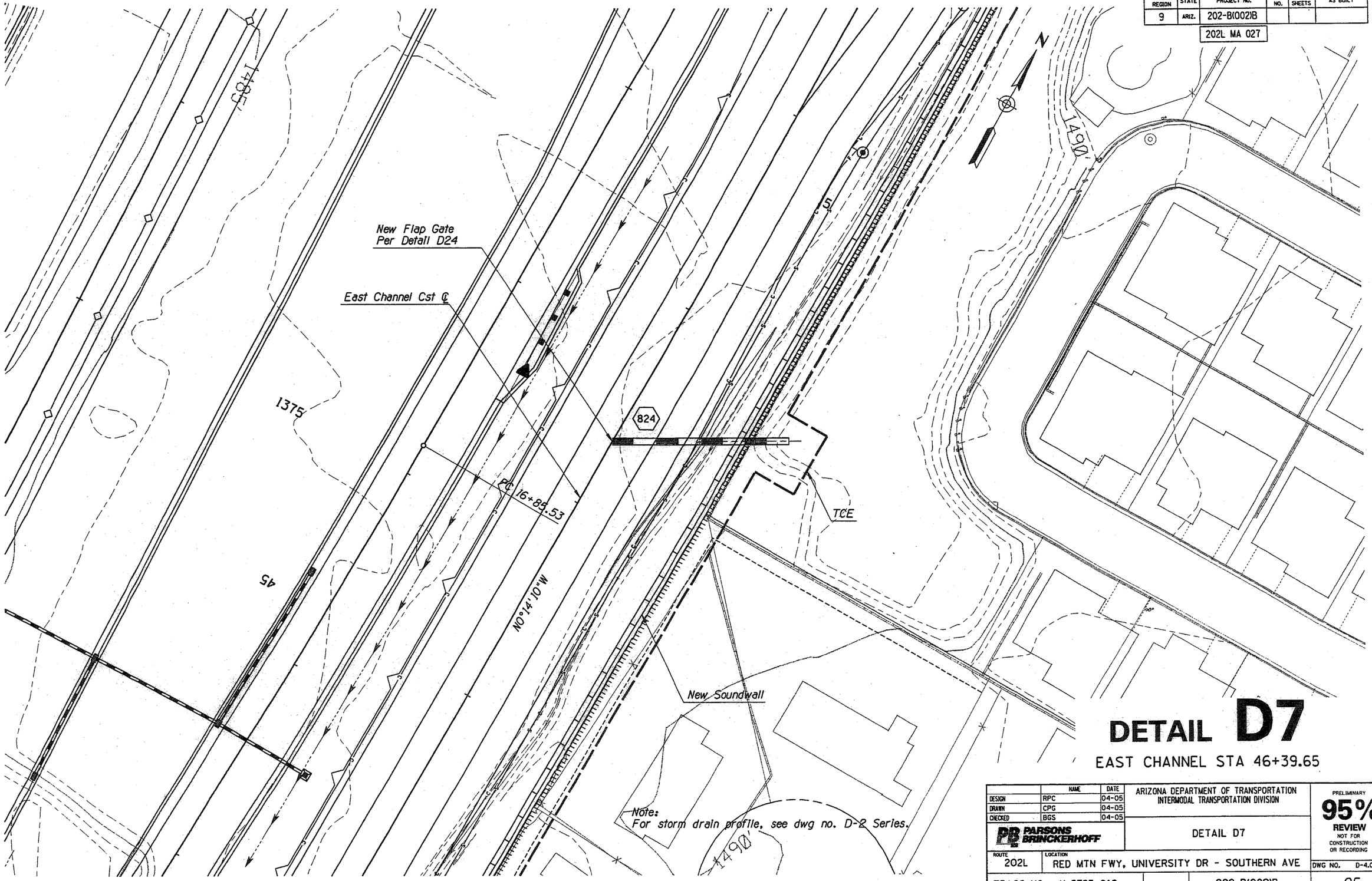

DETAIL D7

EAST CHANNEL STA 46+39.65

	NAME	DATE
DESIGN	RPC	04-05
DRAWN	CPG	04-05
CHECKED	BGS	04-05

PARSONS BRINCKERHOFF

ARIZONA DEPARTMENT OF TRANSPORTATION
INTERMODAL TRANSPORTATION DIVISION

DETAIL D7

PRELIMINARY
95%
REVIEW
NOT FOR CONSTRUCTION OR RECORDING

ROUTE 202L | LOCATION RED MTN FWY, UNIVERSITY DR - SOUTHERN AVE

DWG NO. D-4.07

TRACS NO. H 5783 01C | 202-B(002)B | ___ OF ___

SURVEY NO. | FINISHED PLANS- | REVISIONS- | LOCATION- | DATE-

Tue Mar 29 11:28:47 2005 H:\RedMtn-Univ-Southern\Drng\drdet07.dgn

F.H.W.A. REGION	STATE	PROJECT NO.	SHEET NO.	TOTAL SHEETS	AS BUILT
9	ARIZ.	202-B(002)B			

202L MA 027

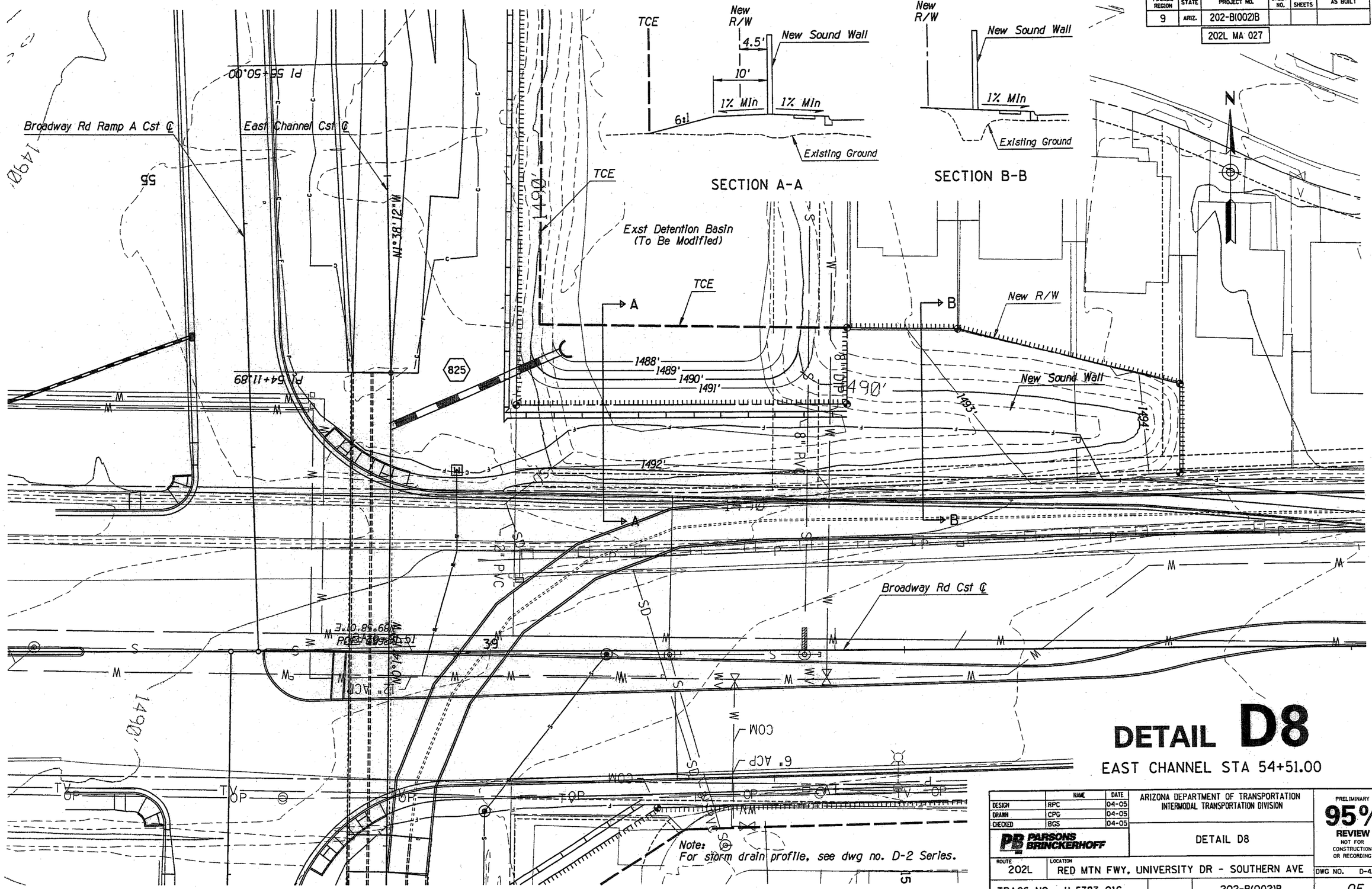

DETAIL D8

EAST CHANNEL STA 54+51.00

	NAME	DATE
DESIGN	RPC	04-05
DRAWN	CPG	04-05
CHECKED	BGS	04-05

PARSONS BRINCKERHOFF

ARIZONA DEPARTMENT OF TRANSPORTATION
INTERMODAL TRANSPORTATION DIVISION

DETAIL D8

PRELIMINARY 95% REVIEW NOT FOR CONSTRUCTION OR RECORDING

ROUTE 202L | LOCATION RED MTN FWY, UNIVERSITY DR - SOUTHERN AVE

DWG NO. D-4.08

TRACS NO. H 5783 01C | 202-B(002)B | ___ OF ___

Tue Mar 29 11:29:13 2005 H:\RedMtn-Univ-Southern\Drng\drdet08.dgn

F.H.W.A. REGION	STATE	PROJECT NO.	SHEET NO.	TOTAL SHEETS	AS BUILT
9	ARIZ.	202-B(002)B			

202L MA 027

SECTION A-A

* For Concrete Channel Structural Sections, See Detail D17

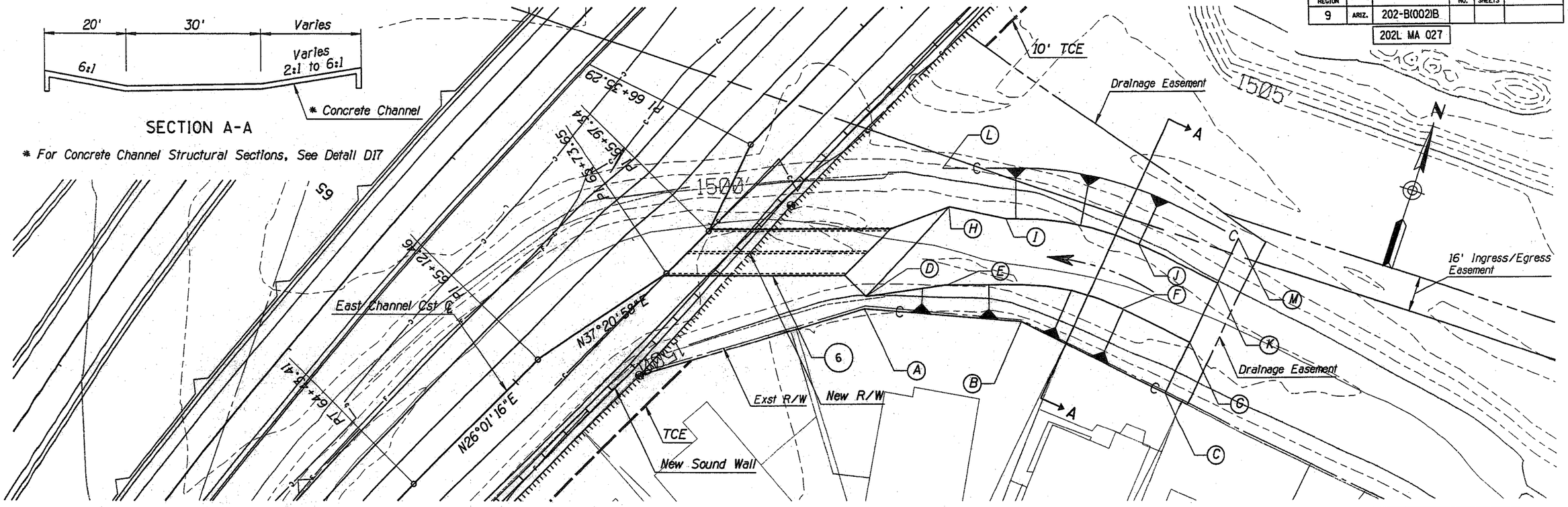

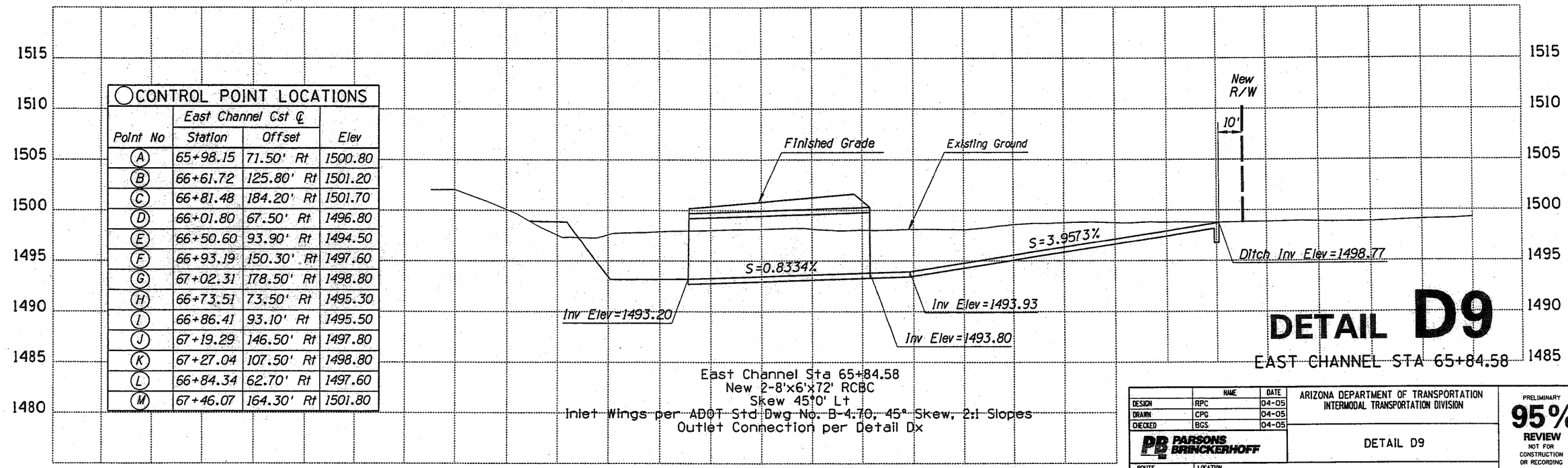

○CONTROL POINT LOCATIONS

Point No	East Channel Cst ℄ Station	Offset	Elev
A	65+98.15	71.50' Rt	1500.80
B	66+61.72	125.80' Rt	1501.20
C	66+81.48	184.20' Rt	1501.70
D	66+01.80	67.50' Rt	1496.80
E	66+50.60	93.90' Rt	1494.50
F	66+93.19	150.30' Rt	1497.60
G	67+02.31	178.50' Rt	1498.80
H	66+73.51	73.50' Rt	1495.30
I	66+86.41	93.10' Rt	1495.50
J	67+19.29	146.50' Rt	1497.80
K	67+27.04	107.50' Rt	1498.80
L	66+84.34	62.70' Rt	1497.60
M	67+46.07	164.30' Rt	1501.80

East Channel Sta 65+84.58
New 2-8'x6'x72' RCBC
Skew 45°0' Lt
Inlet Wings per ADOT Std Dwg No. B-4.70, 45° Skew, 2:1 Slopes
Outlet Connection per Detail Dx

DETAIL D9

EAST CHANNEL STA 65+84.58

	NAME	DATE
DESIGN	RPC	04-05
DRAWN	CPG	04-05
CHECKED	BGS	04-05

PARSONS BRINCKERHOFF

ARIZONA DEPARTMENT OF TRANSPORTATION
INTERMODAL TRANSPORTATION DIVISION

DETAIL D9

PRELIMINARY 95% REVIEW NOT FOR CONSTRUCTION OR RECORDING

ROUTE 202L | LOCATION RED MTN FWY, UNIVERSITY DR - SOUTHERN AVE | DWG NO. D-4.09

TRACS NO. H 5783 01C | 202-B(002)B | ___ OF ___

Tue Mar 29 11:29:40 2005 H:\RedMtn-Univ-Southern\Drng\drdet09.dgn

F.H.W.A. REGION	STATE	PROJECT NO.	SHEET NO.	TOTAL SHEETS	AS BUILT
9	ARIZ.	202-B(002)B			

202L MA 027

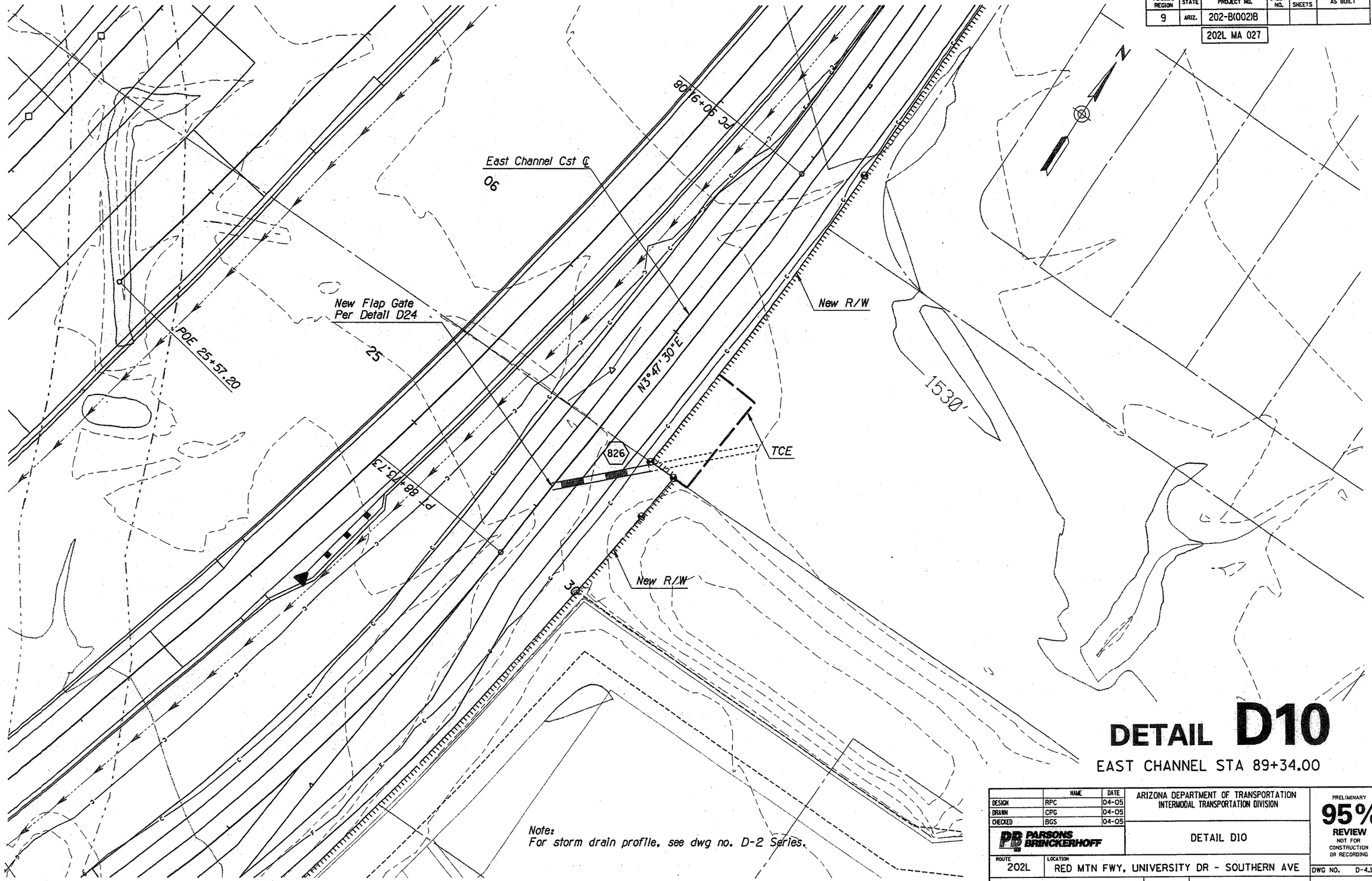

Note:
For storm drain profile, see dwg no. D-2 Series.

DETAIL D10

EAST CHANNEL STA 89+34.00

	NAME	DATE
DESIGN	RPC	04-05
DRAWN	CPG	04-05
CHECKED	BGS	04-05

PARSONS BRINCKERHOFF

ARIZONA DEPARTMENT OF TRANSPORTATION
INTERMODAL TRANSPORTATION DIVISION

DETAIL D10

PRELIMINARY
95%
REVIEW
NOT FOR CONSTRUCTION OR RECORDING

ROUTE 202L | LOCATION RED MTN FWY, UNIVERSITY DR - SOUTHERN AVE

DWG NO. D-4.10

TRACS NO. H 5783 01C | 202-B(002)B | ___ OF ___

SURVEY NO. | FINISHED PLANS- | REVISIONS- | LOCATION- | DATE-

Tue Mar 29 11:30:07 2005 H:\RedMtn-Univ-Southern\Drng\drdet10.dgn

F.H.W.A. REGION	STATE	PROJECT NO.	SHEET NO.	TOTAL SHEETS	AS BUILT
9	ARIZ.	202-B(002)B			

202L MA 027

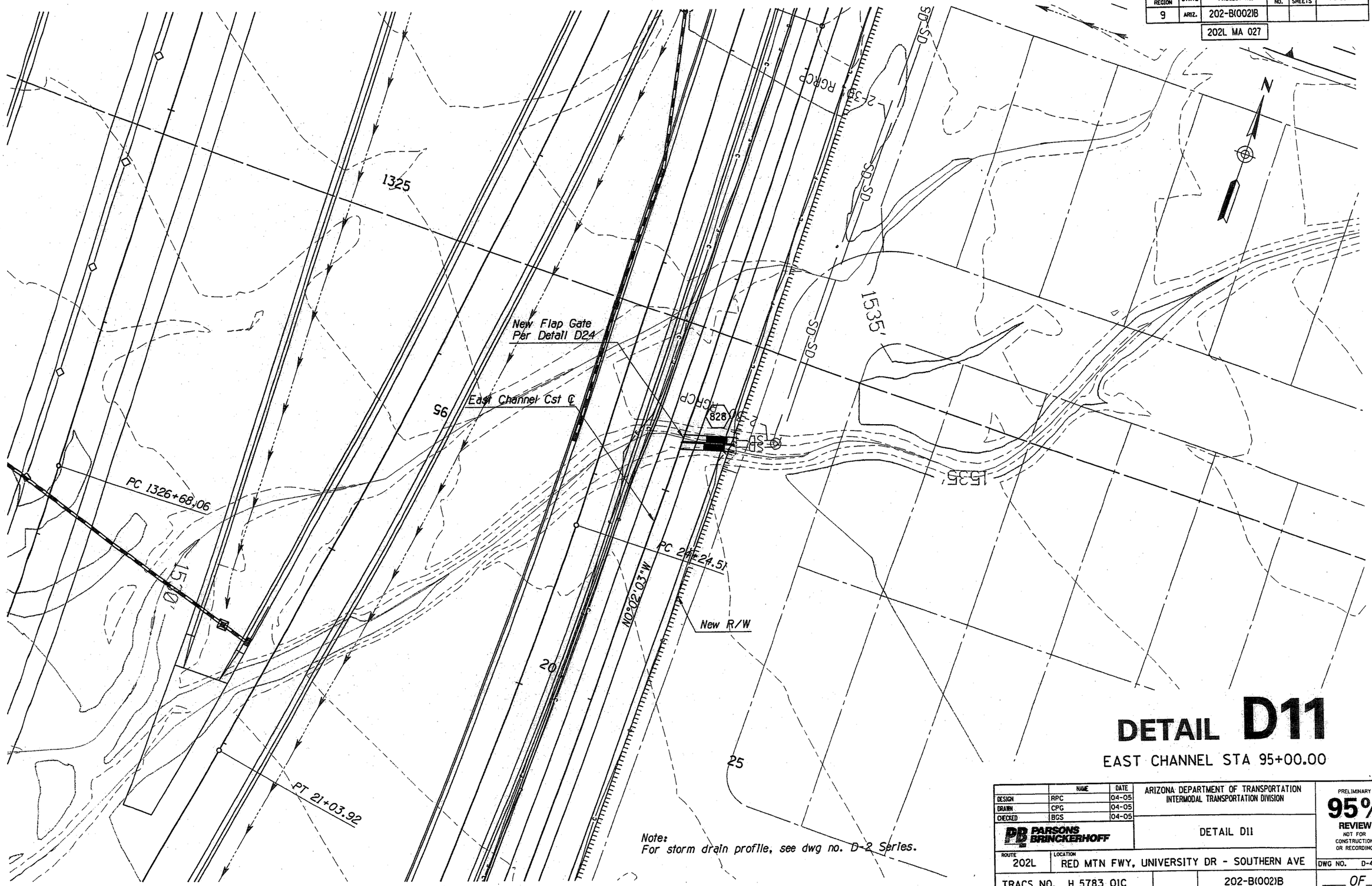

DETAIL D11

EAST CHANNEL STA 95+00.00

Note:
For storm drain profile, see dwg no. D-2 Series.

	NAME	DATE
DESIGN	RPC	04-05
DRAWN	CPG	04-05
CHECKED	BGS	04-05

PARSONS BRINCKERHOFF

ARIZONA DEPARTMENT OF TRANSPORTATION
INTERMODAL TRANSPORTATION DIVISION

DETAIL D11

PRELIMINARY
95%
REVIEW
NOT FOR CONSTRUCTION OR RECORDING

ROUTE 202L

LOCATION RED MTN FWY, UNIVERSITY DR - SOUTHERN AVE

DWG NO. D-4.11

TRACS NO. H 5783 01C

202-B(002)B

___ OF ___

SURVEY NO. | FINISHED PLANS- | REVISIONS- | LOCATION- | DATE-

Tue Mar 29 11:30:33 2005 H:\RedMtn-Univ-Southern\Drng\drdetl1.dgn

F.H.W.A. REGION	STATE	PROJECT NO.	SHEET NO.	TOTAL SHEETS	AS BUILT
9	ARIZ.	202-B(002)B			

202L MA 027

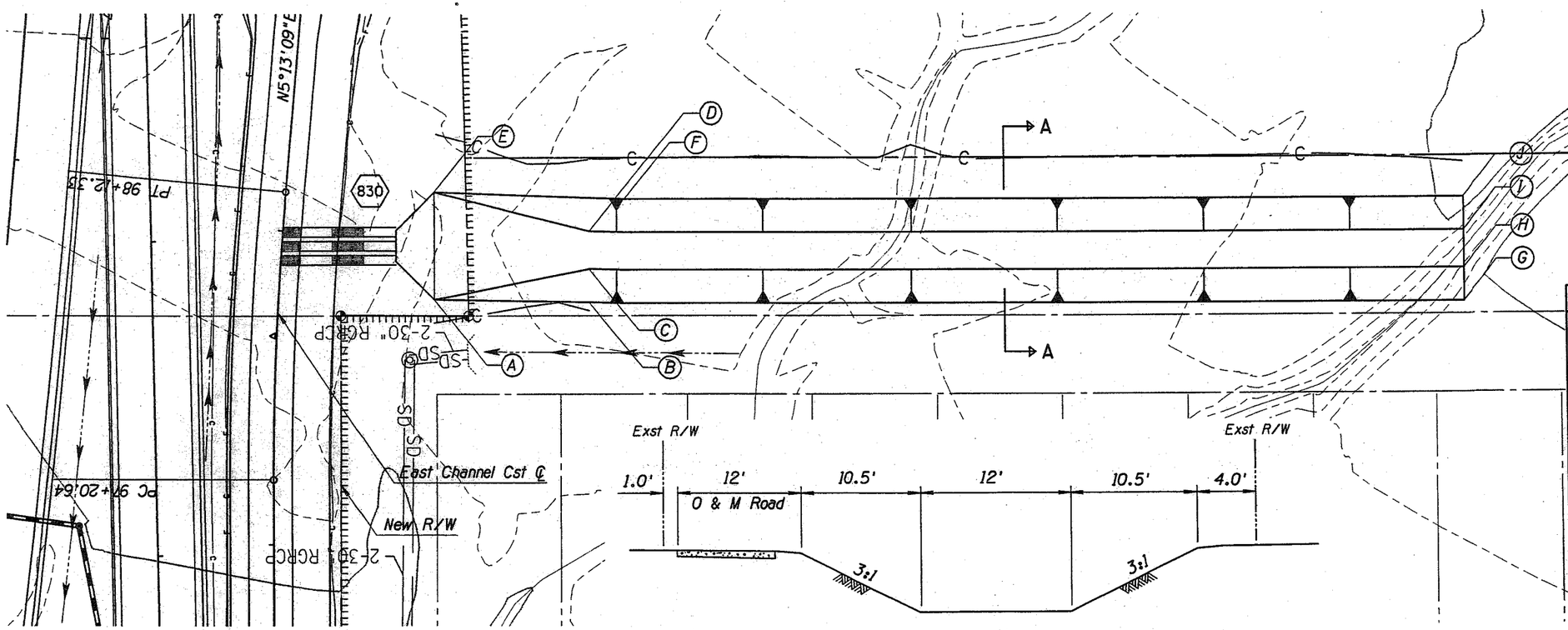

CONTROL POINT LOCATIONS

Point No	East Channel Cst ℄ Station	Offset	Elev
A	97+80.96	49.20' Rt	1534.04
B	97+83.42	49.20' Rt	1537.99
C	97+95.04	98.43' Rt	1534.50
D	98+08.31	97.50' Rt	1534.49
E	98+16.37	46.50' Rt	1534.04
F	98+19.16	96.50' Rt	1537.99
G	98+11.50	378.40' Rt	1540.51
H	98+22.27	377.50' Rt	1537.01
I	98+34.22	376.30' Rt	1537.01
J	98+44.67	375.40' Rt	1540.51

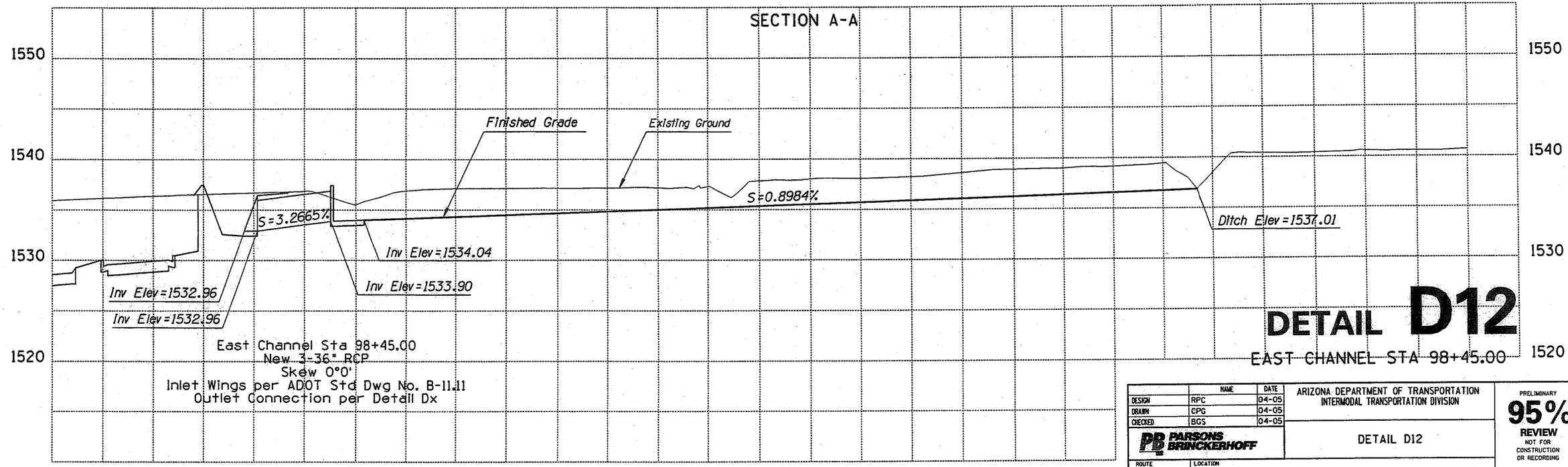

DETAIL D12

EAST CHANNEL STA 98+45.00

	NAME	DATE
DESIGN	RPC	04-05
DRAWN	CPG	04-05
CHECKED	BGS	04-05

PARSONS BRINCKERHOFF

ARIZONA DEPARTMENT OF TRANSPORTATION
INTERMODAL TRANSPORTATION DIVISION

DETAIL D12

PRELIMINARY 95% REVIEW NOT FOR CONSTRUCTION OR RECORDING

ROUTE 202L | LOCATION RED MTN FWY, UNIVERSITY DR - SOUTHERN AVE | DWG NO. D-4.12

TRACS NO. H 5783 01C | 202-B(002)B | ___ OF ___

DATE- LOCATION- REVISIONS- FINISHED PLANS- SURVEY NO.

Tue Mar 29 11:30:59 2005 H:\RedMtn-Univ-Southern\Drng\drdetl2.dgn

F.H.W.A. REGION	STATE	PROJECT NO.	SHEET NO.	TOTAL SHEETS	AS BUILT
9	ARIZ.	202-B(002)B			
		202L MA 027			

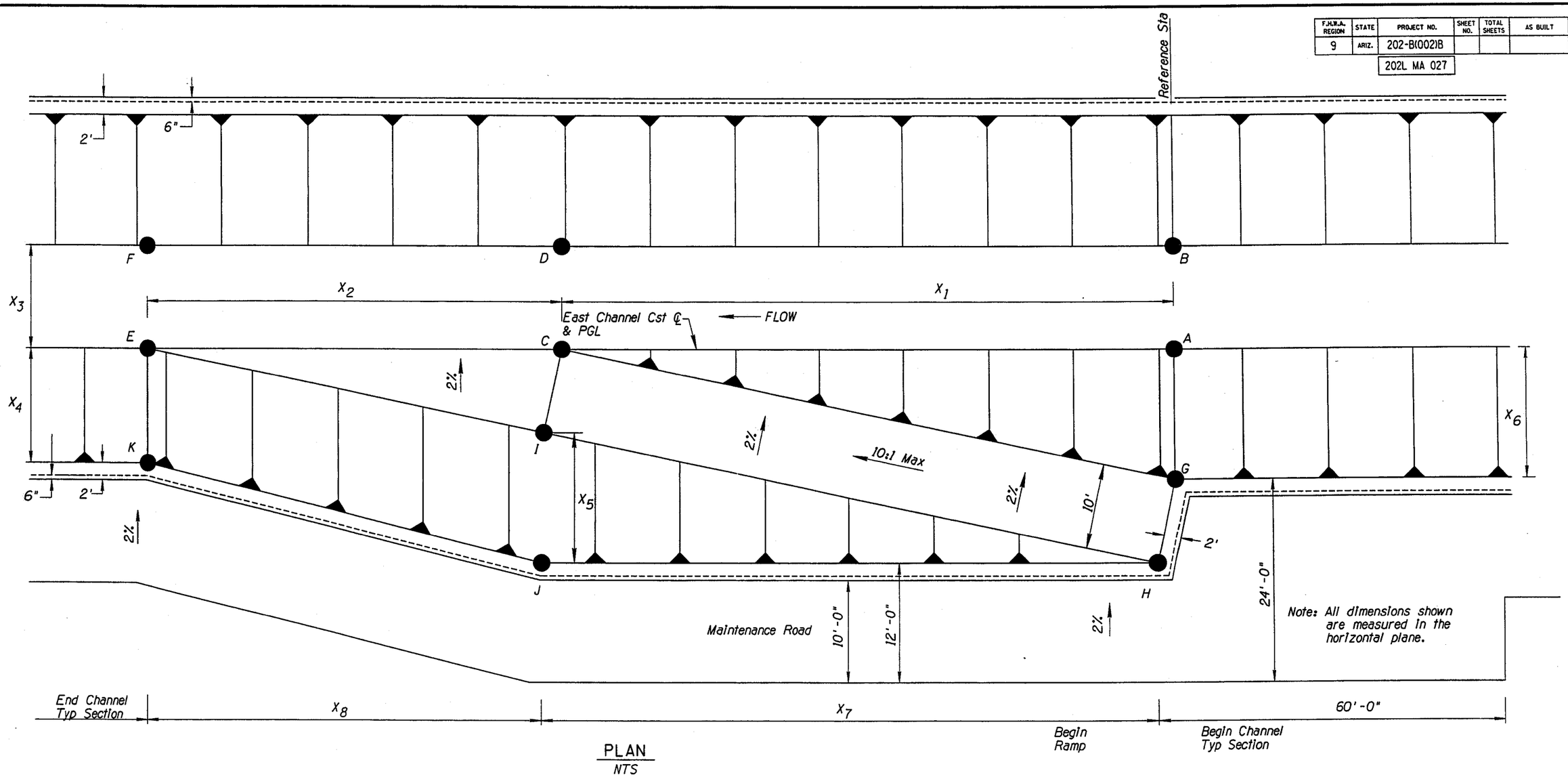

PLAN
NTS

RAMP REFERENCE STATION	DISTANCES (FT)								ELEVATIONS										
	X_1	X_2	X_3	X_4	X_5	X_6	X_7	X_8	A	B	C	D	E	F	G	H	I	J	K
24+50.00	101.3	73.0	12.0	16.9	17.2	16.9	102.5	75.0	1469.34	1469.58	1468.50	1468.74	1467.91	1468.13	1477.46	1477.68	1468.70	1477.18	1476.35
50+00.00	120.0	80.0	12.0	16.0	16.1	16.0	76.0	124.0	1481.42	1481.66	1480.93	1481.17	1480.61	1480.85	1489.38	1489.63	1481.40	1488.77	1488.61
80+00.00	70.0	106.3	10.0	13.0	15.1	13.0	118.6	70.0	1509.09	1509.28	1508.31	1508.50	1507.10	1507.30	1515.10	1515.43	1508.57	1514.13	1513.08
107+11.00	60.0	80.0	8.0	8.0	8.0	8.0	94.1	46.0	1542.21	1542.37	1541.61	1541.77	1540.81	1540.97	1546.21	1546.42	1541.90	1545.47	1545.03

Note: See Detail D15 for Ramp Structural Section

DETAIL D13

	NAME	DATE
DESIGN	RPC	04-05
DRAWN	CPG	04-05
CHECKED	BGS	04-05

PB PARSONS BRINCKERHOFF

ARIZONA DEPARTMENT OF TRANSPORTATION
INTERMODAL TRANSPORTATION DIVISION

CHANNEL ACCESS RAMP LAYOUT

PRELIMINARY 95% REVIEW NOT FOR CONSTRUCTION OR RECORDING

ROUTE 202L | LOCATION RED MTN FWY, UNIVERSITY DR - SOUTHERN AVE

DWG NO. D-4.13

TRACS NO. H 5783 01C | 202-B(002)B | ___ OF ___

DATE- LOCATION- REVISIONS- FINISHED PLANS- SURVEY NO.

Tue Mar 29 11:31:26 2005 H:\RedMtn-Univ-Southern\Drng\drdet13.dgn

F.H.W.A. REGION	STATE	PROJECT NO.	SHEET NO.	TOTAL SHEETS	AS BUILT
9	ARIZ.	202-B(002)B			

202L MA 027

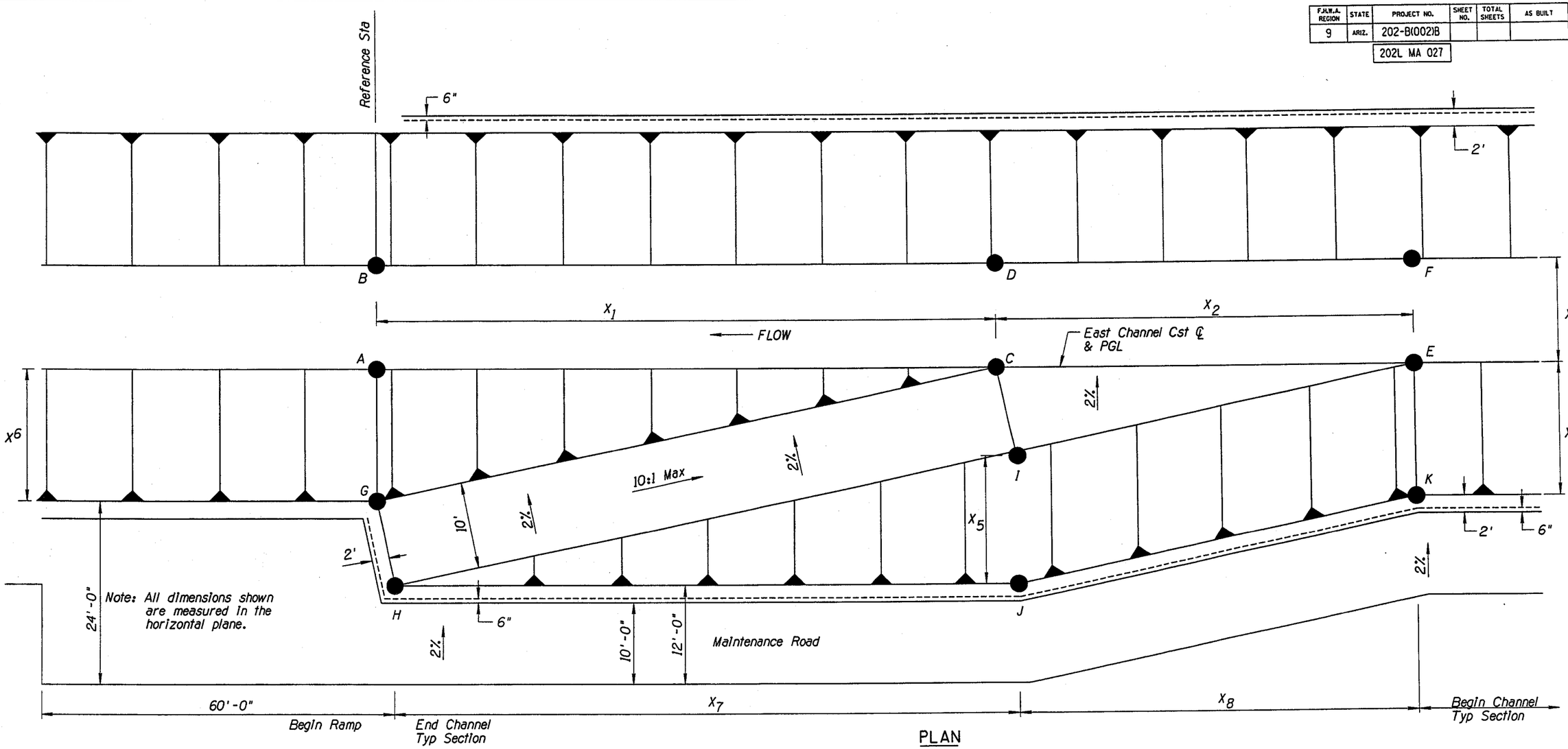

PLAN
NTS

RAMP REFERENCE STATION	DISTANCES (FT)								ELEVATIONS										
	X_1	X_2	X_3	X_4	X_5	X_6	X_7	X_8	A	B	C	D	E	F	G	H	I	J	K
27+80.00	123.0	77.8	12.0	16.0	16.0	16.0	126.2	79.8	1472.11	1472.36	1472.93	1473.16	1473.24	1473.48	1480.05	1480.28	1473.13	1480.26	1481.20
55+50.00	92.7	77.7	10.0	12.0	12.2	12.0	59.3	110.8	1485.28	1485.49	1485.96	1486.16	1486.53	1486.73	1491.27	1491.47	1486.30	1491.82	1492.52
86+98.00	45.0	120.6	8.0	8.0	10.1	8.0	117.4	60.6	1519.99	1520.14	1520.50	1520.65	1521.87	1522.03	1523.98	1524.14	1520.87	1526.00	1525.86

Note: See Detail D15 for Ramp Structural Section

DETAIL D14

	NAME	DATE
DESIGN	RPC	04-05
DRAWN	CPG	04-05
CHECKED	BGS	04-05

PB PARSONS BRINCKERHOFF

ARIZONA DEPARTMENT OF TRANSPORTATION
INTERMODAL TRANSPORTATION DIVISION

CHANNEL ACCESS RAMP LAYOUT

ROUTE 202L
LOCATION RED MTN FWY, UNIVERSITY DR - SOUTHERN AVE

PRELIMINARY 95% REVIEW NOT FOR CONSTRUCTION OR RECORDING

DWG NO. D-4.14

TRACS NO. H 5783 01C

202-B(002)B

___ OF ___

SURVEY NO. | FINISHED PLANS- | REVISIONS- | LOCATION- | DATE-

Tue Mar 29 11:31:36 2005 H:\RedMtn-Univ-Southern\Drng\drdet14.dgn

F.H.W.A. REGION	STATE	PROJECT NO.	SHEET NO.	TOTAL SHEETS	AS BUILT
9	ARIZ.	202-B(002)B			

202L MA 027

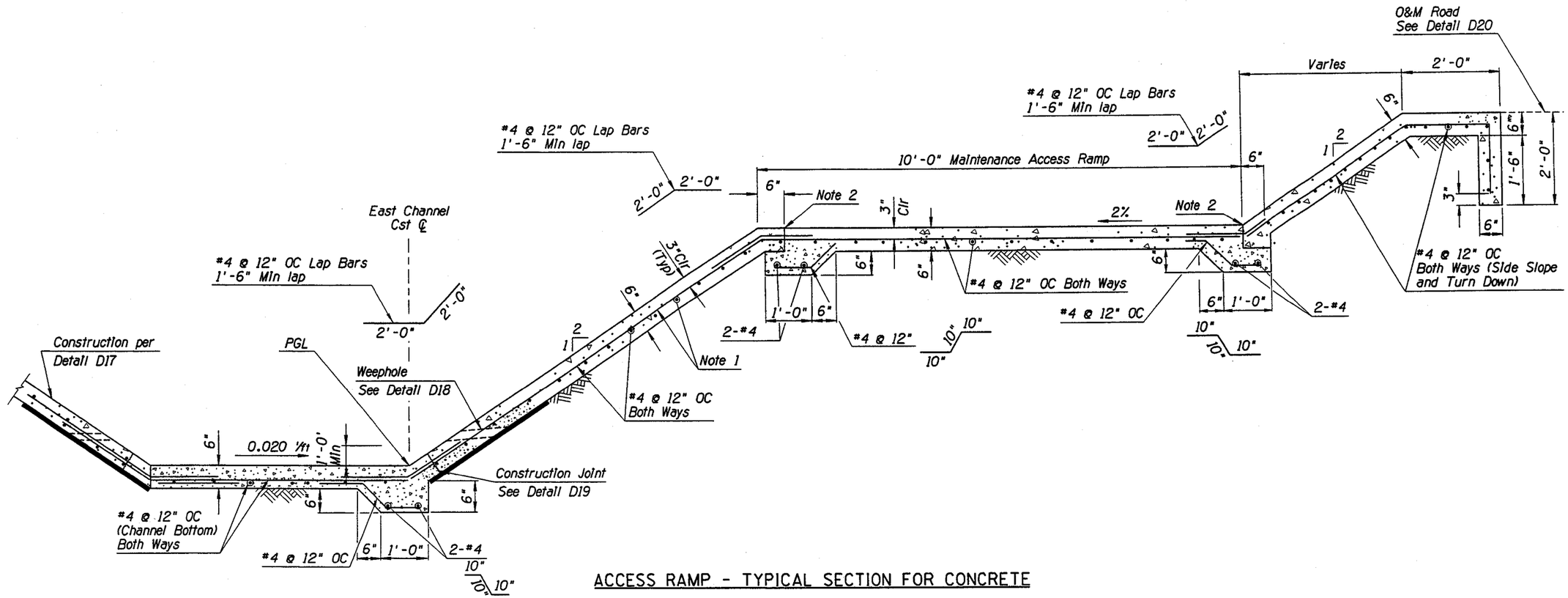

ACCESS RAMP - TYPICAL SECTION FOR CONCRETE

NOTES

1. WWF Reinforcement Cannot be Used in Channel Access Ramps.
2. Seal Joint With ADOT Approved ½" Thick Silicon Joint Sealer.

DETAIL D15

	NAME	DATE
DESIGN	RPC	04-05
DRAWN	CPG	04-05
CHECKED	BGS	04-05

PARSONS BRINCKERHOFF

ARIZONA DEPARTMENT OF TRANSPORTATION
INTERMODAL TRANSPORTATION DIVISION

ACCESS RAMP
STRUCTURAL SECTION

PRELIMINARY
95%
REVIEW
NOT FOR CONSTRUCTION OR RECORDING

ROUTE 202L
LOCATION RED MTN FWY, UNIVERSITY DR - SOUTHERN AVE

DWG NO. D-4.15

TRACS NO. H 5783 01C
202-B(002)B
___ OF ___

Tue Mar 29 11:31:46 2005
H:\RedMtn-Univ-Southern\Drng\drdet15.dgn

F.H.W.A. REGION	STATE	PROJECT NO.	SHEET NO.	TOTAL SHEETS	AS BUILT
9	ARIZ.	202-B(002)B			

202L MA 027

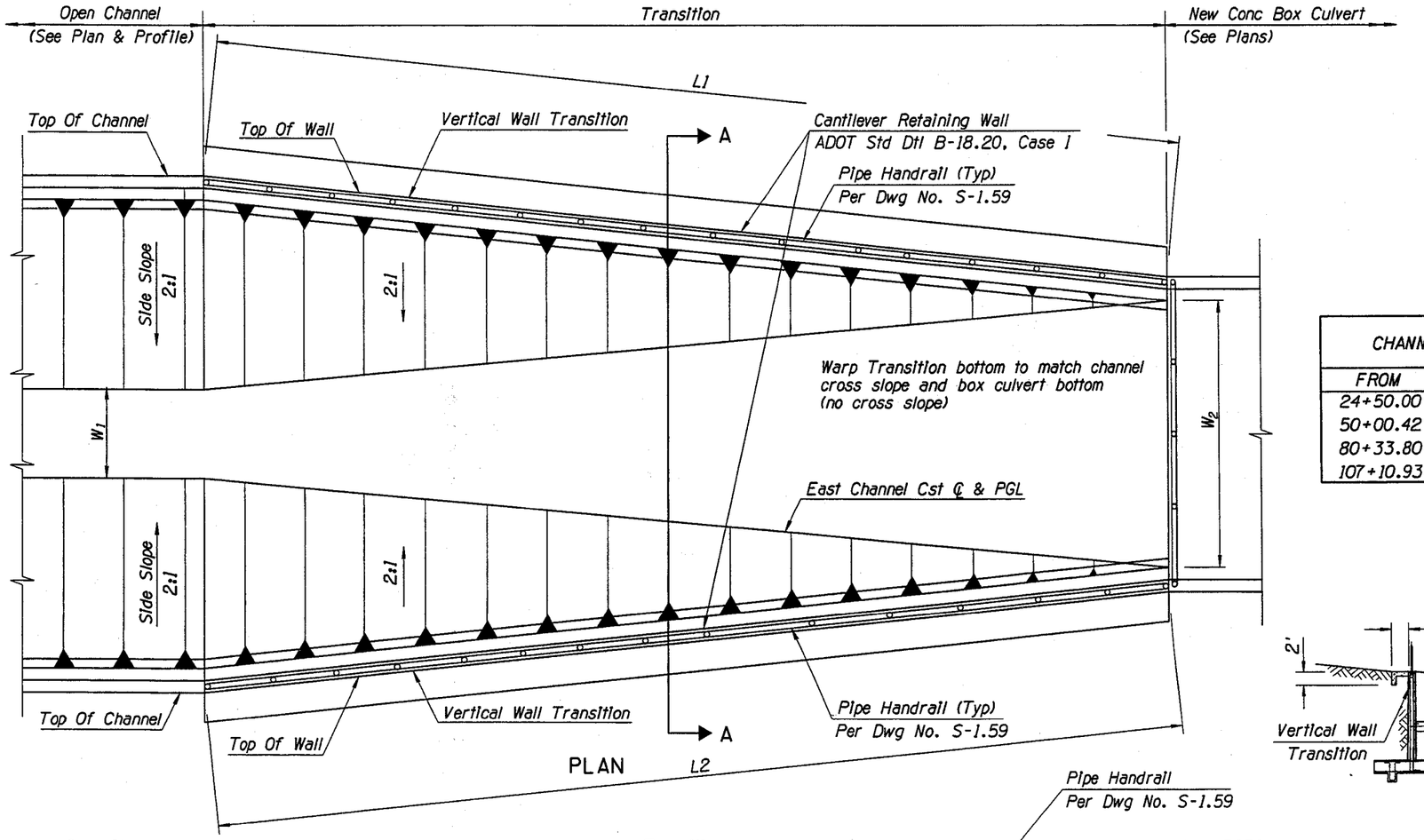

CHANNEL STATION		DEPTH (ft)		WALL LENGTH (ft)			
FROM	TO	D1	D2	L1	L2	W_1	W_2
24+50.00	25+60.00	8.45	8.00	109.50	109.77	12.00	31.82
50+00.42	51+56.06	8.00	8.50	155.04	155.09	12.00	34.25
80+33.80	81+60.00	6.50	6.00	127.04	128.25	10.00	8.00
107+10.93	107+90.00	4.00	4.00	79.47	79.50	8.00	8.00

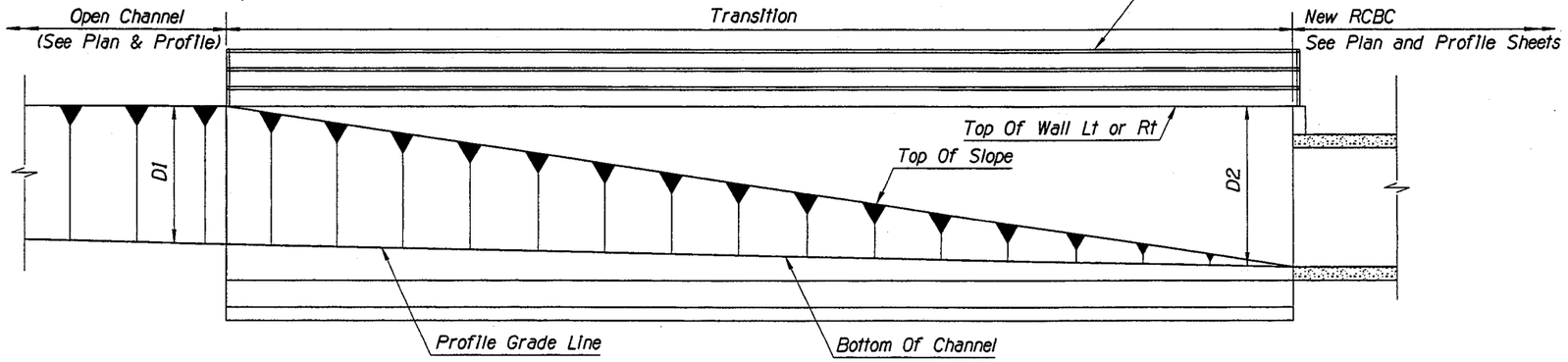

ELEVATION
N.T.S.

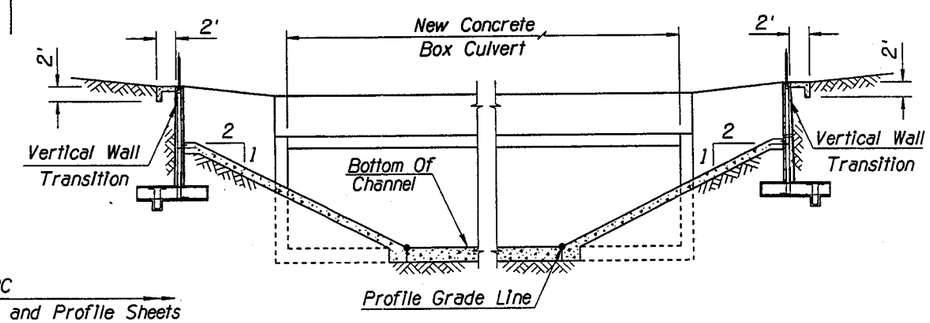

SECTION A-A

DETAIL D16

Sheet 1 of 4

	NAME	DATE
DESIGN	RPC	04-05
DRAWN	CPG	04-05
CHECKED	BGS	04-05

PARSONS BRINCKERHOFF

ARIZONA DEPARTMENT OF TRANSPORTATION
INTERMODAL TRANSPORTATION DIVISION

CHANNEL TRANSITION LAYOUT
SHEET 1 OF 4

PRELIMINARY
95%
REVIEW
NOT FOR CONSTRUCTION OR RECORDING

ROUTE 202L | LOCATION RED MTN FWY, UNIVERSITY DR - SOUTHERN AVE | DWG NO. D-4.16

TRACS NO. H 5783 01C | 202-B(002)B | ___ OF ___

DATE- LOCATION- REVISIONS- FINISHED PLANS- SURVEY NO.

Tue Mar 29 11:31:57 2005 H:\RedMtn-Univ-Southern\Drng\drdet16a.dgn

F.H.W.A. REGION	STATE	PROJECT NO.	SHEET NO.	TOTAL SHEETS	AS BUILT
9	ARIZ.	202-B(002)B			
		202L MA 027			

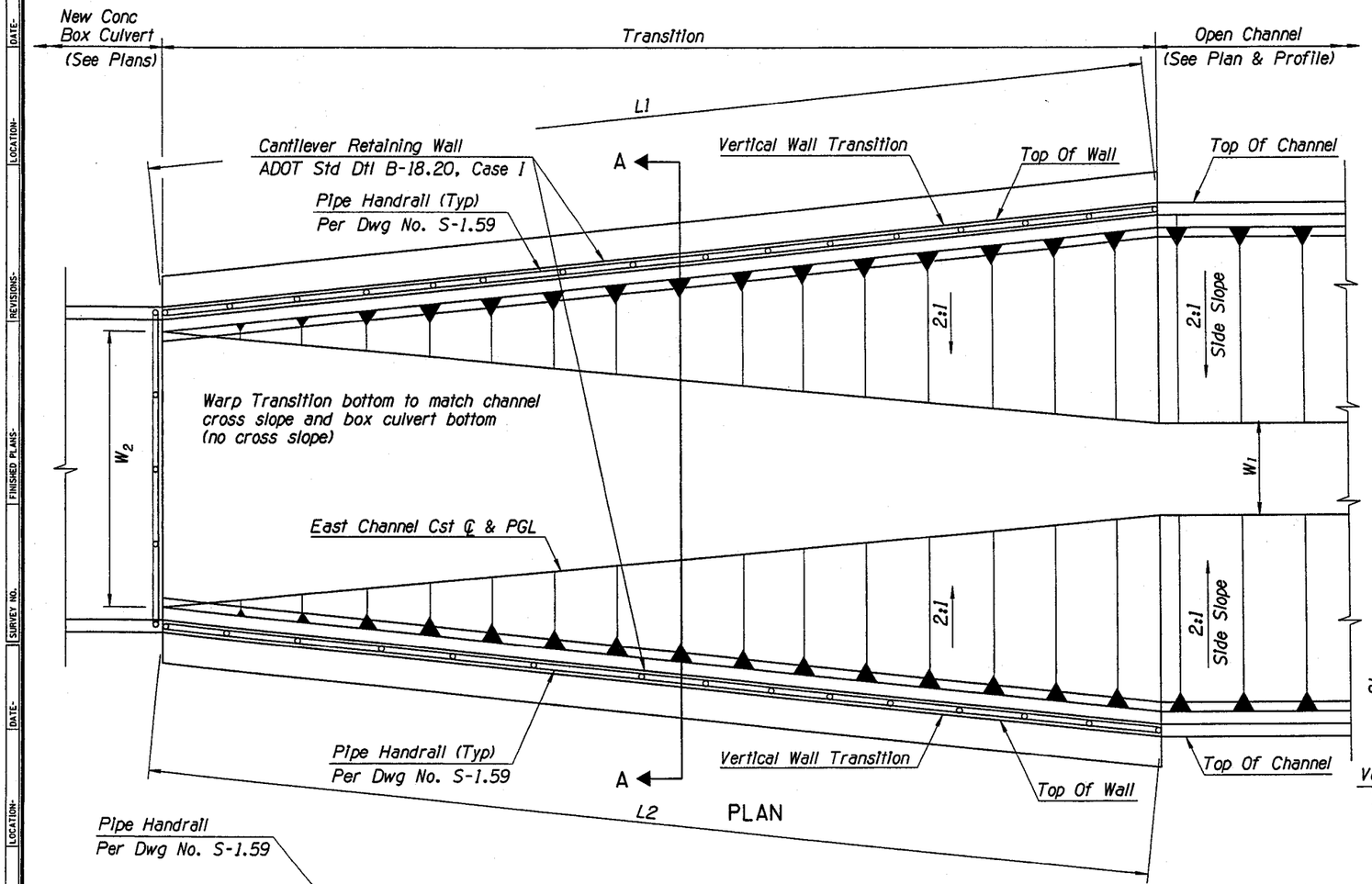

CHANNEL STATION		DEPTH (ft)		WALL LENGTH (ft)			
FROM	TO	D1	D2	L1	L2	W_1	W_2
26+90.00	27+80.00	8.00	8.00	90.21	89.67	12.00	31.72
54+11.89	55+50.00	6.00	8.50	138.31	138.73	10.00	17.00
84+00.00	84+90.00	4.00	6.00	90.44	90.38	8.00	8.00
110+03.58	110+89.93	4.00	5.00	86.52	86.53	4.00	8.00

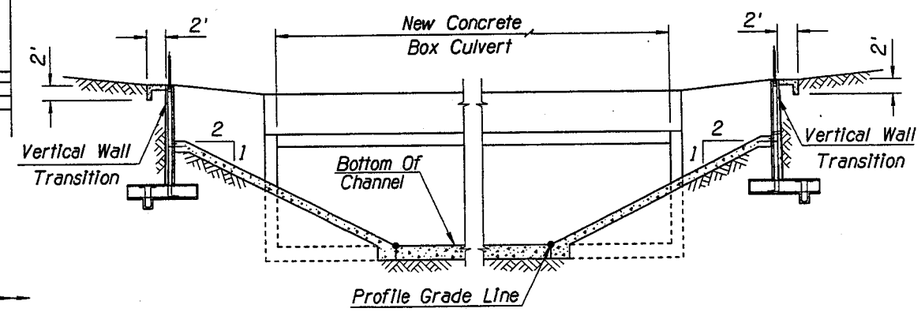

SECTION A-A

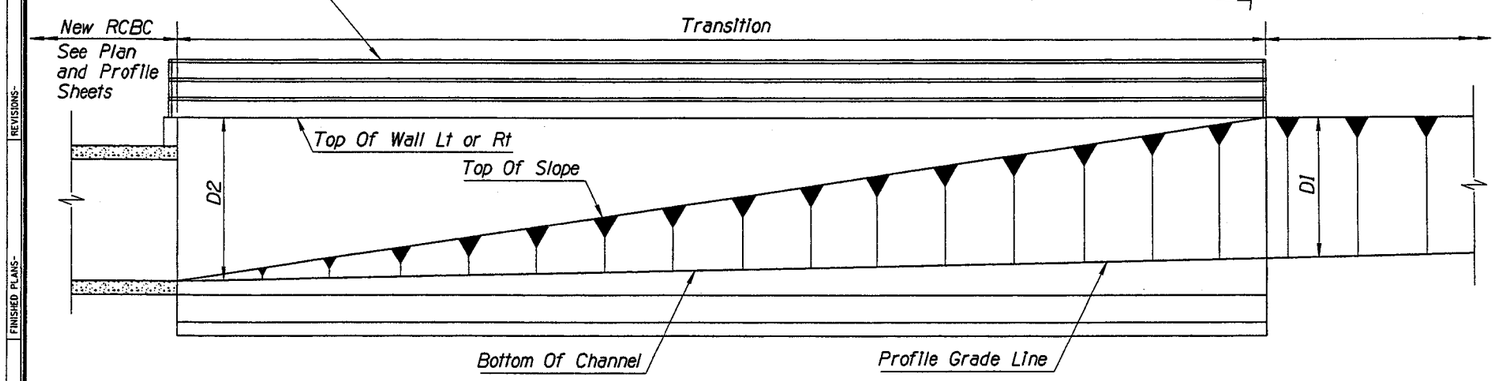

ELEVATION
N.T.S.

DETAIL D16

Sheet 2 of 4

	NAME	DATE
DESIGN	RPC	04-05
DRAWN	CPG	04-05
CHECKED	BGS	04-05

PB PARSONS BRINCKERHOFF

ARIZONA DEPARTMENT OF TRANSPORTATION
INTERMODAL TRANSPORTATION DIVISION

CHANNEL TRANSITION LAYOUT
SHEET 2 OF 4

PRELIMINARY
95%
REVIEW
NOT FOR CONSTRUCTION OR RECORDING

ROUTE 202L
LOCATION RED MTN FWY, UNIVERSITY DR - SOUTHERN AVE

DWG NO. D-4.17

TRACS NO. H 5783 01C

202-B(002)B

___ OF ___

Tue Mar 29 11:32:08 2005 H:\RedMtn-Univ-Southern\Drng\drdet16b.dgn

F.H.W.A. REGION	STATE	PROJECT NO.	SHEET NO.	TOTAL SHEETS	AS BUILT
9	ARIZ.	202-B(002)B			
		202L MA 027			

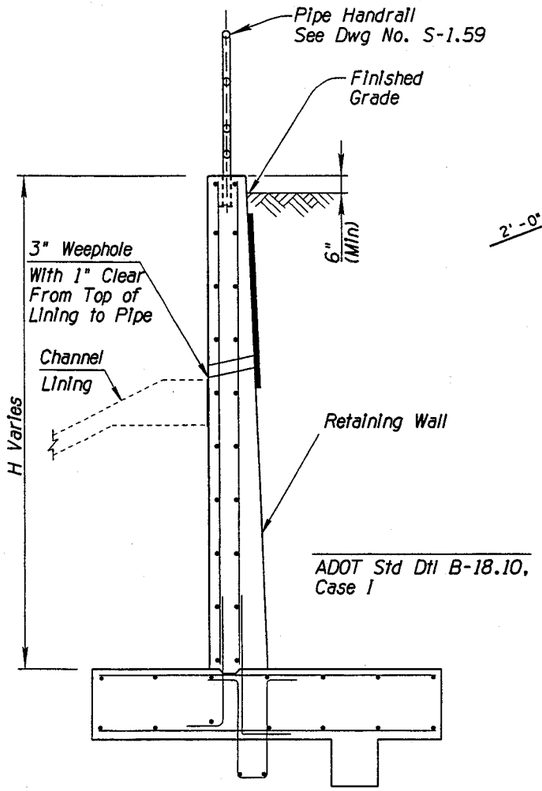

VERTICAL WALL TRANSITION SECTION

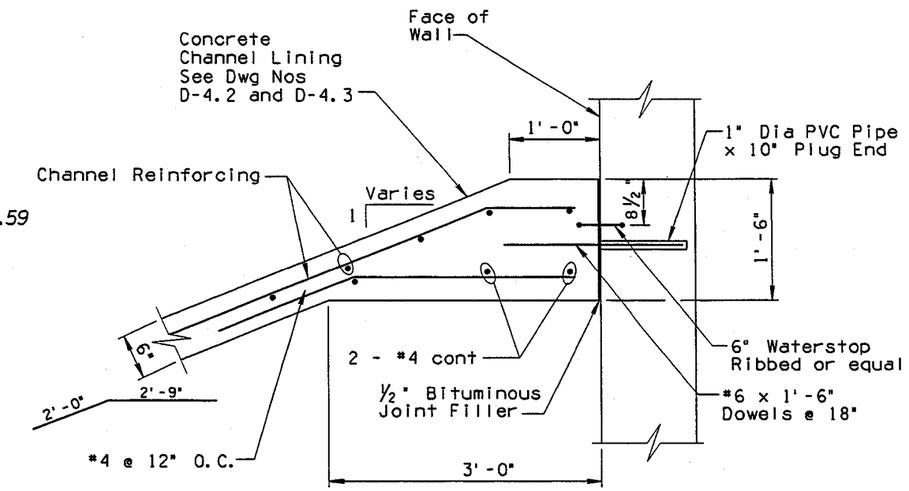

TYPICAL JOINT BETWEEN
RETAINING WALL AND CHANNEL LINING
NTS

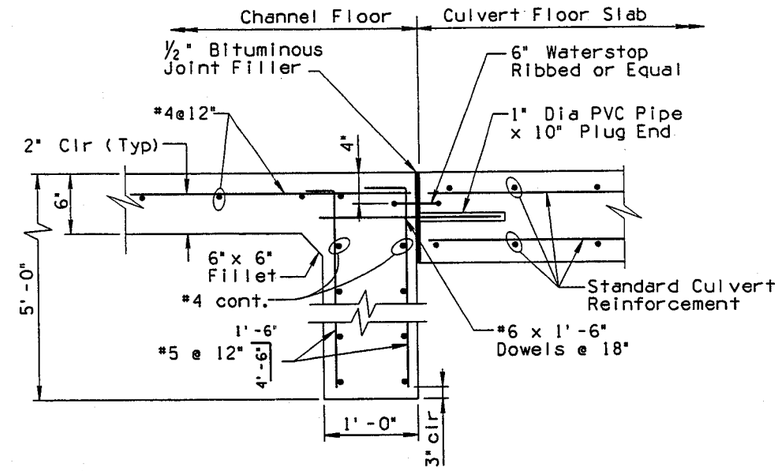

CHANNEL TO CULVERT CONNECTION DETAIL
NTS

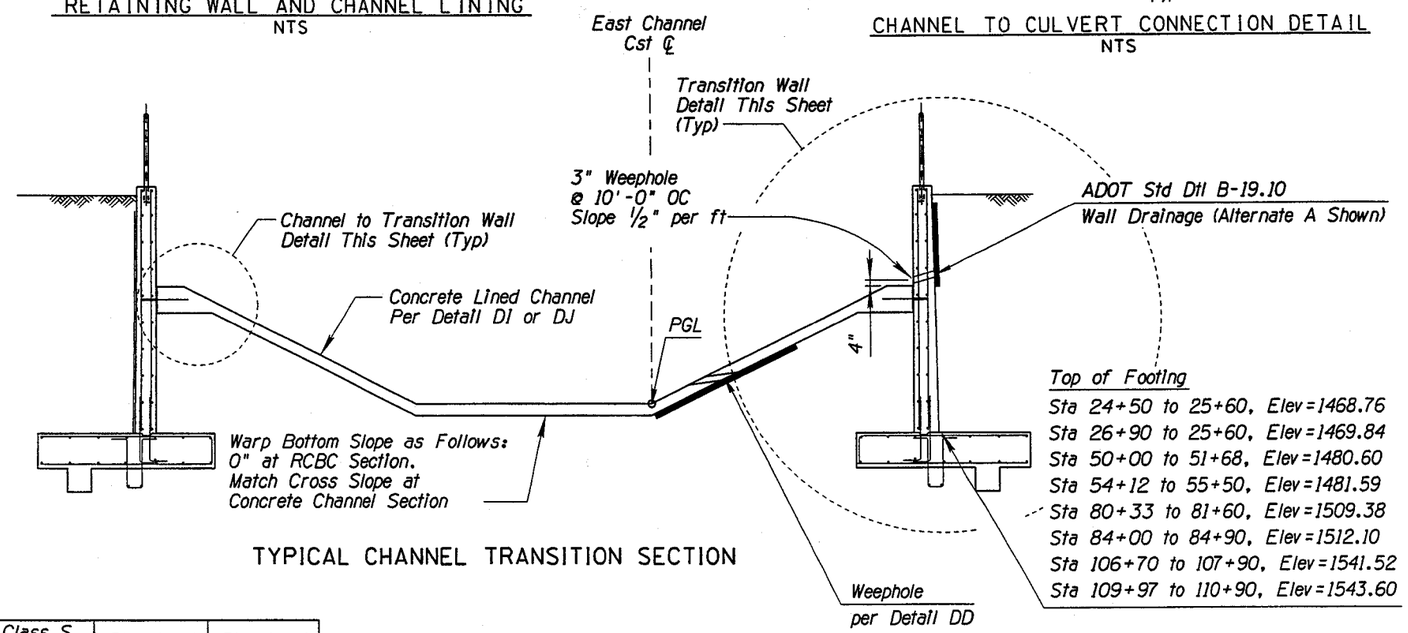

TYPICAL CHANNEL TRANSITION SECTION

Channel Location	Sta 1	Sta 2	Wall Length (Total)	Wall Height H	Reinf Steel	Class S Conc F'c=3 Ksi	Structural Excavation	Structural Back Fill
			ft (0)	ft-In	lb	CY	CY	CY
East Chnl Cst ℄	24+50.00	25+60.00	219	10	10963.5	146.5	16062.2	20830.7
East Chnl Cst ℄	26+90.00	27+80.00	180	11	9893.4	130.2	14878.1	20281.5
East Chnl Cst ℄	50+00.42	51+56.06	310	10	15506.5	207.2	22718.0	29462.4
East Chnl Cst ℄	54+11.89	55+50.00	277	10	13852.0	185.1	20294.0	26318.8
East Chnl Cst ℄	80+33.8	81+60.00	255	9	11488.1	156.5	15935.1	20104.1
East Chnl Cst ℄	84+00.00	84+90.00	181	10	9041.0	120.8	13245.6	17177.9
East Chnl Cst ℄	107+10.93	107+90.00	159	7	5564.0	71.9	7120.5	8067.1
East Chnl Cst ℄	110+03.58	110+89.93	173	7	26273.5	345.9	7751.1	8782.3

Channel Transition Wall Structure Table

NOTE:

1. Channel Lining Between the Retaining Walls is Included in Item 9201001 Concrete Lined Channel.

DETAIL D16

Sheet 3 of 4

	NAME	DATE
DESIGN	RPC	04-05
DRAWN	CPG	04-05
CHECKED	BGS	04-05

PB PARSONS BRINCKERHOFF

ARIZONA DEPARTMENT OF TRANSPORTATION
INTERMODAL TRANSPORTATION DIVISION

VERTICAL WALL TRANSITION
SHEET 3 OF 4

PRELIMINARY
95%
REVIEW
NOT FOR CONSTRUCTION OR RECORDING

ROUTE 202L
LOCATION RED MTN FWY, UNIVERSITY DR - SOUTHERN AVE

DWG NO. D-4.18

TRACS NO. H 5783 01C

202-B(002)B

___ OF ___

SURVEY NO. | FINISHED PLANS- | REVISIONS- | LOCATION- | DATE-

Tue Mar 29 11:32:18 2005 H:\RedMtn-Univ-Southern\Drng\drdet16c.dgn

F.H.W.A. REGION	STATE	PROJECT NO.	SHEET NO.	TOTAL SHEETS	AS BUILT
9	ARIZ.	202-B(002)B			

202L MA 027

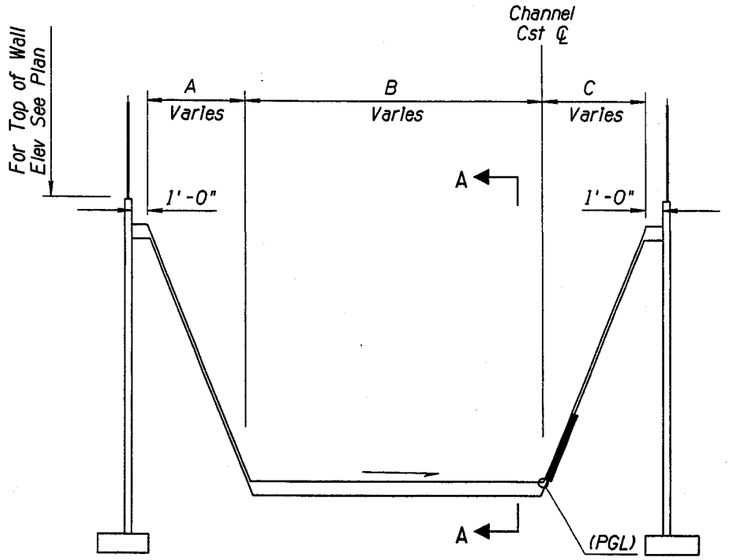

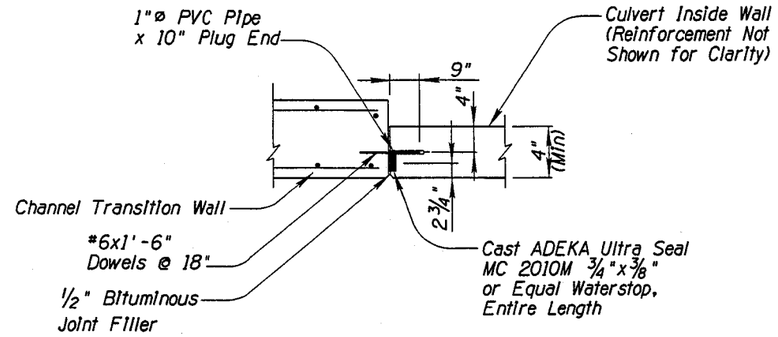

TRANSITION WALL TO CULVERT CONNECTION DETAIL

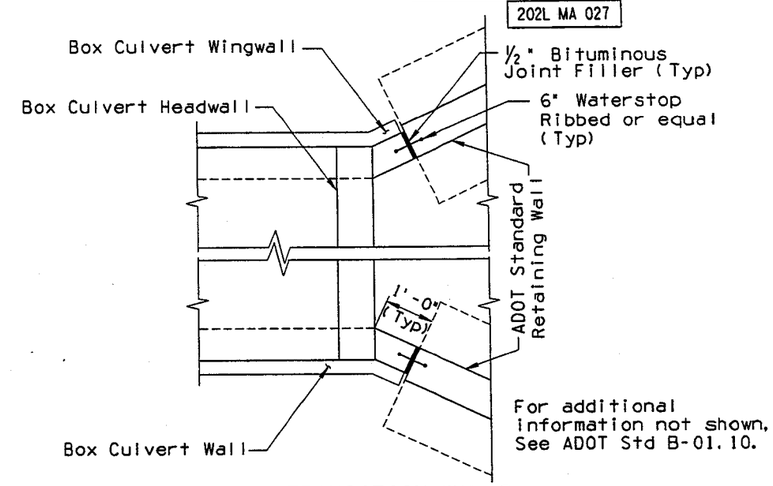

TYPICAL TRANSITION WALLS AND WINGWALLS AT BOX CULVERT

NTS

Location	From Sta	To Sta	A	B	C
East Chnl Cst ℄	24+50.00	25+60.00	16.42 to 0.00	12.00 to 31.82	16.90 to 0.00
East Chnl Cst ℄	50+00.42	51+56.06	15.52 to 0.00	12.00 to 34.25	16.00 to 0.00
East Chnl Cst ℄	80+33.80	81+60.00	12.40 to 0.00	10.00 to 8.00	13.00 to 0.00
East Chnl Cst ℄	107+10.93	107+90.00	7.63 to 0.00	8.00	8.00 to 0.00

CONCRETE LINED CHANNEL TO CULVERT TRANSITION
See Station Limits in Table

NTS

Location	From Sta	To Sta	A	B	C
East Chnl Cst ℄	26+90.00	27+80.00	0.00 TO 15.54	31.72 TO 12.00	0.00 TO 16.00
East Chnl Cst ℄	54+11.89	55+50.00	0.00 TO 11.73	17.00 to 10.00	0.00 TO 12.00
East Chnl Cst ℄	84+00.00	84+90.00	0.00 TO 7.59	8.00	0.00 TO 8.00
East Chnl Cst ℄	110+03.58	110+89.93	0.00 TO 8.29	8.00 TO 4.00	0.00 TO 8.00

CULVERT TO CONCRETE LINED CHANNEL TRANSITION
See Station Limits in Table

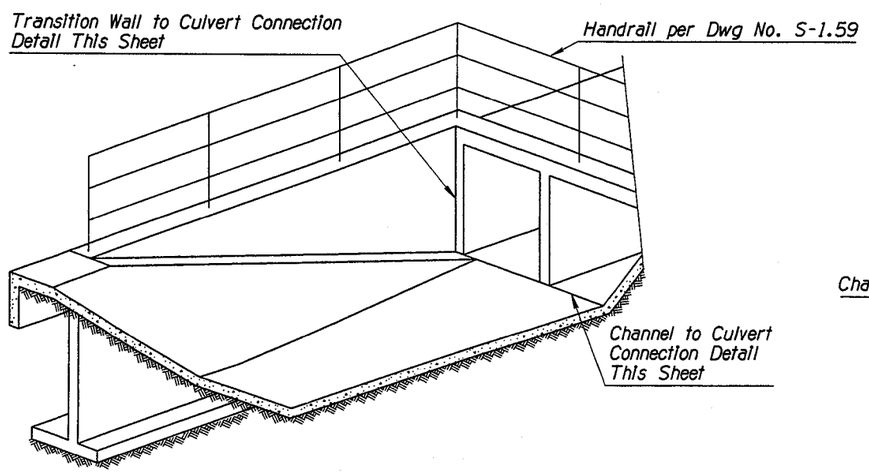

SCHEMATIC REPRESENTATION

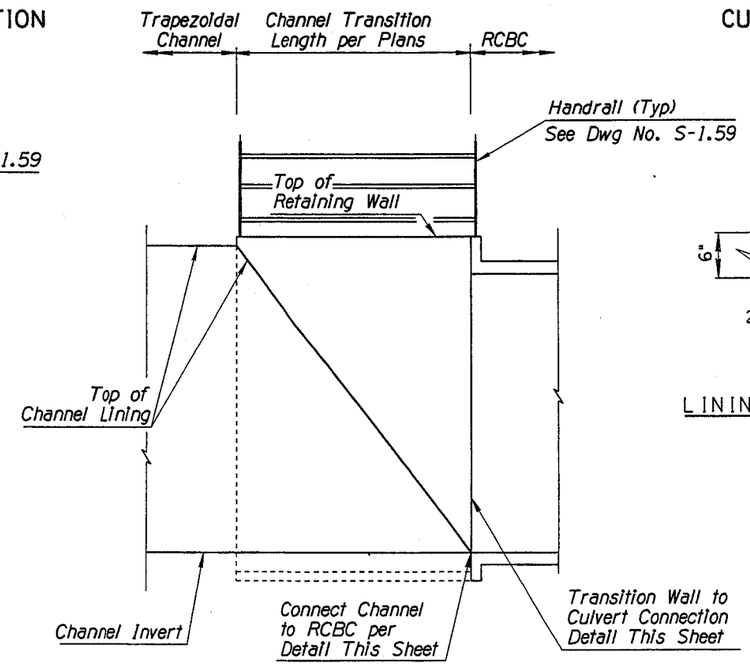

Section A-A

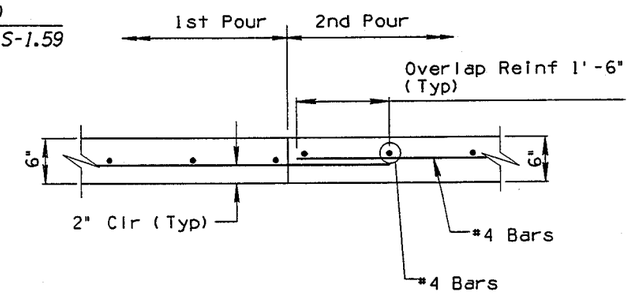

LINING TO LINING CONSTRUCTION JOINT DETAILS

NTS

DETAIL D16

Sheet 4 of 4

	NAME	DATE
DESIGN	RPC	04-05
DRAWN	CPG	04-05
CHECKED	BGS	04-05

PARSONS BRINCKERHOFF

ARIZONA DEPARTMENT OF TRANSPORTATION
INTERMODAL TRANSPORTATION DIVISION

VERTICAL WALL TRANSITION
SHEET 4 OF 4

PRELIMINARY 95% REVIEW NOT FOR CONSTRUCTION OR RECORDING

ROUTE 202L | LOCATION RED MTN FWY, UNIVERSITY DR - SOUTHERN AVE

DWG NO. D-4.19

TRACS NO. H 5783 01C | 202-B(002)B | ___ OF ___

Tue Mar 29 11:32:29 2005 H:\RedMtn-Univ-Southern\Drng\drdetl6d.dgn

F.H.W.A. REGION	STATE	PROJECT NO.	SHEET NO.	TOTAL SHEETS	AS BUILT
9	ARIZ.	202-B(002)B			
		202L MA 027			

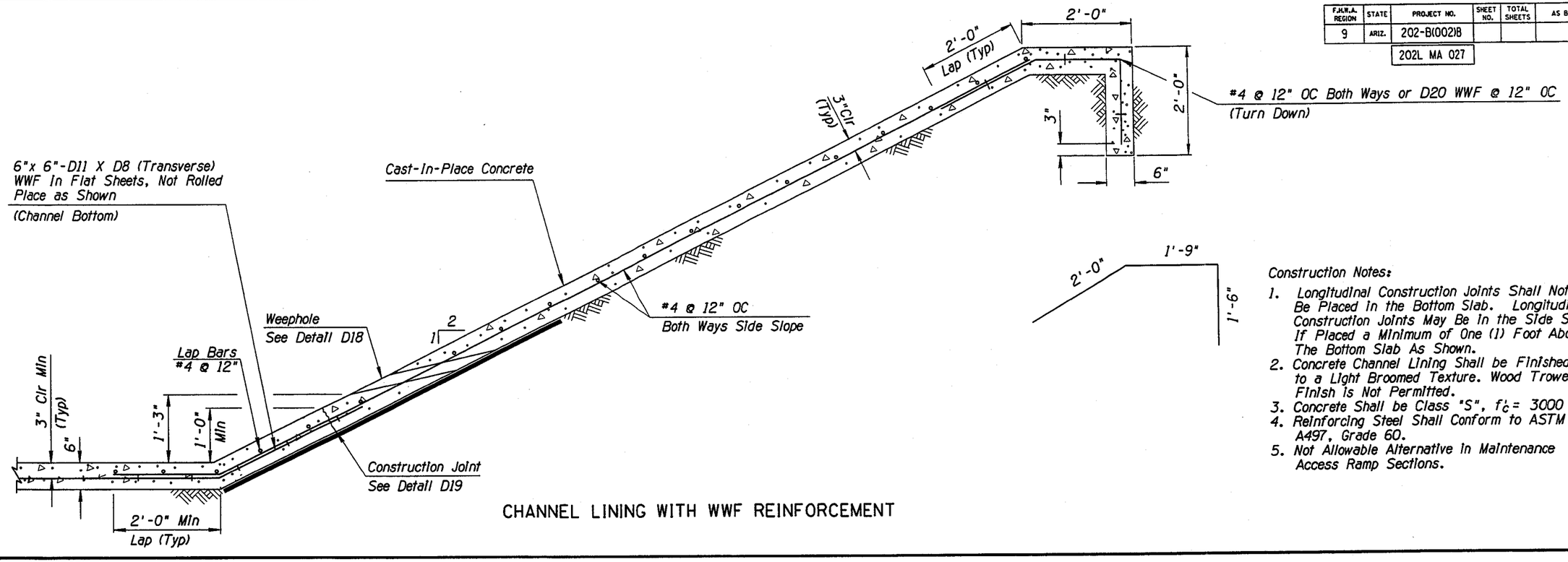

Construction Notes:

1. Longitudinal Construction Joints Shall Not Be Placed In the Bottom Slab. Longitudinal Construction Joints May Be In the Side Slope If Placed a Minimum of One (1) Foot Above The Bottom Slab As Shown.
2. Concrete Channel Lining Shall be Finished to a Light Broomed Texture. Wood Trowel Finish Is Not Permitted.
3. Concrete Shall be Class "S", f'_c = 3000 psi.
4. Reinforcing Steel Shall Conform to ASTM A497, Grade 60.
5. Not Allowable Alternative In Maintenance Access Ramp Sections.

CHANNEL LINING WITH WWF REINFORCEMENT

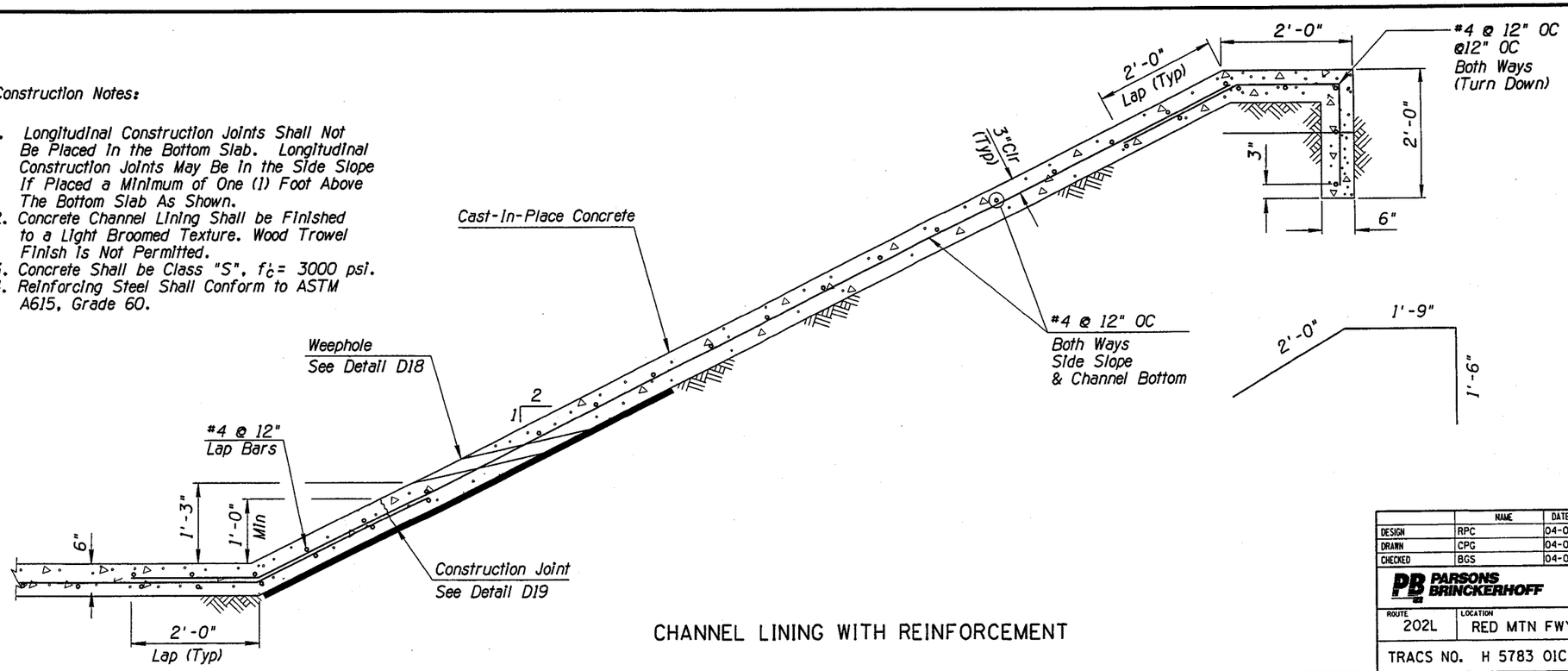

Construction Notes:

1. Longitudinal Construction Joints Shall Not Be Placed In the Bottom Slab. Longitudinal Construction Joints May Be In the Side Slope If Placed a Minimum of One (1) Foot Above The Bottom Slab As Shown.
2. Concrete Channel Lining Shall be Finished to a Light Broomed Texture. Wood Trowel Finish Is Not Permitted.
3. Concrete Shall be Class "S", f'_c = 3000 psi.
4. Reinforcing Steel Shall Conform to ASTM A615, Grade 60.

CHANNEL LINING WITH REINFORCEMENT

DETAIL D17

CHANNEL LINING

	NAME	DATE
DESIGN	RPC	04-05
DRAWN	CPG	04-05
CHECKED	BGS	04-05

PARSONS BRINCKERHOFF

ARIZONA DEPARTMENT OF TRANSPORTATION
INTERMODAL TRANSPORTATION DIVISION

CHANNEL LINING WITH WWF REINFORCEMENT

PRELIMINARY 95% REVIEW NOT FOR CONSTRUCTION OR RECORDING

ROUTE 202L | LOCATION RED MTN FWY, UNIVERSITY DR - SOUTHERN AVE

DWG NO. D-4.20

TRACS NO. H 5783 01C | 202-B(002)B | ___ OF ___

SURVEY NO. | FINISHED PLANS | REVISIONS | LOCATION | DATE

Tue Mar 29 11:32:40 2005 H:\RedMtn-Univ-Southern\Drng\drdet20.dgn

F.H.W.A. REGION	STATE	PROJECT NO.	SHEET NO.	TOTAL SHEETS	AS BUILT
9	ARIZ.	202-B(002)B			
		202L MA 027			

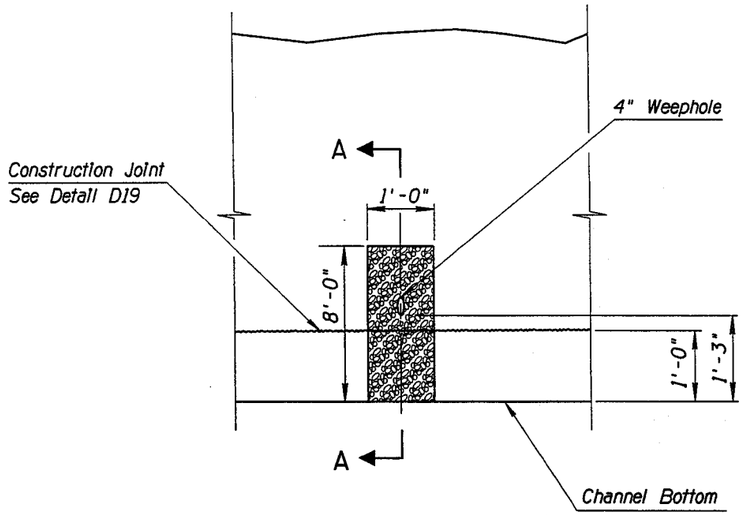

PLAN VIEW

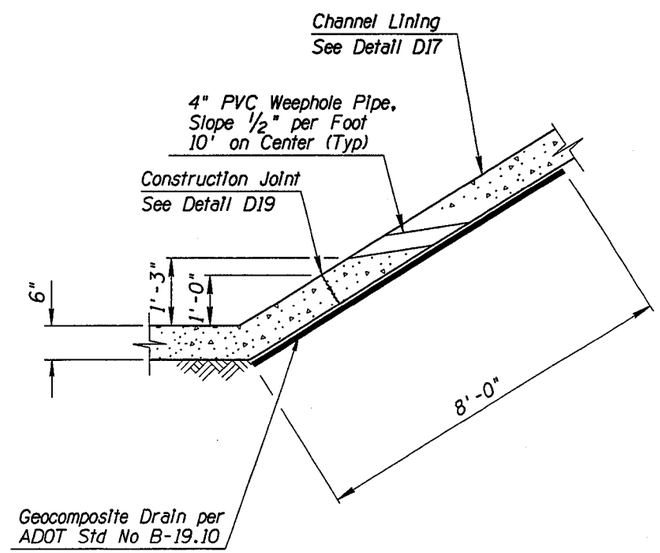

SECTION A - A

NOTE: All Weephole Costs are Incidental to Channel Lining.

DETAIL D18

WEEPHOLE DETAIL

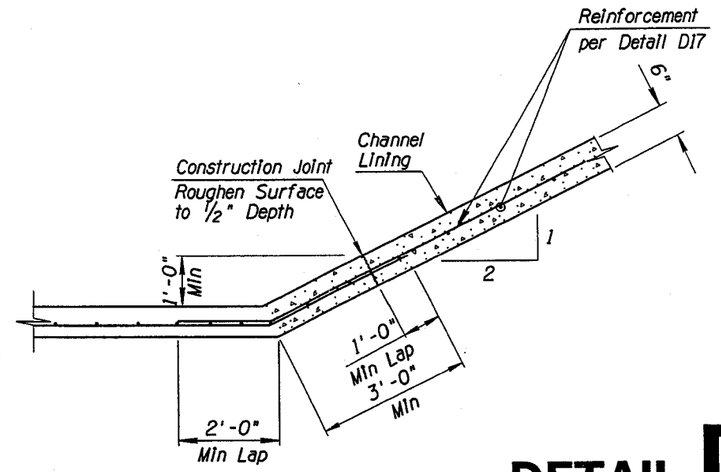

NOTE: All Construction Joint Costs are Incidental to Channel Lining.

DETAIL D19

CHANNEL CONSTRUCTION
JOINT DETAIL

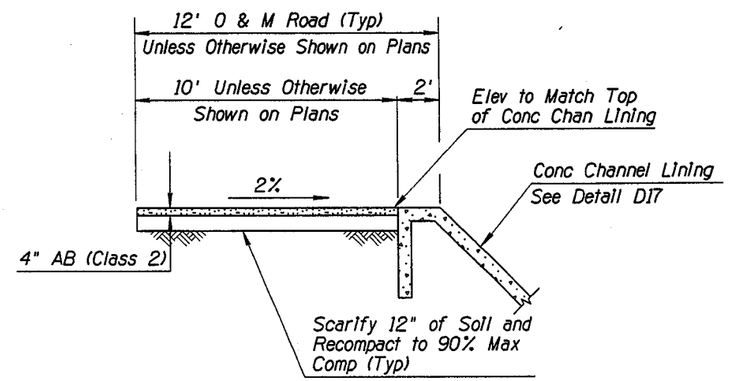

DETAIL D20

CHANNEL OPERATION &
MAINTENANCE (O & M) ROAD

	NAME	DATE
DESIGN	RPC	04-05
DRAWN	CPG	04-05
CHECKED	BGS	04-05

PARSONS BRINCKERHOFF

ARIZONA DEPARTMENT OF TRANSPORTATION
INTERMODAL TRANSPORTATION DIVISION

DETAIL SHEET
DETAILS D18, D19 & D20

PRELIMINARY
95%
REVIEW
NOT FOR CONSTRUCTION OR RECORDING

ROUTE 202L | LOCATION RED MTN FWY, UNIVERSITY DR - SOUTHERN AVE

DWG NO. D-4.21

TRACS NO. H 5783 01C | 202-B(002)B | ___ OF ___

SURVEY NO. | FINISHED PLANS- | REVISIONS- | LOCATION- | DATE-

Tue Mar 29 11:32:51 2005 H:\RedMtn-Univ-Southern\Drng\drdet21.dgn

F.H.W.A. REGION	STATE	PROJECT NO.	SHEET NO.	TOTAL SHEETS	AS BUILT
9	ARIZ.	202-B(002)B			
		202L MA 027			

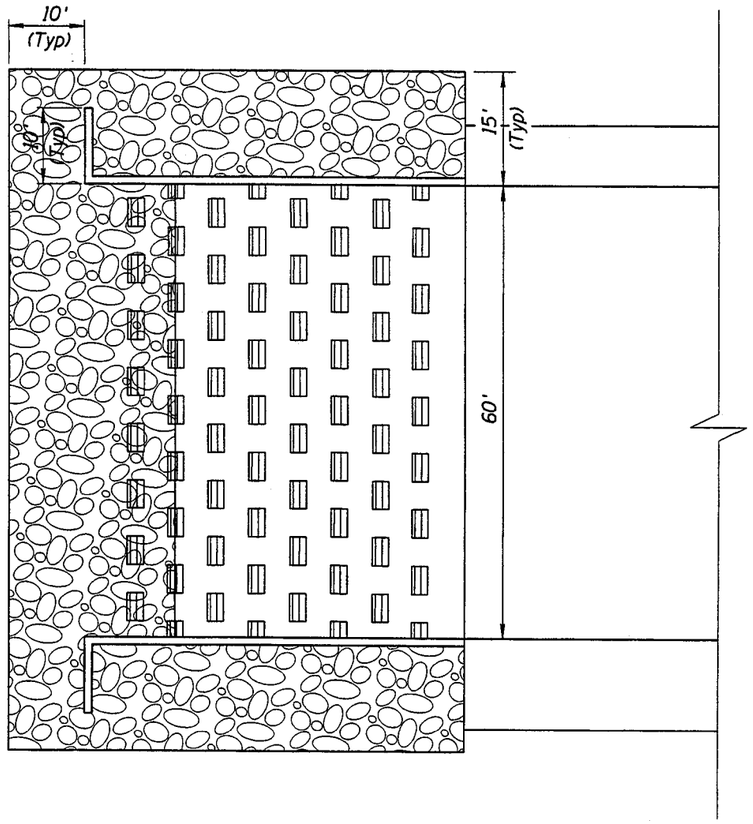

PLAN VIEW - BAFFLED CHUTE

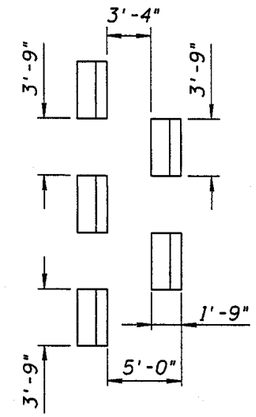

BAFFLE ARRAY DETAIL

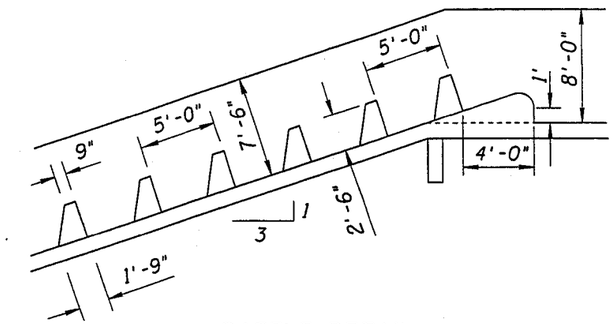

BAFFLE DETAIL

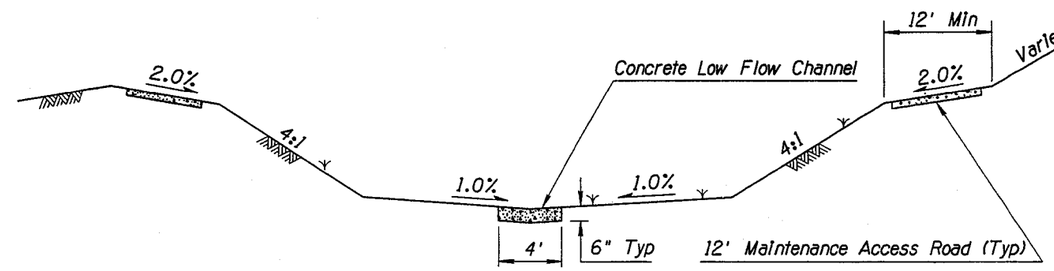

NOTE:
For Additional Information Relating to Specific Elevations and Grades, Refer to 202L/US60 T.I. Phase II Plans.

DETENTION BASIN CROSS-SECTION

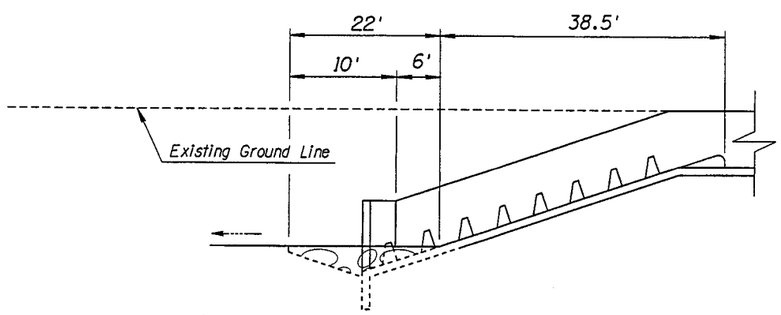

PROFILE VIEW - BAFFLED CHUTE

DETAIL D21

SHEET 1 OF 2

	NAME	DATE
DESIGN	RPC	04-05
DRAWN	CPG	04-05
CHECKED	BGS	04-05

PARSONS BRINCKERHOFF

ARIZONA DEPARTMENT OF TRANSPORTATION
INTERMODAL TRANSPORTATION DIVISION

BAFFLED CHUTE
DROP STRUCTURE DETAIL

PRELIMINARY 95% REVIEW
NOT FOR CONSTRUCTION OR RECORDING

ROUTE: 202L
LOCATION: RED MTN FWY, UNIVERSITY DR - SOUTHERN AVE

DWG NO. D-4.22

TRACS NO. H 5783 01C | 202-B(002)B | ___ OF ___

DATE- | LOCATION- | REVISIONS- | FINISHED PLANS- | SURVEY NO.

Tue Mar 29 13:58:50 2005 H:\RedMtn-Univ-Southern\Drng\drdet22.dgn

F.H.W.A. REGION	STATE	PROJECT NO.	SHEET NO.	TOTAL SHEETS	AS BUILT
9	ARIZ.	202-B(002)B			
		202L MA 027			

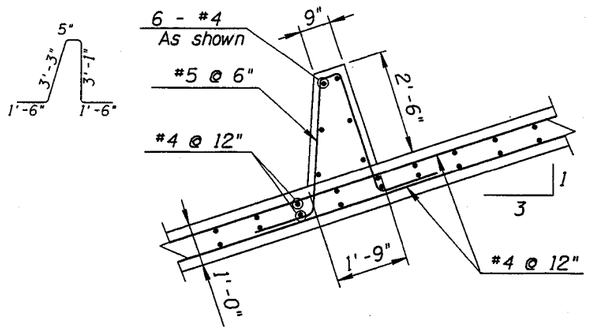

BAFFLE BLOCK REINFORCING

NTS

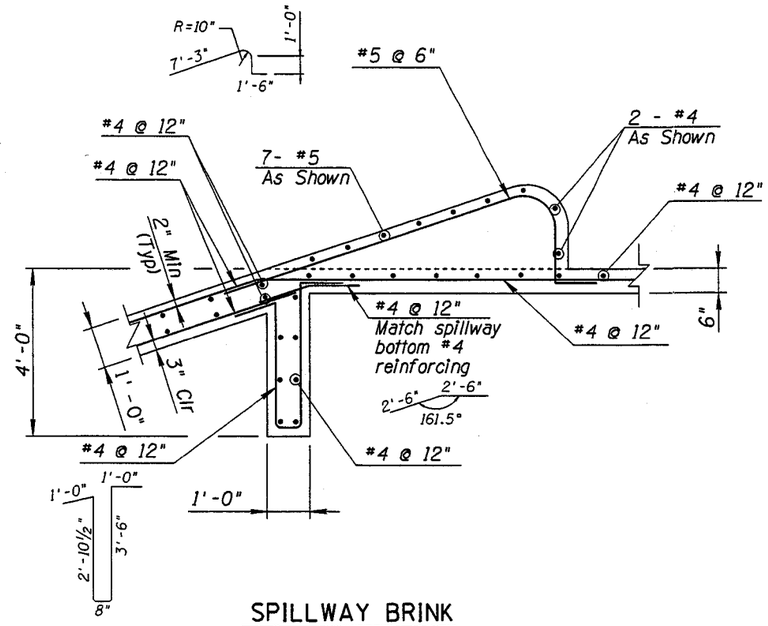

SPILLWAY BRINK

NTS

NOTES:

1. Reinforcing shall have 2 inch clear cover unless noted otherwise.
2. Concrete strength @ 28 days = 3000 psi.

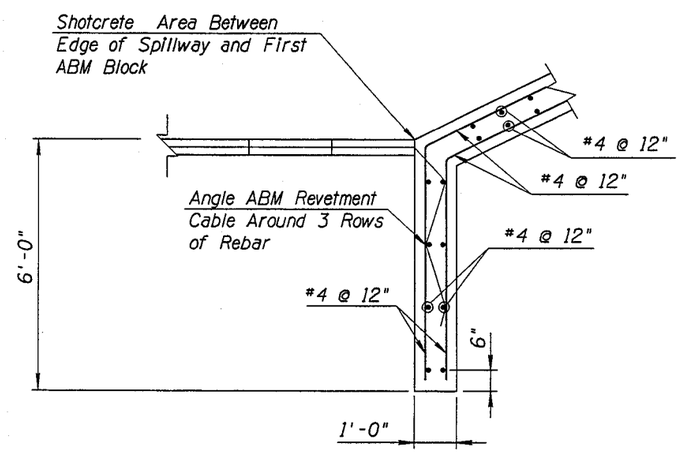

DETAIL A

NTS

NOTE:
ABM Revetment Cable to be Angled around Rebar, and Spillway to be poured, prior to pumping concrete into ABM Fabric.

DETAIL D21

SHEET 2 OF 2

	NAME	DATE	ARIZONA DEPARTMENT OF TRANSPORTATION INTERMODAL TRANSPORTATION DIVISION	PRELIMINARY 95% REVIEW NOT FOR CONSTRUCTION OR RECORDING
DESIGN	RPC	04-05		
DRAWN	CPG	04-05		
CHECKED	BGS	04-05	BAFFLED CHUTE DROP STRUCTURE DETAIL	
PARSONS BRINCKERHOFF				DWG NO. D-4.22A
ROUTE 202L	LOCATION RED MTN FWY, UNIVERSITY DR - SOUTHERN AVE			
TRACS NO. H 5783 01C			202-B(002)B	___ OF ___

SURVEY NO. | FINISHED PLANS- | REVISIONS- | LOCATION- | DATE-

F.H.W.A. REGION	STATE	PROJECT NO.	SHEET NO.	TOTAL SHEETS	AS BUILT
9	ARIZ.	202-B(002)B			
		202L MA 027			

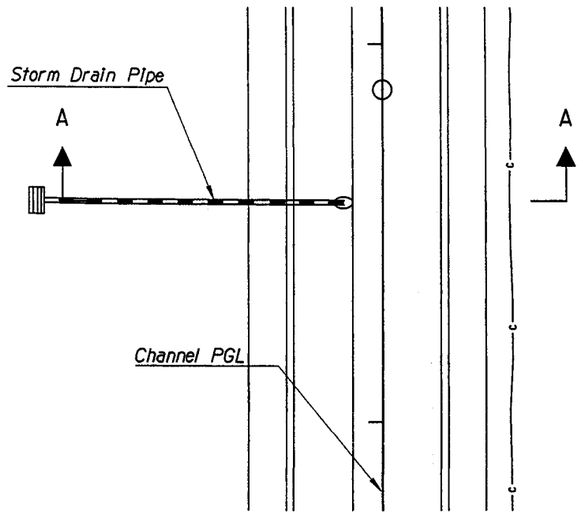

PLAN
PLAN

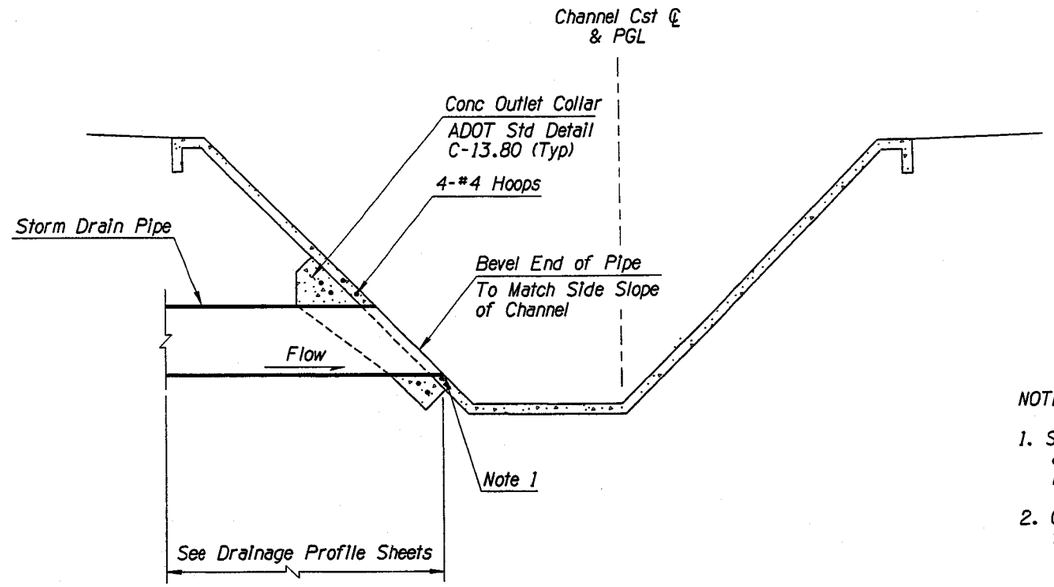

SECTION A - A

NOTES:

1. See Drainage Profile Sheets and table below for Invert elevations.
2. Conc outlet collars are incidental to the cost of storm drain pipe.

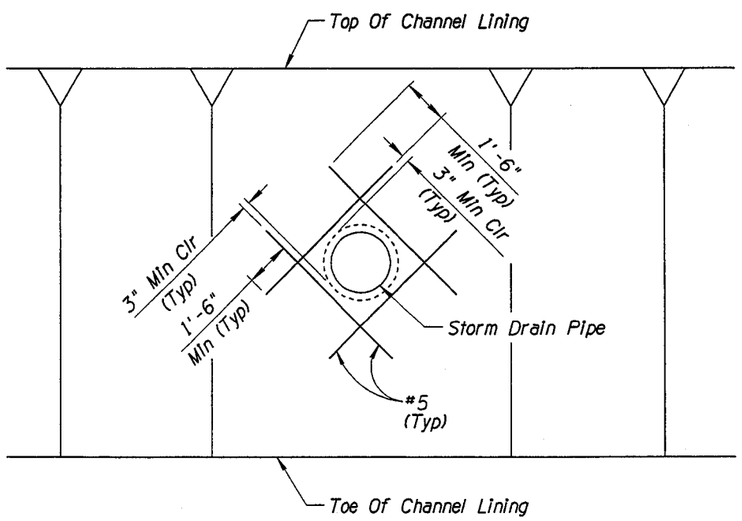

PIPE PENETRATION THROUGH CHANNEL LINING
NTS

Pipe Ref Number	Station	Pipe ø	Invert Elevation
175	13+76.75	24"	1460.50
452	70+55.58	24"	1499.25
451	76+16.70	24"	1505.49
413	84+09.37	24"	1514.93
402	103+22.26	24"	1538.71
401	105+22.56	24"	1540.72

DETAIL D22

PIPE PENETRATION THROUGH CHANNEL LINING

	NAME	DATE	ARIZONA DEPARTMENT OF TRANSPORTATION INTERMODAL TRANSPORTATION DIVISION	PRELIMINARY 95% REVIEW NOT FOR CONSTRUCTION OR RECORDING
DESIGN	RPC	04-05		
DRAWN	CPG	04-05		
CHECKED	BGS	04-05		
PB PARSONS BRINCKERHOFF			PIPE PENETRATION DETAILS	
ROUTE 202L	LOCATION RED MTN FWY, UNIVERSITY DR - SOUTHERN AVE			DWG NO. D-4.23
TRACS NO. H 5783 01C			202-B(002)B	___ OF ___

SURVEY NO. | FINISHED PLANS- | REVISIONS- | LOCATION- | DATE-

F.H.W.A. REGION	STATE	PROJECT NO.	SHEET NO.	TOTAL SHEETS	AS BUILT
9	ARIZ.	202-B(002)B			
		202L MA 027			

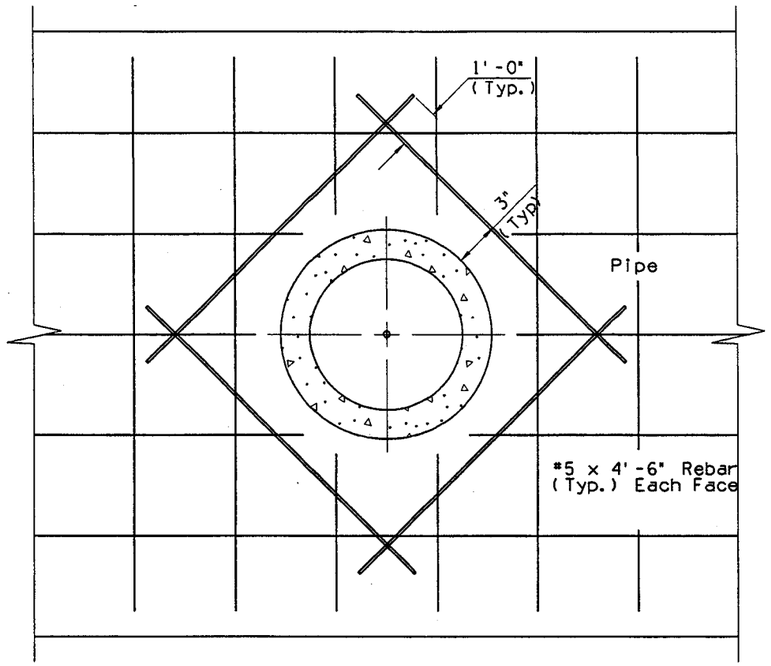

PIPE PENETRATION THROUGH CONCRETE BOX CULVERT WALL

NTS

Pipe Ref Number	Station	Pipe Φ	Invert Elevation
711	108+27.64	24"	1544.41
733	83+71.40	24"	1514.28
734	82+79.45	24"	1513.24
735	82+29.07	24"	1512.65
825	53+87.96	42"	1484.75

DETAIL D23

PIPE PENETRATION THROUGH
BOX CULVERT WALL

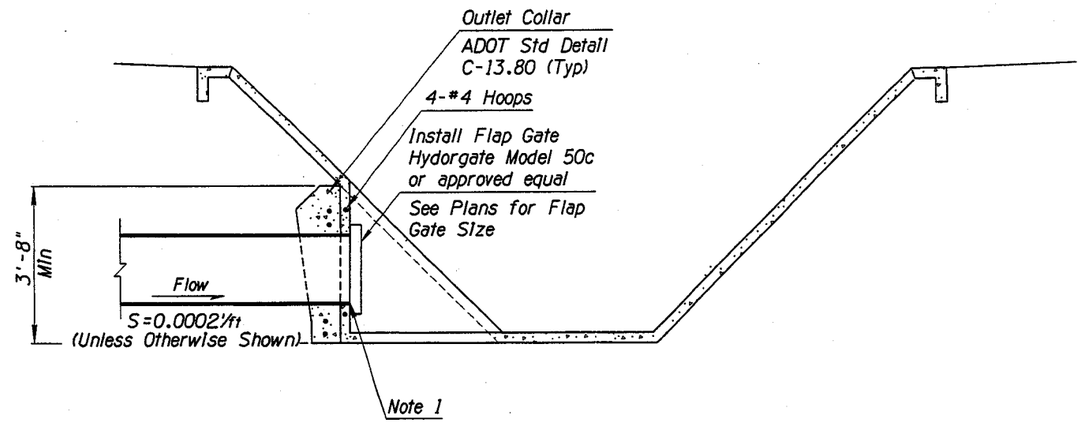

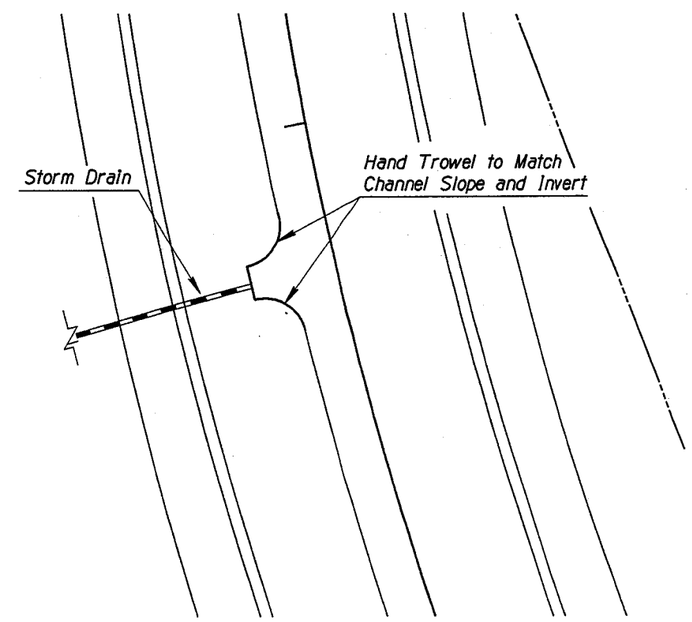

Notes:

1. See Drainage Profile Sheets for Invert Elevations.
2. Outlet Pipe Collars are Incidental to the cost of Storm Drain Pipes.
3. Provide 6" Min. clear around gate all directions.

DETAIL D24

FLAP GATE DETAIL

	NAME	DATE	ARIZONA DEPARTMENT OF TRANSPORTATION INTERMODAL TRANSPORTATION DIVISION	PRELIMINARY 95% REVIEW NOT FOR CONSTRUCTION OR RECORDING
DESIGN	RPC	04-05		
DRAWN	CPG	04-05		
CHECKED	BGS	04-05		
PB PARSONS BRINCKERHOFF			DETAILS D23 AND D24	
ROUTE 202L	LOCATION RED MTN FWY, UNIVERSITY DR - SOUTHERN AVE			DWG NO. D-4.24
TRACS NO. H 5783 01C			202-B(002)B	___ OF ___

SURVEY NO. | FINISHED PLANS- | REVISIONS- | LOCATION- | DATE-

Tue Mar 29 11:33:32 2005 H:\RedMtn-Univ-Southern\Drng\drdet24.dgn

F.H.W.A. REGION	STATE	PROJECT NO.	SHEET NO.	TOTAL SHEETS	AS BUILT
9	ARIZ.	202-B(002)B			

202L MA 027

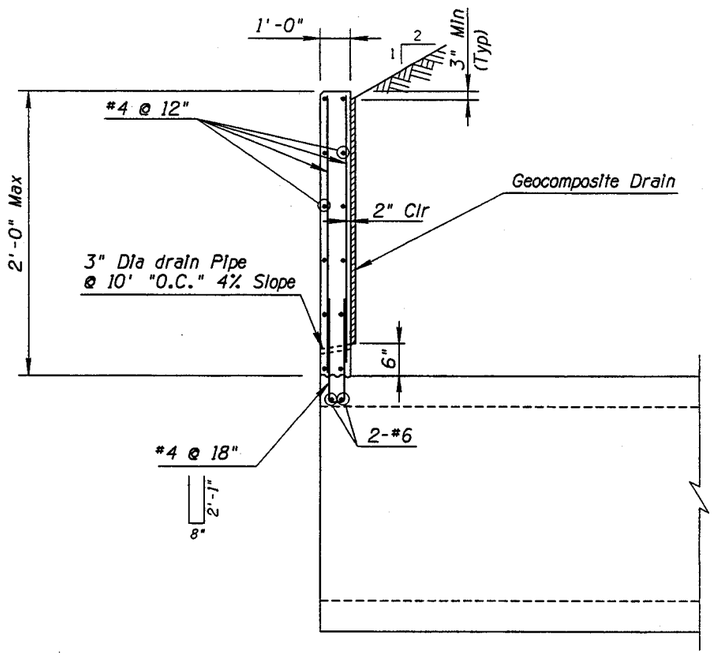

BOX CULVERT RETAINING WALL DETAIL FOR L2

NTS

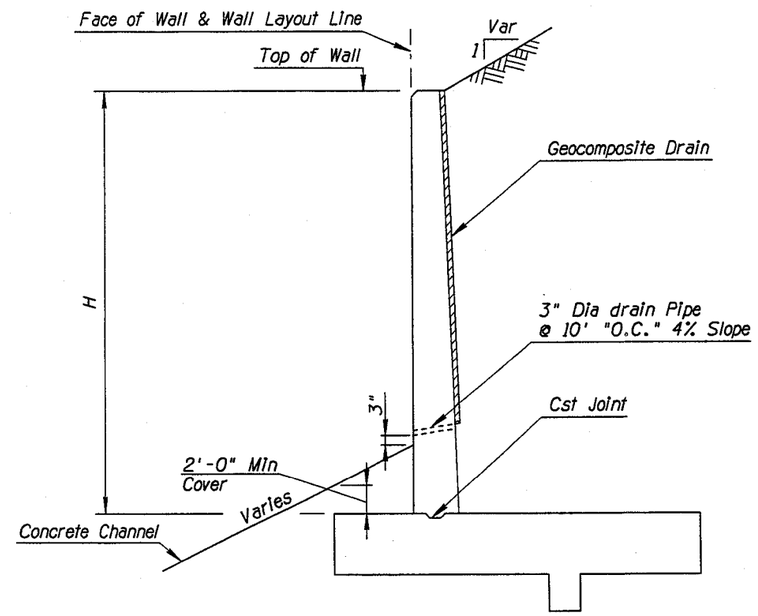

L1* & L3* RETAINING WALLS

NTS

DETAIL D25

CBC CONNECTION TO EAST CHANNEL

	NAME	DATE	ARIZONA DEPARTMENT OF TRANSPORTATION INTERMODAL TRANSPORTATION DIVISION	PRELIMINARY 95% REVIEW NOT FOR CONSTRUCTION OR RECORDING
DESIGN	RPC	04-05		
DRAWN	CPG	04-05		
CHECKED	BGS	04-05		
PARSONS BRINCKERHOFF			CBC CONNECTION TO EAST CHANNEL	
ROUTE 202L	LOCATION RED MTN FWY, UNIVERSITY DR - SOUTHERN AVE			DWG NO. D-4.25
TRACS NO. H 5783 01C			202-B(002)B	___ OF ___

SURVEY NO. | FINISHED PLANS- | REVISIONS- | LOCATION- | DATE-

Tue Mar 29 11:33:42 2005 H:\RedMtn-Univ-Southern\Drng\drdet25.dgn

F.H.W.A. REGION	STATE	PROJECT NO.	SHEET NO.	TOTAL SHEETS	AS BUILT
9	ARIZ.	202-B(002)B			
		202L MA 027			

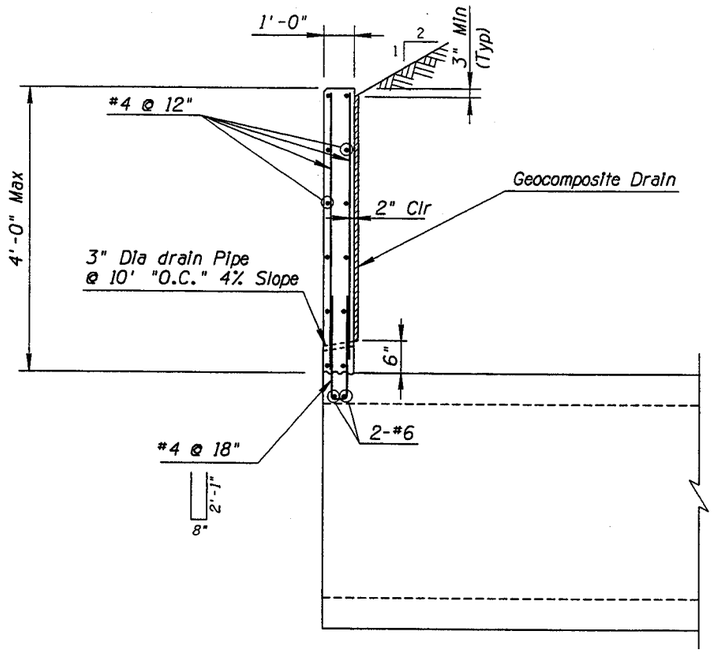

BOX CULVERT RETAINING WALL DETAIL FOR L2

NTS

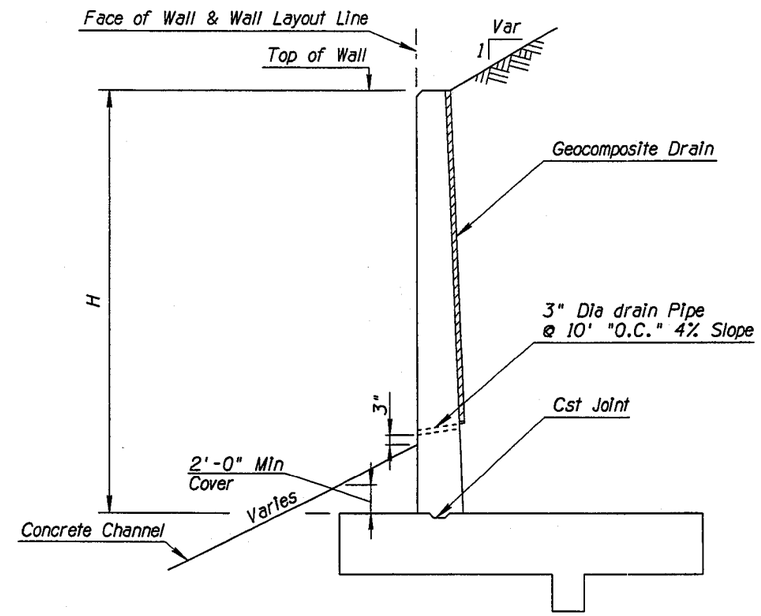

L1* & L3* RETAINING WALLS

NTS

DETAIL D26

CBC CONNECTION TO EAST CHANNEL

	NAME	DATE	ARIZONA DEPARTMENT OF TRANSPORTATION INTERMODAL TRANSPORTATION DIVISION	PRELIMINARY 95% REVIEW NOT FOR CONSTRUCTION OR RECORDING
DESIGN	RPC	04-05		
DRAWN	CPG	04-05		
CHECKED	BGS	04-05		
PB PARSONS BRINCKERHOFF			CBC CONNECTION TO EAST CHANNEL	
ROUTE 202L	LOCATION RED MTN FWY, UNIVERSITY DR - SOUTHERN AVE			DWG NO. D-4.26
TRACS NO. H 5783 01C			202-B(002)B	___ OF ___

Tue Mar 29 11:33:52 2005

H:\RedMtn-Univ-Southern\Drng\drdet26.dgn

SURVEY NO. | FINISHED PLANS- | REVISIONS- | LOCATION- | DATE-

F.H.W.A. REGION	STATE	PROJECT NO.	SHEET NO.	TOTAL SHEETS	AS BUILT
9	ARIZ.	202-B(002)B			

202L MA 027

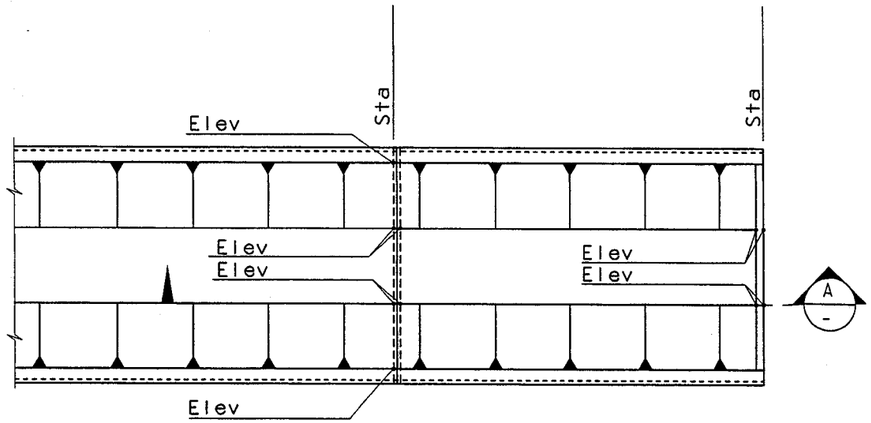

NORTH TERMINUS

Note:

Turndowns shall be constructed along total width of channel including side slopes.

Note:

Weepholes typical along Channel and Transitions

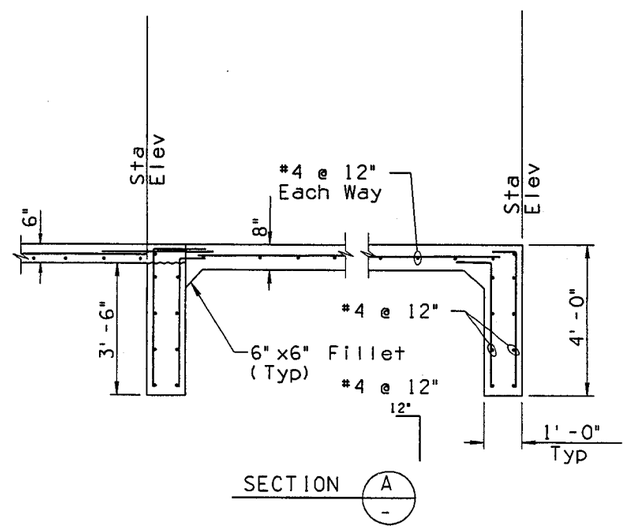

DETAIL D27

	NAME	DATE	ARIZONA DEPARTMENT OF TRANSPORTATION INTERMODAL TRANSPORTATION DIVISION	PRELIMINARY 95% REVIEW NOT FOR CONSTRUCTION OR RECORDING
DESIGN	RPC	04-05		
DRAWN	CPG	04-05		
CHECKED	BGS	04-05		
PB PARSONS BRINCKERHOFF			RIPRAP CHANNEL TRANSITION	
ROUTE 202L	LOCATION RED MTN FWY, UNIVERSITY DR - SOUTHERN AVE			DWG NO. D-4.27
TRACS NO. H 5783 01C			202-B(002)B	___ OF ___

Tue Mar 29 11:34:04 2005 H:\RedMtn-Univ-Southern\Drng\drdet29.dgn

F.H.W.A. REGION	STATE	PROJECT NO.	SHEET NO.	TOTAL SHEETS	AS BUILT
9	ARIZ.	202-B(002)B			
		202L MA 027			

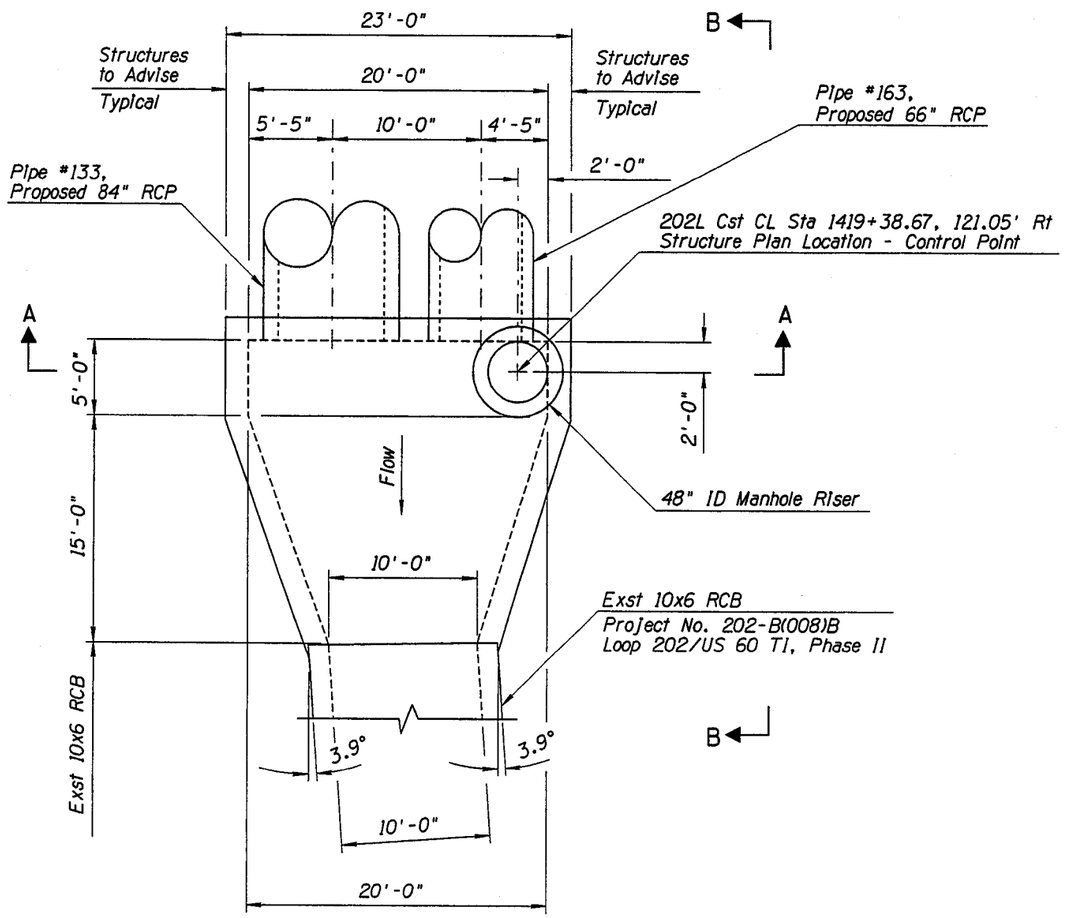

PLAN VIEW - JS134

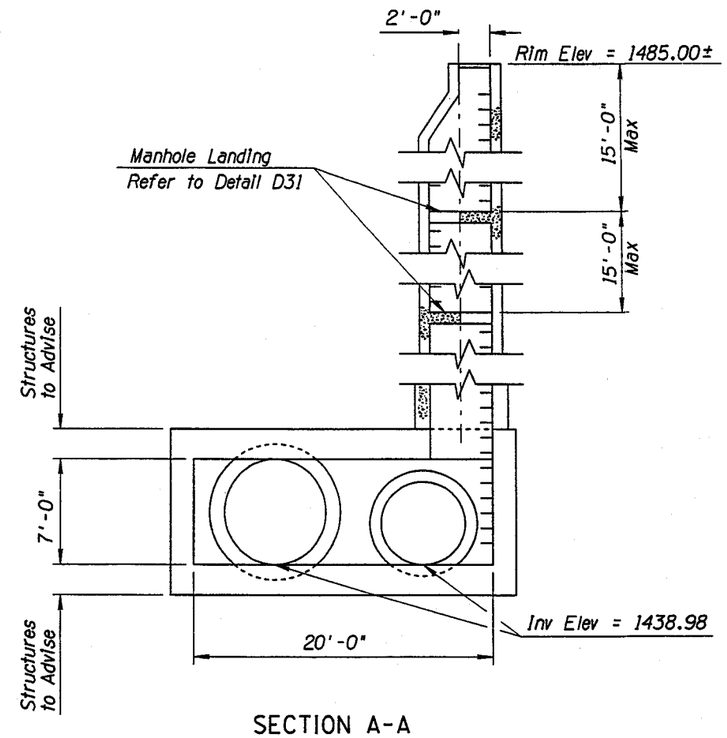

SECTION A-A

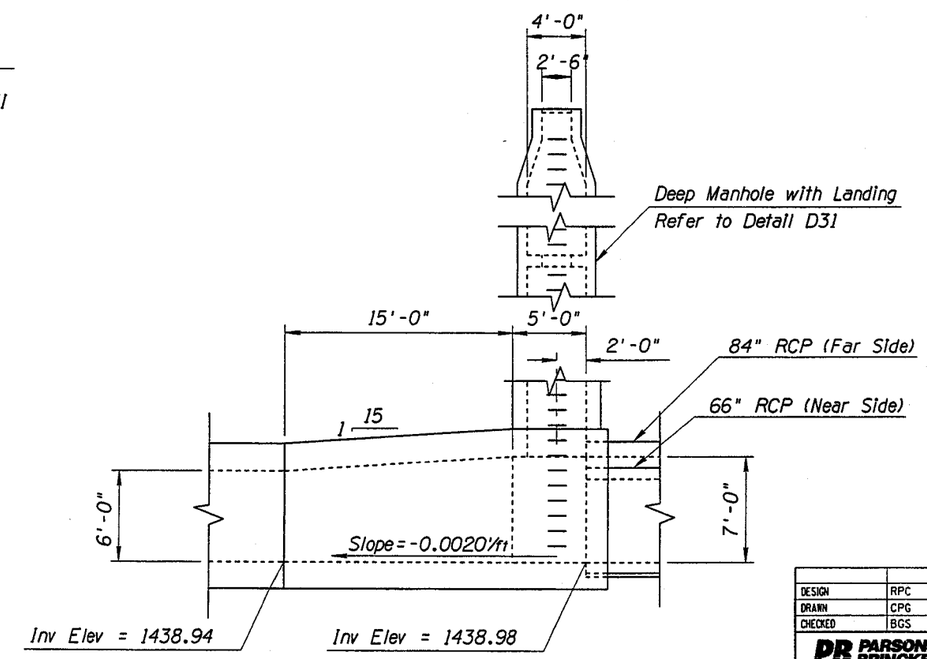

ELEVATION VIEW B-B

Note:
Refer to Detail D61 for reinforcing.

DETAIL D28

JUNCTION STRUCTURE JS134

	NAME	DATE
DESIGN	RPC	04-05
DRAWN	CPG	04-05
CHECKED	BGS	04-05

PB PARSONS BRINCKERHOFF

ARIZONA DEPARTMENT OF TRANSPORTATION
INTERMODAL TRANSPORTATION DIVISION

JUNCTION STRUCTURE JS134
DETAILS

PRELIMINARY
95%
REVIEW
NOT FOR CONSTRUCTION OR RECORDING

ROUTE 202L
LOCATION RED MTN FWY, UNIVERSITY DR - SOUTHERN AVE

DWG NO. D-4.28

TRACS NO. H 5783 01C | 202-B(002)B | ___ OF ___

SURVEY NO. | FINISHED PLANS- | REVISIONS- | LOCATION- | DATE-

Tue Mar 29 13:59:09 2005 H:\RedMtn-Univ-Southern\Drng\drdet30.dgn

F.H.W.A. REGION	STATE	PROJECT NO.	SHEET NO.	TOTAL SHEETS	AS BUILT
9	ARIZ.	202-B(002)B			

202L MA 027

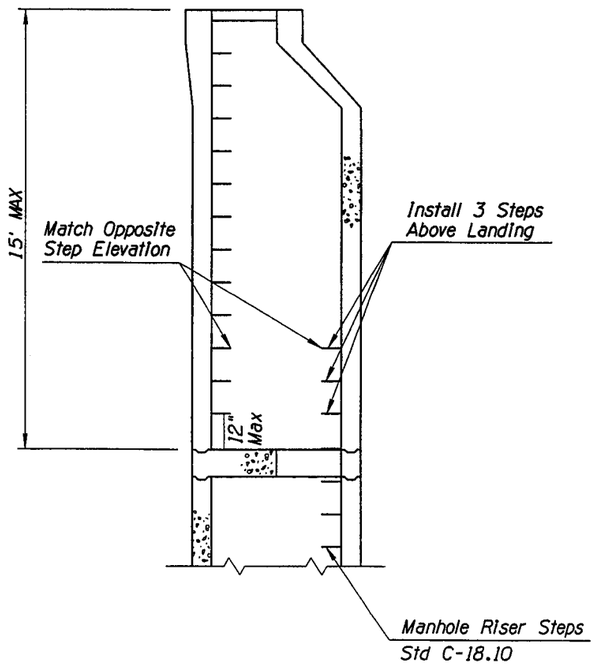

ELEVATION

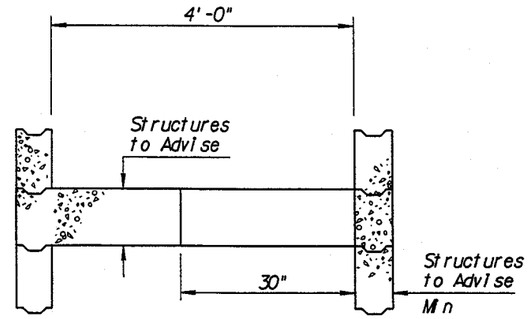

SECTION A-A

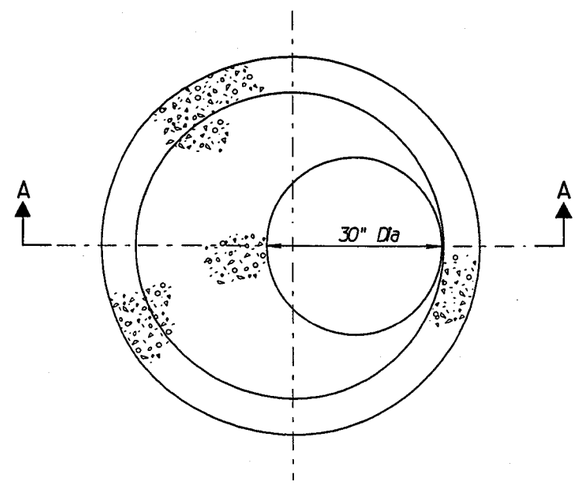

LANDING PLAN

DETAIL D29

MANHOLE LANDING
FOR DEEP MANHOLES

	NAME	DATE	ARIZONA DEPARTMENT OF TRANSPORTATION INTERMODAL TRANSPORTATION DIVISION	PRELIMINARY 95% REVIEW NOT FOR CONSTRUCTION OR RECORDING
DESIGN	RPC	04-05		
DRAWN	CPG	04-05		
CHECKED	BGS	04-05		
PARSONS BRINCKERHOFF			MANHOLE LANDING FOR DEEP MANHOLES	
ROUTE 202L	LOCATION RED MTN FWY, UNIVERSITY DR - SOUTHERN AVE			DWG NO. D-4.29
TRACS NO. H 5783 01C			202-B(002)B	___ OF ___

SURVEY NO. | FINISHED PLANS- | REVISIONS- | LOCATION- | DATE-

F.H.W.A. REGION	STATE	PROJECT NO.	SHEET NO.	TOTAL SHEETS	AS BUILT
9	ARIZ.	202-B(002)B			
		202L MA 027			

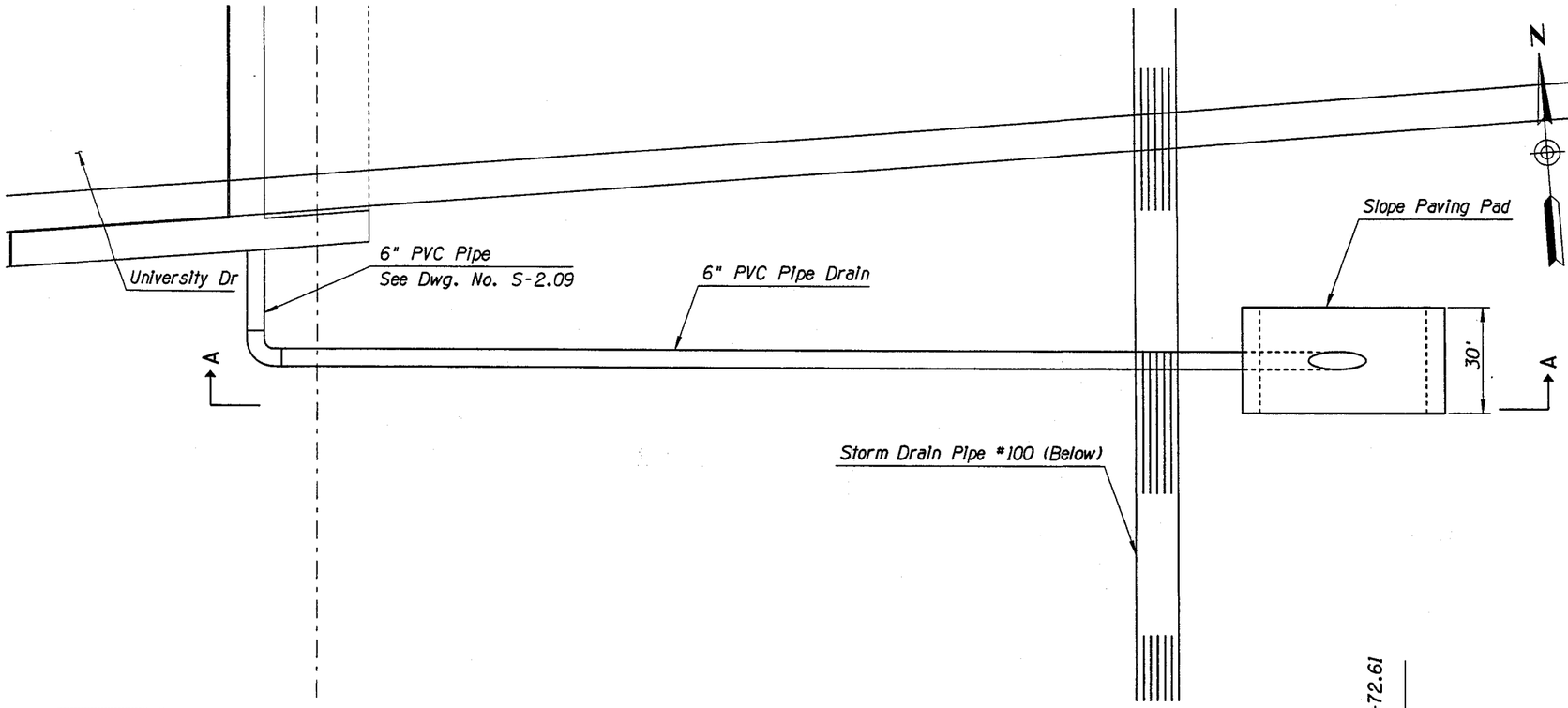

NOTES:

1. Pipe end shall be kept clear at all times.
2. Construction specification - ADOT standard specifications for road and bridge construction, edition of 2000.
3. All concrete shall be class S (f'_c=3000psi) (slope paving area = 1.7 sq yd)
4. Welded wire fabric shall be 6x6-W1.4xW1.4.
5. Cost of pipe, fittings, slope paving & installation is incidental to cost of bridge.
6. PVC joints shall be fastened using "RED HOT BLUE GLUE" PVC cement or equivalent.

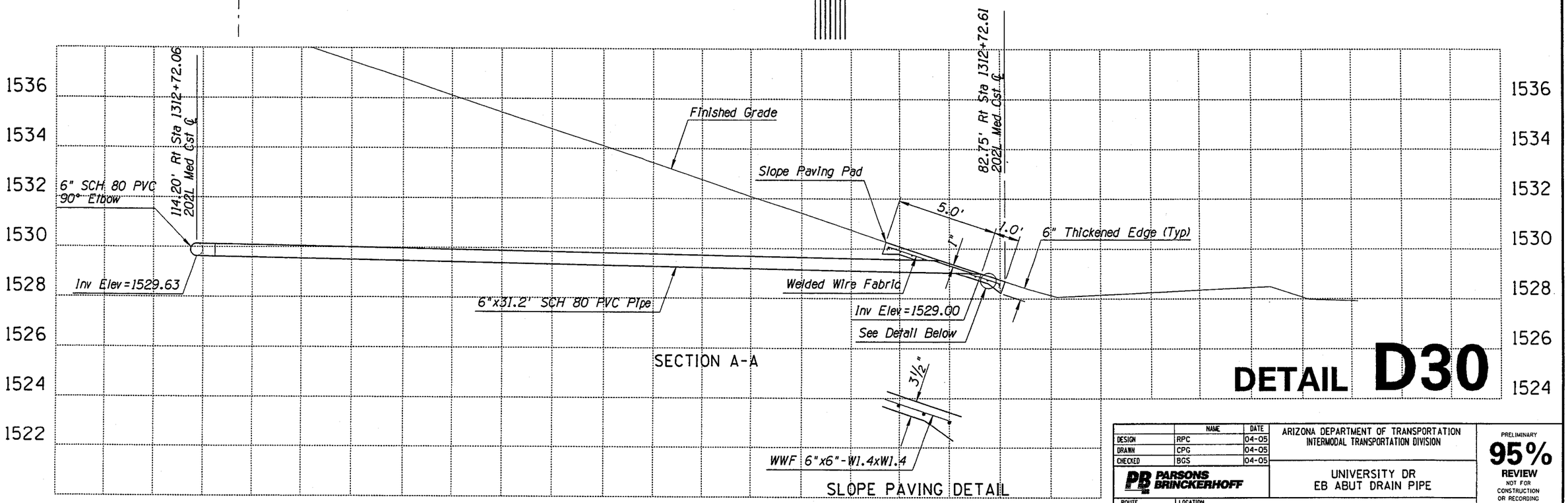

DETAIL D30

	NAME	DATE
DESIGN	RPC	04-05
DRAWN	CPG	04-05
CHECKED	BGS	04-05

PB PARSONS BRINCKERHOFF

ARIZONA DEPARTMENT OF TRANSPORTATION
INTERMODAL TRANSPORTATION DIVISION

UNIVERSITY DR
EB ABUT DRAIN PIPE

PRELIMINARY
95%
REVIEW
NOT FOR CONSTRUCTION OR RECORDING

ROUTE 202L
LOCATION RED MTN FWY, UNIVERSITY DR - SOUTHERN AVE

DWG NO. D-4.30

TRACS NO. H 5783 01C

202-B(002)B

___ OF ___

Tue Mar 29 13:59:31 2005

H:\RedMtn-Univ-Southern\Drng\drdet32.dgn

F.H.W.A. REGION	STATE	PROJECT NO.	SHEET NO.	TOTAL SHEETS	AS BUILT
9	ARIZ.	202-B(002)B			
		202L MA 027			

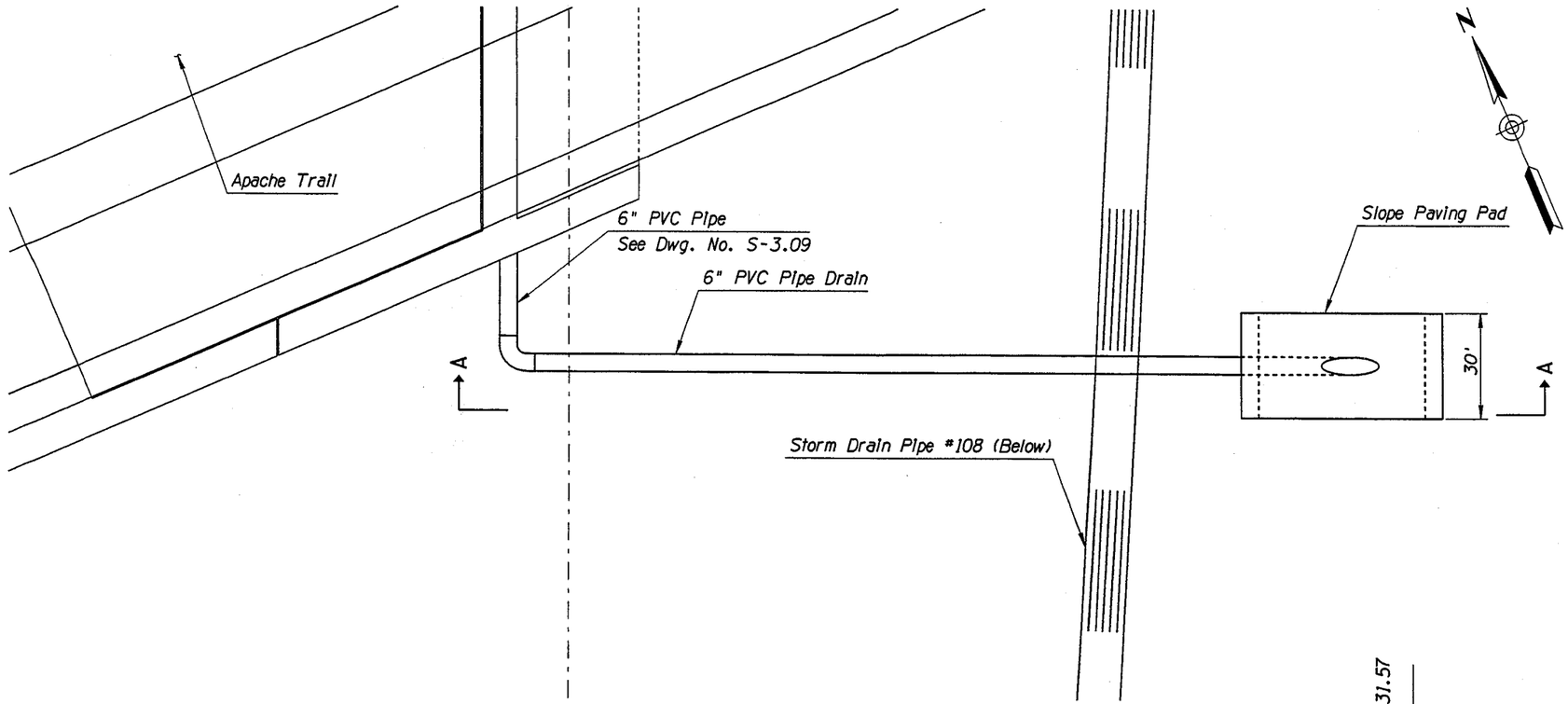

NOTES:

1. Pipe end shall be kept clear at all times.
2. Construction specification - ADOT standard specifications for road and bridge construction, edition of 2000.
3. All concrete shall be class S (f'_c=3000psi) (slope paving area = 1.7 sq yd)
4. Welded wire fabric shall be 6x6-W1.4xW1.4.
5. Cost of pipe, fittings, slope paving & installation is incidental to cost of bridge.
6. PVC joints shall be fastened using "RED HOT BLUE GLUE" PVC cement or equivalent.

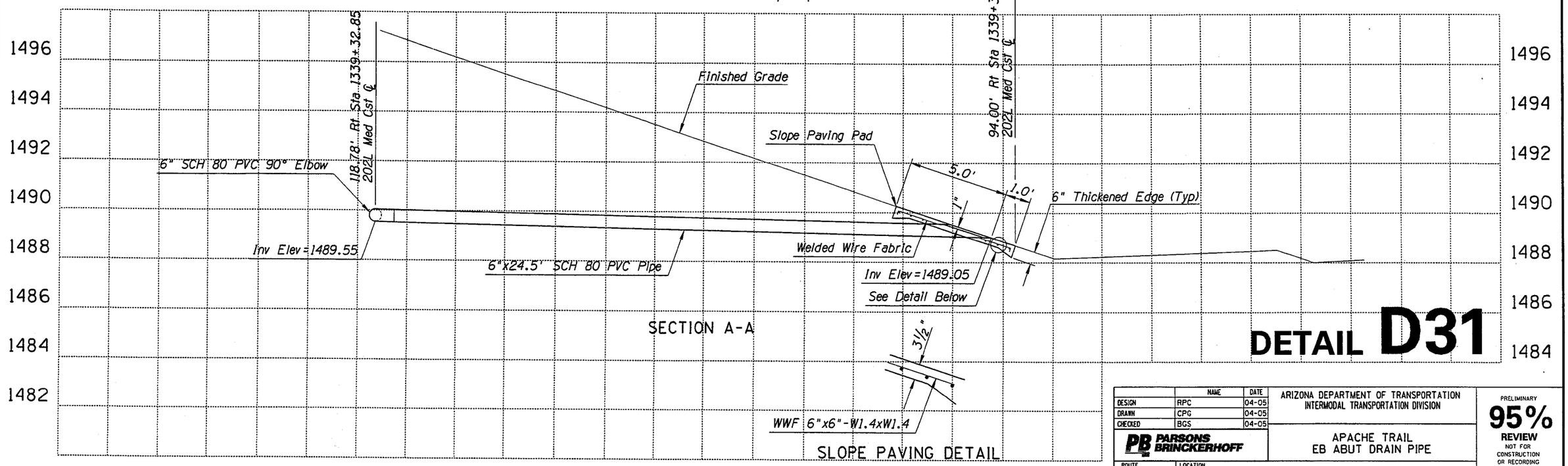

SECTION A-A

SLOPE PAVING DETAIL

DETAIL D31

	NAME	DATE
DESIGN	RPC	04-05
DRAWN	CPG	04-05
CHECKED	BGS	04-05

PB PARSONS BRINCKERHOFF

ARIZONA DEPARTMENT OF TRANSPORTATION
INTERMODAL TRANSPORTATION DIVISION

APACHE TRAIL
EB ABUT DRAIN PIPE

PRELIMINARY
95%
REVIEW
NOT FOR CONSTRUCTION OR RECORDING

ROUTE 202L
LOCATION RED MTN FWY, UNIVERSITY DR - SOUTHERN AVE

DWG NO. D-4.31

TRACS NO. H 5783 01C | 202-B(002)B | ___ OF ___

SURVEY NO. | FINISHED PLANS- | REVISIONS- | LOCATION- | DATE-

Tue Mar 29 13:59:43 2005 H:\RedMtn-Univ-Southern\Drng\drdet33.dgn

F.H.W.A. REGION	STATE	PROJECT NO.	SHEET NO.	TOTAL SHEETS	AS BUILT
9	ARIZ.	202-B(002)B			
		202L MA 027			

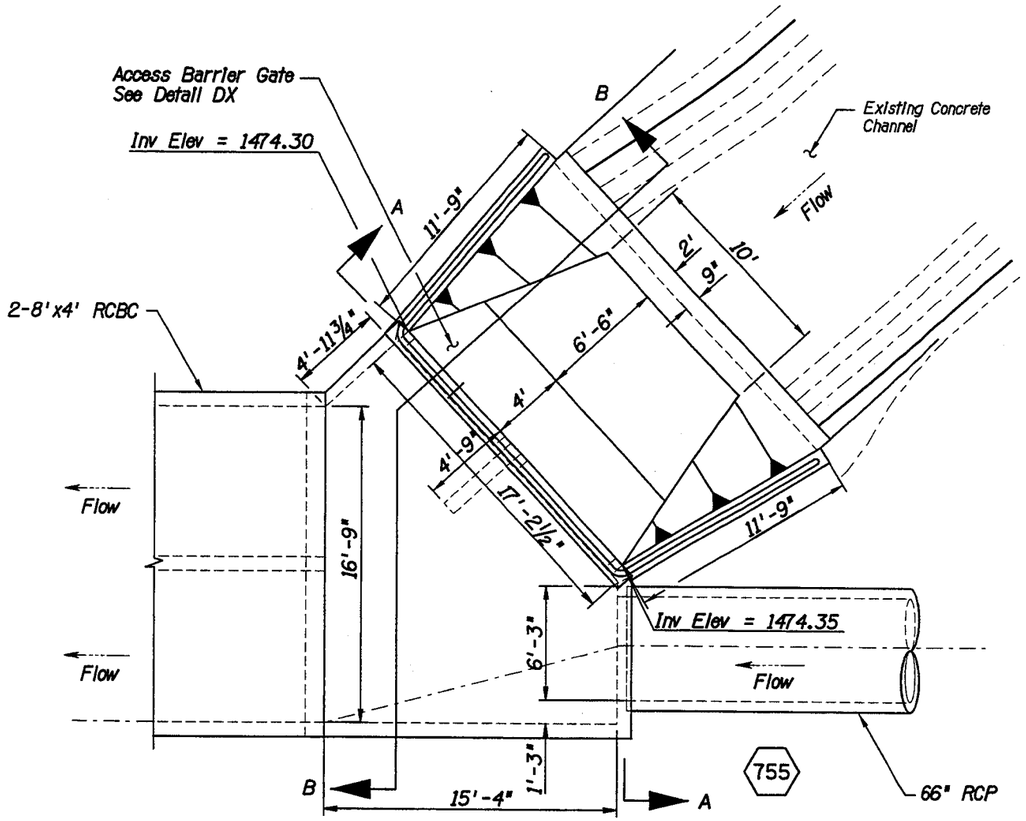

For Plan Location, See Sheet D-3.23

66" Pipe To CBC Junction Structure

JCT 756

NTS

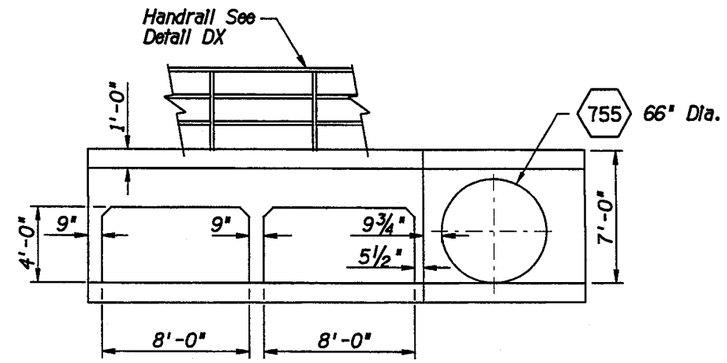

Section A

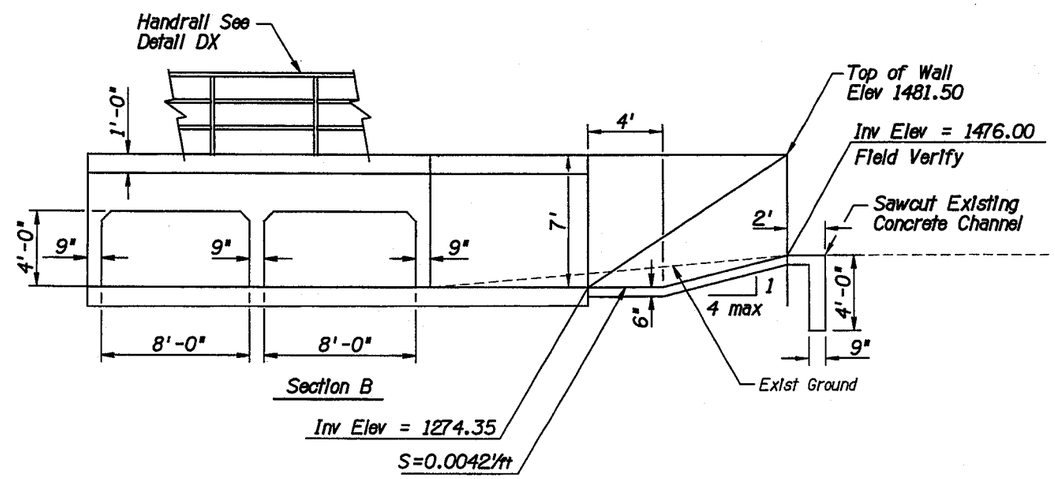

Section B

Inv Elev = 1274.35

S=0.0042'/ft

DETAIL D41

Note:

1. Concrete shall be Class S, f'c=3,000 psi
2. Reinforcing shall be per ASTM A615, Grade B Fy=60ksi
3. See structural detailing for all Reinforcing. (See Detail D65)

	NAME	DATE
DESIGN	JP/ML	04/05
DRAWN	MRT	04/05
CHECKED	JH	04/05

J2 engineering and environmental design
8222 south 48th street, suite 135
phoenix, arizona 85044
phone: 602.438.2221
www.j2design.us

ARIZONA DEPARTMENT OF TRANSPORTATION
INTERMODAL TRANSPORTATION DIVISION

66" PIPE TO CBC
JUNCTION STRUCTURE DETAILS

PRELIMINARY
95%
REVIEW
NOT FOR CONSTRUCTION OR RECORDING

ROUTE: 202L
LOCATION: RED MTN FWY, UNIVERSITY DR - SOUTHERN AVE
DWG NO. D-5.01

TRACS NO. H 5783 01C
202-B(002)B
___ OF ___

Plotted By: MRT P:\040024\J2Cad\Sheets\RMUS_j2dt41.dgn 3/29/2005 8:44:58 AM

F.H.W.A. REGION	STATE	PROJECT NO.	SHEET NO.	TOTAL SHEETS	AS BUILT
9	ARIZ.	202-B(002)B			
		202L MA 027			

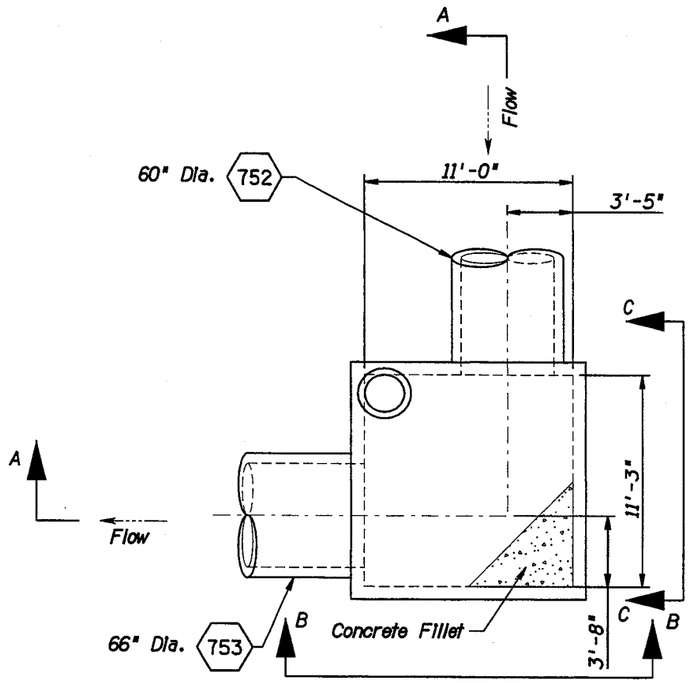

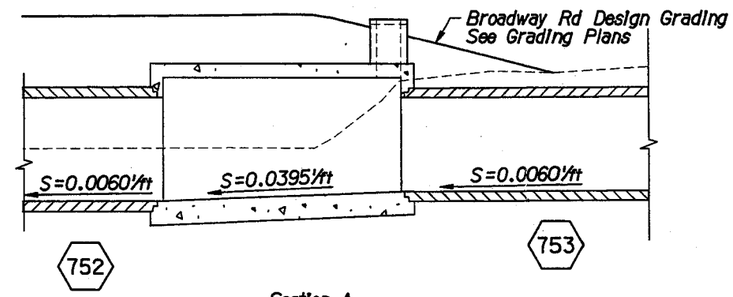

Section A

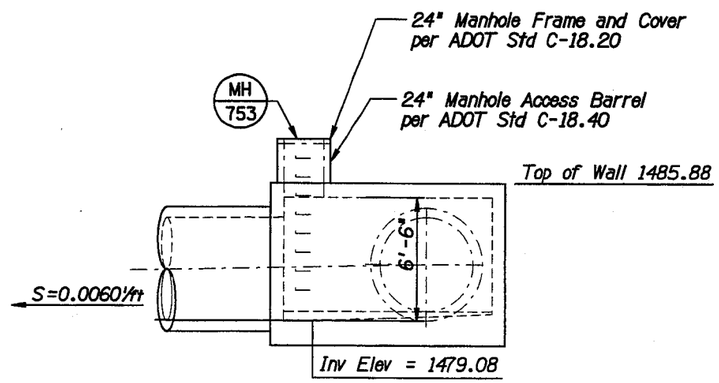

Section B

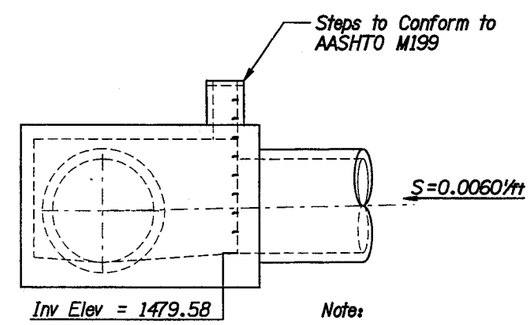

Section C

Note:

1. Concrete shall be Class S, f'c=3,000 psi
2. Reinforcing shall be per ASTM A615, Grade B Fy=60ksi
3. See structural detailing for all Reinforcing. (See Detail D66)

For Plan Location, See Sheet D-3.23

60" To 66" Junction

NTS

DETAIL D42

	NAME	DATE
DESIGN	JP/ML	04/05
DRAWN	MRT	04/05
CHECKED	JH	04/05

j2 engineering and environmental design
6222 south 48th street, suite 135
phoenix, arizona 85044
phone: 602.438.2221
www.j2design.us

ARIZONA DEPARTMENT OF TRANSPORTATION
INTERMODAL TRANSPORTATION DIVISION

DETAIL D42

PRELIMINARY
95%
REVIEW
NOT FOR CONSTRUCTION OR RECORDING

ROUTE 202L
LOCATION RED MTN FWY, UNIVERSITY DR - SOUTHERN AVE

DWG NO. D-5.02

TRACS NO. H 5783 01C

202-B(002)B

___ OF ___

Plotted By: MRT p:\040024\j2cad\sheets\rmus_j2dt16.dgn 3/29/2005 8:24:58 AM

F.H.W.A. REGION	STATE	PROJECT NO.	SHEET NO.	TOTAL SHEETS	AS BUILT
9	ARIZ.	202-B(002)B			
		202L MA 027			

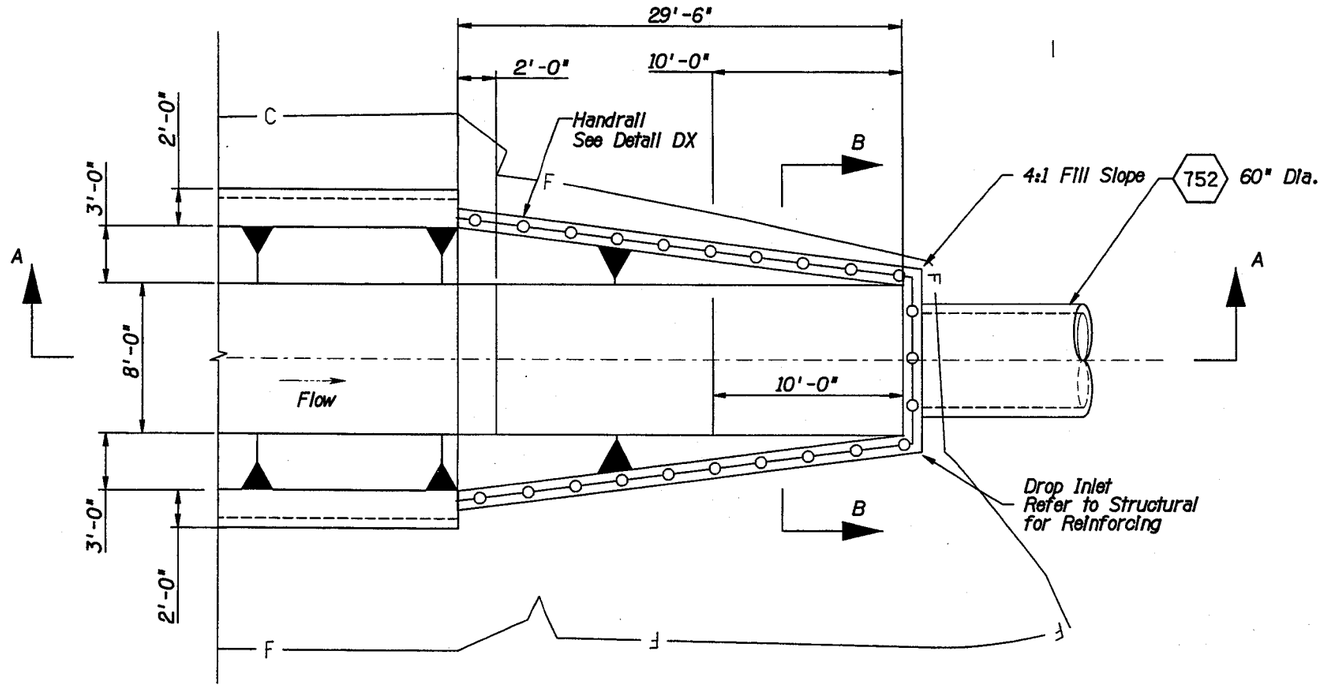

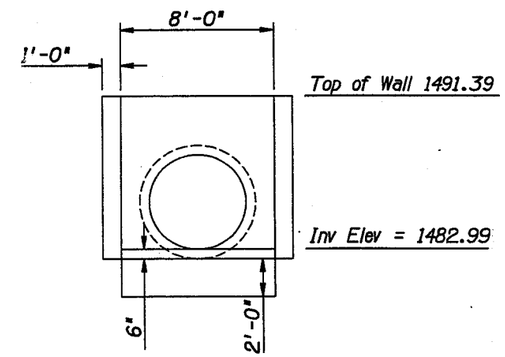

Section B

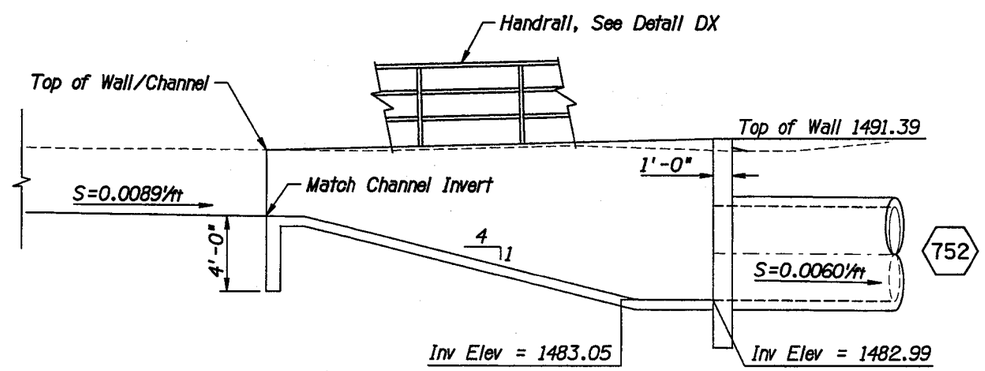

Section A

For Plan Location, See Sheet D-3.22

60" Drop Inlet Structure

NTS

Note:

1. Concrete shall be Class S, f'c=3,000 psi
2. Reinforcing shall be per ASTM A615, Grade B Fy=60ksi
3. See structural detailing for all Reinforcing. (See Detail D67)

DETAIL D43

	NAME	DATE
DESIGN	JP/ML	04/05
DRAWN	MRT	04/05
CHECKED	JH	04/05

J2 engineering and environmental design
8222 south 48th street, suite 135
phoenix, arizona 85044
phone: 602.438.2221
www.j2design.us

ARIZONA DEPARTMENT OF TRANSPORTATION
INTERMODAL TRANSPORTATION DIVISION

CULVERT DROP INLET
STRUCTURE DETAILS

PRELIMINARY
95%
REVIEW
NOT FOR CONSTRUCTION OR RECORDING

ROUTE: 202L
LOCATION: RED MTN FWY, UNIVERSITY DR - SOUTHERN AVE

DWG NO. D-5.03

TRACS NO. H 5783 01C | 202-B(002)B | ___ OF ___

Plotted By: MRT p:\040024\j2cad\sheets\rmus_j2dt15.dgn 3/29/2005 8:24:58 AM

DATE- LOCATION- REVISIONS- FINISHED PLANS- SURVEY NO.

F.H.W.A. REGION	STATE	PROJECT NO.	SHEET NO.	TOTAL SHEETS	AS BUILT
9	ARIZ.	202-B(002)B			

202L MA 027

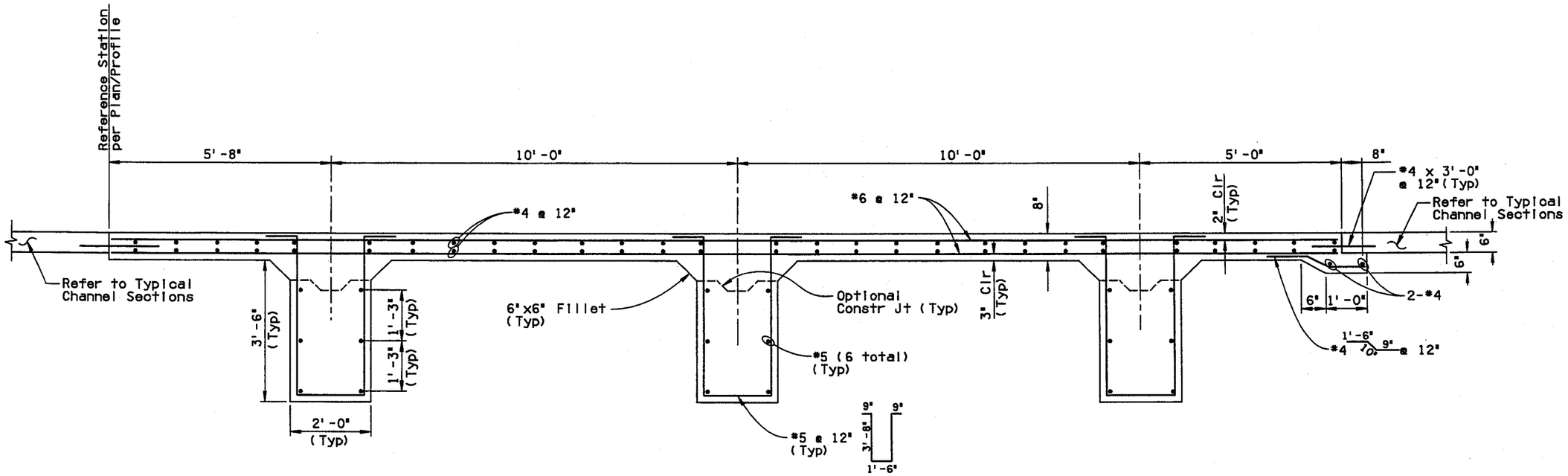

ANCHOR SLAB SECTION

NTS

Note:

Anchor slab shall be constructed along the bottom of the channel.

DETAIL D44

	NAME	DATE
DESIGN	JP/ML	04/05
DRAWN	MRT	04/05
CHECKED	JH	04/05

J2 engineering and environmental design
8222 south 48th street, suite 135
phoenix, arizona 85044
phone 602.438.2221
www.j2design.us

ARIZONA DEPARTMENT OF TRANSPORTATION
INTERMODAL TRANSPORTATION DIVISION

ANCHOR SLAB DETAIL

PRELIMINARY
95%
REVIEW
NOT FOR CONSTRUCTION OR RECORDING

ROUTE: 202L
LOCATION: RED MTN FWY, UNIVERSITY DR - SOUTHERN AVE

DWG NO. D-5.04

TRACS NO. H 5783 01C

202-B(002)B

___ OF ___

Plotted By: MRT p:\040024\j2cad\sheets\rmus_j2dt12.dgn 3/29/2005 8:24:56 AM

F.H.W.A. REGION	STATE	PROJECT NO.	SHEET NO.	TOTAL SHEETS	AS BUILT
9	ARIZ.	202-B(002)B			

202L MA 027

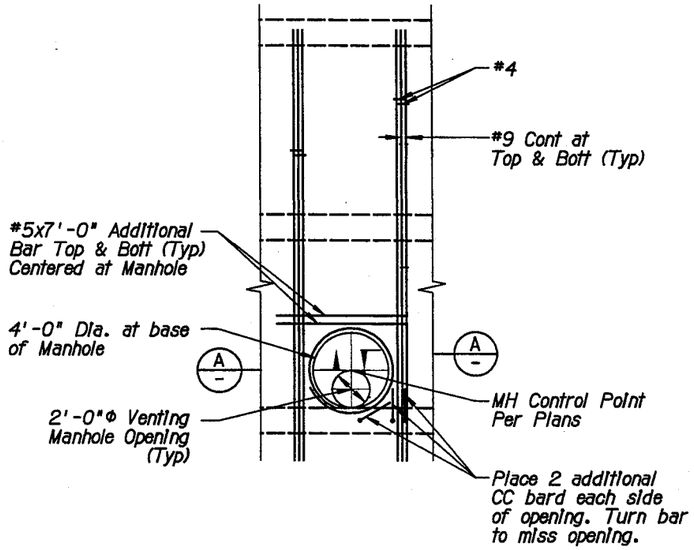

PARTIAL PLAN VIEW AT MANHOLE OPENING (1)

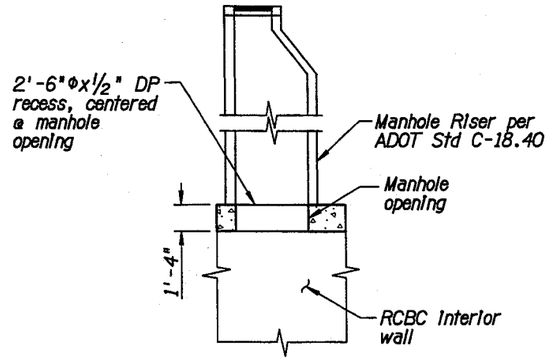

TYPICAL SECTION AT VENTING MANHOLE (2)

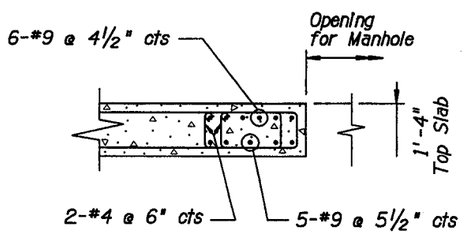

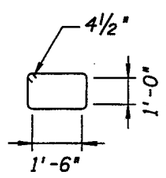

SECTION A-A
Not to Scale (2)

Notes for Manhole:

1. *Manhole Riser per C-18.40 Paid under Bid Item #xxxxxxxx*
2. *Refer to Plan & Profile Dwg D-3.21 for manhole location & Rim elevations.*

DETAIL D45

	NAME	DATE
DESIGN	JP/ML	04/05
DRAWN	MRT	04/05
CHECKED	JH	04/05

J2 engineering and environmental design
6222 south 40th street, suite 135
phoenix, arizona 85044
phone 602.438.2222
www.j2designs.com

ARIZONA DEPARTMENT OF TRANSPORTATION
INTERMODAL TRANSPORTATION DIVISION

BOX CULVERT MANHOLE ACCESS DETAILS

PRELIMINARY
95%
REVIEW
NOT FOR CONSTRUCTION OR RECORDING

ROUTE: 202L
LOCATION: RED MTN FWY, UNIVERSITY DR - SOUTHERN AVE

DWG NO. D-5.05

TRACS NO. H 5783 01C

202-B(002)B

___ OF ___

SURVEY NO. | FINISHED PLANS- | REVISIONS- | LOCATION- | DATE-

Plotted By: MRT P:\040024\J2Cad\Sheets\RMUS_j2dt46.dgn 3/29/2005 8:45:57 AM