19990049
IN TE
SIGNAL BUTTE
FLOODWAY

DRAINAGE REPORT
FOR
GRAYFOX AT LAS SENDAS

WOOD/PATEL

DRAINAGE REPORT
FOR
GRAYFOX AT LAS SENDAS

Prepared For:

Sonoran Desert Holdings, L.L.C.
c/o Bob Proehl
3651 East Baseline Road, Suite 108
Gilbert, Arizona 85234
(602) 892-4492

Submitted To:

City of Mesa
55 North Center Street
P.O. Box 1466
Mesa, Arizona 85211-1466
(602) 644-2185

Prepared By:

Wood, Patel & Associates, Inc.
1550 East Missouri
Suite 203
Phoenix, Arizona 85014
(602) 234-1344

Registered Professional Engineer (Civil)
CERTIFICATE NO. 32853
MICHAEL T. YOUNG
Date Signed 6-28-99
ARIZONA, U.S.A.

January 14, 1999
Revised: June 28, 1999
WP #98778

TABLE OF CONTENTS

1.0 INTRODUCTION ..... Page 1
- 1.1 General Background ..... Page 1
- 1.2 Scope of Work ..... Page 2

2.0 DESCRIPTION OF STUDY AREA ..... Page 3
- 2.1 General ..... Page 3
- 2.2 Rainfall Seasons ..... Page 3
- 2.3 Runoff Characteristics ..... Page 3
- 2.4 Flood Insurance Rate Maps ..... Page 3

3.0 EXISTING CONDITIONS ..... Page 5
- 3.1 Hydrology ..... Page 5
- 3.2 Hydraulics ..... Page 6

4.0 PROPOSED DEVELOPMENT CONDITION ..... Page 7
- 4.1 Hydrology ..... Page 7
- 4.2 Hydraulics ..... Page 8
- 4.3 Jurisdictional Delineations ..... Page 10

5.0 PROPOSED RETENTION ..... Page 11

6.0 CONCLUSIONS AND RECOMMENDATIONS ..... Page 12

7.0 REFERENCES ..... Page 13

APPENDICES

Appendix A	-	HEC-1 Input Parameters, Existing Conditions
Appendix B	-	HEC-1 Computer Model, Existing Conditions
Appendix C	-	HEC-1 Input Parameters, Post-Development Conditions
Appendix D	-	HEC-1 Computer Model, Post-Development
Appendix E	-	Offsite Drainage System Calculations
Appendix F	-	Weighted C Factor Calculations
Appendix G	-	Rational Method Worksheet
Appendix H	-	Street Capacity Charts
Appendix I	-	Curb Opening, Catch Basin, and Storm Drain Calculations

LIST OF PLATES

Plate 1	Vicinity Map
Plate 2	Existing Conditions Onsite Drainage Map
Plate 3	Existing Conditions Offsite Watershed Drainage Map
Plate 4	Post-Development Conditions Onsite Drainage Map
Plate 5	Post-Development Conditions Offsite Drainage Map
Plate 6	Onsite Drainage Map

Registered Professional Engineer (Civil)
CERTIFICATE NO. 32853
MICHAEL T. YOUNG
Date Signed 10-28-99
ARIZONA, U.S.A.

1.0 INTRODUCTION

1.1 General Background

Sonoran Desert Holdings, L.L.C. is planning to develop Grayfox at Las Sendas (Parcels 45, 49, and 50) into a residential subdivision. Las Sendas is an approved Master Planned Community within the City of Mesa located south of McDowell Road and east of Power Road. More specifically, the site is located in the southwest quarter of Section 6, Township 2 North, Range 7 East, of the Gila and Salt River Meridian. Refer to Plate 1 for the vicinity and approximate boundary location.

Las Sendas is being developed into a multi-use development consisting of single family housing, multi-family housing, retail space, a school, golf course, and more. The development of individual parcels is to be done at various times. This report describes the onsite and offsite drainage directly related to the development of Grayfox.

The overall background is covered in the approved Drainage Report by Greiner Engineering, *Master Drainage Report for Falcon Ridge*. The method proposed in this report for handling onsite and offsite storm runoff is based on the referenced approved report and the current City of Mesa drainage design criteria.

It is important to note that due to upstream residential development after the date of the approved *Master Drainage Report for Falcon Ridge*, one offsite upstream drainage basin has been altered from the original drainage basin determined within the Master Drainage Report. This report clearly identifies and documents the changed drainage basin conditions as they are different from the Master Drainage Report.

1.2 Scope of Work

The purpose of this report is to document the drainage plan for Grayfox. In addition, it provides a hydraulic analysis to substantiate the design of drainage facilities within the development of this project. This report addresses overall hydrology and presents a drainage plan consisting of streets, catch basins/curb openings, storm drainage conveyance facilities, and retention basins. Also, this report addresses Grayfox considering that North Ridgecrest is existing from McDowell Road for approximately 1,700 feet to the south.

2.0 DESCRIPTION OF STUDY AREA

2.1 General

Currently, this site is vacant desert land, generally sloping to the southwest at approximately 2%. There are three washes that cross the site and discharge into the Spook Hill Flood Retardation Structure.

2.2 Rainfall Seasons

There are two separate rainfall seasons. The first occurs during the winter months from November to March when the area is subjected to occasional storms from the Pacific Ocean. While this is classified as a rainfall season, there can be periods of a month or more in this or any other season when practically no precipitation occurs. The second rainfall period occurs during July and August, when Arizona is subjected to widespread thunderstorm activity whose moisture supply originates both in the Gulf of Mexico and along Mexico's west coast. These thunderstorms are extremely variable in intensity and location.

2.3 Runoff Characteristics

Generally, runoff occurs only during and immediately following heavy precipitation because arid climate and drainage characteristics are not conducive to continuous flow.

2.4 Flood Insurance Rate Maps

The Maricopa County, Arizona and Incorporated Areas Flood Insurance Rate Map (FIRM) Panel Number 04013C2210D dated April 15, 1988, indicates the site falls within Zone "B".

Zone "B" is defined by FEMA as follows:

Areas between limits of the 100-year flood and 500-year flood; or certain areas subject to 100-year flooding with average depths less than one (1) foot or where the contributing drainage area is less than one square mile.

3.0 EXISTING CONDITIONS

3.1 Hydrology

The major offsite watersheds that impact the roadway have been calculated using the *U.S. Army Corps of Engineers HEC-1 Flood Hydrograph Program (Ref. 9).* These natural washes impact from the east. These washes are intercepted by a temporary channel that runs south adjacent to the east side of North Ridgecrest Street. This channel is routed to an existing wash at the south termination of North Ridgecrest Street and discharges into the Spook Hill Flood Retardation Structure. This is the historical discharge location for these existing washes.

The offsite watersheds have been delineated from USGS maps and are shown on Plate 3. The concentration points of these watersheds are shown on Plate 2. The existing watershed characteristics and HEC-1 input parameters are provided in Appendix A. The existing HEC-1 model provided in Appendix B is based on the SCS Curve Number Method. This method was chosen because it was used in the previously approved Las Sendas Master Drainage Plan.

As can be seen on Plate 3, the existing offsite watershed, shown as Drainage Area #800, has changed due to a residential subdivision, Thunder Mountain (BK:285,PG:44), being developed on the northeast corner of McDowell Road and Hawes Road. Thunder Mountain has truncated the upstream drainage area that used to flow directly to the southeast corner of the project site, intercepting the discharge and routing it into onsite retention/detention basins before leaving the site through relatively small wall openings. The discharge then enters McDowell Road where it begins to flow both south and east. The discharge flowing east and north of McDowell Road will enter a 42" cmp which then drains under McDowell Road and enters Drainage Area #700. The remainder of the flow from Drainage Area #800 continues south out of the watershed.

3.2 Hydraulics

As can be seen within Appendix E - Offsite Drainage System Calculations, and Appendix B - HEC-1 Computer Model, Existing Conditions, the 42"cmp which diverts some of the upstream offsite discharge from Drainage Area #800 into #700 was modeled using a conservative full flow discharge pipe condition. It was determined that a Q100 of 100 cfs was conveyed under McDowell Road and included within the upstream offsite drainage area #700 Q100 discharge.

All washes from the east are intercepted by a temporary natural channel that runs south adjacent to the east side of North Ridgecrest Street. The existing channel was designed to intercept and convey the 100-year flow south to an existing wash which routes and discharges the flow into the Spook Hill Flood Retardation Structure

4.0 PROPOSED DEVELOPMENT CONDITIONS

4.1 Hydrology

In the proposed development condition, the residential streets of Grayfox discharge directly into existing North Ridgecrest Street and the proposed retention basin system. The *U.S. Army Corps of Engineers HEC-1 Flood Hydrograph Program (Ref. 9)* was used to calculate the complete drainage system of Grayfox with the impacts of the offsite watersheds and the efficiency of the retention basins and storm drainage conveyance facilities that capture the onsite stormwater and route the offsite stormwater through the proposed development. The Rational Method was used to calculate the street capacities of Grayfox and North Ridgecrest Street. Drainage sub-basins have been delineated based on the lotting layout and proposed grading and paving design.

The proposed development watershed characteristics and HEC-1 input parameters are provided in Appendix C. The proposed HEC-1 model provided in Appendix D is based on the SCS Curve Number Method. This method was chosen because it was used in the previously approved Las Sendas Master Drainage Plan. Refer to the Onsite Drainage Map, Plate 6, for location of the HEC-1 channels, storm drain facilities, and retention basins.

The Rational Method times of concentration were based on street flow, with a minimum time of concentration of five minutes. The 10-year intensities were based on City of Mesa standards, as were the coefficients of runoff (C-values). Since the Mesa Procedure Manual (Ref. 1) does not include the 100-year intensity duration relationship, the 100-year values were estimated based on the Maricopa County Drainage Design Manual (Ref. 5). Hydrologic data and flows are listed in Appendices E and F. Refer to Plate 4 for concentration point locations. These methods of quantifying the storm water runoff for street capacities is in accordance with the *City of Mesa Engineering and Design Standards* (Ref. 1).

4.2 Hydraulics

The drainage system of Grayfox is analyzed for a 100-year storm event. In the HEC-1 proposed development condition, 4 cfs from offsite watershed 440 impacts the eastern boundary and will be channelized and routed south to Concentration Point 15 (Plate 4). Offsite watershed 300 produces 36 cfs which will be routed to Concentration Point 15. Offsite watershed 400 produces 24 cfs, and at Concentration Point 15 these three watersheds are combined to produce 65 cfs. This flow will be intercepted by a proposed minor improved rock rip-rapped channel and conveyed to Retention Basin 1. Retention Basin 1 also receives 17 cfs from Offsite Watershed 510. Onsite Watershed 201 produces 29 cfs and discharges into Retention Basin 1 through a depressed curb opening. Watersheds 510 and 201 are combined at Concentration Point 25 (Plate 4) with the flows conveyed from Concentration Point 15 that result in a total discharge rate of 105 cfs into Retention Basin 1. Retention Basin 1 provides a storage volume of 1.86 acre-feet at 3.5 feet of ponding with a 1 foot weir structure that regulates the discharge flow rate to 25 cfs.

This discharge flow rate of 25 cfs will be conveyed to Retention Basin 2 through a proposed 24 inch concrete pipe. The storm water from Onsite Watershed 101 discharges into Retention Basin 2 at a rate of 69 cfs. Retention Basin 2 also receives flows of 7 cfs and 240 cfs from Offsite Watersheds 560 and 610, respectively. These three watersheds are combined with the discharge from Retention Basin 1 at Concentration Point 35 to produce a flow of 294 cfs into Retention Basin 2. Retention Basin 2 provides a storage volume of 3.54 acre-feet at 3.5 feet of ponding with a 50' weir outlet structure which regulates the discharge from Retention Basin 2 to 286 cfs.

The discharge flow rate of 286 cfs from the weir will be conveyed to Retention Basin 3 in 2 proposed 60 inch concrete cast in place pipes. Retention Basin 3 provides a storage volume of 1.77 acre-feet at 3.5 feet of ponding with a 50' weir outlet structure which regulate the discharge from Retention Basin 3 to 284 cfs

The 2 proposed 60 inch concrete pipes will convey the 284 cfs to Retention Basin 4. The storm water from Onsite Watershed 301 also discharges into Retention Basin 4 through depressed curb openings at a rate of 38 cfs. This discharge is combined with the discharge from Retention Basin 3 at Concentration Point 45 to produce a flow of 289 cfs into Retention Basin 4. Retention Basin 4 provides a storage volume of 1.48 acre-feet at 1.5 feet of ponding with two weir outlet structures which regulate the discharge from Retention Basin 4 to 281 cfs; 94 cfs from a 21' weir outlet, and 187 cfs from a 42' weir outlet. This is the historical discharge location of these watersheds which drain to the Spook Hill Flood Retardation Structure.

Offsite Watersheds 710 & 810 impacts the eastern boundary of the project site, combining at Concentration Point 715 for an upstream combined offsite Q100 discharge of 303 cfs. The discharge will be collected in a minor improved concrete lined interceptor channel proposed on the eastern boundary of the project site. This flow rate of 303 cfs will be conveyed from the southeastern corner of the property, to the western boundary in two proposed 54 inch concrete cast in place pipes and discharges into the Spook Hill Flood Retardation Structure. This is the historical discharge location of these watersheds.

The proposed development condition HEC-1 model is provided in Appendix D. The offsite watershed conveyance facility calculations are provided in Appendix E.

All proposed streets are designed to carry runoff from the 10-year storm at or below top of curb elevations and the 100-year storm at or below 6 inches above top of curb elevations. Curb openings and catch basins are located as needed to prevent the 10-year flow from overtopping the curb. All sump condition curb openings were designed based on the Maricopa County Hydraulic Manual (Ref. 5). All on grade curb openings and catch basin openings were designed based on the ADOT computer program for curb openings in flow-by condition (Ref. 3).

The catch basins in North Ridgecrest Street discharge into a storm drain system which outfalls into proposed Retention Basin 2. The storm drain system is designed to convey the 10-year runoff with the hydraulic grade line a minimum of 1 foot below the catch basin outlets per City of Mesa standards.

Refer to Appendices F, G, and H for a hydraulic summary of street flow calculations. Refer to Appendix I for curb openings, catch basin and storm drain calculations for the onsite storm water conveyance system.

4.3 Jurisdictional Delineations

The Corps of Engineers have approved jurisdictional delineations of four separate washes that cross the Grayfox subdivision. At a minimum, all four washes must have 18 inch culverts that discharge into them per the required 404 Nationwide Permit. At the southwest corner of the property, the two proposed 54 inch pipes will discharge into one of the 404 washes. In Retention Basin 4, there are two proposed 18 inch pipes that will discharge into two additional 404 washes. The final 404 wash must be fed as a part of Parcel 46 (not part of this project). See Plate 6 for the location of these discharge points.

5.0 PROPOSED RETENTION

The subject property was incorporated into the regional stormwater conveyance master plan for Las Sendas as addressed in the *Master Drainage Report for Falcon Ridge* (Ref.4). The retention basin system for Grayfox was designed in accordance with this approved *Master Drainage Report for Falcon Ridge* (Ref. 4). The following is a summary of the required and proposed retention based on the three major onsite drainage sub-basins, maintaining an overall retention volume exceeding the required minimum retention volume for the proposed development:

Sub-basin	Area (ac.)	Req. Retention (ac-ft)	Prop. Retention (ac-ft)
101	31.8	4.80	5.31
201	10.6	1.60	1.86
301	14.7	2.20	1.48
TOTAL	--	8.60	8.65

6.0 CONCLUSIONS AND RECOMMENDATIONS

Based on the analysis of this Drainage Report, the following conclusions are drawn:

A. This Drainage Report is prepared in accordance with the recommendations and design parameters from the City of Mesa (Ref. 1).

B. The HEC-1 computer model was used to estimate peak discharges for the offsite flows which impact this site and the onsite flows. The HEC-1 model was also used to analyze the complete drainage system, including retention basins and stormwater conveyance facilities.

C. The Rational Method was used to estimate peak discharges for the onsite drainage flows. The peak discharges were used to analyze street capacity for 10-year and 100-year conditions. These flows were also used to size onsite hydraulic structures.

D. Onsite retention is required and provided for the 100-year, 2-hour storm.

E. The design of hydraulic structures has been based on generally accepted engineering practices and in accordance with City of Mesa requirements.

F. Three discharge locations along the western boundary of the property must feed the approved 404 wash jurisdictional delineations.

7.0 REFERENCES

1. *Procedure Manual, Engineering & Design Standards*, City of Mesa, dated 1990.

2. *National Flood Insurance Program*, Flood Insurance Rate Map 2210 of 4350, dated April 15, 1988.

3. *Pavement Drainage Analysis Program*, Arizona Department of Transportation, December, 1995.

4. *Master Drainage Report for Falcon Ridge*, Greiner Engineering Sciences, dated May 1987, District of Maricopa County, November, 1991.

5. *Drainage Design Manual for Maricopa County Volume I, Hydrology*, Flood Control District of Maricopa County, May 1991.

6. *Addendum to Master Drainage Report for Falcon Ridge*, GeoDimensions, Inc., February 1994.

7. *Addendum II to Master Drainage Report for Falcon Ridge*, GeoDimensions, Inc. January 1995.

8. *Addendum III to Master Drainage Report for Falcon Ridge*, GeoDimensions, Inc., January 1996.

9. *U.S. Army Corps of Engineers, HEC-1 Flood Hydrograph Package*, September 1990.

10. *Drainage Report for North Ridgecrest Street at Las Sendas*, Wood, Patel & Associates, Inc., December 1998.

APPENDICES

APPENDIX A

HEC-1 Input Parameters,

Existing Conditions

Drainage Basin Area Calculations for
Pre-Development Model (Existing Conditions)

Basin Number	Area [acres]	Area [sq mi]	Low Elev [ft]	Hi Elev [ft]	Watershed Length [ft]	Watershed Length [mi]	Centroid Length [ft]	Centroid Length [mi]	EGL slope
100	8.33	0.013	1608	1635	880	0.17	290	0.05	0.0307
200	10.44	0.016	1604	1626	1080	0.20	480	0.09	0.0204
300	22.77	0.036	1625	1718	3880	0.73	1940	0.37	0.0240
400	11.74	0.018	1620	1670	2200	0.42	900	0.17	0.0227
450	11.90	0.019	1601	1651	2120	0.40	1200	0.23	0.0236
500	21.11	0.033	1605	1650	3100	0.59	1450	0.27	0.0145
570	3.37	0.005	1590	1605	720	0.14	350	0.07	0.0208
600	188.25	0.294	1589	1800	10750	2.04	5500	1.04	0.0196
700	151.52	0.237	1587	1780	8700	1.65	5000	0.95	0.0222
800	651.97	1.018	1750	2500	14200	2.69	6800	1.29	0.0528

Lag Time Calculations for
Gray Fox at Las Sendas
Pre-Development Model (Existing Conditions)

Basin Number	High elevation	Low elevation	Watershed length		Centroid length		Kn	C	Lag time
	ft	ft	ft	mi	ft	mi			hr
100	1635	1608	880	0.17	290	0.05	0.038	0.912	0.06
200	1626	1604	1080	0.20	480	0.09	0.038	0.912	0.08
300	1718	1625	3880	0.73	1940	0.37	0.038	0.912	0.22
400	1670	1620	2200	0.42	900	0.17	0.038	0.912	0.13
450	1651	1601	2120	0.40	1200	0.23	0.038	0.912	0.15
500	1650	1605	3100	0.59	1450	0.27	0.038	0.912	0.20
570	1605	1590	720	0.14	350	0.07	0.038	0.912	0.06
600	1800	1589	10750	2.04	5500	1.04	0.038	0.912	0.50
700	1780	1587	8700	1.65	5000	0.95	0.038	0.912	0.44
800	2500	1750	14200	2.69	6800	1.29	0.038	0.912	0.50

Estimation of lag times using Maricopa County Drainage Manual:

(1) Velocity estimated from natural ground slopes

(2) T_c equal to drainage path length divided by velocity

(3) Lag time equal to T_c pluc 10 minutes multiplied by 0.6

APPENDIX B

HEC-1 Computer Model,

Existing Conditions

```
1****************************************
*                                      *
*   FLOOD HYDROGRAPH PACKAGE  (HEC-1)  *
*             MAY   1991               *
*           VERSION 4.0.1E             *
*     Lahey F77L-EM/32 version 5.01    *
*       Dodson & Associates, Inc.      *
*  RUN DATE  06/15/99  TIME  07:40:23  *
****************************************
```

```
****************************************
*                                      *
*    U.S. ARMY CORPS OF ENGINEERS      *
*    HYDROLOGIC ENGINEERING CENTER     *
*          609 SECOND STREET           *
*       DAVIS, CALIFORNIA 95616        *
*          (916) 551-1748              *
*                                      *
****************************************
```

```
X     X  XXXXXXX   XXXXX          X
X     X  X        X    X         XX
X     X  X        X              X
XXXXXXX  XXXX     X       XXXXX  X
X     X  X        X              X
X     X  X        X    X         X
X     X  XXXXXXX   XXXXX         XXX
```

THIS PROGRAM REPLACES ALL PREVIOUS VERSIONS OF HEC-1 KNOWN AS HEC1 (JAN 73), HEC1GS, HEC1DB, AND HEC1KW.

THE DEFINITIONS OF VARIABLES -RTIMP- AND -RTIOR- HAVE CHANGED FROM THOSE USED WITH THE 1973-STYLE INPUT STRUCTURE.
THE DEFINITION OF -AMSKK- ON RM-CARD WAS CHANGED WITH REVISIONS DATED 28 SEP 81. THIS IS THE FORTRAN77 VERSION
NEW OPTIONS: DAMBREAK OUTFLOW SUBMERGENCE , SINGLE EVENT DAMAGE CALCULATION, DSS:WRITE STAGE FREQUENCY,
DSS:READ TIME SERIES AT DESIRED CALCULATION INTERVAL LOSS RATE:GREEN AND AMPT INFILTRATION
KINEMATIC WAVE: NEW FINITE DIFFERENCE ALGORITHM

```
1                                          HEC-1 INPUT                                                    PAGE  1

      LINE          ID.......1.......2.......3.......4.......5.......6.......7.......8.......9......10

        1           ID     LAS SENDAS DRAINAGE STUDY
        2           ID        FOR PARCELS SOUTH OF McDOWELL ROAD
        3           ID
        4           ID     EXISTING CONDITIONS MODEL
        5           ID        100-YEAR, 24-HOUR FREQUENCY
        6           ID        SCS TYPE II RAINFALL DISTRIBUTION
        7           ID
        8           ID        FILENAME: N:\980510\hydro\hec-1\EXFOX_4.dat
        9           ID
                    *DIAGRAM
       10           IT       2                    900
       11           IO       5
       12           IN      15

       13           KK     100
       14           PB    3.65
       15           PC    .000    .002    .005    .008    .011    .014    .017    .020    .023    .026
       16           PC    .029    .032    .035    .038    .041    .044    .048    .052    .056    .060
       17           PC    .064    .068    .072    .076    .080    .085    .090    .095    .100    .105
       18           PC    .110    .115    .120    .126    .133    .140    .147    .155    .163    .172
       19           PC    .181    .191    .203    .218    .236    .257    .283    .387    .663    .707
       20           PC    .735    .758    .776    .791    .804    .815    .825    .834    .842    .849
       21           PC    .856    .863    .869    .875    .881    .887    .893    .898    .903    .908
       22           PC    .913    .918    .922    .926    .930    .934    .938    .942    .946    .950
       23           PC    .953    .956    .959    .962    .965    .968    .971    .974    .977    .980
       24           PC    .983    .986    .989    .992    .995    .998   1.000
       25           KM        RUNOFF HYDROGRAPH FROM SUB-BASIN 100
       26           BA   0.013
       27           LS       0      77       0
       28           UD    0.06

       29           KK      R1
       30           KM        ROUTE FLOW FROM SUB-BASIN 100 TO C1
       31           KM        Temporary Channel along North Ridgecrest Street
       32           RS       1    FLOW      -1
       33           RC    0.05   0.035    0.05     700   0.015
       34           RX    1000    1010    1020    1024    1030    1034    1044    1054
       35           RY      12      12      11      10      10      11      12      12

       36           KK     200
       37           KM        RUNOFF HYDROGRAPH FROM SUB-BASIN 200
       38           BA   0.016
       39           LS       0      77       0
       40           UD    0.08

       41           KK      C1
       42           KM        COMBINE SUB-BASINS 100 AND 200
       43           HC       2

       44           KK     RC1
       45           KM        ROUTE FLOW FROM C1 TO C2
       46           KM        Temporary Channel along North Ridgecrest Street
       47           RS       1    FLOW      -1
       48           RC    0.05   0.035    0.05     330    0.01
       49           RX    1000    1010    1020    1028    1038    1046    1056    1066
1                                          HEC-1 INPUT                                                    PAGE  2

      LINE          ID.......1.......2.......3.......4.......5.......6.......7.......8.......9......10

       50           RY      13      13      12      10      10      12      13      13

       51           KK     450
       52           KM        RUNOFF HYDROGRAPH FROM SUB-BASIN     450
       53           BA   0.019
       54           LS       0      77       0
       55           UD    0.15

       56           KK     300
       57           KM        RUNOFF HYDROGRAPH FROM SUB-BASIN 300
       58           BA   0.036
       59           LS       0      77       0
       60           UD    0.22

       61           KK     R15
       62           KM        ROUTE FLOW FROM SUB-BASIN 300 TO C15
```

```
 63          RS       1    FLOW      -1
 64          RC     .05    .035     .05      50  0.0167
 65          RX    1000    1008    1021    1026    1038    1042    1047    1052
 66          RY      13      12      11      10      10      11      12      13

 67          KK     400
 68          KM        RUNOFF HYDROGRAPH FROM SUB-BASIN     400
 69          BA   0.018
 70          LS       0      77       0
 71          UD    0.13

 72          KK     C15
 73          KM        COMBINE HYDROGRAPHS FROM SUB-BASINS 300 AND 400
 74          HC       2

 75          KK     RC2
 76          KM        ROUTE FLOW FROM C15 TO C2
 77          RS       1    FLOW      -1
 78          RC     .05    .035     .05    1200  0.0167
 79          RX    1000    1008    1021    1026    1038    1042    1047    1052
 80          RY      13      12      11      10      10      11      12      13

 81          KK      C2
 82          KM        COMBINE HYDROGRAPHS FROM SUB-BASINS 300, 400, 450 AND C1
 83          HC       3

 84          KK     RC3
 85          KM        ROUTE FLOW FROM C2 TO C3
 86          KM        Temporary Channel along North Ridgecrest Street
 87          RS       1    FLOW      -1
 88          RC     .05    .035     .05     475    0.01
 89          RX    1000    1010    1020    1028    1040    1048    1058    1068
 90          RY      13      13      12      10      10      12      13      13
1                                          HEC-1 INPUT                                                          PAGE  3
LINE         ID.......1.......2.......3.......4.......5.......6.......7.......8.......9......10

 91          KK     500
 92          KM        RUNOFF HYDROGRAPH FROM SUB-BASIN 500
 93          BA   0.033
 94          LS       0      82       0
 95          UD     0.2

 96          KK      C3
 97          KM        COMBINE HYDROGRAPHS FROM SUB-BASIN 500 AND C2
 98          HC       2

 99          KK     RC4
100          KM        ROUTE FLOW FROM C3 TO C4
101          RS       1    FLOW      -1
102          RC     .05    .035     .05    1100   0.024
103          RX    1000    1020    1030    1049    1053    1056    1077    1100
104          RY      11      11      11      10      10      11      12      12

105          KK     570
106          KM        RUNOFF HYDROGRAPH FROM SUB-BASIN 570
107          BA   0.005
108          LS       0      77       0
109          UD    0.06

110          KK      C4
111          KM        COMBINE HYDROGRAPHS FROM SUB-BASIN 570 AND C3
112          HC       2

113          KK     600
114          KM        RUNOFF HYDROGRAPH FROM SUB-BASIN 600
115          BA   0.294
116          LS       0      82       0
117          UD     0.5

118          KK     800
119          KM        RUNOFF HYDROGRAPH FROM SUB-BASIN 800
120          BA   1.018
121          LS       0    82.5       0
122          UD     0.5

123          KK      D1
124          KM        DIVERT FLOW TO CONSIDER ONLY THE 42"CMP
125          DT    D830
126          DI       0     100     796
127          DQ       0       0     696

128          KK     R30
129          KM        ROUTE FLOW FROM 830 TO SUB-BASIN 700
130          RS       1    FLOW      -1
131          RC     .05    .035     .05    7400  0.0193
132          RX    1000    1020    1030    1049    1053    1056    1077    1100
133          RY      12      12      11      10      10      11      12      12
1                                          HEC-1 INPUT                                                          PAGE  4
LINE         ID.......1.......2.......3.......4.......5.......6.......7.......8.......9......10

134          KK     700
135          KM        RUNOFF HYDROGRAPH FROM SUB-BASIN     700
136          BA   0.237
137          LS       0      82       0
138          UD    0.44

139          KK      C5
140          KM        COMBINE HYDROGRAPHS FROM SUB-BASINS 700 & 830D
141          HC       2
142          ZZ
```

1

SCHEMATIC DIAGRAM OF STREAM NETWORK

```
 INPUT
 LINE      (V) ROUTING          (--->) DIVERSION OR PUMP FLOW

  NO.      (.) CONNECTOR        (<---) RETURN OF DIVERTED OR PUMPED FLOW

   13        100
              V
              V
   29         R1
              .
              .
   36         .         200
              .           .
              .           .
   41         C1............
              V
              V
   44        RC1
              .
              .
   51         .         450
              .           .
              .           .
   56         .           .         300
              .           .           V
              .           .           V
   61         .           .         R15
              .           .           .
              .           .           .
   67         .           .           .         400
              .           .           .           .
              .           .           .           .
   72         .           .         C15...........
              .           .           V
              .           .           V
   75         .           .         RC2
              .           .           .
              .           .           .
   81         C2......................
              V
              V
   84        RC3
              .
              .
   91         .         500
              .           .
              .           .
   96         C3............
              V
              V
   99        RC4
              .
              .
  105         .         570
              .           .
              .           .
  110         C4............
              .
              .
  113         .         600
              .           .
              .           .
  118         .           .         800
              .           .           .
              .           .           .
  125         .           .           .-------->    D830
  123         .           .          D1
              .           .           V
              .           .           V
  128         .           .         R30
              .           .           .
              .           .           .
  134         .           .           .         700
              .           .           .           .
              .           .           .           .
  139         .           .          C5............
```

(***) RUNOFF ALSO COMPUTED AT THIS LOCATION

```
1*****************************************
 *                                       *
 *   FLOOD HYDROGRAPH PACKAGE  (HEC-1)   *
 *             MAY   1991                *
 *           VERSION 4.0.1E              *
 *     Lahey F77L-EM/32 version 5.01     *
 *       Dodson & Associates, Inc.       *
 *  RUN DATE  06/15/99  TIME  07:40:23   *
 *****************************************
```

```
*****************************************
*                                       *
*    U.S. ARMY CORPS OF ENGINEERS       *
*    HYDROLOGIC ENGINEERING CENTER      *
*          609 SECOND STREET            *
*       DAVIS, CALIFORNIA 95616         *
*           (916) 551-1748              *
*                                       *
*****************************************
```

```
                    LAS SENDAS DRAINAGE STUDY
                       FOR PARCELS SOUTH OF McDOWELL ROAD

                    EXISTING CONDITIONS MODEL
                       100-YEAR, 24-HOUR FREQUENCY
                       SCS TYPE II RAINFALL DISTRIBUTION

                       FILENAME: N:\980510\hydro\hec-1\EXFOX_4.dat

 11 IO        OUTPUT CONTROL VARIABLES
                    IPRNT          5  PRINT CONTROL
                    IPLOT          0  PLOT CONTROL
                    QSCAL         0.  HYDROGRAPH PLOT SCALE

    IT        HYDROGRAPH TIME DATA
                     NMIN          2  MINUTES IN COMPUTATION INTERVAL
                    IDATE      1   0  STARTING DATE
                    ITIME       0000  STARTING TIME
                       NQ        900  NUMBER OF HYDROGRAPH ORDINATES
                   NDDATE      2   0  ENDING DATE
                   NDTIME       0558  ENDING TIME
                    ICENT         19  CENTURY MARK

                COMPUTATION INTERVAL    0.03 HOURS
                     TOTAL TIME BASE   29.97 HOURS

          ENGLISH UNITS
               DRAINAGE AREA          SQUARE MILES
               PRECIPITATION DEPTH    INCHES
               LENGTH, ELEVATION      FEET
               FLOW                   CUBIC FEET PER SECOND
               STORAGE VOLUME         ACRE-FEET
               SURFACE AREA           ACRES
               TEMPERATURE            DEGREES FAHRENHEIT
```

RUNOFF SUMMARY
FLOW IN CUBIC FEET PER SECOND
TIME IN HOURS, AREA IN SQUARE MILES

	OPERATION	STATION	PEAK FLOW	TIME OF PEAK	AVERAGE FLOW FOR MAXIMUM PERIOD 6-HOUR	24-HOUR	72-HOUR	BASIN AREA	MAXIMUM STAGE	TIME OF MAX STAGE
+	HYDROGRAPH AT	100	19.	12.00	2.	1.	0.	0.01		
+	ROUTED TO	R1	17.	12.03	2.	1.	0.	0.01		
+									10.64	12.03
+	HYDROGRAPH AT	200	22.	12.00	2.	1.	1.	0.02		
+	2 COMBINED AT	C1	39.	12.03	4.	1.	1.	0.03		
+	ROUTED TO	RC1	39.	12.03	4.	1.	1.	0.03		
+									10.87	12.03
+	HYDROGRAPH AT	450	22.	12.07	3.	1.	1.	0.02		
+	HYDROGRAPH AT	300	36.	12.13	5.	1.	1.	0.04		
+	ROUTED TO	R15	36.	12.13	5.	1.	1.	0.04		
+									10.65	12.13
+	HYDROGRAPH AT	400	22.	12.03	2.	1.	1.	0.02		
+	2 COMBINED AT	C15	55.	12.10	7.	2.	2.	0.05		
+	ROUTED TO	RC2	52.	12.13	7.	2.	2.	0.05		
+									10.80	12.13
+	3 COMBINED AT	C2	105.	12.07	14.	4.	3.	0.10		
+	ROUTED TO	RC3	103.	12.10	14.	4.	3.	0.10		
+									11.36	12.10
+	HYDROGRAPH AT	500	43.	12.10	6.	2.	1.	0.03		
+	2 COMBINED AT	C3	146.	12.10	19.	6.	5.	0.13		
+	ROUTED TO	RC4	136.	12.13	19.	6.	5.	0.13		
+									11.24	12.13
+	HYDROGRAPH AT	570	7.	12.00	1.	0.	0.	0.00		
+	2 COMBINED AT	C4	138.	12.13	20.	6.	5.	0.14		
+	HYDROGRAPH AT	600	225.	12.40	49.	15.	12.	0.29		
+	HYDROGRAPH AT	800	796.	12.40	173.	53.	43.	1.02		
+	DIVERSION TO	D830	696.	11.80	98.	25.	20.	1.02		
+	HYDROGRAPH AT	D1	100.	11.80	75.	29.	23.	1.02		
+	ROUTED TO	R30	100.	14.10	74.	29.	23.	1.02		
+									11.19	14.10
+	HYDROGRAPH AT	700	197.	12.33	39.	12.	10.	0.24		
+	2 COMBINED AT	C5	289.	12.33	113.	41.	33.	1.25		

*** NORMAL END OF HEC-1 ***

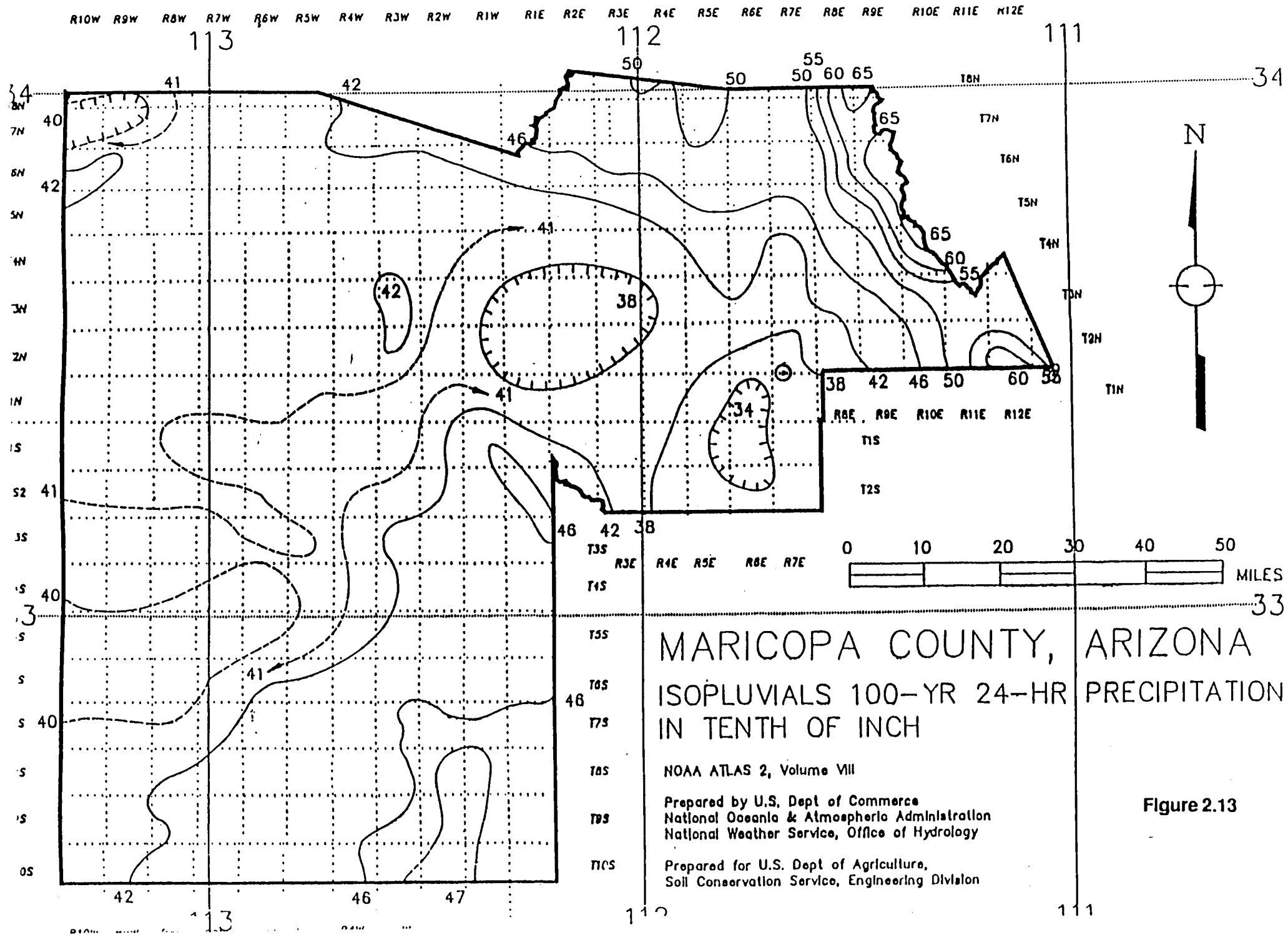
MARICOPA COUNTY, ARIZONA
ISOPLUVIALS 100-YR 24-HR PRECIPITATION
IN TENTH OF INCH
NOAA ATLAS 2, Volume VIII
Prepared by U.S. Dept of Commerce
National Oceanic & Atmospheric Administration
National Weather Service, Office of Hydrology
Prepared for U.S. Dept of Agriculture,
Soil Conservation Service, Engineering Division
N
0 10 20 30 40 50
MILES
R10W R9W R8W R7W R6W R5W R4W R3W R2W R1W R1E R2E R3E R4E R5E R6E R7E R8E R9E R10E R11E R12E
T8N T7N T6N T5N T4N T3N T2N T1N T1S T2S T3S T4S T5S T6S T7S T8S T9S T10S
113 112 111
34 33

Figure 2.13

APPENDIX C

HEC-1 Input Parameters,

Post-Development Conditions

Gray Fox at Las Sendas
Drainage Basin Area Calculations for
Post-Development Model

Basin Number	Area [acres]	Area [sq mi]	Low Elev [ft]	Hi Elev [ft]	Watershed Length [ft]	Watershed Length [mi]	Centroid Length [ft]	Centroid Length [mi]	EGL slope
OFFSITE AREAS									
300	22.77	0.036	1625	1718	3880	0.73	1940	0.37	0.0240
400	11.74	0.018	1620	1670	2200	0.42	900	0.17	0.0227
440	1.86	0.003	1636	1649	800	0.15	400	0.08	0.0163
510	8.54	0.013	1610	1650	2000	0.38	900	0.17	0.0200
560	2.36	0.004	1606	1620	310	0.06	155	0.03	0.0452
610	181.82	0.284	1600	1800	9000	1.70	4700	0.89	0.0222
710	143.80	0.225	1600	1780	7300	1.38	3800	0.72	0.0164
810	651.97	1.018	1750	2500	14200	2.69	6800	1.29	0.0528
SUBDIVISION AREAS									
101	31.8	0.050	1600	1638	2500	0.47	1250	0.24	0.0152
201	10.6	0.017	1615	1640	700	0.13	350	0.07	0.0357
301	14.7	0.023	1595	1610	950	0.18	475	0.09	0.0158

Lag Time Calculations for
Gray Fox at Las Sendas
Post-Development Model

Basin Number	High elevation	Low elevation	Watershed length		Centroid length		Kn	C	Lag time
OFFSITE AREAS									
	ft	ft	ft	mi	ft	mi			hr
300	1718	1625	3880	0.73	1940	0.37	0.038	0.912	0.22
400	1670	1620	2200	0.42	900	0.17	0.038	0.912	0.13
440	1649	1636	800	0.15	400	0.08	0.038	0.912	0.07
510	1650	1610	2000	0.38	900	0.17	0.038	0.912	0.13
560	1620	1606	310	0.06	155	0.03	0.038	0.912	0.03
610	1800	1600	9000	1.70	4700	0.89	0.038	0.912	0.43
710	1780	1600	7300	1.38	3800	0.72	0.038	0.912	0.39
810	2500	1750	14200	2.69	6800	1.29	0.038	0.912	0.50
SUBDIVISION AREAS									
101	1638	1600	2500	0.47	1250	0.24	0.038	0.912	0.17
201	1640	1615	700	0.13	350	0.07	0.038	0.912	0.06
301	1610	1595	950	0.18	475	0.09	0.038	0.912	0.08

Estimation of lag times using Maricopa County Drainage Manual:

(1) Velocity estimated from natural ground slopes

(2) T_c equal to drainage path length divided by velocity

(3) Lag time equal to T_c pluc 10 minutes multiplied by 0.6

Required Retention Calculations for
Gray Fox at Las Sendas

POSTDEVELOPMENT (SUBDIVISION) AREAS				
Drainage Basin	Area [acres]	Weighted C	P [in]	V [ac-ft]
101	31.8	0.67	2.7	4.79
201	10.6	0.67	2.7	1.60
301	14.7	0.67	2.7	2.22

From the Maricopa County Drainage Manual:

Volume calculations based on Equation 3.4, page3-7: V = C*(P/12)*A

Precipitation (P) Fig. 2.1 - 100-yr, 2-hr Isopluvial for T1N R7E and T2N R7E

APPENDIX D

HEC-1 Computer Model,

Post Development

```
1*************************************
*                                   *
*   FLOOD HYDROGRAPH PACKAGE  (HEC-1)  *
*            MAY   1991             *
*          VERSION 4.0.1E           *
*     Lahey F77L-EM/32 version 5.01 *
*       Dodson & Associates, Inc.   *
*  RUN DATE  06/24/99  TIME  08:34:41  *
*************************************
```

```
*************************************
*                                   *
*    U.S. ARMY CORPS OF ENGINEERS   *
*    HYDROLOGIC ENGINEERING CENTER  *
*          609 SECOND STREET        *
*       DAVIS, CALIFORNIA 95616     *
*           (916) 551-1748          *
*                                   *
*************************************
```

```
X     X  XXXXXXX   XXXXX          X
X     X  X        X     X        XX
X     X  X        X              X
XXXXXXX  XXXX     X       XXXXX  X
X     X  X        X              X
X     X  X        X     X        X
X     X  XXXXXXX   XXXXX         XXX
```

THIS PROGRAM REPLACES ALL PREVIOUS VERSIONS OF HEC-1 KNOWN AS HEC1 (JAN 73), HEC1GS, HEC1DB, AND HEC1KW.

THE DEFINITIONS OF VARIABLES -RTIMP- AND -RTIOR- HAVE CHANGED FROM THOSE USED WITH THE 1973-STYLE INPUT STRUCTURE.
THE DEFINITION OF -AMSKK- ON RM-CARD WAS CHANGED WITH REVISIONS DATED 28 SEP 81. THIS IS THE FORTRAN77 VERSION
NEW OPTIONS: DAMBREAK OUTFLOW SUBMERGENCE , SINGLE EVENT DAMAGE CALCULATION, DSS:WRITE STAGE FREQUENCY,
DSS:READ TIME SERIES AT DESIRED CALCULATION INTERVAL LOSS RATE:GREEN AND AMPT INFILTRATION
KINEMATIC WAVE: NEW FINITE DIFFERENCE ALGORITHM

```
1                                    HEC-1 INPUT                                    PAGE  1

  LINE          ID.......1.......2.......3.......4.......5.......6.......7.......8.......9......10

    1           ID        LAS SENDAS DRAINAGE STUDY
    2           ID        FOR PARCELS SOUTH OF McDOWELL ROAD
    3           ID
    4           ID        DEVELOPED CONDITIONS MODEL
    5           ID        100-YEAR, 24-HOUR STORM, TOTAL RAINFALL = 3.65 IN
    6           ID        SCS CURVE NUMBER METHOD FOR LOSSES
    7           ID        S-GRAPH UNIT HYDROGRAPH
    8           ID
    9           ID        FILENAME: N:\980606\DRAINAGE\HEC1\FOX100.DAT
   10           ID        MODIFIED FROM DVFOX100.DAT, JUNE 8, 1999
   11           ID
                *DIAGRAM
   12           IT       2                    1000
   13           IO       5
   14           IN      15

   15           KK     440
   16           PB    3.65
   17           PC    .000    .002    .005    .008    .011    .014    .017    .020    .023    .026
   18           PC    .029    .032    .035    .038    .041    .044    .048    .052    .056    .060
   19           PC    .064    .068    .072    .076    .080    .085    .090    .095    .100    .105
   20           PC    .110    .115    .120    .126    .133    .140    .147    .155    .163    .172
   21           PC    .181    .191    .203    .218    .236    .257    .283    .387    .663    .707
   22           PC    .735    .758    .776    .791    .804    .815    .825    .834    .842    .849
   23           PC    .856    .863    .869    .875    .881    .887    .893    .898    .903    .908
   24           PC    .913    .918    .922    .926    .930    .934    .938    .942    .946    .950
   25           PC    .953    .956    .959    .962    .965    .968    .971    .974    .977    .980
   26           PC    .983    .986    .989    .992    .995    .998   1.000
   27           KM        RUNOFF HYDROGRAPH FROM SUB-BASIN 440
   28           BA   0.003
   29           LS       0      77       0
   30           UD    0.07

   31           KK     R12
   32           KM        ROUTE FLOW FROM SUB-BASIN 440 TO C15
   33           KM        Trapezoidal Channel with 2' Bottom and 4:1 side slopes
   34           RS       2    FLOW      -1
   35           RC     .05    .035     .05    1320  0.0379
   36           RX    1000    1001    1002    1010    1012    1020    1021    1022
   37           RY      13      12      12      10      10      12      12      13

   38           KK     300
   39           KM        RUNOFF HYDROGRAPH FROM SUB-BASIN 300
   40           BA   0.036
   41           LS       0      77       0
   42           UD    0.22

   43           KK     R15
   44           KM        ROUTE FLOW FROM SUB-BASIN 300 TO C15
   45           KM        Natural Wash
   46           RS       1    FLOW      -1
   47           RC     .05    .035     .05      50  0.0167
   48           RX    1000    1008    1021    1026    1038    1042    1047    1052
   49           RY      14      13      12      10      10      12      13      14
1                                    HEC-1 INPUT                                    PAGE  2

  LINE          ID.......1.......2.......3.......4.......5.......6.......7.......8.......9......10

   50           KK     400
   51           KM        RUNOFF HYDROGRAPH FROM SUB-BASIN 400
   52           BA   0.018
   53           LS       0      79       0
   54           UD    0.13

   55           KK     C15
   56           KM        COMBINE HYDROGRAPHS FROM SUB-BASINS 300 400 AND 440
   57           HC       3

   58           KK     R25
   59           KM        ROUTE FLOW FROM C15 TO RET1
   60           KM        48" Concrete Pipe at 1.58%
   61           RK     190   0.014   0.013            CIRC       4
```

```
 62          KK     510
 63          KM        RUNOFF HYDROGRAPH FROM SUB-BASIN 510
 64          BA   0.013
 65          LS       0       79        0
 66          UD    0.13

 67          KK     201
 68          KM        RUNOFF HYDROGRAPH FROM SUB-BASIN 201
 69          BA  0.0166
 70          LS       0       82        0
 71          UD    0.06

 72          KK     C25
 73          KM        COMBINE HYDROGRAPHS FROM SUB-BASIN 510, R25, AND 201
 74          HC       3

 75          KK    RET1
 76          KM        RETENTION BASIN 1
 77          KM        Broad-Crested Weir with C=2.8, L=1 ft., Weir Crest Elev.=3.5 ft.
 78          KM        Low-flow 18" Concrete pipe
 79          KO       1
 80          RS       1    ELEV       0
 81          SA    0.41   0.444   0.477   0.544    0.61   0.705   0.742   0.780   0.818    0.96
 82          SE       0     0.5       1       2       3     3.5     4.0     4.5     5.0     5.5
 83          SQ       0       1     3.5      10   14.25      16    18.5      22    25.5      30

 84          KK     R26
 85          KM        ROUTE FLOW FROM RET1 TO RET2
 86          KM        24" Concrete Pipe at 1.39%
 87          RK     615  0.0203   0.012            CIRC       2

 88          KK     101
 89          KM        RUNOFF HYDROGRAPH FROM SUB-BASIN 101 (SUBDIVISION)
 90          BA   0.050
 91          LS       0       82        0
 92          UD    0.17
```



```
LINE         ID.......1.......2.......3.......4.......5.......6.......7.......8.......9......10

 93          KK     560
 94          KM        RUNOFF HYDROGRAPH FROM SUB-BASIN 560
 95          BA   0.004
 96          LS       0       79        0
 97          UD    0.03

 98          KK     610
 99          KM        RUNOFF HYDROGRAPH FROM SUB-BASIN 610
100          BA   0.284
101          LS       0       82        0
102          UD    0.43

103          KK     C35
104          KM        COMBINE HYDROGRAPHS FROM R26, 101, 560, and 610
105          HC       4

106          KK    RET2
107          KM        RETENTION BASIN 2
108          KM        Broad-Crested Weir with C=2.8, L=50 ft, Weir Crest Elev.=3.5 ft.
109          KM        Low-flow 24" Concrete pipe for maintaining flow to 404 washes
110          KO       1
111          RS       1    ELEV       0
112          SA    0.85   0.895   0.942    1.04    1.13    1.16    1.23    1.29    1.34    1.46
113          SE       0     0.5       1       2       3     3.5     4.0     4.5     5.0     5.5
114          SQ       0     1.2     4.2    13.2    21.7    26.2    78.7     172   291.4     433

115          KK     R34
116          KM        ROUTE FLOW FROM RET2 TO RET3
117          KM              2-60" Concrete Pipes at 0.57%
118          RK     364  0.0058   0.012            CIRC       5

119          KK    RET3
120          KM        RETENTION BASIN 3
121          KM        Broad-Crested Weir with C=2.8, L=50 ft, Weir Crest Elev.=3.5 ft.
122          KM        Low-flow 24" Concrete pipe
123          KO       1
124          RS       1    ELEV       0
125          SA    .401    .429    .458    .519    .582    .626    .661    .696    .732    .770
126          SE       0     0.5       1       2       3     3.5     4.0     4.5     5.0     5.5
127          SQ       0     1.2     4.2    13.2    21.7    26.2    78.7     172   291.4     433

128          KK     R35
129          KM        ROUTE FLOW FROM RETENTION BASIN 3 TO RETENTION BASIN 4
130          KM        2 - 54" Concrete Pipes at 0.78%
131          RK     377  0.0057   0.012            CIRC     4.5

132          KK     301
133          KM        RUNOFF HYDROGRAPH FROM SUB-BASIN 301
134          BA   0.023
135          LS       0       82        0
136          UD    0.08
```



```
LINE         ID.......1.......2.......3.......4.......5.......6.......7.......8.......9......10

137          KK     C45
138          KM        COMBINE HYDROGRAPHS FROM R36 & SUB-BASIN 301
139          HC       2

140          KK    RET4
141          KM        RETENTION BASIN 4
142          KM        Broad-Crested Weir with C=2.8, L=63 ft, Weir Crest Elev.=1.5 ft.
143          KM        Weir #1= 42 ft., Weir #2=21 ft.
144          KM        2-18" concrete pipes for low-flow outlet to 404 washes
145          KO       1
146          RS       1    ELEV       0
147          SA    0.85    1.03    1.12    1.21    1.31    1.40
148          SE       0       1     1.5       2     2.5       3
149          SQ       0       7      13    82.4     201   352.6
```

```
150          KK     810
151          KM        RUNOFF HYDROGRAPH FROM SUB-BASIN 810
152          BA   1.018
153          LS       0    82.5       0
154          UD     0.5

155          KK     830
156          KM        DIVERT FLOW TO CONSIDER ONLY THE 42"CMP LOCATED ON MCDOWELL ROAD
157          DT    830D
158          DI       0     100     796
159          DQ       0       0     696

160          KK     850
161          KM        ROUTE REMAINING FLOW FROM 830 TO SUB-BASIN 710
162          RS       1    FLOW      -1
163          RC     .05    .035     .05    7400  0.0193
164          RX    1000    1020    1030    1049    1053    1056    1077    1100
165          RY      12      12      11      10      10      11      12      12

166          KK     710
167          KM        RUNOFF HYDROGRAPH FROM SUB-BASIN 710
168          BA   0.237
169          LS       0      82       0
170          UD    0.39

171          KK     715
172          KM        COMBINE HYDROGRAPHS FROM SUB-BASINS 710 & 830
173          HC       2

174          KK     R36
175          KM        ROUTE FLOW AROUND PROJECT SITE
176          KM        2 - 54" Concrete Pipes at 0.5%
177          RK     518  0.0054   0.012            CIRC     4.5
178          ZZ
```

1

SCHEMATIC DIAGRAM OF STREAM NETWORK

```
INPUT
 LINE      (V) ROUTING          (--->) DIVERSION OR PUMP FLOW

  NO.      (.) CONNECTOR        (<---) RETURN OF DIVERTED OR PUMPED FLOW

   15        440
               V
               V
   31        R12
               .
               .
   38          .         300
               .           V
               .           V
   43          .         R15
               .           .
               .           .
   50          .           .         400
               .           .           .
               .           .           .
   55        C15.......................
               V
               V
   58        R25
               .
               .
   62          .         510
               .           .
               .           .
   67          .           .         201
               .           .           .
               .           .           .
   72        C25.......................
               V
               V
   75       RET1
               V
               V
   84        R26
               .
               .
   88          .         101
               .           .
               .           .
   93          .           .         560
               .           .           .
               .           .           .
   98          .           .           .         610
               .           .           .           .
               .           .           .           .
  103        C35.................................
               V
               V
  106       RET2
               V
               V
  115        R34
               V
               V
  119       RET3
               V
               V
  128        R35
               .
               .
  132          .         301
               .           .
               .           .
  137        C45............
               V
               V
  140       RET4
               .
               .
  150          .         810
               .           .
               .           .
  157          .           .------->    830D
  155          .         830
               .           V
               .           V
  160          .         850
               .           .
               .           .
  166          .           .         710
               .           .           .
               .           .           .
  171          .         715............
               .           V
               .           V
  174          .         R36
```

(***) RUNOFF ALSO COMPUTED AT THIS LOCATION

```
1*****************************************
*                                       *
*   FLOOD HYDROGRAPH PACKAGE  (HEC-1)   *
*              MAY   1991               *
*            VERSION 4.0.1E             *
*     Lahey F77L-EM/32 version 5.01     *
*       Dodson & Associates, Inc.       *
*  RUN DATE  06/24/99  TIME  08:34:41   *
*****************************************
```

```
*****************************************
*                                       *
*    U.S. ARMY CORPS OF ENGINEERS       *
*    HYDROLOGIC ENGINEERING CENTER      *
*          609 SECOND STREET            *
*       DAVIS, CALIFORNIA 95616         *
*           (916) 551-1748              *
*                                       *
*****************************************
```

LAS SENDAS DRAINAGE STUDY
FOR PARCELS SOUTH OF McDOWELL ROAD

DEVELOPED CONDITIONS MODEL
100-YEAR, 24-HOUR STORM, TOTAL RAINFALL = 3.65 IN
SCS CURVE NUMBER METHOD FOR LOSSES
S-GRAPH UNIT HYDROGRAPH

FILENAME: N:\980606\DRAINAGE\HEC1\FOX100.DAT
MODIFIED FROM DVFOX100.DAT, JUNE 8, 1999

```
 13 IO          OUTPUT CONTROL VARIABLES
                      IPRNT          5  PRINT CONTROL
                      IPLOT          0  PLOT CONTROL
                      QSCAL         0.  HYDROGRAPH PLOT SCALE

    IT          HYDROGRAPH TIME DATA
                       NMIN          2  MINUTES IN COMPUTATION INTERVAL
                      IDATE      1   0  STARTING DATE
                      ITIME       0000  STARTING TIME
                         NQ       1000  NUMBER OF HYDROGRAPH ORDINATES
                     NDDATE      2   0  ENDING DATE
                     NDTIME       0918  ENDING TIME
                      ICENT         19  CENTURY MARK

                 COMPUTATION INTERVAL    0.03 HOURS
                      TOTAL TIME BASE   33.30 HOURS

          ENGLISH UNITS
               DRAINAGE AREA          SQUARE MILES
               PRECIPITATION DEPTH    INCHES
               LENGTH, ELEVATION      FEET
               FLOW                   CUBIC FEET PER SECOND
               STORAGE VOLUME         ACRE-FEET
               SURFACE AREA           ACRES
               TEMPERATURE            DEGREES FAHRENHEIT

*** *** *** *** *** *** *** *** *** *** *** *** *** *** *** *** *** *** *** *** *** *** *** *** *** *** *** *** *** *** *** *** *** *** ***

            **************
            *            *
 75 KK      *     RET1   *
            *            *
            **************

 79 KO          OUTPUT CONTROL VARIABLES
                      IPRNT          1  PRINT CONTROL
                      IPLOT          0  PLOT CONTROL
                      QSCAL         0.  HYDROGRAPH PLOT SCALE

               HYDROGRAPH ROUTING DATA

 80 RS          STORAGE ROUTING
                      NSTPS          1  NUMBER OF SUBREACHES
                       ITYP       ELEV  TYPE OF INITIAL CONDITION
                     RSVRIC       0.00  INITIAL CONDITION
                          X       0.00 WORKING R AND D COEFFICIENT

 81 SA              AREA         0.4       0.4       0.5       0.5       0.6       0.7       0.7       0.8       0.8       1.0

 82 SE          ELEVATION        0.00      0.50      1.00      2.00      3.00      3.50      4.00      4.50      5.00      5.50

 83 SQ          DISCHARGE         0.        1.        4.       10.       14.       16.       19.       22.       26.       30.

                                                          ***

                                                 COMPUTED STORAGE-ELEVATION DATA

            STORAGE       0.00      0.21      0.44      0.95      1.53      1.86      2.22      2.60      3.00      3.44
          ELEVATION       0.00      0.50      1.00      2.00      3.00      3.50      4.00      4.50      5.00      5.50

  PEAK FLOW     TIME                          MAXIMUM AVERAGE FLOW
                                     6-HR       24-HR       72-HR     33.30-HR
+   (CFS)       (HR)
                          (CFS)
+     25.      12.47        12.         4.          3.          3.
                        (INCHES)     1.300       1.661       1.661       1.661
                         (AC-FT)       6.          8.          8.          8.

 PEAK STORAGE   TIME                          MAXIMUM AVERAGE STORAGE
                                     6-HR       24-HR       72-HR     33.30-HR
+  (AC-FT)      (HR)
       3.      12.43                  1.          0.          0.          0.

  PEAK STAGE    TIME                          MAXIMUM AVERAGE STAGE
                                     6-HR       24-HR       72-HR     33.30-HR
+   (FEET)      (HR)
     4.87      12.47                 2.58        0.94        0.68        0.68

                        CUMULATIVE AREA =    0.09 SQ MI
```

```
*** *** *** *** *** *** *** *** *** *** *** *** *** *** *** *** *** *** *** *** *** *** *** *** *** *** *** *** *** *** *** *** *** *** *** ***
            **************
            *            *
106 KK      *     RET2   *
            *            *
            **************

110 KO          OUTPUT CONTROL VARIABLES
                     IPRNT          1  PRINT CONTROL
                     IPLOT          0  PLOT CONTROL
                     QSCAL         0.  HYDROGRAPH PLOT SCALE

              HYDROGRAPH ROUTING DATA

111 RS          STORAGE ROUTING
                     NSTPS          1  NUMBER OF SUBREACHES
                      ITYP       ELEV  TYPE OF INITIAL CONDITION
                    RSVRIC       0.00  INITIAL CONDITION
                         X       0.00 WORKING R AND D COEFFICIENT

112 SA              AREA        0.9      0.9      0.9      1.0      1.1      1.2      1.2      1.3      1.3      1.5

113 SE          ELEVATION      0.00     0.50     1.00     2.00     3.00     3.50     4.00     4.50     5.00     5.50

114 SQ          DISCHARGE        0.       1.       4.      13.      22.      26.      79.     172.     291.     433.
                                                                  ***

                                                   COMPUTED STORAGE-ELEVATION DATA

            STORAGE      0.00     0.44     0.90     1.89     2.97     3.54     4.14     4.77     5.43     6.13
          ELEVATION      0.00     0.50     1.00     2.00     3.00     3.50     4.00     4.50     5.00     5.50


  PEAK FLOW     TIME                          MAXIMUM AVERAGE FLOW
                                     6-HR       24-HR       72-HR     33.30-HR
+   (CFS)       (HR)
                          (CFS)
+     286.     12.37        65.         21.         15.         15.
                       (INCHES)      1.424       1.847       1.847       1.847
                        (AC-FT)       32.         42.         42.         42.

 PEAK STORAGE   TIME                          MAXIMUM AVERAGE STORAGE
                                     6-HR       24-HR       72-HR     33.30-HR
+  (AC-FT)      (HR)
       5.      12.37         4.          2.          1.          1.

  PEAK STAGE    TIME                          MAXIMUM AVERAGE STAGE
                                     6-HR       24-HR       72-HR     33.30-HR
+   (FEET)      (HR)
     4.98      12.37      3.66        1.76        1.27        1.27

                       CUMULATIVE AREA =    0.42 SQ MI
*** *** *** *** *** *** *** *** *** *** *** *** *** *** *** *** *** *** *** *** *** *** *** *** *** *** *** *** *** *** *** *** *** *** *** ***
            **************
            *            *
119 KK      *     RET3   *
            *            *
            **************

123 KO          OUTPUT CONTROL VARIABLES
                     IPRNT          1  PRINT CONTROL
                     IPLOT          0  PLOT CONTROL
                     QSCAL         0.  HYDROGRAPH PLOT SCALE

              HYDROGRAPH ROUTING DATA

124 RS          STORAGE ROUTING
                     NSTPS          1  NUMBER OF SUBREACHES
                      ITYP       ELEV  TYPE OF INITIAL CONDITION
                    RSVRIC       0.00  INITIAL CONDITION
                         X       0.00 WORKING R AND D COEFFICIENT

125 SA              AREA        0.4      0.4      0.5      0.5      0.6      0.6      0.7      0.7      0.7      0.8

126 SE          ELEVATION      0.00     0.50     1.00     2.00     3.00     3.50     4.00     4.50     5.00     5.50

127 SQ          DISCHARGE        0.       1.       4.      13.      22.      26.      79.     172.     291.     433.
                                                                  ***

                                                   COMPUTED STORAGE-ELEVATION DATA

            STORAGE      0.00     0.21     0.43     0.92     1.47     1.77     2.09     2.43     2.79     3.16
          ELEVATION      0.00     0.50     1.00     2.00     3.00     3.50     4.00     4.50     5.00     5.50


  PEAK FLOW     TIME                          MAXIMUM AVERAGE FLOW
                                     6-HR       24-HR       72-HR     33.30-HR
+   (CFS)       (HR)
                          (CFS)
+     284.     12.40        63.         21.         15.         15.
                       (INCHES)      1.386       1.842       1.842       1.842
                        (AC-FT)       31.         42.         42.         42.

 PEAK STORAGE   TIME                          MAXIMUM AVERAGE STORAGE
                                     6-HR       24-HR       72-HR     33.30-HR
+  (AC-FT)      (HR)
       3.      12.40         2.          1.          1.          1.

  PEAK STAGE    TIME                          MAXIMUM AVERAGE STAGE
                                     6-HR       24-HR       72-HR     33.30-HR
+   (FEET)      (HR)
     4.97      12.40      3.70        1.82        1.31        1.31

                       CUMULATIVE AREA =    0.42 SQ MI
```

```
*** *** *** *** *** *** *** *** *** *** *** *** *** *** *** *** *** *** *** *** *** *** *** *** *** *** *** *** *** *** *** *** *** *** ***
            **************
            *            *
 140 KK     *     RET4   *
            *            *
            **************

 145 KO          OUTPUT CONTROL VARIABLES
                      IPRNT          1  PRINT CONTROL
                      IPLOT          0  PLOT CONTROL
                      QSCAL         0.  HYDROGRAPH PLOT SCALE

                HYDROGRAPH ROUTING DATA

 146 RS          STORAGE ROUTING
                      NSTPS          1  NUMBER OF SUBREACHES
                       ITYP       ELEV  TYPE OF INITIAL CONDITION
                     RSVRIC       0.00  INITIAL CONDITION
                          X       0.00 WORKING R AND D COEFFICIENT

 147 SA               AREA        0.9       1.0       1.1       1.2       1.3       1.4

 148 SE          ELEVATION       0.00      1.00      1.50      2.00      2.50      3.00

 149 SQ          DISCHARGE         0.        7.       13.       82.      201.      353.
                                                                 ***

                                                 COMPUTED STORAGE-ELEVATION DATA

            STORAGE       0.00      0.94      1.48      2.06      2.69      3.37
          ELEVATION       0.00      1.00      1.50      2.00      2.50      3.00

  PEAK FLOW     TIME                          MAXIMUM AVERAGE FLOW
                                     6-HR       24-HR       72-HR     33.30-HR
+   (CFS)       (HR)
                            (CFS)
+     281.     12.47                 65.         22.         16.         16.
                         (INCHES)  1.341       1.839       1.839       1.839
                          (AC-FT)    32.         44.         44.         44.

 PEAK STORAGE   TIME                         MAXIMUM AVERAGE STORAGE
                                     6-HR       24-HR       72-HR     33.30-HR
+  (AC-FT)      (HR)
       3.      12.47                  2.          1.          1.          1.

  PEAK STAGE    TIME                          MAXIMUM AVERAGE STAGE
                                     6-HR       24-HR       72-HR     33.30-HR
+   (FEET)      (HR)
     2.76      12.47                 1.81        1.10        0.79        0.79

                         CUMULATIVE AREA =    0.45 SQ MI
```

RUNOFF SUMMARY
FLOW IN CUBIC FEET PER SECOND
TIME IN HOURS, AREA IN SQUARE MILES

	OPERATION	STATION	PEAK FLOW	TIME OF PEAK	AVERAGE FLOW FOR MAXIMUM PERIOD 6-HOUR	24-HOUR	72-HOUR	BASIN AREA	MAXIMUM STAGE	TIME OF MAX STAGE
+	HYDROGRAPH AT	440	4.	12.00	0.	0.	0.	0.00		
+	ROUTED TO	R12	4.	12.07	0.	0.	0.	0.00		
+									10.34	12.07
+	HYDROGRAPH AT	300	36.	12.13	5.	1.	1.	0.04		
+	ROUTED TO	R15	36.	12.13	5.	1.	1.	0.04		
+									10.67	12.13
+	HYDROGRAPH AT	400	24.	12.03	3.	1.	1.	0.02		
+	3 COMBINED AT	C15	60.	12.07	8.	2.	2.	0.06		
+	ROUTED TO	R25	60.	12.10	8.	2.	2.	0.06		
+	HYDROGRAPH AT	510	17.	12.03	2.	1.	0.	0.01		
+	HYDROGRAPH AT	201	29.	12.00	3.	1.	1.	0.02		
+	3 COMBINED AT	C25	101.	12.03	13.	4.	3.	0.09		
+	ROUTED TO	RET1	25.	12.47	12.	4.	3.	0.09		
+									4.87	12.47
+	ROUTED TO	R26	25.	12.47	12.	4.	3.	0.09		
+	HYDROGRAPH AT	101	69.	12.07	8.	3.	2.	0.05		
+	HYDROGRAPH AT	560	7.	12.00	1.	0.	0.	0.00		
+	HYDROGRAPH AT	610	240.	12.33	47.	15.	10.	0.28		
+	4 COMBINED AT	C35	293.	12.27	68.	21.	15.	0.42		
+	ROUTED TO	RET2	286.	12.37	65.	21.	15.	0.42		
+									4.98	12.37
+	ROUTED TO	R34	286.	12.37	65.	21.	15.	0.42		
+	ROUTED TO	RET3	284.	12.40	63.	21.	15.	0.42		
+									4.97	12.40
+	ROUTED TO	R35	283.	12.40	63.	21.	15.	0.42		
+	HYDROGRAPH AT	301	38.	12.00	4.	1.	1.	0.02		
+	2 COMBINED AT	C45	289.	12.40	66.	22.	16.	0.45		
+	ROUTED TO	RET4	281.	12.47	65.	22.	16.	0.45		
+									2.76	12.47
+	HYDROGRAPH AT	810	796.	12.40	173.	53.	38.	1.02		
+	DIVERSION TO	830D	696.	11.80	98.	25.	18.	1.02		
+	HYDROGRAPH AT	830	100.	11.80	75.	29.	21.	1.02		
+	ROUTED TO	850	100.	14.10	74.	29.	21.	1.02		
+									11.19	14.10
+	HYDROGRAPH AT	710	213.	12.27	39.	12.	9.	0.24		
+	2 COMBINED AT	715	303.	12.30	113.	41.	29.	1.25		
+	ROUTED TO	R36	303.	12.30	113.	41.	29.	1.25		

SUMMARY OF KINEMATIC WAVE - MUSKINGUM-CUNGE ROUTING
(FLOW IS DIRECT RUNOFF WITHOUT BASE FLOW)

ISTAQ	ELEMENT	DT (MIN)	PEAK (CFS)	TIME TO PEAK (MIN)	VOLUME (IN)	INTERPOLATED TO COMPUTATION INTERVAL DT (MIN)	PEAK (CFS)	TIME TO PEAK (MIN)	VOLUME (IN)
R25	MANE	0.18	60.39	724.38	1.59	2.00	60.22	726.00	1.59

CONTINUITY SUMMARY (AC-FT) - INFLOW=0.4825E+01 EXCESS=0.0000E+00 OUTFLOW=0.4825E+01 BASIN STORAGE=0.7414E-14 PERCENT ERROR= 0.0

R26	MANE	0.31	24.56	748.04	1.66	2.00	24.56	748.00	1.66

CONTINUITY SUMMARY (AC-FT) - INFLOW=0.7673E+01 EXCESS=0.0000E+00 OUTFLOW=0.7672E+01 BASIN STORAGE=0.8849E-04 PERCENT ERROR= 0.0

R34	MANE	0.23	285.73	741.96	1.85	2.00	285.72	742.00	1.85

CONTINUITY SUMMARY (AC-FT) - INFLOW=0.4183E+02 EXCESS=0.0000E+00 OUTFLOW=0.4183E+02 BASIN STORAGE=0.5754E-03 PERCENT ERROR= 0.0

R35	MANE	0.26	283.51	744.26	1.84	2.00	283.39	744.00	1.84

CONTINUITY SUMMARY (AC-FT) - INFLOW=0.4170E+02 EXCESS=0.0000E+00 OUTFLOW=0.4170E+02 BASIN STORAGE=0.8712E-03 PERCENT ERROR= 0.0

R36	MANE	0.32	303.33	738.09	1.21	2.00	303.31	738.00	1.21

CONTINUITY SUMMARY (AC-FT) - INFLOW=0.8116E+02 EXCESS=0.0000E+00 OUTFLOW=0.8116E+02 BASIN STORAGE=0.8019E-04 PERCENT ERROR= 0.0

*** NORMAL END OF HEC-1 ***

APPENDIX E

Offsite Drainage System Calculations

MINOR IMPROVED INTERCEPTOR CHANNEL

HEC-1 R12
Worksheet for Trapezoidal Channel

Project Description	
Project File	c:\fmw\98510.fm2
Worksheet	TRAP CHANNEL ANALYSIS
Flow Element	Trapezoidal Channel
Method	Manning's Formula
Solve For	Channel Depth

Input Data		
Mannings Coefficient	0.040	
Channel Slope	0.037900	ft/ft
Left Side Slope	4.00	H : V
Right Side Slope	4.00	H : V
Bottom Width	2.00	ft
Discharge	4.00	ft^3/s

Results		
Depth	0.38	ft
Flow Area	1.35	ft^2
Wetted Perimeter	5.16	ft
Top Width	5.06	ft
Critical Depth	0.38	ft
Critical Slope	0.037054	ft/ft
Velocity	2.96	ft/s
Velocity Head	0.14	ft
Specific Energy	0.52	ft
Froude Number	1.01	
Flow is supercritical.		

HEC-1 R12
Cross Section for Trapezoidal Channel

Project Description	
Project File	c:\fmw\98510.fm2
Worksheet	TRAP CHANNEL ANALYSIS
Flow Element	Trapezoidal Channel
Method	Manning's Formula
Solve For	Channel Depth

Section Data		
Mannings Coefficient	0.040	
Channel Slope	0.037900	ft/ft
Depth	0.38	ft
Left Side Slope	4.00	H : V
Right Side Slope	4.00	H : V
Bottom Width	2.00	ft
Discharge	4.00	ft^3/s

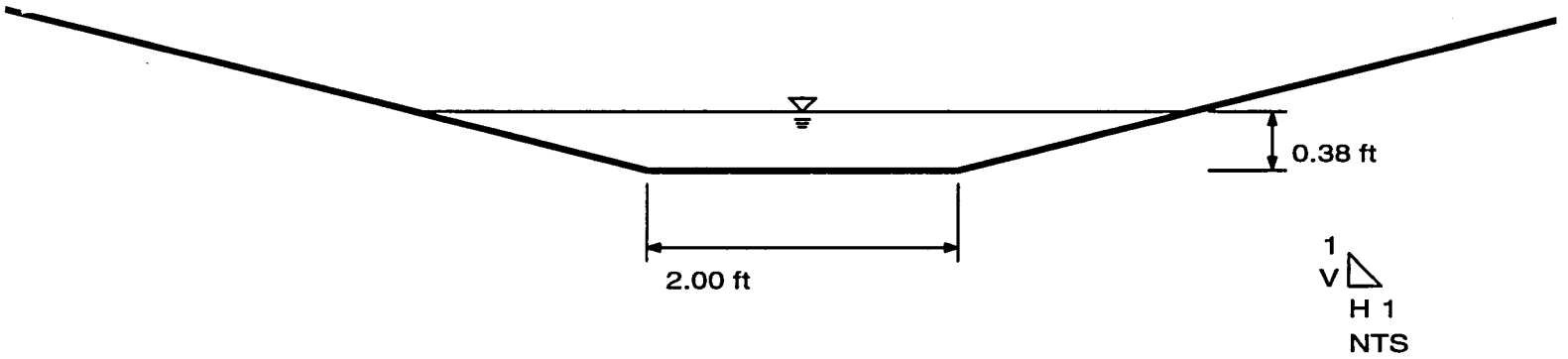

HEC-1 D.A. 710 CHANNEL TO CATCH BASIN
Worksheet for Trapezoidal Channel

Project Description	
Project File	c:\fmw\98510.fm2
Worksheet	TRAP CHANNEL ANALYSIS
Flow Element	Trapezoidal Channel
Method	Manning's Formula
Solve For	Channel Depth

Input Data		
Mannings Coefficient	0.040	
Channel Slope	0.020000	ft/ft
Left Side Slope	4.00	H : V
Right Side Slope	4.00	H : V
Bottom Width	2.00	ft
Discharge	20.00	ft^3/s

Results		
Depth	0.96	ft
Flow Area	5.58	ft^2
Wetted Perimeter	9.89	ft
Top Width	9.66	ft
Critical Depth	0.88	ft
Critical Slope	0.029637	ft/ft
Velocity	3.59	ft/s
Velocity Head	0.20	ft
Specific Energy	1.16	ft
Froude Number	0.83	
Flow is subcritical.		

HEC-1 D.A. 710 CHANNEL TO CATCH BASIN
Cross Section for Trapezoidal Channel

Project Description	
Project File	c:\fmw\98510.fm2
Worksheet	TRAP CHANNEL ANALYSIS
Flow Element	Trapezoidal Channel
Method	Manning's Formula
Solve For	Channel Depth

Section Data		
Mannings Coefficient	0.040	
Channel Slope	0.020000	ft/ft
Depth	0.96	ft
Left Side Slope	4.00	H : V
Right Side Slope	4.00	H : V
Bottom Width	2.00	ft
Discharge	20.00	ft^3/s

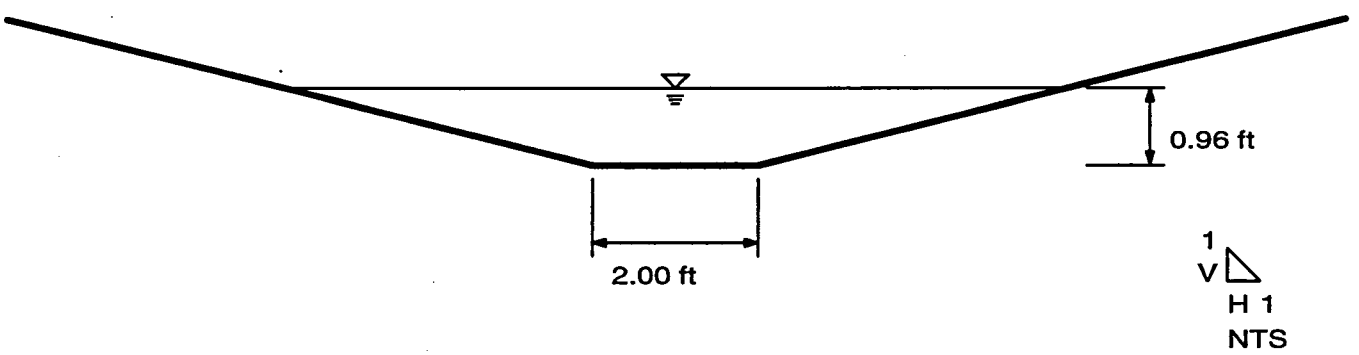

Curve
Plotted Curves for Trapezoidal Channel

Project Description	
Project File	c:\fmw\98510.fm2
Worksheet	TRAP CHANNEL ANALYSIS
Flow Element	Trapezoidal Channel
Method	Manning's Formula
Solve For	Channel Depth

Constant Data		
Mannings Coefficient	0.040	
Channel Slope	0.020000 ft/ft	
Left Side Slope	4.00	H : V
Right Side Slope	4.00	H : V
Bottom Width	2.00	ft

Input Data			
	Minimum	Maximum	Increment
Discharge	20.00	100.00	20.00 ft³/s

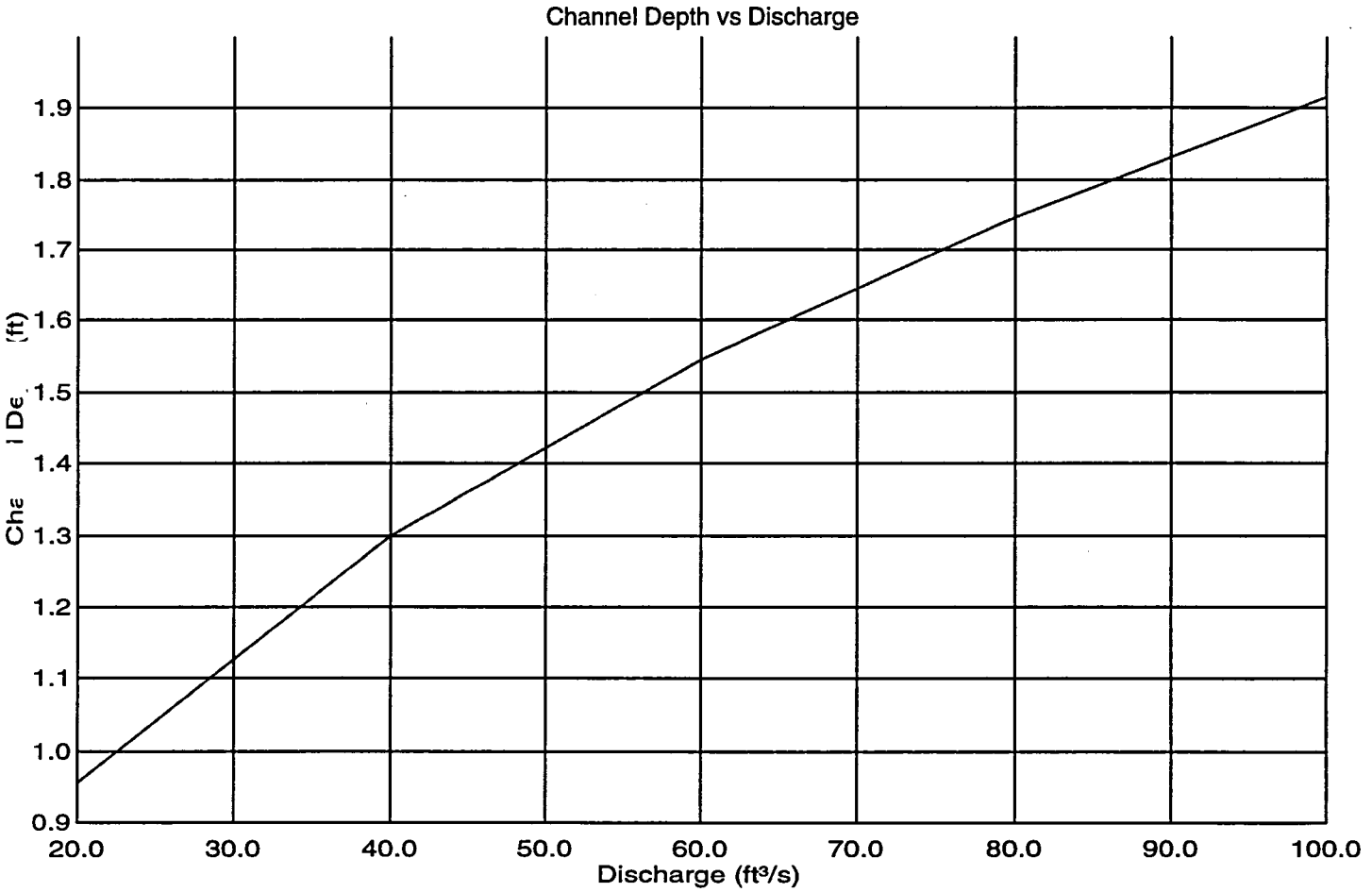

MINOR IMPROVED ROCK RIP-RAP CHANNEL

```
******  HYCHL  ****** (Version 6.1) ******          Date 06-10-1999

Commands Read From File: C:\HYCHL\HYCHL1.CHL

      JOB EXAMPLE ONE:  DESIGNING TEMPORARY & PERMANENT LININGS
      UNI 0
** UNITS PARAMETER = 0 (ENGLISH)
      CHL 0.036  70
      TRP 4      2      2
** LEFT SIDE SLOPE    2.0 AND RIGHT SIDE SLOPE    2.0
** THE BASE WIDTH OF THE TRAPEZOID (ft)    4.00
      N   .035   .035
** LOW  FLOW N VALUE=  .035
** SIDE SLOPE N VALUE=  .035
      LRR .75    2 41     2.60   0.047
** D50 (ft)    .75
** ANGLE OF REPOSE (DEGREES)   41.00
** SPECIFIC GRAVITY    2.60
** SHIELDS PARAMETER    .047
      END
**************END OF COMMAND FILE************

EXAMPLE ONE:  DESIGNING TEMPORARY & PERMANENT LININGS
------------
INPUT REVIEW
------------
  DESIGN PARAMETERS:
      DESIGN DISCHARGE (ft^3/s):           70.00
      CHANNEL SHAPE:                  TRAPEZOIDAL
      CHANNEL SLOPE (ft/ft):               .036
----------------------------------------
HYDRAULIC CALCULATIONS USING NORMAL DEPTH
----------------------------------------

                          DESIGN     MAXIMUM
                          ------     -------
FLOW (cfs)                 70.00      49.67
DEPTH (ft)                  1.37       1.15
AREA (ft^2)                 9.24       7.21
WETTED PERIMETER (ft)      10.13       9.13
HYDRAULIC RADIUS (ft)        .91        .79
VELOCITY (ft/s)             7.58       6.89
MANNINGS N (LOW FLOW)        .035       .035
REYNOLDS NUMBER (10^5)       .82

*** WARNING:  Davg/D50 <= 2 FOR THE MAXIMUM DISCHARGE PROCEDURE.
                Qmax MAY BE INCORRECT BECAUSE IT REQUIRES BATHURST

------------------
STABILITY ANALYSIS
------------------

                      LINING    PERMIS SHR   CALC. SHR  STAB.
   CONDITION          TYPE      (LB/FT^2)    (LB/FT^2)  FACTOR   REMARKS
   ---------          ------    ----------   ---------  ------   -------
  BOTTOM; STRAIGHT   RIPRAP          3.52       3.08      1.14   STABLE
  SIDE; STRAIGHT     RIPRAP          2.57       2.37      1.08   STABLE

*** NORMAL END OF HYCHL ***
```

ROCK RIP-RAP APRON
ANALYSIS
FOR MINOR IMPROVED ROCK RIP-RAP CHANNEL

RETENTION BASIN #1 INLET CHANNEL
Worksheet for Trapezoidal Channel

Project Description	
Project File	c:\fmw\980508.fm2
Worksheet	natural channels
Flow Element	Trapezoidal Channel
Method	Manning's Formula
Solve For	Channel Depth

Input Data		
Mannings Coefficient	0.035	
Channel Slope	0.037000	ft/ft
Left Side Slope	2.00	H : V
Right Side Slope	2.00	H : V
Bottom Width	4.00	ft
Discharge	70.00	ft^3/s

Results		
Depth	1.36	ft
Flow Area	9.15	ft^2
Wetted Perimeter	10.09	ft
Top Width	9.44	ft
Critical Depth	1.62	ft
Critical Slope	0.018900	ft/ft
Velocity	7.65	ft/s
Velocity Head	0.91	ft
Specific Energy	2.27	ft
Froude Number	1.37	
Flow is supercritical.		

RET. BASIN #1 INLET CHANNEL
Cross Section for Trapezoidal Channel

Project Description	
Project File	c:\fmw\980508.fm2
Worksheet	natural channels
Flow Element	Trapezoidal Channel
Method	Manning's Formula
Solve For	Channel Depth

Section Data		
Mannings Coefficient	0.035	
Channel Slope	0.037000	ft/ft
Depth	1.36	ft
Left Side Slope	2.00	H : V
Right Side Slope	2.00	H : V
Bottom Width	4.00	ft
Discharge	70.00	ft^3/s

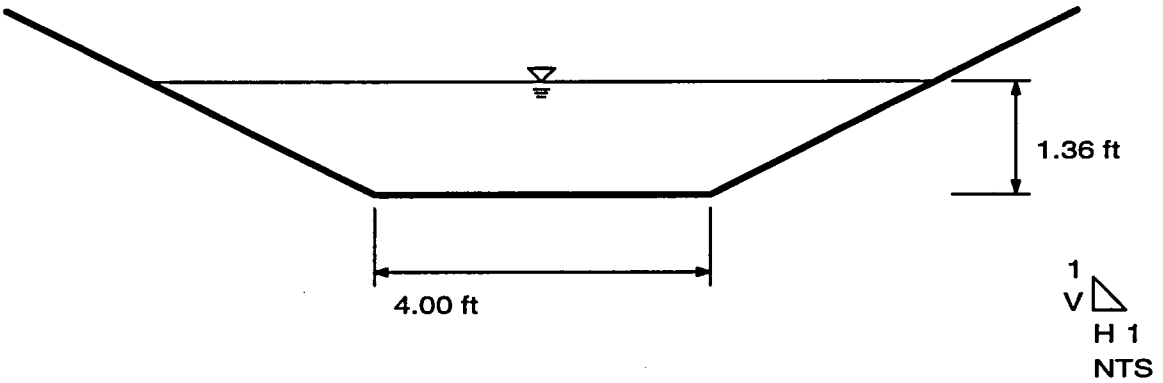

RETENTION BASIN #1 OUTLET CHANNEL
Worksheet for Trapezoidal Channel

Project Description	
Project File	c:\fmw\980508.fm2
Worksheet	natural channels
Flow Element	Trapezoidal Channel
Method	Manning's Formula
Solve For	Channel Depth

Input Data		
Mannings Coefficient	0.035	
Channel Slope	0.005000	ft/ft
Left Side Slope	2.00	H : V
Right Side Slope	2.00	H : V
Bottom Width	30.00	ft
Discharge	70.00	ft^3/s

Results		
Depth	0.85	ft
Flow Area	27.06	ft^2
Wetted Perimeter	33.82	ft
Top Width	33.41	ft
Critical Depth	0.55	ft
Critical Slope	0.022325	ft/ft
Velocity	2.59	ft/s
Velocity Head	0.10	ft
Specific Energy	0.96	ft
Froude Number	0.51	
Flow is subcritical.		

RET. BASIN #1 OUTLET CHANNEL
Cross Section for Trapezoidal Channel

Project Description	
Project File	c:\fmw\980508.fm2
Worksheet	natural channels
Flow Element	Trapezoidal Channel
Method	Manning's Formula
Solve For	Channel Depth

Section Data		
Mannings Coefficient	0.035	
Channel Slope	0.005000	ft/ft
Depth	0.85	ft
Left Side Slope	2.00	H : V
Right Side Slope	2.00	H : V
Bottom Width	30.00	ft
Discharge	70.00	ft^3/s

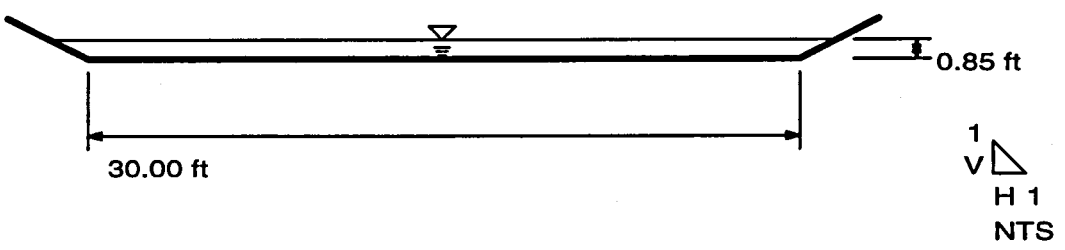

FHWA CULVERT ANALYSIS, HY-8, VERSION 6.0

CURRENT DATE	CURRENT TIME	FILE NAME	FILE DATE
06-10-1999	13:47:31	980510	06-10-1999

CULVERT AND CHANNEL DATA

CULVERT NO. 1			DOWNSTREAM CHANNEL		
~~CULVERT TYPE: 8.000 X 4.000 BOX~~			CHANNEL TYPE : TRAPEZOIDAL		
CULVERT LENGTH	=	191.128 ft	BOTTOM WIDTH	=	20.000 ft
NO. OF BARRELS	=	1.0	TAILWATER DEPTH	=	0.874 ft
FLOW PER BARREL	=	70.000 cfs	TOTAL DESIGN FLOW	=	70.000 cfs
INVERT ELEVATION	=	11.000 ft	BOTTOM ELEVATION	=	11.000 ft
* OUTLET VELOCITY	=	7.690 fps	NORMAL VELOCITY	=	3.542 fps
OUTLET DEPTH	=	1.140 ft			

$D_{50} = 0.75'$

RIPRAP STILLING BASIN -- FINAL DESIGN

THE LENGTH OF THE BASIN	=	32.000 ft
THE LENGTH OF THE POOL	=	24.000 ft
THE LENGTH OF THE APRON	=	8.000 ft
THE WIDTH OF THE BASIN AT THE OUTLET	=	20.000 ft
THE DEPTH OF POOL BELOW CULVERT INVERT	=	-0.088 ft
THE THICKNESS OF THE RIPRAP ON THE APRON	=	2.250 ft
THE THICKNESS OF THE RIPRAP ON THE REST OF THE BASIN	=	1.500 ft
THE BASIN OUTLET VELOCITY	=	3.043 fps
THE DEPTH OF FLOW AT BASIN OUTLET	=	1.150 ft

24" RCP FROM DET. #1

JRRENT DATE: 06-14-1999 FILE DATE: 06-14-1999
JRRENT TIME: 13:56:46 FILE NAME: 98510

FHWA CULVERT ANALYSIS
HY-8, VERSION 6.1

C U L V NO.	SITE DATA: INLET ELEV. (ft)	OUTLET ELEV. (ft)	CULVERT LENGTH (ft)	CULVERT SHAPE, MATERIAL, INLET: BARRELS SHAPE MATERIAL	SPAN (ft)	RISE (ft)	MANNING n	INLET TYPE
1	1608.00	1595.50	615.13	1 RCP	2.00	2.00	.012	CONVENTIONAL
2								
3								
4								
5								
6								

JMMARY OF CULVERT FLOWS (cfs) FILE: 98510 DATE: 06-14-1999

ELEV (ft)	TOTAL	1	2	3	4	5	6	ROADWAY	ITR
1608.00	0.0	0.0	0.0	0.0	0.0	0.0	0.0	0.00	1
1608.67	2.5	2.5	0.0	0.0	0.0	0.0	0.0	0.00	1
1609.06	5.0	5.0	0.0	0.0	0.0	0.0	0.0	0.00	1
1609.36	7.5	7.5	0.0	0.0	0.0	0.0	0.0	0.00	1
1609.62	10.0	10.0	0.0	0.0	0.0	0.0	0.0	0.00	1
1609.85	12.5	12.5	0.0	0.0	0.0	0.0	0.0	0.00	1
1610.08	15.0	15.0	0.0	0.0	0.0	0.0	0.0	0.00	1
1610.32	17.5	17.5	0.0	0.0	0.0	0.0	0.0	0.00	1
1610.59	20.0	20.0	0.0	0.0	0.0	0.0	0.0	0.00	1
1610.89	22.5	22.5	0.0	0.0	0.0	0.0	0.0	0.00	1
1611.21	25.0	25.0	0.0	0.0	0.0	0.0	0.0	0.00	1
1614.50	34.0	34.0	0.0	0.0	0.0	0.0	0.0	OVERTOPPING	

SUMMARY OF ITERATIVE SOLUTION ERRORS FILE: 98510 DATE: 06-14-1999

HEAD ELEV (ft)	HEAD ERROR (ft)	TOTAL FLOW (cfs)	FLOW ERROR (cfs)	% FLOW ERROR
1608.00	0.000	0.00	0.00	0.00
1608.67	0.000	2.50	0.00	0.00
1609.06	0.000	5.00	0.00	0.00
1609.36	0.000	7.50	0.00	0.00
1609.62	0.000	10.00	0.00	0.00
1609.85	0.000	12.50	0.00	0.00
1610.08	0.000	15.00	0.00	0.00
1610.32	0.000	17.50	0.00	0.00
1610.59	0.000	20.00	0.00	0.00
1610.89	0.000	22.50	0.00	0.00
1611.21	0.000	25.00	0.00	0.00

<1> TOLERANCE (ft) = 0.010 <2> TOLERANCE (%) = 1.000

(JRRENT DATE: 06-14-1999 FILE DATE: 06-14-1999
CURRENT TIME: 13:56:46 FILE NAME: 98510

TAILWATER

CONSTANT WATER SURFACE ELEVATION
1600.50

ROADWAY OVERTOPPING DATA

ROADWAY SURFACE	PAVED	
EMBANKMENT TOP WIDTH	600.00	ft
CREST LENGTH	10.00	ft
OVERTOPPING CREST ELEVATION	1614.50	ft

FHWA CULVERT ANALYSIS, HY-8, VERSION 6.0

CURRENT DATE	CURRENT TIME	FILE NAME	FILE DATE
06-14-1999	14:29:57	98510	06-14-1999

ááá

CULVERT AND CHANNEL DATA

ááá

CULVERT NO. 1		DOWNSTREAM CHANNEL	
CULVERT TYPE:	2.000 ft CIRCULAR	CHANNEL TYPE :	TRAPEZOIDAL
CULVERT LENGTH	= 615.127 ft	BOTTOM WIDTH	= 50.000 ft
NO. OF BARRELS	= 1.0	TAILWATER DEPTH	= 0.450 ft
FLOW PER BARREL	= 25.000 cfs	TOTAL DESIGN FLOW	= 25.000 cfs
INVERT ELEVATION	= 1595.500 ft	BOTTOM ELEVATION	= 1595.500 ft
OUTLET VELOCITY	= 13.350 fps	NORMAL VELOCITY	= 1.082 fps
OUTLET DEPTH	= 1.150 ft		

ááá

D_{50} = Ø.5'

ááá

RIPRAP STILLING BASIN -- FINAL DESIGN

ááá

THE LENGTH OF THE BASIN	= 22.630 ft
THE LENGTH OF THE POOL	= 15.087 ft
THE LENGTH OF THE APRON	= 7.543 ft
THE WIDTH OF THE BASIN AT THE OUTLET	= 17.087 ft
THE DEPTH OF POOL BELOW CULVERT INVERT	= 1.509 ft
THE THICKNESS OF THE RIPRAP ON THE APRON	= 1.500 ft
THE THICKNESS OF THE RIPRAP ON THE REST OF THE BASIN	= 1.000 ft
THE BASIN OUTLET VELOCITY	= 1.381 fps
THE DEPTH OF FLOW AT BASIN OUTLET	= 1.060 ft

ááá

2-60" RCPs FROM DET. #2

URRENT DATE: 06-14-1999 FILE DATE: 06-14-1999
URRENT TIME: 14:17:03 FILE NAME: 98510B

FHWA CULVERT ANALYSIS
HY-8, VERSION 6.1

CULV NO.	SITE DATA: INLET ELEV. (ft)	OUTLET ELEV. (ft)	CULVERT LENGTH (ft)	CULVERT SHAPE, MATERIAL, INLET: BARRELS	SHAPE MATERIAL	SPAN (ft)	RISE (ft)	MANNING n	INLET TYPE
1	93.60	91.50	364.01	2	RCP	5.00	5.00	.012	CONVENTIONAL
2									
3									
4									
5									
6									

UMMARY OF CULVERT FLOWS (cfs) FILE: 98510B DATE: 06-14-1999

ELEV (ft)	TOTAL	1	2	3	4	5	6	ROADWAY	ITR
96.50	0.0	0.0	0.0	0.0	0.0	0.0	0.0	0.00	1
96.51	28.6	28.6	0.0	0.0	0.0	0.0	0.0	0.00	1
96.57	57.2	57.2	0.0	0.0	0.0	0.0	0.0	0.00	1
96.66	85.8	85.8	0.0	0.0	0.0	0.0	0.0	0.00	1
96.80	114.4	114.4	0.0	0.0	0.0	0.0	0.0	0.00	1
96.98	143.0	143.0	0.0	0.0	0.0	0.0	0.0	0.00	1
97.36	171.6	171.6	0.0	0.0	0.0	0.0	0.0	0.00	1
97.71	200.2	200.2	0.0	0.0	0.0	0.0	0.0	0.00	1
98.04	228.8	228.8	0.0	0.0	0.0	0.0	0.0	0.00	1
98.37	257.4	257.4	0.0	0.0	0.0	0.0	0.0	0.00	1
98.71	286.0	286.0	0.0	0.0	0.0	0.0	0.0	0.00	1
99.00	310.1	310.1	0.0	0.0	0.0	0.0	0.0	OVERTOPPING	

SUMMARY OF ITERATIVE SOLUTION ERRORS FILE: 98510B DATE: 06-14-1999

HEAD ELEV (ft)	HEAD ERROR (ft)	TOTAL FLOW (cfs)	FLOW ERROR (cfs)	% FLOW ERROR
96.50	0.000	0.00	0.00	0.00
96.51	0.000	28.60	0.00	0.00
96.57	0.000	57.20	0.00	0.00
96.66	0.000	85.80	0.00	0.00
96.80	0.000	114.40	0.00	0.00
96.98	0.000	143.00	0.00	0.00
97.36	0.000	171.60	0.00	0.00
97.71	0.000	200.20	0.00	0.00
98.04	0.000	228.80	0.00	0.00
98.37	0.000	257.40	0.00	0.00
98.71	0.000	286.00	0.00	0.00

<1> TOLERANCE (ft) = 0.010 <2> TOLERANCE (%) = 1.000

CURRENT DATE: 06-14-1999 FILE DATE: 06-14-1999
CURRENT TIME: 14:17:03 FILE NAME: 98510B

PERFORMANCE CURVE FOR CULVERT 1 - 2(5.00 (ft) BY 5.00 (ft)) RCP

DIS-CHARGE FLOW (cfs)	HEAD-WATER ELEV. (ft)	INLET CONTROL DEPTH (ft)	OUTLET CONTROL DEPTH (ft)	FLOW TYPE <F4>	NORMAL DEPTH (ft)	CRIT. DEPTH (ft)	OUTLET DEPTH (ft)	TW DEPTH (ft)	OUTLET VEL. (fps)	TW VEL. (fps)
0.00	96.50	0.00	2.90	0-NF	0.00	0.00	0.00	5.00	0.00	0.00
28.60	96.51	1.21	2.91	1-S1f	0.84	1.03	5.00	5.00	0.73	0.00
57.20	96.57	1.89	2.97	1-S1f	1.21	1.48	5.00	5.00	1.46	0.00
85.80	96.66	2.46	3.06	1-S1f	1.51	1.82	5.00	5.00	2.18	0.00
114.40	96.80	2.95	3.20	1-S1f	1.75	2.12	5.00	5.00	2.91	0.00
143.00	96.98	3.38	3.37	1-S1f	1.98	2.38	2.90	5.00	6.06	0.00
171.60	97.36	3.76	3.76	1-S1f	2.19	2.62	2.80	5.00	7.59	0.00
200.20	97.71	4.11	4.11	1-S1f	2.39	2.84	3.00	5.00	8.14	0.00
228.80	98.04	4.44	4.44	1-S1f	2.59	3.05	3.20	5.00	8.63	0.00
257.40	98.37	4.77	4.77	1-S1f	2.78	3.24	3.40	5.00	9.06	0.00
286.00	98.71	5.11	5.11	1-S1f	2.98	3.42	3.60	5.00	9.46	0.00

El. inlet face invert 93.60 ft El. outlet invert 91.50 ft
El. inlet throat invert 0.00 ft El. inlet crest 0.00 ft

**** SITE DATA ***** CULVERT INVERT **********

INLET STATION	0.00 ft
INLET ELEVATION	93.60 ft
OUTLET STATION	364.00 ft
OUTLET ELEVATION	91.50 ft
NUMBER OF BARRELS	2
SLOPE (V/H)	0.0058
CULVERT LENGTH ALONG SLOPE	364.01 ft

***** CULVERT DATA SUMMARY **********

BARREL SHAPE	CIRCULAR
BARREL DIAMETER	5.00 ft
BARREL MATERIAL	CONCRETE
BARREL MANNING'S n	0.012
INLET TYPE	CONVENTIONAL
INLET EDGE AND WALL	BEVELED EDGE (1.5:1)
INLET DEPRESSION	NONE

CURRENT DATE: 06-14-1999 FILE DATE: 06-14-1999
CURRENT TIME: 14:17:03 FILE NAME: 98510B

TAILWATER

CONSTANT WATER SURFACE ELEVATION
96.50

ROADWAY OVERTOPPING DATA

ROADWAY SURFACE	PAVED
EMBANKMENT TOP WIDTH	360.00 ft
CREST LENGTH	10.00 ft
OVERTOPPING CREST ELEVATION	99.00 ft

FHWA CULVERT ANALYSIS, HY-8, VERSION 6.0

CURRENT DATE	CURRENT TIME	FILE NAME	FILE DATE
06-14-1999	14:30:44	98510B	06-14-1999

áá

CULVERT AND CHANNEL DATA

áá

CULVERT NO. 1		DOWNSTREAM CHANNEL	
CULVERT TYPE:	5.000 ft CIRCULAR	CHANNEL TYPE :	TRAPEZOIDAL
CULVERT LENGTH =	364.006 ft	BOTTOM WIDTH =	50.000 ft
NO. OF BARRELS =	2.0	TAILWATER DEPTH =	1.908 ft
FLOW PER BARREL =	143.000 cfs	TOTAL DESIGN FLOW =	286.000 cfs
INVERT ELEVATION =	91.500 ft	BOTTOM ELEVATION =	91.500 ft
OUTLET VELOCITY =	12.010 fps	NORMAL VELOCITY =	2.691 fps
OUTLET DEPTH =	2.920 ft		

áá

D_{50} = ∅.5'

áá

RIPRAP STILLING BASIN -- FINAL DESIGN

áá

THE LENGTH OF THE BASIN	=	35.379 ft
THE LENGTH OF THE POOL	=	23.586 ft
THE LENGTH OF THE APRON	=	11.793 ft
THE WIDTH OF THE BASIN AT THE OUTLET	=	28.586 ft
THE DEPTH OF POOL BELOW CULVERT INVERT	=	2.359 ft
THE THICKNESS OF THE RIPRAP ON THE APRON	=	1.500 ft
THE THICKNESS OF THE RIPRAP ON THE REST OF THE BASIN	=	1.000 ft
THE BASIN OUTLET VELOCITY	=	2.257 fps
THE DEPTH OF FLOW AT BASIN OUTLET	=	2.216 ft

áá

2-54" RCPs FROM DET. #3

JRRENT DATE: 06-15-1999 FILE DATE: 06-15-1999
JRRENT TIME: 10:08:47 FILE NAME: 98510C

FHWA CULVERT ANALYSIS
HY-8, VERSION 6.1

CULV NO.	SITE DATA: INLET ELEV. (ft)	OUTLET ELEV. (ft)	CULVERT LENGTH (ft)	CULVERT SHAPE, MATERIAL, INLET: BARRELS / SHAPE / MATERIAL	SPAN (ft)	RISE (ft)	MANNING n	INLET TYPE
1	89.20	87.00	377.01	2 RCP	4.50	4.50	.012	CONVENTIONAL
2								
3								
4								
5								
6								

SUMMARY OF CULVERT FLOWS (cfs) FILE: 98510C DATE: 06-15-1999

ELEV (ft)	TOTAL	1	2	3	4	5	6	ROADWAY	ITR
89.20	0.0	0.0	0.0	0.0	0.0	0.0	0.0	0.00	1
90.48	28.4	28.4	0.0	0.0	0.0	0.0	0.0	0.00	1
91.21	56.8	56.8	0.0	0.0	0.0	0.0	0.0	0.00	1
91.80	85.2	85.2	0.0	0.0	0.0	0.0	0.0	0.00	1
92.30	113.6	113.6	0.0	0.0	0.0	0.0	0.0	0.00	1
92.73	142.0	142.0	0.0	0.0	0.0	0.0	0.0	0.00	1
93.13	170.4	170.4	0.0	0.0	0.0	0.0	0.0	0.00	1
93.51	198.8	198.8	0.0	0.0	0.0	0.0	0.0	0.00	1
93.90	227.2	227.2	0.0	0.0	0.0	0.0	0.0	0.00	1
94.31	255.6	255.6	0.0	0.0	0.0	0.0	0.0	0.00	1
94.74	284.0	284.0	0.0	0.0	0.0	0.0	0.0	0.00	1
95.00	299.4	299.4	0.0	0.0	0.0	0.0	0.0	OVERTOPPING	

SUMMARY OF ITERATIVE SOLUTION ERRORS FILE: 98510C DATE: 06-15-1999

HEAD ELEV (ft)	HEAD ERROR (ft)	TOTAL FLOW (cfs)	FLOW ERROR (cfs)	% FLOW ERROR
89.20	0.000	0.00	0.00	0.00
90.48	0.000	28.40	0.00	0.00
91.21	0.000	56.80	0.00	0.00
91.80	0.000	85.20	0.00	0.00
92.30	0.000	113.60	0.00	0.00
92.73	0.000	142.00	0.00	0.00
93.13	0.000	170.40	0.00	0.00
93.51	0.000	198.80	0.00	0.00
93.90	0.000	227.20	0.00	0.00
94.31	0.000	255.60	0.00	0.00
94.74	0.000	284.00	0.00	0.00

<1> TOLERANCE (ft) = 0.010 <2> TOLERANCE (%) = 1.000

CURRENT DATE: 06-15-1999 FILE DATE: 06-15-1999
CURRENT TIME: 10:08:47 FILE NAME: 98510C

PERFORMANCE CURVE FOR CULVERT 1 - 2(4.50 (ft) BY 4.50 (ft)) RCP

DIS-CHARGE FLOW (cfs)	HEAD-WATER ELEV. (ft)	INLET CONTROL DEPTH (ft)	OUTLET CONTROL DEPTH (ft)	FLOW TYPE <F4>	NORMAL DEPTH (ft)	CRIT. DEPTH (ft)	OUTLET DEPTH (ft)	TW DEPTH (ft)	OUTLET VEL. (fps)	TW VEL. (fps)
0.00	89.20	0.00	0.00	0-NF	0.00	0.00	0.00	0.00	0.00	0.00
28.40	90.48	1.28	1.28	1-S2n	0.90	1.05	0.89	0.49	6.39	1.14
56.80	91.21	2.01	2.01	1-S2n	1.26	1.51	1.21	0.73	8.18	1.48
85.20	91.80	2.60	2.60	1-S2n	1.56	1.87	1.47	0.93	9.37	1.73
113.60	92.30	3.10	3.10	1-S2n	1.83	2.18	1.78	1.11	9.69	1.92
142.00	92.73	3.53	3.53	1-S2n	2.08	2.45	2.08	1.26	9.88	2.09
170.40	93.13	3.93	3.93	1-S2n	2.31	2.70	2.20	1.41	11.00	2.23
198.80	93.51	4.31	4.31	1-S2n	2.54	2.92	2.55	1.54	10.69	2.36
227.20	93.90	4.70	4.70	5-S2n	2.77	3.14	2.78	1.67	11.02	2.48
255.60	94.31	5.11	5.11	5-S2n	3.01	3.31	2.91	1.79	11.74	2.59
284.00	94.74	5.54	5.54	5-S2n	3.27	3.49	3.19	1.90	11.76	2.68

El. inlet face invert 89.20 ft El. outlet invert 87.00 ft
El. inlet throat invert 0.00 ft El. inlet crest 0.00 ft

**** SITE DATA ***** CULVERT INVERT **********

INLET STATION	0.00 ft
INLET ELEVATION	89.20 ft
OUTLET STATION	377.00 ft
OUTLET ELEVATION	87.00 ft
NUMBER OF BARRELS	2
SLOPE (V/H)	0.0058
CULVERT LENGTH ALONG SLOPE	377.01 ft

***** CULVERT DATA SUMMARY **********

BARREL SHAPE	CIRCULAR
BARREL DIAMETER	4.50 ft
BARREL MATERIAL	CONCRETE
BARREL MANNING'S n	0.012
INLET TYPE	CONVENTIONAL
INLET EDGE AND WALL	BEVELED EDGE (1.5:1)
INLET DEPRESSION	NONE

CURRENT DATE: 06-15-1999 FILE DATE: 06-15-1999
CURRENT TIME: 10:08:47 FILE NAME: 98510C

TAILWATER

******* REGULAR CHANNEL CROSS SECTION ********

BOTTOM WIDTH	50.00 ft
SIDE SLOPE H/V (X:1)	3.0
CHANNEL SLOPE V/H (ft/ft)	0.001
MANNING'S n (.01-0.1)	0.025
CHANNEL INVERT ELEVATION	87.00 ft
CULVERT NO.1 OUTLET INVERT ELEVATION	87.00 ft

******* UNIFORM FLOW RATING CURVE FOR DOWNSTREAM CHANNEL

FLOW (cfs)	W.S.E. (ft)	FROUDE NUMBER	DEPTH (ft)	VEL. (f/s)	SHEAR (psf)
0.00	87.00	0.000	0.00	0.00	0.00
28.40	87.49	0.288	0.49	1.14	0.03
56.80	87.73	0.305	0.73	1.48	0.05
85.20	87.93	0.315	0.93	1.73	0.06
113.60	88.11	0.322	1.11	1.92	0.07
142.00	88.26	0.328	1.26	2.09	0.08
170.40	88.41	0.332	1.41	2.23	0.09
198.80	88.54	0.335	1.54	2.36	0.10
227.20	88.67	0.338	1.67	2.48	0.10
255.60	88.79	0.341	1.79	2.59	0.11
284.00	88.90	0.343	1.90	2.68	0.12

ROADWAY OVERTOPPING DATA

ROADWAY SURFACE	PAVED
EMBANKMENT TOP WIDTH	320.00 ft
CREST LENGTH	10.00 ft
OVERTOPPING CREST ELEVATION	95.00 ft

FHWA CULVERT ANALYSIS, HY-8, VERSION 6.0

CURRENT DATE	CURRENT TIME	FILE NAME	FILE DATE
06-14-1999	14:31:11	98510C	06-14-1999

áá
CULVERT AND CHANNEL DATA
áá

CULVERT NO. 1			DOWNSTREAM CHANNEL		
CULVERT TYPE:		4.500 ft CIRCULAR	CHANNEL TYPE	:	TRAPEZOIDAL
CULVERT LENGTH	=	350.006 ft	BOTTOM WIDTH	=	50.000 ft
NO. OF BARRELS	=	2.0	TAILWATER DEPTH	=	1.896 ft
FLOW PER BARREL	=	141.500 cfs	TOTAL DESIGN FLOW	=	283.000 cfs
INVERT ELEVATION	=	87.000 ft	BOTTOM ELEVATION	=	87.000 ft
OUTLET VELOCITY	=	11.750 fps	NORMAL VELOCITY	=	2.680 fps
OUTLET DEPTH	=	3.190 ft			

áá

D_{50} = 0.5'

áá
RIPRAP STILLING BASIN -- FINAL DESIGN
áá

THE LENGTH OF THE BASIN	=	33.327 ft
THE LENGTH OF THE POOL	=	22.218 ft
THE LENGTH OF THE APRON	=	11.109 ft
THE WIDTH OF THE BASIN AT THE OUTLET	=	26.718 ft
THE DEPTH OF POOL BELOW CULVERT INVERT	=	2.222 ft
THE THICKNESS OF THE RIPRAP ON THE APRON	=	1.500 ft
THE THICKNESS OF THE RIPRAP ON THE REST OF THE BASIN	=	1.000 ft
THE BASIN OUTLET VELOCITY	=	2.309 fps
THE DEPTH OF FLOW AT BASIN OUTLET	=	2.293 ft

áá

MINOR IMPROVED INTERCEPTOR ROCK RIP-RAP CHANNEL

****** HYCHL ****** (Version 6.1) ****** Date 06-14-1999

Commands Read From File: C:\HYCHL\RIPRAP.CHL

```
      JOB RIPRAP LINING DESIGN
      UNI 0
** UNITS PARAMETER = 0 (ENGLISH)
      CHL 0.02   60
      TRP 6      2      2
** LEFT SIDE SLOPE    2.0 AND RIGHT SIDE SLOPE    2.0
** THE BASE WIDTH OF THE TRAPEZOID (ft)    6.00
      N   .035   .035
** LOW  FLOW N VALUE=  .035
** SIDE SLOPE N VALUE=  .035
      LRR .5     2 40     2.65   0.047
** D50 (ft)    .50
** ANGLE OF REPOSE (DEGREES)   40.00
** SPECIFIC GRAVITY    2.65
** SHIELDS PARAMETER    .047
      END
***************END OF COMMAND FILE************
```

RIPRAP LINING DESIGN

INPUT REVIEW

DESIGN PARAMETERS:

DESIGN DISCHARGE (ft^3/s):	60.00
CHANNEL SHAPE:	TRAPEZOIDAL
CHANNEL SLOPE (ft/ft):	.020

HYDRAULIC CALCULATIONS USING NORMAL DEPTH

	DESIGN	MAXIMUM
FLOW (cfs)	60.00	73.48
DEPTH (ft)	1.25	1.39
AREA (ft^2)	10.60	12.23
WETTED PERIMETER (ft)	11.58	12.23
HYDRAULIC RADIUS (ft)	.92	1.00
VELOCITY (ft/s)	5.66	6.01
MANNINGS N (LOW FLOW)	.035	.035
REYNOLDS NUMBER (10^5)	.45	

STABILITY ANALYSIS

CONDITION	LINING TYPE	PERMIS SHR (LB/FT^2)	CALC. SHR (LB/FT^2)	STAB. FACTOR	REMARKS
BOTTOM; STRAIGHT	RIPRAP	2.42	1.56	1.55	STABLE
SIDE; STRAIGHT	RIPRAP	1.74	1.20	1.45	STABLE

*** NORMAL END OF HYCHL ***

MINOR IMPROVED INTERCEPTOR CHANNEL

LOCATED

ON THE SOUTHEAST SIDE OF THE DEVELOPMENT

INTERCEPTOR CHANNEL
Worksheet for Trapezoidal Channel

Project Description	
Project File	c:\fmw\980508.fm2
Worksheet	natural channels
Flow Element	Trapezoidal Channel
Method	Manning's Formula
Solve For	Channel Depth

Input Data		
Mannings Coefficient	0.016	
Channel Slope	0.005000	ft/ft
Left Side Slope	1.00	H : V
Right Side Slope	1.00	H : V
Bottom Width	6.00	ft
Discharge	303.00	ft^3/s

Results		
Depth	3.20	ft
Flow Area	29.48	ft^2
Wetted Perimeter	15.06	ft
Top Width	12.41	ft
Critical Depth	3.51	ft
Critical Slope	0.003566	ft/ft
Velocity	10.28	ft/s
Velocity Head	1.64	ft
Specific Energy	4.84	ft
Froude Number	1.18	
Flow is supercritical.		

INTERCEPTOR CHANNEL
Cross Section for Trapezoidal Channel

Project Description	
Project File	c:\fmw\980508.fm2
Worksheet	natural channels
Flow Element	Trapezoidal Channel
Method	Manning's Formula
Solve For	Channel Depth

Section Data		
Mannings Coefficient	0.016	
Channel Slope	0.005000	ft/ft
Depth	3.20	ft
Left Side Slope	1.00	H : V
Right Side Slope	1.00	H : V
Bottom Width	6.00	ft
Discharge	303.00	ft^3/s

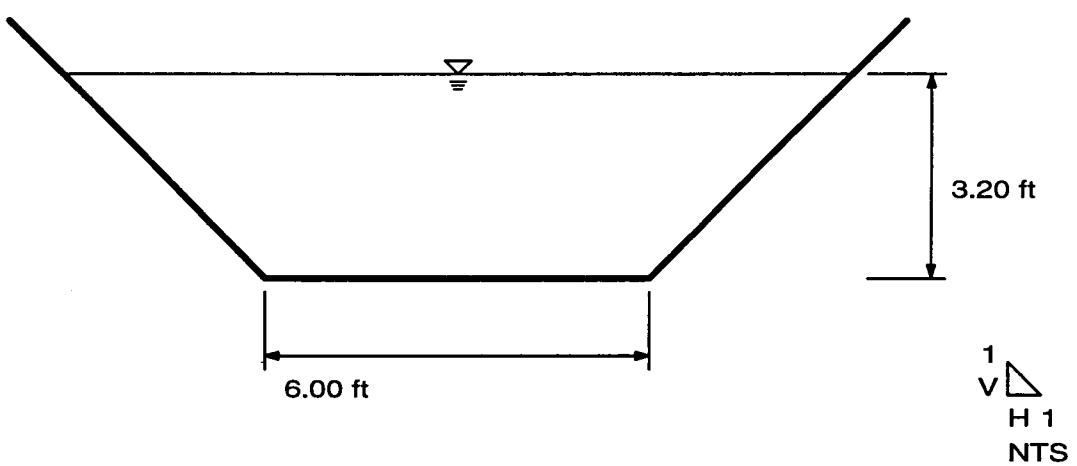

2-54" RCPs ROUTING OFFSITE FLOW AROUND SITE

CURRENT DATE: 06-14-1999 FILE DATE: 06-14-1999
CURRENT TIME: 14:23:28 FILE NAME: 98510D

FHWA CULVERT ANALYSIS
HY-8, VERSION 6.1

CULV NO.	SITE DATA: INLET ELEV. (ft)	OUTLET ELEV. (ft)	CULVERT LENGTH (ft)	CULVERT SHAPE, MATERIAL, INLET: BARRELS SHAPE MATERIAL	SPAN (ft)	RISE (ft)	MANNING n	INLET TYPE
1	90.80	88.00	518.01	2 RCP	4.50	4.50	.012	CONVENTIONAL
2								
3								
4								
5								
6								

SUMMARY OF CULVERT FLOWS (cfs) FILE: 98510D DATE: 06-14-1999

ELEV (ft)	TOTAL	1	2	3	4	5	6	ROADWAY	ITR
90.80	0.0	0.0	0.0	0.0	0.0	0.0	0.0	0.00	1
92.13	30.3	30.3	0.0	0.0	0.0	0.0	0.0	0.00	1
92.90	60.6	60.6	0.0	0.0	0.0	0.0	0.0	0.00	1
93.51	90.9	90.9	0.0	0.0	0.0	0.0	0.0	0.00	1
94.02	121.2	121.2	0.0	0.0	0.0	0.0	0.0	0.00	1
94.47	151.5	151.5	0.0	0.0	0.0	0.0	0.0	0.00	1
94.88	181.8	181.8	0.0	0.0	0.0	0.0	0.0	0.00	1
95.29	212.1	212.1	0.0	0.0	0.0	0.0	0.0	0.00	1
95.72	242.4	242.4	0.0	0.0	0.0	0.0	0.0	0.00	1
96.17	272.7	272.7	0.0	0.0	0.0	0.0	0.0	0.00	1
96.65	303.0	303.0	0.0	0.0	0.0	0.0	0.0	0.00	1
97.00	322.8	322.8	0.0	0.0	0.0	0.0	0.0	OVERTOPPING	

SUMMARY OF ITERATIVE SOLUTION ERRORS FILE: 98510D DATE: 06-14-1999

HEAD ELEV (ft)	HEAD ERROR (ft)	TOTAL FLOW (cfs)	FLOW ERROR (cfs)	% FLOW ERROR
90.80	0.000	0.00	0.00	0.00
92.13	0.000	30.30	0.00	0.00
92.90	0.000	60.60	0.00	0.00
93.51	0.000	90.90	0.00	0.00
94.02	0.000	121.20	0.00	0.00
94.47	0.000	151.50	0.00	0.00
94.88	0.000	181.80	0.00	0.00
95.29	0.000	212.10	0.00	0.00
95.72	0.000	242.40	0.00	0.00
96.17	0.000	272.70	0.00	0.00
96.65	0.000	303.00	0.00	0.00

<1> TOLERANCE (ft) = 0.010 <2> TOLERANCE (%) = 1.000

CURRENT DATE: 06-14-1999 FILE DATE: 06-14-1999
CURRENT TIME: 14:23:28 FILE NAME: 98510D

PERFORMANCE CURVE FOR CULVERT 1 - 2(4.50 (ft) BY 4.50 (ft)) RCP

DIS-CHARGE FLOW (cfs)	HEAD-WATER ELEV. (ft)	INLET CONTROL DEPTH (ft)	OUTLET CONTROL DEPTH (ft)	FLOW TYPE <F4>	NORMAL DEPTH (ft)	CRIT. DEPTH (ft)	OUTLET DEPTH (ft)	TW DEPTH (ft)	OUTLET VEL. (fps)	TW VEL. (fps)
0.00	90.80	0.00	0.00	0-NF	0.00	0.00	0.00	0.00	0.00	0.00
30.30	92.13	1.33	1.33	1-S2n	0.94	1.08	0.88	0.39	6.87	4.78
60.60	92.90	2.10	2.10	1-S2n	1.34	1.56	1.26	0.59	8.26	6.13
90.90	93.51	2.71	2.71	1-S2n	1.65	1.94	1.54	0.75	9.45	7.07
121.20	94.02	3.22	3.22	1-S2n	1.94	2.26	1.86	0.88	9.75	7.79
151.50	94.47	3.67	3.67	1-S2n	2.20	2.53	2.13	1.00	10.19	8.40
181.80	94.88	4.08	4.08	1-S2n	2.46	2.79	2.39	1.11	10.60	8.92
212.10	95.29	4.49	4.49	1-S2n	2.71	3.02	2.62	1.21	11.04	9.38
242.40	95.72	4.92	4.92	5-S2n	2.97	3.23	2.97	1.31	10.89	9.79
272.70	96.17	5.37	5.37	5-S2n	3.25	3.42	3.12	1.40	11.59	10.17
303.00	96.65	5.85	5.85	5-S2n	3.56	3.61	3.51	1.48	11.41	10.51

El. inlet face invert 90.80 ft El. outlet invert 88.00 ft
El. inlet throat invert 0.00 ft El. inlet crest 0.00 ft

**** SITE DATA ***** CULVERT INVERT **********

INLET STATION	0.00 ft
INLET ELEVATION	90.80 ft
OUTLET STATION	518.00 ft
OUTLET ELEVATION	88.00 ft
NUMBER OF BARRELS	2
SLOPE (V/H)	0.0054
CULVERT LENGTH ALONG SLOPE	518.01 ft

***** CULVERT DATA SUMMARY **********

BARREL SHAPE	CIRCULAR
BARREL DIAMETER	4.50 ft
BARREL MATERIAL	CONCRETE
BARREL MANNING'S n	0.012
INLET TYPE	CONVENTIONAL
INLET EDGE AND WALL	BEVELED EDGE (1.5:1)
INLET DEPRESSION	NONE

CURRENT DATE: 06-14-1999 FILE DATE: 06-14-1999
CURRENT TIME: 14:23:28 FILE NAME: 98510D

TAILWATER

******* REGULAR CHANNEL CROSS SECTION ********

BOTTOM WIDTH	15.00 ft
SIDE SLOPE H/V (X:1)	3.0
CHANNEL SLOPE V/H (ft/ft)	0.025
MANNING'S n (.01-0.1)	0.025
CHANNEL INVERT ELEVATION	88.00 ft
CULVERT NO.1 OUTLET INVERT ELEVATION	88.00 ft

******* UNIFORM FLOW RATING CURVE FOR DOWNSTREAM CHANNEL

FLOW (cfs)	W.S.E. (ft)	FROUDE NUMBER	DEPTH (ft)	VEL. (f/s)	SHEAR (psf)
0.00	88.00	0.000	0.00	0.00	0.00
30.30	88.39	1.345	0.39	4.78	0.61
60.60	88.59	1.408	0.59	6.13	0.92
90.90	88.75	1.441	0.75	7.07	1.16
121.20	88.88	1.463	0.88	7.79	1.38
151.50	89.00	1.479	1.00	8.40	1.56
181.80	89.11	1.491	1.11	8.92	1.73
212.10	89.21	1.501	1.21	9.38	1.89
242.40	89.31	1.509	1.31	9.79	2.04
272.70	89.40	1.516	1.40	10.17	2.18
303.00	89.48	1.521	1.48	10.51	2.31

ROADWAY OVERTOPPING DATA

ROADWAY SURFACE	PAVED
EMBANKMENT TOP WIDTH	510.00 ft
CREST LENGTH	10.00 ft
OVERTOPPING CREST ELEVATION	97.00 ft

FHWA CULVERT ANALYSIS, HY-8, VERSION 6.0

CURRENT DATE	CURRENT TIME	FILE NAME	FILE DATE
06-14-1999	14:32:43	98510D	06-14-1999

ááá

CULVERT AND CHANNEL DATA

ááá

CULVERT NO. 1		DOWNSTREAM CHANNEL	
CULVERT TYPE:	4.500 ft CIRCULAR	CHANNEL TYPE :	TRAPEZOIDAL
CULVERT LENGTH	= 518.008 ft	BOTTOM WIDTH	= 15.000 ft
NO. OF BARRELS	= 2.0	TAILWATER DEPTH	= 1.482 ft
FLOW PER BARREL	= 151.500 cfs	TOTAL DESIGN FLOW	= 303.000 cfs
INVERT ELEVATION	= 88.000 ft	BOTTOM ELEVATION	= 88.000 ft
OUTLET VELOCITY	= 11.410 fps	NORMAL VELOCITY	= 10.511 fps
OUTLET DEPTH	= 3.510 ft		

ááá

D_{50} = Ø.75'

ááá

RIPRAP STILLING BASIN -- FINAL DESIGN

ááá

THE LENGTH OF THE BASIN	= 30.047 ft
THE LENGTH OF THE POOL	= 20.031 ft
THE LENGTH OF THE APRON	= 10.016 ft
THE WIDTH OF THE BASIN AT THE OUTLET	= 15.000 ft
THE DEPTH OF POOL BELOW CULVERT INVERT	= 2.003 ft
THE THICKNESS OF THE RIPRAP ON THE APRON	= 2.250 ft
THE THICKNESS OF THE RIPRAP ON THE REST OF THE BASIN	= 1.500 ft
THE BASIN OUTLET VELOCITY	= 6.815 fps
THE DEPTH OF FLOW AT BASIN OUTLET	= 1.482 ft

ááá

18" BLEED-OFF PIPE

PIPE CULVERT ANALYSIS
COMPUTATION OF CULVERT PERFORMANCE CURVE

June 7, 1999

PROGRAM INPUT DATA

DESCRIPTION	VALUE
Culvert Diameter (ft)	1.5
FHWA Chart Number	1
FHWA Scale Number (Type of Culvert Entrance)	2
Manning's Roughness Coefficient (n-value)	0.013
Entrance Loss Coefficient of Culvert Opening	0.1
Culvert Length (ft)	35.0
Invert Elevation at Downstream end of Culvert (ft)	1.0
Invert Elevation at Upstream end of Culvert (ft)	1.18
Culvert Slope (ft/ft)	0.0051
Starting Flow Rate (cfs)	0.5
Incremental Flow Rate (cfs)	0.5
Ending Flow Rate (cfs)	25.5
Starting Tailwater Depth (ft)	0.0
Incremental Tailwater Depth (ft)	0.0
Ending Tailwater Depth (ft)	0.0

COMPUTATION RESULTS

Flow Rate (cfs)	Tailwater Depth (ft)	Headwater (ft) Inlet Control	Headwater (ft) Outlet Control	Normal Depth (ft)	Critical Depth (ft)	Depth at Outlet (ft)	Outlet Velocity (fps)
0.5	0.0	0.35	0.36	0.26	0.26	0.26	2.42
1.0	0.0	0.5	0.0	0.37	0.37	0.37	2.96
1.5	0.0	0.63	0.0	0.45	0.46	0.45	3.32
2.0	0.0	0.74	0.0	0.53	0.53	0.53	3.6
2.5	0.0	0.83	0.0	0.6	0.6	0.6	3.82
3.0	0.0	0.93	0.0	0.66	0.66	0.66	4.03
3.5	0.0	1.02	1.02	0.72	0.71	0.71	4.22
4.0	0.0	1.1	1.1	0.78	0.77	0.78	4.33
4.5	0.0	1.19	1.17	0.83	0.81	0.83	4.45
5.0	0.0	1.27	1.25	0.89	0.86	0.89	4.56
5.5	0.0	1.36	1.32	0.95	0.9	0.95	4.65
6.0	0.0	1.44	1.39	1.01	0.95	1.01	4.73
6.5	0.0	1.52	1.47	1.08	0.99	1.08	4.79
7.0	0.0	1.6	1.54	1.14	1.02	1.14	4.84
7.5	0.0	1.69	1.61	1.22	1.06	1.22	4.86
8.0	0.0	1.78	1.69	1.34	1.1	1.34	4.8
8.5	0.0	1.81	1.77	1.5	1.13	1.5	4.81
9.0	0.0	1.86	1.85	1.5	1.16	1.5	5.09
9.5	0.0	1.95	1.93	1.5	1.19	1.5	5.38
10.0	0.0	2.04	2.03	1.5	1.22	1.5	5.66
10.5	0.0	2.14	1.59	1.5	1.25	1.5	5.94
11.0	0.0	2.24	1.66	1.5	1.27	1.5	6.22
11.5	0.0	2.34	1.71	1.5	1.29	1.5	6.51
12.0	0.0	2.45	1.77	1.5	1.31	1.5	6.79
12.5	0.0	2.57	1.82	1.5	1.33	1.5	7.07
13.0	0.0	2.69	1.88	1.5	1.35	1.5	7.36
13.5	0.0	2.81	1.93	1.5	1.37	1.5	7.64
14.0	0.0	2.94	2.0	1.5	1.38	1.5	7.92
14.5	0.0	3.07	2.05	1.5	1.39	1.5	8.21
15.0	0.0	3.21	2.11	1.5	1.41	1.5	8.49
15.5	0.0	3.35	2.17	1.5	1.42	1.5	8.77
16.0	0.0	3.5	2.23	1.5	1.42	1.5	9.05
16.5	0.0	3.65	2.3	1.5	1.43	1.5	9.34
17.0	0.0	3.81	2.36	1.5	1.44	1.5	9.62
17.5	0.0	3.97	2.43	1.5	1.45	1.5	9.9
18.0	0.0	4.14	2.5	1.5	1.45	1.5	10.19
18.5	0.0	4.31	2.56	1.5	1.46	1.5	10.47

19.0	0.0	4.48	2.64	1.5	1.46	1.5	10.75
19.5	0.0	4.66	2.71	1.5	1.46	1.5	11.03
20.0	0.0	4.85	2.78	1.5	1.47	1.5	11.32
20.5	0.0	5.04	2.86	1.5	1.47	1.5	11.6
21.0	0.0	5.23	2.93	1.5	1.47	1.5	11.88
21.5	0.0	5.43	3.01	1.5	1.48	1.5	12.17
22.0	0.0	5.63	3.09	1.5	1.48	1.5	12.45
22.5	0.0	5.84	3.17	1.5	1.48	1.5	12.73
23.0	0.0	6.05	3.26	1.5	1.48	1.5	13.02
23.5	0.0	6.27	3.34	1.5	1.48	1.5	13.3
24.0	0.0	6.49	3.43	1.5	1.48	1.5	13.58
24.5	0.0	6.72	3.52	1.5	1.49	1.5	13.86
25.0	0.0	6.95	3.61	1.5	1.49	1.5	14.15
25.5	0.0	7.19	3.7	1.5	1.49	1.5	14.43

==========

HYDROCALC Hydraulics for Windows, Version 1.2a Copyright (c) 1996
Dodson & Associates, Inc., 5629 FM 1960 West, Suite 314, Houston, TX 77069
Phone:(281)440-3787, Fax:(281)440-4742, Email:software@dodson-hydro.com
All Rights Reserved.

24" BLEED-OFF PIPE

PIPE CULVERT ANALYSIS
COMPUTATION OF CULVERT PERFORMANCE CURVE

June 8, 1999

PROGRAM INPUT DATA

DESCRIPTION	VALUE
Culvert Diameter (ft)	2.0
FHWA Chart Number	1
FHWA Scale Number (Type of Culvert Entrance)	2
Manning's Roughness Coefficient (n-value)	0.013
Entrance Loss Coefficient of Culvert Opening	0.5
Culvert Length (ft)	15.0
Invert Elevation at Downstream end of Culvert (ft)	1.0
Invert Elevation at Upstream end of Culvert (ft)	1.1
Culvert Slope (ft/ft)	0.0067
Starting Flow Rate (cfs)	0.2
Incremental Flow Rate (cfs)	1.0
Ending Flow Rate (cfs)	42.2
Starting Tailwater Depth (ft)	0.0
Incremental Tailwater Depth (ft)	0.0
Ending Tailwater Depth (ft)	0.0

COMPUTATION RESULTS

Flow Rate (cfs)	Tailwater Depth (ft)	Headwater (ft) Inlet Control	Headwater (ft) Outlet Control	Normal Depth (ft)	Critical Depth (ft)	Depth at Outlet (ft)	Outlet Velocity (fps)
0.2	0.0	0.2	0.0	0.15	0.15	0.15	1.95
1.2	0.0	0.5	0.0	0.35	0.38	0.35	3.31
2.2	0.0	0.7	0.0	0.47	0.52	0.47	3.95
3.2	0.0	0.85	0.0	0.56	0.62	0.56	4.41
4.2	0.0	0.99	0.0	0.65	0.72	0.65	4.77
5.2	0.0	1.12	0.0	0.73	0.8	0.73	5.05
6.2	0.0	1.24	0.0	0.8	0.88	0.8	5.3
7.2	0.0	1.36	0.0	0.87	0.95	0.87	5.51
8.2	0.0	1.47	0.0	0.93	1.02	0.93	5.7
9.2	0.0	1.58	0.0	1.0	1.08	1.0	5.88
10.2	0.0	1.69	0.0	1.06	1.14	1.06	6.02
11.2	0.0	1.8	0.0	1.12	1.2	1.12	6.16
12.2	0.0	1.9	0.0	1.19	1.26	1.19	6.29
13.2	0.0	2.01	0.0	1.25	1.31	1.25	6.39
14.2	0.0	2.12	0.0	1.31	1.36	1.31	6.49
15.2	0.0	2.23	0.0	1.38	1.41	1.38	6.56
16.2	0.0	2.35	2.48	1.45	1.45	1.45	6.63
17.2	0.0	2.41	2.57	1.53	1.49	1.49	6.83
18.2	0.0	2.45	2.67	1.61	1.54	1.54	7.03
19.2	0.0	2.56	2.77	1.72	1.58	1.58	7.23
20.2	0.0	2.68	2.87	2.0	1.61	1.61	7.44
21.2	0.0	2.8	2.98	2.0	1.65	1.65	7.65
22.2	0.0	2.93	3.1	2.0	1.68	1.68	7.87
23.2	0.0	3.07	3.22	2.0	1.71	1.71	8.1
24.2	0.0	3.21	3.34	2.0	1.74	1.74	8.34
25.2	0.0	3.35	3.48	2.0	1.77	1.77	8.58
26.2	0.0	3.5	2.55	2.0	1.79	2.0	8.34
27.2	0.0	3.66	2.62	2.0	1.81	2.0	8.66
28.2	0.0	3.83	2.69	2.0	1.83	2.0	8.98
29.2	0.0	4.0	2.76	2.0	1.85	2.0	9.29
30.2	0.0	4.17	2.83	2.0	1.87	2.0	9.61
31.2	0.0	4.35	2.9	2.0	1.88	2.0	9.93
32.2	0.0	4.54	2.98	2.0	1.89	2.0	10.25
33.2	0.0	4.73	3.06	2.0	1.9	2.0	10.57
34.2	0.0	4.93	3.14	2.0	1.91	2.0	10.89
35.2	0.0	5.14	3.22	2.0	1.92	2.0	11.2
36.2	0.0	5.35	3.29	2.0	1.93	2.0	11.52

37.2	0.0	5.57	3.37	2.0	1.94	2.0	11.84
38.2	0.0	5.79	3.46	2.0	1.94	2.0	12.16
39.2	0.0	6.02	3.54	2.0	1.95	2.0	12.48
40.2	0.0	6.25	3.63	2.0	1.95	2.0	12.8
41.2	0.0	6.5	3.72	2.0	1.96	2.0	13.11
42.2	0.0	6.74	3.82	2.0	1.96	2.0	13.43

==========

HYDROCALC Hydraulics for Windows, Version 1.2a Copyright (c) 1996
Dodson & Associates, Inc., 5629 FM 1960 West, Suite 314, Houston, TX 77069
Phone:(281)440-3787, Fax:(281)440-4742, Email:software@dodson-hydro.com
All Rights Reserved.

42" CMP
LOCATED ON MCDOWELL ROAD
DOWNSTREAM OF
THUNDER MOUNTAIN

PIPE CULVERT ANALYSIS
COMPUTATION OF CULVERT PERFORMANCE CURVE

June 5, 1999

PROGRAM INPUT DATA

DESCRIPTION	VALUE
Culvert Diameter (ft)	3.5
FHWA Chart Number	2
FHWA Scale Number (Type of Culvert Entrance)	1
Manning's Roughness Coefficient (n-value)	0.021
Entrance Loss Coefficient of Culvert Opening	0.1
Culvert Length (ft)	50.0
Invert Elevation at Downstream end of Culvert (ft)	1.0
Invert Elevation at Upstream end of Culvert (ft)	1.5
Culvert Slope (ft/ft)	0.01
Starting Flow Rate (cfs)	50.0
Incremental Flow Rate (cfs)	5.0
Ending Flow Rate (cfs)	125.0
Starting Tailwater Depth (ft)	3.0
Incremental Tailwater Depth (ft)	0.1
Ending Tailwater Depth (ft)	4.5

COMPUTATION RESULTS

Flow Rate (cfs)	Tailwater Depth (ft)	Headwater (ft) Inlet Control	Headwater (ft) Outlet Control	Normal Depth (ft)	Critical Depth (ft)	Depth at Outlet (ft)	Outlet Velocity (fps)
50.0	3.0	3.35	3.39	2.37	2.21	3.0	5.7
55.0	3.1	3.58	3.61	2.56	2.32	3.1	6.1
60.0	3.2	3.82	3.84	2.76	2.43	3.2	6.51
65.0	3.3	4.14	4.09	3.03	2.53	3.03	7.34
70.0	3.4	4.45	4.39	3.5	2.62	3.5	7.28
75.0	3.5	4.7	4.76	3.5	2.71	3.5	7.8
80.0	3.6	5.02	5.11	3.5	2.79	3.5	8.32
85.0	3.7	5.36	5.47	3.5	2.87	3.5	8.83
90.0	3.8	5.71	5.84	3.5	2.94	3.5	9.35
95.0	3.9	6.09	6.23	3.5	3.01	3.5	9.87
100.0	4.0	6.49	6.64	3.5	3.07	3.5	10.39
105.0	4.1	6.91	7.06	3.5	3.12	3.5	10.91
110.0	4.2	7.35	7.49	3.5	3.17	3.5	11.43
115.0	4.3	7.81	7.95	3.5	3.21	3.5	11.95
120.0	4.4	8.29	8.42	3.5	3.25	3.5	12.47
125.0	4.5	8.79	8.9	3.5	3.28	3.5	12.99

HYDROCALC Hydraulics for Windows, Version 1.2a Copyright (c) 1996
Dodson & Associates, Inc., 5629 FM 1960 West, Suite 314, Houston, TX 77069
Phone:(281)440-3787, Fax:(281)440-4742, Email:software@dodson-hydro.com
All Rights Reserved.

APPENDIX F

Weighted C Factor Calculations

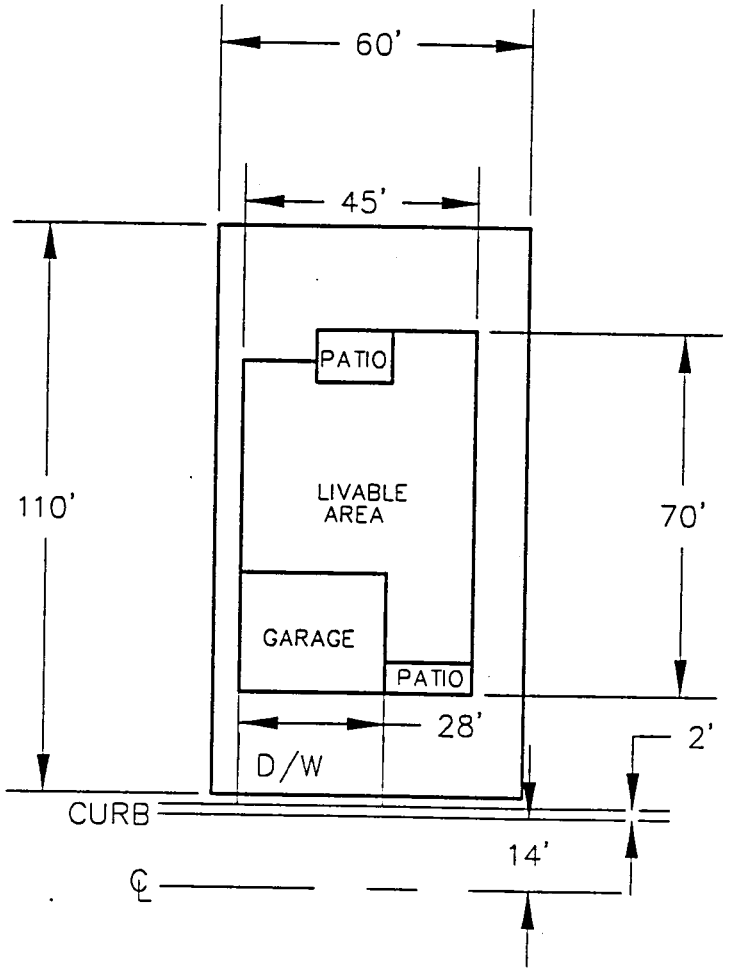

WEIGHTED "C" CALCUATIONS

ASPHALT & ROOFS: C=0.85
CONCRETE: C=0.95
DESERT & TURF LANDSCAPE: C=0.45

$$\text{WTD. "C"} = \frac{0.85(4030)+0.95(756)+0.45(4174)}{8960}$$

WTD. "C" = 0.67

WOOD/PATEL
ASSOCIATES
Civil Engineers
Hydrologists
Land Surveyors
(602) 234-1344

APPENDIX G

Rational Method Worksheet

Street Capacity Analysis

Grayfox at Las Sendas

Concentration Point	Note	Watersheds	Area (ac)	Coefficient	Length of Area (ft)	Average Velocity (fps)	Time of Concentration (min)	10-Year					100-Year				
								Intensity (in/hr)	Q (cfs)	Captured (cfs)	Resultant (cfs)	St. Capacity (cfs)	Intensity (in/hr)	Q (cfs)	Captured (cfs)	Resultant (cfs)	St. Capacity (cfs)
A	1	2	5.5	0.67	1,350	2.7	18	3.4	13	0	13	20	5.3	20	0	20	175
B	1	2 to 3	6.8	0.67	-	-	18	3.4	15	0	15	24	5.3	24	0	24	220
C	2	1 to 4	9.9	0.67	-	-	18	3.4	23	0	23	60	5.3	35	0	35	303
D	1	5	3.8	0.67	491	2.7	13	3.9	10	0	10	20	6.5	17	0	17	175
E	2	1 to 6	14.3	0.67	-	-	13	3.9	37	0	37	60	6.5	62	0	62	303
F	1	7	7.9	0.67	1,740	2.4	22	3.0	16	0	16	19	5.0	26	0	26	173
G	2	1 to 8	22.6	0.67	-	-	22	3.0	45	0	45	50	5.0	76	0	76	254
H	2	1 to 9	23.2	0.67	-	-	22	3.0	47	0	47	50	5.0	78	0	78	254
I	1	10	3.7	0.67	2,200	2.5	25	3.7	9	0	9	19	4.5	11	0	11	160
J	2,3	1 to 10	26.9	0.67	-	-	25	3.0	54	26	28	50	4.5	81	26	55	254
K	2, 4	1 to 11	27.3	0.67	-	-	22	3.0	55	55	0	50	5.0	91	91	0	200
L	1, 4	16	3.4	0.67	400	3.1	12	4.1	9	9	0	24	6.6	15	15	0	210
N	1, 4	17	5.9	0.67	800	2.5	15	3.7	15	15	0	18	6.0	24	24	0	166
O	1, 4	18	3.4	0.67	400	2.5	13	3.9	9	9	0	18	6.6	15	15	0	160
P	1,4	14	7.5	0.67	1,350	2.9	18	3.4	17	17	0	24	5.3	27	27	0	200

Notes:
1 - Proposed roadway with 4" roll curb
2 - Proposed roadway with 6" vertical curb and gutter
3 - On grade condition at catch basins / curb openings
4 - Sump condition at catch basins / curb openings

APPENDIX H

Street Capacity Charts

Street Capacity Computations

4" Roll Curb

Description: Calculation of Street Flow Conveyance Capacity

References: Federal Highway Administration, Hydraulic Engineering Circular No. 12, "Drainage of Highway Pavements", March 1984

CITY OF MESA ENGINEERING & DESIGN STANDARDS

Date: 01/08/99

Known Values:

Depth of Flow =	0.33 ft
Cross Slope =	0.02 ft/ft
Street Width (F/C to F/C) =	30 ft
Manning's "n" Value=	0.016

Calculated Values:

Referenced Equations:

$Q = 0.56 * (S_x^{1.67}) * (S^{0.5}) * (T^{2.67}) / n$ for flow below crown (FHWA Procedure)

$Q = 1.486 * A * (R^{0.67}) * (S^{0.5}) / n$ for flow above crown (Manning's equation)

where Q = flow rate, cfs; S_x = cross slope, ft/ft; S = longitudinal slope, ft/ft; T = width of flow, ft; A = conveyance area, sq ft; R = hydraulic radius, ft

Longitudinal Slope ft/ft	*Conveyance Area sq ft*	*Velocity fps*	*Hydraulic Capacity cfs*	*1/2 Street Hydraulic Capacity, cfs*
0.0020	5.40	1.30	7	4
0.0025	5.40	1.45	8	4
0.0030	5.40	1.59	9	4
0.0035	5.40	1.72	9	5
0.0040	5.40	1.83	10	5
0.0045	5.40	1.95	11	5
0.0050	5.40	2.05	11	6
0.0055	5.40	2.15	12	6
0.0060	5.40	2.25	12	6
0.0065	5.40	2.34	13	6
0.0070	5.40	2.43	13	7
0.0075	5.40	2.51	14	7
0.0080	5.40	2.59	14	7
0.0085	5.40	2.67	14	7
0.0090	5.40	2.75	15	7
0.0095	5.40	2.83	15	8
0.0100	5.40	2.90	16	8
0.0105	5.40	2.97	16	8
0.0110	5.40	3.04	16	8
0.0115	5.40	3.11	17	8
0.0150	5.40	3.55	19	10
0.0200	5.40	4.10	22	11
0.0300	5.40	5.02	27	14
0.0400	5.40	5.80	31	16
0.0500	5.40	6.49	35	18
0.0600	5.40	7.11	38	19

WOOD, PATEL & ASSOCIATES, INC., 10/97

N:\DRAINAGE\STCAP-R4.xls

6" above
4" Roll Curb

Street Capacity Computations

Description: Calculation of Street Flow Conveyance Capacity

References: Federal Highway Administration, Hydraulic Engineering Circular No. 12, "Drainage of Highway Pavements", March 1984

CITY OF MESA ENGINEERING & DESIGN STANDARDS

Date: 01/08/99

Known Values:

Depth of Flow =	0.83 ft
Cross Slope =	0.02 ft/ft
Street Width (F/C to F/C) =	30 ft
Manning's "n" Value=	0.016

Calculated Values:

Referenced Equations:

$Q = 0.56 * (S_x^{1.67}) * (S^{0.5}) * (T^{2.67}) / n$ for flow below crown (FHWA Procedure)

$Q = 1.486 * A * (R^{0.67}) * (S^{0.5}) / n$ for flow above crown (Manning's equation)

where Q = flow rate, cfs; S_x = cross slope, ft/ft; S = longitudinal slope, ft/ft; T = width of flow, ft; A = conveyance area, sq ft; R = hydraulic radius, ft

Longitudinal Slope ft/ft	*Conveyance Area sq ft*	*Velocity fps*	*Hydraulic Capacity cfs*	*1/2 Street Hydraulic Capacity, cfs*
0.0020	20.40	3.09	63	32
0.0025	20.40	3.46	71	35
0.0030	20.40	3.79	77	39
0.0035	20.40	4.09	83	42
0.0040	20.40	4.38	89	45
0.0045	20.40	4.64	95	47
0.0050	20.40	4.89	100	50
0.0055	20.40	5.13	105	52
0.0060	20.40	5.36	109	55
0.0065	20.40	5.58	114	57
0.0070	20.40	5.79	118	59
0.0075	20.40	5.99	122	61
0.0080	20.40	6.19	126	63
0.0085	20.40	6.38	130	65
0.0090	20.40	6.56	134	67
0.0095	20.40	6.74	138	69
0.0100	20.40	6.92	141	71
0.0105	20.40	7.09	145	72
0.0110	20.40	7.26	148	74
0.0115	20.40	7.42	151	76
0.0150	20.40	8.47	173	86
0.0200	20.40	9.78	200	100
0.0300	20.40	11.98	244	122
0.0400	20.40	13.84	282	141
0.0500	20.40	15.47	316	158
0.0600	20.40	16.94	346	173

Street Capacity Computations

6" Vertical Curb

Description: Calculation of Street Flow Conveyance Capacity

References: Federal Highway Administration, Hydraulic Engineering Circular No. 12, "Drainage of Highway Pavements", March 1984

CITY OF MESA ENGINEERING & DESIGN STANDARDS

Date: 01/08/99

Known Values:

Depth of Flow =	0.5 ft
Cross Slope =	0.02 ft/ft
Street Width (F/C to F/C) =	40 ft
Manning's "n" Value=	0.016

Calculated Values:

Referenced Equations:

$Q = 0.56 * (S_x^{1.67}) * (S^{0.5}) * (T^{2.67}) / n$ for flow below crown (FHWA Procedure)

$Q = 1.486 * A * (R^{0.67}) * (S^{0.5}) / n$ for flow above crown (Manning's equation)

where Q = flow rate, cfs; S_x = cross slope, ft/ft; S = longitudinal slope, ft/ft; T = width of flow, ft; A = conveyance area, sq ft; R = hydraulic radius, ft

Longitudinal Slope ft/ft	*Conveyance Area sq ft*	*Velocity fps*	*Hydraulic Capacity cfs*	*1/2 Street Hydraulic Capacity, cfs*
0.0020	12.00	1.82	22	11
0.0025	12.00	2.04	24	12
0.0030	12.00	2.23	27	13
0.0035	12.00	2.41	29	14
0.0040	12.00	2.58	31	15
0.0045	12.00	2.73	33	16
0.0050	12.00	2.88	35	17
0.0055	12.00	3.02	36	18
0.0060	12.00	3.16	38	19
0.0065	12.00	3.29	39	20
0.0070	12.00	3.41	41	20
0.0075	12.00	3.53	42	21
0.0080	12.00	3.65	44	22
0.0085	12.00	3.76	45	23
0.0090	12.00	3.87	46	23
0.0095	12.00	3.97	48	24
0.0100	12.00	4.08	49	24
0.0105	12.00	4.18	50	25
0.0110	12.00	4.28	51	26
0.0115	12.00	4.37	52	26
0.0150	12.00	4.99	60	30
0.0200	12.00	5.77	69	35
0.0300	12.00	7.06	85	42
0.0400	12.00	8.15	98	49
0.0500	12.00	9.12	109	55
0.0600	12.00	9.99	119.84	59.92

WOOD, PATEL & ASSOCIATES, INC., 1/98
N:\DRAINAGE\STCAP-V6.xls

6" above
6" Vertical Curb

Street Capacity Computations

Description: Calculation of Street Flow Conveyance Capacity

References: Federal Highway Administration, Hydraulic Engineering Circular No. 12, "Drainage of Highway Pavements", March 1984

CITY OF MESA ENGINEERING & DESIGN STANDARDS

Date: 01/08/99

Known Values:

Depth of Flow =	1	ft
Cross Slope =	0.02	ft/ft
Street Width (F/C to F/C) =	40	ft
Manning's "n" Value=	0.016	

Calculated Values:

Referenced Equations:

$Q = 0.56 * (S_x^{1.67}) * (S^{0.5}) * (T^{2.67}) / n$ for flow below crown (FHWA Procedure)

$Q = 1.486 * A * (R^{0.67}) * (S^{0.5}) / n$ for flow above crown (Manning's equation)

where Q = flow rate, cfs; S_x = cross slope, ft/ft; S = longitudinal slope, ft/ft; T = width of flow, ft; A = conveyance area, sq ft; R = hydraulic radius, ft

Longitudinal Slope ft/ft	*Conveyance Area sq ft*	*Velocity fps*	*Hydraulic Capacity cfs*	*1/2 Street Hydraulic Capacity, cfs*
0.0020	32.00	3.46	111	55
0.0025	32.00	3.87	124	62
0.0030	32.00	4.24	136	68
0.0035	32.00	4.58	147	73
0.0040	32.00	4.89	157	78
0.0045	32.00	5.19	166	83
0.0050	32.00	5.47	175	88
0.0055	32.00	5.74	184	92
0.0060	32.00	6.00	192	96
0.0065	32.00	6.24	200	100
0.0070	32.00	6.48	207	104
0.0075	32.00	6.70	214	107
0.0080	32.00	6.92	222	111
0.0085	32.00	7.14	228	114
0.0090	32.00	7.34	235	117
0.0095	32.00	7.54	241	121
0.0100	32.00	7.74	248	124
0.0105	32.00	7.93	254	127
0.0110	32.00	8.12	260	130
0.0115	32.00	8.30	266	133
0.0150	32.00	9.48	303	152
0.0200	32.00	10.95	350	175
0.0300	32.00	13.41	429	214
0.0400	32.00	15.48	495	248
0.0500	32.00	17.31	554	277
0.0600	32.00	18.96	606.66	303.33

APPENDIX I

Curb Opening, Catch Basin, and Storm Drain Calculations

Depressed Curb Opening Computations

Sump Conditions

Description:	Calculation of Curb Opening Catch Basin Capacity
References:	Maricopa County Hydraulics Manual, Equation 3.7
Date:	01/13/99

Referenced Equations:

$Q_i = C_w * (L + 1.8*W) * d^{1.5}$

where Q_i = intercepted flow rate, cfs
$C_w = 2.3$
L = length of opening, ft
W = width of opening, ft
d = depth of water at curb opening, ft

Location	*Intercepted Flow Rate, Q_i cfs*	*Width of Curb Opening ft*	*Length of Curb Opening ft*	*Depth of Flow at Curb Opening ft*
Concentration Point K	29.0	1.0	30.0	0.54
Concentration Point L	9.0	1.0	10.0	0.48
Concentration Point N	15.0	1.0	15.0	0.53
Concentration Point O	9.0	1.0	10.0	0.48
Concentration Point P	17.0	1.0	20.0	0.49

WOOD, PATEL & ASSOCIATES, INC., 1/99

N:\DRAINAGE\Depressed Curb Opening - Sump.xls

Pipe Report

Pipe	Up Node	Dn Node	Q (cfs)	Length (ft)	S (ft/ft)	Size	Roughness	Cap (cfs)	Up Invert (ft)	Dn Invert (ft)	Up Gr Elev (ft)	Dn Gr Elev (ft)	Up Cover (ft)	Dn Cover (ft)
P-1	I-1	J-2	13.00	32.00	0.020312	18 inch	0.013	14.97	1,599.56	1,598.91	1,603.56	1,603.30	2.50	2.89
P-2	I-2	J-2	13.00	5.00	0.020000	18 inch	0.013	14.85	1,599.56	1,599.46	1,603.56	1,603.30	2.50	2.34
P-3	J-2	J-3	26.00	150.00	0.007733	30 inch	0.013	36.07	1,598.81	1,597.65	1,603.30	1,601.70	1.99	1.55
P-4	J-3	J-4	26.00	77.00	0.007662	30 inch	0.013	35.90	1,597.55	1,596.96	1,601.70	1,600.89	1.65	1.43
P-5	J-4	Outlet	26.00	136.00	0.010000	30 inch	0.013	41.01	1,596.86	1,595.50	1,600.89	1,601.00	1.53	3.00

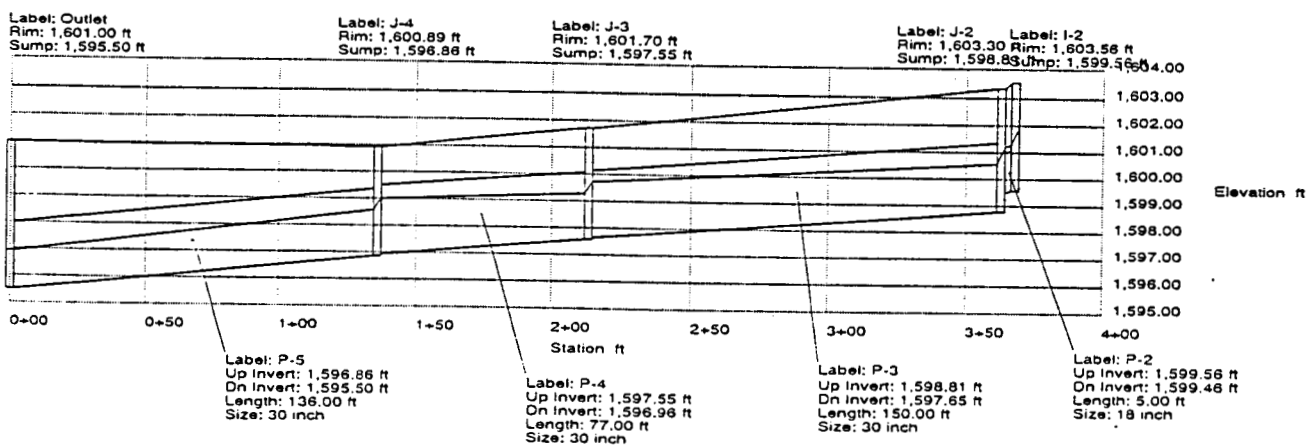
Label: Outlet
Rim: 1,601.00 ft
Sump: 1,595.50 ft
Label: J-4
Rim: 1,600.89 ft
Sump: 1,596.86 ft
Label: J-3
Rim: 1,601.70 ft
Sump: 1,597.55 ft
Label: J-2
Rim: 1,603.30
Sump: 1,598.8
Label: I-2
Rim: 1,603.56 ft
Sump: 1,599.56
1,604.00
1,603.00
1,602.00
1,601.00
1,600.00
1,599.00
1,598.00
1,597.00
1,596.00
1,595.00
Elevation ft
0+00
0+50
1+00
1+50
2+00
2+50
3+00
3+50
4+00
Station ft
Label: P-5
Up Invert: 1,596.86 ft
Dn Invert: 1,595.50 ft
Length: 136.00 ft
Size: 30 inch
Label: P-4
Up Invert: 1,597.55 ft
Dn Invert: 1,596.96 ft
Length: 77.00 ft
Size: 30 inch
Label: P-3
Up Invert: 1,598.81 ft
Dn Invert: 1,597.65 ft
Length: 150.00 ft
Size: 30 inch
Label: P-2
Up Invert: 1,599.56 ft
Dn Invert: 1,599.46 ft
Length: 5.00 ft
Size: 18 inch

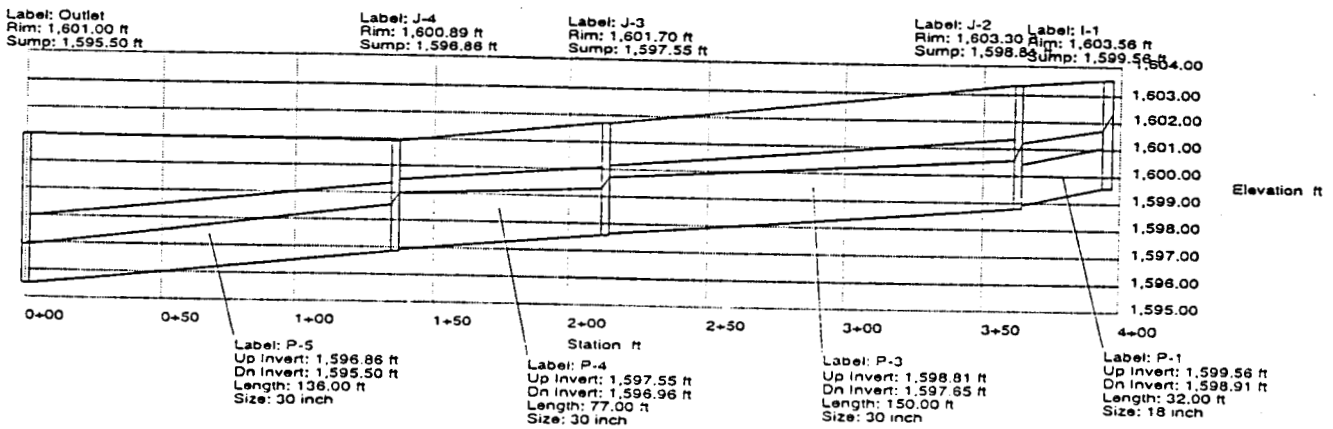
Label: Outlet
Rim: 1,601.00 ft
Sump: 1,595.50 ft
Label: J-4
Rim: 1,600.89 ft
Sump: 1,596.88 ft
Label: J-3
Rim: 1,601.70 ft
Sump: 1,597.55 ft
Label: J-2
Rim: 1,603.30 ft
Sump: 1,598.83
Label: I-1
Rim: 1,603.56 ft
Sump: 1,599.56 ft
1,604.00
1,603.00
1,602.00
1,601.00
1,600.00
1,599.00
1,598.00
1,597.00
1,596.00
1,595.00
Elevation ft
0+00
0+50
1+00
1+50
2+00
2+50
3+00
3+50
4+00
Station ft
Label: P-5
Up Invert: 1,596.86 ft
Dn Invert: 1,595.50 ft
Length: 136.00 ft
Size: 30 inch
Label: P-4
Up Invert: 1,597.55 ft
Dn Invert: 1,596.96 ft
Length: 77.00 ft
Size: 30 inch
Label: P-3
Up Invert: 1,598.81 ft
Dn Invert: 1,597.65 ft
Length: 150.00 ft
Size: 30 inch
Label: P-1
Up Invert: 1,599.56 ft
Dn Invert: 1,598.91 ft
Length: 32.00 ft
Size: 18 inch

PLATES

PLATE 1

Vicinity Map

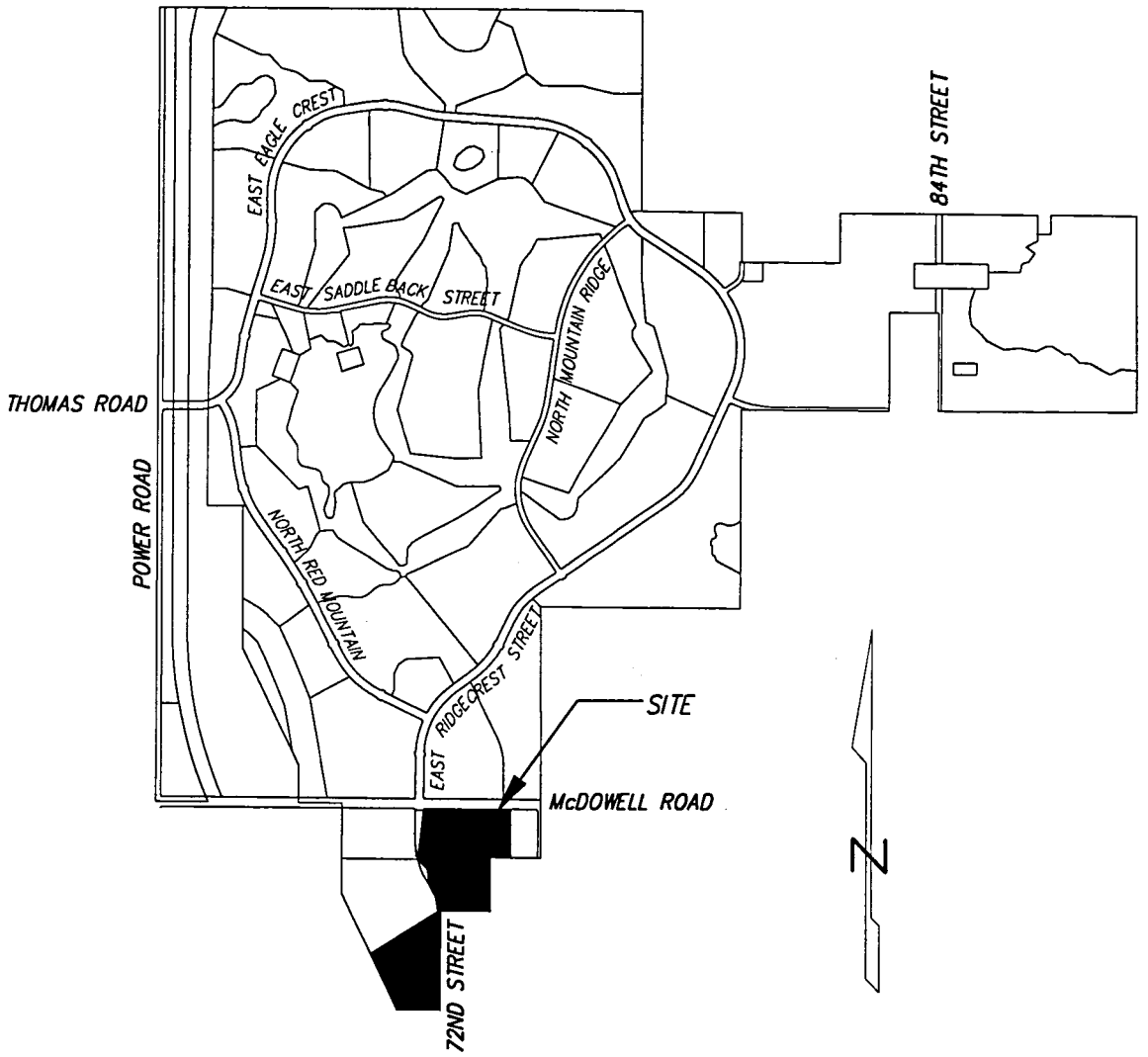

VICINITY MAP

N.T.S.

VICINITY MAP
PLATE 1

Gray Fox
at Las Sendas

WOOD/PATEL
ASSOCIATES
Civil Engineers
Hydrologists
Land Surveyors
(602) 234-1344

PLATE 2

Existing Conditions

Onsite Drainage Map

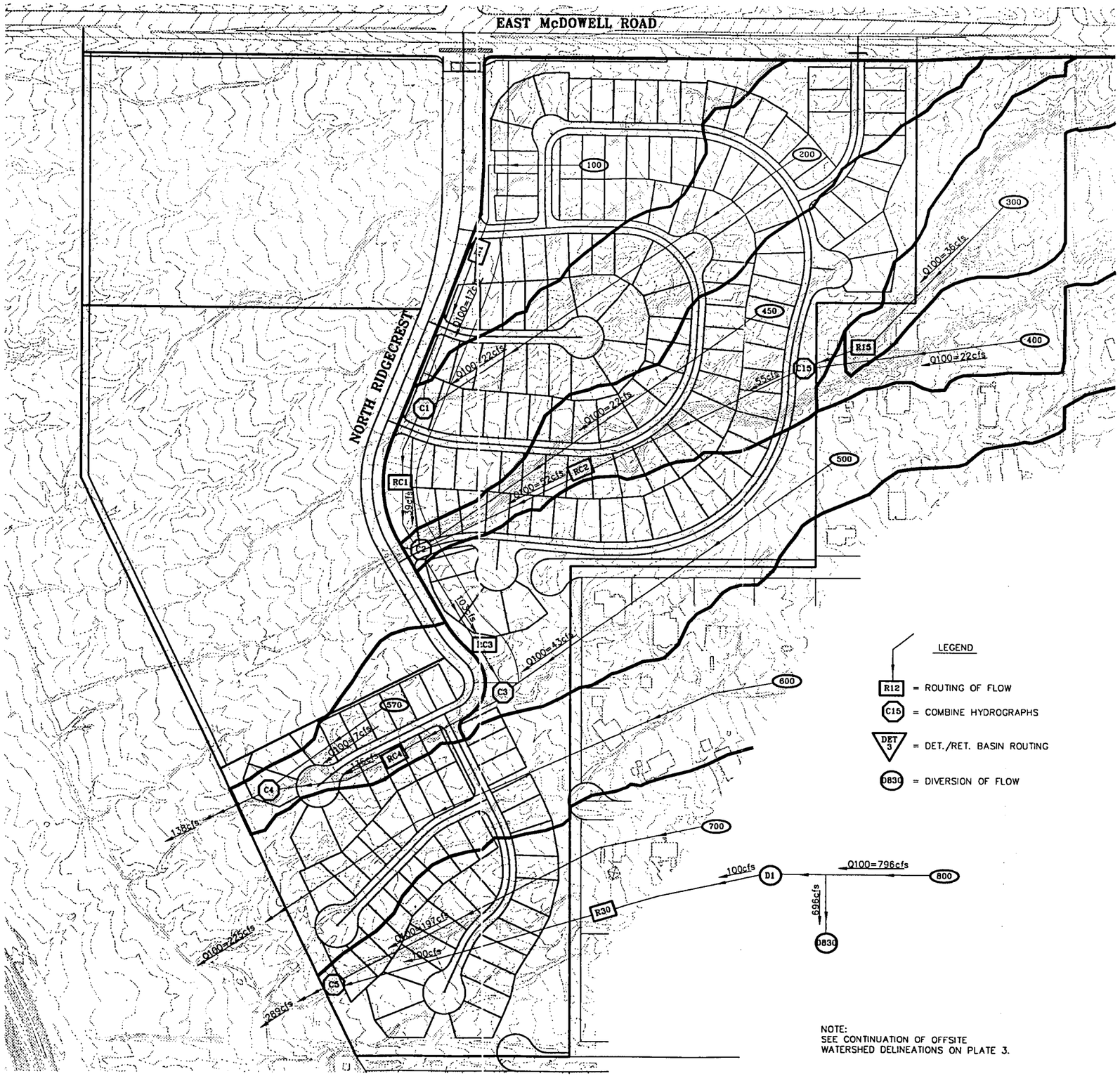

LEGEND

R12 = ROUTING OF FLOW

C15 = COMBINE HYDROGRAPHS

DET 3 = DET./RET. BASIN ROUTING

D830 = DIVERSION OF FLOW

NOTE:
SEE CONTINUATION OF OFFSITE WATERSHED DELINEATIONS ON PLATE 3.

PLATE 2

GRAYFOX
EXISTING CONDITIONS HEC-1 MODEL

WOOD/PATEL ASSOCIATES
Civil Engineers
Hydrologists
Land Surveyors
(602) 234-1344

SCALE N.T.S.	SHEET 2 OF 6
DATE 1-13-99	JOB NO. 98781
DESIGN CP	CHECK CP
DRAWN PJ	FILE 98781PLATE

PLATE 3

Existing Conditions

Offsite Watershed Drainage Map

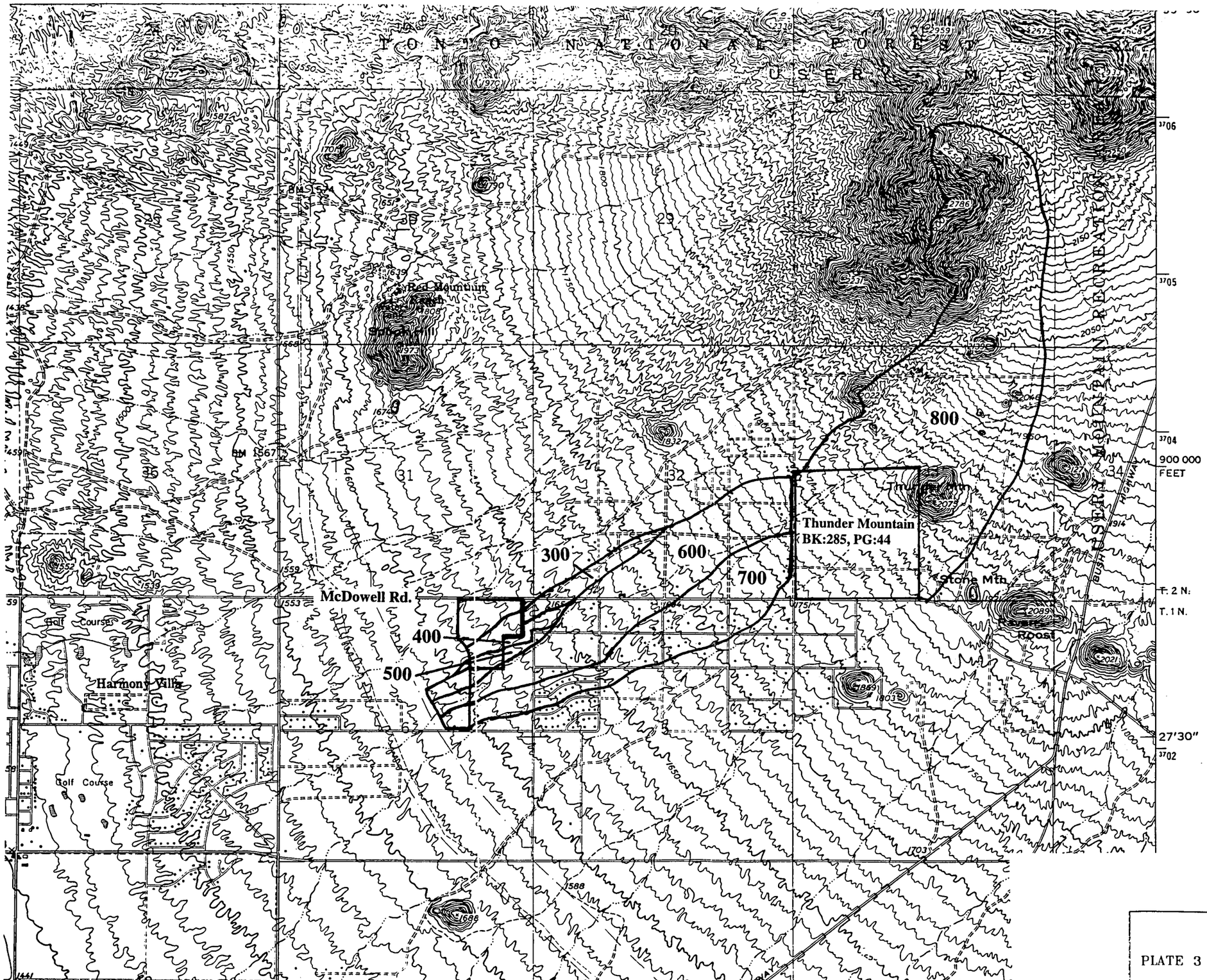

PLATE 3

GRAY FOX EXISTING
OFFSITE WATERSHEDS
DRAINAGE MAP

WOOD/PATEL ASSOCIATES Civil Engineers Hydrologists Land Surveyors (602) 234-1344	SCALE 1"=2000'	SHEET 3 OF 6
	DATE 12-18-98	JOB NO. 98778
	DESIGN HTY DRAWN HTY	CHECK HTY FIELD BOOK/PAGE

PLATE 4

Post-Development Conditions

Onsite Drainage Map

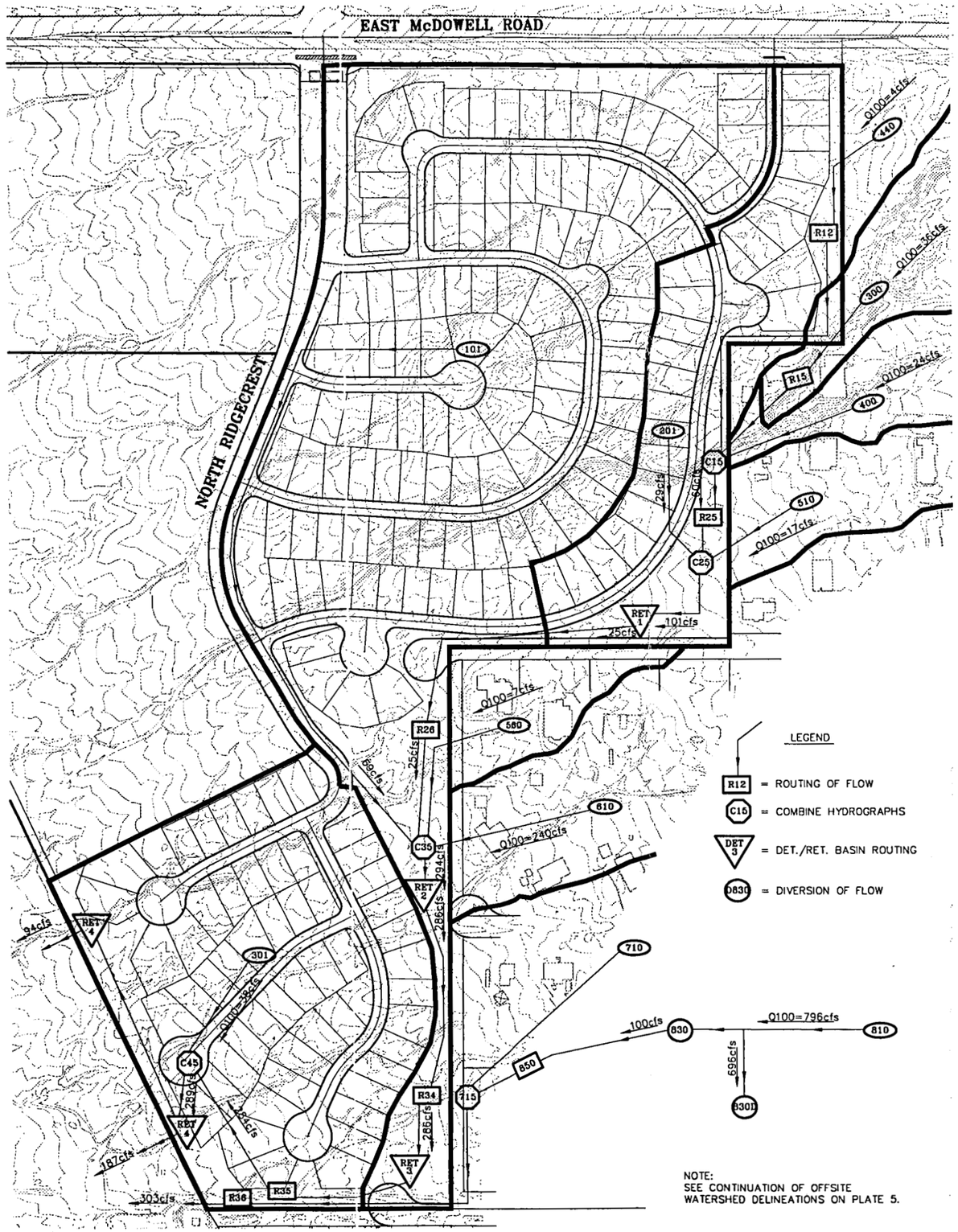

NOTE:
SEE CONTINUATION OF OFFSITE WATERSHED DELINEATIONS ON PLATE 5.

PLATE 4

GRAYFOX
POST-DEVELOPMENT CONDITIONS
HEC-1 MODEL

WOOD/PATEL ASSOCIATES
Civil Engineers
Hydrologists
Land Surveyors
(602) 234-1344

SCALE	SHEET
N.T.S.	4 OF 6
DATE	JOB NO.
1-13-99	98781
DESIGN BY	CHECK BY
DRAWN BY	FILE 98781R.DWG

PLATE 5

Post Development Conditions

Offsite Drainage Map

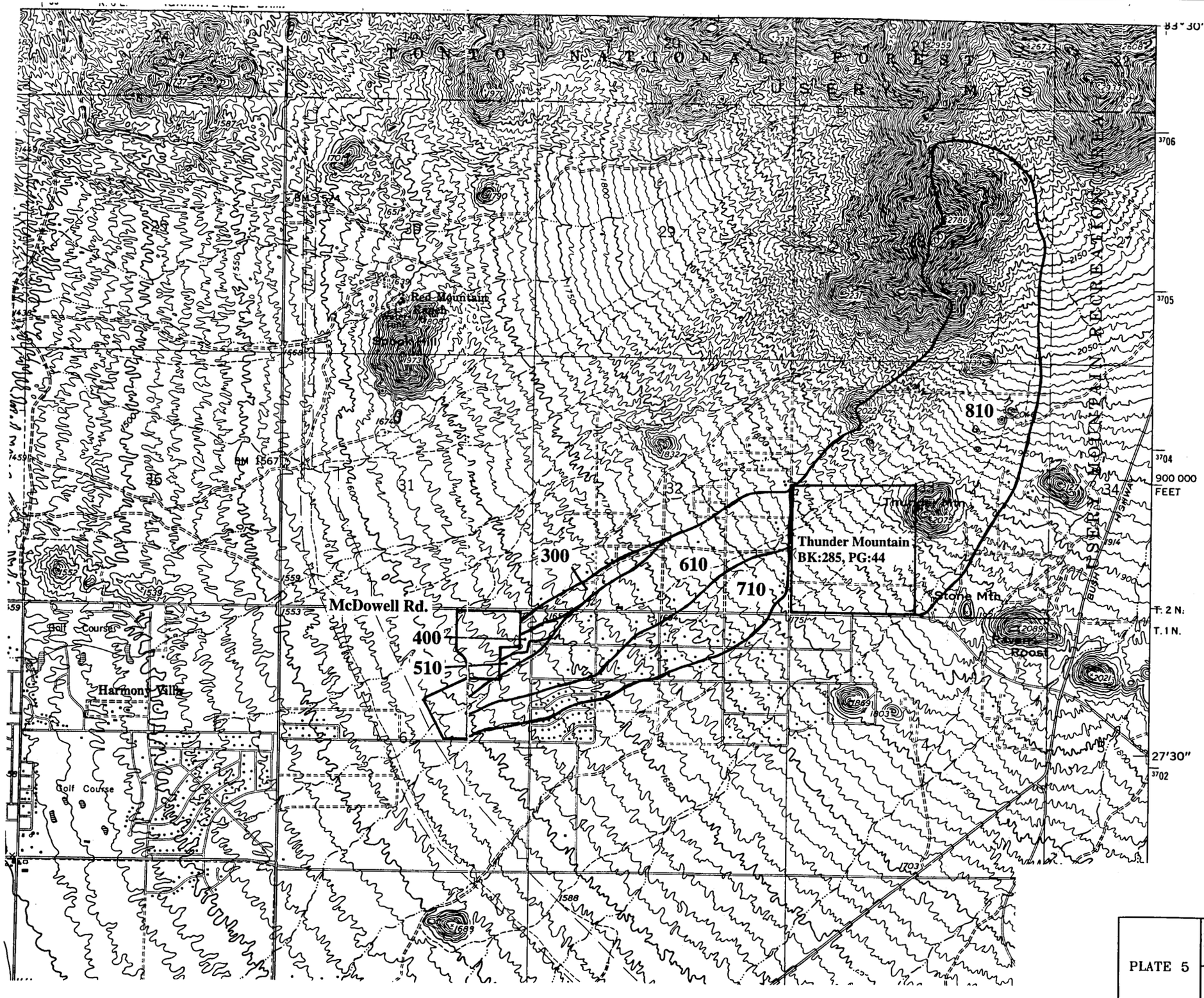

PLATE 5

GRAY FOX
POST-DEVELOPMENT
OFFSITE WATERSHEDS
DRAINAGE MAP

WOOD/PATEL ASSOCIATES Civil Engineers Hydrologists Land Surveyors (602) 234-1344	SCALE 1"=2000'	SHEET 5 OF 6
	DATE 12-16-98	JOB NO. 98778
	DESIGN HTT DRAWN HTT	CHECK HTT FIELD BOOK/PG HTT

PLATE 6

Onsite Drainage Map

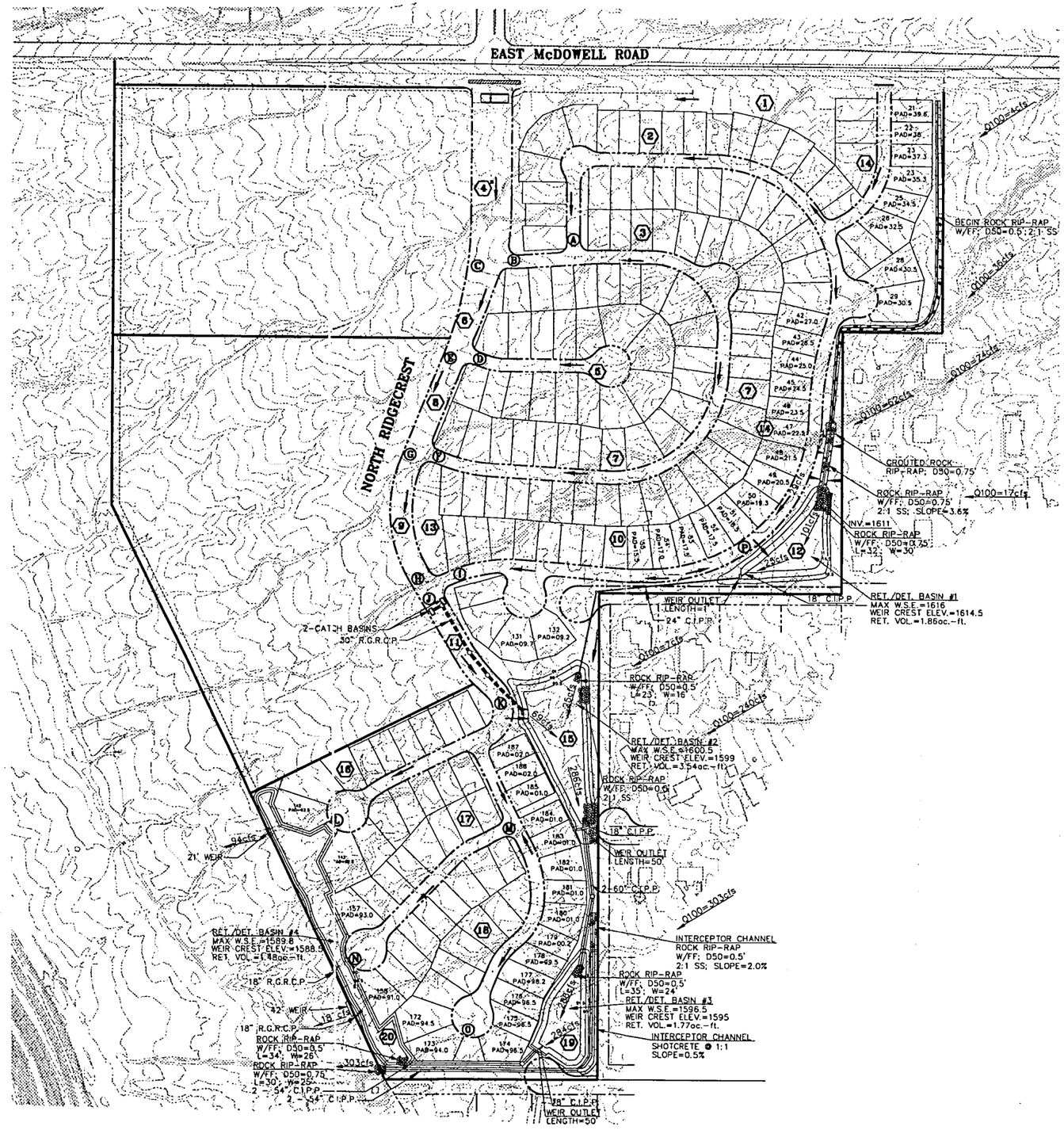

PLATE 6

GRAY FOX

POST DEVELOPMENT CONDITION

DRAINAGE MAP

WOOD/PATEL ASSOCIATES
Civil Engineers
Hydrologists
Land Surveyors
(602) 234-1344

SCALE	SHEET
N.T.S.	6 OF 6
DATE	JOB NO.
1-14-99	98781
DESIGN MTY	CHECK MTY
DRAWN MTY	FILE 98781P5.ATC