KARAN

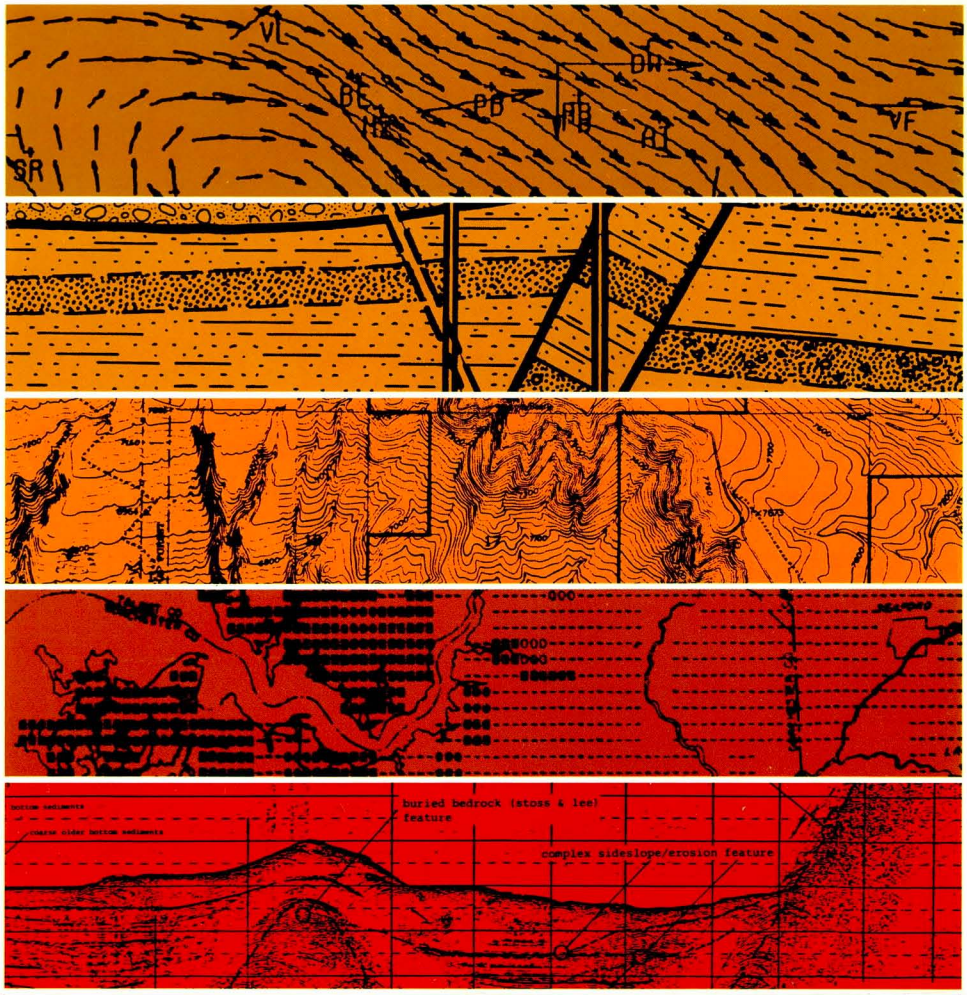

REPORT

HYDRAULIC AND GEOTECHNICAL ENGINEERING STUDIES CHANNEL BANK STABILIZATION AND PROTECTION NEW RIVER AND SKUNK CREEK FOR ELLIS-MURPHY, INC.

Dames & Moore

Appendix to
Design Report for Skunk Creek
Channel Improvements
by Ellis-Murphy, Inc.
May 4, 1987

Property of
Flood Control District of MC Library
Please Return to
2801 W. Durango
Phoenix, AZ 85009

REPORT

HYDRAULIC AND GEOTECHNICAL ENGINEERING STUDIES CHANNEL BANK STABILIZATION AND PROTECTION NEW RIVER AND SKUNK CREEK FOR ELLIS-MURPHY, INC.

Dames & Moore

Registered Professional Engineer (Civil)
CERTIFICATE NO. 14723
GEORGE J. REISER
Date Signed 4-27-87
ARIZONA, U.S.A.

D&M Job No. 15448-002-22
April 27, 1987

Registered Professional Engineer
CERTIFICATE NO. 15592
DEATHERAGE
Date Signed 4/27/87
ARIZONA, U.S.A.

Dames & Moore

Pointe Corporate Centre
7500 N. Dreamy Draw Drive
Suite 145
Phoenix, Arizona 85020
(602) 371-1110

April 27, 1987

D&M Job No. 15448-002-22

Ellis-Murphy, Inc.
7975 N. Hayden Road, #A-105
Scottsdale, Arizona 85258

Attention: Mr. John Lewis, P.E.
Project Manager

Gentlemen:

Enclosed are six (6) copies of the Final Report for the New River and Skunk Creek Hydraulic and Geotechnical Engineering Studies. We have enjoyed working on this most interesting and challenging project. If you have any questions, please do not hesitate to call us.

Very truly yours,

DAMES & MOORE
A Professional Limited Partnership

George J. Geiser, P.E.
Project Manager

W. Gary Rogers
Manager

WGR/lml
Enclosure

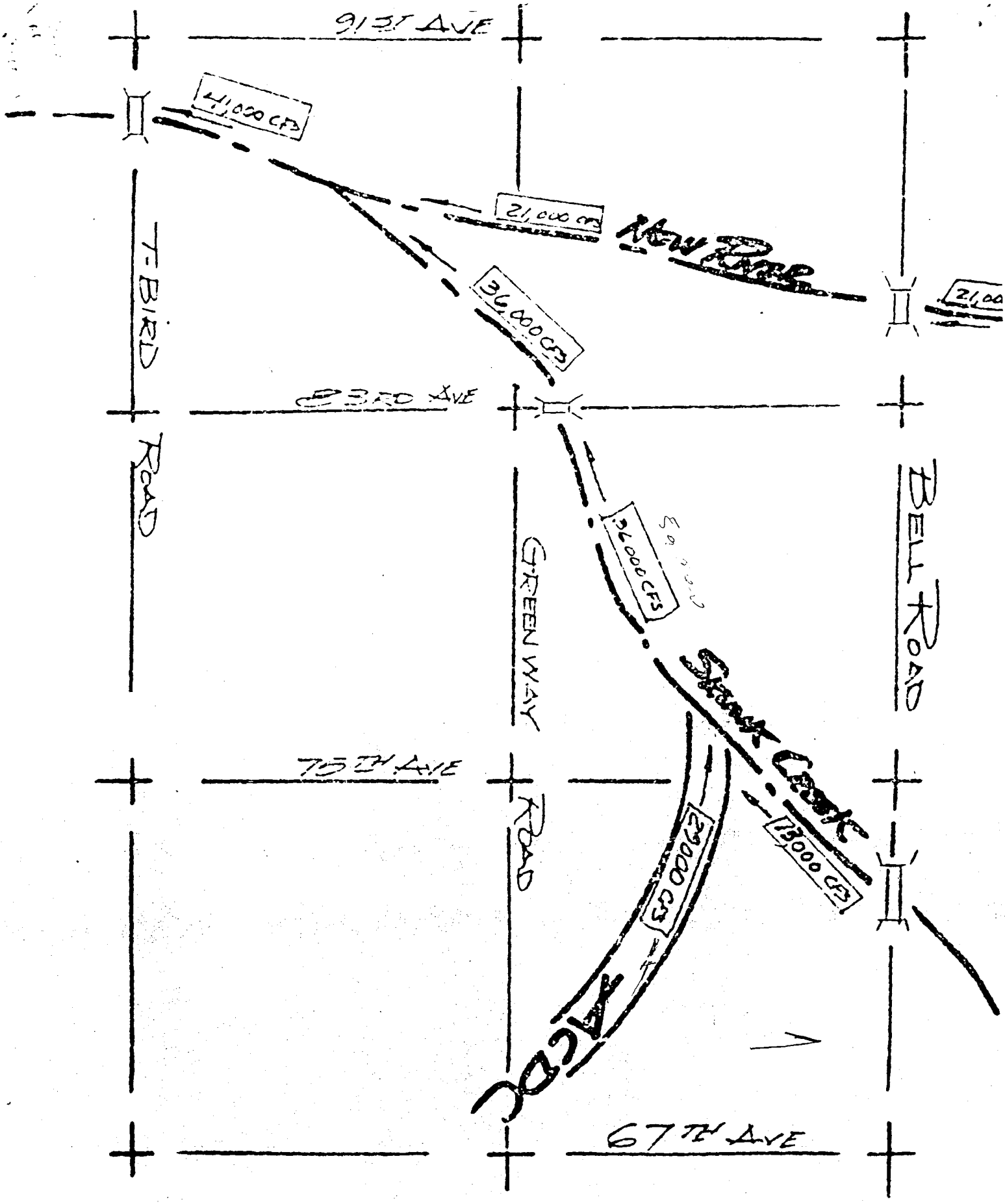
91ST AVE
41,000 CFS
21,000 CFS
New River
36,000 CFS
T-BIRD ROAD
83RD AVE
BELL ROAD
GREEN WAY ROAD
75TH AVE
Skunk Creek
23000 CFS
29000 CFS
Agua Fria
67TH AVE

REPORT

HYDRAULIC AND GEOTECHNICAL ENGINEERING STUDIES
CHANNEL BANK STABILIZATION AND PROTECTION
NEW RIVER AND SKUNK CREEK
FOR
ELLIS-MURPHY, INC.

Dames & Moore
A Professional Limited Partnership
Pointe Corporate Centre
7500 N. Dreamy Draw Drive, Suite 145
Phoenix, Arizona 85020

TABLE OF CONTENTS

		Page
1.0	INTRODUCTION	1-1
2.0	SCOPE OF WORK	2-1
3.0	GEOTECHNICAL INVESTIGATION	3-1
3.1	REGIONAL SETTING	3-1
3.2	LOCAL SETTING	3-2
3.3	SUBSURFACE CONDITIONS	3-4
3.4	GROUND WATER	3-6
3.5	STABILITY ANALYSIS	3-7
3.6	DISCUSSION AND RECOMMENDATIONS	3-7
3.7	INSPECTION DURING CONSTRUCTION	3-9
4.0	HYDRAULIC ANALYSIS	4-1
4.1	FACTORS AFFECTING ANALYSIS	4-1
4.1.1	Constraints	4-1
4.1.2	Assumptions	4-2
4.2	ALTERNATIVES EVALUATED	4-3
4.2.1	Uniformly Sloped, Clear Channel	4-4
4.2.1.1	Bridges	4-4
4.2.1.2	Bank Protection	4-5
4.2.1.3	Channel Stability	4-5
4.2.1.4	Evaluation of Uniformly Sloped, Clear Channel	4-6
4.2.2	Two Drop Structures in Clear Channel	4-6
4.2.2.1	Bridges	4-7
4.2.2.2	Bank Protection	4-7
4.2.2.3	Channel Stability	4-7

TABLE OF CONTENTS (Continued)

Page

4.2.2.4 Evaluation of Two Drop Structures in Clear Channel 4-8

4.2.3 Two Drop Structures with Bypass Channel 4-8

4.2.3.1 Bridges 4-9

4.2.3.2 Bank Protection 4-9

4.2.3.3 Channel Stability 4-9

4.2.3.4 Evaluation of Two Drop Structures with Bypass Channel 4-10

4.3 CHANNEL BANK STABILIZATION CONCEPTS 4-10

4.4 DROP STRUCTURE CONCEPTS 4-16

5.0 SUMMARY AND CONCLUSIONS 5-1

6.0 REFERENCES 6-1

APPENDICES
A - FIELD EXPLORATION AND LABORATORY TESTING
B - HEC-2 COMPUTER MODELING RESULTS

LIST OF TABLES

Table | Page

4-1 SUMMARY OF MANNING'S ROUGHNESS COEFFICIENTS FOR SKUNK CREEK 4-2

4-2 GROUTED RIPRAP PLACEMENT 4-14

4-3 UNGROUTED RIPRAP PLACEMENT 4-15

LIST OF PLATES
(Plates follow Section 6.0)

Plate

1 VICINITY MAP

2 TYPICAL SECTION FOR SOIL CEMENT

3 TYPICAL SECTION FOR GROUTED AND UNGROUTED RIPRAP AND GABIONS

4 CONCEPTUAL DROP STRUCTURE DETAIL (CAST-IN-PLACE CONCRETE)

5 CONCEPTUAL DROP STRUCTURE DETAIL (GROUTED RIPRAP)

1.0 INTRODUCTION

This report presents the results of Dames & Moore's hydraulic and geotechnical engineering studies for portions of Skunk Creek and New River near Peoria, Arizona. The upstream end of the study reach is bounded by Bell Road and the downstream end is near the confluence of New River and Skunk Creek, which is approximately one mile north of Thunderbird Road (see Plate 1). As a result of flood control structures recently completed upstream of the study reach, the flow regime within Skunk Creek and New River is controlled within relatively predictable limits. In the near future, the flow in the lower reach of Skunk Creek will be significantly increased above historic levels by flows from the Arizona Canal Diversion Channel (ACDC), which is presently under construction by the U.S. Army Corps of Engineers. The ACDC outfalls to Skunk Creek about 1-1/2 miles upstream of the Skunk Creek - New River confluence (see Plate 1).

The Desert Harbor development is also under construction near the confluence of the two drainage courses. The future high flowrates in Skunk Creek, after the completion of the ACDC, will necessitate significant channel improvements along lower Skunk Creek to protect the Desert Harbor development and other developed areas adjacent to these drainages from possible flood damages.

This report summarizes the geotechnical and hydraulic analysis performed for the study reach, and provides recommendations for channelization and channel bank stabilization along Skunk Creek within the study area. This investigation was authorized by Ellis-Murphy, Inc. (EMI) Purchase Order No. 1182, dated January 8, 1987. Numerous contacts with the Flood Control District (FCD) of Maricopa County provided valuable input to the study as it progressed.

2.0 SCOPE OF WORK

The scope of this investigation included hydraulic and geotechnical investigations. The hydraulic investigation included the following tasks:

- HEC-2 modeling of the study reach to estimate flow depths and velocities for the design flowrate;
- Evaluating the hydraulic adequacy of the existing 83rd Avenue bridge and the proposed Outer Loop Expressway bridges for the design flowrate;
- Identifying areas where channel improvements and/or bank protection and stabilization are required and provide two detailed alternative recommendations for bank protection and stabilization; and
- Evaluating the need for drop structures on Skunk Creek and provide two conceptual designs for any required drop structures.
- Providing no more than a Level I qualitative geomorphic analysis (ADWR, 1985) for channel improvements.
- Evaluating the need for detailed sediment transport studies based upon the improved channel configuration.

The geotechnical investigation included the following tasks:

- Reviewing available subsurface information within the vicinity of Skunk Creek;
- Completing a limited field exploration program to obtain additional subsurface information;
- Conducting a limited laboratory testing program to assist in evaluating pertinent physical characteristics of the soils; and
- Completing engineering analyses to evaluate the maximum safe steepness of channel side slopes and to provide design recommendations for erosion protection, as needed.

3.0 GEOTECHNICAL INVESTIGATION

As a portion of Dames & Moore's contract to provide hydraulic and geotechnical consulting services to Ellis-Murphy Inc. (EMI), a geotechnical field and laboratory investigation and a review of information supplied to Dames & Moore by EMI was conducted. The purpose of this study was to develop information on the engineering properties of the soils which will comprise the bottom and sides of the proposed new Skunk Creek channel. This information was used to help develop recommendations for the design of channel bank protection and drop structures.

The regional and local settings were described in the sediment transport study (Simons, Li and Associates, 1985) and are presented as summaries in Sections 3.1 and 3.2.

3.1 REGIONAL SETTING

The general site area consists of fairly flat valley land with regular alluvial slopes. The valleys are filled with alluvium. The older alluvium (Tertiary) consists of moderately to well consolidated residual and talus debris found alongside slopes of the valleys and underlying the recent alluvium (Quaternary). The floodplain deposits overlie or are cut into the alluvial valley deposits. These deposits consist of silts, sand and gravel. This alluvium contains appreciable amounts of firmly cemented, fine-grained soils of low permeability; however, most of the alluvium is unconsolidated sand and gravel with high permeabilities.

The soils in the lower alluvial valley are formed on either recent or old alluvium. Soils in or adjacent to the Skunk Creek and New River channels are characteristically deep, sandy and gravely soils. These gravely sandy soils consist of loamy fine sands formed in recent alluvial material and are moderately alkaline and slightly to strongly calcareous (Simons, Li and Associates, 1985).

3.2 LOCAL SETTING

The local setting was described in the sediment transport study (Simons, Li and Associates, 1985). The study indicates that the Skunk Creek bed material at Bell Road is relatively fine as compared to armored reaches below the Arizona Canal Diversion Channel (ACDC) outfall and near the 83rd Avenue bridge. Additionally, some caliche outcrops exist in this area.

At and below the ACDC outfall, the bed material is coarser than material immediately above the outfall and an armor layer has developed. Channelization below the ACDC outfall has resulted in a channel of relatively high conveyance (larger area, less resistance than upstream or downstream reaches). Bed material conditions in this channelized section are finer than upstream conditions with maximum particle sizes about 3 to 4 inches.

At 83rd Avenue, the bed is heavily armored with particle sizes as large as 6 to 8 inches; however, scour is occurring at the piers. Pilings are exposed on the downstream side of the second span (from north abutment) and on the upstream side of the third span.

From the 83rd Avenue bridge to the confluence with New River, the Skunk Creek channel is narrow, deeply incised and heavily vegetated. Conveyance appears to be less in this reach compared to upstream reaches.

The characteristics of the material forming the banks of channels are highly variable, although bank material particle sizes are typically equal to or smaller than the bed particles. Bank material deposited in a channel can be broadly classified as cohesive, non-cohesive, or stratified. Cohesive material is more resistant to surface erosion and has low permeability that reduces the effects of seepage, piping, and subsurface flow on the stability of the banks. However, such banks when undercut and/or saturated are more likely to fail due to mass wasting processes such as sliding or block failure.

Non-cohesive bank material tends to be removed grain by grain from the bank line. The rate of particle removal, and hence the rate of bank erosion, is affected by factors such as the direction and magnitude of the water adjacent to the bank, turbulent fluctuations, magnitude and fluctuations in the shear stress exerted on the banks, seepage forces, and piping and wave forces, many of which may act concurrently.

Stratified banks are very common in alluvial channels and generally are the product of past transport and deposition of sediment. More specifically, these types of banks consist of layers of materials of various sizes, permeability, and cohesion. Layers of non-cohesive material are subject to surface erosion, but may be partly protected by adjacent layers

of cohesive material. This type of bank is also vulnerable to erosion and sliding as a consequence of subsurface flows and piping.

Channel banks along the study reach of New River and Skunk Creek are typically stratified. In areas where the alluvium has not been recently disturbed or re-worked, the cohesive materials result in steep or vertical channel side slopes (Simons, Li and Associates, 1985).

3.3 SUBSURFACE CONDITIONS

Subsurface conditions at the site were explored by means of 21 backhoe pits excavated with a Ford 555A backhoe at locations indicated on the Vicinity Map, Plate 1. A discussion of the method of performing the field explorations, together with a detailed log of the test pits, are presented in Appendix A, Field Exploration and Laboratory Testing.

The subsurface conditions can be categorized into four general strata as described below:

Strata A

Relatively clean sands and gravels with trace to some cobbles and boulders.

Strata B

Silty and clayey sands and gravels with trace to some cobbles and boulders.

Strata C

Sandy clays and silts, silty clays, clayey silts, with trace gravels.

Strata D

Fill - silty sand, gravel and cobbles mixed with construction debris such as broken concrete, wood, car bodies, miscellaneous rubbish.

Typically the left and right banks (facing downstream) of Skunk Creek have a variable thickness of Strata B or C; fine-grained granular mixed soils overlying Strata A or B granular soils through the depths investigated. These soils are typically loose to medium dense at the surface, increasing to medium dense to very dense at depth. Consolidation testing shows some of the surface soils are moisture sensitive, and will collapse upon wetting. An active slope failure within the steeply sloping portion of the west channel bank was observed just downstream from Bell Road. In some areas, variable thicknesses of Strata D fill soils have been built up over the native soils. One noticeable extensive fill is in the left bank of the channel just below the confluence of New River and Skunk Creek. In this area more than 10 feet of Strata D fill material has been placed, extending over 320 feet east from the present left bank of the channel. Wood, car bodies, rubber tires, pipes, and miscellaneous rubbish and trash are visible along the side of the channel. A second area of significant filling is on the left bank of Skunk Creek just upstream from the 83rd Avenue bridge; its extent was not determined in the field program.

On the Skunk Creek channel bottom Strata A and B granular soils are mixed, in a loose to dense condition. Numerous areas of Strata C fine-grained soils are present, either as surface layers or as lenses within the investigated depth profile. One area along Skunk Creek just below Bell Road has an extensive surficial exposure of very stiff and cemented Strata C fine-grained soil in the channel bottom. Hard cemented zones of Strata C

soils were encountered at depth in both of the two proposed drop structure locations.

A review of test pits and boring logs produced for other construction in the area (ADOT, June 1986), (U.S. Army Corps of Engineers, undated) reveals that the interbedded sands and gravels have increased plastic fines to depths of 34 feet, and areas of higher cementation. The Arizona Department of Transportation excavated 23 test pits from 9 to 11 feet deep along the right bank of Skunk Creek from the ACDC outfall to the confluence of Skunk Creek and New River. The Corps of Engineers drilled two borings 21 feet and 34 feet deep, one near the ACDC outfall to Skunk Creek and the other located downstream from test pit $6C_L$ in Skunk Creek.

3.4 GROUND WATER

Perched ground water was encountered at a depth of 4 feet 8 inches in test pit $8C_L$ on 1/23/87. Ponded surface water was observed between test pits 4 C_L and 5 C_L as a result of irrigation water draining into the channel, and between test pits 5 C_L and 6 C_L due to ponding on the left overbank. Standing water was present just upstream of the 83rd Avenue bridge, and at the base of the extensive fill area on the channel's left bank just downstream from the Skunk Creek and New River confluence. During the drop structure test pit investigation on March 17, 1987, Skunk Creek was flowing at approximately 5 cfs near the 83rd Avenue bridge, and ground water was encountered at a depth of 4 feet in test pit A1 and at a depth of 2 feet in test pit A2. No water was encountered in the two test pits B1 and B2 excavated in the channel across from the horse track.

3.5 STABILITY ANALYSIS

Stability analyses were performed for typical channel bank configurations based on 2:1 (h:v) slopes. Chart stability methods (Tesarik and McWilliams, 1981) were used to analyze the stability of the slopes. A factor of safety of 1.8 was calculated for the design slope. Channel slopes as steep as 1-1/2:1 (h:v) would have a factor of safety of 1.5, and should be considered the maximum steepness for a safe slope. This analysis assumes drainage behind the slope protection to prevent buildup of hydrostatic pressures, and mobilized shear strength of any geosynthetic or erosion protection at least as high as the strength of the soils in the slope (c=100 psf, $\emptyset$=44°). After slope excavation and prior to placement of channel stabilization, all slopes should be observed by a qualified engineer to identify loose or soft soil or fill zones. These zones should be removed and replaced with engineered fill.

3.6 DISCUSSION AND RECOMMENDATIONS

The field investigation and laboratory testing program have defined the general site geotechnical parameters necessary for design of channel slope protection and drop structures. The top several feet of channel bank soils should be considered potentially moisture sensitive, and care should be taken to prevent ponding of surface water adjacent to the channel slope protection. Collapse and erosion of these fine-grained soils could result in voids developing behind the channel slope protection. In areas where surface water will run into the channel, the low density surface soils should be excavated to a depth of 3 feet and recompacted adjacent to the

channel slope protection. This reworking and compaction will decrease both the permeability and moisture sensitivity of the fine-grained, low-density surface soils.

The channel bottom soils are typically loose at the surface, and increase in relative density and cementation with depth. The foundation depths for the proposed drop structures in the channel near test pit B1 and B2, and downstream from the 83rd Avenue bridge, near test pits A1 and A2 are anticipated to be about 12 feet below the existing channel. Both structures should be founded on dense granular or stiff cohesive soils. Ground water perched over less pervious strata within the channel should be anticipated, with dewatering of drop structure or below grade channel slope protection excavations necessary.

Areas of landfill adjacent to the planned slope protection cause special concern from an environmental and geotechnical engineering standpoint. As the contents of the landfills are not known, care should be exercised when excavating into the landfills. Recommendations or guidelines from the Arizona Department of Water Resources and Arizona Department of Health Services relative to construction within an existing landfill should be identified and followed. The geotechnical investigation of 21 backhoe pits was not sufficient to identify all areas of significant filling adjacent to and within the channel of Skunk Creek, however the two most significant areas identified during this investigation appear to be immediately upstream of the 83rd avenue bridge on the left bank of the channel, and just downstream of the confluence of Skunk Creek and New River, on the left bank of the channel. The filling upstream of the 83rd Avenue

Bridge appears to be due to straightening of an old meander of Skunk Creek, while interpretation of aerial photographs suggests the downstream landfill has been located in a eroded area where flows from New River had impinged on the left channel bank.

The specific geotechnical design for construction behind the channel bank stabilization adjacent to the landfill was not addressed in this study. Additional site investigation and analysis are recommended in conjunction with regulatory requirements to address this issue.

Channel slope protection such as grouted riprap should be underlain with a woven geotextile to filter water which passes through the slope protection. Unfiltered fine-grained soils could be eroded out from under the slope protection, leaving voids which could cause settlement, excessive cracking, and possible failure of the channel slope protection.

3.7 INSPECTION DURING CONSTRUCTION

Soil conditions encountered during construction may differ in some areas from those encountered in the test pits previously completed. In order to permit correlation between soil data shown in this report and the actual soil conditions encountered during construction and to inspect for conformance with the plans and specifications, it is recommended that a qualified soil engineer be retained to perform construction inspection. Observations made during these inspections should include: 1) verification of adequacy of the excavation within the construction limits, 2) approval of

fill material, 3) verification of preparation of subgrade prior to fill and foundation installation, and 4) fill placement procedures and fill density testing.

4.0 HYDRAULIC ANALYSIS

4.1 FACTORS AFFECTING ANALYSIS

Some improvements to the drainage courses which affected the analysis of the study reach have already begun. These factors are discussed below as study constraints and study assumptions.

4.1.1 Constraints

The most significant constraint to the analysis is the U.S. Army Corps of Engineers (COE) proposed bank stabilization project along the left (east) bank of most of Skunk Creek from the ACDC outfall to 83rd Avenue. The COE project will include grouted rip-rap placed on a 2:1 (h:v) side slope from the ACDC outfall to just upstream of 83rd Avenue (U.S. Army Corps of Engineers, 1984). Consideration was given to preserving the 83rd Avenue bridge and to minimizing infringement upon the City of Peoria's Greenway Park, located on the right overbank approximately 1/2 mile upstream from 83rd Avenue. Also considered was minimizing impacts to the thickly vegetated area located in the channel immediately upstream of the 83rd Avenue bridge (see Plate 1).

Other constraints affecting the analysis included the proposed Outer Loop Expressway companion bridges and the proposed 12-foot high Desert Harbor drop structure (see Plate 1). It was required by the Flood Control District (FCD) that the 100-year design flow of 35,000 cubic feet per second (cfs) be contained in an incised channel. This means that no levees would

be allowed as part of the channelization project, except for freeboard. Freeboard for the bridges would be 4 feet above the 100-year water surface elevations. Freeboard for the channelized section away from the bridges could be less than 4 feet, but it was required by the FCD that a peak flow of 50,000 cfs would also be completely contained in the incised channel (FCD, 1987).

4.1.2 Assumptions

At the request of the FCD, the COE bank stabilization project, Outer Loop bridges and Desert Harbor drop structures were assumed to be in place for the baseline condition of this investigation. The design flow-rates for the study were also provided by the FCD. The 100-year peak flowrate in the study reach of Skunk Creek is 35,000 cubic feet per second (cfs). Coincident flowrates in New River and the ACDC are 41,000 cfs and 29,000 cfs, respectively (Simons, Li and Associates, Inc., 1985). Manning's roughness coefficients (n values) selected for use in the HEC-2 model are summarized in Table 4-1, presented below.

Table 4-1

SUMMARY OF MANNING'S ROUGHNESS COEFFICIENTS FOR SKUNK CREEK

Location	Manning's Roughness Coefficient (n value)
Natural channel bottom w/some vegetation	0.035
Riprapped channel side slopes	0.025
Overbank areas	0.030 - 0.035
Vegetated area on channel bottom	0.035 - 0.090

(Chow 1959)

Throughout all of the alternatives, the channel side slopes were modeled at 2:1 (h:v). This slope was selected to provide reasonable factor of safety against slope failure during rapid drawdown and moderate side slope seepage into the channel, and also to be compatible with the planned COE left bank. All alternatives assumed that the channel alignment would provide smooth curves between control points to minimize turbulence and control velocity transitions. Additional assumptions specific to each alternative examined are included below.

4.2 ALTERNATIVES EVALUATED

A total of three alternatives were evaluated during this study. The first alternative represented a fairly simple concept of a uniformly sloped, constant width trapezoidal channel cleared of all vegetation. Two subsequent modifications to this initial concept were completed in an attempt to meet study objectives.

All alternatives were modeled using the HEC-2 computer program for water surface profiles (USACOE, 1982). Cross-sectional data was obtained from three sources: New River cross sections were taken from previous studies (EMI, 1984 & 1985), Skunk Creek cross sections were provided by EMI engineering staff and supplemented by more detailed topographic information where available (USACOE, 1984), and cross sections for the ACDC were taken from the ACDC plans (USACOE, 1984). The results of the computer modeling are presented on the computer printout which are bound under separate cover and included with this report. A description of each alternative evaluated

is presented below along with comments on how well each model performed relevant to study objectives.

4.2.1 Uniformly Sloped, Clear Channel

This alternative included a uniform channel slope of 0.00356 foot/foot from the COE stabilizer section to the upstream edge of the proposed Desert Harbor drop structure. This alternative also has a uniform channel bottom width of 240 feet to provide a top width which could be constrained to an approximate 300-foot wide right-of-way.

4.2.1.1 Bridges

The proposed Outer Loop Expressway companion bridges were modeled as a single bridge with a total roadway width of 145 feet. The bridge design was taken from Arizona Department of Transportation (ADOT) drawings provided by EMI (ADOT 1986). The location for the proposed bridges was also provided by EMI (EMI 1987). The 83rd Avenue bridge across Skunk Creek is skewed to the flow and was modeled at its existing roadway width, approximately 55 feet, and lengthened from its present 204 feet to 320 feet to span the new channel. The proximity of the 83rd Avenue bridge foundation to the proposed channel invert and expected high flow velocities under the bridge would require heavy armoring of the channel and bridge abutments in the vicinity of the bridge. The heavy armoring would be required because even a minimal amount of local scour could expose the bridge foundation and potentially induce bridge failure. Because of the fixed locations of the upstream COE project and the downstream ADOT bridges, the bridge would also

have to be lengthened at both ends to span the proposed new channel. Velocities beneath the Outer Loop Expressway bridges and the 83rd Avenue bridge are both approximately 12 feet per second (fps).

4.2.1.2 Bank Protection

Velocities in the Skunk Creek channel ranged from approximately 10 to 14 fps. These high velocities would require that channel bank protection be provided along most of the study reach.

4.2.1.3 Channel Stability

No detailed analysis of sediment movement for the proposed channelization was called for in the scope of work. However, there may be significant changes in sediment movement patterns resulting from the combination of the increased flow potential and the channelization project. It is anticipated that lower flowrates will provide sediment to the study reach and this sediment may be deposited on the channel bottom at a variety of locations. The higher flowrates will probably remove most of these smaller fraction depositions as suspended or wash loads. The receding limb of the larger flow hydrographs may leave a significant volume of deposition material on the channel bed. Significant degradation and local scour may occur in the vicinity of the bridges and detailed design for these structures must accommodate potential problems of this type. The interaction of the ACDC, Skunk Creek and New River with flows peaking at different times represents a highly dynamic process which should be monitored after every major flow and on a periodic basis also. Only a detailed sediment transport

study based on the proposed new channel configuration could accurately estimate sediment movement patterns and long term channel stability.

4.2.1.4 Evaluation of Uniformly Sloped, Clear Channel

The estimated channel water surface elevations in the HEC-2 model for this alternative resulted in about 8 feet of freeboard for the Outer Loop Expressway bridges and roughly 5 feet of freeboard for the 83rd Avenue bridge. The clear channel alternative would require removing the thick vegetation upstream of 83rd Avenue. The toe of the proposed COE riprap was almost exposed at several locations in this alternative.

This alternative meets some of the design objectives but provides high velocities, requires removal of the thick vegetation upstream of 83rd Avenue and may endanger the COE riprap. In addition, the 50,000 cfs flow would require a levee adjacent to Greenway Park.

4.2.2 Two Drop Structures in Clear Channel

In an effort to decrease the velocities in the channel and maintain cover of the toe of the COE project, the slope of the channel was reduced to 0.002 foot/foot between the COE stabilizer section and two 6-foot drop structures proposed in this alternative. One 6-foot drop structure is proposed just upstream of the City of Peoria's Greenway Park, while the other is proposed just downstream of the 83rd Avenue bridge (see Plate 1).

4.2.2.1 Bridges

Both bridge designs used in this alternative were modeled as in the previous alternative. Velocities beneath both of the bridges remained at approximately 12 fps.

4.2.2.2 Bank Protection

The velocities projected by the HEC-2 model for this alternative would be 10 to 13 feet per second in the channel with velocities of up to 16 fps in the vicinity of the two drop structures. Channel bank protection would be required along most of the study reach.

4.2.2.3 Channel Stability

Channel stability conditions for this alternative would be different than for the uniformly sloped alternative. The velocities are somewhat lower, but are still high enough to easily move the smaller fractions of the bed material. The two drop structures will provide localized higher velocities and significant turbulence in the immediate vicinity. Care must be taken in the design of these facilities to protect the channel bottom and side slopes in these areas. As with the uniformly sloped alternative, inspection of the channel after major flows and on a periodic basis would be required.

4.2.2.4 Evaluation of Two Drop Structures in Clear Channel

Freeboard for the Outer Loop Expressway bridges remained fairly constant, while the freeboard for the 83rd Avenue bridge decreased to roughly 2.5 feet which is less than the 4 feet required by this study. The HEC-2 model prediction of the water surface elevation at the park facilities did not change significantly. The depth of cover for the COE riprap was increased with this alternative.

This alternative did not meet the 83rd Avenue bridge freeboard requirement or preserve the thick vegetation upstream of 83rd Avenue. It did provide slower velocities and more cover for the COE riprap. As with the uniformly sloped alternative, the 50,000 cfs flow would require a levee adjacent to Greenway Park.

4.2.3 Two Drop Structures with Bypass Channel

In order to evaluate preservation of the vegetated area, a bypass channel was modeled around the area. This was accomplished by increasing the channel base width (mostly on the north side) to approximately 400 feet in the vicinity of the vegetation. The channel section would still include a relatively flat channel bottom, but the vegetation would be left in place with the cleared bypass channel allowing flows around the vegetation. In order to contain the 50,000 cfs flow in an incised channel, the drop structure just upstream of the park was increased to a height of 7 feet and the drop structure just downstream of the 83rd Avenue bridge was lowered 1 foot.

4.2.3.1 Bridges

The Outer Loop Expressway bridges were modeled the same way as in the previous alternatives. However, as a result of the addition of the bypass channel, the 83rd Avenue bridge had to be lengthened to approximately 450 feet. The FCD indicated that for a bridge requirement of this length, the old bridge would be removed and a new bridge constructed. The new 83rd Avenue bridge was modeled at a roadway width of 80 feet. With this alternative, the flow velocities at the Outer Loop Expressway and 83rd Avenue bridges are estimated to be 11.3 and 10.4 fps, respectively.

4.2.3.2 Bank Protection

Velocities for this alternative were lower on average than the previous alternatives. The velocities ranged from approximately 6.5 to 13 feet per second. As with the previous alternative, localized higher velocities could reach 16 feet per second in the vicinity of the drop structures. These velocities still require bank protection throughout the study reach.

4.2.3.3 Channel Stability

Similar to the other alternatives, channel stability may be a problem for the bypass channel alternative. It is stressed here that detailed studies of sediment movement are not in the present scope of work. However, periodic monitoring and inspection of the channel after major flows should be completed as part of a rigorous maintenance program for the

project. The channel in the vicinity of the thick vegetation upstream of 83rd Avenue should be monitored closely as should the areas in the vicinity of the bridges, drop structures, and confluences of major drainages.

4.2.3.4 Evaluation of Two Drop Structures with Bypass Channel

Freeboard on the Outer Loop Expressway bridges for this alternative is about 10 feet, and freeboard on the new 83rd Avenue bridge would be about 6 feet. This alternative also provides reasonable flow velocities with the channel fully incised for both the design and the 50,000 cfs flows. It is important to note that the larger flows may be significantly affected by the vegetation on the channel bottom. The computer model cannot predict problems associated with local turbulence. Major flows may be directed by the vegetation to impinge on the adjacent channel banks and 83rd Avenue bridge abutments with localized higher velocities which could cause the bank protection to fail. It is also possible that a large flow could remove part or all of the vegetation and thus improve the flow characteristics.

Of the three alternatives evaluated during this study, this alternative appears to best meet all of the study objectives.

4.3 CHANNEL BANK STABILIZATION CONCEPTS

The selection of a concept for channel bank protection should be primarily based on economic considerations of placement and maintenance costs. Other considerations, such as aesthetic quality and compatibility with other structures should also be evaluated during the selection process.

A total of four channel bank protection measures were selected for consideration on this project. These are: soil cement, grouted riprap, ungrouted riprap and gabions. These are further described below along with our comments on their expected performance.

Toedown depths for each of the channel bank protection measures would be similar along the study reach since the presence of existing and planned grade control (drop) structures will minimize the potential for general degradation and undercutting of the bank protection measures. All of the recommendations for the proposed bank protection measures are based upon the fact that the drop structures will be constructed as proposed before the channel is ready for flows. A minimum toedown depth of 8 feet is proposed for the channel bank protection. This toedown depth is anticipated to intersect the more granular or stiffer cohesive soils. Alternatively, an apron of bank protection material about 4 feet thick could extend into the channel away from the toe a distance of about 20 feet. The apron may be easier to construct if ground water depths are shallow. However, the toedown would be preferred even if it means scheduling the construction during the dry period of the year and if dewatering was required.

The channel bank protection measures should extend above the water surface elevation to allow for wave runup, local turbulence, and any superelevation of the water adjacent to curves. The required freeboard should be 4 feet above the 100-year design flow water surface elevation.

The channel bank protection should also be tied into all drop structures and bridge abutments to provide smooth velocity transitions and

minimal turbulence in these areas. We recommended that the channel bank protection be installed along both sides of the full length of the study reach. However, some areas are more critical than others. These are listed below:

- Outer Loop bridge abutments
- 83rd Avenue bridge abutments
- Drop structures
- Adjacent to landfill on south bank downstream from Outer Loop bridge
- Confluence of New River and Skunk Creek
- Confluence of Skunk Creek and the ACDC

We recommend that at a minimum the following areas initially be provided with channel bank protection:

1. South bank of Skunk Creek from the downstream end of the COE grouted riprap past 83rd Avenue, the 6-foot high drop structure, the Outer Loop bridge, past the landfill and through the confluence with New River.

2. North bank of Skunk Creek from the upstream end of where the vegetation will be maintained on the channel bottom, extending downstream similar to the south bank to the confluence with New River.

3. North bank of Skunk Creek extending 100 feet upstream and 200 feet downstream of the 7-foot high drop structure.

4. North bank of Skunk Creek extending at least 200 feet upstream and 200 feet downstream from the confluence with the ACDC.

Areas which are not protected will be subject to bank erosion and possible slope failures during even small channel flows. Larger flows may erode behind the ends of any in-place bank protection and cause failure of the adjacent channel bank protection. Any channel improvement plan which does not include a full length channel bank protection concept should anticipate repeated maintenance for the channel.

Soil cement has been used extensively along the lower Agua Fria River and in Pima County. It has excellent application in alluvial channels, especially those which are not degrading and which also have soil that can be used in the soil cement construction. Alternatively local soil could be processed on site or soil for the soil cement mix could be imported. The soil cement can be placed by heavy equipment and then cut back to a smooth slope. Slopes steeper than 2:1 (h to v) would require less soil cement, but may make it difficult for people to climb out of the channel. Drainage behind the soil cement may be provided by a system of geotextile encapsulated corrugated HDPE drainage pipes which would extend parallel to the channel 18 inches above the flow line, with outlets into the channel at about 500-foot intervals. A typical section of a soil cement channel bank protection concept is presented on Plate 2.

Grouted riprap has been proposed by the COE for channel bank protection along the left bank for most of the channel between the Arizona Canal Diversion Channel outfall and 83rd Avenue. Grouted riprap could also be used for bank protection along both sides of the remainder of the proposed new channel. The grout should extend through the full thickness of the riprap. One advantage of the grouted riprap is that smaller rock may be used than would be required with ungrouted riprap. However, the grouted riprap is less likely to settle uniformly during a slope failure. The size of the riprap is primarily a function of adjacent flow velocities. The riprap should be laid over a filter fabric placed over the compacted soil. Table 4.2 presents design criteria for the range of velocities which are expected to occur during passage of the design flow. Drainage behind the grouted riprap may be provided by a system of geotextile encapsulated

corrugated high density polyethylene (HDPE) drainage pipes which would extend parallel to the channel 18 inches above the flow line, with outlets into the channel at about 500-foot intervals. A typical section of a grouted riprap channel bank protection concept is presented on Plate 3.

Table 4-2

GROUTED RIPRAP PLACEMENT

	HEC-2 ANALYSES		PROPOSED RIPRAP DESIGN[a]		
Reach Location	Section Numbers	Velocity Range Ft/Sec	Minimum d_{50} Inches	d_{100} Inches	Minimum Blanket Thickness Inches
New River from D.H. drop past landfill to Outer Loop bridge	4.0 - 7.1	6 - 8	8	12	12
Skunk Creek from Outer Loop to 6-foot drop	7.6 - 12.0				
Under Outer Loop bridge	7.1 - 7.6	8 - 13	12	18	18
Under 83rd Ave. bridge	13.2 - 15.0				
Upstream of 83rd Ave. and downstream of 7-foot drop	15.0 - 24.8				
Upstream of 7-foot drop and downstream of ACDC outfall	24.9 - 29.0				
100 feet upstream and 200 feet downstream of 2 drop structures	----------	12 - 16	28	40	40

[a]CANMET

Ungrouted riprap would serve well as a bank stabilization measure. The proposed 2:1 (h to v) channel sideslopes are compatible with this measure and the riprap should be laid over a sand bedding underlain with Mirafi 600x woven geotextile (or equal) placed over the compacted soil. The

ungrouted riprap is somewhat more flexible than the grouted riprap. However, it requires that larger rock be used than for the grouted riprap bank protection concept. The riprap sizing and extent would primarily be a function of adjacent flow velocities. Table 4-3 presents design criteria for the range of velocities which are expected to occur during passage of the design flow. A typical section of an ungrouted riprap channel bank protection concept is presented on Plate 3.

Table 4-3

UNGROUTED RIPRAP PLACEMENT

	HEC-2 ANALYSES		PROPOSED RIPRAP DESIGN[a]		
Reach Location	Section Numbers	Velocity Range Ft/Sec	Minimum d_{50} Inches	d_{100} Inches	Minimum Blanket Thickness Inches
New River from D.H. drop past landfill to Outer Loop bridge	4.0 - 7.1	6 - 8	12	18	18
Skunk Creek from Outer Loop to 6-foot drop	7.6 - 12.0				
Under Outer Loop bridge	7.1 - 7.6	8 - 13	18	27	27
Under 83rd Ave. bridge	13.2 - 15.0				
Upstream of 83rd Ave. and downstream of 7-foot drop	15.0 - 24.8				
Upstream of 7-foot drop and downstream of ACDC outfall	24.9 - 29.0				
100 feet upstream and 200 feet downstream of 2 drop structures	----------	12 - 16	42	60	60

[a]CANMET

Gabions could also be used for the channel bank stabilization. The gabions should be placed over Mirafi 600x woven geotextile (or equal) which has been laid over the compacted 2:1 (h to v) channel side slopes. Care must be taken in selection of the gabion material to provide a final product which will be compatible with the chemical conditions of the soil and water and which can withstand the abrasive and impact forces of the moving bed load during the design flow. A gabion supplier should be consulted during final design of this concept. However, a 1-foot thick gabion blanket would probably adequately protect the channel side slope against velocities of 10 fps, or less. Higher velocities would require a 2- or 3-foot thick layer. A typical section of a gabion channel bank protection concept is presented on Plate 3.

4.4 DROP STRUCTURE CONCEPTS

The proposed drop structures were designed at the conceptual level for this study. Drop structures can be constructed of a variety of materials including; cast-in place concrete, pre-cast concrete, soil cement, gabions and grouted riprap. However, the finished project must be capable of surviving all the structural loadings during the passage of the design hydrograph and also withstanding the abrasive and dynamic conditions provided by the bed and wash loads. Two alternative drop structure designs are presented below along with conceptual criteria for their design. Final design will require additional review of the site conditions and should include detailed structural analysis and cost comparisons.

A cast-in-place concrete drop structure would be similar to the drop structure designed for the Desert Harbor development. The cast-in-place concrete can be designed for the structural loads and the higher strength concrete mixes will not be significantly damaged by sediment particles. The cast-in-place concrete drop structure concept is recommended for the Skunk Creek reach under study. A conceptual cross section of a cast-in-place drop structure is presented on Plate 4.

Because of the relatively low heights (6 and 7 feet) of the proposed drop structures, grouted riprap may also be used to construct the drop structures. This design would be similar to the 4-foot-high drop structure designed by the COE and already in place near the lower end of the ACDC. The grouted riprap concept can also be designed to be structurally sound through the passage of the design hydrograph and withstand sediment impacts. A conceptual cross section of a grouted riprap drop structure is presented on Plate 5.

5.0 SUMMARY AND CONCLUSIONS

The proposed changes in flowrate and channel geometry are considered major changes for the study reach of Skunk Creek. However, the geotechnical and hydraulic studies completed for this project indicate that the proposed improvements will be adequate to safely pass the 100-year flow and that a flow of 50,000 cfs will be contained within the incised channel. The proposed design is summarized in the following paragraphs.

A trapezoidal earth-bottom channel is proposed to extend from the stabilizer section near the ACDC outfall to the Desert Harbor drop structure. The channel should have a bottom width of 240 feet over most of the study reach with a wider section in the vicinity of the thick vegetation just upstream of 83rd Avenue. The channel should have 2:1 (h:v) or flatter side slopes over the entire study reach. The channel side slopes should be protected over the full length with a layer of soil cement to minimize bank erosion and lateral channel migration. Meetings held during the course of the study indicate that the 2:1 side slopes protected by soil cement are the concept preferred by the FCD staff. The report identifies those areas which are more critical for the bank protection application. The soil cement should extend 4 feet above the 100-year flow water surface elevation and 8 feet below the finished channel invert elevation. The grouted riprap channel bank protection proposed by the Corps of Engineers (COE) for the left bank upstream of 83rd Avenue should be re-evaluated based on the hydraulic conditions caused by the new channel configuration. The channel improvements proposed in this report will provide different water velocities with lower channel inverts and water surface elevations.

Two drop structures are included in the recommended channel design alternative to produce lower flow velocities and help provide a completely incised channel for a flow of 50,000 cfs. These drop structures should be constructed of cast-in-place reinforced concrete to heights of 6 and 7 feet, respectively. The concrete drop structures should be tied into the soil cement channel bank protection at both sides of the channel so that flows can not cut into the banks or undercut the drop structures.

The new bridges proposed to cross the study reach should provide a minimum of 4 feet of freeboard between 100-year water surface elevation and bridge low chord. The proposed Outer Loop bridges as presently designed are significantly higher than this already. The new 83rd Avenue bridge should not require significant abutment fill to meet this objective.

A significant percentage of the soils which need to be excavated during channel construction are generally suitable for use in the soil cement placement. Based upon the limited geotechnical program completed to date the soils underlying the proposed channel bottom appear adequate to support the proposed structural elements of the new channel project. However, more detailed foundation studies should be completed before final design of any of the structures (eg. bridges, drop structures, etc.).

A detailed sediment transport study is required to accurately evaluate sediment movement patterns in the new channel. However, this analysis is complicated in that flows in the ACDC, Skunk Creek, and New River do not have coincident peaks and this may be a critical element in any sediment transport studies.

The hydraulic analysis completed for this study was based on several major constraints and assumptions as listed in Section 4.1. If any of these constraints or assumptions are, in the future found invalid, then this study should be considered obsolete and additional studies initiated to model the study reach with modified constraints or assumptions.

The geotechnical recommendations made in this report are based on the assumption that the soil conditions do not vary appreciably between the test pits. The subsurface information presented in this report does not constitute a direct or implied warranty that the soil conditions between test pit locations can be directly interpolated or extrapolated or that soil conditions and/or variations different from those disclosed by the test pits will not be revealed.

Dames & Moore has prepared this report to aid in the evaluation of the site and to assist in channel protection and drop structure design of this project. We have developed our conclusions and recommendations in accordance with generally accepted professional engineering principles and practices. We make no other warranty either expressed or implied. Our conclusions are based on the results of our previous field explorations and laboratory testing and on our interpretations of subsurface conditions between and beyond these explorations. If the contractor encounters conditions that appear different from those described in our report, Dames & Moore should be notified so that we may review and verify or modify our recommendations.

6.0 REFERENCES

Arizona Department of Transportation, July 1986, Plans for Outer Loop Bridges over Skunk Creek.

_____, June 1986, Outer Loop Stage II, Northern Avenue to Bell Road (test pit data).

Arizona Department of Water Resources, 1985, Design Manual for Engineering Analysis of Fluvial Systems, by Simons, Li & Associates, Inc.

Canada Centre for Mineral and Energy Technology (CANMET), Pit Slope Manual, Chapter 9, Waste Embankments, Energy, Mines and Resources Canada.

Chow, Ven Te, Ph.D., 1959, Open-Channel Hydraulics, McGraw-Hill Book Company.

Ellis-Murphy, Inc., 1987, bridge location notes for proposed ADOT Outer Loop Expressway Bridge at Skunk Creek.

_____, January 1985, Desert Harbor Drop Structure in New River (6 plan sheets).

_____, November 1984 and September 1985, HEC-2 output for modeling of Desert Harbor improvements.

Flood Control District of Maricopa County, 1987, verbal communication between FDC staff and Dames & Moore.

Simons, Li and Associates, Inc., January 1985, Final Sediment Transport Report for New River and Skunk Creek.

Tesarik, D.R., McWilliams, P.C., 1981, Factor of Safety Charts for Estimating the Stability of Saturated and Unsaturated Tailings Pond Embankments, Bureau of Mines Report of Investigation RI-8564.

U.S. Army Corps of Engineers, undated, Skunk Creek Bank Stabilization Foundation Investigation - ACDC to Thunderbird Road, Los Angeles Engineering District, File 252/191 Sheet 4 of 15.

_____, November 1984, Skunk Creek Bank Stabilization, Plans and Profiles (15 sheets).

_____, 1982, HEC-2 water surface profiles, users manual, generalized computer program, The Hydrologic Engineering Center, September 1982.

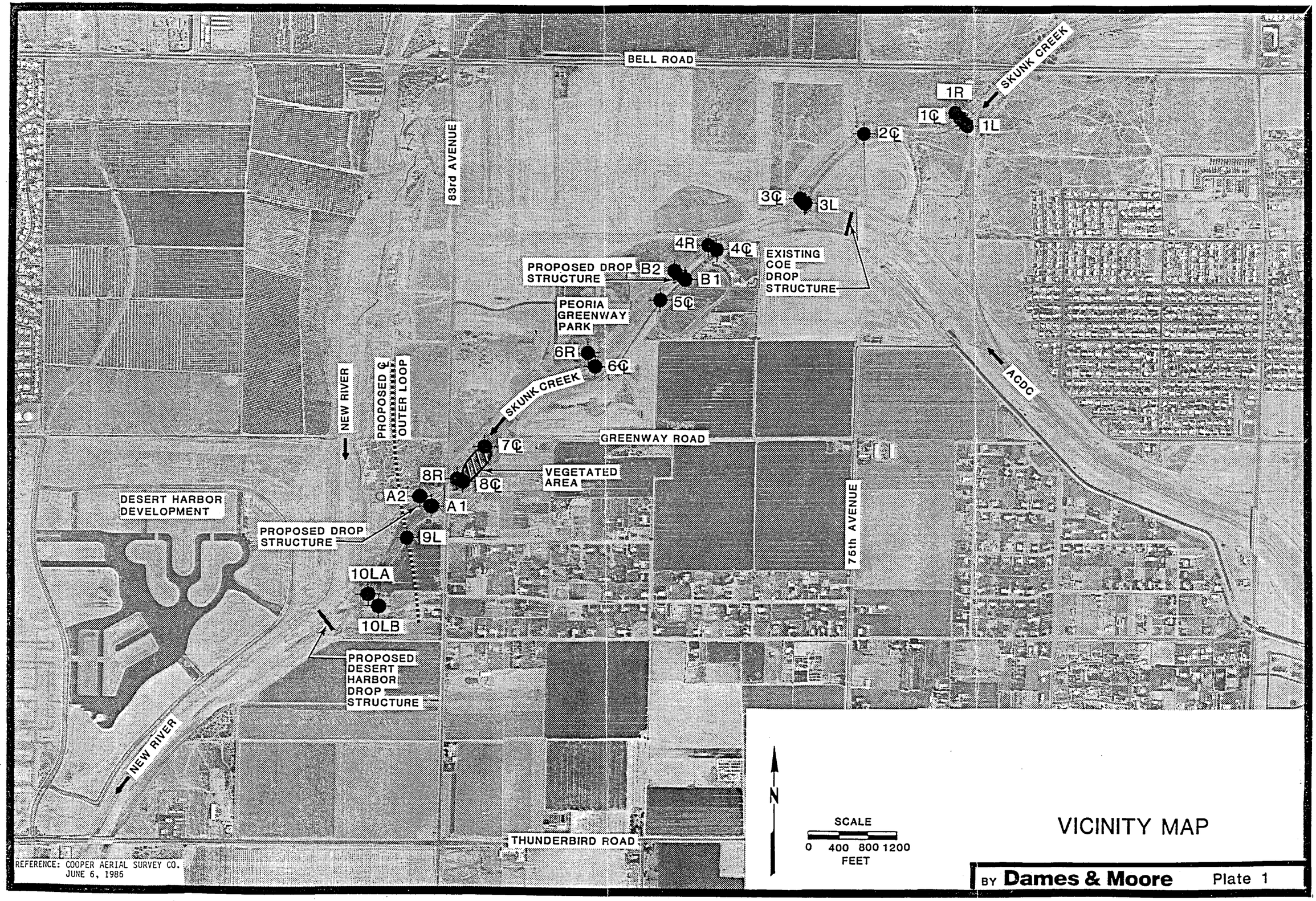

REFERENCE: COOPER AERIAL SURVEY CO.
JUNE 6, 1986

VICINITY MAP

BY **Dames & Moore** Plate 1

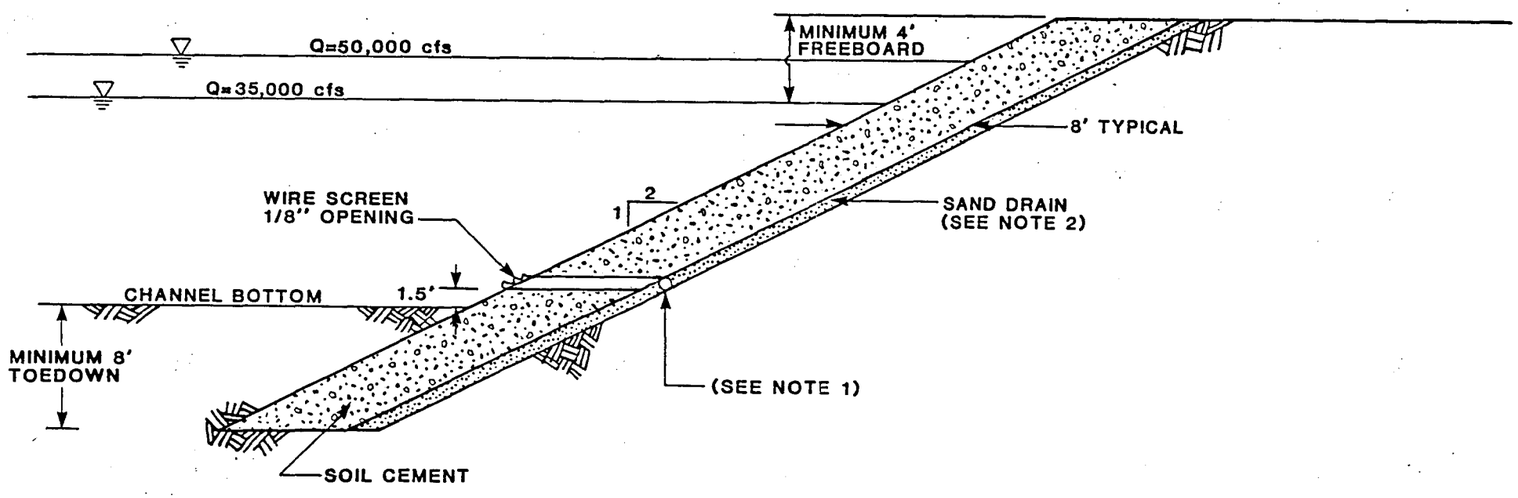

NOTES: 1. 4" DIAMETER GEOTEXTILE ENCAPSULATED CORRUGATED HIGH DENSITY POLYETHYLENE DRAINAGE PIPES OUTLET TO CHANNEL AT 500 FOOT INTERVALS.

2. SAND BEDDING/DRAIN MATERIAL 8" THICK MEETING MAG SECTION 605.5 (F3) SPECIFICATIONS, PLACED PER SECTION 605.6.1 REQUIREMENTS, COMPACTED PER SECTION 605.6.2 REQUIREMENTS.

3. PRIOR TO PLACEMENT OF SAND FILTER/DRAIN MATERIAL, SLOPE WILL BE STRIPPED OF ALL FILL, LOOSE SOIL, DEBRIS AND OTHER DELETERIOUS MATERIAL AS DETERMINED BY THE ENGINEER. EARTHWORK FOR THE CHANNEL SLOPE PREPARATION WILL MEET MAG SPECIFICATIONS 215.1 THROUGH 216.6 (EARTHWORK FOR OPEN CHANNELS).

4. DRAINAGE SYSTEM NOT REQUIRED FOR UNGROUTED RIPRAP OR GABION BANK PROTECTION.

SCALE

0 10 20

FEET

TYPICAL SECTION FOR SOIL CEMENT

BY **Dames & Moore** Plate 2

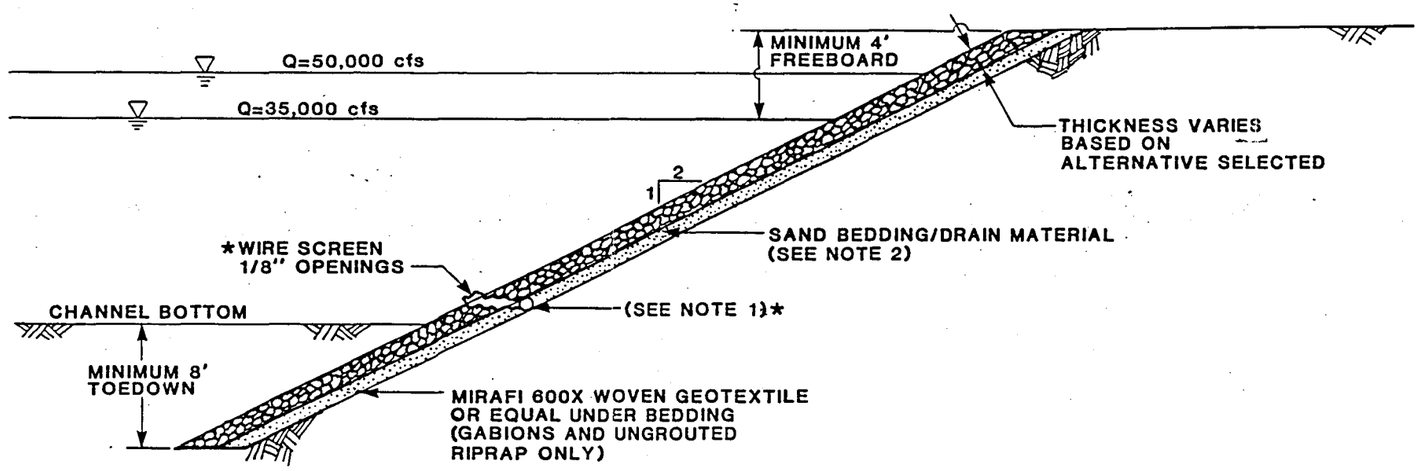

NOTES:
1. 4" DIAMETER GEOTEXTILE ENCAPSULATED CORRUGATED HIGH DENSITY POLYETHYLENE DRAINAGE PIPES OUTLET TO CHANNEL AT 500 FOOT INTERVALS.
2. SAND BEDDING/DRAIN MATERIAL 8" THICK MEETING MAG SECTION 605.5 (F3) SPECIFICATIONS, PLACED PER SECTION 605.6.1 REQUIREMENTS, COMPACTED PER SECTION 605.6.2 REQUIREMENTS.
3. PRIOR TO PLACEMENT OF SAND FILTER/DRAIN MATERIAL, SLOPE WILL BE STRIPPED OF ALL FILL, LOOSE SOIL, DEBRIS AND OTHER DELETERIOUS MATERIAL AS DETERMINED BY THE ENGINEER. EARTHWORK FOR THE CHANNEL SLOPE PREPERATION WILL MEET MAG SPECIFICATIONS 215.1 THROUGH 216.6 (EARTHWORK FOR OPEN CHANNELS).
4. DRAINAGE SYSTEM NOT REQUIRED FOR UNGROUTED RIPRAP OR GABION BANK PROTECTION.

SCALE
0 10 20
FEET

TYPICAL SECTION FOR GROUTED AND UNGROUTED RIPRAP AND GABIONS

BY **Dames & Moore** Plate 3

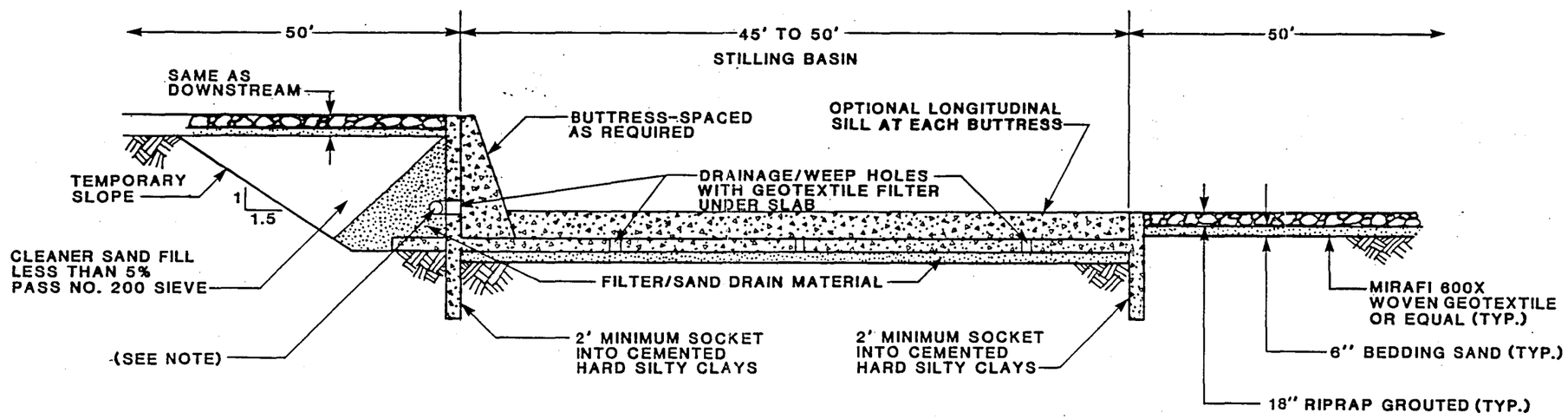

SCALE

0 10 20

FEET

NOTE: 3" DIAMETER GEOTEXTILE ENCAPSULATED CORRUGATED HDPE DRAINAGE PIPES, CONTINUOUS UPSTREAM OF DROP STRUCTURE, OUTLETS 20' O.C. INTO STILLING BASIN.

CONCEPTUAL DROP STRUCTURE DETAIL

(CAST-IN-PLACE CONCRETE)

BY **Dames & Moore** Plate 4

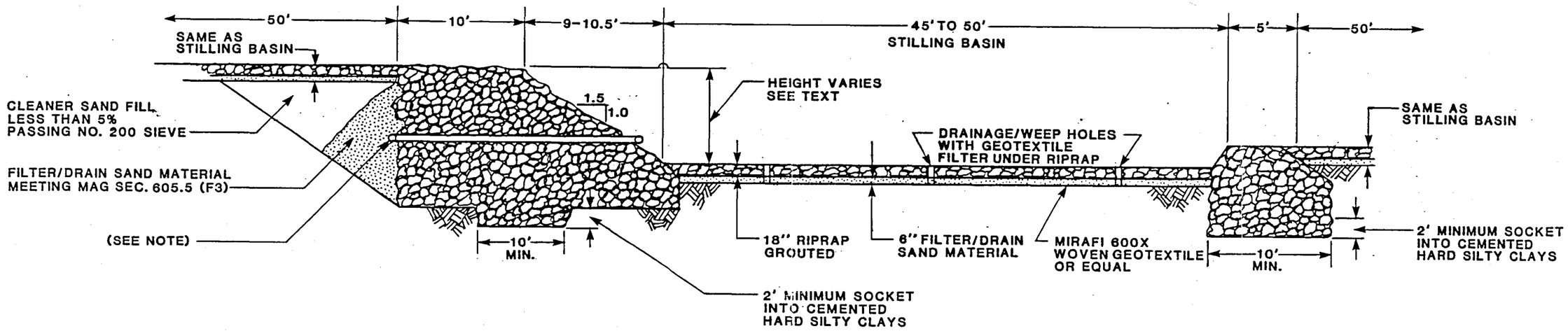

SCALE

0 10 20

FEET

NOTE: 3" DIAMETER GEOTEXTILE ENCAPSULATED CORRUGATED HDPE DRAINAGE PIPES, CONTINUOUS UPSTREAM OF DROP STRUCTURE, OUTLETS 20' O.C. INTO STILLING BASIN.

CONCEPTUAL DROP STRUCTURE DETAIL
(GROUTED RIPRAP)

BY **Dames & Moore** Plate 5

APPENDIX A

FIELD EXPLORATION AND LABORATORY TESTING

FIELD EXPLORATION

The field exploration program consisted of excavating test pits and obtaining soil samples. The test pit portion of the field exploration program was performed during January 22 through March 17, 1987, and was supervised by Dames & Moore geotechnical engineers.

TEST PITS

Twenty one test pits, TP-1R through T-10L(B), and test pits A1, A2, B1 and B2 were excavated and logged at the locations shown on Figure 1. Test pits TP-1R through TP-10L(B) are identified by a number (1-10) indicating the location and letters (R,L,C_L) indicating whether the pit location was right, left (facing downstream) or on the proposed channel centerline. The test pits were excavated with a Ford 55A backhoe. Test pits were backfilled upon completion of logging.

Relatively undisturbed samples were recovered from the test pits using the Dames & Moore hand sampler shown on Plate A-1. The samples were classified in accordance with the Unified Soil Classification System presented on Plate A-2.

Dames & Moore engineers observed all test pit excavations, obtained undisturbed and bulk samples for classification and laboratory testing, and

prepared detailed logs of the subsurface conditions encountered. The Key to the Log of Test Pits is shown on Plate A-3. The Log of Test Pits is presented on Plates A-4A to A-4L.

LABORATORY TESTING

A laboratory testing program was conducted on selected samples recovered from the test pits to evaluate their geotechnical engineering properties. Included in this program were moisture content and dry density determinations, sieve analyses, Atterberg limits, direct shear, and consolidation tests. Testing was performed in the Dames & Moore Phoenix Laboratory.

MOISTURE CONTENT AND DRY DENSITY

Moisture content and dry density determinations were performed on selected undisturbed samples recovered from the borings and test pits. The results of these tests were used to correlate between samples on which other tests were performed and to provide input to the engineering analyses. These results are presented on the Log of Test Pits, Plates A-4A to A-4L.

SIEVE ANALYSES

Sieve analyses were completed on selected samples. These tests, performed in accordance with ASTM D 422-63, aided in classifying the soils. Test results are presented in Table A-1.

ATTERBERG LIMITS

Atterberg limits tests, performed in accordance with ASTM D 423-66, Standard Method of Test for Liquid Limit of Soils, and ASTM D 242-59, Standard Method of Test for Plastic Limit and Plasticity Index of Soils, were conducted on selected samples for classification purposes. Test results are presented on the Log of Test Pits and in Table A-1.

DIRECT SHEAR

Direct shear tests were performed on undisturbed and remolded samples of native soils obtained from borings. The equipment and general test procedures are presented on Plate A-5, Method of Performing Direct Shear and Friction Tests. Test results are presented on Plate A-6.

CONSOLIDATION TESTS

Consolidation testing was performed on undisturbed samples of native soils. The equipment and general test procedures are presented on Plate A-7, Method of Performing Consolidation Tests. Test results are presented on Plate A-8.

Table A-1

SIEVE ANALYSIS AND ATTERBERG LIMITS TEST RESULTS

Test Pit No.	Depth	Percent Passing (By Weight) The Sieve Size Indicated											Atterberg Limits	
		#200	#100	#50	#30	#16	#8	#4	3/8"	3/4"	1"	2"	L.L.	P.I.
1 C_L	0'-2'	13*	17	22	29	38	51	71	91	100				
2 C_L	0'-4'	6	7	11	21	37	53	62.5	69	78.5	--	86	52.4	18.8
3 C_L	0'-6'	5	6.5	12	23	36	48	60	69	82	--	90		
4 R	14'-14' 1/2"	3.5	4	8	19.5	33	42	47.5	53	61	100			
4 C_L	0'-2'	6	8	13.5	24	36	46	57	70	80	100			
5 C_L	0'-2'	15	18	23.5	31.5	42	50	56	61	71	100			
6 R	5'-6'	31	45	65	78	84	87	91	100					N.P.
6 R	12'-13'	10	13.5	21	32	42	49	54	59	66	100			
6 C_L	6'-7'	8	11	15	23	34	49	53.5	60	73	82	100		
7 C_L	6"-1'	65.5	76	87	94	100								
8 R	4"-10"	57	68	81	89	95	98	99.5	100				26.2	7.0
8 C_L	6'-7'	6.5	7	9	14.5	31	47.5	59	67	77	100			
8 C_L	10'-10'9"	6*	8	12	18	26	40	72	98	100				
9 L	1'-1 1/2'	53	67	82	90	95	97	98	99	100				

*Cemented soil fragments did not break down after soaking in water 72 hours.

The following plates are attached and complete this Appendix.

Plate A-1	DAMES & MOORE HAND SAMPLER
Plate A-2	UNIFIED SOIL CLASSIFICATION SYSTEM
Plate A-3	KEY TO LOG OF TEST PITS
Plate A-4A through Plate A-4K	LOG OF TEST PITS
Plate A-5	METHOD OF PERFORMING DIRECT SHEAR AND FRICTION TESTS
Plate A-6	RESULTS OF DIRECT SHEAR TESTING, NATIVE SOIL SAMPLES, ULTIMATE STRENGTH
Plate A-7	METHOD OF PERFORMING CONSOLIDATION TESTS
Plate A-8	CONSOLIDATION TEST DATA

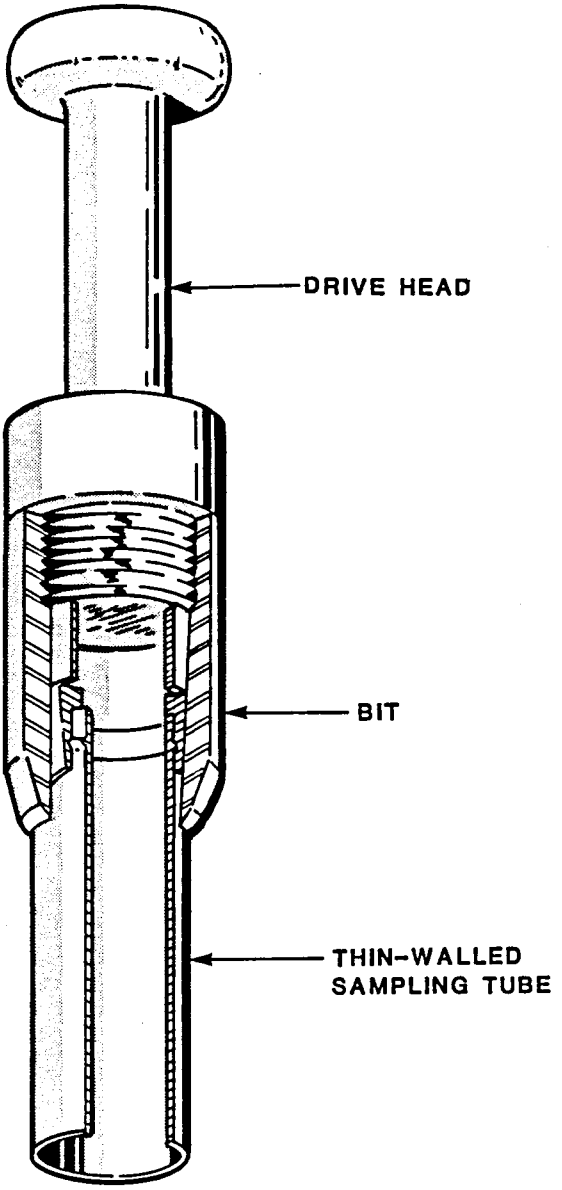

DAMES & MOORE
HAND SAMPLER

BY **Dames & Moore** Plate A-1

MAJOR DIVISIONS			GRAPHIC SYMBOL	LETTER SYMBOL	TYPICAL DESCRIPTIONS
COARSE GRAINED SOILS	GRAVEL AND GRAVELLY SOILS	CLEAN GRAVELS (LITTLE OR NO FINES)		GW	WELL GRADED GRAVELS, GRAVEL SAND MIXTURES, LITTLE OR NO FINES
				GP	POORLY GRADED GRAVELS, GRAVEL SAND MIXTURES, LITTLE OR NO FINES
	MORE THAN 50% OF COARSE FRACTION RETAINED ON NO. 4 SIEVE	GRAVELS WITH FINES (APPRECIABLE AMOUNT OF FINES)		GM	SILTY GRAVELS, GRAVEL SAND-SILT MIXTURES
				GC	CLAYEY GRAVELS, GRAVEL SAND-CLAY MIXTURES
MORE THAN 50% OF MATERIAL IS LARGER THAN NO. 200 SIEVE SIZE	SAND AND SANDY SOILS	CLEAN SAND (LITTLE OR NO FINES)		SW	WELL-GRADED SANDS, GRAVELLY SANDS, LITTLE OR NO FINES
				SP	POORLY GRADED SANDS, GRAVELLY SANDS, LITTLE OR NO FINES
	MORE THAN 50% OF COARSE FRACTION PASSING NO. 4 SIEVE	SANDS WITH FINES (APPRECIABLE AMOUNT OF FINES)		SM	SILTY SANDS, SAND-SILT MIXTURES
				SC	CLAYEY SANDS, SAND CLAY MIXTURES
FINE GRAINED SOILS	SILTS AND CLAYS	LIQUID LIMIT LESS THAN 50		ML	INORGANIC SILTS AND VERY FINE SANDS, ROCK FLOUR, SILTY OR CLAYEY FINE SANDS OR CLAYEY SILTS WITH SLIGHT PLASTICITY
				CL	INORGANIC CLAYS OF LOW TO MEDIUM PLASTICITY, GRAVELLY CLAYS, SANDY CLAYS, SILTY CLAYS, LEAN CLAYS
				OL	ORGANIC SILTS AND ORGANIC SILTY CLAYS OF LOW PLASTICITY
MORE THAN 50% OF MATERIAL IS SMALLER THAN NO. 200 SIEVE SIZE	SILTS AND CLAYS	LIQUID LIMIT GREATER THAN 50		MH	INORGANIC SILTS, MICACEOUS OR DIATOMACEOUS FINE SAND OR SILTY SOILS
				CH	INORGANIC CLAYS OF HIGH PLASTICITY, FAT CLAYS
				OH	ORGANIC CLAYS OF MEDIUM TO HIGH PLASTICITY, ORGANIC SILTS
HIGHLY ORGANIC SOILS				PT	PEAT, HUMUS, SWAMP SOILS WITH HIGH ORGANIC CONTENTS

NOTE: DUAL SYMBOLS ARE USED TO INDICATE BORDERLINE SOIL CLASSIFICATIONS

UNIFIED SOIL CLASSIFICATION SYSTEM

BY **Dames & Moore** Plate A-2

SYMBOL	TYPE OF TEST
M	MOISTURE
QD	QUICK MD TEST BASED ON ASSUMED SPECIFIC GRAVITY
MD	MOISTURE-DENSITY
CD	CHUNK DENSITY ON BULK SAMPLE
RD	RELATIVE DENSITY
COMP	COMPACTION CURVE
CI	CALIFORNIA IMPACT
CC	COMPACTED CORE
G	SPECIFIC GRAVITY
pH	HYDROGEN ION CONCENTRATION
MA	MECHANICAL ANALYSIS*
SA	SIEVE ANALYSIS (+200 ONLY)
HA	HYDROMETER ANALYSIS (-200 ONLY)
AL	ATTERBERG LIMITS (LL & PL)
SL	SHRINKAGE LIMIT
FS	FREE SWELL
SS	SHRINK-SWELL
EXP	EXPANSION
C (COL)	CONSOLIDATION (COLLAPSE)
VC	VIBRATING CONSOLIDATION
P	PERMEABILITY
FP	FIELD PERMEABILITY
UC	UNCONFINED COMPRESSION
	TRIAXIAL COMPRESSION TEST
TXUU	1. UNCONSOLIDATED-UNDRAINED
TXC	2. CONSOLIDATED-UNDRAINED
TXCUM	3. CU/MULTIPHASE**
TXCUPF	4. CU/WITH PORE PRESSURE MEASUREMENTS
TXCD	5. CONSOLIDATED-DRAINED
	DIRECT SHEAR TEST
DS/UU	1. UNCONSOLIDATED-UNDRAINED
DS/CU	2. CONSOLIDATED-UNDRAINED
DS/CD	3. CONSOLIDATED-DRAINED
DS/CD/MΦ	4. CD/MULTIPHASE**
LV	TORVANE SHEAR (LAB VANE SHEAR)

* INCLUDES COMPLETE ANALYSIS, SIEVING AND HYDROMETER
** SERIES OF TESTS RUN ON SAMPLE

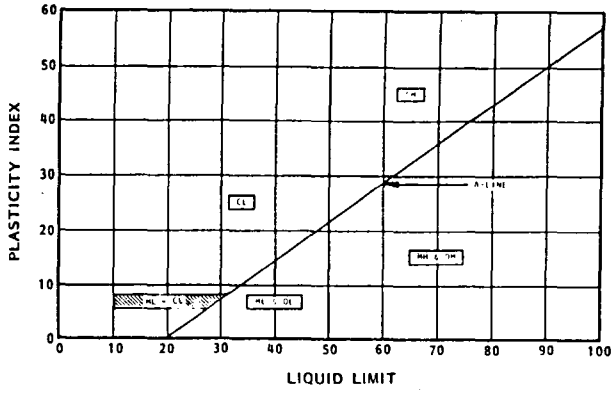

PLASTICITY CHART

- INDICATES DEPTH OF AUGER CUTTINGS SAMPLE
- INDICATES DEPTH OF UNDISTURBED SAMPLE
- INDICATES DEPTH OF DISTURBED SAMPLE
- INDICATES DEPTH OF SAMPLING ATTEMPT WITH NO RECOVERY
- INDICATES DEPTH OF STANDARD PENETRATION TEST
- INDICATES DEPTH OF STANDARD PENETRATION TEST WITH NO RECOVERY
- 70% I 5% — INDICATES DEPTH AND LENGTH OF CORE RUN
  - 5% — RQD (ROCK QUALITY DETERMINATION) PERCENT OF THE TOTAL CORE RUN HAVING AN UNFRACTURED LENGTH OF 4" OR MORE
  - 70% — PERCENT OF CORE RUN RECOVERED
- INDICATES DEPTH OF FIELD VANE SHEAR TEST

KEY TO SAMPLES

NOTES:

1. UNLESS OTHERWISE NOTED SAMPLING RESISTANCE IS MEASURED IN BLOWS PER FOOT REQUIRED TO DRIVE SAMPLER 12-INCHES AFTER SAMPLER HAS BEEN SEATED 6-INCHES. A 140-POUND HAMMER, FREE FALLING A DISTANCE OF 30 INCHES IS USED TO DRIVE THE SAMPLER.
2. DISCUSSION IN THE TEXT OF THIS REPORT IS NECESSARY FOR A PROPER UNDERSTANDING OF THE SUBSURFACE CONDITIONS. DAMES & MOORE MAKES NO WARRANTY AS TO SUBSURFACE CONDITIONS EXTRAPOLATED BEYOND THE BORINGS.
3. DISCUSSION IN THE TEXT OF THIS REPORT IS NECESSARY FOR A PROPER UNDERSTANDING OF SUBSURFACE INFORMATION.

KEY TO LOG OF TEST PITS

TEST PIT NUMBER / ELEVATION	MOISTURE & DENSITY / TEST DEPTH	RANGE OF DEPTH (FT) FROM	TO	SOIL TYPE	MATERIAL ENCOUNTERED
A1		0	1	SW	Tan well-graded subrounded sand and gravel, some rounded cobbles, non-plastic (loose) (moist)
		1	3	SC	Brown medium-grained subrounded clayey sands, little subrounded gravel and cobbles, low to medium plasticity (loose) (moist)
		3	11	SP-GP	Brown well-graded subrounded to rounded sand and gravel, some rounded cobbles, little clay, low plasticity (medium dense) (saturated)
		11	15	CL	Brown silty clay, little rounded sands and gravels, medium plasticity, moderate cementation (hard) (moist) Test pit terminated at 15' on 3-17-87 Ground water encountered at 4' on 3-17-87

TEST PIT NUMBER / ELEVATION	MOISTURE & DENSITY / TEST DEPTH	RANGE OF DEPTH (FT) FROM	TO	SOIL TYPE	MATERIAL ENCOUNTERED
A2		0	3 1/2	SC	Brown well-graded subrounded to rounded clayey sand, some rounded gravels and cobbles, medium plasticity (medium dense) (moist)
		3 1/2	12	SC-GC	Brown well-graded subrounded to rounded clayey sand and gravel, some rounded cobbles, medium plasticity, slightly cemented (dense) (moist)
		12	14	CL	Brown silty clay, little rounded sands and gravels, medium plasticity, very cemented (hard) (moist) Test pit terminated at 14' on 3-17-87 Ground water encountered at 2' on 3-17-87

LOG OF TEST PITS

TEST PIT NUMBER / ELEVATION	MOISTURE & DENSITY / TEST DEPTH	RANGE OF DEPTH (FT) FROM	TO	SOIL TYPE	MATERIAL ENCOUNTERED
B1		0	2 1/2	SW	Tan-brown well-graded sub-rounded to rounded gravelly sand, some rounded cobbles, nonplastic (loose) (moist)
		2 1/2	7	SC-GC	Red-brown well-graded sub-rounded to rounded clayey sand and gravel, some rounded cobbles, medium plasticity (medium dense) (moist)
		7	13 1/2	CL	Brown silty clay, little subrounded to rounded sand and gravel, medium plasticity, very cemented (hard) slightly moist) Test pit terminated at 13.5' on 3-17-87 No ground water encountered

TEST PIT NUMBER / ELEVATION	MOISTURE & DENSITY / TEST DEPTH	RANGE OF DEPTH (FT) FROM	TO	SOIL TYPE	MATERIAL ENCOUNTERED
B2		0	2	SC-GC	Brown-black well-graded sub-rounded sand and gravel, some clay, some rounded cobbles, medium to low plasticity (medium dense) (moist)
		2	9 1/2	SP-GP	Brown well-graded sub-rounded to rounded sand and gravel, little clay, low plasticity (medium dense) (moist)
		9 1/2	15	CL	Brown silty clay, little subrounded sand and gravel, medium plasticity, very cemented (hard) (slightly moist) Test pit terminated at 15' on 3-17-87 No ground water encountered

LOG OF TEST PITS

TEST PIT NUMBER / ELEVATION	MOISTURE & DENSITY / TEST DEPTH	RANGE OF DEPTH (FT) FROM	TO	SOIL TYPE	MATERIAL ENCOUNTERED
1 R	2.1%-106.2 PCF @ 6"	0	1	SM	Brown silty fine to medium sand, trace fine gravels (loose)
		1	10 1/2	SP	Brown subrounded sand and gravel, trace silt, trace to little rounded cobbles (loose to medium dense)
		10 1/2	15	SM	Brown silty fine to medium subrounded sand, trace clay, trace to little subrounded gravel (loose to medium dense)
					Test pit terminated at 15' on 1/22/87. No ground water encountered.

TEST PIT NUMBER / ELEVATION	MOISTURE & DENSITY / TEST DEPTH	RANGE OF DEPTH (FT) FROM	TO	SOIL TYPE	MATERIAL ENCOUNTERED
1 C_L	22.7%-87.6 PCF @ 6"	0	2	MH	Tan clayey silt, trace to little fine sand, highly plastic (very stiff)
		2	8'9"	SP	Brown subrounded sand little to some subrounded gravel and cobbles (very dense)
					Note: Increasing cobbles below 7 1/2 feet.
					Test pit terminated at 8'9" on 1/22/87. No ground water encountered.

LOG OF TEST PITS

TEST PIT NUMBER / ELEVATION	MOISTURE & DENSITY / TEST DEPTH	RANGE OF DEPTH (FT) FROM	TO	SOIL TYPE	MATERIAL ENCOUNTERED
1 L	5.4%-92.9 PCF @ 1'	0	1	SM	Tan silty fine sand some construction debris (loose) (fill)
		1	5 1/2	SM	Tan silty fine sand, trace subrounded gravels and cobbles (loose to medium dense)
		5 1/2	9	SP	Tan subrounded sand and gravel, trace cobbles, slightly cemented (loose to medium dense)
		9	13	SM	Brown silty fine sand, trace to little subrounded gravel and cobbles (dense)
					Note: Pockets of cemented clays.
					Test pit terminated at 13' on 1/22/87. No ground water encountered.

TEST PIT NUMBER / ELEVATION	MOISTURE & DENSITY / TEST DEPTH	RANGE OF DEPTH (FT) FROM	TO	SOIL TYPE	MATERIAL ENCOUNTERED
2 C_L	6.7% @ 0'-4'	0	14	SP-SM	Brown silty medium to coarse subrounded sand and gravel, trace to little subrounded to rounded cobbles and boulders (loose to dense)
					Note: Increased cobbles below 3 foot.
					Note: Increased silt below 4 foot.
					Test pit terminated at 14' on 1/22/87. No ground water encountered.

LOG OF TEST PITS

TEST PIT NUMBER / ELEVATION	MOISTURE & DENSITY / TEST DEPTH	RANGE OF DEPTH (FT) FROM	TO	SOIL TYPE	MATERIAL ENCOUNTERED
3 C_L	8.5% @ 0'-6'	0	10 1/2	SP	Brown medium to coarse subrounded sand and gravel, trace silt, trace subrounded cobbles and boulders (medium dense to dense) Note: Decreased gravels and cobbles below 6'. Note: Very cemented sands below 6'. Test pit terminated at 10 1/2' on 1/22/87. No ground water encountered.

TEST PIT NUMBER / ELEVATION	MOISTURE & DENSITY / TEST DEPTH	RANGE OF DEPTH (FT) FROM	TO	SOIL TYPE	MATERIAL ENCOUNTERED
3 L	11.4%-89.2 PCF @ 2'	0	2	SP-SM	Tan silty fine to medium subrounded sand, trace to little rounded to subrounded gravel and cobbles (loose)
		2	3	SM	Brown silty fine sand, trace to little rounded gravels (loose)
		3	10	SP	Brown subrounded to rounded sand and gravel, little to some subrounded to rounded cobbles (very dense) Test pit terminated at 10' on 1/22/87. No ground water encountered.

LOG OF TEST PITS

BY **Dames & Moore** Plate A-4E

TEST PIT NUMBER / ELEVATION	MOISTURE & DENSITY TEST DEPTH	RANGE OF DEPTH (FT) FROM	TO	SOIL TYPE	MATERIAL ENCOUNTERED
4 R	5.4%-101.1 PCF @ 6"	0	3/4	SM	Light brown silty fine sand, trace subrounded gravel (loose)
	2.7% @ 14'	3/4	14'9"	SP	Brown medium to coarse subrounded sand and gravel, trace to little rounded to subrounded cobbles and boulders (loose)
					Test pit terminated at 14'9" on 1/22/87. No ground water encountered.

TEST PIT NUMBER / ELEVATION	MOISTURE & DENSITY TEST DEPTH	RANGE OF DEPTH (FT) FROM	TO	SOIL TYPE	MATERIAL ENCOUNTERED
4 C_L	4.1% @ 0'-2'	0	2	SP-SM	Brown silty medium to coarse subrounded sand and gravel trace to little subrounded to rounded cobbles and boulders (loose)
		2	12	SP-SM	Red brown silty fine sand with some subrounded to rounded gravel, trace to little rounded to subrounded cobbles and boulders (loose)
		12	13'9"	SM	Red brown silty medium to coarse subrounded sand, trace clay, with cementation (medium dense)
					Test pit terminated at 13'9" on 1/23/87. No ground water encountered.

LOG OF TEST PITS

BY **Dames & Moore** Plate A-4F

TEST PIT NUMBER / ELEVATION	MOISTURE & DENSITY / TEST DEPTH	RANGE OF DEPTH (FT) FROM	TO	SOIL TYPE	MATERIAL ENCOUNTERED
5 C_L	6.3% @ 0'-2'	0	2	GM	Brown silty subrounded gravel and sand little to some subrounded to rounded cobbles and boulders (dense)
		2	11'9"	SP-SM	Brown silty subrounded sand little to some subrounded gravel, cobbles and boulders (dense)
		11'9"	13'	SM	Red brown silty medium to coarse rounded to subrounded sand (very dense)
					Test pit terminated at 13' on 1/23/87. No ground water encountered.

TEST PIT NUMBER / ELEVATION	MOISTURE & DENSITY / TEST DEPTH	RANGE OF DEPTH (FT) FROM	TO	SOIL TYPE	MATERIAL ENCOUNTERED
6 R	8.7%-107.9 PCF @ 1'	0	6 1/2	SM	Brown silty fine sand, trace subrounded gravel (loose to medium dense)
	1% @ 5'-6' 2.9% @ 12'-13'	6 1/2	14 1/2	GP-GM	Light brown silty fine subrounded to rounded gravel and sand, trace silt, trace to little subrounded to rounded cobbles and boulders (loose to medium dense)
					Test pit terminated at 14 1/2' on 1/26/87. No ground water encountered.

LOG OF TEST PITS

TEST PIT NUMBER / ELEVATION	MOISTURE & DENSITY / TEST DEPTH	RANGE OF DEPTH (FT) FROM	TO	SOIL TYPE	MATERIAL ENCOUNTERED
6 C_L	8.3% @ 6'-7'	0	1	SM	Brown silty subrounded to rounded sand, some gravel, trace to little rounded to subrounded cobbles and boulders (loose)
		1	8 1/2	GP-GM	Red brown silty fine subrounded to rounded gravel and sand, trace silt and clay (dense)
		8 1/2	10 1/2	SC	Red brown clayey fine to medium subrounded sand (dense)
					Test pit terminated at 10 1/2' on 1/23/87. No ground water encountered.

TEST PIT NUMBER / ELEVATION	MOISTURE & DENSITY / TEST DEPTH	RANGE OF DEPTH (FT) FROM	TO	SOIL TYPE	MATERIAL ENCOUNTERED
7 C_L	19.9%-92.5 PCF @ 1'	0	2	SC	Brown clayey fine sand (very loose)
		2	11	SP-SM	Red brown silty subangular sand, some subrounded to rounded gravel, trace subrounded to rounded cobbles and boulders (loose to medium dense)
		11	12	CL	Red brown sandy clay, fine sands, very cemented (hard)
					Test pit terminated at 12' on 1/23/87. No ground water encountered.

LOG OF TEST PITS

BY **Dames & Moore** Plate A-4H

TEST PIT NUMBER / ELEVATION	MOISTURE & DENSITY / TEST DEPTH	RANGE OF DEPTH (FT) FROM	TO	SOIL TYPE	MATERIAL ENCOUNTERED
8 R	7.1%-108.7 PCF @ 6"	0	6"	ML-CL	Brown sandy silt, trace gravel medium plastic (soft)
		6"	4'	SM	Brown silty fine sand trace clay (loose to medium dense)
	1.8% @ 10'-12'	4'	14'	SP	Tan medium subrounded to rounded sand, trace subrounded to rounded gravels and cobbles (loose)
					Test pit terminated @ 14' on 1/23/87. No ground water encountered.

LOG OF TEST PITS

TEST PIT NUMBER / ELEVATION	MOISTURE & DENSITY TEST DEPTH	RANGE OF DEPTH (FT) FROM	TO	SOIL TYPE	MATERIAL ENCOUNTERED
8 C_L		0	1/2	ML	Brown sandy silt, fine sands, trace subrounded to rounded gravel, medium plasticity (soft)
		1/2	4	SM	Brown silty fine sand, trace slay (loose to medium dense)
	8.4% @ 6'-7' 33.4% @ 10'	4	14	SP	Tan medium subrounded to rounded sand, trace subrounded to rounded gravel and cobbles (loose) Test pit terminated at 14' on 1/23/87. Ground water encountered @ 4'8" on 1/23/87.

TEST PIT NUMBER / ELEVATION	MOISTURE & DENSITY TEST DEPTH	RANGE OF DEPTH (FT) FROM	TO	SOIL TYPE	MATERIAL ENCOUNTERED
9 L	6.7%-84.0 PCF @ 1'	0	5	CL	Brown silty clay, some fine sand, low to medium plasticity (soft to firm)
		5	11	SP	Brown subrounded to rounded sand and gravel, trace to little subrounded to rounded cobbles and boulders (medium dense) Test pit terminated at 11' on 1/26/87. No ground water encountered.

LOG OF TEST PITS

TEST PIT NUMBER / ELEVATION	MOISTURE & DENSITY / TEST DEPTH	RANGE OF DEPTH (FT) FROM	TO	SOIL TYPE	MATERIAL ENCOUNTERED
10 L(A)		0	10'9"	SM	Brown silty sand, some gravel cobbles and boulders (loose to medium dense) (fill) Note: Considerable large concrete blocks. Fill extends 320' east from east bank of Skunk Creek. Note: Test pit consists of a series of three excavations along a 105-foot line. Test pit terminated at 10'9" on 1/26/87. No ground water encountered.

TEST PIT NUMBER / ELEVATION	MOISTURE & DENSITY / TEST DEPTH	RANGE OF DEPTH (FT) FROM	TO	SOIL TYPE	MATERIAL ENCOUNTERED
10 L(B)		0	2 1/2	SM	Brown silty sand trace fine gravel (loose to medium dense)
		2 1/2	3'	GP	Tan sandy gravel, some cobbles, very cemented (very dense) Note: Test pit consists of a series of three excavations along a 110-foot line. Test pit terminated at 3' on 1/26/87. No ground water encountered.

LOG OF TEST PITS

Method Of Performing Direct Shear and Friction Tests

Direct shear tests are performed to determine the shearing strengths of soils. Friction tests are performed to determine the frictional resistances between soils and various other materials such as wood, steel, or concrete. The tests are performed in the laboratory to simulate anticipated field conditions.

DIRECT SHEAR APPARATUS WITH ELECTRONIC RECORDER

Each sample is tested in a split sample holder, two and one-half inches in diameter and one inch high. Undisturbed samples of in-place soils are extruded from rings taken from the sampling device in which the samples were obtained. Loose samples of soils to be used in constructing earth fills are compacted in rings to predetermined conditions and tested.

Direct Shear Tests

A one-inch length of the sample is tested in direct single shear. A constant pressure, appropriate to the conditions of the problem for which the test is being performed, is applied normal to the ends of the sample through porous stones. A shearing failure of the sample is caused by moving the upper sample holder in a direction perpendicular to the axis of the sample. Transverse movement of the lower sample holder is prevented.

The shearing failure is accomplished by applying to the upper sample holder a constant rate of deflection. The shearing load and the deflections in both the axial and transverse directions are recorded and plotted. The shearing strength of the soils is determined from the resulting load-deflection curves.

Friction Tests

In order to determine the frictional resistance between soil and the surfaces of various materials, the lower sample holder in the direct shear test is replaced by a disk of the material to be tested. The test is then performed in the same manner as the direct shear test by forcing the soil over the friction material surface.

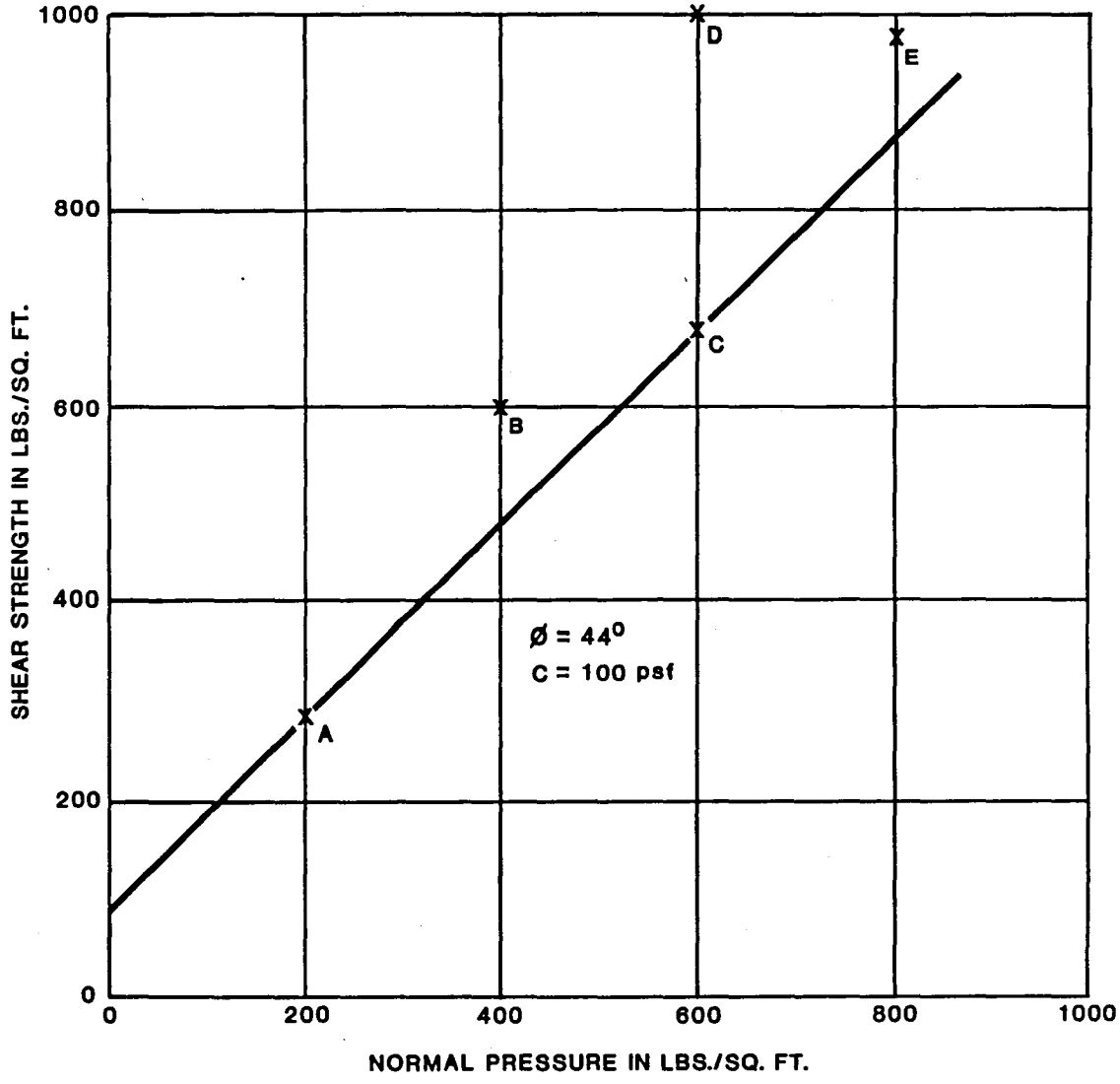

TEST	TEST PIT	DEPTH	DRY DENSITY (PCF)	MOISTURE	NOTE
A	8R	10'	98.7	1.8%	REMOLDED
B	6R	12'	96.8	2.9%	REMOLDED
C	8R	10'	96.1	1.8%	REMOLDED
D	6R	1'	107.9	8.7%	UNDISTURBED
E	6R	12'	101.5	2.9%	REMOLDED

RESULTS OF DIRECT SHEAR TESTING NATIVE SOIL SAMPLES ULTIMATE STRENGTH

BY **Dames & Moore** Plate A-6

METHOD OF PERFORMING CONSOLIDATION TESTS

CONSOLIDATION TESTS ARE PERFORMED TO EVALUATE THE VOLUME CHANGES OF SOILS SUBJECTED TO INCREASED LOADS. TIME-CONSOLIDATION AND PRESSURE-CONSOLIDATION CURVES MAY BE PLOTTED FROM THE DATA OBTAINED IN THE TESTS. ENGINEERING ANALYSES BASED ON THESE CURVES PERMIT ESTIMATES TO BE MADE OF THE PROBABLE MAGNITUDE AND RATE OF SETTLEMENT OF THE TESTED SOILS UNDER APPLIED LOADS.

EACH SAMPLE IS TESTED WITHIN BRASS RINGS TWO AND ONE-HALF INCHES IN DIAMETER AND ONE INCH IN LENGTH. UNDISTURBED SAMPLES OF IN-PLACE SOILS ARE TESTED IN RINGS TAKEN FROM THE SAMPLING DEVICE IN WHICH THE SAMPLES WERE OBTAINED. LOOSE SAMPLES OF SOILS TO BE USED IN CONSTRUCTING EARTH FILLS ARE COMPACTED IN RINGS TO PREDETERMINED CONDITIONS AND TESTED.

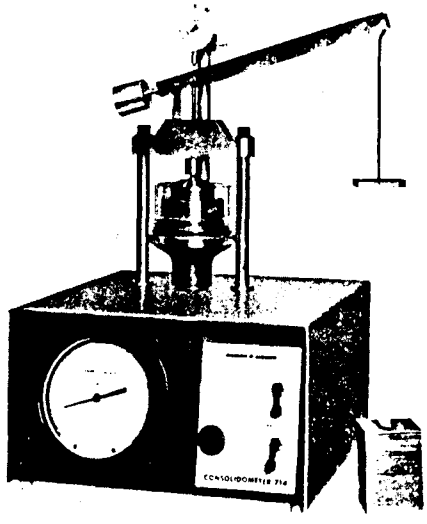

DEAD LOAD-PNEUMATIC CONSOLIDOMETER

IN TESTING, THE SAMPLE IS RIGIDLY CONFINED LATERALLY BY THE BRASS RING. AXIAL LOADS ARE TRANSMITTED TO THE ENDS OF THE SAMPLE BY POROUS DISKS. THE DISKS ALLOW DRAINAGE OF THE LOADED SAMPLE. THE AXIAL COMPRESSION OR EXPANSION OF THE SAMPLE IS MEASURED BY A MICROMETER DIAL INDICATOR AT APPROPRIATE TIME INTERVALS AFTER EACH LOAD INCREMENT IS APPLIED. EACH LOAD IS ORDINARILY TWICE THE PRECEDING LOAD. THE INCREMENTS ARE SELECTED TO OBTAIN CONSOLIDATION DATA REPRESENTING THE FIELD LOADING CONDITIONS FOR WHICH THE TEST IS BEING PERFORMED. EACH LOAD INCREMENT IS ALLOWED TO ACT OVER AN INTERVAL OF TIME DEPENDENT ON THE TYPE AND EXTENT OF THE SOIL IN THE FIELD.

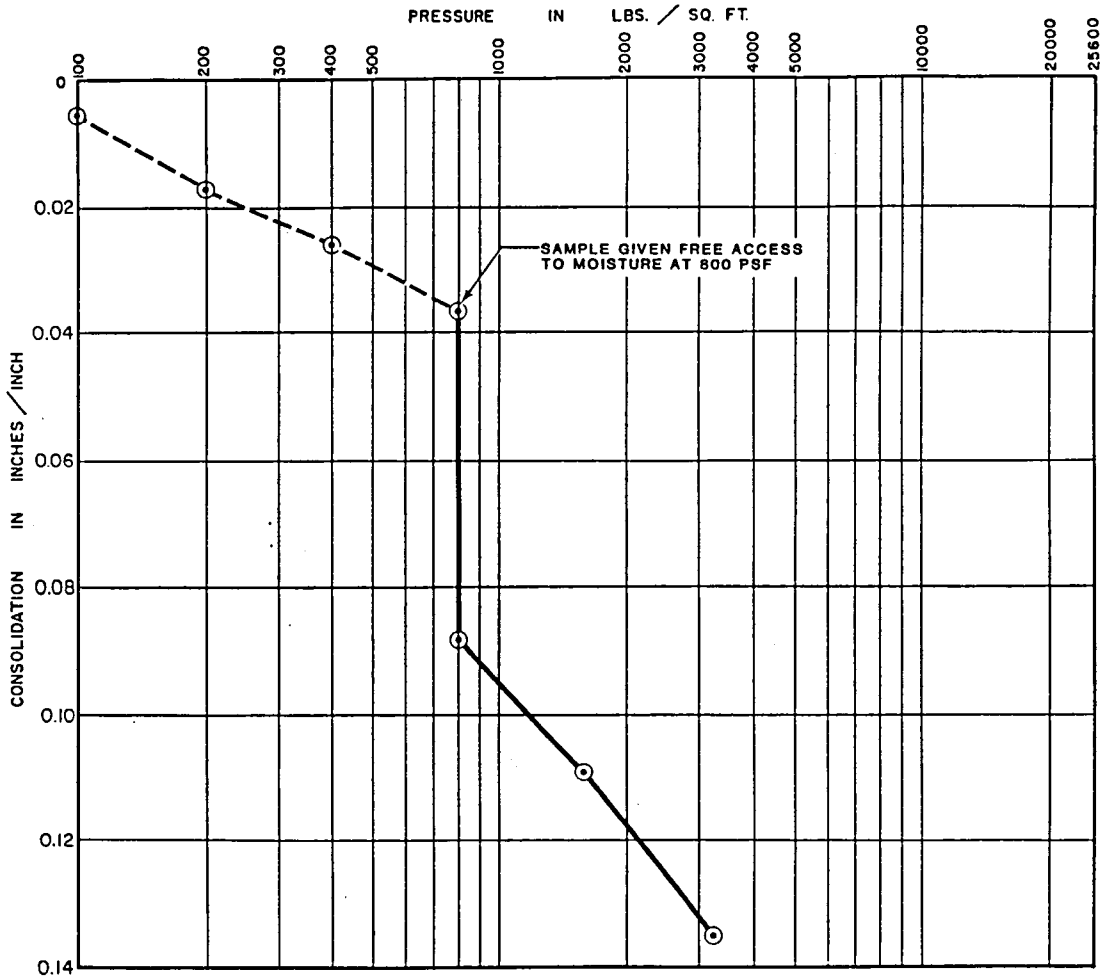

TEST PIT NUMBER			UNIFIED SOIL CLASS	MOISTURE CONTENT IN PERCENT		DRY DENSITY IN pcf	
NO.	DEPTH			BEFORE	AFTER	BEFORE	AFTER
8R	4"	BROWN SANDY SILT, TRACE GRAVEL, MEDIUM PLASTIC	CL-ML	5.9	17.8	100.8	114.4

CONSOLIDATION TEST DATA

BY **Dames & Moore**

Plate A-8

APPENDIX B

HEC-2 COMPUTER MODELING RESULTS

HEC-2 COMPUTER RUN
FOR CLEAR CHANNEL
BASE WIDTH = 240 FEET
2:1 SIDE SLOPES
CONSTANT SLOPE
FLOWRATE IN SKUNK CREEK = 35,000 CFS

```
%SET W NOTSET, error modifying DRB1:
-CLI-E-IVDEVTYPE, invalid device type - specify a mailbox device
$SET DEF [PH04]
$COPY 2FMI240C.DAT SYS$OUTPUT
C
C    13.0
C     1.0 DOWNSTREAM END OF STUDY-NEW RIVER FLOW=41,000 CFS
C     3.0 LOCATION OF FUTURE DROP STRUCTURE
C     5.1 CONFLUENCE OF SKUNK CREEK & NEW RIVER
C     7.1 BEGIN CHANNEL (B=240',Z=2) SKUNK CREEK FLOW=35,000 CFS
C     7.3 DOWNSTREAM EDGE OF PROPOSED OUTER LOOP FREEWAY BRIDGES
C     7.4 UPSTREAM EDGE OF PROPOSED OUTER LOOP FREEWAY BRIDGES
C    12.0 83RD AVENUE CROSSES BETWEEN SECTION NUMBERS 12.0 & 15.0
C    18.0 DOWNSTREAM END OF COE PROPOSED LEFT BANK STABILIZATION
C    21.0 DOWNSTREAM EDGE OF EXISTING PARK FACILITIES
C    24.0 UPSTREAM EDGE OF EXISTING PARK FACILITIES
C    29.0 CONFLUENCE OF ACDC & SKUNK CREEK
C    30.0 ACDC CHANNEL-FLOW=29,000 CFS
C    32.0 LOCATION OF 4-FOOT-HIGH COE DROP STRUCTURE
T1         DAMES & MOORE JOB NUMBER 15448-002-022 FOR ELLIS-MURPHY, INC.
T2         COE & ADOT IN PLACE, W/O 83RD BRIDGE W/NEW CHANNEL @ B = 240 FEET
T3         SKUNK CREEK
J1   -10                                   0.0055     0.5 41000.0  1152.0
J2   -1.0
J3 150.0
NC 0.030   0.030   0.035     0.1     0.3
X1   1.0     39.0  9842.6 10184.6     0.0     0.0     0.0
GR1210.0  8000.0  1165.6  8001.0  1165.6  8686.9  1166.1  8820.4  1165.78987.1
GR1164.7  9138.2  1164.6  9325.1  1165.2  9577.9  1164.6  9610.8  1165.69625.5
GR1165.7  9641.5  1163.4  9648.3  1165.7  9651.2  1166.6  9681.0  1165.59704.0
GR1165.9  9729.3  1156.3  9742.3  1149.4  9752.9  1149.8  9776.1  1154.29786.7
GR1151.4  9815.3  1151.4  9838.6  1152.9  9842.6  1147.3  9870.4  1140.89905.1
GR1139.1  9917.6  1139.0 10000.0  1139.9 10014.4  1140.5 10040.8  1148.610084.6
GR1159.0 10134.3  1166.5 10177.2  1168.2 10184.6  1164.8 10197.3  1165.510251.6
GR1174.2 10268.3  1165.5 10282.8  1165.5 10400.0  1210.0 10401.0
X1   2.0     35.0  9779.0 10155.0   310.0   240.0   260.0
GR1210.0  8000.0  1167.8  8001.0  1167.8  8650.8  1167.2  9060.3  1166.69116.6
GR1165.8  9601.5  1166.3  9622.5  1164.0  9640.4  1166.0  9644.4  1166.79674.5
GR1165.5  9684.1  1163.9  9712.8  1152.0  9726.2  1150.7  9757.4  1158.69767.6
GR1166.4  9779.0  1158.8  9821.0  1152.0  9858.5  1144.4  9893.7  1140.89919.9
GR1141.4  9944.3  1142.3 10000.0  1142.0 10016.4  1142.8 10031.2  1141.710043.8
GR1146.9 10071.0  1154.3 10110.7  1163.5 10155.0  1166.5 10322.6  1166.010337.4
GR1162.6 10363.5  1160.2 10367.5  1157.0 10390.2  1157.0 10500.0  1210.010501.0
X1   3.0     22.0  9705.1 10153.3    80.0   110.0   100.0
GR1210.0  8000.0  1168.7  8001.0  1168.7  8672.8  1166.0  9274.8  1166.29596.9
GR1167.1  9620.5  1164.2  9635.0  1165.5  9637.5  1167.2  9694.9  1162.79705.1
GR1152.5  9717.1  1152.0  9738.1  1152.0  9750.6  1152.0  9761.9  1152.010099.9
GR1157.7 10128.3  1163.4 10153.3  1168.8 10207.9  1164.3 10361.2  1167.010375.0
GR1167.0 10500.0  1210.0 10501.0
X1   3.5     18.0  9702.6 10179.5    30.0    30.0    30.0
GR1210.0  8000.0  1168.6  8001.0  1168.8  8683.7  1167.0  9066.3  1167.59622.5
GR1164.3  9637.5  1166.4  9640.7  1167.8  9666.8  1166.2  9693.2  1162.59702.6
GR1152.1  9714.2  1152.1 10094.5  1153.5 10108.4  1159.3 10141.4  1168.810179.5
GR1169.4 10198.8  1164.0 10500.0  1210.0 10501.0
X1   4.0     20.0  9689.8 10163.3    90.0    90.0    90.0
GR1210.0  8000.0  1169.3  8001.0  1169.3  8716.0  1167.8  9076.6  1167.69627.3
GR1165.0  9633.8  1166.6  9637.5  1165.2  9689.8  1152.4  9702.3  1152.49723.0
GR1152.4  9884.6  1152.4  9919.6  1152.0 10036.0  1152.3 10103.9  1159.110136.8
GR1166.6 10163.3  1170.0 10325.0  1164.7 10351.0  1164.7 10499.0  1210.010500.0
X1   4.5     20.0  9584.1 10207.0   540.0   260.0   400.0
```

```
QR1210.0  8000.0  1171.0  8001.0  1171.7  8858.5  1170.9  9026.0  1169.29333.9
QR1169.7  9436.5  1167.4  9443.3  1169.3  9584.1  1157.3  9613.7  1153.89653.3
QR1153.8  9855.1  1153.8  9871.6  1153.8  9902.2  1153.8 10131.7  1158.710149.9
QR1164.1 10174.1  1171.4 10207.0  1172.0 10222.9  1172.0 10400.0  1210.010401.0
X1    5.0    23.0  9610.0 10224.3   540.0   370.0   460.0
QR1210.0  8000.0  1174.0  8001.0  1174.0  8649.5  1172.8  8725.6  1172.09029.0
QR1171.0  9322.0  1169.5  9443.6  1171.5  9503.3  1166.4  9548.1  1171.69581.4
QR1166.9  9605.0  1171.5  9610.0  1155.3  9645.0  1155.3  9884.0  1155.39885.0
QR1155.4  9915.0  1155.4  9915.5  1155.3  9916.3  1155.3 10154.7  1164.510193.7
QR1171.2 10224.3  1171.2 10499.0  1210.0 10500.0
X1    6.1    30.0  9385.0 10213.5   380.0   440.0   480.0
QR1210.0  8000.0  1174.8  8001.0  1173.0  8650.0  1172.0  8870.0  1172.08875.0
QR1171.0  8931.8  1170.0  9196.9  1168.3  9265.9  1167.0  9305.7  1156.89321.0
QR1173.5  9346.0  1167.4  9377.0  1173.5  9385.0  1157.3  9420.0  1157.39660.0
QR1168.3  9678.4  1173.6  9692.1  1172.0  9728.0  1172.6  9771.0  1167.89795.5
QR1160.0  9831.0  1157.0  9844.0  1156.0  9895.0  1157.0 10151.0  1164.710183.0
QR1170.6 10206.0  1172.2 10213.5  1172.0 10342.2  1172.0 10499.0  1210.010500.0
X2 35000
NH    5.0   0.030   600.0   0.030   659.2   0.035   899.2   0.030   958.4 0.035
NH2001.0
X1    7.1     8.0   600.0   958.4   205.0   310.0   245.0
QR1210.0     0.0  1186.8     1.0  1186.8   600.0  1157.8   659.2  1157.8 899.2
QR1187.9   958.4  1187.9  2000.0  1210.0  2001.0
NH    5.0   0.025   600.0   0.030   659.2   0.035   899.2   0.025   958.4 0.035
NH2001.0
X1    7.2     8.0   600.0   958.4   100.0   100.0   100.0
QR1210.0     0.0  1186.8     1.0  1186.8   600.0 1158.18   659.2 1158.18 899.2
QR1187.9   958.4  1187.9  2000.0  1210.0  2001.0
NC                          0.3     0.5
NH    5.0   0.030   604.0   0.025   637.0   0.035   877.0   0.025   914.1 0.035
NH2001.0
X1    7.3    12.0   600.0   914.1     5.0     5.0     5.0
X3   10.0                                          1186.8  1187.9
QR1210.0     0.0  1186.8     1.0  1186.0   600.0  1176.0   600.1  1176.0 604.0
QR1158.2   637.0  1158.2   877.0  1176.2   910.0  1176.2   914.0  1187.9 914.1
QR1187.9  2000.0  1210.0  2001.0
SB   0.90    0.80     2.80     0.0   240.0    15.0  4841.5     2.0 1158.701158.20
NH    5.0   0.030   600.0   0.025   654.4   0.035   894.4   0.025   951.0 0.035
NH2001.0
X1    7.4    12.0   600.0   914.1   145.0   145.0   145.0
X2                     1.0  1178.0  1186.8
X3   10.0                                          1186.8  1187.9
QR1210.0     0.0  1186.8     1.0  1186.0   600.0  1176.0   600.1  1176.0 604.0
QR1158.7   637.0  1158.7   877.0  1176.2   910.0  1176.2   914.0  1187.9 914.1
QR1187.9  2000.0  1210.0  2001.0
BT    4.0   600.0  1186.8  1186.8   600.1  1186.8  1178.0   914.0  1187.91178.2
BT  914.1  1187.9  1187.9
NC                          0.1     0.3
NH    5.0   0.030   600.0   0.025   654.4   0.035   894.4   0.025   951.0 0.035
NH2001.0
X1    7.5     8.0   600.0   951.0     5.0     5.0     5.0
QR1210.0     0.0  1186.8     1.0  1186.8   600.0 1158.72   654.4 1158.72 894.4
QR1187.9   951.0  1187.9  2000.0  1210.0  2001.0
NH    5.0   0.030   600.0   0.025   654.4   0.035   894.4   0.025   951.0 0.035
NH2001.0
X1    7.6     8.0   600.0   951.0   100.0   100.0   100.0
QR1210.0     0.0  1186.8     1.0  1186.8   600.0  1159.1   654.4  1159.1 894.4
QR1187.9   951.0  1187.9  2000.0  1210.0  2001.0
NH    5.0   0.030   530.0   0.025   562.0   0.035   802.0   0.025   834.0 0.035
NH1801.0
```

```
X1  11.0     12.0    530.0    834.0     65.0    335.0    115.0
GR1210.0      0.0   1175.5      1.0   1175.5    530.0   1159.4    562.0   1159.4 802.0
GR1175.0    834.0   1175.0    955.0   1175.0    960.0   1175.0    970.0   1175.51300.0
GR1175.0   1800.0   1210.0   1801.0
NH   5.0    0.030    550.0    0.025    580.0    0.035    820.0    0.025    850.0 0.035
NH1751.0
X1  12.0      9.0    550.0    850.0    210.0    175.0    210.0
GR1210.0      0.0   1176.4      1.0   1177.0    300.0   1174.0    550.0   1160.2 580.0
GR1160.2    820.0   1176.0    850.0   1179.9   1650.0   1210.0   1751.0
NH   5.0    0.030   1000.0    0.025   1041.0    0.035   1281.0    0.025   1322.00.030
NH2301.0
X1  13.0      8.0   1000.0   1322.0    125.0    135.0    130.0
GR1210.0      0.0   1181.0      1.0   1181.0   1000.0   1160.6   1041.0   1160.61281.0
GR1181.0   1322.0   1181.0   2300.0   1210.0   2301.0
NH   5.0    0.030   1000.0    0.025   1038.0    0.035   1278.0    0.025   1316.0 0.030
NH2001.0
X1  14.1      8.0   1000.0   1316.0    170.0    160.0    165.0
GR1210.0      0.0   1180.0      1.0   1180.0   1000.0 1161.20   1038.0 1161.201278.0
GR1180.0   1316.0   1180.0   2000.0   1210.0   2001.0
NC                            0.3      0.5
NH   5.0    0.030   1000.0    0.025   1038.0    0.035   1278.0    0.025   1316.00.030
NH2001.0
X1  14.2      8.0   1000.0   1316.0      5.0      5.0      5.0
X3  10.0                                                        1180.0   1180.0
GR1210.0      0.0   1180.0      1.0   1180.0   1000.0 1161.22   1038.0 1161.221278.0
GR1180.0   1316.0   1180.0   2000.0   1210.0   2001.0
SB  0.90     0.80     2.80      0.0    240.0     15.0   4841.5      2.0 1161.501161.22
NH   5.0    0.030   1000.0    0.025   1037.0    0.035   1277.0    0.025   1314.00.030
NH2001.0
X1  14.3      8.0   1000.0   1314.0     80.0     80.0     80.0
X2                     1.0   1178.0   1181.0
X3  10.0                                                        1180.0   1180.0
GR1210.0      0.0   1180.0      1.0   1180.0   1000.0 1161.50   1037.0 1161.501277.0
GR1180.0   1314.0   1180.0   2000.0   1210.0   2001.0
BT   4.0   1000.0   1180.0   1180.0   1000.1   1181.0   1178.0   1313.9   1181.01178.0
BT1314.0   1180.0   1180.0
NC                            0.1      0.3
NH   5.0    0.030   1000.0    0.025   1037.0    0.035   1277.0    0.025   1314.00.030
NH2001.0
X1  14.4      8.0   1000.0   1314.0      5.0      5.0      5.0
GR1210.0      0.0   1180.0      1.0   1180.0   1000.0 1161.52   1037.0 1161.521277.0
GR1180.0   1314.0   1180.0   2000.0   1210.0   2001.0
NH   5.0    0.030    510.0    0.025    546.0    0.035    782.0    0.025    822.00.030
NH1691.0
X1  15.0     15.0    510.0    822.0    105.0     45.0     90.0
GR1210.0      0.0   1180.0      1.0   1180.0    285.0   1180.9    405.0   1180.0 460.0
GR1180.0    510.0   1161.8    546.0   1161.8    782.0   1180.0    822.0   1180.01039.0
GR1180.0   1040.0   1180.0   1080.0   1179.7   1240.0   1180.0   1690.0   1210.01691.0
NH   5.0    0.030    730.0    0.025    767.0    0.035   1007.0    0.025   1044.00.030
NH1951.0
X1  16.0     12.0    730.0   1044.0    265.0    110.0    210.0
GR1210.0      0.0   1181.8      1.0   1181.8    700.0   1181.0    730.0   1162.6 767.0
GR1162.6   1007.0   1180.0   1044.0   1180.0   1250.0   1179.7   1650.0   1180.01860.0
GR1180.2   1950.0   1210.0   1951.0
NH   5.0    0.030    880.0    0.025    920.0    0.035   1160.0    0.025   1200.0 0.030
NH2101.0
X1  18.0     15.0    880.0   1200.0    170.0    210.0    185.0
GR1210.0      0.0   1182.3      1.0   1182.3    880.0   1163.2    920.0   1163.21160.0
GR1182.3   1200.0   1182.3   1220.0   1180.0   1285.0   1182.5   1303.0   1180.01323.0
GR1177.8   1470.0   1179.7   1540.0   1180.0   1850.0   1180.7   2100.0   1210.02101.0
```

```
NH    5.0    0.030   1050.0    0.025   1090.0    0.035   1330.0    0.025   1370.0 0.030
NH2021.0
X1   19.0     11.0   1050.0   1370.0    475.0    500.0    470.0
GR1210.0      0.0   1183.3      1.0   1183.3   1050.0   1164.8   1090.0   1164.81330.0
GR1183.3   1370.0   1180.0   1375.0   1180.0   1480.0   1180.2   1750.0   1181.82020.0
GR1210.0   2021.0
NH    5.0    0.030    630.0    0.025    670.0    0.035    910.0    0.025    950.0 0.030
NH1681.0
X1   20.0     13.0    630.0    950.0    590.0    730.0    610.0
GR1210.0      0.0   1185.3      1.0   1185.3    630.0   1166.9    670.0   1166.9 910.0
GR1185.3    950.0   1185.3    970.0   1182.0    976.6   1185.0    985.0   1182.0 986.0
GR1182.7   1280.0   1184.0   1680.0   1210.0   1681.0
NH    5.0    0.030    942.0    0.025    982.0    0.035   1222.0    0.025   1262.0 0.030
NH2161.0
X1   21.0     12.0    942.0   1262.0    337.0    550.0    390.0
GR1210.0      0.0   1186.5      1.0   1186.5    942.0   1168.3    982.0   1168.31222.0
GR1186.5   1262.0   1186.5   1282.0   1184.1   1520.0   1184.7   1820.0   1184.01970.0
GR1185.0   2160.0   1210.0   2161.0
NH    5.0    0.030    905.0    0.025    945.0    0.035   1185.0    0.025   1225.0 0.035
NH2201.0
X1   22.0     11.0    905.0   1225.0    480.0    375.0    460.0
GR1210.0      0.0   1189.4      1.0   1189.4    905.0   1169.9    945.0   1169.91185.0
GR1189.4   1225.0   1189.4   1245.0   1188.0   1247.8   1186.4   1640.0   1186.52200.0
GR1210.0   2201.0
NH    5.0    0.030    550.0    0.025    590.0    0.035    830.0    0.025    870.0 0.035
NH1801.0
X1   23.0     12.0    550.0    870.0    520.0    300.0    480.0
GR1210.0      0.0   1191.6      1.0   1191.6    550.0   1171.5    590.0   1171.5 830.0
GR1191.6    870.0   1191.6    890.0   1188 0    897.2   1188.0    900.0   1188.01620.0
GR1187.5   1800.0   1210.0   1801.0
NH    5.0    0.030   1085.0    0.025   1125.0    0.035   1365.0    0.025   1405.0 0.035
NH2051.0
X1   24.0     15.0   1085.0   1405.0    540.0    555.0    545.0
GR1210.0      0.0   1194.3      1.0   1194.3   1085.0   1173.4   1125.0   1173.41365.0
GR1194.3   1405.0   1194.3   1425.0   1190.2   1433.2   1190.0   1500.0   1190.01580.0
GR1190.5   1650.0   1190.0   1720.0   1189.5   1870.0   1188.7   2050.0   1210.02051.0
NH    5.0    0.030    690.0    0.025    730.0    0.035    970.0    0.025   1010.0 0.030
NH1651.0
X1   25.0     11.0    690.0   1010.0    610.0    625.0    615.0
GR1210.0      0.0   1197.2      1.0   1197.2    690.0   1175.5    730.0   1175.5 970.0
GR1197.2   1010.0   1197.2   1030.0   1190.1   1044.4   1190.1   1490.0   1190.41650.0
GR1210.0   1651.0
NH    5.0    0.030    730.0    0.025    774.0    0.035   1014.0    0.025   1058.0 0.030
NH1751.0
X1   26.0     12.0    730.0   1058.0    530.0    630.0    550.0
GR1210.0      0.0   1199.5      1.0   1199.5    730.0   1177.4    774.0   1177.41014.0
GR1199.5   1058.0   1199.5   1070.0   1194.0   1081.0   1194.0   1100.0   1193.81300.0
GR1194.0   1750.0   1210.0   1751.0
NH    5.0    0.030    860.0    0.025    904.8    0.035   1144.8    0.025   1189.6 0.030
NH1991.0
X1   27.0     13.0    860.0   1189.6    330.0    400.0    345.0
GR1210.0      0.0   1201.2      1.0   1201.2    860.0   1178.6    904.8   1178.61144.8
GR1201.2   1189.6   1201.2   1200.0   1195.4   1200.2   1196.0   1410.0   1196.31600.0
GR1196.0   1900.0   1197.8   1990.0   1210.0   1991.0
NH    5.0    0.030    394.0    0.025    434.0    0.035    674.0    0.025    714.0 0.030
NH1601.0
X1   28.0     13.0    394.0    714.0    314.0    320.0    315.0
GR1210.0      0.0   1201.9      1.0   1201.9    394.0   1179.7    434.0   1179.7 674.0
GR1201.9    714.0   1201.9    734.0   1198.3    741.2   1198.3   1200.0   1200.01370.0
GR1200.0   1380.0   1198.5   1600.0   1210.0   1601.0
```

```
NH    5.0    0.030    368.0    0.025    408.0    0.035    648.0    0.025    683.0 0.030
NH1591.0
X1   29.0     18.0    368.0    763.0    566.0    555.0    605.0
GR1210.0       0.0   1202.8      1.0   1202.8    368.0   1182.8    408.0   1181.6 528.0
GR1182.8     648.0   1185.0    683.0   1185.0    693.0   1187.0    718.0   1190.0 732.0
GR1201.0     763.0   1201.0    771.0   1200.0    830.0   1200.0   1060.0   1200.01130.0
GR1200.3    1490.0   1200.0   1590.0   1210.0   1591.0
X2 29000
NH    3.0    0.025     42.0    0.035    282.0    0.025    324.0
X1   30.0      7.0      1.0    323.0    370.0    370.0    370.0
GR1210.0       0.0   1203.7      1.0   1183.0     42.0   1182.2    162.0   1183.0 282.0
GR1203.7     323.0   1210.0    324.0
NH    3.0    0.025     42.0    0.035    282.0    0.025    324.0
X1   31.0      7.0      1.0    323.0    300.0    300.0    300.0
GR1210.0       0.0   1204.0      1.0   1183 3     42.0   1182.5    162.0   1183.3 282.0
GR1204.0     323.0   1210.0    324.0
NH    3.0    0.025    113.0    0.035    307.1    0.025    420.0
X1   32.0     16.0    113.0    307.1     12.0     12.0     12.0
GR1210.0       0.0   1204.0      1.0   1204.0     53.0   1202.0     53.1   1202.0 113.0
GR1187.3     113.1   1186.5    193.0   1183.5    202.0   1183.5    218.0   1186.5 227.0
GR1187.3     307.0   1202.0    307.1   1202.0    367.0   1204.0    367.1   1204.0 419.0
GR1210.0     420.0
EJ


ER
$ASSIGN 2EMI240C.DAT SYS$INPUT
$COPY 2EMI240C.DAT INPUT.DAT
$RUN EPLIB:HEC2
```

```
*****************************************************
*  WATER SURFACE PROFILES                           *
*  VERSION OF NOVEMBER 1976                         *
*  UPDATED MARCH 1982                               *
*                                                   *
*  RUN DATE   4-MAR-87 TIME   09:17:42              *
*****************************************************
```

```
*****************************************
*  U.S. ARMY CORPS OF ENGINEERS         *
*  THE HYDROLOGIC ENGINEERING CENTER    *
*  609 SECOND STREET, SUITE D           *
*  DAVIS, CALIFORNIA 95616              *
*  (916) 440-2105 (FTS) 448-2105        *
*****************************************
```

```
X     X  XXXXXXX  XXXXX            XXXXX
X     X  X        X     X          X     X
X     X  X        X                      X
XXXXXXX  XXXX     X         XXXXX   XXXXX
X     X  X        X                X
X     X  X        X     X          X
X     X  XXXXXXX  XXXXX            XXXXXXX
```

```
**************************************************
  HEC2 RELEASE DATED NOV 76 UPDATED MARCH 1982
  ERROR CORR -  01,02,03,04,05
  MODIFICATION -  50,51,52,53,54,55
**************************************************

C
T1        DAMES & MOORE JOB NUMBER 15448-002-022 FOR ELLIS-MURPHY, INC.
T2        COE & ADOT IN PLACE, W/O 83RD BRIDGE W/NEW CHANNEL @ B = 240 FEET
T3        SKUNK CREEK

J1  ICHECK    INQ       NINV      IDIR      STRT      METRIC    HVINS     Q         WSEL      FQ

    -10.       0.        0.        0.   0.000000     0.01       0.5    41000.   1152.000   0.000

J2  NPROF     IPLOT     PRFVS     XSECV     XSECH     FN        ALLDC     IBW       CHNIM     ITRACE

    -1.000    0.000     0.000     0.000     0.000     0.000     0.000     0.000     0.000     0.000

J3  VARIABLE CODES FOR SUMMARY PRINTOUT

    150.000   0.000     0.000     0.000     0.000     0.000     0.000     0.000     0.000     0.000
```

```
   SECNO     DEPTH     CWSEL     CRIWS     WSELK     EG        HV        HL        OLOSS     BANK ELEV
   Q         QLOB      QCH       QROB      ALOB      ACH       AROB      VOL       TWA     LEFT/RIGHT
   TIME      VLOB      VCH       VROB      XNL       XNCH      XNR       WTN       ELMIN       SSTA
   SLOPE     XLOBL     XLCH      XLOBR     ITRIAL    IDC       ICONT     CORAR     TOPWID      ENDST

*PROF 1

CCHV=   0.100 CEHV=   0.300
*SECNO 1.000

3265 DIVIDED FLOW

3720 CRITICAL DEPTH ASSUMED
         DOWNSTREAM END OF STUDY-NEW RIVER FLOW=41.000 CFS
     1.00     13.21  1152.21  1152.21  1152.00  1156.38      4.17      0.00      0.00  1152.90
   41000.      635.   40365.       0.       97.    2448.        0.        0.        0.  1168.20
     0.00      6.56     16.49     0.00    0.030    0.035     0.030     0.000   1139.00  9748.58
 0.007513        0.        0.       0.        0        4         0      0.00    322.90 10101.85

*SECNO 2.000

3265 DIVIDED FLOW

     2.00     13.74  1154.54     0.00     0.00  1158.28      3.73      1.86      0.04  1166.40
   41000.      944.   40056.       0.      113.    2562.        0.       16.        2.  1163.50
     0.00      8.37     15.64     0.00    0.030    0.035     0.030     0.000   1140.80  9723.34
 0.006748      310.      260.     240.        4        0         0      0.00    306.41 10111.87

*SECNO 3.000
3685 20 TRIALS ATTEMPTED WSEL,CWSEL
3693 PROBABLE MINIMUM SPECIFIC ENERGY
3720 CRITICAL DEPTH ASSUMED
         LOCATION OF FUTURE DROP STRUCTURE
     3.00      6.97  1158.97  1158.97     0.00  1162.28      3.31      0.80      0.04  1162.70
   41000.        0.   41000.       0.        0.    2806.        0.       22.        3.  1163.40
     0.01      0.00     14.61     0.00    0.030    0.035     0.030     0.000   1152.00  9709.49
 0.009632       80.      100.     110.       20        8         0      0.00    424.36 10133.85

*SECNO 3.500

3301 HV CHANGED MORE THAN HVINS

     3.50      8.26  1160.36     0.00     0.00  1162.60      2.23      0.21      0.11  1162.50
   41000.        0.   41000.       0.        0.    3418.        0.       24.        3.  1168.80
     0.01      0.00     11.99     0.00    0.030    0.035     0.030     0.000   1152.10  9704.98
 0.005298       30.       30.      30.        6        0         0      0.00    440.68 10145.66
```

```
   SECNO      DEPTH      CWSEL      CRIWS      WSELK      EG         HV         HL         OLOSS     BANK ELEV
   Q          QLOB       QCH        QROB       ALOB       ACH        AROB       VOL        TWA    LEFT/RIGHT
   TIME       VLOB       VCH        VROB       XNL        XNCH       XNR        WTN        ELMIN        SSTA
   SLOPE      XLOBL      XLCH       XLOBR      ITRIAL     IDC        ICONT      CORAR      TOPWID       ENDST

*SECNO 4.000
     4.00       9.25    1161.25       0.00       0.00    1163.04       1.79       0.40       0.04    1165.20
   41000.         0.    41000.         0.         0.       3824.         0.        32.         4.    1166.60
     0.01       0.00      10.72       0.00      0.030      0.035      0.030      0.000    1152.00    9693.66
 0.003737        90.        90.        90.          3          0          0       0.00     450.75   10144.40

*SECNO 4.500

1645 INI SEC ADDED BY RAISING SEC      4.50,  -0.900FT AND MULTIPLYING BY   0.888

3301 HV CHANGED MORE THAN HVINS

     1.01       9.51    1162.41       0.00       0.00    1163.69       1.28       0.61       0.05    1168.40
   41000.         0.    41000.         0.         0.       4509.         0.        51.         6.    1170.50
     0.02       0.00       9.09       0.00      0.030      0.035      0.030      0.000    1152.90    9419.40
 0.002511       270.       200.       130.          2          0          0       0.00     507.53    9926.93

1645 INI SEC ADDED BY RAISING SEC      1.01,   0.900FT AND MULTIPLYING BY   1.126

     4.50       9.32    1163.12       0.00       0.00    1164.18       1.06       0.46       0.02    1169.30
   41000.         0.    41000.         0.         0.       4970.         0.        72.         9.    1171.40
     0.02       0.00       8.25       0.00      0.030      0.035      0.030      0.000    1153.80    9599.34
 0.002117       270.       200.       130.          2          0          0       0.00     570.38   10169.72

*SECNO 5.000
     5.00       8.80    1164.10       0.00       0.00    1165.27       1.17       1.05       0.03    1171.50
   41000.         0.    41000.         0.         0.       4724.         0.       124.        15.    1171.20
     0.01       0.00       8.68       0.00      0.030      0.035      0.030      0.000    1155.30    9626.02
 0.002485       540.       460.       370.          2          0          0       0.00     565.93   10191.95

*SECNO 6.100

3265 DIVIDED FLOW

          CONFLUENCE OF SKUNK CREEK & NEW RIVER
     6.10       9.46    1165.46       0.00       0.00    1166.41       0.95       1.12       0.02    1173.50
   41000.       614.    40386.         0.        112       5146.         0.       179.        21.    1172.20
     0.05       5.46       7.85       0.00      0.030      0.035      0.030      0.000    1156.00    9308.00
 0.002197       380.       480.       440.          2          0          0       0.00     677.11   10185.98
```

```
   SECNO      DEPTH      CWSEL      CRIWS      WSELK      EG         HV         HL         OLOSS     BANK ELEV
   Q          QLOB       QCH        QROB       ALOB       ACH        AROB       VOL        TWA    LEFT/RIGHT
   TIME       VLOB       VCH        VROB       XNL        XNCH       XNR        WTN        ELMIN       SSTA
   SLOPE      XLOBL      XLCH       XLOBR      ITRIAL     IDC        ICONT      CORAR      TOPWID      ENDST

1490 NH CARD USED
*SECNO 7.100

1645 INI SEC ADDED BY RAISING SEC      7.10,  -1.350FT AND MULTIPLYING BY   1.826

     1.01       8.85   1165.30       0.00       0.00   1166.69       1.39       0.15       0.13   1185.45
   39500.         0.    39500.         0.         0.     4169.         0.       185.        22.   1186.55
     0.06       0.00      9.47       0.00      0.030      0.030      0.030      0.000    1156.45   1170.76
 0.002971        51.       61.        78.          2          0          0       0.00     503.10   1673.85

1645 INI SEC ADDED BY RAISING SEC      1.01,   0.450FT AND MULTIPLYING BY   0.849

3301 HV CHANGED MORE THAN HVINS

     1.02       8.09   1164.99       0.00       0.00   1167.16       2.17       0.23       0.23   1185.90
   38000.         0.    38000.         0.         0.     3216.         0.       190.        23.   1187.00
     0.06       0.00     11.82       0.00      0.030      0.030      0.030      0.000    1156.90    996.63
 0.005176        51.       61.        78.          3          0          0       0.00     422.48   1419.11

1645 INI SEC ADDED BY RAISING SEC      1.02,   0.450FT AND MULTIPLYING BY   0.822

3301 HV CHANGED MORE THAN HVINS

3685 20 TRIALS ATTEMPTED WSEL,CWSEL
3693 PROBABLE MINIMUM SPECIFIC ENERGY
3720 CRITICAL DEPTH ASSUMED
     1.03       7.43   1164.78    1164.78       0.00   1168.33       3.55       0.42       0.41   1186.35
   36500.         0.    36500.         0.         0.     2414.         0.       194.        23.   1187.45
     0.06       0.00     15.12       0.00      0.030      0.030      0.030      0.000    1157.35    821.39
 0.009446        51.       61.        78.         20         11          0       0.00     344.05   1165.44

1645 INI SEC ADDED BY RAISING SEC      1.03,   0.450FT AND MULTIPLYING BY   0.784

3685 20 TRIALS ATTEMPTED WSEL,CWSEL
3693 PROBABLE MINIMUM SPECIFIC ENERGY
```

```
   SECNO     DEPTH     CWSEL     CRIWS     WSELK     EG        HV        HL        OLOSS    BANK ELEV
   Q         QLOB      QCH       QROB      ALOB      ACH       AROB      VOL       TWA    LEFT/RIGHT
   TIME      VLOB      VCH       VROB      XNL       XNCH      XNR       WTN       ELMIN       SSTA
   SLOPE     XLOBL     XLCH      XLOBR     ITRIAL    IDC       ICONT     CORAR     TOPWID      ENDST

3720 CRITICAL DEPTH ASSUMED
        BEGIN CHANNEL (B=240',Z=2) SKUNK CREEK FLOW=35,000 CFS
     7.10      8.49  1166.29  1166.29      0.00  1170.29      4.00      0.56      0.13  1186.80
   35000.        0.   35000.        0.        0.     2182.        0.      198.       24.  1187.90
     0.06      0.00     16.04      0.00     0.030     0.030     0.030     0.000  1157.80   641.87
 0.009001       51.       61.       78.        20         8         0      0.00   274.03   915.90

1490 NH CARD USED
*SECNO 7.200

1645 INI SEC ADDED BY RAISING SEC      7.20,  -0.253FT AND MULTIPLYING BY   0.999

3301 HV CHANGED MORE THAN HVINS

     1.01      9.67  1167.59  1166.40      0.00  1170.62      3.03      0.24      0.10  1186.55
   35000.        0.   35000.        0.        0.     2507.        0.      199.       24.  1187.65
     0.06      0.00     13.96      0.00     0.030     0.025     0.030     0.000  1157.93   638.84
 0.005810       33.       33.       33.        16         5         0      0.00   279.07   917.91

1645 INI SEC ADDED BY RAISING SEC      1.01,   0.127FT AND MULTIPLYING BY   1.000

     1.02      9.90  1167.96      0.00      0.00  1170.82      2.87      0.19      0.02  1186.67
   35000.        0.   35000.        0.        0.     2576.        0.      201.       24.  1187.77
     0.06      0.00     13.59      0.00     0.030     0.025     0.030     0.000  1158.05   638.52
 0.005335       33.       33.       33.         2         0         0      0.00   280.15   918.67

1645 INI SEC ADDED BY RAISING SEC      1.02,   0.127FT AND MULTIPLYING BY   1.000

     7.20     10.04  1168.22      0.00      0.00  1171.00      2.78      0.17      0.01  1186.80
   35000.        0.   35000.        0.        0.     2614.        0.      203.       25.  1187.90
     0.06      0.00     13.39      0.00     0.030     0.025     0.030     0.000  1158.18   638.43
 0.005098       33.       33.       33.         2         0         0      0.00   280.76   919.20

CCHV=   0.300 CEHV=   0.500
1490 NH CARD USED
```

```
   SECNO     DEPTH     CWSEL     CRIWS     WSELK     EG        HV        HL        OLOSS     BANK ELEV
   Q         QLOB      QCH       QROB      ALOB      ACH       AROB      VOL       TWA    LEFT/RIGHT
   TIME      VLOB      VCH       VROB      XNL       XNCH      XNR       WTN       ELMIN       SSTA
   SLOPE     XLOBL     XLCH      XLOBR     ITRIAL    IDC       ICONT     CORAR     TOPWID      ENDST

*SECNO 7.300

3495 OVERBANK AREA ASSUMED NON-EFFECTIVE,ELLEA=     1186.80 ELREA=     1187.90

          DOWNSTREAM EDGE OF PROPOSED OUTER LOOP FREEWAY BRIDGES
     7.30     10.02  1168.22      0.00      0.00  1171.05      2.83      0.03      0.02  1186.00
   35000.        0.   35000.        0.        0.     2593.        0.      204.       25.  1187.90
     0.06      0.00     13.50      0.00     0.030     0.025     0.030     0.000  1158.20   618.40
 0.005091        5.        5.        5.         1         0         0      0.00   276.99   895.39


SPECIAL BRIDGE

5227 DOWNSTREAM ELEV IS   1165.29 ,NOT   1168.22 HYDRAULIC JUMP OCCURS DOWNSTREAM (IF LOW FLOW CONTROLS)

SB  XK        XKOR      COFQ      RDLEN     BWC       BWP       BAREA     SS        ELCHU     ELCHD
     0.90      0.80      2.80      0.00    240.00     15.00   4841.50      2.00   1158.70   1158.20

1490 NH CARD USED
*SECNO 7.400

3301 HV CHANGED MORE THAN HVINS

CLASS B LOW FLOW

3420 BRIDGE W.S.=   1167.30 BRIDGE VELOCITY=,     16.30     CALCULATED CHANNEL AREA=,     2082.

 EQPRS     EQLWC     H3        QWEIR     QLOW      BAREA     TRAPEZOID      ELLC      ELTRD
                                                             AREA
     0.00  1172.02      0.00        0.    35000.     4842.     5087.     1178.00   1186.80


3495 OVERBANK AREA ASSUMED NON-EFFECTIVE,ELLEA=     1186.80 ELREA=     1187.90

          UPSTREAM EDGE OF PROPOSED OUTER LOOP FREEWAY BRIDGES
     7.40     11.03  1169.73      0.00      0.00  1172.02      2.30      0.97      0.00  1186.00
   35000.        0.   35000.        0.        0.     2877.        0.      213.       26.  1187.90
     0.07      0.00     12.17      0.00     0.030     0.025     0.030     0.000  1158.70   615.97
 0.003686       145.      145.      145.         0         0         0      0.00   281.83   897.79


CCHV=   0.100 CEHV=   0.300
```

```
   SECNO     DEPTH     CWSEL     CRIWS     WSELK     EG        HV        HL        OLOSS     BANK ELEV
   Q         QLOB      QCH       QROB      ALOB      ACH       AROB      VOL       TWA     LEFT/RIGHT
   TIME      VLOB      VCH       VROB      XNL       XNCH      XNR       WTN       ELMIN       SSTA
   SLOPE     XLOBL     XLCH      XLOBR     ITRIAL    IDC       ICONT     CORAR     TOPWID      ENDST


1490 NH CARD USED
*SECNO 7.500
     7.50     11.03   1169.75      0.00      0.00   1172.04      2.29      0.02      0.00   1186.80
   35000.        0.   35000.        0.        0.     2882.        0.      213.       26.   1187.90
     0.07      0.00     12.14      0.00     0.030     0.025     0.030     0.000   1158.72    633.04
 0.003681        5.        5.        5.         0         0         0      0.00    282.75    915.79

1490 NH CARD USED
*SECNO 7.600
     7.60     11.03   1170.13      0.00      0.00   1172.41      2.28      0.37      0.00   1186.80
   35000.        0.   35000.        0.        0.     2887.        0.      220.       26.   1187.90
     0.07      0.00     12.12      0.00     0.030     0.025     0.030     0.000   1159.10    632.73
 0.003658      100.      100.      100.         0         0         0      0.00    283.36    916.09

1490 NH CARD USED
*SECNO 11.000
    11.00     11.26   1170.66      0.00      0.00   1172.83      2.17      0.41      0.01   1175.50
   35000.        0.   35000.        0.        0.     2958.        0.      227.       27.   1175.00
     0.07      0.00     11.83      0.00     0.030     0.025     0.030     0.000   1159.40    539.62
 0.003422       65.      115.      335.         2         0         0      0.00    285.47    825.10

1490 NH CARD USED
*SECNO 12.000
          83RD AVENUE CROSSES BETWEEN SECTION NUMBERS 12.0 & 15.0
    12.00     11.15   1171.35      0.00      0.00   1173.57      2.22      0.73      0.01   1174.00
   35000.        0.   35000.        0.        0.     2930.        0.      242.       28.   1176.00
     0.08      0.00     11.94      0.00     0.030     0.025     0.030     0.000   1160.20    555.75
 0.003506      210.      210.      175.         2         0         0      0.00    285.43    841.18

1490 NH CARD USED
*SECNO 13.000
    13.00     11.24   1171.84      0.00      0.00   1174.02      2.19      0.45      0.00   1181.00
   35000.        0.   35000.        0.        0.     2950.        0.      250.       29.   1181.00
     0.08      0.00     11.86      0.00     0.030     0.025     0.030     0.000   1160.60   1018.42
 0.003442      125.      130.      135.         2         0         0      0.00    285.17   1303.58

1490 NH CARD USED
```

```
   SECNO     DEPTH     CWSEL     CRIWS     WSELK     EG        HV        HL        OLOSS     BANK ELEV
   Q         QLOB      QCH       QROB      ALOB      ACH       AROB      VOL       TWA     LEFT/RIGHT
   TIME      VLOB      VCH       VROB      XNL       XNCH      XNR       WTN       ELMIN       SSTA
   SLOPE     XLOBL     XLCH      XLOBR     ITRIAL    IDC       ICONT     CORAR     TOPWID      ENDST

*SECNO 14.100
    14.10     11.20   1172.40      0.00      0.00   1174.60      2.20      0.57      0.00   1180.00
   35000.        0.   35000.        0.        0.     2941.        0.      261.       30.   1180.00
     0.08      0.00     11.90      0.00     0.030     0.025     0.030     0.000   1161.20   1015.37
 0.003480      170.      165.      160.         2         0         0      0.00    285.27   1300.63

CCHV=   0.300 CEHV=   0.500
1490 NH CARD USED
*SECNO 14.200

3495 OVERBANK AREA ASSUMED NON-EFFECTIVE,ELLEA=     1180.00 ELREA=     1180.00

    14.20     11.20   1172.42      0.00      0.00   1174.62      2.20      0.02      0.00   1180.00
   35000.        0.   35000.        0.        0.     2942.        0.      262.       30.   1180.00
     0.08      0.00     11.90      0.00     0.030     0.025     0.030     0.000   1161.22   1015.34
 0.003477        5.        5.        5.         0         0         0      0.00    285.33   1300.66


SPECIAL BRIDGE

SB   XK        XKOR      COFG      RDLEN     BWC       BWP       BAREA     SS        ELCHU     ELCHD
     0.90      0.80      2.80      0.00    240.00     15.00   4841.50      2.00   1161.50   1161.22

1490 NH CARD USED
*SECNO 14.300
CLASS A LOW FLOW

3420 BRIDGE W.S.=   1171.95 BRIDGE VELOCITY=,      13.43      CALCULATED CHANNEL AREA=,      2569.

 EQPRS     EQLWC     H3        QWEIR     QLOW      BAREA     TRAPEZOID      ELLC      ELTRD
                                                             AREA
     0.00   1175.04      0.51        0.    35000.     4842.     4257.     1178.00   1181.00


3495 OVERBANK AREA ASSUMED NON-EFFECTIVE,ELLEA=     1180.00 ELREA=     1180.00

    14.30     11.43   1172.93      0.00      0.00   1175.04      2.11      0.42      0.00   1180.00
   35000.        0.   35000.        0.        0.     3005.        0.      267.       31.   1180.00
     0.08      0.00     11.65      0.00     0.030     0.025     0.030     0.000   1161.50   1014.13
 0.003245       80.       80.       80.         0         0         0      0.00    285.73   1299.87
```

```
   SECNO      DEPTH      CWSEL      CRIWS      WSELK      EG         HV         HL         OLOSS     BANK ELEV
   Q          QLOB       QCH        QROB       ALOB       ACH        AROB       VOL        TWA    LEFT/RIGHT
   TIME       VLOB       VCH        VROB       XNL        XNCH       XNR        WTN        ELMIN       SSTA
   SLOPE      XLOBL      XLCH       XLOBR      ITRIAL     IDC        ICONT      CORAR      TOPWID      ENDST

CCHV=   0.100 CEHV=   0.300
1490 NH CARD USED
*SECNO 14.400
     14.40      11.43   1172.95       0.00       0.00   1175.06       2.11       0.02       0.00   1180.00
    35000.         0.   35000.         0.         0.      3006.         0.       268.        31.   1180.00
      0.08       0.00     11.64       0.00      0.030      0.025      0.030      0.000    1161.52   1014.11
  0.003245         5.        5.         5.          0          0          0       0.00     285.78   1299.89

1490 NH CARD USED
*SECNO 15.000
     15.00      11.41   1173.21       0.00       0.00   1175.37       2.17       0.30       0.02   1180.00
    35000.         0.   35000.         0.         0.      2963.         0.       274.        31.   1180.00
      0.09       0.00     11.81       0.00      0.030      0.025      0.030      0.000    1161.80    523.44
  0.003383       105.       90.        45.          2          0          0       0.00     283.63    807.07

1490 NH CARD USED
*SECNO 16.000
     16.00      11.35   1173.95       0.00       0.00   1176.08       2.12       0.70       0.00   1181.00
    35000.         0.   35000.         0.         0.      2992.         0.       288.        33.   1180.00
      0.09       0.00     11.70       0.00      0.030      0.025      0.030      0.000    1162.60    744.17
  0.003321       265.      210.       110.          2          0          0       0.00     286.98   1031.15

1490 NH CARD USED
*SECNO 18.000
          DOWNSTREAM END OF COE PROPOSED LEFT BANK STABILIZATION
     18.00      11.38   1174.58       0.00       0.00   1176.69       2.11       0.61       0.00   1182.30
    35000.         0.   35000.         0.         0.      3003.         0.       301.        34.   1182.30
      0.10       0.00     11.65       0.00      0.030      0.025      0.030      0.000    1163.20    896.16
  0.003281       170.      185.       210.          2          0          0       0.00     287.68   1183.84

1490 NH CARD USED
*SECNO 19.000
     19.00      11.33   1176.13       0.00       0.00   1178.25       2.12       1.55       0.00   1183.30
    35000.         0.   35000.         0.         0.      2995.         0.       333.        37.   1183.30
      0.11       0.00     11.69       0.00      0.030      0.025      0.030      0.000    1164.80   1065.52
  0.003331       475.      470.       500.          2          0          0       0.00     288.97   1354.48
```

```
   SECNO      DEPTH      CWSEL      CRIWS      WSELK      EG         HV         HL         OLOSS      BANK ELEV
   Q          QLOB       QCH        QROB       ALOB       ACH        AROB       VOL        TWA     LEFT/RIGHT
   TIME       VLOB       VCH        VROB       XNL        XNCH       XNR        WTN        ELMIN        SSTA
   SLOPE      XLOBL      XLCH       XLOBR      ITRIAL     IDC        ICONT      CORAR      TOPWID       ENDST

1490 NH CARD USED
*SECNO 20.000
    20.00      11.26    1178.16       0.00       0.00    1180.31       2.14       2.05       0.01    1185.30
   35000.         0.   35000.          0.          0.    2978.          0.       375.        41.    1185.30
     0.12       0.00      11.75       0.00      0.030      0.025      0.030      0.000    1166.90     645.52
 0.003393       590.       610.       730.          2          0          0       0.00     288.96     934.48

1490 NH CARD USED
*SECNO 21.000
          DOWNSTREAM EDGE OF EXISTING PARK FACILITIES
    21.00      11.18    1179.48       0.00       0.00    1181.66       2.17       1.34       0.01    1186.50
   35000.         0.   35000.          0.          0.    2957.          0.       402.        44.    1186.50
     0.13       0.00      11.83       0.00      0.030      0.025      0.030      0.000    1168.30     957.43
 0.003476       337.       390.       550.          2          0          0       0.00     289.13    1246.57

1490 NH CARD USED
*SECNO 22.000
    22.00      11.17    1181.07       0.00       0.00    1183.27       2.20       1.61       0.01    1189.40
   35000.         0.   35000.          0.          0.    2938.          0.       433.        47.    1189.40
     0.14       0.00      11.91       0.00      0.030      0.025      0.030      0.000    1169.90     922.08
 0.003503       480.       460.       375.          1          0          0       0.00     285.84    1207.92

1490 NH CARD USED
*SECNO 23.000
    23.00      11.25    1182.75       0.00       0.00    1184.94       2.19       1.67       0.00    1191.60
   35000.         0.   35000.          0.          0.    2950.          0.       465.        50.    1191.60
     0.15       0.00      11.86       0.00      0.030      0.025      0.030      0.000    1171.50     567.62
 0.003436       520.       480.       300.          2          0          0       0.00     284.76     852.38

1490 NH CARD USED
*SECNO 24.000
          UPSTREAM EDGE OF EXISTING PARK FACILITIES
    24.00      11.22    1184.62       0.00       0.00    1186.83       2.21       1.88       0.01    1194.30
   35000.         0.   35000.          0.          0.    2933.          0.       502.        54.    1194.30
     0.17       0.00      11.93       0.00      0.030      0.025      0.030      0.000    1173.40    1103.53
 0.003476       540.       545.       555.          2          0          0       0.00     282.93    1386.47
```

```
   SECNO      DEPTH      CWSEL      CRIWS      WSELK      EG         HV         HL         OLOSS      BANK ELEV
   Q          QLOB       QCH        QROB       ALOB       ACH        AROB       VOL        TWA     LEFT/RIGHT
   TIME       VLOB       VCH        VROB       XNL        XNCH       XNR        WTN        ELMIN        SSTA
   SLOPE      XLOBL      XLCH       XLOBR      ITRIAL     IDC        ICONT      CORAR      TOPWID       ENDST

1490 NH CARD USED
*SECNO 25.000
    25.00      11.25    1186.75       0.00       0.00    1188.96       2.21       2.13       0.00    1197.20
   35000.         0.   35000.          0.         0.      2933.         0.       543.        58.    1197.20
     0.18       0.00      11.93       0.00      0.030      0.025      0.030      0.000    1175.50     709.27
 0.003454       610.       615.       625.          2          0          0       0.00     281.47     990.73

1490 NH CARD USED
*SECNO 26.000
    26.00      11.28    1188.68       0.00       0.00    1190.85       2.17       1.89       0.00    1199.50
   35000.         0.   35000.          0.         0.      2960.         0.       581.        61.    1199.50
     0.19       0.00      11.82       0.00      0.030      0.025      0.030      0.000    1177.40     751.55
 0.003402       530.       550.       630.          2          0          0       0.00     284.91    1036.45

1490 NH CARD USED
*SECNO 27.000
    27.00      11.25    1189.85       0.00       0.00    1192.03       2.19       1.18       0.00    1201.20
   35000.         0.   35000.          0.         0.      2950.         0.       604.        63.    1201.20
     0.20       0.00      11.86       0.00      0.030      0.025      0.030      0.000    1178.60     882.51
 0.003435       330.       345.       400.          2          0          0       0.00     284.59    1167.09

1490 NH CARD USED
*SECNO 28.000
    28.00      11.20    1190.90       0.00       0.00    1193.14       2.24       1.09       0.02    1201.90
   35000.         0.   35000.          0.         0.      2915.         0.       625.        65.    1201.90
     0.21       0.00      12.01       0.00      0.030      0.025      0.030      0.000    1179.70     413.81
 0.003507       314.       315.       320.          2          0          0       0.00     280.37     694.19

1490 NH CARD USED
*SECNO 29.000

1645 INI SEC ADDED BY RAISING SEC     29.00,  -0.950FT AND MULTIPLYING BY   0.945

     1.01      11.65    1192.30       0.00       0.00    1194.10       1.81       0.92       0.04    1201.85
   35000.         0.   35000.          0.         0.      3244.         0.       647.        68.    1200.05
     0.22       0.00      10.79       0.00      0.030      0.026      0.030      0.000    1180.65     365.78
 0.002662       283.       303.       278.          6          0          0       0.00     334.54     700.32
```

```
   SECNO     DEPTH     CWSEL     CRIWS     WSELK     EG        HV        HL        OLOSS     BANK ELEV
   Q         QLOB      QCH       QROB      ALOB      ACH       AROB      VOL       TWA     LEFT/RIGHT
   TIME      VLOB      VCH       VROB      XNL       XNCH      XNR       WTN       ELMIN       SSTA
   SLOPE     XLOBL     XLCH      XLOBR     ITRIAL    IDC       ICONT     CORAR     TOPWID      ENDST


1645 INT SEC ADDED BY RAISING SEC      1.01,    0.950FT AND MULTIPLYING BY    1.058

         CONFLUENCE OF ACDC & SKUNK CREEK
    29.00     11.68  1193.28      0.00      0.00  1194.88      1.60      0.76      0.02  1202.80
   35000.        0.   35000.        0.        0.    3443.        0.      670.       70.  1201.00
     0.22      0.00     10.17      0.00     0.030     0.026     0.030     0.000  1181.60   387.05
 0.002353      283.      303.      278.         7         0         0      0.00   354.19   741.23


1490 NH CARD USED
*SECNO 30.000
         ACDC CHANNEL-FLOW=29,000 CFS
    30.00     12.14  1194.34      0.00      0.00  1195.72      1.38      0.82      0.02  1203.70
   29000.        0.   29000.        0.        0.    3073.        0.      697.       73.  1203.70
     0.23      0.00      9.44      0.00     0.030     0.025     0.030     0.000  1182.20    19.54
 0.002050      370.      370.      370.         2         0         0      0.00   284.93   304.46


1490 NH CARD USED
*SECNO 31.000
    31.00     12.52  1195.02      0.00      0.00  1196.31      1.29      0.58      0.01  1204.00
   29000.        0.   29000.        0.        0.    3182.        0.      719.       75.  1204.00
     0.24      0.00      9.11      0.00     0.030     0.025     0.030     0.000  1182.50    18.78
 0.001838      300.      300.      300.         2         0         0      0.00   286.44   305.22


1490 NH CARD USED
*SECNO 32.000

3301 HV CHANGED MORE THAN HVINS

3685 20 TRIALS ATTEMPTED WSEL,CWSEL
3693 PROBABLE MINIMUM SPECIFIC ENERGY
3720 CRITICAL DEPTH ASSUMED
         LOCATION OF 4-FOOT-HIGH COE DROP STRUCTURE
    32.00     11.67  1195.17  1195.17      0.00  1199.73      4.56      0.04      0.98  1202.00
   29000.        0.   29000.        0.        0.    1692.        0.      720.       75.  1202.00
     0.24      0.00     17.14      0.00     0.030     0.035     0.030     0.000  1183.50   113.05
 0.010131       12.       12.       12.        20         8         0      0.00   194.01   307.05
```

PROFILE FOR STREAM SKUNK CREEK

PLOTTED POINTS (BY PRIORITY)-E-ENERGY,W-WATER SURFACE,I-INVERT,C-CRITICAL W.S.,L-LEFT BANK,R-RIGHT BANK,M-LOWER END STA

```
ELEVATION  1130.     1140.     1150.     1160.     1170.     1180.     1190.     1200.     1210.     1220.
    SECNO  CUMDIS
  1.00      0.  .        I.          . WL  E         R .         .         .         .         M         .         .
           50.  C        I.          .  W L E       R  .         .         .         .         M         .         .
          100.  C         I          .  W   EL      R  .         .         .         .         M         .         .
          150.  C         I          .   W  E  .L   R   .         .         .         .         M         .         .
          200.  C         I          .   W   E .  L R   .         .         .         .         M         .         .
          250.  C         .I         .   W   E .   R L  .         .         .         .         M         .         .
  2.00    300.  C         .I         .    W  E .   R L  .         .         .         .         M         .         .
          350.  C         .     I    .      W  E  R L   .         .         .         .         M         .         .
  3.00    400.  .         .          . I      W. EL     .         .         .         .         M         .         .
  3.50    450.  C         .          . I       W  E     R.         .         .         .         M         .         .
  4.00    500.  C         .          . I       .W E L R  .         .         .         .         M         .         .
          550.  C         .          . I        . WE  L R .         .         .         .         M         .         .
          600.  C         .          . I        . WE   L R.         .         .         .         M         .         .
          650.  C         .          .  I       . W E   L R         .         .         .         M.        .         .
  1.01    700.  C         .          .  I       . W E   L .R        .         .         .         M.        .         .
          750.  C         .          .  I       .  WE    L.R        .         .         .         M.        .         .
          800.  C         .          .  I       .  WE    L.R        .         .         .         M         .         .
          850.  C         .          .   I      .  WE    L.R        .         .         .         M         .         .
  4.50    900.  C         .          .   I      .  WE    L.R        .         .         .         M         .         .
          950.  C         .          .   I      .  WE     LR        .         .         .         M         .         .
         1000.  C         .          .   I      .  WE     LR        .         .         .         M         .         .
         1050.  C         .          .   I      .  W E    LR        .         .         .         M         .         .
         1100.  C         .          .   I      .   WE    LR        .         .         .         M         .         .
         1150.  C         .          .    I     .   WE    LR        .         .         .         M         .         .
         1200.  C         .          .    I     .   WE    .L        .         .         .         M         .         .
         1250.  C         .          .    I     .   WE    .L        .         .         .         M         .         .
         1300.  C         .          .    I     .   WE    .L        .         .         .         M         .         .
  5.00   1350.  C         .          .    I     .   WE    .RL       .         .         .         M         .         .
         1400.  C         .          .    I     .   WE    .RL       .         .         .         M         .         .
         1450.  C         .          .    I     .   W E   .RL       .         .         .         M         .         .
         1500.  C         .          .     I    .    WE   . L       .         .         .         M         .         .
         1550.  C         .          .     I    .    WE   . L       .         .         .         M         .         .
         1600.  C         .          .     I    .    WE   . RL      .         .         .         M         .         .
         1650.  C         .          .     I    .    WE   . RL      .         .         .         M         .         .
         1700.  C         .          .     I    .    WE   . RL      .         .         .         M         .         .
         1750.  C         .          .     I    .    WE   . RL      .         .         .         M         .         .
         1800.  C         .          .     I    .    WE   . RL      .         .         .         M         .         .
  6.10   1850.  C         .          .     I    .    WE   . R L     .         .         .         M         .         .
  1.01   1900.  C         .          .     I    .    W E  .         .     L R .         .         M.        .         .
  1.02   1950.  C         .          .      I   .    W E  .         .      LR .         .         M.        .         .
         2000.  C         .          .      I   .    W  E .         .      LR .         .         M.        .         .
  1.03   2050.  .         .          .      I   .    W  E .         .      LR .         .         M         .         .
  7.10   2100.  .         .          .       I  .     W   E         .       LR .         .         M         .         .
  1.01   2150.  .         .          .       I  .     C W .E        .       LR .         .         M         .         .
  1.02   2200.  C         .          .       I  .       W .E        .       LR .         .         M         .         .
  7.20   2250.  C         .          .       I  .       W .E        .       LR .         .         M         .         .
  7.30   2300.  C         .          .       I  .       W .E        .     L R .         .         M         .         .
  7.40   2350.  C         .          .        I.          W E        .     L R .         .         M         .         .
  7.50   2400.  C         .          .        I.          W E        .      LR .         .         M         .         .
```

```
 7.60  2450.  C  .  .  I.  W E  .  LR .  .  M  .  .
       2500.  C  .  .  I.  W  E  . L  .  .  M  .  .
11.00  2550.  C  .  .  I.  .W E RL  .  .  .  M  .  .
       2600.  C  .  .   I  .W E L  .  .  .  M  .  .
       2650.  C  .  .   I  .W E L  .  .  .  M  .  .
       2700.  C  .  .   I  .W EL R  .  .  .  M  .  .
12.00  2750.  C  .  .   I  .W  E R  .  .  .  M  .  .
       2800.  C  .  .   I  . W E  LR .  .  .  M  .  .
       2850.  C  .  .  .I  . W E   LR  .  .  M  .  .
13.00  2900.  C  .  .  .I  . W E    .L  .  .  M  .  .
       2950.  C  .  .  .I  . W E    .L  .  .  M  .  .
       3000.  C  .  .  .I  . W E    L  .  .  M  .  .
14.10  3050.  C  .  .  .I  . W  E   L  .  .  M  .  .
14.20  3100.  C  .  .  .I  . W  E   L  .  .  M  .  .
14.30  3150.  C  .  .  . I  .  W E   L  .  .  M  .  .
14.40  3200.  C  .  .  . I  .  W E   L  .  .  M  .  .
15.00  3250.  C  .  .  . I  .  W E   L  .  .  M  .  .
       3300.  C  .  .  . I  .  W  E  L  .  .  M  .  .
       3350.  C  .  .  . I  .   W E  L  .  .  M  .  .
       3400.  C  .  .  . I  .   W E  RL .  .  M  .  .
16.00  3450.  C  .  .  .  I  .   W E  RL .  .  M  .  .
       3500.  C  .  .  .  I  .   W E  .L .  .  M  .  .
       3550.  C  .  .  .  I  .   W E  .RL .  .  M  .  .
       3600.  C  .  .  .  I  .   W  E . L .  .  M  .  .
18.00  3650.  C  .  .  .  I  .    W E . L .  .  M  .  .
       3700.  C  .  .  .  I  .    W E . L .  .  M  .  .
       3750.  C  .  .  .   I  .   W E .  L .  .  M  .  .
       3800.  C  .  .  .   I  .   W E .  L .  .  M  .  .
       3850.  C  .  .  .   I  .   W E .  L .  .  M  .  .
       3900.  C  .  .  .   I  .   W  E . L .  .  M  .  .
       3950.  C  .  .  .   I  .    W E . L .  .  M  .  .
       4000.  C  .  .  .   I  .    W E . L .  .  M  .  .
       4050.  C  .  .  .    I  .   W E . L .  .  M  .  .
19.00  4100.  C  .  .  .    I  .   W E . L .  .  M  .  .
       4150.  C  .  .  .    I  .   W E . L .  .  M  .  .
       4200.  C  .  .  .    I  .   W  E. L .  .  M  .  .
       4250.  C  .  .  .    I  .    W E. L .  .  M  .  .
       4300.  C  .  .  .    I  .    W E. L .  .  M  .  .
       4350.  C  .  .  .     I  .   W E. L .  .  M  .  .
       4400.  C  .  .  .     I  .   W E. L .  .  M  .  .
       4450.  C  .  .  .     I  .   W E. L .  .  M  .  .
       4500.  C  .  .  .     I  .   W  E  L .  .  M  .  .
       4550.  C  .  .  .     I  .    W E  L .  .  M  .  .
       4600.  C  .  .  .      I  .   W E  L .  .  M  .  .
       4650.  C  .  .  .      I  .   W E  L .  .  M  .  .
20.00  4700.  C  .  .  .      I  .   W E  L .  .  M  .  .
       4750.  C  .  .  .      I  .   W E  L .  .  M  .  .
       4800.  C  .  .  .      I  .   W .E  L .  .  M  .  .
       4850.  C  .  .  .      I  .    W.E  L .  .  M  .  .
       4900.  C  .  .  .       I .    W.E  L .  .  M  .  .
       4950.  C  .  .  .       I .    W.E  L .  .  M  .  .
       5000.  C  .  .  .       I .    W.E  L .  .  M  .  .
       5050.  C  .  .  .       I .    W.  E L .  .  M  .  .
21.00  5100.  C  .  .  .       I .    W.  E  L .  .  M  .  .
       5150.  C  .  .  .       I .     W E  L .  .  M  .  .
       5200.  C  .  .  .        I.     W E  L .  .  M  .  .
       5250.  C  .  .  .        I.     W E  L .  .  M  .  .
       5300.  C  .  .  .        I.     W E   L .  .  M  .  .
       5350.  C  .  .  .        I.     W  E  L .  .  M  .  .
       5400.  C  .  .  .        I.      .W E  L .  .  M  .  .
```

```
       5450.  C .  .  .  I   .W E    L.    .   M  .  .
       5500.  C .  .  .  I   .W E    L.    .   M  .  .
22.00  5550.  C .  .  .  I   .W E    L.    .   M  .  .
       5600.  C .  .  .  I   .W E     L    .   M  .  .
       5650.  C .  .  .  I   .W  E    L    .   M  .  .
       5700.  C .  .  .  I   . W E    L    .   M  .  .
       5750.  C .  .  .  .I  . W E    L    .   M  .  .
       5800.  C .  .  .  .I  . W E    .L   .   M  .  .
       5850.  C .  .  .  .I  . W E    .L   .   M  .  .
       5900.  C .  .  .  .I  . W E    .L   .   M  .  .
       5950.  C .  .  .  .I  . W  E   .L   .   M  .  .
       6000.  C .  .  .  .I  .  W E   .L   .   M  .  .
23.00  6050.  C .  .  .  . I  .  W E   . L  .   M  .  .
       6100.  C .  .  .  . I  .  W E   . L  .   M  .  .
       6150.  C .  .  .  . I  .  W E   . L  .   M  .  .
       6200.  C .  .  .  . I  .  W E   . L  .   M  .  .
       6250.  C .  .  .  . I  .  W  E  .  L .   M  .  .
       6300.  C .  .  .  . I  .   W E  .  L .   M  .  .
       6350.  C .  .  .  .  I .   W E  .  L .   M  .  .
       6400.  C .  .  .  .  I .   W E  .  L .   M  .  .
       6450.  C .  .  .  .  I .   W E  .   L.   M  .  .
       6500.  C .  .  .  .  I .   W  E .   L.   M  .  .
       6550.  C .  .  .  .  I .   W  E .   L.   M  .  .
24.00  6600.  C .  .  .  .  I .    W E .   L.   M  .  .
       6650.  C .  .  .  .   I .   W E .    L.   M  .  .
       6700.  C .  .  .  .   I .   W E .    L.   M  .  .
       6750.  C .  .  .  .   I .   W E .    L.   M  .  .
       6800.  C .  .  .  .   I .   W  E.    L.   M  .  .
       6850.  C .  .  .  .   I .   W  E.    L.   M  .  .
       6900.  C .  .  .  .   I .    W E.    L.   M  .  .
       6950.  C .  .  .  .    I .   W E.    L.   M  .  .
       7000.  C .  .  .  .    I .   W E.    L.   M  .  .
       7050.  C .  .  .  .    I .   W E.    L.   M  .  .
       7100.  C .  .  .  .    I .   W  E.    L.  M  .  .
       7150.  C .  .  .  .    I .    W E.    L.  M  .  .
25.00  7200.  C .  .  .  .     I .   W E.    L.  M  .  .
       7250.  C .  .  .  .     I .   W E.    L.  M  .  .
       7300.  C .  .  .  .     I .   W E.     L. M  .  .
       7350.  C .  .  .  .     I .   W E.     L. M  .  .
       7400.  C .  .  .  .     I .   W  E     L. M  .  .
       7450.  C .  .  .  .     I .    W E     L. M  .  .
       7500.  C .  .  .  .      I .   W E     L. M  .  .
       7550.  C .  .  .  .      I .   W E      L.M  .  .
       7600.  C .  .  .  .      I .   W E      L.M  .  .
       7650.  C .  .  .  .      I .   W .E     L.M  .  .
       7700.  C .  .  .  .      I .    W.E     L.M  .  .
26.00  7750.  C .  .  .  .      I .    W.E      L M  .  .
       7800.  C .  .  .  .       I .   W.E      L M  .  .
       7850.  C .  .  .  .       I .   W.E      L M  .  .
       7900.  C .  .  .  .       I .   W.E      L M  .  .
       7950.  C .  .  .  .       I .   W. E     L M  .  .
       8000.  C .  .  .  .       I .    W E     .L M  .  .
       8050.  C .  .  .  .       I .    W E     .L M  .  .
27.00  8100.  C .  .  .  .        I.    W E     .L M  .  .
       8150.  C .  .  .  .        I.    W E     .L M  .  .
       8200.  C .  .  .  .        I.    W E     .L M  .  .
       8250.  C .  .  .  .        I.    W  E    . L M  .  .
       8300.  C .  .  .  .        I.    .W E    . L M  .  .
       8350.  C .  .  .  .        I.    .W E    . L M  .  .
28.00  8400.  C .  .  .  .         I    .W E    . L M  .  .
```

```
        8450.  C                                   I          .W E      . L       M          .          .
        8500.  C                                   I          .W E     .RL        M          .          .
        8550.  C                                   I          . W E    .RL        M          .          .
        8600.  C                                   I          . W E    .RL       M.          .          .
        8650.  C                                   I          . W E    R L       M.          .          .
  1.01  8700.  C                                  .I          . W E    R L       M.          .          .
        8750.  C                                  .I          . W E    R L       M.          .          .
        8800.  C                                  .I          .  WE    R L       M.          .          .
        8850.  C                                  .I          .  WE    .RL        M          .          .
        8900.  C                                  .I          .  W E   .RL        M          .          .
        8950.  C                                  .I          .  W E   .R L       M          .          .
 29.00  9000.  C                                   .I         .  W E   .R L       M          .          .
        9050.  C                                   .I         .  W E   .R L       M          .          .
        9100.  C                                   .I         .   WE   . RL       M          .          .
        9150.  C                                   .I         .   WE   . RL       M          .          .
        9200.  C                                   .I         .   WE   . RL       M          .          .
        9250.  C                                   .I         .   WE   .  L       M          .          .
        9300.  C                                   .I         .   W E  .  RL      M          .          .
        9350.  C                                   .I         .   W E  .   L      M          .          .
 30.00  9400.  C                                   .I         .   W E  .   L      M          .          .
        9450.  C                                   .I         .   W E  .   L      M          .          .
        9500.  C                                   .I         .    WE  .   L      M          .          .
        9550.  C                                   .I         .    WE  .   L      M          .          .
        9600.  C                                   .I         .    WE  .   L      M          .          .
        9650.  C                                   .I         .    WE  .   L      M          .          .
 31.00  9700.  C                                    .  I      .    WE  .   L      M          .          .
 32.00  9750.  .                                    .   I     .    W   E L        M          .          .
```

```
*****************************************
  HEC2 RELEASE DATED NOV 76 UPDATED MARCH 1982
  ERROR CORR =  01,02,03,04,05
  MODIFICATION -  50,51,52,53,54,55
*****************************************
```

NOTE- ASTERISK (*) AT LEFT OF CROSS-SECTION NUMBER INDICATES MESSAGE IN SUMMARY OF ERRORS LIST

SKUNK CREEK

SUMMARY PRINTOUT TABLE 150

	SECNO	XLCH	ELTRD	ELLC	ELMIN	Q	CWSEL	CRIWS	EG	10K*S	VCH	AREA	.01K
*	1.000	0.00	0.00	0.00	1139.00	41000.00	1152.21	1152.21	1156.38	75.13	18.49	2544.99	4730.27
	2.000	260.00	0.00	0.00	1140.80	41000.00	1154.54	0.00	1158.28	67.48	15.64	2674.73	4990.95
*	3.000	100.00	0.00	0.00	1152.00	41000.00	1158.97	1158.97	1162.28	96.32	14.61	2806.26	4177.68
	3.500	30.00	0.00	0.00	1152.10	41000.00	1160.36	0.00	1162.60	52.58	11.99	3418.30	5654.41
	4.000	90.00	0.00	0.00	1152.00	41000.00	1161.25	0.00	1163.04	37.37	10.72	3824.00	6707.16
*	4.500	400.00	0.00	0.00	1153.80	41000.00	1163.12	0.00	1164.18	21.17	8.25	4970.08	8910.82
	5.000	460.00	0.00	0.00	1155.30	41000.00	1164.10	0.00	1165.27	24.85	8.68	4724.14	8225.52
	6.100	480.00	0.00	0.00	1156.00	41000.00	1165.46	0.00	1166.41	21.97	7.85	5258.71	8747.91
*	7.100	245.00	0.00	0.00	1157.80	35000.00	1166.29	1166.29	1170.29	90.01	16.04	2181.92	3689.15
*	7.200	100.00	0.00	0.00	1158.18	35000.00	1168.22	0.00	1171.00	50.98	13.39	2614.03	4902.12
	7.300	5.00	0.00	0.00	1158.20	35000.00	1168.22	0.00	1171.05	50.91	13.50	2593.48	4905.27
*	7.400	145.00	1186.80	1178.00	1158.70	35000.00	1169.73	0.00	1172.02	36.86	12.17	2877.02	5765.24
	7.500	5.00	0.00	0.00	1158.72	35000.00	1169.75	0.00	1172.04	36.81	12.14	2882.15	5768.89
	7.600	100.00	0.00	0.00	1159.10	35000.00	1170.13	0.00	1172.41	36.68	12.12	2887.43	5778.69
	11.000	115.00	0.00	0.00	1159.40	35000.00	1170.66	0.00	1172.83	34.22	11.83	2958.10	5983.27
	12.000	210.00	0.00	0.00	1160.20	35000.00	1171.35	0.00	1173.57	35.06	11.94	2930.26	5911.35
	13.000	130.00	0.00	0.00	1160.60	35000.00	1171.84	0.00	1174.02	34.42	11.86	2950.45	5965.67

	SECNO	XLCH	ELTRD	ELLC	ELMIN	G	CWSEL	CRIWS	EQ	10K*S	VCH	AREA	.01K
	14.100	165.00	0.00	0.00	1161.20	35000.00	1172.40	0.00	1174.60	34.80	11.90	2941.06	5932.77
	14.200	5.00	0.00	0.00	1161.22	35000.00	1172.42	0.00	1174.62	34.77	11.90	2942.15	5935.63
	14.300	80.00	1181.00	1178.00	1161.50	35000.00	1172.93	0.00	1175.04	32.45	11.65	3005.41	6143.67
	14.400	5.00	0.00	0.00	1161.52	35000.00	1172.95	0.00	1175.06	32.45	11.64	3005.73	6144.07
	15.000	90.00	0.00	0.00	1161.80	35000.00	1173.21	0.00	1175.37	33.83	11.81	2963.36	6017.48
	16.000	210.00	0.00	0.00	1162.60	35000.00	1173.95	0.00	1176.08	33.21	11.70	2991.94	6073.65
	18.000	185.00	0.00	0.00	1163.20	35000.00	1174.58	0.00	1176.69	32.81	11.65	3003.40	6110.30
	19.000	470.00	0.00	0.00	1164.80	35000.00	1176.13	0.00	1178.25	33.31	11.69	2995.01	6064.58
	20.000	610.00	0.00	0.00	1166.90	35000.00	1178.16	0.00	1180.31	33.93	11.75	2978.36	6008.74
	21.000	390.00	0.00	0.00	1168.30	35000.00	1179.48	0.00	1181.66	34.76	11.83	2957.34	5936.15
	22.000	460.00	0.00	0.00	1169.90	35000.00	1181.07	0.00	1183.27	35.03	11.91	2937.67	5913.87
	23.000	480.00	0.00	0.00	1171.50	35000.00	1182.75	0.00	1184.94	34.36	11.86	2950.36	5970.85
	24.000	545.00	0.00	0.00	1173.40	35000.00	1184.62	0.00	1186.83	34.76	11.93	2932.80	5936.04
	25.000	615.00	0.00	0.00	1175.50	35000.00	1186.75	0.00	1188.96	34.54	11.93	2932.62	5935.06
	26.000	550.00	0.00	0.00	1177.40	35000.00	1188.68	0.00	1190.85	34.02	11.82	2959.92	6000.98
	27.000	345.00	0.00	0.00	1178.60	35000.00	1189.85	0.00	1192.03	34.35	11.86	2949.98	5971.78
	28.000	315.00	0.00	0.00	1179.70	35000.00	1190.90	0.00	1193.14	35.07	12.01	2914.89	5909.88
*	29.000	605.00	0.00	0.00	1181.60	35000.00	1193.28	0.00	1194.88	23.53	10.17	3443.09	7215.93
	30.000	370.00	0.00	0.00	1182.20	29000.00	1194.34	0.00	1195.72	20.50	9.44	3072.83	6404.64
	31.000	300.00	0.00	0.00	1182.50	29000.00	1195.02	0.00	1196.31	18.38	9.11	3182.11	6764.53
*	32.000	12.00	0.00	0.00	1183.50	29000.00	1195.17	1195.17	1199.73	101.31	17.14	1691.82	2881.24

SKUNK CREEK

SUMMARY PRINTOUT TABLE 150

	SECNO	Q	CWSEL	DIFWSP	DIFWSX	DIFKWS	TOPWID	XLCH
*	1.000	41000.00	1152.21	0.00	0.00	0.21	322.90	0.00
	2.000	41000.00	1154.54	0.00	2.33	0.00	306.41	260.00
*	3.000	41000.00	1158.97	0.00	4.42	0.00	424.36	100.00
	3.500	41000.00	1160.36	0.00	1.40	0.00	440.68	30.00
	4.000	41000.00	1161.25	0.00	0.89	0.00	450.75	90.00
*	4.500	41000.00	1163.12	0.00	0.71	0.00	570.38	400.00
	5.000	41000.00	1164.10	0.00	0.97	0.00	565.93	460.00
	6.100	41000.00	1165.46	0.00	1.36	0.00	677.11	480.00
*	7.100	35000.00	1166.29	0.00	1.51	0.00	274.03	245.00
*	7.200	35000.00	1168.22	0.00	0.26	0.00	280.76	100.00
	7.300	35000.00	1168.22	0.00	0.00	0.00	276.99	5.00
*	7.400	35000.00	1169.73	0.00	1.50	0.00	281.83	145.00
	7.500	35000.00	1169.75	0.00	0.03	0.00	282.75	5.00
	7.600	35000.00	1170.13	0.00	0.38	0.00	283.36	100.00
	11 000	35000.00	1170.66	0.00	0.53	0.00	285.47	115.00
	12.000	35000.00	1171.35	0.00	0.70	0.00	285.43	210.00
	13.000	35000.00	1171.84	0.00	0.48	0.00	285.17	130.00
	14.100	35000.00	1172.40	0.00	0.56	0.00	285.27	165.00
	14.200	35000.00	1172.42	0.00	0.02	0.00	285.33	5.00
	14.300	35000.00	1172.93	0.00	0.51	0.00	285.73	80.00
	14.400	35000.00	1172.95	0.00	0.02	0.00	285.78	5.00
	15.000	35000.00	1173.21	0.00	0.26	0.00	283.63	90.00
	16.000	35000.00	1173.95	0.00	0.75	0.00	286.98	210.00
	18.000	35000.00	1174.58	0.00	0.63	0.00	287.68	185.00

	SECNO	Q	CWSEL	DIFWSP	DIFWSX	DIFKWS	TOPWID	XLCH
	19.000	35000.00	1176.13	0.00	1.55	0.00	288.97	470.00
	20.000	35000.00	1178.16	0.00	2.03	0.00	288.96	610.00
	21.000	35000.00	1179.48	0.00	1.32	0.00	289.13	390.00
	22.000	35000.00	1181.07	0.00	1.58	0.00	285.84	460.00
	23.000	35000.00	1182.75	0.00	1.69	0.00	284.76	480.00
	24.000	35000.00	1184.62	0.00	1.87	0.00	282.93	545.00
	25.000	35000.00	1186.75	0.00	2.13	0.00	281.47	615.00
	26.000	35000.00	1188.68	0.00	1.93	0.00	284.91	550.00
	27.000	35000.00	1189.85	0.00	1.17	0.00	284.59	345.00
	28.000	35000.00	1190.90	0.00	1.06	0.00	280.37	315.00
*	29.000	35000.00	1193.28	0.00	0.98	0.00	354.19	605.00
	30.000	29000.00	1194.34	0.00	1.06	0.00	284.93	370.00
	31.000	29000.00	1195.02	0.00	0.68	0.00	286.44	300.00
*	32.000	29000.00	1195.17	0.00	0.14	0.00	194.01	12.00

SUMMARY OF ERRORS AND SPECIAL NOTES

```
CAUTION  SECNO=    1.000  PROFILE= 1  CRITICAL DEPTH ASSUMED

CAUTION  SECNO=    3.000  PROFILE= 1  CRITICAL DEPTH ASSUMED
CAUTION  SECNO=    3.000  PROFILE= 1  PROBABLE MINIMUM SPECIFIC ENERGY
CAUTION  SECNO=    3.000  PROFILE= 1  20 TRIALS ATTEMPTED TO BALANCE WSEL

CAUTION  SECNO=    4.500  PROFILE= 1  INTERPOLATED XSECTIONS USED

CAUTION  SECNO=    7.100  PROFILE= 1  INTERPOLATED XSECTIONS USED

CAUTION  SECNO=    7.200  PROFILE= 1  INTERPOLATED XSECTIONS USED

CAUTION  SECNO=    7.400  PROFILE= 1  HYDRAULIC JUMP D.S.

CAUTION  SECNO=   29.000  PROFILE= 1  INTERPOLATED XSECTIONS USED

CAUTION  SECNO=   32.000  PROFILE= 1  CRITICAL DEPTH ASSUMED
CAUTION  SECNO=   32.000  PROFILE= 1  PROBABLE MINIMUM SPECIFIC ENERGY
CAUTION  SECNO=   32.000  PROFILE= 1  20 TRIALS ATTEMPTED TO BALANCE WSEL
```

HEC-2 COMPUTER RUN
FOR CLEAR CHANNEL
BASE WIDTH = 240 FEET
2:1 SIDE SLOPES
TWO 6-FOOT DROP STRUCTURES
FLOWRATE IN SKUNK CREEK = 35,000 CFS

```
%SET-W NOTSET, error modifying DRB1:
-CLI E-IVDEVTYPE, invalid device type - specify a mailbox device
$SET DEF [PH04]
$COPY 2FMI66DROPC.DAT SYS$OUTPUT
C
C    14.0
C     1.0 DOWNSTREAM END OF STUDY-NEW RIVER FLOW=41,000 CFS
C     3.0 LOCATION OF FUTURE DROP STRUCTURE
C     6.1 CONFLUENCE OF SKUNK CREEK & NEW RIVER
C     7.1 BEGIN CHANNEL (B=240',Z=2) SKUNK CREEK FLOW=35,000 CFS
C     7.3 DOWNSTREAM EDGE OF PROPOSED OUTER LOOP FREEWAY BRIDGES
C     7.4 UPSTREAM EDGE OF PROPOSED OUTER LOOP FREEWAY BRIDGES
C    12.9 6-FOOT DROP STRUCTURE AT DOWNSTREAM EDGE OF 83RD AVE ALIGNMENT
C    18.0 DOWNSTREAM END OF COE PROPOSED LEFT BANK STABILIZATION
C    21.0 DOWNSTREAM EDGE OF EXISTING PARK FACILITIES
C    24.0 UPSTREAM EDGE OF EXISTING PARK FACILITIES
C    24.9 6-FOOT DROP STRUCTURE AT THIS LOCATION
C    29.0 CONFLUENCE OF ACDC & SKUNK CREEK
C    30.0 ACDC CHANNEL-FLOW=29,000 CFS
C    32.0 LOCATION OF 4-FOOT-HIGH COE DROP STRUCTURE
T1         DAMES & MOORE JOB NUMBER 15448-002-022 FOR ELLIS-MURPHY, INC.
T2         W/COE,ADOT,B=240' & TWO 6-FOOT DROPS.W/O 83RD AVE BRIDGE
T3         SKUNK CREEK
J1   -10                                   0.0055      0.5 41000.0  1152.0
J2  -1.0
J3 150.0
NC 0.030   0.030   0.035     0.1     0.3
X1    1.0     39.0  9842.6 10184.6     0.0     0.0     0.0
GR1210.0  8000.0  1165.6  8001.0  1165.6  8686.9  1166.1  8820.4  1165.78987.1
GR1164.7  9138.2  1164.6  9325.1  1165.2  9577.9  1164.6  9610.8  1165.69625.5
GR1165.7  9641.5  1163.4  9648.3  1165.7  9651.2  1166.6  9681.0  1165.59704.0
GR1165.9  9729.3  1156.3  9742.3  1149.4  9752.9  1149.8  9776.1  1154.29786.7
GR1151.4  9815.3  1151.4  9838.6  1152.9  9842.6  1147.3  9870.4  1140.89905.1
GR1139.1  9917.6  1139.0 10000.0  1139.9 10014.4  1140.5 10040.8  1148.610084.6
GR1159.0 10134.3  1166.5 10177.2  1168.2 10184.6  1164.8 10197.3  1165.510251.6
GR1174.2 10268.3  1165.5 10282.8  1165.5 10400.0  1210.0 10401.0
X1    2.0     35.0  9779.0 10155.0   310.0   240.0   260.0
GR1210.0  8000.0  1167.8  8001.0  1167.8  8650.8  1167.2  9060.3  1166.69116.6
GR1165.8  9601.5  1166.3  9622.5  1164.0  9640.4  1166.0  9644.4  1166.79674.5
GR1165.5  9684.1  1163.9  9712.8  1152.0  9726.2  1150.7  9757.4  1158.69767.6
GR1166.4  9779.0  1158.8  9821.0  1152.0  9858.5  1144.4  9893.7  1140.89919.9
GR1141.4  9944.3  1142.3 10000.0  1142.0 10016.4  1142.8 10031.2  1141.710043.8
GR1146.9 10071.0  1154.3 10110.7  1163.5 10155.0  1166.5 10322.6  1166.010337.4
GR1162.6 10363.5  1160.2 10367.5  1157.0 10390.2  1157.0 10500.0  1210.010501.0
X1    3.0     22.0  9705.1 10153.3    80.0   110.0   100.0
GR1210.0  8000.0  1168.7  8001.0  1168.7  8672.8  1166.0  9274.8  1166.29596.9
GR1167.1  9620.5  1164.2  9635.0  1165.5  9637.5  1167.2  9694.9  1162.79705.1
GR1152.5  9717.1  1152.0  9738.1  1152.0  9750.6  1152.0  9761.9  1152.010099.9
GR1157.7 10128.3  1163.4 10153.3  1168.8 10207.9  1164.3 10361.2  1167.010375.0
GR1167.0 10500.0  1210.0 10501.0
X1    3.5     18.0  9702.6 10179.5    30.0    30.0    30.0
GR1210.0  8000.0  1168.6  8001.0  1168.8  8683.7  1167.0  9066.3  1167.59622.5
GR1164.3  9637.5  1166.4  9640.7  1167.8  9666.8  1166.2  9693.2  1162.59702.6
GR1152.1  9714.2  1152.1 10094.5  1153.5 10108.4  1159.3 10141.4  1168.810179.5
GR1169.4 10198.8  1164.0 10500.0  1210.0 10501.0
X1    4.0     20.0  9689.8 10163.3    90.0    90.0    90.0
GR1210.0  8000.0  1169.3  8001.0  1169.3  8716.0  1167.8  9076.6  1167.69627.3
GR1165.0  9633.8  1166.6  9637.5  1165.2  9689.8  1152.4  9702.3  1152.49723.0
GR1152.4  9884.6  1152.4  9919.6  1152.3 10036.0  1152.3 10103.9  1159.110136.8
GR1166.6 10163.3  1170.0 10325.0  1164.7 10351.0  1164.7 10499.0  1210.010500.0
```

```
X1    4.5     20.0   9584.1  10207.0    540.0    260.0    400.0
QR1210.0   8000.0   1171.0   8001.0   1171.7   8858.5   1170.9   9026.0   1169.29333.9
QR1169.7   9436.5   1167.4   9443.3   1169.3   9584.1   1157.3   9613.7   1153.29653.3
QR1153.2   9855.1   1153.2   9871.6   1153.2   9902.2   1153.2  10131.7   1158.710149.9
QR1164.1  10174.1   1171.4  10207.0   1172.0  10222.9   1172.0  10400.0   1210.010401.0
X1    5.0     23.0   9610.0  10224.3    540.0    370.0    460.0
QR1210.0   8000.0   1174.0   8001.0   1174.0   8649.5   1172.8   8725.6   1172.09029.0
QR1171.0   9322.0   1169.5   9443.6   1171.5   9503.3   1166.4   9548.1   1171.69581.4
QR1166.9   9605.0   1171.5   9610.0   1154.3   9645.0   1154.3   9884.0   1154.39885.0
QR1154.4   9915.0   1154.4   9915.5   1154.3   9916.3   1154.3  10154.7   1164.510193.7
QR1171.2  10224.3   1171.2  10499.0   1210.0  10500.0
X1    6.1     30.0   9389.0  10213.5    380.0    440.0    480.0
QR1210.0   8000.0   1174.8   8001.0   1173.0   8650.0   1172.0   8870.0   1172.08875.0
QR1171.0   8931.8   1170.0   9196.9   1168.3   9265.9   1167.0   9305.7   1156.89321.0
QR1173.5   9346.0   1167.4   9377.0   1173.5   9385.0   1155.4   9420.0   1155.49660.0
QR1168.3   9678.4   1173.6   9692.1   1172.0   9728.0   1172.6   9771.0   1167.89795.5
QR1160.0   9831.0   1157.0   9844.0   1156.0   9895.0   1157.0  10151.0   1164.710183.0
QR1170.8  10206.0   1172.2  10213.5   1172.0  10342.2   1172.0  10499.0   1210.010500.0
X2 35000
NH    5.0   0.030    600.0    0.025    659.2    0.035    899.2    0.025    958.4 0.035
NH2001.0
X1    7.1      8.0    600.0    958.4    205.0    310.0    245.0
QR1210.0      0.0   1186.8      1.0   1186.8    600.0   1156.0    659.2   1156.0 899.2
QR1187.9    958.4   1187.9   2000.0   1210.0   2001.0
NH    5.0   0.030    600.0    0.025    659.2    0.035    899.2    0.025    958.4 0.035
NH2001.0
X1    7.2      8.0    600.0    958.4    100.0    100.0    100.0
QR1210.0      0.0   1186.8      1.0   1186.8    600.0  1156.19    659.2  1156.19 899.2
QR1187.9    958.4   1187.9   2000.0   1210.0   2001.0
NC                                0.3      0.5
NH    5.0   0.030    600.0    0.025    637.0    0.035    877.0    0.025    914.1 0.035
NH2001.0
X1    7.3     12.0    600.0    914.1      5.0      5.0      5.0
X3   10.0                                                        1186.8   1187.9
QR1210.0      0.0   1186.8      1.0   1186.0    600.0   1176.0    600.1   1176.0 604.0
QR1156.2    637.0   1156.2    877.0   1176.2    910.0   1176.2    914.0   1187.9 914.1
QR1187.9   2000.0   1210.0   2001.0
SB   0.90     0.80     2.80      0.0    240.0     15.0   4841.5      2.0  1156.601156.19
NH    5.0   0.030    600.0    0.025    654.4    0.035    894.4    0.025    951.0  0.030
NH2001.0
X1    7.4      8.0    600.0    951.0    145.0    145.0    145.0
X2                      1.0   1178.0   1186.8
X3   10.0                                                        1186.8   1187.9
QR1210.0      0.0   1186.8      1.0   1186.8    600.0  1156.60    654.4  1156.60 894.4
QR1187.9    951.0   1187.9   2000.0   1210.0   2001.0
BT    5.0    600.0   1186.8   1186.8    600.1   1186.8   1178.0    757.0   1189.41179.5
BT  914.0   1187.9   1178.2    914.1   1187.9   1187.9
NC                                0.1      0.3
NH    5.0   0.030    600.0    0.025    654.4    0.035    894.4    0.025    951.0 0.035
NH2001.0
X1    7.5      8.0    600.0    951.0      5.0      5.0      5.0
QR1210.0      0.0   1186.8      1.0   1186.8    600.0  1156.61    654.4  1156.61 894.4
QR1187.9    951.0   1187.9   2000.0   1210.0   2001.0
NH    5.0   0.030    600.0    0.025    654.4    0.035    894.4    0.025    951.0 0.035
NH2001.0
X1    7.6      8.0    600.0    951.0    100.0    100.0    100.0
QR1210.0      0.0   1186.8      1.0   1186.8    600.0   1156.8    654.4   1156.8 894.4
QR1187.9    951.0   1187.9   2000.0   1210.0   2001.0
NH    5.0   0.030    455.0    0.025    490.0    0.035    730.0    0.025    765.0 0.035
NH1801.0
```

```
X1   11.0     12.0    455.0    765.0     65.0    335.0    115.0
GR1210.0       0.0   1175.5      1.0   1175.5    455.0   1157.1    490.0   1157.1 730.0
GR1175.0     765.0   1175.0    800.0   1175.0    850.0   1175.0    900.0   1175.51300.0
GR1175.0    1800.0   1210.0   1801.0
NH    5.0    0.030    500.0    0.025    530.0    0.035    770.0    0.025    804.0 0.035
NH1751.0
X1   12.0      9.0    500.0    804.0    210.0    175.0    210.0
GR1210.0       0.0   1176.4      1.0   1177.0    300.0   1174.0    500.0   1157.6 530.0
GR1157.6     770.0   1176.0    804.0   1179.9   1650.0   1210.0   1751.0
NH    5.0    0.030   1000.0    0.025   1046.0    0.035   1286.0    0.025   1332.00.030
NH2301.0
X1   12.8      8.0   1000.0   1332.0    125.0    135.0    130.0
GR1210.0       0.0   1181.0      1.0   1181.0   1000.0   1157.9   1046.0   1157.91286.0
GR1181.0    1332.0   1181.0   2300.0   1210.0   2301.0
NH    5.0    0.030   1000.0    0.025   1046.0    0.035   1286.0    0.025   1332.00.030
NH2301.0
X1   12.9      8.0   1000.0   1308.0     15.0     15.0     15.0
GR1210.0       0.0   1181.0      1.0   1181.0   1000.0   1163.9   1034.0   1163.91274.0
GR1181.0    1308.0   1181.0   2300.0   1210.0   2301.0
NH    5.0    0.030   1000.0    0.025   1032.0    0.035   1272.0    0.025   1304.00.030
NH2001.0
X1   14.1      8.0   1000.0   1304.0    155.0    145.0    150.0
GR1210.0       0.0   1180.0      1.0   1180.0   1000.0 1164.19   1032.0 1164.191272.0
GR1180.0    1304.0   1180.0   2000.0   1210.0   2001.0
NC                              0.3      0.5
NH    5.0    0.030   1000.0    0.025   1032.0    0.035   1272.0    0.025   1304.00.030
NH2001.0
X1   14.2      8.0   1000.0   1304.0      5.0      5.0      5.0
X3   10.0                                                        1180.0   1180.0
GR1210.0       0.0   1180.0      1.0   1180.0   1000.0 1164.20   1032.0 1164.201272.0
GR1180.0    1304.0   1180.0   2000.0   1210.0   2001.0
SB   0.90     0.80      2.80     0.0    240.0     15.0   4841.0      2.0 1164.351164.20
NH    5.0    0.030   1000.0    0.025   1031.0    0.035   1271.0    0.025   1302.00.030
NH2001.0
X1   14.3      8.0   1000.0   1302.0     80.0     80.0     80.0
X2                      1.0   1178.0   1181.0
X3   10.0                                                        1180.0   1180.0
GR1210.0       0.0   1180.0      1.0   1180.0   1000.0 1164.35   1031.0 1164.351271.0
GR1180.0    1302.0   1180.0   2000.0   1210.0   2001.0
BT    4.0   1000.0   1180.0   1180.0   1000.1   1181.0   1178.0   1301.9   1181.01178.0
BT1302.0    1180.0   1180.0
NC                              0.1      0.3
NH    5.0    0.030   1000.0    0.025   1031.0    0.035   1271.0    0.025   1302.00.030
NH2001.0
X1   14.4      8.0   1000.0   1302.0      5.0      5.0      5.0
GR1210.0       0.0   1180.0      1.0   1180.0   1000.0 1164.36   1031.0 1164.361271.0
GR1180.0    1302.0   1180.0   2000.0   1210.0   2001.0
NH    5.0    0.030    510.0    0.025    541.0    0.035    781.0    0.025    812.00.030
NH1691.0
X1   15.0     15.0    510.0    812.0    105.0     45.0     90.0
GR1210.0       0.0   1180.0      1.0   1180.0    285.0   1180.9    405.0   1180.0 460.0
GR1180.0     510.0   1164.5    541.0   1164.5    781.0   1180.0    812.0   1180.01039.0
GR1180.0    1040.0   1180.0   1080.0   1179.7   1240.0   1180.0   1690.0   1210.01691.0
NH    5.0    0.030    730.0    0.025    770.0    0.035   1010.0    0.025   1050.0 0.030
NH1951.0
X1   16.0     12.0    730.0   1050.0    265.0    105.0    210.0
GR1210.0       0.0   1181.8      1.0   1181.8    700.0   1181.0    730.0   1165.0 770.0
GR1165.0    1010.0   1180.0   1050.0   1180.0   1175.0   1179.7   1650.0   1180.01860.0
GR1180.2    1950.0   1210.0   1951.0
NH    5.0    0.030    880.0    0.025    920.0    0.035   1160.0    0.025   1200.0 0.030
```

```
NH2101.0
X1  18.0    15.0   880.0  1200.0   170.0   210.0   185.0
GR1210.0     0.0  1182.3     1.0  1182.3   880.0  1165.4   920.0  1165.41160.0
GR1182.3  1200.0  1182.3  1220.0  1180.0  1285.0  1182.5  1303.0  1180.01323.0
GR1177.8  1470.0  1179.7  1540.0  1180.0  1850.0  1180.7  2100.0  1210.02101.0
NH   5.0   0.030  1050.0   0.025  1090.0   0.035  1330.0   0.025  1370.0 0.030
NH2021.0
X1  19.0    11.0  1050.0  1370.0   475.0   500.0   470.0
GR1210.0     0.0  1183.3     1.0  1183.3  1050.0  1166.3  1090.0  1166.31330.0
GR1183.3  1370.0  1180.0  1375.0  1180.0  1480.0  1180.2  1750.0  1181.82020.0
GR1210.0  2021.0
NH   5.0   0.030   630.0   0.025   670.0   0.035   910.0   0.025   950.0 0.030
NH1681.0
X1  20.0    13.0   630.0   950.0   590.0   730.0   610.0
GR1210.0     0.0  1185.3     1.0  1185.3   630.0  1167.5   670.0  1167.5 910.0
GR1185.3   950.0  1185.3   970.0  1182.0   976.6  1185.0   985.0  1182.0 986.0
GR1182.7  1280.0  1184.0  1680.0  1210.0  1681.0
NH   5.0   0.030   942.0   0.025   982.0   0.035  1222.0   0.025  1262.0 0.030
NH2161.0
X1  21.0    12.0   942.0  1262.0   337.0   550.0   390.0
GR1210.0     0.0  1186.5     1.0  1186.5   942.0  1168.3   982.0  1168.31222.0
GR1186.5  1262.0  1186.5  1282.0  1184.1  1520.0  1184.7  1820.0  1184.01970.0
GR1185.0  2160.0  1210.0  2161.0
NH   5.0   0.030   905.0   0.025   945.0   0.035  1185.0   0.025  1225.0 0.035
NH2201.0
X1  22.0    11.0   905.0  1225.0   480.0   375.0   460.0
GR1210.0     0.0  1189.4     1.0  1189.4   905.0  1169.2   945.0  1169.21185.0
GR1189.4  1225.0  1189.4  1245.0  1188.0  1247.8  1186.4  1640.0  1186.52200.0
GR1210.0  2201.0
NH   5.0   0.030   550.0   0.025   590.0   0.035   830.0   0.025   870.0 0.035
NH1801.0
X1  23.0    12.0   550.0   870.0   520.0   300.0   480.0
GR1210.0     0.0  1191.6     1.0  1191.6   550.0  1170.2   590.0  1170.2 830.0
GR1191.6   870.0  1191.6   890.0  1188.0   897.2  1188.0   900.0  1188.01620.0
GR1187.5  1800.0  1210.0  1801.0
NH   5.0   0.030  1085.0   0.025  1125.0   0.035  1365.0   0.025  1405.0 0.035
NH2051.0
X1  24.0    15.0  1085.0  1405.0   540.0   555.0   545.0
GR1210.0     0.0  1194.3     1.0  1194.3  1085.0  1171.3  1125.0  1171.31365.0
GR1194.3  1405.0  1194.3  1425.0  1190.2  1433.2  1190.0  1500.0  1190.01580.0
GR1190.5  1650.0  1190.0  1720.0  1189.5  1870.0  1188.7  2050.0  1210.02051.0
NH   5.0   0.030   690.0   0.025   740.0   0.035   980.0   0.025  1030.0 0.030
NH1651.0
X1  24.8    10.0   690.0  1030.0   595.0   610.0   600.0
GR1210.0     0.0  1197.2     1.0  1197.2   690.0  1172.4   740.0  1172.4 980.0
GR1197.2  1030.0  1197.2  1050.0  1190.0  1065.0  1190.0  1650.0  1210.01651.0
NH   5.0   0.030   690.0   0.025   732.0   0.035   972.0   0.025  1014.0 0.035
NH1651.0
X1  24.9    10.0   690.0  1014.0    15.0    15.0    15.0
GR1210.0     0.0  1197.2     1.0  1197.2   690.0  1178.4   732.0  1178.4 972.0
GR1197.2  1014.0  1197.2  1024.0  1190.0  1040.0  1190.0  1650.0  1210.01651.0
NH   5.0   0.030   730.0   0.025   774.0   0.035  1014.0   0.025  1058.0 0.030
NH1751.0
X1  26.0    12.0   730.0  1058.0   530.0   630.0   550.0
GR1210.0     0.0  1199.5     1.0  1199.5   730.0  1179.5   774.0  1179.51014.0
GR1199.5  1058.0  1199.5  1070.0  1194.0  1081.0  1194.0  1100.0  1193.81300.0
GR1194.0  1750.0  1210.0  1751.0
NH   5.0   0.030   860.0   0.025   904.8   0.035  1144.8   0.025  1189.6 0.030
NH1991.0
X1  27.0    13.0   860.0  1189.6   330.0   400.0   345.0
```

```
QR1210.0     0.0  1201.2     1.0  1201.2   860.0  1180.2   904.8  1180.21144.8
QR1201.2  1189.6  1201.2  1200.0  1195.4  1200.2  1196.0  1410.0  1196.31600.0
QR1196.0  1900.0  1197.8  1990.0  1210.0  1991.0
NH   5.0   0.030   394.0   0.025   434.0   0.035   674.0   0.025   714.0 0.030
NH1601.0
X1  28.0    13.0   394.0   714.0   314.0   320.0   315.0
QR1210.0     0.0  1201.9     1.0  1201.9   394.0  1180.8   434.0  1180.8 674.0
QR1201.9   714.0  1201.9   734.0  1198.3   741.2  1198.3  1200.0  1200.01370.0
QR1200.0  1380.0  1198.5  1600.0  1210.0  1601.0
NH   5.0   0.030   368.0   0.025   408.0   0.035   648.0   0.025   683.0 0.030
NH1591.0
X1  29.0    18.0   368.0   763.0   566.0   555.0   605.0
QR1210.0     0.0  1202.8     1.0  1202.8   368.0  1182.8   408.0  1181.6 528.0
QR1182.8   648.0  1185.0   683.0  1185.0   693.0  1187.0   718.0  1190.0 732.0
QR1201.0   763.0  1201.0   771.0  1200.0   830.0  1200.0  1060.0  1200.01130.0
QR1200.3  1490.0  1200.0  1590.0  1210.0  1591.0
X2 29000
NH   3.0   0.025    42.0   0.035   282.0   0.025   324.0
X1  30.0     7.0     1.0   323.0   370.0   370.0   370.0
QR1210.0     0.0  1203.7     1.0  1183.0    42.0  1182.2   162.0  1183.0 282.0
QR1203.7   323.0  1210.0   324.0
NH   3.0   0.025    42.0   0.035   282.0   0.025   324.0
X1  31.0     7.0     1.0   323.0   300.0   300.0   300.0
QR1210.0     0.0  1204.0     1.0  1183.3    42.0  1182.5   162.0  1183.3 282.0
QR1204.0   323.0  1210.0   324.0
NH   3.0   0.025   113.0   0.035   307.1   0.025   420.0
X1  32.0    16.0   113.0   307.1    12.0    12.0    12.0
QR1210.0     0.0  1204.0     1.0  1204.0    53.0  1202.0    53.1  1202.0 113.0
QR1187.3   113.1  1186.5   193.0  1183.5   202.0  1183.5   218.0  1186.5 227.0
QR1187.3   307.0  1202.0   307.1  1202.0   367.0  1204.0   367.1  1204.0 419.0
QR1210.0   420.0
EJ


ER
$ASSIGN 2EMI66DROPC.DAT SYS$INPUT
$COPY 2FMI66DROPC.DAT INPUT.DAT
$RUN EPLIB:HEC2
```

```
*****************************************************
*  WATER SURFACE PROFILES                           *
*  VERSION OF NOVEMBER 1976                         *
*  UPDATED MARCH 1982                               *
*                                                   *
*  RUN DATE   4 MAR-87 TIME   09:18:26              *
*****************************************************
```

```
*****************************************
*  U.S. ARMY CORPS OF ENGINEERS         *
*  THE HYDROLOGIC ENGINEERING CENTER    *
*  609 SECOND STREET, SUITE D           *
*  DAVIS, CALIFORNIA 95616              *
*  (916) 440-2105 (FTS) 448-2105        *
*****************************************
```

```
X     X  XXXXXXX   XXXXX              XXXXX
X     X  X        X     X            X     X
X     X  X        X                        X
XXXXXXX  XXXX     X          XXXXX    XXXXX
X     X  X        X
X     X  X        X     X            X
X     X  XXXXXXX   XXXXX              XXXXXXX
```

```
*********************************************
  HEC2 RELEASE DATED NOV 76 UPDATED MARCH 1982
  ERROR CORR =  01,02,03,04,05
  MODIFICATION -  50,51,52,53,54,55
*********************************************

C
T1        DAMES & MOORE JOB NUMBER 15448-002-022 FOR ELLIS-MURPHY, INC.
T2        W/COE,ADOT,B=240' & TWO 6-FOOT DROPS.W/O 83RD AVE BRIDGE
T3        SKUNK CREEK
J1  ICHECK    ING       NINV      IDIR      STRT      METRIC    HVINS     Q         WSEL      FQ
    -10.      0.        0.        0.   0.000000     0.01      0.5     41000.   1152.000   0.000
J2  NPROF     IPLOT     PRFVS     XSECV     XSECH     FN        ALLDC     IBW       CHNIM     ITRACE
    -1.000    0.000     0.000     0.000     0.000     0.000     0.000     0.000     0.000     0.000
J3  VARIABLE CODES FOR SUMMARY PRINTOUT
    150.000   0.000     0.000     0.000     0.000     0.000     0.000     0.000     0.000     0.000
```

```
   SECNO     DEPTH     CWSEL     CRIWS     WSELK     EG        HV        HL        OLOSS     BANK ELEV
   Q         QLOB      QCH       QROB      ALOB      ACH       AROB      VOL       TWA    LEFT/RIGHT
   TIME      VLOB      VCH       VROB      XNL       XNCH      XNR       WTN       ELMIN        SSTA
   SLOPE     XLOBL     XLCH      XLOBR     ITRIAL    IDC       ICONT     CORAR     TOPWID       ENDST

*PROF 1

CCHV=   0.100 CEHV=   0.300
*SECNO 1.000

3265 DIVIDED FLOW

3720 CRITICAL DEPTH ASSUMED
         DOWNSTREAM END OF STUDY-NEW RIVER FLOW=41,000 CFS
     1.00     13.21  1152.21  1152.21  1152.00  1156.38     4.17      0.00      0.00  1152.90
   41000.      635.  40365.       0.       97.     2448.       0.        0.        0.   1168.20
     0.00      6.56     16.49     0.00    0.030    0.035    0.030     0.000   1139.00   9748.58
 0.007513       0.        0.        0.        0        4        0      0.00    322.90  10101.85

*SECNO 2.000

3265 DIVIDED FLOW

     2.00     13.74  1154.54     0.00     0.00  1158.28     3.73      1.86      0.04  1166.40
   41000.      944.  40056.       0.      113.     2562.       0.       16.        2.   1163.50
     0.00      8.37     15.64     0.00    0.030    0.035    0.030     0.000   1140.80   9723.34
 0.006748      310.      260.      240.        4        0        0      0.00    306.41  10111.87

*SECNO 3.000
3685 20 TRIALS ATTEMPTED WSEL,CWSEL
3693 PROBABLE MINIMUM SPECIFIC ENERGY
3720 CRITICAL DEPTH ASSUMED
         LOCATION OF FUTURE DROP STRUCTURE
     3.00      6.97  1158.97  1158.97     0.00  1162.28     3.31      0.80      0.04  1162.70
   41000.        0.  41000.       0.        0.     2806.       0.       22.        3.   1163.40
     0.01      0.00     14.61     0.00    0.030    0.035    0.030     0.000   1152.00   9709.49
 0.009632       80.      100.      110.       20        8        0      0.00    424.36  10133.85

*SECNO 3.500

3301 HV CHANGED MORE THAN HVINS

     3.50      8.26  1160.36     0.00     0.00  1162.60     2.23      0.21      0.11  1162.50
   41000.        0.  41000.       0.        0.     3418.       0.       24.        3.   1168.80
     0.01      0.00     11.99     0.00    0.030    0.035    0.030     0.000   1152.10   9704.98
 0.005258       30.       30.       30.        6        0        0      0.00    440.68  10145.66
```

```
   SECNO     DEPTH     CWSEL     CRIWS     WSELK     EG        HV        HL        OLOSS     BANK ELEV
   Q         QLOB      QCH       QROB      ALOB      ACH       AROB      VOL       TWA    LEFT/RIGHT
   TIME      VLOB      VCH       VROB      XNL       XNCH      XNR       WTN       ELMIN       SSTA
   SLOPE     XLOBL     XLCH      XLOBR     ITRIAL    IDC       ICONT     CORAR     TOPWID      ENDST

*SECNO 4.000
     4.00      8.91   1161.21      0.00      0.00   1163.04      1.83      0.40      0.04   1163.20
   41000.        0.   41000.        0.        0.    3779.        0.       32.        4.   1166.60
     0.01      0.00     10.85      0.00     0.030     0.035     0.030     0.000   1152.30   9693.69
 0.003886       90.       90.       90.         3         0         0      0.00    450.57  10144.26

*SECNO 4.500

1645 INI SEC ADDED BY RAISING SEC      4.50,  -0.450FT AND MULTIPLYING BY   0.902

3301 HV CHANGED MORE THAN HVINS

     1.01      9.74   1162.49      0.00      0.00   1163.69      1.20      0.58      0.06   1168.85
   41000.        0.   41000.        0.        0.    4662.        0.       51.        6.   1170.95
     0.02      0.00      8.79      0.00     0.030     0.035     0.030     0.000   1152.75   9442.54
 0.002280      270.      200.      130.         3         0         0      0.00    513.16   9955.70

1645 INI SEC ADDED BY RAISING SEC      1.01,   0.450FT AND MULTIPLYING BY   1.109

     4.50      9.98   1163.18      0.00      0.00   1164.11      0.93      0.39      0.03   1169.30
   41000.        0.   41000.        0.        0.    5310.        0.       74.        9.   1171.40
     0.02      0.00      7.72      0.00     0.030     0.035     0.030     0.000   1153.20   9599.19
 0.001700      270.      200.      130.         2         0         0      0.00    570.81  10170.00

*SECNO 5.000
     5.00      9.66   1163.96      0.00      0.00   1164.93      0.97      0.81      0.01   1171.50
   41000.        0.   41000.        0.        0.    5197.        0.      129.       15.   1171.20
     0.04      0.00      7.89      0.00     0.030     0.035     0.030     0.000   1154.30   9625.34
 0.001812      540.      460.      370.         3         0         0      0.00    566.30  10191.64

*SECNO 6.100

3265 DIVIDED FLOW

          CONFLUENCE OF SKUNK CREEK & NEW RIVER
     6.10      9.55   1164.95      0.00      0.00   1165.84      0.90      0.91      0.01   1173.50
   41000.      495.   40505.        0.       99.    5308.        0.      188.       21.   1172.20
     0.06      4.98      7.63      0.00     0.030     0.035     0.030     0.000   1155.40   9308.78
 0.001984      380.      480.      440.         2         0         0      0.00    671.96  10183.96
```

```
   SECNO     DEPTH     CWSEL     CRIWS     WSELK     EG        HV        HL        OLOSS     BANK ELEV
   Q         QLOB      QCH       QROB      ALOB      ACH       AROB      VOL       TWA     LEFT/RIGHT
   TIME      VLOB      VCH       VROB      XNL       XNCH      XNR       WTN       ELMIN       SSTA
   SLOPE     XLOBL     XLCH      XLOBR     ITRIAL    IDC       ICONT     CORAR     TOPWID      ENDST

1490 NH CARD USED
*SECNO 7.100

1645 INI SEC ADDED BY RAISING SEC      7.10,  -0.450FT AND MULTIPLYING BY   1.866

     1.01      9.31   1164.86      0.00      0.00   1166.07      1.21      0.13      0.09   1186.35
   39500.        0.    39500.        0.        0.     4476.        0.      195.       22.   1187.45
     0.06      0.00      8.83      0.00     0.030     0.025     0.030     0.000   1155.55   1196.74
 0.002385       51.       61.       78.         2         0         0      0.00    513.51   1710.25

1645 INI SEC ADDED BY RAISING SEC      1.01,   0.150FT AND MULTIPLYING BY   0.845

     1.02      9.00   1164.70      0.00      0.00   1166.39      1.68      0.17      0.14   1186.50
   38000.        0.    38000.        0.        0.     3651.        0.      200.       23.   1187.60
     0.06      0.00     10.41      0.00     0.030     0.025     0.030     0.000   1155.70   1012.52
 0.003462       51.       61.       78.         2         0         0      0.00    432.24   1444.77

1645 INI SEC ADDED BY RAISING SEC      1.02,   0.150FT AND MULTIPLYING BY   0.817

3301 HV CHANGED MORE THAN HVINS

     1.03      8.43   1164.28      0.00      0.00   1166.96      2.68      0.27      0.30   1186.65
   36500.        0.    36500.        0.        0.     2781.        0.      205.       24.   1187.75
     0.05      0.00     13.13      0.00     0.030     0.025     0.030     0.000   1155.85    828.63
 0.005989       51.       61.       78.         3         0         0      0.00    350.34   1178.96

1645 INI SEC ADDED BY RAISING SEC      1.03,   0.150FT AND MULTIPLYING BY   0.776

3301 HV CHANGED MORE THAN HVINS

3685 20 TRIALS ATTEMPTED WSEL,CWSEL
3693 PROBABLE MINIMUM SPECIFIC ENERGY
3720 CRITICAL DEPTH ASSUMED
          BEGIN CHANNEL (B=240',Z=2) SKUNK CREEK FLOW=35,000 CFS
     7.10      8.50   1164.50   1164.50      0.00   1168.52      4.02      0.44      0.40   1186.80
   35000.        0.    35000.        0.        0.     2176.        0.      208.       24.   1187.90
     0.06      0.00     16.08      0.00     0.030     0.025     0.030     0.000   1156.00    642.86
 0.008915       51.       61.       78.        20         5         0      0.00    272.11    914.97
```

```
   SECNO     DEPTH     CWSEL     CRIWS     WSELK     EG        HV        HL        OLOSS    BANK ELEV
   Q         QLOB      QCH       QROB      ALOB      ACH       AROB      VOL       TWA    LEFT/RIGHT
   TIME      VLOB      VCH       VROB      XNL       XNCH      XNR       WTN       ELMIN       SSTA
   SLOPE     XLOBL     XLCH      XLOBR     ITRIAL    IDC       ICONT     CORAR     TOPWID      ENDST

1490 NH CARD USED
#SECNO 7.200

1645 INI SEC ADDED BY RAISING SEC      7.20,  -0.127FT AND MULTIPLYING BY   1.000

3301 HV CHANGED MORE THAN HVINS

     1.01      9.87   1165.93   1164.55      0.00   1168.85      2.92      0.23      0.11   1186.67
   35000.        0.    35000.        0.        0.    2552.        0.      210.       24.   1187.77
     0.06      0.00     13.72      0.00     0.030     0.025     0.030     0.000   1156.06    639.96
 0.005380       33.       33.       33.        16         5         0      0.00    277.42    917.38

1645 INI SEC ADDED BY RAISING SEC      1.01,   0.063FT AND MULTIPLYING BY   1.000

     1.02     10.21   1166.33      0.00      0.00   1169.04      2.71      0.17      0.02   1186.74
   35000.        0.    35000.        0.        0.    2650.        0.      212.       24.   1187.84
     0.06      0.00     13.21      0.00     0.030     0.025     0.030     0.000   1156.13    639.36
 0.004772       33.       33.       33.         2         0         0      0.00    278.80    918.16

1645 INI SEC ADDED BY RAISING SEC      1.02,   0.063FT AND MULTIPLYING BY   1.000

     7.20     10.42   1166.61      0.00      0.00   1169.21      2.60      0.15      0.01   1186.80
   35000.        0.    35000.        0.        0.    2706.        0.      214.       25.   1187.90
     0.06      0.00     12.93      0.00     0.030     0.025     0.030     0.000   1156.19    639.05
 0.004468       33.       33.       33.         2         0         0      0.00    279.59    918.65

CCHV=   0.300 CEHV=   0.500
1490 NH CARD USED
#SECNO 7.300

3495 OVERBANK AREA ASSUMED NON-EFFECTIVE,ELLEA=     1186.80 ELREA=     1187.90

          DOWNSTREAM EDGE OF PROPOSED OUTER LOOP FREEWAY BRIDGES
     7.30     10.41   1166.61      0.00      0.00   1169.26      2.65      0.02      0.03   1186.00
   35000.        0.    35000.        0.        0.    2679.        0.      214.       25.   1187.90
     0.06      0.00     13.06      0.00     0.030     0.025     0.030     0.000   1156.20    619.64
 0.004519        5.        5.        5.         1         0         0      0.00    274.54    894.18
```

```
   SECNO     DEPTH     CWSEL     CRIWS     WSELK     EG        HV        HL        OLOSS    BANK ELEV
   Q         QLOB      QCH       QROB      ALOB      ACH       AROB      VOL       TWA    LEFT/RIGHT
   TIME      VLOB      VCH       VROB      XNL       XNCH      XNR       WTN       ELMIN       SSTA
   SLOPE     XLOBL     XLCH      XLOBR     ITRIAL    IDC       ICONT     CORAR     TOPWID      ENDST


SPECIAL BRIDGE

5227 DOWNSTREAM ELEV IS   1163.28 ,NOT   1166.61 HYDRAULIC JUMP OCCURS DOWNSTREAM (IF LOW FLOW CONTROLS)

SB  XK        XKOR      COFQ      RDLEN     BWC       BWP       BAREA     SS        ELCHU     ELCHD
     0.90      0.80      2.80      0.00    240.00     15.00   4841.50     2.00   1156.60   1156.19

1490 NH CARD USED
*SECNO 7.400
CLASS B LOW FLOW

3420 BRIDGE W.S. =   1165.24 BRIDGE VELOCITY=,      16.30      CALCULATED CHANNEL AREA=,      2094.

 EQPRS     EQLWC      H3       QWEIR     QLOW      BAREA   TRAPEZOID      ELLC      ELTRD
                                                            AREA
     0.00  1159.94    0.00        0.    35000.     4842.    5731.     1178.00   1186.80


3495 OVERBANK AREA ASSUMED NON-EFFECTIVE,ELLEA=     1186.80 ELREA=     1187.90

         UPSTREAM EDGE OF PROPOSED OUTER LOOP FREEWAY BRIDGES
     7.40     11.03  1167.63     0.00      0.00  1169.94     2.32      0.69      0.00  1186.80
   35000.        0.   35000.        0.        0.    2866.       0.       224.       26.  1187.90
     0.07      0.00    12.21     0.00     0.030     0.025    0.030     0.000   1156.60   634.34
 0.003702      145.     145.     145.         0         0        0      0.00    279.80   914.34


CCHV=   0.100 CEHV=   0.300
1490 NH CARD USED
*SECNO 7.500
     7.50     11.04  1167.65     0.00      0.00  1169.96     2.32      0.02      0.00  1186.80
   35000.        0.   35000.        0.        0.    2866.       0.       224.       26.  1187.90
     0.07      0.00    12.21     0.00     0.030     0.025    0.030     0.000   1156.61   634.53
 0.003702        5.       5.        5.         0         0        0      0.00    279.82   914.35


1490 NH CARD USED
*SECNO 7.600
     7.60     11.36  1168.16     0.00      0.00  1170.33     2.17      0.35      0.01  1186.80
   35000.        0.   35000.        0.        0.    2962.       0.       231.       26.  1187.90
     0.07      0.00    11.82     0.00     0.030     0.025    0.030     0.000   1156.80   633.79
 0.003340      100.     100.     100.         2         0        0      0.00    281.29   915.08
```

```
   SECNO     DEPTH     CWSEL     CRIWS     WSELK     EG        HV        HL        OLOSS     BANK ELEV
   Q         QLOB      QCH       QROB      ALOB      ACH       AROB      VOL       TWA     LEFT/RIGHT
   TIME      VLOB      VCH       VROB      XNL       XNCH      XNR       WTN       ELMIN       SSTA
   SLOPE     XLOBL     XLCH      XLOBR     ITRIAL    IDC       ICONT     CORAR     TOPWID      ENDST

1490 NH CARD USED
*SECNO 11.000
    11.00     11.53   1168.63      0.00      0.00   1170.71      2.08      0.37      0.01   1175.50
   35000.        0.   35000.        0.        0.     3024.        0.      239.       27.   1175.00
     0.07      0.00     11.57      0.00     0.030     0.025     0.030     0.000   1157.10    468.07
 0.003166       65.      115.      335.         2         0         0      0.00    284.48    752.55

1490 NH CARD USED
*SECNO 12.000
    12.00     11.74   1169.34      0.00      0.00   1171.36      2.02      0.65      0.01   1174.00
   35000.        0.   35000.        0.        0.     3069.        0.      253.       28.   1176.00
     0.08      0.00     11.40      0.00     0.030     0.025     0.030     0.000   1157.60    508.54
 0.002994      210.      210.      175.         2         0         0      0.00    283.14    791.68

1490 NH CARD USED
*SECNO 12.800
    12.80     11.93   1169.83      0.00      0.00   1171.75      1.92      0.38      0.01   1181.00
   35000.        0.   35000.        0.        0.     3146.        0.      263.       29.   1181.00
     0.08      0.00     11.12      0.00     0.030     0.025     0.030     0.000   1157.90   1022.25
 0.002810      125.      130.      135.         2         0         0      0.00    287.51   1309.75

1490 NH CARD USED
*SECNO 12.900

3301 HV CHANGED MORE THAN HVINS

3685 20 TRIALS ATTEMPTED WSEL,CWSEL
3693 PROBABLE MINIMUM SPECIFIC ENERGY
3720 CRITICAL DEPTH ASSUMED
          6-FOOT DROP STRUCTURE AT DOWNSTREAM EDGE OF 83RD AVE ALIGNMENT
    12.90      8.50   1172.40   1172.40      0.00   1176.39      3.99      0.07      0.62   1181.00
   35000.        0.   35000.        0.        0.     2184.        0.      263.       29.   1181.00
     0.08      0.00     16.03      0.00     0.030     0.025     0.030     0.000   1163.90   1017.10
 0.008888       15.       15.       15.        20        15         0      0.00    273.81   1290.90

1490 NH CARD USED
*SECNO 14.100
```

```
   SECNO     DEPTH     CWSEL     CRIWS     WSELK     EG        HV        HL        OLOSS    BANK ELEV
   Q         QLOB      QCH       QROB      ALOB      ACH       AROB      VOL       TWA    LEFT/RIGHT
   TIME      VLOB      VCH       VROB      XNL       XNCH      XNR       WTN       ELMIN       SSTA
   SLOPE     XLOBL     XLCH      XLOBR     ITRIAL    IDC       ICONT     CORAR     TOPWID      ENDST

1645 INT SEC ADDED BY RAISING SEC      14.10,   =0.217FT AND MULTIPLYING BY   0.999

3301 HV CHANGED MORE THAN HVINS

     1.01      9.90  1173.88  1172.44      0.00  1176.75      2.88      0.25      0.11  1179.78
   35000.        0.  35000.        0.        0.    2571.        0.      265.       30.   1179.78
     0.08      0.00     13.61      0.00     0.030     0.025     0.030     0.000  1163.97  1011.07
 0.005308       39.       38.       36.        14         5         0      0.00   279.82  1290.89

1645 INT SEC ADDED BY RAISING SEC       1.01,   0.072FT AND MULTIPLYING BY   1.000

     1.02     10.25  1174.30      0.00      0.00  1176.96      2.67      0.19      0.02  1179.86
   35000.        0.  35000.        0.        0.    2671.        0.      268.       30.   1179.86
     0.08      0.00     13.10      0.00     0.030     0.025     0.030     0.000  1164.05  1010.66
 0.004709       39.       38.       36.         3         0         0      0.00   281.33  1291.98

1645 INT SEC ADDED BY RAISING SEC       1.02,   0.072FT AND MULTIPLYING BY   1.000

     1.03     10.50  1174.62      0.00      0.00  1177.15      2.53      0.17      0.01  1179.93
   35000.        0.  35000.        0.        0.    2744.        0.      270.       30.   1179.93
     0.08      0.00     12.76      0.00     0.030     0.025     0.030     0.000  1164.12  1010.44
 0.004329       39.       38.       36.         2         0         0      0.00   282.44  1292.88

1645 INT SEC ADDED BY RAISING SEC       1.03,   0.072FT AND MULTIPLYING BY   1.000

    14.10     10.69  1174.88      0.00      0.00  1177.31      2.43      0.16      0.01  1180.00
   35000.        0.  35000.        0.        0.    2798.        0.      272.       30.   1180.00
     0.09      0.00     12.51      0.00     0.030     0.025     0.030     0.000  1164.19  1010.36
 0.004072       39.       38.       36.         2         0         0      0.00   283.29  1293.64

CCHV=   0.300 CEHV=   0.500
1490 NH CARD USED
*SECNO 14.200
```

```
   SECNO     DEPTH     CWSEL     CRIWS     WSELK     EG        HV        HL        OLOSS     BANK ELEV
   Q         QLOB      QCH       QROB      ALOB      ACH       AROB      VOL       TWA    LEFT/RIGHT
   TIME      VLOB      VCH       VROB      XNL       XNCH      XNR       WTN       ELMIN       SSTA
   SLOPE     XLOBL     XLCH      XLOBR     ITRIAL    IDC       ICONT     CORAR     TOPWID      ENDST


3495 OVERBANK AREA ASSUMED NON-EFFECTIVE, ELLEA=     1180.00 ELREA=     1180.00

    14.20     10.71   1174.91      0.00      0.00   1177.33      2.43      0.02      0.00   1180.00
   35000.        0.   35000.        0.        0.     2799.        0.      273.       30.   1180.00
     0.09      0.00     12.50      0.00     0.030     0.025     0.030     0.000   1164.20   1010.33
 0.004067        5.        5.        5.         1         0         0      0.00    283.33   1293.67


SPECIAL BRIDGE

SB  XK        XKOR      COFG      RDLEN     BWC       BWP       BAREA     SS        ELCHU     ELCHD
     0.90      0.80      2.80      0.00    240.00     15.00   4841.00      2.00   1164.35   1164.20

1490 NH CARD USED
#SECNO 14.300
CLASS A LOW FLOW

3420 BRIDGE W.S. =   1174.11 BRIDGE VELOCITY=,     14.55     CALCULATED CHANNEL AREA=,     2386.

 EQPRS     EQLWC     H3        QWEIR     QLOW      BAREA     TRAPEZOID     ELLC      ELTRD
                                                                AREA
     0.00   1177.76      0.65        0.    35000.     4841.      3444.   1178.00   1181.00


3495 OVERBANK AREA ASSUMED NON-EFFECTIVE, ELLEA=     1180.00 ELREA=     1180.00

    14.30     11.20   1175.55      0.00      0.00   1177.76      2.21      0.42      0.00   1180.00
   35000.        0.   35000.        0.        0.     2937.        0.      278.       31.   1180.00
     0.09      0.00     11.92      0.00     0.030     0.025     0.030     0.000   1164.35   1008.81
 0.003483       80.       80.       80.         0         0         0      0.00    284.38   1293.19


CCHV=    0.100 CEHV=    0.300
1490 NH CARD USED
#SECNO 14.400
    14.40     11.21   1175.57      0.00      0.00   1177.77      2.21      0.02      0.00   1180.00
   35000.        0.   35000.        0.        0.     2937.        0.      278.       31.   1180.00
     0.09      0.00     11.92      0.00     0.030     0.025     0.030     0.000   1164.36   1008.80
 0.003483        5.        5.        5.         0         0         0      0.00    284.40   1293.20
```

```
   SECNO     DEPTH     CWSEL     CRIWS     WSELK     EG        HV        HL        OLOSS     BANK ELEV
   Q         QLOB      QCH       QROB      ALOB      ACH       AROB      VOL       TWA     LEFT/RIGHT
   TIME      VLOB      VCH       VROB      XNL       XNCH      XNR       WTN       ELMIN       SSTA
   SLOPE     XLOBL     XLCH      XLOBR     ITRIAL    IDC       ICONT     CORAR     TOPWID      ENDST

1490 NH CARD USED
*SECNO 15.000
    15.00     11.51   1176.01      0.00      0.00   1178.09      2.07      0.30      0.01   1180.00
   35000.        0.   35000.        0.        0.    3030.        0.      285.       31.   1180.00
     0.09      0.00     11.55      0.00     0.030     0.025     0.030     0.000   1164.50    517.96
 0.003165      105.       90.       45.         2         0         0      0.00    286.07    804.04

1490 NH CARD USED
*SECNO 16.000
    16.00     11.90   1176.90      0.00      0.00   1178.73      1.83      0.62      0.02   1181.00
   35000.        0.   35000.        0.        0.    3223.        0.      300.       33.   1180.00
     0.09      0.00     10.86      0.00     0.030     0.025     0.030     0.000   1165.00    740.24
 0.002767      265.      210.      105.         2         0         0      0.00    301.51   1041.75

1490 NH CARD USED
*SECNO 18.000
          DOWNSTREAM END OF COE PROPOSED LEFT BANK STABILIZATION
    18.00     12.01   1177.41      0.00      0.00   1179.24      1.83      0.51      0.00   1182.30
   35000.        0.   35000.        0.        0.    3222.        0.      313.       34.   1182.30
     0.10      0.00     10.86      0.00     0.030     0.025     0.030     0.000   1165.40    891.59
 0.002704      170.      185.      210.         2         0         0      0.00    296.83   1188.41

1490 NH CARD USED
*SECNO 19.000
    19.00     12.45   1178.75      0.00      0.00   1180.44      1.69      1.19      0.01   1183.30
   35000.        0.   35000.        0.        0.    3354.        0.      349.       37.   1183.30
     0.11      0.00     10.43      0.00     0.030     0.025     0.030     0.000   1166.30   1060.69
 0.002385      475.      470.      500.         2         0         0      0.00    298.61   1359.31

1490 NH CARD USED
*SECNO 20.000
    20.00     12.73   1180.23      0.00      0.00   1181.86      1.63      1.41      0.01   1185.30
   35000.        0.   35000.        0.        0.    3416.        0.      396.       42.   1185.30
     0.13      0.00     10.25      0.00     0.030     0.025     0.030     0.000   1167.50    641.42
 0.002230      590.      610.      730.         2         0         0      0.00    297.16    938.58

1490 NH CARD USED
```

```
    SECNO     DEPTH     CWSEL     CRIWS     WSELK     EG        HV        HL        OLOSS     BANK ELEV
    Q         QLOB      QCH       QROB      ALOB      ACH       AROB      VOL       TWA    LEFT/RIGHT
    TIME      VLOB      VCH       VROB      XNL       XNCH      XNR       WTN       ELMIN       SSTA
    SLOPE     XLOBL     XLCH      XLOBR     ITRIAL    IDC       ICONT     CORAR     TOPWID      ENDST

*SECNO 21.000
          DOWNSTREAM EDGE OF EXISTING PARK FACILITIES
     21.00     12.80   1181.10      0.00      0.00   1182.72      1.61      0.86      0.00   1186.50
    35000.        0.    35000.        0.        0.     3432.        0.      427.       44.   1186.50
      0.14      0.00     10.20      0.00     0.030     0.025     0.030     0.000   1168.30    953.87
  0.002186      337.      390.      550.         2         0         0      0.00    296.27   1250.13

1490 NH CARD USED
*SECNO 22.000
     22.00     12.90   1182.10      0.00      0.00   1183.72      1.62      1.00      0.00   1189.40
    35000.        0.    35000.        0.        0.     3425.        0.      463.       47.   1189.40
      0.15      0.00     10.22      0.00     0.030     0.025     0.030     0.000   1169.20    919.46
  0.002153      480.      460.      375.         2         0         0      0.00    291.08   1210.54

1490 NH CARD USED
*SECNO 23.000
     23.00     12.92   1183.12      0.00      0.00   1184.76      1.63      1.03      0.00   1191.60
    35000.        0.    35000.        0.        0.     3414.        0.      501.       50.   1191.60
      0.16      0.00     10.25      0.00     0.030     0.025     0.030     0.000   1170.20    565.85
  0.002150      520.      480.      300.         2         0         0      0.00    288.31    854.15

1490 NH CARD USED
*SECNO 24.000
          UPSTREAM EDGE OF EXISTING PARK FACILITIES
     24.00     12.99   1184.29      0.00      0.00   1185.92      1.64      1.17      0.00   1194.30
    35000.        0.    35000.        0.        0.     3410.        0.      543.       54.   1194.30
      0.18      0.00     10.26      0.00     0.030     0.025     0.030     0.000   1171.30   1102.42
  0.002128      540.      545.      555.         2         0         0      0.00    285.17   1387.58

1490 NH CARD USED
*SECNO 24.800
     24.80     13.23   1185.63      0.00      0.00   1187.16      1.53      1.23      0.01   1197.20
    35000.        0.    35000.        0.        0.     3529.        0.      591.       58.   1197.20
      0.20      0.00      9.92      0.00     0.030     0.025     0.030     0.000   1172.40    713.32
  0.001968      595.      600.      610.         2         0         0      0.00    293.36   1006.68

1490 NH CARD USED
```

```
   SECNO     DEPTH     CWSEL     CRIWS     WSELK     EG        HV        HL        OLOSS     BANK ELEV
   Q         QLOB      QCH       QROB      ALOB      ACH       AROB      VOL       TWA     LEFT/RIGHT
   TIME      VLOB      VCH       VROB      XNL       XNCH      XNR       WTN       ELMIN       SSTA
   SLOPE     XLOBL     XLCH      XLOBR     ITRIAL    IDC       ICONT     CORAR     TOPWID      ENDST

*SECNO 24.900

3301 HV CHANGED MORE THAN HVINS

3685 20 TRIALS ATTEMPTED WSEL,CWSEL
3693 PROBABLE MINIMUM SPECIFIC ENERGY
3720 CRITICAL DEPTH ASSUMED
        6 FOOT DROP STRUCTURE AT THIS LOCATION
    24.90      8.45   1186.85   1186.85      0.00   1190.83      3.98      0.05      0.74   1197.20
   35000.        0.    35000.        0.        0.     2186.        0.      592.       58.   1197.20
     0.20      0.00     16.01      0.00     0.030     0.025     0.035     0.000   1178.40    713.13
 0.009020       15.       15.       15.        20         8         0      0.00    277.73    990.87

1490 NH CARD USED
*SECNO 26.000

1645 INI SEC ADDED BY RAISING SEC      26.00,  -0.825FT AND MULTIPLYING BY   1.001

3301 HV CHANGED MORE THAN HVINS

     1.01     10.73   1189.40      0.00      0.00   1191.78      2.37      0.79      0.16   1198.68
   35000.        0.    35000.        0.        0.     2831.        0.      600.       59.   1198.68
     0.20      0.00     12.36      0.00     0.030     0.025     0.035     0.000   1178.68    751.01
 0.003990      133.      138.      158.         5         0         0      0.00    287.45   1038.46

1645 INI SEC ADDED BY RAISING SEC       1.01,   0.275FT AND MULTIPLYING BY   1.000

     1.02     11.20   1190.15      0.00      0.00   1192.31      2.16      0.51      0.02   1198.95
   35000.        0.    35000.        0.        0.     2967.        0.      609.       60.   1198.95
     0.20      0.00     11.80      0.00     0.030     0.025     0.035     0.000   1178.95    749.76
 0.003441      133.      138.      158.         2         0         0      0.00    289.46   1039.22

1645 INI SEC ADDED BY RAISING SEC       1.02,   0.275FT AND MULTIPLYING BY   1.000

     1.03     11.51   1190.73      0.00      0.00   1192.77      2.04      0.45      0.01   1199.23
   35000.        0.    35000.        0.        0.     3054.        0.      619.       61.   1199.23
     0.21      0.00     11.46      0.00     0.030     0.025     0.035     0.000   1179.23    748.89
 0.003146      133.      138.      158.         2         0         0      0.00    290.71   1039.60
```

```
   SECNO     DEPTH     CWSEL     CRIWS     WSELK     EG        HV        HL        OLOSS     BANK ELEV
   Q         QLOB      QCH       QROB      ALOB      ACH       AROB      VOL       TWA    LEFT/RIGHT
   TIME      VLOB      VCH       VROB      XNL       XNCH      XNR       WTN       ELMIN       SSTA
   SLOPE     XLOBL     XLCH      XLOBR     ITRIAL    IDC       ICONT     CORAR     TOPWID      ENDST


1645 INT SEC ADDED BY RAISING SEC      1.03,   0.275FT AND MULTIPLYING BY   1.000

    26.00     11.75   1191.25      0.00      0.00   1193.20      1.95      0.42      0.01   1199.50
   35000.        0.   35000.        0.        0.      3124.        0.      629.       62.   1199.50
     0.21      0.00     11.20      0.00     0.030     0.025     0.035     0.000   1179.50    748.15
 0.002931      133.      138.      158.         2         0         0      0.00    291.70   1039.85


1490 NH CARD USED
#SECNO 27.000
    27.00     12.14   1192.34      0.00      0.00   1194.17      1.83      0.96      0.01   1201.20
   35000.        0.   35000.        0.        0.      3227.        0.      654.       64.   1201.20
     0.22      0.00     10.84      0.00     0.030     0.025     0.035     0.000   1180.20    878.91
 0.002631      330.      345.      400.         2         0         0      0.00    291.79   1170.69


1490 NH CARD USED
#SECNO 28.000
    28.00     12.39   1193.19      0.00      0.00   1194.98      1.78      0.80      0.00   1201.90
   35000.        0.   35000.        0.        0.      3265.        0.      677.       66.   1201.90
     0.23      0.00     10.72      0.00     0.030     0.025     0.035     0.000   1180.80    410.51
 0.002478      314.      315.      320.         3         0         0      0.00    286.98    697.49


1490 NH CARD USED
#SECNO 29.000

1645 INT SEC ADDED BY RAISING SEC     29.00,  -0.400FT AND MULTIPLYING BY   0.942

     1.01     13.13   1194.33      0.00      0.00   1195.70      1.37      0.68      0.04   1202.40
   35000.        0.   35000.        0.        0.      3731.        0.      701.       68.   1200.60
     0.24      0.00      9.38      0.00     0.030     0.026     0.035     0.000   1181.20    361.68
 0.002033      283.      303.      278.         4         0         0      0.00    340.06    701.74


1645 INT SEC ADDED BY RAISING SEC      1.01,   0.400FT AND MULTIPLYING BY   1.062

          CONFLUENCE OF ACDC & SKUNK CREEK
    29.00     13.54   1195.14      0.00      0.00   1196.27      1.13      0.55      0.02   1202.80
   35000.        0.   35000.        0.        0.      4109.        0.      729.       71.   1201.00
     0.25      0.00      8.52      0.00     0.030     0.026     0.035     0.000   1181.60    383.33
 0.001613      283.      303.      278.         4         0         0      0.00    363.13    746.46
```

```
    SECNO     DEPTH     CWSEL     CRIWS     WSELK     EG        HV        HL        OLOSS    BANK ELEV
    Q         QLOB      QCH       QROB      ALOB      ACH       AROB      VOL       TWA    LEFT/RIGHT
    TIME      VLOB      VCH       VROB      XNL       XNCH      XNR       WTN       ELMIN       SSTA
    SLOPE     XLOBL     XLCH      XLOBR     ITRIAL    IDC       ICONT     CORAR     TOPWID      ENDST


1490 NH CARD USED
*SECNO 30.000
          ACDC CHANNEL-FLOW=29.000 CFS
    30.00     13.55  1195.75      0.00      0.00  1196.83      1.08      0.56      0.00  1203.70
   29000.        0.   29000.        0.        0.    3475.        0.      761.       74.  1203.70
     0.26      0.00      8.35      0.00     0.030     0.025     0.035     0.000  1182.20    16.77
 0.001397      370.      370.      370.         0         0         0      0.00    290.46   307.23


1490 NH CARD USED
*SECNO 31.000
    31.00     13.69  1196.19      0.00      0.00  1197.24      1.06      0.41      0.00  1204.00
   29000.        0.   29000.        0.        0.    3518.        0.      785.       76.  1204.00
     0.27      0.00      8.24      0.00     0.030     0.025     0.035     0.000  1182.50    16.47
 0.001344      300.      300.      300.         2         0         0      0.00    291.05   307.53


1490 NH CARD USED
*SECNO 32.000

3301 HV CHANGED MORE THAN HVINS

3685 20 TRIALS ATTEMPTED WSEL,CWSEL
3693 PROBABLE MINIMUM SPECIFIC ENERGY
3720 CRITICAL DEPTH ASSUMED
          LOCATION OF 4-FOOT-HIGH COE DROP STRUCTURE
    32.00     11.58  1195.08  1195.08      0.00  1199.73      4.66      0.03      1.08  1202.00
   29000.        0.   29000.        0.        0.    1675.        0.      786.       76.  1202.00
     0.27      0.00     17.32      0.00     0.030     0.035     0.035     0.000  1183.50   113.05
 0.010466       12.       12.       12.        20        15         0      0.00    194.01   307.05
```

PROFILE FOR STREAM SKUNK CREEK

PLOTTED POINTS (BY PRIORITY)-E-ENERGY, W-WATER SURFACE, I-INVERT, C-CRITICAL W.S., L-LEFT BANK, R-RIGHT BANK, M-LOWER END STA

```
ELEVATION  1130.     1140.     1150.     1160.     1170.     1180.     1190.     1200.     1210.     1220.
    SECNO   CUMDIS
  1.00       0.  .         I.          . WL  E   .       R .         .         .         .         M         .         .
            50.  C         I.          .  W L E  .      R  .         .         .         .         M         .         .
           100.  C          I          .  W   EL .     R   .         .         .         .         M         .         .
           150.  C          I          .   W  E  .L   R    .         .         .         .         M         .         .
           200.  C          I          .   W   E .  L R    .         .         .         .         M         .         .
           250.  C         .I          .   W   E .   R L   .         .         .         .         M         .         .
  2.00     300.  C         .I          .    W  E .   R L   .         .         .         .         M         .         .
           350.  C         .     I     .      W  E  R L    .         .         .         .         M         .         .
  3.00     400.  .         .          . I      W. EL      .         .         .         .         M         .         .
  3.50     450.  C         .          . I      W  E     R.         .         .         .         M         .         .
  4.00     500.  C         .          . I      .W E L R   .         .         .         .         M         .         .
           550.  C         .          . I      . WE  L R  .         .         .         .         M         .         .
           600.  C         .          .  I     . WE   L R.         .         .         .         M         .         .
           650.  C         .          .  I     . W E   L R         .         .         .         M         .         .
  1.01     700.  C         .          .  I     . W E    L.R        .         .         .         M         .         .
           750.  C         .          .  I     .  WE    L.R        .         .         .         M         .         .
           800.  C         .          .  I     .  WE    L.R        .         .         .         M         .         .
           850.  C         .          .  I     .  WE    L.R        .         .         .         M         .         .
  4.50     900.  C         .          .  I     .  WE    L.R        .         .         .         M         .         .
           950.  C         .          .  I     .  WE     LR        .         .         .         M         .         .
          1000.  C         .          .  I     .  WE     LR        .         .         .         M         .         .
          1050.  C         .          .   I    .  WE     LR        .         .         .         M         .         .
          1100.  C         .          .   I    .   E     LR        .         .         .         M         .         .
          1150.  C         .          .   I    .   WE    LR        .         .         .         M         .         .
          1200.  C         .          .   I    .   WE    .L        .         .         .         M         .         .
          1250.  C         .          .   I    .   WE    .L        .         .         .         M         .         .
          1300.  C         .          .   I    .   WE    .L        .         .         .         M         .         .
  5.00    1350.  C         .          .   I    .   WE    .RL       .         .         .         M         .         .
          1400.  C         .          .   I    .   WE    .RL       .         .         .         M         .         .
          1450.  C         .          .    I   .   WE    .RL       .         .         .         M         .         .
          1500.  C         .          .    I   .   WE    . L       .         .         .         M         .         .
          1550.  C         .          .    I   .   WE    . L       .         .         .         M         .         .
          1600.  C         .          .    I   .   WE    . RL      .         .         .         M         .         .
          1650.  C         .          .    I   .    E    . RL      .         .         .         M         .         .
          1700.  C         .          .    I   .    WE   . RL      .         .         .         M         .         .
          1750.  C         .          .    I   .    WE   . RL      .         .         .         M         .         .
          1800.  C         .          .    I   .    WE   . RL      .         .         .         M         .         .
  6.10    1850.  C         .          .    I   .    WE   . R L     .         .         .         M         .         .
  1.01    1900.  C         .          .     I  .    WE   .         .         LR        .         M         .         .
  1.02    1950.  C         .          .     I  .    WE   .         .         LR        .         M         .         .
          2000.  C         .          .     I  .   W  E   .         .         LR        .         M         .         .
  1.03    2050.  C         .          .     I  .   W  E   .         .         LR        .         M         .         .
  7.10    2100.  .         .          .     I  .    W   E.         .         LR        .         M         .         .
  1.01    2150.  .         .          .     I  .    CW  E.         .         LR        .         M         .         .
  1.02    2200.  C         .          .     I  .     W  E.         .         LR        .         M         .         .
  7.20    2250.  C         .          .     I  .      W E.         .         LR        .         M         .         .
  7.30    2300.  C         .          .     I  .      W E.         .         L R       .         M         .         .
  7.40    2350.  C         .          .      I .       W E         .         LR        .         M         .         .
  7.50    2400.  C         .          .      I .       W E         .         LR        .         M         .         .
```

```
 7.60  2450.  C                 .         .         I .         W E           .         LR .         .         M         .         .
       2500.  C                 .         .         I .         W E           .         . L        .         .         M         .         .
11.00  2550.  C                 .         .         I .          W.E   RL     .         .         .         .         M         .         .
       2600.  C                 .         .         I .          W.E   L      .         .         .         .         M         .         .
       2650.  C                 .         .         I .          W.E   L      .         .         .         .         M         .         .
       2700.  C                 .         .         I .          W.E  L R     .         .         .         .         M         .         .
12.00  2750.  C                 .         .          I .         W.E  L R     .         .         .         .         M         .         .
       2800.  C                 .         .          I .          W E    LR .         .         .         .         M         .         .
       2850.  C                 .         .          I .          W E      LR         .         .         .         M         .         .
12.80  2900.  C                 .         .          I .          W E       .L        .         .         .         M         .         .
12.90  2950.  .                 .         .         .  I      . W   E   .L        .         .         .         M         .         .
 1.01  3000.  .                 .         .         .  I      . C W  E  L         .         .         .         M         .         .
 1.02  3050.  C                 .         .         .  I      .   W  E  L         .         .         .         M         .         .
 1.03  3100.  C                 .         .         .  I      .    W E  L         .         .         .         M         .         .
14.10  3150.  C                 .         .         .  I      .    W E  L         .         .         .         M         .         .
14.20  3200.  C                 .         .         .  I      .    W E  L         .         .         .         M         .         .
14.30  3250.  C                 .         .         .  I      .     W E L         .         .         .         M         .         .
14.40  3300.  C                 .         .         .  I      .     W E L         .         .         .         M         .         .
15.00  3350.  C                 .         .         .   I     .     W E L         .         .         .         M         .         .
       3400.  C                 .         .         .   I     .     W E L         .         .         .         M         .         .
16.00  3450.  C                 .         .         .   I     .      W ERL        .         .         .         M         .         .
       3500.  C                 .         .         .   I     .      W E.L        .         .         .         M         .         .
       3550.  C                 .         .         .   I     .      W E.RL       .         .         .         M         .         .
       3600.  C                 .         .         .   I     .      W E. L       .         .         .         M         .         .
18.00  3650.  C                 .         .         .   I     .      W E. L       .         .         .         M         .         .
       3700.  C                 .         .         .   I     .       WE. L       .         .         .         M         .         .
       3750.  C                 .         .         .    I    .       WE.  L      .         .         .         M         .         .
       3800.  C                 .         .         .    I    .       W E  L      .         .         .         M         .         .
       3850.  C                 .         .         .    I    .       W E  L      .         .         .         M         .         .
       3900.  C                 .         .         .    I    .       W E  L      .         .         .         M         .         .
       3950.  C                 .         .         .    I    .       W E  L      .         .         .         M         .         .
       4000.  C                 .         .         .    I    .       W E  L      .         .         .         M         .         .
       4050.  C                 .         .         .    I    .        WE  L      .         .         .         M         .         .
19.00  4100.  C                 .         .         .    I    .        WE  L      .         .         .         M         .         .
       4150.  C                 .         .         .    I    .        W.E L      .         .         .         M         .         .
       4200.  C                 .         .         .    I    .        W.E  L     .         .         .         M         .         .
       4250.  C                 .         .         .     I   .        W.E  L     .         .         .         M         .         .
       4300.  C                 .         .         .     I   .        W.E  L     .         .         .         M         .         .
       4350.  C                 .         .         .     I   .        W.E  L     .         .         .         M         .         .
       4400.  C                 .         .         .     I   .        W.E  L     .         .         .         M         .         .
       4450.  C                 .         .         .     I   .         WE  L     .         .         .         M         .         .
       4500.  C                 .         .         .     I   .         WE   L    .         .         .         M         .         .
       4550.  C                 .         .         .     I   .         WE   L    .         .         .         M         .         .
       4600.  C                 .         .         .     I   .         W E  L    .         .         .         M         .         .
       4650.  C                 .         .         .     I   .         W E  L    .         .         .         M         .         .
20.00  4700.  C                 .         .         .      I  .         W E  L    .         .         .         M         .         .
       4750.  C                 .         .         .      I  .         W E  L    .         .         .         M         .         .
       4800.  C                 .         .         .      I  .         W E   L   .         .         .         M         .         .
       4850.  C                 .         .         .      I  .         .WE   L   .         .         .         M         .         .
       4900.  C                 .         .         .      I  .         .WE   L   .         .         .         M         .         .
       4950.  C                 .         .         .      I  .         .WE   L   .         .         .         M         .         .
       5000.  C                 .         .         .      I  .         .W E  L   .         .         .         M         .         .
       5050.  C                 .         .         .      I  .         .W E  L   .         .         .         M         .         .
21.00  5100.  C                 .         .         .      I  .         .W E   L  .         .         .         M         .         .
       5150.  C                 .         .         .      I  .         .W E   L  .         .         .         M         .         .
       5200.  C                 .         .         .      I  .         .W E   L  .         .         .         M         .         .
       5250.  C                 .         .         .       I.          .W E   L  .         .         .         M         .         .
       5300.  C                 .         .         .       I.          . WE    L .         .         .         M         .         .
       5350.  C                 .         .         .       I.          . WE    L .         .         .         M         .         .
       5400.  C                 .         .         .       I.          . WE    L .         .         .         M         .         .
```

```
        5450.  C     .     .     .     I.    .  WE    L.    .     M     .     .
        5500.  C     .     .     .     I.    .  W E   L.    .     M     .     .
22.00   5550.  C     .     .     .     I.    .  W E   L.    .     M     .     .
        5600.  C     .     .     .     I.    .  W E    L    .     M     .     .
        5650.  C     .     .     .     I.    .  W E    L    .     M     .     .
        5700.  C     .     .     .      I    .  W E    L    .     M     .     .
        5750.  C     .     .     .      I    .   WE    L    .     M     .     .
        5800.  C     .     .     .      I    .   WE   .L    .     M     .     .
        5850.  C     .     .     .      I    .   WE   .L    .     M     .     .
        5900.  C     .     .     .      I    .   WE   .L    .     M     .     .
        5950.  C     .     .     .      I    .   W E  .L    .     M     .     .
        6000.  C     .     .     .      I    .   W E  .L    .     M     .     .
23.00   6050.  C     .     .     .      I    .   W E  . L   .     M     .     .
        6100.  C     .     .     .      I    .   W E  . L   .     M     .     .
        6150.  C     .     .     .      I    .   W E  . L   .     M     .     .
        6200.  C     .     .     .     .I    .   W E  . L   .     M     .     .
        6250.  C     .     .     .     .I    .    WE  .  L  .     M     .     .
        6300.  C     .     .     .     .I    .    WE  .  L  .     M     .     .
        6350.  C     .     .     .     .I    .    WE  .  L  .     M     .     .
        6400.  C     .     .     .     .I    .    W E .  L  .     M     .     .
        6450.  C     .     .     .     .I    .    W E .   L .     M     .     .
        6500.  C     .     .     .     .I    .    W E .   L .     M     .     .
        6550.  C     .     .     .     .I    .    W E .   L .     M     .     .
24.00   6600.  C     .     .     .     .I    .    W E .   L .     M     .     .
        6650.  C     .     .     .     .I    .    W E .    L.     M     .     .
        6700.  C     .     .     .     .I    .     WE .    L.     M     .     .
        6750.  C     .     .     .     . I   .     WE .    L.     M     .     .
        6800.  C     .     .     .     . I   .     WE .    L.     M     .     .
        6850.  C     .     .     .     . I   .     WE .     L     M     .     .
        6900.  C     .     .     .     . I   .     W E .     L     M     .     .
        6950.  C     .     .     .     . I   .     W E .     L     M     .     .
        7000.  C     .     .     .     . I   .     W E .     L     M     .     .
        7050.  C     .     .     .     . I   .     W E .     L     M     .     .
        7100.  C     .     .     .     . I   .     W E .      L    M     .     .
        7150.  C     .     .     .     . I   .      WE .      L    M     .     .
24.80   7200.  C     .     .     .     . I   .      WE .      L    M     .     .
24.90   7250.  .     .     .     .     .     I .     W  .E    L    M     .     .
        7300.  C     .     .     .     .      I.      W .E     L.   M     .     .
 1.01   7350.  C     .     .     .     .      I.       W. E    L.   M.    .     .
        7400.  C     .     .     .     .      I.        W E    L.   M.    .     .
        7450.  C     .     .     .     .      I.        W E    L.   M.    .     .
 1.02   7500.  C     .     .     .     .      I.        W E    L.   M.    .     .
        7550.  C     .     .     .     .      I.        W E    L.    M    .     .
 1.03   7600.  C     .     .     .     .      I.       .W E    L.    M    .     .
        7650.  C     .     .     .     .      I.       .W E    L.    M    .     .
        7700.  C     .     .     .     .      I.       .W E    L.    M    .     .
26.00   7750.  C     .     .     .     .       I       .W E     L    M    .     .
        7800.  C     .     .     .     .       I       .W E     L    M    .     .
        7850.  C     .     .     .     .       I        WE      L    M    .     .
        7900.  C     .     .     .     .       I       . W E    L    M    .     .
        7950.  C     .     .     .     .       I       . W E    L    M    .     .
        8000.  C     .     .     .     .       I       . W E   .L    M    .     .
        8050.  C     .     .     .     .       I       . W E   .L    M    .     .
27.00   8100.  C     .     .     .     .       I       . W E   .L    M    .     .
        8150.  C     .     .     .     .       I       . W E   .L    M    .     .
        8200.  C     .     .     .     .       I        WE     .L    M    .     .
        8250.  C     .     .     .     .       I       .  W E  . L   M    .     .
        8300.  C     .     .     .     .      .I       .  W E  . L   M    .     .
        8350.  C     .     .     .     .      .I       .  W E  . L   M    .     .
28.00   8400.  C     .     .     .     .      .I       .  W E  . L   M    .     .
```

```
        8450.  C  .  .  .  .  .I  .  W E  . L    M  .  .
        8500.  C  .  .  .  .  .I  .   WE  .RL    M  .  .
        8550.  C  .  .  .  .  .I  .   WE  .RL    M  .  .
        8600.  C  .  .  .  .  .I  .   WE  .RL    M  .  .
        8650.  C  .  .  .  .  .I  .   W E .RL    M  .  .
  1.01  8700.  C  .  .  .  .  .I  .   W E .RL    M  .  .
        8750.  C  .  .  .  .  .I  .   W E .RL    M  .  .
        8800.  C  .  .  .  .  .I  .    WE .R L   M  .  .
        8850.  C  .  .  .  .  .I  .    WE .R L   M  .  .
        8900.  C  .  .  .  .  .I  .    WE .R L   M  .  .
        8950.  C  .  .  .  .  . I .    WE .R L   M  .  .
 29.00  9000.  C  .  .  .  .  . I .    WE .R L   M  .  .
        9050.  C  .  .  .  .  . I .    WE .R L   M  .  .
        9100.  C  .  .  .  .  . I .    WE . RL   M  .  .
        9150.  C  .  .  .  .  . I .    WE . RL   M  .  .
        9200.  C  .  .  .  .  . I .    W E . RL  M  .  .
        9250.  C  .  .  .  .  . I .     WE .  L  M  .  .
        9300.  C  .  .  .  .  . I .     WE .  RL M  .  .
        9350.  C  .  .  .  .  . I .     WE .   L M  .  .
 30.00  9400.  C  .  .  .  .  . I .     WE .   L M  .  .
        9450.  C  .  .  .  .  . I .     WE .   L M  .  .
        9500.  C  .  .  .  .  . I .     WE .   L M  .  .
        9550.  C  .  .  .  .  . I .     WE .   L M  .  .
        9600.  C  .  .  .  .  . I .     WE .   L M  .  .
        9650.  C  .  .  .  .  . I .     WE .   L M  .  .
 31.00  9700.  C  .  .  .  .  .  I .    WE .   L M  .  .
 32.00  9750.  .  .  .  .  .  .  I .   W   E L   M  .  .
```

```
*****************************************************
  HEC2 RELEASE DATED NOV 76 UPDATED MARCH 1982
  ERROR CORR -  01,02,03,04,05
  MODIFICATION -  50,51,52,53,54,55
*****************************************************
```

NOTE- ASTERISK (*) AT LEFT OF CROSS-SECTION NUMBER INDICATES MESSAGE IN SUMMARY OF ERRORS LIST

SKUNK CREEK

SUMMARY PRINTOUT TABLE 150

	SECNO	XLCH	ELTRD	ELLC	ELMIN	Q	CWSEL	CRIWS	EG	10K*S	VCH	AREA	.01K
*	1.000	0.00	0.00	0.00	1139.00	41000.00	1152.21	1152.21	1158.38	75.13	18.49	2544.99	4730.27
	2.000	260.00	0.00	0.00	1140.80	41000.00	1154.54	0.00	1158.28	67.48	15.64	2674.73	4990.95
*	3.000	100.00	0.00	0.00	1152.00	41000.00	1158.97	1158.97	1162.28	96.32	14.61	2806.26	4177.68
	3.500	30.00	0.00	0.00	1152.10	41000.00	1160.36	0.00	1162.60	92.58	11.99	3418.30	5654.41
	4.000	90.00	0.00	0.00	1152.30	41000.00	1161.21	0.00	1163.04	38.86	10.85	3778.56	6576.79
*	4.500	400.00	0.00	0.00	1153.20	41000.00	1163.18	0.00	1164.11	17.00	7.72	5310.26	9942.56
	5.000	460.00	0.00	0.00	1154.30	41000.00	1163.96	0.00	1164.93	18.12	7.89	5196.63	9631.72
	6.100	480.00	0.00	0.00	1155.40	41000.00	1164.95	0.00	1165.84	19.84	7.63	5407.11	9205.77
*	7.100	245.00	0.00	0.00	1156.00	35000.00	1164.50	1164.50	1168.52	89.15	16.08	2176.17	3706.82
*	7.200	100.00	0.00	0.00	1156.19	35000.00	1166.61	0.00	1169.21	44.68	12.93	2706.17	5236.08
	7.300	5.00	0.00	0.00	1156.20	35000.00	1166.61	0.00	1169.26	45.19	13.06	2679.18	5206.46
*	7.400	145.00	1186.80	1178.00	1156.60	35000.00	1167.63	0.00	1169.94	37.02	12.21	2865.86	5752.59
	7.500	5.00	0.00	0.00	1156.61	35000.00	1167.65	0.00	1169.96	37.02	12.21	2865.97	5752.77
	7.600	100.00	0.00	0.00	1156.80	35000.00	1168.16	0.00	1170.33	33.40	11.82	2961.80	6055.82
	11.000	115.00	0.00	0.00	1157.10	35000.00	1168.63	0.00	1170.71	31.66	11.57	3023.93	6220.52
	12.000	210.00	0.00	0.00	1157.60	35000.00	1169.34	0.00	1171.36	29.94	11.40	3069.05	6396.94
	12.800	130.00	0.00	0.00	1157.90	35000.00	1169.83	0.00	1171.75	28.10	11.12	3146.22	6603.19

	SECNO	XLCH	ELTRD	ELLC	ELMIN	G	CWSEL	CRIWS	EQ	10K*S	VCH	AREA	.01K
*	12.900	15.00	0.00	0.00	1163.90	35000.00	1172.40	1172.40	1176.39	88.88	16.03	2184.02	3712.56
*	14.100	150.00	0.00	0.00	1164.19	35000.00	1174.88	0.00	1177.31	40.72	12.51	2797.87	5484.77
	14.200	5.00	0.00	0.00	1164.20	35000.00	1174.91	0.00	1177.33	40.67	12.50	2799.12	5488.34
	14.300	80.00	1181.00	1178.00	1164.35	35000.00	1175.55	0.00	1177.76	34.83	11.92	2936.81	5930.36
	14.400	5.00	0.00	0.00	1164.36	35000.00	1175.57	0.00	1177.77	34.83	11.92	2936.97	5930.52
	15.000	90.00	0.00	0.00	1164.50	35000.00	1176.01	0.00	1178.09	31.65	11.55	3029.56	6221.24
	16.000	210.00	0.00	0.00	1165.00	35000.00	1176.90	0.00	1178.73	27.67	10.86	3223.17	6653.96
	18.000	185.00	0.00	0.00	1165.40	35000.00	1177.41	0.00	1179.24	27.04	10.86	3222.39	6731.36
	19.000	470.00	0.00	0.00	1166.30	35000.00	1178.75	0.00	1180.44	23.85	10.43	3354.24	7167.37
	20.000	610.00	0.00	0.00	1167.50	35000.00	1180.23	0.00	1181.86	22.30	10.25	3415.91	7411.03
	21.000	390.00	0.00	0.00	1168.30	35000.00	1181.10	0.00	1182.72	21.86	10.20	3432.45	7485.26
	22.000	460.00	0.00	0.00	1169.20	35000.00	1182.10	0.00	1183.72	21.53	10.22	3424.71	7542.56
	23.000	480.00	0.00	0.00	1170.20	35000.00	1183.12	0.00	1184.76	21.50	10.25	3413.51	7547.59
	24.000	545.00	0.00	0.00	1171.30	35000.00	1184.29	0.00	1185.92	21.28	10.26	3409.91	7587.05
	24.800	600.00	0.00	0.00	1172.40	35000.00	1185.63	0.00	1187.16	19.68	9.92	3529.20	7888.97
*	24.900	15.00	0.00	0.00	1178.40	35000.00	1186.85	1186.85	1190.83	90.20	16.01	2186.15	3685.28
*	26.000	550.00	0.00	0.00	1179.50	35000.00	1191.25	0.00	1193.20	29.31	11.20	3123.91	6465.29
	27.000	345.00	0.00	0.00	1180.20	35000.00	1192.34	0.00	1194.17	26.31	10.84	3227.45	6823.94
	28.000	315.00	0.00	0.00	1180.80	35000.00	1193.19	0.00	1194.98	24.78	10.72	3265.12	7031.09
*	29.000	605.00	0.00	0.00	1181.60	35000.00	1195.14	0.00	1196.27	16.13	8.52	4108.68	8713.80
	30.000	370.00	0.00	0.00	1182.20	29000.00	1195.75	0.00	1196.83	13.97	8.35	3474.66	7759.15
	31.000	300.00	0.00	0.00	1182.50	29000.00	1196.19	0.00	1197.24	13.44	8.24	3517.82	7909.63
*	32.000	12.00	0.00	0.00	1183.50	29000.00	1195.08	1195.08	1199.73	104.66	17.32	1674.82	2834.71

SKUNK CREEK

SUMMARY PRINTOUT TABLE 150

	SECNO	Q	CWSEL	DIFWSP	DIFWSX	DIFKWS	TOPWID	XLCH
*	1.000	41000.00	1152.21	0.00	0.00	0.21	322.90	0.00
	2.000	41000.00	1154.54	0.00	2.33	0.00	306.41	260.00
*	3.000	41000.00	1158.97	0.00	4.42	0.00	424.36	100.00
	3.500	41000.00	1160.36	0.00	1.40	0.00	440.68	30.00
	4.000	41000.00	1161.21	0.00	0.85	0.00	450.57	90.00
*	4.500	41000.00	1163.18	0.00	0.69	0.00	570.81	400.00
	5.000	41000.00	1163.96	0.00	0.78	0.00	566.30	460.00
	6.100	41000.00	1164.95	0.00	0.98	0.00	671.96	480.00
*	7.100	35000.00	1164.50	0.00	0.22	0.00	272.11	245.00
*	7.200	35000.00	1166.61	0.00	0.28	0.00	279.59	100.00
	7.300	35000.00	1166.61	0.00	0.00	0.00	274.54	5.00
*	7.400	35000.00	1167.63	0.00	1.02	0.00	279.80	145.00
	7.500	35000.00	1167.65	0.00	0.02	0.00	279.82	5.00
	7.600	35000.00	1168.16	0.00	0.51	0.00	281.29	100.00
	11.000	35000.00	1168.63	0.00	0.47	0.00	284.48	115.00
	12.000	35000.00	1169.34	0.00	0.71	0.00	283.14	210.00
	12.800	35000.00	1169.83	0.00	0.48	0.00	287.51	130.00
*	12.900	35000.00	1172.40	0.00	2.57	0.00	273.81	15.00
*	14.100	35000.00	1174.88	0.00	0.26	0.00	283.29	150.00
	14.200	35000.00	1174.91	0.00	0.02	0.00	283.33	5.00
	14.300	35000.00	1175.55	0.00	0.65	0.00	284.38	80.00
	14.400	35000.00	1175.57	0.00	0.02	0.00	284.40	5.00
	15.000	35000.00	1176.01	0.00	0.44	0.00	286.07	90.00
	16.000	35000.00	1176.90	0.00	0.89	0.00	301.51	210.00

	SECNO	Q	CWSEL	DIFWSP	DIFWSX	DIFKWS	TOPWID	XLCH
	18.000	35000.00	1177.41	0.00	0.51	0.00	296.83	185.00
	19.000	35000.00	1178.75	0.00	1.35	0.00	298.61	470.00
	20.000	35000.00	1180.23	0.00	1.47	0.00	297.16	610.00
	21.000	35000.00	1181.10	0.00	0.88	0.00	296.27	390.00
	22.000	35000.00	1182.10	0.00	0.99	0.00	291.08	460.00
	23.000	35000.00	1183.12	0.00	1.03	0.00	288.31	480.00
	24.000	35000.00	1184.29	0.00	1.16	0.00	285.17	545.00
	24.800	35000.00	1185.63	0.00	1.35	0.00	293.36	600.00
*	24.900	35000.00	1186.85	0.00	1.21	0.00	277.73	15.00
*	26.000	35000.00	1191.25	0.00	0.52	0.00	291.70	550.00
	27.000	35000.00	1192.34	0.00	1.09	0.00	291.79	345.00
	28.000	35000.00	1193.19	0.00	0.85	0.00	286.98	315.00
*	29.000	35000.00	1195.14	0.00	0.81	0.00	363.13	605.00
	30.000	29000.00	1195.75	0.00	0.61	0.00	290.46	370.00
	31.000	29000.00	1196.19	0.00	0.44	0.00	291.05	300.00
*	32.000	29000.00	1195.08	0.00	-1.11	0.00	194.01	12.00

SUMMARY OF ERRORS AND SPECIAL NOTES

```
CAUTION  SECNO=    1.000  PROFILE= 1  CRITICAL DEPTH ASSUMED

CAUTION  SECNO=    3.000  PROFILE= 1  CRITICAL DEPTH ASSUMED
CAUTION  SECNO=    3.000  PROFILE= 1  PROBABLE MINIMUM SPECIFIC ENERGY
CAUTION  SECNO=    3.000  PROFILE= 1  20 TRIALS ATTEMPTED TO BALANCE WSEL

CAUTION  SECNO=    4.500  PROFILE= 1  INTERPOLATED XSECTIONS USED

CAUTION  SECNO=    7.100  PROFILE= 1  INTERPOLATED XSECTIONS USED

CAUTION  SECNO=    7.200  PROFILE= 1  INTERPOLATED XSECTIONS USED

CAUTION  SECNO=    7.400  PROFILE= 1  HYDRAULIC JUMP D.S.

CAUTION  SECNO=   12.900  PROFILE= 1  CRITICAL DEPTH ASSUMED
CAUTION  SECNO=   12.900  PROFILE= 1  PROBABLE MINIMUM SPECIFIC ENERGY
CAUTION  SECNO=   12.900  PROFILE= 1  20 TRIALS ATTEMPTED TO BALANCE WSEL

CAUTION  SECNO=   14.100  PROFILE= 1  INTERPOLATED XSECTIONS USED

CAUTION  SECNO=   24.900  PROFILE= 1  CRITICAL DEPTH ASSUMED
CAUTION  SECNO=   24.900  PROFILE= 1  PROBABLE MINIMUM SPECIFIC ENERGY
CAUTION  SECNO=   24.900  PROFILE= 1  20 TRIALS ATTEMPTED TO BALANCE WSEL

CAUTION  SECNO=   26.000  PROFILE= 1  INTERPOLATED XSECTIONS USED

CAUTION  SECNO=   29.000  PROFILE= 1  INTERPOLATED XSECTIONS USED

CAUTION  SECNO=   32.000  PROFILE= 1  CRITICAL DEPTH ASSUMED
CAUTION  SECNO=   32.000  PROFILE= 1  PROBABLE MINIMUM SPECIFIC ENERGY
CAUTION  SECNO=   32.000  PROFILE= 1  20 TRIALS ATTEMPTED TO BALANCE WSEL
```

```
*********************************************
  HEC2 RELEASE DATED NOV 76 UPDATED MARCH 1982
  ERROR CORR -  01,02,03,04,05
  MODIFICATION -  50,51,52,53,54,55
*********************************************



ER

%FOR-F-ENDDURREA, end-of-file during read
  unit 5  file DISK$USERS1:[PH04]INPUT.DAT;3
  user PC 0000F152
-RMS-E EOF, end of file detected
%TRACE-F-TRACEBACK, symbolic stack dump follows
module name     routine name                        line       rel PC    abs PC

                                                           0004DA4E  0004DA4E
                                                           0004D95B  0004D95B
                                                           0004A717  0004A717
                                                           0004A1CA  0004A1CA
H2MAIN          H2MAIN                              543    00000BA2  0000F152
HEC2$MAIN       HEC2$MAIN                           224    00000097  0000E897
  PH04         job terminated at  4-MAR-1987 09:18:49.46

  Accounting information:
  Buffered I/O count:          176      Peak working set size:   989
  Direct I/O count:            465      Peak page file size:     958
  Page faults:                1240      Mounted volumes:           0
  Charged CPU time:     0 00:00:14.06   Elapsed time:     0 00:00:34.99
```

HEC-2 COMPUTER RUN
FOR CHANNEL WITH THICKLY VEGETATED AREA IN PLACE
BASE WIDTH VARIES
2:1 SIDESLOPES
ONE 6-FOOT AND ONE 7-FOOT DROP STRUCTURE
FLOWRATE IN SKUNK CREEK = 35,000 CFS

```
%SET-W NOTSET, error modifying DRB1:
-CLI-E-IVDEVTYPE, invalid device type - specify a mailbox device
$SET DEF [PH04]
$COPY 2FM167DROP83.DAT SYS$OUTPUT
C
C    16.0
C     1.0 DOWNSTREAM END OF STUDY-NEW RIVER FLOW=41,000 CFS
C     3.0 LOCATION OF FUTURE DROP STRUCTURE
C     6.1 CONFLUENCE OF SKUNK CREEK & NEW RIVER
C     7.1 BEGIN CHANNEL (B=240',Z=2) SKUNK CREEK FLOW=35,000 CFS
C     7.3 DOWNSTREAM EDGE OF PROPOSED OUTER LOOP FREEWAY BRIDGES
C     7.4 UPSTREAM EDGE OF PROPOSED OUTER LOOP FREEWAY BRIDGES
C    13.1 6-FOOT DROP STRUCTURE DOWNSTREAM OF NEW 83RD AVE BRIDGE
C    14.2 DOWNSTREAM EDGE OF NEW 83RD AVE BRIDGE
C    14.3 UPSTREAM EDGE OF NEW 83RD AVE BRIDGE
C    18.0 DOWNSTREAM END OF COE PROPOSED LEFT BANK STABILIZATION
C    21.0 DOWNSTREAM EDGE OF EXISTING PARK FACILITIES
C    24.0 UPSTREAM EDGE OF EXISTING PARK FACILITIES
C    24.9 7-FOOT DROP STRUCTURE AT THIS LOCATION
C    29.0 CONFLUENCE OF ACDC & SKUNK CREEK
C    30.0 ACDC CHANNEL-FLOW=29,000 CFS
C    32.0 LOCATION OF 4-FOOT-HIGH COE DROP STRUCTURE
T1         DAMES & MOORE JOB NUMBER 15448-002-022 FOR ELLIS-MURPHY, INC.
T2         W/COE,ADOT,B=240-300' & 6- AND 7-FOOT DROPS. W/NEW 83RD AVE BRIDGE
T3         SKUNK CREEK, W/WSEL FROM COE & VAN LOO STUDY
J1    -10                                    0.0055      0.5 41000.0  1152.0
J2   -1.0
J3  150.0
NC 0.030   0.030   0.035     0.1     0.3
X1    1.0     39.0  9842.6 10184.6     0.0     0.0     0.0
GR1210.0  8000.0  1165.6  8001.0  1165.6  8686.9  1166.1  8820.4  1165.78987.1
GR1164.7  9138.2  1164.6  9325.1  1165.2  9577.9  1164.6  9610.8  1165.69625.5
GR1165.7  9641.5  1163.4  9648.3  1165.7  9651.2  1166.6  9681.0  1165.59704.0
GR1165.9  9729.3  1156.3  9742.3  1149.4  9752.9  1149.8  9776.1  1154.29786.7
GR1151.4  9815.3  1151.4  9838.6  1152.9  9842.6  1147.3  9870.4  1140.89905.1
GR1139.1  9917.6  1139.0 10000.0  1139.9 10014.4  1140.5 10040.8  1148.610084.6
GR1159.0 10134.3  1166.5 10177.2  1168.2 10184.6  1164.8 10197.3  1165.510251.6
GR1174.2 10268.3  1165.5 10282.8  1165.5 10400.0  1210.0 10401.0
X1    2.0     35.0  9779.0 10155.0   310.0   240.0   260.0
GR1210.0  8000.0  1167.8  8001.0  1167.8  8650.8  1167.2  9060.3  1166.69116.6
GR1165.8  9601.5  1166.3  9622.5  1164.0  9640.4  1166.0  9644.4  1166.79674.5
GR1165.5  9684.1  1163.9  9712.8  1152.0  9726.2  1150.7  9757.4  1158.69767.6
GR1166.4  9779.0  1158.8  9821.0  1152.0  9858.5  1144.4  9893.7  1140.89919.9
GR1141.4  9944.3  1142.3 10000.0  1142.0 10016.4  1142.8 10031.2  1141.710043.8
GR1146.9 10071.0  1154.3 10110.7  1163.5 10155.0  1166.5 10322.6  1166.010337.4
GR1162.6 10363.5  1160.2 10367.5  1157.0 10390.2  1157.0 10500.0  1210.010501.0
X1    3.0     22.0  9705.1 10153.3    80.0   110.0   100.0
GR1210.0  8000.0  1168.7  8001.0  1168.7  8672.8  1166.0  9274.8  1166.29596.9
GR1167.1  9620.5  1164.2  9635.0  1165.5  9637.5  1167.2  9694.9  1162.79705.1
GR1152.5  9717.1  1152.0  9738.1  1152.0  9750.6  1152.0  9761.9  1152.010099.9
GR1157.7 10128.3  1163.4 10153.3  1168.8 10207.9  1164.3 10361.2  1167.010375.0
GR1167.0 10500.0  1210.0 10501.0
X1    3.5     18.0  9702.6 10179.5    30.0    30.0    30.0
GR1210.0  8000.0  1168.6  8001.0  1168.8  8683.7  1167.0  9066.3  1167.59622.5
GR1164.3  9637.5  1166.4  9640.7  1167.8  9666.8  1166.2  9693.2  1162.59702.6
GR1152.1  9714.2  1152.1 10094.5  1153.5 10108.4  1159.3 10141.4  1168.810179.5
GR1169.4 10198.8  1164.0 10500.0  1210.0 10501.0
X1    4.0     20.0  9689.8 10163.3    90.0    90.0    90.0
GR1210.0  8000.0  1169.3  8001.0  1169.3  8716.0  1167.8  9076.6  1167.69627.3
GR1165.0  9633.8  1166.6  9637.5  1165.2  9689.8  1152.4  9702.3  1152.49723.0
```

```
GR1152.4  9884.6  1152.4  9919.6  1152.3 10036.0  1152.3 10103.9  1159.110136.8
GR1166.6 10163.3  1170.0 10325.0  1164.7 10351.0  1164.7 10499.0  1210.010500.0
X1    4.5    20.0  9584.1 10207.0   540.0   260.0   400.0
GR1210.0  8000.0  1171.0  8001.0  1171.7  8858.5  1170.9  9026.0  1169.29333.9
GR1169.7  9436.5  1167.4  9443.3  1169.3  9584.1  1157.3  9613.7  1153.49653.0
GR1153.4  9855.1  1153.4  9871.6  1153.4  9902.2  1153.4 10131.7  1158.710149.9
GR1164.1 10174.1  1171.4 10207.0  1172.0 10222.9  1172.0 10400.0  1210.010401.0
X1    5.0    23.0  9610.0 10224.3   540.0   370.0   460.0
GR1210.0  8000.0  1174.0  8001.0  1174.0  8649.5  1172.8  8725.6  1172.09029.0
GR1171.0  9322.0  1169.5  9443.6  1171.5  9503.3  1166.4  9548.1  1171.69581.4
GR1166.9  9605.0  1171.5  9610.0  1154.2  9645.0  1154.2  9884.0  1154.29885.0
GR1154.2  9915.0  1154.2  9915.5  1154.2  9916.3  1154.2 10154.7  1164.510193.7
GR1171.2 10224.3  1171.2 10499.0  1210.0 10500.0
X1    6.1    30.0  9460.0  9795.0   380.0   440.0   480.0
GR1210.0  8000.0  1174.8  8001.0  1173.0  8650.0  1172.0  8870.0  1172.08875.0
GR1171.0  8931.8  1170.0  9196.9  1168.3  9265.9  1167.0  9305.7  1156.89321.0
GR1173.5  9346.0  1167.4  9395.0  1173.5  9460.0  1154.9  9495.0  1154.99760.0
GR1178.3  9795.0  1173.6  9798.1  1172.0  9799.0  1172.6  9800.0  1167.89801.5
GR1160.0  9831.0  1157.0  9844.0  1156.0  9895.0  1157.0 10151.0  1164.710183.0
GR1170.6 10206.0  1172.2 10213.5  1172.0 10342.2  1172.0 10499.0  1210.010500.0
X2 35000
NH    5.0   0.030   600.0   0.030   659.2   0.035   899.2   0.030   958.4 0.035
NH2001.0
X1    7.1     8.0   600.0   958.4   205.0   310.0   245.0
GR1210.0     0.0  1186.8     1.0  1186.8   600.0  1155.4   659.2  1155.4 899.2
GR1187.9   958.4  1187.9  2000.0  1210.0  2001.0
NH    5.0   0.025   600.0   0.030   659.2   0.035   899.2   0.025   958.4 0.035
NH2001.0
X1    7.2     8.0   600.0   958.4   100.0   100.0   100.0
GR1210.0     0.0  1186.8     1.0  1186.8   600.0 1155.59   659.2 1155.59 899.2
GR1187.9   958.4  1187.9  2000.0  1210.0  2001.0
NC                          0.3     0.5
NH    5.0   0.030   604.0   0.025   637.0   0.035   877.0   0.025   914.1 0.035
NH2001.0
X1    7.3    12.0   600.0   914.1     5.0     5.0     5.0
X3   10.0                                          1186.8  1187.9
GR1210.0     0.0  1186.8     1.0  1186.0   600.0  1176.0   600.1  1176.0 604.0
GR1155.6   637.0  1155.6   877.0  1176.2   910.0  1176.2   914.0  1187.9 914.1
GR1187.9  2000.0  1210.0  2001.0
SB   0.90    0.80     2.80     0.0   240.0    15.0  4841.5     2.0 1155.801155.60
NH    5.0   0.030   600.0   0.025   654.4   0.035   894.4   0.025   951.0 0.035
NH2001.0
X1    7.4    12.0   600.0   914.1   145.0   145.0   145.0
X2                     1.0  1178.0  1186.8
X3   10.0                                          1186.8  1187.9
GR1210.0     0.0  1186.8     1.0  1186.0   600.0  1176.0   600.1  1176.0 604.0
GR1155.8   637.0  1155.8   877.0  1176.2   910.0  1176.2   914.0  1187.9 914.1
GR1187.9  2000.0  1210.0  2001.0
BT    4.0   600.0  1186.8  1186.8   600.1  1186.8  1178.0   914.0  1187.91178.2
BT  914.1  1187.9  1187.9
NC                          0.1     0.3
NH    5.0   0.030   600.0   0.025   654.4   0.035   894.4   0.025   951.0 0.035
NH2001.0
X1    7.5     8.0   600.0   951.0     5.0     5.0     5.0
GR1210.0     0.0  1186.8     1.0  1186.8   600.0 1155.81   654.4 1155.81 894.4
GR1187.9   951.0  1187.9  2000.0  1210.0  2001.0
NH    5.0   0.030   600.0   0.025   654.4   0.035   913.4   0.025   970.0 0.035
NH2001.0
X1    7.6     8.0   600.0   970.0   100.0   100.0   100.0
GR1210.0     0.0  1186.8     1.0  1186.8   600.0  1156.0   654.4  1156.0 913.4
```

```
GR1187.9   970.0  1187.9  2000.0  1210.0  2001.0
NH    5.0  0.030   530.0   0.025   565.0   0.035   915.0   0.025   950.0 0.035
NH1801.0
X1   11.0    12.0   530.0   950.0    65.0   335.0   115.0
GR1210.0     0.0  1175.5     1.0  1175.5   530.0  1156.2   565.0  1156.2 915.0
GR1175.0   950.0  1175.0   955.0  1175.0   960.0  1175.0   970.0  1175.51300.0
GR1175.0  1800.0  1210.0  1801.0
NH    5.0  0.030   550.0   0.025   580.0   0.035   950.0   0.025   980.0 0.035
NH1751.0
X1   12.0     9.0   550.0   980.0   210.0   175.0   210.0
GR1210.0     0.0  1176.4     1.0  1177.0   300.0  1174.0   550.0  1156.5 580.0
GR1156.5   950.0  1176.0   980.0  1179.9  1650.0  1210.0  1751.0
NH    5.0  0.030  1000.0   0.025  1048.0   0.035  1425.0   0.025  1474.00.030
NH2301.0
X1   13.1     8.0  1000.0  1474.0   125.0   135.0   130.0
GR1210.0     0.0  1181.0     1.0  1181.0  1000.0  1156.7  1049.0  1156.71425.0
GR1181.0  1474.0  1181.0  2300.0  1210.0  2301.0
NH    5.0  0.030  1000.0   0.025  1036.0   0.035  1413.0   0.025  1450.00.030
NH2301.0
X1   13.2     8.0  1000.0  1450.0    15.0    15.0    15.0
GR1210.0     0.0  1181.0     1.0  1181.0  1000.0  1162.7  1037.0  1162.71413.0
GR1181.0  1450.0  1181.0  2300.0  1210.0  2301.0
NH    5.0  0.030  1000.0   0.025  1034.0   0.035  1416.0   0.025  1450.00.030
NH2001.0
X1   14.1     8.0  1000.0  1450.0   155.0   145.0   150.0
GR1210.0     0.0  1180.0     1.0  1180.0  1000.0 1163.12  1034.0 1163.121416.0
GR1180.0  1450.0  1180.0  2000.0  1210.0  2001.0
NC                           0.3     0.5
NH    5.0  0.030  1000.0   0.025  1034.0   0.035  1416.0   0.025  1450.00.030
NH2001.0
X1   14.2     8.0  1000.0  1450.0     5.0     5.0     5.0
X3   10.0                                                 1180.0  1180.0
GR1210.0     0.0  1180.0     1.0  1180.0  1000.0 1163.10  1034.0 1163.101416.0
GR1180.0  1450.0  1180.0  2000.0  1210.0  2001.0
SB   0.90    0.80     2.80     0.0   382.0    20.0  6732.0     2.0 1163.321163.1
NH    5.0  0.030  1000.0   0.025  1034.0   0.035  1416.0   0.025  1450.00.030
NH2001.0
X1   14.3     8.0  1000.0  1450.0    80.0    80.0    80.0
X2                   1.0  1178.0  1181.0
X3   10.0                                                 1180.0  1180.0
GR1210.0     0.0  1180.0     1.0  1180.0  1000.0 1163.32  1034.0 1163.321416.0
GR1180.0  1450.0  1180.0  2000.0  1210.0  2001.0
BT    4.0  1000.0  1180.0  1180.0  1000.1  1181.0  1178.0  1449.9  1181.01178.0
BT1450.0  1180.0  1180.0
NC                           0.1     0.3
NH    5.0  0.030  1000.0   0.025  1034.0   0.035  1416.0   0.025  1450.00.030
NH2001.0
X1   14.4     8.0  1000.0  1450.0     5.0     5.0     5.0
GR1210.0     0.0  1180.0     1.0  1180.0  1000.0 1163.34  1034.0 1163.341416.0
GR1180.0  1450.0  1180.0  2000.0  1210.0  2001.0
NH    7.0  0.030   510.0   0.025   543.0   0.035   570.0   0.090   660.0 0.035
NH 947.0  0.025   980.0   0.030  1691.0
X1   15.0    15.0   510.0   980.0   105.0    45.0    90.0
X4    2.0  1163.6   570.0  1163.6   660.0
GR1210.0     0.0  1180.0     1.0  1180.0   285.0  1180.9   405.0  1180.0 460.0
GR1180.0   510.0  1163.6   543.0  1163.6   947.0  1180.0   980.0  1180.01039.0
GR1180.0  1040.0  1180.0  1080.0  1179.7  1240.0  1180.0  1690.0  1210.01691.0
NH    7.0  0.030   730.0   0.025   764.0   0.035   814.0   0.090   960.0 0.035
NH1191.0  0.025  1225.0   0.030  1951.0
X1   16.0    12.0   730.0  1225.0   265.0   110.0   210.0
```

```
X4    2.0  1164.0   814.0  1164.0   960.0
GR1210.0     0.0  1181.8     1.0  1181.8   700.0  1181.0   730.0  1164.0 764.0
GR1164.0  1191.0  1180.0  1225.0  1180.0  1250.0  1179.7  1650.0  1180.01860.0
GR1180.2  1950.0  1210.0  1951.0
NH    7.0   0.030   880.0   0.025   916.0   0.035   966.0   0.090  1050.0 0.035
NH1304.0   0.025  1340.0   0.030  2101.0
X1   18.0    15.0   880.0  1340.0   170.0   210.0   185.0
X4    2.0  1164.4   966.0  1164.4  1050.0
GR1210.0     0.0  1182.3     1.0  1182.3   880.0  1164.4   916.0  1164.41304.0
GR1182.3  1340.0  1182.3  1350.0  1180.0  1354.0  1182.5  1355.0  1180.01357.0
GR1177.8  1470.0  1179.7  1540.0  1180.0  1850.0  1180.7  2100.0  1210.02101.0
NH    7.0   0.030  1050.0   0.025  1086.0   0.035  1136.0   0.090  1230.0 0.035
NH1326.0   0.025  1362.0   0.030  2021.0
X1   19.0    11.0  1050.0  1362.0   475.0   500.0   470.0
X4    2.0  1165.3  1136.0  1165.3  1230.0
GR1210.0     0.0  1183.3     1.0  1183.3  1050.0  1165.3  1086.0  1165.31326.0
GR1183.3  1362.0  1180.0  1375.0  1180.0  1480.0  1180.2  1750.0  1181.82020.0
GR1210.0  2021.0
NH    5.0   0.030   630.0   0.025   668.0   0.035   908.0   0.025   946.0 0.030
NH1681.0
X1   20.0    13.0   630.0   946.0   590.0   730.0   610.0
GR1210.0     0.0  1185.3     1.0  1185.3   630.0  1166.5   668.0  1166.5 908.0
GR1185.3   946.0  1185.3   956.0  1182.0   962.6  1185.0   985.0  1182.0 986.0
GR1182.7  1260.0  1184.0  1680.0  1210.0  1681.0
NH    5.0   0.030   942.0   0.025   980.0   0.035  1220.0   0.025  1258.0 0.030
NH2161.0
X1   21.0    12.0   942.0  1258.0   337.0   550.0   390.0
GR1210.0     0.0  1186.5     1.0  1186.5   942.0  1167.3   980.0  1167.31220.0
GR1186.5  1258.0  1186.5  1268.0  1184.1  1520.0  1184.7  1820.0  1184.01970.0
GR1185.0  2160.0  1210.0  2161.0
NH    5.0   0.030   905.0   0.025   947.0   0.035  1187.0   0.025  1229.0 0.035
NH2201.0
X1   22.0    11.0   905.0  1229.0   480.0   375.0   460.0
GR1210.0     0.0  1189.4     1.0  1189.4   905.0  1168.2   947.0  1168.21187.0
GR1189.4  1229.0  1189.4  1239.0  1188.0  1247.8  1186.4  1640.0  1186.52200.0
GR1210.0  2201.0
NH    5.0   0.030   550.0   0.025   595.0   0.035   835.0   0.025   890.0 0.035
NH1801.0
X1   23.0    12.0   550.0   880.0   520.0   300.0   480.0
GR1210.0     0.0  1191.6     1.0  1191.6   550.0  1169.2   595.0  1169.2 835.0
GR1191.6   880.0  1191.6   890.0  1188.0   897.2  1188.0   900.0  1188.01620.0
GR1187.5  1800.0  1210.0  1801.0
NH    5.0   0.030  1085.0   0.025  1133.0   0.035  1373.0   0.025  1421.0 0.035
NH2051.0
X1   24.0    15.0  1085.0  1421.0   540.0   555.0   545.0
GR1210.0     0.0  1194.3     1.0  1194.3  1085.0  1170.3  1133.0  1170.31373.0
GR1194.3  1421.0  1194.3  1431.0  1190.2  1439.2  1190.0  1500.0  1190.01580.0
GR1190.5  1650.0  1190.0  1720.0  1189.5  1870.0  1188.7  2050.0  1210.02051.0
NH    5.0   0.030   690.0   0.025   742.0   0.035   982.0   0.025  1034.0 0.030
NH1651.0
X1   24.8    10.0   690.0  1034.0   595.0   610.0   600.0
GR1210.0     0.0  1197.2     1.0  1197.2   690.0  1171.4   742.0  1171.4 982.0
GR1197.2  1034.0  1197.2  1050.0  1190.0  1065.0  1190.0  1650.0  1210.01651.0
NH    5.0   0.030   690.0   0.025   728.0   0.035   968.0   0.025  1006.0 0.035
NH1651.0
X1   24.9    10.0   690.0  1006.0    15.0    15.0    15.0
GR1210.0     0.0  1197.2     1.0  1197.2   690.0  1178.4   728.0  1178.4 968.0
GR1197.2  1006.0  1197.2  1016.0  1190.0  1040.0  1190.0  1650.0  1210.01651.0
NH    5.0   0.030   730.0   0.025   774.0   0.035  1014.0   0.025  1058.0 0.030
NH1751.0
```

PRINTED IN U.S.A.

```
X1  26.0     12.0    730.0   1058.0    530.0    630.0    550.0
GR1210.0      0.0   1199.5      1.0   1199.5    730.0   1179.5    774.0  1179.51014.0
GR1199.5   1058.0   1199.5   1070.0   1194.0   1081.0   1194.0   1100.0  1193.81300.0
GR1194.0   1750.0   1210.0   1751.0
NH   5.0    0.030    860.0    0.025    904.8    0.035   1144.8    0.025   1189.6 0.030
NH1991.0
X1  27.0     13.0    860.0   1189.6    330.0    400.0    345.0
GR1210.0      0.0   1201.2      1.0   1201.2    860.0   1180.2    904.8  1180.21144.8
GR1201.2   1189.6   1201.2   1200.0   1195.4   1200.2   1196.0   1410.0  1196.31600.0
GR1196.0   1900.0   1197.8   1990.0   1210.0   1991.0
NH   5.0    0.030    394.0    0.025    434.0    0.035    674.0    0.025    714.0 0.030
NH1601.0
X1  28.0     13.0    394.0    714.0    314.0    320.0    315.0
GR1210.0      0.0   1201.9      1.0   1201.9    394.0   1180.8    434.0  1180.8 674.0
GR1201.9    714.0   1201.9    734.0   1198.3    741.2   1198.3   1200.0  1200.01370.0
GR1200.0   1380.0   1198.5   1600.0   1210.0   1601.0
NH   5.0    0.030    368.0    0.025    408.0    0.035    648.0    0.025    683.0 0.030
NH1591.0
X1  29.0     18.0    368.0    763.0    566.0    555.0    605.0
GR1210.0      0.0   1202.8      1.0   1202.8    368.0   1182.8    408.0  1181.6 528.0
GR1182.8    648.0   1185.0    683.0   1185.0    693.0   1187.0    718.0  1190.0 732.0
GR1201.0    763.0   1201.0    771.0   1200.0    830.0   1200.0   1060.0  1200.01130.0
GR1200.3   1490.0   1200.0   1590.0   1210.0   1591.0
X2 29000
NH   3.0    0.025     42.0    0.035    282.0    0.025    324.0
X1  30.0      7.0      1.0    323.0    370.0    370.0    370.0
GR1210.0      0.0   1203.7      1.0   1183.0     42.0   1182.2    162.0  1183.0 282.0
GR1203.7    323.0   1210.0    324.0
NH   3.0    0.025     42.0    0.035    282.0    0.025    324.0
X1  31.0      7.0      1.0    323.0    300.0    300.0    300.0
GR1210.0      0.0   1204.0      1.0   1183.3     42.0   1182.5    162.0  1183.3 282.0
GR1204.0    323.0   1210.0    324.0
NH   3.0    0.025    113.0    0.035    307.1    0.025    420.0
X1  32.0     16.0    113.0    307.1     12.0     12.0     12.0
GR1210.0      0.0   1204.0      1.0   1204.0     53.0   1202.0     53.1  1202.0 113.0
GR1187.3    113.1   1186.5    193.0   1183.5    202.0   1183.5    218.0  1186.5 227.0
GR1187.3    307.0   1202.0    307.1   1202.0    367.0   1204.0    367.1  1204.0 419.0
GR1210.0    420.0
EJ


ER
$ASSIGN 2EMI67DROP83.DAT SYS$INPUT
$COPY 2FMI67DROP83.DAT INPUT.DAT
$RUN EPLIB:HEC2
```

```
*****************************************************
*  WATER SURFACE PROFILES                           *
*  VERSION OF NOVEMBER 1976                         *
*  UPDATED MARCH 1982                               *
*                                                   *
*  RUN DATE  10-FEB-87 TIME   18:24:41              *
*****************************************************
```

```
*****************************************
*  U.S. ARMY CORPS OF ENGINEERS         *
*  THE HYDROLOGIC ENGINEERING CENTER    *
*  609 SECOND STREET, SUITE D           *
*  DAVIS, CALIFORNIA 95616              *
*  (916) 440-2105 (FTS) 448-2105        *
*****************************************
```

```
X     X  XXXXXXX   XXXXX              XXXXX
X     X  X        X     X            X     X
X     X  X        X                        X
XXXXXXX  XXXX     X          XXXXX    XXXXX
X     X  X        X                  X
X     X  X        X     X            X
X     X  XXXXXXX   XXXXX              XXXXXXX
```

```
*****************************************************
  HEC2 RELEASE DATED NOV 76 UPDATED MARCH 1982
  ERROR CORR -  01,02,03,04,05
  MODIFICATION -  50,51,52,53,54,55
*****************************************************

C
T1        DAMES & MOORE JOB NUMBER 15448-002-022 FOR ELLIS-MURPHY, INC.
T2        W/COE,ADOT,B=240-300' & 6- AND 7-FOOT DROPS. W/NEW 83RD AVE BRIDGE
T3        SKUNK CREEK, W/WSEL FROM COE & VAN LOO STUDY
J1  ICHECK    INQ       NINV      IDIR      STRT      METRIC    HVINS     Q         WSEL      FQ
    =10.      0.        0.        0.   0.000000     0.01      0.5     41000.   1152.000   0.000
J2  NPROF     IPLOT     PRFVS     XSECV     XSECH     FN        ALLDC     IBW       CHNIM     ITRACE
    -1.000    0.000     0.000     0.000     0.000     0.000     0.000     0.000     0.000     0.000
J3  VARIABLE CODES FOR SUMMARY PRINTOUT
    150.000   0.000     0.000     0.000     0.000     0.000     0.000     0.000     0.000     0.000
```

```
   SECNO     DEPTH     CWSEL     CRIWS     WSELK     EG        HV        HL        OLOSS     BANK ELEV
   Q         QLOB      QCH       QROB      ALOB      ACH       AROB      VOL       TWA    LEFT/RIGHT
   TIME      VLOB      VCH       VROB      XNL       XNCH      XNR       WTN       ELMIN       SSTA
   SLOPE     XLOBL     XLCH      XLOBR     ITRIAL    IDC       ICONT     CORAR     TOPWID      ENDST

*PROF 1

CCHV=   0.100 CEHV=   0.300
*SECNO 1.000

3265 DIVIDED FLOW

3720 CRITICAL DEPTH ASSUMED
        DOWNSTREAM END OF STUDY-NEW RIVER FLOW=41,000 CFS
     1.00     13.21  1152.21  1152.21  1152.00  1156.38     4.17      0.00      0.00  1152.90
   41000.      635.   40365.       0.       97.     2448.       0.        0.        0.  1168.20
     0.00      6.56     16.49     0.00     0.030     0.035    0.030     0.000   1139.00  9748.58
 0.007513        0.        0.       0.         0         4        0      0.00    322.90 10101.85

*SECNO 2.000

3265 DIVIDED FLOW

     2.00     13.74  1154.54     0.00     0.00  1158.28     3.73      1.[illegible]     0.04  1168.40
   41000.      944.   40056.       0.      113.     2562.       0.        16.[illegible]      2.  1163.50
     0.00      8.37     15.64     0.00     0.030     0.035    0.030     0.000   1140.80  9723.34
 0.006748      310.      260.     240.         4         0        0      0.00    306.41 10111.87

*SECNO 3.000
3685 20 TRIALS ATTEMPTED WSEL,CWSEL
3693 PROBABLE MINIMUM SPECIFIC ENERGY
3720 CRITICAL DEPTH ASSUMED
        LOCATION OF FUTURE DROP STRUCTURE
     3.00      6.97  1158.97  1158.97     0.00  1162.28     3.31      0.80      0.04  1162.70
   41000.        0.   41000.       0.        0.     2806.       0.       22.        3.  1163.40
     0.01      0.00     14.61     0.00     0.030     0.035    0.030     0.000   1152.00  9709.49
 0.009632       80.      100.     110.        20         8        0      0.00    424.36 10133.85

*SECNO 3.500

3301 HV CHANGED MORE THAN HVINS

     3.50      8.26  1160.36     0.00     0.00  1162.60     2.23      0.21      0.11  1162.50
   41000.        0.   41000.       0.        0.     3418.       0.       24.        3.  1168.80
     0.01      0.00     11.99     0.00     0.030     0.035    0.030     0.000   1152.10  9704.98
 0.005258       30.       30.      30.         6         0        0      0.00    440.68 10145.66
```

```
   SECNO      DEPTH      CWSEL      CRIWS      WSELK      EG         HV         HL         OLOSS      BANK ELEV
   Q          QLOB       QCH        QROB       ALOB       ACH        AROB       VOL        TWA     LEFT/RIGHT
   TIME       VLOB       VCH        VROB       XNL        XNCH       XNR        WTN        ELMIN       SSTA
   SLOPE      XLOBL      XLCH       XLOBR      ITRIAL     IDC        ICONT      CORAR      TOPWID      ENDST

*SECNO 4.000
      4.00       8.91    1161.21       0.00       0.00    1163.04       1.83       0.40       0.04    1163.20
    41000.         0.    41000.         0.         0.       3779.         0.        32.         4.    1166.60
      0.01       0.00      10.85       0.00      0.030      0.035      0.030      0.000    1152.30    9693.69
  0.003835        90.        90.        90.          3          0          0       0.00     450.57   10144.26

*SECNO 4.500

1645 INI SEC ADDED BY RAISING SEC      4.50,  -0.550FT AND MULTIPLYING BY   0.901

3301 HV CHANGED MORE THAN HVINS

      1.01       9.62    1162.47       0.00       0.00    1163.70       1.23       0.60       0.06    1168.75
    41000.         0.    41000.         0.         0.       4608.         0.        51.         6.    1170.85
      0.02       0.00       8.90       0.00      0.030      0.035      0.030      0.000    1152.85    9440.74
  0.002370       270.       200.       130.          3          0          0       0.00     513.09    9953.83

1645 INI SEC ADDED BY RAISING SEC      1.01,   0.550FT AND MULTIPLYING BY   1.110

      4.50       9.78    1163.18       0.00       0.00    1164.14       0.96       0.41       0.03    1169.30
    41000.         0.    41000.         0.         0.       5205.         0.        73.         9.    1171.40
      0.02       0.00       7.88       0.00      0.030      0.035      0.030      0.000    1153.40    9599.21
  0.001818       270.       200.       130.          2          0          0       0.00     570.76   10169.96

*SECNO 5.000
      5.00       9.82    1164.02       0.00       0.00    1164.95       0.93       0.81       0.00    1171.50
    41000.         0.    41000.         0.         0.       5286.         0.       129.        15.    1171.20
      0.04       0.00       7.76       0.00      0.030      0.035      0.030      0.000    1154.20    9625.13
  0.001714       540.       460.       370.          2          0          0       0.00     566.75   10191.88

*SECNO 6.100

3265 DIVIDED FLOW

          CONFLUENCE OF SKUNK CREEK & NEW RIVER
      6.10       9.99    1164.89       0.00       0.00    1165.69       0.80       0.72       0.01    1173.50
    41000.       407.     19667.      20925.        98.       2817.      2835.        188.        21.    1178.30
      0.06       4.15       6.98       7.38      0.030      0.035      0.030      0.000    1154.90    9308.86
  0.001391       380.       480.       440.          2          0          0       0.00     694.28   10183.76
```

```
   SECNO      DEPTH      CWSEL      CRIWS      WSELK      EG         HV         HL         OLOSS      BANK ELEV
   Q          QLOB       QCH        QROB       ALOB       ACH        AROB       VOL        TWA    LEFT/RIGHT
   TIME       VLOB       VCH        VROB       XNL        XNCH       XNR        WTN        ELMIN        SSTA
   SLOPE      XLOBL      XLCH       XLOBR      ITRIAL     IDC        ICONT      CORAR      TOPWID       ENDST

1490 NH CARD USED
*SECNO 7.100

1645 INI SEC ADDED BY RAISING SEC       7.10,   -0.375FT AND MULTIPLYING BY   1.068

3301 HV CHANGED MORE THAN HVINS

3685 20 TRIALS ATTEMPTED WSEL,CWSEL
3693 PROBABLE MINIMUM SPECIFIC ENERGY
3720 CRITICAL DEPTH ASSUMED
     1.01       8.80   1163.82   1163.82       0.00   1168.00       4.18       0.18       1.01   1186.43
   39500.         0.    39500.         0.         0.    2408.         0.       194.        22.   1187.53
     0.06       0.00     16.41       0.00      0.030      0.030      0.030      0.000   1155.03    686.17
 0.008947        51.       61.        78.         20         11          0       0.00    291.09    977.26

1645 INI SEC ADDED BY RAISING SEC       1.01,   0.125FT AND MULTIPLYING BY   0.979

3301 HV CHANGED MORE THAN HVINS

     1.02      10.75   1165.90       0.00       0.00   1168.53       2.63       0.37       0.16   1186.55
   38000.         0.    38000.         0.         0.    2922.         0.       198.        23.   1187.65
     0.06       0.00     13.01       0.00      0.030      0.030      0.030      0.000   1155.15    667.80
 0.004381        51.       61.        78.          6          0          0       0.00    292.51    960.31

1645 INI SEC ADDED BY RAISING SEC       1.02,   0.125FT AND MULTIPLYING BY   0.978

     1.03      11.22   1166.50       0.00       0.00   1168.81       2.31       0.25       0.03   1186.68
   36500.         0.    36500.         0.         0.    2993.         0.       202.        23.   1187.78
     0.06       0.00     12.19       0.00      0.030      0.030      0.030      0.000   1155.28    652.46
 0.003654        51.       61.        78.          3          0          0       0.00    287.97    940.42

1645 INI SEC ADDED BY RAISING SEC       1.03,   0.125FT AND MULTIPLYING BY   0.978

          BEGIN CHANNEL (B=240',Z=2) SKUNK CREEK FLOW=35,000 CFS
     7.10      11.56   1166.96       0.00       0.00   1169.04       2.08       0.21       0.02   1186.80
   35000.         0.    35000.         0.         0.    3023.         0.       206.        23.   1187.90
     0.06       0.00     11.58       0.00      0.030      0.030      0.030      0.000   1155.40    637.40
 0.003176        51.       61.        78.          2          0          0       0.00    282.86    920.26
```

```
   SECNO      DEPTH      CWSEL      CRIWS      WSELK      EQ         HV         HL         OLOSS     BANK ELEV
   Q          QLOB       QCH        QROB       ALOB       ACH        AROB       VOL        TWA    LEFT/RIGHT
   TIME       VLOB       VCH        VROB       XNL        XNCH       XNR        WTN        ELMIN       SSTA
   SLOPE      XLOBL      XLCH       XLOBR      ITRIAL     IDC        ICONT      CORAR      TOPWID      ENDST

1490 NH CARD USED
*SECNO 7.200
     7.20      11.76   1167.35       0.00       0.00   1169.36       2.00       0.31       0.01   1186.80
   35000.         0.   35000.          0.         0.     3081.         0.       213.        24.   1187.90
     0.07       0.00     11.36       0.00      0.030      0.025      0.030      0.000    1155.59    636.89
 0.002995       100.      100.       100.          2          0          0       0.00     283.87    920.75

CCHV=   0.300 CEHV=   0.500
1490 NH CARD USED
*SECNO 7.300

3495 OVERBANK AREA ASSUMED NON-EFFECTIVE, ELLEA=     1186.80 ELREA=     1187.90

          DOWNSTREAM EDGE OF PROPOSED OUTER LOOP FREEWAY BRIDGES
     7.30      11.74   1167.34       0.00       0.00   1169.40       2.06       0.02       0.03   1186.00
   35000.         0.   35000.          0.         0.     3039.         0.       214.        24.   1187.90
     0.07       0.00     11.52       0.00      0.030      0.025      0.030      0.000    1155.60    618.01
 0.003016         5.       5.          5.          2          0          0       0.00     277.80    895.81


SPECIAL BRIDGE

SB   XK         XKOR       COFQ       RDLEN      BWC        BWP        BAREA      SS         ELCHU      ELCHD
     0.90       0.80       2.80       0.00     240.00      15.00     4841.50      2.00    1155.80    1155.60

1490 NH CARD USED
*SECNO 7.400
CLASS A LOW FLOW

3420 BRIDGE W.S. =   1166.97 BRIDGE VELOCITY=,      12.54      CALCULATED CHANNEL AREA=,      2763.

 EQPRS      EGLWC      H3         GWEIR      QLOW       BAREA      TRAPEZOID      ELLC       ELTRD
                                                                     AREA
     0.00    1169.74     0.43          0.     35000.      4842.      5981.      1178.00    1186.80


3495 OVERBANK AREA ASSUMED NON-EFFECTIVE, ELLEA=     1186.80 ELREA=     1187.90

          UPSTREAM EDGE OF PROPOSED OUTER LOOP FREEWAY BRIDGES
     7.40      11.97   1167.77       0.00       0.00   1169.74       1.97       0.35       0.00   1186.00
   35000.         0.   35000.          0.         0.     3107.         0.       224.        25.   1187.90
     0.07       0.00     11.27       0.00      0.030      0.025      0.030      0.000    1155.80    617.44
 0.002818       145.      145.       145.          0          0          0       0.00     278.93    896.37
```

```
   SECNO     DEPTH     CWSEL     CRIWS     WSELK     EG        HV        HL        OLOSS     BANK ELEV
   Q         QLOB      QCH       QROB      ALOB      ACH       AROB      VOL       TWA     LEFT/RIGHT
   TIME      VLOB      VCH       VROB      XNL       XNCH      XNR       WTN       ELMIN       SSTA
   SLOPE     XLOBL     XLCH      XLOBR     ITRIAL    IDC       ICONT     CORAR     TOPWID      ENDST

CCHV=   0.100 CEHV=   0.300
1490 NH CARD USED
*SECNO 7.500
     7.50     12.02   1167.83      0.00      0.00   1169.76      1.93      0.01      0.00   1186.80
   35000.        0.   35000.        0.        0.      3140.        0.      224.       25.   1187.90
     0.07      0.00     11.15      0.00     0.030     0.025     0.030     0.000   1155.81    633.29
 0.002764        5.        5.        5.         2         0         0      0.00    282.31    915.61

1490 NH CARD USED
*SECNO 7.600
     7.60     12.50   1168.50      0.00      0.00   1170.04      1.54      0.24      0.04   1186.80
   35000.        0.   35000.        0.        0.      3516.        0.      232.       26.   1187.90
     0.07      0.00     9.95      0.00     0.030     0.025     0.030     0.000   1156.00    632.31
 0.002085      100.      100.      100.         2         0         0      0.00    303.28    935.59

1490 NH CARD USED
*SECNO 11.000

1645 INT SEC ADDED BY RAISING SEC      11.00,  -0.100FT AND MULTIPLYING BY   0.877

3301 HV CHANGED MORE THAN HVINS

     1.01     13.05   1169.15      0.00      0.00   1170.18      1.04      0.09      0.05   1175.40
   35000.        0.   35000.        0.        0.      4280.        0.      237.       26.   1174.90
     0.07      0.00     8.18      0.00     0.030     0.025     0.030     0.000   1156.10    474.78
 0.001307       33.       58.      168.         2         0         0      0.00    349.03    823.81

1645 INT SEC ADDED BY RAISING SEC       1.01,   0.100FT AND MULTIPLYING BY   1.140

    11.00     13.31   1169.51      0.00      0.00   1170.27      0.77      0.06      0.03   1175.50
   35000.        0.   35000.        0.        0.      4984.        0.      243.       27.   1175.00
     0.08      0.00     7.02      0.00     0.030     0.025     0.030     0.000   1156.20    540.86
 0.000940       33.       58.      168.         2         0         0      0.00    398.91    939.78

1490 NH CARD USED
*SECNO 12.000
    12.00     13.26   1169.76      0.00      0.00   1170.47      0.71      0.19      0.01   1174.00
   35000.        0.   35000.        0.        0.      5194.        0.      268.       29.   1176.00
     0.08      0.00     6.74      0.00     0.030     0.025     0.030     0.000   1156.50    557.26
 0.000856      210.      210.      175.         2         0         0      0.00    413.14    970.41
```

```
   SECNO     DEPTH     CWSEL     CRIWS     WSELK     EG        HV        HL        OLOSS    BANK ELEV
   Q         QLOB      QCH       QROB      ALOB      ACH       AROB      VOL       TWA    LEFT/RIGHT
   TIME      VLOB      VCH       VROB      XNL       XNCH      XNR       WTN       ELMIN       SSTA
   SLOPE     XLOBL     XLCH      XLOBR     ITRIAL    IDC       ICONT     CORAR     TOPWID      ENDST


1645 INI SEC ADDED BY RAISING SEC      1.02,   0.140FT AND MULTIPLYING BY   1.005

    14.10      8.19  1171.31      0.00      0.00  1173.09      1.79      0.21      0.01  1180.00
   35000.        0.   35000.        0.        0.     3263.        0.      295.       31.  1180.00
     0.09      0.00     10.73      0.00     0.030     0.025     0.030     0.000  1163.12  1017.51
 0.004064       52.       50.       48.         2         0         0      0.00   414.98  1432.49


CCHV=   0.300 CEHV=   0.500
1490 NH CARD USED
*SECNO 14.200

3495 OVERBANK AREA ASSUMED NON-EFFECTIVE,ELLEA=     1180.00 ELREA=     1180.00

          DOWNSTREAM EDGE OF NEW 83RD AVE BRIDGE
    14.20      8.27  1171.37      0.00      0.00  1173.12      1.75      0.02      0.01  1180.00
   35000.        0.   35000.        0.        0.     3297.        0.      296.       31.  1180.00
     0.09      0.00     10.62      0.00     0.030     0.025     0.030     0.000  1163.10  1017.36
 0.003929        5.        5.        5.         2         0         0      0.00   415.28  1432.64


SPECIAL BRIDGE

SB  XK        XKOR      COFQ      RDLEN     BWC       BWP       BAREA     SS        ELCHU     ELCHD
     0.90      0.80      2.80      0.00    382.00     20.00   6732.00      2.00   1163.32   1163.10

1490 NH CARD USED
*SECNO 14.300
CLASS A LOW FLOW

3420 BRIDGE W.S.=   1171.06 BRIDGE VELOCITY=,     11.81      CALCULATED CHANNEL AREA=,     2921.

 EQPRS     EGLWC     H3        GWEIR     QLOW      BAREA     TRAPEZOID      ELLC      ELTRD
                                                             AREA
     0.00  1173.43     0.38        0.    35000.     6732.     5745.     1178.00   1181.00


3495 OVERBANK AREA ASSUMED NON-EFFECTIVE,ELLEA=     1180.00 ELREA=     1180.00

          UPSTREAM EDGE OF NEW 83RD AVE BRIDGE
    14.30      8.44  1171.76      0.00      0.00  1173.43      1.68      0.31      0.00  1180.00
   35000.        0.   35000.        0.        0.     3367.        0.      302.       32.  1180.00
     0.10      0.00     10.39      0.00     0.030     0.025     0.030     0.000  1163.32  1016.81
 0.003674       80.       80.       80.         0         0         0      0.00   416.39  1433.19
```

```
   SECNO     DEPTH     CWSEL     CRIWS     WSELK     EG        HV        HL        OLOSS    BANK ELEV
   Q         GLOB      QCH       QROB      ALOB      ACH       AROB      VOL       TWA    LEFT/RIGHT
   TIME      VLOB      VCH       VROB      XNL       XNCH      XNR       WTN       ELMIN       SSTA
   SLOPE     XLOBL     XLCH      XLOBR     ITRIAL    IDC       ICONT     CORAR     TOPWID      ENDST

CCHV=   0.100 CEHV=   0.300
1490 NH CARD USED
*SECNO 14.400
    14.40      8.43  1171.77      0.00      0.00  1173.45      1.68      0.02      0.00  1180.00
   35000.        0.   35000.        0.        0.    3368.        0.      302.       32.  1180.00
     0.10      0.00     10.39      0.00     0.030     0.025     0.030     0.000  1163.34  1016.78
 0.003673        5.        5.        5.         0         0         0      0.00   416.43  1433.22

1490 NH CARD USED
*SECNO 15.000
    15.00      8.85  1172.45      0.00      0.00  1173.82      1.36      0.33      0.03  1180.00
   35000.        0.   35000.        0.        0.    3738.        0.      310.       33.  1180.00
     0.10      0.00      9.36      0.00     0.030     0.031     0.030     0.000  1163.60   525.17
 0.003717      105.       90.       45.         2         0         0      0.00   439.66   964.83

1490 NH CARD USED
*SECNO 16.000
    16.00      9.51  1173.51      0.00      0.00  1174.56      1.05      0.71      0.03  1181.00
   35000        0.   35000.        0.        0.    4250.        0.      329.       35.  1180.00
     0.11      0.00      8.24      0.00     0.030     0.036     0.030     0.000  1164.00   744.97
 0.003117      265.      210.      110.         2         0         0      0.00   466.25  1211.22

1490 NH CARD USED
*SECNO 18.000
          DOWNSTREAM END OF COE PROPOSED LEFT BANK STABILIZATION
    18.00      9.54  1173.94      0.00      0.00  1175.20      1.26      0.58      0.06  1182.30
   35000.        0.   35000.        0.        0.    3883.        0.      346.       37.  1182.30
     0.11      0.00      9.01      0.00     0.030     0.036     0.030     0.000  1164.40   896.82
 0.003112      170.      185.      210.         2         0         0      0.00   426.36  1323.18

1490 NH CARD USED
*SECNO 19.000

1645 INT SEC ADDED BY RAISING SEC      19.00,  -0.675FT AND MULTIPLYING BY   1.429

     1.01      9.59  1174.22      0.00      0.00  1175.72      1.51      0.45      0.07  1182.63
   35000.        0.   35000.        0.        0.    3552.        0.      356.       38.  1182.63
     0.12      0.00      9.85      0.00     0.030     0.044     0.030     0.000  1164.63  1524.21
 0.004882      119.      118.      125.         2         0         0      0.00   397.72  1921.93
```

```
  SECNO     DEPTH     CWSEL     CRIWS     WSELK     EG        HV        HL        OLOSS    BANK ELEV
  Q         GLOB      GCH       GROB      ALOB      ACH       AROB      VOL       TWA    LEFT/RIGHT
  TIME      VLOB      VCH       VROB      XNL       XNCH      XNR       WTN       ELMIN       SSTA
  SLOPE     XLOBL     XLCH      XLOBR     ITRIAL    IDC       ICONT     CORAR     TOPWID      ENDST


1645 INI SEC ADDED BY RAISING SEC       1.01,   0.225FT AND MULTIPLYING BY   0.900

    1.02      9.79  1174.64      0.00      0.00  1176.42      1.78      0.61      0.08  1182.85
  35000.        0.  35000.        0.        0.    3268.        0.      365.       39.   1182.85
    0.12      0.00     10.71     0.00     0.030     0.044     0.030     0.000  1164.85  1371.23
0.005622      119.      118.      125.         2         0         0      0.00   358.96  1730.19


1645 INI SEC ADDED BY RAISING SEC       1.02,   0.225FT AND MULTIPLYING BY   0.889

    1.03     10.03  1175.10      0.00      0.00  1177.24      2.14      0.71      0.11  1183.07
  35000.        0.  35000.        0.        0.    2980.        0.      374.       40.   1183.07
    0.12      0.00     11.74     0.00     0.030     0.044     0.030     0.000  1165.07  1218.29
0.006566      119.      118.      125.         2         0         0      0.00   320.14  1538.43


1645 INI SEC ADDED BY RAISING SEC       1.03,   0.225FT AND MULTIPLYING BY   0.875

3301 HV CHANGED MORE THAN HVINS

   19.00     10.29  1175.59      0.00      0.00  1178.23      2.64      0.84      0.15  1183.30
  35000.        0.  35000.        0.        0.    2682.        0.      381.       41.   1183.30
    0.12      0.00     13.05     0.00     0.030     0.044     0.030     0.000  1165.30  1065.41
0.007852      119.      118.      125.         2         0         0      0.00   281.17  1346.59

1490 NH CARD USED
*SECNO 20.000

1645 INI SEC ADDED BY RAISING SEC      20.00,  -0.600FT AND MULTIPLYING BY   1.000

3301 HV CHANGED MORE THAN HVINS

    1.01     11.81  1177.71      0.00      0.00  1179.67      1.96      1.37      0.07  1184.70
  35000.        0.  35000.        0.        0.    3116.        0.      402.       43.   1184.70
    0.13      0.00     11.23     0.00     0.030     0.025     0.030     0.000  1165.90   643.93
0.002904      295.      305.      365.         3         0         0      0.00   287.66   931.59
```

```
   SECNO      DEPTH      CWSEL      CRIWS      WSELK      EG         HV         HL         OLOSS    BANK ELEV
   Q          GLOB       GCH        GROB       ALOB       ACH        AROB       VOL        TWA    LEFT/RIGHT
   TIME       VLOB       VCH        VROB       XNL        XNCH       XNR        WTN        ELMIN       SSTA
   SLOPE      XLOBL      XLCH       XLOBR      ITRIAL     IDC        ICONT      CORAR      TOPWID      ENDST


1645 INI SEC ADDED BY RAISING SEC      1.01,   0.600FT AND MULTIPLYING BY   1.000

    20.00      12.20    1178.70       0.00       0.00    1180.52       1.82       0.84       0.01    1185.30
   35000.         0.    35000.         0.         0.     3230.         0.        424.        45.    1185.30
     0.14       0.00      10.84       0.00      0.030      0.025      0.030      0.000    1166.50     643.33
 0.002596       295.       305.       365.          2          0          0       0.00     289.33     932.67


1490 NH CARD USED
*SECNO 21.000
          DOWNSTREAM EDGE OF EXISTING PARK FACILITIES
    21.00      12.46    1179.76       0.00       0.00    1181.51       1.75       0..98      0.01    1186.50
   35000.         0.    35000.         0.         0.     3296.         0.        453.        48.    1186.50
     0.15       0.00      10.62       0.00      0.030      0.025      0.030      0.000    1167.30     955.35
 0.002426       337.       390.       550.          2          0          0       0.00     289.30    1244.65


1490 NH CARD USED
*SECNO 22.000
    22.00      12.72    1180.92       0.00       0.00    1182.59       1.67       1.08       0.01    1189.40
   35000.         0.    35000.         0.         0.     3374.         0.        488.        51.    1189.40
     0.16       0.00      10.37       0.00      0.030      0.025      0.030      0.000    1168.20     921.79
 0.002255       480.       460.       375.          2          0          0       0.00     290.41    1212.21


1490 NH CARD USED
*SECNO 23.000
    23.00      12.83    1182.03       0.00       0.00    1183.66       1.64       1.07       0.00    1191.60
   35000.         0.    35000.         0.         0.     3409.         0.        526.        54.    1191.60
     0.17       0.00      10.27       0.00      0.030      0.025      0.030      0.000    1169.20     569.23
 0.002191       520.       480.       300.          2          0          0       0.00     291.53     860.77


1490 NH CARD USED
*SECNO 24.000
          UPSTREAM EDCE OF EXISTING PARK FACILITIES
    24.00      12.93    1183.23       0.00       0.00    1184.84       1.61       1.18       0.00    1194.30
   35000.         0.    35000.         0.         0.     3439.         0.        569.        58.    1194.30
     0.19       0.00      10.18       0.00      0.030      0.025      0.030      0.000    1170.30    1107.13
 0.002130       540.       545.       555.          2          0          0       0.00     291.74    1398.87
```

```
   SECNO     DEPTH     CWSEL     CRIWS     WSELK     EG        HV        HL        OLOSS    BANK ELEV
   Q         QLOB      QCH       QROB      ALOB      ACH       AROB      VOL       TWA    LEFT/RIGHT
   TIME      VLOB      VCH       VROB      XNL       XNCH      XNR       WTN       ELMIN       SSTA
   SLOPE     XLOBL     XLCH      XLOBR     ITRIAL    IDC       ICONT     CORAR     TOPWID      ENDST

1490 NH CARD USED
*SECNO 24.800
    24.80     13.14   1184.54      0.00      0.00   1186.09      1.55      1.24      0.01   1197.20
   35000.        0.   35000.        0.        0.     3502.        0.      616.       62.   1197.20
     0.21      0.00      9.99      0.00     0.030     0.025     0.030     0.000   1171.40    715.51
 0.002016      595.      600.      610.         2         0         0      0.00    292.98   1008.49

1490 NH CARD USED
*SECNO 24.900

3301 HV CHANGED MORE THAN HVINS

3685 20 TRIALS ATTEMPTED WSEL,CWSEL
3693 PROBABLE MINIMUM SPECIFIC ENERGY
3720 CRITICAL DEPTH ASSUMED
          7-FOOT DROP STRUCTURE AT THIS LOCATION
    24.90      8.49   1186.89   1186.89      0.00   1190.88      3.99      0.06      0.73   1197.20
   35000.        0.   35000.        0.        0.     2182.        0.      617.       62.   1197.20
     0.21      0.00     16.04      0.00     0.030     0.025     0.035     0.000   1178.40    710.85
 0.008932       15.       15.       15.        20        11         0      0.00    274.31    985.15

1490 NH CARD USED
*SECNO 26.000

1645 INT SEC ADDED BY RAISING SEC     26.00,  -0.825FT AND MULTIPLYING BY   0.996

3301 HV CHANGED MORE THAN HVINS

     1.01     10.78   1189.45      0.00      0.00   1191.83      2.37      0.79      0.16   1198.68
   35000.        0.   35000.        0.        0.     2830.        0.      625.       63.   1198.68
     0.21      0.00     12.37      0.00     0.030     0.025     0.035     0.000   1178.68    746.98
 0.003968      133.      138.      158.         5         0         0      0.00    286.17   1033.14

1645 INT SEC ADDED BY RAISING SEC      1.01,   0.275FT AND MULTIPLYING BY   1.001

     1.02     11.25   1190.20      0.00      0.00   1192.36      2.16      0.51      0.02   1198.95
   35000.        0.   35000.        0.        0.     2969.        0.      634.       64.   1198.95
     0.21      0.00     11.79      0.00     0.030     0.025     0.035     0.000   1178.95    747.05
 0.003423      133.      138.      158.         3         0         0      0.00    288.64   1035.69
```

```
  SECNO     DEPTH     CWSEL     CRIWS     WSELK     EG        HV        HL        OLOSS    BANK ELEV
  Q         GLOB      GCH       GROB      ALOB      ACH       AROB      VOL       TWA    LEFT/RIGHT
  TIME      VLOB      VCH       VROB      XNL       XNCH      XNR       WTN       ELMIN       SSTA
  SLOPE     XLOBL     XLCH      XLOBR     ITRIAL    IDC       ICONT     CORAR     TOPWID      ENDST


1645 INT SEC ADDED BY RAISING SEC      1.02,   0.275FT AND MULTIPLYING BY   1.001

     1.03     11.57   1190.80      0.00      0.00   1192.82      2.02      0.45      0.01   1199.23
   35000.        0.    35000.        0.        0.    3069.        0.      644.       64.   1199.23
     0.22      0.00     11.41      0.00     0.030     0.025     0.035     0.000   1179.23    747.43
 0.003094      133.      138.      158.         2         0         0      0.00    290.51   1037.94


1645 INT SEC ADDED BY RAISING SEC      1.03,   0.275FT AND MULTIPLYING BY   1.001

    26.00     11.81   1191.31      0.00      0.00   1193.24      1.93      0.41      0.01   1199.50
   35000.        0.    35000.        0.        0.    3142.        0.      654.       65.   1199.50
     0.22      0.00     11.14      0.00     0.030     0.025     0.035     0.000   1179.50    748.02
 0.002879      133.      138.      158.         2         0         0      0.00    291.97   1039.98


1490 NH CARD USED
*SECNO 27.000
    27.00     12.18   1192.38      0.00      0.00   1194.19      1.81      0.94      0.01   1201.20
   35000.        0.    35000.        0.        0.    3238.        0.      679.       68.   1201.20
     0.23      0.00     10.81      0.00     0.030     0.025     0.035     0.000   1180.20    878.83
 0.002605      330.      345.      400.         2         0         0      0.00    291.94   1170.77


1490 NH CARD USED
*SECNO 28.000
    28.00     12.42   1193.22      0.00      0.00   1194.99      1.78      0.80      0.00   1201.90
   35000.        0.    35000.        0.        0.    3272.        0.      702.       70.   1201.90
     0.24      0.00     10.70      0.00     0.030     0.025     0.035     0.000   1180.80    410.46
 0.002461      314.      315.      320.         3         0         0      0.00    287.08    697.54


1490 NH CARD USED
*SECNO 29.000

1645 INT SEC ADDED BY RAISING SEC     29.00,  -0.400FT AND MULTIPLYING BY   0.941

     1.01     13.15   1194.35      0.00      0.00   1195.71      1.36      0.67      0.04   1202.40
   35000.        0.    35000.        0.        0.    3736.        0.      727.       72.   1200.60
     0.25      0.00      9.37      0.00     0.030     0.026     0.035     0.000   1181.20    361.61
 0.002024      283.      303.      278.         4         0         0      0.00    340.10    701.71
```

```
  SECNO     DEPTH     CWSEL     CRIWS     WSELK     EG        HV        HL        OLOSS    BANK ELEV
  Q         QLOB      QCH       QROB      ALOB      ACH       AROB      VOL       TWA    LEFT/RIGHT
  TIME      VLOB      VCH       VROB      XNL       XNCH      XNR       WTN       ELMIN       SSTA
  SLOPE     XLOBL     XLCH      XLOBR     ITRIAL    IDC       ICONT     CORAR     TOPWID      ENDST


1645 INI SEC ADDED BY RAISING SEC      1.01,   0.400FT AND MULTIPLYING BY   1.062

        CONFLUENCE OF ACDC & SKUNK CREEK
   29.00     13.49  1195.09      0.00      0.00  1196.23      1.13      0.50      0.02  1202.80
  35000.        0.   35000.        0.        0.    4094.        0.      754.       74.  1201.00
    0.26      0.00      8.55      0.00     0.030     0.026     0.035     0.000  1181.60   383.41
0.001357      283.      303.      278.        12         0         0      0.00   362.94   746.35


1490 NH CARD USED
*SECNO 30.000
        ACDC CHANNEL-FLOW=29,000 CFS
   30.00     13.45  1195.65      0.00      0.00  1196.75      1.10      0.51      0.00  1203.70
  29000.        0.   29000.        0.        0.    3448.        0.      786.       77.  1203.70
    0.27      0.00      8.41      0.00     0.030     0.025     0.035     0.000  1182.20    16.95
0.001431      370.      370.      370.         2         0         0      0.00   290.10   307.05


1490 NH CARD USED
*SECNO 31.000
   31.00     13.60  1196.10      0.00      0.00  1197.17      1.07      0.42      0.00  1204.00
  29000.        0.   29000.        0.        0.    3492.        0.      810.       79.  1204.00
    0.28      0.00      8.30      0.00     0.030     0.025     0.035     0.000  1182.50    16.65
0.001376      300.      300.      300.         2         0         0      0.00   290.70   307.35


1490 NH CARD USED
*SECNO 32.000

3301 HV CHANGED MORE THAN HVINS

3685 20 TRIALS ATTEMPTED WSEL,CWSEL
3693 PROBABLE MINIMUM SPECIFIC ENERGY
3720 CRITICAL DEPTH ASSUMED
        LOCATION OF 4-FOOT-HIGH COE DROP STRUCTURE
   32.00     11.95  1195.45  1195.45      0.00  1199.73      4.28      0.03      0.96  1202.00
  29000.        0.   29000.        0.        0.    1747.        0.      811.       79.  1202.00
    0.28      0.00     16.60      0.00     0.030     0.035     0.035     0.000  1183.50   113.04
0.009131       12.       12.       12.        20        16         0      0.00   194.01   307.06
```

PROFILE FOR STREAM SKUNK CREEK, W/WSEL FR

PLOTTED POINTS (BY PRIORITY)-E-ENERGY, W-WATER SURFACE, I-INVERT, C-CRITICAL W.S., L-LEFT BANK, R-RIGHT BANK, M-LOWER END STA

```
ELEVATION  1130.      1140.      1150.      1160.      1170.      1180.      1190.      1200.      1210.      1220.
    SECND   CUMDIS

    1.00      0.  .         I.           . WL  E   .        R .           .           .           .           M           .           .
             50.  C         I.           .  W L E  .       R  .           .           .           .           M           .           .
            100.  C          I           .  W   EL .      R   .           .           .           .           M           .           .
            150.  C          I           .   W  E  .L   R     .           .           .           .           M           .           .
            200.  C          I           .   W   E .   L R    .           .           .           .           M           .           .
            250.  C          .I          .   W   E .    R L   .           .           .           .           M           .           .
    2.00    300.  C          .I          .    W  E .    R L   .           .           .           .           M           .           .
            350.  C          .      I    .      W  E  R L     .           .           .           .           M           .           .
    3.00    400.  .          .           . I      W. EL       .           .           .           .           M           .           .
    3.50    450.  C          .           . I       W  E     R.           .           .           .           M           .           .
    4.00    500.  C          .           . I        .W E L R  .           .           .           .           M           .           .
            550.  C          .           . I        . WE  L R .           .           .           .           M           .           .
            600.  C          .           .  I       . WE   L R.           .           .           .           M           .           .
            650.  C          .           .  I       . W E   L R           .           .           .           M           .           .
    1.01    700.  C          .           .  I       . W E    L.R          .           .           .          M.           .           .
            750.  C          .           .  I       .  WE    L.R          .           .           .           M           .           .
            800.  C          .           .  I       .  WE    L.R          .           .           .           M           .           .
            850.  C          .           .  I       .  WE    L.R          .           .           .           M           .           .
    4.50    900.  C          .           .  I       .  WE    L.R          .           .           .           M           .           .
            950.  C          .           .  I       .  WE     LR          .           .           .           M           .           .
           1000.  C          .           .   I      .  WE     LR          .           .           .           M           .           .
           1050.  C          .           .   I      .  WE     LR          .           .           .           M           .           .
           1100.  C          .           .   I      .   E     LR          .           .           .           M           .           .
           1150.  C          .           .   I      .   WE    LR          .           .           .           M           .           .
           1200.  C          .           .   I      .   WE    .L          .           .           .           M           .           .
           1250.  C          .           .   I      .   WE    .L          .           .           .           M           .           .
           1300.  C          .           .   I      .   WE    .L          .           .           .           M           .           .
    5.00   1350.  C          .           .   I      .   WE    .RL         .           .           .           M           .           .
           1400.  C          .           .   I      .   WE    . L         .           .           .           M           .           .
           1450.  C          .           .   I      .   WE    . LR        .           .           .           M           .           .
           1500.  C          .           .   I      .   WE    . LR        .           .           .           M           .           .
           1550.  C          .           .   I      .   WE    . L R       .           .           .           M           .           .
           1600.  C          .           .    I     .   WE    .  L R      .           .           .           M           .           .
           1650.  C          .           .    I     .    E    .  L  R     .           .           .           M           .           .
           1700.  C          .           .    I     .    E    .  L  R     .           .           .           M           .           .
           1750.  C          .           .    I     .   WE    .  L   R    .           .           .           M           .           .
           1800.  C          .           .    I     .   WE    .  L    R   .           .           .           M           .           .
    6.10   1850.  C          .           .    I     .   WE    .   L   R   .           .           .           M           .           .
    1.01   1900.  .          .           .    I     .   W   E .           .       L R .           .           M           .           .
    1.02   1950.  C          .           .    I     .     W  E.           .        LR .           .           M           .           .
           2000.  C          .           .    I     .     W  E.           .        LR .           .           M           .           .
    1.03   2050.  C          .           .    I     .      W E.           .        LR .           .           M           .           .
    7.10   2100.  C          .           .    I     .      W E.           .        LR .           .           M           .           .
           2150.  C          .           .    I     .      W E.           .        LR .           .           M           .           .
    7.20   2200.  C          .           .     I    .      W E.           .        LR .           .           M           .           .
    7.30   2250.  C          .           .     I    .      W E.           .       L R .           .           M           .           .
           2300.  C          .           .     I    .      W  E           .       L R .           .           M           .           .
    7.40   2350.  C          .           .     I    .       W E           .       L R .           .           M           .           .
    7.50   2400.  C          .           .     I    .       W E           .        LR .           .           M           .           .
```

```
 7.60  2450.  C  .  .  I  .  WE  .  LR .  .  M  .  .
 1.01  2500.  C  .  .  I  .  WE   L  .  .  .  M  .  .
11.00  2550.  C  .  .  I  .   E   RL .  .  .  M  .  .
       2600.  C  .  .  I  .   E   L  .  .  .  M  .  .
       2650.  C  .  .  I  .   E   L  .  .  .  M  .  .
       2700.  C  .  .  I  .   E  L R .  .  .  M  .  .
12.00  2750.  C  .  .   I .   E  L R .  .  .  M  .  .
       2800.  C  .  .   I .   WE    LR .  .  M  .  .
       2850.  C  .  .   I .   WE      LR  .  M  .  .
13.10  2900.  C  .  .   I .   WE       .L  .  M  .  .
13.20  2950.  .  .  .  . I  W. E       .L  .  M  .  .
 1.01  3000.  C  .  .  . I   .W E      L  .  M  .  .
 1.02  3050.  C  .  .  . I   .W E      L  .  M  .  .
14.10  3100.  C  .  .  . I   .W E      L  .  M  .  .
14.20  3150.  C  .  .  . I   .W E      L  .  M  .  .
14.30  3200.  C  .  .  . I   . WE      L  .  M  .  .
14.40  3250.  C  .  .  . I   . WE      L  .  M  .  .
15.00  3300.  C  .  .  .  I  . W E     L  .  M  .  .
       3350.  C  .  .  .  I  .  WE     L  .  M  .  .
       3400.  C  .  .  .  I  .  WE     L  .  M  .  .
16.00  3450.  C  .  .  .  I  .   WE    RL  .  M  .  .
       3500.  C  .  .  .  I  .   WE    .L  .  M  .  .
       3550.  C  .  .  .  I  .   WE    .RL .  M  .  .
       3600.  C  .  .  .  I  .   WE    . L  .  M  .  .
18.00  3650.  C  .  .  .  I  .   WE    . L  .  M  .  .
       3700.  C  .  .  .  I  .   WE    . L  .  M  .  .
 1.01  3750.  C  .  .  .   I .   W E   .  L  .  M. .  .
       3800.  C  .  .  .   I .   W E   .  L  .  M. .  .
 1.02  3850.  C  .  .  .   I .    WE   .  L  .  M  .  .
       3900.  C  .  .  .   I .    W E  .  L  .  M  .  .
       3950.  C  .  .  .   I .    W E  .  L  .  M  .  .
 1.03  4000.  C  .  .  .   I .    W E  .  L  .  M  .  .
       4050.  C  .  .  .   I .    W  E .  L  .  M  .  .
19.00  4100.  C  .  .  .   I .     W E .  L  .  M  .  .
       4150.  C  .  .  .   I .     W E .   L  .  M  .  .
       4200.  C  .  .  .   I .     W  E.  L  .  M  .  .
       4250.  C  .  .  .    I .      W E.  L  .  M  .  .
       4300.  C  .  .  .    I .      W E.  L  .  M  .  .
       4350.  C  .  .  .    I .      W E.  L  .  M  .  .
 1.01  4400.  C  .  .  .    I .       W E   L  .  M. .  .
       4450.  C  .  .  .    I .       W E   L  .  M. .  .
       4500.  C  .  .  .    I .       W E   L  .  M  .  .
       4550.  C  .  .  .    I .       W E   L  .  M  .  .
       4600.  C  .  .  .    I .       W E   L  .  M  .  .
       4650.  C  .  .  .    I .        WE   L  .  M  .  .
20.00  4700.  C  .  .  .     I .        W.E  L  .  M  .  .
       4750.  C  .  .  .     I .        W.E  L  .  M  .  .
       4800.  C  .  .  .     I .        W.E   L .  M  .  .
       4850.  C  .  .  .     I .        W.E   L .  M  .  .
       4900.  C  .  .  .     I .        W.E   L .  M  .  .
       4950.  C  .  .  .     I .        W.E   L .  M  .  .
       5000.  C  .  .  .     I .         WE   L .  M  .  .
       5050.  C  .  .  .     I .         WE   L .  M  .  .
21.00  5100.  C  .  .  .     I .         W E   L .  M  .  .
       5150.  C  .  .  .     I .         W E   L .  M  .  .
       5200.  C  .  .  .     I .         W E   L .  M  .  .
       5250.  C  .  .  .      I .        W E   L .  M  .  .
       5300.  C  .  .  .      I .        W E    L . M  .  .
       5350.  C  .  .  .      I .        W E    L . M  .  .
       5400.  C  .  .  .      I .         .WE   L . M  .  .
```

```
        5450.  C .  .  .  I .  .WE    L.  .  M  .  .
        5500.  C .  .  .  I .  .WE    L.  .  M  .  .
22.00   5550.  C .  .  .  I .  .W E   L.  .  M  .  .
        5600.  C .  .  .  I .  .W E    L  .  M  .  .
        5650.  C .  .  .  I .  .W E    L  .  M  .  .
        5700.  C .  .  .  I.   .W E    L  .  M  .  .
        5750.  C .  .  .  I.   .W E    L  .  M  .  .
        5800.  C .  .  .  I.   .W E   .L  .  M  .  .
        5850.  C .  .  .  I.   . WE   .L  .  M  .  .
        5900.  C .  .  .  I.   . WE   .L  .  M  .  .
        5950.  C .  .  .  I.   . WE   .L  .  M  .  .
        6000.  C .  .  .  I.   . W E  .L  .  M  .  .
23.00   6050.  C .  .  .  I.   . W E  . L  .  M  .  .
        6100.  C .  .  .  I.   . W E  . L  .  M  .  .
        6150.  C .  .  .  I.   . W E  . L  .  M  .  .
        6200.  C .  .  .   I   . W E  . L  .  M  .  .
        6250.  C .  .  .   I   . W E  .  L  .  M  .  .
        6300.  C .  .  .   I   .  WE  .  L  .  M  .  .
        6350.  C .  .  .   I   .  WE  .  L  .  M  .  .
        6400.  C .  .  .   I   .  WE  .  L  .  M  .  .
        6450.  C .  .  .   I   .  W E .   L  .  M  .  .
        6500.  C .  .  .   I   .  W E .   L  .  M  .  .
        6550.  C .  .  .   I   .  W E .   L  .  M  .  .
24.00   6600.  C .  .  .   I   .  W E .   L  .  M  .  .
        6650.  C .  .  .   I   .  W E .    L  .  M  .  .
        6700.  C .  .  .   I   .  W E .    L  .  M  .  .
        6750.  C .  .  .  .I   .   WE .    L  .  M  .  .
        6800.  C .  .  .  .I   .   WE .    L  .  M  .  .
        6850.  C .  .  .  .I   .   WE .     L  .  M  .  .
        6900.  C .  .  .  .I   .   WE .     L  .  M  .  .
        6950.  C .  .  .  .I   .   W E .    L  .  M  .  .
        7000.  C .  .  .  .I   .   W E .    L  .  M  .  .
        7050.  C .  .  .  .I   .   W E .    L  .  M  .  .
        7100.  C .  .  .  .I   .   W E .     L  .  M  .  .
        7150.  C .  .  .  .I   .   W E .     L  .  M  .  .
24.80   7200.  C .  .  .  .I   .    WE .     L  .  M  .  .
24.90   7250.  . .  .  .  .  I .     W  .E    L  .  M  .  .
        7300.  C .  .  .  .   I.      W .E     L .  M  .  .
 1.01   7350.  C .  .  .  .   I.       W. E     L.  M. .  .
        7400.  C .  .  .  .   I.        W E     L.  M. .  .
        7450.  C .  .  .  .   I.        W E     L.  M. .  .
 1.02   7500.  C .  .  .  .   I.        W E     L.  M. .  .
        7550.  C .  .  .  .   I.        W  E    L.   M .  .
 1.03   7600.  C .  .  .  .   I.        .W E    L.   M .  .
        7650.  C .  .  .  .   I.        .W E    L.   M .  .
        7700.  C .  .  .  .   I.        .W E    L.   M .  .
26.00   7750.  C .  .  .  .    I        .W E     L   M .  .
        7800.  C .  .  .  .    I        .W E     L   M .  .
        7850.  C .  .  .  .    I        . W E    L   M .  .
        7900.  C .  .  .  .    I        . W E    L   M .  .
        7950.  C .  .  .  .    I        . W E    L   M .  .
        8000.  C .  .  .  .    I        . W E   .L   M .  .
        8050.  C .  .  .  .    I        . W E   .L   M .  .
27.00   8100.  C .  .  .  .    I        . W E   .L   M .  .
        8150.  C .  .  .  .    I        .  WE   .L   M .  .
        8200.  C .  .  .  .    I        .  WE   .L   M .  .
        8250.  C .  .  .  .    I        .  W E  . L  M .  .
        8300.  C .  .  .  .   .I        .  W E  . L  M .  .
        8350.  C .  .  .  .   .I        .  W E  . L  M .  .
28.00   8400.  C .  .  .  .   .I        .  W E  . L  M .  .
```

```
        8450.  C                                  .I          .  W E    . L       M          .          .
        8500.  C                                  .I          .   WE    .RL       M          .          .
        8550.  C                                  .I          .   WE    .RL       M          .          .
        8600.  C                                  .I          .   WE    .RL       M          .          .
        8650.  C                                  .I          .   W E   .RL       M          .          .
  1.01  8700.  C                                  .I          .   W E   .RL       M          .          .
        8750.  C                                  .I          .   W E   .RL       M          .          .
        8800.  C                                  .I          .    WE   .R L      M          .          .
        8850.  C                                  .I          .    WE   .R L      M          .          .
        8900.  C                                  .I          .    WE   .R L      M          .          .
        8950.  C                                  . I         .    WE   .R L      M          .          .
 29.00  9000.  C                                  . I         .    WE   .R L      M          .          .
        9050.  C                                  . I         .    WE   .R L      M          .          .
        9100.  C                                  . I         .    WE   . RL      M          .          .
        9150.  C                                  . I         .    WE   . RL      M          .          .
        9200.  C                                  . I         .    W E  . RL      M          .          .
        9250.  C                                  . I         .    W E  .  L      M          .          .
        9300.  C                                  . I         .     WE  .  RL     M          .          .
        9350.  C                                  . I         .     WE  .   L     M          .          .
 30.00  9400.  C                                  . I         .     WE  .   L     M          .          .
        9450.  C                                  . I         .     WE  .   L     M          .          .
        9500.  C                                  . I         .     WE  .   L     M          .          .
        9550.  C                                  . I         .     WE  .   L     M          .          .
        9600.  C                                  . I         .     WE  .   L     M          .          .
        9650.  C                                  . I         .     WE  .   L     M          .          .
 31.00  9700.  C                                  .  I        .     WE  .   L     M          .          .
 32.00  9750.  .                                  .   I       .    W    E L       M          .          .
```

```
*************************************************
  HEC2 RELEASE DATED NOV 76 UPDATED MARCH 1982
  ERROR CORR -  01,02,03,04,05
  MODIFICATION -  50,51,52,53,54,55
*************************************************
```

NOTE- ASTERISK (*) AT LEFT OF CROSS-SECTION NUMBER INDICATES MESSAGE IN SUMMARY OF ERRORS LIST

SKUNK CREEK, W/WSEL FR

SUMMARY PRINTOUT TABLE 150

	SECNO	XLCH	ELTRD	ELLC	ELMIN	Q	CWSEL	CRIWS	EG	10K*S	VCH	AREA	.01K
*	1.000	0.00	0.00	0.00	1139.00	41000.00	1152.21	1152.21	1156.38	75.13	16.49	2544.99	4730.27
	2.000	260.00	0.00	0.00	1140.80	41000.00	1154.54	0.00	1158.28	67.48	15.64	2674.73	4990.95
*	3.000	100.00	0.00	0.00	1152.00	41000.00	1158.97	1158.97	1162.28	96.32	14.61	2806.26	4177.68
	3.500	30.00	0.00	0.00	1152.10	41000.00	1160.36	0.00	1162.60	52.58	11.99	3418.30	5654.41
	4.000	90.00	0.00	0.00	1152.30	41000.00	1161.21	0.00	1163.04	38.86	10.85	3778.56	6576.79
*	4.500	400.00	0.00	0.00	1153.40	41000.00	1163.18	0.00	1164.14	18.18	7.88	5204.74	9616.95
	5.000	460.00	0.00	0.00	1154.20	41000.00	1164.02	0.00	1164.95	17.14	7.76	5285.52	9901.84
	6.100	480.00	0.00	0.00	1154.90	41000.00	1164.89	0.00	1165.69	13.91	6.98	5749.96	10994.00
*	7.100	245.00	0.00	0.00	1155.40	35000.00	1166.96	0.00	1169.04	31.76	11.58	3022.82	6210.17
	7.200	100.00	0.00	0.00	1155.59	35000.00	1167.35	0.00	1169.36	29.95	11.36	3081.17	6395.40
	7.300	5.00	0.00	0.00	1155.60	35000.00	1167.34	0.00	1169.40	30.16	11.52	3039.22	6372.60
	7.400	145.00	1186.80	1178.00	1155.80	35000.00	1167.77	0.00	1169.74	28.18	11.27	3106.77	6592.71
	7.500	5.00	0.00	0.00	1155.81	35000.00	1167.83	0.00	1169.76	27.64	11.15	3139.94	6657.40
	7.600	100.00	0.00	0.00	1156.00	35000.00	1168.50	0.00	1170.04	20.85	9.95	3516.41	7665.67
*	11.000	115.00	0.00	0.00	1156.20	35000.00	1169.51	0.00	1170.27	9.40	7.02	4983.82	11417.72
	12.000	210.00	0.00	0.00	1156.50	35000.00	1169.76	0.00	1170.47	8.56	6.74	5193.77	11963.39
	13.100	130.00	0.00	0.00	1156.70	35000.00	1169.91	0.00	1170.58	8.69	6.58	5319.95	11875.44

	SECNO	XLCH	ELTRD	ELLC	ELMIN	Q	CWSEL	CRIWS	EG	10K*S	VCH	AREA	.01K
*	13.200	15.00	0.00	0.00	1162.70	35000.00	1169.08	1169.08	1172.17	99.34	14.12	2479.56	3511.65
*	14.100	150.00	0.00	0.00	1163.12	35000.00	1171.31	0.00	1173.09	40.64	10.73	3262.76	5490.39
	14.200	5.00	0.00	0.00	1163.10	35000.00	1171.37	0.00	1173.12	39.29	10.62	3296.85	5583.74
	14.300	80.00	1181.00	1178.00	1163.32	35000.00	1171.76	0.00	1173.43	36.74	10.39	3367.47	5774.66
	14.400	5.00	0.00	0.00	1163.34	35000.00	1171.77	0.00	1173.45	36.73	10.39	3367.70	5774.95
	15 000	90.00	0.00	0.00	1163.60	35000.00	1172.45	0.00	1173.82	37.17	9.36	3738.15	5741.18
	16.000	210.00	0.00	0.00	1164.00	35000.00	1173.51	0.00	1174.56	31.17	8.24	4249.51	6268.69
	18.000	185.00	0.00	0.00	1164.40	35000.00	1173.94	0.00	1175.20	31.12	9.01	3883.24	6274.05
*	19.000	470.00	0.00	0.00	1165.30	35000.00	1175.59	0.00	1178.23	78.52	13.05	2682.32	3949.81
*	20.000	610.00	0.00	0.00	1166.50	35000.00	1178.70	0.00	1180.52	25.96	10.84	3229.91	6869.73
	21.000	390.00	0.00	0.00	1167.30	35000.00	1179.76	0.00	1181.51	24.26	10.62	3296.05	7105.55
	22.000	460.00	0.00	0.00	1168.20	35000.00	1180.92	0.00	1182.59	22.55	10.37	3374.32	7369.90
	23.000	480.00	0.00	0.00	1169.20	35000.00	1182.03	0.00	1183.66	21.91	10.27	3408.85	7477.09
	24.000	545.00	0.00	0.00	1170.30	35000.00	1183.23	0.00	1184.84	21.30	10.18	3438.77	7583.05
	24.800	600.00	0.00	0.00	1171.40	35000.00	1184.54	0.00	1186.09	20.16	9.99	3502.16	7795.45
*	24.900	15.00	0.00	0.00	1178.40	35000.00	1186.89	1186.89	1190.88	89.32	16.04	2182.29	3703.40
*	26.000	550.00	0.00	0.00	1179.50	35000.00	1191.31	0.00	1193.24	28.79	11.14	3141.63	6522.49
	27.000	345.00	0.00	0.00	1180.20	35000.00	1192.38	0.00	1194.19	26.05	10.81	3237.72	6857.81
	28.000	315.00	0.00	0.00	1180.80	35000.00	1193.22	0.00	1194.99	24.61	10.70	3272.24	7055.13
*	29.000	605.00	0.00	0.00	1181.60	35000.00	1195.09	0.00	1196.23	13.57	8.55	4094.12	9501.17
	30.000	370.00	0.00	0.00	1182.20	29000.00	1195.65	0.00	1196.75	14.31	8.41	3448.06	7666.90
	31.000	300.00	0.00	0.00	1182.50	29000.00	1196.10	0.00	1197.17	13.76	8.30	3491.93	7819.26
*	32.000	12.00	0.00	0.00	1183.50	29000.00	1195.45	1195.45	1199.73	91.34	16.60	1747.12	3034.44

SKUNK CREEK, W/WSEL FR

SUMMARY PRINTOUT TABLE 150

	SECNO	Q	CWSEL	DIFWSP	DIFWSX	DIFKWS	TOPWID	XLCH
*	1.000	41000.00	1152.21	0.00	0.00	0.21	322.90	0.00
	2.000	41000.00	1154.54	0.00	2.33	0.00	306.41	260.00
*	3.000	41000.00	1158.97	0.00	4.42	0.00	424.36	100.00
	3.500	41000.00	1160.36	0.00	1.40	0.00	440.68	30.00
	4.000	41000.00	1161.21	0.00	0.85	0.00	450.57	90.00
*	4.500	41000.00	1163.18	0.00	0.71	0.00	570.76	400.00
	5.000	41000.00	1164.02	0.00	0.84	0.00	566.75	460.00
	6.100	41000.00	1164.89	0.00	0.87	0.00	694.28	480.00
*	7.100	35000.00	1166.96	0.00	0.46	0.00	282.86	245.00
	7.200	35000.00	1167.35	0.00	0.39	0.00	283.87	100.00
	7.300	35000.00	1167.34	0.00	-0.01	0.00	277.80	5.00
	7.400	35000.00	1167.77	0.00	0.43	0.00	278.93	145.00
	7.500	35000.00	1167.83	0.00	0.06	0.00	282.31	5.00
	7.600	35000.00	1168.50	0.00	0.67	0.00	303.28	100.00
*	11.000	35000.00	1169.51	0.00	0.36	0.00	398.91	115.00
	12.000	35000.00	1169.76	0.00	0.26	0.00	413.14	210.00
	13.100	35000.00	1169.91	0.00	0.15	0.00	429.29	130.00
*	13.200	35000.00	1169.08	0.00	-0.84	0.00	401.78	15.00
*	14.100	35000.00	1171.31	0.00	0.33	0.00	414.98	150.00
	14.200	35000.00	1171.37	0.00	0.07	0.00	415.28	5.00
	14.300	35000.00	1171.76	0.00	0.38	0.00	416.39	80.00
	14.400	35000.00	1171.77	0.00	0.02	0.00	416.43	5.00
	15.000	35000.00	1172.45	0.00	0.68	0.00	439.66	90.00
	16.000	35000.00	1173.51	0.00	1.05	0.00	466.25	210.00

	SECNO	Q	CWSEL	DIFWSP	DIFWSX	DIFKWS	TOPWID	XLCH
	18.000	35000.00	1173.94	0.00	0.43	0.00	426.36	185.00
*	19.000	35000.00	1175.59	0.00	0.49	0.00	281.17	470.00
*	20.000	35000.00	1178.70	0.00	0.99	0.00	289.33	610.00
	21.000	35000.00	1179.76	0.00	1.06	0.00	289.30	390.00
	22.000	35000.00	1180.92	0.00	1.16	0.00	290.41	460.00
	23.000	35000.00	1182.03	0.00	1.10	0.00	291.53	480.00
	24.000	35000.00	1183.23	0.00	1.21	0.00	291.74	545.00
	24.800	35000.00	1184.54	0.00	1.31	0.00	292.98	600.00
*	24.900	35000.00	1186.89	0.00	2.34	0.00	274.31	15.00
*	26.000	35000.00	1191.31	0.00	0.51	0.00	291.97	550.00
	27.000	35000.00	1192.38	0.00	1.07	0.00	291.94	345.00
	28.000	35000.00	1193.22	0.00	0.84	0.00	287.08	315.00
*	29.000	35000.00	1195.09	0.00	0.75	0.00	362.94	605.00
	30.000	29000.00	1195.65	0.00	0.55	0.00	290.10	370.00
	31.000	29000.00	1196.10	0.00	0.45	0.00	290.70	300.00
*	32.000	29000.00	1195.45	0.00	-0.65	0.00	194.01	12.00

SUMMARY OF ERRORS AND SPECIAL NOTES

```
CAUTION  SECNO=    1.000  PROFILE= 1  CRITICAL DEPTH ASSUMED

CAUTION  SECNO=    3.000  PROFILE= 1  CRITICAL DEPTH ASSUMED
CAUTION  SECNO=    3.000  PROFILE= 1  PROBABLE MINIMUM SPECIFIC ENERGY
CAUTION  SECNO=    3.000  PROFILE= 1  20 TRIALS ATTEMPTED TO BALANCE WSEL

CAUTION  SECNO=    4.500  PROFILE= 1  INTERPOLATED XSECTIONS USED

CAUTION  SECNO=    7.100  PROFILE= 1  INTERPOLATED XSECTIONS USED

CAUTION  SECNO=   11.000  PROFILE= 1  INTERPOLATED XSECTIONS USED

CAUTION  SECNO=   13.200  PROFILE= 1  CRITICAL DEPTH ASSUMED
CAUTION  SECNO=   13.200  PROFILE= 1  PROBABLE MINIMUM SPECIFIC ENERGY
CAUTION  SECNO=   13.200  PROFILE= 1  20 TRIALS ATTEMPTED TO BALANCE WSEL

CAUTION  SECNO=   14.100  PROFILE= 1  INTERPOLATED XSECTIONS USED

CAUTION  SECNO=   19.000  PROFILE= 1  INTERPOLATED XSECTIONS USED

CAUTION  SECNO=   20.000  PROFILE= 1  INTERPOLATED XSECTIONS USED

CAUTION  SECNO=   24.900  PROFILE= 1  CRITICAL DEPTH ASSUMED
CAUTION  SECNO=   24.900  PROFILE= 1  PROBABLE MINIMUM SPECIFIC ENERGY
CAUTION  SECNO=   24.900  PROFILE= 1  20 TRIALS ATTEMPTED TO BALANCE WSEL

CAUTION  SECNO=   26.000  PROFILE= 1  INTERPOLATED XSECTIONS USED

CAUTION  SECNO=   29.000  PROFILE= 1  INTERPOLATED XSECTIONS USED

CAUTION  SECNO=   32.000  PROFILE= 1  CRITICAL DEPTH ASSUMED
CAUTION  SECNO=   32.000  PROFILE= 1  PROBABLE MINIMUM SPECIFIC ENERGY
CAUTION  SECNO=   32.000  PROFILE= 1  20 TRIALS ATTEMPTED TO BALANCE WSEL
```

HEC-2 COMPUTER RUN
FOR CHANNEL WITH THICKLY VEGETATED AREA IN PLACE
BASE WIDTH VARIES
2:1 SIDESLOPES
ONE 6-FOOT AND ONE 7-FOOT DROP STRUCTURE
FLOWRATE IN SKUNK CREEK = 50,000 CFS

```
%SET-W-NOTSET, error modifying DRB1:
-CLI-E-IVDEVTYPE, invalid device type - specify a mailbox device
$SET DEF [PH04]
$COPY 2EMI67DROP8350K.DAT SYS$OUTPUT
C
C    16.0
C     1.0 DOWNSTREAM END OF STUDY-NEW RIVER FLOW=50,000 CFS
C     3.0 LOCATION OF FUTURE DROP STRUCTURE
C     6.1 CONFLUENCE OF SKUNK CREEK & NEW RIVER
C     7.1 BEGIN CHANNEL (B=240',Z=2) SKUNK CREEK FLOW=50,000 CFS
C     7.3 DOWNSTREAM EDGE OF PROPOSED OUTER LOOP FREEWAY BRIDGES
C     7.4 UPSTREAM EDGE OF PROPOSED OUTER LOOP FREEWAY BRIDGES
C    13.1 6-FOOT DROP STRUCTURE DOWNSTREAM OF NEW 83RD AVE BRIDGE
C    14.2 DOWNSTREAM EDGE OF NEW 83RD AVE BRIDGE
C    14.3 UPSTREAM EDGE OF NEW 83RD AVE BRIDGE
C    18.0 DOWNSTREAM END OF COE PROPOSED LEFT BANK STABILIZATION
C    21.0 DOWNSTREAM EDGE OF EXISTING PARK FACILITIES
C    24.0 UPSTREAM EDGE OF EXISTING PARK FACILITIES
C    24.9 7-FOOT DROP STRUCTURE AT THIS LOCATION
C    29.0 CONFLUENCE OF ACDC & SKUNK CREEK
C    30.0 ACDC CHANNEL-FLOW=50,000 CFS
C    32.0 LOCATION OF 4-FOOT-HIGH COE DROP STRUCTURE
T1         DAMES & MOORE JOB NUMBER 15448-002-022 FOR ELLIS-MURPHY, INC.
T2         W/COE,ADOT,B=240-300' & 6- AND 7-FOOT DROPS. W/NEW 83RD AVE BRIDGE
T3         SKUNK CREEK, W/WSEL FROM COE & VAN LOO STUDY
J1    -10                                    0.0055      0.5 50000.0  1154.0
J2   -1.0
J3  150.0
NC  0.030   0.030   0.035     0.1     0.3
X1    1.0    39.0  9842.6 10184.6     0.0     0.0     0.0
GR1210.0  8000.0  1165.6  8001.0  1165.6  8686.9  1166.1  8820.4  1165.78987.1
GR1164.7  9138.2  1164.6  9325.1  1165.2  9577.9  1164.6  9610.8  1165.69625.5
GR1165.7  9641.5  1163.4  9648.3  1165.7  9651.2  1166.6  9681.0  1165.59704.0
GR1165.9  9729.3  1156.3  9742.3  1149.4  9752.9  1149.8  9776.1  1154.29786.7
GR1151.4  9815.3  1151.4  9838.6  1152.9  9842.6  1147.3  9870.4  1140.89905.1
GR1139.1  9917.6  1139.0 10000.0  1139.9 10014.4  1140.5 10040.8  1148.610084.6
GR1159.0 10134.3  1166.5 10177.2  1168.2 10184.6  1164.8 10197.3  1165.510251.6
GR1174.2 10268.3  1165.5 10282.8  1165.5 10400.0  1210.0 10401.0
X1    2.0    35.0  9779.0 10155.0   310.0   240.0   260.0
GR1210.0  8000.0  1167.8  8001.0  1167.8  8650.8  1167.2  9060.3  1166.69116.6
GR1165.8  9601.5  1166.3  9622.5  1164.0  9640.4  1166.0  9644.4  1166.79674.5
GR1165.5  9684.1  1163.9  9712.8  1152.0  9726.2  1150.7  9757.4  1158.69767.6
GR1166.4  9779.0  1158.8  9821.0  1152.0  9858.5  1144.4  9893.7  1140.89919.9
GR1141.4  9944.3  1142.3 10000.0  1142.0 10016.4  1142.8 10031.2  1141.710043.8
GR1146.9 10071.0  1154.3 10110.7  1163.5 10155.0  1166.5 10322.6  1166.010337.4
GR1162.6 10363.5  1160.2 10367.5  1157.0 10390.2  1157.0 10500.0  1210.010501.0
X1    3.0    22.0  9705.1 10153.3    80.0   110.0   100.0
GR1210.0  8000.0  1168.7  8001.0  1168.7  8672.8  1166.0  9274.8  1166.29596.9
GR1167.1  9620.5  1164.2  9635.0  1165.5  9637.5  1167.2  9694.9  1162.79705.1
GR1152.5  9717.1  1152.0  9738.1  1152.0  9750.6  1152.0  9761.9  1152.010099.9
GR1157.7 10128.3  1163.4 10153.3  1168.8 10207.9  1164.3 10361.2  1167.010375.0
GR1167.0 10500.0  1210.0 10501.0
X1    3.5    18.0  9702.6 10179.5    30.0    30.0    30.0
GR1210.0  8000.0  1168.6  8001.0  1168.8  8683.7  1167.0  9066.3  1167.59622.5
GR1164.3  9637.5  1166.4  9640.7  1167.8  9666.8  1166.2  9693.2  1162.59702.6
GR1152.1  9714.2  1152.1 10094.5  1153.5 10108.4  1159.3 10141.4  1168.810179.5
GR1169.4 10198.8  1164.0 10500.0  1210.0 10501.0
X1    4.0    20.0  9689.8 10163.3    90.0    90.0    90.0
GR1210.0  8000.0  1169.3  8001.0  1169.3  8716.0  1167.8  9076.6  1167.69627.3
GR1165.0  9633.8  1166.6  9637.5  1165.2  9689.8  1152.4  9702.3  1152.49723.0
```

```
GR1152.4  9884.6  1152.4  9919.6  1152.3 10036.0  1152.3 10103.9  1159.110136.8
GR1166.6 10163.3  1170.0 10325.0  1164.7 10351.0  1164.7 10499.0  1210.010500.0
X1   4.5    20.0  9584.1 10207.0   540.0   260.0   400.0
GR1210.0  8000.0  1171.0  8001.0  1171.7  8858.5  1170.9  9026.0  1169.29333.9
GR1169.7  9436.5  1167.4  9443.3  1169.3  9584.1  1157.3  9613.7  1153.49653.0
GR1153.4  9855.1  1153.4  9871.6  1153.4  9902.2  1153.4 10131.7  1158.710149.9
GR1164.1 10174.1  1171.4 10207.0  1172.0 10222.9  1172.0 10400.0  1210.010401.0
X1   5.0    23.0  9610.0 10224.3   540.0   370.0   460.0
GR1210.0  8000.0  1174.0  8001.0  1174.0  8649.5  1172.8  8725.6  1172.09029.0
GR1171.0  9322.0  1169.5  9443.6  1171.5  9503.3  1166.4  9548.1  1171.69581.4
GR1166.9  9605.0  1171.5  9610.0  1154.2  9645.0  1154.2  9884.0  1154.29885.0
GR1154.2  9915.0  1154.2  9915.5  1154.2  9916.3  1154.2 10154.7  1164.510193.7
GR1171.2 10224.3  1171.2 10499.0  1210.0 10500.0
X1   6.1    30.0  9460.0  9795.0   380.0   440.0   480.0
GR1210.0  8000.0  1174.8  8001.0  1173.0  8650.0  1172.0  8870.0  1172.08875.0
GR1171.0  8931.8  1170.0  9196.9  1168.3  9265.9  1167.0  9305.7  1156.89321.0
GR1173.5  9346.0  1167.4  9395.0  1173.5  9460.0  1154.9  9495.0  1154.99760.0
GR1178.3  9795.0  1173.6  9798.1  1172.0  9799.0  1172.6  9800.0  1167.89801.5
GR1160.0  9831.0  1157.0  9844.0  1156.0  9895.0  1157.0 10151.0  1164.710183.0
GR1170.6 10206.0  1172.2 10213.5  1172.0 10342.2  1172.0 10499.0  1210.010500.0
NH   5.0   0.030   600.0   0.030   659.2   0.035   899.2   0.030   958.4 0.035
NH2001.0
X1   7.1     8.0   600.0   958.4   205.0   310.0   245.0
GR1210.0     0.0  1186.8     1.0  1186.8   600.0  1155.4   659.2  1155.4 899.2
GR1187.9   958.4  1187.9  2000.0  1210.0  2001.0
NH   5.0   0.025   600.0   0.030   659.2   0.035   899.2   0.025   958.4 0.035
NH2001.0
X1   7.2     8.0   600.0   958.4   100.0   100.0   100.0
GR1210.0     0.0  1186.8     1.0  1186.8   600.0 1155.59   659.2 1155.59 899.2
GR1187.9   958.4  1187.9  2000.0  1210.0  2001.0
NC                          0.3     0.5
NH   5.0   0.030   604.0   0.025   637.0   0.035   877.0   0.025   914.1 0.035
NH2001.0
X1   7.3    12.0   600.0   914.1     5.0     5.0     5.0
X3  10.0                                           1186.8  1187.9
GR1210.0     0.0  1186.8     1.0  1186.0   600.0  1176.0   600.1  1176.0 604.0
GR1155.6   637.0  1155.6   877.0  1176.2   910.0  1176.2   914.0  1187.9 914.1
GR1187.9  2000.0  1210.0  2001.0
SB  0.90    0.80     2.80     0.0   240.0    15.0  4841.5     2.0 1155.801155.60
NH   5.0   0.030   600.0   0.025   654.4   0.035   894.4   0.025   951.0 0.035
NH2001.0
X1   7.4    12.0   600.0   914.1   145.0   145.0   145.0
X2                   1.0  1178.0  1186.8
X3  10.0                                           1186.8  1187.9
GR1210.0     0.0  1186.8     1.0  1186.0   600.0  1176.0   600.1  1176.0 604.0
GR1155.8   637.0  1155.8   877.0  1176.2   910.0  1176.2   914.0  1187.9 914.1
GR1187.9  2000.0  1210.0  2001.0
BT   4.0   600.0  1186.8  1186.8   600.1  1186.8  1178.0   914.0  1187.91178.2
BT 914.1  1187.9  1187.9
NC                          0.1     0.3
NH   5.0   0.030   600.0   0.025   654.4   0.035   894.4   0.025   951.0 0.035
NH2001.0
X1   7.5     8.0   600.0   951.0     5.0     5.0     5.0
GR1210.0     0.0  1186.8     1.0  1186.8   600.0 1155.81   654.4 1155.81 894.4
GR1187.9   951.0  1187.9  2000.0  1210.0  2001.0
NH   5.0   0.030   600.0   0.025   654.4   0.035   913.4   0.025   970.0 0.035
NH2001.0
X1   7.6     8.0   600.0   970.0   100.0   100.0   100.0
GR1210.0     0.0  1186.8     1.0  1186.8   600.0  1156.0   654.4  1156.0 913.4
GR1187.9   970.0  1187.9  2000.0  1210.0  2001.0
```

```
NH    5.0   0.030    530.0    0.025    565.0    0.035    915.0    0.025    950.0 0.035
NH1801.0
X1   11.0    12.0    530.0    950.0     65.0    335.0    115.0
GR1210.0     0.0   1175.5      1.0   1175.5    530.0   1156.2    565.0   1156.2 915.0
GR1175.0   950.0   1175.0    955.0   1175.0    960.0   1175.0    970.0   1175.51300.0
GR1175.0  1800.0   1210.0   1801.0
NH    5.0   0.030    550.0    0.025    580.0    0.035    950.0    0.025    980.0 0.035
NH1751.0
X1   12.0     9.0    550.0    980.0    210.0    175.0    210.0
GR1210.0     0.0   1176.4      1.0   1177.0    300.0   1174.0    550.0   1156.5 580.0
GR1156.5   950.0   1176.0    980.0   1179.9   1650.0   1210.0   1751.0
NH    5.0   0.030   1000.0    0.025   1048.0    0.035   1425.0    0.025   1474.00.030
NH2301.0
X1   13.1     8.0   1000.0   1474.0    125.0    135.0    130.0
GR1210.0     0.0   1181.0      1.0   1181.0   1000.0   1156.7   1049.0   1156.71425.0
GR1181.0  1474.0   1181.0   2300.0   1210.0   2301.0
NH    5.0   0.030   1000.0    0.025   1036.0    0.035   1413.0    0.025   1450.00.030
NH2301.0
X1   13.2     8.0   1000.0   1450.0     15.0     15.0     15.0
GR1210.0     0.0   1181.0      1.0   1181.0   1000.0   1162.7   1037.0   1162.71413.0
GR1181.0  1450.0   1181.0   2300.0   1210.0   2301.0
NH    5.0   0.030   1000.0    0.025   1034.0    0.035   1416.0    0.025   1450.00.030
NH2001.0
X1   14.1     8.0   1000.0   1450.0    155.0    145.0    150.0
GR1210.0     0.0   1180.0      1.0   1180.0   1000.0   1163.12   1034.0   1163.121416.0
GR1180.0  1450.0   1180.0   2000.0   1210.0   2001.0
NC                            0.3      0.5
NH    5.0   0.030   1000.0    0.025   1034.0    0.035   1416.0    0.025   1450.00.030
NH2001.0
X1   14.2     8.0   1000.0   1450.0      5.0      5.0      5.0
X3   10.0                                                        1180.0   1180.0
GR1210.0     0.0   1180.0      1.0   1180.0   1000.0   1163.10   1034.0   1163.101416.0
GR1180.0  1450.0   1180.0   2000.0   1210.0   2001.0
SB   0.90    0.80      2.80     0.0    382.0     20.0   6732.0      2.0   1163.321163.1
NH    5.0   0.030   1000.0    0.025   1034.0    0.035   1416.0    0.025   1450.00.030
NH2001.0
X1   14.3     8.0   1000.0   1450.0     80.0     80.0     80.0
X2                     1.0   1178.0   1181.0
X3   10.0                                                        1180.0   1180.0
GR1210.0     0.0   1180.0      1.0   1180.0   1000.0   1163.32   1034.0   1163.321416.0
GR1180.0  1450.0   1180.0   2000.0   1210.0   2001.0
BT    4.0  1000.0   1180.0   1180.0   1000.1   1181.0   1178.0   1449.9   1181.01178.0
BT1450.0  1180.0   1180.0
NC                            0.1      0.3
NH    5.0   0.030   1000.0    0.025   1034.0    0.035   1416.0    0.025   1450.00.030
NH2001.0
X1   14.4     8.0   1000.0   1450.0      5.0      5.0      5.0
GR1210.0     0.0   1180.0      1.0   1180.0   1000.0   1163.34   1034.0   1163.341416.0
GR1180.0  1450.0   1180.0   2000.0   1210.0   2001.0
NH    7.0   0.030    510.0    0.025    543.0    0.035    570.0    0.090    660.0 0.035
NH 947.0   0.025    980.0    0.030   1691.0
X1   15.0    15.0    510.0    980.0    105.0     45.0     90.0
X4    2.0  1163.6    570.0   1163.6    660.0
GR1210.0     0.0   1180.0      1.0   1180.0    285.0   1180.9    405.0   1180.0 460.0
GR1180.0   510.0   1163.6    543.0   1163.6    947.0   1180.0    980.0   1180.01039.0
GR1180.0  1040.0   1180.0   1080.0   1179.7   1240.0   1180.0   1690.0   1210.01691.0
NH    7.0   0.030    730.0    0.025    764.0    0.035    814.0    0.090    960.0 0.035
NH1191.0   0.025   1225.0    0.030   1951.0
X1   16.0    12.0    730.0   1225.0    265.0    110.0    210.0
X4    2.0  1164.0    814.0   1164.0    960.0
```

```
GR1210.0      0.0  1181.8      1.0  1181.8    700.0  1181.0    730.0  1164.0 764.0
GR1164.0   1191.0  1180.0   1225.0  1180.0   1250.0  1179.7   1650.0  1180.01860.0
GR1180.2   1950.0  1210.0   1951.0
NH    7.0   0.030   880.0    0.025   916.0    0.035   966.0    0.090  1050.0 0.035
NH1304.0   0.025  1340.0    0.030  2101.0
X1   18.0    15.0   880.0   1340.0   170.0    210.0   185.0
X4    2.0  1164.4   966.0   1164.4  1050.0
GR1210.0      0.0  1182.3      1.0  1182.3    880.0  1164.4    916.0  1164.41304.0
GR1182.3   1340.0  1182.3   1350.0  1180.0   1354.0  1182.5   1355.0  1180.01357.0
GR1177.8   1470.0  1179.7   1540.0  1180.0   1850.0  1180.7   2100.0  1210.02101.0
NH    7.0   0.030  1050.0    0.025  1086.0    0.035  1136.0    0.090  1230.0 0.035
NH1326.0   0.025  1362.0    0.030  2021.0
X1   19.0    11.0  1050.0   1362.0   475.0    500.0   470.0
X4    2.0  1165.3  1136.0   1165.3  1230.0
GR1210.0      0.0  1183.3      1.0  1183.3   1050.0  1165.3   1086.0  1165.31326.0
GR1183.3   1362.0  1180.0   1375.0  1180.0   1480.0  1180.2   1750.0  1181.82020.0
GR1210.0   2021.0
NH    5.0   0.030   630.0    0.025   668.0    0.035   908.0    0.025   946.0 0.030
NH1681.0
X1   20.0    13.0   630.0   946.0   590.0    730.0   610.0
GR1210.0      0.0  1185.3      1.0  1185.3    630.0  1166.5    668.0  1166.5 908.0
GR1185.3    946.0  1185.3    956.0  1182.0    962.6  1185.0    985.0  1182.0 986.0
GR1182.7   1280.0  1184.0   1680.0  1210.0   1681.0
NH    5.0   0.030   942.0    0.025   980.0    0.035  1220.0    0.025  1258.0 0.030
NH2161.0
X1   21.0    12.0   942.0   1258.0   337.0    550.0   390.0
GR1210.0      0.0  1186.5      1.0  1186.5    942.0  1167.3    980.0  1167.31220.0
GR1186.5   1258.0  1186.5   1268.0  1184.1   1520.0  1184.7   1820.0  1184.01970.0
GR1185.0   2160.0  1210.0   2161.0
NH    5.0   0.030   905.0    0.025   947.0    0.035  1187.0    0.025  1229.0 0.035
NH2201.0
X1   22.0    11.0   905.0   1229.0   480.0    375.0   460.0
GR1210.0      0.0  1189.4      1.0  1189.4    905.0  1168.2    947.0  1168.21187.0
GR1189.4   1229.0  1189.4   1239.0  1188.0   1247.8  1186.4   1640.0  1186.52200.0
GR1210.0   2201.0
NH    5.0   0.030   550.0    0.025   595.0    0.035   835.0    0.025   890.0 0.035
NH1801.0
X1   23.0    12.0   550.0   880.0   520.0    300.0   480.0
GR1210.0      0.0  1191.6      1.0  1191.6    550.0  1169.2    595.0  1169.2 835.0
GR1191.6    880.0  1191.6    890.0  1188.0    897.2  1188.0    900.0  1188.01620.0
GR1187.5   1800.0  1210.0   1801.0
NH    5.0   0.030  1085.0    0.025  1133.0    0.035  1373.0    0.025  1421.0 0.035
NH2051.0
X1   24.0    15.0  1085.0   1421.0   540.0    555.0   545.0
GR1210.0      0.0  1194.3      1.0  1194.3   1085.0  1170.3   1133.0  1170.31373.0
GR1194.3   1421.0  1194.3   1431.0  1190.2   1439.2  1190.0   1500.0  1190.01580.0
GR1190.5   1650.0  1190.0   1720.0  1189.5   1870.0  1188.7   2050.0  1210.02051.0
NH    5.0   0.030   690.0    0.025   742.0    0.035   982.0    0.025  1034.0 0.030
NH1651.0
X1   24.8    10.0   690.0   1034.0   595.0    610.0   600.0
GR1210.0      0.0  1197.2      1.0  1197.2    690.0  1171.4    742.0  1171.4 982.0
GR1197.2   1034.0  1197.2   1050.0  1190.0   1065.0  1190.0   1650.0  1210.01651.0
NH    5.0   0.030   690.0    0.025   728.0    0.035   968.0    0.025  1006.0 0.035
NH1651.0
X1   24.9    10.0   690.0   1006.0    15.0     15.0    15.0
GR1210.0      0.0  1197.2      1.0  1197.2    690.0  1178.4    728.0  1178.4 968.0
GR1197.2   1006.0  1197.2   1016.0  1193.0   1040.0  1193.0   1650.0  1210.01651.0
NH    5.0   0.030   730.0    0.025   774.0    0.035  1014.0    0.025  1058.0 0.030
NH1751.0
X1   26.0    12.0   730.0   1058.0   530.0    630.0   550.0
```

```
GR1210.0     0.0  1199.5     1.0  1199.5   730.0  1179.5   774.0  1179.51014.0
GR1199.5  1058.0  1199.5  1070.0  1194.0  1081.0  1194.0  1100.0  1193.81300.0
GR1194.0  1750.0  1210.0  1751.0
NH    5.0  0.030   860.0  0.025   904.8  0.035  1144.8  0.025  1189.6 0.030
NH1991.0
X1   27.0    13.0   860.0  1189.6   330.0   400.0   345.0
GR1210.0     0.0  1201.2     1.0  1201.2   860.0  1180.2   904.8  1180.21144.8
GR1201.2  1189.6  1201.2  1200.0  1195.4  1200.2  1196.0  1410.0  1196.31600.0
GR1196.0  1900.0  1197.8  1990.0  1210.0  1991.0
NH    5.0  0.030   394.0  0.025   434.0  0.035   674.0  0.025   714.0 0.030
NH1601.0
X1   28.0    13.0   394.0   714.0   314.0   320.0   315.0
GR1210.0     0.0  1201.9     1.0  1201.9   394.0  1180.8   434.0  1180.8 674.0
GR1201.9   714.0  1201.9   734.0  1198.3   741.2  1198.3  1200.0  1200.01370.0
GR1200.0  1380.0  1198.5  1600.0  1210.0  1601.0
NH    5.0  0.030   368.0  0.025   408.0  0.035   648.0  0.025   683.0 0.030
NH1591.0
X1   29.0    18.0   368.0   763.0   566.0   555.0   605.0
GR1210.0     0.0  1202.8     1.0  1202.8   368.0  1182.8   408.0  1181.6 528.0
GR1182.8   648.0  1185.0   683.0  1185.0   693.0  1187.0   718.0  1190.0 732.0
GR1201.0   763.0  1201.0   771.0  1200.0   830.0  1200.0  1060.0  1200.01130.0
GR1200.3  1490.0  1200.0  1590.0  1210.0  1591.0
NH    3.0  0.025    42.0  0.035   282.0  0.025   324.0
X1   30.0     7.0     1.0   323.0   370.0   370.0   370.0
GR1210.0     0.0  1203.7     1.0  1183.0    42.0  1182.2   162.0  1183.0 282.0
GR1203.7   323.0  1210.0   324.0
NH    3.0  0.025    42.0  0.035   282.0  0.025   324.0
X1   31.0     7.0     1.0   323.0   300.0   300.0   300.0
GR1210.0     0.0  1204.0     1.0  1183.3    42.0  1182.5   162.0  1183.3 282.0
GR1204.0   323.0  1210.0   324.0
NH    3.0  0.025   113.0  0.035   307.1  0.025   420.0
X1   32.0    16.0   113.0   307.1    12.0    12.0    12.0
GR1210.0     0.0  1204.0     1.0  1204.0    53.0  1202.0    53.1  1202.0 113.0
GR1187.3   113.1  1186.5   193.0  1183.5   202.0  1183.5   218.0  1186.5 227.0
GR1187.3   307.0  1202.0   307.1  1202.0   367.0  1204.0   367.1  1204.0 419.0
GR1210.0   420.0
EJ


ER
$ASSIGN 2EMI67DROP8350K.DAT SYS$INPUT
$COPY 2EMI67DROP8350K.DAT INPUT.DAT
$RUN EPLIB:HEC2
```

```
*****************************************************
*  WATER SURFACE PROFILES                           *
*  VERSION OF NOVEMBER 1976                         *
*  UPDATED MARCH 1982                               *
*                                                   *
*  RUN DATE  11-MAR-87 TIME   06:28:42              *
*****************************************************
```


```
****************************************
*  U.S. ARMY CORPS OF ENGINEERS        *
*  THE HYDROLOGIC ENGINEERING CENTER   *
*  609 SECOND STREET, SUITE D          *
*  DAVIS, CALIFORNIA 95616             *
*  (916) 440-2105 (FTS) 448-2105       *
****************************************
```


```
X     X  XXXXXXX   XXXXX              XXXXX
X     X  X        X     X            X     X
X     X  X        X                        X
XXXXXXX  XXXX     X          XXXXX    XXXXX
X     X  X        X                  X
X     X  X        X     X            X
X     X  XXXXXXX   XXXXX             XXXXXXX
```

```
**************************************************
  HEC2 RELEASE DATED NOV 76 UPDATED MARCH 1982
  ERROR CORR -  01,02,03,04,05
  MODIFICATION -  50,51,52,53,54,55
**************************************************

C
T1        DAMES & MOORE JOB NUMBER 15448-002-022 FOR ELLIS-MURPHY, INC.
T2        W/COE,ADOT,B=240-300' & 6- AND 7-FOOT DROPS. W/NEW 83RD AVE BRIDGE
T3        SKUNK CREEK, W/WSEL FROM COE & VAN LOO STUDY

J1  ICHECK    INQ       NINV      IDIR      STRT      METRIC    HVINS     Q         WSEL      FQ

    -10.       0.        0.        0.   0.000000     0.01       0.5    50000.   1154.000   0.000

J2  NPROF     IPLOT     PRFVS     XSECV     XSECH     FN        ALLDC     IBW       CHNIM     ITRACE

    -1.000    0.000     0.000     0.000     0.000     0.000     0.000     0.000     0.000     0.000

J3  VARIABLE CODES FOR SUMMARY PRINTOUT

    150.000   0.000     0.000     0.000     0.000     0.000     0.000     0.000     0.000     0.000
```

```
   SECNO     DEPTH     CWSEL     CRIWS     WSELK     EG        HV        HL        OLOSS    BANK ELEV
   Q         QLOB      QCH       QROB      ALOB      ACH       AROB      VOL       TWA    LEFT/RIGHT
   TIME      VLOB      VCH       VROB      XNL       XNCH      XNR       WTN       ELMIN       SSTA
   SLOPE     XLOBL     XLCH      XLOBR     ITRIAL    IDC       ICONT     CORAR     TOPWID      ENDST

*PROF 1

CCHV=   0.100 CEHV=   0.300
*SECNO 1.000

3265 DIVIDED FLOW

         DOWNSTREAM END OF STUDY-NEW RIVER FLOW=50,000 CFS
     1.00     15.00  1154.00      0.00  1154.00  1158.08      4.08      0.00      0.00  1152.90
   50000.     1960.   48040.        0.     242.     2919.        0.        0.        0.  1168.20
     0.00      8.10     16.46     0.00     0.030    0.035     0.030     0.000   1139.00  9745.83
 0.006300       0.        0.        0.         0        0         0      0.00    362.05 10110.41

*SECNO 2.000

3265 DIVIDED FLOW

     2.00     14.73  1155.53  1155.40      0.00  1159.98      4.45      1.79      0.11  1166.40
   50000.     1582.   48418.        0.     153.     2833.        0.       19.        2.  1163.50
     0.00     10.36     17.09     0.00     0.030    0.035     0.030     0.000   1140.80  9722.22
 0.007420      310.      260.      240.         4        8         0      0.00    319.08 10116.65

*SECNO 3.000

1645 INT SEC ADDED BY RAISING SEC      3.00,   -5.600FT AND MULTIPLYING BY   0.727

3685 20 TRIALS ATTEMPTED WSEL,CWSEL
3693 PROBABLE MINIMUM SPECIFIC ENERGY
3720 CRITICAL DEPTH ASSUMED
     1.01      9.72  1156.12  1156.12      0.00  1160.72      4.59      0.40      0.04  1157.10
   50000.        0.   50000.        0.        0.     2907.        0.       22.        2.  1157.80
     0.01      0.00     17.20     0.00     0.030    0.035     0.030     0.000   1146.40  9240.67
 0.008851       40.       50.       55.        20       14         0      0.00    319.72  9560.40


1645 INT SEC ADDED BY RAISING SEC      1.01,    5.600FT AND MULTIPLYING BY   1.375

3301 HV CHANGED MORE THAN HVINS
```

```
   SECNO      DEPTH      CWSEL      CRIWS      WSELK      EQ         HV         HL         OLOSS    BANK ELEV
   Q          QLOB       QCH        QROB       ALOB       ACH        AROB       VOL        TWA    LEFT/RIGHT
   TIME       VLOB       VCH        VROB       XNL        XNCH       XNR        WTN        ELMIN      SSTA
   SLOPE      XLOBL      XLCH       XLOBR      ITRIAL     IDC        ICONT      CORAR      TOPWID     ENDST

3685 20 TRIALS ATTEMPTED WSEL,CWSEL
3693 PROBABLE MINIMUM SPECIFIC ENERGY
3720 CRITICAL DEPTH ASSUMED
        LOCATION OF FUTURE DROP STRUCTURE
     3.00       7.90    1159.90    1159.90       0.00    1163.68       3.78       0.45       0.08    1162.70
    50000.         0.    50000.         0.         0.     3206.         0.        25.         3.    1163.40
     0.01       0.00      15.59       0.00      0.030      0.035      0.030      0.000    1152.00    9708.39
 0.009347        40.        50.        55.         20         15          0       0.00     429.57   10137.96

*SECNO 3.500

3301 HV CHANGED MORE THAN HVINS

     3.50       9.35    1161.45       0.00       0.00    1164.00       2.55       0.20       0.12    1162.50
    50000.         0.    50000.         0.         0.     3902.         0.        28.         3.    1168.80
     0.01       0.00      12.81       0.00      0.030      0.035      0.030      0.000    1152.10    9703.77
 0.005123        30.        30.        30.          6          0          0       0.00     446.27   10150.03

*SECNO 4.000
     4.00      10.03    1162.33       0.00       0.00    1164.45       2.11       0.40       0.04    1165.20
    50000.         0.    50000.         0.         0.     4285.         0.        36.         4.    1166.60
     0.01       0.00      11.67       0.00      0.030      0.035      0.030      0.000    1152.30    9692.60
 0.003863        90.        90.        90.          3          0          0       0.00     455.61   10148.21

*SECNO 4.500

1645 INT SEC ADDED BY RAISING SEC      4.50,   -0.733FT AND MULTIPLYING BY   0.867

3301 HV CHANGED MORE THAN HVINS

     1.01      10.68    1163.35       0.00       0.00    1164.92       1.58       0.42       0.05    1168.57
    50000.         0.    50000.         0.         0.     4964.         0.        51.         6.    1170.67
     0.01       0.00      10.07       0.00      0.030      0.035      0.030      0.000    1152.67    9384.92
 0.002663       180.       133.        87.          3          0          0       0.00     500.42    9885.34

1645 INT SEC ADDED BY RAISING SEC      1.01,    0.367FT AND MULTIPLYING BY   1.077
```

```
   SECNO      DEPTH      CWSEL      CRIWS      WSELK      EQ         HV         HL         OLOSS    BANK ELEV
   Q          QLOB       QCH        QROB       ALOB       ACH        AROB       VOL        TWA    LEFT/RIGHT
   TIME       VLOB       VCH        VROB       XNL        XNCH       XNR        WTN        ELMIN      SSTA
   SLOPE      XLOBL      XLCH       XLOBR      ITRIAL     IDC        ICONT      CORAR      TOPWID     ENDST

     1.02      10.94    1163.98       0.00       0.00    1165.27       1.29       0.32       0.03    1168.93
   50000.         0.    50000.          0.         0.       5487.         0.        66.         7.    1171.03
     0.02       0.00       9.11       0.00      0.030      0.035      0.030      0.000    1153.03    9490.34
 0.002111       180.       133.        87.          2          0          0       0.00     540.46   10030.79

1645 INT SEC ADDED BY RAISING SEC      1.02,   0.367FT AND MULTIPLYING BY   1.071

     4.50      11.04    1164.44       0.00       0.00    1165.54       1.10       0.26       0.02    1169.30
   50000.         0.    50000.          0.         0.       5933.         0.        84.         9.    1171.40
     0.02       0.00       8.43       0.00      0.030      0.035      0.030      0.000    1153.40    9596.08
 0.001785       180.       133.        87.          2          0          0       0.00     579.56   10175.64

*SECNO 5.000
     5.00      11.07    1165.27       0.00       0.00    1166.35       1.08       0.80       0.00    1171.50
   50000.         0.    50000.          0.         0.       5999.         0.       147.        15.    1171.20
     0.04       0.00       8.33       0.00      0.030      0.035      0.030      0.000    1154.20    9622.60
 0.001704       540.       460.       370.          2          0          0       0.00     574.62   10197.22

*SECNO 6.100

3265 DIVIDED FLOW

          CONFLUENCE OF SKUNK CREEK & NEW RIVER
     6.10      11.28    1166.18       0.00       0.00    1167.07       0.89       0.70       0.02    1173.50
   50000.       585.    23371.      26044.        132.       3203.       3318.       215.        22.    1178.30
     0.05       4.44       7.30       7.85      0.030      0.035      0.030      0.000    1154.90    9306.93
 0.001308       380.       480.       440.          2          0          0       0.00     712.32   10188.76

1490 NH CARD USED
*SECNO 7.100

1645 INT SEC ADDED BY RAISING SEC      7.10,   -0.375FT AND MULTIPLYING BY   1.067

3301 HV CHANGED MORE THAN HVINS

3685 20 TRIALS ATTEMPTED WSEL,CWSEL
3693 PROBABLE MINIMUM SPECIFIC ENERGY
```

```
   SECNO     DEPTH     CWSEL     CRIWS     WSELK     EG        HV        HL        OLOSS    BANK ELEV
   Q         QLOB      QCH       QROB      ALOB      ACH       AROB      VOL       TWA    LEFT/RIGHT
   TIME      VLOB      VCH       VROB      XNL       XNCH      XNR       WTN       ELMIN       SSTA
   SLOPE     XLOBL     XLCH      XLOBR     ITRIAL    IDC       ICONT     CORAR     TOPWID      ENDST

3720 CRITICAL DEPTH ASSUMED
     1.01     10.26  1165.28   1165.28      0.00   1170.12      4.84      0.18      1.18   1186.43
   50000.        0.   50000.        0.        0.     2834.        0.      222.       23.   1187.53
     0.05      0.00     17.65      0.00     0.030     0.030     0.030     0.000   1155.03    682.45
 0.008549       51.       61.       78.        20        11         0      0.00    296.53    978.97


1645 INT SEC ADDED BY RAISING SEC       1.01,   0.125FT AND MULTIPLYING BY   0.979

3301 HV CHANGED MORE THAN HVINS

     1.02     11.69  1166.84      0.00      0.00   1170.64      3.80      0.42      0.10   1186.55
   50000.        0.   50000.        0.        0.     3196.        0.      227.       23.   1187.65
     0.06      0.00     15.64      0.00     0.030     0.030     0.030     0.000   1155.15    665.42
 0.005716       51.       61.       78.         6         0         0      0.00    295.92    961.35


1645 INT SEC ADDED BY RAISING SEC       1.02,   0.125FT AND MULTIPLYING BY   0.979

     1.03     11.91  1167.18      0.00      0.00   1171.00      3.81      0.35      0.00   1186.68
   50000.        0.   50000.        0.        0.     3190.        0.      231.       23.   1187.78
     0.06      0.00     15.67      0.00     0.030     0.030     0.030     0.000   1155.28    650.88
 0.005613       51.       61.       78.         2         0         0      0.00    290.45    941.32


1645 INT SEC ADDED BY RAISING SEC       1.03,   0.125FT AND MULTIPLYING BY   0.978

          BEGIN CHANNEL (B=240',Z=2) SKUNK CREEK FLOW=50,000 CFS
     7.10     12.10  1167.50      0.00      0.00   1171.35      3.85      0.34      0.01   1186.80
   50000.        0.   50000.        0.        0.     3175.        0.      235.       24.   1187.90
     0.06      0.00     15.75      0.00     0.030     0.030     0.030     0.000   1155.40    636.39
 0.005556       51.       61.       78.         2         0         0      0.00    284.85    921.24


1490 NH CARD USED
*SECNO 7.200

1645 INT SEC ADDED BY RAISING SEC       7.20,  -0.095FT AND MULTIPLYING BY   1.000
```

```
   SECNO     DEPTH     CWSEL     CRIWS     WSELK     EG        HV        HL        OLOSS    BANK ELEV
   Q         QLOB      QCH       QROB      ALOB      ACH       AROB      VOL       TWA    LEFT/RIGHT
   TIME      VLOB      VCH       VROB      XNL       XNCH      XNR       WTN       ELMIN       SSTA
   SLOPE     XLOBL     XLCH      XLOBR     ITRIAL    IDC       ICONT     CORAR     TOPWID      ENDST

     1.01     12.65   1168.15      0.00      0.00   1171.64      3.49      0.26      0.04   1186.71
   50000.        0.   50000.        0.        0.      3334.        0.      239.       24.   1187.81
     0.06      0.00     15.00      0.00     0.030     0.025     0.030     0.000   1155.49    635.09
 0.004777       50.       50.       50.         3         0         0      0.00    287.12    922.21


1645 INT SEC ADDED BY RAISING SEC      1.01,   0.095FT AND MULTIPLYING BY   1.000

     7.20     13.04   1168.63      0.00      0.00   1171.89      3.27      0.23      0.02   1186.80
   50000.        0.   50000.        0.        0.      3448.        0.      243.       25.   1187.90
     0.06      0.00     14.50      0.00     0.030     0.025     0.030     0.000   1155.59    634.46
 0.004301       50.       50.       50.         2         0         0      0.00    288.65    923.10


CCHV=    0.300 CEHV=    0.500
1490 NH CARD USED
*SECNO 7.300

3495 OVERBANK AREA ASSUMED NON-EFFECTIVE,ELLEA=     1186.80 ELREA=     1187.90

          DOWNSTREAM EDGE OF PROPOSED OUTER LOOP FREEWAY BRIDGES
     7.30     12.99   1168.59      0.00      0.00   1171.97      3.38      0.02      0.06   1186.00
   50000.        0.   50000.        0.        0.      3389.        0.      244.       25.   1187.90
     0.06      0.00     14.75      0.00     0.030     0.025     0.030     0.000   1155.60    615.99
 0.004364        5.        5.        5.         2         0         0      0.00    281.82    897.81


SPECIAL BRIDGE

5227 DOWNSTREAM ELEV IS   1164.57 ,NOT   1168.59 HYDRAULIC JUMP OCCURS DOWNSTREAM (IF LOW FLOW CONTROLS)

SB  XK        XKOR      COFQ      RDLEN     BWC       BWP       BAREA     SS        ELCHU     ELCHD
    0.90      0.80      2.80      0.00    240.00     15.00   4841.50      2.00   1155.80   1155.60

1490 NH CARD USED
*SECNO 7.400
CLASS B LOW FLOW

3420 BRIDGE W.S.=   1166.84 BRIDGE VELOCITY=,     18.14      CALCULATED CHANNEL AREA=,      2729.
```

```
   SECNO     DEPTH     CWSEL     CRIWS     WSELK     EG        HV        HL        OLOSS    BANK ELEV
   Q         QLOB      QCH       QROB      ALOB      ACH       AROB      VOL       TWA    LEFT/RIGHT
   TIME      VLOB      VCH       VROB      XNL       XNCH      XNR       WTN       ELMIN       SSTA
   SLOPE     XLOBL     XLCH      XLOBR     ITRIAL    IDC       ICONT     CORAR     TOPWID      ENDST

 EGPRS     EGLWC      H3       QWEIR      QLOW      BAREA   TRAPEZOID      ELLC      ELTRD
                                                              AREA
    0.00   1172.57    0.00        0.    50000.     4842.     5981.    1178.00    1186.80

3495 OVERBANK AREA ASSUMED NON-EFFECTIVE, ELLEA=     1186.80 ELREA=     1187.90

         UPSTREAM EDGE OF PROPOSED OUTER LOOP FREEWAY BRIDGES
    7.40     13.82  1169.62      0.00      0.00  1172.57      2.95      0.60      0.00  1186.00
   50000.        0.  50000.        0.        0.    3628.        0.      255.       26.  1187.90
    0.06      0.00     13.78      0.00     0.030     0.025     0.030     0.000   1155.80   614.42
 0.003530      145.      145.      145.         0         0         0      0.00    284.94   899.36

CCHV=   0.100 CEHV=   0.300
1490 NH CARD USED
*SECNO 7.500
    7.50     13.93  1169.74      0.00      0.00  1172.60      2.86      0.02      0.01  1186.80
   50000.        0.  50000.        0.        0.    3684.        0.      256.       26.  1187.90
    0.06      0.00     13.57      0.00     0.030     0.025     0.030     0.000   1155.81   629.95
 0.003418        5.        5.        5.         2         0         0      0.00    289.02   918.97

1490 NH CARD USED
*SECNO 7.600

1645 INT SEC ADDED BY RAISING SEC      7.60,  -0.095FT AND MULTIPLYING BY   0.966

    1.01     14.42  1170.32      0.00      0.00  1172.79      2.47      0.15      0.04  1186.71
   50000.        0.  50000.        0.        0.    3967.        0.      260.       26.  1187.81
    0.06      0.00     12.60      0.00     0.030     0.025     0.030     0.000   1155.91   607.70
 0.002803       50.       50.       50.         2         0         0      0.00    299.62   907.32

1645 INT SEC ADDED BY RAISING SEC      1.01,   0.095FT AND MULTIPLYING BY   1.035

    7.60     14.76  1170.76      0.00      0.00  1172.95      2.19      0.13      0.03  1186.80
   50000.        0.  50000.        0.        0.    4209.        0.      265.       26.  1187.90
    0.07      0.00     11.88      0.00     0.030     0.025     0.030     0.000   1156.00   628.33
 0.002420       50.       50.       50.         2         0         0      0.00    311.26   939.59
```

```
   SECNO     DEPTH     CWSEL     CRIWS     WSELK     EQ        HV        HL        OLOSS    BANK ELEV
   Q         GLOB      QCH       QROB      ALOB      ACH       AROB      VOL       TWA    LEFT/RIGHT
   TIME      VLOB      VCH       VROB      XNL       XNCH      XNR       WTN       ELMIN       SSTA
   SLOPE     XLOBL     XLCH      XLOBR     ITRIAL    IDC       ICONT     CORAR     TOPWID      ENDST

1490 NH CARD USED
*SECNO 11.000

1645 INT SEC ADDED BY RAISING SEC      11.00,   -0.133FT AND MULTIPLYING BY   0.837

3301 HV CHANGED MORE THAN HVINS

     1.01     15.38   1171.45      0.00      0.00   1173.08      1.63      0.08      0.06   1175.37
    50000.        0.   50000.        0.        0.     4875.        0.      269.       27.   1174.87
     0.07      0.00     10.26      0.00     0.030     0.025     0.030     0.000   1156.07    449.81
 0.001675       22.       38.      112.         2         0         0      0.00    340.48    790.29


1645 INT SEC ADDED BY RAISING SEC      1.01,    0.067FT AND MULTIPLYING BY   1.097

     1.02     15.75   1171.88      0.00      0.00   1173.17      1.29      0.06      0.03   1175.43
    50000.        0.   50000.        0.        0.     5483.        0.      273.       27.   1174.93
     0.07      0.00      9.12      0.00     0.030     0.025     0.030     0.000   1156.13    492.85
 0.001285       22.       38.      112.         2         0         0      0.00    374.74    867.59


1645 INT SEC ADDED BY RAISING SEC      1.02,    0.067FT AND MULTIPLYING BY   1.088

    11.00     15.98   1172.18      0.00      0.00   1173.24      1.06      0.04      0.02   1175.50
    50000.        0.   50000.        0.        0.     6064.        0.      278.       27.   1175.00
     0.07      0.00      8.25      0.00     0.030     0.025     0.030     0.000   1156.20    536.01
 0.001030       22.       38.      112.         2         0         0      0.00    408.75    944.76


1490 NH CARD USED
*SECNO 12.000
    12.00     15.98   1172.48      0.00      0.00   1173.45      0.97      0.21      0.01   1174.00
    50000.        0.   50000.        0.        0.     6330.        0.      308.       29.   1176.00
     0.08      0.00      7.90      0.00     0.030     0.025     0.030     0.000   1156.50    552.60
 0.000929      210.      210.      175.         0         0         0      0.00    421.99    974.59


1490 NH CARD USED
*SECNO 13.100
          6-FOOT DROP STRUCTURE DOWNSTREAM OF NEW 83RD AVE BRIDGE
```

```
   SECNO      DEPTH      CWSEL      CRIWS      WSELK      EG         HV         HL         OLOSS    BANK ELEV
   Q          QLOB       QCH        QROB       ALOB       ACH        AROB       VOL        TWA    LEFT/RIGHT
   TIME       VLOB       VCH        VROB       XNL        XNCH       XNR        WTN        ELMIN       SSTA
   SLOPE      XLOBL      XLCH       XLOBR      ITRIAL     IDC        ICONT      CORAR      TOPWID      ENDST

    13.10     15.97   1172.67       0.00       0.00   1173.58       0.91       0.12       0.01   1181.00
   50000.        0.   50000.          0.         0.     6522.         0.       327.        30.   1181.00
     0.08      0.00      7.67       0.00      0.030      0.025      0.030      0.000    1156.70   1016.78
 0.000938      125.      130.       135.          1          0          0       0.00     440.43   1457.22

1490 NH CARD USED
*SECNO 13.200

3301 HV CHANGED MORE THAN HVINS

7185 MINIMUM SPECIFIC ENERGY
3720 CRITICAL DEPTH ASSUMED
    13.20      8.06   1170.76   1170.76       0.00   1174.64       3.88       0.03       0.89   1181.00
   50000.        0.   50000.          0.         0.     3161.         0.       329.        31.   1181.00
     0.08      0.00     15.82       0.00      0.030      0.025      0.030      0.000    1162.70   1020.71
 0.009271       15.       15.        15.          6          8          0       0.00     408.59   1429.29

1490 NH CARD USED
*SECNO 14.100

1645 INT SEC ADDED BY RAISING SEC      14.10,   -0.315FT AND MULTIPLYING BY    0.989

3301 HV CHANGED MORE THAN HVINS

     1.01      9.42   1172.23       0.00       0.00   1175.01       2.78       0.26       0.11   1179.68
   50000.        0.   50000.          0.         0.     3735.         0.       332.        31.   1179.68
     0.08      0.00     13.39       0.00      0.030      0.025      0.030      0.000    1162.80   1003.68
 0.005289       39.       38.        36.          6          0          0       0.00     415.25   1418.92

1645 INT SEC ADDED BY RAISING SEC       1.01,    0.105FT AND MULTIPLYING BY    1.004

     1.02      9.74   1172.64       0.00       0.00   1175.22       2.57       0.19       0.02   1179.79
   50000.        0.   50000.          0.         0.     3884.         0.       335.        31.   1179.79
     0.08      0.00     12.87       0.00      0.030      0.025      0.030      0.000    1162.91   1006.81
 0.004683       39.       38.        36.          2          0          0       0.00     418.11   1424.92
```

```
   SECNO     DEPTH     CWSEL     CRIWS     WSELK     EG        HV        HL        OLOSS    BANK ELEV
   Q         QLOB      QCH       QROB      ALOB      ACH       AROB      VOL       TWA    LEFT/RIGHT
   TIME      VLOB      VCH       VROB      XNL       XNCH      XNR       WTN       ELMIN       SSTA
   SLOPE     XLOBL     XLCH      XLOBR     ITRIAL    IDC       ICONT     CORAR     TOPWID      ENDST

1645 INT SEC ADDED BY RAISING SEC      1.02,   0.105FT AND MULTIPLYING BY   1.004

     1.03      9.93   1172.95      0.00      0.00   1175.40      2.45      0.17      0.01   1179.89
   50000.        0.   50000.        0.        0.     3980.        0.      339.       32.   1179.89
     0.08      0.00     12.56      0.00     0.030     0.025     0.030     0.000   1163.01   1010.21
 0.004350       39.       38.       36.         2         0         0      0.00    420.46   1430.66

1645 INT SEC ADDED BY RAISING SEC      1.03,   0.105FT AND MULTIPLYING BY   1.004

    14.10     10.10   1173.21      0.00      0.00   1175.57      2.35      0.16      0.01   1180.00
   50000.        0.   50000.        0.        0.     4062.        0.      342.       32.   1180.00
     0.08      0.00     12.31      0.00     0.030     0.025     0.030     0.000   1163.12   1013.66
 0.004091       39.       38.       36.         2         0         0      0.00    422.67   1436.34

CCHV=   0.300 CEHV=   0.500
1490 NH CARD USED
*SECNO 14.200

3495 OVERBANK AREA ASSUMED NON-EFFECTIVE,ELLEA=     1180.00 ELREA=     1180.00

          DOWNSTREAM EDGE OF NEW 83RD AVE BRIDGE
    14.20     10.19   1173.29      0.00      0.00   1175.60      2.31      0.02      0.01   1180.00
   50000.        0.   50000.        0.        0.     4102.        0.      343.       32.   1180.00
     0.08      0.00     12.19      0.00     0.030     0.025     0.030     0.000   1163.10   1013.50
 0.003964        5.        5.        5.         2         0         0      0.00    423.01   1436.50

SPECIAL BRIDGE

SB  XK        XKOR      COFQ      RDLEN     BWC       BWP       BAREA     SS        ELCHU     ELCHD
     0.90      0.80      2.80      0.00    382.00     20.00   6732.00      2.00   1163.32   1163.10

1490 NH CARD USED
*SECNO 14.300
CLASS A LOW FLOW

3420 BRIDGE W.S.=   1172.78 BRIDGE VELOCITY=,     13.70     CALCULATED CHANNEL AREA=,     3605.
```

```
   SECNO     DEPTH     CWSEL     CRIWS     WSELK     EQ        HV        HL        OLOSS    BANK ELEV
   Q         QLOB      QCH       QROB      ALOB      ACH       AROB      VOL       TWA    LEFT/RIGHT
   TIME      VLOB      VCH       VROB      XNL       XNCH      XNR       WTN       ELMIN       SSTA
   SLOPE     XLOBL     XLCH      XLOBR     ITRIAL    IDC       ICONT     CORAR     TOPWID      ENDST

 EQPRS       EQLWC       H3       QWEIR       QLOW      BAREA   TRAPEZOID      ELLC      ELTRD
                                                                  AREA
     0.00    1175.99     0.53        0.     50000.     6732.     5745.     1178.00    1181.00

3495 OVERBANK AREA ASSUMED NON-EFFECTIVE, ELLEA=     1180.00 ELREA=     1180.00

          UPSTREAM EDGE OF NEW 83RD AVE BRIDGE
    14.30     10.50  1173.82      0.00      0.00  1175.99      2.16      0.38      0.00  1180.00
   50000.        0.  50000.        0.        0.     4238.        0.      350.       33.  1180.00
     0.09      0.00     11.80     0.00     0.030     0.025     0.030     0.000   1163.32  1012.59
 0.003577       80.       80.      80.         0         0         0      0.00    424.82  1437.41

CCHV=    0.100 CEHV=    0.300
1490 NH CARD USED
*SECNO 14.400
    14.40     10.50  1173.84      0.00      0.00  1176.00      2.16      0.02      0.00  1180.00
   50000.        0.  50000.        0.        0.     4238.        0.      351.       33.  1180.00
     0.09      0.00     11.80     0.00     0.030     0.025     0.030     0.000   1163.34  1012.56
 0.003577        5.        5.       5.         0         0         0      0.00    424.88  1437.44

1490 NH CARD USED
*SECNO 15.000
    15.00     11.01  1174.61      0.00      0.00  1176.37      1.76      0.32      0.04  1180.00
   50000.        0.  50000.        0.        0.     4695.        0.      360.       34.  1180.00
     0.09      0.00     10.65     0.00     0.030     0.031     0.030     0.000   1163.60   520.83
 0.003634      105.       90.      45.         2         0         0      0.00    448.34   969.17

1490 NH CARD USED
*SECNO 16.000
    16.00     11.73  1175.73      0.00      0.00  1177.11      1.39      0.71      0.04  1181.00
   50000.        0.  50000.        0.        0.     5291.        0.      384.       36.  1180.00
     0.09      0.00      9.45     0.00     0.030     0.036     0.030     0.000   1164.00   740.55
 0.003136      265.      210.     110.         3         0         0      0.00    475.37  1215.92

1490 NH CARD USED
```

```
   SECNO      DEPTH      CWSEL      CRIWS      WSELK      EG         HV         HL         OLOSS    BANK ELEV
   Q          QLOB       QCH        QROB       ALOB       ACH        AROB       VOL        TWA    LEFT/RIGHT
   TIME       VLOB       VCH        VROB       XNL        XNCH       XNR        WTN        ELMIN       SSTA
   SLOPE      XLOBL      XLCH       XLOBR      ITRIAL     IDC        ICONT      CORAR      TOPWID      ENDST

*SECNO 18.000
          DOWNSTREAM END OF COE PROPOSED LEFT BANK STABILIZATION
    18.00      11.71    1176.11       0.00       0.00    1177.78       1.67       0.58       0.08    1182.30
   50000.         0.    50000.         0.         0.     4824.         0.       406.        38.    1182.30
     0.10       0.00      10.37       0.00      0.030      0.036      0.030      0.000    1164.40     892.43
 0.003161       170.       185.       210.          1          0          0       0.00     435.14    1327.57

1490 NH CARD USED
*SECNO 19.000

1645 INT SEC ADDED BY RAISING SEC      19.00,   -0.675FT AND MULTIPLYING BY    1.423

     1.01      11.71    1176.33       0.00       0.00    1178.35       2.02       0.46       0.10    1182.63
   50000.         0.    50000.         0.         0.     4389.         0.       418.        39.    1182.63
     0.10       0.00      11.39       0.00      0.030      0.044      0.030      0.000    1164.63    1511.60
 0.005068       119.       118.       125.          0          0          0       0.00     408.07    1919.67

1645 INT SEC ADDED BY RAISING SEC       1.01,    0.225FT AND MULTIPLYING BY    0.901

     1.02      11.85    1176.70       0.00       0.00    1179.12       2.42       0.65       0.12    1182.85
   50000.         0.    50000.         0.         0.     4004.         0.       429.        40.    1182.85
     0.11       0.00      12.49       0.00      0.030      0.044      0.030      0.000    1164.85    1361.58
 0.006008       119.       118.       125.          2          0          0       0.00     368.35    1729.93

1645 INT SEC ADDED BY RAISING SEC       1.02,    0.225FT AND MULTIPLYING BY    0.890

3301 HV CHANGED MORE THAN HVINS

     1.03      12.01    1177.09       0.00       0.00    1180.05       2.96       0.77       0.16    1183.07
   50000.         0.    50000.         0.         0.     3619.         0.       440.        41.    1183.07
     0.11       0.00      13.81       0.00      0.030      0.044      0.030      0.000    1165.07    1211.56
 0.007232       119.       118.       125.          2          0          0       0.00     328.64    1540.20

1645 INT SEC ADDED BY RAISING SEC       1.03,    0.225FT AND MULTIPLYING BY    0.877
```

```
   SECNO      DEPTH      CWSEL      CRIWS      WSELK      EQ         HV         HL         OLOSS     BANK ELEV
   Q          QLOB       QCH        QROB       ALOB       ACH        AROB       VOL        TWA    LEFT/RIGHT
   TIME       VLOB       VCH        VROB       XNL        XNCH       XNR        WTN        ELMIN       SSTA
   SLOPE      XLOBL      XLCH       XLOBR      ITRIAL     IDC        ICONT      CORAR      TOPWID      ENDST

3301 HV CHANGED MORE THAN HVINS

    19.00      12.19    1177.49       0.00       0.00    1181.23       3.73       0.94       0.23    1183.30
   50000.         0.   50000.          0.         0.     3224.          0.       449.        42.    1183.30
     0.11       0.00      15.51       0.00      0.030      0.044      0.030      0.000    1165.30    1061.61
 0.008962       119.       118.       125.          2          0          0       0.00     288.78    1350.39

1490 NH CARD USED
*SECNO 20.000

1645 INT SEC ADDED BY RAISING SEC      20.00,   -0.800FT AND MULTIPLYING BY    0.999

3301 HV CHANGED MORE THAN HVINS

     1.01      13.87    1179.57       0.00       0.00    1182.38       2.81       1.06       0.09    1184.50
   50000.         0.   50000.          0.         0.     3716.          0.       465.        43.    1184.50
     0.11       0.00      13.46       0.00      0.030      0.025      0.030      0.000    1165.70     639.59
 0.003422       197.       203.       243.          4          0          0       0.00     295.91     935.49

1645 INT SEC ADDED BY RAISING SEC       1.01,    0.400FT AND MULTIPLYING BY    1.000

     1.02      14.36    1180.46       0.00       0.00    1183.06       2.60       0.65       0.02    1184.90
   50000.         0.   50000.          0.         0.     3864.          0.       483.        45.    1184.90
     0.12       0.00      12.94       0.00      0.030      0.025      0.030      0.000    1166.10     638.77
 0.003033       197.       203.       243.          2          0          0       0.00     297.99     936.77

1645 INT SEC ADDED BY RAISING SEC       1.02,    0.400FT AND MULTIPLYING BY    1.000

    20.00      14.69    1181.19       0.00       0.00    1183.66       2.47       0.59       0.01    1185.30
   50000.         0.   50000.          0.         0.     3963.          0.       501.        46.    1185.30
     0.12       0.00      12.62       0.00      0.030      0.025      0.030      0.000    1166.50     638.30
 0.002805       197.       203.       243.          2          0          0       0.00     299.41     937.70

1490 NH CARD USED
```

```
   SECNO     DEPTH     CWSEL     CRIWS     WSELK     EG        HV        HL        OLOSS    BANK ELEV
   Q         QLOB      QCH       QROB      ALOB      ACH       AROB      VOL       TWA    LEFT/RIGHT
   TIME      VLOB      VCH       VROB      XNL       XNCH      XNR       WTN       ELMIN       SSTA
   SLOPE     XLOBL     XLCH      XLOBR     ITRIAL    IDC       ICONT     CORAR     TOPWID      ENDST

*SECNO 21.000
         DOWNSTREAM EDGE OF EXISTING PARK FACILITIES
    21.00     15.08   1182.38      0.00      0.00   1184.73      2.35      1.05      0.01   1186.50
   50000.        0.   50000.        0.        0.      4067.        0.      537.       49.   1186.50
     0.13      0.00     12.29      0.00     0.030     0.025     0.030     0.000   1167.30    950.17
 0.002577      337.      390.      550.         2         0         0      0.00    299.67   1249.83

1490 NH CARD USED
*SECNO 22.000
    22.00     15.45   1183.65      0.00      0.00   1185.87      2.22      1.13      0.01   1189.40
   50000.        0.   50000.        0.        0.      4183.        0.      580.       52.   1189.40
     0.14      0.00     11.95      0.00     0.030     0.025     0.030     0.000   1168.20    916.38
 0.002364      480.      460.      375.         2         0         0      0.00    301.24   1217.62

1490 NH CARD USED
*SECNO 23.000
    23.00     15.64   1184.84      0.00      0.00   1186.99      2.16      1.11      0.01   1191.60
   50000.        0.   50000.        0.        0.      4244.        0.      627.       55.   1191.60
     0.15      0.00     11.78      0.00     0.030     0.026     0.030     0.000   1169.20    563.59
 0.002269      520.      480.      300.         2         0         0      0.00    302.82    866.41

1490 NH CARD USED
*SECNO 24.000
         UPSTREAM EDGE OF EXISTING PARK FACILITIES
    24.00     15.80   1186.10      0.00      0.00   1188.21      2.11      1.21      0.00   1194.30
   50000.        0.   50000.        0.        0.      4292.        0.      680.       59.   1194.30
     0.17      0.00     11.65      0.00     0.030     0.026     0.030     0.000   1170.30   1101.40
 0.002189      540.      545.      555.         2         0         0      0.00    303.20   1404.60

1490 NH CARD USED
*SECNO 24.800
    24.80     16.07   1187.47      0.00      0.00   1189.49      2.03      1.28      0.01   1197.20
   50000.        0.   50000.        0.        0.      4377.        0.      740.       63.   1197.20
     0.18      0.00     11.42      0.00     0.030     0.026     0.030     0.000   1171.40    709.61
 0.002065      595.      600.      610.         2         0         0      0.00    304.77   1014.39

1490 NH CARD USED
```

```
   SECNO     DEPTH     CWSEL     CRIWS     WSELK     EG        HV        HL        OLOSS    BANK ELEV
   Q         QLOB      QCH       QROB      ALOB      ACH       AROB      VOL       TWA    LEFT/RIGHT
   TIME      VLOB      VCH       VROB      XNL       XNCH      XNR       WTN       ELMIN       SSTA
   SLOPE     XLOBL     XLCH      XLOBR     ITRIAL    IDC       ICONT     CORAR     TOPWID      ENDST

*SECNO 24.900

3301 HV CHANGED MORE THAN HVINS

3685 20 TRIALS ATTEMPTED WSEL,CWSEL
3693 PROBABLE MINIMUM SPECIFIC ENERGY
3720 CRITICAL DEPTH ASSUMED
          7-FOOT DROP STRUCTURE AT THIS LOCATION
    24.90     10.70  1189.10  1189.10      0.00  1194.05      4.95      0.06      0.88  1197.20
   50000.        0.   50000.        0.        0.    2800.        0.      741.       63.  1197.20
     0.18      0.00     17.86      0.00     0.030     0.025     0.035     0.000  1178.40   706.37
 0.008288       15.       15.       15.        20        11         0      0.00   283.26   989.63

1490 NH CARD USED
*SECNO 26.000

1645 INT SEC ADDED BY RAISING SEC      26.00,   -0.825FT AND MULTIPLYING BY   0.995

3301 HV CHANGED MORE THAN HVINS

     1.01     13.24  1191.92      0.00      0.00  1195.01      3.09      0.77      0.19  1198.68
   50000.        0.   50000.        0.        0.    3545.        0.      751.       64.  1198.68
     0.18      0.00     14.10      0.00     0.030     0.025     0.030     0.000  1178.68   740.80
 0.004015      133.      138.      158.         5         0         0      0.00   296.65  1037.45

1645 INT SEC ADDED BY RAISING SEC       1.01,    0.275FT AND MULTIPLYING BY   1.002

     1.02     13.78  1192.73      0.00      0.00  1195.55      2.82      0.51      0.03  1198.95
   50000.        0.   50000.        0.        0.    3711.        0.      763.       65.  1198.95
     0.19      0.00     13.47      0.00     0.030     0.025     0.030     0.000  1178.95   740.98
 0.003491      133.      138.      158.         3         0         0      0.00   299.54  1040.52

1645 INT SEC ADDED BY RAISING SEC       1.02,    0.275FT AND MULTIPLYING BY   1.002

     1.03     14.16  1193.38      0.00      0.00  1196.02      2.64      0.46      0.02  1199.23
   50000.        0.   50000.        0.        0.    3833.        0.      775.       66.  1199.23
     0.19      0.00     13.05      0.00     0.030     0.026     0.030     0.000  1179.23   741.50
 0.003167      133.      138.      158.         2         0         0      0.00   301.76  1043.25
```

```
   SECNO     DEPTH     CWSEL     CRIWS     WSELK     EQ        HV        HL        OLOSS    BANK ELEV
   Q         QLOB      QCH       QROB      ALOB      ACH       AROB      VOL       TWA    LEFT/RIGHT
   TIME      VLOB      VCH       VROB      XNL       XNCH      XNR       WTN       ELMIN       SSTA
   SLOPE     XLOBL     XLCH      XLOBR     ITRIAL    IDC       ICONT     CORAR     TOPWID      ENDST

1645 INT SEC ADDED BY RAISING SEC      1.03,   0.275FT AND MULTIPLYING BY   1.002

3265 DIVIDED FLOW

    26.00     14.44   1193.94   1190.14      0.00   1196.46      2.52      0.42      0.01   1199.50
   50000.        0.    49987.       13.        0.    3923.       30.      787.       68.   1199.50
     0.19      0.00     12.74      0.45     0.030     0.026     0.030     0.000   1179.50    742.24
 0.002952      133.      138.      158.         4        15         0      0.00    745.80   1606.19

1490 NH CARD USED
*SECNO 27.000
    27.00     14.85   1195.05      0.00      0.00   1197.44      2.39      0.97      0.01   1201.20
   50000.        0.    50000.        0.        0.    4033.        0.      819.       72.   1201.20
     0.20      0.00     12.40      0.00     0.030     0.026     0.030     0.000   1180.20    873.13
 0.002693      330.      345.      400.         2         0         0      0.00    303.34   1176.47

1490 NH CARD USED
*SECNO 28.000
    28.00     15.12   1195.92      0.00      0.00   1198.27      2.35      0.83      0.00   1201.90
   50000.        0.    50000.        0.        0.    4062.        0.      848.       75.   1201.90
     0.21      0.00     12.31      0.00     0.030     0.025     0.030     0.000   1180.80    405.34
 0.002563      314.      315.      320.         3         0         0      0.00    297.32    702.66

1490 NH CARD USED
*SECNO 29.000

1645 INT SEC ADDED BY RAISING SEC     29.00,  -0.400FT AND MULTIPLYING BY   0.933

3301 HV CHANGED MORE THAN HVINS

     1.01     16.07   1197.27      0.00      0.00   1199.02      1.75      0.69      0.06   1202.40
   50000.        0.    50000.        0.        0.    4704.        0.      878.       77.   1200.60
     0.22      0.00     10.63      0.00     0.030     0.026     0.030     0.000   1181.20    352.91
 0.002035      283.      303.      278.         3         0         0      0.00    350.15    703.06
```

```
   SECNO      DEPTH      CWSEL      CRIWS      WSELK      EG         HV         HL         OLOSS     BANK ELEV
   Q          QLOB       QCH        QROB       ALOB       ACH        AROB       VOL        TWA     LEFT/RIGHT
   TIME       VLOB       VCH        VROB       XNL        XNCH       XNR        WTN        ELMIN       SSTA
   SLOPE      XLOBL      XLCH       XLOBR      ITRIAL     IDC        ICONT      CORAR      TOPWID      ENDST

1645 INT SEC ADDED BY RAISING SEC      1.01,   0.400FT AND MULTIPLYING BY   1.072

         CONFLUENCE OF ACDC & SKUNK CREEK
    29.00      16.51    1198.11       0.00       0.00    1199.54       1.43       0.48       0.03    1202.80
   50000.         0.     50000.         0.         0.     5211.         0.       913.        79.    1201.00
     0.22       0.00       9.59       0.00      0.030      0.026      0.030      0.000    1181.60     377.38
 0.001293       283.       303.       278.          2          0          0       0.00     377.48     754.86

1490 NH CARD USED
*SECNO 30.000

1645 INT SEC ADDED BY RAISING SEC     30.00,  -0.300FT AND MULTIPLYING BY   1.098

     1.01      16.26    1198.16       0.00       0.00    1199.92       1.76       0.28       0.10    1203.40
   50000.         0.     50000.         0.         0.     4701.         0.       934.        81.    1203.40
     0.23       0.00      10.64       0.00      0.030      0.025      0.030      0.000    1181.90      12.50
 0.001804       185.       185.       185.          2          0          0       0.00     330.87     343.37

1645 INT SEC ADDED BY RAISING SEC      1.01,   0.300FT AND MULTIPLYING BY   0.910

         ACDC CHANNEL-FLOW=50,000 CFS
    30.00      16.03    1198.23       0.00       0.00    1200.42       2.19       0.37       0.13    1203.70
   50000.         0.     50000.         0.         0.     4211.         0.       953.        82.    1203.70
     0.23       0.00      11.87       0.00      0.030      0.025      0.030      0.000    1182.20      11.83
 0.002289       185.       185.       185.          2          0          0       0.00     300.34     312.17

1490 NH CARD USED
*SECNO 31.000
    31.00      16.55    1199.05       0.00       0.00    1201.08       2.03       0.65       0.02    1204.00
   50000.         0.     50000.         0.         0.     4369.         0.       982.        84.    1204.00
     0.24       0.00      11.44       0.00      0.030      0.025      0.030      0.000    1182.50      10.79
 0.002044       300.       300.       300.          2          0          0       0.00     302.42     313.21

1490 NH CARD USED
*SECNO 32.000
```

```
   SECNO     DEPTH     CWSEL     CRIWS     WSELK     EQ        HV        HL        OLOSS    BANK ELEV
   Q         QLOB      QCH       QROB      ALOB      ACH       AROB      VOL       TWA    LEFT/RIGHT
   TIME      VLOB      VCH       VROB      XNL       XNCH      XNR       WTN       ELMIN       SSTA
   SLOPE     XLOBL     XLCH      XLOBR     ITRIAL    IDC       ICONT     CORAR     TOPWID      ENDST


3301 HV CHANGED MORE THAN HVINS

3685 20 TRIALS ATTEMPTED WSEL,CWSEL
3693 PROBABLE MINIMUM SPECIFIC ENERGY
3720 CRITICAL DEPTH ASSUMED
         LOCATION OF 4-FOOT-HIGH COE DROP STRUCTURE
    32.00     15.60  1199.10  1199.10      0.00  1205.54      6.44      0.05      1.32  1202.00
   50000.        0.   50000.        0.        0.    2456.        0.      983.       84.  1202.00
     0.24      0.00     20.36      0.00     0.030     0.035     0.030     0.000   1183.50   113.02
 0.009130       12.       12.       12.        20         8         0      0.00    194.06   307.08
```

PROFILE FOR STREAM SKUNK CREEK, W/WSEL FR

PLOTTED POINTS (BY PRIORITY)-E-ENERGY, W-WATER SURFACE, I-INVERT, C-CRITICAL W.S., L-LEFT BANK, R-RIGHT BANK, M-LOWER END STA

ELEVATION	1130.	1140.	1150.	1160.	1170.	1180.	1190.	1200.	1210.	1220.
SECNO	CUMDIS									
1.00	0.	C I.	LW E. R.						M	
	50.	C I.	WL E. R						M	
	100.	C I	W LE. R						M	
	150.	C I	W E. L R						M	
	200.	C I	W E L R						M	
	250.	C .I	W E R L						M	
2.00	300.	. .I	CW E R L						M	
1.01	350.	. I	WLR .E					M	.	
3.00	400.	.	I W LE						M	
3.50	450.	C .	I .W LE R.						M	
4.00	500.	C .	I . W EL R						M	
	550.	C .	I . W EL R						M	
	600.	C .	I . W E L R						M.	
1.01	650.	C .	I . W E L.R						M.	
	700.	C .	I . WE L.R						M.	
1.02	750.	C .	I . WE L.R						M	
	800.	C .	I . WE L.R						M	
	850.	C .	I . WE L.R						M	
4.50	900.	C .	I . W E L.R						M	
	950.	C .	I . WE LR						M	
	1000.	C .	I . WE LR						M	
	1050.	C .	I . WE LR						M	
	1100.	C .	I . WE LR						M	
	1150.	C .	I . WE LR						M	
	1200.	C .	I . WE .L						M	
	1250.	C .	I . WE .L						M	
	1300.	C .	I . WE .L						M	
5.00	1350.	C .	I . WE .RL						M	
	1400.	C .	I . WE . L						M	
	1450.	C .	I . W E . LR						M	
	1500.	C .	I . WE . LR						M	
	1550.	C .	I . WE . L R						M	
	1600.	C .	I . WE . L R						M	
	1650.	C .	I . WE . L R						M	
	1700.	C .	I . WE . L R						M	
	1750.	C .	I . WE . L R						M	
	1800.	C .	I . WE . L R						M	
6.10	1850.	C .	I . WE . L R						M	
1.01	1900.	. .	I . W E .			L R			M	
1.02	1950.	C .	I . W .E			LR			M	
	2000.	C .	I . W .E			LR			M	
1.03	2050.	C .	I . W .E			LR			M	
7.10	2100.	C .	I . W .E			LR			M	
1.01	2150.	C .	I . W . E			LR			M	
7.20	2200.	C .	I . W. E			LR			M	
7.30	2250.	C .	I . W. E			L R			M	
	2300.	C .	I . W. E			L R			M	
7.40	2350.	C .	I . W E			L R			M	
7.50	2400.	C .	I . W E			LR			M	

```
  1.01 2450.  C         .         .     I   .         W  E      .      LR .         .         M         .         .
  7.60 2500.  C         .         .     I   .         .W E      .      LR .         .         M         .         .
  1.01 2550.  C         .         .     I   .         .W E L    .         .         .         M         .         .
  1.02 2600.  C         .         .     I   .         . WE L    .         .         .         M         .         .
 11.00 2650.  C         .         .     I   .         . WE RL   .         .         .         M         .         .
       2700.  C         .         .     I   .         . WE L    .         .         .         M         .         .
 12.00 2750.  C         .         .      I  .         . WEL R   .         .         .         M         .         .
       2800.  C         .         .      I  .         .  WE  LR .         .         .         M         .         .
       2850.  C         .         .      I  .         .  WE    LR         .         .         M         .         .
 13.10 2900.  C         .         .      I  .         .  WE     .L        .         .         M         .         .
 13.20 2950.  .         .         .         .  I      .W   E    .L        .         .         M         .         .
  1.01 3000.  C         .         .         .  I      . W  E    L         .         .         M         .         .
  1.02 3050.  C         .         .         .  I      .  W E    L         .         .         M         .         .
  1.03 3100.  C         .         .         .  I      .  W E    L         .         .         M         .         .
 14.10 3150.  C         .         .         .  I      .  W  E   L         .         .         M         .         .
 14.20 3200.  C         .         .         .  I      .  W  E   L         .         .         M         .         .
 14.30 3250.  C         .         .         .  I      .   W E   L         .         .         M         .         .
 14.40 3300.  C         .         .         .  I      .   W E   L         .         .         M         .         .
 15.00 3350.  C         .         .         .   I     .    WE   L         .         .         M         .         .
       3400.  C         .         .         .   I     .    W E  L         .         .         M         .         .
 16.00 3450.  C         .         .         .   I     .     WE  RL        .         .         M         .         .
       3500.  C         .         .         .   I     .     WE  .L        .         .         M         .         .
       3550.  C         .         .         .   I     .     WE  .RL       .         .         M         .         .
       3600.  C         .         .         .   I     .     W E . L       .         .         M         .         .
 18.00 3650.  C         .         .         .   I     .     W E . L       .         .         M         .         .
       3700.  C         .         .         .   I     .     W E . L       .         .         M         .         .
  1.01 3750.  C         .         .         .    I    .     W E .  L      .         .        M.         .         .
       3800.  C         .         .         .    I    .     W  E.  L      .         .        M.         .         .
  1.02 3850.  C         .         .         .    I    .      W E.  L      .         .         M         .         .
       3900.  C         .         .         .    I    .      W  E  L      .         .         M         .         .
       3950.  C         .         .         .    I    .      W  E  L      .         .         M         .         .
  1.03 4000.  C         .         .         .    I    .      W  E  L      .         .         M         .         .
       4050.  C         .         .         .    I    .      W  .E L      .         .         M         .         .
 19.00 4100.  C         .         .         .    I    .      W  .E L      .         .         M         .         .
       4150.  C         .         .         .    I    .       W . E L     .         .         M         .         .
       4200.  C         .         .         .    I    .        W. E L     .         .         M         .         .
       4250.  C         .         .         .     I   .        W. E L     .         .        M.         .         .
  1.01 4300.  C         .         .         .     I   .         W E  L    .         .        M.         .         .
       4350.  C         .         .         .     I   .         W  E L    .         .        M.         .         .
       4400.  C         .         .         .     I   .         W  E L    .         .        M.         .         .
       4450.  C         .         .         .     I   .         W  E L    .         .        M.         .         .
  1.02 4500.  C         .         .         .     I   .         W  E L    .         .         M         .         .
       4550.  C         .         .         .     I   .         .W E L    .         .         M         .         .
       4600.  C         .         .         .     I   .         .W E L    .         .         M         .         .
       4650.  C         .         .         .     I   .         .W  EL    .         .         M         .         .
 20.00 4700.  C         .         .         .      I  .         .W  EL    .         .         M         .         .
       4750.  C         .         .         .      I  .         .W  EL    .         .         M         .         .
       4800.  C         .         .         .      I  .         . W E L   .         .         M         .         .
       4850.  C         .         .         .      I  .         . W E L   .         .         M         .         .
       4900.  C         .         .         .      I  .         . W E L   .         .         M         .         .
       4950.  C         .         .         .      I  .         . W E L   .         .         M         .         .
       5000.  C         .         .         .      I  .         . W E L   .         .         M         .         .
       5050.  C         .         .         .      I  .         . W  EL   .         .         M         .         .
 21.00 5100.  C         .         .         .      I  .         . W  E L  .         .         M         .         .
       5150.  C         .         .         .      I  .         .   W E L .         .         M         .         .
       5200.  C         .         .         .      I  .         .   W E L .         .         M         .         .
       5250.  C         .         .         .       I .         .   W E L .         .         M         .         .
       5300.  C         .         .         .       I .         .   W E  L.         .         M         .         .
       5350.  C         .         .         .       I .         .   W E  L.         .         M         .         .
       5400.  C         .         .         .       I .         .   W E  L.         .         M         .         .
```

```
        5450.  C .  .  .  I .  .  W  E  L.  .  M  .  .
        5500.  C .  .  .  I .  .  W  E  L.  .  M  .  .
22.00   5550.  C .  .  .  I .  .  W E  L.  .  M  .  .
        5600.  C .  .  .  I .  .  W E   L  .  M  .  .
        5650.  C .  .  .  I .  .  W E   L  .  M  .  .
        5700.  C .  .  .  .I.  .  W E   L  .  M  .  .
        5750.  C .  .  .  .I.  .  W E   L  .  M  .  .
        5800.  C .  .  .  .I.  .  W E   .L .  M  .  .
        5850.  C .  .  .  .I.  .  W  E  .L .  M  .  .
        5900.  C .  .  .  .I.  .  W E  .L  .  M  .  .
        5950.  C .  .  .  .I.  .  W E  .L  .  M  .  .
        6000.  C .  .  .  .I.  .  W E  .L  .  M  .  .
23.00   6050.  C .  .  .  .I.  .  W E  . L .  M  .  .
        6100.  C .  .  .  .I.  .  W E  . L .  M  .  .
        6150.  C .  .  .  .I.  .  W E  . L .  M  .  .
        6200.  C .  .  .   I   .  W E  . L .  M  .  .
        6250.  C .  .  .   I   .  W E  .  L .  M  .  .
        6300.  C .  .  .   I   .  W  E .  L .  M  .  .
        6350.  C .  .  .   I   .   W E .  L .  M  .  .
        6400.  C .  .  .   I   .   W E .  L .  M  .  .
        6450.  C .  .  .   I   .   W E .   L .  M  .  .
        6500.  C .  .  .   I   .   W E .   L .  M  .  .
        6550.  C .  .  .   I   .   W E .   L .  M  .  .
24.00   6600.  C .  .  .   I   .   W E .   L .  M  .  .
        6650.  C .  .  .   I   .   W E .    L .  M  .  .
        6700.  C .  .  .   I   .   W E .    L .  M  .  .
        6750.  C .  .  .  .I   .   W  E.    L .  M  .  .
        6800.  C .  .  .  .I   .    W E.    L .  M  .  .
        6850.  C .  .  .  .I   .    W E.     L .  M  .  .
        6900.  C .  .  .  .I   .    W E.     L .  M  .  .
        6950.  C .  .  .  .I   .    W E.     L .  M  .  .
        7000.  C .  .  .  .I   .    W E.     L .  M  .  .
        7050.  C .  .  .  .I   .    W E.     L .  M  .  .
        7100.  C .  .  .  .I   .    W E.      L .  M  .  .
        7150.  C .  .  .  .I   .    W E.      L .  M  .  .
24.80   7200.  C .  .  .  .I   .    W E.      L .  M  .  .
24.90   7250.  .  .  .  .  .  I .   W.    E  L .  M  .  .
        7300.  C .  .  .  .  I.    W   E   L .  M  .  .
 1.01   7350.  C .  .  .  .  I.     . W  E   L. M. .  .
        7400.  C .  .  .  .  I.     . W  E   L. M. .  .
        7450.  C .  .  .  .  I.     .  W E   L. M. .  .
 1.02   7500.  C .  .  .  .  I.     .  W  E  L. M. .  .
        7550.  C .  .  .  .  I.     .  W  E  L.  M  .  .
 1.03   7600.  C .  .  .  .  I.     .  W  E  L.  M  .  .
        7650.  C .  .  .  .  I.     .   W E  L.  M  .  .
        7700.  C .  .  .  .  I.     .   W E  L.  M  .  .
26.00   7750.  .  .  .  .  .  I     C   W E   L  M  .  .
        7800.  C .  .  .  .  I     .   W  E  L  M  .  .
        7850.  C .  .  .  .  I     .   W  E  L  M  .  .
        7900.  C .  .  .  .  I     .   W  E  L  M  .  .
        7950.  C .  .  .  .  I     .    W E  L  M  .  .
        8000.  C .  .  .  .  I     .    W E  .L M  .  .
        8050.  C .  .  .  .  I     .    W E  .L M  .  .
27.00   8100.  C .  .  .  .  I     .    W E  .L M  .  .
        8150.  C .  .  .  .  I     .    W  E .L M  .  .
        8200.  C .  .  .  .  I     .    W  E .L M  .  .
        8250.  C .  .  .  .  I     .    W  E . L M  .  .
        8300.  C .  .  .  .  .I    .     W E . L M  .  .
        8350.  C .  .  .  .  .I    .     W E . L M  .  .
28.00   8400.  C .  .  .  .  .I    .     W E . L M  .  .
```

```
          8450.  C         .          .          .          .          .I     .    W E . L       M          .          .
          8500.  C         .          .          .          .          .I     .    W  E.RL       M          .          .
          8550.  C         .          .          .          .          .I     .     W E.RL       M          .          .
          8600.  C         .          .          .          .          .I     .     W E.RL       M          .          .
          8650.  C         .          .          .          .          .I     .     W E.RL       M          .          .
   1.01   8700.  C         .          .          .          .          .I     .     W E.RL       M          .          .
          8750.  C         .          .          .          .          .I     .     W E.RL       M          .          .
          8800.  C         .          .          .          .          .I     .      WE.R L      M          .          .
          8850.  C         .          .          .          .          .I     .      WE.R L      M          .          .
          8900.  C         .          .          .          .          .I     .      WE.R L      M          .          .
          8950.  C         .          .          .          .          . I    .      WE.R L      M          .          .
  29.00   9000.  C         .          .          .          .          . I    .      W ER L      M          .          .
          9050.  C         .          .          .          .          . I    .      W E RL      M          .          .
          9100.  C         .          .          .          .          . I    .      W E RL      M          .          .
          9150.  C         .          .          .          .          . I    .      W E  L      M          .          .
   1.01   9200.  C         .          .          .          .          . I    .      W E  L      M          .          .
          9250.  C         .          .          .          .          . I    .      W E  L      M          .          .
          9300.  C         .          .          .          .          . I    .      W E   L     M          .          .
          9350.  C         .          .          .          .          . I    .      W E   L     M          .          .
  30.00   9400.  C         .          .          .          .          . I    .      W E   L     M          .          .
          9450.  C         .          .          .          .          . I    .      W .E  L     M          .          .
          9500.  C         .          .          .          .          . I    .       W.E  L     M          .          .
          9550.  C         .          .          .          .          . I    .       W.E  L     M          .          .
          9600.  C         .          .          .          .          . I    .       W.E  L     M          .          .
          9650.  C         .          .          .          .          . I    .       W.E  L     M          .          .
  31.00   9700.  C         .          .          .          .          .  I   .       W.E  L     M          .          .
  32.00   9750.  .         .          .          .          .          .   I  .       W. L   E   M          .          .
```

```
*************************************************
  HEC2 RELEASE DATED NOV 76 UPDATED MARCH 1982
  ERROR CORR -  01,02,03,04,05
  MODIFICATION -  50,51,52,53,54,55
*************************************************
```

NOTE- ASTERISK (*) AT LEFT OF CROSS-SECTION NUMBER INDICATES MESSAGE IN SUMMARY OF ERRORS LIST

SKUNK CREEK, W/WSEL FR

SUMMARY PRINTOUT TABLE 150

	SECNO	XLCH	ELTRD	ELLC	ELMIN	Q	CWSEL	CRIWS	EG	10K*S	VCH	AREA	.01K
	1.000	0.00	0.00	0.00	1139.00	50000.00	1154.00	0.00	1158.08	63.00	16.46	3160.68	6299.18
	2.000	260.00	0.00	0.00	1140.80	50000.00	1155.53	1155.40	1159.98	74.20	17.09	2985.55	5804.58
*	3.000	100.00	0.00	0.00	1152.00	50000.00	1159.90	1159.90	1163.68	93.47	15.59	3206.49	5171.64
	3.500	30.00	0.00	0.00	1152.10	50000.00	1161.45	0.00	1164.00	51.23	12.81	3902.04	6985.86
	4.000	90.00	0.00	0.00	1152.30	50000.00	1162.33	0.00	1164.45	38.63	11.67	4285.25	8044.80
*	4.500	400.00	0.00	0.00	1153.40	50000.00	1164.44	0.00	1165.54	17.85	8.43	5932.54	11835.12
	5.000	460.00	0.00	0.00	1154.20	50000.00	1165.27	0.00	1166.35	17.04	8.33	5998.95	12110.96
	6.100	480.00	0.00	0.00	1154.90	50000.00	1166.18	0.00	1167.07	13.08	7.30	6652.97	13825.58
*	7.100	245.00	0.00	0.00	1155.40	50000.00	1167.50	0.00	1171.35	55.56	15.75	3175.38	6707.95
*	7.200	100.00	0.00	0.00	1155.59	50000.00	1168.63	0.00	1171.89	43.01	14.50	3448.12	7623.98
	7.300	5.00	0.00	0.00	1155.60	50000.00	1168.59	0.00	1171.97	43.64	14.75	3389.29	7568.74
*	7.400	145.00	1186.80	1178.00	1155.80	50000.00	1169.62	0.00	1172.57	35.30	13.78	3627.93	8415.41
	7.500	5.00	0.00	0.00	1155.81	50000.00	1169.74	0.00	1172.60	34.18	13.57	3684.08	8552.52
*	7.600	100.00	0.00	0.00	1156.00	50000.00	1170.76	0.00	1172.95	24.20	11.88	4208.75	10163.21
*	11.000	115.00	0.00	0.00	1156.20	50000.00	1172.18	0.00	1173.24	10.30	8.25	6064.01	15577.44
	12.000	210.00	0.00	0.00	1156.50	50000.00	1172.48	0.00	1173.45	9.29	7.90	6329.55	16406.13
	13.100	130.00	0.00	0.00	1156.70	50000.00	1172.67	0.00	1173.58	9.38	7.67	6521.87	16326.77

	SECNO	XLCH	ELTRD	ELLC	ELMIN	Q	CWSEL	CRIWS	EQ	10K*S	VCH	AREA	.01K
*	13.200	15.00	0.00	0.00	1162.70	50000.00	1170.76	1170.76	1174.64	92.71	15.82	3161.18	5192.94
*	14.100	150.00	0.00	0.00	1163.12	50000.00	1173.21	0.00	1175.57	40.91	12.31	4062.23	7817.07
	14.200	5.00	0.00	0.00	1163.10	50000.00	1173.29	0.00	1175.60	39.64	12.19	4102.08	7941.17
	14.300	80.00	1181.00	1178.00	1163.32	50000.00	1173.82	0.00	1175.99	35.77	11.80	4237.54	8359.90
	14.400	5.00	0.00	0.00	1163.34	50000.00	1173.84	0.00	1176.00	35.77	11.80	4237.87	8360.32
	15.000	90.00	0.00	0.00	1163.60	50000.00	1174.61	0.00	1176.37	36.34	10.65	4695.30	8294.12
	16.000	210.00	0.00	0.00	1164.00	50000.00	1175.73	0.00	1177.11	31.36	9.45	5291.14	8928.48
	18.000	185.00	0.00	0.00	1164.40	50000.00	1176.11	0.00	1177.78	31.61	10.37	4823.79	8892.83
*	19.000	470.00	0.00	0.00	1165.30	50000.00	1177.49	0.00	1181.23	89.62	15.51	3224.05	5281.67
*	20.000	610.00	0.00	0.00	1166.50	50000.00	1181.19	0.00	1183.66	28.05	12.62	3963.28	9440.09
	21.000	390.00	0.00	0.00	1167.30	50000.00	1182.38	0.00	1184.73	25.77	12.29	4067.40	9849.83
	22.000	460.00	0.00	0.00	1168.20	50000.00	1183.65	0.00	1185.87	23.64	11.95	4182.96	10283.79
	23.000	480.00	0.00	0.00	1169.20	50000.00	1184.83	0.00	1186.99	22.69	11.78	4243.69	10497.24
	24.000	545.00	0.00	0.00	1170.30	50000.00	1186.10	0.00	1188.21	21.89	11.65	4291.65	10686.12
	24.800	600.00	0.00	0.00	1171.40	50000.00	1187.47	0.00	1189.49	20.65	11.42	4376.66	11002.92
*	24.900	15.00	0.00	0.00	1178.40	50000.00	1189.10	1189.10	1194.05	82.88	17.86	2800.03	5492.10
*	26.000	550.00	0.00	0.00	1179.50	50000.00	1193.94	1190.14	1196.46	29.52	12.74	3953.19	9202.56
	27.000	345.00	0.00	0.00	1180.20	50000.00	1195.05	0.00	1197.44	26.93	12.40	4032.91	9635.22
	28.000	315.00	0.00	0.00	1180.80	50000.00	1195.92	0.00	1198.27	25.63	12.31	4061.68	9876.77
*	29.000	605.00	0.00	0.00	1181.60	50000.00	1198.11	0.00	1199.54	12.93	9.59	5211.39	13905.54
*	30.000	370.00	0.00	0.00	1182.20	50000.00	1198.23	0.00	1200.42	22.89	11.87	4211.41	10449.98
	31.000	300.00	0.00	0.00	1182.50	50000.00	1199.05	0.00	1201.08	20.44	11.44	4369.14	11058.12
*	32.000	12.00	0.00	0.00	1183.50	50000.00	1199.10	1199.10	1205.54	91.30	20.36	2455.95	5232.74

SKUNK CREEK, W/WSEL FR

SUMMARY PRINTOUT TABLE 150

	SECNO	Q	CWSEL	DIFWSP	DIFWSX	DIFKWS	TOPWID	XLCH
	1.000	50000.00	1154.00	0.00	0.00	0.00	362.05	0.00
	2.000	50000.00	1155.53	0.00	1.53	0.00	319.08	260.00
*	3.000	50000.00	1159.90	0.00	3.78	0.00	429.57	100.00
	3.500	50000.00	1161.45	0.00	1.55	0.00	446.27	30.00
	4.000	50000.00	1162.33	0.00	0.88	0.00	455.61	90.00
*	4.500	50000.00	1164.44	0.00	0.46	0.00	579.56	400.00
	5.000	50000.00	1165.27	0.00	0.83	0.00	574.62	460.00
	6.100	50000.00	1166.18	0.00	0.91	0.00	712.32	480.00
*	7.100	50000.00	1167.50	0.00	0.32	0.00	284.85	245.00
*	7.200	50000.00	1168.63	0.00	0.48	0.00	288.65	100.00
	7.300	50000.00	1168.59	0.00	-0.04	0.00	281.82	5.00
*	7.400	50000.00	1169.62	0.00	1.03	0.00	284.94	145.00
	7.500	50000.00	1169.74	0.00	0.12	0.00	289.02	5.00
*	7.600	50000.00	1170.76	0.00	0.43	0.00	311.26	100.00
*	11.000	50000.00	1172.18	0.00	0.30	0.00	408.75	115.00
	12.000	50000.00	1172.48	0.00	0.30	0.00	421.99	210.00
	13.100	50000.00	1172.67	0.00	0.18	0.00	440.43	130.00
*	13.200	50000.00	1170.76	0.00	-1.91	0.00	408.59	15.00
*	14.100	50000.00	1173.21	0.00	0.27	0.00	422.67	150.00
	14.200	50000.00	1173.29	0.00	0.08	0.00	423.01	5.00
	14.300	50000.00	1173.82	0.00	0.53	0.00	424.82	80.00
	14.400	50000.00	1173.84	0.00	0.02	0.00	424.88	5.00
	15.000	50000.00	1174.61	0.00	0.77	0.00	448.34	90.00
	16.000	50000.00	1175.73	0.00	1.12	0.00	475.37	210.00

	SECNO	Q	CWSEL	DIFWSP	DIFWSX	DIFKWS	TOPWID	XLCH
	18.000	50000.00	1176.11	0.00	0.39	0.00	435.14	185.00
*	19.000	50000.00	1177.49	0.00	0.40	0.00	288.78	470.00
*	20.000	50000.00	1181.19	0.00	0.73	0.00	299.41	610.00
	21.000	50000.00	1182.38	0.00	1.19	0.00	299.67	390.00
	22.000	50000.00	1183.65	0.00	1.28	0.00	301.24	460.00
	23.000	50000.00	1184.83	0.00	1.18	0.00	302.82	480.00
	24.000	50000.00	1186.10	0.00	1.27	0.00	303.20	545.00
	24.800	50000.00	1187.47	0.00	1.36	0.00	304.77	600.00
*	24.900	50000.00	1189.10	0.00	1.64	0.00	283.26	15.00
*	26.000	50000.00	1193.94	0.00	0.55	0.00	745.80	550.00
	27.000	50000.00	1195.05	0.00	1.12	0.00	303.34	345.00
	28.000	50000.00	1195.92	0.00	0.86	0.00	297.32	315.00
*	29.000	50000.00	1198.11	0.00	0.84	0.00	377.48	605.00
*	30.000	50000.00	1198.23	0.00	0.07	0.00	300.34	370.00
	31.000	50000.00	1199.05	0.00	0.82	0.00	302.42	300.00
*	32.000	50000.00	1199.10	0.00	0.05	0.00	194.06	12.00

SUMMARY OF ERRORS AND SPECIAL NOTES

```
CAUTION  SECNO=    3.000  PROFILE= 1  INTERPOLATED XSECTIONS USED

CAUTION  SECNO=    4.500  PROFILE= 1  INTERPOLATED XSECTIONS USED

CAUTION  SECNO=    7.100  PROFILE= 1  INTERPOLATED XSECTIONS USED

CAUTION  SECNO=    7.200  PROFILE= 1  INTERPOLATED XSECTIONS USED

CAUTION  SECNO=    7.400  PROFILE= 1  HYDRAULIC JUMP D.S.

CAUTION  SECNO=    7.600  PROFILE= 1  INTERPOLATED XSECTIONS USED

CAUTION  SECNO=   11.000  PROFILE= 1  INTERPOLATED XSECTIONS USED

CAUTION  SECNO=   13.200  PROFILE= 1  CRITICAL DEPTH ASSUMED
CAUTION  SECNO=   13.200  PROFILE= 1  MINIMUM SPECIFIC ENERGY

CAUTION  SECNO=   14.100  PROFILE= 1  INTERPOLATED XSECTIONS USED

CAUTION  SECNO=   19.000  PROFILE= 1  INTERPOLATED XSECTIONS USED

CAUTION  SECNO=   20.000  PROFILE= 1  INTERPOLATED XSECTIONS USED

CAUTION  SECNO=   24.900  PROFILE= 1  CRITICAL DEPTH ASSUMED
CAUTION  SECNO=   24.900  PROFILE= 1  PROBABLE MINIMUM SPECIFIC ENERGY
CAUTION  SECNO=   24.900  PROFILE= 1  20 TRIALS ATTEMPTED TO BALANCE WSEL

CAUTION  SECNO=   26.000  PROFILE= 1  INTERPOLATED XSECTIONS USED

CAUTION  SECNO=   29.000  PROFILE= 1  INTERPOLATED XSECTIONS USED

CAUTION  SECNO=   30.000  PROFILE= 1  INTERPOLATED XSECTIONS USED

CAUTION  SECNO=   32.000  PROFILE= 1  CRITICAL DEPTH ASSUMED
CAUTION  SECNO=   32.000  PROFILE= 1  PROBABLE MINIMUM SPECIFIC ENERGY
CAUTION  SECNO=   32.000  PROFILE= 1  20 TRIALS ATTEMPTED TO BALANCE WSEL
```