83rd Avenue / Pinnacle Peak Drainage Improvements

Special Structures

Prepared by:
Jacobs

January 2006

Table of Contents

1. Quantities

2. Plan Sheets

3. Structural Calculations

			Concrete			Reinforcement			
Detail No.	Type	Location	Quantity	Unit Cost	TOTAL	Quantity	Unit Cost	TOTAL	Detail No.
2	Vault	83rd Ave: Sta. 100+05	10.0 CY	$ 400	$ 3,989	1803 lbs	Included	$ -	2
3	Manhole	83rd Ave: Sta. 102+00	5.3 CY	$ 400	$ 2,136	1188 lbs	Included	$ -	3
4	Vault	83rd Ave.: Sta. 104+75	7.2 CY	$ 400	$ 2,886	1371 lbs	Included	$ -	4
5	Manhole	83rd Ave.: Sta. 134+86	13.7 CY	$ 400	$ 5,481	2497 lbs	Included	$ -	5
6	Vault	Pinnacle Peak Rd: Sta. 199+60	8.9 CY	$ 400	$ 3,544	1532 lbs	Included	$ -	6
7	Manhole	Pinnacle Peak Rd: Sta. 226+64	9.9 CY	$ 400	$ 3,961	1676 lbs	Included	$ -	7
9	Manhole	Pinnacle Peak Rd: Sta. 244+40	16.8 CY	$ 400	$ 6,734	2872 lbs	Included	$ -	9
10	Manhole	Pinnacle Peak Rd: Sta. 245+65	23.5 CY	$ 400	$ 9,405	5289 lbs	Included	$ -	10
11	Manhole	87th Ave.: Sta. 313+52	25.0 CY	$ 400	$ 9,986	4471 lbs	Included	$ -	11
12	Stilling Basin	87th Ave.: Sta.61+62	96.1 CY	$ 400	$ 38,440	14775 lbs	Included	$ -	12
13	Manhole	87th Ave.: Sta. 326+40	21.8 CY	$ 400	$ 8,701	5129 lbs	Included	$ -	13
14	Manhole	89th Ave.: Sta. 416+56	12.5 CY	$ 400	$ 5,000	2020 lbs	Included	$ -	14
15	Vault	Calle Lejos: Sta. 336+55	13.8 CY	$ 400	$ 5,522	2205 lbs	Included	$ -	15
16	Vault	Calle Lejos: Sta. 339+55	17.4 CY	$ 400	$ 6,955	3488 lbs	Included	$ -	16
17	Vault	Cielo Grande: Sta. 400+30	10.5 CY	$ 400	$ 4,213	1729 lbs	Included	$ -	17
18	Manhole	89th Ave.: Sta. 413+23	12.4 CY	$ 400	$ 4,977	2447 lbs	Included	$ -	18
19	Manhole	83rd Ave.: Sta. 142+46	8.4 CY	$ 400	$ 3,350	1722 lbs	Included	$ -	19
20	Inlet Structure	Ventana Picacho RB Sta. 81+37	9.9 CY	$ 400	$ 3,950	1411 lbs	Included	$ -	20
21	Inlet Structure	Ventana Picacho RB Sta. 85+77	42.6 CY	$ 400	$ 17,044	4928 lbs	Included	$ -	21
22	Inlet Structure	Calle Lajos: Sta. 340+27	6.2 CY	$ 400	$ 2,464	1257 lbs	Included	$ -	22
23	Manhole	87th Ave.: Sta. 307+50	5.8 CY	$ 400	$ 2,306	1350 lbs	Included	$ -	23
24	Manhole	87th Ave.: Sta. 61+37	15.1 CY	$ 400	$ 6,037	2332 lbs	Included	$ -	24

Vault	83rd Ave: Sta. 100+05

Vault	83rd Ave: Sta. 100+05	
SUMMARY:	CONCRETE	10.0 CY
	REBAR	1802.7 lbs

GEOMETRY	Outside	Inside	Wall
Width (ft.)	10.00	8.17	0.92 ft.
Length (ft.)	12.00	10.17	
Height (ft.)	4.67	3.00	
Volume (ft.^{3})	560	249.0833	

OPENINGS	TOP	SIDE 1	SIDE 2	SIDE 3	SIDE 4	SIDE 5	SIDE 6	TOTAL
Diameter (ft.)	2.5	3.0	3.0	3.0	3.0			
Skew (deg)	0.0	27.5	27.5	0.0	0.0			
Bar Perimeter (ft.)	10.4	15.7	15.7	14.1	14.1	0.0	0.0	
Area (ft.^{2})	4.9	11.9	11.9	10.6	10.6	0.0	0.0	
Volume (ft.^{3})	4.1	10.9	10.9	9.7	9.7	0.0	0.0	45.3

SUNDRY	3.7	ft.^{3}
CONCRETE	**10.0 CY**	

REBAR	Size	Dim.	Hook	Length	Weight/ft.	Number	Weight
Bot Slab BB	#5	9.67	0.83	11.33	1.043	13	154 lbs
Bot Slab B	#4	11.67	0.67	13.00	0.668	11	96 lbs
Bot Slab TT	#5	9.67	0.83	11.33	1.043	13	154 lbs
Bot Slab T	#4	11.67	0.67	13.00	0.668	11	96 lbs
Wall Vert	#5	4.33	1.17 *	6.67	1.043	80	556 lbs
Wall Horiz	#4	9.67	0.67	11.00	0.668	12	88 lbs
Wall Horiz	#4	11.67	0.67	13.00	0.668	12	104 lbs
Top Slab BB	#5	9.67	0.83	11.33	1.043	13	154 lbs
Top Slab B	#4	11.67	0.67	13.00	0.668	11	96 lbs
Top Slab TT	#5	9.67	0.83	11.33	1.043	13	154 lbs
Top Slab T	#4	11.67	0.67	13.00	0.668	11	96 lbs
Additional #6's	#6	0.00	0.00	0.00	1.502	0	0 lbs
Trimmer Bars	#6			69.87	1.502	2	210 lbs
REBAR	**1802.7 lbs**						

* Adds 4" to represent the longer hook on the outside bars

size	lbs/ft	Hook
#4	0.668	0.67
#5	1.043	0.83
#6	1.502	1.00
#7	2.044	1.17
#8	2.67	1.33

Legend:

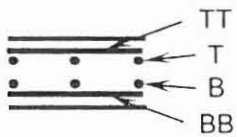

SUNDRY:	18 lbs
OPENINGS:	-171 lbs

Manhole	83rd Ave: Sta. 102+00

Manhole	83rd Ave: Sta. 102+00	
SUMMARY:	CONCRETE	5.3 CY
	REBAR	1187.8 lbs

GEOMETRY	Outside	Inside	Wall
Width (ft.)	6.00	4.17	0.92 ft.
Length (ft.)	11.00	9.17	
Height (ft.)	4.67	3.00	
Volume (ft.^{3})	308	114.5833	

OPENINGS	TOP	SIDE 1	SIDE 2	SIDE 3	SIDE 4	SIDE 5	SIDE 6	TOTAL
Diameter (ft.)	4.0	3.0	3.0	3.0	3.0			
Skew (deg)	0.0	0.0	0.0	0.0	0.0			
Bar Perimeter (ft.)	15.1	14.1	14.1	14.1	14.1	0.0	0.0	
Area (ft.^{2})	12.6	10.6	10.6	10.6	10.6	0.0	0.0	
Volume (ft.^{3})	10.5	9.7	9.7	9.7	9.7	0.0	0.0	49.2

SUNDRY 0.0 ft.^{3}

CONCRETE 5.3 CY

REBAR	Size	Dim.	Hook	Length	Weight/ft.	Number	Weight
Bot Slab BB	#5	5.67	0.83	7.33	1.043	12	92 lbs
Bot Slab B	#4	10.67	0.67	12.00	0.668	7	56 lbs
Bot Slab TT	#5	5.67	0.83	7.33	1.043	12	92 lbs
Bot Slab T	#4	10.67	0.67	12.00	0.668	7	56 lbs
Wall Vert	#5	4.33	1.17 *	6.67	1.043	60	417 lbs
Wall Horiz	#4	5.67	0.67	7.00	0.668	12	56 lbs
Wall Horiz	#4	10.67	0.67	12.00	0.668	12	96 lbs
Top Slab BB	#5	5.67	0.83	7.33	1.043	12	92 lbs
Top Slab B	#4	10.67	0.67	12.00	0.668	7	56 lbs
Top Slab TT	#5	5.67	0.83	7.33	1.043	12	92 lbs
Top Slab T	#4	10.67	0.67	12.00	0.668	7	56 lbs
Additional #6's	#6	0.00	0.00	0.00	1.502	0	0 lbs
Trimmer Bars	#6			71.38	1.502	2	214 lbs
REBAR	**1187.8 lbs**						

* Adds 4" to represent the longer hook on the outside bars

size	lbs/ft	Hook
#4	0.668	0.67
#5	1.043	0.83
#6	1.502	1.00
#7	2.044	1.17
#8	2.67	1.33

Legend:

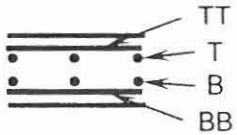

SUNDRY:	0 lbs
OPENINGS:	-188 lbs

Vault	83rd Ave.: Sta. 104+75

Vault	83rd Ave.: Sta. 104+75	
SUMMARY:	CONCRETE	7.2 CY
	REBAR	1371.2 lbs

GEOMETRY	Outside	Inside	Wall
Width (ft.)	6.00	4.17	0.92 ft.
Length (ft.)	11.00	9.17	
Height (ft.)	5.83	4.08	
Volume (ft.^{3})	385	155.9606	

OPENINGS	TOP	SIDE 1	SIDE 2	SIDE 3	SIDE 4	SIDE 5	SIDE 6	TOTAL
Diameter (ft.)	2.5	3.0	3.0	4.0				
Skew (deg)	0.0	0.0	0.0	0.0				
Bar Perimeter (ft.)	10.4	14.1	14.1	17.7	0.0	0.0	0.0	
Area (ft.^{2})	4.9	10.6	10.6	18.3	0.0	0.0	0.0	
Volume (ft.^{3})	4.1	9.7	9.7	16.8	0.0	0.0	0.0	40.3

SUNDRY 6.1 ft.^{3}

CONCRETE 7.2 CY

REBAR	Size	Dim.	Hook	Length	Weight/ft.	Number	Weight
Bot Slab BB	#5	5.67	0.83	7.33	1.043	12	92 lbs
Bot Slab B	#4	10.67	0.67	12.00	0.668	7	56 lbs
Bot Slab TT	#5	5.67	0.83	7.33	1.043	12	92 lbs
Bot Slab T	#4	10.67	0.67	12.00	0.668	7	56 lbs
Wall Vert	#5	5.50	1.17 *	7.83	1.043	60	490 lbs
Wall Horiz	#4	5.67	0.67	7.00	0.668	20	94 lbs
Wall Horiz	#4	10.67	0.67	12.00	0.668	20	160 lbs
Top Slab BB	#5	5.67	0.83	7.33	1.043	12	92 lbs
Top Slab B	#4	10.67	0.67	12.00	0.668	7	56 lbs
Top Slab TT	#5	5.67	0.83	7.33	1.043	12	92 lbs
Top Slab T	#4	10.67	0.67	12.00	0.668	7	56 lbs
Additional #6's	#6	0.00	0.00	0.00	1.502	0	0 lbs
Trimmer Bars	#6			56.27	1.502	2	169 lbs
REBAR	**1371.2 lbs**						

* Adds 4" to represent the longer hook on the outside bars

size	lbs/ft	Hook
#4	0.668	0.67
#5	1.043	0.83
#6	1.502	1.00
#7	2.044	1.17
#8	2.67	1.33

Legend:

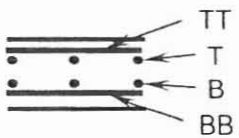

SUNDRY:	19 lbs
OPENINGS:	-152 lbs

Manhole	83rd Ave.: Sta. 134+86

Manhole	83rd Ave.: Sta. 134+86	
SUMMARY:	CONCRETE	13.7 CY
	REBAR	2496.6 lbs

GEOMETRY	Outside	Inside	Wall
Width (ft.)	9.00	7.17	0.92 ft.
Length (ft.)	9.00	7.17	
Height (ft.)	11.00	9.33	
Volume (ft.^{3})	891	479.3704	

OPENINGS	TOP	SIDE 1	SIDE 2	SIDE 3	SIDE 4	SIDE 5	SIDE 6	TOTAL
Diameter (ft.)	4.0	2.0	3.5	3.5				
Skew (deg)	0.0	0.0	13.5	10.5				
Bar Perimeter (ft.)	15.1	10.4	16.3	16.1	0.0	0.0	0.0	
Area (ft.^{2})	12.6	4.9	14.6	14.4	0.0	0.0	0.0	
Volume (ft.^{3})	10.5	4.5	13.4	13.2	0.0	0.0	0.0	41.6

SUNDRY 0.0 ft.^{3}

CONCRETE 13.7 CY

REBAR	Size	Dim.	Hook	Length	Weight/ft.	Number	Weight
Bot Slab BB	#5	8.67	0.83	10.33	1.043	14	151 lbs
Bot Slab B	#4	8.67	0.67	10.00	0.668	10	67 lbs
Bot Slab TT	#5	8.67	0.83	10.33	1.043	14	151 lbs
Bot Slab T	#4	8.67	0.67	10.00	0.668	10	67 lbs
Wall Vert	#5	10.67	1.17 *	13.00	1.043	80	1085 lbs
Wall Horiz	#4	8.67	0.67	10.00	0.668	40	267 lbs
Wall Horiz	#4	8.67	0.67	10.00	0.668	40	267 lbs
Top Slab BB	#5	8.67	0.83	10.33	1.043	10	108 lbs
Top Slab B	#4	8.67	0.67	10.00	0.668	10	67 lbs
Top Slab TT	#5	8.67	0.83	10.33	1.043	10	108 lbs
Top Slab T	#4	8.67	0.67	10.00	0.668	10	67 lbs
Additional #6's	#6	8.67	0.00	8.67	1.502	6	78 lbs
Trimmer Bars	#6			57.97	1.502	2	174 lbs
REBAR	**2496.6 lbs**						

* Adds 4" to represent the longer hook on the outside bars

size	lbs/ft	Hook
#4	0.668	0.67
#5	1.043	0.83
#6	1.502	1.00
#7	2.044	1.17
#8	2.67	1.33

Legend:

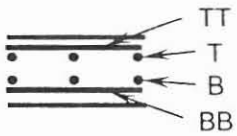

SUNDRY:	0 lbs
OPENINGS:	-159 lbs

Vault	Pinnacle Peak Rd: Sta. 199+60

Vault	Pinnacle Peak Rd: Sta. 199+60	
SUMMARY:	CONCRETE	8.9 CY
	REBAR	1532.0 lbs

GEOMETRY	Outside	Inside	Wall
Width (ft.)	8.00	6.17	0.92 ft.
Length (ft.)	9.00	7.17	
Height (ft.)	6.75	4.92	
Volume (ft.^{3})	486	217.2894	

OPENINGS	TOP	SIDE 1	SIDE 2	SIDE 3	SIDE 4	SIDE 5	SIDE 6	TOTAL
Diameter (ft.)	2.5	2.5	4.5					
Skew (deg)	0.0	0.0	0.0					
Bar Perimeter (ft.)	10.4	12.2	19.6	0.0	0.0	0.0	0.0	
Area (ft.^{2})	4.9	7.5	23.0	0.0	0.0	0.0	0.0	
Volume (ft.^{3})	4.1	6.8	21.1	0.0	0.0	0.0	0.0	32.1

SUNDRY 2.6 ft.^{3}

CONCRETE 8.9 CY

REBAR	Size	Dim.	Hook	Length	Weight/ft.	Number	Weight
Bot Slab BB	#5	7.67	0.83	9.33	1.043	10	97 lbs
Bot Slab B	#4	8.67	0.67	10.00	0.668	9	60 lbs
Bot Slab TT	#5	7.67	0.83	9.33	1.043	10	97 lbs
Bot Slab T	#4	8.67	0.67	10.00	0.668	9	60 lbs
Wall Vert	#5	6.42	1.17 *	8.75	1.043	60	548 lbs
Wall Horiz	#4	7.67	0.67	9.00	0.668	20	120 lbs
Wall Horiz	#4	8.67	0.67	10.00	0.668	20	134 lbs
Top Slab BB	#5	7.67	0.83	9.33	1.043	10	97 lbs
Top Slab B	#4	8.67	0.67	10.00	0.668	9	60 lbs
Top Slab TT	#5	7.67	0.83	9.33	1.043	10	97 lbs
Top Slab T	#4	8.67	0.67	10.00	0.668	9	60 lbs
Additional #6's	#6	8.67	0.00	8.67	1.502	6	78 lbs
Trimmer Bars	#6			42.20	1.502	2	127 lbs
REBAR	**1532.0 lbs**						

size	lbs/ft	Hook
#4	0.668	0.67
#5	1.043	0.83
#6	1.502	1.00
#7	2.044	1.17
#8	2.67	1.33

Legend:

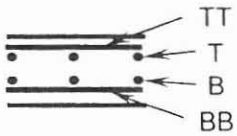

SUNDRY:	17 lbs
OPENINGS:	-122 lbs

* Adds 4" to represent the longer hook on the outside bars

Manhole	Pinnacle Peak Rd: Sta. 226+64

Manhole	Pinnacle Peak Rd: Sta. 226+64	
SUMMARY:	CONCRETE	9.9 CY
	REBAR	1676.4 lbs

GEOMETRY	Outside	Inside	Wall
Width (ft.)	8.00	6.17	0.92 ft.
Length (ft.)	10.00	8.17	
Height (ft.)	8.67	6.67	
Volume (ft.^{3})	693.3333	335.7407	

OPENINGS	TOP	SIDE 1	SIDE 2	SIDE 3	SIDE 4	SIDE 5	SIDE 6	TOTAL
Diameter (ft.)	4.0	5.0	4.0	6.0				
Skew (deg)	0.0	0.0	0.0	0.0				
Bar Perimeter (ft.)	15.1	21.4	17.7	25.1	0.0	0.0	0.0	
Area (ft.^{2})	12.6	28.3	18.3	40.3	0.0	0.0	0.0	
Volume (ft.^{3})	10.5	25.9	16.8	37.0	0.0	0.0	0.0	90.2

SUNDRY 0.0 ft.^{3}

CONCRETE 9.9 CY

REBAR	Size	Dim.	Hook	Length	Weight/ft.	Number	Weight
Bot Slab BB	#5	7.67	0.83	9.33	1.043	11	107 lbs
Bot Slab B	#4	9.67	0.67	11.00	0.668	9	66 lbs
Bot Slab TT	#5	7.67	0.83	9.33	1.043	11	107 lbs
Bot Slab T	#4	9.67	0.67	11.00	0.668	9	66 lbs
Wall Vert	#5	8.33	1.17 *	10.67	1.043	64	712 lbs
Wall Horiz	#4	7.67	0.67	9.00	0.668	28	168 lbs
Wall Horiz	#4	9.67	0.67	11.00	0.668	28	206 lbs
Top Slab BB	#5	7.67	0.83	9.33	1.043	11	107 lbs
Top Slab B	#4	9.67	0.67	11.00	0.668	9	66 lbs
Top Slab TT	#5	7.67	0.83	9.33	1.043	11	107 lbs
Top Slab T	#4	9.67	0.67	11.00	0.668	9	66 lbs
Additional #6's	#6	0.00	0.00	0.00	1.502	0	0 lbs
Trimmer Bars	#6			79.30	1.502	2	238 lbs
REBAR	**1676.4 lbs**						

size	lbs/ft	Hook
#4	0.668	0.67
#5	1.043	0.83
#6	1.502	1.00
#7	2.044	1.17
#8	2.67	1.33

Legend:

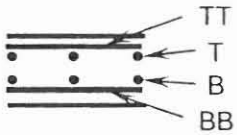

* Adds 4" to represent the longer hook on the outside bars

SUNDRY:	0 lbs
OPENINGS:	-341 lbs

DETAIL 8 DELETED:

THIS SHEET LEFT

BLANK INTENTIONALLY

Manhole	Pinnacle Peak Rd: Sta. 244+40

Manhole	Pinnacle Peak Rd: Sta. 244+40	
SUMMARY:	CONCRETE	16.8 CY
	REBAR	2871.9 lbs

GEOMETRY	Outside	Inside	Wall
Width (ft.)	9.00	7.17	0.92 ft.
Length (ft.)	14.00	12.17	
Height (ft.)	10.00	8.00	
Volume (ft.^{3})	1260	697.5556	

OPENINGS	TOP	SIDE 1	SIDE 2	SIDE 3	SIDE 4	SIDE 5	SIDE 6	TOTAL
Diameter (ft.)	4.0	6.5	7.0					
Skew (deg)	0.0	0.0	22.5					
Bar Perimeter (ft.)	15.1	26.9	31.0	0.0	0.0	0.0	0.0	
Area (ft.^{2})	12.6	47.2	59.0	0.0	0.0	0.0	0.0	
Volume (ft.^{3})	10.5	43.2	54.1	0.0	0.0	0.0	0.0	107.9

SUNDRY 0.0 ft.^{3}

CONCRETE 16.8 CY

REBAR	Size	Dim.	Hook	Length	Weight/ft.	Number	Weight
Bot Slab BB	#5	8.67	0.83	10.33	1.043	22	237 lbs
Bot Slab B	#4	13.67	0.67	15.00	0.668	10	100 lbs
Bot Slab TT	#5	8.67	0.83	10.33	1.043	22	237 lbs
Bot Slab T	#4	13.67	0.67	15.00	0.668	10	100 lbs
Wall Vert	#5	9.67	1.17 *	12.00	1.043	106	1327 lbs
Wall Horiz	#4	8.67	0.67	10.00	0.668	32	214 lbs
Wall Horiz	#4	13.67	0.67	15.00	0.668	32	321 lbs
Top Slab BB	#5	8.67	0.83	10.33	1.043	15	162 lbs
Top Slab B	#4	13.67	0.67	15.00	0.668	10	100 lbs
Top Slab TT	#5	8.67	0.83	10.33	1.043	15	162 lbs
Top Slab T	#4	13.67	0.67	15.00	0.668	10	100 lbs
Additional #6's	#6	0.00	0.00	0.00	1.502	0	0 lbs
Trimmer Bars	#6			72.98	1.502	2	219 lbs
REBAR	**2871.9 lbs**						

size	lbs/ft	Hook
#4	0.668	0.67
#5	1.043	0.83
#6	1.502	1.00
#7	2.044	1.17
#8	2.67	1.33

Legend:

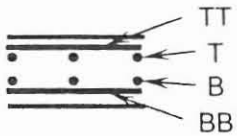

* Adds 4" to represent the longer hook on the outside bars

SUNDRY:	0 lbs
OPENINGS:	-407 lbs

Manhole	Pinnacle Peak Rd: Sta. 245+65

Manhole	Pinnacle Peak Rd: Sta. 245+65	
SUMMARY:	CONCRETE	23.5 CY
	REBAR	5288.5 lbs

GEOMETRY	Outside	Inside	Wall
Width (ft.)	12.50	10.67	0.92 ft.
Length (ft.)	14.00	12.17	
Height (ft.)	11.00	9.00	
Volume (ft.^{3})	1925	1168	

OPENINGS	TOP	SIDE 1	SIDE 2	SIDE 3	SIDE 4	SIDE 5	SIDE 6	TOTAL
Diameter (ft.)	4.0	7.0	7.0	2.0				
Skew (deg)	0.0	22.5	19.5	0.0				
Bar Perimeter (ft.)	15.1	31.0	30.4	10.4	0.0	0.0	0.0	
Area (ft.^{2})	12.6	59.0	57.9	4.9	0.0	0.0	0.0	
Volume (ft.^{3})	10.5	54.1	53.0	4.5	0.0	0.0	0.0	122.2

SUNDRY 0.0 ft.^{3}

CONCRETE 23.5 CY

REBAR	Size	Dim.	Hook	Length	Weight/ft.	Number	Weight
Bot Slab BB	#6	12.17	1.00	14.17	1.502	22	468 lbs
Bot Slab B	#4	13.67	0.67	15.00	0.668	14	140 lbs
Bot Slab TT	#6	12.17	1.00	14.17	1.502	22	468 lbs
Bot Slab T	#4	13.67	0.67	15.00	0.668	14	140 lbs
Wall Vert	#6	10.67	1.33 *	13.33	1.502	130	2603 lbs
Wall Horiz	#4	12.17	0.67	13.50	0.668	36	325 lbs
Wall Horiz	#4	13.67	0.67	15.00	0.668	36	361 lbs
Top Slab BB	#6	12.17	1.00	14.17	1.502	15	319 lbs
Top Slab B	#4	13.67	0.67	15.00	0.668	14	140 lbs
Top Slab TT	#6	12.17	1.00	14.17	1.502	15	319 lbs
Top Slab T	#4	13.67	0.67	15.00	0.668	14	140 lbs
Additional #6's	#6	7.00	0.00	7.00	1.502	6	63 lbs
Trimmer Bars	#6			86.87	1.502	2	261 lbs
REBAR	**5288.5 lbs**						

* Adds 4" to represent the longer hook on the outside bars

size	lbs/ft	Hook
#4	0.668	0.67
#5	1.043	0.83
#6	1.502	1.00
#7	2.044	1.17
#8	2.67	1.33

Legend:

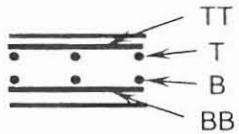

SUNDRY:	0 lbs
OPENINGS:	-460 lbs

Manhole	87th Ave.: Sta. 313+52

Manhole	87th Ave.: Sta. 313+52	
SUMMARY:	CONCRETE	25.0 CY
	REBAR	4470.8 lbs

GEOMETRY	Outside	Inside	Wall
Width (ft.)	12.00	10.17	0.92 ft.
Length (ft.)	16.00	14.17	
Height (ft.)	11.33	9.33	
Volume (ft.^{3})	2176	1344.259	

OPENINGS	TOP	SIDE 1	SIDE 2	SIDE 3	SIDE 4	SIDE 5	SIDE 6	TOTAL
Diameter (ft.)	4.0	6.5	6.5	7.0				
Skew (deg)	0.0	0.0	0.0	34.5				
Bar Perimeter (ft.)	15.1	26.9	26.9	34.5	0.0	0.0	0.0	
Area (ft.^{2})	12.6	47.2	47.2	66.2	0.0	0.0	0.0	
Volume (ft.^{3})	10.5	43.2	43.2	60.7	0.0	0.0	0.0	157.7

SUNDRY 0.0 ft.^{3}

CONCRETE 25.0 CY

REBAR	Size	Dim.	Hook	Length	Weight/ft.	Number	Weight
Bot Slab BB	#6	11.67	1.00	13.67	1.502	17	349 lbs
Bot Slab B	#4	15.67	0.67	17.00	0.668	13	148 lbs
Bot Slab TT	#6	11.67	1.00	13.67	1.502	17	349 lbs
Bot Slab T	#4	15.67	0.67	17.00	0.668	13	148 lbs
Wall Vert	#6	11.00	1.33 *	13.67	1.502	90	1847 lbs
Wall Horiz	#4	11.67	0.67	13.00	0.668	40	347 lbs
Wall Horiz	#4	15.67	0.67	17.00	0.668	40	454 lbs
Top Slab BB	#6	11.67	1.00	13.67	1.502	17	349 lbs
Top Slab B	#4	15.67	0.67	17.00	0.668	13	148 lbs
Top Slab TT	#6	11.67	1.00	13.67	1.502	17	349 lbs
Top Slab T	#4	15.67	0.67	17.00	0.668	13	148 lbs
Additional #6's	#6	6.50	0.00	6.50	1.502	12	117 lbs
Trimmer Bars	#6			103.44	1.502	2	311 lbs
REBAR	**4470.8 lbs**						

size	lbs/ft	Hook
#4	0.668	0.67
#5	1.043	0.83
#6	1.502	1.00
#7	2.044	1.17
#8	2.67	1.33

Legend:

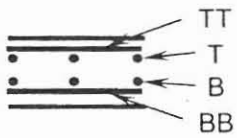

SUNDRY:	0 lbs
OPENINGS:	-593 lbs

* Adds 4" to represent the longer hook on the outside bars

Stilling Basin	87th Ave.: Sta.61+62

Stilling Basin	87th Ave.: Sta.61+62		
SUMMARY:	CONCRETE	96.1	CY
	REBAR	14775.2	lbs

GEOMETRY	Outside	Inside	Wall
Width (ft.)	22.33	20.00	1.17 ft.
Length (ft.)	28.50	26.17	
Height (ft.)	16.67	15.50	
Volume (ft.^{3})	10608.33	8111.667	

OPENINGS	TOP	SIDE 1	SIDE 2	SIDE 3	SIDE 4	SIDE 5	SIDE 6	TOTAL
Diameter (ft.)		7.0						
Skew (deg)		0.0						
Bar Perimeter (ft.)	0.0	28.7	0.0	0.0	0.0	0.0	0.0	
Area (ft.^{2})	0.0	54.5	0.0	0.0	0.0	0.0	0.0	
Volume (ft.^{3})	0.0	63.6	0.0	0.0	0.0	0.0	0.0	63.8

SUNDRY 2594.7 ft.^{3} from separate calculation

CONCRETE 96.1 CY

REBAR	Size	Dim.	Hook	Length	Weight/ft.	Number	Weight
Slab Transverse	#5	22.00	0.00	22.00	1.043	68	1560 lbs
Slab Longitudinal	#5	28.17	0.00	28.17	1.043	86	2540 lbs
Wall Verts	#5	16.33	0.83	18.00	1.043	140	2628 lbs
Wall Verts	#5	13.58	0.83	15.25	1.043	92	1462 lbs
Back Wall Horiz	#5	22.00	0.83	23.67	1.043	46	1147 lbs
Side Horiz	#5	28.17	0.83	29.83	1.043	60	1866 lbs
Side Horiz	#5	20.33	0.83	21.17	1.043	33	728 lbs
Int. Wall Verts	#5	8.83	0.83	10.50	1.043	60	657 lbs
Int. Wall Horiz	#5	22.00	0.83	23.67	1.043	37	913 lbs
Int. Wall Horiz	#5	4.67	0.83	6.33	1.043	60	396 lbs
Shelf	#5	2.50	0.00	2.50	1.043	64	167 lbs
Shelf	#5	45.00	0.00	45.00	1.043	5	235 lbs
Trimmer Bars	#6			28.73	1.502	2	86 lbs
REBAR	**14775.2 lbs**						

size	lbs/ft	Hook
#4	0.668	0.67
#5	1.043	0.83
#6	1.502	1.00
#7	2.044	1.17
#8	2.67	1.33

Cutoff Wall:	732 lbs
OPENINGS:	-342 lbs

Manhole	87th Ave.: Sta. 326+40

Manhole	87th Ave.: Sta. 326+40	
SUMMARY:	CONCRETE	21.8 CY
	REBAR	5129.3 lbs

GEOMETRY	Outside	Inside	Wall
Width (ft.)	10.00	8.17	0.92 ft.
Length (ft.)	11.00	9.17	
Height (ft.)	16.00	14.00	
Volume (ft.^{3})	1760	1048.056	

OPENINGS	TOP	SIDE 1	SIDE 2	SIDE 3	SIDE 4	SIDE 5	SIDE 6	TOTAL
Diameter (ft.)	4.0	6.5	6.5	5.0				
Skew (deg)	0.0	0.0	0.0	20.0				
Bar Perimeter (ft.)	15.1	26.9	26.9	22.7	0.0	0.0	0.0	
Area (ft.^{2})	12.6	47.2	47.2	30.1	0.0	0.0	0.0	
Volume (ft.^{3})	10.5	43.2	43.2	27.6	0.0	0.0	0.0	124.6

SUNDRY 0.0 ft.^{3}

CONCRETE 21.8 CY

REBAR	Size	Dim.	Hook	Length	Weight/ft.	Number	Weight
Bot Slab BB	#6	9.67	1.00	11.67	1.502	21	368 lbs
Bot Slab B	#4	10.67	0.67	12.00	0.668	12	96 lbs
Bot Slab TT	#5	9.67	0.83	11.33	1.043	11	130 lbs
Bot Slab T	#4	10.67	0.67	12.00	0.668	12	96 lbs
Wall Vert	#6	15.67	1.33 *	18.33	1.502	108	2974 lbs
Wall Horiz	#4	9.67	0.67	11.00	0.668	56	411 lbs
Wall Horiz	#4	10.67	0.67	12.00	0.668	56	449 lbs
Top Slab BB	#5	9.67	0.83	11.33	1.043	11	130 lbs
Top Slab B	#4	10.67	0.67	12.00	0.668	12	96 lbs
Top Slab TT	#6	9.67	1.00	11.67	1.502	21	368 lbs
Top Slab T	#4	10.67	0.67	12.00	0.668	12	96 lbs
Additional #6's	#6	6.00	0.00	6.00	1.502	12	108 lbs
Trimmer Bars	#6			91.58	1.502	2	275 lbs
REBAR	**5129.3 lbs**						

size	lbs/ft	Hook
#4	0.668	0.67
#5	1.043	0.83
#6	1.502	1.00
#7	2.044	1.17
#8	2.67	1.33

Legend:

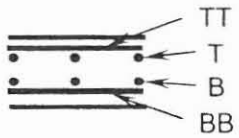

SUNDRY:	0 lbs
OPENINGS:	-469 lbs

* Adds 4" to represent the longer hook on the outside bars

Manhole	89th Ave.: Sta. 416+56

Manhole	89th Ave.: Sta. 416+56	
SUMMARY:	CONCRETE	12.5 CY
	REBAR	2019.7 lbs

GEOMETRY	Outside	Inside	Wall
Width (ft.)	10.00	8.17	0.92 ft.
Length (ft.)	10.00	8.17	
Height (ft.)	8.67	6.67	
Volume (ft.^{3})	866.6667	444.6296	

OPENINGS	TOP	SIDE 1	SIDE 2	SIDE 3	SIDE 4	SIDE 5	SIDE 6	TOTAL
Diameter (ft.)	4.0	6.0	6.0					
Skew (deg)	0.0	0.0	0.0					
Bar Perimeter (ft.)	15.1	25.1	25.1	0.0	0.0	0.0	0.0	
Area (ft.^{2})	12.6	40.3	40.3	0.0	0.0	0.0	0.0	
Volume (ft.^{3})	10.5	37.0	37.0	0.0	0.0	0.0	0.0	84.5

SUNDRY 0.0 ft.^{3}

CONCRETE 12.5 CY

REBAR	Size	Dim.	Hook	Length	Weight/ft.	Number	Weight
Bot Slab BB	#5	9.67	0.83	11.33	1.043	11	130 lbs
Bot Slab B	#4	9.67	0.67	11.00	0.668	11	81 lbs
Bot Slab TT	#5	9.67	0.83	11.33	1.043	11	130 lbs
Bot Slab T	#4	9.67	0.67	11.00	0.668	11	81 lbs
Wall Vert	#5	8.33	1.17 *	10.67	1.043	72	801 lbs
Wall Horiz	#4	9.67	0.67	11.00	0.668	28	206 lbs
Wall Horiz	#4	9.67	0.67	11.00	0.668	28	206 lbs
Top Slab BB	#5	9.67	0.83	11.33	1.043	11	130 lbs
Top Slab B	#4	9.67	0.67	11.00	0.668	11	81 lbs
Top Slab TT	#5	9.67	0.83	11.33	1.043	11	130 lbs
Top Slab T	#4	9.67	0.67	11.00	0.668	11	81 lbs
Additional #6's	#6	9.67	0.00	9.67	1.502	6	87 lbs
Trimmer Bars	#6			65.24	1.502	2	196 lbs
REBAR	**2019.7 lbs**						

* Adds 4" to represent the longer hook on the outside bars

size	lbs/ft	Hook
#4	0.668	0.67
#5	1.043	0.83
#6	1.502	1.00
#7	2.044	1.17
#8	2.67	1.33

Legend:

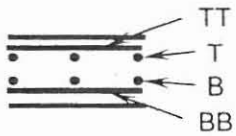

SUNDRY:	0 lbs
OPENINGS:	-319 lbs

Vault	Calle Lejos: Sta. 336+55

Vault	Calle Lejos: Sta. 336+55	
SUMMARY:	CONCRETE	13.8 CY
	REBAR	2205.4 lbs

GEOMETRY	Outside	Inside	Wall
Width (ft.)	7.50	5.67	0.92 ft.
Length (ft.)	14.00	12.17	
Height (ft.)	8.67	6.67	
Volume (ft.^{3})	910	459.6296	

OPENINGS	TOP	SIDE 1	SIDE 2	SIDE 3	SIDE 4	SIDE 5	SIDE 6	TOTAL
Diameter (ft.)	2.5	6.0	2.5	4.0	4.0			
Skew (deg)	0.0	0.0	4.5	0.0	0.0			
Bar Perimeter (ft.)	10.4	25.1	12.3	17.7	17.7	0.0	0.0	
Area (ft.^{2})	4.9	40.3	7.5	18.3	18.3	0.0	0.0	
Volume (ft.^{3})	4.1	37.0	6.9	16.8	16.8	0.0	0.0	81.6

SUNDRY 4.0 ft.^{3}

CONCRETE 13.8 CY

REBAR	Size	Dim.	Hook	Length	Weight/ft.	Number	Weight
Bot Slab BB	#5	7.17	0.83	8.83	1.043	15	138 lbs
Bot Slab B	#4	13.67	0.67	15.00	0.668	9	90 lbs
Bot Slab TT	#5	7.17	0.83	8.83	1.043	15	138 lbs
Bot Slab T	#4	13.67	0.67	15.00	0.668	9	90 lbs
Wall Vert	#5	8.33	1.17 *	10.67	1.043	80	890 lbs
Wall Horiz	#4	7.17	0.67	8.50	0.668	28	159 lbs
Wall Horiz	#4	13.67	0.67	15.00	0.668	28	281 lbs
Top Slab BB	#5	7.17	0.83	8.83	1.043	15	138 lbs
Top Slab B	#4	13.67	0.67	15.00	0.668	9	90 lbs
Top Slab TT	#5	7.17	0.83	8.83	1.043	15	138 lbs
Top Slab T	#4	13.67	0.67	15.00	0.668	9	90 lbs
Additional #6's	#6	0.00	0.00	0.00	1.502	0	0 lbs
Trimmer Bars	#6			83.19	1.502	2	250 lbs
REBAR	**2205.4 lbs**						

size	lbs/ft	Hook
#4	0.668	0.67
#5	1.043	0.83
#6	1.502	1.00
#7	2.044	1.17
#8	2.67	1.33

Legend:

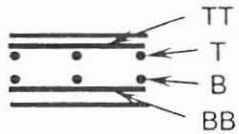

SUNDRY:	19 lbs
OPENINGS:	-306 lbs

* Adds 4" to represent the longer hook on the outside bars

Vault	Calle Lejos: Sta. 339+55

Vault	Calle Lejos: Sta. 339+55	
SUMMARY:	CONCRETE	17.4 CY
	REBAR	3488.2 lbs

GEOMETRY	Outside	Inside	Wall
Width (ft.)	14.00	12.17	0.92 ft.
Length (ft.)	14.00	12.17	
Height (ft.)	5.83	4.08	
Volume (ft.^{3})	1143.333	604.4468	

OPENINGS	TOP	SIDE 1	SIDE 2	SIDE 3	SIDE 4	SIDE 5	SIDE 6	TOTAL
Diameter (ft.)	2.5	4.0	4.0	4.0	4.0			
Skew (deg)	0.0	0.0	0.0	6.0	6.0			
Bar Perimeter (ft.)	10.4	17.7	17.7	17.8	17.8	0.0	0.0	
Area (ft.^{2})	4.9	18.3	18.3	18.4	18.4	0.0	0.0	
Volume (ft.^{3})	4.1	16.8	16.8	16.9	16.9	0.0	0.0	71.6

SUNDRY 2.2 ft.^{3}

CONCRETE 17.4 CY

REBAR	Size	Dim.	Hook	Length	Weight/ft.	Number	Weight
Bot Slab BB	#6	13.67	1.00	15.67	1.502	15	353 lbs
Bot Slab B	#4	13.67	0.67	15.00	0.668	15	150 lbs
Bot Slab TT	#6	13.67	1.00	15.67	1.502	15	353 lbs
Bot Slab T	#4	13.67	0.67	15.00	0.668	15	150 lbs
Wall Vert	#6	5.50	1.33 *	8.17	1.502	90	1104 lbs
Wall Horiz	#4	13.67	0.67	15.00	0.668	16	160 lbs
Wall Horiz	#4	13.67	0.67	15.00	0.668	16	160 lbs
Top Slab BB	#6	13.67	1.00	15.67	1.502	15	353 lbs
Top Slab B	#4	13.67	0.67	15.00	0.668	15	150 lbs
Top Slab TT	#6	13.67	1.00	15.67	1.502	15	353 lbs
Top Slab T	#4	13.67	0.67	15.00	0.668	15	150 lbs
Additional #6's	#6	6.50	0.00	6.50	1.502	6	59 lbs
Trimmer Bars	#6			81.51	1.502	2	245 lbs
REBAR	**3488.2 lbs**						

size	lbs/ft	Hook
#4	0.668	0.67
#5	1.043	0.83
#6	1.502	1.00
#7	2.044	1.17
#8	2.67	1.33

Legend:

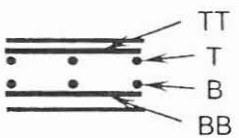

SUNDRY:	16 lbs
OPENINGS:	-269 lbs

* Adds 4" to represent the longer hook on the outside bars

Vault	Cielo Grande: Sta. 400+30

Vault	Cielo Grande: Sta. 400+30	
SUMMARY:	CONCRETE	10.5 CY
	REBAR	1728.8 lbs

GEOMETRY	Outside	Inside	Wall
Width (ft.)	7.00	5.17	0.92 ft.
Length (ft.)	11.00	9.17	
Height (ft.)	8.08	6.08	
Volume (ft.^{3})	622.4167	288.1134	

OPENINGS	TOP	SIDE 1	SIDE 2	SIDE 3	SIDE 4	SIDE 5	SIDE 6	TOTAL
Diameter (ft.)	2.5	2.5	2.5	5.5				
Skew (deg)	0.0	40.5	0.0	0.0				
Bar Perimeter (ft.)	10.4	15.6	12.2	23.2	0.0	0.0	0.0	
Area (ft.^{2})	4.9	9.8	7.5	34.0	0.0	0.0	0.0	
Volume (ft.^{3})	4.1	9.0	6.8	31.2	0.0	0.0	0.0	51.2
SUNDRY	1.3 ft.^{3}							
CONCRETE	**10.5 CY**							

REBAR	Size	Dim.	Hook	Length	Weight/ft.	Number	Weight
Bot Slab BB	#5	6.67	0.83	8.33	1.043	12	104 lbs
Bot Slab B	#4	10.67	0.67	12.00	0.668	8	64 lbs
Bot Slab TT	#5	6.67	0.83	8.33	1.043	12	104 lbs
Bot Slab T	#4	10.67	0.67	12.00	0.668	8	64 lbs
Wall Vert	#5	7.75	1.17 *	10.08	1.043	64	673 lbs
Wall Horiz	#4	6.67	0.67	8.00	0.668	28	150 lbs
Wall Horiz	#4	10.67	0.67	12.00	0.668	28	224 lbs
Top Slab BB	#5	6.67	0.83	8.33	1.043	12	104 lbs
Top Slab B	#4	10.67	0.67	12.00	0.668	8	64 lbs
Top Slab TT	#5	6.67	0.83	8.33	1.043	12	104 lbs
Top Slab T	#4	10.67	0.67	12.00	0.668	8	64 lbs
Additional #6's	#6	0.00	0.00	0.00	1.502	0	0 lbs
Trimmer Bars	#6			61.48	1.502	2	185 lbs
REBAR	**1728.8 lbs**						

* Adds 4" to represent the longer hook on the outside bars

size	lbs/ft	Hook
#4	0.668	0.67
#5	1.043	0.83
#6	1.502	1.00
#7	2.044	1.17
#8	2.67	1.33

Legend:

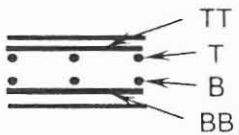

SUNDRY:	16 lbs
OPENINGS:	-193 lbs

Manhole	89th Ave.: Sta. 413+23

Manhole	89th Ave.: Sta. 413+23	
SUMMARY:	CONCRETE	12.4 CY
	REBAR	2447.0 lbs

GEOMETRY	Outside	Inside	Wall
Width (ft.)	10.00	8.17	0.92 ft.
Length (ft.)	10.00	8.17	
Height (ft.)	8.67	6.67	
Volume (ft.^{3})	866.6667	444.6296	

OPENINGS	TOP	SIDE 1	SIDE 2	SIDE 3	SIDE 4	SIDE 5	SIDE 6	TOTAL
Diameter (ft.)	4.0	6.0	5.5	2.5				
Skew (deg)	0.0	0.0	0.0	22.5				
Bar Perimeter (ft.)	15.1	25.1	23.2	13.1	0.0	0.0	0.0	
Area (ft.^{2})	12.6	40.3	34.0	8.1	0.0	0.0	0.0	
Volume (ft.^{3})	10.5	37.0	31.2	7.4	0.0	0.0	0.0	86.1
SUNDRY	0.0 ft.^{3}							
CONCRETE	**12.4 CY**							

REBAR	Size	Dim.	Hook	Length	Weight/ft.	Number	Weight
Bot Slab BB	#5	9.67	0.83	11.33	1.043	16	189 lbs
Bot Slab B	#4	9.67	0.67	11.00	0.668	11	81 lbs
Bot Slab TT	#5	9.67	0.83	11.33	1.043	16	189 lbs
Bot Slab T	#4	9.67	0.67	11.00	0.668	11	81 lbs
Wall Vert	#5	8.33	1.17 *	10.67	1.043	92	1024 lbs
Wall Horiz	#4	9.67	0.67	11.00	0.668	32	235 lbs
Wall Horiz	#4	9.67	0.67	11.00	0.668	32	235 lbs
Top Slab BB	#5	9.67	0.83	11.33	1.043	11	130 lbs
Top Slab B	#4	9.67	0.67	11.00	0.668	11	81 lbs
Top Slab TT	#5	9.67	0.83	11.33	1.043	11	130 lbs
Top Slab T	#4	9.67	0.67	11.00	0.668	11	81 lbs
Additional #6's	#6	9.67	0.00	9.67	1.502	6	87 lbs
Trimmer Bars	#6			76.52	1.502	2	230 lbs
REBAR	**2447.0 lbs**						

size	lbs/ft	Hook
#4	0.668	0.67
#5	1.043	0.83
#6	1.502	1.00
#7	2.044	1.17
#8	2.67	1.33

Legend:

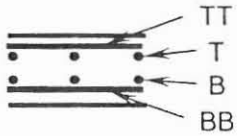

SUNDRY:	0 lbs
OPENINGS:	-325 lbs

* Adds 4" to represent the longer hook on the outside bars

Manhole	83rd Ave.: Sta. 142+46

Manhole	83rd Ave.: Sta. 142+46	
SUMMARY:	CONCRETE	8.4 CY
	REBAR	1721.8 lbs

GEOMETRY	Outside	Inside	Wall
Width (ft.)	6.00	4.17	0.92 ft.
Length (ft.)	13.00	11.17	
Height (ft.)	6.00	4.17	
Volume (ft.^{3})	468	193.8657	

OPENINGS	TOP	SIDE 1	SIDE 2	SIDE 3	SIDE 4	SIDE 5	SIDE 6	TOTAL
Diameter (ft.)	4.0	3.5	3.0	3.0				
Skew (deg)	0.0	0.0	26.0	45.0				
Bar Perimeter (ft.)	15.1	15.9	15.5	19.3	0.0	0.0	0.0	
Area (ft.^{2})	12.6	14.2	11.7	14.9	0.0	0.0	0.0	
Volume (ft.^{3})	10.5	13.0	10.8	13.7	0.0	0.0	0.0	48.0

SUNDRY 0.0 ft.^{3}

CONCRETE 8.4 CY

REBAR	Size	Dim.	Hook	Length	Weight/ft.	Number	Weight
Bot Slab BB	#5	5.67	0.83	7.33	1.043	20	153 lbs
Bot Slab B	#4	12.67	0.67	14.00	0.668	7	65 lbs
Bot Slab TT	#5	5.67	0.83	7.33	1.043	20	153 lbs
Bot Slab T	#4	12.67	0.67	14.00	0.668	7	65 lbs
Wall Vert	#5	5.67	1.17 *	8.00	1.043	84	701 lbs
Wall Horiz	#4	5.67	0.67	7.00	0.668	16	75 lbs
Wall Horiz	#4	12.67	0.67	14.00	0.668	16	150 lbs
Top Slab BB	#5	5.67	0.83	7.33	1.043	14	107 lbs
Top Slab B	#4	12.67	0.67	14.00	0.668	7	65 lbs
Top Slab TT	#5	5.67	0.83	7.33	1.043	14	107 lbs
Top Slab T	#4	12.67	0.67	14.00	0.668	7	65 lbs
Additional #6's	#6	0.00	0.00	0.00	1.502	0	0 lbs
Trimmer Bars	#6			65.77	1.502	2	198 lbs
REBAR	**1721.8 lbs**						

size	lbs/ft	Hook
#4	0.668	0.67
#5	1.043	0.83
#6	1.502	1.00
#7	2.044	1.17
#8	2.67	1.33

Legend:

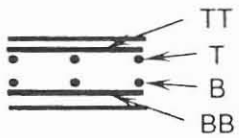

SUNDRY:	0 lbs
OPENINGS:	-183 lbs

* Adds 4" to represent the longer hook on the outside bars

Inlet Structure	Ventana Picacho RB Sta. 81+37

Inlet Structure	Ventana Picacho RB Sta. 81+37	
SUMMARY:	CONCRETE	9.9 CY
	REBAR	1411.3 lbs

GEOMETRY	Outside	Inside	Wall
Width (ft.)	4.83	3.00	0.92 ft.
Length (ft.)	11.83	10.00	
Height (ft.)	8.60	7.43	
Volume (ft.^{3})	491.6816	222.9	

OPENINGS	TOP	SIDE 1	SIDE 2	SIDE 3	SIDE 4	SIDE 5	SIDE 6	TOTAL
Diameter (ft.)		5.0						
Skew (deg)		0.0						
Bar Perimeter (ft.)	0.0	21.4	0.0	0.0	0.0	0.0	0.0	
Area (ft.^{2})	0.0	28.3	0.0	0.0	0.0	0.0	0.0	
Volume (ft.^{3})	0.0	25.9	0.0	0.0	0.0	0.0	0.0	26.0
SUNDRY	23.9 ft.^{3}							
CONCRETE	**9.9 CY**							

REBAR	Size	Dim.	Hook	Length	Weight/ft.	Number	Weight
Bot Slab BB	#5	4.50	0.83	6.17	1.043	13	84 lbs
Bot Slab B	#4	11.50	0.67	12.83	0.668	6	51 lbs
Bot Slab TT	#5	4.50	0.83	6.17	1.043	13	84 lbs
Bot Slab T	#4	11.50	0.67	12.83	0.668	6	51 lbs
Wall Vert	#5	8.26	0.83	9.93	1.043	60	621 lbs
Wall Horiz	#4	4.50	0.67	5.83	0.668	32	125 lbs
Wall Horiz	#4	11.50	0.67	12.83	0.668	36	309 lbs
Top Slab BB	#4	4.50	0.67	5.83	0.668	0	0 lbs
Top Slab B	#4	11.50	0.67	12.83	0.668	0	0 lbs
Top Slab TT	#4	4.50	0.67	5.83	0.668	0	0 lbs
Top Slab T	#4	11.50	0.67	12.83	0.668	0	0 lbs
Additional #6's	#6	0.00	0.00	0.00	1.502	0	0 lbs
Trimmer Bars	#6			21.40	1.502	2	64 lbs
REBAR	**1411.3 lbs**						

size	lbs/ft	Hook
#4	0.668	0.67
#5	1.043	0.83
#6	1.502	1.00
#7	2.044	1.17
#8	2.67	1.33

Legend:

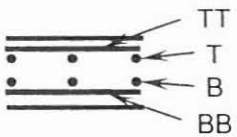

SUNDRY:	119 lbs
OPENINGS:	-97 lbs

Inlet Structure	Ventana Picacho RB Sta. 85+77

Inlet Structure	Ventana Picacho RB Sta. 85+77	
SUMMARY:	CONCRETE	42.6 CY
	REBAR	4928.0 lbs

GEOMETRY	Outside	Inside	Wall
Width (ft.)	6.83	5.00	0.92 ft.
Length (ft.)	46.83	45.00	
Height (ft.)	9.17	8.00	
Volume (ft.^{3})	2933.588	1800	

OPENINGS	TOP	SIDE 1	SIDE 2	SIDE 3	SIDE 4	SIDE 5	SIDE 6	TOTAL
Diameter (ft.)		5.0						
Skew (deg)		0.0						
Bar Perimeter (ft.)	0.0	21.4	0.0	0.0	0.0	0.0	0.0	
Area (ft.^{2})	0.0	28.3	0.0	0.0	0.0	0.0	0.0	
Volume (ft.^{3})	0.0	25.9	0.0	0.0	0.0	0.0	0.0	26.0

SUNDRY 42.9 ft.^{3}

CONCRETE 42.6 CY

REBAR	Size	Dim.	Hook	Length	Weight/ft.	Number	Weight
Bot Slab BB	#5	6.50	0.83	8.17	1.043	48	409 lbs
Bot Slab B	#4	46.50	0.67	47.83	0.668	8	256 lbs
Bot Slab TT	#5	6.50	0.83	8.17	1.043	48	409 lbs
Bot Slab T	#4	46.50	0.67	47.83	0.668	8	256 lbs
Wall Vert	#5	8.83	0.83	10.50	1.043	208	2278 lbs
Wall Horiz	#4	6.50	0.67	7.83	0.668	32	167 lbs
Wall Horiz	#4	46.50	0.67	47.83	0.668	34	1086 lbs
Top Slab BB	#4	6.50	0.67	7.83	0.668	0	0 lbs
Top Slab B	#4	46.50	0.67	47.83	0.668	0	0 lbs
Top Slab TT	#4	6.50	0.67	7.83	0.668	0	0 lbs
Top Slab T	#4	46.50	0.67	47.83	0.668	0	0 lbs
Additional #6's	#6	0.00	0.00	0.00	1.502	0	0 lbs
Trimmer Bars	#6			21.40	1.502	2	64 lbs

REBAR 4928.0 lbs

size	lbs/ft	Hook
#4	0.668	0.67
#5	1.043	0.83
#6	1.502	1.00
#7	2.044	1.17
#8	2.67	1.33

Legend:

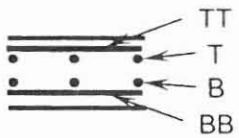

SUNDRY:	100 lbs
OPENINGS:	-97 lbs

Inlet Structure	Calle Lajos: Sta. 340+27

Inlet Structure	Calle Lajos: Sta. 340+27		
SUMMARY:	CONCRETE	6.2	CY
	REBAR	1256.6	lbs

GEOMETRY	Outside	Inside	Wall
Width (ft.)			0.00 ft.
Length (ft.)			
Height (ft.)			
Volume (ft.^{3})	0	0	

OPENINGS	TOP	SIDE 1	SIDE 2	SIDE 3	SIDE 4	SIDE 5	SIDE 6	TOTAL
Diameter (ft.)								
Skew (deg)								
Bar Perimeter (ft.)	0.0	0.0	0.0	0.0	0.0	0.0	0.0	
Area (ft.^{2})	0.0	0.0	0.0	0.0	0.0	0.0	0.0	
Volume (ft.^{3})	0.0	0.0	0.0	0.0	0.0	0.0	0.0	0.0

SUNDRY 166.3 ft.^{3}

CONCRETE 6.2 CY

REBAR	Size	Dim.	Hook	Length	Weight/ft.	Number	Weight
Bot Slab BB	#4	-0.33	0.67	1.00	0.668		0 lbs
Bot Slab B	#4	-0.33	0.67	1.00	0.668		0 lbs
Bot Slab TT	#4	-0.33	0.67	1.00	0.668		0 lbs
Bot Slab T	#4	-0.33	0.67	1.00	0.668		0 lbs
Wall Vert	#4	-0.33	0.67	1.00	0.668		0 lbs
Wall Horiz	#4	-0.33	0.67	1.00	0.668		0 lbs
Wall Horiz	#4	-0.33	0.67	1.00	0.668		0 lbs
Top Slab BB	#4	-0.33	0.67	1.00	0.668		0 lbs
Top Slab B	#4	-0.33	0.67	1.00	0.668		0 lbs
Top Slab TT	#4	-0.33	0.67	1.00	0.668		0 lbs
Top Slab T	#4	-0.33	0.67	1.00	0.668		0 lbs
Additional #6's	#6		0.00	0.00	1.502		0 lbs
Trimmer Bars	#6			0.00	1.502	2	0 lbs

REBAR 1256.6 lbs

size	lbs/ft	Hook
#4	0.668	0.67
#5	1.043	0.83
#6	1.502	1.00
#7	2.044	1.17
#8	2.67	1.33

Legend:

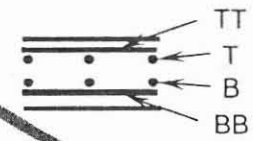

SUNDRY: 1257 lbs
OPENINGS: 0 lbs

Manhole	87th Ave.: Sta. 307+50

Manhole	87th Ave.: Sta. 307+50	
SUMMARY:	CONCRETE	5.8 CY
	REBAR	1349.6 lbs

GEOMETRY	Outside	Inside	Wall
Width (ft.)	7.33	5.50	0.92 ft.
Length (ft.)	8.00	6.17	
Height (ft.)	6.00	4.17	
Volume (ft.^{3})	352	141.3194	

OPENINGS	TOP	SIDE 1	SIDE 2	SIDE 3	SIDE 4	SIDE 5	SIDE 6	TOTAL
Diameter (ft.)	4.0	3.5	3.5	4.0				
Skew (deg)	0.0	0.0	22.0	16.0				
Bar Perimeter (ft.)	15.1	15.9	17.0	18.4	0.0	0.0	0.0	
Area (ft.^{2})	12.6	14.2	15.3	19.1	0.0	0.0	0.0	
Volume (ft.^{3})	10.5	13.0	14.0	17.5	0.0	0.0	0.0	55.1

SUNDRY 0.0 ft.^{3}

CONCRETE 5.8 CY

REBAR	Size	Dim.	Hook	Length	Weight/ft.	Number	Weight
Bot Slab BB	#5	7.00	0.83	8.67	1.043	13	118 lbs
Bot Slab B	#4	7.67	0.67	9.00	0.668	8	48 lbs
Bot Slab TT	#5	7.00	0.83	8.67	1.043	13	118 lbs
Bot Slab T	#4	7.67	0.67	9.00	0.668	8	48 lbs
Wall Vert	#5	5.67	1.17 *	8.00	1.043	70	584 lbs
Wall Horiz	#4	7.00	0.67	8.33	0.668	16	89 lbs
Wall Horiz	#4	7.67	0.67	9.00	0.668	16	96 lbs
Top Slab BB	#5	7.00	0.83	8.67	1.043	9	81 lbs
Top Slab B	#4	7.67	0.67	9.00	0.668	8	48 lbs
Top Slab TT	#5	7.00	0.83	8.67	1.043	9	81 lbs
Top Slab T	#4	7.67	0.67	9.00	0.668	8	48 lbs
Additional #6's	#6	0.00	0.00	0.00	1.502	0	0 lbs
Trimmer Bars	#6			66.43	1.502	2	200 lbs
REBAR	**1349.6 lbs**						

size	lbs/ft	Hook
#4	0.668	0.67
#5	1.043	0.83
#6	1.502	1.00
#7	2.044	1.17
#8	2.67	1.33

Legend:

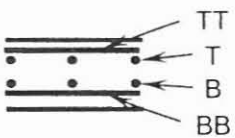

* Adds 4" to represent the longer hook on the outside bars

SUNDRY:	0 lbs
OPENINGS:	-209 lbs

Manhole	87th Ave.: Sta. 61+37

Manhole	87th Ave.: Sta. 61+37	
SUMMARY:	CONCRETE	15.1 CY
	REBAR	2331.9 lbs

GEOMETRY	Outside	Inside	Wall
Width (ft.)	9.00	7.17	0.92 ft.
Length (ft.)	11.00	9.17	
Height (ft.)	12.00	10.00	
Volume (ft.^{3})	1188	656.9444	

OPENINGS	TOP	SIDE 1	SIDE 2	SIDE 3	SIDE 4	SIDE 5	SIDE 6	TOTAL
Diameter (ft.)	4.0	7.0	3.5	7.0				
Skew (deg)	0.0	0.0	0.0	0.0				
Bar Perimeter (ft.)	15.1	28.7	15.9	28.7	0.0	0.0	0.0	
Area (ft.^{2})	12.6	54.5	14.2	54.5	0.0	0.0	0.0	
Volume (ft.^{3})	10.5	50.0	13.0	50.0	0.0	0.0	0.0	123.5

SUNDRY 0.0 ft.^{3}

CONCRETE 15.1 CY

REBAR	Size	Dim.	Hook	Length	Weight/ft.	Number	Weight
Bot Slab BB	#5	8.67	0.83	10.33	1.043	12	129 lbs
Bot Slab B	#4	10.67	0.67	12.00	0.668	10	80 lbs
Bot Slab TT	#5	8.67	0.83	10.33	1.043	12	129 lbs
Bot Slab T	#4	10.67	0.67	12.00	0.668	10	80 lbs
Wall Vert	#5	11.67	1.17 *	14.00	1.043	72	1051 lbs
Wall Horiz	#4	8.67	0.67	10.00	0.668	40	267 lbs
Wall Horiz	#4	10.67	0.67	12.00	0.668	40	321 lbs
Top Slab BB	#5	8.67	0.83	10.33	1.043	12	129 lbs
Top Slab B	#4	10.67	0.67	12.00	0.668	10	80 lbs
Top Slab TT	#5	8.67	0.83	10.33	1.043	12	129 lbs
Top Slab T	#4	10.67	0.67	12.00	0.668	10	80 lbs
Additional #6's	#6	6.00	0.00	6.00	1.502	6	54 lbs
Trimmer Bars	#6			88.47	1.502	2	266 lbs
REBAR	**2331.9 lbs**						

size	lbs/ft	Hook
#4	0.668	0.67
#5	1.043	0.83
#6	1.502	1.00
#7	2.044	1.17
#8	2.67	1.33

Legend:

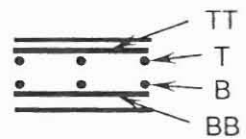

* Adds 4" to represent the longer hook on the outside bars

SUNDRY:	0 lbs
OPENINGS:	-465 lbs

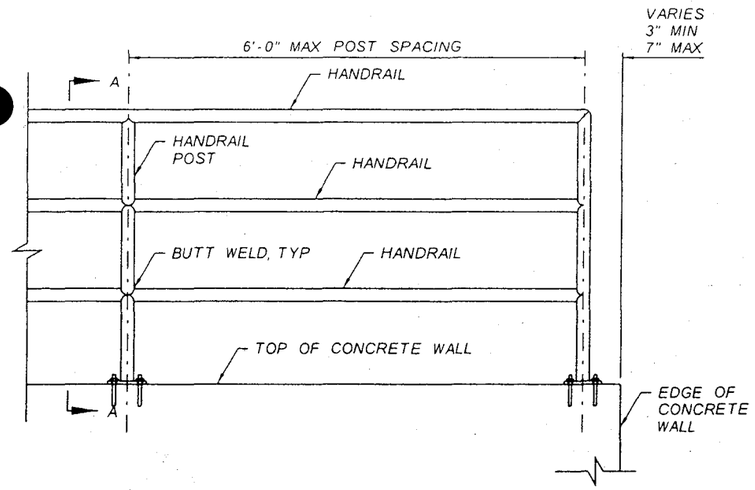

ELEVATION
TYPICAL HANDRAIL ON WALL
NTS

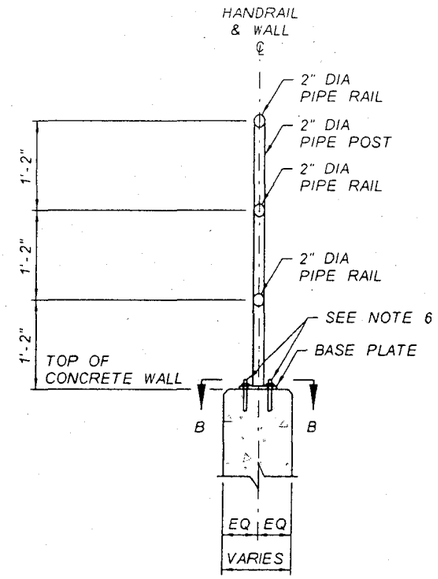

SECTION A-A
HANDRAIL ON WALL
NTS

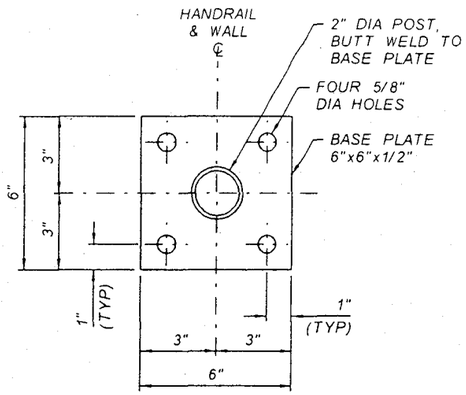

SECTION B-B
BASE PLATE
NTS

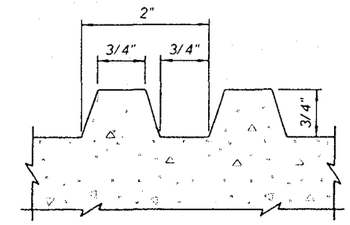

TYPICAL FORM LINER DETAIL FOR EXPOSED CONCRETE SURFACES. SURFACES BELOW TRASH RACKS NEED NOT BE TREATED WITH THE FORM LINER.

DETAIL
FORM LINER RUSTICATION
NTS

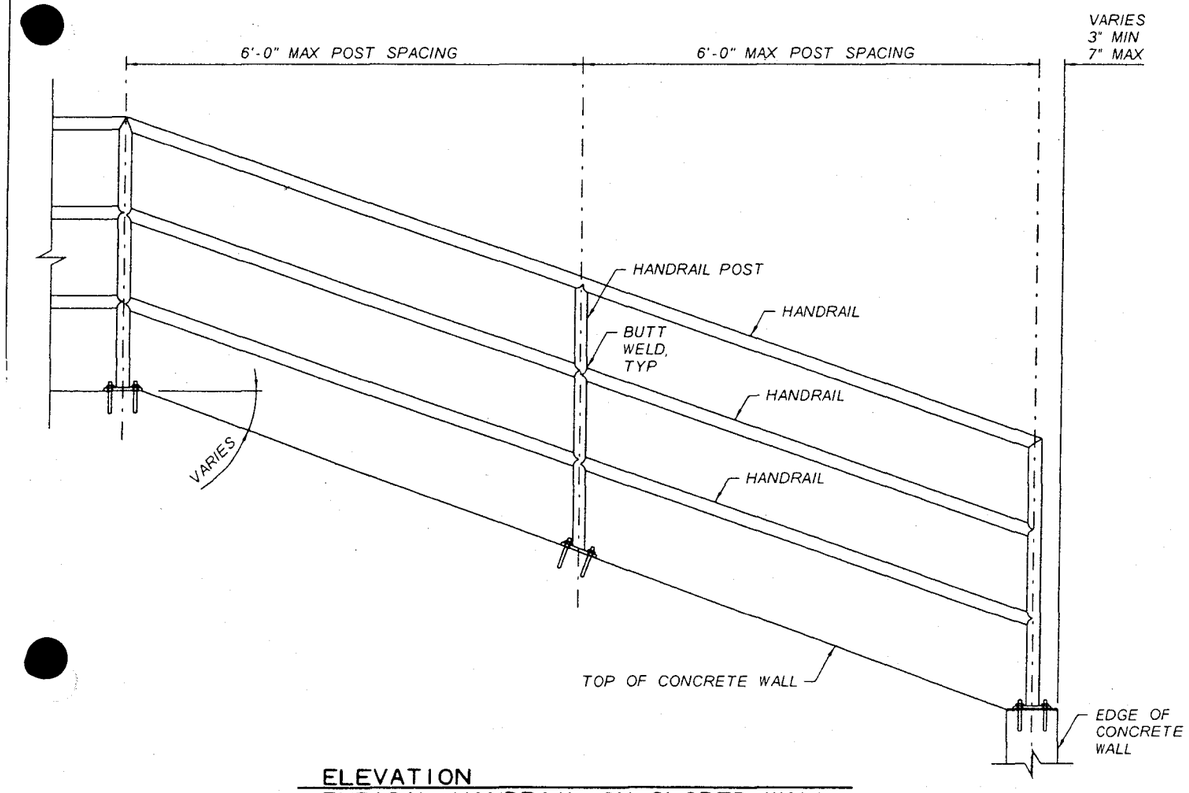

ELEVATION
TYPICAL HANDRAIL ON SLOPED WALL
NTS

NOTES:

1) ALL RAILS, POSTS AND FITTINGS SHALL BE STEEL, CONFORMING TO ALL REQUIREMENTS OF AASHTO M 181 FOR GRADE 2 PIPE. 2" N.D. PIPE IS SCHEDULE 40 PER ASTM A-53.

2) FITTINGS AND RAILS SHALL BE WELDED WITH CONTINOUS WELDS. ALL CUT EDGES SHALL BE GROUND SMOOTH AND ALL VISIBLE WELDS, WHEN COMPLETED, SHALL PRESENT A SMOOTH, EVEN APPEARANCE.

3) SPACING OF POSTS SHALL BE 6' OR LESS AS REQUIRED IN THE FIELD.

4) CONTRACTOR SHALL SUBMIT WORKING DRAWINGS FOR APPROVAL. WORKING DRAWINGS SHALL CONSIST OF SHOP DRAWINGS AND FIELD HORIZONTAL AND VERTICAL INSTALLATION.

5) PAINT STEEL ORIFICE PLATES AND HANDRAIL, COLOR "WEATHERED SANDSTONE, #320-4, SEE SPECS.

6) FOUR STAINLESS STEEL EXPANSION ANCHORS, 0.5" DIAMETER x 5" LONG, EMBEDDED 3.5", WITH WASHERS AND LOCKING NUTS.

7) POSTS ON SLOPING WINGWALL WILL BE VERTICAL. DISTANCES SHOWN ARE HORIZONTAL DISTANCE BETWEEN POSTS.

NO.	REVISION	BY	DATE
3			
2			
1			

FLOOD CONTROL DISTRICT OF MARICOPA COUNTY
ENGINEERING DIVISION

83RD AVENUE / PINNACLE PEAK ROAD
DRAINAGE IMPROVEMENTS
PCN 450.02.33 FCD CONTRACT NO. 2003C060

90%
PRELIMINARY NOT FOR CONSTRUCTION

	BY	DATE
DESIGNED	O. OLIDEN	01/06
DRAWN	A. JOHNSON	01/06
CHECKED	M. RATHBONE	01/06

JACOBS CIVIL INC.

DRAWING NO.		SHEET OF
D01	DTL 01 STEEL HANDRAIL	

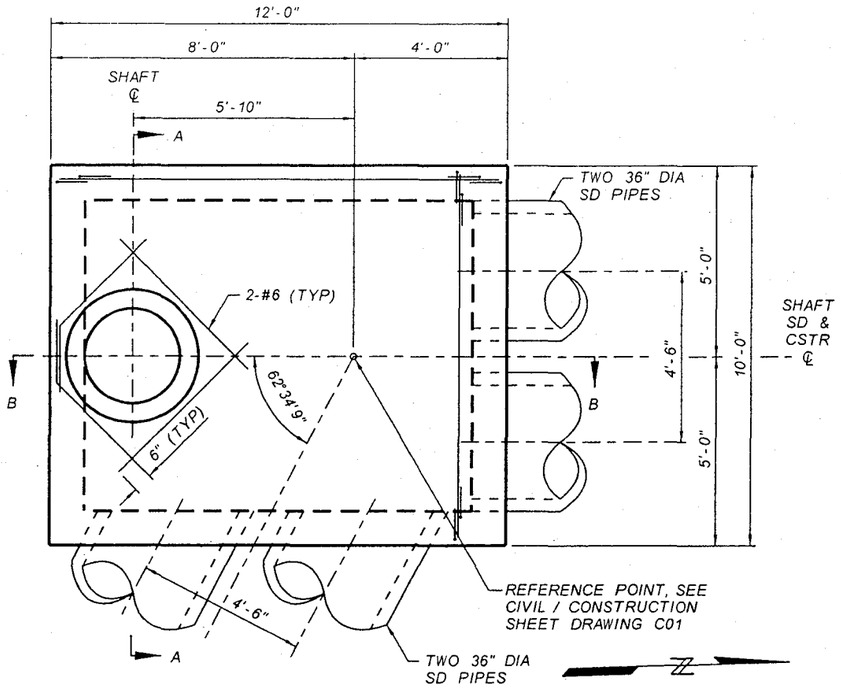

PLAN
CONCRETE VAULT
83RD AVENUE STA 100+05
NTS

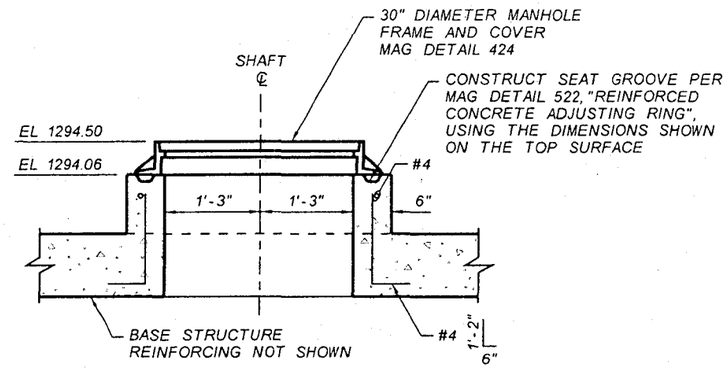

SHAFT DETAIL
CONCRETE VAULT
83RD AVENUE STA 100+05
NTS

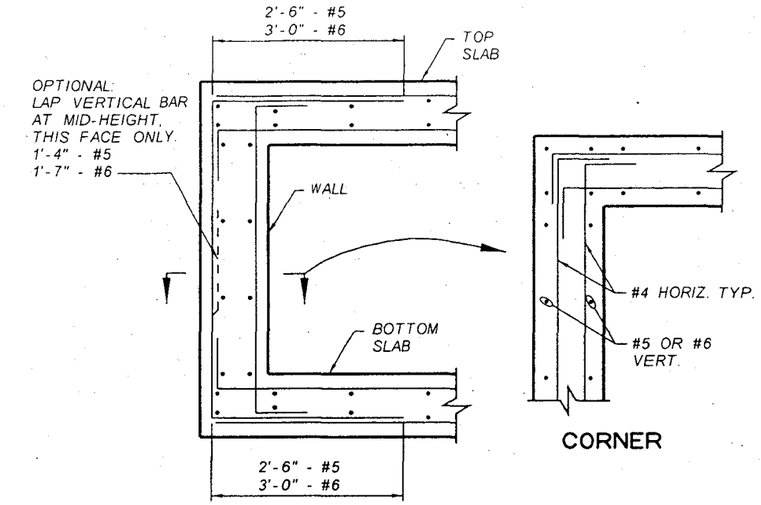

WALL REINFORCING DETAILS
TYPICAL AT ALL CONCRETE VAULTS AND STORM DRAIN MANHOLE BASES
NTS

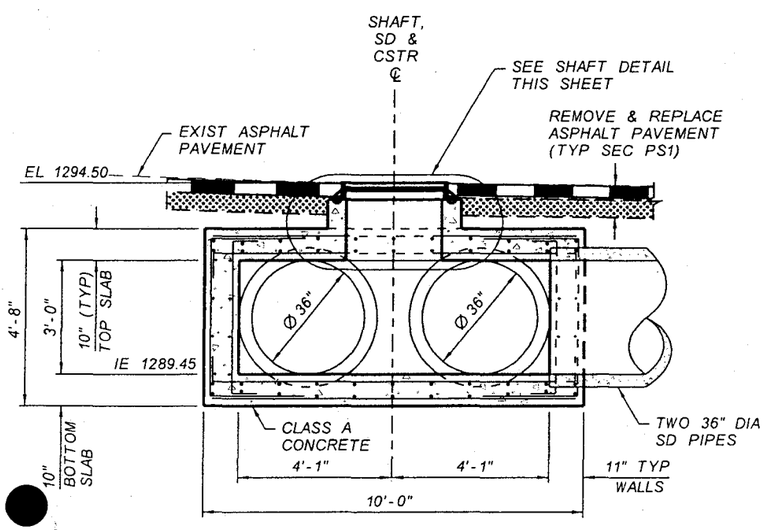

SECTION A-A
CONCRETE VAULT
83RD AVENUE STA 100+05
NTS

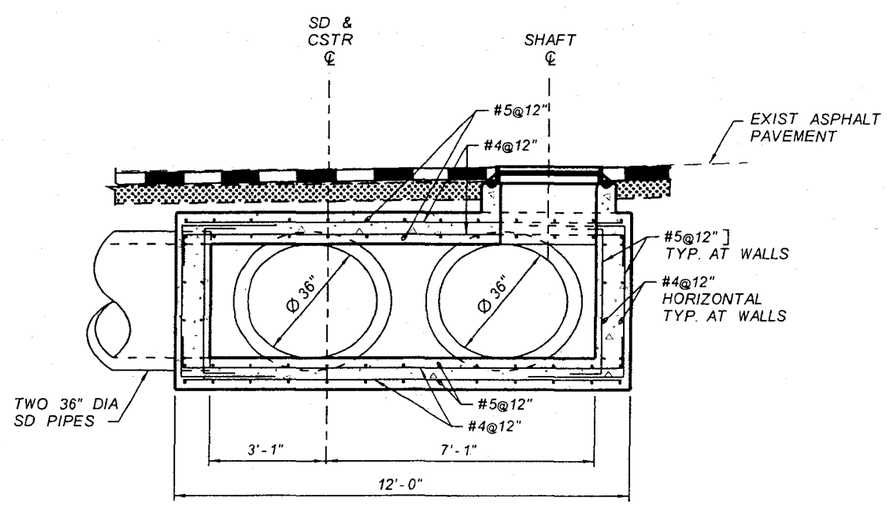

SECTION B-B
CONCRETE VAULT
83RD AVENUE STA 100+05
NTS

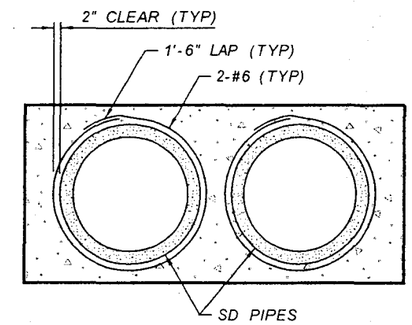

REINFORCING AT SD PIPE
CONCRETE VAULT AND STORM DRAIN MANHOLE BASE TYPICAL AT ALL LOCATIONS, ALL PIPES AND SHAFTS
NTS

NO	REVISION	BY	DATE
3			
2			
1			

FLOOD CONTROL DISTRICT OF MARICOPA COUNTY
ENGINEERING DIVISION

83RD AVENUE / PINNACLE PEAK ROAD
DRAINAGE IMPROVEMENTS
PCN 450.02.33 FCD CONTRACT NO. 2003C060

90%
PRELIMINARY NOT FOR CONSTRUCTION

	BY	DATE
DESIGNED	O. OLIDEN	01/06
DRAWN	A. JOHNSON	01/06
CHECKED	M. RATHBONE	01/06

JACOBS CIVIL INC.

DRAWING NO. D02 | DTL 02 CONCRETE VAULT | SHEET OF

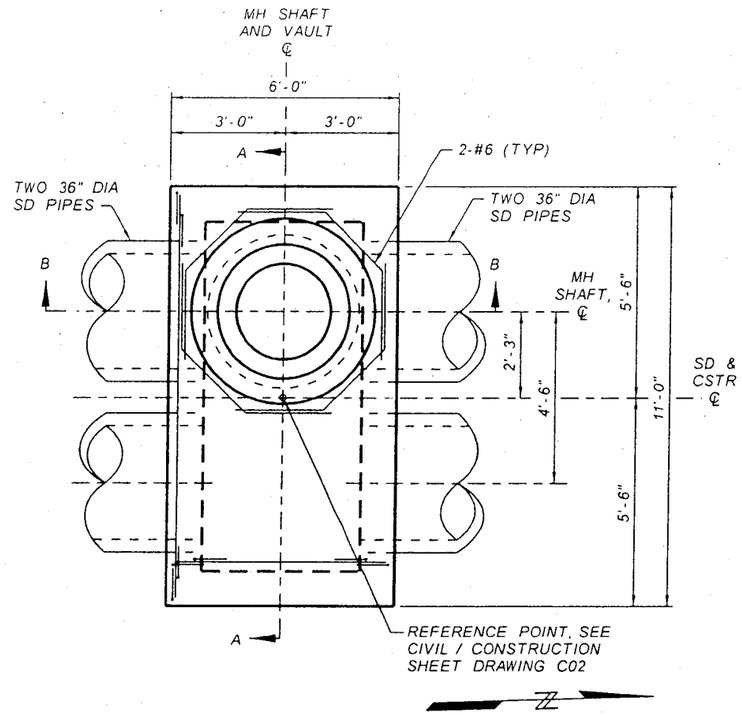

PLAN
STORM DRAIN MANHOLE BASE
83RD AVENUE STA 102+00
NTS

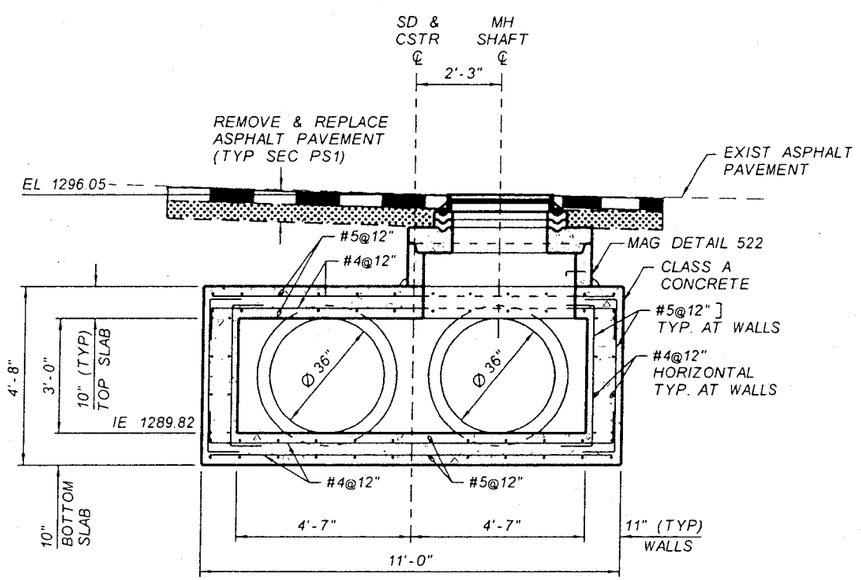

SECTION A-A
STORM DRAIN MANHOLE BASE
83RD AVENUE STA 102+00
NTS

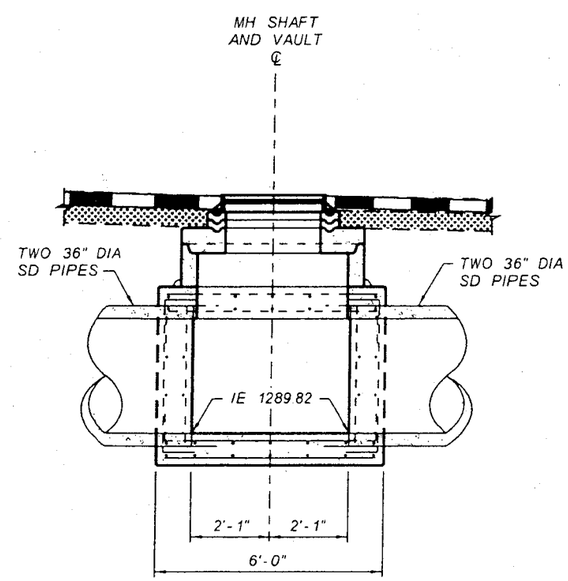

SECTION B-B
STORM DRAIN MANHOLE BASE
83RD AVENUE STA 102+00
NTS

NO.	REVISION	BY	DATE
3			
2			
1			

FLOOD CONTROL DISTRICT OF MARICOPA COUNTY
ENGINEERING DIVISION

83RD AVENUE / PINNACLE PEAK ROAD
DRAINAGE IMPROVEMENTS
PCN 450.02.33 FCD CONTRACT NO. 2003C060

90%
PRELIMINARY
NOT FOR
CONSTRUCTION

	BY	DATE
DESIGNED	O OLIDEN	01/06
DRAWN	A JOHNSON	01/06
CHECKED	M RATHBONE	01/06

JACOBS CIVIL INC.

DRAWING NO. D03 | DTL 03 STORM DRAIN MANHOLE BASE | SHEET OF

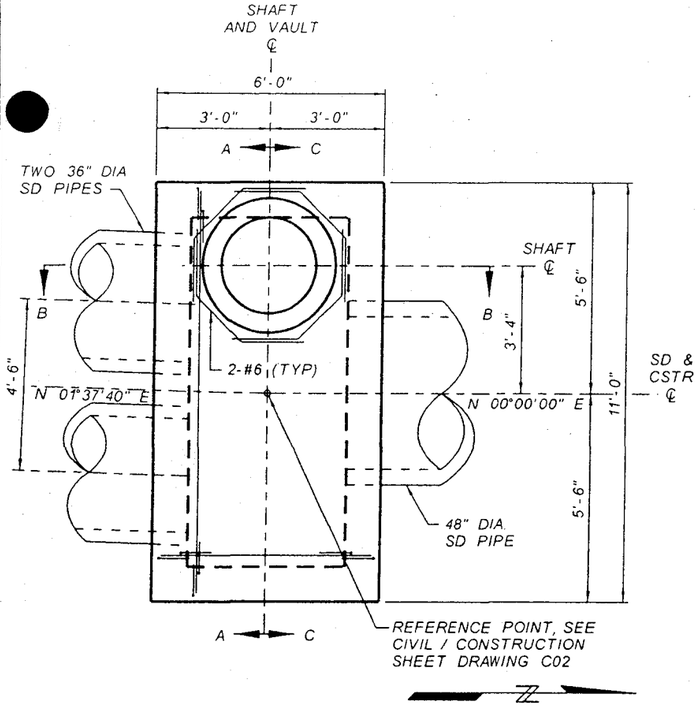

PLAN
CONCRETE VAULT
83RD AVENUE STA 104+75
NTS

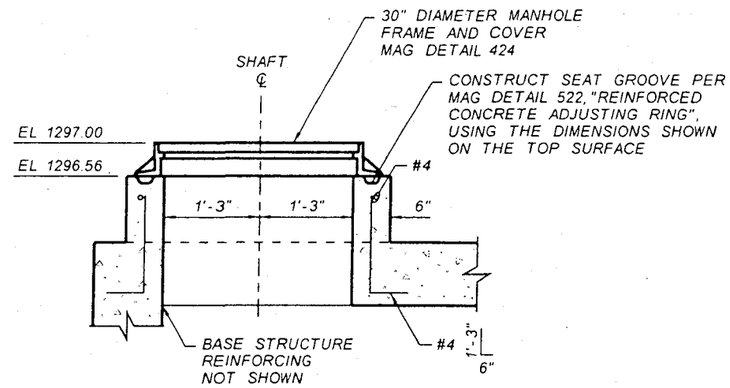

SHAFT DETAIL
CONCRETE VAULT
83RD AVENUE STA 104+75
NTS

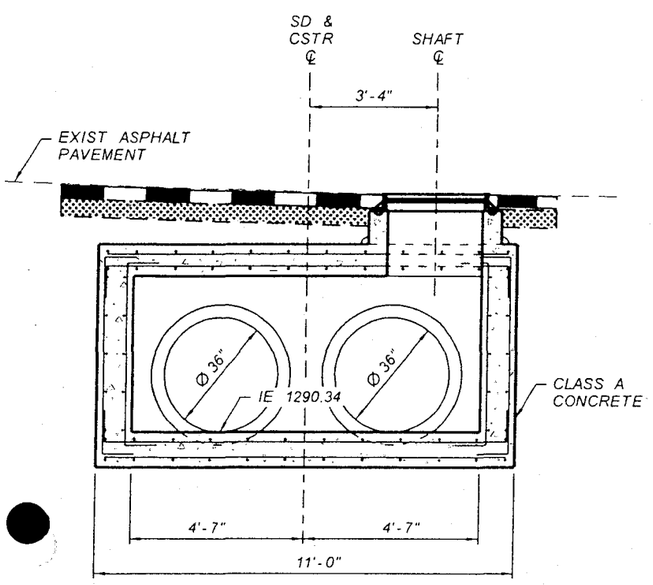

SECTION A-A
CONCRETE VAULT
83RD AVENUE STA 104+75
NTS

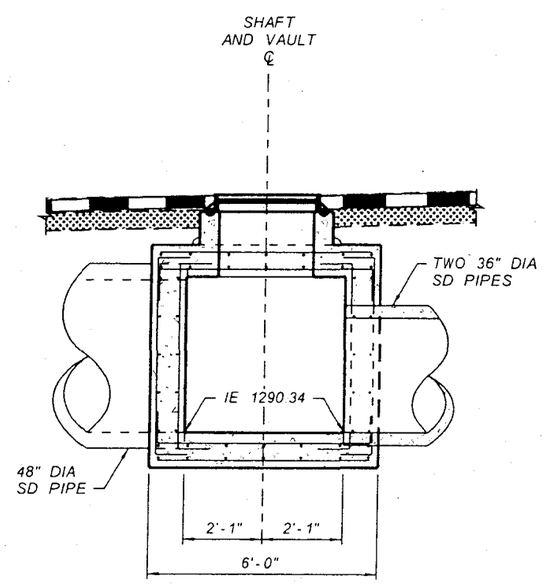

SECTION B-B
CONCRETE VAULT
83RD AVENUE STA 104+75
NTS

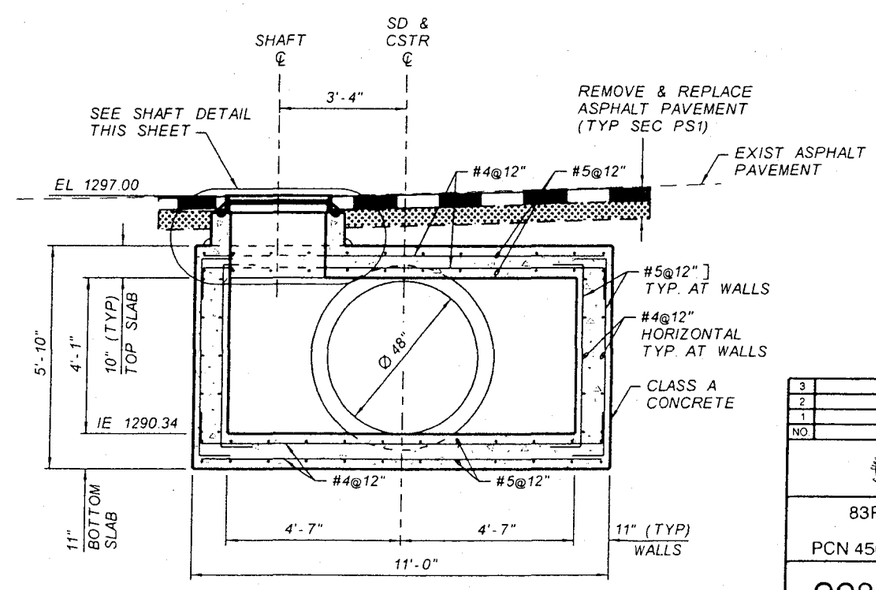

SECTION C-C
CONCRETE VAULT
83RD AVENUE STA 104+75
NTS

NO.	REVISION	BY	DATE
3			
2			
1			

FLOOD CONTROL DISTRICT
OF MARICOPA COUNTY
ENGINEERING DIVISION

83RD AVENUE / PINNACLE PEAK ROAD
DRAINAGE IMPROVEMENTS
PCN 450.02.33 FCD CONTRACT NO. 2003C060

90%
PRELIMINARY
NOT FOR
CONSTRUCTION

	BY	DATE
DESIGNED	O. OLIDEN	01/06
DRAWN	A. JOHNSON	01/06
CHECKED	M. RATHBONE	01/06

JACOBS CIVIL INC.

DRAWING NO. D04 | DTL 04 CONCRETE VAULT | SHEET OF

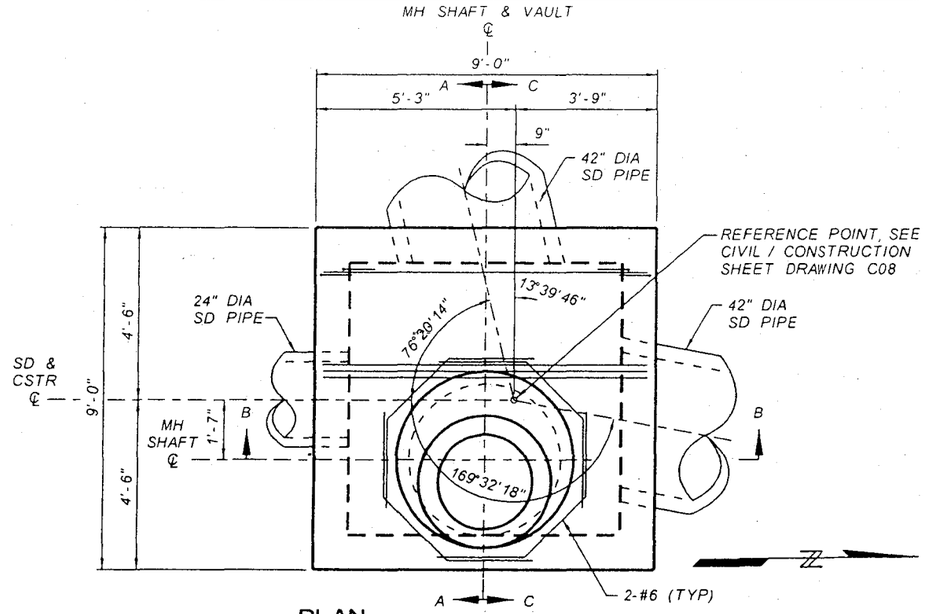

PLAN
STORM DRAIN MANHOLE BASE
83RD AVENUE STA 134+86
NTS

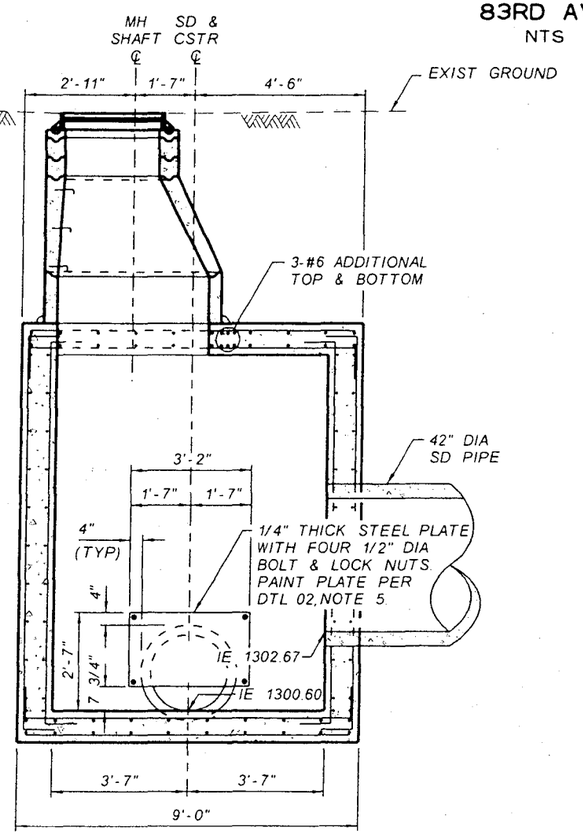

SECTION A-A
STORM DRAIN MANHOLE BASE
83RD AVENUE STA 134+86
NTS

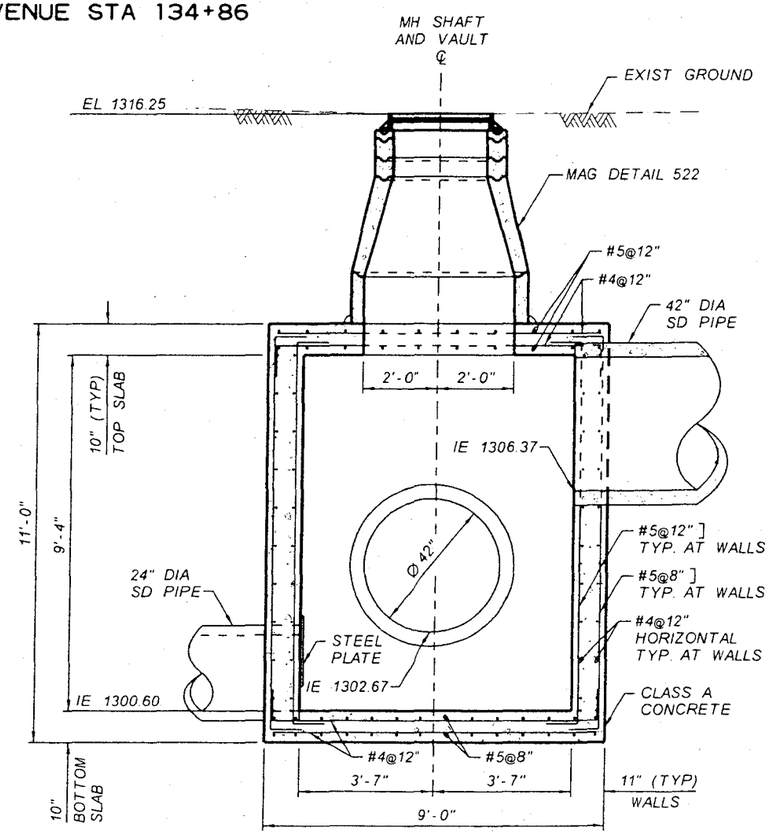

SECTION B-B
STORM DRAIN MANHOLE BASE
83RD AVENUE STA 134+86
NTS

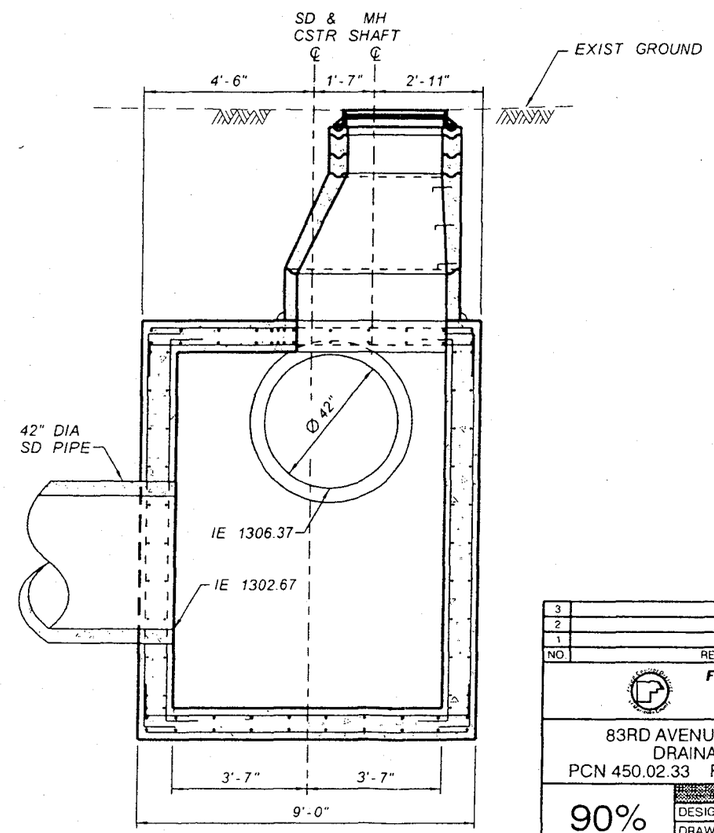

SECTION C-C
STORM DRAIN MANHOLE BASE
83RD AVENUE STA 134+86
NTS

NO.	REVISION	BY	DATE
3			
2			
1			

FLOOD CONTROL DISTRICT OF MARICOPA COUNTY
ENGINEERING DIVISION

83RD AVENUE / PINNACLE PEAK ROAD
DRAINAGE IMPROVEMENTS
PCN 450.02.33 FCD CONTRACT NO. 2003C060

90%
PRELIMINARY NOT FOR CONSTRUCTION

	BY	DATE
DESIGNED	O. OLIDEN	01/06
DRAWN	A. JOHNSON	01/06
CHECKED	M. RATHBONE	01/06

JACOBS CIVIL INC.

DRAWING NO. D05 | DTL 05 STORM DRAIN MANHOLE BASE | SHEET OF

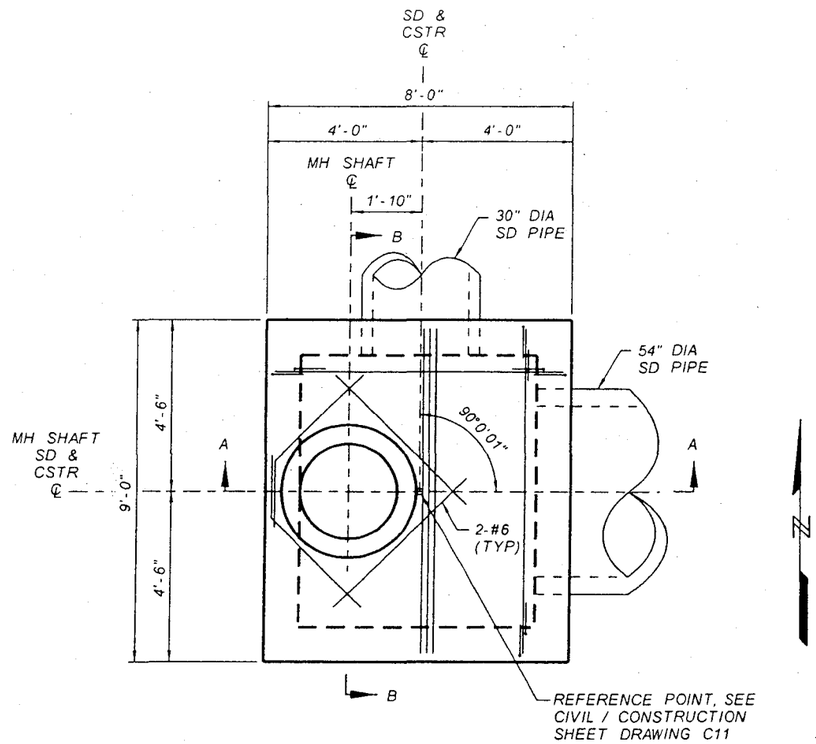

PLAN
CONCRETE VAULT
PINNACLE PEAK ROAD STA 199+60
NTS

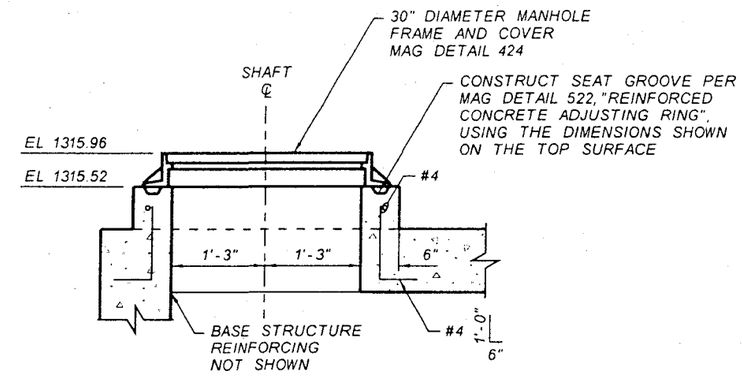

SHAFT DETAIL
CONCRETE VAULT
PINNACLE PEAK ROAD STA 199+60
NTS

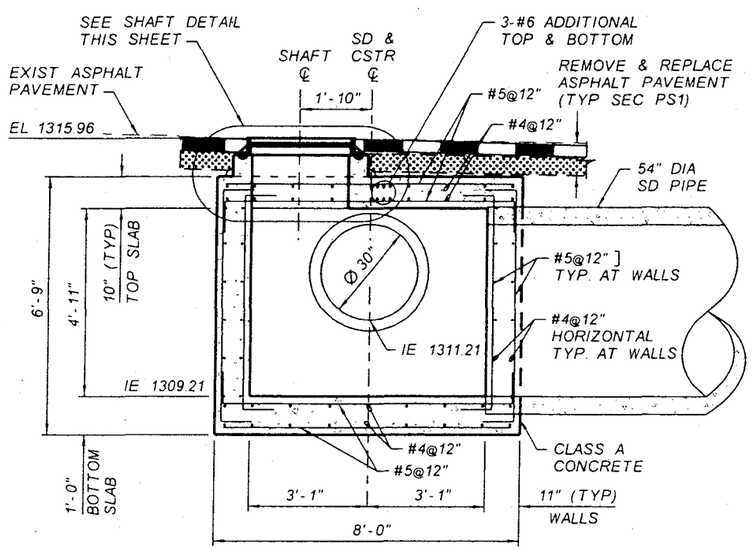

SECTION A-A
CONCRETE VAULT
PINNACLE PEAK ROAD STA 199+60
NTS

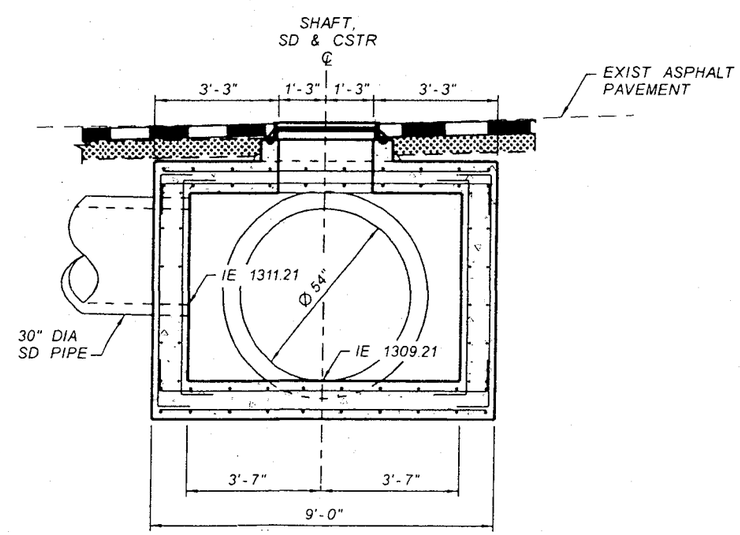

SECTION B-B
CONCRETE VAULT
PINNACLE PEAK ROAD STA 199+60
NTS

NO.	REVISION	BY	DATE
3			
2			
1			

FLOOD CONTROL DISTRICT OF MARICOPA COUNTY
ENGINEERING DIVISION

83RD AVENUE / PINNACLE PEAK ROAD
DRAINAGE IMPROVEMENTS
PCN 450.02.33 FCD CONTRACT NO. 2003C060

90%
PRELIMINARY NOT FOR CONSTRUCTION

	BY	DATE
DESIGNED	O. OLIDEN	01/06
DRAWN	A. JOHNSON	01/06
CHECKED	M. RATHBONE	01/06

JACOBS CIVIL INC.

DRAWING NO. D06 | DTL 06 CONCRETE VAULT | SHEET OF

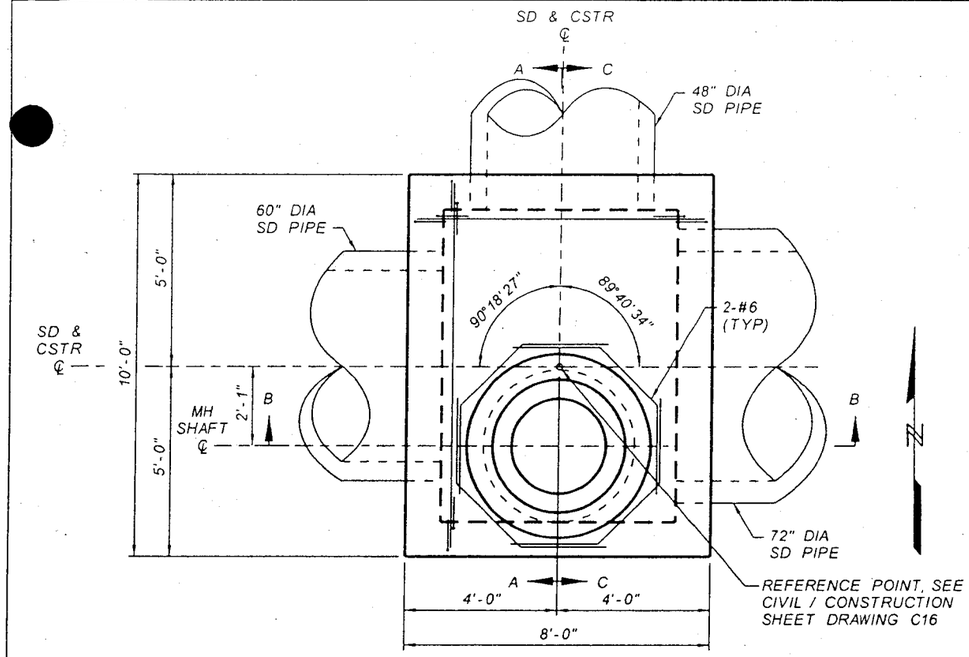

PLAN
STORM DRAIN MANHOLE BASE
PINNACLE PEAK ROAD STA 226+64
NTS

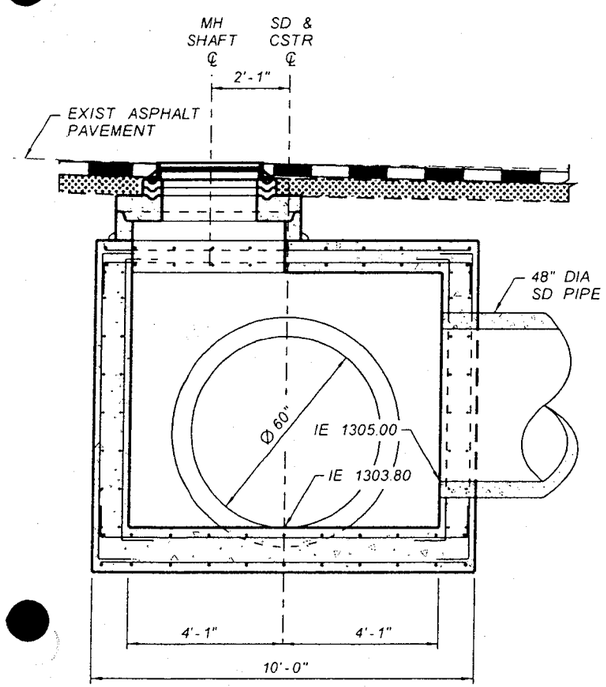

SECTION A-A
STORM DRAIN MANHOLE BASE
PINNACLE PEAK ROAD STA 226+64
NTS

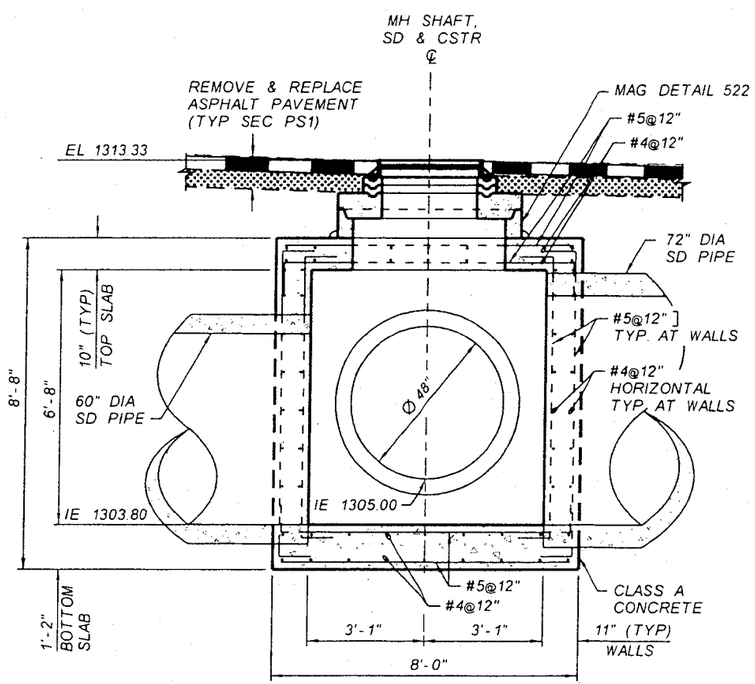

SECTION B-B
STORM DRAIN MANHOLE BASE
PINNACLE PEAK ROAD STA 226+64
NTS

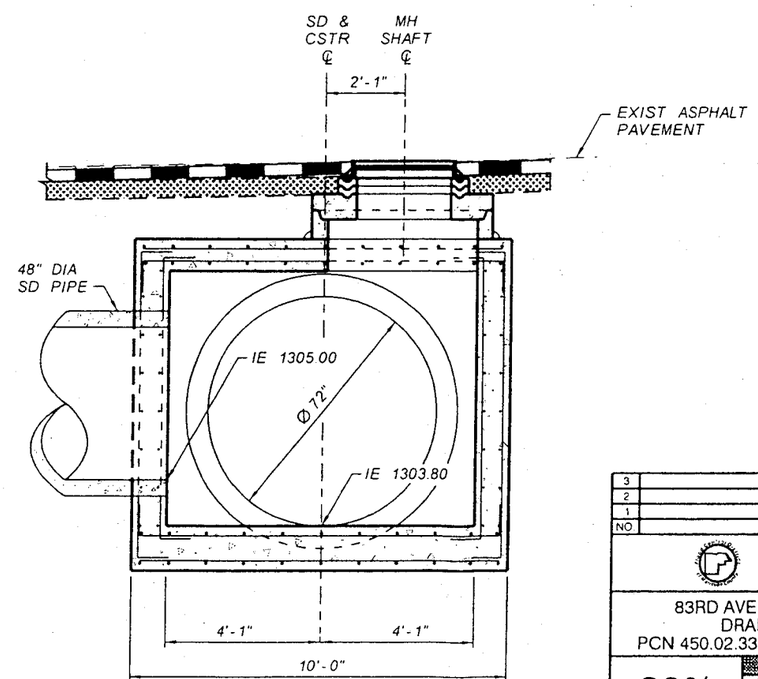

SECTION C-C
STORM DRAIN MANHOLE BASE
PINNACLE PEAK ROAD STA 226+64
NTS

NO	REVISION	BY	DATE
3			
2			
1			

FLOOD CONTROL DISTRICT OF MARICOPA COUNTY
ENGINEERING DIVISION

83RD AVENUE / PINNACLE PEAK ROAD
DRAINAGE IMPROVEMENTS
PCN 450.02.33 FCD CONTRACT NO. 2003C060

90%
PRELIMINARY NOT FOR CONSTRUCTION

	BY	DATE
DESIGNED	O. OLIDEN	01/06
DRAWN	A. JOHNSON	01/06
CHECKED	M. RATHBONE	01/06

JACOBS CIVIL INC.

DRAWING NO. D07 | DTL 07 STORM DRAIN MANHOLE BASE | SHEET OF

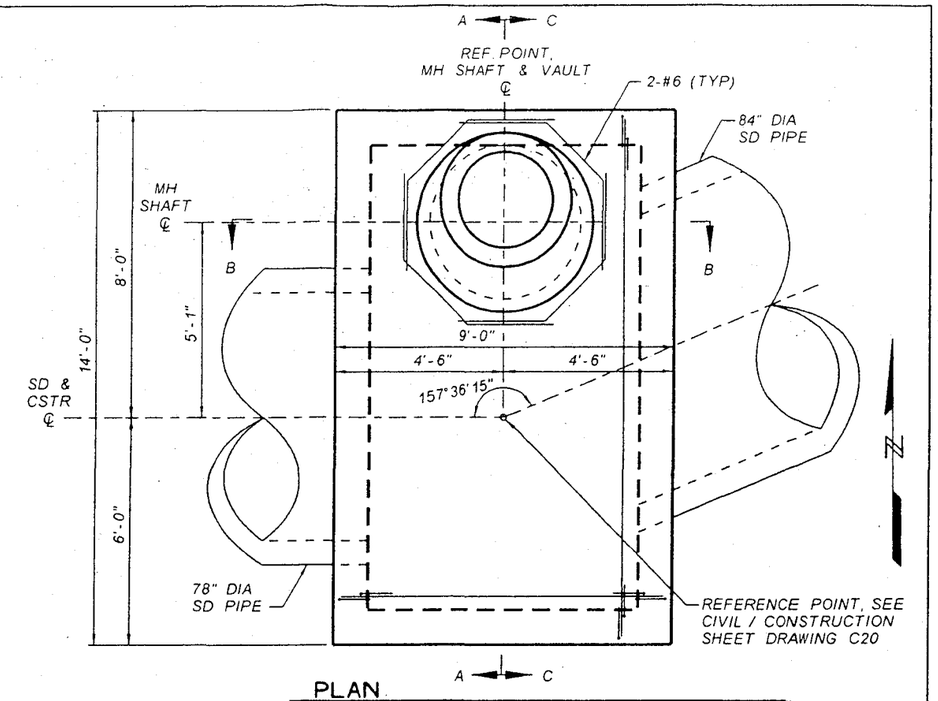

PLAN
STORM DRAIN MANHOLE BASE
PINNACLE PEAK ROAD STA 244+40
NTS

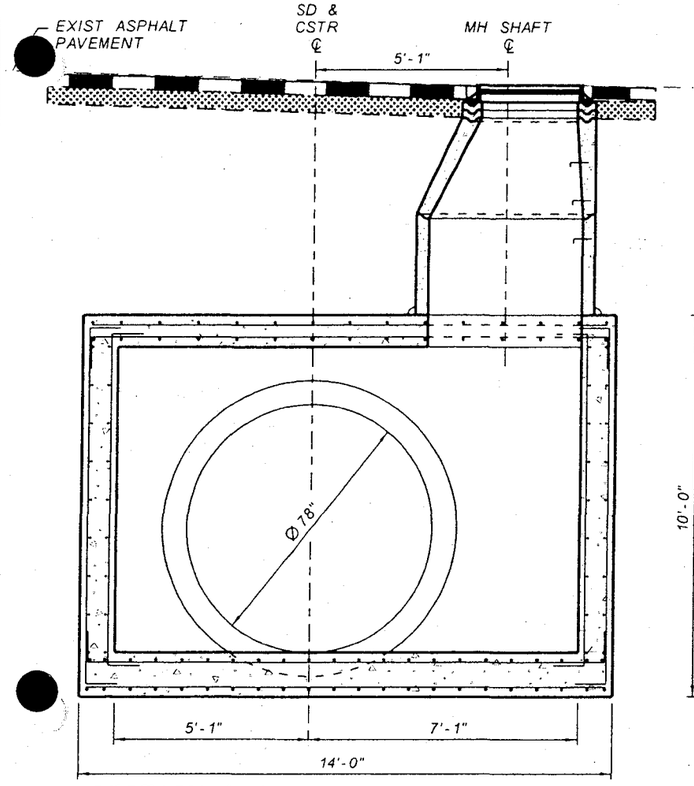

SECTION A-A
STORM DRAIN MANHOLE BASE
PINNACLE PEAK ROAD STA 244+40
NTS

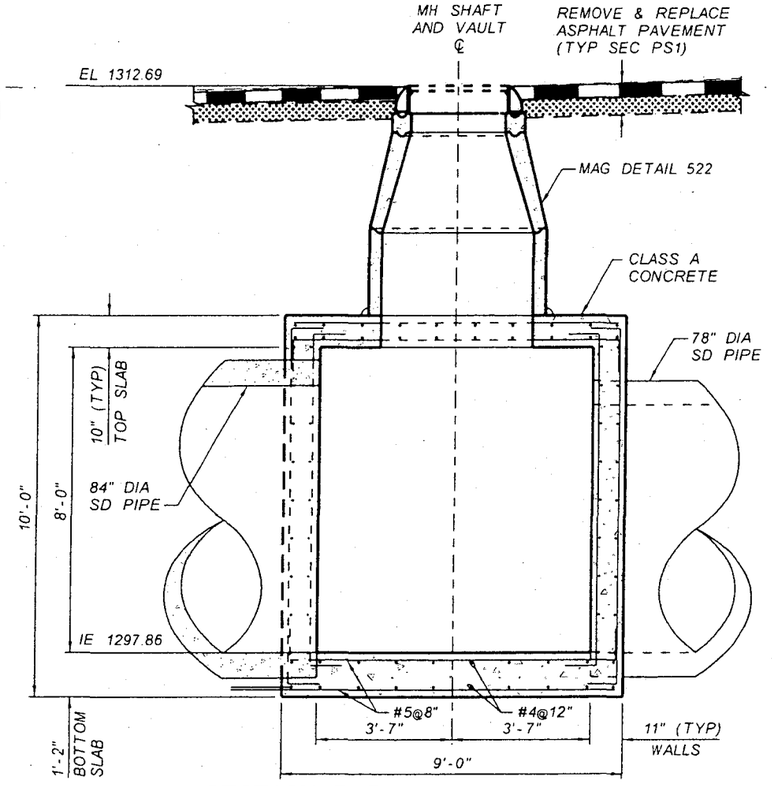

SECTION B-B
STORM DRAIN MANHOLE BASE
PINNACLE PEAK ROAD STA 244+40
NTS

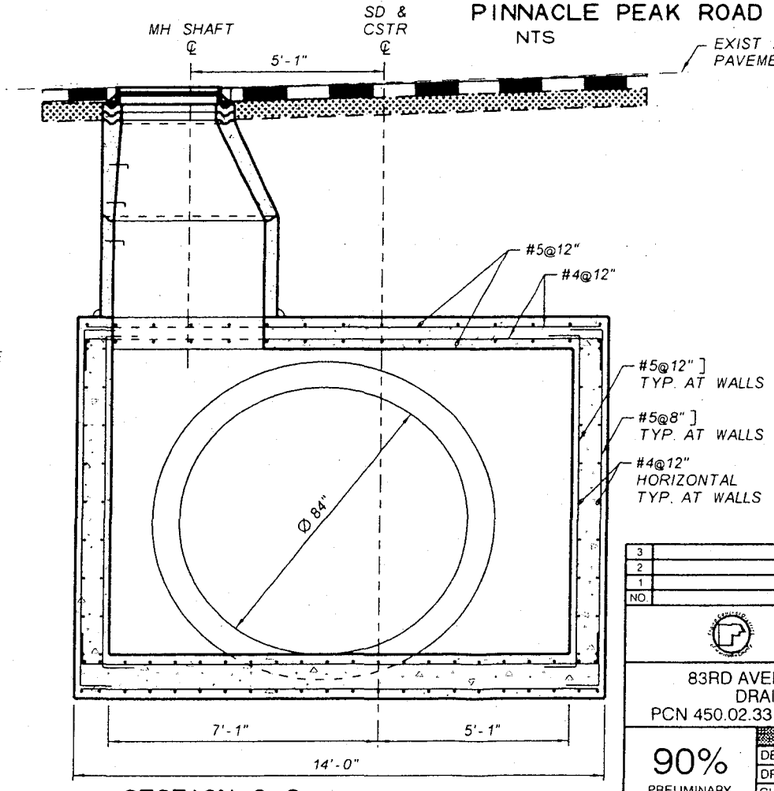

SECTION C-C
STORM DRAIN MANHOLE BASE
PINNACLE PEAK ROAD STA 244+40
NTS

NO	REVISION	BY	DATE
3			
2			
1			

FLOOD CONTROL DISTRICT OF MARICOPA COUNTY
ENGINEERING DIVISION

83RD AVENUE / PINNACLE PEAK ROAD
DRAINAGE IMPROVEMENTS
PCN 450.02.33 FCD CONTRACT NO. 2003C060

90%
PRELIMINARY NOT FOR CONSTRUCTION

	BY	DATE
DESIGNED	O OLIDEN	01/06
DRAWN	A JOHNSON	01/06
CHECKED	M. RATHBONE	01/06

JACOBS CIVIL INC.

DRAWING NO. D09 | DTL 09 STORM DRAIN MANHOLE BASE | SHEET OF

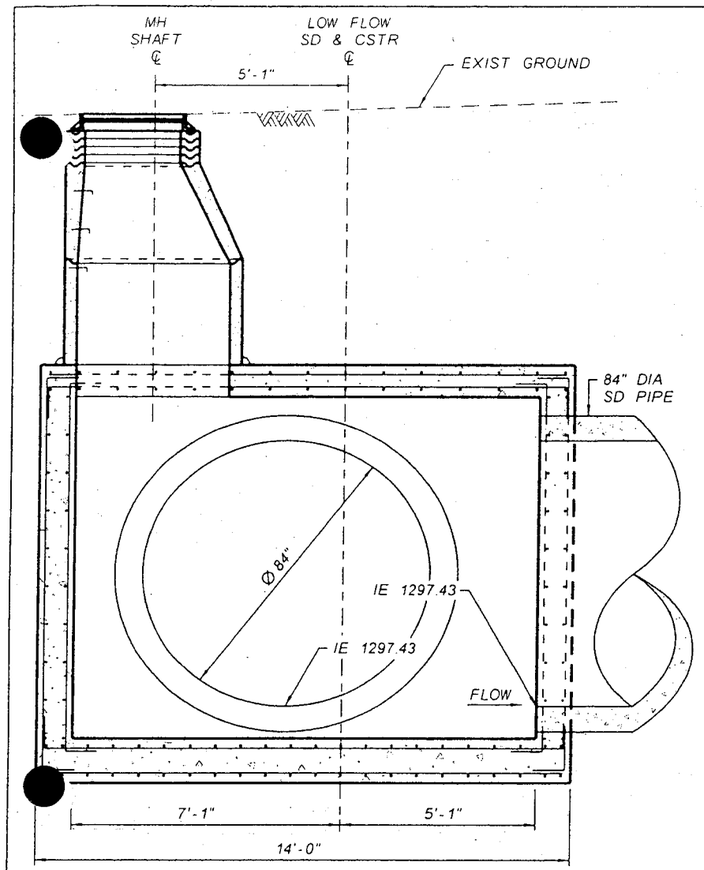

SECTION A-A
STORM DRAIN MANHOLE BASE
PINNACLE PEAK ROAD STA 245+65
NTS

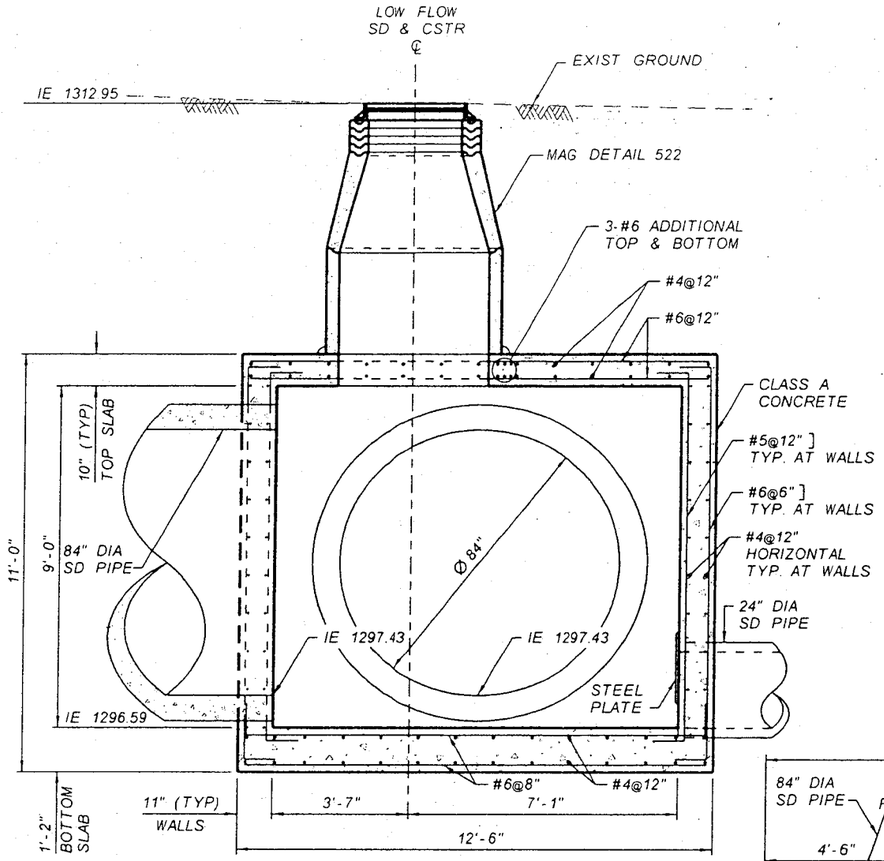

SECTION B-B
STORM DRAIN MANHOLE BASE
PINNACLE PEAK ROAD STA 245+65
NTS

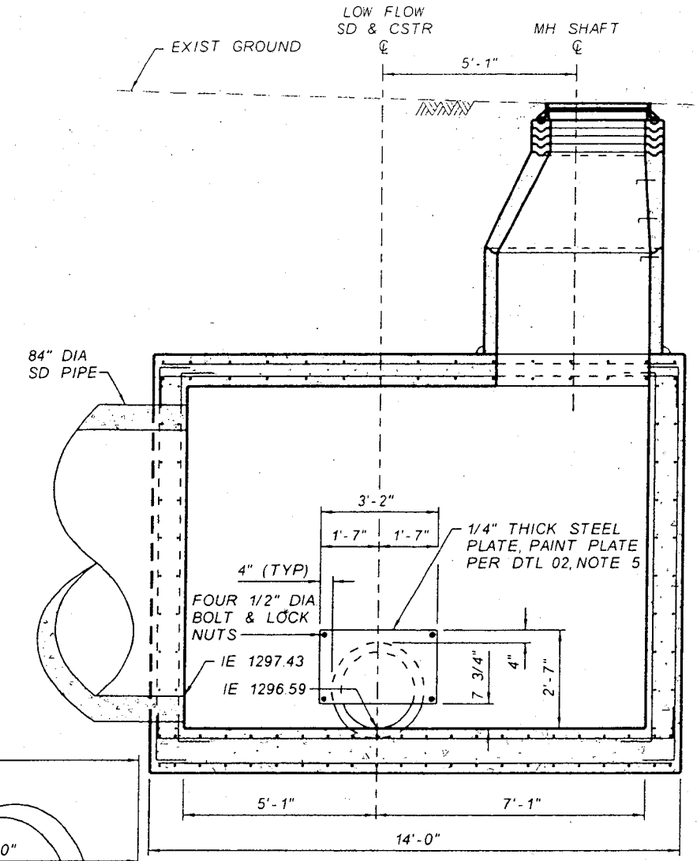

SECTION C-C
STORM DRAIN MANHOLE BASE
PINNACLE PEAK ROAD STA 245+65
NTS

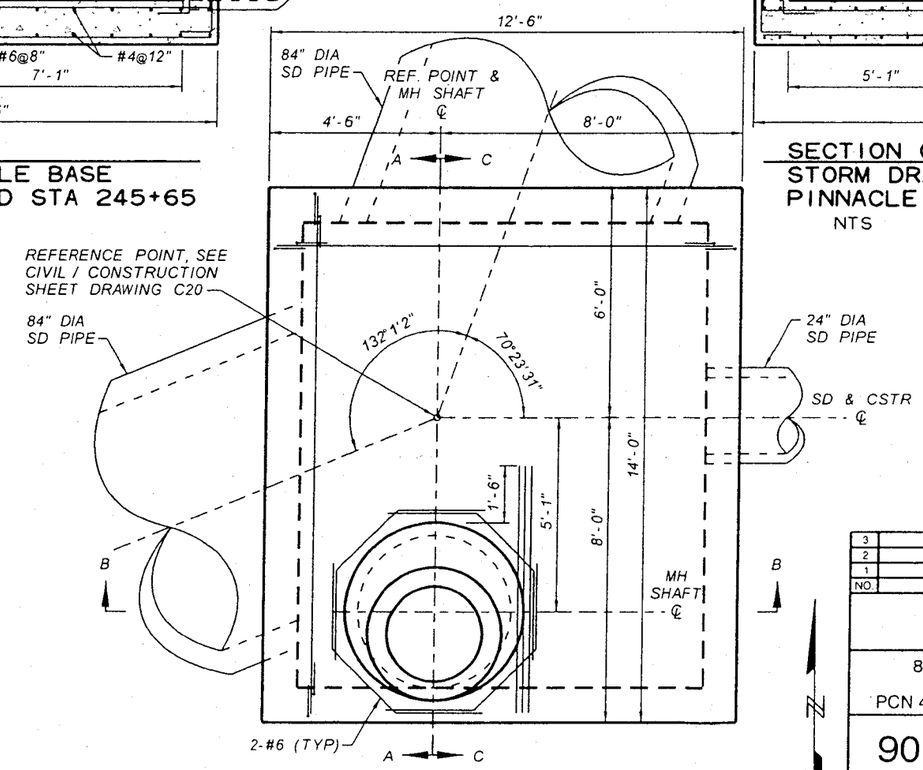

DETAIL
STORM DRAIN MANHOLE BASE
PINNACLE PEAK ROAD STA 245+65
NTS

NO.	REVISION	BY	DATE
3			
2			
1			

FLOOD CONTROL DISTRICT OF MARICOPA COUNTY
ENGINEERING DIVISION

83RD AVENUE / PINNACLE PEAK ROAD
DRAINAGE IMPROVEMENTS
PCN 450.02.33 FCD CONTRACT NO. 2003C060

90%
PRELIMINARY NOT FOR CONSTRUCTION

	BY	DATE
DESIGNED	O. OLIDEN	01/06
DRAWN	A. JOHNSON	01/06
CHECKED	M. RATHBONE	01/06

JACOBS CIVIL INC.

DRAWING NO. D10 | DTL 10 STORM DRAIN MANHOLE BASE | SHEET OF

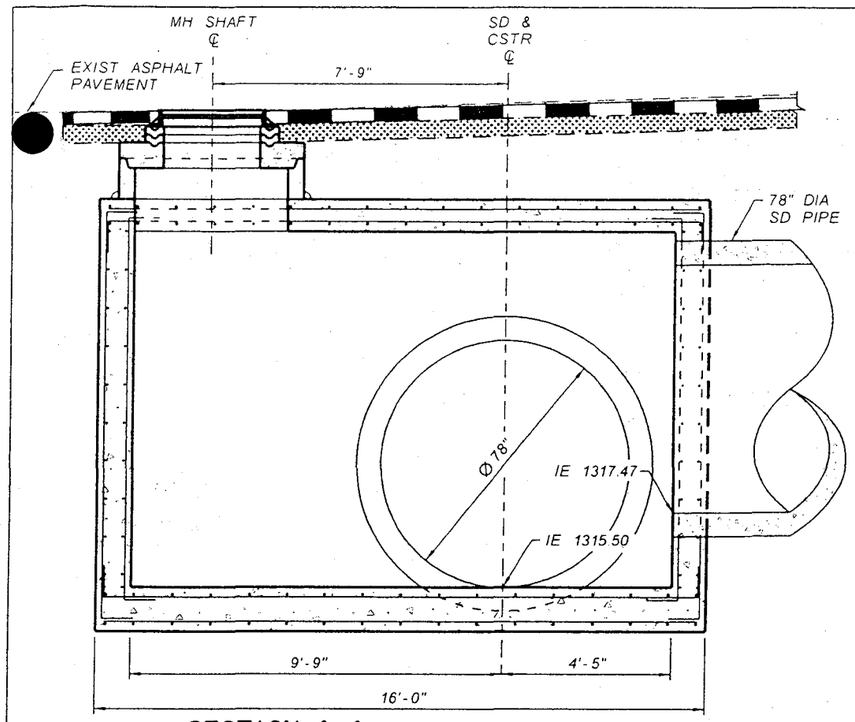

SECTION A-A
STORM DRAIN MANHOLE BASE
87TH AVENUE STA 313+52
NTS

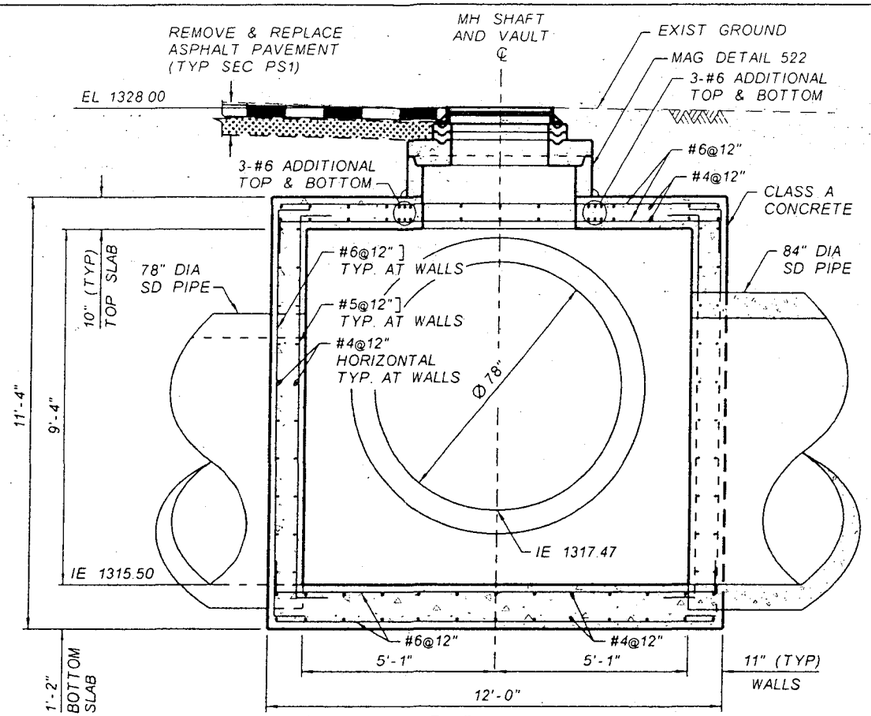

SECTION B-B
STORM DRAIN MANHOLE BASE
87TH AVENUE STA 313+52
NTS

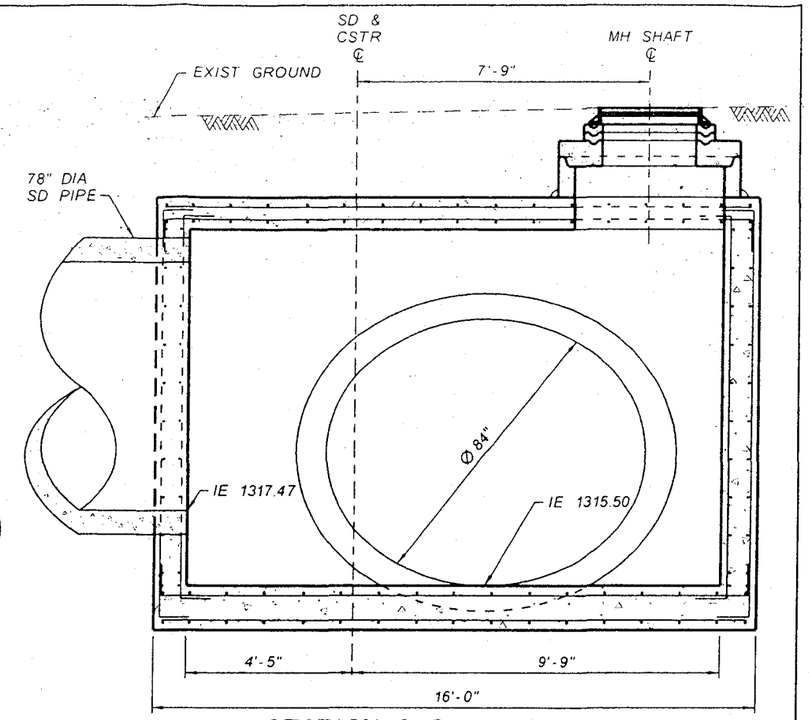

SECTION C-C
STORM DRAIN MANHOLE BASE
87TH AVENUE STA 313+52
NTS

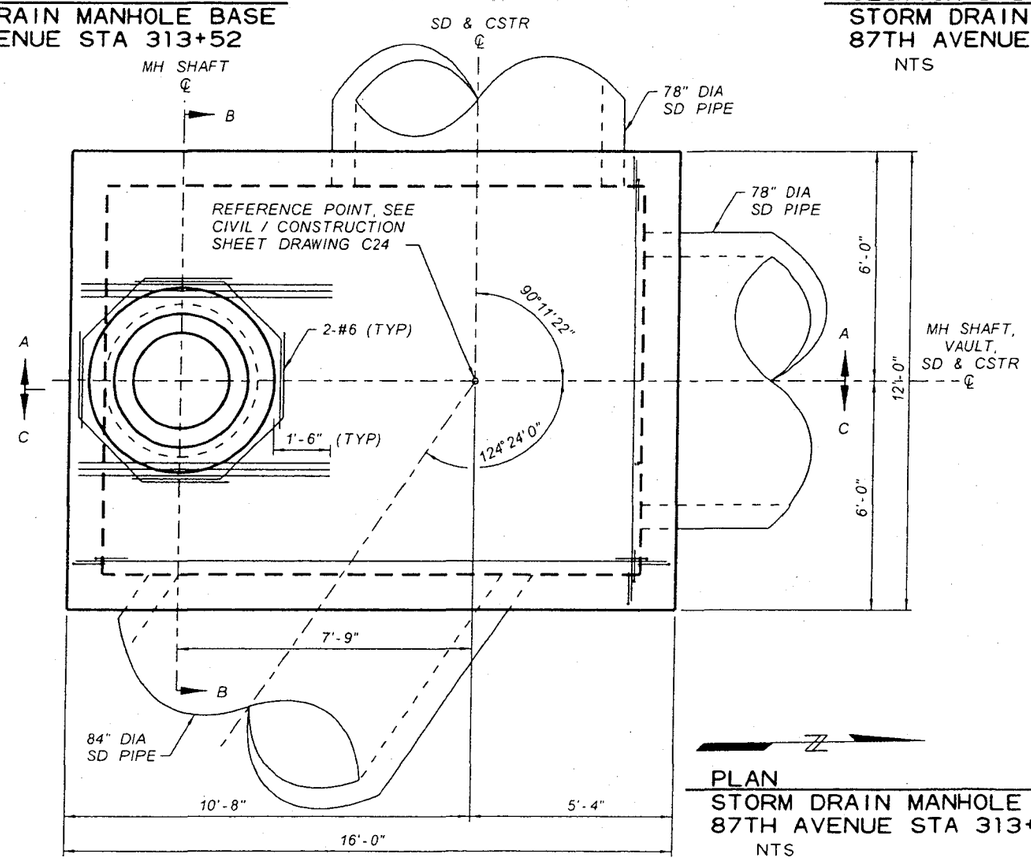

PLAN
STORM DRAIN MANHOLE BASE
87TH AVENUE STA 313+52
NTS

NO	REVISION	BY	DATE
3			
2			
1			

FLOOD CONTROL DISTRICT OF MARICOPA COUNTY
ENGINEERING DIVISION

83RD AVENUE / PINNACLE PEAK ROAD
DRAINAGE IMPROVEMENTS
PCN 450.02.33 FCD CONTRACT NO. 2003C060

90%
PRELIMINARY NOT FOR CONSTRUCTION

	BY	DATE
DESIGNED	O. OLIDEN	01/06
DRAWN	A. JOHNSON	01/06
CHECKED	M. RATHBONE	01/06

JACOBS CIVIL INC.

DRAWING NO. D11 | DTL 11 STORM DRAIN MANHOLE BASE | SHEET OF

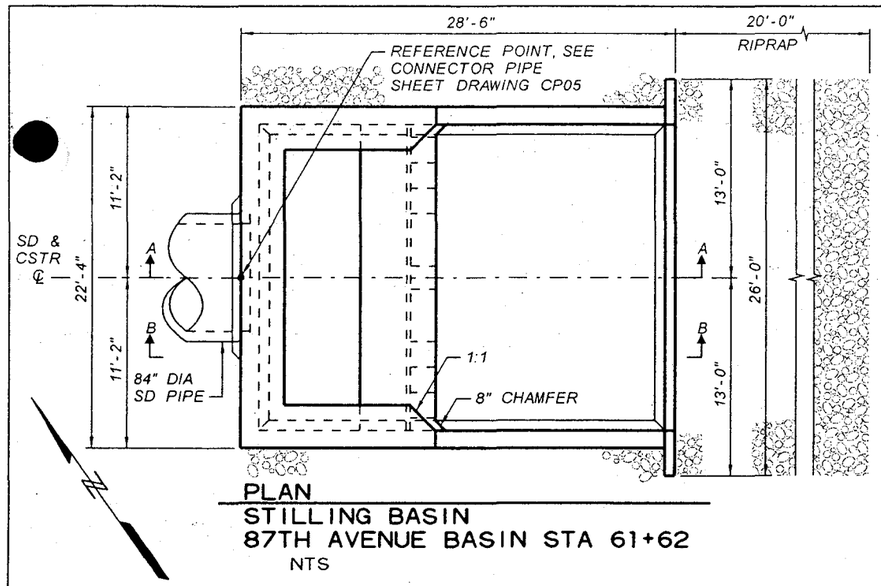

PLAN
STILLING BASIN
87TH AVENUE BASIN STA 61+62
NTS

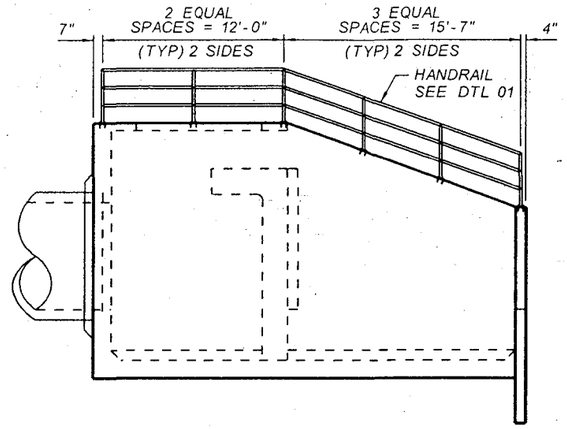

SIDE PROFILE
STILLING BASIN
87TH AVENUE BASIN STA 61+62
NTS

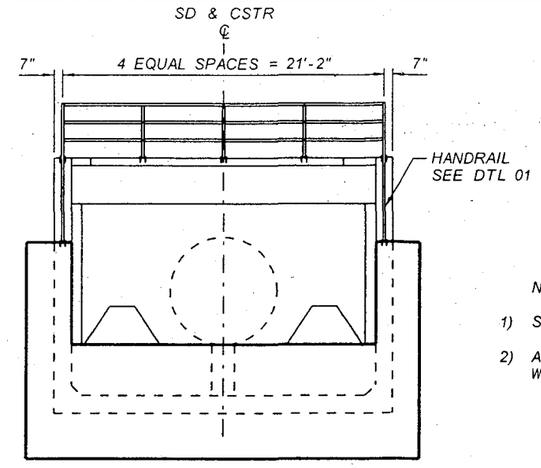

FRONT PROFILE
STILLING BASIN
87TH AVENUE BASIN STA 61+62
NTS

NOTES:

1) STAIN ALL EXPOSED SURFACES, SEE SPECIFICATIONS.
2) ALL EXPOSED SURFACES SHALL BE CONSTRUCTED WITH FORM LINER PER DTL 01.

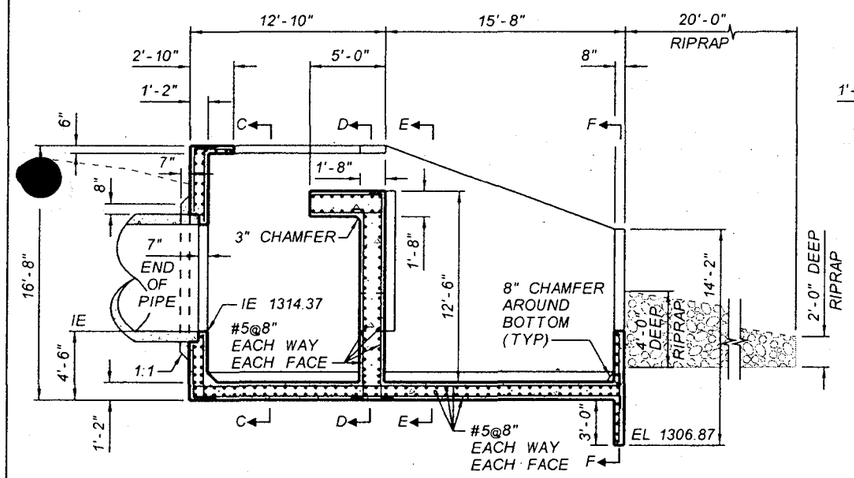

SECTION A-A
STILLING BASIN
87TH AVENUE BASIN STA 61+62
NTS

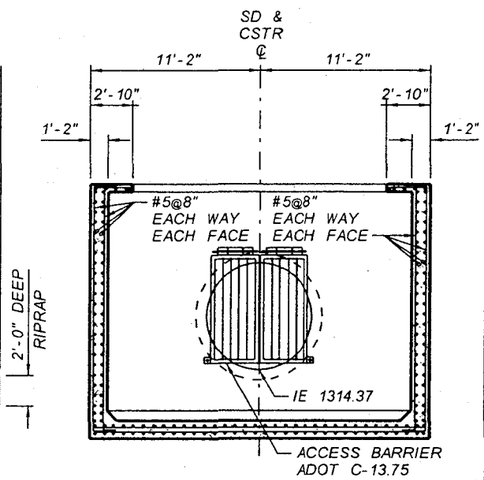

SECTION C-C
STILLING BASIN
87TH AVENUE BASIN
STA 61+62
NTS

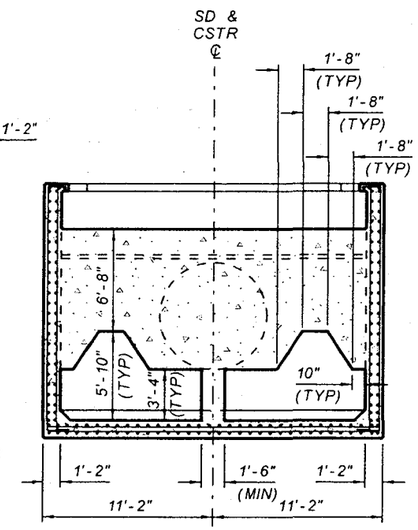

SECTION D-D
STILLING BASIN
87TH AVENUE BASIN
STA 61+62
NTS

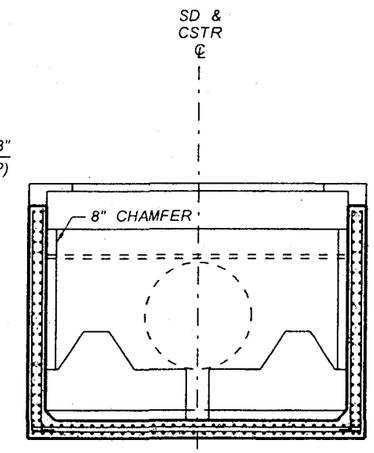

SECTION E-E
STILLING BASIN
87TH AVENUE BASIN
STA 61+62
NTS

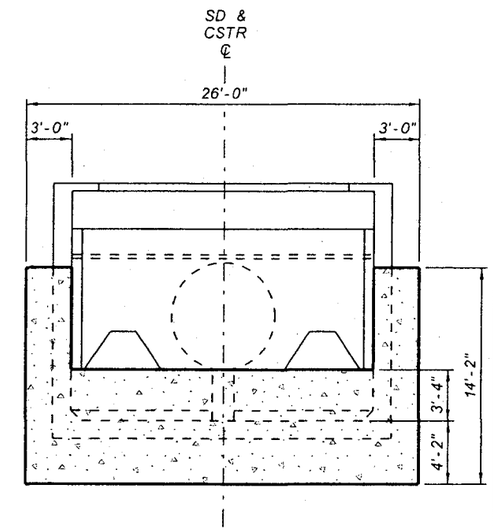

SECTION F-F
STILLING BASIN
87TH AVENUE BASIN
STA 61+62
NTS

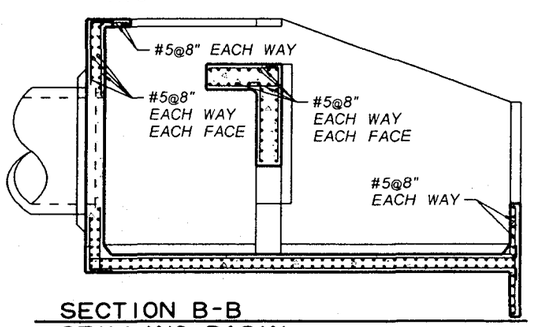

SECTION B-B
STILLING BASIN
87TH AVENUE BASIN STA 61+62
NTS

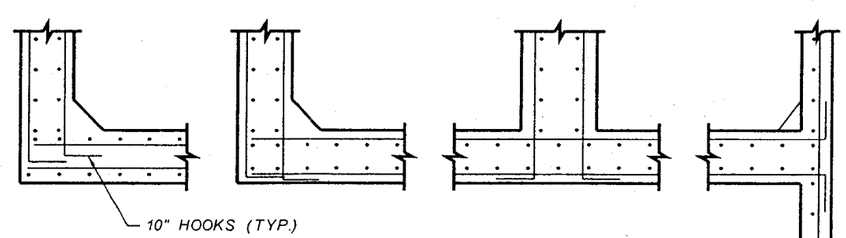

BAR ARRANGEMENTS AT CORNERS
STILLING BASIN
87TH AVENUE BASIN STA 61+62
NTS

NO.	REVISION	BY	DATE
3			
2			
1			

FLOOD CONTROL DISTRICT OF MARICOPA COUNTY
ENGINEERING DIVISION

83RD AVENUE / PINNACLE PEAK ROAD
DRAINAGE IMPROVEMENTS
PCN 450.02.33 FCD CONTRACT NO. 2003C060

90%
PRELIMINARY NOT FOR CONSTRUCTION

	BY	DATE
DESIGNED	O. OLIDEN	01/06
DRAWN	A. JOHNSON	01/06
CHECKED	M. RATHBONE	01/06

JACOBS CIVIL INC.

DRAWING NO. D12 | DTL 12 STILLING BASIN | SHEET OF

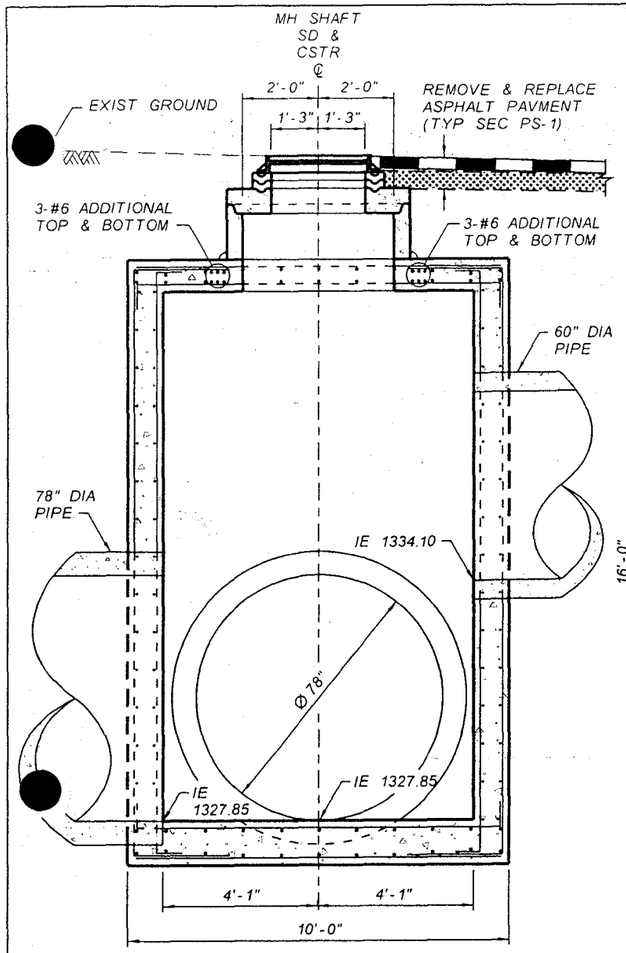

SECTION A-A
STORM DRAIN MANHOLE BASE
87TH AVENUE STA 326+47
NTS

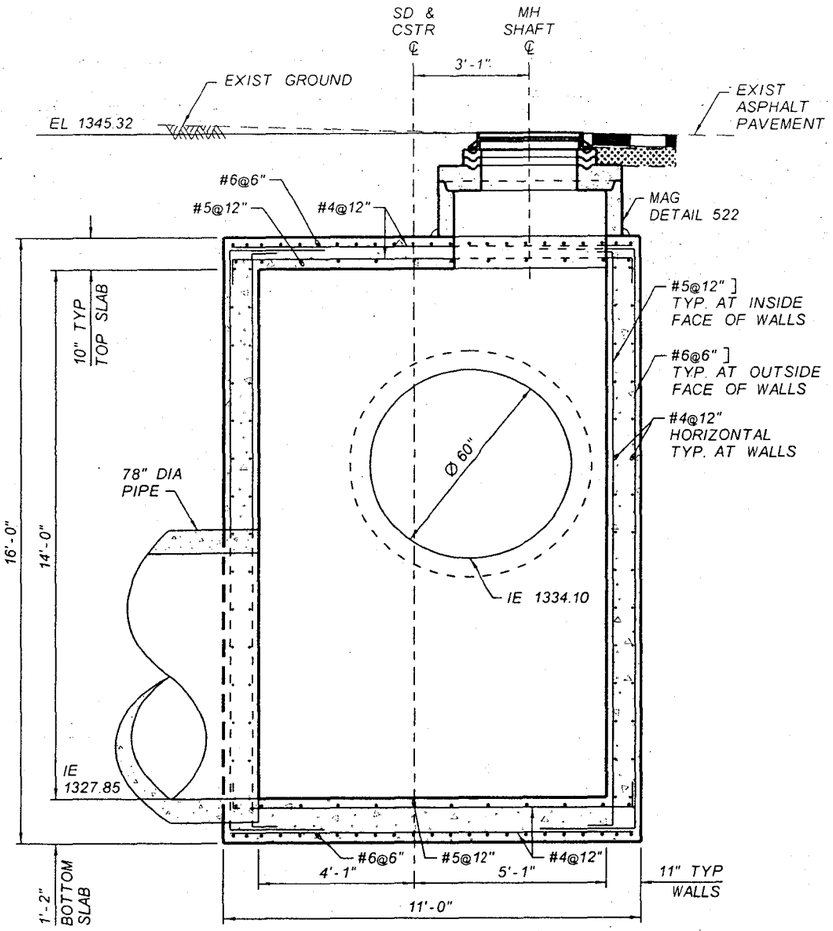

SECTION B-B
STORM DRAIN MANHOLE BASE
87TH AVENUE STA 326+47
NTS

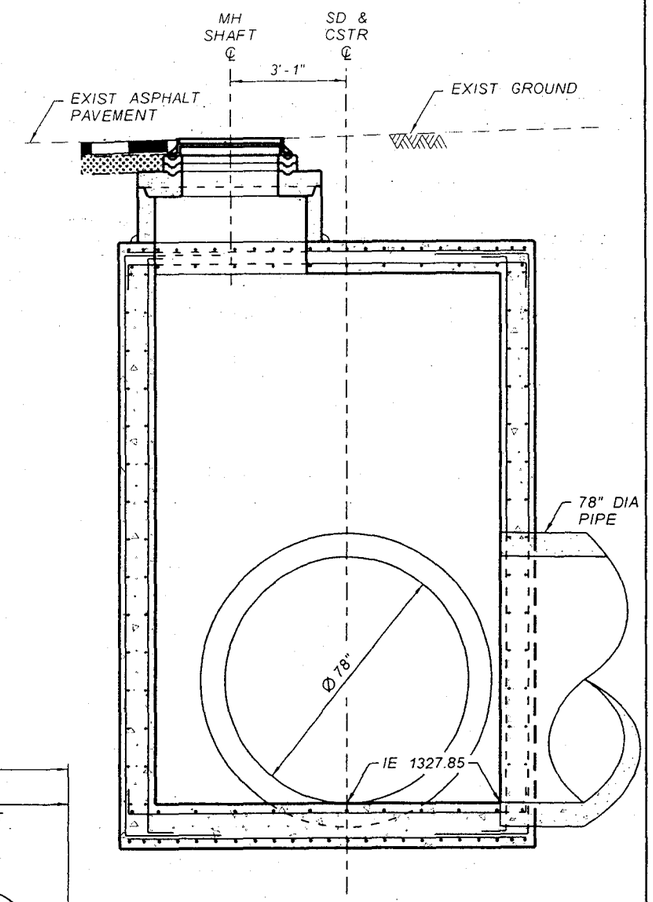

SECTION C-C
STORM DRAIN MANHOLE BASE
87TH AVENUE STA 326+47
NTS

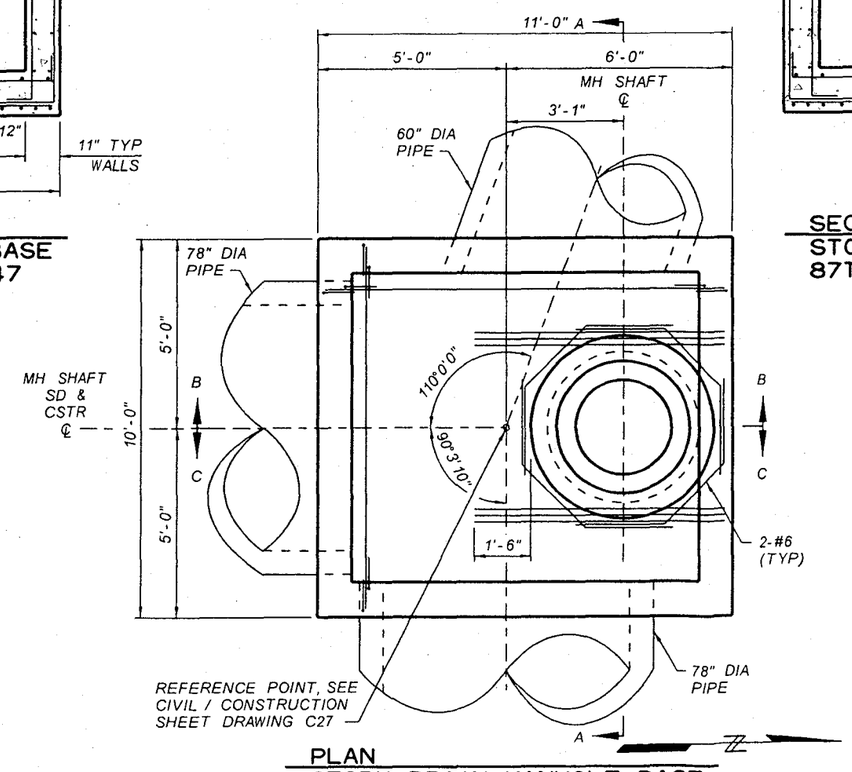

PLAN
STORM DRAIN MANHOLE BASE
87TH AVENUE STA 326+47
NTS

NO.	REVISION	BY	DATE
3			
2			
1			

FLOOD CONTROL DISTRICT OF MARICOPA COUNTY
ENGINEERING DIVISION

83RD AVENUE / PINNACLE PEAK ROAD
DRAINAGE IMPROVEMENTS
PCN 450.02.33 FCD CONTRACT NO. 2003C060

90%
PRELIMINARY
NOT FOR
CONSTRUCTION

	BY	DATE
DESIGNED	O. OLIDEN	01/06
DRAWN	A. JOHNSON	01/06
CHECKED	M. RATHBONE	01/06

JACOBS CIVIL INC.

DRAWING NO. D13 | DTL 13 STORM DRAIN MANHOLE BASE | SHEET OF

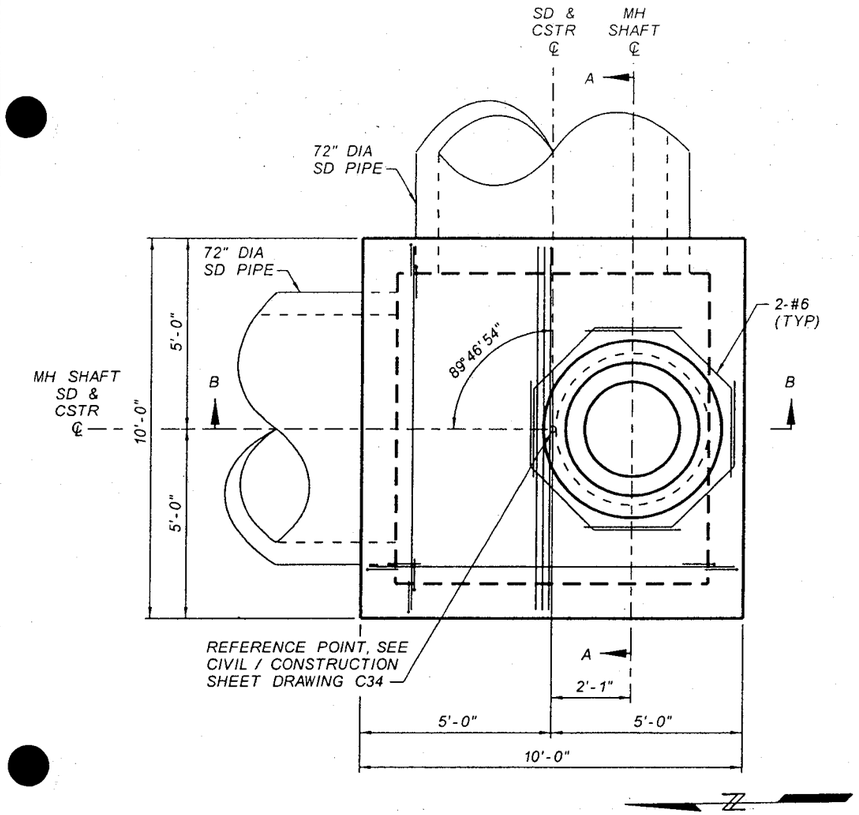

PLAN
STORM DRAIN MANHOLE BASE
89TH AVENUE STA 416+56
NTS

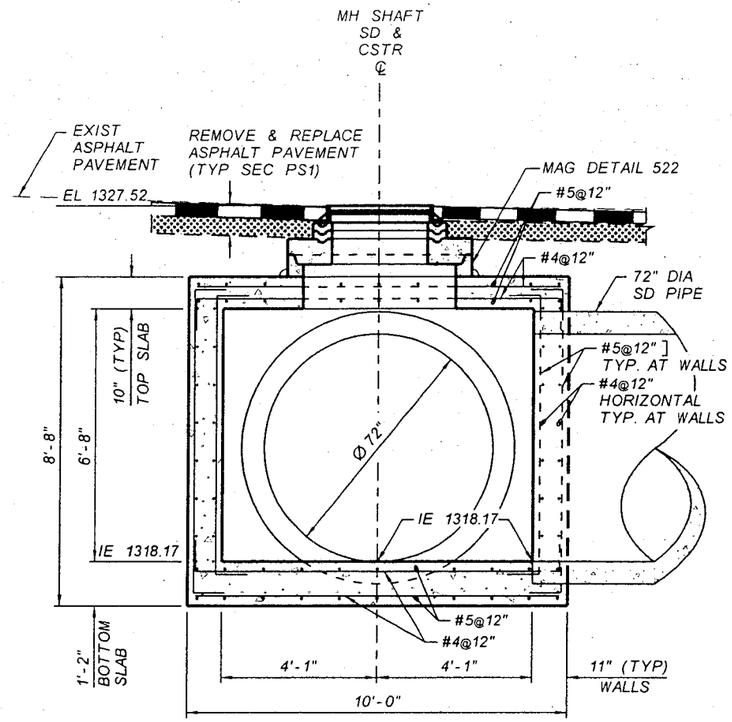

SECTION A-A
STORM DRAIN MANHOLE BASE
89TH AVENUE STA 416+56
NTS

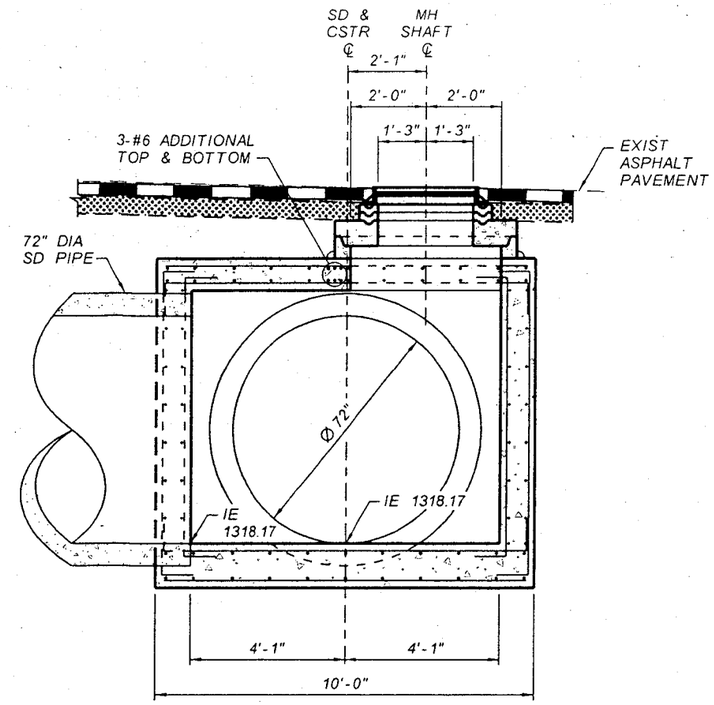

SECTION B-B
STORM DRAIN MANHOLE BASE
89TH AVENUE STA 416+56
NTS

NO.	REVISION	BY	DATE
3			
2			
1			

FLOOD CONTROL DISTRICT OF MARICOPA COUNTY
ENGINEERING DIVISION

83RD AVENUE / PINNACLE PEAK ROAD
DRAINAGE IMPROVEMENTS
PCN 450.02.33 FCD CONTRACT NO. 2003C060

90%
PRELIMINARY NOT FOR CONSTRUCTION

	BY	DATE
DESIGNED	O. OLIDEN	01/06
DRAWN	A. JOHNSON	01/06
CHECKED	M. RATHBONE	01/06

JACOBS CIVIL INC.

DRAWING NO. D14
DTL 14
STORM DRAIN MANHOLE BASE
SHEET OF

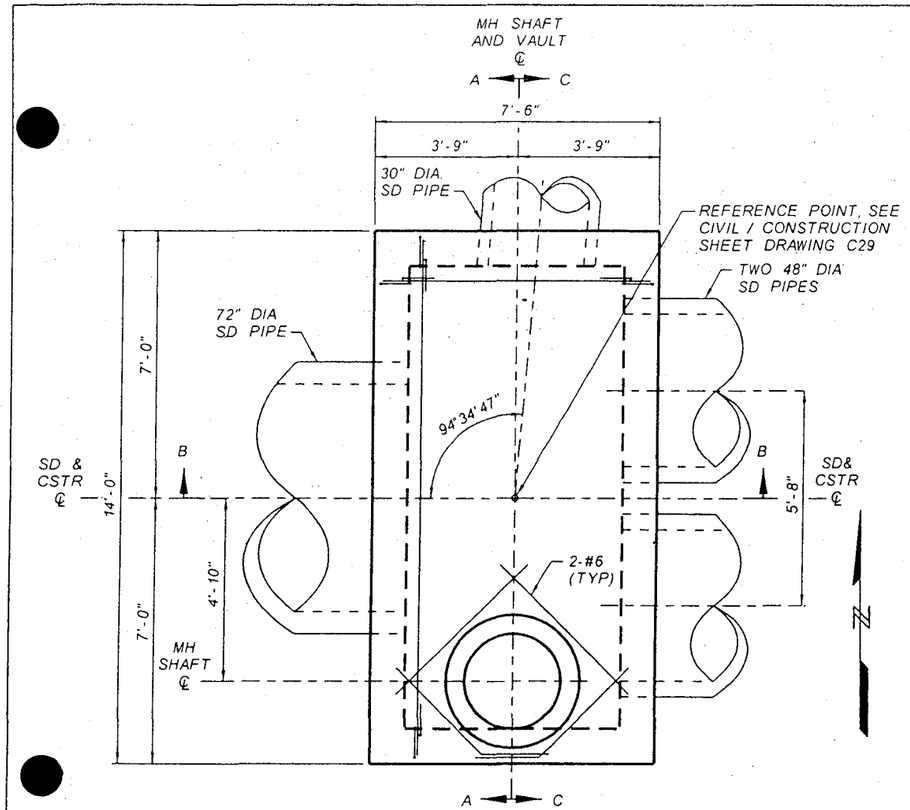

PLAN
CONCRETE VAULT
CALLE LEJOS STA 336+62
NTS

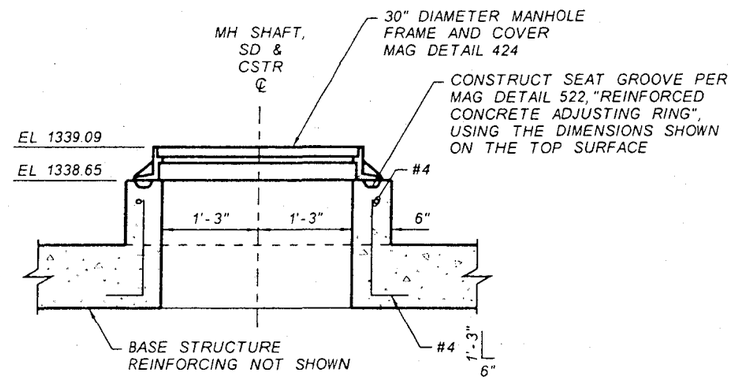

SHAFT DETAIL
CONCRETE VAULT
CALLE LEJOS STA 336+62
NTS

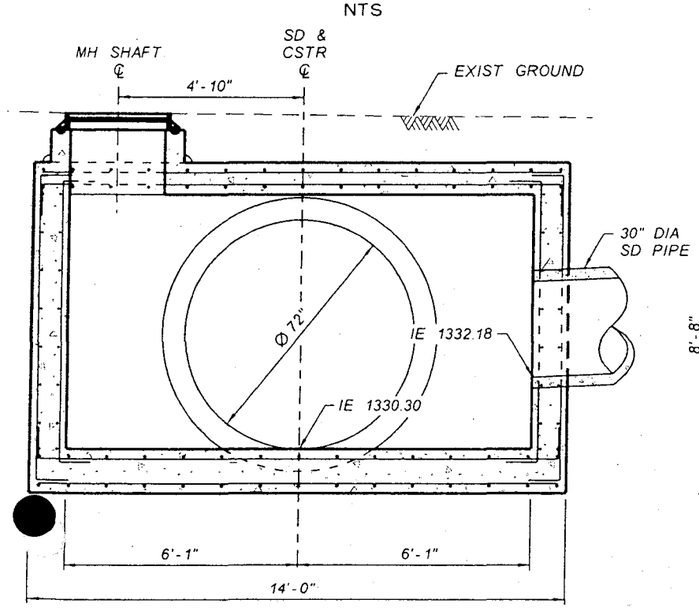

SECTION A-A
CONCRETE VAULT
CALLE LEJOS STA 336+62
NTS

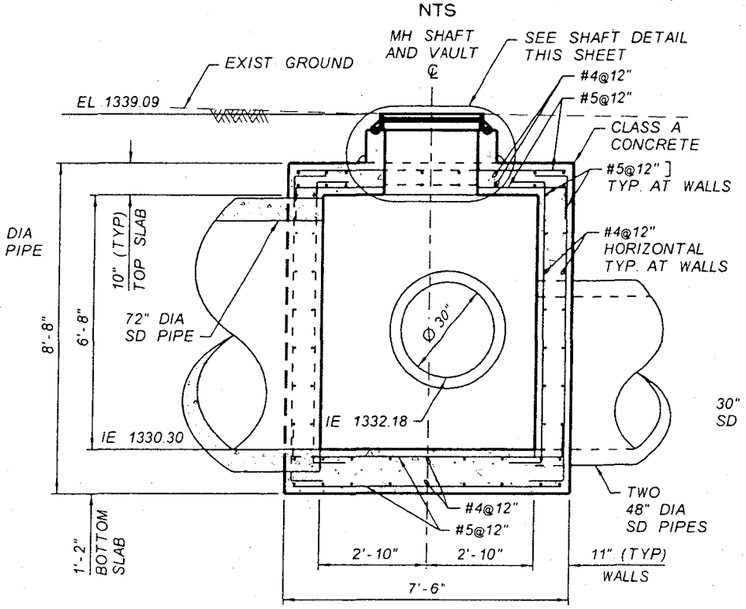

SECTION B-B
CONCRETE VAULT
CALLE LEJOS STA 336+62
NTS

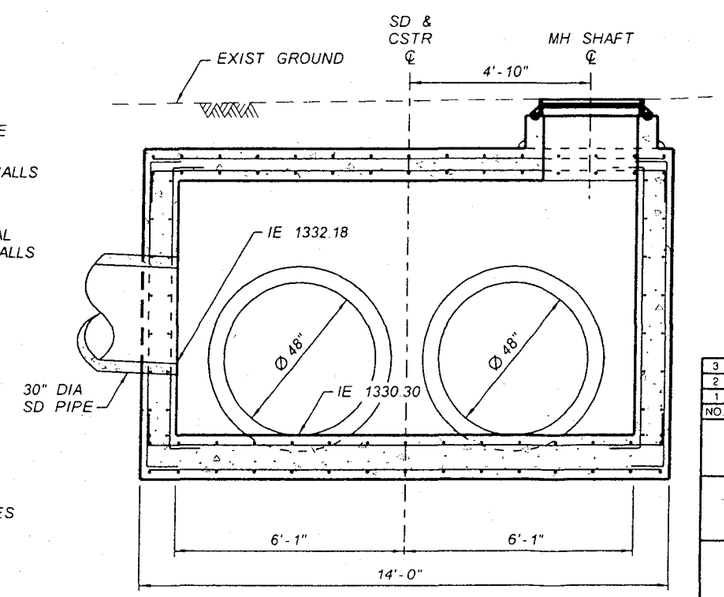

SECTION C-C
CONCRETE VAULT
CALLE LEJOS STA 336+62
NTS

NO	REVISION	BY	DATE
3			
2			
1			

FLOOD CONTROL DISTRICT OF MARICOPA COUNTY
ENGINEERING DIVISION

83RD AVENUE / PINNACLE PEAK ROAD
DRAINAGE IMPROVEMENTS
PCN 450.02.33 FCD CONTRACT NO. 2003C060

90%
PRELIMINARY
NOT FOR
CONSTRUCTION

	BY	DATE
DESIGNED	O. OLIDEN	01/06
DRAWN	A. JOHNSON	01/06
CHECKED	M. RATHBONE	01/06

JACOBS CIVIL INC.

DRAWING NO. D15 | DTL 15 CONCRETE VAULT | SHEET OF

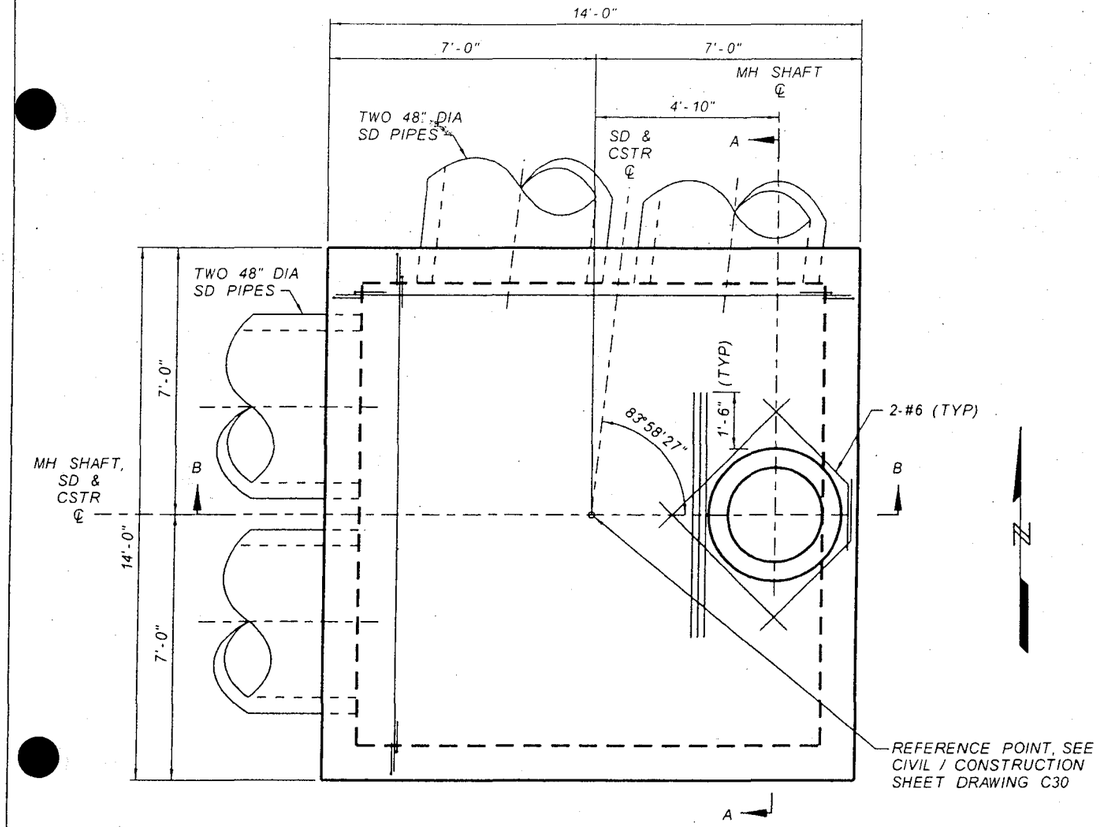

PLAN
CONCRETE VAULT
CALLE LEJOS STA 339+62
NTS

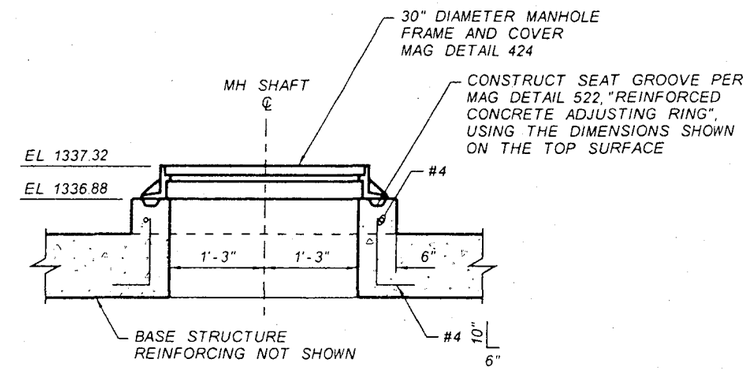

SHAFT DETAIL
CONCRETE VAULT
CALLE LEJOS STA 339+62
NTS

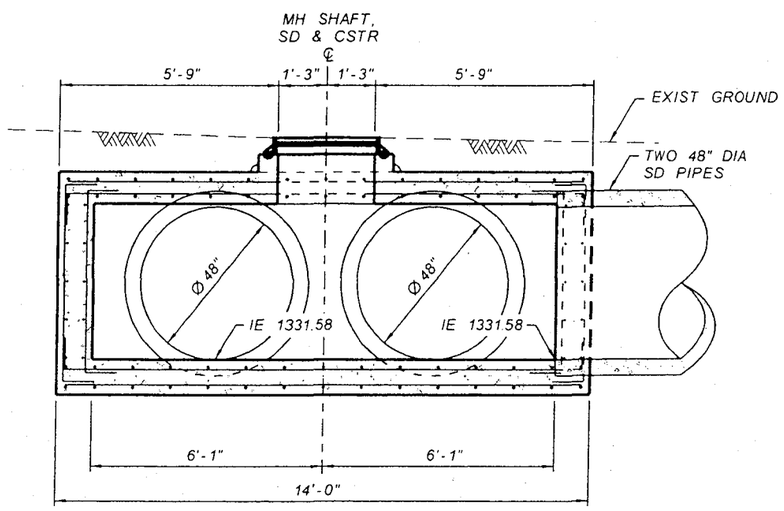

SECTION A-A
CONCRETE VAULT
CALLE LEJOS STA 339+62
NTS

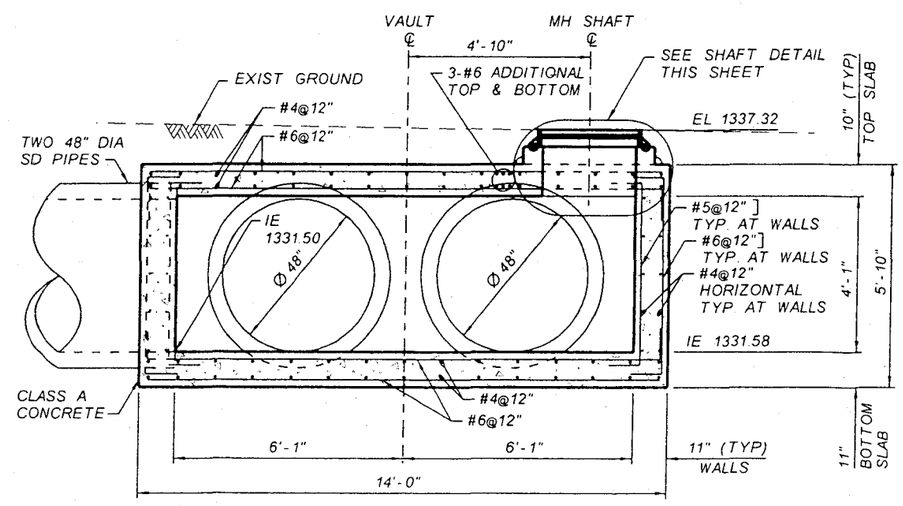

SECTION B-B
CONCRETE VAULT
CALLE LEJOS STA 339+62
NTS

NO.	REVISION	BY	DATE
3			
2			
1			

FLOOD CONTROL DISTRICT OF MARICOPA COUNTY
ENGINEERING DIVISION

83RD AVENUE / PINNACLE PEAK ROAD
DRAINAGE IMPROVEMENTS
PCN 450.02.33 FCD CONTRACT NO. 2003C060

90%
PRELIMINARY NOT FOR CONSTRUCTION

	BY	DATE
DESIGNED	O. OLIDEN	01/06
DRAWN	A. JOHNSON	01/06
CHECKED	M. RATHBONE	01/06

JACOBS CIVIL INC.

DRAWING NO.		SHEET OF
D16	DTL 16 CONCRETE VAULT	

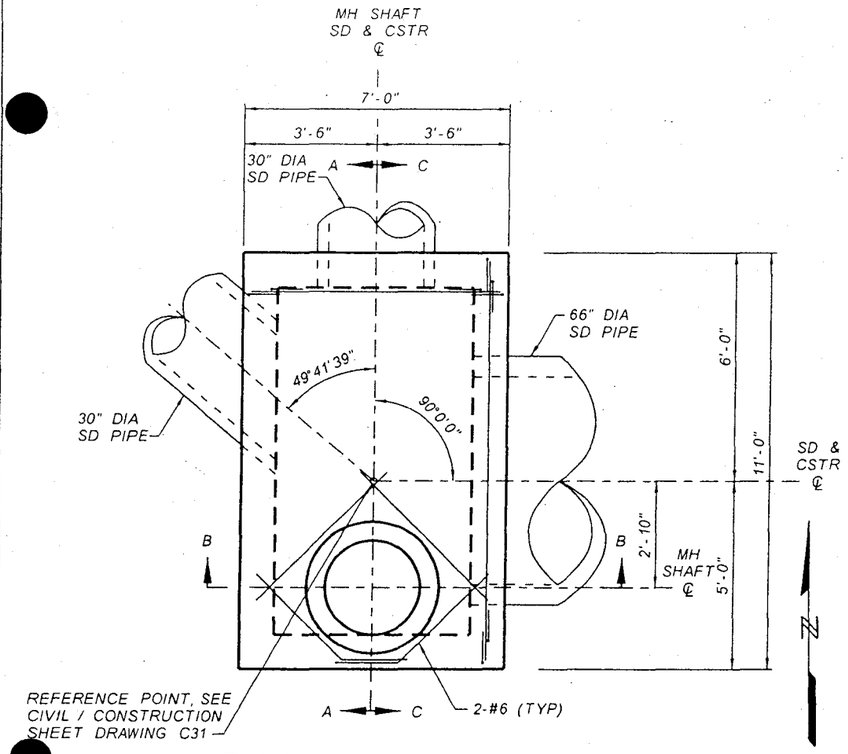

PLAN
CONCRETE VAULT
CIELO GRANDE STA 400+30
NTS

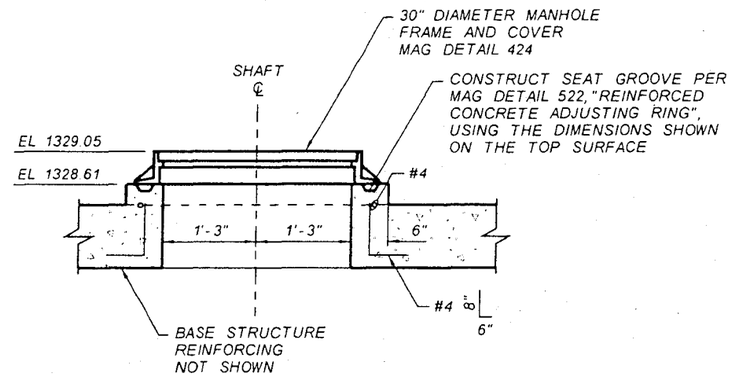

SHAFT DETAIL
CONCRETE VAULT
CIELO GRANDE STA 400+30
NTS

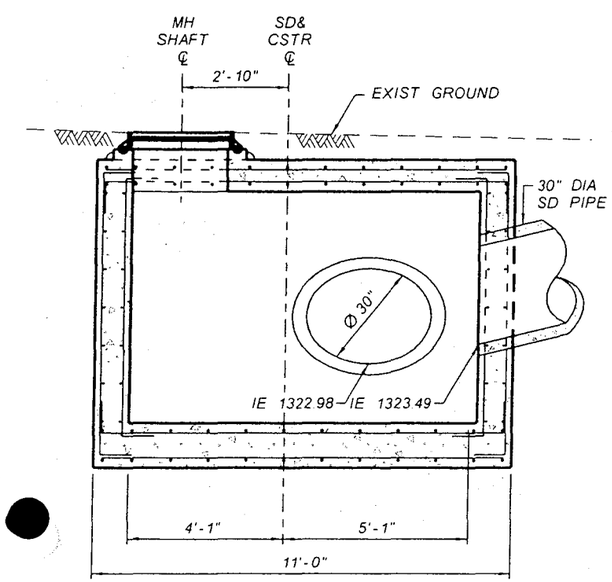

SECTION A-A
CONCRETE VAULT
CIELO GRANDE STA 400+30
NTS

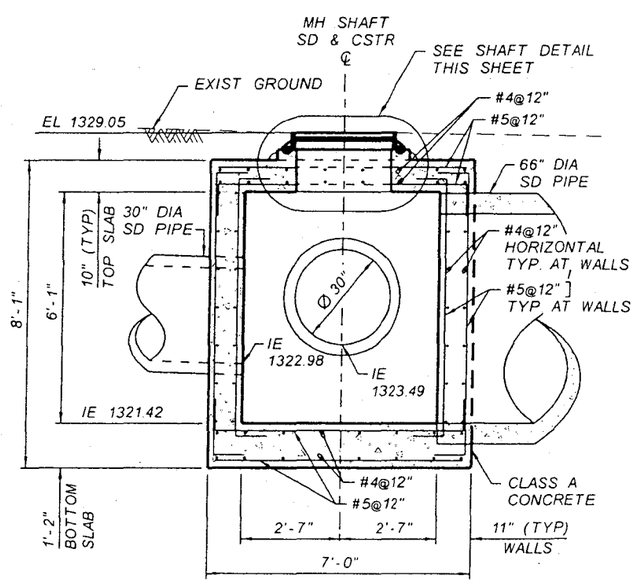

SECTION B-B
CONCRETE VAULT
CIELO GRANDE STA 400+30
NTS

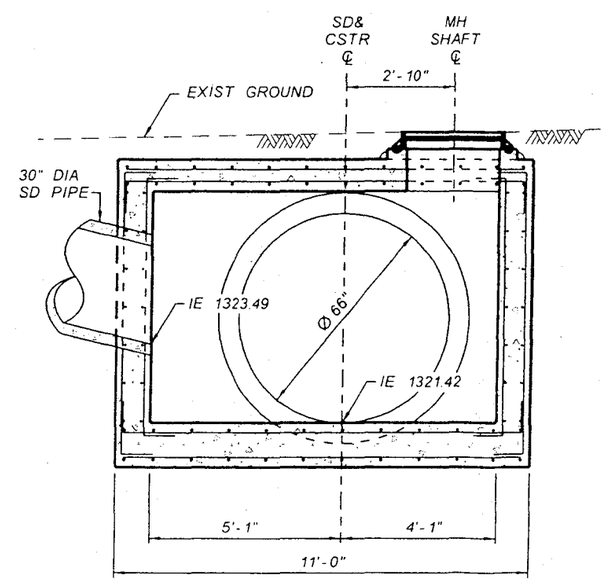

SECTION C-C
CONCRETE VAULT
CIELO GRANDE STA 400+30
NTS

NO	REVISION	BY	DATE
3			
2			
1			

FLOOD CONTROL DISTRICT OF MARICOPA COUNTY
ENGINEERING DIVISION

83RD AVENUE / PINNACLE PEAK ROAD
DRAINAGE IMPROVEMENTS
PCN 450.02.33 FCD CONTRACT NO. 2003C060

90%
PRELIMINARY
NOT FOR
CONSTRUCTION

	BY	DATE
DESIGNED	O. OLIDEN	01/06
DRAWN	A. JOHNSON	01/06
CHECKED	M. RATHBONE	01/06

JACOBS CIVIL INC.

DRAWING NO. D17 | DTL 17 CONCRETE VAULT | SHEET OF

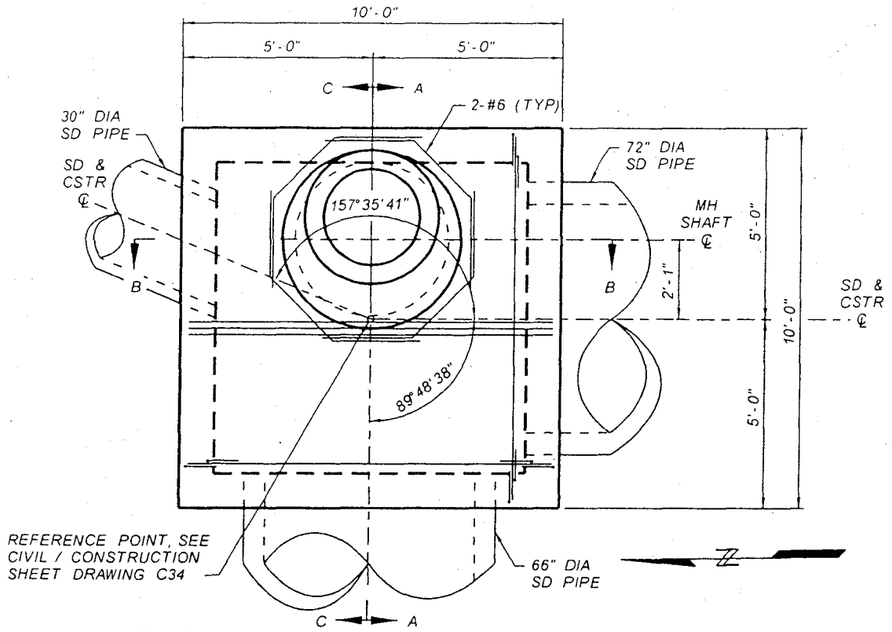

PLAN
STORM DRAIN MANHOLE BASE
89TH AVENUE STA 413+23
NTS

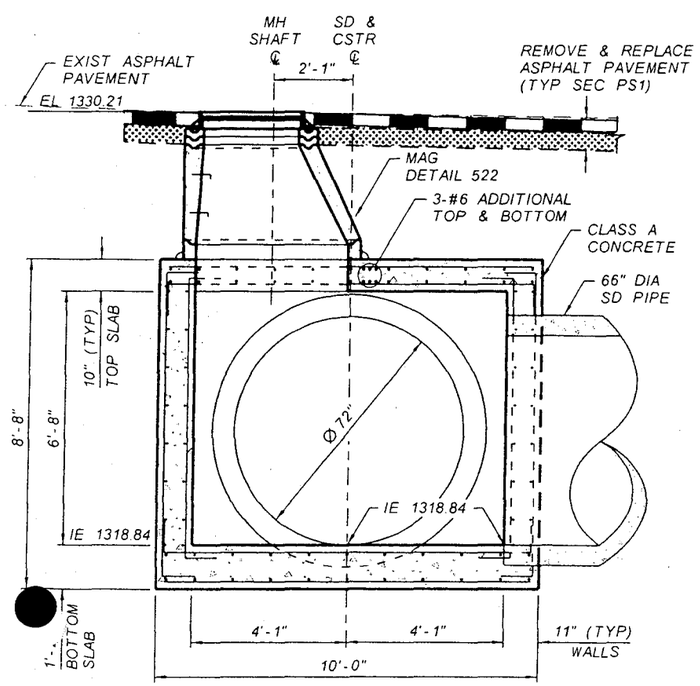

SECTION A-A
STORM DRAIN MANHOLE BASE
89TH AVENUE STA 413+23
NTS

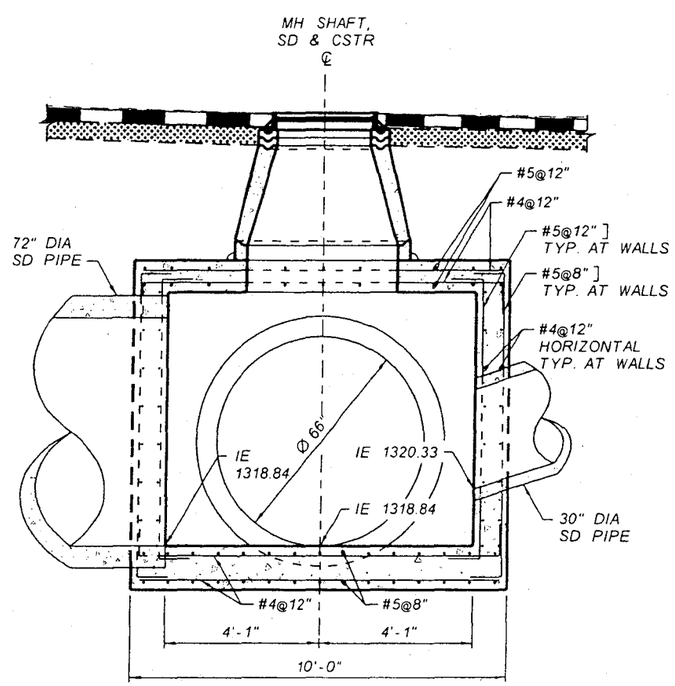

SECTION B-B
STORM DRAIN MANHOLE BASE
89TH AVENUE STA 413+23
NTS

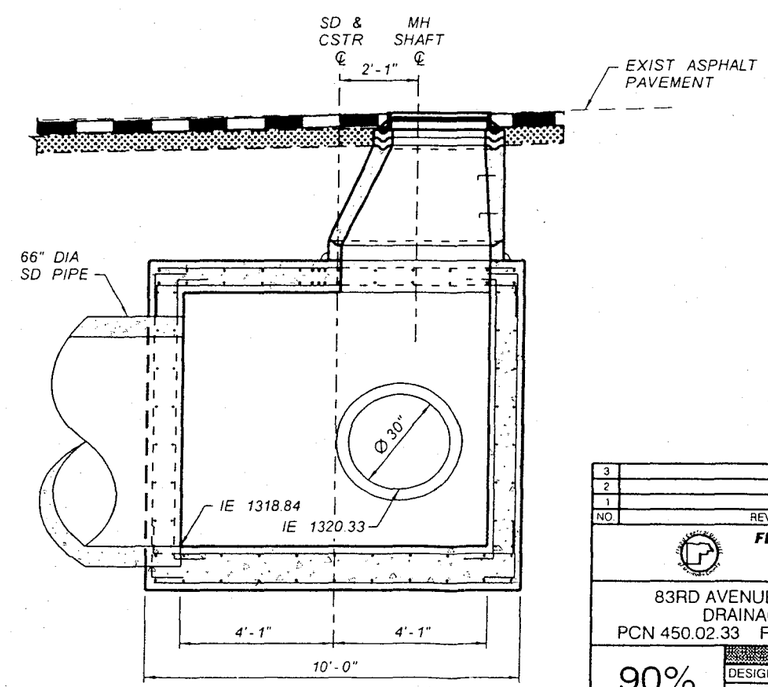

SECTION C-C
STORM DRAIN MANHOLE BASE
89TH AVENUE STA 413+23
NTS

NO.	REVISION	BY	DATE
3			
2			
1			

FLOOD CONTROL DISTRICT OF MARICOPA COUNTY
ENGINEERING DIVISION

83RD AVENUE / PINNACLE PEAK ROAD
DRAINAGE IMPROVEMENTS
PCN 450.02.33 FCD CONTRACT NO. 2003C060

90%
PRELIMINARY
NOT FOR
CONSTRUCTION

	BY	DATE
DESIGNED	O OLIDEN	01/06
DRAWN	A JOHNSON	01/06
CHECKED	M RATHBONE	01/06

JACOBS CIVIL INC.

DRAWING NO. D18 | DTL 18 STORM DRAIN MANHOLE BASE | SHEET OF

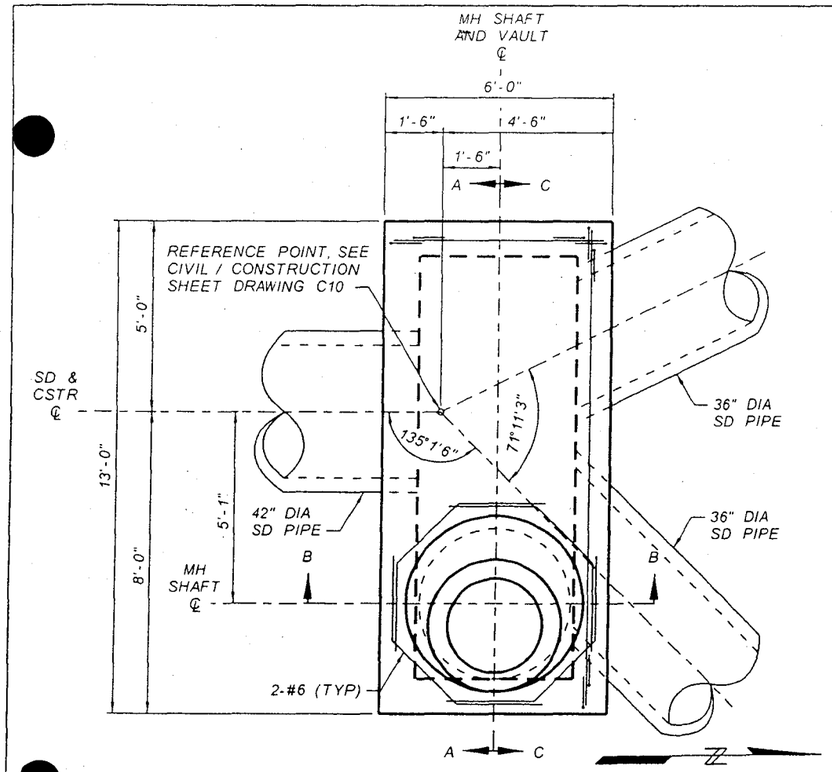

PLAN
STORM DRAIN MANHOLE BASE
83RD AVENUE STA 142+46
NTS

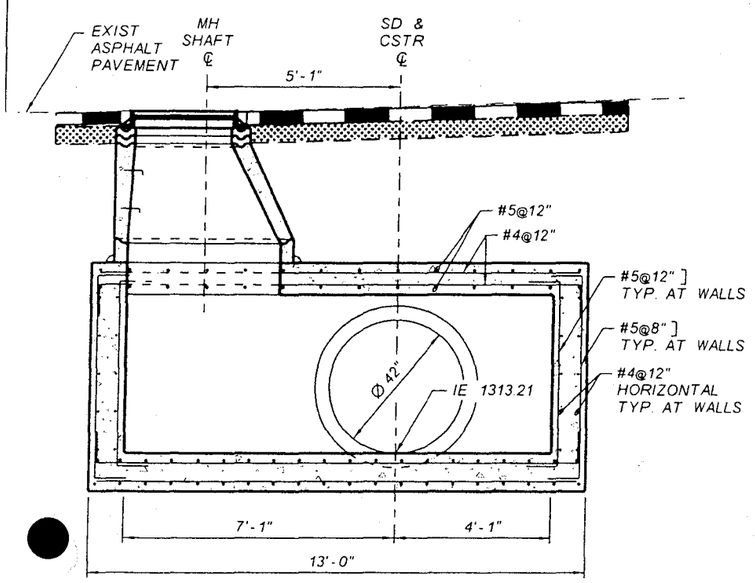

SECTION A-A
STORM DRAIN MANHOLE BASE
83RD AVENUE STA 142+46
NTS

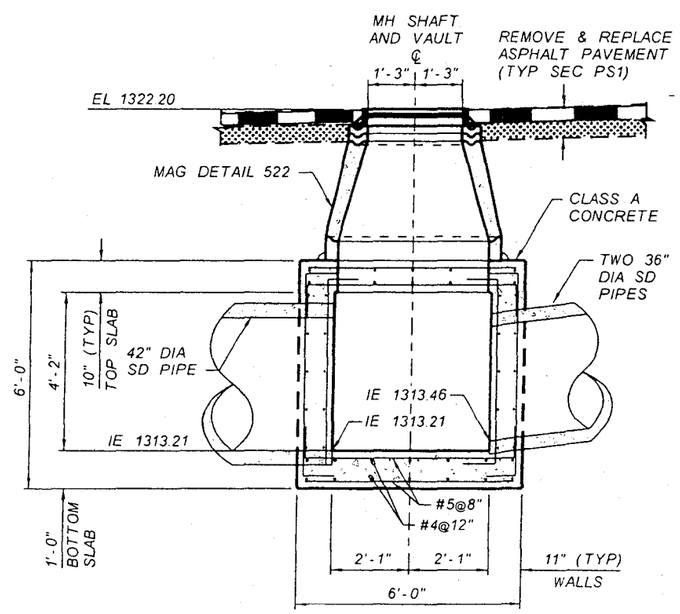

SECTION B-B
STORM DRAIN MANHOLE BASE
83RD AVENUE STA 142+46
NTS

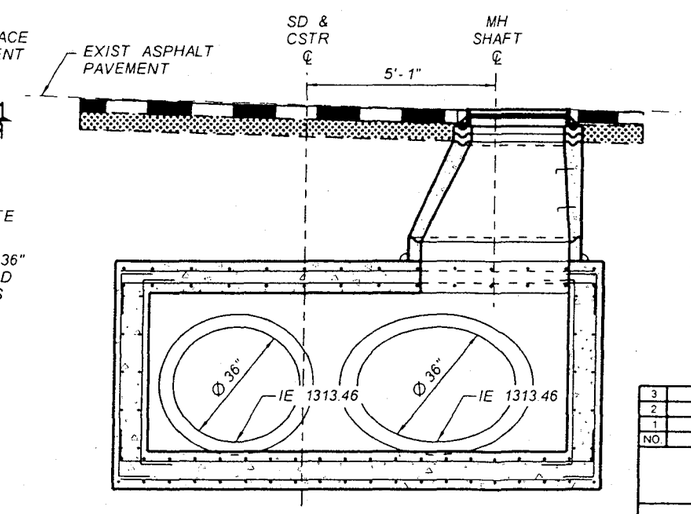

SECTION C-C
STORM DRAIN MANHOLE BASE
83RD AVENUE STA 142+46
NTS

NO.	REVISION	BY	DATE
3			
2			
1			

FLOOD CONTROL DISTRICT OF MARICOPA COUNTY
ENGINEERING DIVISION

83RD AVENUE / PINNACLE PEAK ROAD
DRAINAGE IMPROVEMENTS
PCN 450.02.33 FCD CONTRACT NO. 2003C060

90%
PRELIMINARY
NOT FOR
CONSTRUCTION

	BY	DATE
DESIGNED	O. OLIDEN	01/06
DRAWN	A. JOHNSON	01/06
CHECKED	M. RATHBONE	01/06

JACOBS CIVIL INC.

DRAWING NO. D19 | DTL 19 STORM DRAIN MANHOLE BASE | SHEET OF

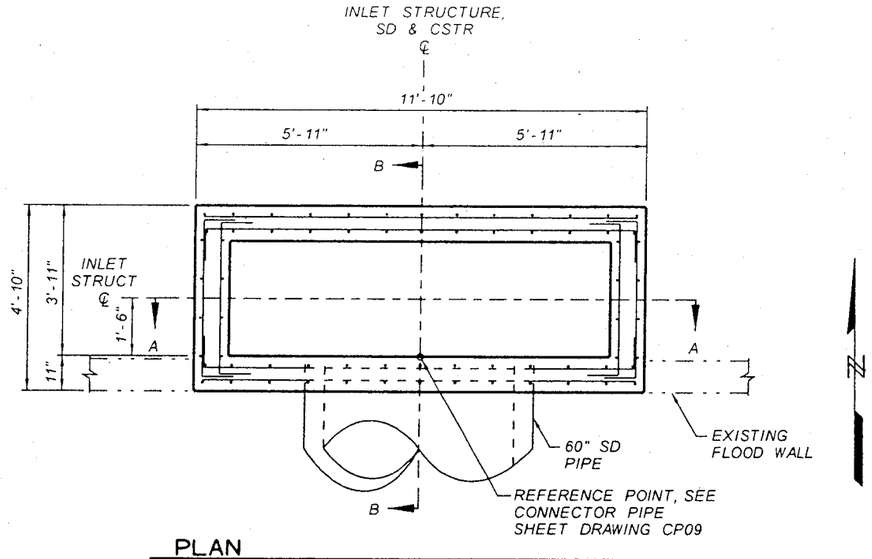

PLAN
INLET STRUCTURE
VENTANA PICACHOS
RETENTION BASIN STA 81+37
NTS

NOTES:

1) STAIN ALL EXPOSED SURFACES, SEE SPECIFICATIONS.

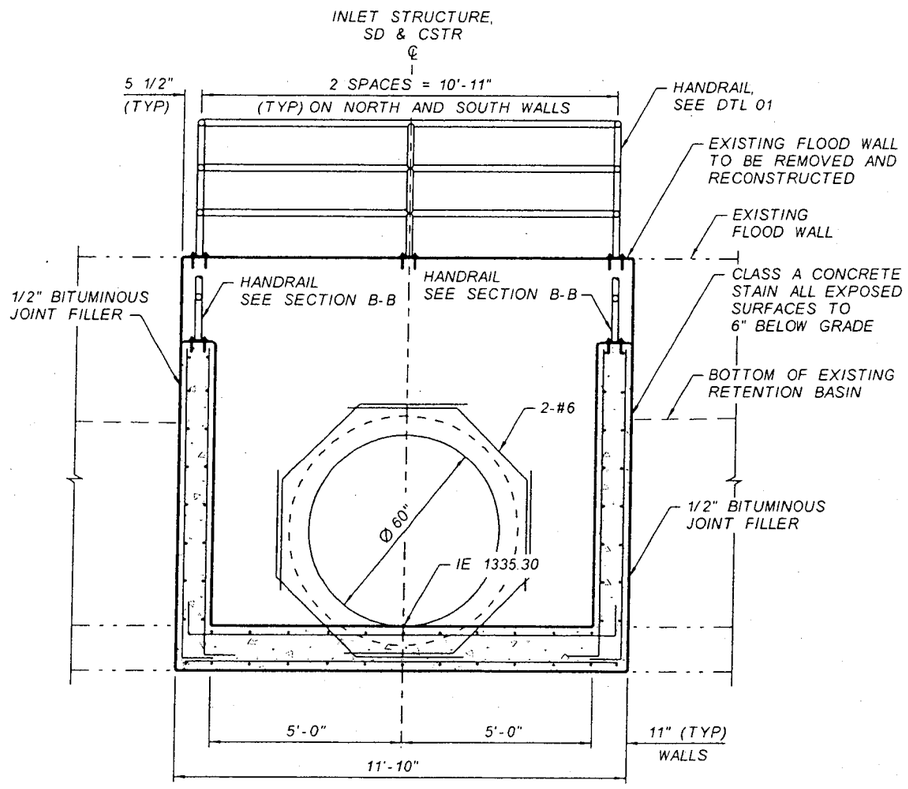

SECTION A-A
INLET STRUCTURE
VENTANA PICACHOS
RETENTION BASIN STA 81+37
NTS

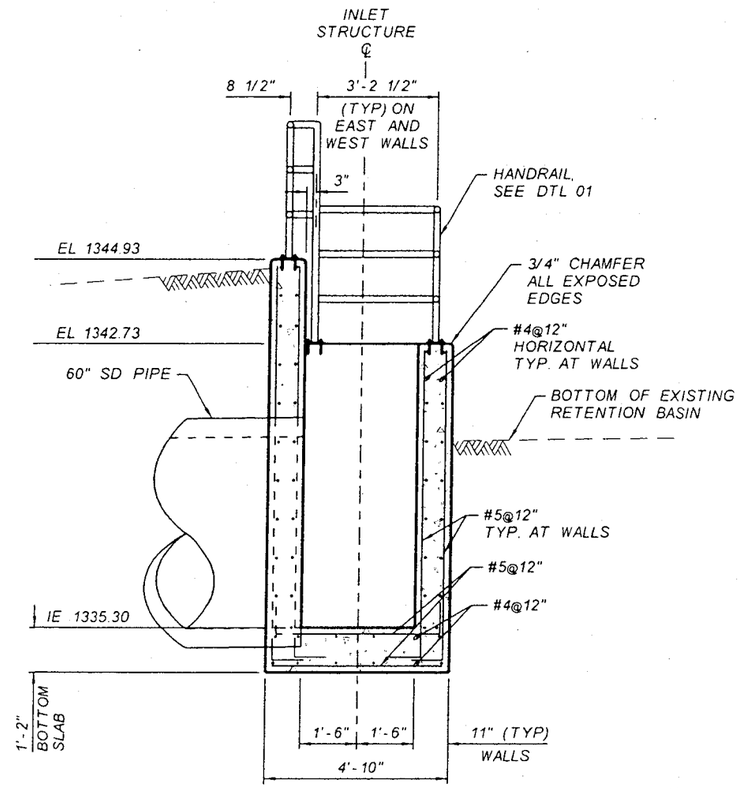

SECTION B-B
INLET STRUCTURE
VENTANA PICACHOS
RETENTION BASIN STA 81+37
NTS

NO.	REVISION	BY	DATE
3			
2			
1			

FLOOD CONTROL DISTRICT OF MARICOPA COUNTY
ENGINEERING DIVISION

83RD AVENUE / PINNACLE PEAK ROAD
DRAINAGE IMPROVEMENTS
PCN 450.02.33 FCD CONTRACT NO. 2003C060

90%
PRELIMINARY
NOT FOR
CONSTRUCTION

	BY	DATE
DESIGNED	O. OLIDEN	01/06
DRAWN	A. JOHNSON	01/06
CHECKED	M. RATHBONE	01/06

JACOBS CIVIL INC.

DRAWING NO. D20 | DTL 20 INLET STRUCTURE | SHEET OF

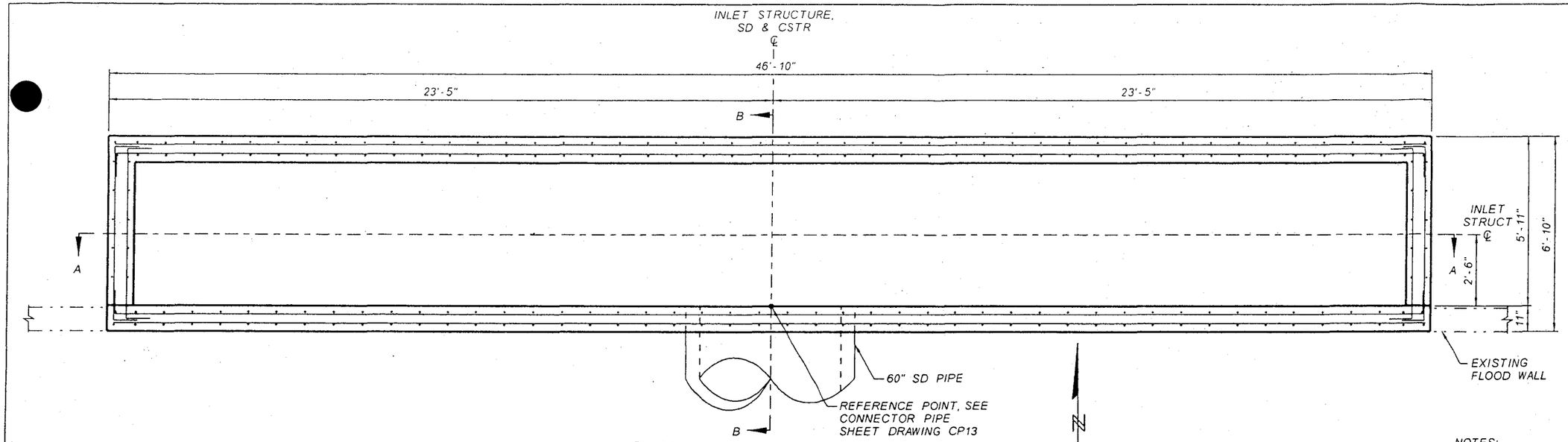

PLAN
INLET STRUCTURE
VENTANA PICACHOS
RETENTION BASIN STA 85+77
NTS

NOTES:

1) STAIN ALL EXPOSED SURFACES, SEE SPECIFICATIONS.

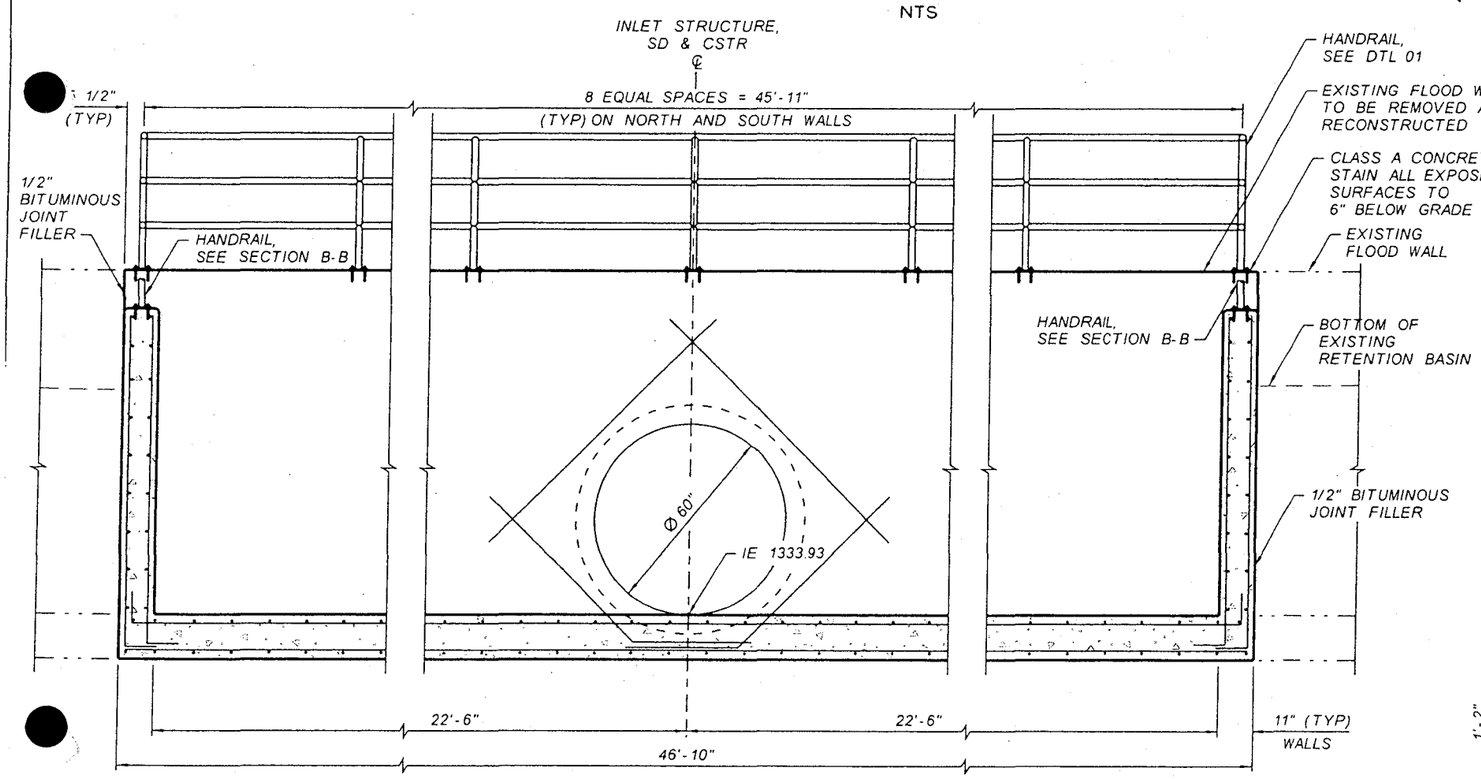

SECTION A-A
INLET STRUCTURE
VENTANA PICACHOS
RETENTION BASIN STA 85+77
NTS

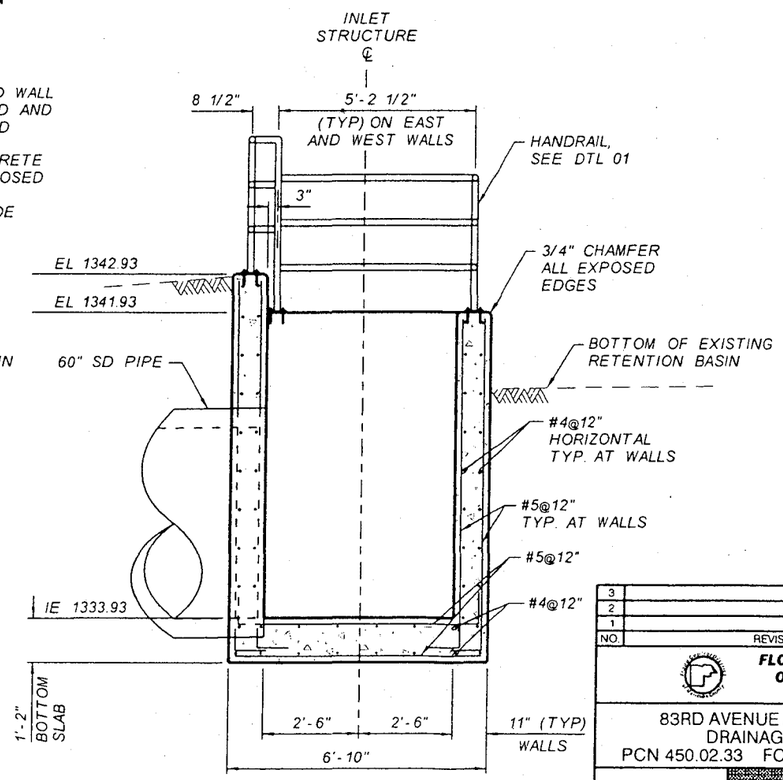

SECTION B-B
INLET STRUCTURE
VENTANA PICACHOS
RETENTION BASIN STA 85+77
NTS

NO.	REVISION	BY	DATE
3			
2			
1			

FLOOD CONTROL DISTRICT OF MARICOPA COUNTY
ENGINEERING DIVISION

83RD AVENUE / PINNACLE PEAK ROAD
DRAINAGE IMPROVEMENTS
PCN 450.02.33 FCD CONTRACT NO. 2003C060

90%
PRELIMINARY
NOT FOR
CONSTRUCTION

	BY	DATE
DESIGNED	O. OLIDEN	01/06
DRAWN	A. JOHNSON	01/06
CHECKED	M. RATHBONE	01/06

JACOBS CIVIL INC.

DRAWING NO.		SHEET OF
D21	DTL 21 INLET STRUCTURE	

NOTES:

1) STAIN ALL EXPOSED SURFACES, SEE SPECIFICATIONS.
2) ALL EXPOSED SURFACES SHALL BE CONSTRUCTED WITH FORM LINER PER DTL 01.

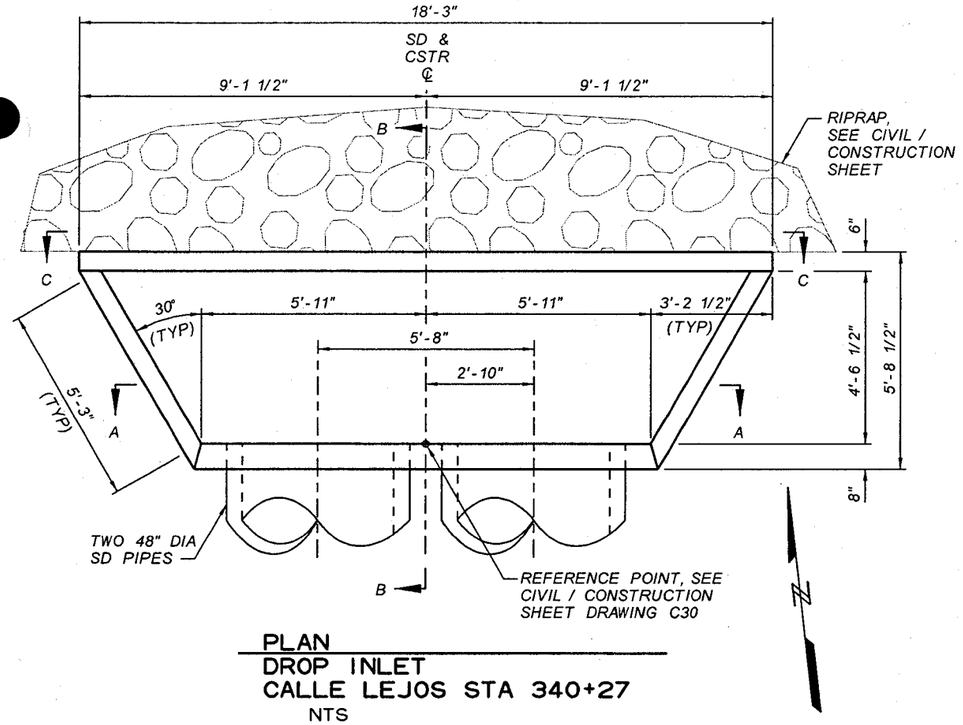

PLAN
DROP INLET
CALLE LEJOS STA 340+27
NTS

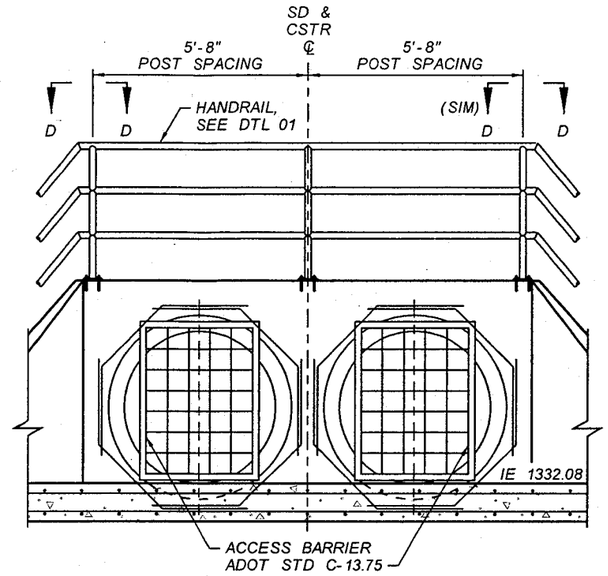

SECTION A-A
DROP INLET
CALLE LEJOS STA 340+27
NTS

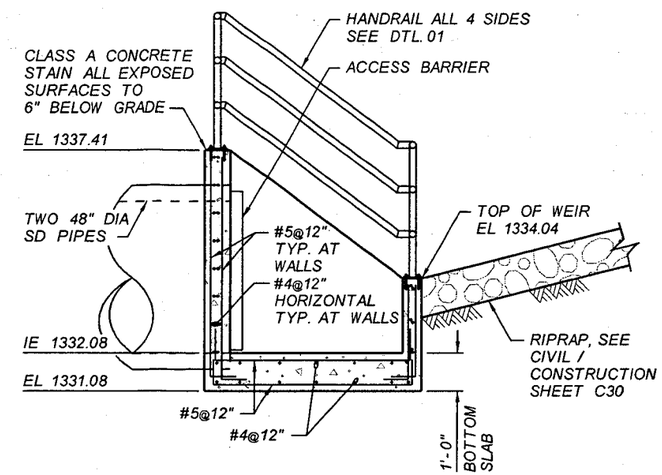

SECTION B-B
DROP INLET
CALLE LEJOS STA 340+27
NTS

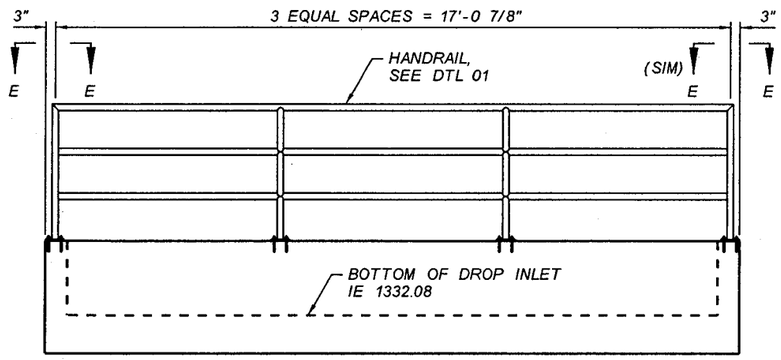

SECTION C-C
DROP INLET
CALLE LEJOS STA 340+27
NTS

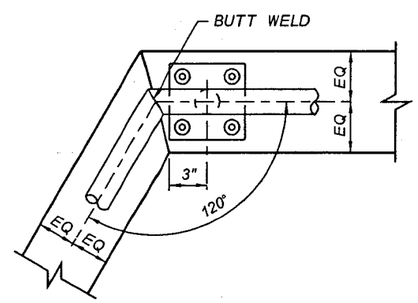

SECTION D-D
HANDRAIL AT
DROP INLET
CALLE LEJOS STA 340+27
NTS

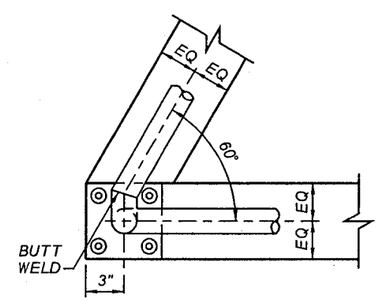

SECTION E-E
HANDRAIL AT
DROP INLET
CALLE LEJOS STA 340+27
NTS

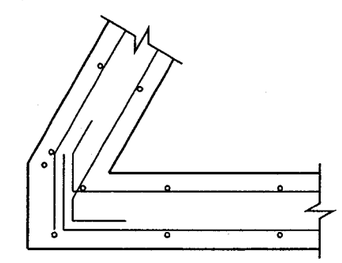

CORNER REINFORCING PLAN
DROP INLET
CALLE LEJOS STA 340+27
NTS

NO.	REVISION	BY	DATE
3			
2			
1			

FLOOD CONTROL DISTRICT OF MARICOPA COUNTY
ENGINEERING DIVISION

83RD AVENUE / PINNACLE PEAK ROAD
DRAINAGE IMPROVEMENTS
PCN 450.02.33 FCD CONTRACT NO. 2003C060

90%
PRELIMINARY NOT FOR CONSTRUCTION

	BY	DATE
DESIGNED	O. OLIDEN	01/06
DRAWN	A. JOHNSON	01/06
CHECKED	M. RATHBONE	01/06

JACOBS CIVIL INC.

DRAWING NO. D22 | DTL 22 DROP INLET | SHEET OF

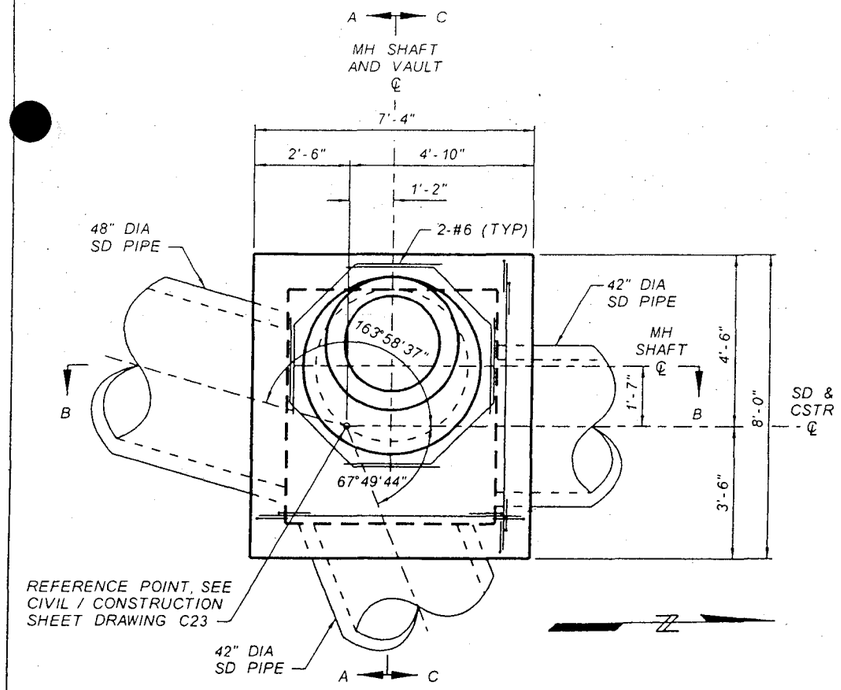

PLAN
STORM DRAIN MANHOLE BASE
87TH AVENUE BASIN STA 307+50
NTS

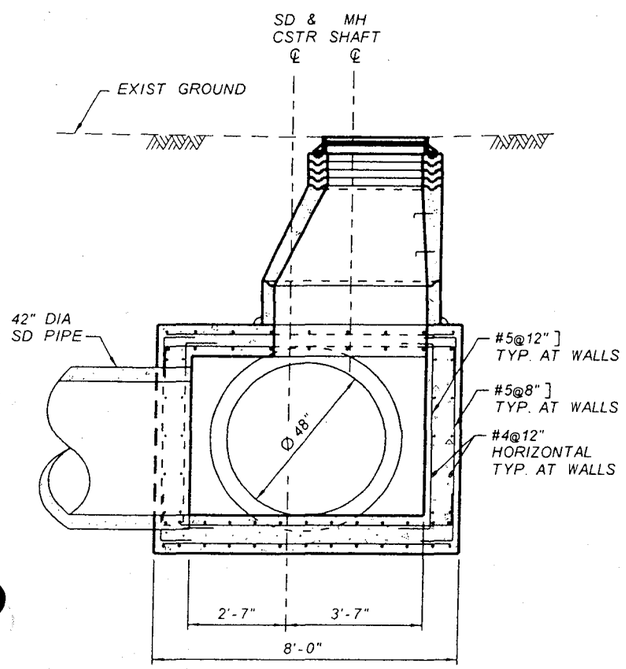

SECTION A-A
STORM DRAIN MANHOLE BASE
87TH AVENUE BASIN STA 307+50
NTS

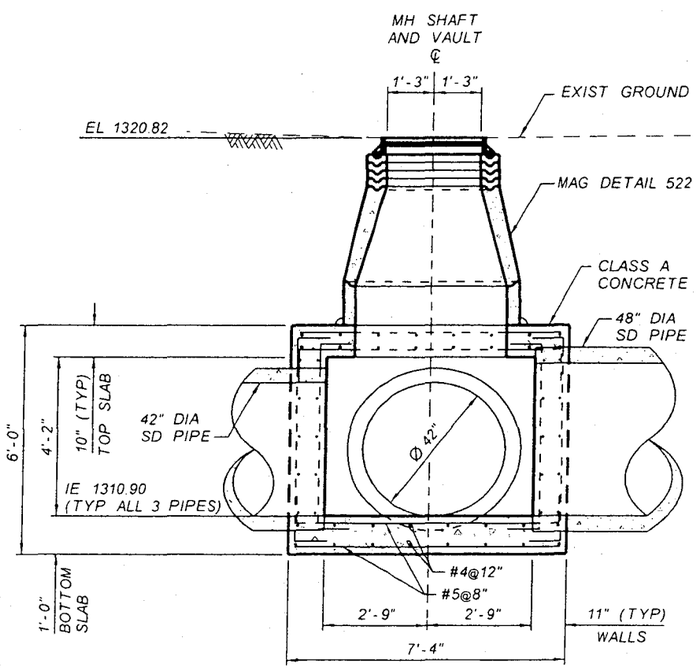

SECTION B-B
STORM DRAIN MANHOLE BASE
87TH AVENUE BASIN STA 307+50
NTS

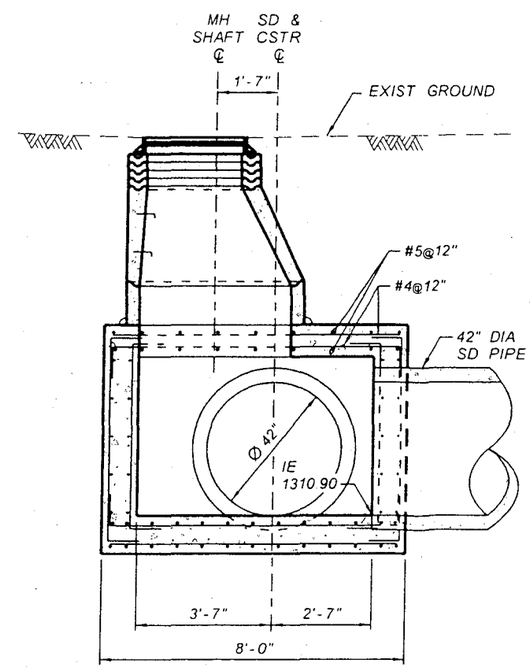

SECTION C-C
STORM DRAIN MANHOLE BASE
87TH AVENUE BASIN STA 307+50
NTS

NO.	REVISION	BY	DATE
3			
2			
1			

FLOOD CONTROL DISTRICT OF MARICOPA COUNTY
ENGINEERING DIVISION

83RD AVENUE / PINNACLE PEAK ROAD
DRAINAGE IMPROVEMENTS
PCN 450.02.33 FCD CONTRACT NO. 2003C060

90%
PRELIMINARY
NOT FOR
CONSTRUCTION

	BY	DATE
DESIGNED	O. OLIDEN	01/06
DRAWN	A. JOHNSON	01/06
CHECKED	M. RATHBONE	01/06

JACOBS CIVIL INC.

DRAWING NO. D23 | DTL 23 STORM DRAIN MANHOLE BASE | SHEET OF

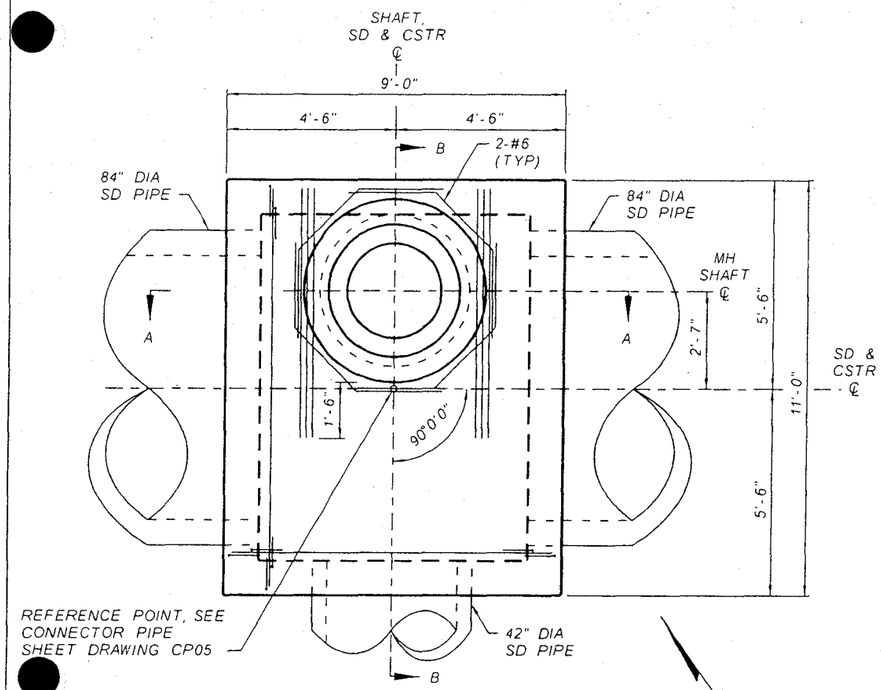

PLAN
STORM DRAIN MANHOLE BASE
87TH AVENUE BASIN STA 61+37
NTS

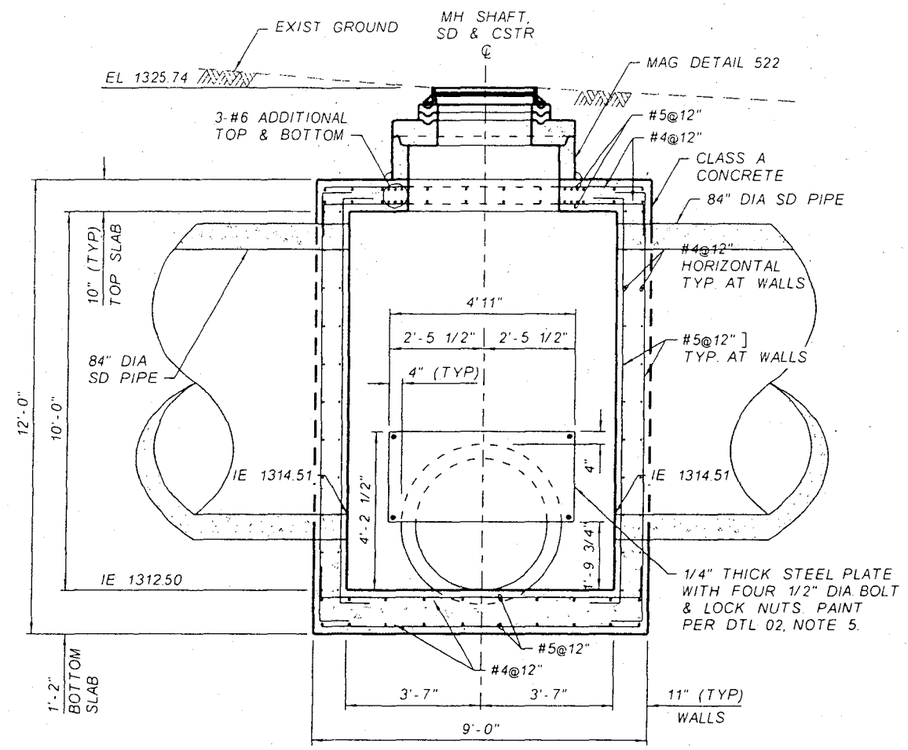

SECTION A-A
STORM DRAIN MANHOLE BASE
87TH AVENUE BASIN STA 61+37
NTS

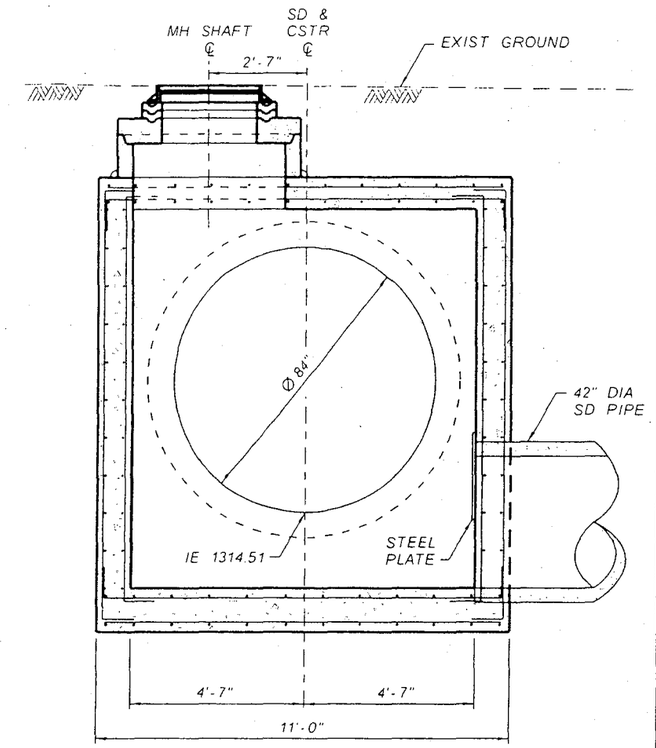

SECTION B-B
STORM DRAIN MANHOLE BASE
87TH AVENUE BASIN STA 61+37
NTS

NO	REVISION	BY	DATE
3			
2			
1			

FLOOD CONTROL DISTRICT OF MARICOPA COUNTY
ENGINEERING DIVISION

83RD AVENUE / PINNACLE PEAK ROAD
DRAINAGE IMPROVEMENTS
PCN 450.02.33 FCD CONTRACT NO. 2003C060

90%
PRELIMINARY
NOT FOR
CONSTRUCTION

	BY	DATE
DESIGNED	O. OLIDEN	01/06
DRAWN	A. JOHNSON	01/06
CHECKED	M. RATHBONE	01/06

JACOBS CIVIL INC.

DRAWING NO. DTL 24 SHEET OF

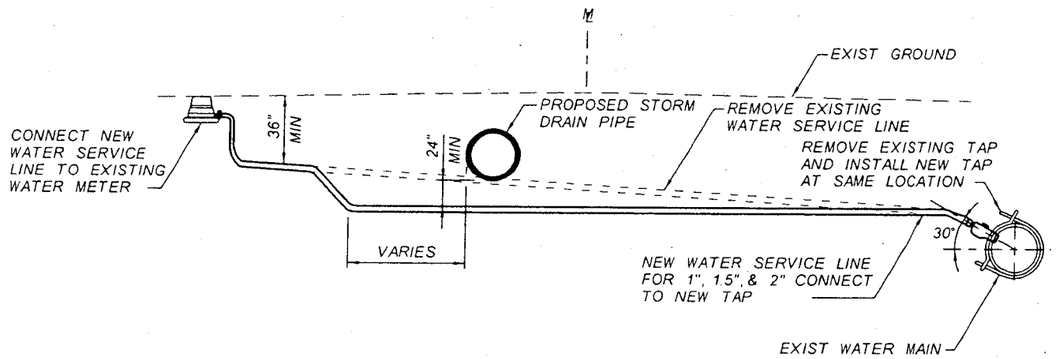

TYPICAL SECTION
VERTICAL REALIGNMENT
FOR WATER SERVICES
NTS

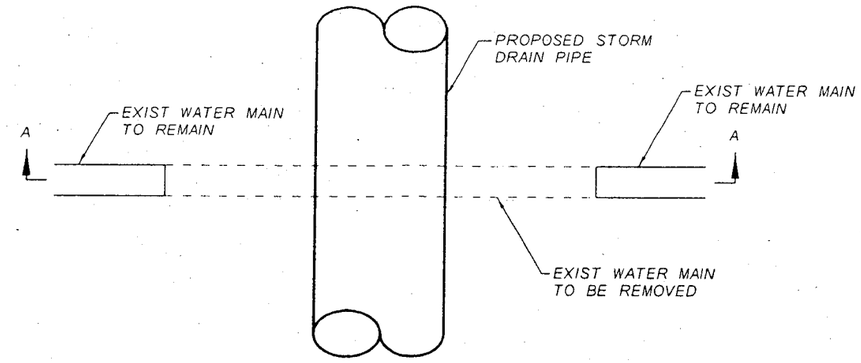

PLAN
VERTICAL REALIGNMENT
OF WATER MAINS
NTS

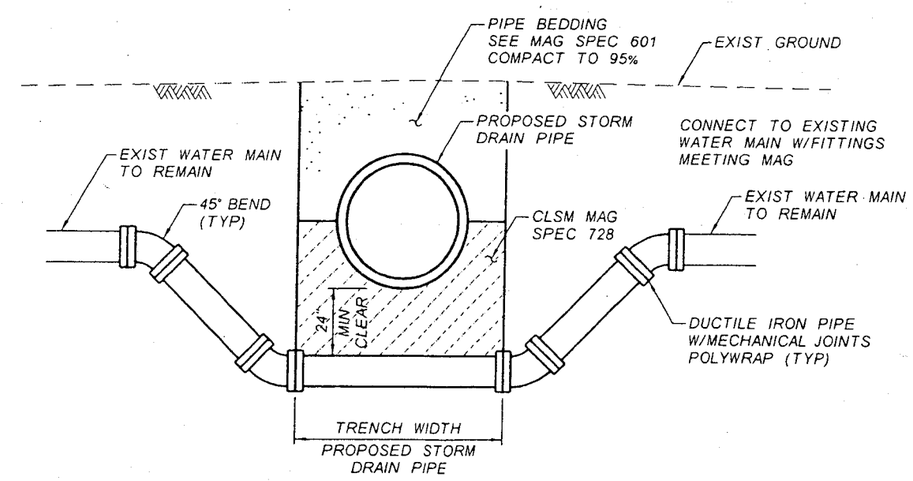

SECTION A-A
VERTICAL REALIGNMENT
OF WATER MAINS
NTS

NO.	REVISION	BY	DATE
3			
2			
1			

FLOOD CONTROL DISTRICT OF MARICOPA COUNTY
ENGINEERING DIVISION

83RD AVENUE / PINNACLE PEAK ROAD
DRAINAGE IMPROVEMENTS
PCN 450.02.33 FCD CONTRACT NO. 2003C060

90%
PRELIMINARY
NOT FOR
CONSTRUCTION

	BY	DATE
DESIGNED	O. OLIDEN	01/06
DRAWN	A. JOHNSON	01/06
CHECKED	M. RATHBONE	01/06

JACOBS CIVIL INC.

DRAWING NO. D25
DTL 25
WATER RELOCATION DETAILS
SHEET OF

JACOBS

Subject MANHOLES Project 82nd AVE / Immaculate Rd
WTXTM 300 Sheet No. 1 Of
Authored by MJR Date 11/24/01 Checked by Date

SUMMARY OF MANHOLE DIM'S (EXTERNAL)

STA (FILL)	L	W	H	PENETRATIONS LS	SS	TOP	
102+00	11	7.5	5	2/2	0/0	EX	
104+75	11	7.5	5.8	2/1	0/0	EX	
134+86 (5.5')	9	7	11	1/1	1/0	C	Taller
199+60	9	8	6.75	1/0	1/0	C	
226+64	10	8	9.33	1/1	1/0	C	
235+50	11	9	10	1/1	0/0	C	
244+40 (6.0')	14	9	10	1/1	0/0	C	
245+65 (6.5')	14	12.5	10	1/1	1/0	EX	
313+52	16	12	11.33	1/1	1/0	EX	
Anbrnb 326+40	21	14	16	1/1	1/1	EX	
336+55	14	7.5	8.67	2/1	1/0	C	
339+55	14	14	5.91	2/0	2/0	C	Flatter
400+30	10	7	8.1	1/1	1/0	C	
413+23	13	10	8.2	1/1	1/0	C	
416+56	10	10	8.2	1/0	1/0	C	

JACOBS

Subject _____ Project LJ7K7430 - 2060

_____ Sheet No. _____ Of _____

Authored by _____ Date _____ Checked by _____ Date _____

WHEEL LOAD DIRECTLY ON SLAB,

(FOR MANHOLES WITH < 2' COVER)

FROM PLAN DETAILS, LONGEST SHALLOW SPAN IS 14 FEET AT STA 339+55

FROM AASHTO CHAPTER 3,

- AASHTO 3.8.2: USE $I = \frac{50}{14+125} = 0.36$, MAX 0.3

$$\underline{I = 0.3}$$

- AASHTO 3.24.1.2 (a): 'S' WILL BE THE CLEAR SPAN = 12'-2"
- AASHTO 3.24.3.2 - CASE B REINF PARALLEL TO TRAFFIC (MANHOLE IS SQUARE)

$$E = 4 + 0.06S$$
$$= 4 + 0.06(12.17)$$
$$= \underline{4.73'}$$

$$LLM = 9005 \text{ ft-lbs (FOR SPANS} \leq 50')$$
$$= 900(12.17) \times 1/1000 \text{ ft-kips}$$
$$= \underline{10.95 \text{ ft-kips}}$$

FOR A 1-ft WIDE DESIGN STRIP, WITH IMPACT

$$LLM = \frac{LLM}{E}(1+I)$$
$$= \frac{10.95}{4.73}(1+0.3)$$
$$= 3.01 \text{ ft-kips per foot.}$$

JACOBS

Subject _____ Project _____

_____ Sheet No. _____ Of _____

Authored by _____ Date _____ Checked by _____ Date _____

ADDITIONAL MOMENT FROM DEAD LOAD:

FILL OVER: APPROX 2' = 2(120) = 240 #/ft.

SLAB (CONC.) 10" THK : $\frac{10}{12}$(150) = 125 #/ft

DLM : $(240 + 125) \times \frac{12.17^2}{12} \times 1/1000$ (FIXED-END)

= 4.50 ft-kips per foot. (2.96 FILL, 1.54 SLAB)

NOTE: THE DEAD LOAD MOMENT IS ALSO CALCULATED AUTOMATICALLY IN THE CULVERT SPREADSHEET. A LESSER VALUE IS PRODUCED AS A RESULT OF THE SOIL - STRUCTURE INTERACTION.

GRP I MOM GOVERNS: M = 2.96 + 1.54 + 3.01
= 7.51 f-k

(SPREADSHEET RETURNS 6.8 f-k AFTER ADDING LLM TO SOIL-STRUCTURE RESULT)

ENGINEERS' NOTEBOOK

Moments in buried box culverts

P. C. DAVE, A.M. ASCE, Senior Civil Engineer, The Kuljian Corp. Ind. Pvt. Ltd., Calcutta, India

Buried box culverts are subjected to four main types of loading: the total weight of two walls, W_1; total uniform vertical load due to weight of slab, fill and surcharge, W_2; total uniform lateral load due to soil and surcharge, W_3; and the total lateral triangular load due to soil, W_4 (see Fig. 1). Hydrostatic loads, if present, can be regarded as negative W_2, W_3, or W_4.

For the purpose of design, moments at the four corners and at mid-points of the four sides, corresponding to points 1 through 5 in Fig. 1, are required. Coefficients derived from slope-deflection equations are available to evaluate the moments resulting from the various kinds of loadings.[1] For example, for moments M_1 and M_2 resulting from W_1 through W_4:

$$M_1 = W_1 L \left[\frac{K}{12\,(K+1)\,(K+3)}\right]$$

$$M_2 = -W_1 L \left[\frac{2K+3}{12\,(K+1)\,(K+3)}\right]$$

$$M_1 = M_2 = -W_2\,L/12\,(K+1)$$

$$M_1 = M_2 = -W_3 H K/12\,(K+1)$$

$$M_1 = -W_4 H \left[\frac{(2K+7)\,K}{30\,(K+1)\,(K+3)}\right]$$

$$M_2 = -W_4 H \left[\frac{(3K+8)\,K}{30\,(K+1)\,(K+3)}\right]$$

(See Fig. 1 for explanation of symbols.)

Mid-span moments can be obtained by deducting end moments from the simple span moments, or can be expressed in terms of W_1 to W_1 as is done here. Adding and simplifying the expressions gives:

$$M_1 = [L\,(A W_1 - W_2) - KH\,(W_3 + 0.9 W_4)]\,/12C \quad \text{...Eq. 1}$$

$$M_2 = [-L\,[(A+1) W_1 + W_2] - KH\,(W_3 + 1.1 W_4)]\,/12C \quad \text{...Eq. 2}$$

$$M_3 = [L\,(A W_1 + B W_2) - KH\,(W_3 + 0.9 W_4)]\,/12C \quad \text{...Eq. 3}$$

$$M_4 = [L\,[(B - A) W_1 + B W_2] - KH\,(W_3 + 1.1 W_4)]\,/12C \quad \text{...Eq. 4}$$

$$M_5 = [-L\,(\tfrac{1}{2} W_1 + W_2) + \tfrac{1}{2} CH\,(W_3 + W_4)]\,/12C \quad \text{...Eq. 5}$$

where $A = K/(K+3)$

$B = (3K+1)/2$

$C = (K+1)$

The constants 0.9 and 1.1 are average values of expressions

$D = 2(2K+7)/5\,(K+3)$ and

$E = 2(3K+8)/5(K+3)$,

for usual values of K. This approximation is justified because as K varies from 0 to ∞, D varies from 0.934 to 0.8, and E varies from 1.065 to 1.2—indeed an insignificant variation for routine values of K. Thus, Eqs. 1 to 5 give the required moments with very simple coefficients A, B, C to be evaluated. Curves showing the variation of all coefficients are given in Fig. 2, from which the values can be read directly.

The above discussion applies to culverts with both top and bottom slabs of identical thickness. As the moments for top slab do not vary greatly from those for bottom slab, it is usually convenient to vary reinforcement, keeping slab thickness the same. Coefficients for culverts with top slab thickness different from bottom slab thickness are available, but it is felt that in such cases moment distribution might be simpler.

Example: Find moments M_1 to M_5 for a culvert with $h = 14$ ft, $l = 9$ ft 2 in., $t_w = 1.0$ ft, and with loading (kips) $W_2 = 10$, $W_3 = 5$, $W_4 = 4$.

Solution: $L = 10$ ft, $H = 15$ ft, $W_1 = 2 \times 15 \times 10/12 \times 0.15 = 4$ kips (approx.) $K = 2.6$, $A = .46$, $B = 4.4$, $C = 3.6$. Substituting these values into Eqs. 1 through 5 gives:

$M_1 = -9.7$ kip-ft

$M_2 = -12.1$ kip-ft

$M_3 = 2.8$ kip-ft

$M_4 = 5.4$ kip-ft

$M_5 = 2.8$ kip-ft

It may be noted that the above calculations are only up to first significant figure after decimal point. ▽

References

[1] Reinforced Concrete Designer's Handbook, Charles E. Reynolds, sixth edition 1961, Concrete Publications, Ltd., London, Table No. 99, pp. 321.

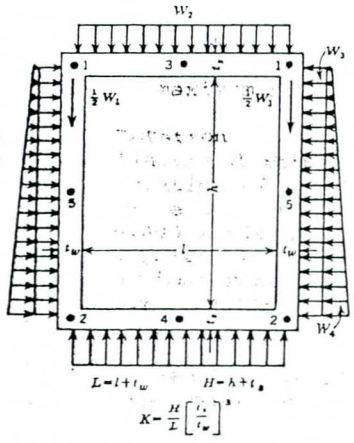

FIG. 1. Typical box culvert section.

FIG. 2. Variation in coefficients used in simplified moment equations.

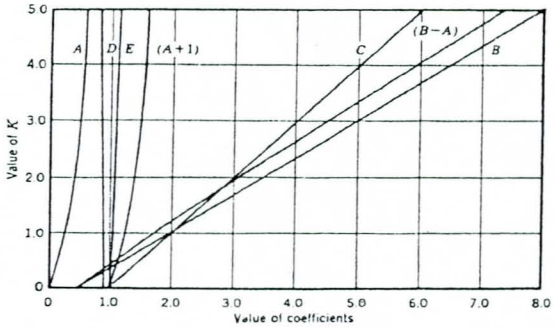

JACOBS CIVIL INC.

PROJECT	83rd Avenue / Pinnacle Peak Rd Drainage Improvements	JOB NO. W7X74300	NO
SUBJECT	Storm Drain Manhole Reinforcement	DESIGNED BY MJR	CHECK BY
	Minimum W:H aspect Ratio (Example: Manhole @ Station 326+40)	DATE 28-Nov-05	SHEET OF

METHOD:

"Moments in Buried Box Culverts", P. C. Dave, A.M. ASCE, Civil Engineering-ASCE, 1967 (Attached)

GEOMETRY			LOADS			
l:	8.16667	ft.	W_1:	2.52083	kips	- Total weight of two walls
h:	8.33333	ft.	W_2:	3.3	kips	- Total uniform vertical load from slab, fill & surcharge
t_w:	0.91667	ft.	W_3:	1.1	kips	- Total uniform lateral load from soil & surcharge
t_s:	0.83	ft.	W_4:	2.52	kips	- Total lateral triangular load from soil
K_0:	0.5	Coefficient of lateral soil pressure at rest				
Fill Height:	2	ft.				
L =	9.08333		A =	0.20		
H =	9.16667		B =	1.6		
K =	0.8		C =	1.8		

	ASD		LFD	
M_1 =	-2.3	ft-kips	-3.0	ft-kips
M_2 =	-4.0	ft-kips	-5.2	ft-kips
M_3 =	1.4	ft-kips	1.9	ft-kips
M_4 =	2.6	ft-kips	3.4	ft-kips
M_5 =	-0.6	ft-kips	-0.8	ft-kips

INTERPOLATION OF MOMENTS AT HAUNCH/SLAB INTERFACE

TOP SLAB:

Haunch: 0 inches

Distance Ratio: 0.101 (CL Wall to End Haunch : CL Wall to Midspan)

Moment @ End Haunch: -1.94 ft-kips

BOTTOM SLAB:

Haunch: 0 inches

Distance Ratio: 0.101 (CL Wall to End Haunch : CL Wall to Midspan)

Moment @ End Haunch: -3.34 ft-kips

NOTE: Add 3.01 ft-k to top slab moment for direct wheel load on shallow structure.

FLEXURE CHECK

CONSTANTS (from computations):

Design width, b :	12	in.
Young's Modulus (concrete), E_c :	485,592	ksf
Young's Modulus (steel), E_s :	4,176,000	ksf
Modular ratio, n :	8	
Flexure reduction factor, ϕ_{fl} :	0.9	
Shear reduction factor, ϕ_{sh} :	0.85	
Wearing thickness (integral) :	0	in.

Material Stresses

Steel			Concrete		
f_s :	24,000	psi	f_c :	1,400	psi
f_y :	60,000	psi	f'_c :	3,500	psi
			f_r :	444	psi

FLEXURE	SECTION	SECTION	SECTION	SECTION	SECTION
	M1 - Top Corner	M2 - Bottom Corner	M3 - Top Slab	M4 - Bottom Slab	M5 - Walls
M_{max}	1.9 ft-kips	3.3 ft-kips	4.5 ft-kips	2.6 ft-kips	0.6 ft-kips
TRY	# 5 @ 12.0	# 5 @ 12.0	# 5 @ 12.00	# 5 @ 12.00	# 5 @ 12.0
Dia.	0.625 in.	0.625 in.	0.625 in.	0.625 in.	0.625 in.
D^+	10.0 in.	10.0 in.	10.0 in.	10.0 in.	11.0 in.
D	10.0 in.	10.0 in.	10.0 in.	10.0 in.	11.0 in.
A_g	120.0 sq.in.	120.0 sq.in.	120.0 sq.in.	120.0 sq.in.	132.0 sq.in.
cover	2.0 in.	3.0 in.	1.0 in.	2.0 in.	1.5 in.
d	7.69 in.	6.69 in.	8.69 in.	7.69 in.	9.19 in.
A_s	0.310 sq.in.	0.310 sq.in.	0.310 sq.in.	0.310 sq.in.	0.310 sq.in.
p	0.00336	0.00386	0.00297	0.00336	0.00281
k	0.2065	0.2196	0.1956	0.2065	0.1908
j	0.9312	0.9268	0.9348	0.9312	0.9364
f_s	10481 psi	20852 psi	21241 psi	14164 psi	2641 psi
f_c	341 psi	734 psi	646 psi	461 psi	78 psi
a	0.521 in.	0.521 in.	0.521 in.	0.521 in.	0.521 in.
ϕM_n	10.4 ft-kips	9.0 ft-kips	11.8 ft-kips	10.4 ft-kips	12.5 ft-kips
M_{cr}	7.4 ft-kips	7.4 ft-kips	7.4 ft-kips	7.4 ft-kips	8.9 ft-kips
$1.2M_{cr}$	8.87 ft-kips	8.87 ft-kips	8.87 ft-kips	8.87 ft-kips	10.74 ft-kips
A_s(min)	0.262 sq.in	0.301 sq.in	0.232 sq.in	0.262 sq.in	0.265 sq.in
CHECK:					
Steel:	44%	87%	89%	59%	11%
Concrete:	24%	52%	46%	33%	6%

NOTE: Cover should NOT include the integral wearing thickness.
D+ is the total depth of concrete, including the integral wearing thickness.
D is the structural depth, which excludes the integral wearing thickness.

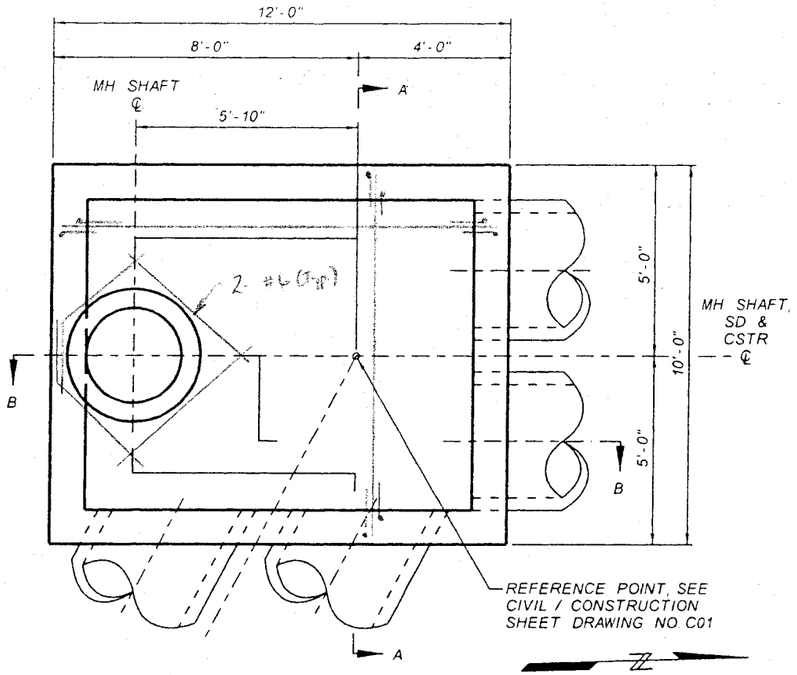

PLAN
CONCRETE VAULT
83RD AVENUE STA 100+00
NTS

SHALLOW 10 [illegible]

DTL 02 ✓
03 ✓
04 ✓
06 ✓
09 ✓
14 ✓
15 ✓
17 ✓
21 ✓

Check general notes:
f'_c = 3,500 psi (min)

MAKE THESE BARS Φ#12 [illegible]

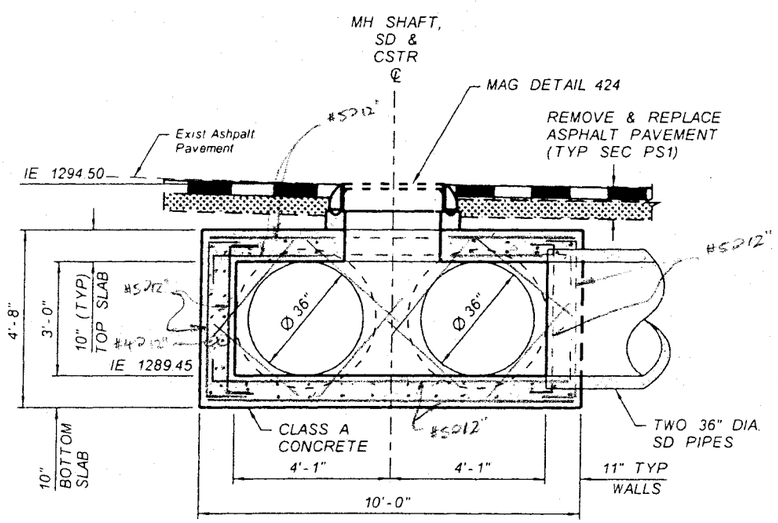

SECTION A-A
CONCRETE VAULT
83RD AVENUE STA 100+00
NTS

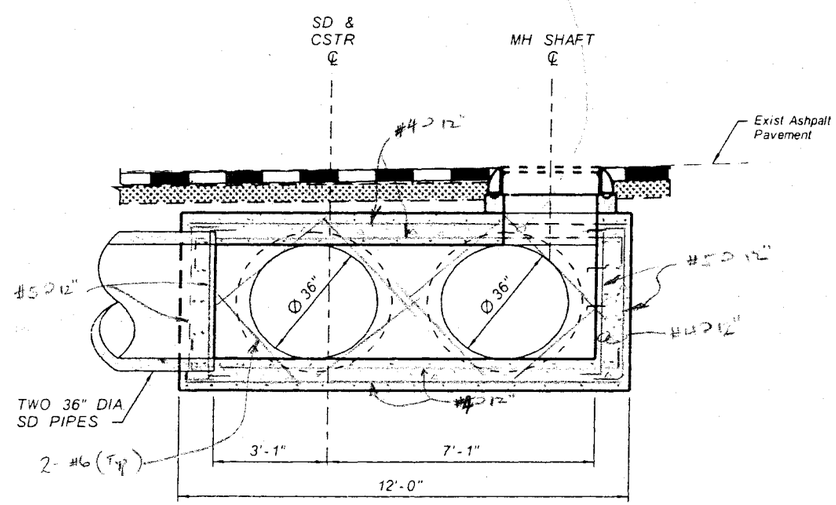

SECTION B-B
CONCRETE VAULT
83RD AVENUE STA 100+00
NTS

NO	REVISION	BY	DATE
3			
2			
1			

FLOOD CONTROL DISTRICT OF MARICOPA COUNTY
ENGINEERING DIVISION

83RD AVENUE / PINNACLE PEAK ROAD
DRAINAGE IMPROVEMENTS
PCN 450.02.33 FCD CONTRACT NO. 2003C060

60%
PRELIMINARY NOT FOR CONSTRUCTION

	BY	DATE
DESIGNED	O. OLIDEN	11/05
DRAWN	A. JOHNSON	11/05
CHECKED		

JACOBS CIVIL INC.

DRAWING NO. D02 | DTL 02 CONCRETE VAULT | SHEET OF

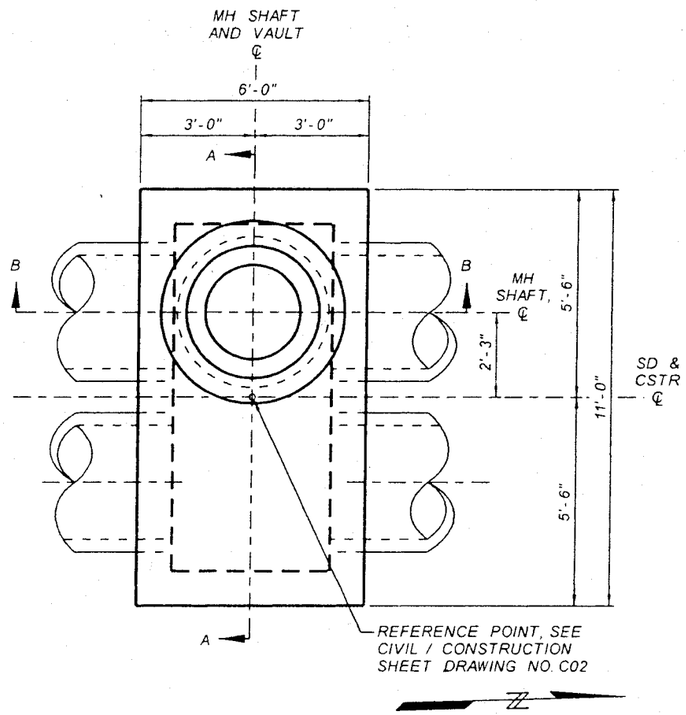

PLAN
STORM DRAIN MANHOLE BASE
83RD AVENUE STA 102+00
NTS

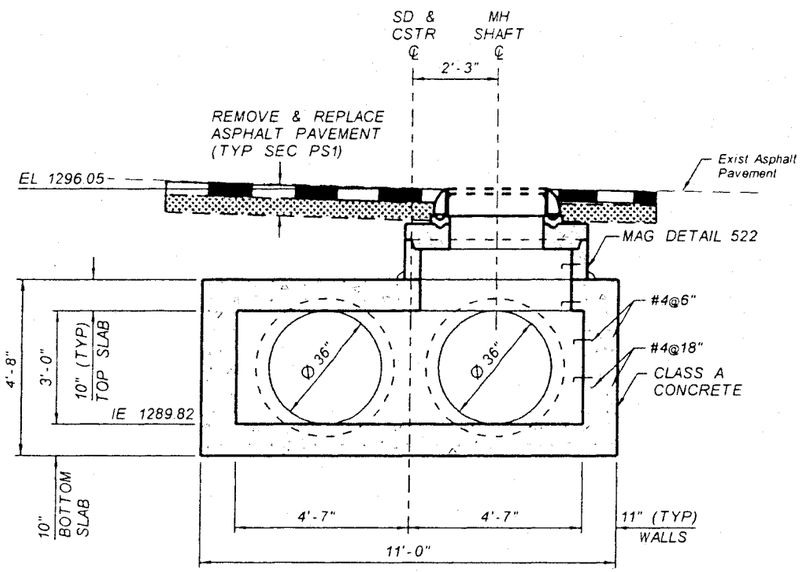

SECTION A-A
STORM DRAIN MANHOLE BASE
83RD AVENUE STA 102+00
NTS

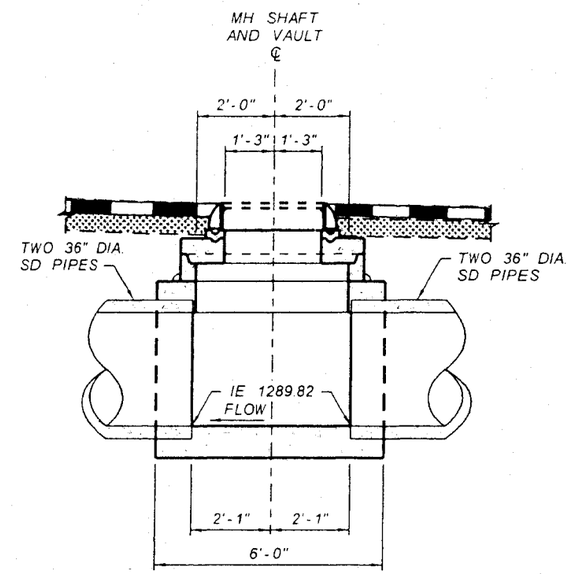

SECTION B-B
STORM DRAIN MANHOLE BASE
83RD AVENUE STA 102+00
NTS

NO.	REVISION	BY	DATE
3			
2			
1			

FLOOD CONTROL DISTRICT OF MARICOPA COUNTY
ENGINEERING DIVISION

83RD AVENUE / PINNACLE PEAK ROAD
DRAINAGE IMPROVEMENTS
PCN 450.02.33 FCD CONTRACT NO. 2003C060

60%
PRELIMINARY
NOT FOR
CONSTRUCTION

	BY	DATE
DESIGNED	O. OLIDEN	11/05
DRAWN	A. JOHNSON	11/05
CHECKED		

JACOBS CIVIL INC.

DRAWING NO		SHEET OF
D03	DTL 03 STORM DRAIN MANHOLE	

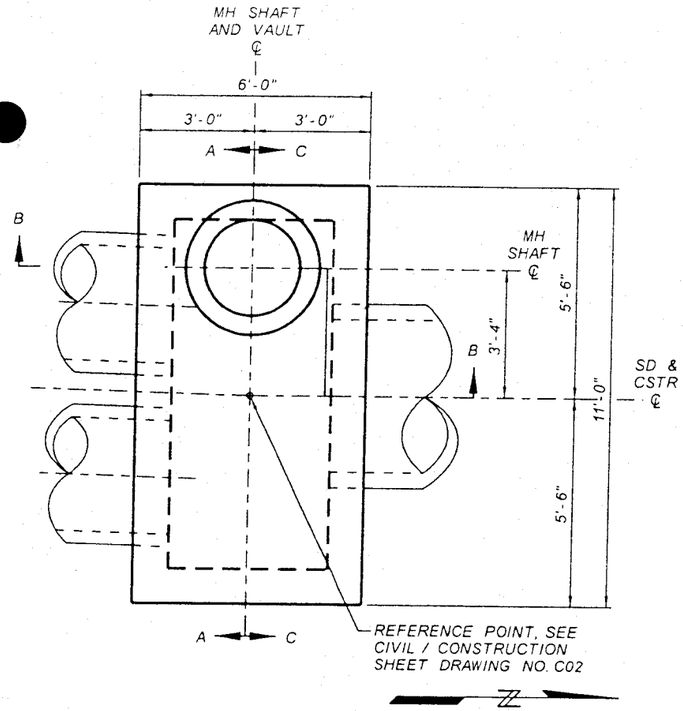

PLAN
STORM DRAIN MANHOLE BASE
83RD AVENUE STA 104+75
NTS

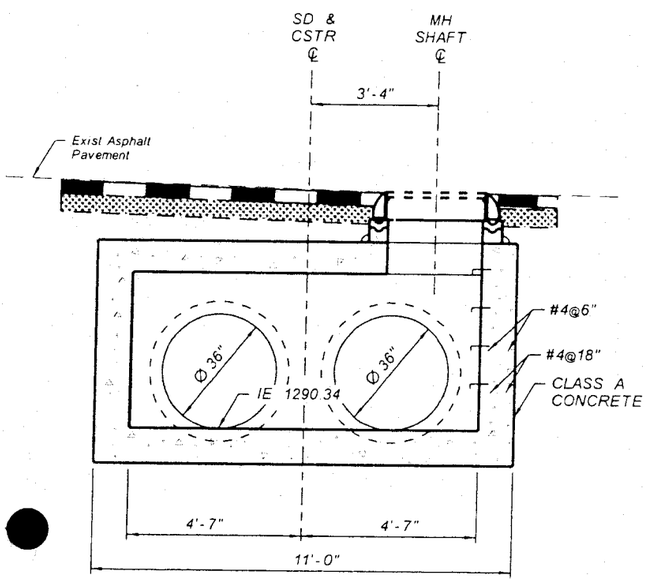

SECTION A-A
STORM DRAIN MANHOLE BASE
83RD AVENUE STA 104+75
NTS

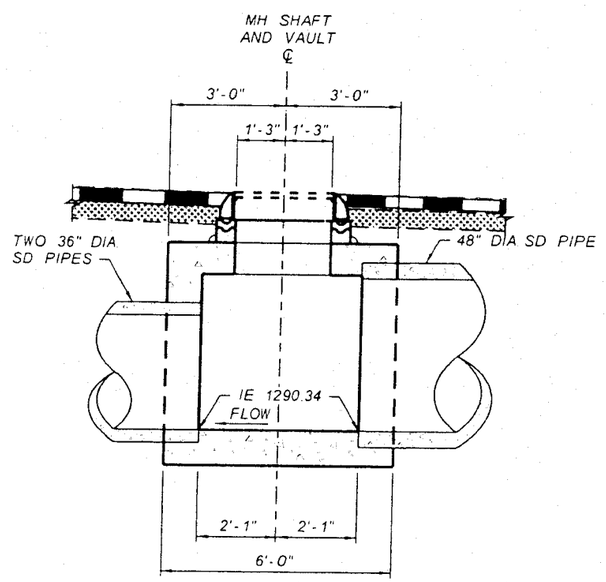

SECTION B-B
STORM DRAIN MANHOLE BASE
83RD AVENUE STA 104+75
NTS

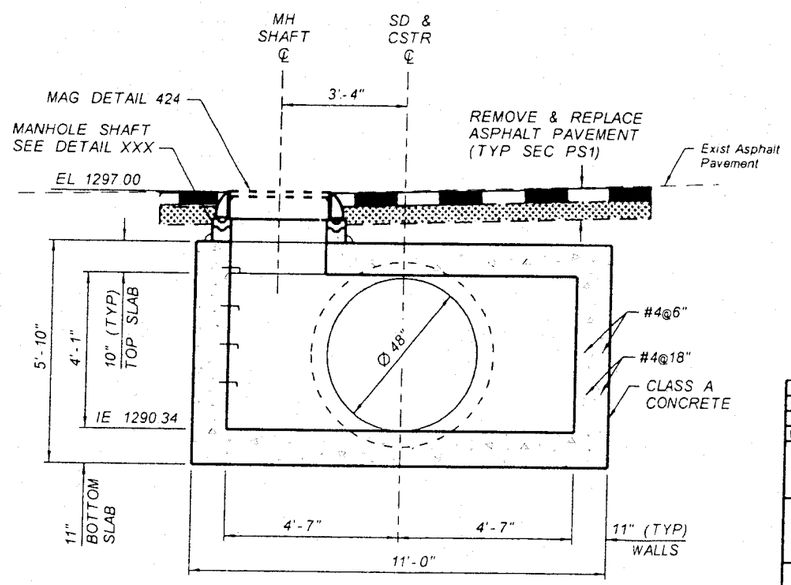

SECTION C-C
STORM DRAIN MANHOLE BASE
83RD AVENUE STA 104+75
NTS

NO.	REVISION	BY	DATE
3			
2			
1			

FLOOD CONTROL DISTRICT OF MARICOPA COUNTY
ENGINEERING DIVISION

83RD AVENUE / PINNACLE PEAK ROAD
DRAINAGE IMPROVEMENTS
PCN 450.02.33 FCD CONTRACT NO. 2003C060

60%
PRELIMINARY
NOT FOR
CONSTRUCTION

	BY	DATE
DESIGNED	O OLIDEN	11/05
DRAWN	A JOHNSON	11/05
CHECKED		

JACOBS CIVIL INC.

DRAWING NO. D04
DTL 04
STORM DRAIN MANHOLE
SHEET OF

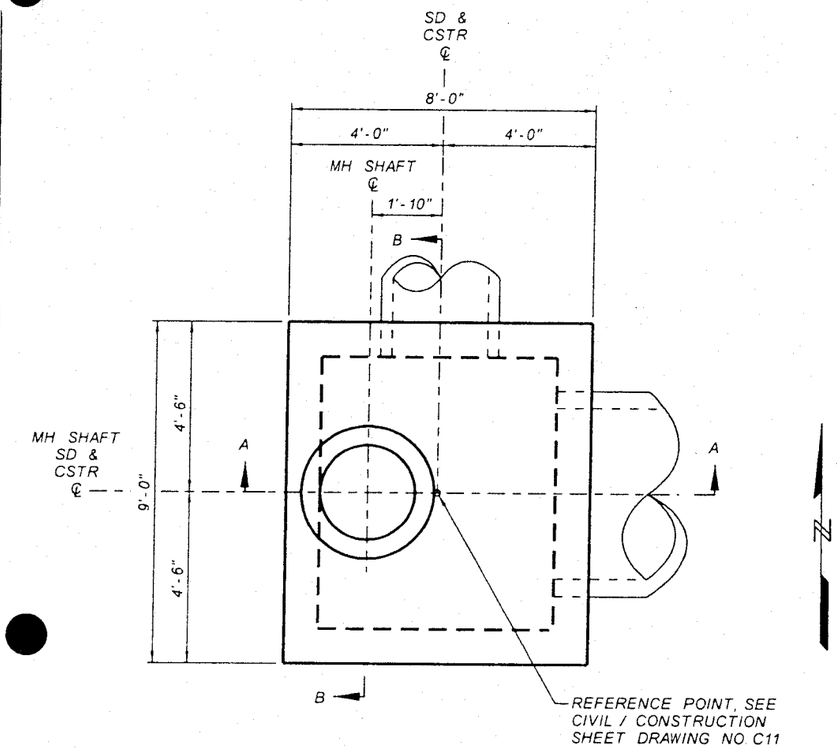

PLAN
STORM DRAIN MANHOLE BASE
PINNACLE PEAK ROAD STA 199+60
NTS

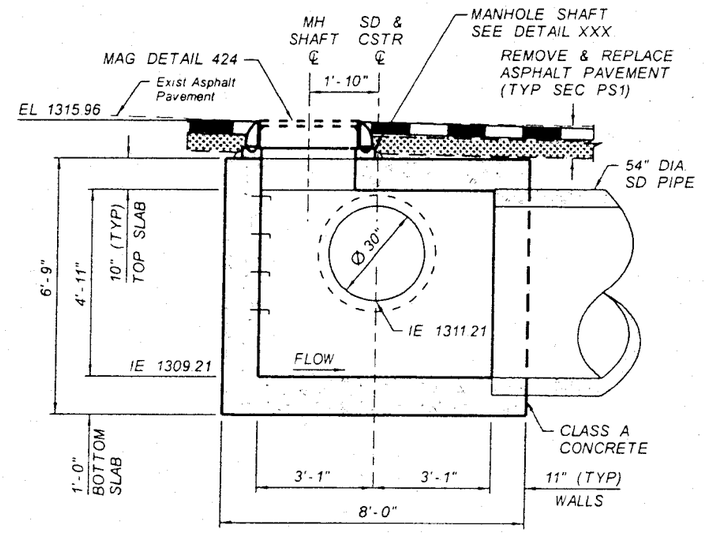

SECTION A-A
STORM DRAIN MANHOLE BASE
PINNACLE PEAK ROAD STA 199+60
NTS

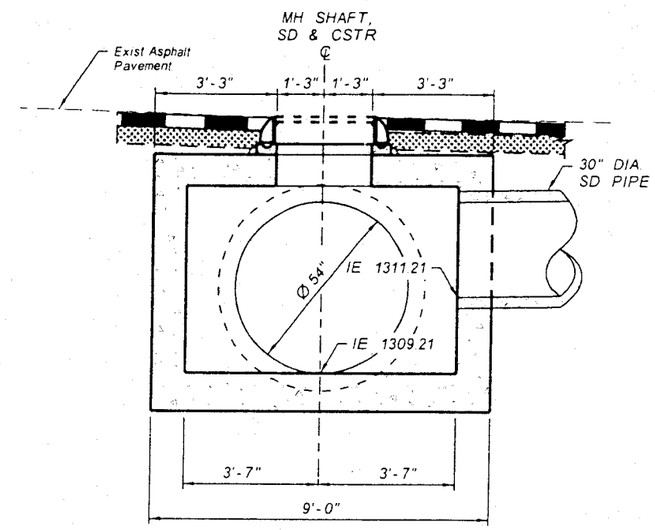

SECTION B-B
STORM DRAIN MANHOLE BASE
PINNACLE PEAK ROAD STA 199+60
NTS

NO.	REVISION	BY	DATE
3			
2			
1			

FLOOD CONTROL DISTRICT OF MARICOPA COUNTY
ENGINEERING DIVISION

83RD AVENUE / PINNACLE PEAK ROAD
DRAINAGE IMPROVEMENTS
PCN 450.02.33 FCD CONTRACT NO. 2003C060

60%
PRELIMINARY NOT FOR CONSTRUCTION

	BY	DATE
DESIGNED	O. OLIDEN	11/05
DRAWN	A. JOHNSON	11/05
CHECKED		

JACOBS CIVIL INC.

DRAWING NO. D06 | DTL 06 STORM DRAIN MANHOLE | SHEET OF

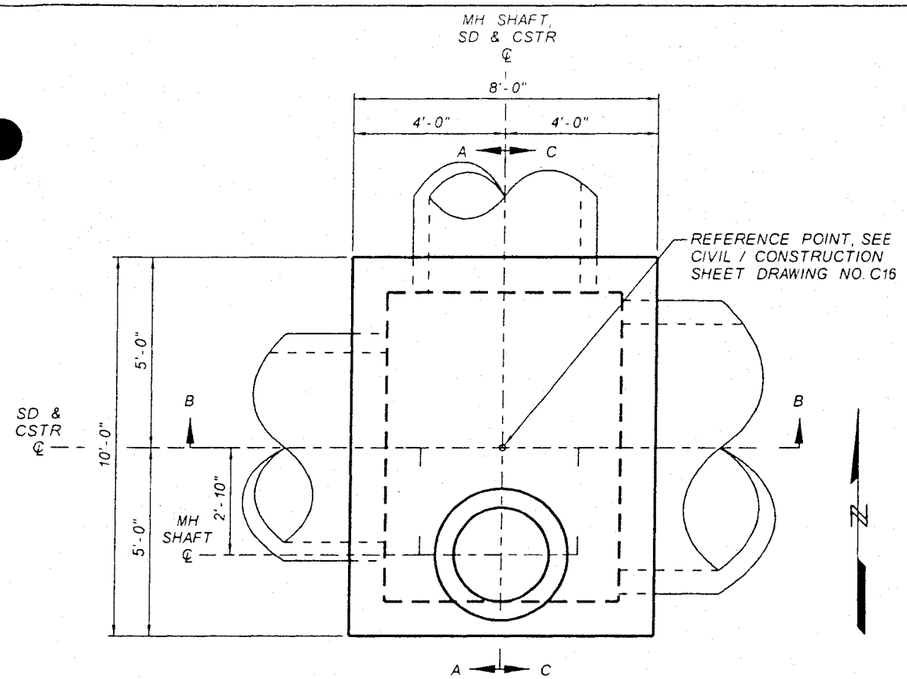

PLAN
STORM DRAIN MANHOLE BASE
PINNACLE PEAK ROAD STA 226+64
NTS

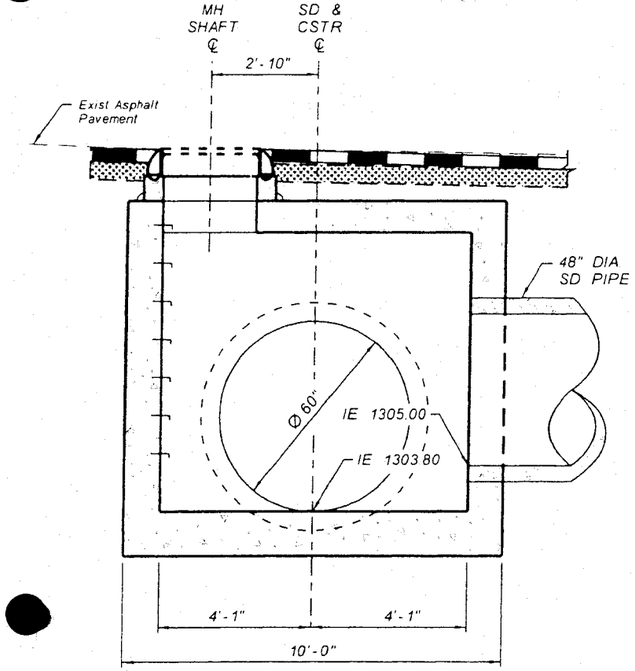

SECTION A-A
STORM DRAIN MANHOLE BASE
PINNACLE PEAK ROAD STA 226+64
NTS

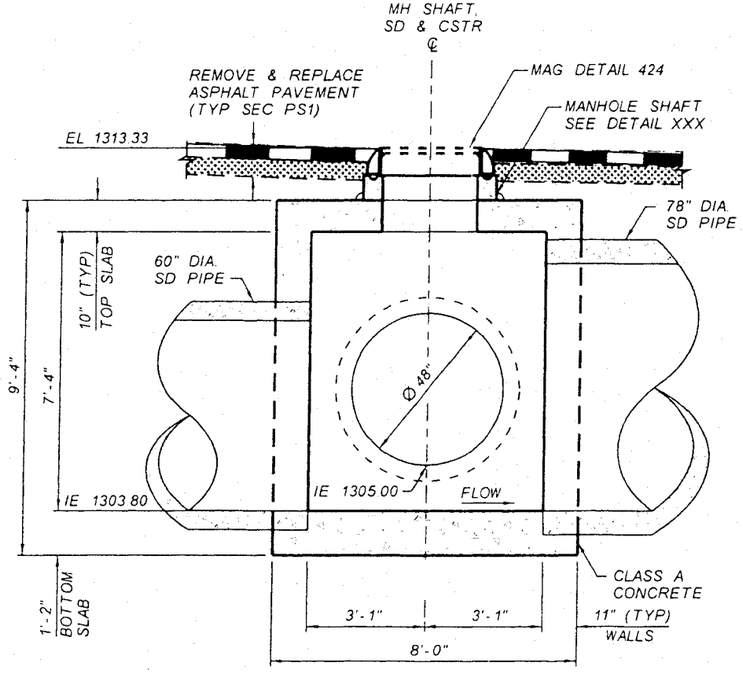

SECTION B-B
STORM DRAIN MANHOLE BASE
PINNACLE PEAK ROAD STA 226+64
NTS

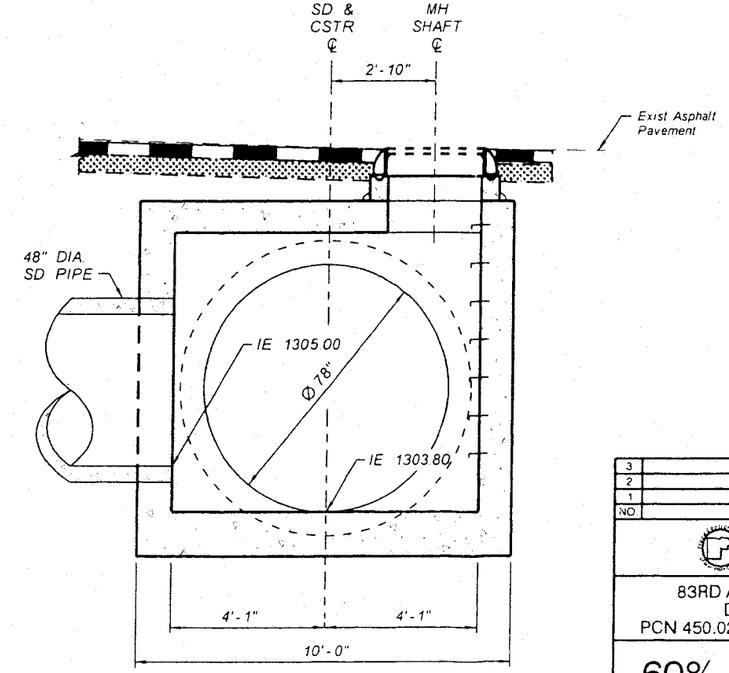

SECTION C-C
STORM DRAIN MANHOLE BASE
PINNACLE PEAK ROAD STA 226+64
NTS

NO.	REVISION	BY	DATE
3			
2			
1			

FLOOD CONTROL DISTRICT OF MARICOPA COUNTY
ENGINEERING DIVISION

83RD AVENUE / PINNACLE PEAK ROAD
DRAINAGE IMPROVEMENTS
PCN 450.02.33 FCD CONTRACT NO. 2003C060

60%
PRELIMINARY
NOT FOR
CONSTRUCTION

	BY	DATE
DESIGNED	O OLIDEN	11/05
DRAWN	A JOHNSON	11/05
CHECKED		

JACOBS CIVIL INC.

DRAWING NO. D07 | DTL 07 STORM DRAIN MANHOLE | SHEET OF

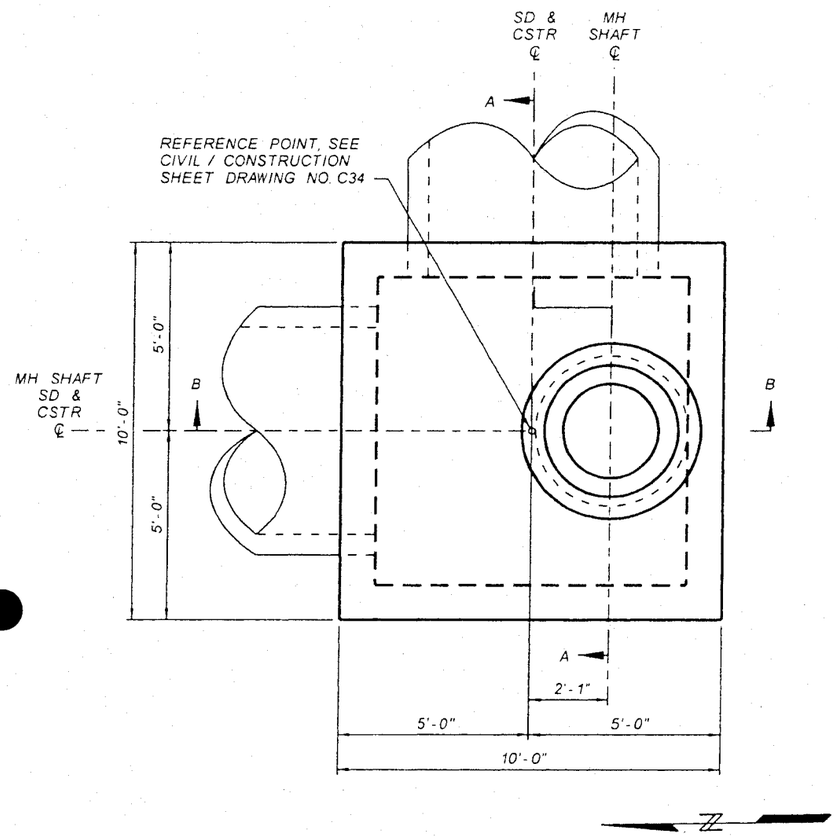

PLAN
STORM DRAIN MANHOLE BASE
89TH AVENUE STA 416+56
NTS

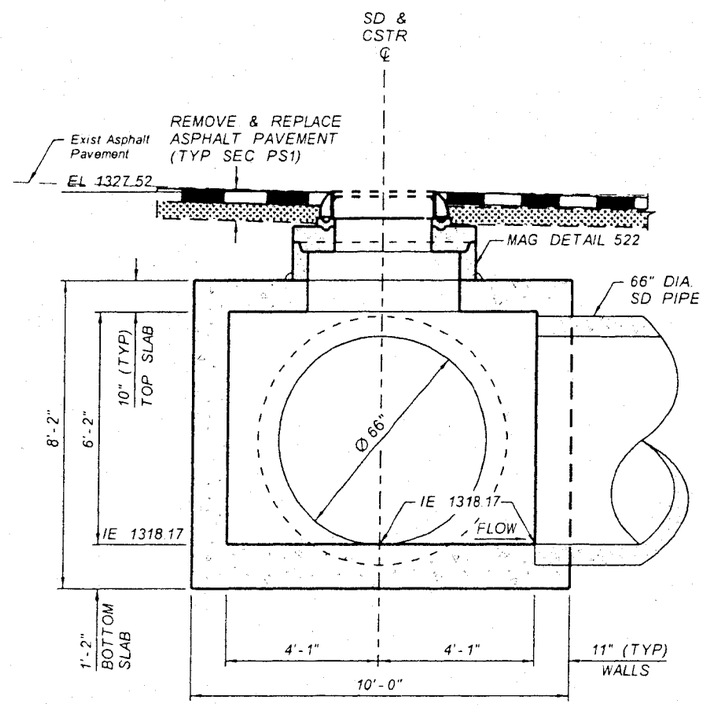

SECTION A-A
STORM DRAIN MANHOLE BASE
89TH AVENUE STA 416+56
NTS

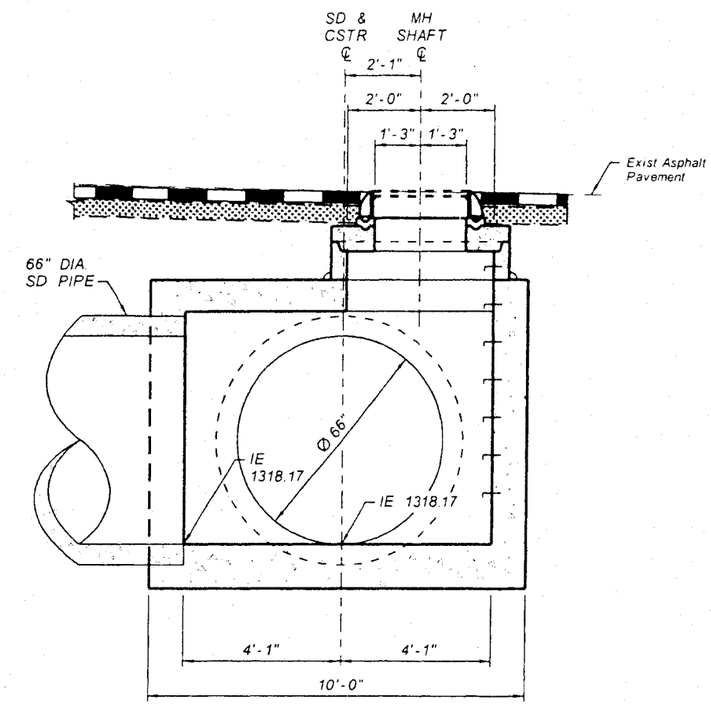

SECTION B-B
STORM DRAIN MANHOLE BASE
89TH AVENUE STA 416+56
NTS

NO	REVISION	BY	DATE
3			
2			
1			

FLOOD CONTROL DISTRICT OF MARICOPA COUNTY
ENGINEERING DIVISION

83RD AVENUE / PINNACLE PEAK ROAD
DRAINAGE IMPROVEMENTS
PCN 450.02.33 FCD CONTRACT NO. 2003C060

60%
PRELIMINARY NOT FOR CONSTRUCTION

	BY	DATE
DESIGNED	O. OLIDEN	11/05
DRAWN	A. JOHNSON	11/05
CHECKED		

JACOBS CIVIL INC.

DRAWING NO. D14 | DTL 14 STORM DRAIN MANHOLE | SHEET OF

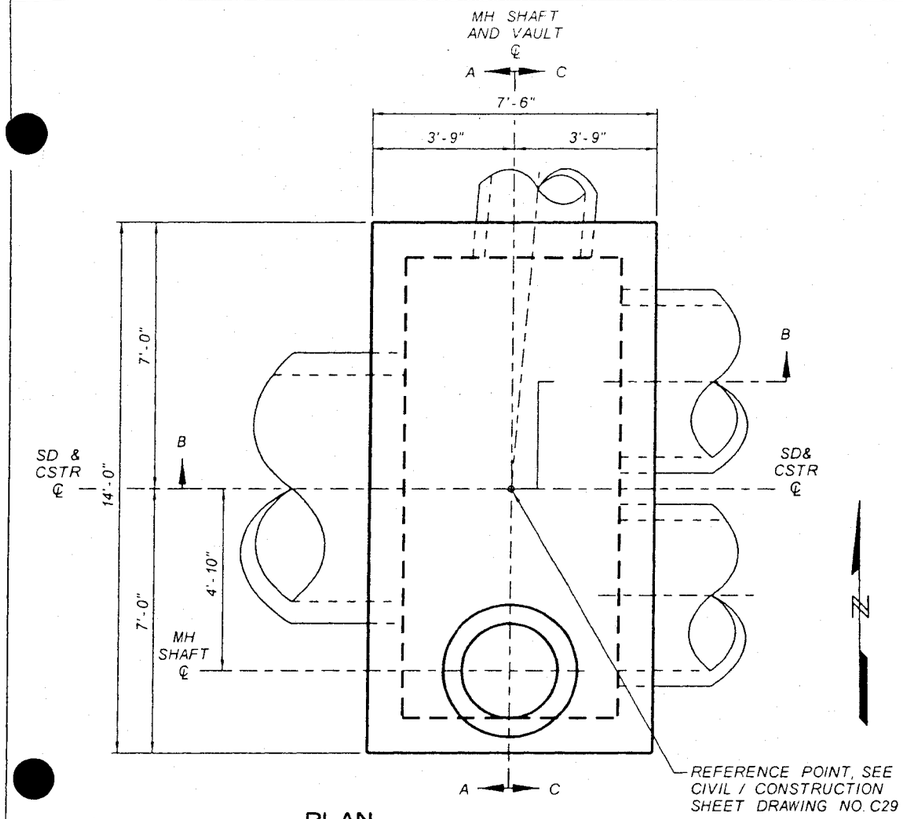

PLAN
STORM DRAIN MANHOLE BASE
CALLE LEJOS STA 336+55
NTS

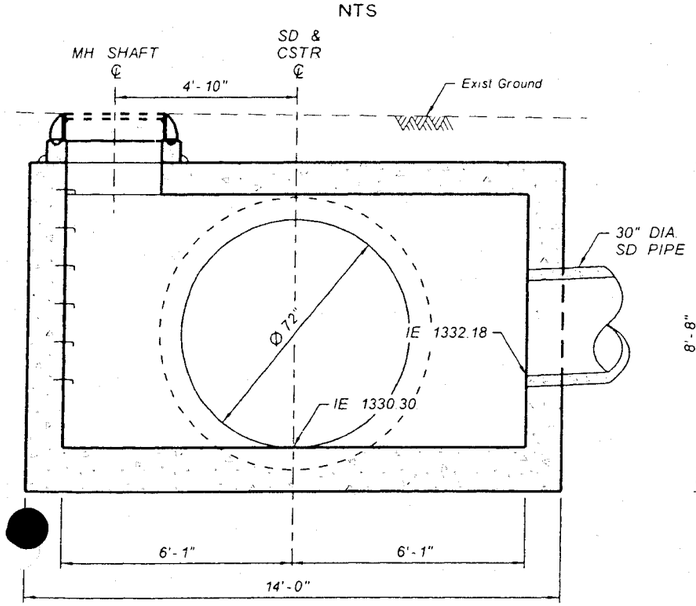

SECTION A-A
STORM DRAIN MANHOLE BASE
CALLE LEJOS STA 336+55
NTS

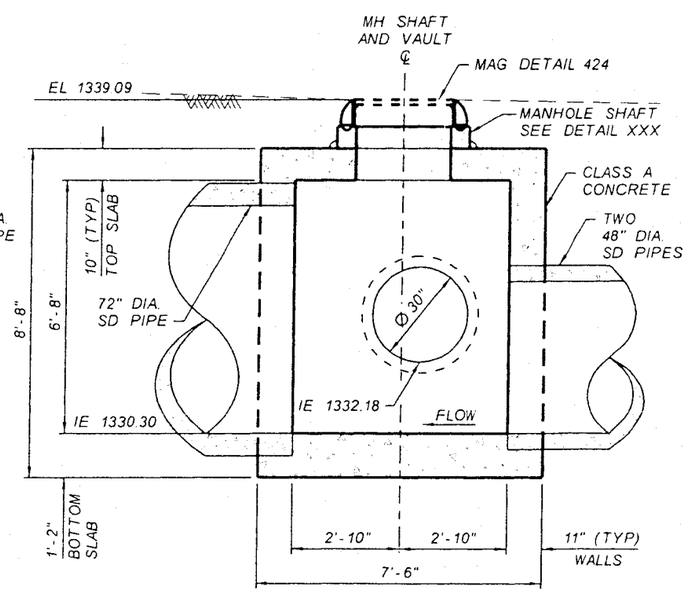

SECTION B-B
STORM DRAIN MANHOLE BASE
CALLE LEJOS STA 336+55
NTS

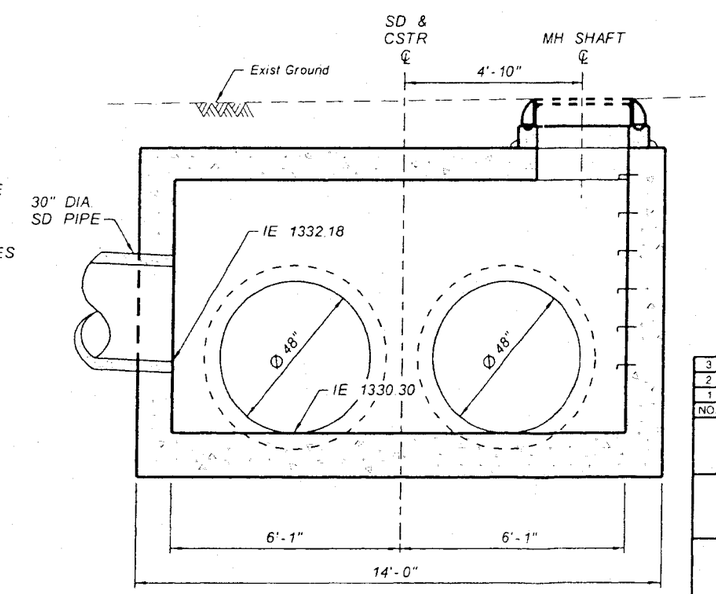

SECTION C-C
STORM DRAIN MANHOLE BASE
CALLE LEJOS STA 336+55
NTS

NO	REVISION	BY	DATE
3			
2			
1			

FLOOD CONTROL DISTRICT OF MARICOPA COUNTY
ENGINEERING DIVISION

83RD AVENUE / PINNACLE PEAK ROAD
DRAINAGE IMPROVEMENTS
PCN 450.02.33 FCD CONTRACT NO. 2003C060

60%
PRELIMINARY
NOT FOR
CONSTRUCTION

	BY	DATE
DESIGNED	O OLIDEN	11/05
DRAWN	A JOHNSON	11/05
CHECKED		

JACOBS CIVIL INC.

DRAWING NO D15 | DTL 15 STORM DRAIN MANHOLE | SHEET OF

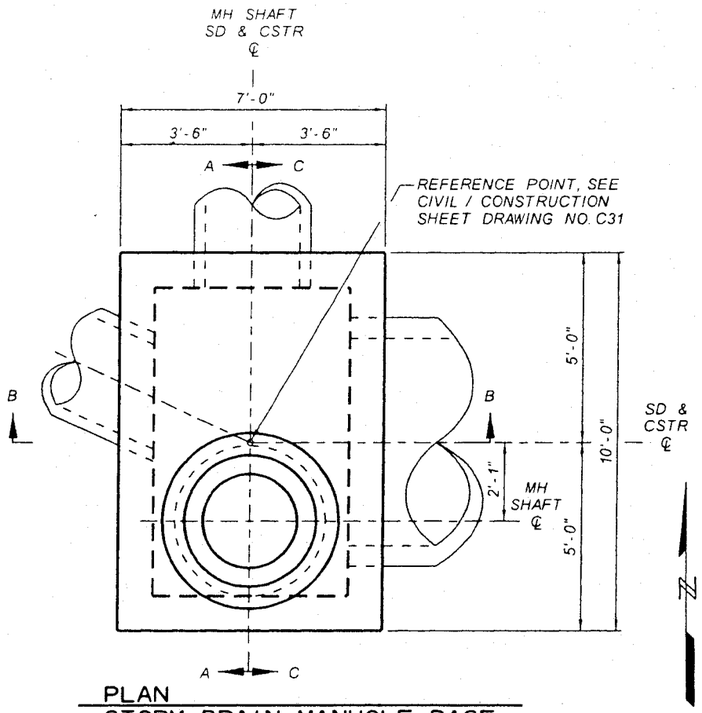

PLAN
STORM DRAIN MANHOLE BASE
CIELO GRANDE STA 400+30
NTS

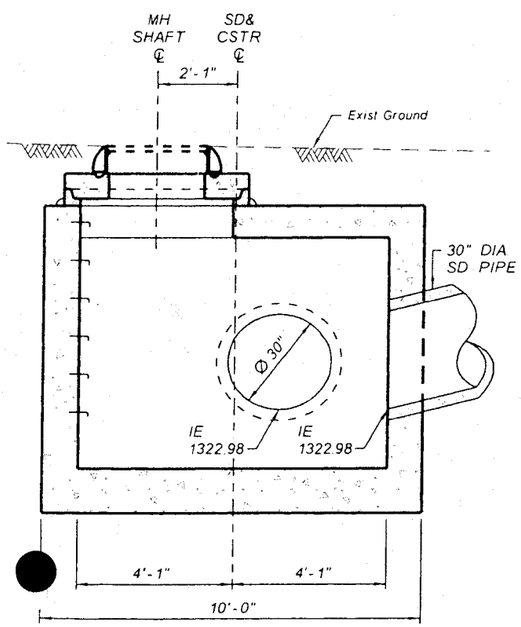

SECTION A-A
STORM DRAIN MANHOLE BASE
CIELO GRANDE STA 400+30
NTS

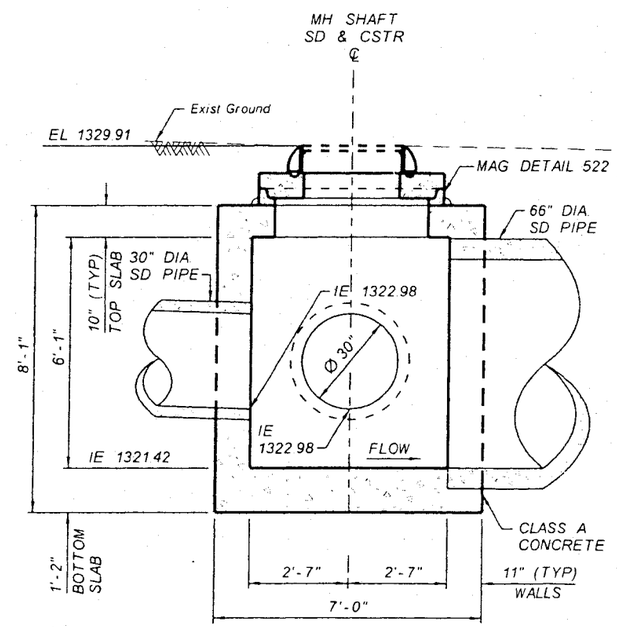

SECTION B-B
STORM DRAIN MANHOLE BASE
CIELO GRANDE STA 400+30
NTS

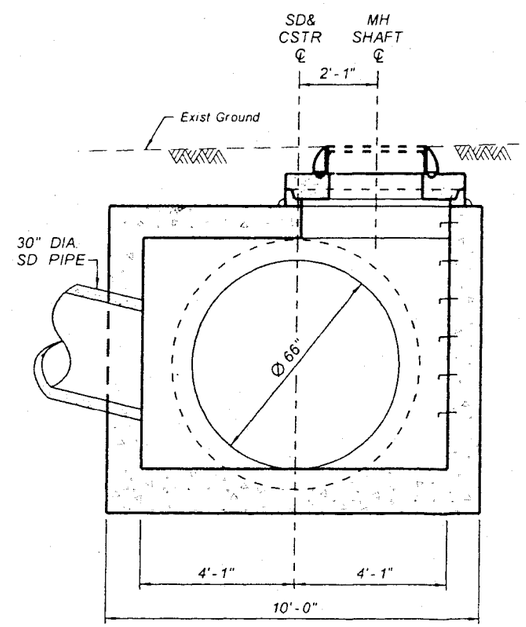

SECTION C-C
STORM DRAIN MANHOLE BASE
CIELO GRANDE STA 400+30
NTS

NO.	REVISION	BY	DATE
3			
2			
1			

FLOOD CONTROL DISTRICT OF MARICOPA COUNTY
ENGINEERING DIVISION

83RD AVENUE / PINNACLE PEAK ROAD
DRAINAGE IMPROVEMENTS
PCN 450.02.33 FCD CONTRACT NO. 2003C060

60%
PRELIMINARY NOT FOR CONSTRUCTION

	BY	DATE
DESIGNED	O. OLIDEN	11/05
DRAWN	A. JOHNSON	11/05
CHECKED		

JACOBS CIVIL INC.

DRAWING NO. D17 | DTL 17 STORM DRAIN MANHOLE | SHEET OF

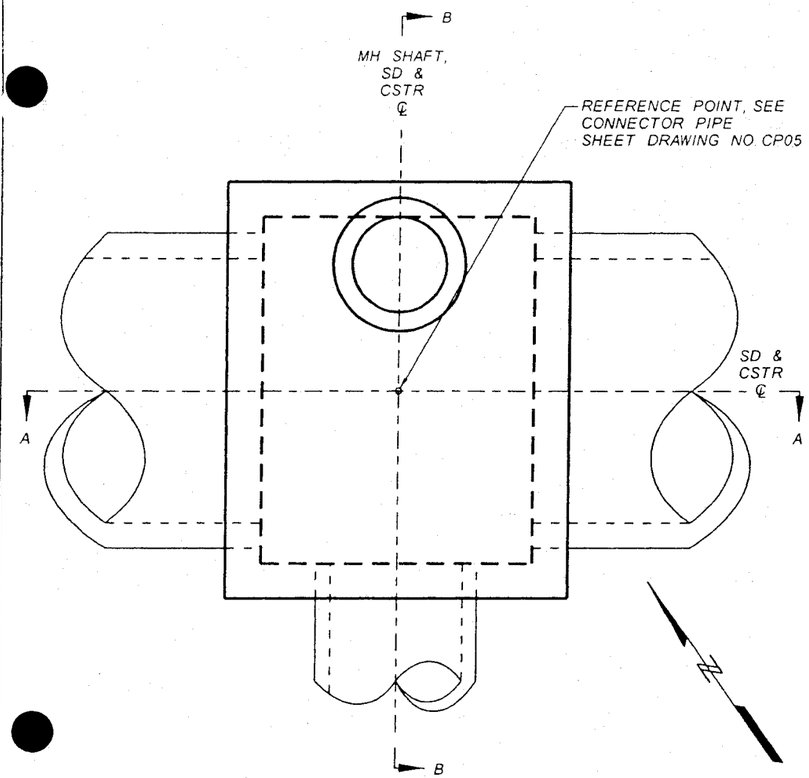

PLAN
STORM DRAIN MANHOLE BASE
87TH AVENUE BASIN STA 61+37
NTS

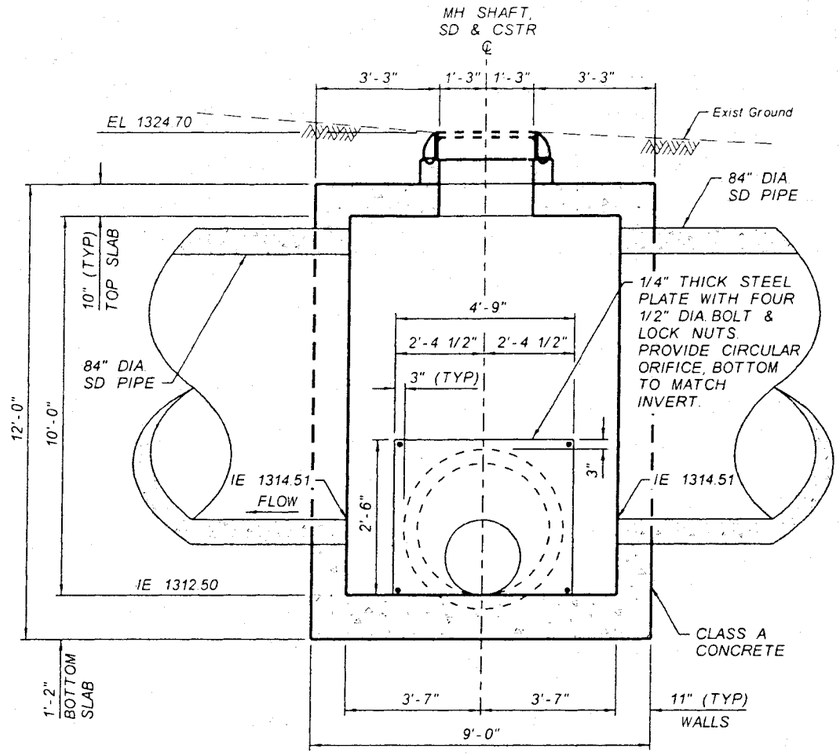

SECTION A-A
STORM DRAIN MANHOLE BASE
87TH AVENUE BASIN STA 61+37
NTS

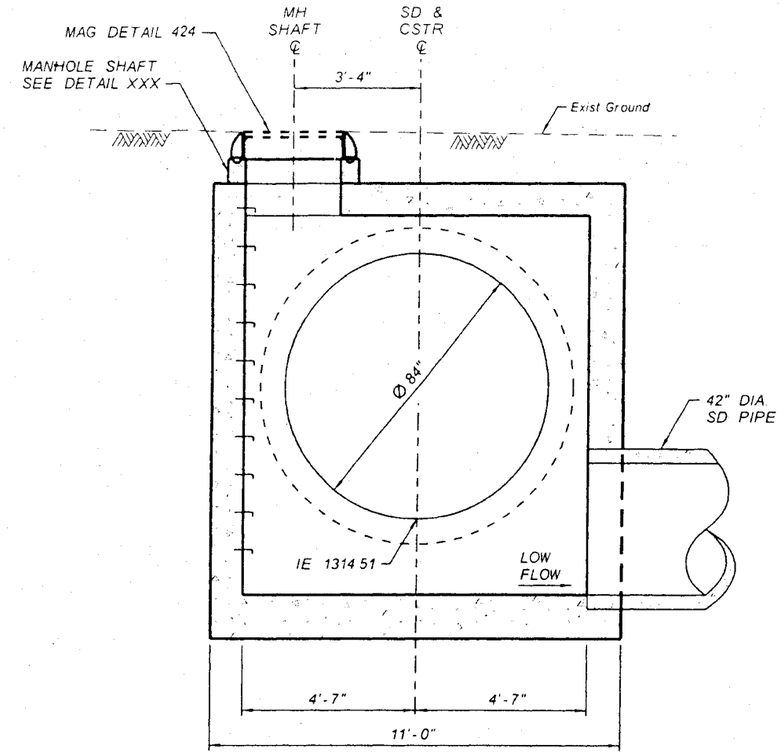

SECTION B-B
STORM DRAIN MANHOLE BASE
87TH AVENUE BASIN STA 61+37
NTS

NO	REVISION	BY	DATE
3			
2			
1			

FLOOD CONTROL DISTRICT OF MARICOPA COUNTY
ENGINEERING DIVISION

83RD AVENUE / PINNACLE PEAK ROAD
DRAINAGE IMPROVEMENTS
PCN 450.02.33 FCD CONTRACT NO. 2003C060

60%
PRELIMINARY
NOT FOR
CONSTRUCTION

	BY	DATE
DESIGNED	O. OLIDEN	11/05
DRAWN	A. JOHNSON	11/05
CHECKED		

JACOBS CIVIL INC.

DRAWING NO		SHEET OF
D24	DTL 24 STORM DRAIN MANHOLE	

METHOD:

"Moments in Buried Box Culverts", P. C. Dave, A.M. ASCE, Civil Engineering-ASCE, 1967 (Attached)

GEOMETRY			LOADS			
l:	8.16667	ft.	W_1:	2.52083	kips	- Total weight of two walls
h:	8.33333	ft.	W_2:	7.7	kips	- Total uniform vertical load from slab, fill & surcharge
t_w:	0.91667	ft.	W_3:	3.3	kips	- Total uniform lateral load from soil & surcharge
t_s:	0.83	ft.	W_4:	2.52	kips	- Total lateral triangular load from soil
K_0:	0.5	Coefficient of lateral soil pressure at rest				
Fill Height:	6	ft.				

L = 9.08333 A = 0.20

H = 9.16667 B = 1.6

K = 0.8 C = 1.8

	ASD		LFD	
M_1 =	-4.9	ft-kips	-6.4	ft-kips
M_2 =	-6.6	ft-kips	-8.6	ft-kips
M_3 =	3.8	ft-kips	4.9	ft-kips
M_4 =	5.0	ft-kips	6.5	ft-kips
M_5 =	-1.6	ft-kips	-2.1	ft-kips

INTERPOLATION OF MOMENTS AT HAUNCH/SLAB INTERFACE

TOP SLAB:

Haunch: 0 inches

Distance Ratio: 0.101 (CL Wall to End Haunch : CL Wall to Midspan)

Moment @ End Haunch: -4.04 ft-kips

BOTTOM SLAB:

Haunch: 0 inches

Distance Ratio: 0.101 (CL Wall to End Haunch : CL Wall to Midspan)

Moment @ End Haunch: -5.44 ft-kips

FLEXURE CHECK

CONSTANTS (from computations):

Design width, b :	12	in.
Young's Modulus (concrete), E_c :	485,592	ksf
Young's Modulus (steel), E_s :	4,176,000	ksf
Modular ratio, n :	8	
Flexure reduction factor, ϕ_{fl} :	0.9	
Shear reduction factor, ϕ_{sh} :	0.85	
Wearing thickness (integral) :	0	in.

Material Stresses

Steel			Concrete		
f_s :	24,000	psi	f_c :	1,400	psi
f_y :	60,000	psi	f'_c :	3,500	psi
			f_r :	444	psi

FLEXURE	SECTION	SECTION	SECTION	SECTION	SECTION
	M1 - Top Corner	M2 - Bottom Corner	M3 - Top Slab	M4 - Bottom Slab	M5 - Walls
M_{max}	4.0 ft-kips	5.4 ft-kips	3.8 ft-kips	5.0 ft-kips	1.6 ft-kips
TRY	# 5 @ 12.0	# 5 @ 8.0	# 5 @ 12.00	# 5 @ 8.00	# 5 @ 12.0
Dia.	0.625 in.	0.625 in.	0.625 in.	0.625 in.	0.625 in.
D^+	10.0 in.	10.0 in.	10.0 in.	10.0 in.	11.0 in.
D	10.0 in.	10.0 in.	10.0 in.	10.0 in.	11.0 in.
A_g	120.0 sq.in.	120.0 sq.in.	120.0 sq.in.	120.0 sq.in.	132.0 sq.in.
cover	2.0 in.	3.0 in.	1.0 in.	2.0 in.	1.5 in.
d	7.69 in.	6.69 in.	8.69 in.	7.69 in.	9.19 in.
A_s	0.310 sq.in.	0.465 sq.in.	0.310 sq.in.	0.465 sq.in.	0.310 sq.in.
p	0.00336	0.00579	0.00297	0.00504	0.00281
k	0.2065	0.2616	0.1956	0.2465	0.1908
j	0.9312	0.9128	0.9348	0.9178	0.9364
f_s	21850 psi	23002 psi	18089 psi	18170 psi	7306 psi
f_c	711 psi	1019 psi	550 psi	743 psi	215 psi
a	0.521 in.	0.782 in.	0.521 in.	0.782 in.	0.521 in.
ϕM_n	10.4 ft-kips	13.2 ft-kips	11.8 ft-kips	15.3 ft-kips	12.5 ft-kips
M_{cr}	7.4 ft-kips	7.4 ft-kips	7.4 ft-kips	7.4 ft-kips	8.9 ft-kips
$1.2M_{cr}$	8.87 ft-kips	8.87 ft-kips	8.87 ft-kips	8.87 ft-kips	10.74 ft-kips
A_s(min)	0.262 sq.in	0.301 sq.in	0.232 sq.in	0.262 sq.in	0.265 sq.in
CHECK:					
Steel:	91%	96%	75%	76%	30%
Concrete:	51%	73%	39%	53%	15%

NOTE: Cover should NOT include the integral wearing thickness.
D+ is the total depth of concrete, including the integral wearing thickness.
D is the structural depth, which excludes the integral wearing thickness.

"DEEP"

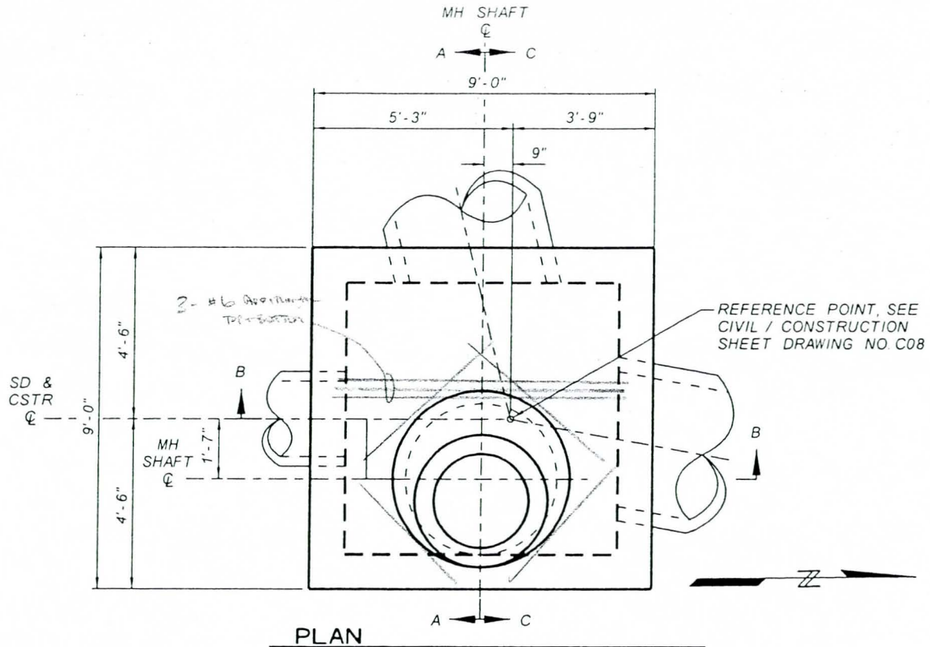

PLAN
STORM DRAIN MANHOLE BASE
83RD AVENUE STA 134+86
NTS

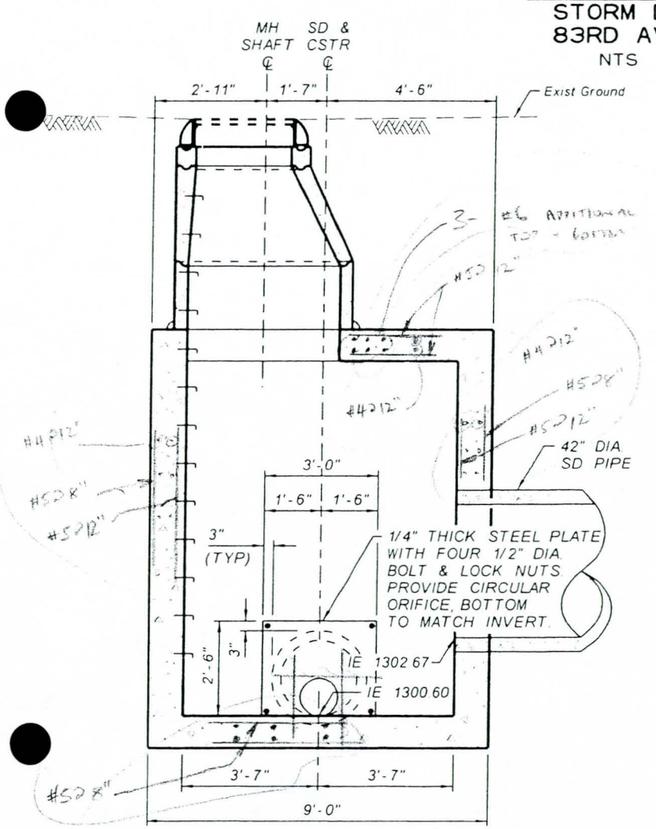

SECTION A-A
STORM DRAIN MANHOLE BASE
83RD AVENUE STA 134+86
NTS

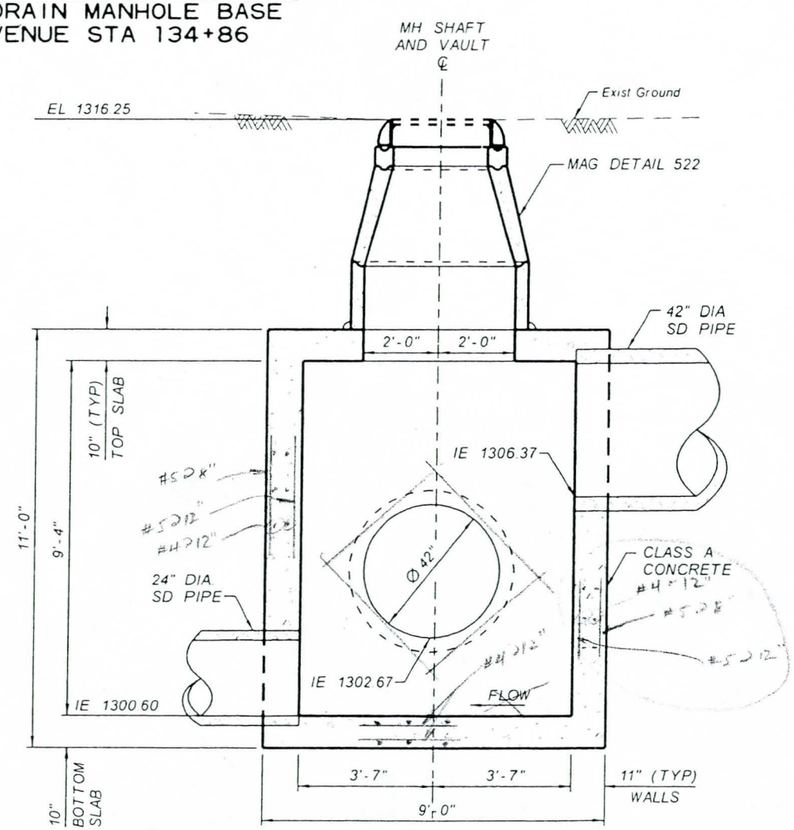

SECTION B-B
STORM DRAIN MANHOLE BASE
83RD AVENUE STA 134+86
NTS

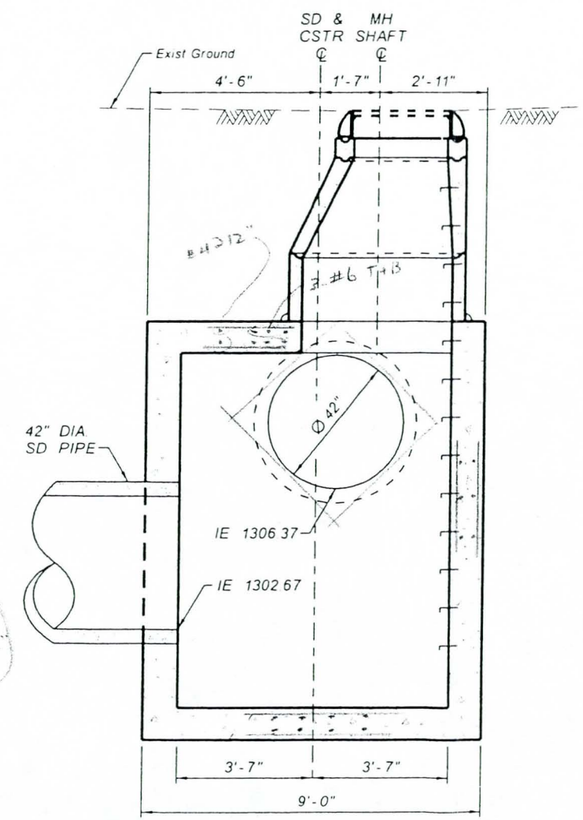

SECTION C-C
STORM DRAIN MANHOLE BASE
83RD AVENUE STA 134+86
NTS

NO	REVISION	BY	DATE
3			
2			
1			

FLOOD CONTROL DISTRICT OF MARICOPA COUNTY
ENGINEERING DIVISION

83RD AVENUE / PINNACLE PEAK ROAD
DRAINAGE IMPROVEMENTS
PCN 450.02.33 FCD CONTRACT NO. 2003C060

60%
PRELIMINARY NOT FOR CONSTRUCTION

	BY	DATE
DESIGNED	O. OLIDEN	11/05
DRAWN	A. JOHNSON	11/05
CHECKED		

JACOBS CIVIL INC.

DRAWING NO. D05 | DTL 05 STORM DRAIN MANHOLE | SHEET OF

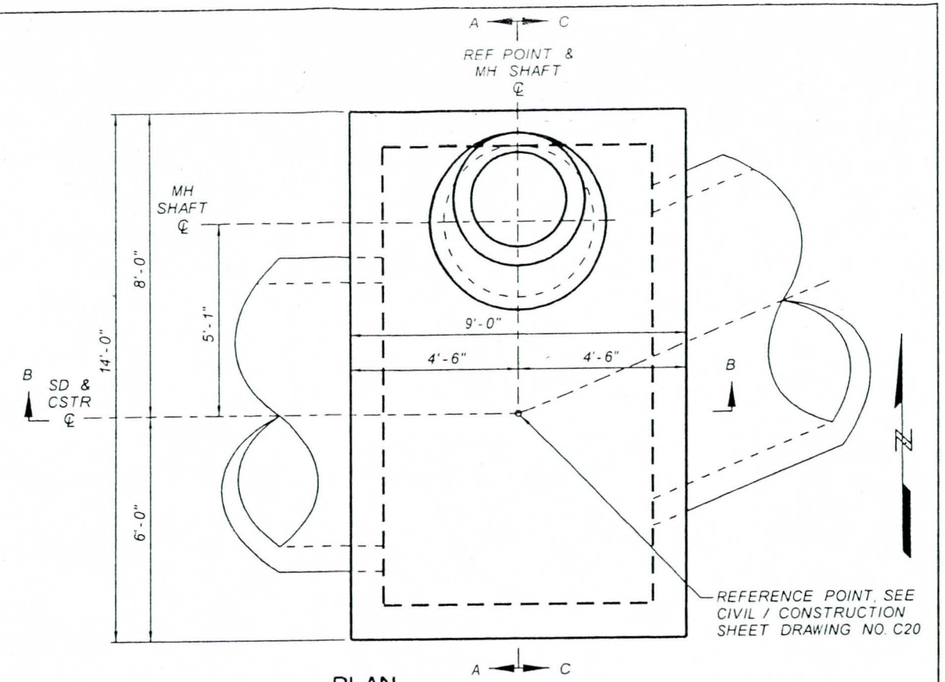

PLAN
STORM DRAIN MANHOLE BASE
PINNACLE PEAK ROAD STA 244+40
NTS

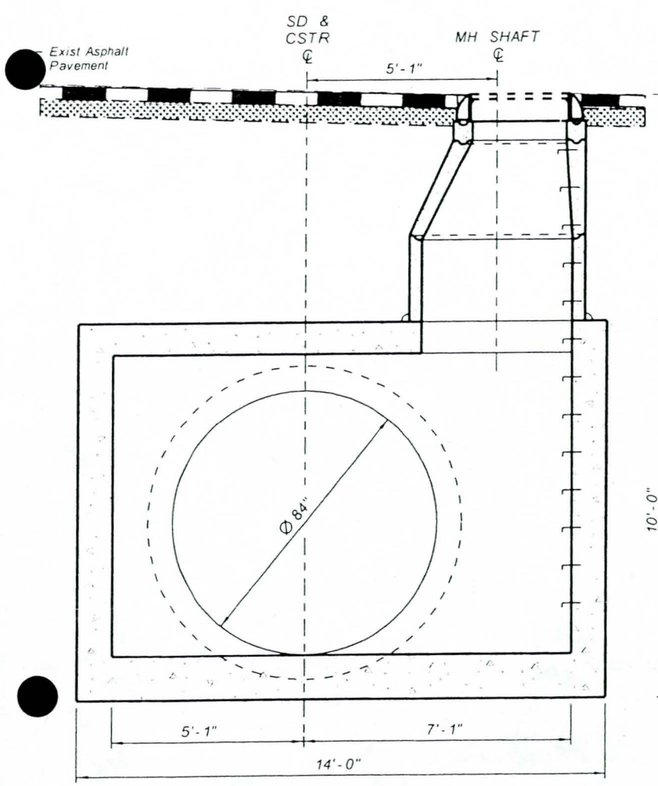

SECTION A-A
STORM DRAIN MANHOLE BASE
PINNACLE PEAK ROAD STA 244+40
NTS

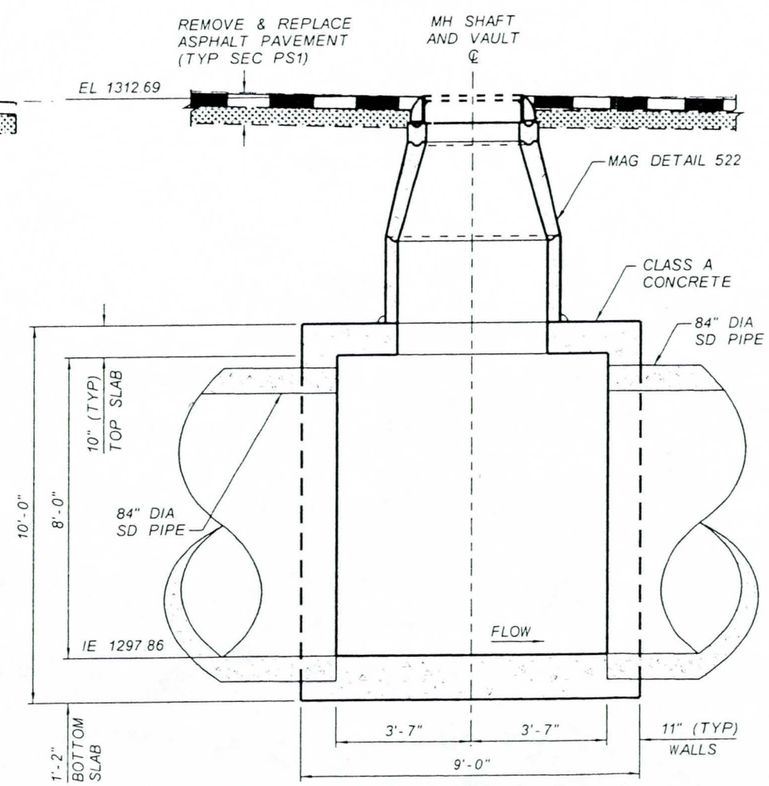

SECTION B-B
STORM DRAIN MANHOLE BASE
PINNACLE PEAK ROAD STA 244+40
NTS

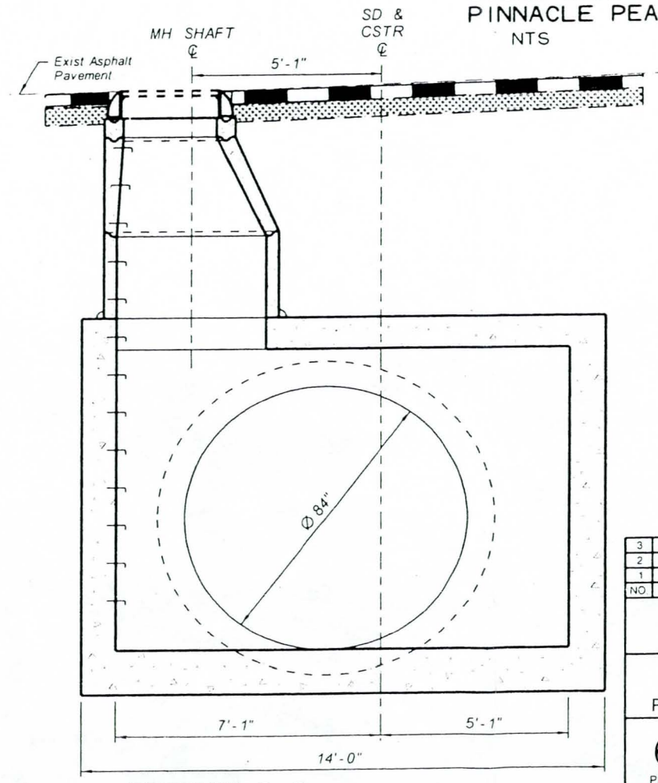

SECTION C-C
STORM DRAIN MANHOLE BASE
PINNACLE PEAK ROAD STA 244+40
NTS

NO.	REVISION	BY	DATE
3			
2			
1			

FLOOD CONTROL DISTRICT OF MARICOPA COUNTY
ENGINEERING DIVISION

83RD AVENUE / PINNACLE PEAK ROAD
DRAINAGE IMPROVEMENTS
PCN 450.02.33 FCD CONTRACT NO. 2003C060

60%
PRELIMINARY
NOT FOR
CONSTRUCTION

	BY	DATE
DESIGNED	O. OLIDEN	11/05
DRAWN	A. JOHNSON	11/05
CHECKED		

JACOBS CIVIL INC.

DRAWING NO. D09 | DTL 09 STORM DRAIN MANHOLE | SHEET OF

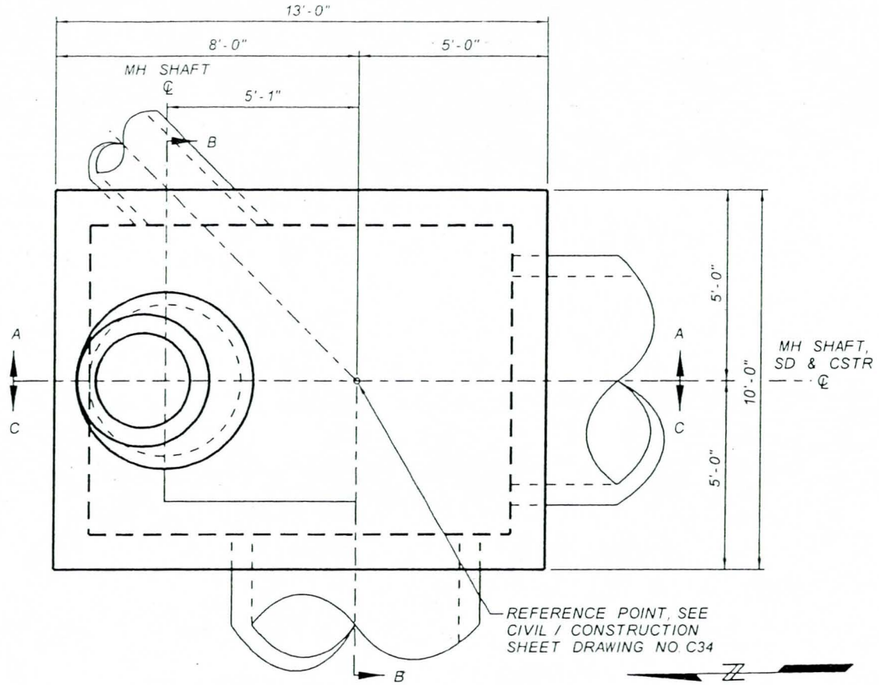

PLAN
STORM DRAIN MANHOLE BASE
89TH AVENUE STA 413+23
NTS

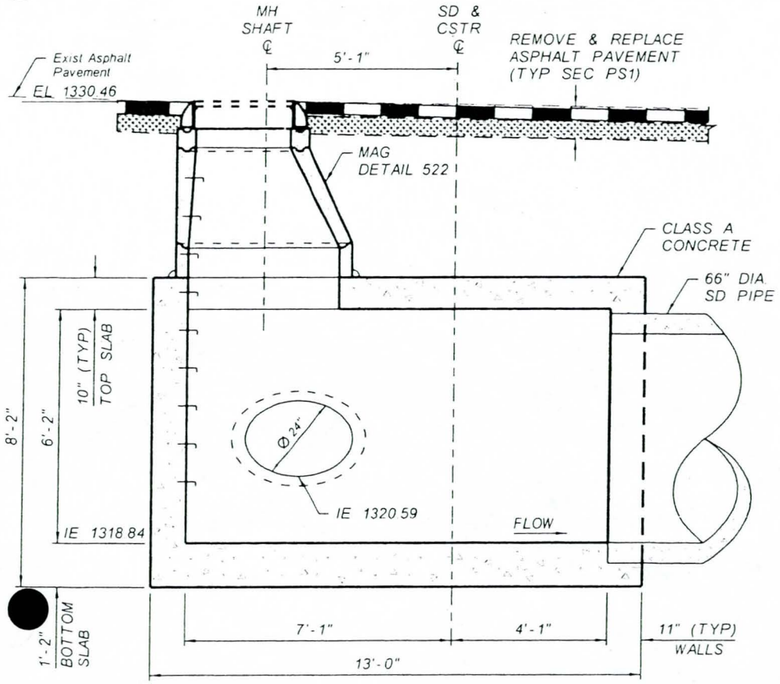

SECTION A-A
STORM DRAIN MANHOLE BASE
89TH AVENUE STA 413+23
NTS

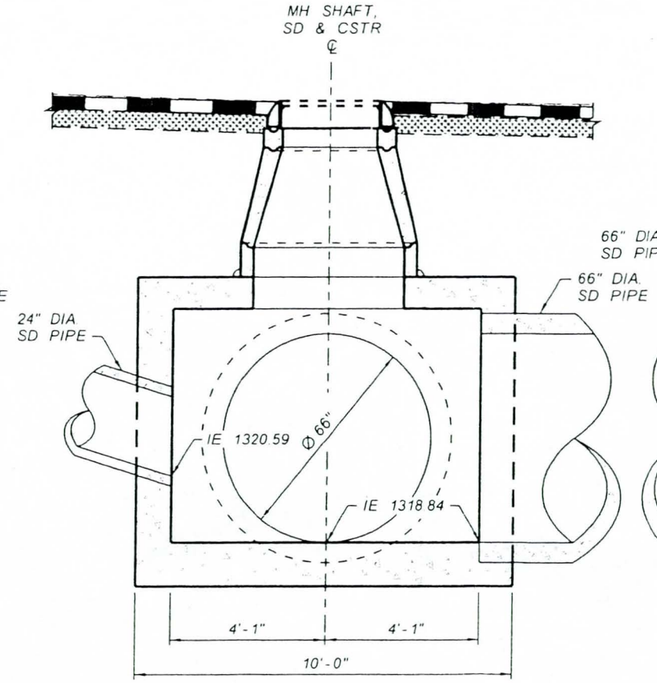

SECTION B-B
STORM DRAIN MANHOLE BASE
89TH AVENUE STA 413+23
NTS

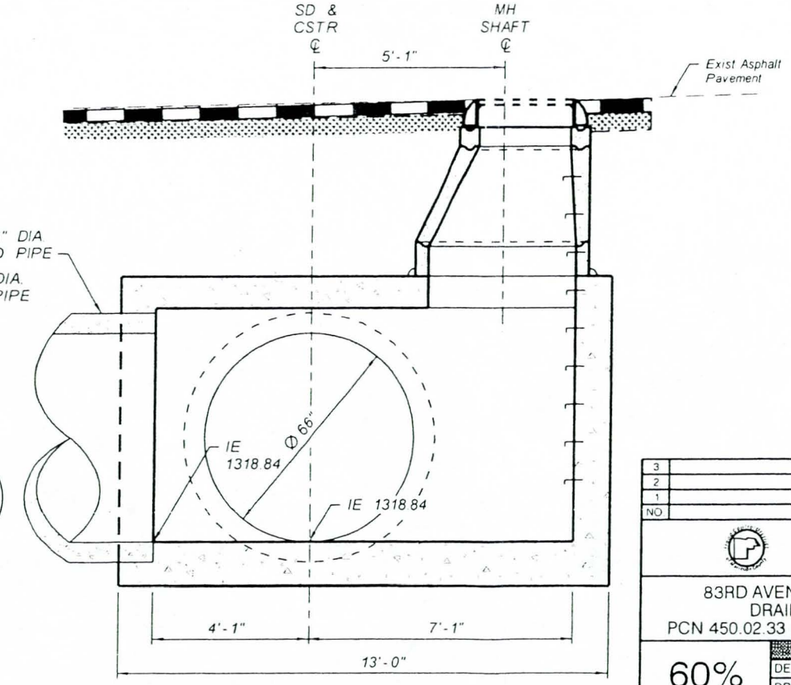

SECTION C-C
STORM DRAIN MANHOLE BASE
89TH AVENUE STA 413+23
NTS

NO	REVISION	BY	DATE
3			
2			
1			

FLOOD CONTROL DISTRICT OF MARICOPA COUNTY
ENGINEERING DIVISION

83RD AVENUE / PINNACLE PEAK ROAD
DRAINAGE IMPROVEMENTS
PCN 450.02.33 FCD CONTRACT NO. 2003C060

60%
PRELIMINARY NOT FOR CONSTRUCTION

	BY	DATE
DESIGNED	O OLIDEN	11/05
DRAWN	A JOHNSON	11/05
CHECKED		

JACOBS CIVIL INC.

DRAWING NO. D18 | DTL 18 STORM DRAIN MANHOLE | SHEET OF

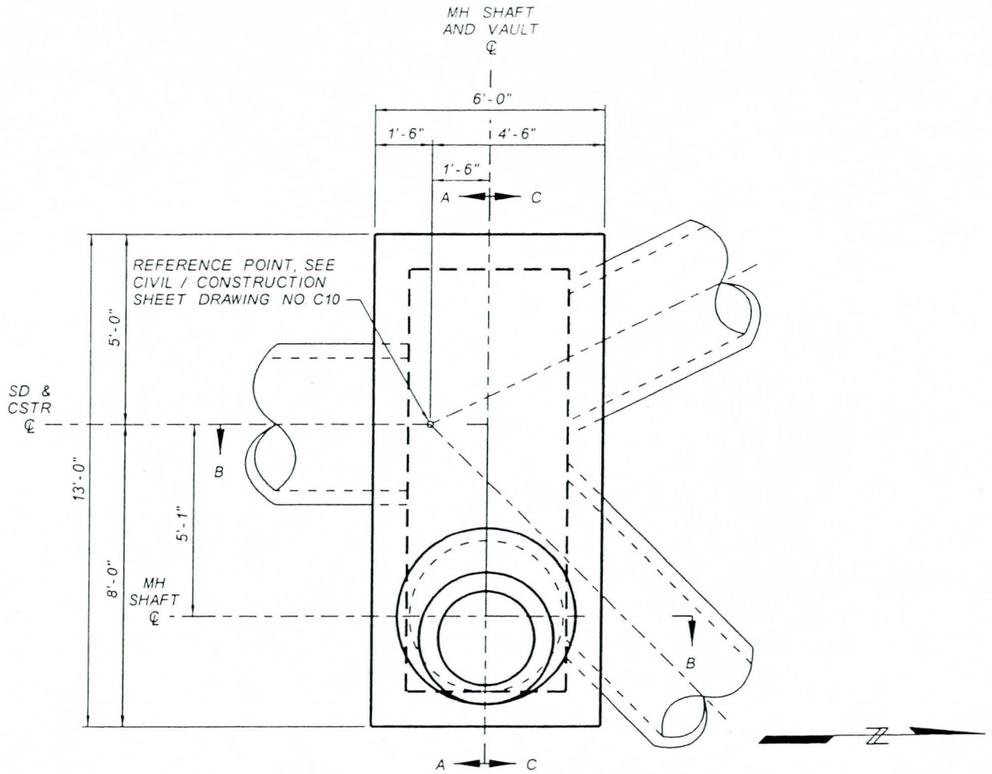

PLAN
STORM DRAIN MANHOLE BASE
83RD AVENUE STA 142+46
NTS

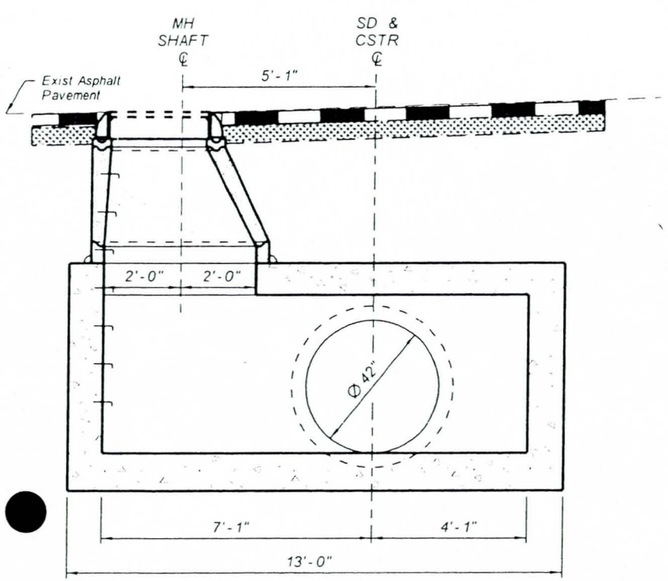

SECTION A-A
STORM DRAIN MANHOLE BASE
83RD AVENUE STA 142+46
NTS

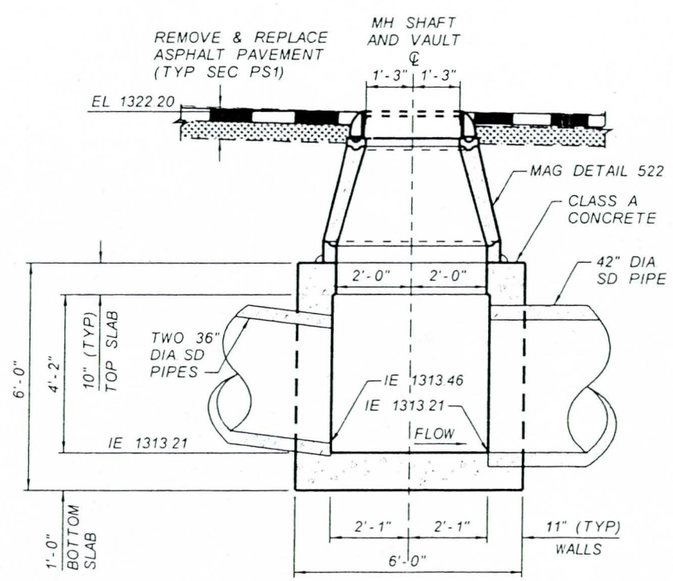

SECTION B-B
STORM DRAIN MANHOLE BASE
83RD AVENUE STA 142+46
NTS

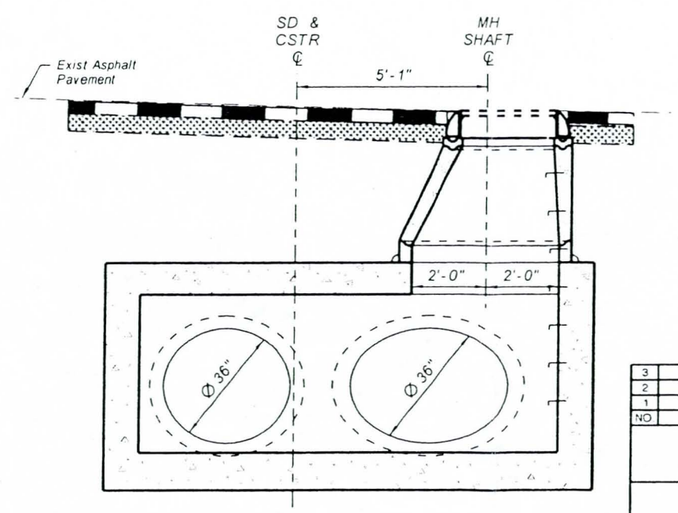

SECTION C-C
STORM DRAIN MANHOLE BASE
83RD AVENUE STA 142+46
NTS

NO	REVISION	BY	DATE
3			
2			
1			

FLOOD CONTROL DISTRICT OF MARICOPA COUNTY
ENGINEERING DIVISION

83RD AVENUE / PINNACLE PEAK ROAD
DRAINAGE IMPROVEMENTS
PCN 450.02.33 FCD CONTRACT NO. 2003C060

60%
PRELIMINARY
NOT FOR
CONSTRUCTION

	BY	DATE
DESIGNED	O. OLIDEN	11/05
DRAWN	A. JOHNSON	11/05
CHECKED		

JACOBS CIVIL INC.

DRAWING NO. D19 | DTL 19 STORM DRAIN MANHOLE | SHEET OF

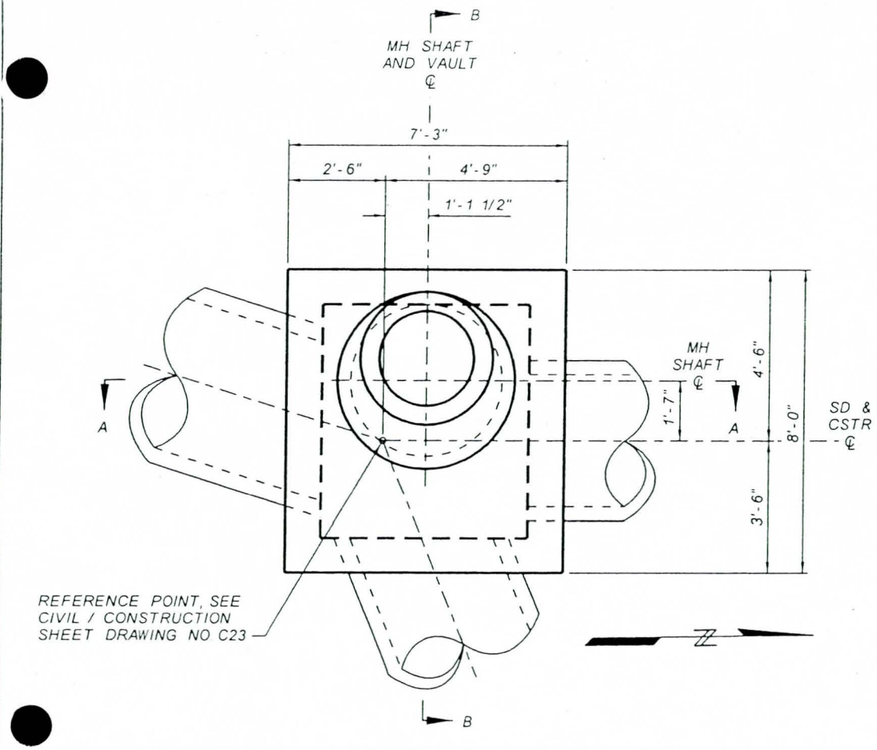

PLAN
STORM DRAIN MANHOLE BASE
87TH AVENUE BASIN STA 307+50
NTS

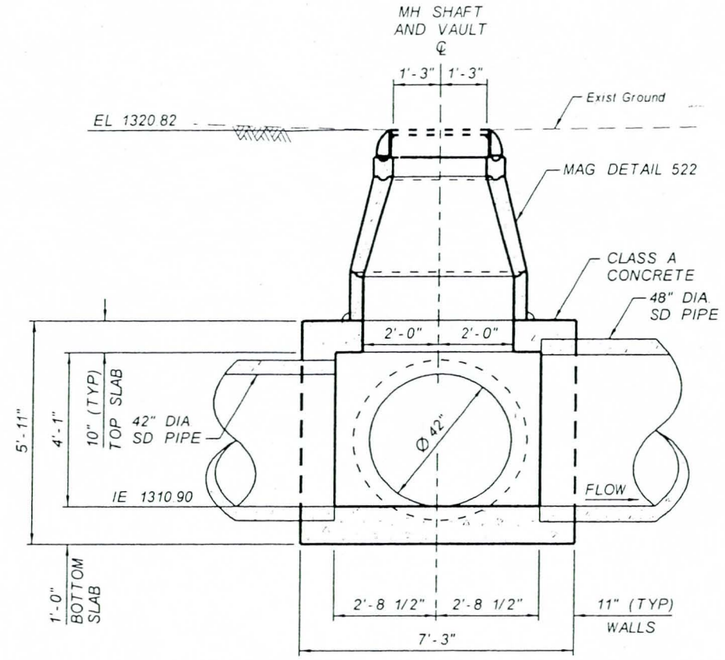

SECTION A-A
STORM DRAIN MANHOLE BASE
87TH AVENUE BASIN STA 307+50
NTS

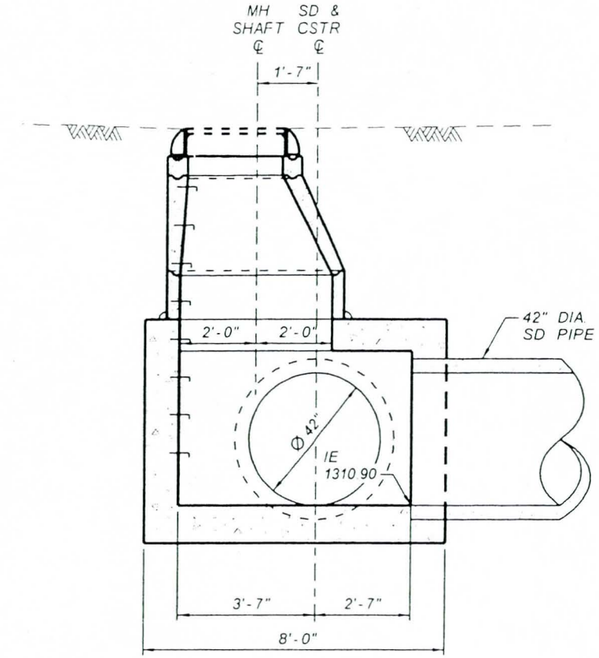

SECTION B-B
STORM DRAIN MANHOLE BASE
87TH AVENUE BASIN STA 307+50
NTS

NO	REVISION	BY	DATE
3			
2			
1			

FLOOD CONTROL DISTRICT OF MARICOPA COUNTY
ENGINEERING DIVISION

83RD AVENUE / PINNACLE PEAK ROAD
DRAINAGE IMPROVEMENTS
PCN 450.02.33 FCD CONTRACT NO. 2003C060

60%
PRELIMINARY
NOT FOR
CONSTRUCTION

	BY	DATE
DESIGNED	O. OLIDEN	11/05
DRAWN	A. JOHNSON	11/05
CHECKED		

JACOBS CIVIL INC.

DRAWING NO. D23

DTL 23
STORM DRAIN MANHOLE

SHEET OF

METHOD:

"Moments in Buried Box Culverts", P. C. Dave, A.M. ASCE, Civil Engineering-ASCE, 1967 (Attached)

GEOMETRY			LOADS			
l:	10.6667	ft.	W_1:	2.79583	kips	- Total weight of two walls
h:	9.33333	ft.	W_2:	9.8	kips	- Total uniform vertical load from slab, fill & surcharge
t_w:	0.91667	ft.	W_3:	3.66	kips	- Total uniform lateral load from soil & surcharge
t_s:	0.83	ft.	W_4:	3.10	kips	- Total lateral triangular load from soil
K_0:	0.5	Coefficient of lateral soil pressure at rest				
Fill Height:	6	ft.				
L =	11.5833		A =	0.18		
H =	10.1667		B =	1.5		
K =	0.7		C =	1.7		

~~0.5988~~

	ASD		LFD	
M_1 =	-7.6	ft-kips	-9.8	ft-kips
M_2 =	-10.0	ft-kips	-13.0	ft-kips
M_3 =	6.6	ft-kips	8.6	ft-kips
M_4 =	8.2	ft-kips	10.7	ft-kips
M_5 =	-3.6	ft-kips	-4.7	ft-kips

INTERPOLATION OF MOMENTS AT HAUNCH/SLAB INTERFACE

TOP SLAB:

Haunch: 0 inches

Distance Ratio: 0.079 (CL Wall to End Haunch : CL Wall to Midspan)

Moment @ End Haunch: -6.45 ft-kips

BOTTOM SLAB:

Haunch: 0 inches

Distance Ratio: 0.079 (CL Wall to End Haunch : CL Wall to Midspan)

Moment @ End Haunch: -8.55 ft-kips

FLEXURE CHECK

CONSTANTS (from computations):

Design width, b :	12	in.
Young's Modulus (concrete), E_c :	485,592	ksf
Young's Modulus (steel), E_s :	4,176,000	ksf
12.5 lular ratio, n :	8	
11 ›n factor, $\phi_{fl.}$:	0.9	
Shear reduction factor, $\phi_{sh.}$:	0.85	
Wearing thickness (integral) :	0	in.

Material Stresses

Steel			Concrete		
f_s :	24,000	psi	f_c :	1,400	psi
f_y :	60,000	psi	f'_c :	3,500	psi
			f_r :	444	psi

6

FLEXURE	SECTION	SECTION	SECTION	SECTION	SECTION
	M1 - Top Corner	M2 - Bottom Corner	M3 - Top Slab	M4 - Bottom Slab	M5 - Walls
M_{max}	6.5 ft-kips	8.6 ft-kips	6.6 ft-kips	8.2 ft-kips	3.6 ft-kips
TRY	# 6 @ 8.0	# 6 @ 6.0	# 6 @ 12.00	# 6 @ 8.00	# 5 @ 12.0
Dia.	0.750 in.	0.750 in.	0.750 in.	0.750 in.	0.625 in.
D^+	10.0 in.	10.0 in.	10.0 in.	10.0 in.	11.0 in.
D	10.0 in.	10.0 in.	10.0 in.	10.0 in.	11.0 in.
A_g	120.0 sq.in.	120.0 sq.in.	120.0 sq.in.	120.0 sq.in.	132.0 sq.in.
cover	2.0 in.	3.0 in.	1.0 in.	2.0 in.	1.5 in.
d	7.63 in.	6.63 in.	8.63 in.	7.63 in.	9.19 in.
A_s	0.660 sq.in.	0.880 sq.in.	0.440 sq.in.	0.660 sq.in.	0.310 sq.in.
p	0.00721	0.01107	0.00425	0.00721	0.00281
k	0.2869	0.3415	0.2290	0.2869	0.1908
j	0.9044	0.8862	0.9237	0.9044	0.9364
f_s	17008 psi	19863 psi	22594 psi	21691 psi	16390 psi
f_c	855 psi	1288 psi	839 psi	1091 psi	483 psi
a	1.109 in.	1.479 in.	0.739 in.	1.109 in.	0.521 in.
ϕM_n	21.0 ft-kips	23.3 ft-kips	16.3 ft-kips	21.0 ft-kips	12.5 ft-kips
M_{cr}	7.4 ft-kips	7.4 ft-kips	7.4 ft-kips	7.4 ft-kips	8.9 ft-kips
$1.2M_{cr}$	8.87 ft-kips	8.87 ft-kips	8.87 ft-kips	8.87 ft-kips	10.74 ft-kips
A_s(min)	0.264 sq.in	0.304 sq.in	0.233 sq.in	0.264 sq.in	0.265 sq.in
CHECK:					
Steel:	71%	83%	94%	90%	68%
Concrete:	61%	92%	60%	78%	35%

NOTE: Cover should NOT include the integral wearing thickness.
D+ is the total depth of concrete, including the integral wearing thickness.
D is the structural depth, which excludes the integral wearing thickness.

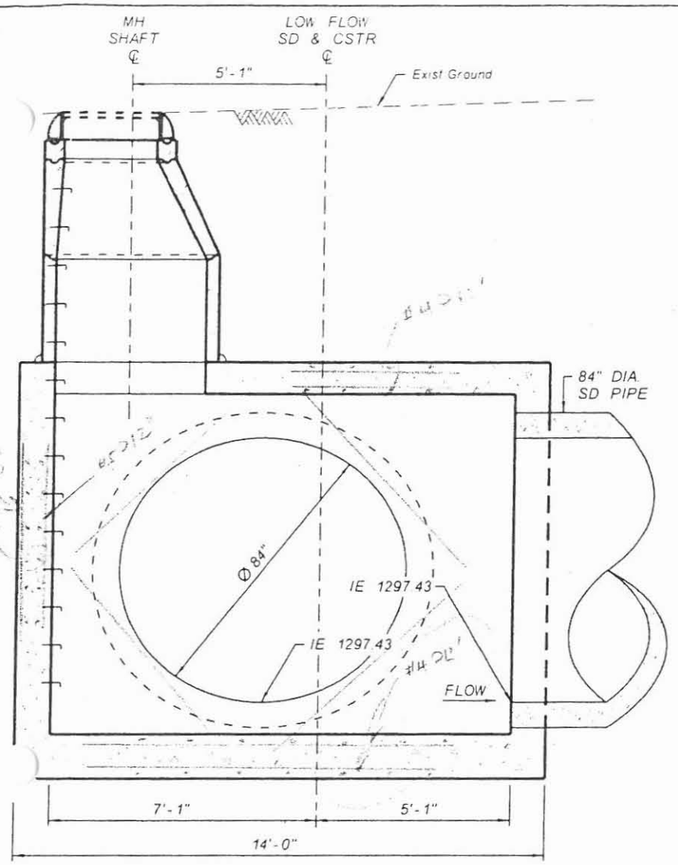

SECTION A-A
STORM DRAIN MANHOLE BASE
PINNACLE PEAK ROAD STA 245+65
NTS

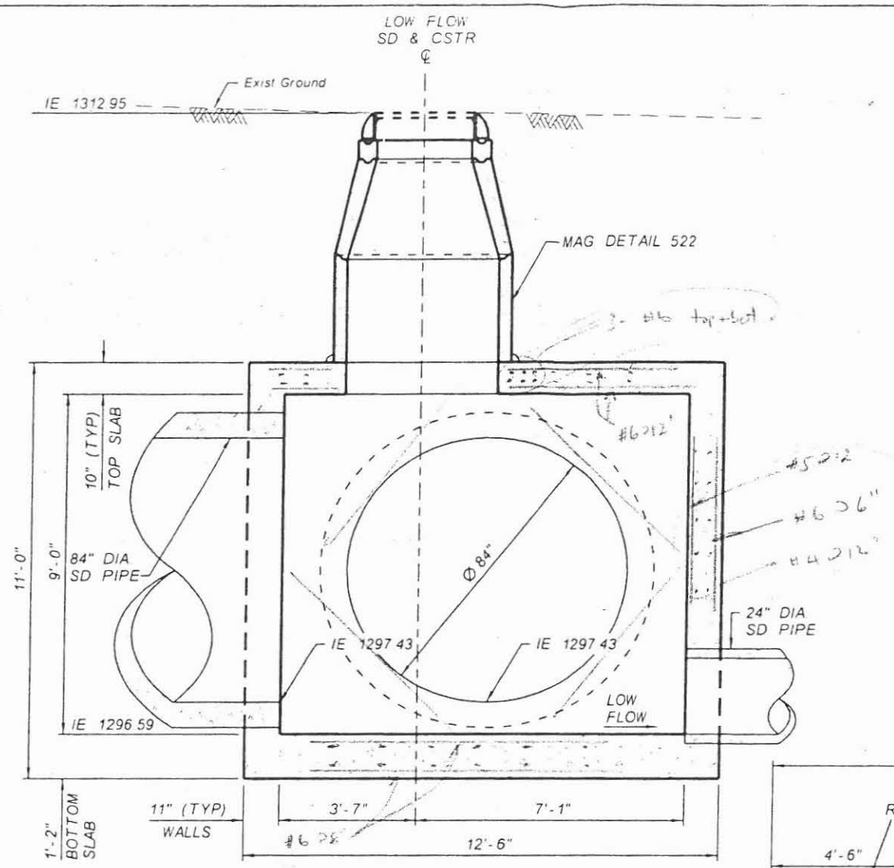

SECTION B-B
STORM DRAIN MANHOLE BASE
PINNACLE PEAK ROAD STA 245+65
NTS

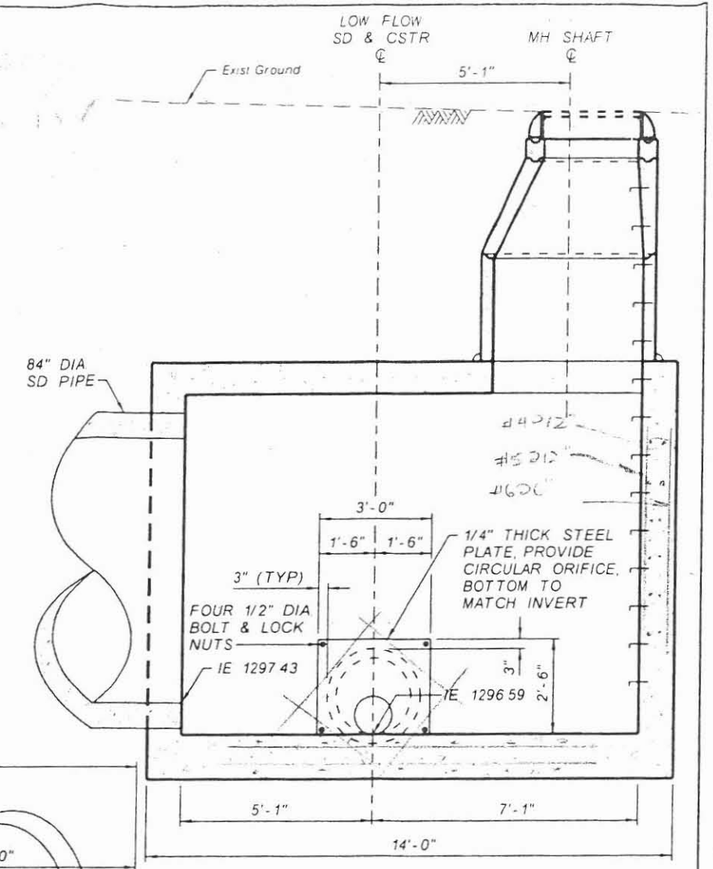

SECTION C-C
STORM DRAIN MANHOLE BASE
PINNACLE PEAK ROAD STA 245+65
NTS

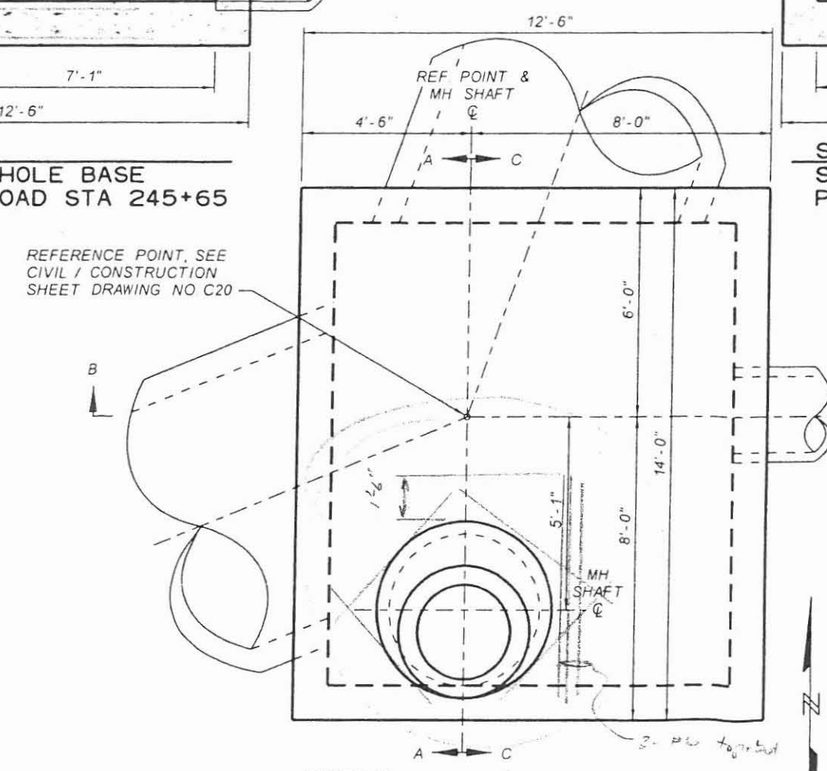

DETAIL
STORM DRAIN MANHOLE BASE
PINNACLE PEAK ROAD STA 245+65
NTS

NO	REVISION	BY	DATE
3			
2			
1			

FLOOD CONTROL DISTRICT OF MARICOPA COUNTY
ENGINEERING DIVISION

83RD AVENUE / PINNACLE PEAK ROAD
DRAINAGE IMPROVEMENTS
PCN 450.02.33 FCD CONTRACT NO. 2003C060

60%
PRELIMINARY
NOT FOR CONSTRUCTION

	BY	DATE
DESIGNED	O. OLIDEN	11/05
DRAWN	A. JOHNSON	11/05
CHECKED		

JACOBS CIVIL INC.

DRAWING NO | DTL-10 | SHEET OF

JACOBS CIVIL INC.

PROJECT	83rd Avenue / Pinnacle Peak Rd Drainage Improvements	JOB NO: W7X74300	NO
SUBJECT	Storm Drain Manhole Reinforcement	DESIGNED BY MJR	CHECK BY
	Maximum W:H aspect Ratio (Example: Manhole @ Station 339+55)	DATE 28-Nov-05	SHEET OF

METHOD:

"Moments in Buried Box Culverts", P. C. Dave, A.M. ASCE, Civil Engineering-ASCE, 1967 (Attached)

GEOMETRY			LOADS			
l:	12.1667	ft.	W_1:	1.375	kips	- Total weight of two walls
h:	4.16667	ft.	W_2:	4.8	kips	- Total uniform vertical load from slab, fill & surcharge
t_w:	0.91667	ft.	W_3:	0.6	kips	- Total uniform lateral load from soil & surcharge
t_s:	0.83	ft.	W_4:	0.75	kips	- Total lateral triangular load from soil
K_0:	0.5	Coefficient of lateral soil pressure at rest				
Fill Height:	2	ft.				

L = 13.0833 A = 0.09

H = 5 B = 0.9

K = 0.3 C = 1.3

	ASD		LFD	
M_1 =	-4.1	ft-kips	-5.3	ft-kips
M_2 =	-5.4	ft-kips	-7.1	ft-kips
M_3 =	3.7	ft-kips	4.9	ft-kips
M_4 =	4.6	ft-kips	6.0	ft-kips
M_5 =	-4.3	ft-kips	-5.7	ft-kips

INTERPOLATION OF MOMENTS AT HAUNCH/SLAB INTERFACE

TOP SLAB:

Haunch: 0 inches

Distance Ratio: 0.070 (CL Wall to End Haunch : CL Wall to Midspan)

Moment @ End Haunch: -3.51 ft-kips

BOTTOM SLAB:

Haunch: 0 inches

Distance Ratio: 0.070 (CL Wall to End Haunch : CL Wall to Midspan)

Moment @ End Haunch: -4.74 ft-kips

Note: Add 3.01 ft-k to top slab moment for direct application of wheel load.

FLEXURE CHECK

CONSTANTS (from computations):

Design width, b :	12	in.
Young's Modulus (concrete), E_c :	485,592	ksf
Young's Modulus (steel), E_s :	4,176,000	ksf
Modular ratio, n :	8	
Flexure reduction factor, ϕ_{fl} :	0.9	
Shear reduction factor, ϕ_{sh} :	0.85	
Wearing thickness (integral) :	0	in.

Material Stresses

Steel			Concrete		
f_s :	24,000	psi	f_c :	1,400	psi
f_y :	60,000	psi	f'_c :	3,500	psi
			f_r :	444	psi

FLEXURE	SECTION	SECTION	SECTION	SECTION	SECTION
	M1 - Top Corner	M2 - Bottom Corner	M3 - Top Slab	M4 - Bottom Slab	M5 - Walls
M_{max}	3.5 ft-kips	4.7 ft-kips	6.8 ft-kips	4.6 ft-kips	4.3 ft-kips
TRY	# 5 @ 12.0	# 6 @ 12.0	# 6 @ 12.00	# 6 @ 12.00	# 5 @ 12.0
Dia.	0.625 in.	0.750 in.	0.750 in.	0.750 in.	0.625 in.
D^+	10.0 in.	10.0 in.	10.0 in.	10.0 in.	11.0 in.
D	10.0 in.	10.0 in.	10.0 in.	10.0 in.	11.0 in.
A_g	120.0 sq.in.	120.0 sq.in.	120.0 sq.in.	120.0 sq.in.	132.0 sq.in.
cover	2.0 in.	3.0 in.	1.0 in.	2.0 in.	1.5 in.
d	7.69 in.	6.63 in.	8.63 in.	7.63 in.	9.19 in.
A_s	0.310 sq.in.	0.440 sq.in.	0.440 sq.in.	0.440 sq.in.	0.310 sq.in.
p	0.00336	0.00553	0.00425	0.00481	0.00281
k	0.2065	0.2566	0.2290	0.2416	0.1908
j	0.9312	0.9145	0.9237	0.9195	0.9364
f_s	19006 psi	21334 psi	23135 psi	17950 psi	19556 psi
f_c	618 psi	920 psi	859 psi	715 psi	576 psi
a	0.521 in.	0.739 in.	0.739 in.	0.739 in.	0.521 in.
ϕM_n	10.4 ft-kips	12.4 ft-kips	16.3 ft-kips	14.4 ft-kips	12.5 ft-kips
M_{cr}	7.4 ft-kips	7.4 ft-kips	7.4 ft-kips	7.4 ft-kips	8.9 ft-kips
$1.2M_{cr}$	8.87 ft-kips	8.87 ft-kips	8.87 ft-kips	8.87 ft-kips	10.74 ft-kips
A_s(min)	0.262 sq.in	0.304 sq.in	0.233 sq.in	0.264 sq.in	0.265 sq.in
CHECK:					
Steel:	79%	89%	96%	75%	81%
Concrete:	44%	66%	61%	51%	41%

NOTE: Cover should NOT include the integral wearing thickness.
D+ is the total depth of concrete, including the integral wearing thickness.
D is the structural depth, which excludes the integral wearing thickness.

METHOD:

"Moments in Buried Box Culverts", P. C. Dave, A.M. ASCE, Civil Engineering-ASCE, 1967 (Attached)

GEOMETRY			LOADS			
l:	7.16667	ft.	W_1:	2.79583	kips	- Total weight of two walls
h:	9.33333	ft.	W_2:	3.0	kips	- Total uniform vertical load from slab, fill & surcharge
t_w:	0.91667	ft.	W_3:	1.22	kips	- Total uniform lateral load from soil & surcharge
t_s:	0.83	ft.	W_4:	3.10	kips	- Total lateral triangular load from soil
K_0:	0.5	Coefficient of lateral soil pressure at rest				
Fill Height:	2	ft.				
L =	8.08333		A =	0.24		
H =	10.1667		B =	1.9		
K =	0.9		C =	1.9		

	ASD		LFD	
M_1 =	-2.4	ft-kips	-3.2	ft-kips
M_2 =	-4.1	ft-kips	-5.4	ft-kips
M_3 =	0.5	ft-kips	0.7	ft-kips
M_4 =	1.7	ft-kips	2.2	ft-kips
M_5 =	0.3	ft-kips	0.4	ft-kips

INTERPOLATION OF MOMENTS AT HAUNCH/SLAB INTERFACE

TOP SLAB:

Haunch: 0 inches

Distance Ratio: 0.113 (CL Wall to End Haunch : CL Wall to Midspan)

Moment @ End Haunch: -2.10 ft-kips

BOTTOM SLAB:

Haunch: 0 inches

Distance Ratio: 0.113 (CL Wall to End Haunch : CL Wall to Midspan)

Moment @ End Haunch: -3.47 ft-kips

NOTE: Includes 3.01 ft-k to top slab moment for direct application of wheel load.

FLEXURE CHECK

CONSTANTS (from computations):

Design width, b :	12	in.
Young's Modulus (concrete), E_c :	485,592	ksf
Young's Modulus (steel), E_s :	4,176,000	ksf
Modular ratio, n :	8	
Flexure reduction factor, ϕ_{fl} :	0.9	
Shear reduction factor, ϕ_{sh} :	0.85	
Wearing thickness (integral) :	0	in.

Material Stresses

Steel			Concrete		
f_s :	24,000	psi	f_c :	1,400	psi
f_y :	60,000	psi	f'_c :	3,500	psi
			f_r :	444	psi

FLEXURE	SECTION	SECTION	SECTION	SECTION	SECTION
	M1 - Top Corner	M2 - Bottom Corner	M3 - Top Slab	M4 - Bottom Slab	M5 - Walls
M_{max}	2.1 ft-kips	3.5 ft-kips	3.6 ft-kips	1.7 ft-kips	0.3 ft-kips
TRY	# 5 @ 12.0	# 5 @ 12.0	# 5 @ 12.00	# 5 @ 12.00	# 5 @ 12.0
Dia.	0.625 in.	0.625 in.	0.625 in.	0.625 in.	0.625 in.
D^+	10.0 in.	10.0 in.	10.0 in.	10.0 in.	11.0 in.
D	10.0 in.	10.0 in.	10.0 in.	10.0 in.	11.0 in.
A_g	120.0 sq.in.	120.0 sq.in.	120.0 sq.in.	120.0 sq.in.	132.0 sq.in.
cover	2.0 in.	3.0 in.	1.0 in.	2.0 in.	1.5 in.
d	7.69 in.	6.69 in.	8.69 in.	7.69 in.	9.19 in.
A_s	0.310 sq.in.	0.310 sq.in.	0.310 sq.in.	0.310 sq.in.	0.310 sq.in.
p	0.00336	0.00386	0.00297	0.00336	0.00281
k	0.2065	0.2196	0.1956	0.2065	0.1908
j	0.9312	0.9268	0.9348	0.9312	0.9364
f_s	11371 psi	21671 psi	16923 psi	9073 psi	1459 psi
f_c	370 psi	762 psi	514 psi	295 psi	43 psi
a	0.521 in.	0.521 in.	0.521 in.	0.521 in.	0.521 in.
ϕM_n	10.4 ft-kips	9.0 ft-kips	11.8 ft-kips	10.4 ft-kips	12.5 ft-kips
M_{cr}	7.4 ft-kips	7.4 ft-kips	7.4 ft-kips	7.4 ft-kips	8.9 ft-kips
$1.2M_{cr}$	8.87 ft-kips	8.87 ft-kips	8.87 ft-kips	8.87 ft-kips	10.74 ft-kips
A_s(min)	0.262 sq.in	0.301 sq.in	0.232 sq.in	0.262 sq.in	0.265 sq.in
CHECK:					
Steel:	47%	90%	71%	38%	6%
Concrete:	26%	54%	37%	21%	3%

NOTE: Cover should NOT include the integral wearing thickness.
D+ is the total depth of concrete, including the integral wearing thickness.
D is the structural depth, which excludes the integral wearing thickness.

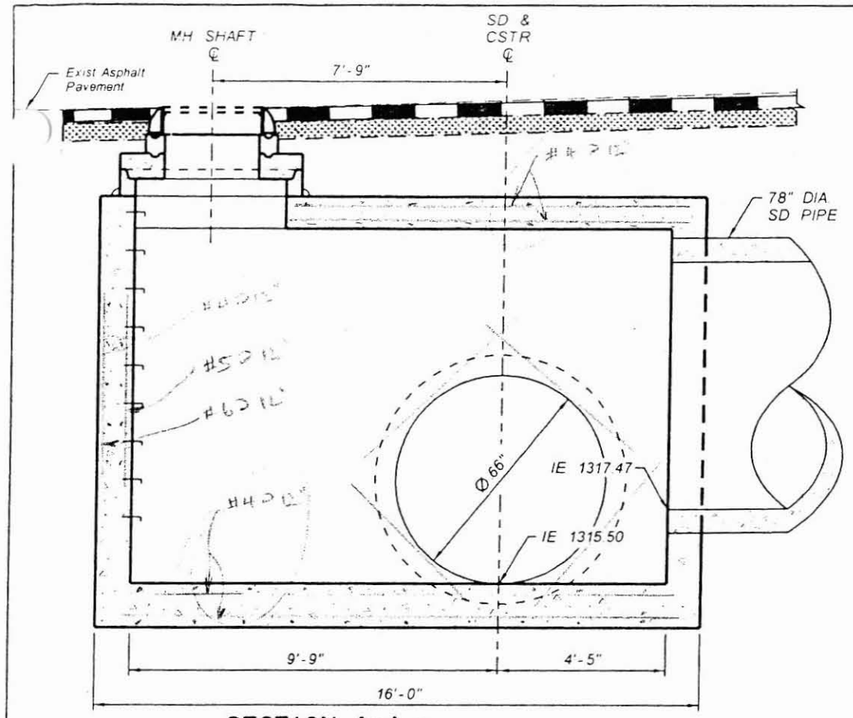

SECTION A-A
STORM DRAIN MANHOLE BASE
87TH AVENUE STA 313+52
NTS

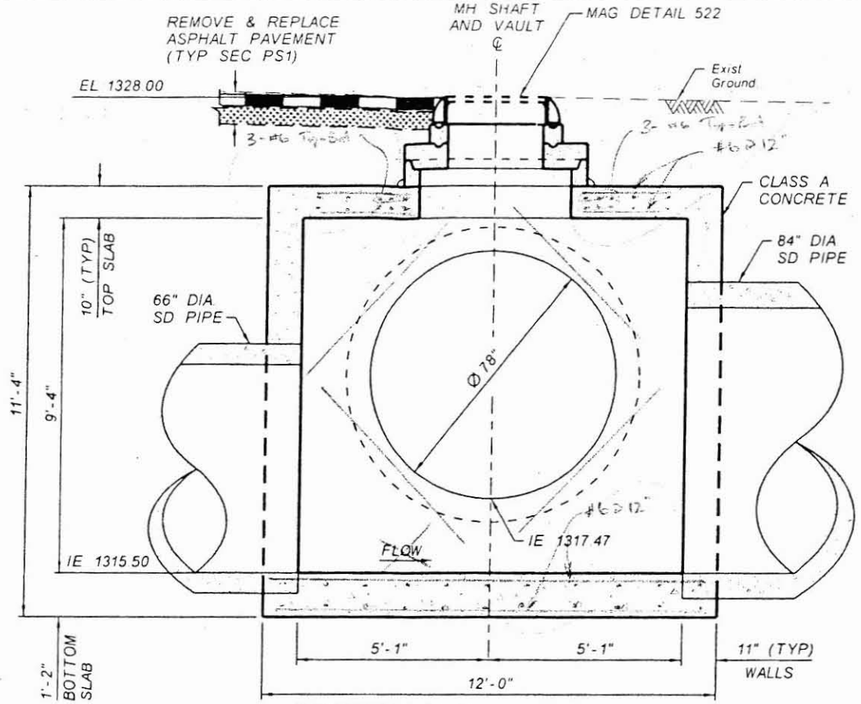

SECTION B-B
STORM DRAIN MANHOLE BASE
87TH AVENUE STA 313+52
NTS

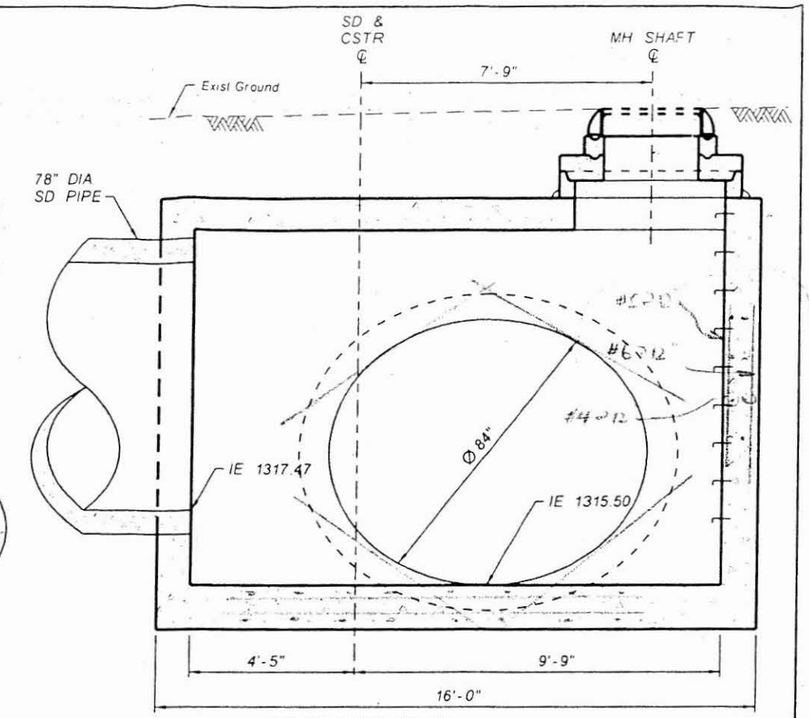

SECTION C-C
STORM DRAIN MANHOLE BASE
87TH AVENUE STA 313+52
NTS

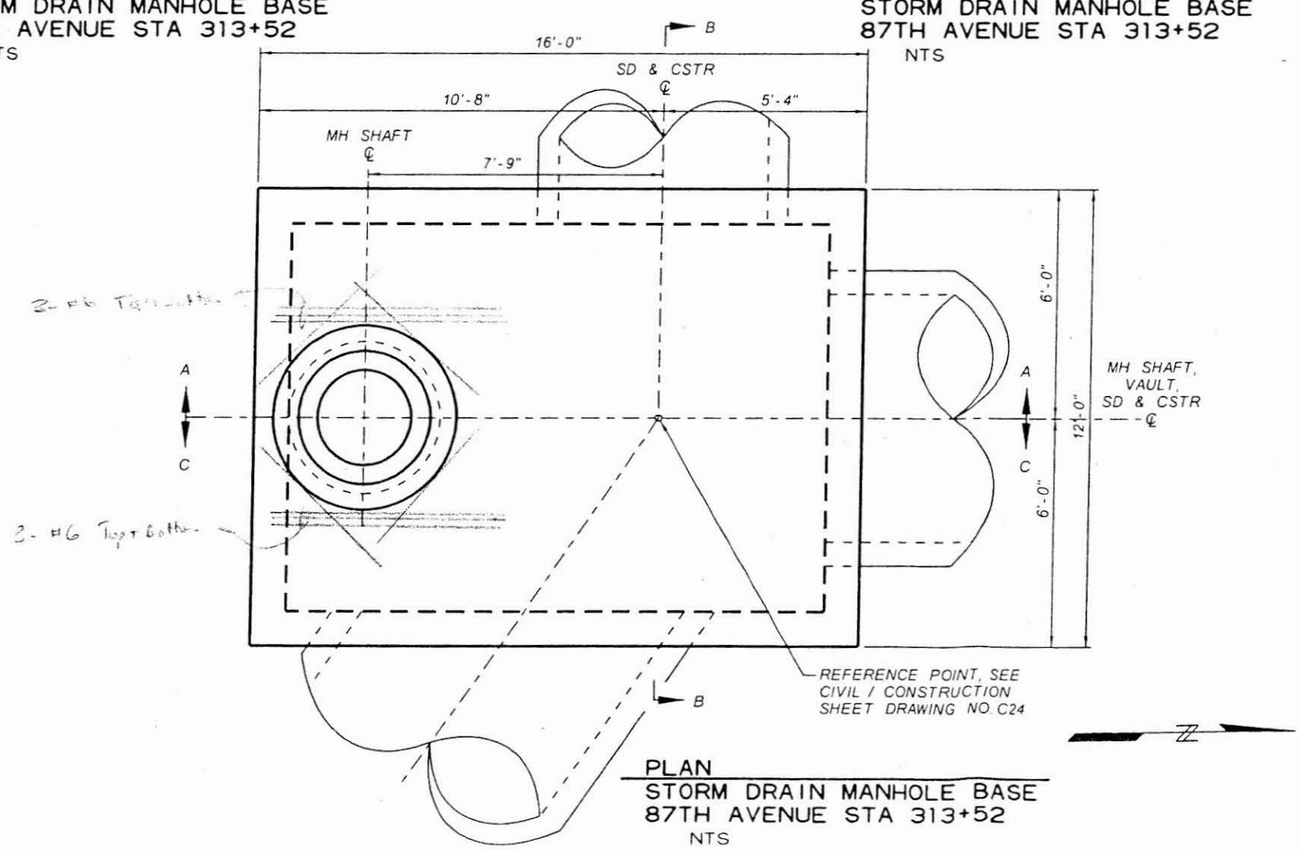

PLAN
STORM DRAIN MANHOLE BASE
87TH AVENUE STA 313+52
NTS

NO	REVISION	BY	DATE
3			
2			
1			

FLOOD CONTROL DISTRICT OF MARICOPA COUNTY
ENGINEERING DIVISION

83RD AVENUE / PINNACLE PEAK ROAD
DRAINAGE IMPROVEMENTS
PCN 450.02.33 FCD CONTRACT NO. 2003C060

60%
PRELIMINARY NOT FOR CONSTRUCTION

	BY	DATE
DESIGNED	O OLIDEN	11/05
DRAWN	A JOHNSON	11/05
CHECKED		

JACOBS CIVIL INC.

DRAWING NO. DTL 11 SHEET OF

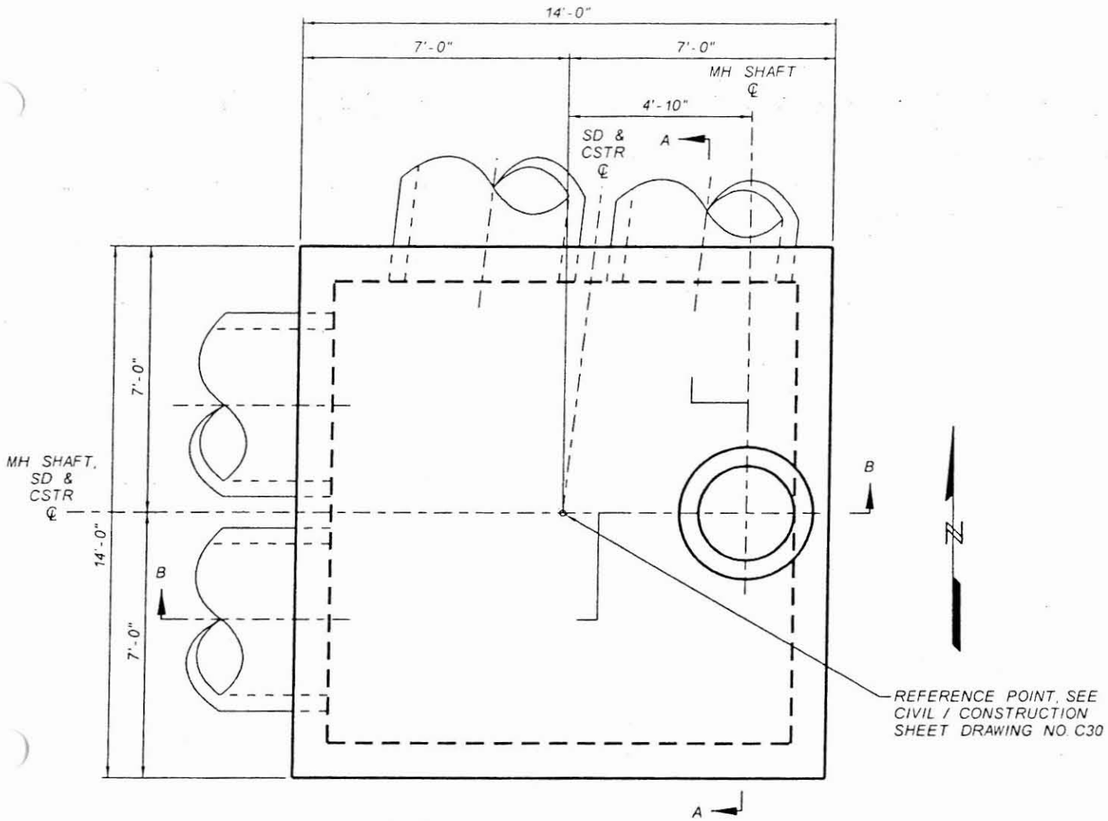

PLAN
STORM DRAIN MANHOLE BASE
CALLE LEJOS STA 339+55
NTS

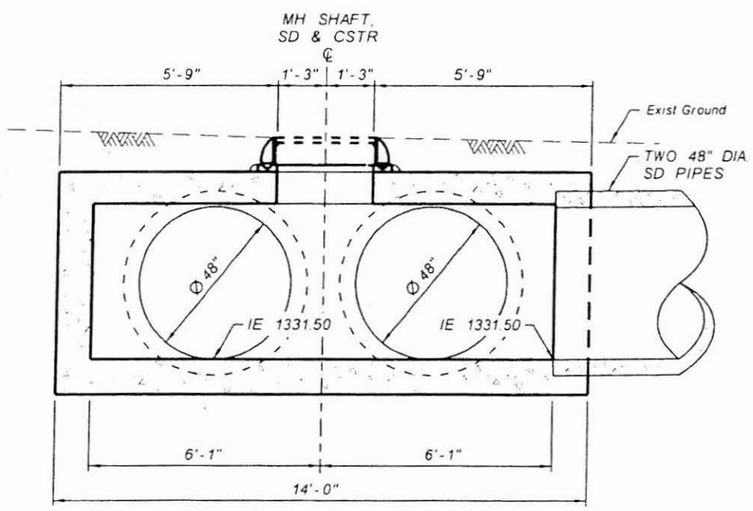

SECTION A-A
STORM DRAIN MANHOLE BASE
CALLE LEJOS STA 339+55
NTS

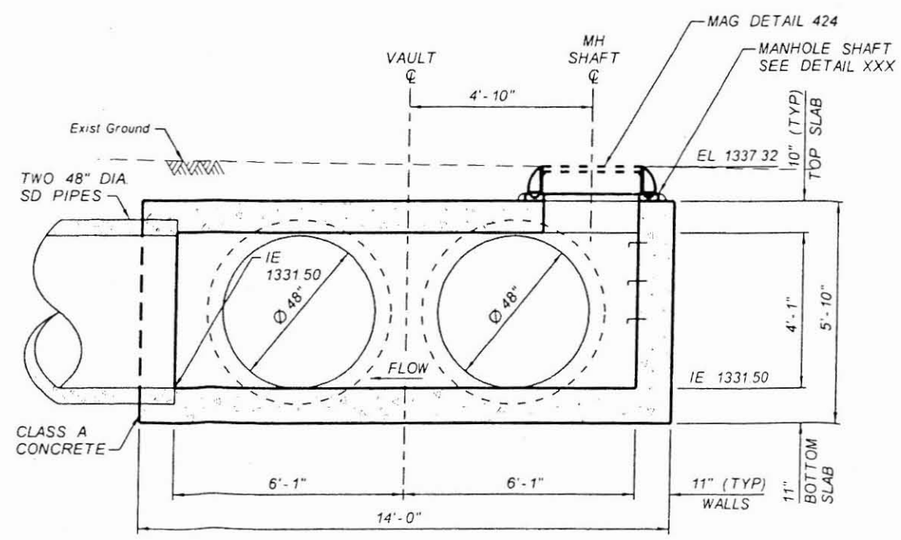

SECTION B-B
STORM DRAIN MANHOLE BASE
CALLE LEJOS STA 339+55
NTS

NO	REVISION	BY	DATE
3			
2			
1			

FLOOD CONTROL DISTRICT OF MARICOPA COUNTY
ENGINEERING DIVISION

83RD AVENUE / PINNACLE PEAK ROAD
DRAINAGE IMPROVEMENTS
PCN 450.02.33 FCD CONTRACT NO. 2003C060

60%
PRELIMINARY NOT FOR CONSTRUCTION

	BY	DATE
DESIGNED	O. OLIDEN	11/05
DRAWN	A. JOHNSON	11/05
CHECKED		

JACOBS CIVIL INC.

DRAWING NO DTL 16 SHEET OF

JACOBS CIVIL INC.

PROJECT	83rd Avenue / Pinnacle Peak Rd Drainage Improvements
SUBJECT	Storm Drain Manhole Reinforcement
	Minimum W:H aspect Ratio (Example: Manhole @ Station 326+40)

JOB NO.	W7X74300	NO.	
DESIGNED BY	MJR	CHECK BY	
DATE:	28-Nov-05	SHEET OF	

METHOD:

"Moments in Buried Box Culverts", P. C. Dave, A.M. ASCE, Civil Engineering-ASCE, 1967 (Attached)

GEOMETRY			LOADS			
l:	7.16667	ft.	W_1:	2.79583	kips	- Total weight of two walls
h:	9.33333	ft.	W_2:	3.0	kips	- Total uniform vertical load from slab, fill & surcharge
t_w:	0.91667	ft.	W_3:	1.22	kips	- Total uniform lateral load from soil & surcharge
t_s:	0.83	ft.	W_4:	3.10	kips	- Total lateral triangular load from soil
K_0:	0.5	Coefficient of lateral soil pressure at rest				
Fill Height:	2	ft.				
L =	8.08333		A =	0.24		
H =	10.1667		B =	1.9		
K =	0.9		C =	1.9		

	ASD		LFD	
M_1 =	-2.4	ft-kips	-3.2	ft-kips
M_2 =	-4.1	ft-kips	-5.4	ft-kips
M_3 =	0.5	ft-kips	0.7	ft-kips
M_4 =	1.7	ft-kips	2.2	ft-kips
M_5 =	0.3	ft-kips	0.4	ft-kips

INTERPOLATION OF MOMENTS AT HAUNCH/SLAB INTERFACE

TOP SLAB:

Haunch: 0 inches

Distance Ratio: 0.113 (CL Wall to End Haunch : CL Wall to Midspan)

Moment @ End Haunch: -2.10 ft-kips

BOTTOM SLAB:

Haunch: 0 inches

Distance Ratio: 0.113 (CL Wall to End Haunch : CL Wall to Midspan)

Moment @ End Haunch: -3.47 ft-kips

NOTE: Add 3.01 ft-k to top slab moment for direct application of wheel load on structure.

FLEXURE CHECK

CONSTANTS (from computations):

Design width, b :	12	in.
Young's Modulus (concrete), E_c :	485,592	ksf
Young's Modulus (steel), E_s :	4,176,000	ksf
Modular ratio, n :	8	
Flexure reduction factor, ϕ_{fl} :	0.9	
Shear reduction factor, ϕ_{sh} :	0.85	
Wearing thickness (integral) :	0	in.

Material Stresses

Steel			Concrete		
f_s :	24,000	psi	f_c :	1,400	psi
f_y :	60,000	psi	f'_c :	3,500	psi
			f_r :	444	psi

FLEXURE	SECTION	SECTION	SECTION	SECTION	SECTION
	M1 - Top Corner	M2 - Bottom Corner	M3 - Top Slab	M4 - Bottom Slab	M5 - Walls
M_{max}	2.1 ft-kips	3.5 ft-kips	3.6 ft-kips	1.7 ft-kips	0.3 ft-kips
TRY	# 5 @ 12.0	# 5 @ 12.0	# 5 @ 12.00	# 5 @ 12.00	# 5 @ 12.0
Dia.	0.625 in.	0.625 in.	0.625 in.	0.625 in.	0.625 in.
D^+	10.0 in.	10.0 in.	10.0 in.	10.0 in.	11.0 in.
D	10.0 in.	10.0 in.	10.0 in.	10.0 in.	11.0 in.
A_g	120.0 sq.in.	120.0 sq.in.	120.0 sq.in.	120.0 sq.in.	132.0 sq.in.
cover	2.0 in.	3.0 in.	1.0 in.	2.0 in.	1.5 in.
d	7.69 in.	6.69 in.	8.69 in.	7.69 in.	9.19 in.
A_s	0.310 sq.in.	0.310 sq.in.	0.310 sq.in.	0.310 sq.in.	0.310 sq.in.
p	0.00336	0.00386	0.00297	0.00336	0.00281
k	0.2065	0.2196	0.1956	0.2065	0.1908
j	0.9312	0.9268	0.9348	0.9312	0.9364
f_s	11371 psi	21671 psi	16923 psi	9073 psi	1459 psi
f_c	370 psi	762 psi	514 psi	295 psi	43 psi
a	0.521 in.	0.521 in.	0.521 in.	0.521 in.	0.521 in.
ϕM_n	10.4 ft-kips	9.0 ft-kips	11.8 ft-kips	10.4 ft-kips	12.5 ft-kips
M_{cr}	7.4 ft-kips	7.4 ft-kips	7.4 ft-kips	7.4 ft-kips	8.9 ft-kips
$1.2M_{cr}$	8.87 ft-kips	8.87 ft-kips	8.87 ft-kips	8.87 ft-kips	10.74 ft-kips
A_s(min)	0.262 sq.in	0.301 sq.in	0.232 sq.in	0.262 sq.in	0.265 sq.in
CHECK:					
Steel:	47%	90%	71%	38%	6%
Concrete:	26%	54%	37%	21%	3%

NOTE: Cover should NOT include the integral wearing thickness.
D+ is the total depth of concrete, including the integral wearing thickness.
D is the structural depth, which excludes the integral wearing thickness.

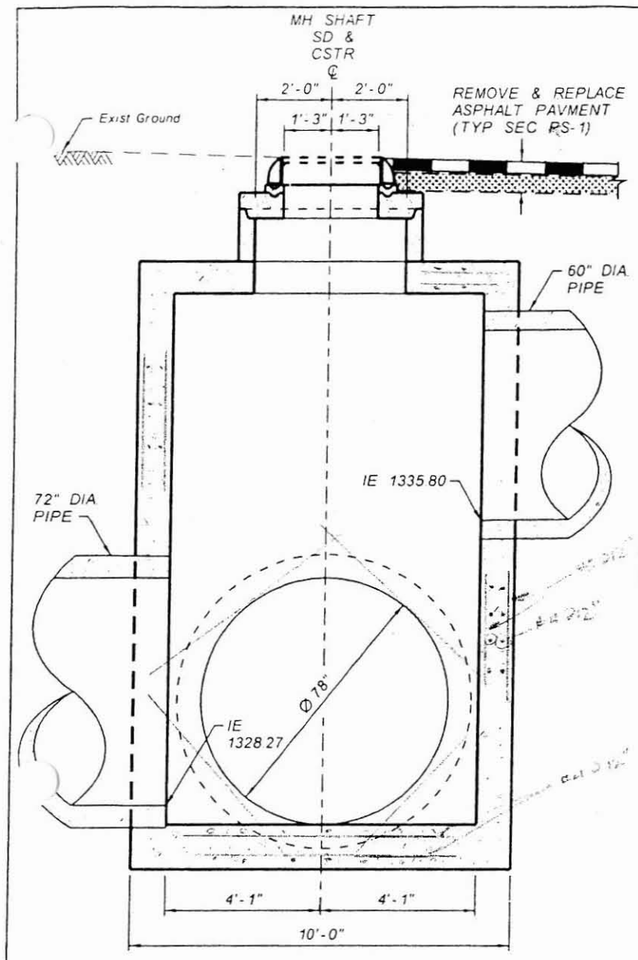

SECTION A-A
STORM DRAIN MANHOLE BASE
87TH AVENUE STA 326+40
NTS

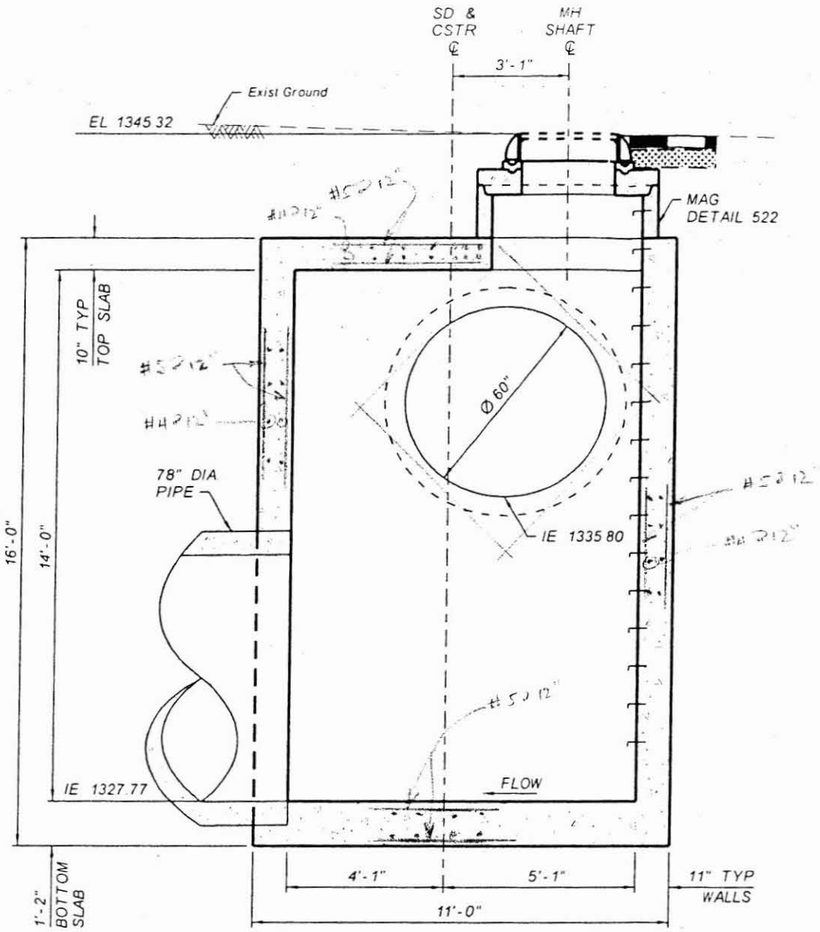

SECTION B-B
STORM DRAIN MANHOLE BASE
87TH AVENUE STA 326+40
NTS

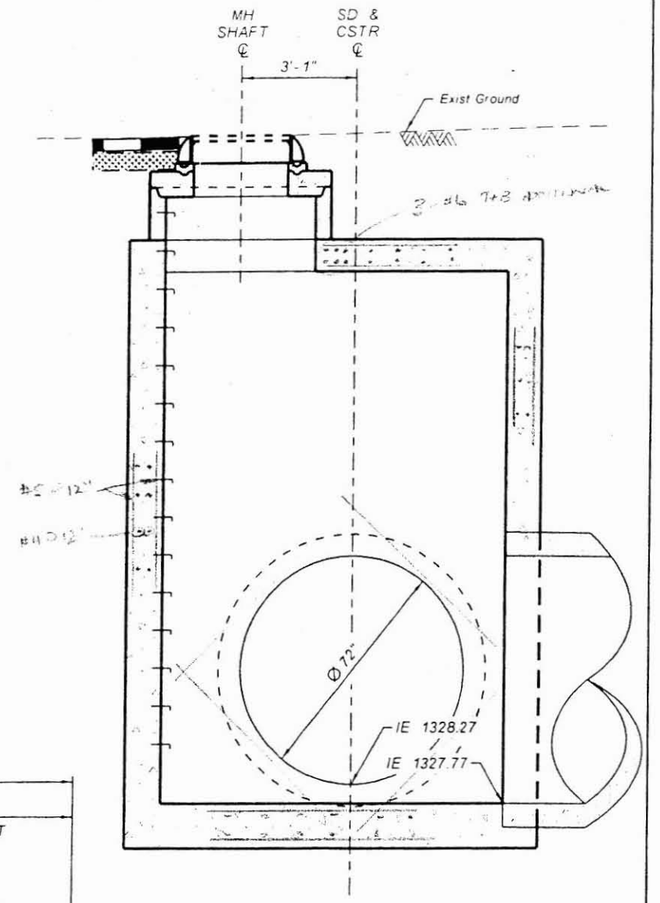

SECTION C-C
STORM DRAIN MANHOLE BASE
87TH AVENUE STA 326+40
NTS

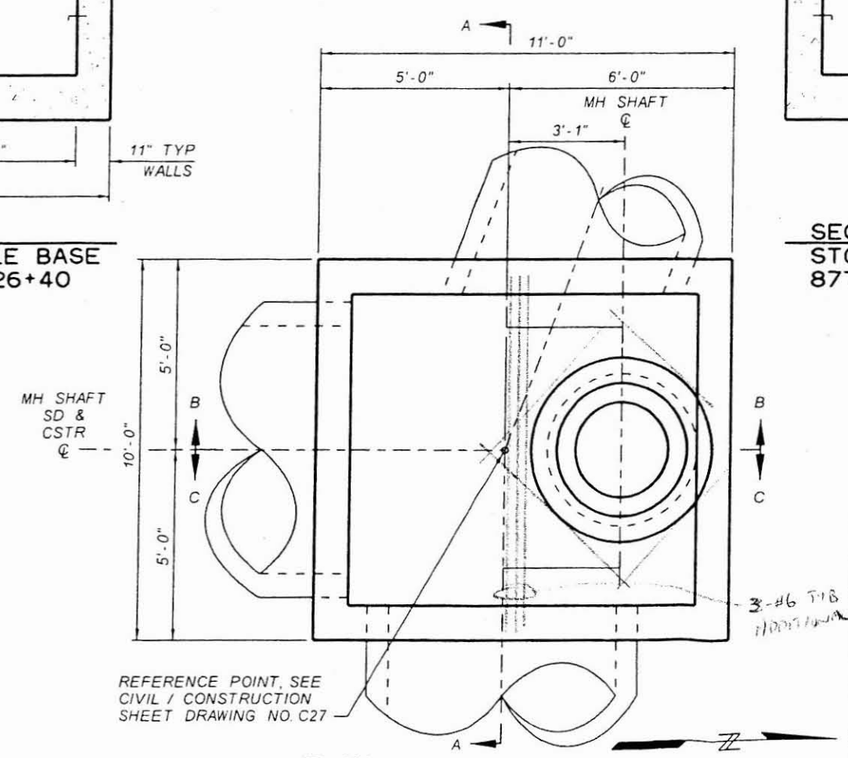

PLAN
STORM DRAIN MANHOLE BASE
87TH AVENUE STA 326+40
NTS

NO	REVISION	BY	DATE
3			
2			
1			

FLOOD CONTROL DISTRICT OF MARICOPA COUNTY
ENGINEERING DIVISION

83RD AVENUE / PINNACLE PEAK ROAD
DRAINAGE IMPROVEMENTS
PCN 450.02.33 FCD CONTRACT NO. 2003C060

60%
PRELIMINARY
NOT FOR
CONSTRUCTION

	BY	DATE
DESIGNED	O. OLIDEN	11/05
DRAWN	A. JOHNSON	11/05
CHECKED		

JACOBS CIVIL INC.

DRAWING NO. D13 | DTL 13 STORM DRAIN MANHOLE | SHEET OF

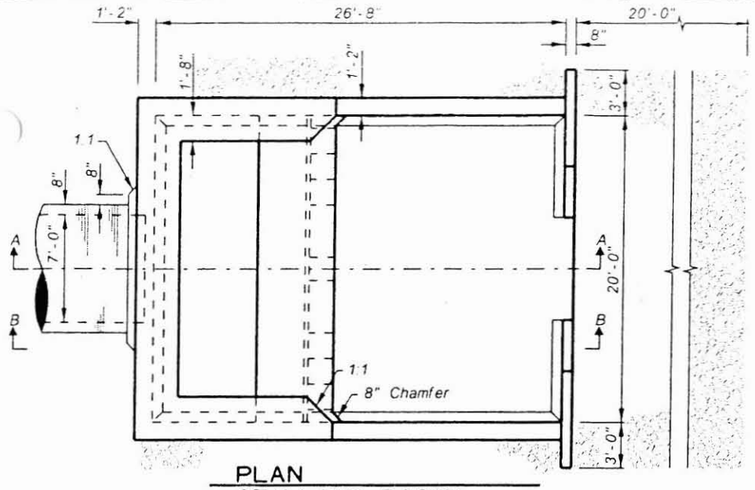

PLAN
STILLING BASIN
STA
NTS

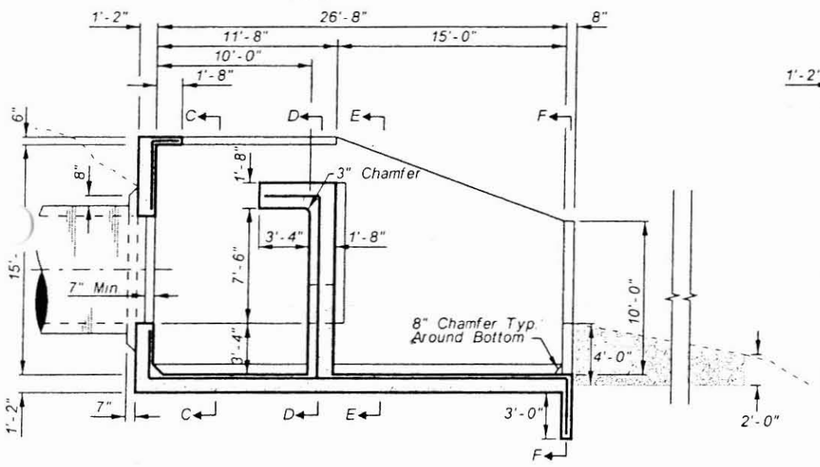

SECTION A-A
STILLING BASIN
STA
NTS

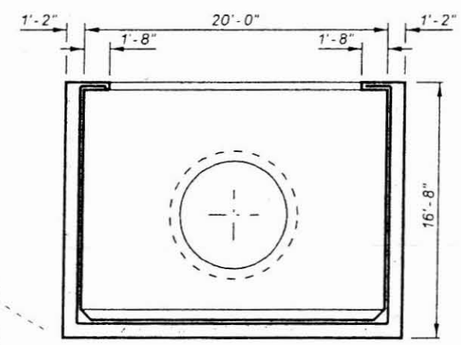

SECTION C-C
STILLING BASIN
STA
NTS

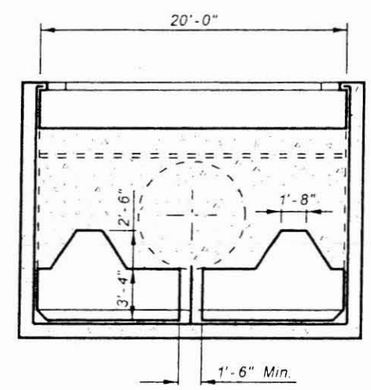

SECTION D-D
STILLING BASIN
STA
NTS

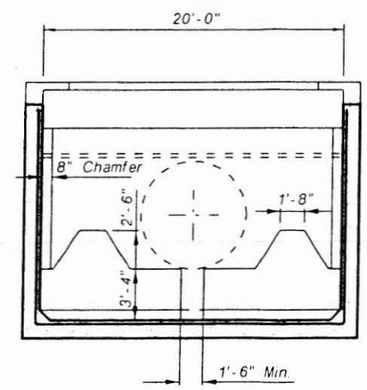

SECTION E-E
STILLING BASIN
STA
NTS

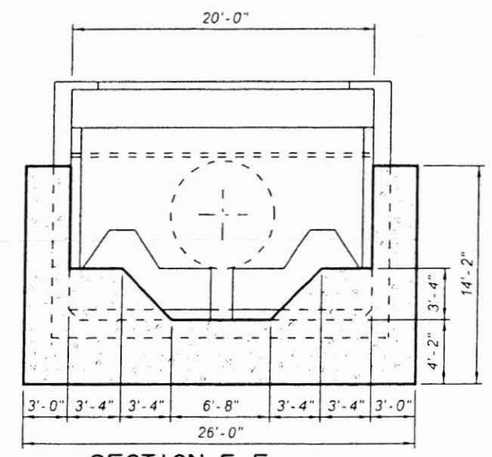

SECTION F-F
STILLING BASIN
STA
NTS

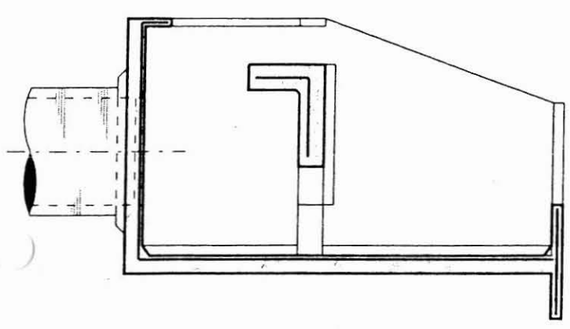

SECTION B-B
STILLING BASIN
STA
NTS

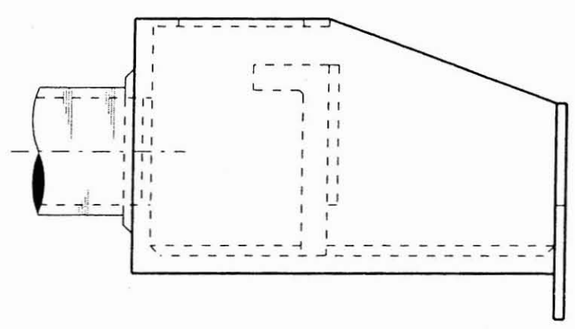

SIDE PROFILE
STILLING BASIN
STA
NTS

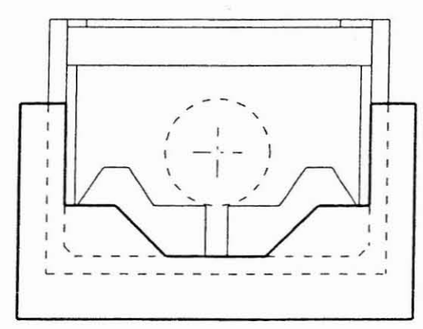

FRONT PROFILE
STILLING BASIN
STA
NTS

NO	REVISION	BY	DATE
3			
2			
1			

FLOOD CONTROL DISTRICT OF MARICOPA COUNTY
ENGINEERING DIVISION

83RD AVENUE / PINNACLE PEAK ROAD
DRAINAGE IMPROVEMENTS
PCN 450.02.33 FCD CONTRACT NO. 2003C060

60%
PRELIMINARY
NOT FOR
CONSTRUCTION

	BY	DATE
DESIGNED	O. OLIDEN	11/05
DRAWN	A. JOHNSON	11/05
CHECKED		

JACOBS CIVIL INC.

DRAWING NO		SHEET OF
D12	DTL 12 STILLING BASIN	

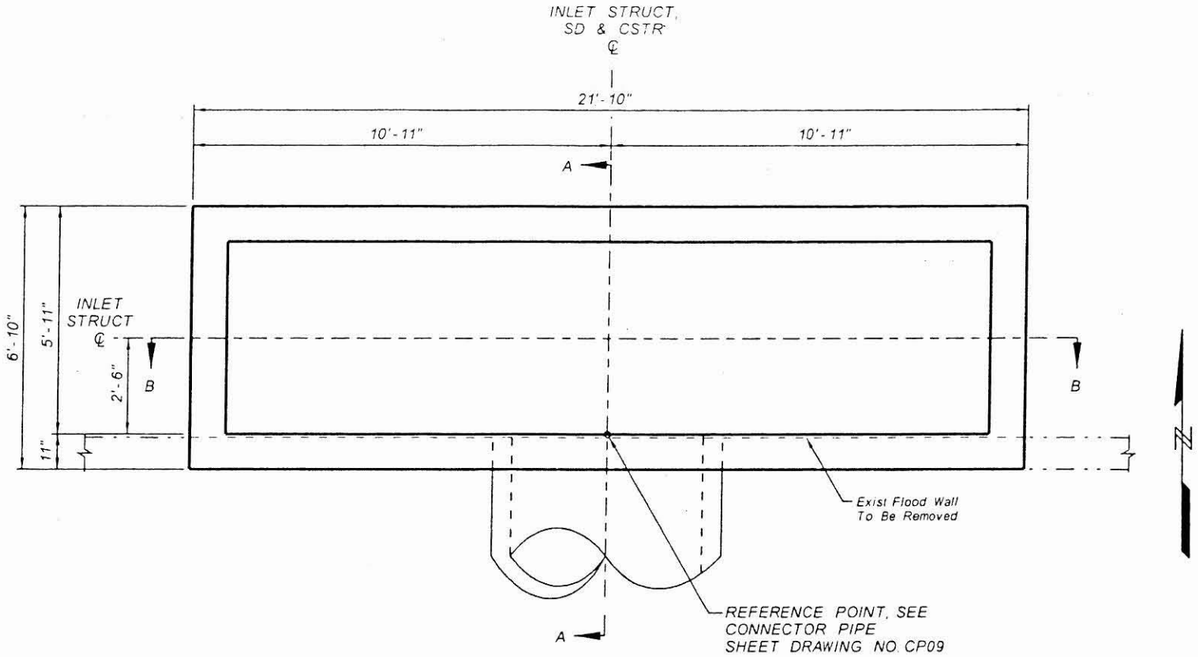

PLAN
INLET STRUCTURE
VENTANA PICACHOS
RETENTION BASIN STA 81+37
NTS

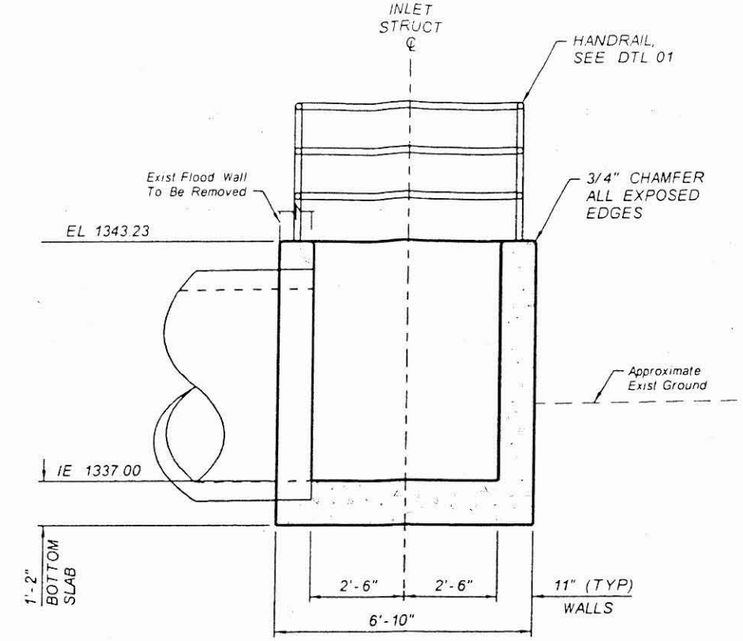

SECTION A-A
INLET STRUCTURE
VENTANA PICACHOS
RETENTION BASIN STA 81+37
NTS

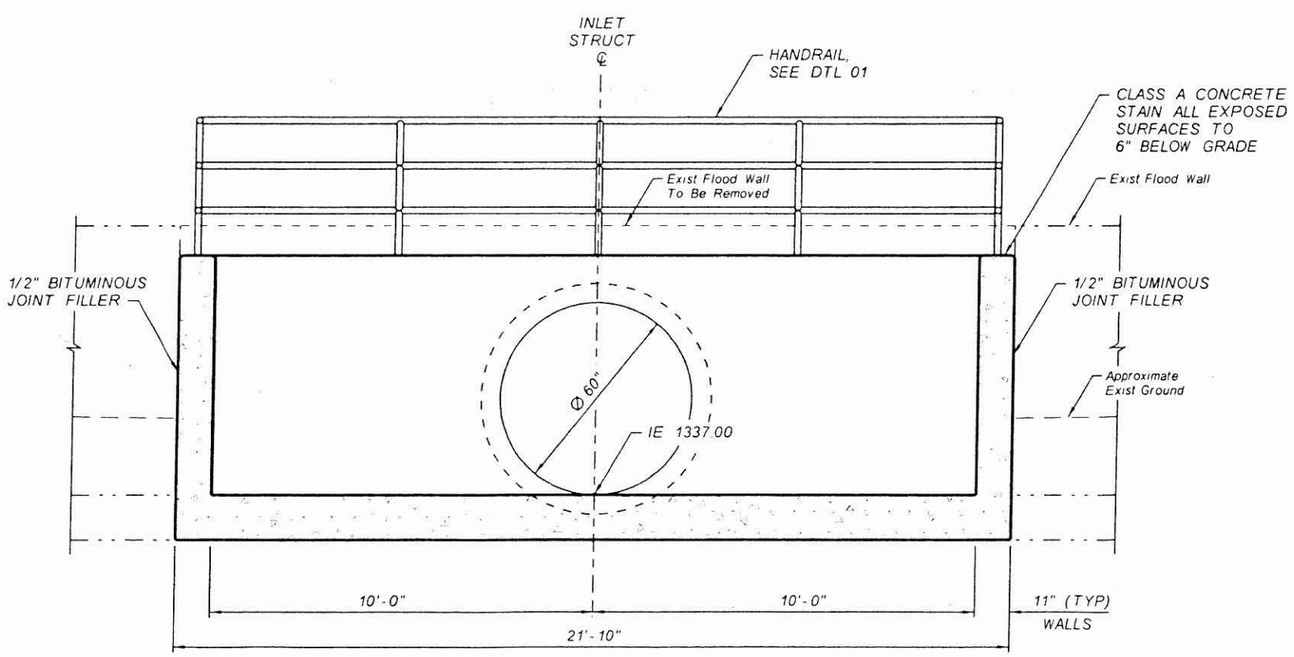

SECTION B-B
INLET STRUCTURE
VENTANA PICACHOS
RETENTION BASIN STA 81+37
NTS

NO	REVISION	BY	DATE
3			
2			
1			

FLOOD CONTROL DISTRICT OF MARICOPA COUNTY
ENGINEERING DIVISION

83RD AVENUE / PINNACLE PEAK ROAD
DRAINAGE IMPROVEMENTS
PCN 450.02.33 FCD CONTRACT NO. 2003C060

60%
PRELIMINARY
NOT FOR
CONSTRUCTION

	BY	DATE
DESIGNED	O. OLIDEN	11/05
DRAWN	A. JOHNSON	11/05
CHECKED		

JACOBS CIVIL INC.

DRAWING NO.		SHEET OF
D20	DTL 20 INLET STRUCTURE	

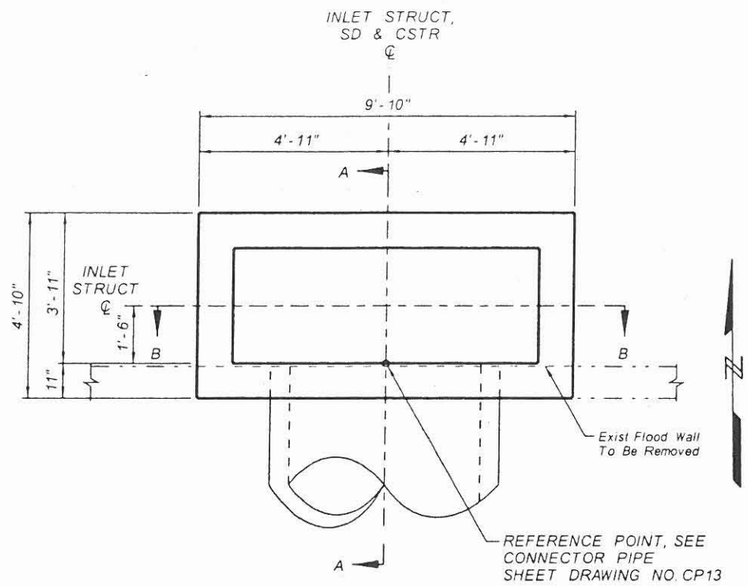

PLAN
INLET STRUCTURE
VENTANA PICACHOS
RETENTION BASIN STA 78+80
NTS

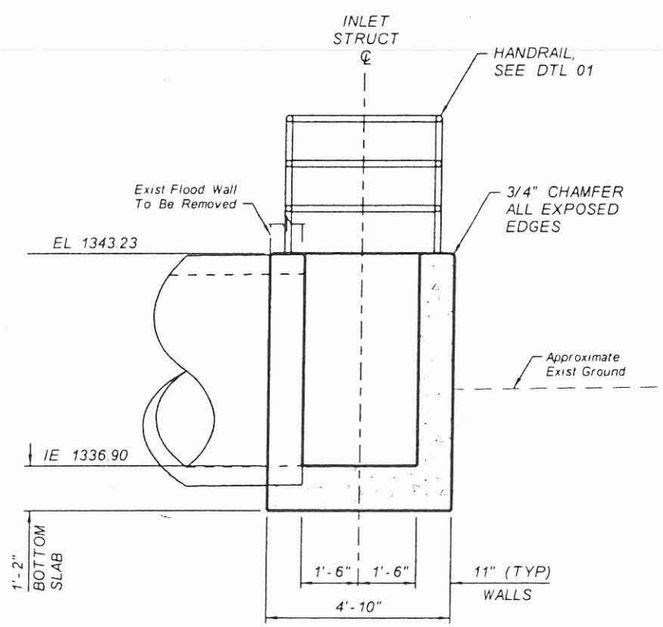

SECTION A-A
INLET STRUCTURE
VENTANA PICACHOS
RETENTION BASIN STA 78+80
NTS

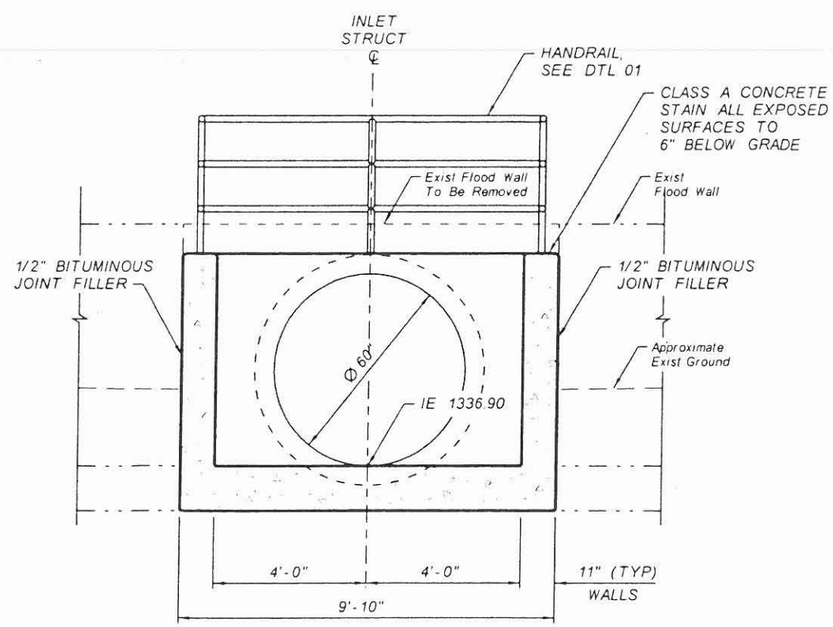

SECTION B-B
INLET STRUCTURE
VENTANA PICACHOS
RETENTION BASIN STA 78+80
NTS

NO.	REVISION	BY	DATE
3			
2			
1			

FLOOD CONTROL DISTRICT OF MARICOPA COUNTY
ENGINEERING DIVISION

83RD AVENUE / PINNACLE PEAK ROAD
DRAINAGE IMPROVEMENTS
PCN 450.02.33 FCD CONTRACT NO. 2003C060

60%
PRELIMINARY
NOT FOR
CONSTRUCTION

	BY	DATE
DESIGNED	O. OLIDEN	11/05
DRAWN	A. JOHNSON	11/05
CHECKED		

JACOBS CIVIL INC.

DRAWING NO.		SHEET OF
D21	DTL 21 INLET STRUCTURE	

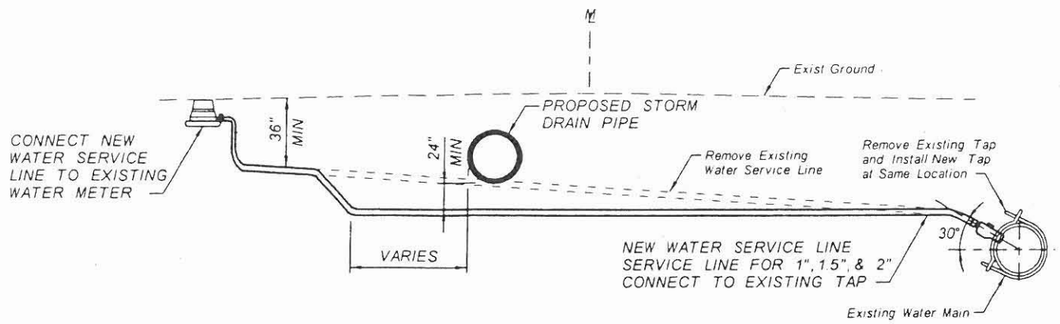

TYPICAL SECTION
VERTICAL REALIGNMENT
FOR WATER SERVICES
NTS

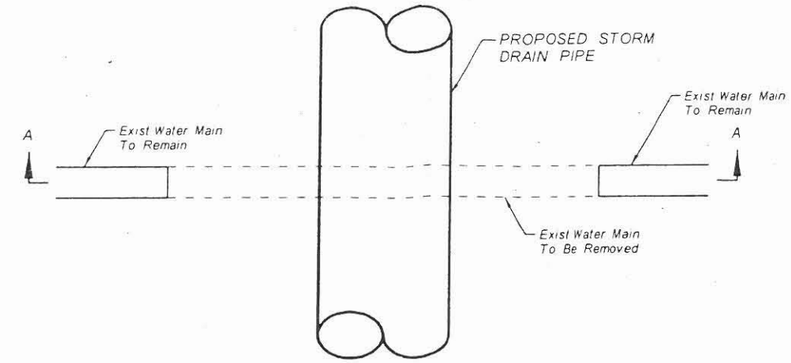

PLAN
VERTICAL REALIGNMENT
OF WATER MAINS
NTS

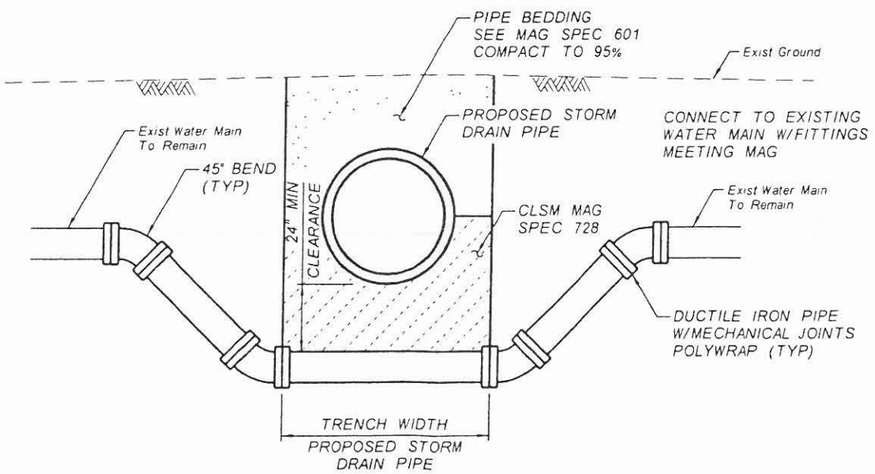

SECTION A-A
VERTICAL REALIGNMENT
OF WATER MAINS
NTS

NO	REVISION	BY	DATE
3			
2			
1			

FLOOD CONTROL DISTRICT OF MARICOPA COUNTY
ENGINEERING DIVISION

83RD AVENUE / PINNACLE PEAK ROAD
DRAINAGE IMPROVEMENTS
PCN 450.02.33 FCD CONTRACT NO. 2003C060

60%
PRELIMINARY
NOT FOR
CONSTRUCTION

	BY	DATE
DESIGNED	O OLIDEN	11/05
DRAWN	A JOHNSON	11/05
CHECKED		

JACOBS CIVIL INC.

DRAWING NO. D25 | DTL 25 WATER RELOCATION DETAILS | SHEET OF

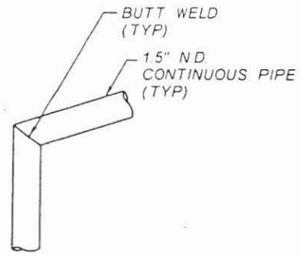

DETAIL A
TOP RAIL CONNECTION TO END POST ON WINGWALL
NTS

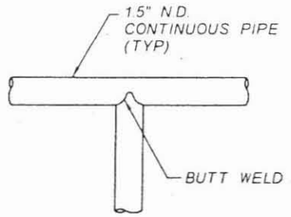

DETAIL B
TOP RAIL CONNECTION TO INTERMEDIATE POST
NTS

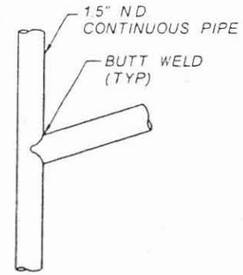

DETAIL C
MIDDLE OR LOWER RAIL CONNECTION TO END POST ON WINGWALL
NTS

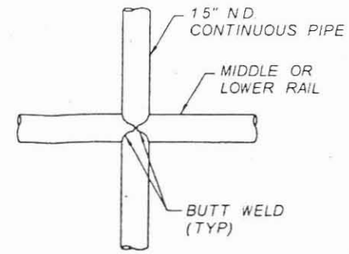

DETAIL D
MIDDLE OR LOWER RAIL CONNECTION TO INTERMEDIATE POST
NTS

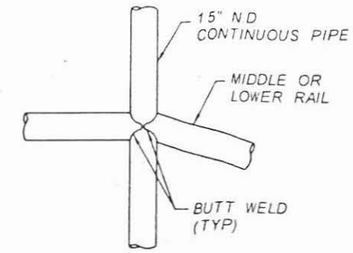

DETAIL E
MIDDLE OR LOWER RAIL CONNECTION TO INTERMEDIATE POST ON WINGWALL
NTS

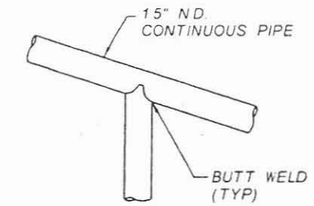

DETAIL F
TOP RAIL CONNECTION TO INTERMEDIATE POST ON WINGWALL
NTS

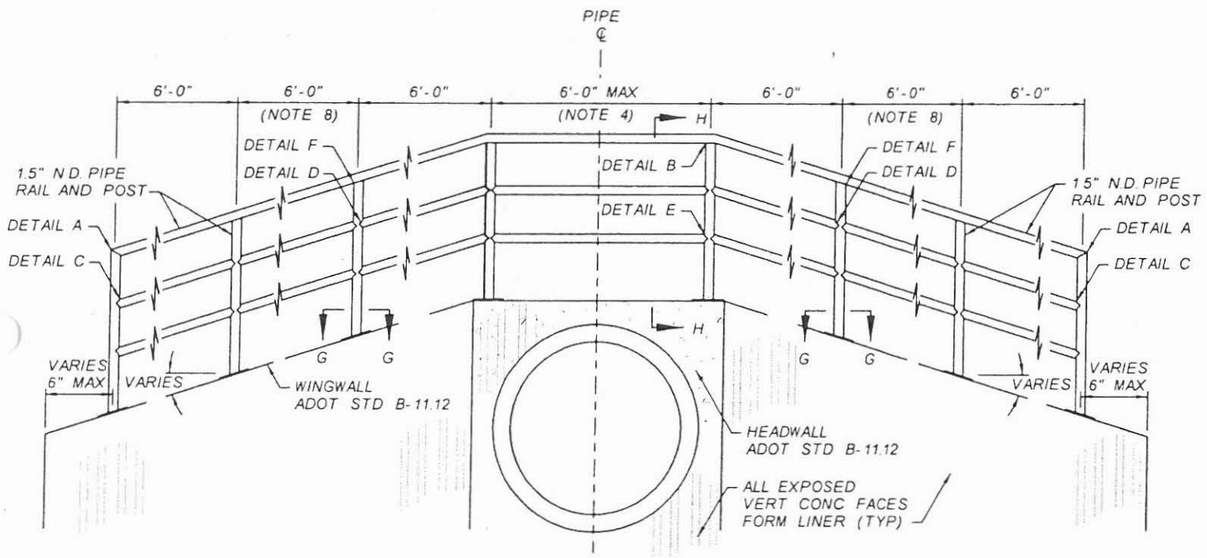

ELEVATION J
HANDRAIL ON HEADWALL, ADOT DET B-11.12
NTS

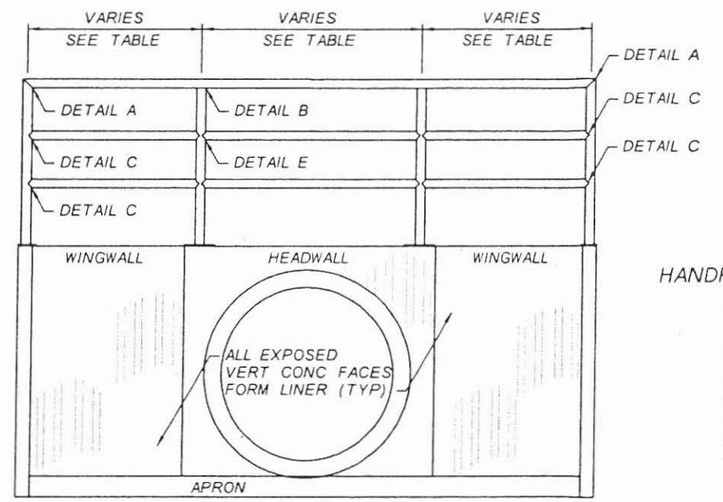

ELEVATION K
HEADWALL, MAG DET 501-4
NTS

HANDRAIL LENGTHS-HEADWALLS

PIPE ℄	W	L
24	4'-0"	2'-0"
30	4'-6"	3'-0"
36	5'-0"	4'-0"
42	5'-6"	5'-0"
48	6'-0"	6'-0"

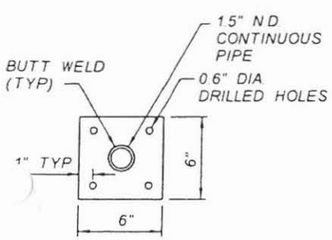

SECTION G-G
ANCHOR PLATE
NTS

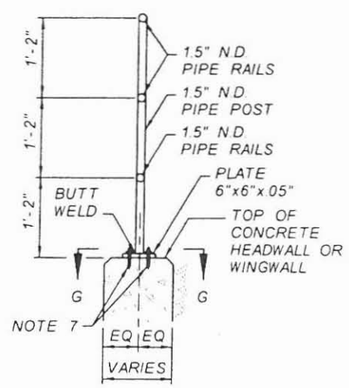

SECTION H-H
HANDRAIL POST ON HEADWALL
NTS

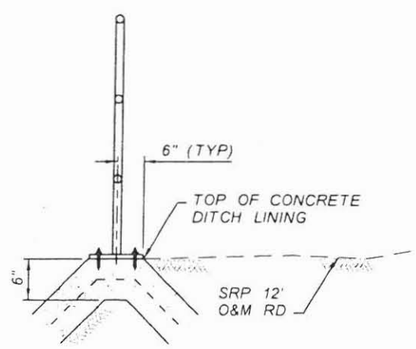

SECTION L-L
HANDRAIL POST ON DITCH LINING
NTS

NOTES:

1) ALL RAILS, POSTS AND FITTING SHALL BE STEEL, CONFORMING TO ALL REQUIREMENTS OF AASHTO M 181 FOR GRADE 2 PIPE. 1.5" N.D. PIPE IS SCHEDULE 40 (0.145" WALL THICKNESS) PER ASTM A-53.

2) FITTING AND RAILS SHALL BE WELDED WITH CONTINOUS WELDS. ALL CUT EDGES SHALL BE GROUND SMOOTH AND ALL VISIBLE WELDS, WHEN COMPLETED, SHALL PRESENT A SMOOTH, EVEN APPEARANCE.

3) USE FORM LINER ON ALL EXPOSED VERTICAL CONCRETE FACES PER TYP SEC X, SHEET 24 PAINT ALL EXPOSED SURFACES WITH ONE COAT OF PRIMER AND TWO FINISH COATS OF PAINT, COLOR "WEATHERED SANDSTONE, # 320-4, SEE SPECS.

4) SPACING OF POSTS SHALL BE 6', OR LESS AS REQUIRED IN THE FIELD.

5) CONTRACTOR SHALL SUBMIT WORKING DRAWINGS FOR APPROVAL. WORKING DRAWINGS SHALL CONSIST OF SHOP DRAWNINGS AND FIELD HORIZONTAL AND VERTICAL INSTALLATION.

6) ALL DIMENSIONS ARE IN INCHES, UNLESS NOTED OTHERWISE.

7) FOUR STAINLESS STEEL EXPANSION ANCHORS, 0.5" x 5" LONG, EMBEDDED 3.5".

8) POSTS ON SLOPING WINGWALL WILL BE VERTICAL. DISTANCES SHOWN ARE HORIZONTAL DISTANCE BETWEEN POSTS.

NO	REVISION	BY	DATE
3			
2			
1			

FLOOD CONTROL DISTRICT OF MARICOPA COUNTY
ENGINEERING DIVISION

83RD AVENUE / PINNACLE PEAK ROAD
DRAINAGE IMPROVEMENTS
PCN 450.02.33 FCD CONTRACT NO. 2003C060

60%
PRELIMINARY NOT FOR CONSTRUCTION

	BY	DATE
DESIGNED	O OLIDEN	11/05
DRAWN	A JOHNSON	11/05
CHECKED		

JACOBS CIVIL INC.

DRAWING NO. D01 | DTL 01 STEEL HANDRAIL | SHEET OF