MASTER DRAINAGE REPORT

DREAMING SUMMIT

NOVEMBER, 1999
DEA PROJECT NO. STAR0068

Outstanding Professionals . . .
Outstanding Quality

DAVID EVANS AND ASSOCIATES, INC.

MASTER DRAINAGE REPORT
FOR
DREAMING SUMMIT

PREPARED FOR

STARDUST DEVELOPMENT, INC.
6730 NORTH SCOTTSDALE ROAD, SUITE 230
SCOTTSDALE, AZ 85253
(602) 607-5800

PREPARED BY

TERI S. MINTZ, P.E.
DAVID EVANS AND ASSOCIATES, INC.
7878 NORTH 16TH STREET, SUITE 250
PHOENIX, AZ 85020
(602) 678-5151

NOVEMBER, 1999
DEA PROJECT NO. STAR0068

Registered Professional Engineer (Civil)
CERTIFICATE NO.
30013
TERI S.
MINTZ
Date Signed 11/10/99
ARIZONA, U.S.A.

TABLE OF CONTENTS

SECTION	TITLE	PAGE NO.
1.0	**INTRODUCTION**	**1**
2.0	**EXISTING DRAINAGE CONDITIONS**	**1**
3.0	**PROPOSED DRAINAGE CONCEPT**	**2**
3.1	ON-SITE DRAINAGE CONVEYANCE	3
3.2	OFF-SITE DRAINAGE CONVEYANCE	4
3.3	ON-SITE STORM WATER RETENTION	5
4.0	**HYDROLOGIC ANALYSIS**	**6**
4.1	OFF-SITE ANALYSIS	6
4.1.1	*Watershed Delineation*	*6*
4.1.2	*Precipitation*	*7*
4.1.3	*Rainfall losses*	*7*
4.1.4	*Hydrograph Generation*	*7*
4.1.5	*Channel Routing*	*8*
4.2	ON-SITE ANALYSIS	9
5.0	**HYDRAULIC ANALYSIS**	**9**
6.0	**CONCLUSIONS AND RECOMMENDATIONS**	**11**
7.0	**REFERENCES**	**12**

FIGURES	TITLE	LOCATION
1	Vicinity Map	Appendix A
2	Typical Street Sections	Appendix A
3	Typical Channel Sections	Appendix A

TABLES	TITLE	LOCATION
4.1	Summary of Peak Flows	Section 4.0
5.1	Dale Creek Wash Water Surface Elevations	Section 5.0

EXHIBITS	TITLE	LOCATION
A	Off-site Drainage Area Map	Back Pocket
B	On-site Drainage Area Map	Back Pocket
C	Soils Map	Back Pocket

APPENDIX	TITLE
A	Figures
B	FEMA Flood Insurance Rate Map
C	Hydrologic Calculation and Data Sheets
D	Hydraulic Calculation and Data Sheets
E	Tables

Registered Professional Engineer (Civil)
CERTIFICATE NO.
30013
TERI S.
MINTZ
Date Signed 10/19/99
ARIZONA, U.S.A.

1.0 INTRODUCTION

This master drainage report has been prepared under a contract from Stardust Development, Inc., Owner/Developer of the Dreaming Summit project. The purpose of this report is to provide the hydrologic and hydraulic analyses, required by Maricopa County, to support the preliminary plat submittals. Preparation of this report has been done according to the procedures detailed in the *Drainage Design Manual for Maricopa County, Arizona, Volumes I & II* (Reference Nos. 1 & 2). Final drainage reports will be prepared under separate covers as part of the improvement plan submittal for the infrastructure and Units 1, 2A and 2B and ultimately Unit 3.

The Dreaming Summit project site is located within Maricopa County, Arizona. The site is located within Sections 10 and 15, Township 2 North, Range 1 West of the Gila and Salt River Base and Meridian. To be more specific, the site is bound by the Colter Channel to the south, Litchfield Road to the west, Dysart Road to the east and Maryland Avenue and Clairemont Street to the north. Figure 1, located in Appendix A, illustrates the location of the project site in relation to Maricopa County street system. Dysart and Litchfield Roads will provide access to the site.

The Dreaming Summit project is a proposed single family subdivision of approximately 630 acres. Improvements to be made on-site will include full roadway sections with asphalt pavement, roll and vertical curbing, gutter and sidewalks, retention basins, and graded building pads. Off-site improvements will include roadway widening and curb and gutter adjacent to the project boundaries. Exhibit B, located in the back pocket, illustrates in concept, the proposed improvements for the project.

2.0 EXISTING DRAINAGE CONDITIONS

The proposed site is located on an undeveloped parcel that has historically been used for runoff detention. Approximately one fifth of the site has been previously graded to provide for a large detention basin, the Litchfield Park Detention Facility, changing the historic flow patterns slightly. Before the construction of the detention basin, two major washes cut across the site from the northwest to the south. After the construction of the detention basin, the two washes were intercepted and detained and released the runoff at the southeast corner of the detention facility. Currently the released flow is conveyed south in a meandering wash, Dale Creek Wash, ultimately spilling into the Colter Channel that runs along the project's southern boundary.

The site is hilly and drains in varying patterns, with the northeast corner draining northeast and the remainder of the site generally draining to the south/southeast at an average slope of 1.0 percent. Areas to the north, east, and west drain to the project site, where the flow is conveyed south to the Colter Channel. The Colter Channel is a Maricopa County Flood Control Structure that intercepts flow from the north and conveys it east to the Agua Fria River. The surrounding area to the north and portions to the east are developed and to the west it is undeveloped. Luke Air Force, to the north and northwest, affects the drainage patterns considerably.

The Litchfield Park Detention Facility is located roughly in the center of the project. Its purpose is to collect runoff from a portion of Luke Air Force Base, the residential area due north of the project site, and the undeveloped areas northwest, northeast and immediately north of the basin. The flow is released via a 42" bleedoff pipe located at the southeast corner of the basin where the flow is conveyed to the Colter Channel. The Colter Channel was constructed in 1992-1993 to permit the upgrading of Camelback Road between Litchfield Road and El Mirage Road.

The current FEMA Flood Insurance Rate Map (FIRM) for this area, map number 04013C1615H (effective date September 30, 1995) shows most of the project site is in a flood hazard Zone X. Zone X is defined as "*Areas of 500-year flood; areas of 100-year flood with average depths of less than one foot or with drainage areas less than one square mile; and areas protected by levees from 100-year flood.*" A portion of the project, the large detention basin and its major feeding watercourse, is within Zone AE. Zone AE is defined as "*Base flood elevations determined.*" The AE Zone was delineated as part of the White Tanks/Agua Fria ADMS. A copy of the current FIRM panel is provided on Appendix B.

3.0 PROPOSED DRAINAGE CONCEPT

The proposed drainage concept is presented in three parts: on-site drainage conveyance, off-site drainage, and on-site storm water retention. The hydrologic analysis is summarized in section 4.0 and the hydraulic analysis is summarized in section 5.0. On-site storm water retention calculations are in section 3.3. See Exhibit B in the back pocket for a graphical illustration of the proposed drainage concept.

3.1 On-site Drainage Conveyance

On-site storm water runoff will be conveyed through the site by the paved roadway sections that will have normal crown sections and either 4-inch roll or 6-inch vertical curb. Lots will be graded to drain into the roadway on which they front. Runoff within the northeastern section of the site will be directed towards their own comparatively smaller retention basins, while runoff from the northwest quarter will be directed towards the Litchfield Park Detention Facility.

The design of the Colter Channel (Reference #3) incorporated the design guideline that there would be a *"relaxing of the retention policy for those subbasins immediately adjacent to the Colter Channel alignment, thus allowing stormwater runoff from these adjacent areas to discharge directly to the channel without on-site retention."* After extensive discussions with Maricopa County Flood Control District (FCDMC) staff, it was determined that the boundary that is described in the Colter Channel design report refers to the Litchfield Ridge project that was proposed and in for FCDMC review at the time of the Colter Channel design process. The Litchfield Ridge project was not constructed, instead the property was incorporated into the Dreaming Summit project. That boundary correlates with the area within the Dreaming Summit project but outside of Units 1, 2A and 2B i.e. the southeastern portion of the site. This area has not been platted as of this time but will be waived of any retention requirement.

The roadway sections will be designed to convey the 10-year peak flows between the curbs and the 100-year peak flows will be contained between the property lines. Catch basins, scuppers, or depressed curbs will be used to direct the flows from the street into the retention basins or Upper Dale Creek Wash.

The Litchfield Park Detention Basin will be regraded to a smooth, landscaped community park. The park will continue to function as a regional detention facility, providing the required retention volume for the project as well as continue to provide the 88.7 acre-feet of volume reserved for off-site flows, as directed by FCDMC staff.

3.2 Off-site Drainage Conveyance

The off-site areas that historically drain into the Colter Channel, as shown on Exhibit B, will continue to do so through landscaped open space areas. Drainage from north of the project enters the site primarily through Upper Dale Creek Wash. The runoff will continue to be conveyed within the wash, however, the wash will be regraded to provide additional conveyance to contain the 100-year peak storm within the improved channel section.

Off-site runoff from the west (CP 225A) is conveyed across Litchfield Road in an existing dip section approximately 1000 feet north of the Bethany Home Road. The runoff from the dip crossing is conveyed in a drainage channel south along the east side of Litchfield Road and then east along the north side of Bethany Home Road. The flow is then released into the Litchfield Park Detention Facility. Refer to the *Infrastructure Drainage Report* prepared by DEA under a separate cover (Reference 9) for the design of the hydraulic structures.

The drainage from a second dip section on Litchfield Road, south of Bethany Home Road (CP N242C), is conveyed east/southeast within an improved channel within Unit 2B. The runoff combines with the bleedoff flow from the Litchfield Park Detention Facility, and is then released into the Colter Channel. The design parameters for the channel are included in the *Final Drainage Report for Unit 2B*, prepared by DEA under a separate cover (Reference 10).

The existing hydrology study (White Tanks ADMS) depicts flow generated within sub-basin N242B continuing east across Litchfield Road. However, due to recent roadway improvements to Litchfield Road, the street grade has been raised approximately 5 feet above the original drainage flow line. Detailed survey data was obtained in this location and stage/storage/discharge information was input into the HEC-1 analysis. It was found that the 60 cfs concentrating at N242B and the resulting volume generated from the contributing sub-basin during the 100-year, 6-hours storm event ponds along the west side of Litchfield Road. Therefore, peak flows up to and including the 100-year, 6-hour event do not affect the Dreaming Summit project.

Off-site runoff from the east is conveyed across Dysart Road by way of curb openings and culverts. One culvert is located midway between Rose Lane and the Bethany Home Road alignment (CP N242G). Another culvert crosses Dysart Road midway between the Bethany Home Road alignment and Solano Drive (CP N242H). The runoff will be conveyed in a graded swale along the west side of Dysart Road, (the existing drainage pattern is maintained). The flow will then be released into the Colter Channel at the southeast corner of the project site. The design calculations for the ditch and culvert crossing are located in the Infrastructure Drainage Report.

Off-site runoff from north of Maryland Avenue is conveyed south on 135th Avenue, with a portion splitting at the local streets that truncate at 135th Avenue, with the remaining portion collected in a storm drain system at the south end of 135th Avenue. The intercepted flow is then conveyed through Unit 2A within the storm drain system, west along Peck Drive and outlet into Upper Dale Creek Wash.

3.3 On-site Storm Water Retention

The County requires that all runoff from the 100-year, 2-hour event generated from the project site and half streets adjacent to the site be retained within the project site. However, as explained in Section 3.1, the design of the Colter Channel was based on a relaxing of this retention requirement for the area that encompassed the former Litchfield Ridge project. Generally, the volume produced from the 100-year, 2-hour storm event for sub-basins north (upstream) of the Litchfield Park Detention Facility is retained within the drainage facility or retention basins included as part of the overall drainage design of Dreaming Summit. There are three exceptions, the runoff generated from the southwestern portion of Unit 2B, Litchfield Road adjacent to this portion of Unit 2B, and the southeastern portion of Unit 1. The runoff will flow directly to Colter channel through the former Litchfield Ridge site, without being retained. The required volume of 8.26 ac-ft is provided in the Litchfield Park Detention basin.

The required retention volume for the project site will be estimated as follows:

$$V_R = C*(P/12)*A$$

Where:

V_R = Estimated volume in cubic feet
C_{wt} = Weighted runoff coefficient
P = 100-year, 2-hour depth of rainfall in inches (2.65 in)
A = Drainage area in acres

The volume required for the entire Dreaming Summit project is 121.06 ac-ft. The volume provided in the detention basin under the proposed conditions is 126.40 ac-ft. The volume calculations are included in Appendix D.

The Litchfield Park Detention Facility will be tiered at increments of 3 feet and the existing 42" bleedoff pipe will not be modified in size or invert elevations. All basins will be designed with a maximum 4:1 side slopes. In accordance with standards set by the County, the retention facilities will be drained within 36 hours. Drywells may be provided to accomplish this.

4.0 HYDROLOGIC ANALYSIS

4.1 Off-site Analysis

The US Army Corps of Engineer's HEC-1 program (Reference #4) was used to determine the 100-year peak discharges that affect the project. The preparation of the input data necessary for the analysis included delineating and measuring the drainage sub-basins, the calculation of precipitation, soil texture classification for the calculation of rainfall losses, and overland and channel flow lengths and slopes to generate the hydrograph. The Flood Control District's Drainage Design Manual System (DDMS) computer program was utilized to calculate the required basin parameters.

The peak discharges for the on-site design will utilize the Flood Control District's Rational Method program. Both the hydrologic and hydraulic analyses for the on-site design are addressed in the individual final drainage reports as each phase of grading plans are submitted. The purpose of this Master Drainage Report is to present an overall hydrologic analysis for the project.

4.1.1 Watershed Delineation

The delineation of the watershed was based on the delineation used in the Colter Channel Report which in turn utilized the White Tanks Area Drainage Master Study (Reference #5). The drainage areas and names used in this report are based on the *Hydrology of Colter Channel Contributory Drainage Area* (Reference #6). The sub-basin parameters are derived from the White Tanks ADMS.

The watershed generally encompasses the area south of the MCFCD Dysart Drain which traverses west to east between Glendale Road and Northern Avenue. The Drain intercepts the 100-year runoff from the northwest and conveys it east to the Agua Fria. The watershed downstream of the Dysart Drain encompasses portions of Luke Air Force Base, including base housing along Glendale Road. The excess runoff flows west past Litchfield Road and then continues south/southwest, combining with runoff west of Litchfield Road, north of Sunset Point. The watershed boundaries are depicted on Exhibit A, located in the back pocket.

4.1.2 Precipitation

The rainfall depth for the 100-year, 6-hour storm of 3.10 inches was determined from Figure 2.7 NOAA Atlas 2, Volume III as shown in the Drainage Design Manual for Maricopa County, Volume I Hydrology. The rainfall depth for the 100-year, 24-hour storm of 3.8 inches was determined from Figure 2.13 NOAA Atlas 2.

Depth-area reduction factors were utilized in the models to define the rainfall duration and the temporal distribution of the general storm. The depth-area reduction factors were determined from Tables 2.1a and 2.2 of the Design Manual Volume I Hydrology. The total watershed area affecting the Dreaming Summit project is 2.82 square miles. JD records were incorporated into the HEC-1 models to areally reduce the point rainfall data based on the size of the contributing watershed at a particular concentration point.

4.1.3 Rainfall losses

The Green & Ampt Loss procedure was used for the estimation of rainfall losses. The volumetric soil moisture deficit (DTHETA) , wetting front capillary suction (PSIF), and the hydraulic conductivity at natural saturation (XSAT) were calculated with the DDMS program. The soil parameters used in the DDMS calculations were derived from the *Conceptual Drainage Report for Dreaming Summit* (Reference #7) and the *Soil Conservation Service (SCS) Soil Survey of Maricopa County, Arizona Central Part (1977).* Exhibit C, located in the back pocket, depicts the soil types within each of the watershed sub-basins. Summaries of the rainfall loss data and time of concentrations are shown on Tables 3 through 8 in Appendix E.

4.1.4 Hydrograph Generation

The Clark Unit Hydrograph Procedure was utilized for the hydrograph generation. The watercourse length and slope of each basin were derived from the *Conceptual Drainage Report for Dreaming Summit*, with the exception of the developed conditions models. The developed models utilized the grades and flow paths based on the revised site plan and final grading plans. Summaries of the drainage path lengths and slopes are shown on Tables 1 and 2, located in Appendix E.

4.1.5 Channel Routing

Normal Depth Routing was applied for the routing of collector channels and the main channel. The eight point cross sections were determined from either field visits, topography generated from aerial mapping, or based on typical channel sections included in the final drainage reports for the individual phases. The overland flow analysis was performed to determine the time of concentration and the storage coefficient, which in turn were utilized in generating the unit hydrograph. Once the hydrograph was determined, it was used as the inflow hydrograph for the sub-basin. A summary of the peak discharges at the various concentration points for each of the six models is listed below in Table 4.1.

Summary of Peak Discharges
Table 4.1

	Existing Condition		Developed Condition	
Concentration Point (CP)	Q_{6hr} (CFS)	Q_{24hr}(CFS)	Q_{6hr}(CFS)	Q_{24hr}(CFS)
223D	108	94		
223E	570	417		
225 Det Basin	825	687	916	597
Outlet	97	89	93	85
225A	330	273	330	273
225B	405	282	396	279
225E	135	71		
225P1			117	83
225P2			158	101
225P3			37	1
226A	901	569		
242A	12	7		
242FP			256	183
242P1			96	60
242P2			182	117
242P3			209	144
D242B	94	67		
D242D1	492	336	507	344
D242D2	388	415	380	397
D242F	562	578	589	589
N242B	60	39	60	39
N242C	165	115	165	115
N242F	222	130		
N242G	41	27	41	27
N242H	48	32	48	32

4.2 On-site Analysis

The hydrologic analysis for this study will be done using the *Drainage Design Manual for Maricopa County*. Peak flows for the site will be computed using the Rational Method program from Maricopa County. The following establishes the Rational Method equation and the basic input data required:

$$Q = C_{wt}IA$$

Where:

Q = Peak Flow (cfs)
C_{wt} = the weighted runoff coefficient relating runoff to rainfall
I = average rainfall intensity in inches/hour, lasting for T_c
A = the contributing drainage area in acres
T_c = Time of Concentration (min.)

The peak flows for the 10-year (Q_{10}) and 100-year (Q_{100}) storm events will be computed at several locations within each unit to determine the location for 4" and 6" curbing and hydraulic structures. These analyses will be included in the final reports for the Infrastructure, Units 1, 2A and 2B.

5.0 HYDRAULIC ANALYSIS

The hydraulic analyses of the proposed storm water management facilities will be completed according to County's *Drainage Design Manual, Volume II, Hydraulics, 1991*. The Mannings formula will be used to estimate roadway stormwater conveyance at various slopes. The design and data sheets for Units 1, 2A & 2B will be provided in the final drainage reports which are prepared under a separate cover and will be submitted to FCD for approval.

As previously discussed in Section 2.0, the site contains a flood hazard zone AE with base flood elevations provided. Upon approval of the final drainage reports for Units 1, 2A and 2B, this Master Drainage Report will be amended to reflect the final channel design of Dale Creek Wash and the Litchfield Park Detention Facility. A Conditional Letter of Map Revision (CLOMR) will be prepared to remove affected lots from the flood hazard designation. The HEC-2 analysis that was the basis of the flood hazard zones within the project boundaries has been converted to HEC-RAS (Reference 8) to create a duplicate effective model for use in the Conditional and Letter of Map Revision (CLOMR and LOMR) procedure. The resulting water surface elevations have been found to be comparable with those from the effective or existing HEC-2 model as shown below.

A revised model was created, depicting the proposed channel cross section and configuration. The original HEC-2 model included cross sections in the retention basin. This is not the usual starting conditions method. The revised HEC-RAS model uses the 100-year water surface elevation within the detention basin as determined from the HEC-1 model as the starting water surface elevation for the backwater calculation. The resulting water surface elevations for the three models are shown below in Table 5.1. The HEC-2 and HEC-RAS input files and output summary tables are included in Appendix E for reference.

Upper Dale Creek Wash
Water Surface Elevations
Table 5.1

Cross Section ID	Existing WSEL (White Tanks ADMS)	Duplicate Effective WSEL (Dreaming Summit)	Developed WSEL (Dreaming Summit)
0.180	1063.06	1063.06	1064.20
0.204			1065.02
0.219			1065.02
0.226			1065.33
0.233			1065.34
0.240			1065.34
0.247	1065.06	1065.06	1065.35
0.265			1065.37
0.283			1065.41
0.323	1067.54	1067.54	1066.56
0.367			1066.10
0.414	1069.26	1069.26	1067.21
0.446			1067.95
0.462			1068.31
0.477	1070.85	1070.82	1068.70
0.487			1068.92
0.496	1071.39	1071.41	1069.15
0.525			1069.79
0.554			1070.68
0.597	1072.56	1072.58	1072.50
0.684	1073.36	1073.37	1073.39
0.775	1074.87	1074.86	1074.85
0.856	1075.72	1075.73	1075.73
0.938	1075.97	1075.97	1075.97
1.019	1076.26	1076.26	1076.26
1.080	1076.51	1076.51	1076.51

The U.S. Army Corps of Engineers has classified a portion of the Dreaming Summit project site as jurisdictional Waters of the US. Due to the proposed changes to the detention facility and regrading of Dale Creek Wash upstream of the detention facility, a 404 permit is required. Because the disturbed area exceeds 3 acres, an individual permit is required. The 404 permit was issued in October 1999.

6.0 CONCLUSIONS AND RECOMMENDATIONS

Based on the results of this study, it can be concluded that:

- The site can be developed according to the guidelines set in the *Drainage Design Manuals for Maricopa County*.
- The development of the site will require that the 10-year event be contained within the roadway and the 100-year event be contained within the property lines
- All finished floor elevations will be set above the 100-year water surface elevation
- The area of the former Litchfield Ridge project is exempt of any retention requirements
- A LOMR is required to remove affected lots from the current AE flood hazard designation
- Each individual unit will be required to prepare a final drainage report and submit it for FCD approval

7.0 REFERENCES

1) *Drainage Design Manual for Maricopa County, Arizona, Volume I, Hydrology*, 1992
2) *Drainage Design Manual for Maricopa County, Arizona, Volume II, Hydraulics*, 1991
3) *Colter Channel Project*, November, 1992, CRSS Civil Engineers, Inc. and Wood, Patel & Associates, Inc.
4) Hydrologic Engineering Center, US Army Corps of Engineers, HEC-1 computer program, April 1996
5) *White Tanks Area Drainage Master Study*, The WLB Group, 19992
6) *Hydrology of Colter Channel Contributory Drainage Area*, DBB, 1992
7) *Conceptual Drainage Report for Dreaming Summit*, AGRA Infrastructure, Inc., August 1998
8) Hydrologic Engineering Center, HEC-RAS computer program, Version 2.1
9) *Infrastructure Drainage Report, Dreaming Summit*, David Evans and Associates, August 1999
10) *Final Drainage Report for Unit 2B, Dreaming Summit*, David Evans and Associates, August 1999
11) *Final Drainage Report for Unit 1, Dreaming Summit*, David Evans and Associates, September 1999
12) *Final Drainage Report for Unit 2A, Dreaming Summit*, David Evans and Associates, August 1999

APPENDIX A
FIGURES

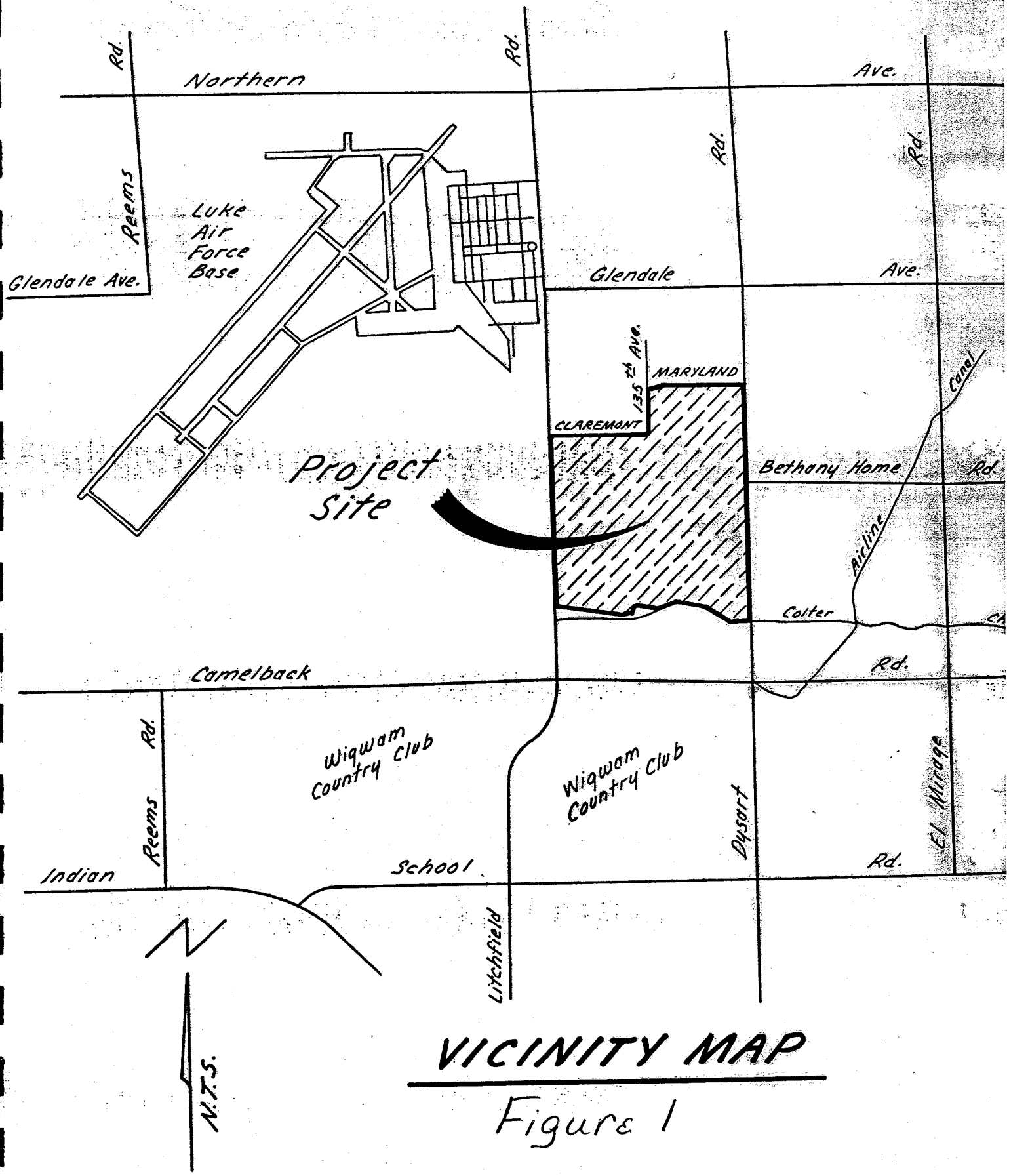

VICINITY MAP

Figure 1

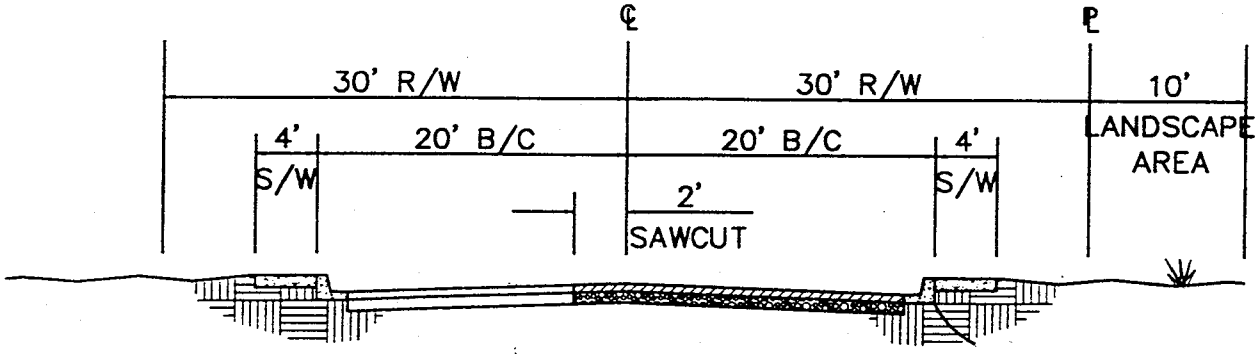

MINOR COLLECTOR ROAD

135TH AVENUE
& MISSOURI AVUNUE

(NOT TO SCALE)

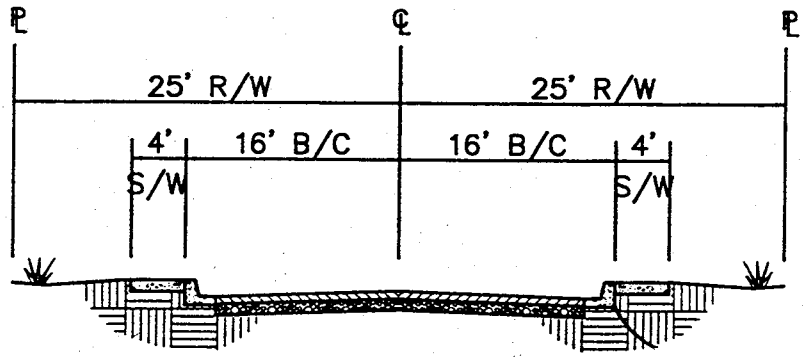

LOCAL STREET SECTONS

(NOT TO SCALE)

TYPICAL STREET SECTIONS
FIGURE 2

CHPV0003 tsm 04/15/99 14:35:36 tsm S:\DRW\STAR0068\CAD\st68fig2.dwg

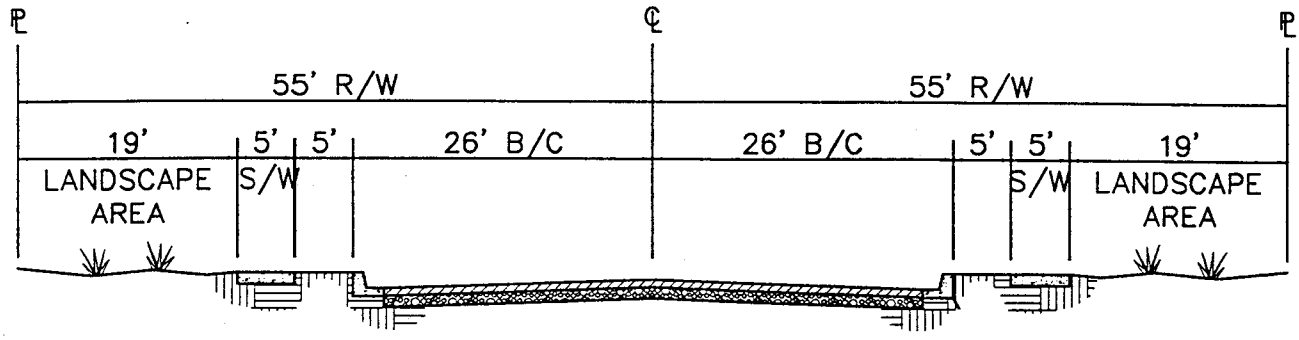

URBAN MAJOR COLLECTOR ROAD (MODIFIED)

BETHANY HOME (NOT TO SCALE)

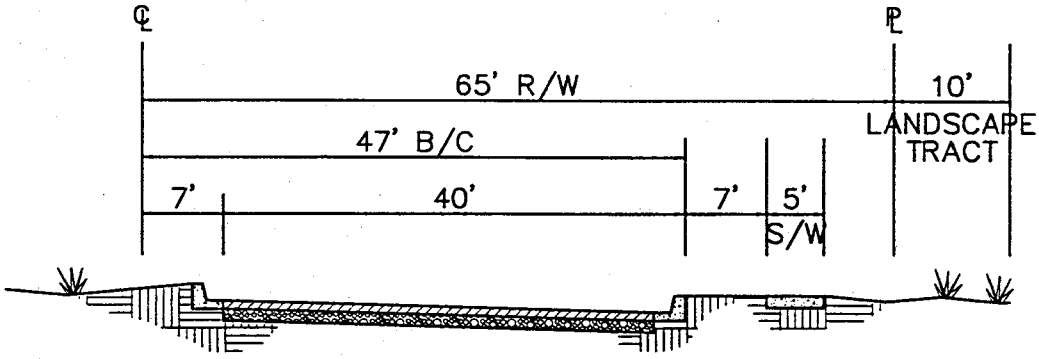

URBAN PRINCIPAL ARTERIAL ROAD

DYSART ROAD (NOT TO SCALE)

TYPICAL STREET SECTIONS

FIGURE 2

CHPV0003 tsm 04/15/99 14:16:21 tsm S:\DRN\STAR0068\CAD\ST68fig2.dwg

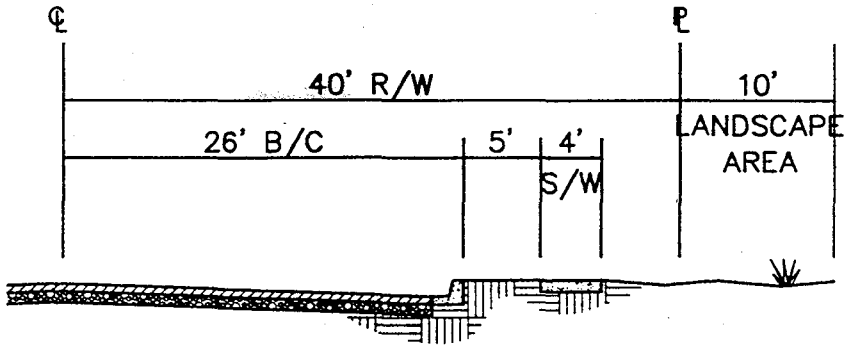

URBAN MAJOR COLLECTOR ROAD

135TH AVENUE (NOT TO SCALE)

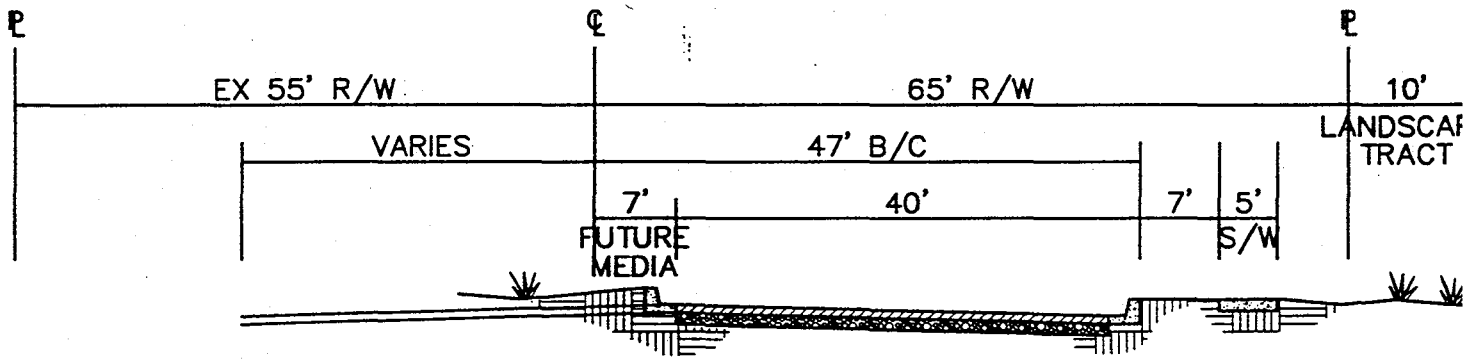

URBAN PRINCIPAL ARTERIAL ROAD

LITCHFIELD ROAD (NOT TO SCALE)

CHPV0003 tam 04/15/99 14:35:36 tam S:\DRN\STAR0068\CAD\St68fig2.dwg

TYPICAL STREET SECTIONS

FIGURE 2

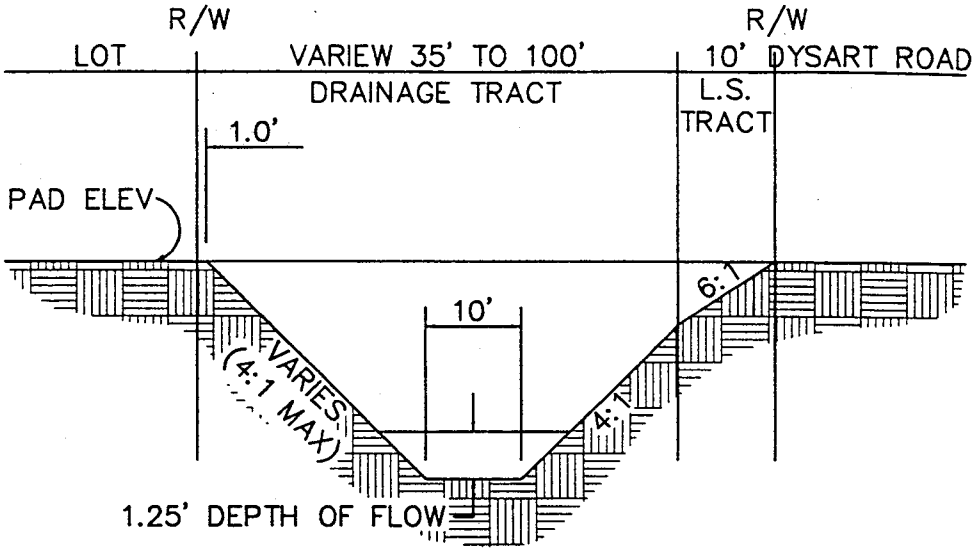

DYSART ROAD CHANNEL

(NOT TO SCALE)

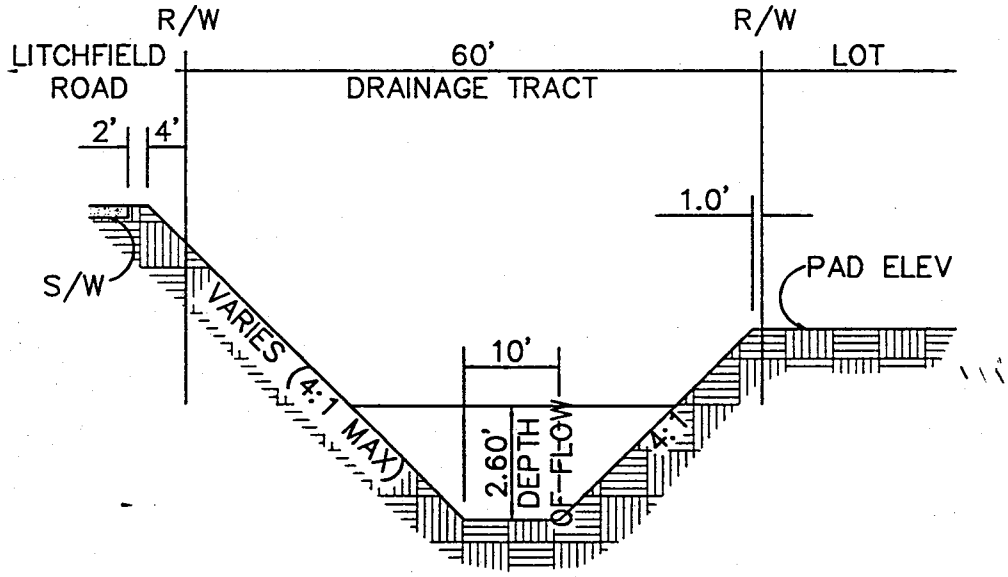

LITCHFIELD ROAD CHANNEL

(NOT TO SCALE)

TYPICAL CHANNEL SECTIONS

FIGURE 3

PAGE 1 OF 2

CHPV0003 tsm 04/15/99 14:55:01 tsm S:\DRW\STAR0068\CAD\SI68fig3.dwg

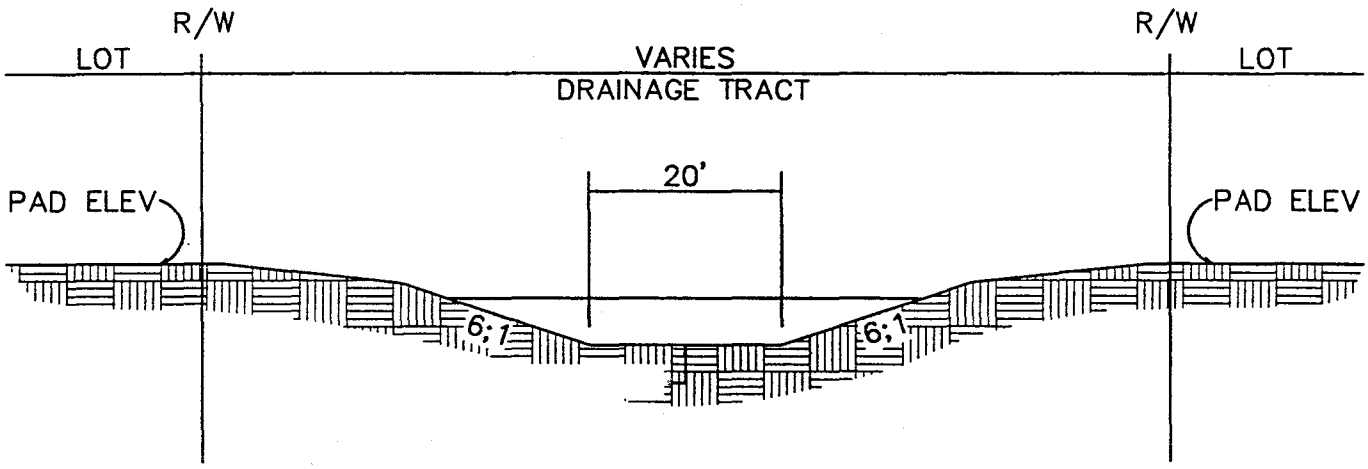

UPPER DALE CREEK WASH

(NOT TO SCALE)

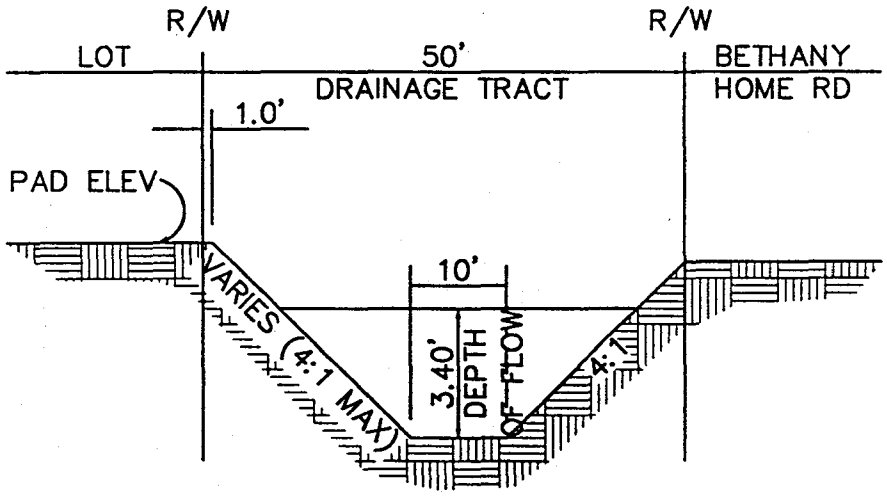

BETHANY HOME ROAD

(NOT TO SCALE)

TYPICAL CHANNEL SECTIONS

FIGURE 3

PAGE 2 OF 2

CHPV0003 tsm 04/15/99 14:55:01 tsm S:\DRN\STAR0068\CAD\St68fig3.dwg

APPENDIX B
FEMA FLOOD INSURANCE RATE MAP

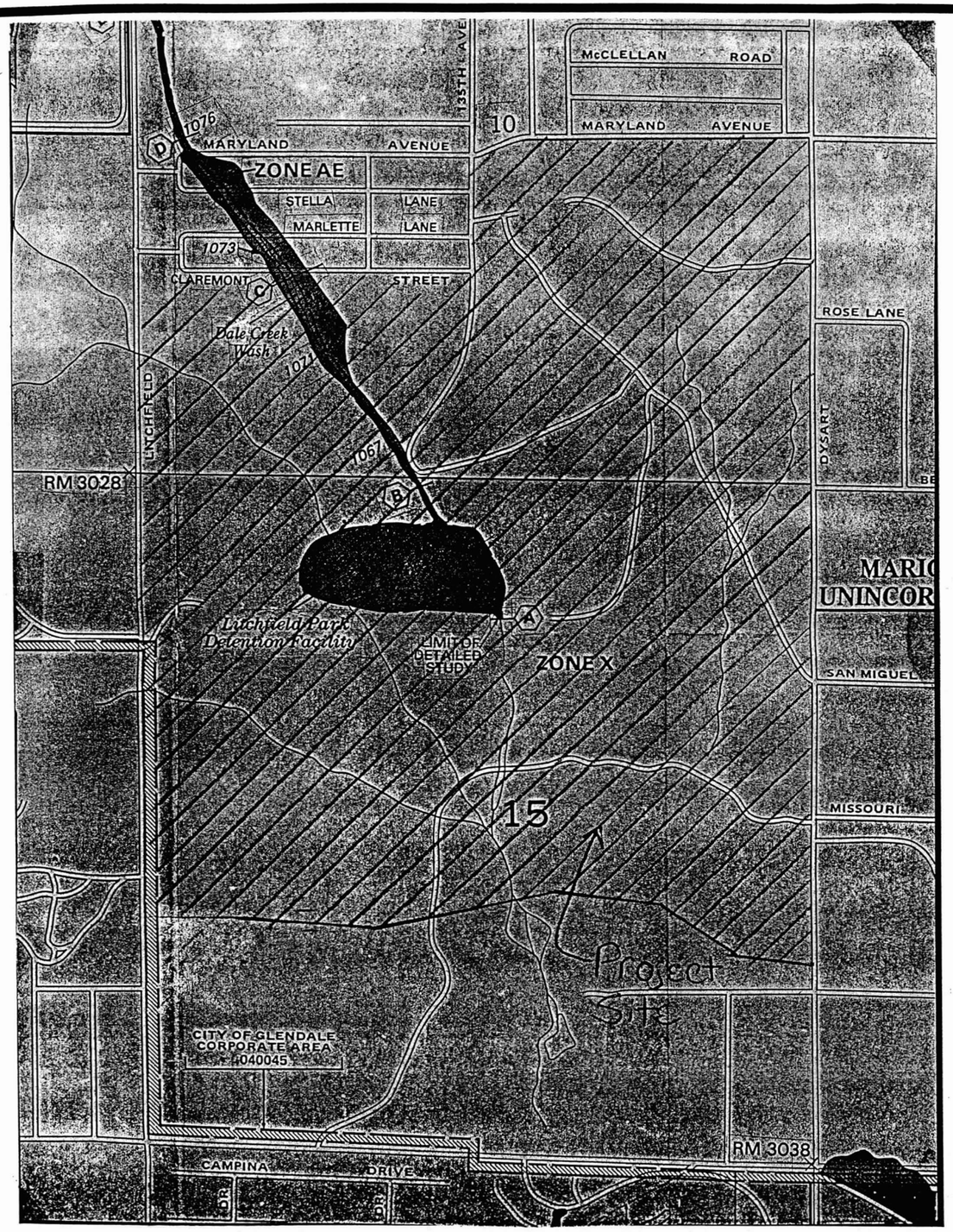

PORTION OF PANEL SHOWING SITE

LEGEND

SPECIAL FLOOD HAZARD AREAS INUNDATED BY 100-YEAR FLOOD

- **ZONE A** — No base flood elevations determined.
- **ZONE AE** — Base flood elevations determined.
- **ZONE AH** — Flood depths of 1 to 3 feet (usually areas of ponding); base flood elevations determined.
- **ZONE AO** — Flood depths of 1 to 3 feet (usually sheet flow on sloping terrain); average depths determined. For areas of alluvial fan flooding, velocities also determined.
- **ZONE A99** — To be protected from 100-year flood by Federal flood protection system under construction; no base elevations determined.
- **ZONE V** — Coastal flood with velocity hazard (wave action); no base flood elevations determined.
- **ZONE VE** — Coastal flood with velocity hazard (wave action); base flood elevations determined.

FLOODWAY AREAS IN ZONE AE

OTHER FLOOD AREAS

- **ZONE X** — Areas of 500-year flood; areas of 100-year flood with average depths of less than 1 foot or with drainage areas less than 1 square mile; and areas protected by levees from 100-year flood.

OTHER AREAS

- **ZONE X** — Areas determined to be outside 500-year flood plain.
- **ZONE D** — Areas in which flood hazards are undetermined.

Flood Boundary

Floodway Boundary

Zone D Boundary

Boundary Dividing Special Flood Hazard Zones, and Boundary Dividing Areas of Different Coastal Base Flood Elevations Within Special Flood Hazard Zones.

513 — Base Flood Elevation Line; Elevation in Feet*

D — D — Cross Section Line

(EL 987) — Base Flood Elevation in Feet Where Uniform Within Zone*

RM7X — Elevation Reference Mark

*Referenced to the National Geodetic Vertical Datum of 1929

N

APPROXIMATE SCALE IN FEET

1000 0 1000

MAP LEGEND

NATIONAL FLOOD INSURANCE PROGRAM

FIRM
FLOOD INSURANCE RATE MAP

MARICOPA COUNTY, ARIZONA AND INCORPORATED AREAS

PANEL 1615 OF 4350

CONTAINS:

COMMUNITY	NUMBER	PANEL	SUFFIX
AVONDALE, CITY OF	040038	1615	H
EL MIRAGE, TOWN OF	040041	1615	H
GLENDALE, CITY OF	040045	1615	H
GOODYEAR, TOWN OF	040046	1615	H
LITCHFIELD PARK, CITY OF	040128	1615	H
MARICOPA COUNTY			
UNINCORPORATED AREAS	040037	1615	H
PHOENIX, CITY OF	040051	1615	H

MAP NUMBER
04013C1615 H

MAP REVISED:
SEPTEMBER 30, 1995

Federal Emergency Management Agency

FIRM PANEL

APPENDIX C
HYDROLOGIC CALCULATIONS

EXISTING CONDITIONS HEC-1
100-YEAR, 6-HOUR

```
****************************************
*                                      *
*  FLOOD HYDROGRAPH PACKAGE  (HEC-1)   *
*            MAY   1991                *
*         VERSION 4.0.1E               *
*    Lahey F77L-EM/32 version 5.01     *
*      Dodson & Associates, Inc.       *
*  RUN DATE  08/24/99  TIME  11:04:47  *
****************************************
```

```
****************************************
*                                      *
*    U.S. ARMY CORPS OF ENGINEERS      *
*    HYDROLOGIC ENGINEERING CENTER     *
*          609 SECOND STREET           *
*       DAVIS, CALIFORNIA 95616        *
*           (916) 551-1748             *
*                                      *
****************************************
```

```
X     X  XXXXXXX   XXXXX          X
X     X  X        X     X        XX
X     X  X        X              X
XXXXXXX  XXXX     X        XXXXX  X
X     X  X        X              X
X     X  X        X     X        X
X     X  XXXXXXX   XXXXX         XXX
```

THIS PROGRAM REPLACES ALL PREVIOUS VERSIONS OF HEC-1 KNOWN AS HEC1 (JAN 73), HEC1GS, HEC1DB, AND HEC1KW.

THE DEFINITIONS OF VARIABLES -RTIMP- AND -RTIOR- HAVE CHANGED FROM THOSE USED WITH THE 1973-STYLE INPUT STRUCTURE.
THE DEFINITION OF -AMSKK- ON RM-CARD WAS CHANGED WITH REVISIONS DATED 28 SEP 81. THIS IS THE FORTRAN77 VERSION
NEW OPTIONS: DAMBREAK OUTFLOW SUBMERGENCE , SINGLE EVENT DAMAGE CALCULATION, DSS:WRITE STAGE FREQUENCY,
DSS:READ TIME SERIES AT DESIRED CALCULATION INTERVAL LOSS RATE:GREEN AND AMPT INFILTRATION
KINEMATIC WAVE: NEW FINITE DIFFERENCE ALGORITHM

```
LINE          ID.......1.......2.......3.......4.......5.......6.......7.......8.......9......10

  1           ID        DREAMING SUMMIT HYDROLOGY       FILE: EXST_6HR.DAT      AUGUST   1999
  2           ID        EXISTING CONDITIONS
  3           ID        LOCATION:
  4           ID                NORTH OF LITCHFIELD PARK, SOUTHEAST OF LUKE AFB,
  5           ID                BETWEEN DYSART ROAD, LITCHFIELD ROAD, COLTER CHANNEL, AND
  6           ID                DYSART DRAIN
  7           ID                T 2 N, R 1 W, GILA AND SALT RIVER MERIDIAN, ARIZONA
  8           ID        BASIN AREAS:
  9           ID                BASED ON WHITE TANKS AREA DRAINAGE MASTER STUDY, WLB GROUP, 1992
 10           ID                WITH ADJUSTMENTS MADE PER WTADMS MAPPING.
 11           ID                WATERSHED AREA AFFECTING DREAMING SUMMIT IS 2.82 SQ MI
 12           ID        PRECIP: MCFCD 6-HOUR PRECIPITATION
 13           ID                NOAA ATLAS 2 DEPTHS
 14           ID                AREAL REDUCTION PER MCFCD USING JD OPTION.
 15           ID        LOSSES: GREEN AND AMPT PARAMETERS PER MCFCD DRAINAGE DESIGN MANUAL VOL 1
 16           ID        UNIT HYDROGRAPHS:
 17           ID                CLARK UNIT HYDROGRAPH METHOD WITH PARAMETERS DEVELOPED USING
 18           ID                MCFCD'S MCUHP1.EXE PROGRAM
 19           ID        CHANNEL ROUTING:
 20           ID                NORMAL DEPTH METHOD
 21           ID
 22           ID                ROUTING,DIVERSION AND RATING DATA PROVIDED FROM RESEARCH BY
 23           ID                AGRA INFRASTRUCTURE, INC.
 24           ID        AREA/STAGE/DISCHARGE ROUTINE ADDED AT N242B PER SURVEY DATA
 25           ID   DDM MCUHP1 Dreaming Summit
              *DIAGRAM
 26           IT       5                    300
 27           IO       5
 28           IN      15
 29           JD    3.10    0.01
 30           PC    .000    .008    .016    .025    .033    .041    .050    .058    .066    .074
 31           PC    .087    .099    .118    .138    .216    .377    .834    .911    .931    .950
 32           PC    .962    .972    .983    .991   1.000
 33           JD    3.08    0.50
 34           JD    3.04    2.80
 35           PC    .000    .009    .016    .025    .034    .042    .051    .059    .067    .076
 36           PC    .087    .100    .120    .163    .252    .451    .694    .837    .900    .938
 37           PC    .950    .963    .975    .988   1.000
 38           JD    2.86    16.0
 39           PC    .000    .015    .020    .030    .048    .063    .076    .090    .105    .119
 40           PC    .135    .152    .175    .222    .304    .472    .670    .796    .868    .912
 41           PC    .946    .960    .973    .987   1.000
 42           JD    2.51    90.0
 43           JD    1.77   500.0
              * DDM   ***** Preserved *****

 44           KK   S226A
 45           KM   PORTION OF WTADMS SUB-BASIN 226
 46           KM   AREA EAST OF LUKE AFB THAT FLOWS WEST INTO LUKE AFB
 47           KM   UA RECORED BASED OFF URBAN WATERSHED
 48           KM     L =  .61  Kb = .033  Adj. Slope =   10.0
 49           BA    .491
 50           LG    .170    .290   4.800    .330  26.000
 51           UC    .580    .200
 52           UA       0       5      16      30      65      77      84      90      94      97
```

```
LINE          ID.......1.......2.......3.......4.......5.......6.......7.......8.......9......10

  53          UA     100
              * DDM   ***** Preserved *****

  54          KK   D226A
  55          KM   DIVERT FLOWS EAST TOWARD AGUA FRIA RIVER IN 36 INCH STORM DRAIN
  56          KM   DIVERT FLOWS NORTH TOWARD DYSART DRAIN IN THREE 18 INCH STORM DRAINS
  57          DT  DI226A
  58          DI       0      31    2000
  59          DQ       0      31      31
              * DDM   ***** Preserved *****

  60          KK  RS226A
  61          KM   STORAGE ROUTE S226 AS IN WTADMS
  62          RS       1    STOR       0
  63          SV       0    0.24    3.34   18.04   51.44  102.84  171.74
  64          SE  1075.2  1075.5    1076  1076.5    1077  1077.5    1078
  65          SQ       0       0      21     136     428     875    1487
              * DDM   ***** Preserved *****

  66          KK   R226A
  67          KM   ROUTE S226A THROUGH S223E
  68          RS       3              -1
  69          RC     .05     .02     .05    1800    .001
  70          RX    9300    9600    9985    9986   10014   10015   10400   10700
  71          RY    1076  1075.2  1075.1  1074.9  1074.9  1075.1  1075.2    1076
              * DDM   ***** Preserved *****

  72          KK   S223E
  73          KM   PORTION OF WTADMS SUB-BASIN 223
  74          KM   PORTION OF LUKE AFB THAT FLOWS BY STORM DRAIN TO PUMP STATION
  75          KM   UA RECORED BASED OFF URBAN WATERSHED
  76          KM     L =  .57  Kb = .048  Adj. Slope =   12.0
  77          BA    .324
  78          LG    .060    .350    4.80    .250  90.000
  79          UC    .650    .290
  80          UA       0       5      16      30      65      77      84      90      94      97
  81          UA     100
              * DDM   ***** Preserved *****

  82          KK   C223E
  83          KM   COMBINE R226A AND S223E
  84          HC       2
              * DDM   ***** Preserved *****

  85          KK   D223E
  86          KM   DIVERT ALL BUT PUMPED FLOWS OUT OF MODEL TO WEST.  PUMPED GOES TO S223D
  87          DT  DI223E
  88          DI       0      60   10060
  89          DQ       0       0   10000
              * DDM   ***** Preserved *****
```

```
LINE          ID.......1.......2.......3.......4.......5.......6.......7.......8.......9......10

  90          KK   S223D
  91          KM   PORTION OF LUKE AFB THAT DRAINS BY GRAVITY TOWARD COLTER CHANNEL
  92          KM   UA RECORED BASED OFF URBAN WATERSHED
  93          KM     L =  .16  Kb = .065  Adj. Slope =   38.0
  94          BA    .020
  95          LG    .060    .350   4.800    .250  90.000
  96          UC    .240    .160
  97          UA       0       5      16      30      65      77      84      90      94      97
  98          UA     100
              * DDM   ***** Preserved *****

  99          KK   C223D
 100          KM   COMBINE R223E AND S223D AT SOUTHEAST LUKE AFB OUTLET
 101          HC       2
              * DDM   ***** Preserved *****

 102          KK  RS223D
 103          KM   ROUTE C223D THROUGH BASIN AND CULVERT AT SOUTHEAST LUKE AFB OUTLET
 104          RS       1    STOR
 105          SV       0      .9     1.6
 106          SE    1078    1079    1080
 107          SQ       0      60     200
              * DDM   ***** Preserved *****

 108          KK   R223D
 109          KM   ROUTE C223D TO LITCHFIELD ROAD CROSSING
 110          RS       3              -1
 111          RC     .05      .1     .05    1850    .003
 112          RX     750     850     950     960    1040    1050    1150    1250
 113          RY      74      72      72      71      71      72      72      74
              * DDM   ***** Preserved *****

 114          KK   S225A
 115          KM   DREAMING SUMMIT OFF-SITE PORTION OF WTADMS SUB-BASIN 225A
 116          KM   RUNOFF FROM SOUTH OF LUKE AFB CROSSING LITCHFIELD ROAD N. OF SUNSET POINT
 117          KM   UA RECORED BASED OFF NATURAL WATERSHED
 118          KM     L =  .55  Kb = .050  Adj. Slope =   20.0
 119          BA    .219
 120          LG    .350    .350   4.700    .290    .000
 121          UC    .600    .310
 122          UA       0       3       5       8      12      20      43      75      90      96
 123          UA     100
              * DDM   ***** Preserved *****

 124          KK   C225A
 125          KM   COMBINE R223D AND S225A AT LITCHFIELD ROAD
 126          HC       2
              * DDM   ***** Preserved *****
```

```
LINE          ID.......1.......2.......3.......4.......5.......6.......7.......8.......9......10

 127          KK   R225A
 128          KM   ROUTE C225A TO LITCHFIELD DETENTION FACILITY
 129          RS       2              -1
 130          RC     .03     .03     .03    2000   .0025
 131          RX       0     100     400     450     550     600     900    1000
 132          RY      74      72    70.2      70      70    70.2      72      74
              * DDM   ***** Preserved *****

 133          KK   S225C
 134          KM   DREAMING SUMMIT ON-SITE PORTION OF WTADMS SUB-BASIN 225A
 135          KM   UA RECORED BASED OFF NATURAL WATERSHED
 136          KM     L =  .40  Kb = .053  Adj. Slope =   12.0
 137          BA    .156
 138          LG    .350    .390   5.700    .190    .000
 139          UC    .600    .290
 140          UA       0       3       5       8      12      20      43      75      90      96
 141          UA     100
              * DDM   ***** Preserved *****

 142          KK   C225C
 143          KM   COMBINE R225A AND S225C AT LITCHFIELD DETENTION FACILITY
 144          HC       2
              * DDM   ***** Preserved *****

 145          KK   S225E
 146          KM   DREAMING SUMMIT ONSITE PORTION OF WTADMS SUB-BASIN 226
 147          KM   UA RECORED BASED OFF NATURAL WATERSHED
 148          KM   L =  .20  Kb = .059  Adj. Slope = 100
 149          BA    .053
 150          LG    .350    .350   4.500    .330    .000
 151          UC    .220    .100
 152          UA       0       3       5       8      12      20      43      75      90      96
 153          UA     100
              * DDM   ***** Preserved *****

 154          KK   R225E
 155          KM   ROUTE S225E THROUGH S225B
 156          RS       9              -1
 157          RC     .04     .04     .04    7800    .003
 158          RX     200     201     425     426     574     575     799     800
 159          RY       1      .5      .5       0       0      .5      .5       1
              * DDM   ***** Preserved *****

 160          KK   S225B
 161          KM   DREAMING SUMMIT OFF-SITE PORTION OF WTADMS SUB-BASIN 225
 162          KM   UA RECORED BASED OFF URBAN WATERSHED
 163          KM     L = 1.69  Kb = .034  Adj. Slope =   17.0
 164          BA    .539
 165          LG    .220    .300   5.000    .290  11.000
 166          UC    .960    .760
 167          UA       0       5      16      30      65      77      84      90      94      97
 168          UA     100
              * DDM   ***** Preserved *****
```

```
LINE          ID.......1.......2.......3.......4.......5.......6.......7.......8.......9......10

  169         KK   C225B
  170         KM   COMBINE S225E AND S225B
  171         HC       2
              * DDM   ***** Preserved *****

  172         KK   R225B
  173         KM   ROUTE C225B TO LITCHFIELD DETENTION FACILITY
  174         RS       3              -1
  175         RC     .04     .04    .035    2000   .0025
  176         RX     250     350     450     490     510     550     650     750
  177         RY    72.5    71.5    70.5      70      70    70.5    71.5    72.5
              * DDM   ***** Preserved *****

  178         KK   S225D
  179         KM   DREAMING SUMMIT ON-SITE PORTION OF WTADMS SUB-BASIN 225
  180         KM   UA RECORED BASED OFF NATURAL WATERSHED
  181         KM     L =  .74  Kb = .050  Adj. Slope =   41.0
  182         BA    .230
  183         LG    .350    .350   4.900    .270    .000
  184         UC    .550    .340
  185         UA       0       3       5       8      12      20      43      75      90      96
  186         UA     100
              * DDM   ***** Preserved *****

  187         KK   C225D
  188         KM   COMBINE R225B AND S225D AT LITCHFIELD DETENTION FACILITY
  189         HC       2
              * DDM   ***** Preserved *****

  190         KK    C225
  191         KM   COMBINE C225C AND C225D AT LITCHFIELD DETENTION FACILITY
  192         HC       2
              * DDM   ***** Preserved *****

  193         KK   RS225
  194         KM   STORAGE ROUTE C225 THROUGH LITCHFIELD DETENTION FACILITY
  195         KM   WITH 42" PIPE OUTLET, INV=1058
  196         RS       1    STOR       0
  197         SA     1.4    2.28    4.74   12.66   18.47   20.39   21.21   21.62   22.26
  198         SE    1058    1059    1060    1061    1062    1063    1064    1065    1066
  199         SQ       0       5      18      37      58      79      92     104     115
              * DDM   ***** Preserved *****

  200         KK    R225
  201         KM   ROUTE RS225 TO COLTER CHANNEL
  202         RS       2              -1
  203         RC     .04     .04     .04    1800   .0025
  204         RX     200     350     470     475     525     530     650     800
  205         RY      68      66      64      60      60      64      66      68
              * DDM   ***** Preserved *****
```

```
LINE          ID.......1.......2.......3.......4.......5.......6.......7.......8.......9......10

  206         KK   S242A
  207         KM   ONSITE PORTION OF WTADMS SUB-BASIN S242A
  208         KM   UA RECORED BASED OFF NATURAL WATERSHED
  209         KM     L =  .10  Kb = .073  Adj. Slope =  160.0
  210         BA    .005
  211         LG    .350    .350   4.550    .320    .000
  212         UC    .150    .140
  213         UA       0       3       5       8      12      20      43      75      90      96
  214         UA     100
              * DDM   ***** Preserved *****

  215         KK   D242A
  216         KM   DIVERT 242A PAST COLTER CHANNEL
  217         DT  DI242A
  218         DI       0    1000
  219         DQ       0    1000
              * DDM   ***** Preserved *****

  220         KK  SN242B
  221         KM   OFFSITE PORTION OF COLTER CHANNEL SUB-BASIN D242B
  222         KM   UA RECORED BASED OFF NATURAL WATERSHED
  223         KM     L =  .24  Kb = .062  Adj. Slope =   65.0
  224         BA    .033
  225         LG    .350    .350   4.300    .380    .000
  226         UC    .290    .210
  227         UA       0       3       5       8      12      20      43      75      90      96
  228         UA     100

  229         KK  RN242B
  230         KM  PONDING THAT OCCURS ALONG THE WEST SIDE OF LITCHFIELD RD
  231         RS       1    STOR       0
  232         SA    .370   1.295   2.249   3.459   4.711   5.764
  233         SE    1083    1084    1085    1086    1087    1088
  234         SQ       0       0       0       0       0      20
              * DDM   ***** Preserved *****

  235         KK  RN242B
  236         KM   ROUTE SN242B THROUGH SD242B
  237         RS       2              -1
  238         RC     .04     .04     .04    2400    .007
  239         RX       0       1       2      49      50      98      99     100
  240         RY       5       5       4       0       0       4       5       5
              * DDM   ***** Preserved *****

  241         KK  SD242B
  242         KM   ONSITE PORTION OF COLTER CHANNEL SUB-BASIN D242B
  243         KM   UA RECORED BASED OFF NATURAL WATERSHED
  244         KM     L =  .51  Kb = .057  Adj. Slope =   69.0
  245         BA    .068
  246         LG    .350    .350   4.650    .300    .000
  247         UC    .400    .360
  248         UA       0       3       5       8      12      20      43      75      90      96
  249         UA     100
              * DDM   ***** Preserved *****
```

```
LINE          ID.......1.......2.......3.......4.......5.......6.......7.......8.......9......10

 250          KK   C242B
 251          KM   COMBINE RN242B AND SD242B AT COLTER CHANNEL
 252          HC       2
              * DDM   ***** Preserved *****

 253          KK   R242B
 254          KM   ROUTE C242B IN COLTER CHANNEL
 255          RS       1              -1
 256          RC     .03     .03     .03     500   .0035
 257          RX     448     449     450     475     525     550     551     552
 258          RY      44      44      44      40      40      44      44      44
              * DDM   ***** Preserved *****

 259          KK  SN242C
 260          KM   OFFSITE PORTION OF COLTER CHANNEL SUB-BASIN N242C (EXIST)
 261          KM   UA RECORED BASED OFF NATURAL WATERSHED
 262          KM     L =  .49  Kb = .054  Adj. Slope =   24.0
 263          BA    .127
 264          LG    .350    .350   4.550    .320    .000
 265          UC    .560    .350
 266          UA       0       3       5       8      12      20      43      75      90      96
 267          UA     100
              * DDM   ***** Preserved *****

 268          KK  RN242C
 269          KM   ROUTE SN242C THROUGH SD242D
 270          RS       2              -1
 271          RC     .04     .04     .04    2600    .01
 272          RX       0       1       2      49      50      98      99     100
 273          RY       5       5       4       0       0       4       5       5
              * DDM   ***** Preserved *****

 274          KK  SD242D
 275          KM   ONSITE PORTION OF COLTER CHANNEL SUB-BASIN N242C (EXIST) AND D242D
 276          KM   UA RECORED BASED OFF NATURAL WATERSHED
 277          KM     L =  .47  Kb = .050  Adj. Slope =   21.0
 278          BA    .241
 279          LG    .350    .360   5.000    .260    .000
 280          UC    .530    .230
 281          UA       0       3       5       8      12      20      43      75      90      96
 282          UA     100
              * DDM   ***** Preserved *****

 283          KK  C242D1
 284          KM   COMBINE RN242C AND SD242D AT COLTER CHANNEL
 285          HC       2
              * DDM   ***** Preserved *****

 286          KK  C242D2
 287          KM   COMBINE R225, 242A, C242D1 AND R242B AT COLTER CHANNEL
 288          HC       4
              * DDM   ***** Preserved *****
```

```
LINE          ID.......1.......2.......3.......4.......5.......6.......7.......8.......9......10

 289          KK   R242D
 290          KM   ROUTE C242D2 IN COLTER CHANNEL TO CD242F
 291          RS       3              -1
 292          RC     .03     .03     .03    2300   .0035
 293          RX     448     449     450     475     525     550     551     552
 294          RY      44      44      44      40      40      44      44      44
              * DDM   ***** Preserved *****

 295          KK  SN242G
 296          KM   NORTH OFFSITE PORTION OF COLTER CHANNEL DESIGN SUB-BASIN N242F
 297          KM   UA RECORED BASED OFF URBAN WATERSHED
 298          KM     L =  .27  Kb = .038  Adj. Slope =   56.0
 299          BA    .021
 300          LG    .150    .260   4.550    .400  17.000
 301          UC    .230    .230
 302          UA       0       5      16      30      65      77      84      90      94      97
 303          UA     100
              * DDM   ***** Preserved *****

 304          KK  RN242G
 305          KM   ROUTE SN242G THROUGH SN242F
 306          RS       1              -1
 307          RC     .05     .04     .05    1000    .015
 308          RX      49      50      85      90     110     115     150     151
 309          RY      91      90      81      80      80      81      90      91
              * DDM   ***** Preserved *****

 310          KK  SN242F
 311          KM   ONSITE PORTION OF COLTER CHANNEL DESIGN SUB-BASIN N242F
 312          KM   UA RECORED BASED OFF NATURAL WATERSHED
 313          KM     L =  .33  Kb = .056  Adj. Slope =  152.0
 314          BA    .081
 315          LG    .350    .350   4.600    .310    .000
 316          UC    .240    .130
 317          UA       0       3       5       8      12      20      43      75      90      96
 318          UA     100
              * DDM   ***** Preserved *****

 319          KK  CN242F
 320          KM   COMBINE RN242G AND SN242F
 321          HC       2
              * DDM   ***** Preserved *****

 322          KK  RN242F
 323          KM   ROUTE CN242F TO COLTER CHANNEL
 324          RS       4              -1
 325          RC     .04     .05     .04    2400    .006
 326          RX      90     100     475     495     505     525     900     910
 327          RY       1      .7      .7       0       0      .7      .7       1
              * DDM   ***** Preserved *****
```

```
LINE          ID.......1.......2.......3.......4.......5.......6.......7.......8.......9......10

  328         KK  SN242H
  329         KM   SOUTH OFFSITE PORTION OF COLTER CHANNEL DESIGN SUB-BASIN N242F
  330         KM   UA RECORED BASED OFF URBAN WATERSHED
  331         KM     L =  .27  Kb = .046  Adj. Slope =   41.0
  332         BA    .027
  333         LG    .220    .290   4.550    .370  11.000
  334         UC    .290    .250
  335         UA       0       5      16      30      65      77      84      90      94      97
  336         UA     100
              * DDM   ***** Preserved *****

  337         KK  RN242H
  338         KM   ROUTE SN242H TO COLTER CHANNEL
  339         RS       3              -1
  340         RC     .04     .05     .04    2400    .006
  341         RX      90     100     475     495     505     525     900     910
  342         RY       1      .7      .7       0       0      .7      .7       1
              * DDM   ***** Preserved *****

  343         KK  SD242F
  344         KM   COLTER CHANNEL DESIGN SUB-BASIN D242F (ASSUMED DEVELOPED FOR COLTER DESIGN)
  345         KM   UA RECORED BASED OFF NATURAL WATERSHED
  346         KM     L =  .73  Kb = .052  Adj. Slope =   27.0
  347         BA    .181
  348         LG    .350    .350   4.700    .290    .000
  349         UC    .650    .470
  350         UA       0       3       5       8      12      20      43      75      90      96
  351         UA     100
              * DDM   ***** Preserved *****

  352         KK  CD242F
  353         KM   COMBINE R242D, RN242F, RN242H, AND SD242F AT COLTER CHANNEL
  354         HC       4
  355         ZZ
```

```
                SCHEMATIC DIAGRAM OF STREAM NETWORK
INPUT
 LINE      (V) ROUTING          (--->) DIVERSION OR PUMP FLOW

 NO.       (.) CONNECTOR        (<---) RETURN OF DIVERTED OR PUMPED FLOW

  44        S226A
                .
                .
  57            .-------> DI226A
  54        D226A
                V
                V
  60       RS226A
                V
                V
  66        R226A
                .
                .
  72            .       S223E
                .           .
                .           .
  82        C223E............
                .
                .
  87            .-------> DI223E
  85        D223E
                .
                .
  90            .       S223D
                .           .
                .           .
  99        C223D............
                V
                V
 102       RS223D
                V
                V
 108        R223D
                .
                .
 114            .       S225A
                .           .
                .           .
 124        C225A............
                V
                V
 127        R225A
                .
                .
 133            .       S225C
                .           .
                .           .
 142        C225C............
                .
                .
 145            .       S225E
                .           V
                .           V
 154            .       R225E
                .           .
                .           .
 160            .           .       S225B
                .           .           .
                .           .           .
 169            .       C225B............
                .           V
                .           V
 172            .       R225B
                .           .
                .           .
 178            .           .       S225D
                .           .           .
                .           .           .
 187            .       C225D............
```

```
                .          .
                .          .
190           C225............
                V
                V
193          RS225
                V
                V
200           R225
                .
                .
206             .       S242A
                .          .
                .          .
217             .          .-------> DI242A
215             .       D242A
                .          .
                .          .
220             .          .      SN242B
                .          .          V
                .          .          V
229             .          .      RN242B
                .          .          V
                .          .          V
235             .          .      RN242B
                .          .          .
                .          .          .
241             .          .          .      SD242B
                .          .          .          .
                .          .          .          .
250             .          .       C242B............
                .          .          V
                .          .          V
253             .          .       R242B
                .          .          .
                .          .          .
259             .          .          .      SN242C
                .          .          .          V
                .          .          .          V
268             .          .          .      RN242C
                .          .          .          .
                .          .          .          .
274             .          .          .          .      SD242D
                .          .          .          .          .
                .          .          .          .          .
283             .          .          .      C242D1...........
                .          .          .          .
                .          .          .          .
286          C242D2.................................
                V
                V
289           R242D
                .
                .
295             .       SN242G
                .          V
                .          V
304             .       RN242G
                .          .
                .          .
310             .          .      SN242F
                .          .          .
                .          .          .
319             .       CN242F............
                .          V
                .          V
322             .       RN242F
                .          .
                .          .
328             .          .      SN242H
                .          .          V
                .          .          V
337             .          .      RN242H
                .          .          .
                .          .          .
343             .          .          .      SD242F
```

```
            .          .          .          .
            .          .          .          .
352     CD242F.....................................
```

(***) RUNOFF ALSO COMPUTED AT THIS LOCATION

```
****************************************
                                       *
  FLOOD HYDROGRAPH PACKAGE  (HEC-1)    *
*              MAY   1991              *
*           VERSION 4.0.1E             *
    Lahey F77L-EM/32 version 5.01      *
      Dodson & Associates, Inc.        *
 RUN DATE  08/24/99  TIME  11:04:47    *
****************************************
```

```
****************************************
*                                      *
*    U.S. ARMY CORPS OF ENGINEERS      *
*    HYDROLOGIC ENGINEERING CENTER     *
*          609 SECOND STREET           *
*       DAVIS, CALIFORNIA 95616        *
*           (916) 551-1748             *
*                                      *
****************************************
```

```
                    DREAMING SUMMIT HYDROLOGY       FILE: EXST_6HR.DAT      AUGUST   1999
                    EXISTING CONDITIONS
                    LOCATION:
                            NORTH OF LITCHFIELD PARK, SOUTHEAST OF LUKE AFB,
                            BETWEEN DYSART ROAD, LITCHFIELD ROAD, COLTER CHANNEL, AND
                            DYSART DRAIN
                            T 2 N, R 1 W, GILA AND SALT RIVER MERIDIAN, ARIZONA
                    BASIN AREAS:
                            BASED ON WHITE TANKS AREA DRAINAGE MASTER STUDY, WLB GROUP, 1992
                            WITH ADJUSTMENTS MADE PER WTADMS MAPPING.
                            WATERSHED AREA AFFECTING DREAMING SUMMIT IS 2.82 SQ MI
                    PRECIP: MCFCD 6-HOUR PRECIPITATION
                            NOAA ATLAS 2 DEPTHS
                            AREAL REDUCTION PER MCFCD USING JD OPTION.
                    LOSSES: GREEN AND AMPT PARAMETERS PER MCFCD DRAINAGE DESIGN MANUAL VOL 1
                    UNIT HYDROGRAPHS:
                            CLARK UNIT HYDROGRAPH METHOD WITH PARAMETERS DEVELOPED USING
                            MCFCD'S MCUHP1.EXE PROGRAM
                    CHANNEL ROUTING:
                            NORMAL DEPTH METHOD

                            ROUTING,DIVERSION AND RATING DATA PROVIDED FROM RESEARCH BY
                            AGRA INFRASTRUCTURE, INC.
                    AREA/STAGE/DISCHARGE ROUTINE ADDED AT N242B PER SURVEY DATA
                DDM MCUHP1 Dreaming Summit

 27 IO        OUTPUT CONTROL VARIABLES
                    IPRNT          5  PRINT CONTROL
                    IPLOT          0  PLOT CONTROL
                    QSCAL         0.  HYDROGRAPH PLOT SCALE

    IT        HYDROGRAPH TIME DATA
                     NMIN          5  MINUTES IN COMPUTATION INTERVAL
                    IDATE      1   0  STARTING DATE
                    ITIME       0000  STARTING TIME
                       NQ        300  NUMBER OF HYDROGRAPH ORDINATES
                   NDDATE      2   0  ENDING DATE
                   NDTIME       0055  ENDING TIME
                    ICENT         19  CENTURY MARK

              COMPUTATION INTERVAL    0.08 HOURS
                   TOTAL TIME BASE   24.92 HOURS

        ENGLISH UNITS
             DRAINAGE AREA          SQUARE MILES
             PRECIPITATION DEPTH    INCHES
             LENGTH, ELEVATION      FEET
             FLOW                   CUBIC FEET PER SECOND
             STORAGE VOLUME         ACRE-FEET
             SURFACE AREA           ACRES
             TEMPERATURE            DEGREES FAHRENHEIT

 29 JD         INDEX STORM NO. 1
                    STRM       3.10  PRECIPITATION DEPTH
                    TRDA       0.01  TRANSPOSITION DRAINAGE AREA

 30 PI          PRECIPITATION PATTERN
                   0.00      0.00      0.00      0.00      0.00      0.00      0.00      0.00      0.00      0.00
                   0.00      0.00      0.00      0.00      0.00      0.00      0.00      0.00      0.00      0.00
                   0.00      0.00      0.00      0.00      0.00      0.00      0.00      0.00      0.00      0.00
                   0.00      0.00      0.00      0.01      0.01      0.01      0.01      0.01      0.01      0.03
                   0.03      0.03      0.05      0.05      0.05      0.15      0.15      0.15      0.03      0.03
```

```
                0.03      0.01      0.01      0.01      0.01      0.01      0.01      0.00      0.00      0.00
                0.00      0.00      0.00      0.00      0.00      0.00      0.00      0.00      0.00      0.00
                0.00      0.00

33 JD        INDEX STORM NO. 2
                STRM        3.08  PRECIPITATION DEPTH
                TRDA        0.50  TRANSPOSITION DRAINAGE AREA

 0 PI          PRECIPITATION PATTERN
                0.00      0.00      0.00      0.00      0.00      0.00      0.00      0.00      0.00      0.00
                0.00      0.00      0.00      0.00      0.00      0.00      0.00      0.00      0.00      0.00
                0.00      0.00      0.00      0.00      0.00      0.00      0.00      0.00      0.00      0.00
                0.00      0.00      0.00      0.01      0.01      0.01      0.01      0.01      0.01      0.03
                0.03      0.03      0.05      0.05      0.05      0.15      0.15      0.15      0.03      0.03
                0.03      0.01      0.01      0.01      0.01      0.01      0.01      0.00      0.00      0.00
                0.00      0.00      0.00      0.00      0.00      0.00      0.00      0.00      0.00      0.00
                0.00      0.00

34 JD        INDEX STORM NO. 3
                STRM        3.04  PRECIPITATION DEPTH
                TRDA        2.80  TRANSPOSITION DRAINAGE AREA

35 PI          PRECIPITATION PATTERN
                0.00      0.00      0.00      0.00      0.00      0.00      0.00      0.00      0.00      0.00
                0.00      0.00      0.00      0.00      0.00      0.00      0.00      0.00      0.00      0.00
                0.00      0.00      0.00      0.00      0.00      0.00      0.00      0.00      0.00      0.00
                0.00      0.00      0.00      0.01      0.01      0.01      0.01      0.01      0.01      0.03
                0.03      0.03      0.07      0.07      0.07      0.08      0.08      0.08      0.05      0.05
                0.05      0.02      0.02      0.02      0.01      0.01      0.01      0.00      0.00      0.00
                0.00      0.00      0.00      0.00      0.00      0.00      0.00      0.00      0.00      0.00
                0.00      0.00

38 JD        INDEX STORM NO. 4
                STRM        2.86  PRECIPITATION DEPTH
                TRDA       16.00  TRANSPOSITION DRAINAGE AREA

39 PI          PRECIPITATION PATTERN
                0.01      0.01      0.00      0.00      0.00      0.00      0.00      0.00      0.00      0.01
                0.01      0.01      0.00      0.01      0.00      0.00      0.00      0.00      0.00      0.00
                0.00      0.00      0.01      0.00      0.00      0.00      0.00      0.01      0.01      0.01
                0.01      0.01      0.01      0.01      0.01      0.01      0.02      0.02      0.02      0.03
                0.03      0.03      0.06      0.06      0.06      0.07      0.07      0.07      0.04      0.04
                0.04      0.02      0.02      0.02      0.01      0.01      0.01      0.01      0.01      0.01
                0.00      0.00      0.00      0.00      0.00      0.00      0.00      0.00      0.00      0.00
                0.00      0.00

42 JD        INDEX STORM NO. 5
                STRM        2.51  PRECIPITATION DEPTH
                TRDA       90.00  TRANSPOSITION DRAINAGE AREA

 0 PI          PRECIPITATION PATTERN
                0.01      0.01      0.00      0.00      0.00      0.00      0.00      0.00      0.00      0.01
                0.01      0.01      0.00      0.01      0.00      0.00      0.00      0.00      0.00      0.00
                0.00      0.00      0.01      0.00      0.00      0.00      0.00      0.01      0.01      0.01
                0.01      0.01      0.01      0.01      0.01      0.01      0.02      0.02      0.02      0.03
                0.03      0.03      0.06      0.06      0.06      0.07      0.07      0.07      0.04      0.04
                0.04      0.02      0.02      0.02      0.01      0.01      0.01      0.01      0.01      0.01
                0.00      0.00      0.00      0.00      0.00      0.00      0.00      0.00      0.00      0.00
                0.00      0.00

43 JD        INDEX STORM NO. 6
                STRM        1.77  PRECIPITATION DEPTH
                TRDA      500.00  TRANSPOSITION DRAINAGE AREA

 0 PI          PRECIPITATION PATTERN
                0.01      0.01      0.00      0.00      0.00      0.00      0.00      0.00      0.00      0.01
                0.01      0.01      0.00      0.01      0.00      0.00      0.00      0.00      0.00      0.00
                0.00      0.00      0.01      0.00      0.00      0.00      0.00      0.01      0.01      0.01
                0.01      0.01      0.01      0.01      0.01      0.01      0.02      0.02      0.02      0.03
                0.03      0.03      0.06      0.06      0.06      0.07      0.07      0.07      0.04      0.04
                0.04      0.02      0.02      0.02      0.01      0.01      0.01      0.01      0.01      0.01
                0.00      0.00      0.00      0.00      0.00      0.00      0.00      0.00      0.00      0.00
                0.00      0.00
```

RUNOFF SUMMARY
FLOW IN CUBIC FEET PER SECOND
TIME IN HOURS, AREA IN SQUARE MILES

OPERATION	STATION	PEAK FLOW	TIME OF PEAK	AVERAGE FLOW FOR MAXIMUM PERIOD 6-HOUR	24-HOUR	72-HOUR	BASIN AREA	MAXIMUM STAGE	TIME OF MAX STAGE
HYDROGRAPH AT	S226A	901.	4.17	99.	25.	24.	0.49		
DIVERSION TO	DI226A	31.	3.50	16.	4.	4.	0.49		
HYDROGRAPH AT	D226A	870.	4.17	83.	21.	20.	0.49		
ROUTED TO	RS226A	233.	4.67	79.	21.	20.	0.49		
ROUTED TO	R226A	177.	5.58	76.	21.	20.	0.49		
HYDROGRAPH AT	S223E	614.	4.25	101.	25.	24.	0.32		
2 COMBINED AT	C223E	570.	4.25	160.	45.	43.	0.81		
DIVERSION TO	DI223E	510.	4.25	105.	26.	25.	0.81		
HYDROGRAPH AT	D223E	60.	3.50	55.	19.	18.	0.81		
HYDROGRAPH AT	S223D	54.	4.08	6.	2.	2.	0.02		
2 COMBINED AT	C223D	108.	4.08	61.	20.	19.	0.83		
ROUTED TO	RS223D	105.	4.08	61.	20.	19.	0.83		
ROUTED TO	R223D	84.	4.75	60.	20.	19.	0.83		
HYDROGRAPH AT	S225A	305.	4.42	33.	8.	8.	0.22		
2 COMBINED AT	C225A	330.	4.42	90.	28.	27.	1.05		
ROUTED TO	R225A	279.	4.67	89.	28.	27.	1.05		
HYDROGRAPH AT	S225C	235.	4.42	25.	6.	6.	0.16		
2 COMBINED AT	C225C	410.	4.50	111.	33.	32.	1.21		
HYDROGRAPH AT	S225E	135.	4.08	8.	2.	2.	0.05		
ROUTED TO	R225E	18.	6.08	7.	2.	2.	0.05		
HYDROGRAPH AT	S225B	411.	4.42	95.	24.	23.	0.54		
2 COMBINED AT	C225B	405.	4.42	99.	26.	25.	0.59		
ROUTED TO	R225B	382.	4.75	99.	26.	25.	0.59		
HYDROGRAPH AT	S225D	315.	4.33	35.	9.	8.	0.23		
2 COMBINED AT	C225D	524.	4.58	128.	33.	32.	0.82		
2 COMBINED AT	C225	825.	4.58	224.	62.	60.	2.03		
ROUTED TO	RS225	97.	7.25	94.	59.	56.	2.03		
ROUTED TO	R225	97.	7.42	94.	58.	56.	2.03		
HYDROGRAPH AT	S242A	12.	4.08	1.	0.	0.	0.00		
DIVERSION TO	DI242A	12.	4.08	1.	0.	0.	0.00		
HYDROGRAPH AT	D242A	0.	0.08	0.	0.	0.	0.00		
HYDROGRAPH AT	SN242B	60.	4.17	5.	1.	1.	0.03		
ROUTED TO	RN242B	0.	0.08	0.	0.	0.	0.03		
ROUTED TO	RN242B	0.	0.08	0.	0.	0.	0.03		

HYDROGRAPH AT	SD242B	94.	4.25	10.	3.	2.	0.07
2 COMBINED AT	C242B	94.	4.25	10.	3.	2.	0.10
ROUTED TO	R242B	91.	4.33	10.	3.	2.	0.10
HYDROGRAPH AT	SN242C	165.	4.33	18.	5.	4.	0.13
ROUTED TO	RN242C	143.	4.50	18.	5.	4.	0.13
HYDROGRAPH AT	SD242D	406.	4.33	37.	9.	9.	0.24
2 COMBINED AT	C242D1	492.	4.33	55.	14.	13.	0.37
4 COMBINED AT	C242D2	388.	4.42	132.	70.	68.	2.51
ROUTED TO	R242D	380.	4.50	131.	70.	67.	2.51
HYDROGRAPH AT	SN242G	41.	4.08	4.	1.	1.	0.02
ROUTED TO	RN242G	37.	4.17	4.	1.	1.	0.02
HYDROGRAPH AT	SN242F	188.	4.08	12.	3.	3.	0.08
2 COMBINED AT	CN242F	222.	4.08	16.	4.	4.	0.10
ROUTED TO	RN242F	95.	4.67	16.	4.	4.	0.10
HYDROGRAPH AT	SN242H	48.	4.08	5.	1.	1.	0.03
ROUTED TO	RN242H	26.	4.67	5.	1.	1.	0.03
HYDROGRAPH AT	SD242F	198.	4.42	27.	7.	7.	0.18
4 COMBINED AT	CD242F	562.	4.58	166.	79.	76.	2.82

** NORMAL END OF HEC-1 ***

EXISTING CONDITIONS HEC-1
100-YEAR, 24-HOUR

```
****************************************
*                                      *
*   FLOOD HYDROGRAPH PACKAGE  (HEC-1)  *
*            MAY   1991                *
*          VERSION 4.0.1E              *
*    Lahey F77L-EM/32 version 5.01     *
*      Dodson & Associates, Inc.       *
*  RUN DATE  08/24/99  TIME  11:19:50  *
****************************************
```

```
****************************************
*                                      *
*    U.S. ARMY CORPS OF ENGINEERS      *
*    HYDROLOGIC ENGINEERING CENTER     *
*          609 SECOND STREET           *
*       DAVIS, CALIFORNIA 95616        *
*           (916) 551-1748             *
*                                      *
****************************************
```

```
X     X  XXXXXXX   XXXXX          X
X     X  X        X     X        XX
X     X  X        X              X
XXXXXXX  XXXX     X       XXXXX  X
X     X  X        X              X
X     X  X        X     X        X
X     X  XXXXXXX   XXXXX         XXX
```

THIS PROGRAM REPLACES ALL PREVIOUS VERSIONS OF HEC-1 KNOWN AS HEC1 (JAN 73), HEC1GS, HEC1DB, AND HEC1KW.

THE DEFINITIONS OF VARIABLES -RTIMP- AND -RTIOR- HAVE CHANGED FROM THOSE USED WITH THE 1973-STYLE INPUT STRUCTURE.
THE DEFINITION OF -AMSKK- ON RM-CARD WAS CHANGED WITH REVISIONS DATED 28 SEP 81. THIS IS THE FORTRAN77 VERSION
NEW OPTIONS: DAMBREAK OUTFLOW SUBMERGENCE , SINGLE EVENT DAMAGE CALCULATION, DSS:WRITE STAGE FREQUENCY,
DSS:READ TIME SERIES AT DESIRED CALCULATION INTERVAL LOSS RATE:GREEN AND AMPT INFILTRATION
KINEMATIC WAVE: NEW FINITE DIFFERENCE ALGORITHM

```
LINE          ID.......1.......2.......3.......4.......5.......6.......7.......8.......9......10

  1           ID        DREAMING SUMMIT HYDROLOGY       FILE: EXST24HR.DAT      AUGUST   1999
  2           ID        EXISTING CONDITIONS     100-YR, 24-HR STORM EVENT
  3           ID        LOCATION:
  4           ID                NORTH OF LITCHFIELD PARK, SOUTHEAST OF LUKE AFB,
  5           ID                BETWEEN DYSART ROAD, LITCHFIELD ROAD, COLTER CHANNEL, AND
  6           ID                DYSART DRAIN
  7           ID                T 2 N, R 1 W, GILA AND SALT RIVER MERIDIAN, ARIZONA
  8           ID        BASIN AREAS:
  9           ID                BASED ON WHITE TANKS AREA DRAINAGE MASTER STUDY, WLB GROUP, 1992
 10           ID                WITH ADJUSTMENTS MADE PER WTADMS MAPPING.
 11           ID        PRECIP: MCFCD 24-HOUR PRECIPITATION
 12           ID                NOAA ATLAS 2 DEPTHS
 13           ID                AREAL REDUCTION PER MCFCD USING JD OPTION.
 14           ID        LOSSES: GREEN AND AMPT PARAMETERS PER MCFCD DRAINAGE DESIGN MANUAL VOL 1
 15           ID        UNIT HYDROGRAPHS:
 16           ID                CLARK UNIT HYDROGRAPH METHOD WITH PARAMETERS DEVELOPED USING
 17           ID                MCFCD'S MCUHP1.EXE PROGRAM
 18           ID        CHANNEL ROUTING:
 19           ID                NORMAL DEPTH METHOD
 20           ID
 21           ID                ROUTING,DIVERSION AND RATING DATA PROVIDED FROM RESEARCH BY
 22           ID                AGRA INFRASTRUCTURE, INC.
 23           ID        AREA/STAGE/DISCHARGE ROUTINE ADDED AT N242B PER SURVEY DATA
 24           ID   DDM MCUHP1 Dreaming Summit
              *DIAGRAM
 25           IT       5                    300
 26           IO       5
 27           IN      15
 28           JD     3.8    0.01
              * The following PC records used a 24-hour SCS Type II Rainfall
 29           PC    .000    .002    .005    .008    .011    .014    .017    .020    .023    .026
 30           PC    .029    .032    .035    .038    .041    .044    .048    .052    .056    .060
 31           PC    .064    .068    .072    .076    .080    .085    .090    .095    .100    .105
 32           PC    .110    .115    .120    .126    .135    .142    .150    .158    .166    .175
 33           PC    .184    .195    .208    .224    .243    .266    .318    .479    .678    .716
 34           PC    .743    .764    .781    .795    .808    .818    .828    .837    .844    .851
 35           PC    .858    .865    .871    .877    .883    .889    .895    .900    .905    .910
 36           PC    .915    .919    .923    .927    .931    .935    .939    .943    .947    .951
 37           PC    .954    .957    .960    .963    .966    .969    .972    .975    .978    .981
 38           PC    .984    .987    .990    .993    .996    .999   1.000
 39           JD    3.57      10
 40           JD    3.46      20
              * DDM   ***** Preserved *****

 41           KK   S226A
 42           KM   PORTION OF WTADMS SUB-BASIN 226
 43           KM   AREA EAST OF LUKE AFB THAT FLOWS WEST INTO LUKE AFB
 44           KM   UA RECORD  BASED OFF URBAN WATERSHED
 45           KM     L =  .61  Kb = .033  Adj. Slope =   10.0
 46           BA    .491
 47           LG    .170    .290   4.800    .330  26.000
 48           UC     .52     .18
 49           UA       0       5      16      30      65      77      84      90      94      97
 50           UA     100
              * DDM   ***** Preserved *****
```

```
LINE          ID.......1.......2.......3.......4.......5.......6.......7.......8.......9......10

  51          KK   D226A
  52          KM   DIVERT FLOWS EAST TOWARD AGUA FRIA RIVER IN 36 INCH STORM DRAIN
  53          KM   DIVERT FLOWS NORTH TOWARD DYSART DRAIN IN THREE 18 INCH STORM DRAINS
  54          DT  DI226A
  55          DI       0      31    2000
  56          DQ       0      31      31
              * DDM   ***** Preserved *****

  57          KK  RS226A
  58          KM   STORAGE ROUTE S226 AS IN WTADMS
  59          RS       1    STOR       0
  60          SV       0    0.24    3.34   18.04   51.44  102.84  171.74
  61          SE  1075.2  1075.5    1076  1076.5    1077  1077.5    1078
  62          SQ       0       0      21     136     428     875    1487
              * DDM   ***** Preserved *****

  63          KK   R226A
  64          KM   ROUTE S226A THROUGH S223E
  65          RS       3              -1
  66          RC     .05     .02     .05    1800    .001
  67          RX    9300    9600    9985    9986   10014   10015   10400   10700
  68          RY    1076  1075.2  1075.1  1074.9  1074.9  1075.1  1075.2    1076
              * DDM   ***** Preserved *****

  69          KK   S223E
  70          KM   PORTION OF WTADMS SUB-BASIN 223
  71          KM   PORTION OF LUKE AFB THAT FLOWS BY STORM DRAIN TO PUMP STATION
  72          KM   UA RECORD  BASED OFF URBAN WATERSHED
  73          KM     L =  .57  Kb = .048  Adj. Slope =   12.0
  74          BA    .324
  75          LG    .060    .350    4.80    .250  90.000
  76          UC    .620    .280
  77          UA       0       5      16      30      65      77      84      90      94      97
  78          UA     100
              * DDM   ***** Preserved *****

  79          KK   C223E
  80          KM   COMBINE R226A AND S223E
  81          HC       2
              * DDM   ***** Preserved *****

  82          KK   D223E
  83          KM   DIVERT ALL BUT PUMPED FLOWS OUT OF MODEL TO WEST.  PUMPED GOES TO S223D
  84          DT  DI223E
  85          DI       0      60   10060
  86          DQ       0       0   10000
              * DDM   ***** Preserved *****

  87          KK   S223D
  88          KM   PORTION OF LUKE AFB THAT DRAINS BY GRAVITY TOWARD COLTER CHANNEL
  89          KM   UA RECORD  BASED OFF URBAN WATERSHED
  90          KM     L =  .16  Kb = .065  Adj. Slope =   38.0
  91          BA    .020
  92          LG    .060    .350   4.800    .250  90.000
```

```
LINE          ID.......1.......2.......3.......4.......5.......6.......7.......8.......9......10

  93          UC    .200    .140
  94          UA       0       5      16      30      65      77      84      90      94      97
  95          UA     100
              * DDM   ***** Preserved *****

  96          KK   C223D
  97          KM   COMBINE R223E AND S223D AT SOUTHEAST LUKE AFB OUTLET
  98          HC       2
              * DDM   ***** Preserved *****

  99          KK  RS223D
 100          KM   ROUTE C223D THROUGH BASIN AND CULVERT AT SOUTHEAST LUKE AFB OUTLET
 101          RS       1    STOR
 102          SV       0      .9     1.6
 103          SE    1078    1079    1080
 104          SQ       0      60     200
              * DDM   ***** Preserved *****

 105          KK   R223D
 106          KM   ROUTE C223D TO LITCHFIELD ROAD CROSSING
 107          RS       3              -1
 108          RC     .05      .1     .05    1850    .003
 109          RX     750     850     950     960    1040    1050    1150    1250
 110          RY      74      72      72      71      71      72      72      74
              * DDM   ***** Preserved *****

 111          KK   S225A
 112          KM   DREAMING SUMMIT OFF-SITE PORTION OF WTADMS SUB-BASIN 225A
 113          KM   RUNOFF FROM SOUTH OF LUKE AFB CROSSING LITCHFIELD ROAD N. OF SUNSET POINT
 114          KM   UA RECORD  BASED OFF NATURAL WATERSHED
 115          KM     L =  .55  Kb = .050  Adj. Slope =   20.0
 116          BA    .219
 117          LG    .350    .350   4.700    .290    .000
 118          UC    .510    .260
 119          UA       0       3       5       8      12      20      43      75      90      96
 120          UA     100
              * DDM   ***** Preserved *****

 121          KK   C225A
 122          KM   COMBINE R223D AND S225A AT LITCHFIELD ROAD
 123          HC       2
              * DDM   ***** Preserved *****

 124          KK   R225A
 125          KM   ROUTE C225A TO LITCHFIELD DETENTION FACILITY
 126          RS       2              -1
 127          RC     .03     .03     .03    2000   .0025
 128          RX       0     100     400     450     550     600     900    1000
 129          RY      74      72    70.2      70      70    70.2      72      74
              * DDM   ***** Preserved *****
```

```
LINE          ID.......1.......2.......3.......4.......5.......6.......7.......8.......9......10

  130         KK   S225C
  131         KM   DREAMING SUMMIT ON-SITE PORTION OF WTADMS SUB-BASIN 225A
  132         KM   UA RECORD  BASED OFF NATURAL WATERSHED
  133         KM     L =  .40  Kb = .053  Adj. Slope =   12.0
  134         BA    .156
  135         LG    .350    .390   5.700    .190    .000
  136         UC    .520    .250
  137         UA       0       3       5       8      12      20      43      75      90      96
  138         UA     100
              * DDM   ***** Preserved *****

  139         KK   C225C
  140         KM   COMBINE R225A AND S225C AT LITCHFIELD DETENTION FACILITY
  141         HC       2
              * DDM   ***** Preserved *****

  142         KK   S225E
  143         KM   DREAMING SUMMIT ONSITE PORTION OF WTADMS SUB-BASIN 226
  144         KM   UA RECORD  BASED OFF NATURAL WATERSHED
  145         KM   L =  .20  Kb = .059  Adj. Slope = 100
  146         BA    .053
  147         LG    .350    .350   4.500    .330    .000
  148         UC    .170    .080
  149         UA       0       3       5       8      12      20      43      75      90      96
  150         UA     100
              * DDM   ***** Preserved *****

  151         KK   R225E
  152         KM   ROUTE S225E THROUGH S225B
  153         RS       9              -1
  154         RC     .04     .04     .04    7800    .003
  155         RX     200     201     425     426     574     575     799     800
  156         RY       1      .5      .5       0       0      .5      .5       1
              * DDM   ***** Preserved *****

  157         KK   S225B
  158         KM   DREAMING SUMMIT OFF-SITE PORTION OF WTADMS SUB-BASIN 225
  159         KM   UA RECORD  BASED OFF URBAN WATERSHED
  160         KM     L = 1.69  Kb = .034  Adj. Slope =   17.0
  161         BA    .539
  162         LG    .220    .300   5.000    .290  11.000
  163         UC    .930    .740
  164         UA       0       5      16      30      65      77      84      90      94      97
  165         UA     100
              * DDM   ***** Preserved *****

  166         KK   C225B
  167         KM   COMBINE S225E AND S225B
  168         HC       2
              * DDM   ***** Preserved *****
```

```
LINE          ID.......1.......2.......3.......4.......5.......6.......7.......8.......9......10

 169          KK   R225B
 170          KM   ROUTE C225B TO LITCHFIELD DETENTION FACILITY
 171          RS       3              -1
 172          RC     .04     .04    .035    2000   .0025
 173          RX     250     350     450     490     510     550     650     750
 174          RY    72.5    71.5    70.5      70      70    70.5    71.5    72.5
              * DDM   ***** Preserved *****

 175          KK   S225D
 176          KM   DREAMING SUMMIT ON-SITE PORTION OF WTADMS SUB-BASIN 225
 177          KM   UA RECORD  BASED OFF NATURAL WATERSHED
 178          KM     L =  .74  Kb = .050  Adj. Slope =   41.0
 179          BA    .230
 180          LG    .350    .350   4.900    .270    .000
 181          UC    .460    .280
 182          UA       0       3       5       8      12      20      43      75      90      96
 183          UA     100
              * DDM   ***** Preserved *****

 184          KK   C225D
 185          KM   COMBINE R225B AND S225D AT LITCHFIELD DETENTION FACILITY
 186          HC       2
              * DDM   ***** Preserved *****

 187          KK    C225
 188          KM   COMBINE C225C AND C225D AT LITCHFIELD DETENTION FACILITY
 189          HC       2
              * DDM   ***** Preserved *****

 190          KK   RS225
 191          KM   STORAGE ROUTE C225 THROUGH LITCHFIELD DETENTION FACILITY
 192          KM   WITH 42" PIPE OUTLET, INV=1058
 193          RS       1    STOR       0
 194          SA     1.4    2.28    4.74   12.66   18.47   20.39   21.21   21.62   22.26
 195          SE    1058    1059    1060    1061    1062    1063    1064    1065    1066
 196          SQ       0       5      18      37      58      79      92     104     115
              * DDM   ***** Preserved *****

 197          KK    R225
 198          KM   ROUTE RS225 TO COLTER CHANNEL
 199          RS       2              -1
 200          RC     .04     .04     .04    1800   .0025
 201          RX     200     350     470     475     525     530     650     800
 202          RY      68      66      64      60      60      64      66      68
              * DDM   ***** Preserved *****

 203          KK   S242A
 204          KM   ONSITE PORTION OF WTADMS SUB-BASIN S242A
 205          KM   UA RECORD  BASED OFF NATURAL WATERSHED
 206          KM     L =  .10  Kb = .050  Adj. Slope =  160.0
 207          BA    .005
 208          LG    .350    .350   4.550    .320    .000
 209          UC    .120    .110
 210          UA       0       3       5       8      12      20      43      75      90      96
```

```
LINE          ID.......1.......2.......3.......4.......5.......6.......7.......8.......9......10

 211          UA     100
              * DDM   ***** Preserved *****

 212          KK   D242A
 213          KM   DIVERT 242A PAST COLTER CHANNEL
 214          DT  DI242A
 215          DI       0    1000
 216          DQ       0    1000
              * DDM   ***** Preserved *****

 217          KK  SN242B
 218          KM   OFFSITE PORTION OF COLTER CHANNEL SUB-BASIN D242B
 219          KM   UA RECORD  BASED OFF NATURAL WATERSHED
 220          KM     L =  .24  Kb = .062  Adj. Slope =   65.0
 221          BA    .033
 222          LG    .350    .350   4.300    .380    .000
 223          UC    .220    .150
 224          UA       0       3       5       8      12      20      43      75      90      96
 225          UA     100

 226          KK  RN242B
 227          KM  PONDING THAT OCCURS ALONG THE WEST SIDE OF LITCHFIELD RD
 228          RS       1    STOR       0
 229          SA    .370   1.295   2.249   3.459   4.711   5.764
 230          SE    1083    1084    1085    1086    1087    1088
 231          SQ       0       0       0       0       0      20
              * DDM   ***** Preserved *****

 232          KK  RN242B
 233          KM   ROUTE SN242B THROUGH SD242B
 234          RS       2              -1
 235          RC     .04     .04     .04    2400    .007
 236          RX       0       1       2      49      50      98      99     100
 237          RY       5       5       4       0       0       4       5       5
              * DDM   ***** Preserved *****

 238          KK  SD242B
 239          KM   ONSITE PORTION OF COLTER CHANNEL SUB-BASIN D242B
 240          KM   UA RECORD  BASED OFF NATURAL WATERSHED
 241          KM     L =  .51  Kb = .057  Adj. Slope =   69.0
 242          BA    .068
 243          LG    .350    .350   4.650    .300    .000
 244          UC    .320    .280
 245          UA       0       3       5       8      12      20      43      75      90      96
 246          UA     100
              * DDM   ***** Preserved *****

 247          KK   C242B
 248          KM   COMBINE RN242B AND SD242B AT COLTER CHANNEL
 249          HC       2
              * DDM   ***** Preserved *****
```

```
LINE          ID.......1.......2.......3.......4.......5.......6.......7.......8.......9......10

 250          KK   R242B
 251          KM   ROUTE C242B IN COLTER CHANNEL
 252          RS       1              -1
 253          RC     .03     .03     .03     500   .0035
 254          RX     448     449     450     475     525     550     551     552
 255          RY      44      44      44      40      40      44      44      44
              * DDM   ***** Preserved *****

 256          KK  SN242C
 257          KM   OFFSITE PORTION OF COLTER CHANNEL SUB-BASIN N242C (EXIST)
 258          KM   UA RECORD  BASED OFF NATURAL WATERSHED
 259          KM     L =  .49  Kb = .054  Adj. Slope =   24.0
 260          BA    .127
 261          LG    .350    .350   4.550    .320    .000
 262          UC    .470    .290
 263          UA       0       3       5       8      12      20      43      75      90      96
 264          UA     100
              * DDM   ***** Preserved *****

 265          KK  RN242C
 266          KM   ROUTE SN242C THROUGH SD242D
 267          RS       2              -1
 268          RC     .04     .04     .04    2600    .01
 269          RX       0       1       2      49      50      98      99     100
 270          RY       5       5       4       0       0       4       5       5
              * DDM   ***** Preserved *****

 271          KK  SD242D
 272          KM   ONSITE PORTION OF COLTER CHANNEL SUB-BASIN N242C (EXIST) AND D242D
 273          KM   UA RECORD  BASED OFF NATURAL WATERSHED
 274          KM     L =  .47  Kb = .050  Adj. Slope =   21.0
 275          BA    .241
 276          LG    .350    .360   5.000    .260    .000
 277          UC    .450    .190
 278          UA       0       3       5       8      12      20      43      75      90      96
 279          UA     100
              * DDM   ***** Preserved *****

 280          KK  C242D1
 281          KM   COMBINE RN242C AND SD242D AT COLTER CHANNEL
 282          HC       2
              * DDM   ***** Preserved *****

 283          KK  C242D2
 284          KM   COMBINE R225, 242A, C242D1 AND R242B AT COLTER CHANNEL
 285          HC       4
              * DDM   ***** Preserved *****

 286          KK   R242D
 287          KM   ROUTE C242D2 IN COLTER CHANNEL TO CD242F
 288          RS       3              -1
 289          RC     .03     .03     .03    2300   .0035
 290          RX     448     449     450     475     525     550     551     552
 291          RY      44      44      44      40      40      44      44      44
              * DDM   ***** Preserved *****
```

```
LINE          ID.......1.......2.......3.......4.......5.......6.......7.......8.......9......10

 292          KK  SN242G
 293          KM   NORTH OFFSITE PORTION OF COLTER CHANNEL DESIGN SUB-BASIN N242F
 294          KM   UA RECORD  BASED OFF URBAN WATERSHED
 295          KM     L =  .27  Kb = .032  Adj. Slope =   56.0
 296          BA    .021
 297          LG    .150    .260   4.550    .400  17.000
 298          UC    .190    .180
 299          UA       0       5      16      30      65      77      84      90      94      97
 300          UA     100
              * DDM   ***** Preserved *****

 301          KK  RN242G
 302          KM   ROUTE SN242G THROUGH SN242F
 303          RS       1              -1
 304          RC     .05     .04     .05    1000    .015
 305          RX      49      50      85      90     110     115     150     151
 306          RY      91      90      81      80      80      81      90      91
              * DDM   ***** Preserved *****

 307          KK  SN242F
 308          KM   ONSITE PORTION OF COLTER CHANNEL DESIGN SUB-BASIN N242F
 309          KM   UA RECORD  BASED OFF NATURAL WATERSHED
 310          KM     L =  .33  Kb = .056  Adj. Slope =  152.0
 311          BA    .081
 312          LG    .350    .350   4.600    .310    .000
 313          UC    .190    .100
 314          UA       0       3       5       8      12      20      43      75      90      96
 315          UA     100
              * DDM   ***** Preserved *****

 316          KK  CN242F
 317          KM   COMBINE RN242G AND SN242F
 318          HC       2
              * DDM   ***** Preserved *****

 319          KK  RN242F
 320          KM   ROUTE CN242F TO COLTER CHANNEL
 321          RS       4              -1
 322          RC     .04     .05     .04    2400    .006
 323          RX      90     100     475     495     505     525     900     910
 324          RY       1      .7      .7       0       0      .7      .7       1
              * DDM   ***** Preserved *****

 325          KK  SN242H
 326          KM   SOUTH OFFSITE PORTION OF COLTER CHANNEL DESIGN SUB-BASIN N242F
 327          KM   UA RECORD  BASED OFF URBAN WATERSHED
 328          KM    L = .27  Kb = .046  Adj. Slope = 41.0
 329          BA    .027
 330          LG    .220    .290    4.55    .370  11.000
 331          UC    .230    .200
 332          UA       0       5      16      30      65      77      84      90      94      97
 333          UA     100
              * DDM   ***** Preserved *****
```

```
LINE          ID.......1.......2.......3.......4.......5.......6.......7.......8.......9......10

  334         KK  RN242H
  335         KM   ROUTE SN242H TO COLTER CHANNEL
  336         RS       3              -1
  337         RC     .04     .05     .04    2400    .006
  338         RX      90     100     475     495     505     525     900     910
  339         RY       1      .7      .7       0       0      .7      .7       1
              * DDM   ***** Preserved *****

  340         KK  SD242F
  341         KM   COLTER CHANNEL DESIGN SUB-BASIN D242F (ASSUMED DEVELOPED FOR COLTER DESIGN)
  342         KM   UA RECORD  BASED OFF NATURAL WATERSHED
  343         KM    L = .73  Kb = .052  Adj. Slope = 27.0
  344         BA    .181
  345         LG    .350    .350   4.700    .290    .000
  346         UC    .570    .410
  347         UA       0       3       5       8      12      20      43      75      90      96
  348         UA     100
              * DDM   ***** Preserved *****

  349         KK  CD242F
  350         KM   COMBINE R242D, RN242F, RN242H, AND SD242F AT COLTER CHANNEL
  351         HC       4
  352         ZZ
```

```
                SCHEMATIC DIAGRAM OF STREAM NETWORK
INPUT
 LINE      (V) ROUTING          (--->) DIVERSION OR PUMP FLOW

 NO.       (.) CONNECTOR        (<---) RETURN OF DIVERTED OR PUMPED FLOW

  41        S226A
                .
                .
  54            .-------> DI226A
  51        D226A
                V
                V
  57       RS226A
                V
                V
  63        R226A
                .
                .
  69            .       S223E
                .           .
                .           .
  79        C223E............
                .
                .
  84            .-------> DI223E
  82        D223E
                .
                .
  87            .       S223D
                .           .
                .           .
  96        C223D............
                V
                V
  99       RS223D
                V
                V
 105        R223D
                .
                .
 111            .       S225A
                .           .
                .           .
 121        C225A............
                V
                V
 124        R225A
                .
                .
 130            .       S225C
                .           .
                .           .
 139        C225C............
                .
                .
 142            .       S225E
                .           V
                .           V
 151            .       R225E
                .           .
                .           .
 157            .           .       S225B
                .           .           .
                .           .           .
 166            .       C225B............
                .           V
                .           V
 169            .       R225B
                .           .
                .           .
 175            .           .       S225D
                .           .           .
                .           .           .
 184            .       C225D............
```

```
                .          .
                .          .
187           C225............
                V
                V
190          RS225
                V
                V
197           R225
                .
                .
203             .       S242A
                .          .
                .          .
214             .          .-------> DI242A
212             .       D242A
                .          .
                .          .
217             .          .     SN242B
                .          .          V
                .          .          V
226             .          .     RN242B
                .          .          V
                .          .          V
232             .          .     RN242B
                .          .          .
                .          .          .
238             .          .          .     SD242B
                .          .          .          .
                .          .          .          .
247             .          .      C242B............
                .          .          V
                .          .          V
250             .          .      R242B
                .          .          .
                .          .          .
256             .          .          .     SN242C
                .          .          .          V
                .          .          .          V
265             .          .          .     RN242C
                .          .          .          .
                .          .          .          .
271             .          .          .          .     SD242D
                .          .          .          .          .
                .          .          .          .          .
280             .          .          .     C242D1............
                .          .          .          .
                .          .          .          .
283        C242D2.................................
                V
                V
286           R242D
                .
                .
292             .       SN242G
                .          V
                .          V
301             .       RN242G
                .          .
                .          .
307             .          .     SN242F
                .          .          .
                .          .          .
316             .       CN242F............
                .          V
                .          V
319             .       RN242F
                .          .
                .          .
325             .          .     SN242H
                .          .          V
                .          .          V
334             .          .     RN242H
                .          .          .
                .          .          .
340             .          .          .     SD242F
```

```
            .          .          .          .
            .          .          .          .
349      CD242F.....................................
```

(***) RUNOFF ALSO COMPUTED AT THIS LOCATION

```
****************************************                                    ****************************************
*                                      *                                    *                                      *
*  FLOOD HYDROGRAPH PACKAGE  (HEC-1)   *                                    *   U.S. ARMY CORPS OF ENGINEERS       *
*            MAY   1991                *                                    *   HYDROLOGIC ENGINEERING CENTER      *
*          VERSION 4.0.1E              *                                    *         609 SECOND STREET            *
*    Lahey F77L-EM/32 version 5.01     *                                    *      DAVIS, CALIFORNIA 95616         *
*      Dodson & Associates, Inc.       *                                    *          (916) 551-1748              *
*  RUN DATE  08/24/99  TIME  11:19:50  *                                    *                                      *
****************************************                                    ****************************************
```

```
                          DREAMING SUMMIT HYDROLOGY       FILE: EXST24HR.DAT      AUGUST   1999
                          EXISTING CONDITIONS     100-YR, 24-HR STORM EVENT
                          LOCATION:
                                  NORTH OF LITCHFIELD PARK, SOUTHEAST OF LUKE AFB,
                                  BETWEEN DYSART ROAD, LITCHFIELD ROAD, COLTER CHANNEL, AND
                                  DYSART DRAIN
                                  T 2 N, R 1 W, GILA AND SALT RIVER MERIDIAN, ARIZONA
                          BASIN AREAS:
                                  BASED ON WHITE TANKS AREA DRAINAGE MASTER STUDY, WLB GROUP, 1992
                                  WITH ADJUSTMENTS MADE PER WTADMS MAPPING.
                          PRECIP: MCFCD 24-HOUR PRECIPITATION
                                  NOAA ATLAS 2 DEPTHS
                                  AREAL REDUCTION PER MCFCD USING JD OPTION.
                          LOSSES: GREEN AND AMPT PARAMETERS PER MCFCD DRAINAGE DESIGN MANUAL VOL 1
                          UNIT HYDROGRAPHS:
                                  CLARK UNIT HYDROGRAPH METHOD WITH PARAMETERS DEVELOPED USING
                                  MCFCD'S MCUHP1.EXE PROGRAM
                          CHANNEL ROUTING:
                                  NORMAL DEPTH METHOD

                                  ROUTING,DIVERSION AND RATING DATA PROVIDED FROM RESEARCH BY
                                  AGRA INFRASTRUCTURE, INC.
                          AREA/STAGE/DISCHARGE ROUTINE ADDED AT N242B PER SURVEY DATA
                      DDM MCUHP1 Dreaming Summit

 26 IO          OUTPUT CONTROL VARIABLES
                      IPRNT          5  PRINT CONTROL
                      IPLOT          0  PLOT CONTROL
                      QSCAL         0.  HYDROGRAPH PLOT SCALE

    IT          HYDROGRAPH TIME DATA
                       NMIN          5  MINUTES IN COMPUTATION INTERVAL
                      IDATE      1   0  STARTING DATE
                      ITIME       0000  STARTING TIME
                         NQ        300  NUMBER OF HYDROGRAPH ORDINATES
                     NDDATE      2   0  ENDING DATE
                     NDTIME       0055  ENDING TIME
                     ICENT         19  CENTURY MARK

                 COMPUTATION INTERVAL    0.08 HOURS
                      TOTAL TIME BASE   24.92 HOURS

        ENGLISH UNITS
             DRAINAGE AREA          SQUARE MILES
             PRECIPITATION DEPTH    INCHES
             LENGTH, ELEVATION      FEET
             FLOW                   CUBIC FEET PER SECOND
             STORAGE VOLUME         ACRE-FEET
             SURFACE AREA           ACRES
             TEMPERATURE            DEGREES FAHRENHEIT

 28 JD          INDEX STORM NO. 1
                       STRM       3.80  PRECIPITATION DEPTH
                       TRDA       0.01  TRANSPOSITION DRAINAGE AREA

 29 PI            PRECIPITATION PATTERN
                     0.00      0.00      0.00      0.00      0.00      0.00      0.00      0.00      0.00      0.00
                     0.00      0.00      0.00      0.00      0.00      0.00      0.00      0.00      0.00      0.00
                     0.00      0.00      0.00      0.00      0.00      0.00      0.00      0.00      0.00      0.00
                     0.00      0.00      0.00      0.00      0.00      0.00      0.00      0.00      0.00      0.00
                     0.00      0.00      0.00      0.00      0.00      0.00      0.00      0.00      0.00      0.00
                     0.00      0.00      0.00      0.00      0.00      0.00      0.00      0.00      0.00      0.00
```

0.00	0.00	0.00	0.00	0.00	0.00	0.00	0.00	0.00	0.00
0.00	0.00	0.00	0.00	0.00	0.00	0.00	0.00	0.00	0.00
0.00	0.00	0.00	0.00	0.00	0.00	0.00	0.00	0.00	0.00
0.00	0.00	0.00	0.00	0.00	0.00	0.00	0.00	0.00	0.00
0.00	0.00	0.00	0.00	0.00	0.00	0.00	0.00	0.00	0.00
0.00	0.00	0.00	0.00	0.00	0.00	0.00	0.00	0.00	0.00
0.00	0.00	0.00	0.00	0.00	0.00	0.01	0.01	0.01	0.01
0.01	0.01	0.01	0.01	0.01	0.02	0.02	0.02	0.05	0.05
0.05	0.07	0.07	0.07	0.01	0.01	0.01	0.01	0.01	0.01
0.01	0.01	0.01	0.01	0.01	0.01	0.00	0.00	0.00	0.00
0.00	0.00	0.00	0.00	0.00	0.00	0.00	0.00	0.00	0.00
0.00	0.00	0.00	0.00	0.00	0.00	0.00	0.00	0.00	0.00
0.00	0.00	0.00	0.00	0.00	0.00	0.00	0.00	0.00	0.00
0.00	0.00	0.00	0.00	0.00	0.00	0.00	0.00	0.00	0.00
0.00	0.00	0.00	0.00	0.00	0.00	0.00	0.00	0.00	0.00
0.00	0.00	0.00	0.00	0.00	0.00	0.00	0.00	0.00	0.00
0.00	0.00	0.00	0.00	0.00	0.00	0.00	0.00	0.00	0.00
0.00	0.00	0.00	0.00	0.00	0.00	0.00	0.00	0.00	0.00
0.00	0.00	0.00	0.00	0.00	0.00	0.00	0.00	0.00	0.00
0.00	0.00	0.00	0.00	0.00	0.00	0.00	0.00	0.00	0.00
0.00	0.00	0.00	0.00	0.00	0.00	0.00	0.00	0.00	0.00
0.00	0.00	0.00	0.00	0.00	0.00	0.00	0.00	0.00	0.00
0.00	0.00	0.00	0.00	0.00	0.00	0.00	0.00		

39 JD INDEX STORM NO. 2

STRM 3.57 PRECIPITATION DEPTH

TRDA 10.00 TRANSPOSITION DRAINAGE AREA

0 PI PRECIPITATION PATTERN

0.00	0.00	0.00	0.00	0.00	0.00	0.00	0.00	0.00	0.00
0.00	0.00	0.00	0.00	0.00	0.00	0.00	0.00	0.00	0.00
0.00	0.00	0.00	0.00	0.00	0.00	0.00	0.00	0.00	0.00
0.00	0.00	0.00	0.00	0.00	0.00	0.00	0.00	0.00	0.00
0.00	0.00	0.00	0.00	0.00	0.00	0.00	0.00	0.00	0.00
0.00	0.00	0.00	0.00	0.00	0.00	0.00	0.00	0.00	0.00
0.00	0.00	0.00	0.00	0.00	0.00	0.00	0.00	0.00	0.00
0.00	0.00	0.00	0.00	0.00	0.00	0.00	0.00	0.00	0.00
0.00	0.00	0.00	0.00	0.00	0.00	0.00	0.00	0.00	0.00
0.00	0.00	0.00	0.00	0.00	0.00	0.00	0.00	0.00	0.00
0.00	0.00	0.00	0.00	0.00	0.00	0.00	0.00	0.00	0.00
0.00	0.00	0.00	0.00	0.00	0.00	0.01	0.01	0.01	0.01
0.01	0.01	0.01	0.01	0.01	0.02	0.02	0.02	0.05	0.05
0.05	0.07	0.07	0.07	0.01	0.01	0.01	0.01	0.01	0.01
0.01	0.01	0.01	0.01	0.01	0.01	0.00	0.00	0.00	0.00
0.00	0.00	0.00	0.00	0.00	0.00	0.00	0.00	0.00	0.00
0.00	0.00	0.00	0.00	0.00	0.00	0.00	0.00	0.00	0.00
0.00	0.00	0.00	0.00	0.00	0.00	0.00	0.00	0.00	0.00
0.00	0.00	0.00	0.00	0.00	0.00	0.00	0.00	0.00	0.00
0.00	0.00	0.00	0.00	0.00	0.00	0.00	0.00	0.00	0.00
0.00	0.00	0.00	0.00	0.00	0.00	0.00	0.00	0.00	0.00
0.00	0.00	0.00	0.00	0.00	0.00	0.00	0.00	0.00	0.00
0.00	0.00	0.00	0.00	0.00	0.00	0.00	0.00	0.00	0.00
0.00	0.00	0.00	0.00	0.00	0.00	0.00	0.00	0.00	0.00
0.00	0.00	0.00	0.00	0.00	0.00	0.00	0.00	0.00	0.00
0.00	0.00	0.00	0.00	0.00	0.00	0.00	0.00	0.00	0.00
0.00	0.00	0.00	0.00	0.00	0.00	0.00	0.00		

40 JD INDEX STORM NO. 3

STRM 3.46 PRECIPITATION DEPTH

TRDA 20.00 TRANSPOSITION DRAINAGE AREA

0 PI PRECIPITATION PATTERN

0.00	0.00	0.00	0.00	0.00	0.00	0.00	0.00	0.00	0.00
0.00	0.00	0.00	0.00	0.00	0.00	0.00	0.00	0.00	0.00
0.00	0.00	0.00	0.00	0.00	0.00	0.00	0.00	0.00	0.00
0.00	0.00	0.00	0.00	0.00	0.00	0.00	0.00	0.00	0.00
0.00	0.00	0.00	0.00	0.00	0.00	0.00	0.00	0.00	0.00
0.00	0.00	0.00	0.00	0.00	0.00	0.00	0.00	0.00	0.00
0.00	0.00	0.00	0.00	0.00	0.00	0.00	0.00	0.00	0.00
0.00	0.00	0.00	0.00	0.00	0.00	0.00	0.00	0.00	0.00
0.00	0.00	0.00	0.00	0.00	0.00	0.00	0.00	0.00	0.00
0.00	0.00	0.00	0.00	0.00	0.00	0.00	0.00	0.00	0.00
0.00	0.00	0.00	0.00	0.00	0.00	0.00	0.00	0.00	0.00

0.00	0.00	0.00	0.00	0.00	0.00	0.01	0.01	0.01	0.01
0.01	0.01	0.01	0.01	0.01	0.02	0.02	0.02	0.05	0.05
0.05	0.07	0.07	0.07	0.01	0.01	0.01	0.01	0.01	0.01
0.01	0.01	0.01	0.01	0.01	0.01	0.00	0.00	0.00	0.00
0.00	0.00	0.00	0.00	0.00	0.00	0.00	0.00	0.00	0.00
0.00	0.00	0.00	0.00	0.00	0.00	0.00	0.00	0.00	0.00
0.00	0.00	0.00	0.00	0.00	0.00	0.00	0.00	0.00	0.00
0.00	0.00	0.00	0.00	0.00	0.00	0.00	0.00	0.00	0.00
0.00	0.00	0.00	0.00	0.00	0.00	0.00	0.00	0.00	0.00
0.00	0.00	0.00	0.00	0.00	0.00	0.00	0.00	0.00	0.00
0.00	0.00	0.00	0.00	0.00	0.00	0.00	0.00	0.00	0.00
0.00	0.00	0.00	0.00	0.00	0.00	0.00	0.00	0.00	0.00
0.00	0.00	0.00	0.00	0.00	0.00	0.00	0.00	0.00	0.00
0.00	0.00	0.00	0.00	0.00	0.00	0.00	0.00	0.00	0.00
0.00	0.00	0.00	0.00	0.00	0.00	0.00	0.00	0.00	0.00
0.00	0.00	0.00	0.00	0.00	0.00	0.00	0.00	0.00	0.00
0.00	0.00	0.00	0.00	0.00	0.00	0.00	0.00	0.00	0.00
0.00	0.00	0.00	0.00	0.00	0.00	0.00	0.00		

RUNOFF SUMMARY
FLOW IN CUBIC FEET PER SECOND
TIME IN HOURS, AREA IN SQUARE MILES

OPERATION	STATION	PEAK FLOW	TIME OF PEAK	AVERAGE FLOW FOR MAXIMUM PERIOD 6-HOUR	24-HOUR	72-HOUR	BASIN AREA	MAXIMUM STAGE	TIME OF MAX STAGE
HYDROGRAPH AT	S226A	569.	12.17	73.	22.	21.	0.49		
DIVERSION TO	DI226A	31.	11.50	19.	8.	8.	0.49		
HYDROGRAPH AT	D226A	538.	12.17	54.	14.	13.	0.49		
ROUTED TO	RS226A	148.	12.50	52.	13.	13.	0.49		
ROUTED TO	R226A	107.	13.67	50.	13.	13.	0.49		
HYDROGRAPH AT	S223E	416.	12.17	85.	30.	29.	0.32		
2 COMBINED AT	C223E	417.	12.17	127.	43.	41.	0.81		
DIVERSION TO	DI223E	357.	12.17	70.	18.	17.	0.81		
HYDROGRAPH AT	D223E	60.	11.50	57.	25.	24.	0.81		
HYDROGRAPH AT	S223D	35.	12.00	5.	2.	2.	0.02		
2 COMBINED AT	C223D	94.	12.00	62.	27.	26.	0.83		
ROUTED TO	RS223D	92.	12.08	62.	27.	26.	0.83		
ROUTED TO	R223D	78.	12.58	61.	27.	26.	0.83		
HYDROGRAPH AT	S225A	207.	12.25	22.	6.	5.	0.22		
2 COMBINED AT	C225A	273.	12.25	83.	32.	31.	1.05		
ROUTED TO	R225A	230.	12.50	83.	32.	31.	1.05		
HYDROGRAPH AT	S225C	161.	12.25	17.	4.	4.	0.16		
2 COMBINED AT	C225C	345.	12.42	99.	36.	35.	1.21		
HYDROGRAPH AT	S225E	71.	12.00	5.	1.	1.	0.05		
ROUTED TO	R225E	10.	14.50	5.	1.	1.	0.05		
HYDROGRAPH AT	S225B	282.	12.42	67.	18.	18.	0.54		
2 COMBINED AT	C225B	282.	12.42	70.	20.	19.	0.59		
ROUTED TO	R225B	261.	12.67	70.	20.	19.	0.59		
HYDROGRAPH AT	S225D	220.	12.25	24.	6.	6.	0.23		
2 COMBINED AT	C225D	350.	12.42	93.	25.	24.	0.82		
2 COMBINED AT	C225	687.	12.42	190.	61.	58.	2.03		
ROUTED TO	RS225	89.	15.25	87.	45.	44.	2.03		
ROUTED TO	R225	89.	15.42	87.	45.	43.	2.03		
HYDROGRAPH AT	S242A	7.	12.00	1.	0.	0.	0.00		
DIVERSION TO	DI242A	7.	12.00	1.	0.	0.	0.00		
HYDROGRAPH AT	D242A	0.	0.08	0.	0.	0.	0.00		
HYDROGRAPH AT	SN242B	39.	12.08	3.	1.	1.	0.03		
ROUTED TO	RN242B	0.	0.08	0.	0.	0.	0.03		
ROUTED TO	RN242B	0.	0.08	0.	0.	0.	0.03		

HYDROGRAPH AT	SD242B	67.	12.17	7.	2.	2.	0.07
2 COMBINED AT	C242B	67.	12.17	7.	2.	2.	0.10
ROUTED TO	R242B	64.	12.25	7.	2.	2.	0.10
HYDROGRAPH AT	SN242C	115.	12.25	13.	3.	3.	0.13
ROUTED TO	RN242C	102.	12.42	13.	3.	3.	0.13
HYDROGRAPH AT	SD242D	261.	12.25	25.	6.	6.	0.24
2 COMBINED AT	C242D1	336.	12.25	37.	9.	9.	0.37
4 COMBINED AT	C242D2	415.	12.25	120.	55.	53.	2.51
ROUTED TO	R242D	391.	12.33	119.	54.	52.	2.51
HYDROGRAPH AT	SN242G	27.	12.00	3.	1.	1.	0.02
ROUTED TO	RN242G	25.	12.08	3.	1.	1.	0.02
HYDROGRAPH AT	SN242F	106.	12.08	8.	2.	2.	0.08
2 COMBINED AT	CN242F	130.	12.08	11.	3.	3.	0.10
ROUTED TO	RN242F	59.	12.67	11.	3.	3.	0.10
HYDROGRAPH AT	SN242H	32.	12.00	3.	1.	1.	0.03
ROUTED TO	RN242H	21.	12.42	3.	1.	1.	0.03
HYDROGRAPH AT	SD242F	139.	12.33	18.	5.	4.	0.18
4 COMBINED AT	CD242F	578.	12.42	149.	62.	60.	2.82

*** NORMAL END OF HEC-1 ***

DEVELOPED CONDITIONS HEC-1
100-YEAR, 6-HOUR

```
****************************************
                                       *
  FLOOD HYDROGRAPH PACKAGE  (HEC-1)    *
*            MAY   1991                *
*          VERSION 4.0.1E              *
    Lahey F77L-EM/32 version 5.01      *
      Dodson & Associates, Inc.        *
* RUN DATE  11/09/99  TIME  11:34:38   *
****************************************
```

```
****************************************
*                                      *
*    U.S. ARMY CORPS OF ENGINEERS      *
*    HYDROLOGIC ENGINEERING CENTER     *
*          609 SECOND STREET           *
*       DAVIS, CALIFORNIA 95616        *
*           (916) 551-1748             *
*                                      *
****************************************
```

```
X     X  XXXXXXX   XXXXX          X
X     X  X        X     X        XX
X     X  X        X               X
XXXXXXX  XXXX     X        XXXXX  X
X     X  X        X               X
X     X  X        X     X         X
X     X  XXXXXXX   XXXXX         XXX
```

THIS PROGRAM REPLACES ALL PREVIOUS VERSIONS OF HEC-1 KNOWN AS HEC1 (JAN 73), HEC1GS, HEC1DB, AND HEC1KW.

THE DEFINITIONS OF VARIABLES -RTIMP- AND -RTIOR- HAVE CHANGED FROM THOSE USED WITH THE 1973-STYLE INPUT STRUCTURE.
THE DEFINITION OF -AMSKK- ON RM-CARD WAS CHANGED WITH REVISIONS DATED 28 SEP 81. THIS IS THE FORTRAN77 VERSION
NEW OPTIONS: DAMBREAK OUTFLOW SUBMERGENCE , SINGLE EVENT DAMAGE CALCULATION, DSS:WRITE STAGE FREQUENCY,
DSS:READ TIME SERIES AT DESIRED CALCULATION INTERVAL LOSS RATE:GREEN AND AMPT INFILTRATION
KINEMATIC WAVE: NEW FINITE DIFFERENCE ALGORITHM

```
LINE          ID.......1.......2.......3.......4.......5.......6.......7.......8.......9......10

  1           ID        DREAMING SUMMIT HYDROLOGY       FILE: DEV_6HR.DAT       NOVEMBER 1999
  2           ID        DEVELOPED CONDITIONS                    100-YR, 6-HR STORM EVENT
  3           ID        DREAMING SUMMIT PROJECT RETAINED 100-YR, 2-HR VOLUME FOR
  4           ID                        UNITS 1, 2A AND 2B
  5           ID                NO RETENTION PROVIDED FOR UNIT 3 (SOUTHEAST PORTION OF PROJECT)
  6           ID        LOCATION:
  7           ID                NORTH OF LITCHFIELD PARK, SOUTHEAST OF LUKE AFB,
  8           ID                BETWEEN DYSART ROAD, LITCHFIELD ROAD, COLTER CHANNEL, AND
  9           ID                DYSART DRAIN
 10           ID                T 2 N, R 1 W, GILA AND SALT RIVER MERIDIAN, ARIZONA
 11           ID        BASIN AREAS:
 12           ID                BASED ON WHITE TANKS AREA DRAINAGE MASTER STUDY, WLB GROUP, 1992
 13           ID                WITH ADJUSTMENTS MADE PER WTADMS MAPPING.
 14           ID                WATERSHED AREA AFFECTING DREAMING SUMMIT IS 2.82 SQ MI
 15           ID        PRECIP: MCFCD 6-HOUR PRECIPITATION
 16           ID                NOAA ATLAS 2 DEPTHS
 17           ID                AREAL REDUCTION PER MCFCD USING JD OPTION.
 18           ID        LOSSES: GREEN AND AMPT PARAMETERS PER MCFCD DRAINAGE DESIGN MANUAL VOL 1
 19           ID        UNIT HYDROGRAPHS:
 20           ID                CLARK UNIT HYDROGRAPH METHOD WITH PARAMETERS DEVELOPED USING
 21           ID                MCFCD'S MCUHP1.EXE PROGRAM
 22           ID        CHANNEL ROUTING:
 23           ID                NORMAL DEPTH METHOD
 24           ID
 25           ID                ROUTING,DIVERSION AND RATING DATA PROVIDED FROM RESEARCH BY
 26           ID                AGRA INFRASTRUCTURE, INC.
 27           ID        AREA/STAGE/DISCHARGE ROUTINE ADDED AT N242B PER SURVEY DATA
 28           ID   DDM MCUHP1 Dreaming Summit
              *DIAGRAM
 29           IT       5                    300
 30           IO       5
 31           IN      15
 32           JD    3.10    0.01
 33           PC    .000    .008    .016    .025    .033    .041    .050    .058    .066    .074
 34           PC    .087    .099    .118    .138    .216    .377    .834    .911    .931    .950
 35           PC    .962    .972    .983    .991   1.000
 36           JD    3.08    0.50
 37           JD    3.04    2.80
 38           PC    .000    .009    .016    .025    .034    .042    .051    .059    .067    .076
 39           PC    .087    .100    .120    .163    .252    .451    .694    .837    .900    .938
 40           PC    .950    .963    .975    .988   1.000
 41           JD    2.86    16.0
 42           PC    .000    .015    .020    .030    .048    .063    .076    .090    .105    .119
 43           PC    .135    .152    .175    .222    .304    .472    .670    .796    .868    .912
 44           PC    .946    .960    .973    .987   1.000
 45           JD    2.51    90.0
              *  *****
              * DDM   ***** Preserved *****

 46           KK   S226A
 47           KM   PORTION OF WTADMS SUB-BASIN 226
 48           KM   AREA EAST OF LUKE AFB THAT FLOWS WEST INTO LUKE AFB
 49           KM   UA RECORD  BASED OFF URBAN WATERSHED
 50           KM     L =  .61  Kb = .033  Adj. Slope =   10.0
 51           BA    .491
```

```
LINE          ID.......1.......2.......3.......4.......5.......6.......7.......8.......9......10

  52          LG    .170    .290   4.800    .330  26.000
  53          UC    .580    .200
  54          UA       0       5      16      30      65      77      84      90      94      97
  55          UA     100
              * DDM   ***** Preserved *****

  56          KK   D226A
  57          KM   DIVERT FLOWS EAST TOWARD AGUA FRIA RIVER IN 36 INCH STORM DRAIN
  58          KM   DIVERT FLOWS NORTH TOWARD DYSART DRAIN IN THREE 18 INCH STORM DRAINS
  59          DT  DI226A
  60          DI       0      31    2000
  61          DQ       0      31      31
              * DDM   ***** Preserved *****

  62          KK  RS226A
  63          KM   STORAGE ROUTE S226 AS IN WTADMS
  64          RS       1    STOR       0
  65          SV       0    0.24    3.34   18.04   51.44  102.84  171.74
  66          SE  1075.2  1075.5    1076  1076.5    1077  1077.5    1078
  67          SQ       0       0      21     136     428     875    1487
              * DDM   ***** Preserved *****

  68          KK   R226A
  69          KM   ROUTE S226A THROUGH S223E
  70          RS       3              -1
  71          RC     .05     .02     .05    1800    .001
  72          RX    9300    9600    9985    9986   10014   10015   10400   10700
  73          RY    1076  1075.2  1075.1  1074.9  1074.9  1075.1  1075.2    1076
              * DDM   ***** Preserved *****

  74          KK   S223E
  75          KM   PORTION OF WTADMS SUB-BASIN 223
  76          KM   PORTION OF LUKE AFB THAT FLOWS BY STORM DRAIN TO PUMP STATION
  77          KM   UA RECORD  BASED OFF URBAN WATERSHED
  78          KM     L =  .57  Kb = .048  Adj. Slope =   11.0
  79          BA    .324
  80          LG    .060    .350    4.80    .250  90.000
  81          UC    .650    .290
  82          UA       0       5      16      30      65      77      84      90      94      97
  83          UA     100
              * DDM   ***** Preserved *****

  84          KK   C223E
  85          KM   COMBINE R226A AND S223E
  86          HC       2
              * DDM   ***** Preserved *****

  87          KK   D223E
  88          KM   DIVERT ALL BUT PUMPED FLOWS OUT OF MODEL TO WEST.  PUMPED GOES TO S223D
  89          DT  DI223E
  90          DI       0      60   10060
  91          DQ       0       0   10000
              * DDM   ***** Preserved *****
```

```
LINE          ID.......1.......2.......3.......4.......5.......6.......7.......8.......9......10

  92          KK   S223D
  93          KM   PORTION OF LUKE AFB THAT DRAINS BY GRAVITY TOWARD COLTER CHANNEL
  94          KM   UA RECORD  BASED OFF URBAN WATERSHED
  95          KM     L =  .16  Kb = .065  Adj. Slope =   38.0
  96          BA    .020
  97          LG    .060    .350   4.800    .250  90.000
  98          UC    .240    .160
  99          UA       0       5      16      30      65      77      84      90      94      97
 100          UA     100

 101          KK   C223D
 102          KM   COMBINE R223E AND S223D AT SOUTHEAST LUKE AFB OUTLET
 103          HC       2

 104          KK  RS223D
 105          KM   ROUTE C223D THROUGH BASIN AND CULVERT AT SOUTHEAST LUKE AFB OUTLET
 106          RS       1    STOR
 107          SV       0      .9     1.6
 108          SE    1078    1079    1080
 109          SQ       0      60     200

 110          KK   R223D
 111          KM   ROUTE C223D TO LITCHFIELD ROAD CROSSING
 112          RS       3              -1
 113          RC     .05      .1     .05    1850    .003
 114          RX     750     850     950     960    1040    1050    1150    1250
 115          RY      74      72      72      71      71      72      72      74

 116          KK   S225A
 117          KM   DREAMING SUMMIT OFF-SITE PORTION OF WTADMS SUB-BASIN 225A
 118          KM   RUNOFF FROM SOUTH OF LUKE AFB CROSSING LITCHFIELD ROAD N. OF SUNSET POINT
 119          KM   UA RECORD  BASED OFF NATURAL WATERSHED
 120          KM     L = .55   Kb = .050  Adj. Slope =   20.0
 121          BA    .219
 122          LG    .350    .350   4.700    .290    .000
 123          UC    .600    .310
 124          UA       0       3       5       8      12      20      43      75      90      96
 125          UA     100
              * DDM   ***** Preserved *****

 126          KK   C225A
 127          KM   COMBINE R223D AND S225A AT LITCHFIELD ROAD
 128          HC       2
              * DDM   ***** Preserved *****

 129          KK   R225A
 130          KM   ROUTE C225A TO LITCHFIELD DETENTION FACILITY
 131          KM  CROSS SECTION DATA BASED ON DEA'S INFRASTRUCTURE DRAINAGE REPORT
 132          RS       2              -1
 133          RC     .03     .03    .025    3000    .002
 134          RX       0       4      20      24      28      30      46      50
 135          RY       5       4       0       0       0       0       4       5
              * DDM   ***** Preserved *****
```

```
LINE          ID.......1.......2.......3.......4.......5.......6.......7.......8.......9......10

 136          KK   225P1
 137          KM   DREAMING SUMMIT ONSITE PORTION OF WTADMS SUB-BASIN 225E
 138          KM   UA RECORD BASED OFF URBAN WATERSHED
 139          KM   L =  .29  Kb = .031  Adj. Slope = 31
 140          BA    .050
 141          LG    .120    .250   4.600    .400  30.000
 142          UC    .240    .160
 143          UA       0       5      16      30      65      77      84      90      94      97
 144          UA     100
              * DDM   ***** Preserved *****

 145          KK   D225P1
 146          KM   DIVERT 225P1 TO DETENTION BASIN
 147          KM   RETENTION PROVIDED IN BASIN 1 PER DEA'S FINAL DRAINAGE REPORT FOR UNIT 1
 148          DT  D225P1    6.35
 149          DI       0    1000
 150          DQ       0    1000
              * DDM   ***** Preserved *****

 151          KK    225B
 152          KM   DREAMING SUMMIT OFF-SITE PORTION OF WTADMS SUB-BASIN 225
 153          KM   UA RECORD  BASED OFF URBAN WATERSHED
 154          KM     L = 1.69  Kb = .034  Adj. Slope =   17.0
 155          BA    .539
 156          LG    .220    .300   5.000    .290  11.000
 157          UC    .980    .780
 158          UA       0       5      16      30      65      77      84      90      94      97
 159          UA     100

 160          KK   C225B
 161          KM   COMBINE 225P1 AND 225B
 162          HC       2
              * DDM   ***** Preserved *****

 163          KK   R225B
 164          KM   ROUTE C225B TO LITCHFIELD DETENTION FACILITY
 165          RS       3              -1
 166          RC    .045    .045    .025    2000   .0043
 167          RX       0      18      36      45      50      56      74      92
 168          RY       6       3       0       0       0       0       3       6

 169          KK   225P4
 170          KM   DREAMING SUMMIT ON-SITE PORTION OF WTADMS SUB-BASIN 225C
 171          KM   UA RECORD  BASED OFF URBAN WATERSHED
 172          KM     L = 0.28  Kb = .026  Adj. Slope =   24.0
 173          BA    .298
 174          LG    .120    .250   5.300    .290  30.000
 175          UC    .240    .050
 176          UA       0       5      16      30      65      77      84      90      94      97
 177          UA     100
              * DDM   ***** Preserved *****
```

```
LINE          ID.......1.......2.......3.......4.......5.......6.......7.......8.......9......10

 178          KK   225P2
 179          KM   DREAMING SUMMIT ONSITE PORTION OF WTADMS SUB-BASIN 225D
 180          KM   UA RECORD  BASED OFF URBAN WATERSHED
 181          KM   L =  .36  Kb = .029  Adj. Slope =  15
 182          BA    .073
 183          LG    .120    .250   4.650    .390  30.000
 184          UC    .310    .190
 185          UA       0       5      16      30      65      77      84      90      94      97
 186          UA     100
              * DDM   ***** Preserved *****

 187          KK  D225P2
 188          KM   DIVERT 225P2 TO DETENTION BASIN
 189          KM   RETENTION PROVIDED IN BASIN 2 PER DEA'S FINAL DRAINAGE REPORT FOR UNIT 1
 190          DT  D225P2    6.35
 191          DI       0    1000
 192          DQ       0    1000
              * DDM   ***** Preserved *****

 193          KK   225P3
 194          KM   DREAMING SUMMIT ONSITE PORTION OF WTADMS SUB-BASIN 226
 195          KM   UA RECORD  BASED OFF URBAN WATERSHED
 196          KM   L =  .40  Kb = .030  Adj. Slope = 154
 197          BA    .065
 198          LG    .120    .250   4.700    .380  30.000
 199          UC    .210    .170
 200          UA       0       5      16      30      65      77      84      90      94      97
 201          UA     100
              * DDM   ***** Preserved *****

 202          KK   242P2
 203          KM   NORTH OFFSITE PORTION OF COLTER CHANNEL DESIGN SUB-BASIN 242P1
 204          KM   UA RECORD  BASED OFF URBAN WATERSHED
 205          KM     L =  .34  Kb = .032  Adj. Slope =  297.0
 206          BA    .016
 207          LG    .120    .250   4.600    .400  30.000
 208          UC    .190    .200
 209          UA       0       5      16      30      65      77      84      90      94      97
 210          UA     100
              * DDM   ***** Preserved *****

 211          KK  C242P2
 212          KM   COMBINE C242P2 AND C225P3
 213          HC       2
              * DDM   ***** Preserved *****

 214          KK  D225P3
 215          KM   DIVERT 225P3 TO DETENTION BASIN
 216          KM   RETENTION PROVIDED IN BASIN 3 PER DEA'S FINAL DRAINAGE REPORT FOR UNIT 1
 217          DT  D225P3    9.69
 218          DI       0    1000
 219          DQ       0    1000
```

```
LINE          ID.......1.......2.......3.......4.......5.......6.......7.......8.......9......10

 220          KK  C225P3
 221          KM   COMBINE 225P2 AND 225P3
 222          HC       2

 223          KK   C225P
 224          KM   COMBINE 225A, 225B, 225P4, AND 225P3 AT LITCHFIELD DETENTION FACILITY
 225          HC       4

 226          KK   RS225
 227          KM   STORAGE ROUTE C225 THROUGH LITCHFIELD DETENTION FACILITY
 228          KM   WITH 42" PIPE OUTLET, INV=1058.0
 229          RS       1    STOR       0
 230          SA    .004     6.6    12.2    16.9    17.8    18.3    18.7    19.6    21.1    21.7
 231          SE    1058    1059    1060    1061    1062    1063    1064    1065    1066    1067
 232          SQ       0       5      18      37      58      79      92     104     115     125
              * DDM   ***** Preserved *****

 233          KK    R225
 234          KM   ROUTE RS225 TO COLTER CHANNEL
 235          RS       2              -1
 236          RC     .04     .04     .04    2300    .002
 237          RX       0      25      35      40      45      70      75      85
 238          RY      58      57      56      55    54.5      55      56      57
              * DDM   ***** Preserved *****

 239          KK  SN242B
 240          KM   OFFSITE PORTION OF COLTER CHANNEL MODEL SUB-BASIN D242B
 241          KM   UA RECORD  BASED OFF NATURAL WATERSHED
 242          KM     L =  .24  Kb = .062  Adj. Slope =   65.0
 243          BA    .033
 244          LG    .350    .350   4.300    .380    .000
 245          UC    .290    .210
 246          UA       0       3       5       8      12      20      43      75      90      96
 247          UA     100

 248          KK  RN242B
 249          KM  PONDING THAT OCCURS ALONG THE WEST SIDE OF LITCHFIELD RD
 250          RS       1    STOR       0
 251          SA    .370   1.295   2.249   3.459   4.711   5.764
 252          SE    1083    1084    1085    1086    1087    1088
 253          SQ       0       0       0       0       0      20
              * DDM   ***** Preserved *****

 254          KK  RN242B
 255          KM   ROUTE SN242B THROUGH   242B
 256          RS       2              -1
 257          RC     .04     .04     .04    2400    .007
 258          RX       0       1       2      49      50      98      99     100
 259          RY       5       5       4       0       0       4       5       5
              * DDM   ***** Preserved *****
```

```
LINE          ID.......1.......2.......3.......4.......5.......6.......7.......8.......9......10

 260          KK  S242BP
 261          KM  OFF-SITE PORTION OF COLTER CHANNEL MODEL SUB-BASIN D242B
 262          KM   UA RECORD  BASED OFF URBAN WATERSHED
 263          KM     L =  .51  Kb = .051  Adj. Slope =   69.0
 264          BA    .055
 265          LG    .350    .350   4.650    .390    .000
 266          UC    .400    .360
 267          UA       0       3       5       8      12      20      43      75      90      96
 268          UA     100
              * DDM   ***** Preserved *****

 269          KK   C242B
 270          KM   COMBINE RN242B AND SD242BP
 271          HC       2
              * DDM   ***** Preserved *****

 272          KK  R242BP
 273          KM   ROUTE C242B IN COLTER CHANNEL
 274          RS       1              -1
 275          RC     .03     .03     .03     500   .0035
 276          RX     448     449     450     475     525     550     551     552
 277          RY      44      44      44      40      40      44      44      44
              * DDM   ***** Preserved *****

 278          KK  SN242C
 279          KM   OFFSITE PORTION OF COLTER CHANNEL SUB-BASIN N242C (EXIST)
 280          KM   UA RECORD  BASED OFF NATURAL WATERSHED
 281          KM     L =  .49  Kb = .054  Adj. Slope =   24.0
 282          BA    .127
 283          LG    .350    .350   4.550    .320    .000
 284          UC    .560    .350
 285          UA       0       3       5       8      12      20      43      75      90      96
 286          UA     100
              * DDM   ***** Preserved *****

 287          KK  RN242C
 288          KM   ROUTE SN242C THROUGH S242P3
 289          RS       2              -1
 290          RC     .04     .04     .04    1600     .01
 291          RX       0       8      20      24      28      30      42      50
 292          RY       4       3       0       0       0       0       3       4
              * DDM   ***** Preserved *****

 293          KK   242P3
 294          KM   PORTION OF SUB-BASIN D242D
 295          KM   UA RECORD BASED OFF URBAN WATERSHED
 296          KM   L = 0.38  Kb = .030  Adj. Slope = 265.2
 297          BA    .068
 298          LG    .120    .250   4.900    .350  30.000
 299          UC    .150    .090
 300          UA       0       5      16      30      65      77      84      90      94      97
 301          UA     100
```

```
LINE          ID.......1.......2.......3.......4.......5.......6.......7.......8.......9......10

 302          KK  C242P3
 303          KM   COMBINE RN242C & S242P3
 304          HC       2
              * DDM   ***** Preserved *****

 305          KK  R242P3
 306          KM   ROUTE 242P3 THROUGH 242DP
 307          RS       2              -1
 308          RC     .04     .04     .04    2300    .006
 309          RX       0       5      23      27      30      33      51      56
 310          RY       4       3       0       0       0       0       3       4
              * DDM   ***** Preserved *****

 311          KK  S242DP
 312          KM   ONSITE PORTION OF COLTER CHANNEL SUB-BASIN D242D
 313          KM   UA RECORD  BASED OFF URBAN WATERSHED
 314          KM     L =  .63  Kb = .027  Adj. Slope =   26.0
 315          BA    .178
 316          LG    .120    .250   4.700    .380  30.000
 317          UC    .390    .240
 318          UA       0       5      16      30      65      77      84      90      94      97
 319          UA     100
              * DDM   ***** Preserved *****

 320          KK  C242D1
 321          KM   COMBINE 242P3 AND 242DP UPSTREAM OF COLTER CHANNEL SPILLWAY
 322          HC       2
              * DDM   ***** Preserved *****

 323          KK  C242D2
 324          KM   COMBINE R225,C242D1 AND R242B IN COLTER CHANNEL
 325          HC       3
              * DDM   ***** Preserved *****

 326          KK   R242D
 327          KM   ROUTE C242D2 IN COLTER CHANNEL TO CD242F
 328          RS       3              -1
 329          RC     .03     .03     .03    2300   .0035
 330          RX     448     449     450     475     525     550     551     552
 331          RY      44      44      44      40      40      44      44      44
              * DDM   ***** Preserved *****

 332          KK  SN242G
 333          KM   NORTH OFFSITE PORTION OF COLTER CHANNEL DESIGN SUB-BASIN N242G
 334          KM   UA RECORD  BASED OFF URBAN WATERSHED
 335          KM     L =  .27  Kb = .038  Adj. Slope =   56.0
 336          BA    .021
 337          LG    .150    .260   4.550    .400  17.000
 338          UC    .230    .230
 339          UA       0       5      16      30      65      77      84      90      94      97
 340          UA     100
              * DDM   ***** Preserved *****
```

```
LINE          ID.......1.......2.......3.......4.......5.......6.......7.......8.......9......10

 341          KK  RN242G
 342          KM   ROUTE N242G THROUGH 242P1
 343          RS       1              -1
 344          RC     .05     .04     .05     900     .02
 345          RX       0      20      40      44      48      50      58      68
 346          RY       6       3       0       0       0       0       2       3

 347          KK   242P1
 348          KM   NORTH ONSITE PORTION OF COLTER CHANNEL DESIGN SUB-BASIN N242F
 349          KM   UA RECORD  BASED OFF URBAN WATERSHED
 350          KM     L =  .17  Kb = .032  Adj. Slope =   151.0
 351          BA    .023
 352          LG    .120    .250   4.550    .420  30.000
 353          UC    .160    .090
 354          UA       0       5      16      30      65      77      84      90      94      97
 355          UA     100

 356          KK  C242P1
 357          KM   COMBINE RN242G AND 242P1 AT COLTER CHANNEL
 358          HC       2
              * DDM   ***** Preserved *****

 359          KK  C242P1
 360          KM   ROUTE C242P1 TO COLTER CHANNEL
 361          RS       3              -1
 362          RC     .04     .05     .04    3600    .007
 363          RX       0      15      30      34      38      40      52      60
 364          RY       6       3       0       0       0       0       3       4

 365          KK  SN242H
 366          KM   SOUTH OFFSITE PORTION OF COLTER CHANNEL DESIGN SUB-BASIN N242H
 367          KM   UA RECORD  BASED OFF URBAN WATERSHED
 368          KM     L =  .27  Kb = .046  Adj. Slope =   41.0
 369          BA    .027
 370          LG    .220    .290   4.550    .370  11.000
 371          UC    .290    .250
 372          UA       0       5      16      30      65      77      84      90      94      97
 373          UA     100
              * DDM   ***** Preserved *****

 374          KK  RN242H
 375          KM   ROUTE SN242H TO COLTER CHANNEL
 376          RS       3              -1
 377          RC     .04     .05     .04    3000    .006
 378          RX       0      15      30      34      38      40      52      60
 379          RY       6       3       0       0       0       0       3       4

 380          KK  N242FP
 381          KM   SOUTH ONSITE PORTION OF COLTER CHANNEL DESIGN SUB-BASIN D242F
 382          KM   UA RECORD  BASED OFF URBAN WATERSHED
 383          KM     L = 1.08  Kb = .027  Adj. Slope =   40.0
 384          BA    .173
 385          LG    .120    .250   4.600    .400  30.000
 386          UC    .450    .440
```

```
LINE          ID.......1.......2.......3.......4.......5.......6.......7.......8.......9......10

 387          UA       0       5      16      30      65      77      84      90      94      97
 388          UA     100
              * DDM   ***** Preserved *****

 389          KK  C242FP
 390          KM   COMBINE N242F AND RN242H UPSTREAM OF COLTER CHANNEL SPILLWAY
 391          HC       2

 392          KK  CD242F
 393          KM   COMBINE R242D, C242P1, AND C242FP IN COLTER CHANNEL
 394          HC       3
 395          ZZ
```

```
            SCHEMATIC DIAGRAM OF STREAM NETWORK
INPUT
LINE      (V) ROUTING          (--->) DIVERSION OR PUMP FLOW

 NO.      (.) CONNECTOR        (<---) RETURN OF DIVERTED OR PUMPED FLOW

  46       S226A
               .
               .
  59           .-------> DI226A
  56       D226A
               V
               V
  62      RS226A
               V
               V
  68       R226A
               .
               .
  74           .       S223E
               .           .
               .           .
  84       C223E............
               .
               .
  89           .-------> DI223E
  87       D223E
               .
               .
  92           .       S223D
               .           .
               .           .
 101       C223D............
               V
               V
 104      RS223D
               V
               V
 110       R223D
               .
               .
 116           .       S225A
               .           .
               .           .
 126       C225A............
               V
               V
 129       R225A
               .
               .
 136           .       225P1
               .           .
               .           .
 148           .           .-------> D225P1
 145           .       D225P
               .           .
               .           .
 151           .           .       225B
               .           .           .
               .           .           .
 160           .       C225B............
               .           V
               .           V
 163           .       R225B
               .           .
               .           .
 169           .           .       225P4
               .           .           .
               .           .           .
 178           .           .           .      225P2
               .           .           .          .
               .           .           .          .
 190           .           .           .          .-------> D225P2
 187           .           .           .      D225P2
               .           .           .          .
```

```
193          225P3
202                  242P2
211          C242P2.............
217                 ------->  D225P3
214          D225P3
220     C225P3.............
223  C225P.....................................
     V
     V
226  RS225
     V
     V
233  R225
     .
     .
239  .     SN242B
     .         V
     .         V
248  .     RN242B
     .         V
     .         V
254  .     RN242B
     .         .
     .         .
260  .         .     S242BP
     .         .         .
     .         .         .
269  .      C242B............
     .         V
     .         V
272  .     R242BP
     .         .
     .         .
278  .         .     SN242C
     .         .         V
     .         .         V
287  .         .     RN242C
     .         .         .
     .         .         .
293  .         .         .     242P3
     .         .         .         .
     .         .         .         .
302  .         .     C242P3............
     .         .         V
     .         .         V
305  .         .     R242P3
     .         .         .
     .         .         .
311  .         .         .     S242DP
     .         .         .         .
     .         .         .         .
320  .         .     C242D1.....
     .         .         .
     .         .         .
323  C242D2.....................
     V
     V
326  R242D
     .
     .
332  .     SN242G
     .         V
     .         V
341  .     RN242G
     .         .
```

R225
0 mi² index
100 cfs 92

C242D1
0 mi² index
445 441

C242D2
0 index
590 398

68 cfs
0.09 mi²
4.33

93 cfs
2.1 mi²
7.17 hr

537 cfs
0.37 sq mi
4.17 hr

380 cfs
2.36 mi²
4.17 hr

```
                .          .
347             .          .      242P1
                .          .          .
                .          .          .
356             .     C242P1............
                .          V
                .          V
359             .     C242P1
                .          .
                .          .
365             .          .     SN242H
                .          .          V
                .          .          V
374             .          .     RN242H
                .          .          .
                .          .          .
380             .          .          .     N242FP
                .          .          .          .
                .          .          .          .
389             .          .     C242FP............
                .          .          .
                .          .          .
392        CD242F........................
```

***) RUNOFF ALSO COMPUTED AT THIS LOCATION

```
****************************************                    ****************************************
                                        *                    *                                      *
  FLOOD HYDROGRAPH PACKAGE  (HEC-1)     *                    *   U.S. ARMY CORPS OF ENGINEERS       *
             MAY   1991                 *                    *   HYDROLOGIC ENGINEERING CENTER      *
          VERSION 4.0.1E                *                    *        609 SECOND STREET             *
    Lahey F77L-EM/32 version 5.01       *                    *      DAVIS, CALIFORNIA 95616         *
      Dodson & Associates, Inc.         *                    *          (916) 551-1748              *
 RUN DATE  11/09/99  TIME  11:34:38     *                    *                                      *
****************************************                    ****************************************
```

```
                    DREAMING SUMMIT HYDROLOGY       FILE: DEV_6HR.DAT       NOVEMBER 1999
                    DEVELOPED CONDITIONS                    100-YR, 6-HR STORM EVENT
                    DREAMING SUMMIT PROJECT RETAINED 100-YR, 2-HR VOLUME FOR
                                    UNITS 1, 2A AND 2B
                            NO RETENTION PROVIDED FOR UNIT 3 (SOUTHEAST PORTION OF PROJECT)
                    LOCATION:
                            NORTH OF LITCHFIELD PARK, SOUTHEAST OF LUKE AFB,
                            BETWEEN DYSART ROAD, LITCHFIELD ROAD, COLTER CHANNEL, AND
                            DYSART DRAIN
                            T 2 N, R 1 W, GILA AND SALT RIVER MERIDIAN, ARIZONA
                    BASIN AREAS:
                            BASED ON WHITE TANKS AREA DRAINAGE MASTER STUDY, WLB GROUP, 1992
                            WITH ADJUSTMENTS MADE PER WTADMS MAPPING.
                            WATERSHED AREA AFFECTING DREAMING SUMMIT IS 2.82 SQ MI
                    PRECIP: MCFCD 6-HOUR PRECIPITATION
                            NOAA ATLAS 2 DEPTHS
                            AREAL REDUCTION PER MCFCD USING JD OPTION.
                    LOSSES: GREEN AND AMPT PARAMETERS PER MCFCD DRAINAGE DESIGN MANUAL VOL 1
                    UNIT HYDROGRAPHS:
                            CLARK UNIT HYDROGRAPH METHOD WITH PARAMETERS DEVELOPED USING
                            MCFCD'S MCUHP1.EXE PROGRAM
                    CHANNEL ROUTING:
                            NORMAL DEPTH METHOD

                            ROUTING,DIVERSION AND RATING DATA PROVIDED FROM RESEARCH BY
                            AGRA INFRASTRUCTURE, INC.
                    AREA/STAGE/DISCHARGE ROUTINE ADDED AT N242B PER SURVEY DATA
                DDM MCUHP1 Dreaming Summit

30 IO       OUTPUT CONTROL VARIABLES
                IPRNT          5  PRINT CONTROL
                IPLOT          0  PLOT CONTROL
                QSCAL         0.  HYDROGRAPH PLOT SCALE

   IT       HYDROGRAPH TIME DATA
                NMIN           5  MINUTES IN COMPUTATION INTERVAL
                IDATE      1   0  STARTING DATE
                ITIME       0000  STARTING TIME
                   NQ        300  NUMBER OF HYDROGRAPH ORDINATES
               NDDATE      2   0  ENDING DATE
               NDTIME       0055  ENDING TIME
               ICENT          19  CENTURY MARK

            COMPUTATION INTERVAL    0.08 HOURS
                 TOTAL TIME BASE   24.92 HOURS

      ENGLISH UNITS
          DRAINAGE AREA          SQUARE MILES
          PRECIPITATION DEPTH    INCHES
          LENGTH, ELEVATION      FEET
          FLOW                   CUBIC FEET PER SECOND
          STORAGE VOLUME         ACRE-FEET
          SURFACE AREA           ACRES
          TEMPERATURE            DEGREES FAHRENHEIT

32 JD       INDEX STORM NO. 1
                STRM        3.10  PRECIPITATION DEPTH
                TRDA        0.01  TRANSPOSITION DRAINAGE AREA

33 PI         PRECIPITATION PATTERN
               0.00      0.00      0.00      0.00      0.00      0.00      0.00      0.00      0.00      0.00
               0.00      0.00      0.00      0.00      0.00      0.00      0.00      0.00      0.00      0.00
```

```
              0.00      0.00      0.00      0.00      0.00      0.00      0.00      0.00      0.00      0.00
              0.00      0.00      0.00      0.01      0.01      0.01      0.01      0.01      0.01      0.03
              0.03      0.03      0.05      0.05      0.05      0.15      0.15      0.15      0.03      0.03
              0.03      0.01      0.01      0.01      0.01      0.01      0.01      0.00      0.00      0.00
              0.00      0.00      0.00      0.00      0.00      0.00      0.00      0.00      0.00      0.00
              0.00      0.00
36 JD       INDEX STORM NO. 2
                STRM        3.08  PRECIPITATION DEPTH
                TRDA        0.50  TRANSPOSITION DRAINAGE AREA

 0 PI         PRECIPITATION PATTERN
              0.00      0.00      0.00      0.00      0.00      0.00      0.00      0.00      0.00      0.00
              0.00      0.00      0.00      0.00      0.00      0.00      0.00      0.00      0.00      0.00
              0.00      0.00      0.00      0.00      0.00      0.00      0.00      0.00      0.00      0.00
              0.00      0.00      0.00      0.01      0.01      0.01      0.01      0.01      0.01      0.03
              0.03      0.03      0.05      0.05      0.05      0.15      0.15      0.15      0.03      0.03
              0.03      0.01      0.01      0.01      0.01      0.01      0.01      0.00      0.00      0.00
              0.00      0.00      0.00      0.00      0.00      0.00      0.00      0.00      0.00      0.00
              0.00      0.00
37 JD       INDEX STORM NO. 3
                STRM        3.04  PRECIPITATION DEPTH
                TRDA        2.80  TRANSPOSITION DRAINAGE AREA

38 PI         PRECIPITATION PATTERN
              0.00      0.00      0.00      0.00      0.00      0.00      0.00      0.00      0.00      0.00
              0.00      0.00      0.00      0.00      0.00      0.00      0.00      0.00      0.00      0.00
              0.00      0.00      0.00      0.00      0.00      0.00      0.00      0.00      0.00      0.00
              0.00      0.00      0.00      0.01      0.01      0.01      0.01      0.01      0.01      0.03
              0.03      0.03      0.07      0.07      0.07      0.08      0.08      0.08      0.05      0.05
              0.05      0.02      0.02      0.02      0.01      0.01      0.01      0.00      0.00      0.00
              0.00      0.00      0.00      0.00      0.00      0.00      0.00      0.00      0.00      0.00
              0.00      0.00
41 JD       INDEX STORM NO. 4
                STRM        2.86  PRECIPITATION DEPTH
                TRDA       16.00  TRANSPOSITION DRAINAGE AREA

42 PI         PRECIPITATION PATTERN
              0.01      0.01      0.00      0.00      0.00      0.00      0.00      0.00      0.00      0.01
              0.01      0.01      0.00      0.01      0.00      0.00      0.00      0.00      0.00      0.00
              0.00      0.00      0.01      0.00      0.00      0.00      0.00      0.01      0.01      0.01
              0.01      0.01      0.01      0.01      0.01      0.01      0.02      0.02      0.02      0.03
              0.03      0.03      0.06      0.06      0.06      0.07      0.07      0.07      0.04      0.04
              0.04      0.02      0.02      0.02      0.01      0.01      0.01      0.01      0.01      0.01
              0.00      0.00      0.00      0.00      0.00      0.00      0.00      0.00      0.00      0.00
              0.00      0.00
45 JD       INDEX STORM NO. 5
                STRM        2.51  PRECIPITATION DEPTH
                TRDA       90.00  TRANSPOSITION DRAINAGE AREA

 0 PI         PRECIPITATION PATTERN
              0.01      0.01      0.00      0.00      0.00      0.00      0.00      0.00      0.00      0.01
              0.01      0.01      0.00      0.01      0.00      0.00      0.00      0.00      0.00      0.00
              0.00      0.00      0.01      0.00      0.00      0.00      0.00      0.01      0.01      0.01
              0.01      0.01      0.01      0.01      0.01      0.01      0.02      0.02      0.02      0.03
              0.03      0.03      0.06      0.06      0.06      0.07      0.07      0.07      0.04      0.04
              0.04      0.02      0.02      0.02      0.01      0.01      0.01      0.01      0.01      0.01
              0.00      0.00      0.00      0.00      0.00      0.00      0.00      0.00      0.00      0.00
              0.00      0.00
     WARNING EXCESS AT PONDING LESS THAN ZERO FOR PERIOD. EXCESS SET TO ZERO
```

RUNOFF SUMMARY
FLOW IN CUBIC FEET PER SECOND
TIME IN HOURS, AREA IN SQUARE MILES

OPERATION	STATION	PEAK FLOW	TIME OF PEAK	AVERAGE FLOW FOR MAXIMUM PERIOD 6-HOUR	24-HOUR	72-HOUR	BASIN AREA	MAXIMUM STAGE	TIME OF MAX STAGE
HYDROGRAPH AT	S226A	901.	4.17	99.	25.	24.	0.49		
DIVERSION TO	DI226A	31.	3.50	16.	4.	4.	0.49		
HYDROGRAPH AT	D226A	870.	4.17	83.	21.	20.	0.49		
ROUTED TO	RS226A	233.	4.67	79.	21.	20.	0.49		
ROUTED TO	R226A	177.	5.58	76.	21.	20.	0.49		
HYDROGRAPH AT	S223E	614.	4.25	101.	25.	24.	0.32		
2 COMBINED AT	C223E	570.	4.25	160.	45.	43.	0.81		
DIVERSION TO	DI223E	510.	4.25	105.	26.	25.	0.81		
HYDROGRAPH AT	D223E	60.	3.50	55.	19.	18.	0.81		
HYDROGRAPH AT	S223D	54.	4.08	6.	2.	2.	0.02		
2 COMBINED AT	C223D	108.	4.08	61.	20.	19.	0.83		
ROUTED TO	RS223D	105.	4.08	61.	20.	19.	0.83		
ROUTED TO	R223D	84.	4.75	60.	20.	19.	0.83		
HYDROGRAPH AT	S225A	305.	4.42	33.	8.	8.	0.22		
2 COMBINED AT	C225A	330.	4.42	90.	28.	27.	1.05		
ROUTED TO	R225A	304.	4.58	90.	28.	27.	1.05		
HYDROGRAPH AT	225P1	117.	4.08	10.	3.	3.	0.05		
DIVERSION TO	D225P1	117.	4.08	10.	3.	3.	0.05		
HYDROGRAPH AT	D225P	0.	0.08	0.	0.	0.	0.05		
HYDROGRAPH AT	225B	402.	4.42	95.	24.	23.	0.54		
2 COMBINED AT	C225B	396.	4.50	94.	24.	23.	0.59		
ROUTED TO	R225B	395.	4.58	94.	24.	23.	0.59		
HYDROGRAPH AT	225P4	927.	4.00	65.	16.	16.	0.30		
HYDROGRAPH AT	225P2	158.	4.08	15.	4.	4.	0.07		
DIVERSION TO	D225P2	158.	4.08	13.	3.	3.	0.07		
HYDROGRAPH AT	D225P2	37.	4.50	2.	1.	1.	0.07		
HYDROGRAPH AT	225P3	148.	4.08	14.	3.	3.	0.06		
HYDROGRAPH AT	242P2	35.	4.08	3.	1.	1.	0.02		
2 COMBINED AT	C242P2	182.	4.08	17.	4.	4.	0.08		
DIVERSION TO	D225P3	182.	4.08	17.	4.	4.	0.08		
HYDROGRAPH AT	D225P3	0.	0.08	0.	0.	0.	0.08		
2 COMBINED AT	C225P3	37.	4.50	2.	1.	1.	0.15		
4 COMBINED AT	C225P	916.	4.00	243.	68.	65.	2.10		
ROUTED TO	RS225	93.	6.92	90.	55.	53.	2.10		

ROUTED TO	R225	93.	7.17	90.	54.	52.	2.10
HYDROGRAPH AT	SN242B	60.	4.17	5.	1.	1.	0.03
ROUTED TO	RN242B	0.	0.08	0.	0.	0.	0.03
ROUTED TO	RN242B	0.	0.08	0.	0.	0.	0.03
HYDROGRAPH AT	S242BP	70.	4.25	7.	2.	2.	0.05
2 COMBINED AT	C242B	70.	4.25	7.	2.	2.	0.09
ROUTED TO	R242BP	68.	4.33	7.	2.	2.	0.09
HYDROGRAPH AT	SN242C	165.	4.33	18.	5.	4.	0.13
ROUTED TO	RN242C	161.	4.42	18.	5.	4.	0.13
HYDROGRAPH AT	242P3	202.	4.00	14.	4.	3.	0.07
2 COMBINED AT	C242P3	209.	4.00	33.	8.	8.	0.20
ROUTED TO	R242P3	176.	4.17	33.	8.	8.	0.20
HYDROGRAPH AT	S242DP	331.	4.17	37.	9.	9.	0.18
2 COMBINED AT	C242D1	507.	4.17	70.	17.	17.	0.37
3 COMBINED AT	C242D2	380.	4.25	138.	70.	67.	2.56
ROUTED TO	R242D	376.	4.33	137.	70.	67.	2.56
HYDROGRAPH AT	SN242G	41.	4.08	4.	1.	1.	0.02
ROUTED TO	RN242G	39.	4.08	4.	1.	1.	0.02
HYDROGRAPH AT	242P1	67.	4.00	5.	1.	1.	0.02
2 COMBINED AT	C242P1	96.	4.00	9.	2.	2.	0.04
ROUTED TO	C242P1	71.	4.25	9.	2.	2.	0.04
HYDROGRAPH AT	SN242H	48.	4.08	5.	1.	1.	0.03
ROUTED TO	RN242H	36.	4.42	5.	1.	1.	0.03
HYDROGRAPH AT	N242FP	233.	4.17	36.	9.	9.	0.17
2 COMBINED AT	C242FP	256.	4.25	40.	10.	10.	0.20
3 COMBINED AT	CD242F	589.	4.33	174.	80.	77.	2.80

*** NORMAL END OF HEC-1 ***

DEVELOPED CONDITIONS HEC-1
100-YEAR, 24-HOUR

```
****************************************
*                                      *
*   FLOOD HYDROGRAPH PACKAGE  (HEC-1)  *
*             MAY   1991               *
*          VERSION 4.0.1E              *
*    Lahey F77L-EM/32 version 5.01     *
*      Dodson & Associates, Inc.       *
* RUN DATE  11/09/99  TIME  11:30:10   *
****************************************
```

```
****************************************
*                                      *
*   U.S. ARMY CORPS OF ENGINEERS       *
*   HYDROLOGIC ENGINEERING CENTER      *
*         609 SECOND STREET            *
*      DAVIS, CALIFORNIA 95616         *
*          (916) 551-1748              *
*                                      *
****************************************
```

```
X     X  XXXXXXX   XXXXX          X
X     X  X        X     X        XX
X     X  X        X               X
XXXXXXX  XXXX     X       XXXXX   X
X     X  X        X               X
X     X  X        X     X         X
X     X  XXXXXXX   XXXXX         XXX
```

THIS PROGRAM REPLACES ALL PREVIOUS VERSIONS OF HEC-1 KNOWN AS HEC1 (JAN 73), HEC1GS, HEC1DB, AND HEC1KW.

THE DEFINITIONS OF VARIABLES -RTIMP- AND -RTIOR- HAVE CHANGED FROM THOSE USED WITH THE 1973-STYLE INPUT STRUCTURE.
THE DEFINITION OF -AMSKK- ON RM-CARD WAS CHANGED WITH REVISIONS DATED 28 SEP 81. THIS IS THE FORTRAN77 VERSION
NEW OPTIONS: DAMBREAK OUTFLOW SUBMERGENCE , SINGLE EVENT DAMAGE CALCULATION, DSS:WRITE STAGE FREQUENCY,
DSS:READ TIME SERIES AT DESIRED CALCULATION INTERVAL LOSS RATE:GREEN AND AMPT INFILTRATION
KINEMATIC WAVE: NEW FINITE DIFFERENCE ALGORITHM

```
LINE          ID.......1.......2.......3.......4.......5.......6.......7.......8.......9......10

  1           ID        DREAMING SUMMIT HYDROLOGY       FILE: DEV_24HR.DAT      NOVEMBER  1999
  2           ID        DEVELOPED CONDITIONS                    100-YR, 24-HR STORM EVENT
  3           ID        DREAMING SUMMIT PROJECT RETAINED 100-YR, 6-HR VOLUME FOR
  4           ID                        UNITS 1, 2A AND 2B
  5           ID                NO RETENTION PROVIDED FOR UNIT 3 (SOUTHEAST PORTION OF PROJECT)
  6           ID        LOCATION:
  7           ID                NORTH OF LITCHFIELD PARK, SOUTHEAST OF LUKE AFB,
  8           ID                BETWEEN DYSART ROAD, LITCHFIELD ROAD, COLTER CHANNEL, AND
  9           ID                DYSART DRAIN
 10           ID                T 2 N, R 1 W, GILA AND SALT RIVER MERIDIAN, ARIZONA
 11           ID        BASIN AREAS:
 12           ID                BASED ON WHITE TANKS AREA DRAINAGE MASTER STUDY, WLB GROUP, 1992
 13           ID                WITH ADJUSTMENTS MADE PER WTADMS MAPPING.
 14           ID                WATERSHED AREA AFFECTING DREAMING SUMMIT IS 2.82 SQ MI
 15           ID        PRECIP: MCFCD 6-HOUR PRECIPITATION
 16           ID                NOAA ATLAS 2 DEPTHS
 17           ID                AREAL REDUCTION PER MCFCD USING JD OPTION.
 18           ID        LOSSES: GREEN AND AMPT PARAMETERS PER MCFCD DRAINAGE DESIGN MANUAL VOL 1
 19           ID        UNIT HYDROGRAPHS:
 20           ID                CLARK UNIT HYDROGRAPH METHOD WITH PARAMETERS DEVELOPED USING
 21           ID                MCFCD'S MCUHP1.EXE PROGRAM
 22           ID        CHANNEL ROUTING:
 23           ID                NORMAL DEPTH METHOD
 24           ID
 25           ID                ROUTING,DIVERSION AND RATING DATA PROVIDED FROM RESEARCH BY
 26           ID                AGRA INFRASTRUCTURE, INC.
 27           ID        AREA\STAGE\DISCHARGE ROUTINE ADDED AT N242B PER SURVEY DATA
 28           ID   DDM MCUHP1 Dreaming Summit
              *DIAGRAM
 29           IT       5                    300
 30           IO       5
 31           IN      15
 32           JD    3.80    0.01
              * The following PC records used a 24-hour SCS Type II Rainfall
 33           PC    .000    .002    .005    .008    .011    .014    .017    .020    .023    .026
 34           PC    .029    .032    .035    .038    .041    .044    .048    .052    .056    .060
 35           PC    .064    .068    .072    .076    .080    .085    .090    .095    .100    .105
 36           PC    .110    .115    .120    .126    .135    .142    .150    .158    .166    .175
 37           PC    .184    .195    .208    .224    .243    .266    .318    .479    .678    .716
 38           PC    .743    .764    .781    .795    .808    .818    .828    .837    .844    .851
 39           PC    .858    .865    .871    .877    .883    .889    .895    .900    .905    .910
 40           PC    .915    .919    .923    .927    .931    .935    .939    .943    .947    .951
 41           PC    .954    .957    .960    .963    .966    .969    .972    .975    .978    .981
 42           PC    .984    .987    .990    .993    .996    .999   1.000
 43           JD    3.57      10
 44           JD    3.46      20
              * DDM   ***** Preserved *****

 45           KK   S226A
 46           KM   PORTION OF WTADMS SUB-BASIN 226
 47           KM   AREA EAST OF LUKE AFB THAT FLOWS WEST INTO LUKE AFB
 48           KM   UA RECORD  BASED OFF URBAN WATERSHED
 49           KM     L =  .61  Kb = .033  Adj. Slope =   10.0
 50           BA    .491
 51           LG    .170    .290   4.800    .330  26.000
```

```
LINE          ID.......1.......2.......3.......4.......5.......6.......7.......8.......9......10

  52          UC    .520    .180
  53          UA       0       5      16      30      65      77      84      90      94      97
  54          UA     100
              * DDM   ***** Preserved *****

  55          KK   D226A
  56          KM   DIVERT FLOWS EAST TOWARD AGUA FRIA RIVER IN 36 INCH STORM DRAIN
  57          KM   DIVERT FLOWS NORTH TOWARD DYSART DRAIN IN THREE 18 INCH STORM DRAINS
  58          DT  DI226A
  59          DI       0      31    2000
  60          DQ       0      31      31
              * DDM   ***** Preserved *****

  61          KK  RS226A
  62          KM   STORAGE ROUTE S226 AS IN WTADMS
  63          RS       1    STOR       0
  64          SV       0    0.24    3.34   18.04   51.44  102.84  171.74
  65          SE  1075.2  1075.5    1076  1076.5    1077  1077.5    1078
  66          SQ       0       0      21     136     428     875    1487
              * DDM   ***** Preserved *****

  67          KK   R226A
  68          KM   ROUTE S226A THROUGH S223E
  69          RS       3              -1
  70          RC     .05     .02     .05    1800    .001
  71          RX    9300    9600    9985    9986   10014   10015   10400   10700
  72          RY    1076  1075.2  1075.1  1074.9  1074.9  1075.1  1075.2    1076
              * DDM   ***** Preserved *****

  73          KK   S223E
  74          KM   PORTION OF WTADMS SUB-BASIN 223
  75          KM   PORTION OF LUKE AFB THAT FLOWS BY STORM DRAIN TO PUMP STATION
  76          KM   UA RECORD  BASED OFF URBAN WATERSHED
  77          KM     L =  .57  Kb = .048  Adj. Slope =   11.0
  78          BA    .324
  79          LG    .060    .350    4.80    .250  90.000
  80          UC    .620    .280
  81          UA       0       5      16      30      65      77      84      90      94      97
  82          UA     100
              * DDM   ***** Preserved *****

  83          KK   C223E
  84          KM   COMBINE R226A AND S223E
  85          HC       2
              * DDM   ***** Preserved *****

  86          KK   D223E
  87          KM   DIVERT ALL BUT PUMPED FLOWS OUT OF MODEL TO WEST.  PUMPED GOES TO S223D
  88          DT  DI223E
  89          DI       0      60   10060
  90          DQ       0       0   10000
              * DDM   ***** Preserved *****
```

```
LINE          ID.......1.......2.......3.......4.......5.......6.......7.......8.......9......10

  91          KK   S223D
  92          KM   PORTION OF LUKE AFB THAT DRAINS BY GRAVITY TOWARD COLTER CHANNEL
  93          KM   UA RECORD  BASED OFF URBAN WATERSHED
  94          KM     L =  .16  Kb = .065  Adj. Slope =   38.0
  95          BA    .020
  96          LG    .060    .350   4.800    .250  90.000
  97          UC    .200    .140
  98          UA       0       5      16      30      65      77      84      90      94      97
  99          UA     100

 100          KK   C223D
 101          KM   COMBINE R223E AND S223D AT SOUTHEAST LUKE AFB OUTLET
 102          HC       2

 103          KK  RS223D
 104          KM   ROUTE C223D THROUGH BASIN AND CULVERT AT SOUTHEAST LUKE AFB OUTLET
 105          RS       1    STOR
 106          SV       0      .9     1.6
 107          SE    1078    1079    1080
 108          SQ       0      60     200

 109          KK   R223D
 110          KM   ROUTE C223D TO LITCHFIELD ROAD CROSSING
 111          RS       3              -1
 112          RC     .05      .1     .05    1850    .003
 113          RX     750     850     950     960    1040    1050    1150    1250
 114          RY      74      72      72      71      71      72      72      74

 115          KK   S225A
 116          KM   DREAMING SUMMIT OFF-SITE PORTION OF WTADMS SUB-BASIN 225A
 117          KM   RUNOFF FROM SOUTH OF LUKE AFB CROSSING LITCHFIELD ROAD N. OF SUNSET POINT
 118          KM   UA RECORD  BASED OFF NATURAL WATERSHED
 119          KM     L = .55   Kb = .050  Adj. Slope =   20.0
 120          BA    .219
 121          LG    .350    .350   4.700    .290    .000
 122          UC    .510    .260
 123          UA       0       3       5       8      12      20      43      75      90      96
 124          UA     100
              * DDM   ***** Preserved *****

 125          KK   C225A
 126          KM   COMBINE R223D AND S225A AT LITCHFIELD ROAD
 127          HC       2
              * DDM   ***** Preserved *****

 128          KK   R225A
 129          KM   ROUTE C225A TO LITCHFIELD DETENTION FACILITY
 130          RS       2              -1
 131          RC     .03     .03    .025    3000    .002
 132          RX       0       4      20      24      28      30      46      50
 133          RY       5       4       0       0       0       0       4       5
              * DDM   ***** Preserved *****
```

```
LINE          ID.......1.......2.......3.......4.......5.......6.......7.......8.......9......10

 134          KK   225P1
 135          KM   DREAMING SUMMIT ONSITE PORTION OF WTADMS SUB-BASIN 225E
 136          KM   UA RECORD BASED OF URBAN WATERSHED
 137          KM   L =  .29  Kb = .031  Adj. Slope = 31
 138          BA    .057
 139          LG    .120    .250   4.600    .400  30.000
 140          UC    .200    .120
 141          UA       0       5      16      30      65      77      84      90      94      97
 142          UA     100
              * DDM   ***** Preserved *****

 143          KK   D225P1
 144          KM   DIVERT 225P1 TO DETENTION BASIN
 145          KM  RETENTION PROVIDED IN BASIN 1 PER DEA'S FINAL DRAINAGE REPORT FOR UNIT 1
 146          DT  D225P1    6.35
 147          DI       0    1000
 148          DQ       0    1000
              * DDM   ***** Preserved *****

 149          KK    225B
 150          KM   DREAMING SUMMIT OFF-SITE PORTION OF WTADMS SUB-BASIN 225
 151          KM   UA RECORD  BASED OFF URBAN WATERSHED
 152          KM     L = 1.69  Kb = .034  Adj. Slope =   17.0
 153          BA    .539
 154          LG    .220    .300   5.000    .290  11.000
 155          UC    .940    .750
 156          UA       0       5      16      30      65      77      84      90      94      97
 157          UA     100

 158          KK   C225B
 159          KM   COMBINE 225P1 AND 225B
 160          HC       2
              * DDM   ***** Preserved *****

 161          KK   R225B
 162          KM   ROUTE C225B TO LITCHFIELD DETENTION FACILITY
 163          RS       3              -1
 164          RC    .045    .045    .025    2000   .0043
 165          RX       0      18      36      45      50      56      74      92
 166          RY       6       3       0       0       0       0       3       6

 167          KK   225P4
 168          KM   DREAMING SUMMIT ON-SITE PORTION OF WTADMS SUB-BASIN 225C
 169          KM   UA RECORD  BASED OFF URBAN WATERSHED
 170          KM     L = 0.28  Kb = .026  Adj. Slope =   24.0
 171          BA    .298
 172          LG    .120    .250   5.300    .290  30.000
 173          UC    .200    .040
 174          UA       0       5      16      30      65      77      84      90      94      97
 175          UA     100
              * DDM   ***** Preserved *****
```

```
LINE          ID.......1.......2.......3.......4.......5.......6.......7.......8.......9......10

  176         KK   225P2
  177         KM   DREAMING SUMMIT ONSITE PORTION OF WTADMS SUB-BASIN 225D
  178         KM   UA RECORD  BASED OFF URBAN WATERSHED
  179         KM   L =  .36  Kb = .029  Adj. Slope =  15
  180         BA    .073
  181         LG    .120    .250   4.650    .390  30.000
  182         UC    .250    .140
  183         UA       0       5      16      30      65      77      84      90      94      97
  184         UA     100
              * DDM   ***** Preserved *****

  185         KK  D225P2
  186         KM   DIVERT 225P2 TO DETENTION BASIN
  187         KM  RETENTION PROVIDED IN BASIN 2 PER DEA'S FINAL DRAINAGE REPORT FOR UNIT 1
  188         DT  D225P2    6.35
  189         DI       0    1000
  190         DQ       0    1000
              * DDM   ***** Preserved *****

  191         KK   225P3
  192         KM   DREAMING SUMMIT ONSITE PORTION OF WTADMS SUB-BASIN 226
  193         KM   UA RECORD  BASED OFF URBAN WATERSHED
  194         KM   L =  .40  Kb = .030  Adj. Slope = 154
  195         BA    .065
  196         LG    .120    .250   4.700    .380  30.000
  197         UC    .170    .130
  198         UA       0       5      16      30      65      77      84      90      94      97
  199         UA     100
              * DDM   ***** Preserved *****

  200         KK   242P2
  201         KM   NORTH OFFSITE PORTION OF COLTER CHANNEL DESIGN SUB-BASIN 242P1
  202         KM   UA RECORD  BASED OFF URBAN WATERSHED
  203         KM     L =  .34  Kb = .032  Adj. Slope =  297.0
  204         BA    .016
  205         LG    .120    .250   4.600    .400  30.000
  206         UC    .150    .160
  207         UA       0       5      16      30      65      77      84      90      94      97
  208         UA     100
              * DDM   ***** Preserved *****

  209         KK  C242P2
  210         KM   COMBINE C242P2 AND C225P3
  211         HC       2
              * DDM   ***** Preserved *****

  212         KK  D225P3
  213         KM   DIVERT 225P3 TO DETENTION BASIN
  214         KM  RETENTION PROVIDED IN BASIN 3 PER DEA'S FINAL DRAINAGE REPORT FOR UNIT 1
  215         DT  D225P3    9.69
  216         DI       0    1000
  217         DQ       0    1000
```

```
LINE          ID.......1.......2.......3.......4.......5.......6.......7.......8.......9......10

 218          KK  C225P3
 219          KM   COMBINE 225P2 AND 225P3
 220          HC       2

 221          KK   C225P
 222          KM   COMBINE 225A, 225B, 225P4, AND 225P3 AT LITCHFIELD DETENTION FACILITY
 223          HC       4

 224          KK   RS225
 225          KM   STORAGE ROUTE C225 THROUGH LITCHFIELD DETENTION FACILITY
 226          KM   WITH 42" PIPE OUTLET, INV=1058.0
 227          RS       1    STOR       0
 228          SA    .004     6.6    12.2    16.9    17.8    18.3    18.7    19.6    21.1    21.7
 229          SE    1058    1059    1060    1061    1062    1063    1064    1065    1066    1067
 230          SQ       0       5      18      37      58      79      92     104     115     125
              * DDM   ***** Preserved *****

 231          KK    R225
 232          KM   ROUTE RS225 TO COLTER CHANNEL
 233          RS       2              -1
 234          RC     .04     .04     .04    2300    .002
 235          RX       0      25      35      40      45      70      75      85
 236          RY      58      57      56      55    54.5      55      56      57
              * DDM   ***** Preserved *****

 237          KK  SN242B
 238          KM   OFFSITE PORTION OF COLTER CHANNEL MODEL SUB-BASIN D242B
 239          KM   UA RECORD  BASED OFF NATURAL WATERSHED
 240          KM     L =  .24  Kb = .062  Adj. Slope =   65.0
 241          BA    .033
 242          LG    .350    .350   4.300    .380    .000
 243          UC    .220    .150
 244          UA       0       3       5       8      12      20      43      75      90      96
 245          UA     100

 246          KK  RN242B
 247          KM  PONDING THAT OCCURS ALONG THE WEST SIDE OF LITCHFIELD RD
 248          RS       1    STOR       0
 249          SA    .370   1.295   2.249   3.459   4.711   5.764
 250          SE    1083    1084    1085    1086    1087    1088
 251          SQ       0       0       0       0       0      20
              * DDM   ***** Preserved *****

 252          KK  RN242B
 253          KM   ROUTE SN242B THROUGH   242B
 254          RS       2              -1
 255          RC     .04     .04     .04    2400    .007
 256          RX       0       1       2      49      50      98      99     100
 257          RY       5       5       4       0       0       4       5       5
              * DDM   ***** Preserved *****
```

```
LINE          ID.......1.......2.......3.......4.......5.......6.......7.......8.......9......10

 258          KK  S242BP
 259          KM  OFF-SITE PORTION OF COLTER CHANNEL MODEL SUB-BASIN D242B
 260          KM   UA RECORD  BASED OFF URBAN WATERSHED
 261          KM     L =  .51  Kb = .051  Adj. Slope =   69.0
 262          BA    .055
 263          LG    .350    .350   4.650    .390    .000
 264          UC    .320    .280
 265          UA       0       3       5       8      12      20      43      75      90      96
 266          UA     100
              * DDM   ***** Preserved *****

 267          KK   C242B
 268          KM   COMBINE RN242B AND SD242BP
 269          HC       2
              * DDM   ***** Preserved *****

 270          KK  R242BP
 271          KM   ROUTE C242B IN COLTER CHANNEL
 272          RS       1              -1
 273          RC     .03     .03     .03     500   .0035
 274          RX     448     449     450     475     525     550     551     552
 275          RY      44      44      44      40      40      44      44      44
              * DDM   ***** Preserved *****

 276          KK  SN242C
 277          KM   OFFSITE PORTION OF COLTER CHANNEL SUB-BASIN N242C (EXIST)
 278          KM   UA RECORD  BASED OFF NATURAL WATERSHED
 279          KM     L =  .49  Kb = .054  Adj. Slope =   24.0
 280          BA    .127
 281          LG    .350    .350   4.550    .320    .000
 282          UC    .470    .290
 283          UA       0       3       5       8      12      20      43      75      90      96
 284          UA     100
              * DDM   ***** Preserved *****

 285          KK  RN242C
 286          KM   ROUTE SN242C THROUGH S242P3
 287          RS       2              -1
 288          RC     .04     .04     .04    1600    .01
 289          RX       0       8      20      24      28      30      42      50
 290          RY       4       3       0       0       0       0       3       4
              * DDM   ***** Preserved *****

 291          KK   242P3
 292          KM   PORTION OF SUB-BASIN D242D
 293          KM   UA RECORD BASED OFF URBAN WATERSHED
 294          KM   L = 0.38  Kb = .030  Adj. Slope = 265.2
 295          BA    .068
 296          LG    .120    .250   4.900    .350  30.000
 297          UC    .120    .080
 298          UA       0       5      16      30      65      77      84      90      94      97
 299          UA     100
              * DDM   ***** Preserved *****
```

```
LINE          ID.......1.......2.......3.......4.......5.......6.......7.......8.......9......10

 300          KK  C242P3
 301          KM   COMBINE RN242C & S242P3
 302          HC       2

 303          KK  R242P3
 304          KM   ROUTE 242P3 THROUGH 242DP
 305          RS       2              -1
 306          RC     .04     .04     .04    2300    .006
 307          RX       0       5      23      27      30      33      51      56
 308          RY       4       3       0       0       0       0       3       4
              * DDM   ***** Preserved *****

 309          KK  S242DP
 310          KM   ONSITE PORTION OF COLTER CHANNEL SUB-BASIN D242D
 311          KM   UA RECORD  BASED OFF URBAN WATERSHED
 312          KM     L =  .63  Kb = .027  Adj. Slope =   26.0
 313          BA    .178
 314          LG    .120    .250   4.700    .380  30.000
 315          UC    .320    .190
 316          UA       0       5      16      30      65      77      84      90      94      97
 317          UA     100
              * DDM   ***** Preserved *****

 318          KK  C242D1
 319          KM   COMBINE 242P3 AND 242DP UPSTREAM OF COLTER CHANNEL SPILLWAY
 320          HC       2
              * DDM   ***** Preserved *****

 321          KK  C242D2
 322          KM   COMBINE R225, C242D1 AND R242B IN COLTER CHANNEL
 323          HC       3
              * DDM   ***** Preserved *****

 324          KK   R242D
 325          KM   ROUTE C242D2 IN COLTER CHANNEL TO CD242F
 326          RS       3              -1
 327          RC     .03     .03     .03    2300   .0035
 328          RX     448     449     450     475     525     550     551     552
 329          RY      44      44      44      40      40      44      44      44
              * DDM   ***** Preserved *****

 330          KK  SN242G
 331          KM   NORTH OFFSITE PORTION OF COLTER CHANNEL DESIGN SUB-BASIN N242G
 332          KM   UA RECORD  BASED OFF URBAN WATERSHED
 333          KM     L =  .27  Kb = .038  Adj. Slope =   56.0
 334          BA    .021
 335          LG    .150    .260   4.550    .400  17.000
 336          UC    .190    .180
 337          UA       0       5      16      30      65      77      84      90      94      97
 338          UA     100
              * DDM   ***** Preserved *****
```

```
LINE          ID.......1.......2.......3.......4.......5.......6.......7.......8.......9......10

  339         KK  RN242G
  340         KM   ROUTE N242G THROUGH 242P1
  341         RS       1              -1
  342         RC     .05     .04     .05     900    .020
  343         RX       0      20      40      44      48      50      58      68
  344         RY       6       3       0       0       0       0       2       3

  345         KK   242P1
  346         KM   NORTH ONSITE PORTION OF COLTER CHANNEL DESIGN SUB-BASIN N242F
  347         KM   UA RECORD  BASED OFF URBAN WATERSHED
  348         KM     L =  .17  Kb = .032  Adj. Slope =   151.0
  349         BA    .023
  350         LG    .120    .250   4.550    .420  30.000
  351         UC    .120    .070
  352         UA       0       5      16      30      65      77      84      90      94      97
  353         UA     100

  354         KK  C242P1
  355         KM   COMBINE RN242G AND 242P1 AT COLTER CHANNEL
  356         HC       2
              * DDM   ***** Preserved *****

  357         KK  C242P1
  358         KM   ROUTE C242P1 TO COLTER CHANNEL
  359         RS       3              -1
  360         RC     .04     .05     .04    3600    .007
  361         RX       0      15      30      34      38      40      52      60
  362         RY       6       3       0       0       0       0       3       4

  363         KK  SN242H
  364         KM   SOUTH OFFSITE PORTION OF COLTER CHANNEL DESIGN SUB-BASIN N242H
  365         KM   UA RECORD  BASED OFF URBAN WATERSHED
  366         KM     L =  .27  Kb = .046  Adj. Slope =   41.0
  367         BA    .027
  368         LG    .220    .290   4.550    .370  11.000
  369         UC    .230    .200
  370         UA       0       5      16      30      65      77      84      90      94      97
  371         UA     100
              * DDM   ***** Preserved *****

  372         KK  RN242H
  373         KM   ROUTE SN242H TO COLTER CHANNEL
  374         RS       3              -1
  375         RC     .04     .05     .04    3000    .006
  376         RX       0      15      30      34      38      40      52      60
  377         RY       6       3       0       0       0       0       3       4

  378         KK  N242FP
  379         KM   SOUTH ONSITE PORTION OF COLTER CHANNEL DESIGN SUB-BASIN D242F
  380         KM   UA RECORD  BASED OFF URBAN WATERSHED
  381         KM     L = 1.08  Kb = .027  Adj. Slope =   40.0
  382         BA    .173
  383         LG    .120    .250   4.600    .400  30.000
  384         UC    .380    .370
```

```
LINE          ID.......1.......2.......3.......4.......5.......6.......7.......8.......9......10

 385          UA       0       5      16      30      65      77      84      90      94      97
 386          UA     100
              * DDM   ***** Preserved *****

 387          KK  C242FP
 388          KM   COMBINE N242F AND RN242H UPSTREAM OF COLTER CHANNEL SPILLWAY
 389          HC       2

 390          KK  CD242F
 391          KM   COMBINE R242D, C242P1, AND C242FP IN COLTER CHANNEL
 392          HC       3
 393          ZZ
```

```
            SCHEMATIC DIAGRAM OF STREAM NETWORK
PUT
LINE      (V) ROUTING          (--->) DIVERSION OR PUMP FLOW

NO.       (.) CONNECTOR        (<---) RETURN OF DIVERTED OR PUMPED FLOW

 45        S226A
               .
               .
 58            .-------> DI226A
 55        D226A
               V
               V
 61       RS226A
               V
               V
 67        R226A
               .
               .
 73            .       S223E
               .           .
               .           .
 83        C223E............
               .
               .
 88            .-------> DI223E
 86        D223E
               .
               .
 91            .       S223D
               .           .
               .           .
100        C223D............
               V
               V
103       RS223D
               V
               V
109        R223D
               .
               .
115            .       S225A
               .           .
               .           .
125        C225A............
               V
               V
128        R225A
               .
               .
134            .       225P1
               .           .
               .           .
146            .           .-------> D225P1
143            .       D225P .
               .           .
               .           .
149            .           .       225B
               .           .           .
               .           .           .
158            .       C225B............
               .           V
               .           V
161            .       R225B
               .           .
               .           .
167            .           .      225P4
               .           .           .
               .           .           .
176            .           .           .      225P2
               .           .           .           .
               .           .           .           .
188            .           .           .           .-------> D225P2
185            .           .           .      D225P2
               .           .           .           .
```

```
191                                          225P3
                                                 .
                                                 .
200                                                   242P2
                                                 .       .
                                                 .       .
209                                          C242P2............
                                                 .
                                                 .
215                                              .-------> D225P3
212                                          D225P3
                                                 .
                                                 .
218                                     C225P3............
                                                 .
                                                 .
221                 C225P.................................
                        V
                        V
224                 RS225
                        V
                        V
231                  R225
                        .
                        .
237                     .      SN242B
                        .          V
                        .          V
246                     .      RN242B
                        .          V
                        .          V
252                     .      RN242B
                        .          .
                        .          .
258                     .          .      S242BP
                        .          .          .
                        .          .          .
267                     .       C242B............
                        .          V
                        .          V
270                     .      R242BP
                        .          .
                        .          .
276                     .          .      SN242C
                        .          .          V
                        .          .          V
285                     .          .      RN242C
                        .          .          .
                        .          .          .
291                     .          .          .       242P3
                        .          .          .          .
                        .          .          .          .
300                     .          .      C242P3............
                        .          .          V
                        .          .          V
303                     .          .      R242P3
                        .          .          .
                        .          .          .
309                     .          .          .      S242DP
                        .          .          .          .
                        .          .          .          .
318                     .          .      C242D1............
                        .          .          .
                        .          .          .
321                 C242D2.......................
                        V
                        V
324                  R242D
                        .
                        .
330                     .      SN242G
                        .          V
                        .          V
339                     .      RN242G
                        .          .
```

```
                .          .
345             .          .      242P1
                .          .          .
                .          .          .
354             .     C242P1............
                .          V
                .          V
357             .     C242P1
                .          .
                .          .
363             .          .     SN242H
                .          .          V
                .          .          V
372             .          .     RN242H
                .          .          .
                .          .          .
378             .          .          .     N242FP
                .          .          .          .
                .          .          .          .
387             .          .     C242FP............
                .          .          .
                .          .          .
390        CD242F........................
```

**) RUNOFF ALSO COMPUTED AT THIS LOCATION

```
****************************************                                    ****************************************
                                       *                                    *                                      *
  FLOOD HYDROGRAPH PACKAGE  (HEC-1)    *                                    *    U.S. ARMY CORPS OF ENGINEERS      *
*            MAY   1991                *                                    *    HYDROLOGIC ENGINEERING CENTER     *
*          VERSION 4.0.1E              *                                    *          609 SECOND STREET           *
    Lahey F77L-EM/32 version 5.01      *                                    *       DAVIS, CALIFORNIA 95616        *
      Dodson & Associates, Inc.        *                                    *           (916) 551-1748             *
  RUN DATE  11/09/99  TIME  11:30:10   *                                    *                                      *
****************************************                                    ****************************************
```

```
                              DREAMING SUMMIT HYDROLOGY       FILE: DEV_24HR.DAT      NOVEMBER  1999
                              DEVELOPED CONDITIONS                    100-YR, 24-HR STORM EVENT
                              DREAMING SUMMIT PROJECT RETAINED 100-YR, 6-HR VOLUME FOR
                                              UNITS 1, 2A AND 2B
                                      NO RETENTION PROVIDED FOR UNIT 3 (SOUTHEAST PORTION OF PROJECT)
                              LOCATION:
                                      NORTH OF LITCHFIELD PARK, SOUTHEAST OF LUKE AFB,
                                      BETWEEN DYSART ROAD, LITCHFIELD ROAD, COLTER CHANNEL, AND
                                      DYSART DRAIN
                                      T 2 N, R 1 W, GILA AND SALT RIVER MERIDIAN, ARIZONA
                              BASIN AREAS:
                                      BASED ON WHITE TANKS AREA DRAINAGE MASTER STUDY, WLB GROUP, 1992
                                      WITH ADJUSTMENTS MADE PER WTADMS MAPPING.
                                      WATERSHED AREA AFFECTING DREAMING SUMMIT IS 2.82 SQ MI
                              PRECIP: MCFCD 6-HOUR PRECIPITATION
                                      NOAA ATLAS 2 DEPTHS
                                      AREAL REDUCTION PER MCFCD USING JD OPTION.
                              LOSSES: GREEN AND AMPT PARAMETERS PER MCFCD DRAINAGE DESIGN MANUAL VOL 1
                              UNIT HYDROGRAPHS:
                                      CLARK UNIT HYDROGRAPH METHOD WITH PARAMETERS DEVELOPED USING
                                      MCFCD'S MCUHP1.EXE PROGRAM
                              CHANNEL ROUTING:
                                      NORMAL DEPTH METHOD

                                      ROUTING,DIVERSION AND RATING DATA PROVIDED FROM RESEARCH BY
                                      AGRA INFRASTRUCTURE, INC.
                              AREA\STAGE\DISCHARGE ROUTINE ADDED AT N242B PER SURVEY DATA
                         DDM MCUHP1 Dreaming Summit

 30 IO          OUTPUT CONTROL VARIABLES
                      IPRNT           5  PRINT CONTROL
                      IPLOT           0  PLOT CONTROL
                      QSCAL          0.  HYDROGRAPH PLOT SCALE

    IT          HYDROGRAPH TIME DATA
                       NMIN           5  MINUTES IN COMPUTATION INTERVAL
                      IDATE      1    0  STARTING DATE
                      ITIME        0000  STARTING TIME
                         NQ         300  NUMBER OF HYDROGRAPH ORDINATES
                     NDDATE      2    0  ENDING DATE
                     NDTIME        0055  ENDING TIME
                      ICENT          19  CENTURY MARK

                 COMPUTATION INTERVAL    0.08 HOURS
                      TOTAL TIME BASE   24.92 HOURS

         ENGLISH UNITS
              DRAINAGE AREA          SQUARE MILES
              PRECIPITATION DEPTH    INCHES
              LENGTH, ELEVATION      FEET
              FLOW                   CUBIC FEET PER SECOND
              STORAGE VOLUME         ACRE-FEET
              SURFACE AREA           ACRES
              TEMPERATURE            DEGREES FAHRENHEIT

 32 JD          INDEX STORM NO. 1
                       STRM       3.80  PRECIPITATION DEPTH
                       TRDA       0.01  TRANSPOSITION DRAINAGE AREA

 33 PI            PRECIPITATION PATTERN
                     0.00      0.00      0.00      0.00      0.00      0.00      0.00      0.00      0.00      0.00
                     0.00      0.00      0.00      0.00      0.00      0.00      0.00      0.00      0.00      0.00
```

0.00	0.00	0.00	0.00	0.00	0.00	0.00	0.00	0.00	0.00
0.00	0.00	0.00	0.00	0.00	0.00	0.00	0.00	0.00	0.00
0.00	0.00	0.00	0.00	0.00	0.00	0.00	0.00	0.00	0.00
0.00	0.00	0.00	0.00	0.00	0.00	0.00	0.00	0.00	0.00
0.00	0.00	0.00	0.00	0.00	0.00	0.00	0.00	0.00	0.00
0.00	0.00	0.00	0.00	0.00	0.00	0.00	0.00	0.00	0.00
0.00	0.00	0.00	0.00	0.00	0.00	0.00	0.00	0.00	0.00
0.00	0.00	0.00	0.00	0.00	0.00	0.00	0.00	0.00	0.00
0.00	0.00	0.00	0.00	0.00	0.00	0.00	0.00	0.00	0.00
0.00	0.00	0.00	0.00	0.00	0.00	0.00	0.00	0.00	0.00
0.00	0.00	0.00	0.00	0.00	0.00	0.01	0.01	0.01	0.01
0.01	0.01	0.01	0.01	0.01	0.02	0.02	0.02	0.05	0.05
0.05	0.07	0.07	0.07	0.01	0.01	0.01	0.01	0.01	0.01
0.01	0.01	0.01	0.01	0.01	0.01	0.00	0.00	0.00	0.00
0.00	0.00	0.00	0.00	0.00	0.00	0.00	0.00	0.00	0.00
0.00	0.00	0.00	0.00	0.00	0.00	0.00	0.00	0.00	0.00
0.00	0.00	0.00	0.00	0.00	0.00	0.00	0.00	0.00	0.00
0.00	0.00	0.00	0.00	0.00	0.00	0.00	0.00	0.00	0.00
0.00	0.00	0.00	0.00	0.00	0.00	0.00	0.00	0.00	0.00
0.00	0.00	0.00	0.00	0.00	0.00	0.00	0.00	0.00	0.00
0.00	0.00	0.00	0.00	0.00	0.00	0.00	0.00	0.00	0.00
0.00	0.00	0.00	0.00	0.00	0.00	0.00	0.00	0.00	0.00
0.00	0.00	0.00	0.00	0.00	0.00	0.00	0.00	0.00	0.00
0.00	0.00	0.00	0.00	0.00	0.00	0.00	0.00	0.00	0.00
0.00	0.00	0.00	0.00	0.00	0.00	0.00	0.00	0.00	0.00
0.00	0.00	0.00	0.00	0.00	0.00	0.00	0.00	0.00	0.00
0.00	0.00	0.00	0.00	0.00	0.00	0.00	0.00		

43 JD INDEX STORM NO. 2

STRM 3.57 PRECIPITATION DEPTH

TRDA 10.00 TRANSPOSITION DRAINAGE AREA

0 PI PRECIPITATION PATTERN

0.00	0.00	0.00	0.00	0.00	0.00	0.00	0.00	0.00	0.00
0.00	0.00	0.00	0.00	0.00	0.00	0.00	0.00	0.00	0.00
0.00	0.00	0.00	0.00	0.00	0.00	0.00	0.00	0.00	0.00
0.00	0.00	0.00	0.00	0.00	0.00	0.00	0.00	0.00	0.00
0.00	0.00	0.00	0.00	0.00	0.00	0.00	0.00	0.00	0.00
0.00	0.00	0.00	0.00	0.00	0.00	0.00	0.00	0.00	0.00
0.00	0.00	0.00	0.00	0.00	0.00	0.00	0.00	0.00	0.00
0.00	0.00	0.00	0.00	0.00	0.00	0.00	0.00	0.00	0.00
0.00	0.00	0.00	0.00	0.00	0.00	0.00	0.00	0.00	0.00
0.00	0.00	0.00	0.00	0.00	0.00	0.00	0.00	0.00	0.00
0.00	0.00	0.00	0.00	0.00	0.00	0.00	0.00	0.00	0.00
0.00	0.00	0.00	0.00	0.00	0.00	0.01	0.01	0.01	0.01
0.01	0.01	0.01	0.01	0.01	0.02	0.02	0.02	0.05	0.05
0.05	0.07	0.07	0.07	0.01	0.01	0.01	0.01	0.01	0.01
0.01	0.01	0.01	0.01	0.01	0.01	0.00	0.00	0.00	0.00
0.00	0.00	0.00	0.00	0.00	0.00	0.00	0.00	0.00	0.00
0.00	0.00	0.00	0.00	0.00	0.00	0.00	0.00	0.00	0.00
0.00	0.00	0.00	0.00	0.00	0.00	0.00	0.00	0.00	0.00
0.00	0.00	0.00	0.00	0.00	0.00	0.00	0.00	0.00	0.00
0.00	0.00	0.00	0.00	0.00	0.00	0.00	0.00	0.00	0.00
0.00	0.00	0.00	0.00	0.00	0.00	0.00	0.00	0.00	0.00
0.00	0.00	0.00	0.00	0.00	0.00	0.00	0.00	0.00	0.00
0.00	0.00	0.00	0.00	0.00	0.00	0.00	0.00	0.00	0.00
0.00	0.00	0.00	0.00	0.00	0.00	0.00	0.00	0.00	0.00
0.00	0.00	0.00	0.00	0.00	0.00	0.00	0.00	0.00	0.00
0.00	0.00	0.00	0.00	0.00	0.00	0.00	0.00	0.00	0.00
0.00	0.00	0.00	0.00	0.00	0.00	0.00	0.00	0.00	0.00
0.00	0.00	0.00	0.00	0.00	0.00	0.00	0.00		

44 JD INDEX STORM NO. 3

STRM 3.46 PRECIPITATION DEPTH

TRDA 20.00 TRANSPOSITION DRAINAGE AREA

0 PI PRECIPITATION PATTERN

0.00	0.00	0.00	0.00	0.00	0.00	0.00	0.00	0.00	0.00
0.00	0.00	0.00	0.00	0.00	0.00	0.00	0.00	0.00	0.00
0.00	0.00	0.00	0.00	0.00	0.00	0.00	0.00	0.00	0.00
0.00	0.00	0.00	0.00	0.00	0.00	0.00	0.00	0.00	0.00
0.00	0.00	0.00	0.00	0.00	0.00	0.00	0.00	0.00	0.00
0.00	0.00	0.00	0.00	0.00	0.00	0.00	0.00	0.00	0.00
0.00	0.00	0.00	0.00	0.00	0.00	0.00	0.00	0.00	0.00
0.00	0.00	0.00	0.00	0.00	0.00	0.00	0.00	0.00	0.00

0.00	0.00	0.00	0.00	0.00	0.00	0.00	0.00	0.00	0.00
0.00	0.00	0.00	0.00	0.00	0.00	0.00	0.00	0.00	0.00
0.00	0.00	0.00	0.00	0.00	0.00	0.00	0.00	0.00	0.00
0.00	0.00	0.00	0.00	0.00	0.00	0.00	0.00	0.00	0.00
0.00	0.00	0.00	0.00	0.00	0.00	0.01	0.01	0.01	0.01
0.01	0.01	0.01	0.01	0.01	0.02	0.02	0.02	0.05	0.05
0.05	0.07	0.07	0.07	0.01	0.01	0.01	0.01	0.01	0.01
0.01	0.01	0.01	0.01	0.01	0.01	0.00	0.00	0.00	0.00
0.00	0.00	0.00	0.00	0.00	0.00	0.00	0.00	0.00	0.00
0.00	0.00	0.00	0.00	0.00	0.00	0.00	0.00	0.00	0.00
0.00	0.00	0.00	0.00	0.00	0.00	0.00	0.00	0.00	0.00
0.00	0.00	0.00	0.00	0.00	0.00	0.00	0.00	0.00	0.00
0.00	0.00	0.00	0.00	0.00	0.00	0.00	0.00	0.00	0.00
0.00	0.00	0.00	0.00	0.00	0.00	0.00	0.00	0.00	0.00
0.00	0.00	0.00	0.00	0.00	0.00	0.00	0.00	0.00	0.00
0.00	0.00	0.00	0.00	0.00	0.00	0.00	0.00	0.00	0.00
0.00	0.00	0.00	0.00	0.00	0.00	0.00	0.00	0.00	0.00
0.00	0.00	0.00	0.00	0.00	0.00	0.00	0.00	0.00	0.00
0.00	0.00	0.00	0.00	0.00	0.00	0.00	0.00	0.00	0.00
0.00	0.00	0.00	0.00	0.00	0.00	0.00	0.00	0.00	0.00
0.00	0.00	0.00	0.00	0.00	0.00	0.00	0.00	0.00	0.00
0.00	0.00	0.00	0.00	0.00	0.00	0.00	0.00	0.00	0.00
0.00	0.00	0.00	0.00	0.00	0.00	0.00	0.00		

RUNOFF SUMMARY
FLOW IN CUBIC FEET PER SECOND
TIME IN HOURS, AREA IN SQUARE MILES

OPERATION	STATION	PEAK FLOW	TIME OF PEAK	AVERAGE FLOW FOR MAXIMUM PERIOD 6-HOUR	24-HOUR	72-HOUR	BASIN AREA	MAXIMUM STAGE	TIME OF MAX STAGE
HYDROGRAPH AT	S226A	569.	12.17	73.	22.	21.	0.49		
DIVERSION TO	DI226A	31.	11.50	19.	8.	8.	0.49		
HYDROGRAPH AT	D226A	538.	12.17	54.	14.	13.	0.49		
ROUTED TO	RS226A	148.	12.50	52.	13.	13.	0.49		
ROUTED TO	R226A	107.	13.67	50.	13.	13.	0.49		
HYDROGRAPH AT	S223E	416.	12.17	85.	30.	29.	0.32		
2 COMBINED AT	C223E	417.	12.17	127.	43.	41.	0.81		
DIVERSION TO	DI223E	357.	12.17	70.	18.	17.	0.81		
HYDROGRAPH AT	D223E	60.	11.50	57.	25.	24.	0.81		
HYDROGRAPH AT	S223D	35.	12.00	5.	2.	2.	0.02		
2 COMBINED AT	C223D	94.	12.00	62.	27.	26.	0.83		
ROUTED TO	RS223D	92.	12.08	62.	27.	26.	0.83		
ROUTED TO	R223D	78.	12.58	61.	27.	26.	0.83		
HYDROGRAPH AT	S225A	207.	12.25	22.	6.	5.	0.22		
2 COMBINED AT	C225A	273.	12.25	83.	32.	31.	1.05		
ROUTED TO	R225A	253.	12.42	83.	32.	31.	1.05		
HYDROGRAPH AT	225P1	83.	12.00	9.	3.	3.	0.06		
DIVERSION TO	D225P1	83.	12.00	9.	3.	3.	0.06		
HYDROGRAPH AT	D225P	0.	0.08	0.	0.	0.	0.06		
HYDROGRAPH AT	225B	279.	12.42	67.	18.	18.	0.54		
2 COMBINED AT	C225B	279.	12.42	67.	18.	18.	0.60		
ROUTED TO	R225B	276.	12.50	67.	18.	18.	0.60		
HYDROGRAPH AT	225P4	482.	12.00	49.	15.	14.	0.30		
HYDROGRAPH AT	225P2	101.	12.00	12.	4.	3.	0.07		
DIVERSION TO	D225P2	101.	12.00	11.	3.	3.	0.07		
HYDROGRAPH AT	D225P2	1.	14.25	1.	0.	0.	0.07		
HYDROGRAPH AT	225P3	95.	12.00	10.	3.	3.	0.06		
HYDROGRAPH AT	242P2	23.	12.00	3.	1.	1.	0.02		
2 COMBINED AT	C242P2	117.	12.00	13.	4.	4.	0.08		
DIVERSION TO	D225P3	117.	12.00	13.	4.	4.	0.08		
HYDROGRAPH AT	D225P3	0.	0.08	0.	0.	0.	0.08		
2 COMBINED AT	C225P3	1.	14.25	1.	0.	0.	0.15		
4 COMBINED AT	C225P	608.	12.00	192.	64.	62.	2.10		
ROUTED TO	RS225	86.	15.17	84.	44.	42.	2.10		

ROUTED TO	R225	86.	15.42	84.	43.	41.	2.10
HYDROGRAPH AT	SN242B	39.	12.08	3.	1.	1.	0.03
ROUTED TO	RN242B	0.	0.08	0.	0.	0.	0.03
ROUTED TO	RN242B	0.	0.08	0.	0.	0.	0.03
HYDROGRAPH AT	S242BP	49.	12.17	5.	1.	1.	0.05
2 COMBINED AT	C242B	49.	12.17	5.	1.	1.	0.09
ROUTED TO	R242BP	47.	12.25	5.	1.	1.	0.09
HYDROGRAPH AT	SN242C	115.	12.25	13.	3.	3.	0.13
ROUTED TO	RN242C	112.	12.33	13.	3.	3.	0.13
HYDROGRAPH AT	242P3	108.	12.00	11.	3.	3.	0.07
2 COMBINED AT	C242P3	144.	12.00	23.	6.	6.	0.20
ROUTED TO	R242P3	131.	12.17	23.	6.	6.	0.20
HYDROGRAPH AT	S242DP	226.	12.08	28.	9.	8.	0.18
2 COMBINED AT	C242D1	344.	12.08	51.	15.	14.	0.37
3 COMBINED AT	C242D2	397.	12.08	126.	58.	56.	2.56
ROUTED TO	R242D	384.	12.25	125.	58.	56.	2.56
HYDROGRAPH AT	SN242G	27.	12.00	3.	1.	1.	0.02
ROUTED TO	RN242G	26.	12.08	3.	1.	1.	0.02
HYDROGRAPH AT	242P1	36.	12.00	4.	1.	1.	0.02
2 COMBINED AT	C242P1	60.	12.00	6.	2.	2.	0.04
ROUTED TO	C242P1	45.	12.25	6.	2.	2.	0.04
HYDROGRAPH AT	SN242H	32.	12.00	3.	1.	1.	0.03
ROUTED TO	RN242H	24.	12.33	3.	1.	1.	0.03
HYDROGRAPH AT	N242FP	166.	12.08	27.	8.	8.	0.17
2 COMBINED AT	C242FP	183.	12.17	30.	9.	9.	0.20
3 COMBINED AT	CD242F	589.	12.25	158.	68.	66.	2.81

*** NORMAL END OF HEC-1 ***

APPENDIX D
HYDRAULIC CALCULATIONS

Existing Volume in
Litchfield Detention Basin

LITCHFIELD PARK DETENTION FACILITY							
Elevation	Area (ac)	Avg. Area (ac)	Depth (ft)	Volume (ac-ft)	Σ Volume (ac-ft)		
1066	22.2643						
		21.9441	1.0	21.9441	21.9		
1065	21.6239						
		21.4157	1.0	21.4157	43.4		
1064	21.2075						
		20.7966	1.0	20.7966	64.2		
1063	20.3856						
		19.4266	1.0	19.4266	83.6		
1062	18.4676						
		15.5658	1.0	15.5658	99.1		
1061	12.6640						
		8.7036	1.0	8.7036	107.9		
1060	4.7432						
		3.5138	1.0	3.5138	111.4		
1059	2.2844						
					111.4	Acre-ft	PROVIDED

Developed Conditions

Sub-areas Contributing to Litchfield Park Detention Facility

2.44	ac-ft Required for Infrastructure Design	
4.15	ac-ft Required for Unit 1 Design	(1.83 directed to Detention Facility) (2.32 directed to Colter Channel)
10.60	ac-ft Required for Unit 2A Design	
15.17	ac-ft Required for Unit 2B Design	(9.23 directed to Detention Facility) (5.94 directed to Colter Channel)
88.70	ac-ft Required for off-site	
121.06	ac-ft Total Required for Detention Facility	

Elevation	Area (ft^2)	Avg. Area (ft^2)	Depth (ft)	Volume (ft^3)	Σ Volume (ft^2)	Σ Volume (ac-ft)
58	175					
		390	0.5	195	195	0.00
58.5	604					
		143,034	0.5	71,517	71,712	1.65
59	285,463					
		324,064	0.5	162,032	162,032	3.72
59.5	362,664					
		446,331	0.5	223,165	223,165	5.12
60	529,997					
		560,230	0.5	280,115	503,280	11.55
60.5	590,462					
		662,462	0.5	331,231	554,396	12.73
61	734,461					
		755,350	1.0	755,350	1,258,630	28.89
62	776,238					
		786,105	1.0	786,105	2,044,734	46.94
63	795,972					
		806,059	1.0	806,059	2,850,793	65.45
64	816,146					
		835,206	1.0	835,206	3,685,999	84.62
65	854,266					
		887,776	1.0	887,776	4,573,775	105.00
66	921,286					
		932,194	1.0	932,194	5,505,969	126.40
67	943,101					

	5,505,969	ft^3
Provided	126.40	Acre-ft
Required	121.06	Acre-ft
Excess Provided	5.34	Acre-ft

RETENTION BASIN CALCULATIONS
Unit 2 B Design

V = C (P/12) A P = 2.65"

Design Storm: 100-year, 2-hour

Litchfield Park Detention Facility

CONTRIBUTING DRAINAGE AREAS **7, 8A-8F, 9A, 9B, 20A-H**
(Flow is directed to Litchfield Park Detention Facility)

Type	Area (Ac)	C' Coefficient	Precip (in)	Retention Required (AF)	
Residential	65.28	0.64	2.65	9.23	
Total	65.28			9.23	REQUIRED

CONTRIBUTING DRAINAGE AREAS **6, 24A, 24A*, 24B, 24B*, 24C, 24C*, 24C**,24D, 24D*, 25-28**
(Flow is reserved in Litchfield Park Detention Facility, however is directed to Colter Channel)

Type	Area (Ac)	C' Coefficient	Precip (in)	Retention Required (AF)	
Residential	37.24	0.64	2.65	5.26	
Open Space	3.61	0.25	2.65	0.20	
Right-of-way	2.40	0.90	2.65	0.48	
Total	43.25			5.94	REQUIRED

RETENTION BASIN CALCULATIONS
Unit 2A Design

V = C (P/12) A P = 2.65"

Design Storm: 100-year, 2-hour

Litchfield Park Detention Facility

CONTRIBUTING DRAINAGE AREAS 1A, 1B, 2A, 2B, 3A, 3B, 4A, 4B, 5A, 5B, 6, 10A, 10B 15, 16, 17A, 17B, 18

Type	Area (Ac)	C' Coefficient	Precip (in)	Retention Required (AF)	
Residential	66.21	0.64	2.65	9.36	
Open Space (DG)	3.85	0.35	2.65	0.30	
Total	70.06			9.66	Required for site

Litchfield Park Detention Facility

CONTRIBUTING DRAINAGE AREAS 19A, 19B, & 19C
(Flow is directed to Litchfield Park Detention Facility)

Type	Area (Ac)	C' Coefficient	Precip (in)	Retention Required (AF)	
Residential	6.68	0.64	2.65	0.94	
Total	6.68			0.94	Required for site

RETENTION BASIN 3

CONTRIBUTING DRAINAGE AREAS 30A, 30B, 30C, 31A thru 31F, BASIN 3

Type	Area (Ac)	C' Coefficient	Precip (in)	Retention Required (AF)
Residential	24.78	0.64	2.65	3.50
Open Space (grass)	4.45	0.25	2.65	0.25
Total	29.23			3.75

Runoff from Infrastructure Design
(Drainage area 3B) 1.88

5.63 REQUIRED

Elevation	Area (ft^2)	Avg. Area (ft^2)	Depth (ft)	Volume (ft^3)	Σ Volume
76	129,136				
		132,947	1.0	132,947	132,947
77	136,758				
		140,648	1.0	140,648	273,595
78	144,537				
		148,505	1.0	148,505	422,100
79	152,473				

Provided 422,100 ft^3

Provided	9.69 Acre-ft
Required	5.63 Acre-ft
Excess/Shortage	4.06 Acre-ft

Litchfield Park Detention Facility
CONTRIBUTING DRAINAGE AREAS 13A, 14A, 14B, & 14C
(Flow is directed to Litchfield Park Detention Facility)

Type	Area (Ac)	C' Coefficient	Precip (in)	Retention Required (AF)	
Residential	7.58	0.64	2.65	1.07	
Right-of-way	3.82	0.90	2.65	0.76	
Total	11.40			1.83	Required

CONTRIBUTING DRAINAGE AREAS 2A, 2B, 3A & 36-39
(Flow is reserved in Litchfield Park Detention Facility, however is directed to Colter Channel)

Type	Area (Ac)	C' Coefficient	Precip (in)	Retention Required (AF)	
Residential	9.53	0.64	2.65	1.35	
Right-of-way	4.89	0.90	2.65	0.97	
Total	14.42	0.90		2.32	Required

RETENTION BASIN 2

CONTRIBUTING DRAINAGE AREAS 12A thru 12E, 35A, 35B, 35C, 40
41A, 41B, 41C, 41D, 41E, 42A, BASIN 2

Type	Area (Ac)	C' Coefficient	Precip (in)	Retention Required (AF)	
Residential	35.00	0.64	2.65	4.95	
Open Space (DG)	2.73	0.35	2.65	0.21	
Open Space (grass)	8.79	0.25	2.65	0.49	
Total	46.52			5.64	Required

Elevation	Area (ft^2)	Avg. Area (ft^2)	Depth (ft)	Volume (ft^3)	Σ Volume
77	104,073				
		107,753	1.0	107,753	107,753
78	111,432				
		119,690	1.0	119,690	227,443
79	127,948				
		131,983	1.0	131,983	359,426
80	136,018				
		139,897	0.5	69,948	429,374
80.5	143,775				

Provided	429,374 ft^3
Provided	9.86 Acre-ft
Required	5.64 Acre-ft
Excess/Shortage	4.21 Acre-ft

RETENTION BASIN CALCULATIONS

Unit 1 Design

V = C (P/12) A P = 2.65"

Design Storm: 100-year, 2-hour

RETENTION BASIN 1

CONTRIBUTING DRAINAGE AREAS 13B, 32A, 32B, 32C, 33A, 33B, 33C, 34A, 34B, BASIN 1

Type	Area (Ac)	C' Coefficient	Precip (in)	Retention Required (AF)	
Residential	29.79	0.64	2.65	4.21	
Open Space (DG)	2.81	0.35	2.65	0.22	
Right-of-way	1.98	0.90	2.65	0.39	
Total	34.58			4.82	Ac-ft
Runoff from Infrastructure Design (Sub-areas 1A and 1B)				0.34	Ac-ft
			Total	5.16	REQUIRED

Elevation	Area (ft^2)	Avg. Area (ft^2)	Depth (ft)	Volume (ft^3)	Σ Volume
95.5	64,675				
		65,545	0.5	32,773	32,773
96	66,415				
		70,083	1.0	70,083	102,855
97	73,750				
		77,498	1.0	77,498	180,353
98	81,245				
		84,550	0.9	76,095	256,448
99	87,855				
				Provided	256,448 ft^3
				Provided	5.89 Acre-ft
				Required	5.16 Acre-ft
				Excess/Shortage	0.73 Acre-ft

RETENTION BASIN CALCULATIONS

Infrastructure Design

V = C*(P/12)*A P = 2.65"

Design Storm: 100-year, 2-hour

Litchfield Park Detention Facility

CONTRIBUTING DRAINAGE AREAS **4B & 5**

(These are the areas contributing to detention facilty for this part of the project only)

Type	Area (Ac)	C' Coefficient	Precip (in)	Retention Required (AF)	
Right-of-way	12.28	0.9	2.65	2.44	
Total	12.28			2.44	REQUIRED

Retention Basin 3 (within Unit 1)

CONTRIBUTING DRAINAGE AREAS **3B**

(This area contributes to detention facilty within Unit 1)

Type	Area (Ac)	C' Coefficient	Precip (in)	Retention Required (AF)	
Residential	13.28	0.64	2.65	1.88	
Total	13.28			1.88	REQUIRED

Temporary Basin 1 *(located @ NEC of site)*

CONTRIBUTING DRAINAGE AREAS **1A and 1B**

Type	Area (Ac)	C' Coefficient	Precip (in)	Retention Required (AF)	
Right-of-way	1.43	0.90	2.65	0.28	
Open Space	1.01	0.25	2.65	0.06	
Total	2.44			0.34	REQUIRED

Elevation	Area (ft^2)	Avg. Area (ft^2)	Depth (ft)	Volume (ft^3)	Σ Volume
96.5	33052				
		30453	1	30453	30453
95.5	27854				

0.70	ac-ft	PROVIDED
0.34	ac-ft	REQUIRED

**
*
*
*
*
*
**

EXISTING HEC-2 MODEL
WHITE TANKS/AGUA FRIA ADMS

HEC2 S/N: 1363000967 HMVersion: 6.52 Data File: 21.HC2

```
*******************************************
*  HEC-2 WATER SURFACE PROFILES           *
*                                         *
*  Version   4.6.2;  May 1991             *
*                                         *
*  RUN DATE     8APR99    TIME   16:07:13 *
*******************************************
```

```
****************************************
*  U.S. ARMY CORPS OF ENGINEERS        *
*  HYDROLOGIC ENGINEERING CENTER       *
*  609 SECOND STREET, SUITE D          *
*  DAVIS, CALIFORNIA 95616-4687        *
*          (916) 756-1104              *
****************************************
```

```
X     X  XXXXXXX   XXXXX              XXXXX
X     X  X        X     X            X     X
X     X  X        X                        X
XXXXXXX  XXXX     X          XXXXX    XXXXX
X     X  X        X                  X
X     X  X        X     X            X
X     X  XXXXXXX   XXXXX             XXXXXXX
```

```
:::::::::::::::::::::::::::::::::::::::::::::
:::::::::::::::::::::::::::::::::::::::::::::
:::                                       :::
:::   FULL MICRO-COMPUTER IMPLEMENTATION   :::
:::                                       :::
:::::::::::::::::::::::::::::::::::::::::::::
:::::::::::::::::::::::::::::::::::::::::::::
```

```
============================
H A E S T A D   M E T H O D S
============================
```

37 Brookside Road * Waterbury, Connecticut 06708 * (203) 755-1666

THIS RUN EXECUTED 8APR99 16:07:13

```
************************************
HEC-2 WATER SURFACE PROFILES

Version   4.6.2;  May 1991
************************************

T1      WHITE TANKS / AGUA FRIA AREA DRAINAGE MASTER STUDY
T2      100 - YEAR STORM EVENT     FLOODPLAIN/FLOODWAY RUN       FILE: 21.H2I
T3      LITCHFIELD DETENTION FACILITY

J1  ICHECK    INQ      NINV     IDIR     STRT     METRIC   HVINS    Q        WSEL     FQ

     0        2        0        0       .005      0        0        0       1062      0

J2  NPROF     IPLOT    PRFVS    XSECV    XSECH    FN       ALLDC    IBW      CHNIM    ITRACE

     1        0        0        0        0        0        0        0        0        0


J3  VARIABLE CODES FOR SUMMARY PRINTOUT

     38       43       1        53       21       22       54       51       4        8
     42       5        26       0        110      0        200

NC    .025     .025     .025     .1       .3

      SECTIONS 0.000 TO 0.496 ARE AS FROM LITCHFIELD DETENTION FACILITY PLANS

 Q = Q AT CP225  ; FROM THE HEC1 MODEL

NT      2       520      520
NT                       9.1                                                  9983     10017


NC   0.000       9       9983     10017    0        0        0
NR   1066.5     9965     1066     9967     1062     9983     1059     9995    1058.8   10000
GR   1059       10005    1062     10017    1066     10033    1066.5   10035

NC    .04       .04      .035     .1       .3
NT                       9.1                                                  9879     10788
X1   0.085       13       9950     10050    470      400      450
NR   1070       9815     1068     9835     1066     9860     1062     9885    1060     9895
NR   1059.5     9950     1059     10000    1059.5   10050    1060     10425   1061     10780
GR   1062       10785    1066     10800    1066.5   10805

NC    .035      .04      .025     .1       .3
NT                       9.1                                                  9930     11036
```

```
X1    0.165       11     9980    10100      360      430      420
GR     1068     9780     1066     9860     1062     9955     1061     9980     1060    10000
GR   1060.5    10100     1061    10585     1062    11025     1066    11070     1067    11090
GR     1068    11275

NC     .045     .045     .025       .1       .3

Q = ABOUT 2/3 Q AT 1I225  ; FROM THE HEC1 MODEL

QT        2      347      347
ET                       9.1                                                   9986    10013
X1    0.238       12   9975.8  10021.4      385      385      385
GR     1072     9520     1071     9710     1070     9790     1069     9870   1067.4   9975.8
GR   1062.6     9995   1062.6    10000   1062.6    10005   1067.4  10021.4     1069    10100
GR     1070    10145   1070.8    10260

ET                       9.1                                                   9983    10017
X1    0.319       16   9979.8  10020.6      430      430      430
GR     1076     9335     1074     9490     1072     9640     1071     9770     1070     9835
GR     1069     9935   1068.2   9979.8   1064.4     9995   1064.5    10000   1064.5    10005
GR   1068.4  10020.6     1070    10100     1071    10120     1072    10180     1074    10255
GR   1075.5    10340

ET                       9.1                                                   9972    10017
X1    0.414       17   9984.2  10014.6      500      500      500
GR     1078     9160     1076     9330     1074     9545     1072     9660     1071     9770
GR     1070     9820   1069.2   9984.2   1066.5     9995   1066.5    10000   1066.6    10005
GR     1069  10014.6     1070    10025     1071    10040     1072    10070     1074    10180
GR     1076    10250   1076.9    10290

ET                       9.1                                                   9970    10044
X1    0.477       11   9985.8  10012.2      335      335      335
GR     1074     9535     1072     9640     1071     9785   1070.4   9985.8   1068.1     9995
GR   1068.2    10000   1068.2    10005     1070  10012.2     1071    10050     1072    10065
GR   1072.5    10110

ET                       9.1                                                   9965    10027
X1    0.496       12     9990    10010      100      100      100
GR     1073     9550     1072     9620     1071     9790   1070.7     9900   1070.8     9940
GR     1071     9990   1068.7     9995   1068.7    10000   1068.7    10005     1071    10010
GR     1072    10055   1072.2    10070

NC      .05      .05      .03       .1       .3

Q = ABOUT 1/2 Q AT 1I225  ; FROM THE HEC1 MODEL

QT        2      260      260
ET                       9.1                                                   9960    10025
X1    0.597        9     9960    10025      510      550      530
GR     1076     9565     1074     9685     1072     9900   1071.7     9960   1070.5    10000
GR     1072    10025     1072    10070     1074    10165   1074.5    10220
```

```
ET                      9.1                                                     9970      10030
X1   0.684        9     9970     10030      470      430      460
GR    1078     9375     1076      9545     1074     9735   1072.5     9970      1072      10000
GR  1072.5    10030     1074     10080     1076    10245     1078    10385

ET                      9.1                                                     9980      10015
X1   0.775        9     9980     10015      490      470      480
GR    1080     9310     1078      9415     1076     9550     1074     9980    1073.2      10000
GR    1074    10015     1076     10215     1078    10310     1080    10400
```

Q = ABOUT 15% OF Q AT 1I225 ; FROM THE HEC1 MODEL

```
ET      2       78       78
ET                      9.1                                                     9981      10018
X1   0.856       10     9980     10020      410      440      430
GR  1078.5     9940     1078      9965     1076     9980     1074     9990    1073.6      10000
GR    1074    10010     1076     10020   1076.7    10035     1078    10190      1080      10235

ET                      9.1                                                     9980      10010
X1   0.938        8     9980     10010      410      440      430
GR  1080.2     9940     1078      9960     1076     9980     1074     9990    1073.7      10000
GR    1075    10010     1078     10020   1079.7    10030

ET                      9.1                                                     9980      10015
X1   1.019        7     9980     10015      430      420      430
GR  1080.5     9950     1080      9965     1076     9980   1073.8    10000      1076      10015
GR    1080    10020   1080.5     10045

ET                      9.1                                                     9985      10010
X1   1.080        6     9985     10010      330      310      320
GR  1080.6     9945     1080      9965     1076     9985   1073.9    10000      1076      10010
GR    1080    10030
```

SECNO	DEPTH	CWSEL	CRIWS	WSELK	EG	HV	HL	OLOSS	L-BANK ELEV
Q	QLOB	QCH	QROB	ALOB	ACH	AROB	VOL	TWA	R-BANK ELEV
TIME	VLOB	VCH	VROB	XNL	XNCH	XNR	WTN	ELMIN	SSTA
SLOPE	XLOBL	XLCH	XLOBR	ITRIAL	IDC	ICONT	CORAR	TOPWID	ENDST

*PROF 1

CCHV= 0.100 CEHV= 0.300
*SECNO 0.000

0.000	3.42	1062.22	0.00	1062.00	1062.98	0.76	0.00	0.00	1062.00
520.0	0.0	520.0	0.0	0.1	74.4	0.1	0.0	0.0	1062.00
0.00	0.04	6.98	0.04	0.025	0.025	0.025	0.000	1058.80	9982.12
0.004999	0.	0.	0.	0	0	5	0.00	35.75	10017.88

CCHV= 0.100 CEHV= 0.300
*SECNO 0.085

3301 HV CHANGED MORE THAN HVINS

3302 WARNING: CONVEYANCE CHANGE OUTSIDE OF ACCEPTABLE RANGE, KRATIO = 30.14

0.085	4.06	1063.06	0.00	0.00	1063.06	0.00	0.01	0.08	1059.50
520.0	38.3	92.5	389.2	206.1	380.8	2158.8	13.4	4.5	1059.50
0.63	0.19	0.24	0.18	0.040	0.035	0.040	0.000	1059.00	9878.38
0.000006	470.	450.	400.	2	0	0	0.00	910.58	10788.97

CCHV= 0.100 CEHV= 0.300
*SECNO 0.165

3302 WARNING: CONVEYANCE CHANGE OUTSIDE OF ACCEPTABLE RANGE, KRATIO = 0.67

0.165	3.06	1063.06	0.00	0.00	1063.06	0.00	0.00	0.00	1061.00
520.0	9.1	136.0	374.9	52.5	332.6	1816.1	37.5	14.3	1060.50
1.08	0.17	0.41	0.21	0.035	0.025	0.040	0.000	1060.00	9929.75
0.000012	360.	420.	430.	2	0	0	0.00	1107.21	11036.96

CCHV= 0.100 CEHV= 0.300
*SECNO 0.238

3301 HV CHANGED MORE THAN HVINS

3685 20 TRIALS ATTEMPTED WSEL,CWSEL

```
 SECNO     DEPTH     CWSEL     CRIWS     WSELK     EG        HV        HL        OLOSS     L-BANK ELEV
 Q         QLOB      QCH       QROB      ALOB      ACH       AROB      VOL       TWA       R-BANK ELEV
 TIME      VLOB      VCH       VROB      XNL       XNCH      XNR       WTN       ELMIN     SSTA
 SLOPE     XLOBL     XLCH      XLOBR     ITRIAL    IDC       ICONT     CORAR     TOPWID    ENDST

693 PROBABLE MINIMUM SPECIFIC ENERGY
720 CRITICAL DEPTH ASSUMED
   0.238     2.46   1065.06   1065.06      0.00   1065.90      0.85      0.01      0.25   1067.40
   347.0      0.0     347.0       0.0       0.0      47.0       0.0      47.4      19.3   1067.40
    1.10     0.00      7.38      0.00     0.000     0.025     0.000     0.000   1062.60   9985.17
0.008061     385.      385.      385.        20        15         0      0.00     28.24  10013.40

SECNO 0.319

3302 WARNING:  CONVEYANCE CHANGE OUTSIDE OF ACCEPTABLE RANGE,  KRATIO =  1.64

   0.319     3.14   1067.54      0.00      0.00   1067.93      0.40      1.98      0.05   1068.20
   347.0      0.0     347.0       0.0       0.0      68.8       0.0      48.0      19.6   1068.40
    1.12     0.00      5.05      0.00     0.000     0.025     0.000     0.000   1064.40   9982.45
0.002981     430.      430.      430.         3         0         0      0.00     34.70  10017.15

SECNO 0.414
   0.414     2.76   1069.26      0.00      0.00   1069.84      0.58      1.85      0.06   1069.20
   347.0      0.1     346.7       0.2       0.4      56.7       0.4      48.7      20.1   1069.00
    1.14     0.23      6.12      0.59     0.045     0.025     0.045     0.000   1066.50   9971.30
0.004742     500.      500.      500.         3         0         0      0.00     46.04  10017.33

SECNO 0.477
185 MINIMUM SPECIFIC ENERGY
3720 CRITICAL DEPTH ASSUMED
   0.477     2.75   1070.85   1070.85      0.00   1071.29      0.44      1.37      0.01   1070.40
   347.0     24.9     306.8      15.3      34.0      54.1      13.7      49.3      21.1   1070.00
    1.16     0.73      5.67      1.12     0.045     0.025     0.045     0.000   1068.10   9834.88
0.003587     335.      335.      335.         2         5         0      0.00    209.48  10044.37

*SECNO 0.496
   0.496     2.69   1071.39   1071.39      0.00   1071.63      0.24      0.31      0.02   1071.00
   347.0    134.5     210.5       2.0     121.9      42.3       3.4      49.7      21.7   1071.00
    1.17     1.10      4.98      0.58     0.045     0.025     0.045     0.000   1068.70   9724.05
0.002766     100.      100.      100.         5         6         0      0.00    303.41  10027.46

CCHV=    0.100 CEHV=    0.300
```

SECNO	DEPTH	CWSEL	CRIWS	WSELK	EG	HV	HL	OLOSS	L-BANK ELEV
Q	QLOB	QCH	QROB	ALOB	ACH	AROB	VOL	TWA	R-BANK ELEV
TIME	VLOB	VCH	VROB	XNL	XNCH	XNR	WTN	ELMIN	SSTA
SLOPE	XLOBL	XLCH	XLOBR	ITRIAL	IDC	ICONT	CORAR	TOPWID	ENDST

*SECNO 0.597

0.597	2.06	1072.56	0.00	0.00	1072.62	0.06	0.97	0.02	1071.70
260.0	42.7	196.2	21.1	60.0	91.4	33.0	51.8	25.0	1072.00
1.25	0.71	2.15	0.64	0.050	0.030	0.050	0.000	1070.50	9839.32
0.001191	510.	530.	550.	2	0	0	0.00	257.49	10096.81

*SECNO 0.684

3302 WARNING: CONVEYANCE CHANGE OUTSIDE OF ACCEPTABLE RANGE, KRATIO = 0.63

0.684	1.36	1073.36	0.00	0.00	1073.46	0.10	0.83	0.01	1072.50
260.0	53.9	194.7	11.5	57.8	66.5	12.3	53.5	27.6	1072.50
1.30	0.93	2.93	0.93	0.050	0.030	0.050	0.000	1072.00	9835.48
0.003043	470.	460.	430.	1	0	0	0.00	223.14	10058.62

*SECNO 0.775

0.775	1.67	1074.87	0.00	0.00	1074.97	0.10	1.51	0.00	1074.00
260.0	77.9	145.8	36.2	80.6	44.3	37.5	55.1	30.5	1074.00
1.36	0.97	3.29	0.97	0.050	0.030	0.050	0.000	1073.20	9793.82
0.003229	490.	480.	470.	3	0	0	0.00	307.78	10101.60

*SECNO 0.856

0.856	2.13	1075.72	0.00	0.00	1075.76	0.03	0.78	0.01	1076.00
78.0	0.0	78.0	0.0	0.0	53.2	0.0	56.2	32.2	1076.00
1.44	0.00	1.47	0.00	0.000	0.030	0.000	0.000	1073.60	9981.40
0.000551	410.	430.	440.	2	0	0	0.00	37.20	10018.60

*SECNO 0.938

0.938	2.27	1075.97	0.00	0.00	1076.01	0.04	0.25	0.00	1076.00
78.0	0.0	77.3	0.7	0.0	47.0	1.6	56.7	32.5	1075.00
1.52	0.00	1.64	0.44	0.000	0.030	0.050	0.000	1073.70	9980.16
0.000608	410.	430.	440.	3	0	0	0.00	33.07	10013.23

*SECNO 1.019

1.019	2.46	1076.26	0.00	0.00	1076.30	0.04	0.29	0.00	1076.00
78.0	0.0	78.0	0.0	0.1	47.4	0.0	57.1	32.9	1076.00
1.59	0.20	1.64	0.01	0.050	0.030	0.050	0.000	1073.80	9979.04
0.000742	430.	430.	420.	2	0	0	0.00	36.28	10015.32

SECNO	DEPTH	CWSEL	CRIWS	WSELK	EG	HV	HL	OLOSS	L-BANK ELEV
Q	QLOB	QCH	QROB	ALOB	ACH	AROB	VOL	TWA	R-BANK ELEV
TIME	VLOB	VCH	VROB	XNL	XNCH	XNR	WTN	ELMIN	SSTA
SLOPE	XLOBL	XLCH	XLOBR	ITRIAL	IDC	ICONT	CORAR	TOPWID	ENDST

SECNO 1.080

1.080	2.61	1076.51	0.00	0.00	1076.57	0.06	0.26	0.01	1076.00
78.0	0.2	77.5	0.2	0.6	38.9	0.6	57.5	33.1	1076.00
1.63	0.36	1.99	0.36	0.050	0.030	0.050	0.000	1073.90	9982.47
0.000917	330.	320.	310.	2	0	0	0.00	30.05	10012.53

PROFILE FOR STREAM LITCHFIELD DETENTION FAC

PLOTTED POINTS (BY PRIORITY) E-ENERGY,W-WATER SURFACE,I-INVERT,C-CRITICAL W.S.,L-LEFT BANK,R-RIGHT BANK,M-LOWER END STA

```
ELEVATION  1059.     1064.     1069.     1074.     1079.     1084.     1089.     1094.     1099.     1104.
   SECNO   CUMDIS

   0.00      0.  I     LWE .    M    .         .         .         .         .         .         .         .
            50.  I     LWE .    M    .         .         .         .         .         .         .         .
           100.  I    L WE .    M    .         .         .         .         .         .         .         .
           150.  I    L WE .    M    .         .         .         .         .         .         .         .
           200.  I   L   E .    M    .         .         .         .         .         .         .         .
           250.  I   L   E .    M    .         .         .         .         .         .         .         .
           300.  I  L    E .    M    .         .         .         .         .         .         .         .
           350.  I  L    E .    M    .         .         .         .         .         .         .         .
           400.  I L     WE.    M    .         .         .         .         .         .         .         .
   0.09    450.  IL       E.    M    .         .         .         .         .         .         .         .
           500.  CIL      E.     M   .         .         .         .         .         .         .         .
           550.  CIL      E.     M   .         .         .         .         .         .         .         .
           600.  CIL      E.     M   .         .         .         .         .         .         .         .
           650.  CIRL     E.      M  .         .         .         .         .         .         .         .
           700.  C IL     E.      M  .         .         .         .         .         .         .         .
           750.  C IRL    E.       M .         .         .         .         .         .         .         .
           800.  C IRL    E.       M .         .         .         .         .         .         .         .
           850.  C IRL    E.       M .         .         .         .         .         .         .         .
   0.17    900.  C IRL    E.       M .         .         .         .         .         .         .         .
           950.  C  I RL  E.        M.         .         .         .         .         .         .         .
          1000.  C   I  RL E         M         .         .         .         .         .         .         .
          1050.  C   I    LWE        .M        .         .         .         .         .         .         .
          1100.  C    I    .E        .M        .         .         .         .         .         .         .
          1150.  C     I   .WEL      . M       .         .         .         .         .         .         .
          1200.  C     I   . WEL     .  M      .         .         .         .         .         .         .
          1250.  C      I  . W E L   .  M      .         .         .         .         .         .         .
   0.24   1300.  .       I .  WE  L  .   M     .         .         .         .         .         .         .
          1350.  C       I .  W E L  .    M    .         .         .         .         .         .         .
          1400.  C       I .   WE  L .     M   .         .         .         .         .         .         .
          1450.  C        I.   W E L .      M  .         .         .         .         .         .         .
          1500.  C        I.    WE L .       M .         .         .         .         .         .         .
          1550.  C         I    W EL .        M.         .         .         .         .         .         .
          1600.  C         I     WELR.         .M        .         .         .         .         .         .
          1650.  C         .I     WEL.         . M       .         .         .         .         .         .
   0.32   1700.  C         .I     WEL.         .  M      .         .         .         .         .         .
          1750.  C         . I     WE.         .   M     .         .         .         .         .         .
          1800.  C         . I     WE.         .   M     .         .         .         .         .         .
          1850.  C         . I      ER         .   M     .         .         .         .         .         .
          1900.  C         .  I     WE         .    M    .         .         .         .         .         .
          1950.  C         .  I     WE         .    M    .         .         .         .         .         .
          2000.  C         .   I     WE        .    M    .         .         .         .         .         .
          2050.  C         .   I     WE        .    M    .         .         .         .         .         .
          2100.  C         .    I    WE        .     M   .         .         .         .         .         .
          2150.  C         .    I    RWE       .     M   .         .         .         .         .         .
   0.41   2200.  C         .    I    RWE       .     M   .         .         .         .         .         .
          2250.  C         .     I   .W E      .    M    .         .         .         .         .         .
          2300.  C         .     I   .RWE      .   M     .         .         .         .         .         .
          2350.  C         .      I  .RWE      . M       .         .         .         .         .         .
          2400.  C         .      I  . LWE     .M        .         .         .         .         .         .
          2450.  C         .       I . RWE     M         .         .         .         .         .         .
          2500.  C         .       I . RLWE  M .         .         .         .         .         .         .
   0.48   2550.  .         .        I. RLWE M  .         .         .         .         .         .         .
```

```
      2600.  .        .       I.  RLE M  .        .        .        .        .        .        .
0.50  2650.  .        .        I   LWEM  .        .        .        .        .        .        .
      2700.  C        .        I    WEM  .        .        .        .        .        .        .
      2750.  C        .        I    LE M .        .        .        .        .        .        .
      2800.  C        .        .I   LE M .        .        .        .        .        .        .
      2850.  C        .        .I   LE  M.        .        .        .        .        .        .
      2900.  C        .        .I   LWE M.        .        .        .        .        .        .
      2950.  C        .        . I  LRE M.        .        .        .        .        .        .
      3000.  C        .        . I  LRE  M        .        .        .        .        .        .
      3050.  C        .        .  I LRE  M        .        .        .        .        .        .
      3100.  C        .        .  I  LE  .M       .        .        .        .        .        .
0.60  3150.  C        .        .  I  L E .M       .        .        .        .        .        .
      3200.  C        .        .   I LRE . M      .        .        .        .        .        .
      3250.  C        .        .   I LRE .  M     .        .        .        .        .        .
      3300.  C        .        .   I LRE .   M    .        .        .        .        .        .
      3350.  C        .        .    ILRE .   M    .        .        .        .        .        .
      3400.  C        .        .    I LWE.    M   .        .        .        .        .        .
      3450.  C        .        .    I L E.     M  .        .        .        .        .        .
      3500.  C        .        .     IL E.      M .        .        .        .        .        .
      3550.  C        .        .     IL E.      M .        .        .        .        .        .
      3600.  C        .        .     IL E.       M.        .        .        .        .        .
0.68  3650.  C        .        .     IL E.       M.        .        .        .        .        .
      3700.  C        .        .      ILWE        M.       .        .        .        .        .
      3750.  C        .        .      IL E        M.       .        .        .        .        .
      3800.  C        .        .      IL E         M       .        .        .        .        .
      3850.  C        .        .      I LWE        M       .        .        .        .        .
      3900.  C        .        .       IL.E        M       .        .        .        .        .
      3950.  C        .        .       IL.E        .M      .        .        .        .        .
      4000.  C        .        .       I LWE       .M      .        .        .        .        .
      4050.  C        .        .       I L E       . M     .        .        .        .        .
0.77  4100.  C        .        .        IL E       . M     .        .        .        .        .
      4150.  C        .        .        I.LWE      . M     .        .        .        .        .
      4200.  C        .        .        I.L E      . M     .        .        .        .        .
      4250.  C        .        .        I. LE      .M      .        .        .        .        .
      4300.  C        .        .        I. LE      .M      .        .        .        .        .
      4350.  C        .        .        I.  E      .M      .        .        .        .        .
      4400.  C        .        .        I.  E      M       .        .        .        .        .
      4450.  C        .        .        I.   E     M       .        .        .        .        .
      4500.  C        .        .         I   E     M       .        .        .        .        .
0.86  4550.  C        .        .         I   E    M.       .        .        .        .        .
      4600.  C        .        .         I   E     M       .        .        .        .        .
      4650.  C        .        .         I   E     M       .        .        .        .        .
      4700.  C        .        .         I   E     M       .        .        .        .        .
      4750.  C        .        .         I  RE     .M      .        .        .        .        .
      4800.  C        .        .         I  RE     .M      .        .        .        .        .
      4850.  C        .        .         I  RE     .M      .        .        .        .        .
      4900.  C        .        .         I  RE     .M      .        .        .        .        .
0.94  4950.  C        .        .         I R E     . M     .        .        .        .        .
      5000.  C        .        .         I  RE     . M     .        .        .        .        .
      5050.  C        .        .         I  RWE    . M     .        .        .        .        .
      5100.  C        .        .         I  RLE    . M     .        .        .        .        .
      5150.  C        .        .         I  RLE    .  M    .        .        .        .        .
      5200.  C        .        .         I   LE    .  M    .        .        .        .        .
      5250.  C        .        .         I   LE    .  M    .        .        .        .        .
      5300.  C        .        .         I   LE    .  M    .        .        .        .        .
      5350.  C        .        .         I   LE    .  M    .        .        .        .        .
1.02  5400.  C        .        .         I   LE    .  M    .        .        .        .        .
      5450.  C        .        .         I   LE    .  M    .        .        .        .        .
      5500.  C        .        .         I   LE    .  M    .        .        .        .        .
      5550.  C        .        .         I   LE    .  M    .        .        .        .        .
      5600.  C        .        .         I   LE    .  M    .        .        .        .        .
      5650.  C        .        .         I   LE    .  M    .        .        .        .        .
1.08  5700.  C        .        .         I   LWE   . M     .        .        .        .        .
```

T1
T2
T3

J1	ICHECK	INQ	NINV	IDIR	STRT	METRIC	HVINS	Q	WSEL	FQ
		3							1062.22	
J2	NPROF	IPLOT	PRFVS	XSECV	XSECH	FN	ALLDC	IBW	CHNIM	ITRACE
	15		-1							

SECNO	DEPTH	CWSEL	CRIWS	WSELK	EG	HV	HL	OLOSS	L-BANK ELEV
Q	QLOB	QCH	QROB	ALOB	ACH	AROB	VOL	TWA	R-BANK ELEV
TIME	VLOB	VCH	VROB	XNL	XNCH	XNR	WTN	ELMIN	SSTA
SLOPE	XLOBL	XLCH	XLOBR	ITRIAL	IDC	ICONT	CORAR	TOPWID	ENDST

ROF 2

HV= 0.100 CEHV= 0.300
*SECNO 0.000

70 ENCROACHMENT STATIONS= 9983.0 10017.0 TYPE= 1 TARGET= 34.000

0.000	3.42	1062.22	0.00	1062.22	1062.98	0.76	0.00	0.00	1062.00
520.0	0.0	520.0	0.0	0.0	74.5	0.0	0.0	0.0	100000.00
0.00	0.00	6.98	0.00	0.000	0.025	0.000	0.000	1058.80	9983.00
0.005077	0.	0.	0.	0	0	0	0.00	34.00	10017.00

CCHV= 0.100 CEHV= 0.300
ECNO 0.085

3301 HV CHANGED MORE THAN HVINS

02 WARNING: CONVEYANCE CHANGE OUTSIDE OF ACCEPTABLE RANGE, KRATIO = 30.37

70 ENCROACHMENT STATIONS= 9879.0 10788.0 TYPE= 1 TARGET= 909.000

0.085	4.06	1063.06	0.00	1063.06	1063.06	0.00	0.01	0.08	1059.50
520.0	38.3	92.5	389.2	206.0	380.9	2158.9	13.4	4.5	1059.50
0.63	0.19	0.24	0.18	0.040	0.035	0.040	0.000	1059.00	9879.00
0.000006	470.	450.	400.	2	0	0	0.00	909.00	10788.00

HV= 0.100 CEHV= 0.300
*SECNO 0.165

02 WARNING: CONVEYANCE CHANGE OUTSIDE OF ACCEPTABLE RANGE, KRATIO = 0.67

70 ENCROACHMENT STATIONS= 9930.0 11036.0 TYPE= 1 TARGET= 1106.000

0.165	3.06	1063.06	0.00	1063.06	1063.07	0.00	0.00	0.00	1061.00
520.0	9.1	136.0	374.9	52.5	332.6	1816.4	37.5	14.3	1060.50
1.08	0.17	0.41	0.21	0.035	0.025	0.040	0.000	1060.00	9930.00
0.000012	360.	420.	430.	2	0	0	0.00	1106.00	11036.00

SECNO	DEPTH	CWSEL	CRIWS	WSELK	EG	HV	HL	OLOSS	L-BANK ELEV
Q	QLOB	QCH	QROB	ALOB	ACH	AROB	VOL	TWA	R-BANK ELEV
TIME	VLOB	VCH	VROB	XNL	XNCH	XNR	WTN	ELMIN	SSTA
SLOPE	XLOBL	XLCH	XLOBR	ITRIAL	IDC	ICONT	CORAR	TOPWID	ENDST

CHV= 0.100 CEHV= 0.300
*SECNO 0.238

301 HV CHANGED MORE THAN HVINS

3685 20 TRIALS ATTEMPTED WSEL,CWSEL
693 PROBABLE MINIMUM SPECIFIC ENERGY
720 CRITICAL DEPTH ASSUMED

3470 ENCROACHMENT STATIONS= 9986.0 10013.0 TYPE= 1 TARGET= 27.000

0.238	2.43	1065.03	1065.03	1065.06	1065.91	0.88	0.01	0.26	100000.00
347.0	0.0	347.0	0.0	0.0	46.2	0.0	47.4	19.3	100000.00
1.10	0.00	7.51	0.00	0.000	0.025	0.000	0.000	1062.60	9986.00
0.008158	385.	385.	385.	20	15	0	0.00	27.00	10013.00

*SECNO 0.319

302 WARNING: CONVEYANCE CHANGE OUTSIDE OF ACCEPTABLE RANGE, KRATIO = 1.67

470 ENCROACHMENT STATIONS= 9983.0 10017.0 TYPE= 1 TARGET= 34.000

0.319	3.13	1067.53	0.00	1067.54	1067.93	0.40	1.97	0.05	100000.00
347.0	0.0	347.0	0.0	0.0	68.6	0.0	48.0	19.6	100000.00
1.12	0.00	5.06	0.00	0.000	0.025	0.000	0.000	1064.40	9983.00
0.002939	430.	430.	430.	3	0	0	0.00	34.00	10017.00

SECNO 0.414

3470 ENCROACHMENT STATIONS= 9972.0 10017.0 TYPE= 1 TARGET= 45.000

0.414	2.75	1069.25	0.00	1069.26	1069.84	0.59	1.85	0.06	1069.20
347.0	0.1	346.7	0.2	0.3	56.4	0.3	48.7	20.0	1069.00
1.14	0.21	6.14	0.61	0.045	0.025	0.045	0.000	1066.50	9972.95
0.004812	500.	500.	500.	3	0	0	0.00	44.05	10017.00

*SECNO 0.477

470 ENCROACHMENT STATIONS= 9970.0 10044.0 TYPE= 1 TARGET= 74.000

0.477	2.72	1070.82	1070.67	1070.85	1071.36	0.55	1.52	0.00	1070.40
347.0	7.0	325.1	14.9	6.2	53.1	12.5	49.2	20.5	1070.00
1.16	1.14	6.12	1.19	0.045	0.025	0.045	0.000	1068.10	9970.00
0.004277	335.	335.	335.	3	8	0	0.00	72.98	10042.98

```
 SECNO     DEPTH     CWSEL     CRIWS     WSELK     EG        HV        HL        OLOSS     L-BANK ELEV
 Q         QLOB      QCH       QROB      ALOB      ACH       AROB      VOL       TWA       R-BANK ELEV
 TIME      VLOB      VCH       VROB      XNL       XNCH      XNR       WTN       ELMIN     SSTA
 SLOPE     XLOBL     XLCH      XLOBR     ITRIAL    IDC       ICONT     CORAR     TOPWID    ENDST

 NO 0.496
3 20 TRIALS ATTEMPTED WSEL,CWSEL
493 PROBABLE MINIMUM SPECIFIC ENERGY
 CRITICAL DEPTH ASSUMED

3470 ENCROACHMENT STATIONS=     9965.0   10027.0  TYPE=      1  TARGET=      62.000
   0.496      2.86   1071.56   1071.56   1071.39   1072.23      0.68      0.45      0.04   1071.00
   347.0      24.4     315.4       7.2      15.1      45.6       6.2      49.4      20.6   1071.00
    1.16      1.61      6.92      1.16     0.045     0.025     0.045     0.000   1068.70   9965.00
0.004816      100.      100.      100.        20         8         0      0.00     62.00  10027.00

CCHV=    0.100 CEHV=    0.300
ECNO 0.597

 HV CHANGED MORE THAN HVINS

 WARNING:  CONVEYANCE CHANGE OUTSIDE OF ACCEPTABLE RANGE,  KRATIO =  1.95

 ENCROACHMENT STATIONS=     9960.0   10025.0  TYPE=      1  TARGET=      65.000
   0.597      2.63   1073.13      0.00   1072.56   1073.19      0.06      0.90      0.06   1071.70
   260.0       0.0     260.0       0.0       0.0     128.5       0.0      50.6      21.4 100000.00
    1.23      0.00      2.02      0.00     0.000     0.030     0.000     0.000   1070.50   9960.00
 000710      510.      530.      550.         3         0         0      0.00     65.00  10025.00

ECNO 0.684

3302 WARNING:  CONVEYANCE CHANGE OUTSIDE OF ACCEPTABLE RANGE,  KRATIO =  0.51

 ENCROACHMENT STATIONS=     9970.0   10030.0  TYPE=      1  TARGET=      60.000
   0.684      1.64   1073.64      0.00   1073.36   1073.79      0.15      0.57      0.03   1072.50
   260.0       0.0     260.0       0.0       0.0      83.2       0.0      51.7      22.1 100000.00
    1.28      0.00      3.13      0.00     0.000     0.030     0.000     0.000   1072.00   9970.00
 002707      470.      460.      430.         3         0         0      0.00     60.00  10030.00

CNO 0.775

70 ENCROACHMENT STATIONS=     9980.0   10015.0  TYPE=      1  TARGET=      35.000
```

SECNO	DEPTH	CWSEL	CRIWS	WSELK	EG	HV	HL	OLOSS	L-BANK ELEV
Q	QLOB	QCH	QROB	ALOB	ACH	AROB	VOL	TWA	R-BANK ELEV
TIME	VLOB	VCH	VROB	XNL	XNCH	XNR	WTN	ELMIN	SSTA
SLOPE	XLOBL	XLCH	XLOBR	ITRIAL	IDC	ICONT	CORAR	TOPWID	ENDST
0.775	2.03	1075.23	0.00	1074.87	1075.55	0.33	1.71	0.05	1074.00
260.0	0.0	260.0	0.0	0.0	56.8	0.0	52.5	22.6	100000.00
1.30	0.00	4.58	0.00	0.000	0.030	0.000	0.000	1073.20	9980.00
.004913	490.	480.	470.	2	0	0	0.00	35.00	10015.00

SECNO 0.856

3 2 WARNING: CONVEYANCE CHANGE OUTSIDE OF ACCEPTABLE RANGE, KRATIO = 1.41

70 ENCROACHMENT STATIONS= 9981.0 10018.0 TYPE= 1 TARGET= 37.000

0.856	2.58	1076.18	0.00	1075.72	1076.20	0.02	0.62	0.03	100000.00
78.0	0.0	78.0	0.0	0.0	70.3	0.0	53.1	23.0	100000.00
1.41	0.00	1.11	0.00	0.000	0.030	0.000	0.000	1073.60	9981.00
.000224	410.	430.	440.	3	0	0	0.00	37.00	10018.00

ECNO 0.938

3470 ENCROACHMENT STATIONS= 9980.0 10010.0 TYPE= 1 TARGET= 30.000

0.938	2.59	1076.29	0.00	1075.97	1076.32	0.03	0.12	0.00	1076.00
78.0	0.0	78.0	0.0	0.0	56.8	0.0	53.7	23.3	100000.00
1.50	0.00	1.37	0.00	0.000	0.030	0.000	0.000	1073.70	9980.00
0.000356	410.	430.	440.	3	0	0	0.00	30.00	10010.00

*SECNO 1.019

70 ENCROACHMENT STATIONS= 9980.0 10015.0 TYPE= 1 TARGET= 35.000

1.019	2.67	1076.47	0.00	1076.26	1076.50	0.03	0.18	0.00	1076.00
78.0	0.0	78.0	0.0	0.0	54.9	0.0	54.3	23.6	100000.00
1.58	0.00	1.42	0.00	0.000	0.030	0.000	0.000	1073.80	9980.00
.000473	430.	430.	420.	2	0	0	0.00	35.00	10015.00

ECNO 1.080

3470 ENCROACHMENT STATIONS= 9985.0 10010.0 TYPE= 1 TARGET= 25.000

1.080	2.74	1076.64	0.00	1076.51	1076.69	0.05	0.19	0.01	1076.00
78.0	0.0	78.0	0.0	0.0	42.3	0.0	54.6	23.8	100000.00
1.63	0.00	1.85	0.00	0.000	0.030	0.000	0.000	1073.90	9985.00
0.000750	330.	320.	310.	2	0	0	0.00	25.00	10010.00

THIS RUN EXECUTED 8APR99 16:07:13

****
HEC-2 WATER SURFACE PROFILES

sion 4.6.2; May 1991
****

- ASTERISK (*) AT LEFT OF CROSS-SECTION NUMBER INDICATES MESSAGE IN SUMMARY OF ERRORS LIST

HFIELD DETENTION FAC

SUMMARY PRINTOUT

	SECNO	Q	CWSEL	SSTA	STCHL	STCHR	ENDST	DIFWSX	TOPWID	DEPTH	ELMIN	10*KS	VCH
	0.000	520.00	1062.22	9982.12	9983.00	10017.00	10017.88	0.00	35.75	3.42	1058.80	49.99	6.98
	0.000	520.00	1062.22	9983.00	9983.00	10017.00	10017.00	0.00	34.00	3.42	1058.80	50.77	6.98
	0.085	520.00	1063.06	9878.38	9950.00	10050.00	10788.97	0.84	910.58	4.06	1059.00	0.06	0.24
	0.085	520.00	1063.06	9879.00	9950.00	10050.00	10788.00	0.84	909.00	4.06	1059.00	0.06	0.24
*	0.165	520.00	1063.06	9929.75	9980.00	10100.00	11036.96	0.00	1107.21	3.06	1060.00	0.12	0.41
	0.165	520.00	1063.06	9930.00	9980.00	10100.00	11036.00	0.00	1106.00	3.06	1060.00	0.12	0.41
*	0.238	347.00	1065.06	9985.17	9975.80	10021.40	10013.40	2.00	28.24	2.46	1062.60	80.61	7.38
-	0.238	347.00	1065.03	9986.00	9975.80	10021.40	10013.00	1.97	27.00	2.43	1062.60	81.58	7.51
-	0.319	347.00	1067.54	9982.45	9979.80	10020.60	10017.15	2.48	34.70	3.14	1064.40	29.81	5.05
*	0.319	347.00	1067.53	9983.00	9979.80	10020.60	10017.00	2.50	34.00	3.13	1064.40	29.39	5.06
	0.414	347.00	1069.26	9971.30	9984.20	10014.60	10017.33	1.73	46.04	2.76	1066.50	47.42	6.12
	0.414	347.00	1069.25	9972.95	9984.20	10014.60	10017.00	1.72	44.05	2.75	1066.50	48.12	6.14
	0.477	347.00	1070.85	9834.88	9985.80	10012.20	10044.37	1.59	209.48	2.75	1068.10	35.87	5.67
	0.477	347.00	1070.82	9970.00	9985.80	10012.20	10042.98	1.56	72.98	2.72	1068.10	42.77	6.12
	0.496	347.00	1071.39	9724.05	9990.00	10010.00	10027.46	0.54	303.41	2.69	1068.70	27.66	4.98
	0.496	347.00	1071.56	9965.00	9990.00	10010.00	10027.00	0.74	62.00	2.86	1068.70	48.16	6.92
	0.597	260.00	1072.56	9839.32	9960.00	10025.00	10096.81	1.17	257.49	2.06	1070.50	11.91	2.15
	0.597	260.00	1073.13	9960.00	9960.00	10025.00	10025.00	1.57	65.00	2.63	1070.50	7.10	2.02
*	0.684	260.00	1073.36	9835.48	9970.00	10030.00	10058.62	0.80	223.14	1.36	1072.00	30.43	2.93
-	0.684	260.00	1073.64	9970.00	9970.00	10030.00	10030.00	0.51	60.00	1.64	1072.00	27.07	3.13
	0.775	260.00	1074.87	9793.82	9980.00	10015.00	10101.60	1.51	307.78	1.67	1073.20	32.29	3.29
	0.775	260.00	1075.23	9980.00	9980.00	10015.00	10015.00	1.59	35.00	2.03	1073.20	49.13	4.58

SECNO	Q	CWSEL	SSTA	STCHL	STCHR	ENDST	DIFWSX	TOPWID	DEPTH	ELMIN	10*KS	VCH
0.856	78.00	1075.72	9981.40	9980.00	10020.00	10018.60	0.86	37.20	2.13	1073.60	5.51	1.47
0.856	78.00	1076.18	9981.00	9980.00	10020.00	10018.00	0.95	37.00	2.58	1073.60	2.24	1.11
0.938	78.00	1075.97	9980.16	9980.00	10010.00	10013.23	0.24	33.07	2.27	1073.70	6.08	1.64
0.938	78.00	1076.29	9980.00	9980.00	10010.00	10010.00	0.11	30.00	2.59	1073.70	3.56	1.37
1.019	78.00	1076.26	9979.04	9980.00	10015.00	10015.32	0.29	36.28	2.46	1073.80	7.42	1.64
1.019	78.00	1076.47	9980.00	9980.00	10015.00	10015.00	0.17	35.00	2.67	1073.80	4.73	1.42
1.080	78.00	1076.51	9982.47	9985.00	10010.00	10012.53	0.25	30.05	2.61	1073.90	9.17	1.99
1.080	78.00	1076.64	9985.00	9985.00	10010.00	10010.00	0.17	25.00	2.74	1073.90	7.50	1.85

ITCHFIELD DETENTION FAC

ARY PRINTOUT TABLE 110

	SECNO	CWSEL	DIFKWS	EG	TOPWID	QLOB	QCH	QROB	PERENC	STENCL	STCHL	STCHR	STENCR
	0.000	1062.22	0.22	1062.98	35.75	0.00	519.99	0.00	0.00	0.00	9983.00	10017.00	0.00
	0.000	1062.22	0.00	1062.98	34.00	0.00	520.00	0.00	34.00	9983.00	9983.00	10017.00	10017.00
	0.085	1063.06	0.00	1063.06	910.58	38.28	92.52	389.21	0.00	0.00	9950.00	10050.00	0.00
*	0.085	1063.06	0.00	1063.06	909.00	38.28	92.51	389.20	909.00	9879.00	9950.00	10050.00	10788.00
	0.165	1063.06	0.00	1063.06	1107.21	9.10	136.04	374.87	0.00	0.00	9980.00	10100.00	0.00
*	0.165	1063.06	0.00	1063.07	1106.00	9.10	136.02	374.88	1106.00	9930.00	9980.00	10100.00	11036.00
	0.238	1065.06	0.00	1065.90	28.24	0.00	347.00	0.00	0.00	0.00	9975.80	10021.40	0.00
	0.238	1065.03	-0.03	1065.91	27.00	0.00	347.00	0.00	27.00	9986.00	9975.80	10021.40	10013.00
	0.319	1067.54	0.00	1067.93	34.70	0.00	347.00	0.00	0.00	0.00	9979.80	10020.60	0.00
	0.319	1067.53	0.00	1067.93	34.00	0.00	347.00	0.00	34.00	9983.00	9979.80	10020.60	10017.00
	0.414	1069.26	0.00	1069.84	46.04	0.09	346.70	0.21	0.00	0.00	9984.20	10014.60	0.00
	0.414	1069.25	-0.01	1069.84	44.05	0.06	346.73	0.20	45.00	9972.00	9984.20	10014.60	10017.00
*	0.477	1070.85	0.00	1071.29	209.48	24.93	306.77	15.31	0.00	0.00	9985.80	10012.20	0.00
	0.477	1070.82	-0.04	1071.36	72.98	7.02	325.11	14.87	74.00	9970.00	9985.80	10012.20	10044.00
	0.496	1071.39	0.00	1071.63	303.41	134.51	210.52	1.97	0.00	0.00	9990.00	10010.00	0.00
*	0.496	1071.56	0.17	1072.23	62.00	24.37	315.38	7.25	62.00	9965.00	9990.00	10010.00	10027.00
	0.597	1072.56	0.00	1072.62	257.49	42.70	196.16	21.14	0.00	0.00	9960.00	10025.00	0.00
*	0.597	1073.13	0.57	1073.19	65.00	0.00	260.00	0.00	65.00	9960.00	9960.00	10025.00	10025.00
	0.684	1073.36	0.00	1073.46	223.14	53.88	194.66	11.46	0.00	0.00	9970.00	10030.00	0.00
	0.684	1073.64	0.28	1073.79	60.00	0.00	260.00	0.00	60.00	9970.00	9970.00	10030.00	10030.00
	0.775	1074.87	0.00	1074.97	307.78	77.91	145.85	36.24	0.00	0.00	9980.00	10015.00	0.00
	0.775	1075.23	0.36	1075.55	35.00	0.00	260.00	0.00	35.00	9980.00	9980.00	10015.00	10015.00
	0.856	1075.72	0.00	1075.76	37.20	0.00	78.00	0.00	0.00	0.00	9980.00	10020.00	0.00
	0.856	1076.18	0.46	1076.20	37.00	0.00	78.00	0.00	37.00	9981.00	9980.00	10020.00	10018.00
	0.938	1075.97	0.00	1076.01	33.07	0.00	77.31	0.69	0.00	0.00	9980.00	10010.00	0.00
	0.938	1076.29	0.33	1076.32	30.00	0.00	78.00	0.00	30.00	9980.00	9980.00	10010.00	10010.00
	1.019	1076.26	0.00	1076.30	36.28	0.02	77.97	0.00	0.00	0.00	9980.00	10015.00	0.00
	1.019	1076.47	0.21	1076.50	35.00	0.00	78.00	0.00	35.00	9980.00	9980.00	10015.00	10015.00
	1.080	1076.51	0.00	1076.57	30.05	0.23	77.55	0.23	0.00	0.00	9985.00	10010.00	0.00
	1.080	1076.64	0.14	1076.69	25.00	0.00	78.00	0.00	25.00	9985.00	9985.00	10010.00	10010.00

MMARY OF ERRORS AND SPECIAL NOTES

```
ARNING SECNO=      0.085  PROFILE=  1  CONVEYANCE CHANGE OUTSIDE ACCEPTABLE RANGE
NING SECNO=        0.085  PROFILE=  2  CONVEYANCE CHANGE OUTSIDE ACCEPTABLE RANGE

WARNING SECNO=     0.165  PROFILE=  1  CONVEYANCE CHANGE OUTSIDE ACCEPTABLE RANGE
NING SECNO=        0.165  PROFILE=  2  CONVEYANCE CHANGE OUTSIDE ACCEPTABLE RANGE

CAUTION SECNO=     0.238  PROFILE=  1  CRITICAL DEPTH ASSUMED
AUTION SECNO=      0.238  PROFILE=  1  PROBABLE MINIMUM SPECIFIC ENERGY
TION SECNO=        0.238  PROFILE=  1  20 TRIALS ATTEMPTED TO BALANCE WSEL
TION SECNO=        0.238  PROFILE=  2  CRITICAL DEPTH ASSUMED
CAUTION SECNO=     0.238  PROFILE=  2  PROBABLE MINIMUM SPECIFIC ENERGY
UTION SECNO=       0.238  PROFILE=  2  20 TRIALS ATTEMPTED TO BALANCE WSEL

WARNING SECNO=     0.319  PROFILE=  1  CONVEYANCE CHANGE OUTSIDE ACCEPTABLE RANGE
ARNING SECNO=      0.319  PROFILE=  2  CONVEYANCE CHANGE OUTSIDE ACCEPTABLE RANGE

TION SECNO=        0.477  PROFILE=  1  CRITICAL DEPTH ASSUMED
CAUTION SECNO=     0.477  PROFILE=  1  MINIMUM SPECIFIC ENERGY

TION SECNO=        0.496  PROFILE=  2  CRITICAL DEPTH ASSUMED
TION SECNO=        0.496  PROFILE=  2  PROBABLE MINIMUM SPECIFIC ENERGY
CAUTION SECNO=     0.496  PROFILE=  2  20 TRIALS ATTEMPTED TO BALANCE WSEL

NING SECNO=        0.597  PROFILE=  2  CONVEYANCE CHANGE OUTSIDE ACCEPTABLE RANGE

ARNING SECNO=      0.684  PROFILE=  1  CONVEYANCE CHANGE OUTSIDE ACCEPTABLE RANGE
NING SECNO=        0.684  PROFILE=  2  CONVEYANCE CHANGE OUTSIDE ACCEPTABLE RANGE

WARNING SECNO=     0.856  PROFILE=  2  CONVEYANCE CHANGE OUTSIDE ACCEPTABLE RANGE
```

DWAY DATA, LITCHFIELD DETENTION FAC
FILE NO. 2

ATION	FLOODWAY WIDTH	FLOODWAY SECTION AREA	FLOODWAY MEAN VELOCITY	WATER SURFACE ELEVATION WITH FLOODWAY	WITHOUT FLOODWAY	DIFFERENCE
0.000	34.	74.	7.0	1062.2	1062.2	0.0
0.085	909.	2746.	0.2	1063.1	1063.1	0.0
0.165	1106.	2202.	0.2	1063.1	1063.1	0.0
0.238	27.	46.	7.5	1065.1	1065.1	0.0
0.319	34.	69.	5.1	1067.5	1067.5	0.0
0.414	44.	57.	6.1	1069.3	1069.3	0.0
0.477	73.	72.	4.8	1070.9	1070.9	0.0
0.496	62.	67.	5.2	1071.6	1071.4	0.2
0.597	65.	128.	2.0	1073.2	1072.6	0.6
0.684	60.	83.	3.1	1073.7	1073.4	0.3
0.775	35.	57.	4.6	1075.3	1074.9	0.4
0.856	37.	70.	1.1	1076.2	1075.7	0.5
0.938	30.	57.	1.4	1076.3	1076.0	0.3
1.019	35.	55.	1.4	1076.5	1076.3	0.2
1.080	25.	42.	1.8	1076.6	1076.5	0.1

DUPLICATE EFFECTIVE HEC-RAS MODEL
DREAMING SUMMIT

Duplicate Effective Model

star0068.rep

HEC-RAS Version 2.1 October 1997
U.S. Army Corp of Engineers
Hydrologic Engineering Center
609 Second Street, Suite D
Davis, California 95616-4687
(916) 756-1104

```
X     X  XXXXXX    XXXX        XXXX       XX      XXXX
X     X  X        X    X      X   X     X  X    X
X     X  X        X           X   X    X    X   X
XXXXXXX  XXXX     X       XXX XXXX     XXXXXX    XXXX
X     X  X        X            X  X    X    X        X
X     X  X        X    X       X   X   X    X        X
X     X  XXXXXX    XXXX        X    X  X    X   XXXXX
```

PROJECT DATA
Project Title: Litchfield Detention Facility
Project File : star0068.prj
Run Date and Time: 4/8/99 10:28:16 AM

Project in English units

Project Description:
WHITE TANKS / AGUA FRIA AREA DRAINAGE MASTER STUDY

100 - YEAR STORM EVENT FLOODPLAIN/FLOODWAY RUN
FILE: 21.H2I

LITCHFIELD DETENTION FACILITY

FLOW DATA

Flow Title: existing conditions
Flow File : s:\drn\star0068\hec-ras\star0068.f01

Flow Data (cfs)

River	Reach	RS	PF#1	PF#2
RIVER-1	Reach-1	1.08	78	78
RIVER-1	Reach-1	0.775	260	260
RIVER-1	Reach-1	0.496	347	347
RIVER-1	Reach-1	0.165	520	520
Litchfield Wash	Reach-1	1.08	78	78
Litchfield Wash	Reach-1	0.775	260	260
Litchfield Wash	Reach-1	0.496	347	347
Litchfield Wash	Reach-1	0.165	520	520

Boundary Conditions

River	Reach	Profile	Upstream	Downstream
Litchfield Wash	Reach-1	PF#1	Normal S = .005	
Litchfield Wash	Reach-1	PF#2	Known WS = 1062.22	

GEOMETRY DATA

Geometry Title: existing conditions
Geometry File : s:\drn\star0068\hec-ras\star0068.g01

CROSS SECTION RIVER: Litchfield Wash
REACH: Reach-1 RS: 1.08

```
INPUT
Description:
Station Elevation Data     num=        6
     Sta    Elev     Sta    Elev     Sta    Elev     Sta    Elev     S
ta    Elev
    9945  1080.6    9965    1080    9985    1076   10000  1073.9   100
10    1076
   10030    1080

Manning's n Values         num=        3
     Sta   n Val     Sta   n Val     Sta   n Val
    9945     .05    9985     .03   10010     .05

Bank Sta: Left   Right    Lengths: Left Channel   Right     Coeff Cont
r.   Expan.
          9985   10010              330     320     310             .1
       .3

CROSS SECTION          RIVER: Litchfield Wash
REACH: Reach-1            RS: 1.019

INPUT
Description:
Station Elevation Data     num=        7
     Sta    Elev     Sta    Elev     Sta    Elev     Sta    Elev     S
ta    Elev
    9950  1080.5    9965    1080    9980    1076   10000  1073.8   100
15    1076
   10020    1080   10045  1080.5

Manning's n Values         num=        3
     Sta   n Val     Sta   n Val     Sta   n Val
    9950     .05    9980     .03   10015     .05

Bank Sta: Left   Right    Lengths: Left Channel   Right     Coeff Cont
r.   Expan.
          9980   10015              430     430     420             .1
       .3

CROSS SECTION          RIVER: Litchfield Wash
REACH: Reach-1            RS: 0.938

INPUT
Description:
Station Elevation Data     num=        8
     Sta    Elev     Sta    Elev     Sta    Elev     Sta    Elev     S
ta    Elev
    9940  1080.2    9960    1078    9980    1076    9990    1074   100
00  1073.7
   10010    1075   10020    1078   10030  1079.7
```

```
Manning's n Values          num=        3
     Sta   n Val      Sta   n Val      Sta   n Val
    9940     .05     9980     .03    10010     .05

Bank Sta: Left   Right    Lengths: Left Channel   Right     Coeff Cont
r.   Expan.
          9980   10010               410     430     440             .1
       .3

CROSS SECTION           RIVER: Litchfield Wash
REACH: Reach-1             RS: 0.856

INPUT
Description: Q = ABOUT 15% OF Q AT 1I225  ; FROM THE HEC1 MODEL



Station Elevation Data      num=       10
     Sta    Elev      Sta    Elev      Sta    Elev      Sta    Elev      S
ta    Elev
    9940  1078.5     9965    1078     9980    1076     9990    1074    100
00  1073.6
   10010    1074    10020    1076    10035  1076.7    10190    1078    102
35    1080

Manning's n Values          num=        3
     Sta   n Val      Sta   n Val      Sta   n Val
    9940     .05     9980     .03    10020     .05

Bank Sta: Left   Right    Lengths: Left Channel   Right     Coeff Cont
r.   Expan.
          9980   10020               410     430     440             .1
       .3

CROSS SECTION           RIVER: Litchfield Wash
REACH: Reach-1             RS: 0.775

INPUT
Description:
Station Elevation Data      num=        9
     Sta    Elev      Sta    Elev      Sta    Elev      Sta    Elev      S
ta    Elev
    9310    1080     9415    1078     9550    1076     9980    1074    100
00  1073.2
   10015    1074    10215    1076    10310    1078    10400    1080

Manning's n Values          num=        3
     Sta   n Val      Sta   n Val      Sta   n Val
```

```
    9310      .05     9980      .03    10015      .05

Bank Sta: Left    Right     Lengths: Left Channel    Right      Coeff Cont
r.    Expan.
           9980    10015                490      480      470              .1
        .3

CROSS SECTION            RIVER: Litchfield Wash
REACH: Reach-1              RS: 0.684

INPUT
Description:
Station Elevation Data     num=        9
     Sta     Elev      Sta     Elev      Sta     Elev      Sta     Elev      S
ta     Elev
    9375     1078     9545     1076     9735     1074     9970   1072.5    100
00     1072
   10030   1072.5    10080     1074    10245     1076    10385     1078

Manning's n Values         num=        3
     Sta    n Val      Sta    n Val      Sta    n Val
    9375      .05     9970      .03    10030      .05

Bank Sta: Left    Right     Lengths: Left Channel    Right      Coeff Cont
r.    Expan.
           9970    10030                470      460      430              .1
        .3

CROSS SECTION            RIVER: Litchfield Wash
REACH: Reach-1              RS: 0.597

INPUT
Description: Q = ABOUT 1/2 Q AT 1I225  ; FROM THE HEC1 MODEL



Station Elevation Data     num=        9
     Sta     Elev      Sta     Elev      Sta     Elev      Sta     Elev      S
ta     Elev
    9565     1076     9685     1074     9900     1072     9960   1071.7    100
00   1070.5
   10025     1072    10070     1072    10165     1074    10220   1074.5

Manning's n Values         num=        3
     Sta    n Val      Sta    n Val      Sta    n Val
    9565      .05     9960      .03    10025      .05

Bank Sta: Left    Right     Lengths: Left Channel    Right      Coeff Cont
r.    Expan.
```

```
          9960    10025                 510      530      550                .1
       .3

CROSS SECTION           RIVER: Litchfield Wash
REACH: Reach-1             RS: 0.496

INPUT
Description:
Station Elevation Data     num=       12
     Sta     Elev      Sta     Elev      Sta     Elev      Sta     Elev      S
ta     Elev
    9550     1073     9620     1072     9790     1071     9900   1070.7     99
40   1070.8
    9990     1071     9995   1068.7    10000   1068.7    10005   1068.7    100
10     1071
   10055     1072    10070   1072.2

Manning's n Values         num=        3
     Sta    n Val      Sta    n Val      Sta    n Val
    9550     .045     9990     .025    10010     .045

Bank Sta: Left    Right    Lengths: Left Channel    Right      Coeff Cont
r.    Expan.
          9990    10010                 100      100      100                .1
       .3

CROSS SECTION           RIVER: Litchfield Wash
REACH: Reach-1             RS: 0.477

INPUT
Description:
Station Elevation Data     num=       11
     Sta     Elev      Sta     Elev      Sta     Elev      Sta     Elev      S
ta     Elev
    9535     1074     9640     1072     9785     1071   9985.8   1070.4     99
95   1068.1
   10000   1068.2    10005   1068.2  10012.2     1070    10050     1071    100
65     1072
   10110   1072.5

Manning's n Values         num=        3
     Sta    n Val      Sta    n Val      Sta    n Val
    9535     .045   9985.8     .025  10012.2     .045

Bank Sta: Left    Right    Lengths: Left Channel    Right      Coeff Cont
r.    Expan.
        9985.8  10012.2                 335      335      335                .1
       .3

CROSS SECTION           RIVER: Litchfield Wash
REACH: Reach-1             RS: 0.414
```

```
INPUT
Description:
Station Elevation Data     num=       17
     Sta     Elev      Sta     Elev      Sta     Elev      Sta     Elev      S
ta     Elev
    9160     1078     9330     1076     9545     1074     9660     1072     97
70     1071
    9820     1070   9984.2   1069.2     9995   1066.5    10000   1066.5    100
05   1066.6
 10014.6     1069    10025     1070    10040     1071    10070     1072    101
80     1074
   10250     1076    10290   1076.9

Manning's n Values         num=        3
     Sta    n Val      Sta    n Val      Sta    n Val
    9160     .045   9984.2     .025 10014.6     .045

Bank Sta: Left   Right    Lengths: Left Channel   Right     Coeff Cont
r.   Expan.
        9984.2 10014.6              500      500      500             .1
       .3

CROSS SECTION           RIVER: Litchfield Wash
REACH: Reach-1             RS: 0.319

INPUT
Description:
Station Elevation Data     num=       16
     Sta     Elev      Sta     Elev      Sta     Elev      Sta     Elev      S
ta     Elev
    9335     1076     9490     1074     9640     1072     9770     1071     98
35     1070
    9935     1069   9979.8   1068.2     9995   1064.4    10000   1064.5    100
05   1064.5
 10020.6   1068.4    10100     1070    10120     1071    10180     1072    102
55     1074
   10340   1075.5

Manning's n Values         num=        3
     Sta    n Val      Sta    n Val      Sta    n Val
    9335     .045   9979.8     .025 10020.6     .045

Bank Sta: Left   Right    Lengths: Left Channel   Right     Coeff Cont
r.   Expan.
        9979.8 10020.6              430      430      430             .1
       .3

CROSS SECTION           RIVER: Litchfield Wash
REACH: Reach-1             RS: 0.238
```

```
INPUT
Description: Q = ABOUT 2/3 Q AT 1I225  ; FROM THE HEC1 MODEL



Station Elevation Data     num=       12
     Sta    Elev     Sta    Elev     Sta    Elev     Sta    Elev     S
ta    Elev
    9520    1072    9710    1071    9790    1070    9870    1069  9975
.8  1067.4
    9995  1062.6   10000  1062.6   10005  1062.6 10021.4  1067.4   101
00    1069
   10145    1070   10260  1070.8

Manning's n Values         num=        3
     Sta   n Val     Sta   n Val     Sta   n Val
    9520    .045  9975.8    .025 10021.4    .045

Bank Sta: Left   Right    Lengths: Left Channel   Right     Coeff Cont
r.   Expan.
        9975.8 10021.4              385     385     385             .1
       .3

CROSS SECTION           RIVER: Litchfield Wash
REACH: Reach-1             RS: 0.165

INPUT
Description:
Station Elevation Data     num=       11
     Sta    Elev     Sta    Elev     Sta    Elev     Sta    Elev     S
ta    Elev
    9780    1068    9860    1066    9955    1062    9980    1061   100
00    1060
   10100  1060.5   10585    1061   11025    1062   11070    1066   110
90    1067
   11275    1068

Manning's n Values         num=        3
     Sta   n Val     Sta   n Val     Sta   n Val
    9780    .035    9980    .025   10100     .04

Bank Sta: Left   Right    Lengths: Left Channel   Right     Coeff Cont
r.   Expan.
           9980   10100              360     420     430             .1
       .3

CROSS SECTION           RIVER: Litchfield Wash
REACH: Reach-1             RS: 0.085
```

```
INPUT
Description:
Station Elevation Data     num=       13
     Sta     Elev      Sta     Elev      Sta     Elev      Sta     Elev      S
ta     Elev
    9815     1070     9835     1068     9860     1066     9885     1062     98
95     1060
    9950   1059.5    10000     1059    10050   1059.5    10425     1060    107
80     1061
   10785     1062    10800     1066    10805   1066.5

Manning's n Values         num=        3
     Sta    n Val      Sta    n Val      Sta    n Val
    9815      .04     9950     .035    10050      .04

Bank Sta: Left    Right     Lengths: Left Channel    Right      Coeff Cont
r.    Expan.
          9950    10050                470      450      400              .1
       .3

CROSS SECTION            RIVER: Litchfield Wash
REACH: Reach-1              RS: 0

INPUT
Description:
```

SECTIONS 0.000 TO 0.496 ARE
AS FROM LITCHFIELD DETENTION FACILITY PLANS

Q = Q AT CP225 ; FROM THE HEC1 MODEL

```
Station Elevation Data     num=        9
     Sta     Elev      Sta     Elev      Sta     Elev      Sta     Elev      S
ta     Elev
    9965   1066.5     9967     1066     9983     1062     9995     1059    100
00   1058.8
   10005     1059    10017     1062    10033     1066    10035   1066.5
```

```
Manning's n Values          num=        3
     Sta    n Val      Sta    n Val      Sta    n Val
    9965     .025     9983     .025    10017     .025

Bank Sta: Left    Right     Lengths: Left Channel    Right      Coeff Cont
r.    Expan.
          9983    10017                 0        0        0              .1
       .3
```

DEVELOPED HEC-RAS MODEL
DREAMING SUMMIT

DEVELOPED HEC-RAS MODEL
DREAMING SUMMIT

GEOMETRY DATA

Geometry Title: developed conditions-without basin xsecs
Geometry File : s:\DRN\STAR0068\HEC-RAS\STAR0068.g03

CROSS SECTION RIVER: Litchfield Wash
REACH: Reach-1 RS: 1.08

INPUT
Description:
Station Elevation Data num= 6

Sta	Elev	Sta	Elev	Sta	Elev	Sta	Elev	Sta	Elev
9945	1080.6	9965	1080	9985	1076	10000	1073.9	10010	1076
10030	1080								

Manning's n Values num= 3

Sta	n Val	Sta	n Val	Sta	n Val
9945	.05	9985	.03	10010	.05

Bank Sta: Left	Right	Lengths: Left	Channel	Right	Coeff Contr.	Expan.
9985	10010	330	320	310	.1	.3

CROSS SECTION RIVER: Litchfield Wash
REACH: Reach-1 RS: 1.019

INPUT
Description:
Station Elevation Data num= 7

Sta	Elev	Sta	Elev	Sta	Elev	Sta	Elev	Sta	Elev

9950	1080.5	9965	1080	9980	1076	10000	1073.8	10015	1076
10020	1080	10045	1080.5						

Manning's n Values num= 3

Sta	n Val	Sta	n Val	Sta	n Val
9950	.05	9980	.03	10015	.05

Bank Sta: Left	Right	Lengths: Left	Channel	Right	Coeff Contr.	Expan.
9980	10015	430	430	420	.1	.3

CROSS SECTION RIVER: Litchfield Wash
REACH: Reach-1 RS: 0.938

INPUT
Description:
Station Elevation Data num= 8

Sta	Elev	Sta	Elev	Sta	Elev	Sta	Elev	Sta	Elev
9940	1080.2	9960	1078	9980	1076	9990	1074	10000	1073.7
10010	1075	10020	1078	10030	1079.7				

Manning's n Values num= 3

Sta	n Val	Sta	n Val	Sta	n Val
9940	.05	9980	.03	10010	.05

Bank Sta: Left	Right	Lengths: Left	Channel	Right	Coeff Contr.	Expan.
9980	10010	410	430	440	.1	.3

CROSS SECTION RIVER: Litchfield Wash
REACH: Reach-1 RS: 0.856

INPUT
Description: Q = ABOUT 15% OF Q AT 1I225 ; FROM THE HEC1 MODEL

Station Elevation Data num= 10

Sta	Elev	Sta	Elev	Sta	Elev	Sta	Elev	Sta	Elev
9940	1078.5	9965	1078	9980	1076	9990	1074	10000	1073.6
10010	1074	10020	1076	10035	1076.7	10190	1078	10235	1080

Manning's n Values num= 3

Sta	n Val	Sta	n Val	Sta	n Val
9940	.05	9980	.03	10020	.05

Bank Sta: Left	Right	Lengths: Left	Channel	Right	Coeff Contr.	Expan.
9980	10020	410	430	440	.1	.3

CROSS SECTION RIVER: Litchfield Wash
REACH: Reach-1 RS: 0.775

INPUT
Description:
Station Elevation Data num= 9

Sta	Elev	Sta	Elev	Sta	Elev	Sta	Elev	Sta	Elev
9310	1080	9415	1078	9550	1076	9980	1074	10000	1073.2
10015	1074	10215	1076	10310	1078	10400	1080		

Manning's n Values num= 3

Sta	n Val	Sta	n Val	Sta	n Val
9310	.05	9980	.03	10015	.05

Bank Sta: Left	Right	Lengths: Left	Channel	Right	Coeff Contr.	Expan.
9980	10015	490	480	470	.1	.3

CROSS SECTION RIVER: Litchfield Wash
REACH: Reach-1 RS: 0.684

INPUT
Description:
Station Elevation Data num= 9

Sta	Elev	Sta	Elev	Sta	Elev	Sta	Elev	Sta	Elev
9375	1078	9545	1076	9735	1074	9970	1072.5	10000	1072
10030	1072.5	10080	1074	10245	1076	10385	1078		

Manning's n Values num= 3

Sta	n Val	Sta	n Val	Sta	n Val
9375	.05	9970	.03	10030	.05

Bank Sta: Left	Right	Lengths: Left	Channel	Right	Coeff Contr.	Expan.
9970	10030	470	460	430	.1	.3

CROSS SECTION RIVER: Litchfield Wash
REACH: Reach-1 RS: 0.597

INPUT
Description: Q = ABOUT 1/2 Q AT 1I225 ; FROM THE HEC1 MODEL

Station Elevation Data num= 9

Sta	Elev	Sta	Elev	Sta	Elev	Sta	Elev	Sta	Elev
9565	1076	9685	1074	9900	1072	9960	1071.7	10000	1070.5
10025	1072	10070	1072	10165	1074	10220	1074.5		

Manning's n Values num= 3

Sta	n Val	Sta	n Val	Sta	n Val
9565	.05	9960	.03	10025	.05

Bank Sta: Left	Right	Lengths: Left	Channel	Right	Coeff Contr.	Expan.
9960	10025	205	225	245	.1	.3

CROSS SECTION RIVER: Litchfield Wash
REACH: Reach-1 RS: .554

INPUT
Description: BEGINNING OF CHANNEL MODIFICATION, NORTHERN BOUNDARY OF DREAMING SUMMIT
Station Elevation Data num= 40

Sta	Elev	Sta	Elev	Sta	Elev	Sta	Elev	Sta	Elev

9875.36	1072.5	9878.36	1072.5	9882.21	1072.54	9886.6	1072.86	9914.01	1073
9919.32	1073	9923.2	1073	9930.56	1073	9930.82	1073	9931.71	1073
9932.26	1073	9935.5	1072.85	9936.28	1072.83	9949.33	1072.31	9958.27	1072.13
9963.06	1072	9963.11	1072	9963.15	1072	9964.39	1071.95	9967.47	1072.1
9968.7	1072.08	9970.69	1071.33	9971.5	1071	9971.62	1070.93	9972.57	1070.7
9972.92	1070.79	9973.5	1071	9974.98	1071.44	9976.09	1071.62	9980.26	1071.6
9983.66	1071.48	9984.94	1071.08	9985.14	1071	9986.97	1070.5	9989.32	1070
9991.57	1069.38	9995.14	1068.89	10000	1068.2	10010	1068.22	10025	1072

Manning's n Values num= 2

Sta	n Val	Sta	n Val
9875.36	.05	10000	.03

Bank Sta: Left	Right	Lengths: Left	Channel	Right	Coeff Contr.	Expan.
9983.66	10025	150	150	150	.1	.3

CROSS SECTION RIVER: Litchfield Wash
REACH: Reach-1 RS: 0.525

INPUT
Description:
Station Elevation Data num= 5

Sta	Elev	Sta	Elev	Sta	Elev	Sta	Elev	Sta	Elev
9954	1073.54	9990	1067.54	10000	1067.54	10010	1067.54	10046	1073.54

Manning's n Values num= 3

Sta	n Val	Sta	n Val	Sta	n Val
9954	.045	9954	.025	10046	.045

Bank Sta: Left	Right	Lengths: Left	Channel	Right	Coeff Contr.	Expan.
9954	10046	145	147	149	.1	.3

CROSS SECTION RIVER: Litchfield Wash
REACH: Reach-1 RS: 0.496

INPUT
Description:

```
Station Elevation Data     num=        5
     Sta    Elev     Sta    Elev     Sta    Elev     Sta    Elev     Sta    Elev
    9954 1072.92    9990 1066.92   10000 1066.92   10010 1066.92   10046 1072.92

Manning's n Values         num=        3
     Sta   n Val     Sta   n Val     Sta   n Val
    9954    .045    9954    .025   10046    .045

Bank Sta: Left   Right    Lengths: Left Channel   Right     Coeff Contr.   Expan.
          9954   10046               52      52      52             .1       .3

CROSS SECTION          RIVER: Litchfield Wash
REACH: Reach-1            RS: .487

INPUT
Description:
Station Elevation Data     num=        5
     Sta    Elev     Sta    Elev     Sta    Elev     Sta    Elev     Sta    Elev
    9954 1072.69    9990 1066.69   10000 1066.69   10010 1066.69   10046 1072.69

Manning's n Values         num=        3
     Sta   n Val     Sta   n Val     Sta   n Val
    9954    .045    9954    .025   10046    .045

Bank Sta: Left   Right    Lengths: Left Channel   Right     Coeff Contr.   Expan.
          9954   10046               50      50      50             .1       .3

CROSS SECTION          RIVER: Litchfield Wash
REACH: Reach-1            RS: 0.477

INPUT
Description:
Station Elevation Data     num=        5
     Sta    Elev     Sta    Elev     Sta    Elev     Sta    Elev     Sta    Elev
    9954 1072.47    9990 1066.47   10000 1066.47   10010 1066.47   10046 1072.47

Manning's n Values         num=        3
```

Sta	n Val	Sta	n Val	Sta	n Val
9954	.045	9954	.025	10046	.045

Bank Sta: Left	Right	Lengths: Left	Channel	Right	Coeff Contr.	Expan.
9954	10046	92	92	92	.1	.3

CROSS SECTION RIVER: Litchfield Wash
REACH: Reach-1 RS: 0.462

INPUT
Description:
Station Elevation Data num= 5

Sta	Elev	Sta	Elev	Sta	Elev	Sta	Elev	Sta	Elev
9954	1072.07	9990	1066.07	10000	1066.07	10010	1066.07	10046	1072.07

Manning's n Values num= 3

Sta	n Val	Sta	n Val	Sta	n Val
9954	.045	9954	.025	10046	.045

Bank Sta: Left	Right	Lengths: Left	Channel	Right	Coeff Contr.	Expan.
9954	10046	84	84	84	.1	.3

CROSS SECTION RIVER: Litchfield Wash
REACH: Reach-1 RS: .446

INPUT
Description:
Station Elevation Data num= 5

Sta	Elev	Sta	Elev	Sta	Elev	Sta	Elev	Sta	Elev
9954	1071.71	9990	1065.71	10000	1065.71	10010	1065.71	10046	1071.71

Manning's n Values num= 3

Sta	n Val	Sta	n Val	Sta	n Val
9954	.045	9954	.025	10046	.045

Bank Sta: Left	Right	Lengths: Left	Channel	Right	Coeff Contr.	Expan.
9954	10046	170	170	170	.1	.3

```
CROSS SECTION          RIVER: Litchfield Wash
REACH: Reach-1            RS: 0.414

INPUT
Description:
Station Elevation Data    num=       5
     Sta    Elev     Sta    Elev     Sta    Elev     Sta    Elev     Sta    Elev
    9954 1070.98    9990 1064.98   10000 1064.98   10010 1064.98   10046 1070.98

Manning's n Values        num=       3
     Sta   n Val     Sta   n Val     Sta   n Val
    9954    .045    9954    .025   10046    .045

Bank Sta: Left   Right    Lengths: Left Channel   Right     Coeff Contr.   Expan.
          9954   10046              258     258     258              .1       .3

CROSS SECTION          RIVER: Litchfield Wash
REACH: Reach-1            RS: .367

INPUT
Description:
Station Elevation Data    num=       5
     Sta    Elev     Sta    Elev     Sta    Elev     Sta    Elev     Sta    Elev
    9954 1069.86    9990 1063.86   10000 1063.86   10010 1063.86   10046 1069.86

Manning's n Values        num=       3
     Sta   n Val     Sta   n Val     Sta   n Val
    9954    .045    9954    .025   10046    .045

Bank Sta: Left   Right    Lengths: Left Channel   Right     Coeff Contr.   Expan.
          9954   10046              231     231     231              .1       .3

CROSS SECTION          RIVER: Litchfield Wash
REACH: Reach-1            RS: .323

INPUT
```

Description:
Station Elevation Data num= 5

Sta	Elev	Sta	Elev	Sta	Elev	Sta	Elev	Sta	Elev
9954	1068.87	9990	1062.87	10000	1062.87	10010	1062.87	10046	1068.87

Manning's n Values num= 3

Sta	n Val	Sta	n Val	Sta	n Val
9954	.045	9954	.025	10046	.045

Bank Sta: Left	Right	Lengths: Left	Channel	Right	Coeff Contr.	Expan.
9954	10046	212	212	212	.1	.3

CROSS SECTION RIVER: Litchfield Wash
REACH: Reach-1 RS: .283

INPUT
Description:
Station Elevation Data num= 5

Sta	Elev	Sta	Elev	Sta	Elev	Sta	Elev	Sta	Elev
9954	1067.96	9990	1061.96	10000	1061.96	10010	1061.96	10046	1067.96

Manning's n Values num= 3

Sta	n Val	Sta	n Val	Sta	n Val
9954	.045	9954	.025	10046	.045

Bank Sta: Left	Right	Lengths: Left	Channel	Right	Coeff Contr.	Expan.
9954	10046	97	97	97	.1	.3

CROSS SECTION RIVER: Litchfield Wash
REACH: Reach-1 RS: .265

INPUT
Description:
Station Elevation Data num= 5

Sta	Elev	Sta	Elev	Sta	Elev	Sta	Elev	Sta	Elev
9954	1067.54	9990	1061.54	10000	1061.54	10010	1061.54	10046	1067.54

```
Manning's n Values          num=        3
     Sta   n Val      Sta   n Val      Sta   n Val
    9954    .045     9954    .025    10046    .045

Bank Sta: Left   Right    Lengths: Left Channel   Right     Coeff Contr.   Expan.
          9954   10046               96      96      96             .1        .3

CROSS SECTION          RIVER: Litchfield Wash
REACH: Reach-1            RS: .247

INPUT
Description: Q = ABOUT 2/3 Q AT 1I225  ; FROM THE HEC1 MODEL


Station Elevation Data      num=        5
     Sta    Elev      Sta    Elev      Sta    Elev      Sta    Elev      Sta    Elev
    9954 1067.15     9990 1061.15    10000 1061.15    10010 1061.15    10046 1067.15

Manning's n Values          num=        3
     Sta   n Val      Sta   n Val      Sta   n Val
    9954    .045     9954    .025    10046    .045

Bank Sta: Left   Right    Lengths: Left Channel   Right     Coeff Contr.   Expan.
          9954   10046               36      36      36             .1        .3

CROSS SECTION          RIVER: Litchfield Wash
REACH: Reach-1            RS: .240

INPUT
Description:
Station Elevation Data      num=        5
     Sta    Elev      Sta    Elev      Sta    Elev      Sta    Elev      Sta    Elev
    9954    1067     9990    1061    10000    1061    10010    1061    10046    1067

Manning's n Values          num=        3
     Sta   n Val      Sta   n Val      Sta   n Val
```

9954	.045	9954	.025	10046	.045

Bank Sta: Left	Right	Lengths: Left	Channel	Right	Coeff Contr.	Expan.
9954	10046	37	37	37	.1	.3

CROSS SECTION RIVER: Litchfield Wash
REACH: Reach-1 RS: .233

INPUT
Description:
Station Elevation Data num= 5

Sta	Elev	Sta	Elev	Sta	Elev	Sta	Elev	Sta	Elev
9954	1066.84	9990	1060.84	10000	1060.84	10010	1060.84	10046	1066.84

Manning's n Values num= 3

Sta	n Val	Sta	n Val	Sta	n Val
9954	.045	9954	.025	10046	.045

Bank Sta: Left	Right	Lengths: Left	Channel	Right	Coeff Contr.	Expan.
9954	10046	39	39	39	.1	.3

CROSS SECTION RIVER: Litchfield Wash
REACH: Reach-1 RS: .226

INPUT
Description:
Station Elevation Data num= 5

Sta	Elev	Sta	Elev	Sta	Elev	Sta	Elev	Sta	Elev
9954	1066.67	9990	1060.67	10000	1060.67	10010	1060.67	10046	1066.67

Manning's n Values num= 3

Sta	n Val	Sta	n Val	Sta	n Val
9954	.045	9954	.025	10046	.045

Bank Sta: Left	Right	Lengths: Left	Channel	Right	Coeff Contr.	Expan.
9954	10046	35	35	35	.1	.3

CROSS SECTION RIVER: Litchfield Wash
REACH: Reach-1 RS: .219

INPUT
Description: U/S face of culvert, at toe of wingwalls, skew = cos(26.5)
Station Elevation Data num= 15

Sta	Elev	Sta	Elev	Sta	Elev	Sta	Elev	Sta	Elev
9901.56	1068	9965.1	1067	9975.84	1066	9979.87	1065	9984.07	1064
9988.01	1063	9991.5	1060.2	10000	1060.2	10008.5	1060.2	10014.77	1062
10019.24	1063	10023.63	1064	10028.28	1065	10033.3	1066	10107.93	1067

Manning's n Values num= 3

Sta	n Val	Sta	n Val	Sta	n Val
9901.56	.016	9975.84	.013	10033.3	.016

Bank Sta: Left	Right	Lengths: Left	Channel	Right	Coeff Contr.	Expan.
9975.84	10033.3	205	205	205	.1	.3

Ineffective Flow num= 2

Sta L	Sta R	Elev	Sta L	Sta R	Elev
9901.56	9991	1067.8	10009	10107.93	1067.8

CULVERT RIVER: Litchfield Wash
REACH: Reach-1 RS: .204

INPUT
Description:
Distance from Upstream XS = 35
Deck/Roadway Width = 82
Weir Coefficient = 2.6
Bridge Deck/Roadway Skew =
Upstream Deck/Roadway Coordinates
num= 2

Sta	Hi Cord	Lo Cord	Sta	Hi Cord	Lo Cord
9060	1067.8		10060	1067.8	

Upstream Bridge Cross Section Data
Station Elevation Data num= 15

Sta	Elev	Sta	Elev	Sta	Elev	Sta	Elev	Sta	Elev
9901.56	1068	9965.1	1067	9975.84	1066	9979.87	1065	9984.07	1064
9988.01	1063	9991.5	1060.2	10000	1060.2	10008.5	1060.2	10014.77	1062
10019.24	1063	10023.63	1064	10028.28	1065	10033.3	1066	10107.93	1067

Manning's n Values num= 3

Sta	n Val	Sta	n Val	Sta	n Val
9901.56	.016	9975.84	.013	10033.3	.016

Bank Sta: Left	Right	Coeff Contr.	Expan.
9975.84	10033.3	.1	.3

Ineffective Flow num= 2

Sta L	Sta R	Elev	Sta L	Sta R	Elev
9901.56	9991	1067.8	10009	10107.93	1067.8

Downstream Deck/Roadway Coordinates
num= 2

Sta	Hi Cord	Lo Cord	Sta	Hi Cord	Lo Cord
9060	1067.8		10060	1067.8	

Downstream Bridge Cross Section Data
Station Elevation Data num= 16

Sta	Elev	Sta	Elev	Sta	Elev	Sta	Elev	Sta	Elev
9946.3	1065	9964.65	1064	9971.36	1063	9975.66	1062	9983.71	1061
9987.92	1060	9991.5	1059.3	10000	1059.3	10008.5	1059.3	10015.21	1059.3
10021.74	1060	10026.4	1061	10032.22	1062	10035.44	1063	10042.96	1064
10057.28	1065								

Manning's n Values num= 3

Sta	n Val	Sta	n Val	Sta	n Val
9946.3	.016	9971.36	.013	10035.44	.016

Bank Sta: Left	Right	Coeff Contr.	Expan.
9971.36	10035.44	.1	.3

Ineffective Flow num= 2

Sta L	Sta R	Elev	Sta L	Sta R	Elev
9946.3	9991	1067.8	10009	10057.28	1067.8

```
Upstream Embankment side slope              =       8 horiz. to 1.0 vertical
Downstream Embankment side slope            =       4 horiz. to 1.0 vertical
Maximum allowable submergence for weir flow =     .95
Elevation at which weir flow begins         =  1067.8
Energy head used in spillway design         =
Spillway height used in design              =
Weir crest shape                            = Broad Crested

Number of Culverts =  1

Culvert Name     Shape      Rise    Span
8 x 4 culv          Box       4       8
FHWA Chart # 8 - flared wingwalls
FHWA Scale # 2 - Wingwall flared 90 or 15 deg.
Solution Criteria = Highest U.S. EG
Culvert Upstrm Dist  Length    n Value   Entrance Loss Coef   Exit Loss Coef
                  0     127       .013                   .5                1
Number of Barrels =  2
Upstream   Elevation =  1060.2
Centerline Stations
    Sta.    Sta.
  9995.5 10004.5
Downstream Elevation =  1059.3
Centerline Stations
    Sta.    Sta.
  9995.5 10004.5

CULVERT OUTPUT    Profile #PF#1
Culvert ID : 8 x 4 culv

  Culv Q (cfs)            405.00   Culv Vel In (ft/s)        6.33
  # Barrels                    2   Culv Vel Out (ft/s)       6.33
  Q Barrel (cfs)          202.50   Culv Inv El Up (ft)    1060.20
  E.G. US. (ft)          1065.40   Culv Inv El Dn (ft)    1059.30
  W.S. US. (ft)          1065.06   Culv Frctn Ls (ft)        0.27
  Delta EG (ft)             0.87   Culv Ext Lss (ft)         0.29
```

Delta WS (ft)	0.86	Culv Ent Lss (ft)	0.31
E.G. IC (ft)	1064.83	Q Weir (cfs)	
E.G. OC (ft)	1065.40	Weir Sta Lft (ft)	
Culvert Control	Outlet	Weir Sta Rgt (ft)	
Culv WS In (ft)	1064.20	Weir Submerg	
Culv WS Out (ft)	1063.30	Weir Max Depth (ft)	
Culv Nml Depth (ft)		Weir Avg Depth (ft)	
Culv Crt Depth (ft)	2.71	Wr Flw Area (sq ft)	
Culv Ful Lngh (ft)	127.00	Min Top Rd (ft)	1067.80

CROSS SECTION RIVER: Litchfield Wash
REACH: Reach-1 RS: .180

INPUT
Description: D/S face of culvert, at toe of wingwalls, skew = cos(26.5)
Station Elevation Data num= 16

Sta	Elev	Sta	Elev	Sta	Elev	Sta	Elev	Sta	Elev
9946.3	1065	9964.65	1064	9971.36	1063	9975.66	1062	9983.71	1061
9987.92	1060	9991.5	1059.3	10000	1059.3	10008.5	1059.3	10015.21	1059.3
10021.74	1060	10026.4	1061	10032.22	1062	10035.44	1063	10042.96	1064
10057.28	1065								

Manning's n Values num= 3

Sta	n Val	Sta	n Val	Sta	n Val
9946.3	.016	9971.36	.013	10035.44	.016

Bank Sta: Left	Right	Lengths: Left	Channel	Right	Coeff Contr.	Expan.
9971.36	10035.44	0	0	0	.1	.3

Ineffective Flow num= 2

Sta L	Sta R	Elev	Sta L	Sta R	Elev
9946.3	9991	1067.8	10009	10057.28	1067.8

Plan: developed 2 River: Litchfield Wash Reach:Reach-1 Riv Sta: .204 Profile: PF#1

Culv Q (cfs)	396.00	Culv Vel In (ft/s)	6.19
# Barrels	2	Culv Vel Out (ft/s)	6.19
Q Barrel (cfs)	198.00	Culv Inv El Up (ft)	1060.20
E.G. US. (ft)	1065.35	Culv Inv El Dn (ft)	1059.30
W.S. US. (ft)	1065.02	Culv Frctn Ls (ft)	0.25
Delta EG (ft)	0.83	Culv Ext Lss (ft)	0.28
Delta WS (ft)	0.82	Culv Ent Lss (ft)	0.30
E.G. IC (ft)	1064.76	Q Weir (cfs)	
E.G. OC (ft)	1065.35	Weir Sta Lft (ft)	
Culvert Control	Outlet	Weir Sta Rgt (ft)	
Culv WS In (ft)	1064.20	Weir Submerg	
Culv WS Out (ft)	1063.30	Weir Max Depth (ft)	
Culv Nml Depth (ft)		Weir Avg Depth (ft)	
Culv Crt Depth (ft)	2.67	Wr Flw Area (sq ft)	
Culv Ful Lngh (ft)	127.00	Min Top Rd (ft)	1067.80

APPENDIX E
TABLES

Existing Sub-basin Parameters Table

Table 1

AREA	Area		Length 1			Length 2			Land use (%)			Soils Group (%)											COM/RES	DRL
NO.	(acres)	(sq. mi.)	(feet)	(miles)	Dh1	(feet)	(miles)	Dh2	DRL	RES	COM	A	B	C	D	E	F	G	H	I	IA	$\overline{XKSAT}$	Kb	Kb
223D	13.0	0.020	840	0.1591	6	0	0.0000	0	0	0	100	0	0	0	0	0	100	0	0	0	0.06	0.25	0.033	0.065
223E	207.3	0.324	3000	0.5682	7	0	0.0000	0	0	0	100	0	0	0		0	78	0	22	0	0.06	0.25	0.026	0.048
225A	140.2	0.219	2400	0.4545	8	500	0.0947	3	100	0	0	0	0	0	30	0	56	0	15	0	0.35	0.25	0.027	0.050
225B	345.0	0.539	5200	0.9848	14	3700	0.7008	15	45	55	0	0	0	0	4	0	87	4	2	4	0.22	0.23	0.024	0.045
225C	99.6	0.156	2120	0.4015	5	0	0.0000	0	100	0	0	0	0	0	14	5	48	0	11	23	0.35	0.16	0.028	0.053
225D	147.5	0.230	3900	0.7386	30	0	0.0000	0	100	0	0	0	0	0	20	10	35	33	0	1	0.35	0.25	0.026	0.050
225E	33.7	0.053	560	0.1061	2	480	0.0909	18	100	0	0	0	28	0	18	36	18	0	0	0	0.35	0.28	0.030	0.059
226A	314.0	0.491	3200	0.6061	6	0	0.0000	0	25	60	15	0	0	0	0	3	97	0	0	0	0.17	0.25	0.024	0.046
226B	205.0	0.320	520	0.0985	9	5720	1.0833	20	70	10	20	0	0	0	3	78	19	0	0	0	0.27	0.26	0.026	0.048
242A	3.0	0.005	550	0.1042	16	0	0.0000	0	100	0	0	0	0	0	100	0	0	0	0	0	0.35	0.29	0.037	0.073
D242B	43.7	0.068	1800	0.3409	15	900	0.1705	20	100	0	0	0	0	0	66	0	23	11	0	0	0.35	0.27	0.030	0.057
N242B	21.0	0.033	900	0.1705	7.5	350	0.0663	8	100	0	0	0	57	0	43	0	0	0	0	0	0.35	0.32	0.032	0.062
N242C	81.3	0.127	2600	0.4924	12	0	0.0000	0	100	0	0	0	11	8	38	0	43	0	0	0	0.35	0.26	0.028	0.054
D242D	154.4	0.241	2480	0.4697	10	0	0.0000	0	100	0	0	0	0	0	23	0	59	9	5	5	0.35	0.23	0.026	0.050
D242F	116.1	0.181	3840	0.7273	20	0	0.0000	0	100	0	0	0	0	0	28	44	7	21	0	0	0.35	0.26	0.027	0.052
N242F	51.9	0.081	840	0.1591	40	920	0.1742	10	100	0	0	0	0	0	86	0	14	0	0	0	0.35	0.28	0.029	0.056
N242G	13.2	0.021	800	0.1515	5	600	0.1136	10	15	85	0	0	0	0	100	0	0	0	0	0	0.15	0.29	0.033	0.065
N242H	17.3	0.027	1400	0.2652	11	0	0.0000	0	45	55	0	0	0	0	100	0	0	0	0	0	0.22	0.29	0.032	0.063

IA			Vegitation (%)			Kn			DTHETA			XKSAT									COM/RES		DRL	
DRL	RES	COM	DRL	RES	COM	DRL	RES	COM	DRL	RES	COM	A	B	C	D	E	F	G	H	I	m	b	m	b
0.35	0.12	0.06	20	50	10	0.05	0.03	0.03	Dry	Normal	Dry	0.04	0.34	0.14	0.29	0.26	0.25	0.24	0.23	0.04	-0.00625	0.04000	-0.01375	0.08000

Developed Sub-basin Parameters Table

Table 2

AREA	Area		Length 1		$EL_{U/S}$	$EL_{D/S}$	DH	Land use (%)			Soils Group (%)											COM/RES	DRL
NO.	(acres)	(sq. mi.)	(feet)	(miles)	MSL,ft.	MSL,ft.	(feet)	DRL	RES	COM	A	B	C	D	E	F	G	H	I	IA	$\overline{XKSAT}$	Kb	Kb
225P1	32.0	0.050	1550	0.294	1110.0	1099.0	11.0	0	100	0	0	25	0	25	32	18	0	0	0	0.12	0.28	0.031	0.059
225P2	51.2	0.080	1900	0.360	1090.0	1082.0	8.0	0	100	0	0	0	0	50	5	45	0	0	0	0.12	0.27	0.029	0.056
225P3	35.8	0.056	2100	0.398	1111.5	1076.0	35.5	0	100	0	0	0	0	20	27	25	28	0	0	0.12	0.26	0.030	0.059
225P4	190.7	0.298	1500	0.284	1074.0	1067.0	7.0	0	100	0	0	0	0	10	0	45	32	0	13	0.12	0.20	0.026	0.049
242P1	20.5	.032	900	0.170	1117.5	1106.0	11.5	0	100	0	0	0	0	100	0	0	0	0	0	0.12	0.25	0.032	0.063
242P2	12.2	.019	1800	0.341	1118.0	1080.0	38.0	0	100	0	0	0	0	71	0	29	0	0	0	0.12	0.28	0.032	0.063
242P3	43.5	0.068	2000	0.379	1185.0	1068.0	117.0	0	100	0	0	0	0	20	0	60	10	5	5	0.12	0.23	0.030	0.057
242DP	114.0	0.178	3300	0.625	1068.0	1052.0	16.0	0	100	0	0	0	0	28	42	10	20	0	0	0.12	0.26	0.027	0.052
242FP	110.7	0.173	5700	1.080	1095.0	1052.0	43.0	0	100	0	0	0	0	75	0	25	0	0	0	0.12	0.28	0.027	0.052
242BP	35.2	0.055	2700	0.511	1095.0	1060.0	35.0	0	100	0	0	0	0	66	0	24	10	0	0	0.12	0.27	0.030	0.059

IA			Vegitation (%)			Kn			DTHETA			XKSAT									COM/RES		DRL	
DRL	RES	COM	DRL	RES	COM	DRL	RES	COM	DRL	RES	COM	A	B	C	D	E	F	G	H	I	m	b	m	b
0.35	0.12	0.06	20	50	10	0.05	0.03	0.03	Dry	Normal	Dry	0.04	0.34	0.14	0.29	0.26	0.25	0.24	0.23	0.04	-0.00625	0.04000	-0.01375	0.08000

AREA	Area		Percent of Soil Group Areas in Square Miles								
NO.	(acres)	(sq. mi.)	A	B	C	D	E	F	G	H	I
225P1	32.0	0.050		0.0125		0.0125	0.0160	0.0090			
225P2	51.2	0.080				0.0400	0.0040	0.0360			
225P3	35.8	0.056				0.0112	0.0151	0.0140	0.0157		
225P4	190.7	0.298				0.0298		0.1341	0.0954		0.0387
242P1	20.5	.032				.032					
242P2	12.2	.019				.019		0.0075			
242P3	43.5	0.068				0.0136		0.0408	0.0068	0.0034	0.0034
242DP	114.0	0.178				0.0499	0.0748	0.0178	0.0356		
242FP	110.7	0.173				0.1297		0.0432			
242BP	35.2	0.055				0.0363		0.0132	0.0055		

Summary of MCUHP1 Input Parameters

Input File: EX6HR.M1I
Output File: EX6HR.M1O

SUBBASIN	AREA sq. miles	IA ins..	DTHETA	PSIF	XKSAT adj	RTIMP %	Tc	R
226 A	0.491	0.170	0.290	4.80	0.330	26.0	0.58	0.20
D242F	0.181	0.350	0.350	4.70	0.290	0.0	0.65	0.47
225E	0.053	0.350	0.350	4.50	0.330	0.0	0.22	0.10
223E	0.324	0.060	0.350	4.80	0.250	90.0	0.65	0.29
223D	0.020	0.060	0.350	4.80	0.250	90.0	0.24	0.16
225A	0.219	0.350	0.350	4.70	0.290	0.0	0.60	0.31
225C	0.156	0.350	0.390	5.70	0.190	0.0	0.60	0.29
225B	0.539	0.220	0.300	5.00	0.290	11.0	0.96	0.76
225D	0.230	0.350	0.350	4.90	0.270	0.0	0.55	0.34
N242C	0.127	0.350	0.350	4.55	0.320	0.0	0.56	0.35
D242D	0.241	0.350	0.360	5.00	0.260	0.0	0.53	0.23
N242B	0.033	0.350	0.350	4.30	0.380	0.0	0.29	0.21
242A	0.005	0.350	0.350	4.55	0.320	0.0	0.15	0.14
N242F	0.081	0.350	0.350	4.60	0.310	0.0	0.24	0.13
N242G	0.021	0.150	0.260	4.55	0.400	17.0	0.23	0.23
D242B	0.068	0.350	0.350	4.65	0.300	0.0	0.40	0.36
N242H	0.027	0.220	0.290	4.55	0.370	11.0	0.29	0.25

Summary of MCUHP1 Input Parameters

Input File: EX24HR.M1I
Output File: EX24HR.M1O

SUBBASIN	AREA sq. miles	IA ins..	DTHETA	PSIF	XKSAT adj	RTIMP %	Tc	R
226 A	0.491	0.170	0.290	4.80	0.330	26.0	0.52	0.18
D242F	0.181	0.350	0.350	4.70	0.290	0.0	0.57	0.41
225E	0.053	0.350	0.350	4.50	0.330	0.0	0.17	0.08
223E	0.324	0.060	0.350	4.80	0.250	90.0	0.62	0.28
223D	0.020	0.060	0.350	4.80	0.250	90.0	0.20	0.14
225A	0.219	0.350	0.350	4.70	0.290	0.0	0.51	0.26
225C	0.156	0.350	0.390	5.70	0.190	0.0	0.52	0.25
225B	0.539	0.220	0.300	5.00	0.290	11.0	0.93	0.74
225D	0.230	0.350	0.350	4.90	0.270	0.0	0.46	0.28
N242C	0.127	0.350	0.350	4.55	0.320	0.0	0.47	0.29
D242D	0.241	0.350	0.360	5.00	0.260	0.0	0.45	0.19
N242B	0.033	0.350	0.350	4.30	0.380	0.0	0.22	0.15
242A	0.005	0.350	0.350	4.55	0.320	0.0	0.12	0.11
N242F	0.081	0.350	0.350	4.60	0.310	0.0	0.19	0.10
N242G	0.021	0.150	0.260	4.55	0.400	17.0	0.19	0.18
D242B	0.068	0.350	0.350	4.65	0.300	0.0	0.32	0.28
N242H	0.027	0.220	0.290	4.55	0.370	11.0	0.23	0.20

Summary of MCUHP1 Input Parameters

Input File: DEV6HR.M1I
Output File: DEV6HR.M1O

SUBBASIN	AREA sq. miles	IA ins..	DTHETA	PSIF	XKSAT adj	RTIMP %	Tc	R
226 A	0.491	0.170	0.290	4.80	0.330	26.0	.058	0.20
242BP	0.055	0.350	0.350	4.65	0.390	0.0	0.40	0.36
242FP	0.173	0.120	0.250	4.60	0.400	30.0	0.45	0.44
242DP	0.178	0.120	0.250	4.70	0.380	30.0	0.39	0.24
225P1	0.050	0.120	0.250	4.60	0.400	30.0	0.24	0.16
225P2	0.080	0.120	0.250	4.65	0.390	30.0	0.31	0.19
225P3	0.056	0.120	0.250	4.70	0.380	30.0	0.21	0.17
225P4	0.298	0.120	0.250	5.30	0.290	30.0	0.24	0.05
242P1	0.032	0.120	0.250	4.55	0.420	30.0	0.16	0.09
242P2	0.019	0.120	0.250	4.60	0.400	30.0	0.19	0.20
223E	0.324	0.060	0.350	4.80	0.250	90.0	0.65	0.29
223D	0.020	0.060	0.350	4.80	0.250	90.0	0.24	0.16
225A	0.219	0.350	0.350	4.70	0.290	0.0	0.60	0.31
225B	0.539	0.220	0.300	5.00	0.290	11.0	0.98	0.78
N242C	0.127	0.350	0.350	4.55	0.320	0.0	0.56	0.35
N242B	0.033	0.350	0.350	4.30	0.380	0.0	0.29	0.21
N242G	0.021	0.150	0.260	4.55	0.400	17.0	0.23	0.23
N242H	0.027	0.220	0.290	4.55	0.370	11.0	0.29	0.25
242P3	0.068	0.120	0.250	4.90	0.350	30.0	0.15	0.09

Summary of MCUHP1 Input Parameters

Input File: DEV24HR.M1I
Output File: DEV24HR.M1O

SUBBASIN	AREA sq. miles	IA ins..	DTHETA	PSIF	XKSAT adj	RTIMP %	Tc	R
226 A	0.491	0.170	0.290	4.80	0.330	26.0	0.52	0.18
242BP	0.055	0.350	0.350	4.65	0.390	0.0	0.32	0.28
242FP	0.173	0.120	0.250	4.60	0.400	30.0	0.38	0.37
242DP	0.178	0.120	0.250	4.70	0.380	30.0	0.32	0.19
225P1	0.050	0.120	0.250	4.60	0.400	30.0	0.20	0.12
225P2	0.080	0.120	0.250	4.65	0.390	30.0	0.25	0.14
225P3	0.056	0.120	0.250	4.70	0.380	30.0	0.17	0.13
225P4	0.298	0.120	0.250	5.30	0.290	30.0	0.20	0.04
242P1	0.032	0.120	0.250	4.55	0.420	30.0	0.12	0.07
242P2	0.019	0.120	0.250	4.60	0.400	30.0	0.15	0.16
223E	0.324	0.060	0.350	4.80	0.250	90.0	0.62	0.28
223D	0.020	0.060	0.350	4.80	0.250	90.0	0.20	0.14
225A	0.219	0.350	0.350	4.70	0.290	0.0	0.51	0.26
225B	0.539	0.220	0.300	5.00	0.290	11.0	0.94	0.75
N242C	0.127	0.350	0.350	4.55	0.320	0.0	0.47	0.29
N242B	0.033	0.350	0.350	4.30	0.380	0.0	0.22	0.15
N242G	0.021	0.150	0.260	4.55	0.400	17.0	0.19	0.18
N242H	0.027	0.220	0.290	4.55	0.370	11.0	0.23	0.20
242P3	0.068	0.120	0.250	4.90	0.350	30.0	0.12	0.08

HEC-RAS OUTPUT

STAR0068 - Existing Conditions

River Sta	Q Total	W.S. Elev		Sta W.S. Lft	Sta W.S. Rgt	Top Width	Crit W.S.	E.G. Elev	Q Left	Q Channel	Q Right	Vel Chnl	Max Chl Dpth	Froude # Chl
	(cfs)	(ft)	(ft)	(ft)	(ft)	(ft)	(ft)	(ft)	(cfs)	(cfs)	(cfs)	(ft/s)	(ft)	
0.000	520	1062.22		9982.13	10017.87	35.74	1061.95	1062.98	0.09	519.82	0.09	6.99	3.42	0.83
0.085	520	1063.06		9878.38	10788.97	910.60		1063.06	36.71	93.73	389.55	0.25	4.06	0.02
0.165	520	1063.06		9929.76	11036.95	1107.19		1063.06	8.16	138.76	373.09	0.42	3.06	0.04
0.238	347	1065.06		9985.17	10013.40	28.24	1065.06	1065.90		347.00		7.38	2.46	1.01
0.319	347	1067.54		9982.45	10017.15	34.70		1067.93		347.00		5.05	3.14	0.63
0.414	347	1069.26		9971.60	10017.32	45.72	1068.96	1069.84	0.09	346.71	0.21	6.12	2.76	0.79
0.477	347	1070.82		9846.61	10043.04	196.43		1071.30	21.01	311.68	14.31	5.86	2.72	0.73
0.496	347	1071.41		9720.92	10028.29	307.37		1071.65	132.54	212.25	2.22	4.98	2.71	0.60
0.597	260	1072.58		9838.09	10097.36	259.27		1072.63	39.92	199.17	20.90	2.16	2.08	0.32
0.684	260	1073.37		9834.26	10058.88	224.63		1073.47	54.38	194.05	11.57	2.90	1.37	0.48
0.775	260	1074.86		9796.00	10100.58	304.59		1074.96	77.13	147.00	35.87	3.34	1.66	0.53
0.856	78	1075.73		9981.37	10018.63	37.26		1075.76		78.00		1.46	2.13	0.21
0.938	78	1075.97		9980.16	10013.22	33.06		1076.01		77.32	0.68	1.64	2.27	0.23
1.019	78	1076.26		9979.04	10015.32	36.28		1076.30	0.02	77.97	0.01	1.64	2.46	0.25
1.080	78	1076.51		9982.47	10012.53	30.05		1076.57	0.23	77.55	0.23	1.99	2.61	0.28

HEC-RAS Plan: developed 2 River: Litchfield Wash Reach: Reach-1

Reach	River Sta	Q Total	Min Ch El	W.S. Elev	Crit W.S.	E.G. Elev	E.G. Slope	Vel Chnl	Flow Area	Top Width	Froude # Chl	Max Chl Dpth
		(cfs)	(ft)	(ft)	(ft)	(ft)	(ft/ft)	(ft/s)	(sq ft)	(ft)		(ft)
Reach-1	.180	396.00	1059.30	1064.20	1061.76	1064.51	0.000186	4.49	88.17	84.84	0.36	4.90
Reach-1	.204	Culvert										
Reach-1	.219	396.00	1060.20	1065.02	1062.67	1065.35	0.000199	4.57	86.64	48.60	0.37	4.82
Reach-1	.226	396.00	1060.67	1065.33		1065.38	0.000213	1.77	223.60	75.94	0.18	4.66
Reach-1	.233	396.00	1060.84	1065.34		1065.39	0.000249	1.87	211.23	73.96	0.20	4.50
Reach-1	.240	396.00	1061.00	1065.34		1065.40	0.000289	1.98	199.94	72.10	0.21	4.34
Reach-1	.247	396.00	1061.15	1065.35		1065.42	0.000333	2.09	189.72	70.38	0.22	4.20
Reach-1	.265	396.00	1061.54	1065.37		1065.46	0.000489	2.40	164.69	65.97	0.27	3.83
Reach-1	.283	396.00	1061.96	1065.41		1065.53	0.000760	2.83	140.16	61.35	0.33	3.45
Reach-1	.323	396.00	1062.87	1065.56		1065.82	0.002068	4.07	97.38	52.32	0.53	2.69
Reach-1	.367	396.00	1063.86	1066.10		1066.54	0.004256	5.28	75.06	46.92	0.74	2.24
Reach-1	0.414	396.00	1064.98	1067.21		1067.65	0.004355	5.32	74.44	46.76	0.74	2.23
Reach-1	.446	396.00	1065.71	1067.95		1068.38	0.004279	5.29	74.91	46.88	0.74	2.24
Reach-1	0.462	396.00	1066.07	1068.31		1068.74	0.004283	5.29	74.89	46.88	0.74	2.24
Reach-1	0.477	396.00	1066.47	1068.70		1069.14	0.004328	5.31	74.61	46.80	0.74	2.23
Reach-1	.487	396.00	1066.69	1068.92		1069.36	0.004355	5.32	74.44	46.76	0.74	2.23
Reach-1	0.496	396.00	1066.92	1069.15		1069.59	0.004383	5.33	74.27	46.72	0.75	2.23
Reach-1	0.525	396.00	1067.54	1069.79		1070.22	0.004196	5.25	75.44	47.02	0.73	2.25
Reach-1	.554	396.00	1068.20	1070.68	1070.63	1071.46	0.017554	7.07	56.01	33.48	0.96	2.48
Reach-1	0.597	260.00	1070.50	1072.50		1072.57	0.001503	2.34	169.28	248.22	0.36	2.00
Reach-1	0.684	260.00	1072.00	1073.39		1073.48	0.002699	2.81	143.76	229.20	0.46	1.39
Reach-1	0.775	260.00	1073.20	1074.85		1074.96	0.003493	3.39	156.72	301.90	0.53	1.65
Reach-1	0.856	78.00	1073.60	1075.73		1075.77	0.000538	1.45	53.66	37.33	0.21	2.13
Reach-1	0.938	78.00	1073.70	1075.97		1076.01	0.000604	1.64	48.71	33.09	0.23	2.27
Reach-1	1.019	78.00	1073.80	1076.26		1076.30	0.000738	1.64	47.68	36.29	0.25	2.46
Reach-1	1.08	78.00	1073.90	1076.51		1076.57	0.000915	1.99	40.19	30.06	0.28	2.61

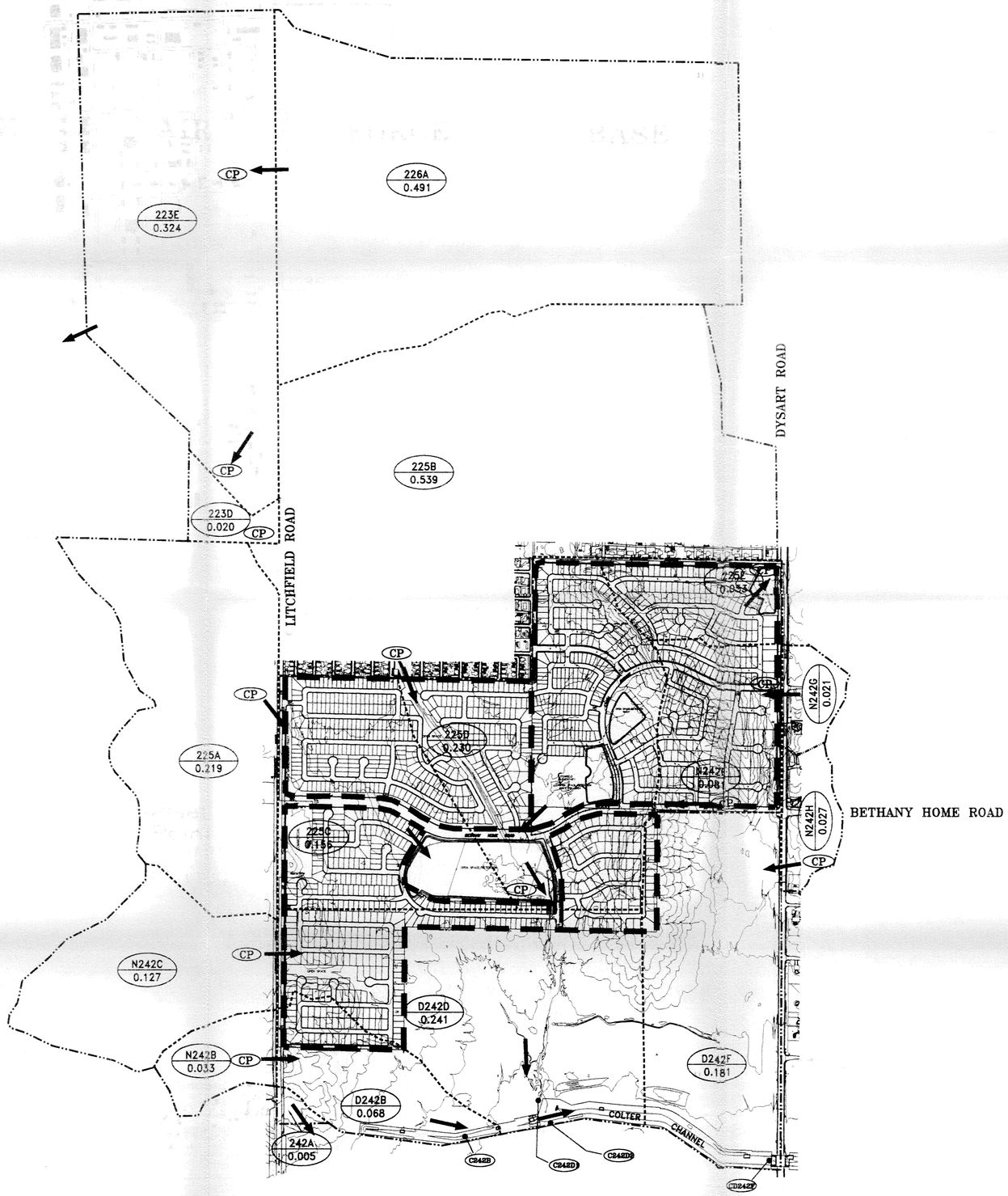

0 300' 600' 1200'

SCALE: 1"=600'

LEGEND

- 225P1 / 0.050 — DRAINAGE AREA NUMBER / DRAINAGE AREA IN SQUARE MILES
- DRAINAGE AREA BOUNDARY
- FLOW DIRECTION
- 1240 — EXISTING CONTOURS
- CP — CONCENTRATION POINT

EXISTING CONDITION

Conc. Point	Q6hr Released @CP (cfs)	Q24hr Released @CP (cfs)
226A	901	569
223E	570	417
223D	108	94
225A	330	273
225E	135	71
225B	405	282
225 (Detention Fac.)	825	687
Outlet	97	89
242A	12	7
N242B	60	39
D242B	94	67
N242C	165	115
D242D1	492	336
D242D2	388	415
N242G	41	27
N242F	222	130
N242H	48	32
D242F	562	578

REVISION	DATE	BY

DESIGN BY: XXX
CHECKED BY:
DATE: 08/99

DAVID EVANS AND ASSOCIATES, INC.
7878 N. 16TH STREET, STE #250
PHOENIX, AZ. 85020-4458 (602) 678-5161

DREAMING SUMMIT - MASTER DRAINAGE REPORT - EXISTING/COLTER CHANNEL DESIGN CONDITIONS OFF-SITE DRAINAGE AREA MAP EXHIBIT A

SCALE: 1"=600'

SECTION: 10, 15
TWNSHP: 2N
RANGE: 1W

SHEET 1 OF 1

JOB NO.: STAR0068

CALL TWO WORKING DAYS BEFORE YOU DIG 263-1100 BLUE STAKE CENTER

STAR0068 tagr 11/10/99 08:23:16 tagr S:\DRN\STAR0068\CAD\ST68001.DWG

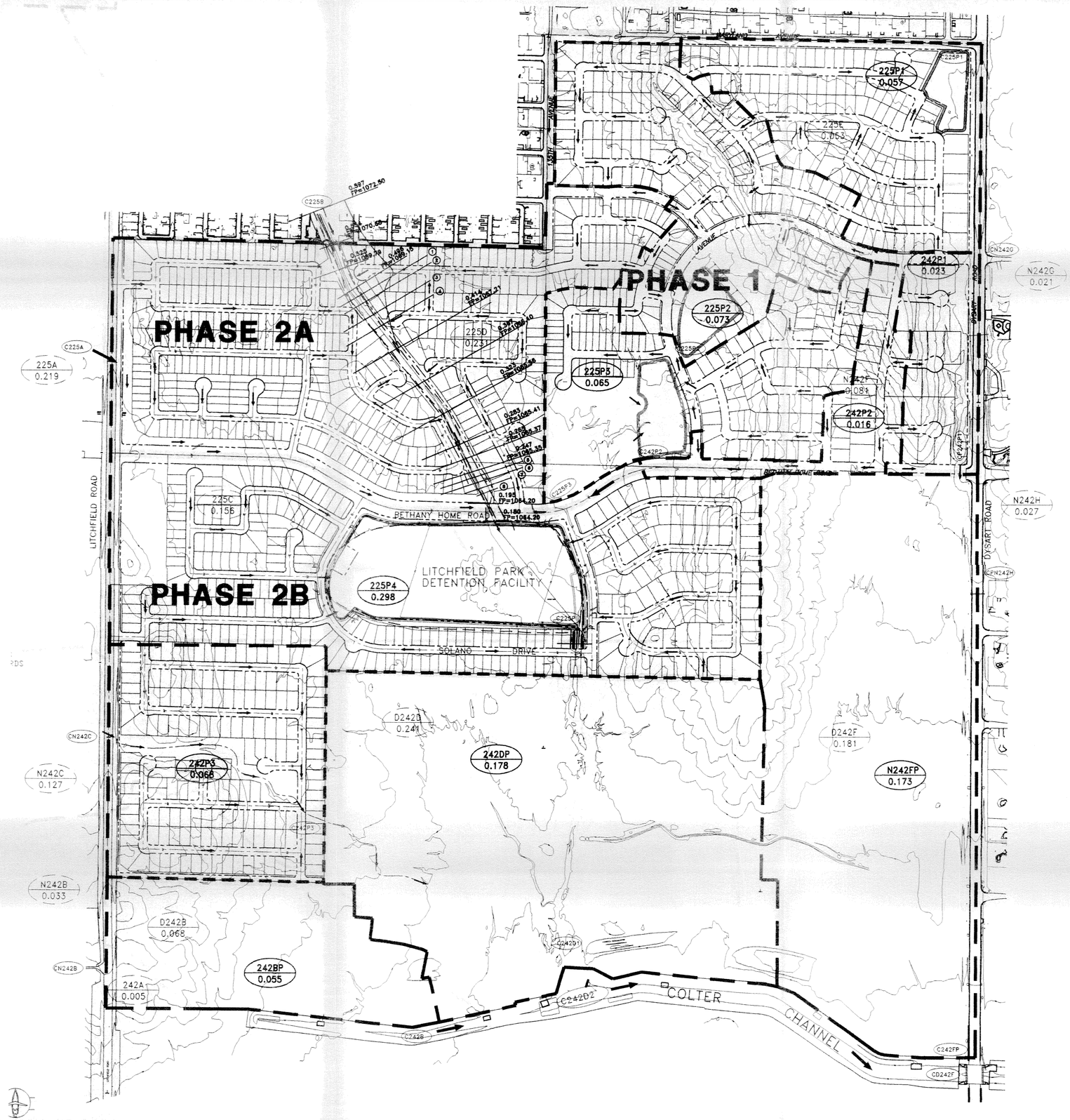

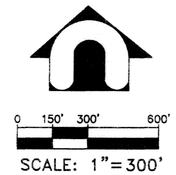

LEGEND

- 225P1 / 0.050 — DEVELOPED CONDITIONS DRAINAGE AREA DESIGNATION; DEVELOPED AREA IN SQUARE MILES
- D242F / 0.185 — DESIGN CONDITIONS DRAINAGE AREA DESIGNATION; AREA IN SQUARE MILES
- DEVELOPED DRAINAGE AREA BOUNDARY
- DEVELOPED FLOODWAY
- EXISTING DRAINAGE AREA BOUNDARY
- EXISTING FLOODWAY
- FLOW DIRECTION
- CP3 — CONCENTRATION POINT
- PHASE LINE

DEVELOPED CONDITION

Conc. Point	Q6hr Released @CP (cfs)	Q24hr Released @CP (cfs)
225A	330	273
225P1	117	83
225B	396	279
225P2	158	101
225P3	37	1
225P	916	608
Litchfield Park Outlet	93	86
N242B	60	39
242B	70	49
N242C	165	115
242P3	209	144
242D1	507	344
242D2	380	397
N242G	41	27
242P1	96	60
242P2	182	117
N242H	48	32
242FP	256	183
D242F	589	589

1. 0.487 FP=1068.92
2. 0.477 FP=1068.70
3. 0.462 FP=1068.31
4. 0.446 FP=1067.95
5. 0.240 FP=1065.34
6. 0.233 FP=1065.34
7. 0.226 FP=1065.33
8. 0.219 FP=1065.02

263-1100 BLUE STAKE CENTER

REVISION	DATE	BY

DESIGN BY: XXX
CHECKED BY:
DATE: 03/99

DAVID EVANS AND ASSOCIATES, INC.
7878 N. 16TH STREET, STE #250
PHOENIX, AZ 85020-4468 (602) 678-5151

DREAMING SUMMIT - MASTER DRAINAGE REPORT - COLTER CHANNEL DESIGN/DEVELOPED CONDITIONS ON-SITE DRAINAGE AREA MAP
EXHIBIT B

SCALE: 1"=300'
SECTION: 10,15
TWNSHP: 2N
RANGE: 1W
SHEET 1 OF 1
JOB NO.: STAR0068

star0068 tagr 11/09/99 16:22:47 tagr S:\DRN\STAR0068\CAD\ST68D02.DWG