Technical Memorandum

URS

7720 N. 16th Street
Suite 100
Phoenix, Arizona 85020
602.371.1100 Tel
602.371.1615 Fax

Action	Info	File
Mike Greenslade – District		23445887

From Todd Ringsmuth, P.E.

Date May 7, 2010

Subject Emergency Spillway Erosion Evaluation
60 Percent Design Review
White Tanks FRS No. 3 Outfall Channel

Registered Professional Engineer (Civil)
CERTIFICATE NO.
32847
TODD E.
RINGSMUTH
Date Signed 5/7/10
ARIZONA, U.S.A.
Expires 9/30/10

The purpose of this memorandum is to provide comments on the 60 percent design documents prepared by Hoskin Ryan for the above referenced project. URS performed a design review at the request of the Flood Control District of Maricopa County (District). The proposed design includes construction of buried, concrete-encased pipelines across the White Tanks FRS No. 3 Emergency Spillway downstream channel and modification to the existing Principal Spillway outlet structure. The comments provided in this memorandum specifically relate to the erosion evaluation conducted for the Emergency Spillway downstream channel.

The White Tanks FRS No. 3 Emergency Spillway and downstream channel are designed to meet ADWR and NRCS criteria, whichever is more stringent. This memorandum presents a discussion of the design criteria, details of the analyses performed, and recommendations for design modifications.

ADWR Design Requirements

ADWR requires the spillway be designed to safely convey the 6-hour Local Storm PMF. To meet ADWR design criteria, scour depths were estimated immediately downstream of the concrete spillway structure and within the channel to determine the depths of erosion protection. The scour depth at the concrete spillway structure was estimated by combining general scour, calculated using the Blench Equation, and local scour, calculated using the Zimmerman and Maniak Equation (USBR 1984). The scour depth for along the dikes was estimated by calculating general scour using the Blench Equation. The equations used to estimate scour were identified through coordination with the District.

ADWR required the scour calculation be performed in two ways:

1) Using the average particle size and a 1.3 factor of safety; and
2) Using the minimum particle size and a 1.0 factor of safety

A470.999.014

Technical Memorandum

URS

7720 N. 16th Street
Suite 100
Phoenix, Arizona 85020
602.371.1100 Tel
602.371.1615 Fax

Action	Info	File
Mike Greenslade – District		23445887

From Todd Ringsmuth, P.E.

Date May 7, 2010

Subject Emergency Spillway Erosion Evaluation
60 Percent Design Review
White Tanks FRS No. 3 Outfall Channel

Registered Professional Engineer (Civil)
CERTIFICATE NO. 32847
TODD E. RINGSMUTH
Date Signed 5/7/10
ARIZONA, U.S.A.
Expires 9/30/10

The purpose of this memorandum is to provide comments on the 60 percent design documents prepared by Hoskin Ryan for the above referenced project. URS performed a design review at the request of the Flood Control District of Maricopa County (District). The proposed design includes construction of buried, concrete-encased pipelines across the White Tanks FRS No. 3 Emergency Spillway downstream channel and modification to the existing Principal Spillway outlet structure. The comments provided in this memorandum specifically relate to the erosion evaluation conducted for the Emergency Spillway downstream channel.

The White Tanks FRS No. 3 Emergency Spillway and downstream channel are designed to meet ADWR and NRCS criteria, whichever is more stringent. This memorandum presents a discussion of the design criteria, details of the analyses performed, and recommendations for design modifications.

ADWR Design Requirements

ADWR requires the spillway be designed to safely convey the 6-hour Local Storm PMF. To meet ADWR design criteria, scour depths were estimated immediately downstream of the concrete spillway structure and within the channel to determine the depths of erosion protection. The scour depth at the concrete spillway structure was estimated by combining general scour, calculated using the Blench Equation, and local scour, calculated using the Zimmerman and Maniak Equation (USBR 1984). The scour depth for along the dikes was estimated by calculating general scour using the Blench Equation. The equations used to estimate scour were identified through coordination with the District.

ADWR required the scour calculation be performed in two ways:

1) Using the average particle size and a 1.3 factor of safety; and
2) Using the minimum particle size and a 1.0 factor of safety

The approach resulting in the greater scour depth is selected for design. The scour depth for the dikes, based on the general scour equation, was calculated to be approximately 10 feet for both the average and minimum particle size approaches. Immediately downstream of the spillway structure, local scour was added to the general scour, resulting in a total scour of 13.3 feet (average) and 19.6 (minimum). The design scour depth at the spillway structure was selected as 20 feet.

The Hoskin Ryan design consists of concrete-encased pipelines constructed across the Emergency Spillway downstream channel and dikes. URS has interpreted the concrete encasement as an erosion control structure as described in *Computing Degradation and Local Scour* (USBR 1984). General scour immediately downstream of the encased pipelines could create a drop condition, increasing the potential for local scour to occur. Therefore, the potential scour at the downstream side of the pipe encasement is similar to that immediately downstream of the concrete spillway structure, or 19.6 feet. The calculation of scour depth based on ADWR criteria is provided in Attachment A.

NRCS Design Requirements

NRCS requires the spillway be designed to maintain spillway integrity and provide spillway stability during conveyance of the corresponding design storms. The spillway integrity is evaluated using the 24-hour General Storm PMF and spillway stability is evaluated using the Emergency Spillway Hydrograph (ESH). The NRCS SITES erosion model was used to evaluate headcut erosion in the spillway channel.

The design conducted for the White Tanks FRS No. 3 Phase 2 Project consisted of evaluating the left and right sides of the spillway channel (looking downstream). Field investigations showed the left side of the spillway channel to have thicker zones of more erodible soils than the right side. The presence of thicker zones of more erodible soils in the left profile resulted in the SITES model showing greater headcut erosion on the left side of the spillway channel. The SITES modeling was also performed for a range of natural ground slopes downstream of the spillway channel, with the 2.0 percent natural ground slope resulting in the worst case erosion. The results of the SITES modeling from the spillway design are presented in Table 1.

TABLE 1
SITES Model Results

Erosion Location	Emergency Spillway Hydrograph (ESH)				24-hour General Storm			
	Left Profile		Right Profile		Left Profile		Right Profile	
	Depth (ft)	Distance[3] (ft)	Depth (ft)	Distance[3] (ft)	Depth (ft)	Distance[3] (ft)	Depth (ft)	Distance[3] (ft)
Erosion at riprap apron[1,2]	0	N/A	0	N/A	9.1	N/A[1]	9.1	N/A[1]
Downstream Erosion (with 2.0 percent natural ground slope)	10.9	1,288	10.9	1,288	20.2	1,017	12.0	1,142

Notes:

1) In all models, riprap does not erode.
2) The erosion depth at the riprap apron does not change with downstream natural ground slope beyond the constructed channel.
3) Distance is measured from the Emergency Spillway crest. The end of the spillway channel is approximately 1,400 feet from the spillway crest.

The results of the SITES modeling indicate that a headcut depth of 20.2 feet could encroach to within 1,017 feet of the concrete spillway structure. The proposed encased pipelines cross the left dike at approximately 1,000 feet downstream of the spillway structure.

Since the left profile provides the worst case headcut erosion assessment, only the left profile was evaluated for review of the Outfall Channel 60 percent design. URS assumed that the proposed manhole located at the center of the spillway channel would be flush to the top of concrete and would therefore not cause increased erosion in the channel. The SITES model for the left profile was revised to include the proposed encased pipelines to evaluate the effect on headcut erosion within the spillway channel. The results of the SITES modeling when incorporating the encased pipelines are presented in Table 2.

TABLE 2
SITES Model Results – Outfall Channel Design

Erosion Location	Emergency Spillway Hydrograph (ESH)		24-hour General Storm	
	Left Profile		Left Profile	
	Depth (ft)	Distance[3] (ft)	Depth (ft)	Distance[3] (ft)
Erosion at riprap apron[1,2]	0	N/A[1]	12.2	N/A[1]
Downstream Erosion (with 2.0 percent natural ground slope)	10.9	1,288	19.7	1,061

Notes:

1) In all models, riprap does not erode.
2) The erosion depth at the riprap apron does not change with downstream natural ground slope beyond the constructed channel.
3) Distance is measured from the Emergency Spillway crest. The end of the spillway channel is approximately 1,400 feet from the spillway crest.

The results of the SITES modeling indicate that the headcut erosion and distance from the spillway structure is unchanged for the ESH. For the 24-hour General Storm model, the headcut erosion immediately downstream of the encased pipelines is estimated to be 19.7 feet deep. The headcut erosion at the spillway increases to 12.2 feet deep for the 24-hour General Storm model. The SITES models developed for this evaluation are provided in Attachment B.

Although not required by NRCS, URS also evaluated the scour downstream of the encased pipelines using the scour methods used to meet ADWR design criteria. The scour depths for the ESH were estimated to be 5.5 feet and 7.5 feet for the average and minimum particle sizes, respectively. The scour depths for the 24-hour General Storm PMF were estimated to be 11.5 feet and 16.7 feet for the average and minimum particle sizes, respectively. The calculation of scour depth based on NRCS criteria is provided in Attachment A.

Recommendations

Based on ADWR design criteria, the estimated scour depth downstream of the concrete-encased pipelines 19.6 feet. The proposed design consists of a 13-foot deep reinforced cutoff wall at the downstream side of the encasement. If the design scour occurs, the pipelines and dikes would likely fail resulting in the potential for increased erosion upstream towards the concrete spillway structure and dam embankment. Due to the potential risk of failure to the spillway structure and dam embankment, URS recommends the Hoskin Ryan design be modified as follows:

- Increase the depth of the concrete cutoff wall, provide riprap, or provide a launch apron to protect against a scour depth of 20 feet immediately downstream of the pipeline encasement.

- Increase the depth of riprap on the dikes or provide a launch apron to protect against a scour depth of 20 feet for a distance of approximately 40 feet downstream of the pipeline encasement.

For the NRCS design criteria, scour depths were estimated for the ESH and the 24-hour General Storm PMF. The results of the SITES modeling for the ESH showed no change in scour depths or locations within the spillway channel. The results of the SITES modeling for the 24-hour General Storm showed an increase in headcut depth to 12.2 feet at the spillway structure and a decrease in headcut depth to 19.7 feet at the concrete-encased pipelines. The increased headcut at the spillway structure is likely caused by the addition of the concrete-encased pipelines within the profile and thus causing headcut to begin at the location. The reduced headcut at the location of the concrete-encased pipelines is a function of the concrete halting the headcut advance, but assumes the concrete structure would remain in place during headcutting. The scour analysis showed that scour depths immediately downstream of the encased pipelines could range from 5.5 to 7.5 feet for the ESH and from 11.5 to 16.7 for the 24-hour General Storm.

Failure of the concrete-encased pipelines due to headcut erosion or scour could during the 24-hour General Storm would increase the potential risk of failure to the spillway structure and dam embankment. Increased headcut erosion at the Emergency Spillway structure could result in failure of the spillway structure and dam embankment. Based on the results of the SITES modeling and scour analysis, URS recommends the Hoskin Ryan design be modified as follows:

- Although the increased headcut depth at the spillway structure would be controlled by the riprap apron, the depth of erosion protection on the dike banks would need to be increased in areas where the headcut exceeds the current riprap depth of 10 feet. The area requiring increased riprap depth is initially estimated to be 200 feet downstream of the spillway structure.
- For the ESH, the designer needs to demonstrate that the encased pipelines and associated cutoff wall will maintain integrity for up to 7.5 feet of scour.
- Increase the depth of the concrete cutoff wall, provide riprap, or provide a launch apron to protect against a scour depth of 20 feet immediately downstream of the pipeline encasement.
- Increase the depth of riprap on the dikes or provide a launch apron to protect against a scour depth of 20 feet for a distance of approximately 40 feet downstream of the pipeline encasement.

The presence of the proposed concrete-encased pipelines increases the risk of headcut erosion and channel scour, and could impact the integrity of the Emergency Spillway structure and dam embankment if additional erosion protection measures are not incorporated.

References

USBR 1984. *Computing Degradation and Local Scour.* Pemberton, E. L., Lara, J. M. United States Bureau of Reclamation.

ATTACHMENT A

SCOUR ANALYSIS

URS

EXHIBIT 4.7-2

CALCULATION COVER SHEET

Client: FCDMC

Project Name: White Tanks FRS No. 3

Project/Calculation Number: 23445887

Title: Scour Calculation of Emergency Spillway Channel

Total Number of Pages (including cover sheet): _____

Total Number of Computer Runs: _____

Prepared by: Michael Johnson, E.I.T.

Date: 5/6/2010

Checked by: Todd Ringsmuth

Date: 5/7/10

Description and Purpose:
Determine the scour depth within the emergency spillway channel in regards to the proposed concrete encased pipeline structure.

Design Basis/References/Assumptions
See Page 2

Remarks/Conclusions/Results:
See Page 3

Calculation Approved by: Todd Ringsmuth 5/7/10
Project Manager/Date

Revision No.:	Description of Revision:	Approved by:

Project Manager/Date

SCOUR CALCULATION for
the PROPOSED PIPELINE STRUCTURE
WHITE TANKS FRS No. 3
FLOOD CONTROL DISTRICT OF MARICOPA COUNTY (FCDMC)

Problem Statement

Determine the scour depth downstream of White Tanks FRS No. 3 within the excavated Emergency Spillway channel at the proposed concrete-encased pipeline structure.

Deliverables

- Total scour depths at the proposed pipeline structure

Design Basis and Assumptions

The peak outflows released from the Emergency Spillway at White Tank FRS No. 3 will be discharged into a channel (referred as the Emergency or Auxiliary Spillway Downstream Channel) with a bottom width of approximately 1,000 ft and spillway dike side slopes of 2.5 to 1 (H:V). The Emergency Spillway Downstream Channel slopes at 1.25 percent until the channel daylights downstream and transitions into natural grade.

Three possible storms were evaluated 1) the Emergency Spillway Hydrograph (ESH) for evaluation of spillway stability, 2) the 24-hour General Storm Probable Maximum Flood (PMF) for evaluation of spillway integrity, in accordance with Earth Dams and Reservoirs, TR-60 (NRCS 2005), and 3) the 6-hour Local Storm PMF. The design peak flow is 6,455 cfs for the ESH; 20,983 cfs for the 24-hour storm; and 26,838 cfs for the 6-hour storm. Flowmaster© was used to calculate the flow characteristics for each storm discharge and are attached.

The Flood Control District of Maricopa County (FCDMC) is proposing to add a concrete-encased pipeline structure through the Emergency Spillway downstream channel. The top of the proposed pipeline structure is shown to be flush with the final grade of the spillway channel. URS has interpreted this structure to be an erosion control structure for the purpose of this calculation. The concrete can not erode per say, but will upset the hydraulics within the channel and will cause general and local scour to occur downstream of the structure. Based on the 60 percent design plans for the proposed pipeline structure there is also a downstream cutoff wall adjacent to the concrete encased pipelines, which measures 13 feet deep and 1 foot wide.

General Scour

The scour depth for the proposed pipeline structure was calculated based on the FCDMC Hydraulic Design Manual, as well as the USBR Technical guidance *"Computing Degradation and Local Scour"* (1984). The scour depth was initially calculated with the average particle size and a factor of safety of 1.3. Next, the scour depth was calculated using the minimum particle size and a factor of safety of 1.0. The calculation spreadsheets are attached. The tables below summarize the scour depths calculated. The Blench equation was used to calculate the general scour at the proposed pipeline structure.

Emergency Spillway Hydrograph

$Z_{general}$	Z_{local}	Z_{bend*}	$Z_{bedform}$	$Z_{low-flow}$	Factor of Safety	Total General Scour, Zt
ft	ft	ft	Ft	ft		ft
Average D_{85} Particle Size						
1.91	0.00	0.00	0.59	1.0	1.3	4.6
Minimum D_{85} Particle Size						
2.84	0.00	0.00	0.59	1.0	1.0	4.4

24-hour General Storm PMF

$Z_{general}$	Z_{local}	Z_{bend*}	$Z_{bedform}$	$Z_{low-flow}$	Factor of Safety	Total General Scour, Zt
ft	ft	ft	Ft	ft		ft
Average D_{85} Particle Size						
4.21	0.00	0.00	1.49	1.0	1.3	8.7
Minimum D_{85} Particle Size						
6.26	0.00	0.00	1.49	1.0	1.0	8.8

6-hr Local Storm PMF
Current Design for Emergency Spillway Apron

$Z_{general}$	Z_{local}	Z_{bend*}	$Z_{bedform}$	$Z_{low-flow}$	Factor of Safety	Total General Scour, Zt
ft	ft	ft	Ft	ft		ft
Average D_{85} Particle Size						
4.97	0.00	0.00	1.81	1.0	1.3	10.1
Minimum D_{85} Particle Size						
7.38	0.00	0.00	1.81	1.0	1.0	10.2

A Factor of Safety of 1.0 was chosen when using the minimum particle size to determine the maximum scour depth possible, which is approximately equal to the scour depth when using the average particle size and a factor of safety of 1.3. The design scour depth based on general scour was selected to be 10.0 ft.

Local Scour

The USBR technical guidance provides several equations for determining scour below a structure. The Schoklitsch and Veronese equations lean heavily on the head differential within the structure and were not computed. The Zimmerman and Maniak equation is more applicable to this design scenario and relies on the unit discharge, channel velocity, and soil particle size. The maximum channel velocity was used in computing the scour at the structure, but the water exiting the stilling basin should be subcritical. The scour at the proposed pipeline structure was determined from the Zimmerman and Maniak (1967) equation as shown below:

$$d_s = K\left(\frac{q^{0.82}}{D_{85}^{\ 0.23}}\right)\left(\frac{d_m}{q^{2/3}}\right)^{0.93} - d_m$$

Where,

K = 1.95 inch-pounds

q = design discharge per unit width, (cfs/ft) = 26.838 cfs/ft

D_{85} = particle size for which 85 percent is finer than (mm)

Average D_{85} = 5.580 mm (geotechnical data attached)

Minimum D_{85} = 0.20 mm (geotechnical data attached)

d_m = downstream channel depth, (ft) = 2.31 ft

d_s = depth of scour below streambed, (ft)

In accordance with FCDMC procedures, the Factor of Safety was intentionally omitted from the local scour depth calculation at the spillway structure, since the Zimmerman and Maniak equation is considered to be conservative. The local scour depth is then added to the general scour depth to calculate total required scour depth below the encased pipeline structure. Similar to the general scour depth calculation, the local scour depth at the proposed pipeline structure was calculated using the average and minimum particle sizes, and is summarized in the table below.

Local Scour Depth Summary

Zimmerman and Maniak	Average D_{85} Scour Depth (ft)	Minimum D_{85} Scour Depth (ft)
Emergency Spillway Hydrograph	1.0	3.0
24-hr General Storm	2.5	7.7
6-hr Local Storm (current design at Emergency Spillway structure)	3.2	9.5

Total Scour Depth Summary

Storm	Scour Depth based on Average Particle Size (ft)	Scour Depth based on Minimum Particle Size (ft)
Emergency Stability Hydrograph	5.5	7.5
24hr General Storm	11.5	16.7
6hr Local Storm	13.2	19.5

Note: Total scour depths have been rounded and may not exactly match the addition of local and general scour depths show in previous tables.

References

Bentley Systems, Inc,FlowMaster, (2005).

Hydraulics Drainage Design Manual, (2003 Draft). *Flood Control District of Maricopa County*

Pemberton, E.L., Lara, J.M. (1984). "Computing Degradation and Local Scour", *United States Bureau of Reclamation.*

FCMDC, 60percent design plans for the construction of the FRS No.3 Outfall Channel, April 2010.

Emergency Spillway Hydrograph Hydraulics

Project Description

Friction Method	Manning Formula
Solve For	Normal Depth

Input Data

Roughness Coefficient	0.025	
Channel Slope	1.25000	%
Left Side Slope	2.50	ft/ft (H:V)
Right Side Slope	2.50	ft/ft (H:V)
Bottom Width	1000.00	ft
Discharge	6455.00	ft^3/s

Results

Normal Depth	0.98	ft
Flow Area	984.60	ft^2
Wetted Perimeter	1005.29	ft
Top Width	1004.91	ft
Critical Depth	1.09	ft
Critical Slope	0.00887	ft/ft
Velocity	6.56	ft/s
Velocity Head	0.67	ft
Specific Energy	1.65	ft
Froude Number	1.17	
Flow Type	Supercritical	

GVF Input Data

Downstream Depth	0.00	ft
Length	0.00	ft
Number Of Steps	0	

GVF Output Data

Upstream Depth	0.00	ft
Profile Description		
Profile Headloss	0.00	ft
Downstream Velocity	Infinity	ft/s
Upstream Velocity	Infinity	ft/s
Normal Depth	0.98	ft
Critical Depth	1.09	ft
Channel Slope	0.01250	ft/ft
Critical Slope	0.00887	ft/ft

Calculation of Scour Depth for Emergency Spillway Hydrograph

(Calculations are based on Maricopa County Hydraulic Design Manual)

Channel: White Tanks DS Channel (S = 1.25%)

Location: Emergency Spillway Channel Bank and Spillway Structure

Total Scour, $$Z_t = FS\left(Z_{long-term} + Z_{general} + Z_{local} + Z_{bend} + Z_{bedform} + Z_{low-flow}\right)$$

Where,

FS = Factor of Safety (with the most commonly used value of 1.3)
$Z_{long\text{-}term}$ = Long-term scour
$Z_{general}$ = General scour
Z_{local} = Local scour
Z_{bend} = Bend scour
$Z_{bedform}$ = Bedform scour
$Z_{low\text{-}flow}$ = Low-flow scour

Equations for each scour component:

Long-Term Scour

$Z_{long\text{-}term}$ = N/A long-term scour not applicable because the spillway flows only during the PMF

General scour

$$Z_{general} = \boxed{d_{fo} = \frac{q_f^{\frac{2}{3}}}{F_{bo}^{\frac{1}{3}}},\ d_s = Zd_{fo}}$$ Blench Equation

Where,
d_{fo} = Depth for zero bed sediment transport, ft
q_f = Design flood discharge per unit width, $ft^3/s/ft$
F_{bo} = Blench's "zero bed factor" in ft/s^2 (see attached graph) D_{50}= 0.44
d_s = Depth of scour, ft
Z = Multiplying factor for Blench regime, 0.6

Local scour

Z_{local} = N/A (scour for bridge/culvert, calculated separately where appropriate)

Bend scour

$$Z_{bend} = \boxed{Y_{max}\frac{0.0685V_m^{0.8}}{Y_h^{0.4}S_e^{0.3}}\left(2.1\left[\frac{\sin^2(\alpha/2)}{\cos\alpha}\right]^{0.2}\right)-1}$$

Where,
α = Angle between point of curvature and channel centerline
Z_{bend} = 0, when $\alpha \leq 17.8$

Bedform scour

$$Z_{bedform} = \boxed{0.5\,d_h}$$

$$\boxed{d_h = 0.066\ Y_h^{1.21}}$$ (for dune height calculation) Fr<0.7

$$\boxed{d_h = 0.28\pi Y_h\ Fr^2}$$ (for antidune height calculation) Fr>0.7

Where,
d_h = Dune or Antidune height, ft
Y_h = Hydraulic depth, ft
V = Channel average velocity, ft/s
Fr = Froude #

Low-flow scour

$Z_{low\text{-}flow}$ = 1 ft. of scour (The spillway flows only during the PMF, so 1.0 ft was assumed to be conservative)

Local Scour at Stilling Basin

Zimmerman and Maniak equation for local scour below a stilling basin

$$d_s = \boxed{K\left(\frac{q^{0.82}}{D_{85}^{0.23}}\right)\left(\frac{d_m}{q^{0.67}}\right)^{0.93} - d_m}$$

d_s = Depth of Scour below streambed, ft

K = 1.95 inch-pound units

q = Design discharge per unit width, $ft^3/s/ft$

D_{85} = Particle size for which 85 percent is finer than, mm 5.58

d_m = Downstream mean water depth, ft

Input Data and Scour Calculation

Input Data: (Output from Flowmaster)

Discharge q, 100yr	Channel Velocity, V_m	Maximum Depth, Y_{max}	Flow Area	Top Width	Hydraulic Depth, Y_h	Energy Slope, S_e	Froude Number	Bend Angle α	Manning's Roughness, n	Blench's zero bed factor
cfs/ft	ft/s	ft	sf	ft	ft	ft/ft		degrees		ft/s^2
6.46	6.56	0.98	985	1,005	0.98	0.0125	1.17	0	0.025	1.31

(*Comments: Straight channel; hence input bend angle is zero)

Scour Calculation:

$Z_{general}$	Z_{local}	Z_{bend*}	$Z_{bedform}$	$Z_{low\text{-}flow}$	F.S.	Total Channel Scour, Zt	Local Scour Depth at Basin	Total Scour at Basin Toe
ft	ft	ft	ft	ft		ft	ft	ft
1.91	0.00	0.00	0.59	1.0	1.3	4.55	0.88	5.4

	A	B	C	D	E	F	G	H	I	J	K

1 **Calculation of Scour Depth for Emergency Spillway Hydrograph**
2 **(Calculations are based on Maricopa County Hydraulic Design Manual)**
3
4 **Channel: White Tanks DS Channel (S = 1.25%)**
5
6 **Location: Emergency Spillway Channel Bank and Spillway Structure**
7
8 Total Scour, $Z_t = FS\left(Z_{long-term} + Z_{general} + Z_{local} + Z_{bend} + Z_{bedform} + Z_{low-flow}\right)$
9
10 Where,
11 FS = Factor of Safety (with the most commonly used value of 1.3)
12 $Z_{long\text{-}term}$ = Long-term scour
13 $Z_{general}$ = General scour
14 Z_{local} = Local scour
15 Z_{bend} = Bend scour
16 $Z_{bedform}$ = Bedform scour
17 $Z_{low\text{-}flow}$ = Low-flow scour
18
19 **Equations for each scour component:**
20
21 ***Long-Term Scour***
22 $Z_{long\text{-}term}$ = N/A long-term scour not applicable because the spillway flows only during the PMF
23
24 ***General scour***
25
26 $Z_{general} = d_{fo} = \dfrac{q_f^{\frac{2}{3}}}{F_{bo}^{\frac{1}{3}}},\ d_s = Zd_{fo}$ Blench Equation
27
28 Where, d_{fo} = Depth for zero bed sediment transport, ft
29 q_f = Design flood discharge per unit width, $ft^3/s/ft$
30 F_{bo} = Blench's "zero bed factor" in ft/s^2 (see attached graph) D_{50}= 0.04
31 d_s = Depth of scour, ft
32 Z = Multiplying factor for Blench regime, 0.6
33
34 ***Local scour***
35 Z_{local} = N/A (scour for bridge/culvert, calculated separately where appropriate)
36
37 ***Bend scour***
38
39 $Z_{bend} = Y_{max}\dfrac{0.0685V_m^{0.8}}{Y_h^{0.4}S_e^{0.3}}\left(2.1\left[\dfrac{\sin^2(\alpha/2)}{\cos\alpha}\right]^{0.2}\right)-1$
40
41
42 Where, α = Angle between point of curvature and channel centerline
43 Z_{bend} = 0, when $\alpha \leq 17.8$
44 ***Bedform scour***
45 $Z_{bedform} = 0.5d_h$
46
47 $d_h = 0.066\ Y_h^{1.21}$ (for dune height calculation) Fr<0.7
48
49 $d_h = 0.28\pi Y_h\ Fr^2$ (for antidune height calculation) Fr>0.7
50
51 Where, d_h = Dune or Antidune height, ft
52 Y_h = Hydraulic depth, ft
53 V = Channel average velocity, ft/s
54 Fr = Froude #

Low-flow scour

$Z_{low\text{-}flow}$ = 1 ft. of scour (The spillway flows only during the PMF, so 1.0 ft was assumed to be conservative)

Local Scour at Stilling Basin

Zimmerman and Maniak equation for local scour below a stilling basin

$$d_s = \boxed{K\left(\frac{q^{0.82}}{D_{85}^{0.23}}\right)\left(\frac{d_m}{q^{0.67}}\right)^{0.93} - d_m}$$

d_s = Depth of Scour below streambed, ft

K = 1.95 inch-pound units

q = Design discharge per unit width, $ft^3/s/ft$

D_{85} = Particle size for which 85 percent is finer than, mm 0.2

d_m = Downstream mean water depth, ft

Input Data and Scour Calculation

Input Data: (Output from Flowmaster)

Discharge q, 100yr	Channel Velocity, V_m	Maximum Depth, Y_{max}	Flow Area	Top Width	Hydraulic Depth, Y_h	Energy Slope, S_e	Froude Number	Bend Angle α	Manning's Roughness, n	Blench's zero bed factor
cfs/ft	ft/s	ft	sf	ft	ft	ft/ft		degrees		ft/s^2
6.46	6.56	0.98	985	1,005	0.98	0.0125	1.17	0	0.025	0.40

(*Comments: Straight channel; hence input bend angle is zero)

Scour Calculation:

$Z_{general}$	Z_{local}	Z_{bend*}	$Z_{bedform}$	$Z_{low\text{-}flow}$	F.S.	Total Channel Scour, Zt	Local Scour Depth at Basin	Total Scour at Basin Toe
ft	ft	ft	ft	ft		ft	ft	ft
2.84	0.00	0.00	0.59	1.0	1	4.43	3.02	7.5

24hr General Storm Spillway Hydraulics

Project Description

Friction Method	Manning Formula
Solve For	Normal Depth

Input Data

Roughness Coefficient	0.025	
Channel Slope	1.25000	%
Left Side Slope	2.50	ft/ft (H:V)
Right Side Slope	2.50	ft/ft (H:V)
Bottom Width	1000.00	ft
Discharge	20983.00	ft^3/s

Results

Normal Depth	1.99	ft
Flow Area	2002.26	ft^2
Wetted Perimeter	1010.73	ft
Top Width	1009.96	ft
Critical Depth	2.39	ft
Critical Slope	0.00684	ft/ft
Velocity	10.48	ft/s
Velocity Head	1.71	ft
Specific Energy	3.70	ft
Froude Number	1.31	
Flow Type	Supercritical	

GVF Input Data

Downstream Depth	0.00	ft
Length	0.00	ft
Number Of Steps	0	

GVF Output Data

Upstream Depth	0.00	ft
Profile Description		
Profile Headloss	0.00	ft
Downstream Velocity	Infinity	ft/s
Upstream Velocity	Infinity	ft/s
Normal Depth	1.99	ft
Critical Depth	2.39	ft
Channel Slope	0.01250	ft/ft
Critical Slope	0.00684	ft/ft

Calculation of Scour Depth for 24hr-General Storm

(Calculations are based on Maricopa County Hydraulic Design Manual)

Channel: White Tanks DS Channel (S = 1.25%)

Location: Emergency Spillway Channel Bank and Spillway Structure

Total Scour, $$Z_t = FS\left(Z_{long-term} + Z_{general} + Z_{local} + Z_{bend} + Z_{bedform} + Z_{low-flow}\right)$$

Where,

FS = Factor of Safety (with the most commonly used value of 1.3)
$Z_{long\text{-}term}$ = Long-term scour
$Z_{general}$ = General scour
Z_{local} = Local scour
Z_{bend} = Bend scour
$Z_{bedform}$ = Bedform scour
$Z_{low\text{-}flow}$ = Low-flow scour

Equations for each scour component:

Long-Term Scour

$Z_{long\text{-}term}$ = N/A long-term scour not applicable because the spillway flows only during the PMF

General scour

$$Z_{general} = \boxed{d_{fo} = \frac{q_f^{\frac{2}{3}}}{F_{bo}^{\frac{1}{3}}},\ d_s = Zd_{fo}}$$ Blench Equation

Where,
d_{fo} = Depth for zero bed sediment transport, ft
q_f = Design flood discharge per unit width, $ft^3/s/ft$
F_{bo} = Blench's "zero bed factor" in ft/s^2 (see attached graph) D_{50}= 0.44
d_s = Depth of scour, ft
Z = Multiplying factor for Blench regime, 0.6

Local scour

Z_{local} = N/A (scour for bridge/culvert, calculated separately where appropriate)

Bend scour

$$Z_{bend} = \boxed{Y_{max}\frac{0.0685V_m^{0.8}}{Y_h^{0.4}S_e^{0.3}}\left(2.1\left[\frac{\sin^2(\alpha/2)}{\cos\alpha}\right]^{0.2}\right)-1}$$

Where,
α = Angle between point of curvature and channel centerline
Z_{bend} = 0, when α ≤17.8

Bedform scour

$$Z_{bedform} = \boxed{0.5d_h}$$

$$\boxed{d_h = 0.066\ Y_h^{1.21}}$$ (for dune height calculation) Fr<0.7

$$\boxed{d_h = 0.28\pi Y_h\ Fr^2}$$ (for antidune height calculation) Fr>0.7

Where,
d_h = Dune or Antidune height, ft
Y_h = Hydraulic depth, ft
V = Channel average velocity, ft/s
Fr = Froude #

White Tanks FRS No. 3
Downstream Channel Scour Calculation

Low-flow scour

$Z_{low\text{-}flow}$ = 1 ft. of scour (The spillway flows only during the PMF, so 1.0 ft was assumed to be conservative)

Local Scour at Stilling Basin

Zimmerman and Maniak equation for local scour below a stilling basin

$$d_s = \boxed{K\left(\frac{q^{0.82}}{D_{85}^{0.23}}\right)\left(\frac{d_m}{q^{0.67}}\right)^{0.93} - d_m}$$

d_s = Depth of Scour below streambed, ft

K = 1.95 inch-pound units

q = Design discharge per unit width, $ft^3/s/ft$

D_{85} = Particle size for which 85 percent is finer than, mm 5.58

d_m = Downstream mean water depth, ft

Input Data and Scour Calculation

Input Data: (Output from Flowmaster)

Discharge q, 100yr	Channel Velocity, V_m	Maximum Depth, Y_{max}	Flow Area	Top Width	Hydraulic Depth, Y_h	Energy Slope, S_e	Froude Number	Bend Angle α	Manning's Roughness, n	Blench's zero bed factor
cfs/ft	ft/s	ft	sf	ft	ft	ft/ft		degrees		ft/s^2
20.98	10.48	1.99	2,002	1,011	1.98	0.0125	1.31	0	0.025	1.31

(*Comments: Straight channel; hence input bend angle is zero)

Scour Calculation:

$Z_{general}$	Z_{local}	Z_{bend*}	$Z_{bedform}$	$Z_{low\text{-}flow}$	F.S.	Total Channel Scour, Zt	Local Scour Depth at Basin	Total Scour at Basin Toe
ft	ft	ft	ft	ft		ft	ft	ft
4.21	0.00	0.00	1.49	1.0	1.3	8.72	2.54	11.3

Calculation of Scour Depth for 24hr-General Storm

(Calculations are based on Maricopa County Hydraulic Design Manual)

Channel: White Tanks DS Channel (S = 1.25%)

Location: Emergency Spillway Channel Bank and Spillway Structure

Total Scour, $$Z_t = FS\left(Z_{long-term} + Z_{general} + Z_{local} + Z_{bend} + Z_{bedform} + Z_{low-flow}\right)$$

Where,

FS = Factor of Safety (with the most commonly used value of 1.3)
$Z_{long\text{-}term}$ = Long-term scour
$Z_{general}$ = General scour
Z_{local} = Local scour
Z_{bend} = Bend scour
$Z_{bedform}$ = Bedform scour
$Z_{low\text{-}flow}$ = Low-flow scour

Equations for each scour component:

Long-Term Scour

$Z_{long\text{-}term}$ = N/A long-term scour not applicable because the spillway flows only during the PMF

General scour

$$Z_{general} = d_{fo} = \frac{q_f^{\frac{2}{3}}}{F_{bo}^{\frac{1}{3}}}, \quad d_s = Zd_{fo}$$ Blench Equation

Where,
d_{fo} = Depth for zero bed sediment transport, ft
q_f = Design flood discharge per unit width, $ft^3/s/ft$
F_{bo} = Blench's "zero bed factor" in ft/s^2 (see attached graph) D_{50}= 0.04
d_s = Depth of scour, ft
Z = Multiplying factor for Blench regime, 0.6

Local scour

Z_{local} = N/A (scour for bridge/culvert, calculated separately where appropriate)

Bend scour

$$Z_{bend} = Y_{max}\frac{0.0685V_m^{0.8}}{Y_h^{0.4}S_e^{0.3}}\left(2.1\left[\frac{\sin^2(\alpha/2)}{\cos\alpha}\right]^{0.2}\right)-1$$

Where,
α = Angle between point of curvature and channel centerline
Z_{bend} = 0, when $\alpha \leq 17.8$

Bedform scour

$$Z_{bedform} = 0.5d_h$$

$$d_h = 0.066\ Y_h^{1.21}$$ (for dune height calculation) Fr<0.7

$$d_h = 0.28\pi Y_h\ Fr^2$$ (for antidune height calculation) Fr>0.7

Where,
d_h = Dune or Antidune height, ft
Y_h = Hydraulic depth, ft
V = Channel average velocity, ft/s
Fr = Froude #

Low-flow scour

$Z_{low\text{-}flow}$ = 1 ft. of scour (The spillway flows only during the PMF, so 1.0 ft was assumed to be conservative)

Local Scour at Stilling Basin

Zimmerman and Maniak equation for local scour below a stilling basin

$$d_s = \boxed{K\left(\frac{q^{0.82}}{D_{85}^{0.23}}\right)\left(\frac{d_m}{q^{0.67}}\right)^{0.93} - d_m}$$

d_s = Depth of Scour below streambed, ft

K = 1.95 inch-pound units

q = Design discharge per unit width, $ft^3/s/ft$

D_{85} = Particle size for which 85 percent is finer than, mm 0.2

d_m = Downstream mean water depth, ft

Input Data and Scour Calculation

Input Data: (Output from Flowmaster)

Discharge q, 100yr	Channel Velocity, V_m	Maximum Depth, Y_{max}	Flow Area	Top Width	Hydraulic Depth, Y_h	Energy Slope, S_e	Froude Number	Bend Angle α	Manning's Roughness, n	Blench's zero bed factor
cfs/ft	ft/s	ft	sf	ft	ft	ft/ft		degrees		ft/s^2
20.98	10.48	1.99	2,002	1,011	1.98	0.0125	1.31	0	0.025	0.40

(*Comments: Straight channel; hence input bend angle is zero)

Scour Calculation:

$Z_{general}$	Z_{local}	Z_{bend*}	$Z_{bedform}$	$Z_{low\text{-}flow}$	F.S.	Total Channel Scour, Zt	Local Scour Depth at Basin	Total Scour at Basin Toe
ft	ft	ft	ft	ft		ft	ft	ft
6.26	0.00	0.00	1.49	1.0	1	8.75	7.76	16.5

6hr Local Storm Spillway Hydraulics

Project Description

Friction Method	Manning Formula
Solve For	Normal Depth

Input Data

Roughness Coefficient	0.025	
Channel Slope	1.25000	%
Left Side Slope	2.50	ft/ft (H:V)
Right Side Slope	2.50	ft/ft (H:V)
Bottom Width	1000.00	ft
Discharge	26838.00	ft^3/s

Results

Normal Depth	2.31	ft
Flow Area	2321.94	ft^2
Wetted Perimeter	1012.43	ft
Top Width	1011.54	ft
Critical Depth	2.81	ft
Critical Slope	0.00648	ft/ft
Velocity	11.56	ft/s
Velocity Head	2.08	ft
Specific Energy	4.38	ft
Froude Number	1.34	
Flow Type	Supercritical	

GVF Input Data

Downstream Depth	0.00	ft
Length	0.00	ft
Number Of Steps	0	

GVF Output Data

Upstream Depth	0.00	ft
Profile Description		
Profile Headloss	0.00	ft
Downstream Velocity	Infinity	ft/s
Upstream Velocity	Infinity	ft/s
Normal Depth	2.31	ft
Critical Depth	2.81	ft
Channel Slope	0.01250	ft/ft
Critical Slope	0.00648	ft/ft

	A	B	C	D	E	F	G	H	I	J	K
1	**Calculation of Scour Depth for 6hr-Local Storm**										
2	**(Calculations are based on Maricopa County Hydraulic Design Manual)**										
3											
4	**Channel:**	**White Tanks DS Channel (S = 1.25%)**									
5											
6	**Location:**	**Emergency Spillway Channel Bank and Spillway Structure**									
7											
8	Total Scour,	$Z_t = FS\left(Z_{long-term} + Z_{general} + Z_{local} + Z_{bend} + Z_{bedform} + Z_{low-flow}\right)$									
9											
10	Where,										
11		FS = Factor of Safety (with the most commonly used value of 1.3)									
12		$Z_{long-term}$ = Long-term scour									
13		$Z_{general}$ = General scour									
14		Z_{local} = Local scour									
15		Z_{bend} = Bend scour									
16		$Z_{bedform}$ = Bedform scour									
17		$Z_{low-flow}$ = Low-flow scour									
18											
19	**Equations for each scour component:**										
20											
21	***Long-Term Scour***										
22		$Z_{long-term}$ = N/A	long-term scour not applicable because the spillway flows only during the PMF								
23											
24	***General scour***										
25											
26		$Z_{general}$ = $d_{fo} = \frac{q_f^{\frac{2}{3}}}{F_{bo}^{\frac{1}{3}}},\ d_s = Zd_{fo}$	Blench Equation								
27											
28	Where,	d_{fo} = Depth for zero bed sediment transport, ft									
29		q_f = Design flood discharge per unit width, $ft^3/s/ft$									
30		F_{bo} = Blench's "zero bed factor" in ft/s^2	(see attached graph)			D_{50}= 0.44					
31		d_s = Depth of scour, ft									
32		Z = Multiplying factor for Blench regime, 0.6									
33											
34	***Local scour***										
35		Z_{local} = N/A	(scour for bridge/culvert, calculated separately where appropriate)								
36											
37	***Bend scour***										
38											
39		Z_{bend} = $Y_{max}\frac{0.0685V_m^{0.8}}{Y_h^{0.4}S_e^{0.3}}\left(2.1\left[\frac{\sin^2(\alpha/2)}{\cos\alpha}\right]^{0.2}\right)-1$									
40											
41											
42	Where,	α = Angle between point of curvature and channel centerline									
43		Z_{bend} = 0, when $\alpha \leq 17.8$									
44	***Bedform scour***										
45		$Z_{bedform}$ = $0.5d_h$									
46											
47		$d_h = 0.066\ Y_h^{1.21}$	(for dune height calculation)			Fr<0.7					
48											
49		$d_h = 0.28\pi Y_h Fr^2$	(for antidune height calculation)			Fr>0.7					
50											
51	Where,	d_h = Dune or Antidune height, ft									
52		Y_h = Hydraulic depth, ft									
53		V = Channel average velocity, ft/s									
54		Fr = Froude #									

Low-flow scour

$Z_{low\text{-}flow}$ = 1 ft. of scour (The spillway flows only during the PMF, so 1.0 ft was assumed to be conservative)

Local Scour at Stilling Basin

Zimmerman and Maniak equation for local scour below a stilling basin

$$d_s = K\left(\frac{q^{0.82}}{D_{85}^{0.23}}\right)\left(\frac{d_m}{q^{0.67}}\right)^{0.93} - d_m$$

d_s = Depth of Scour below streambed, ft

K = 1.95 inch-pound units

q = Design discharge per unit width, $ft^3/s/ft$

D_{85} = Particle size for which 85 percent is finer than, mm 5.58

d_m = Downstream mean water depth, ft

Input Data and Scour Calculation

Input Data: (Output from Flowmaster)

Discharge q, 100yr	Channel Velocity, V_m	Maximum Depth, Y_{max}	Flow Area	Top Width	Hydraulic Depth, Y_h	Energy Slope, S_e	Froude Number	Bend Angle α	Manning's Roughness, n	Blench's zero bed factor
cfs/ft	ft/s	ft	sf	ft	ft	ft/ft		degrees		ft/s^2
26.84	11.56	2.31	2,322	1,012	2.30	0.0125	1.34	0	0.025	1.31

(*Comments: Straight channel; hence input bend angle is zero)

Scour Calculation:

$Z_{general}$	Z_{local}	Z_{bend*}	$Z_{bedform}$	$Z_{low\text{-}flow}$	F.S.	Total Channel Scour, Zt	Local Scour Depth at Basin	Total Scour at Basin Toe
ft	ft	ft	ft	ft		ft	ft	ft
4.97	0.00	0.00	1.81	1.0	1.3	10.12	3.16	13.3

Calculation of Scour Depth for 6hr-Local Storm

(Calculations are based on Maricopa County Hydraulic Design Manual)

Channel: White Tanks DS Channel (S = 1.25%)

Location: Emergency Spillway Channel Bank and Spillway Structure

Total Scour, $$Z_t = FS\left(Z_{long-term} + Z_{general} + Z_{local} + Z_{bend} + Z_{bedform} + Z_{low-flow}\right)$$

Where,

FS = Factor of Safety (with the most commonly used value of 1.3)
$Z_{long\text{-}term}$ = Long-term scour
$Z_{general}$ = General scour
Z_{local} = Local scour
Z_{bend} = Bend scour
$Z_{bedform}$ = Bedform scour
$Z_{low\text{-}flow}$ = Low-flow scour

Equations for each scour component:

Long-Term Scour

$Z_{long\text{-}term}$ = N/A long-term scour not applicable because the spillway flows only during the PMF

General scour

$$Z_{general} = \boxed{d_{fo} = \frac{q_f^{\frac{2}{3}}}{F_{bo}^{\frac{1}{3}}},\ d_s = Zd_{fo}}$$ Blench Equation

Where,
d_{fo} = Depth for zero bed sediment transport, ft
q_f = Design flood discharge per unit width, $ft^3/s/ft$
F_{bo} = Blench's "zero bed factor" in ft/s^2 (see attached graph) D_{50}= 0.04
d_s = Depth of scour, ft
Z = Multiplying factor for Blench regime, 0.6

Local scour

Z_{local} = N/A (scour for bridge/culvert, calculated separately where appropriate)

Bend scour

$$Z_{bend} = \boxed{Y_{max}\frac{0.0685V_m^{0.8}}{Y_h^{0.4}S_e^{0.3}}\left(2.1\left[\frac{\sin^2(\alpha/2)}{\cos\alpha}\right]^{0.2}\right)-1}$$

Where,
α = Angle between point of curvature and channel centerline
Z_{bend} = 0, when $\alpha \leq 17.8$

Bedform scour

$$Z_{bedform} = \boxed{0.5d_h}$$

$$\boxed{d_h = 0.066\ Y_h^{1.21}}$$ (for dune height calculation) Fr<0.7

$$\boxed{d_h = 0.28\pi Y_h Fr^2}$$ (for antidune height calculation) Fr>0.7

Where,
d_h = Dune or Antidune height, ft
Y_h = Hydraulic depth, ft
V = Channel average velocity, ft/s
Fr = Froude #

Low-flow scour

$Z_{low\text{-}flow}$ = 1 ft. of scour (The spillway flows only during the PMF, so 1.0 ft was assumed to be conservative)

Local Scour at Stilling Basin

Zimmerman and Maniak equation for local scour below a stilling basin

$$d_s = K\left(\frac{q^{0.82}}{D_{85}^{0.23}}\right)\left(\frac{d_m}{q^{0.67}}\right)^{0.93} - d_m$$

d_s = Depth of Scour below streambed, ft

K = 1.95 inch-pound units

q = Design discharge per unit width, $ft^3/s/ft$

D_{85} = Particle size for which 85 percent is finer than, mm 0.2

d_m = Downstream mean water depth, ft

Input Data and Scour Calculation

Input Data: (Output from Flowmaster)

Discharge q, 100yr	Channel Velocity, V_m	Maximum Depth, Y_{max}	Flow Area	Top Width	Hydraulic Depth, Y_h	Energy Slope, S_e	Froude Number	Bend Angle α	Manning's Roughness, n	Blench's zero bed factor
cfs/ft	ft/s	ft	sf	ft	ft	ft/ft		degrees		ft/s^2
26.84	11.56	2.31	2,322	1,012	2.30	0.0125	1.34	0	0.025	0.40

(*Comments: Straight channel; hence input bend angle is zero)

Scour Calculation:

$Z_{general}$	Z_{local}	Z_{bend*}	$Z_{bedform}$	$Z_{low\text{-}flow}$	F.S.	Total Channel Scour, Zt	Local Scour Depth at Basin	Total Scour at Basin Toe
ft	ft	ft	ft	ft		ft	ft	ft
7.38	0.00	0.00	1.81	1.0	1	10.19	9.45	19.6

REFERENCES

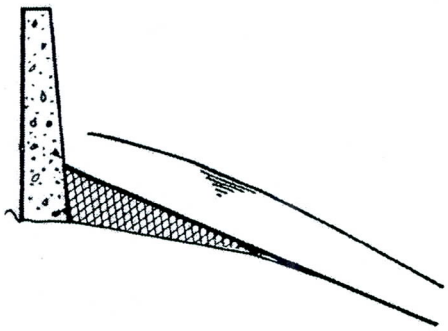

COMPUTING DEGRADATION AND LOCAL SCOUR

TECHNICAL GUIDELINE FOR BUREAU OF RECLAMATION

U.S. Department of the Interior
Bureau of Reclamation

7-2090 (4-81)
Bureau of Reclamation

TECHNICAL REPORT STANDARD TITLE PAGE

1. REPORT NO.	2. GOVERNMENT ACCESSION NO.	3. RECIPIENT'S CATALOG NO.
4. TITLE AND SUBTITLE Computing Degradation and Local Scour		5. REPORT DATE January 1984 6. PERFORMING ORGANIZATION CODE
7. AUTHOR(S) Ernest L. Pemberton and Joseph M. Lara		8. PERFORMING ORGANIZATION REPORT NO.
9. PERFORMING ORGANIZATION NAME AND ADDRESS Bureau of Reclamation Engineering and Research Center Denver, Colorado 80225		10. WORK UNIT NO. 11. CONTRACT OR GRANT NO.
12. SPONSORING AGENCY NAME AND ADDRESS Same		13. TYPE OF REPORT AND PERIOD COVERED Technical Guideline 14. SPONSORING AGENCY CODE DIBR

15. SUPPLEMENTARY NOTES

Microfiche and/or hard copy available at the Engineering and Research Center, Denver, Colorado

Editor-JMT

16. ABSTRACT

Several methods are presented in this technical guide, which can be applied to estimate degradation of a stream channel, occurring because of changes in flow regimen or reduced sediment load below a dam or diversion structure. Estimation of degradation include two types: Those limited by channel armoring and degradation limited by a stable slope. Detailed procedures are introduced to use in estimating maximum scour depth of channels at bridges or siphon crossings.

17. KEY WORDS AND DOCUMENT ANALYSIS

a. DESCRIPTORS-- / stream degradation/ critical tractive force/ deposition/ scour/ streambeds/ stream erosion/ bed load/ hydraulic structures

b. IDENTIFIERS-- / channels/ sedimentation/ erosion

c. COSATI Field/Group 08H, 13B COWRR: 0808 SRIM: 48G, 50B

18. DISTRIBUTION STATEMENT Available from the National Technical Information Service, Operations Division, 5285 Port Royal Road, Springfield, Virginia 22161. (Microfiche and/or hard copy available from NTIS)	19. SECURITY CLASS (THIS REPORT) UNCLASSIFIED 20. SECURITY CLASS (THIS PAGE) UNCLASSIFIED	21. NO. OF PAGES 48 22. PRICE

Inch-pound units	Metric units
$L_g = \frac{37.05}{0.00112}$	$L_g = \frac{1.625\ (6.94)}{0.00112}$
$L_g = 33\,100$ ft	$L_g = 10\,100$ m

and for the subreaches:

Inch-pound units	Metric units
$L_1 = \frac{22.8}{2\ (0.00112)} = 10\ 200$ ft	$L_1 = \frac{6.94}{2\ (0.00112)} = 3\ 100$ m
$L_2 = \frac{3\ (22.8)}{8\ (0.00112)} = 7\ 600$ ft	$L_2 = \frac{3\ (6.94)}{8\ (0.00112)} = 2\ 300$ m
$L_3 = \frac{3\ (22.8)}{4\ (0.00112)} = 15\ 300$ ft	$L_3 = \frac{3(6.94)}{4\ (0.00112)} = 4\ 700$ m

CHANNEL SCOUR DURING PEAK FLOODFLOWS

The design of any structure located either along the riverbank and flood plain or across a channel requires a river study to determine the response of the riverbed and banks to large floods. A knowledge of fluvial morphology combined with field experience is important in both the collection of adequate field data and selection of appropriate studies for predicting the erosion potential. In most studies, two processes must be considered, (1) natural channel scour, and (2) scour induced by structures placed by man either in or adjacent to the main river channel.

Natural scour occurs in any moveable bed river but is more severe when associated with restrictions in river widths, caused by morphological channel changes, and influenced by erosive flow patterns resulting from channel alinement such as a bend in a meandering river. Rock outcrops along the bed or banks of a stream can restrict the normal river movement and thus effect any of the above influencing factors. Manmade structures can have varying degrees of influence, usually dependent upon either the restriction placed upon the normal river movement or by turbulence in flow pattern directly related to the structure. Examples of structures that influence river movement would be (1) levees placed to control flood plain flows, thus increasing main channel discharges; (2) spur dikes, groins, riprapped banks, or bridge abutments used to control main channel movement; or (3) pumping plants or headworks to canals placed on a riverbank. Scour of the bed or banks caused by these structures is that created by higher local velocities or excessive turbulence at the strucutre. Structures placed directly in the river consist of (1) piers and piling for either highways or railroad bridges; (2) dams across the river for diversion or storage, (3) grade control structures such as rock cascades, gabion controls or concrete baffled apron drop

structures; or (4) occasionally a powerline or tower structure placed in the flood plain but exposed to channel erosion with extreme shifting or movement of a river. All of the above may be subject to higher local velocities, but usually are subject to the more critical local scour caused by turbulence and helicoidal flow patterns.

The prediction of river channel scour due to floods is necessary for the design of many Reclamation structures. These Reclamation guidelines on scour represent a summary of some of the more applicable techniques which are described in greater detail in the reference publications by T. Blench (1969), National Cooperative Highway Research Program Synthesis 5 (1970), C. R. Neill (1973), D. B. Simons and F. Senturk (1977), and S. C. Jain (1981). The paper by S. C. Jain (1981) summarized many of the empirical equations developed for predicting scour of a streambed around a bridge pier. It should be recognized that the many equations are empirically developed from experimental studies. Some are regime-type based on practical conditions and considerable experience and judgment. Because of the complexity of scouring action as related to velocity, turbulence, and bed materials, it is difficult to prescribe a direct procedure. Reclamation practice is to compute scour by several methods and utilize judgment in averaging the results or selection of the most applicable procedures.

The equations for predicting local channel scour usually can be grouped into those applicable to the two previously described processes of either a natural channel scour or scour caused by a manmade structure. A further breakdown of these processes is shown in table 6 where Type A equations are those used for natural river erosion and Types B, C, and D cover various manmade structures.

The importance of experience and judgment in conducting a scour study cannot be overemphasized. It should be recognized that the techniques described in these guidelines merely provide a set of practical tools in guiding the investigator to estimate the amount of scour for use in design. The collection of adequate field data to define channel hydraulics and bed or bank materials to be scoured govern the accuracy of any study. They should be given as much emphasis as the methodology used in the analytical study. Field data are needed to compute water surface profiles for a reach of river in the determination of channel hydraulics for use in a scour study. With no restrictions in channel width, scour is computed from the average channel hydraulics for a reach. If a structure restricts the river width, scour is computed from the channel hydraulics at the restriction. In all cases, scour estimates should be based upon the portion of discharge in and hydraulic characteristics of the main channel only.

Table 6. - Classification of scour equation for various structure designs

Equation type	Scour	Design
A	Natural channel for restrictions and bends	Siphon crossing or any buried pipeline. Stability study of a natural bank. Waterway for one-span bridge.
B	Bankline structures	Abutments to bridge or siphon crossing. Bank slope protection such as riprap, etc. Spur dikes, groins, etc. Pumping plants. Canal headworks.
C	Midchannel structures	Piling for bridge. Piers for flume over river. Powerline footings. Riverbed water intake structures.
D	Hydraulic structures across channel	Dams and diversion dams. Erosion controls. Rock cascade drops, gabion controls, and concrete drops.

Although each scour problem must be analyzed individually, there are some general flow and sediment transport characteristics to be considered in making the judgmental decision on methodology. The general conclusion reached by Lane and Borland (1954) was that floods do not cause a general lowering of streambed, and rivers such as the Rio Grande may scour at the narrow sections but fill up at the wider downstream sections during a major flood. Another general sediment transport characteristic is the influence of a large sediment load on scour which includes the variation of sediment transport associated with a high peak, short duration flood hydrograph. The large sediment concentrations usually of clay and silt size material will occur on the rising stage of the hydrograph up and through the peak of the flood while the falling stage of the flood with deposition of coarser sediments in the bed of the channel may be accompanied by greater scour of the wetted channel banks. Channel scour also occurs when the capacity of streamflow with extreme high velocities in portions of the channel cross section will transport the bed material at a greater rate than replacement materials are supplied. Thus, maximum depth of channel scour during the flood is a function of the channel geometry, obstruction created by a structure (if any), the velocity of flow, turbulence, and size of bed material.

Design Flood

The first step in local scour study for design of a structure is selection of design flood frequency. Reclamation criteria for design of most structures

shown in table 6 varies from a design flood estimated on a frequency basis from 50 to 100 years. This pertains to an adequate waterway for passage of the floodflow peak. The scour calculations for these same structures are always made for a 100-year flood peak. The use of the 100-year flood peak for scour is based on variability of channel hydraulics, bed material, and general complexity of the erosive process. The exception in the use of the 100-year flood peak for estimating scour would be the scour hole immediately below a large dam or a major structure where loss of structure could involve lives or represent a catastrophic event. In this case, the scour for use in design should be determined for a flow equal to 50 percent of the structure design flood.

Equation Types A and B (See Table 6)

Natural river channel scour estimates are required in design of a buried pipe, buried canal siphon, or a bankline structure. For most siphon crossings of a river, the cost of burying a siphon will dictate either the selection of a natural narrow reach of river or a restriction in width created by constructing canal bankline levees across a portion of the flood plain. A summary of available methods for computing scour at constrictions is given by Neill (1973). The four methods for estimating general scour at constricted waterways described by Neill (1973) are considered the proper approach for estimating scour for use in either design of a siphon crossing or where general scour is needed of the riverbed for a bankline structure. The four methods supplemented with Reclamation's procedure for application are given below:

Field measurments of scour method. - This method consists of observing or measuring the actual scoured depths either at the river under investigation or a similar type river. The measurements are taken during as high a flow as possible to minimize the influence of extrapolation.

A Reclamation unpublished study by Abbott (1963) analyzed U.S. Geological Survey discharge measurement notes from several streams in the southwestern United States, including the Galisteo Creek at Domingo, New Mexico, and developed an empirical curve enveloping observed scour at the gaging station. This envelope curve for use in siphon design was further supported by observed scour from crest-stage and scour gages on Gallegos, Kutz, Largo, Chaco, and Gobernador Canyons in northwest New Mexico collected during the period from 1963 to 1969. The scour gages consisted of a series of deeply anchored buried flexible tapes across the channel section that were resurveyed after a flood to determine the depth of scour at a specific location. The results of these measurements are shown on figure 8 along with the envelope curve for Galisteo Creek that support scour estimates for wide sandbed (D_{50} varying from 0.5 to 0.7 mm) ephemeral streams in the southwestern United States by the equation.

$$d_s = K\ (q)^{0.24} \qquad (24)$$

where:

d_s = Depth of scour below streambed, ft (m)
K = 2.45 inch-pound units (1.32 metric units)
q = Unit water discharge, ft^3/s per ft of width (m^3/s per m of width)

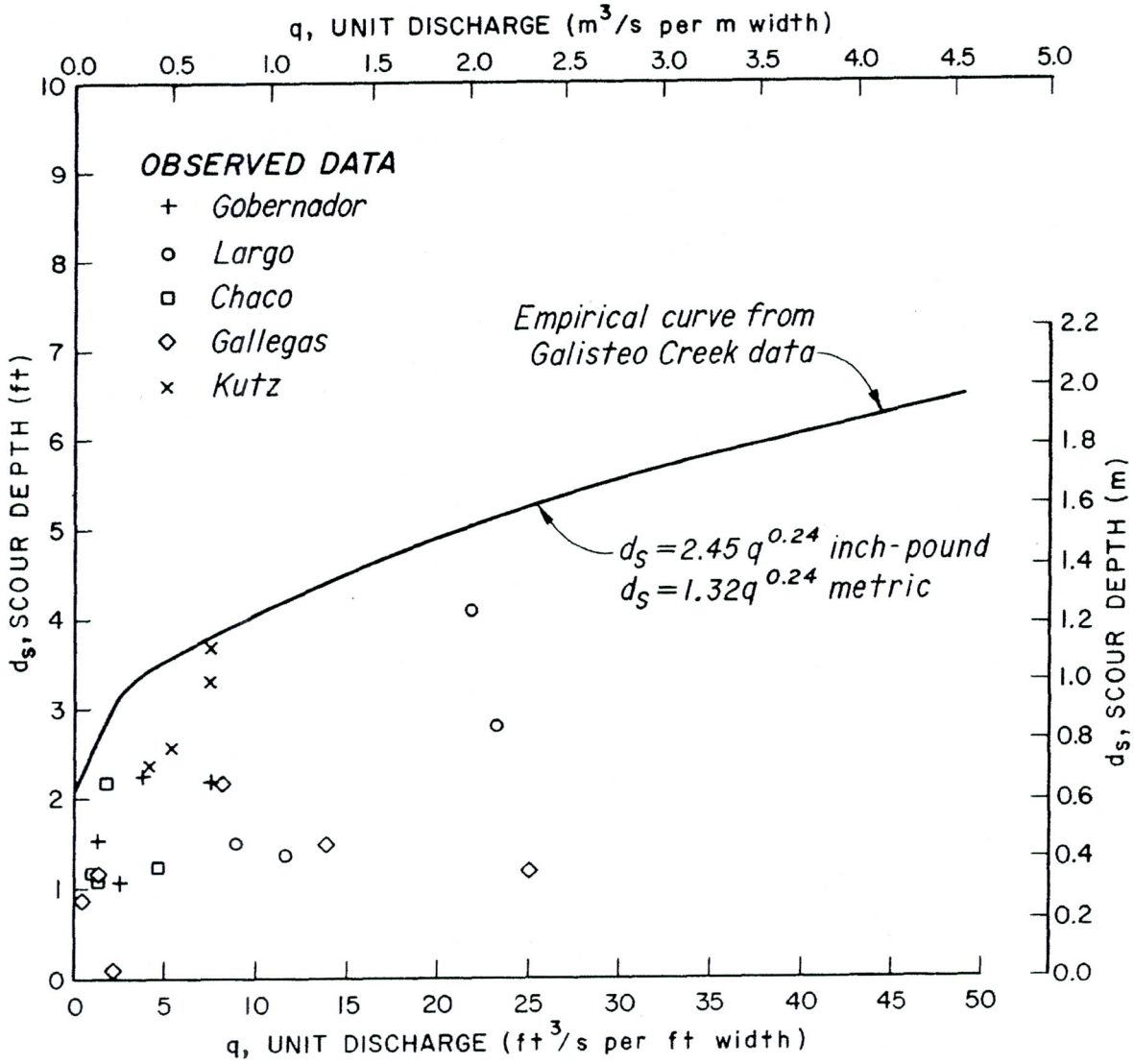

Figure 8. - Navajo Indian Irrigation Project - scour versus unit discharge.

The use of equation 24 except as a check on other methods would be limited to channels similar to those observed on relatively steep slopes ranging from 0.004 to 0.008 ft/ft (m/m). Because of shallow depths of flow and medium to coarse sand size bed material the bedload transport should also be very high.

Regime equations supported by field measurements method. - This approach as suggested by Neill (1973) on recommendations by Blench (1969) involves obtaining field measurements in an incised reach of river from which the bankfull discharge and hydraluics can be determined. From the bankfull hydraulics in the incised reach of river, the flood depths can be computed by:

$$d_f = d_i \left(\frac{q_f}{q_i}\right)^m \qquad (25)$$

where:

d_f = Scoured depth below design floodwater level
d_i = Average depth at bankfull discharge in incised reach
q_f = Design flood discharge per unit width
q_i = Bankfull discharge in incised reach per unit width
m = Exponent varying from 0.67 for sand to 0.85 for coarse gravel

This method has been expanded for Reclamation use to include the empirical regime equation by Lacey (1930) and the method of zero bed-sediment transport by Blench (1969) in the form of the Lacey equation:

$$d_m = 0.47 \left(\frac{Q}{f}\right)^{1/3} \qquad (26)$$

where:

d_m = Mean depth at design discharge, ft (m)
Q = Design discharge, ft^3/s (m^3/s)
f = Lacey's silt factor equals 1.76 $(D_m)^{1/2}$ where D_m equal mean grain size of bed material in millimeters

and the Blench equation for "zero bed factor":

$$d_{fo} = \frac{q_f^{\ 2/3}}{F_{bo}^{1/3}} \qquad (27)$$

where:

d_{fo} = Depth for zero bed sediment transport, ft (m)
q_f = Design flood discharge per unit width, ft^3/s per ft (m^3/s per m)
F_{bo} = Blench's "zero bed factor" in ft/s^2 (m/s^2) from figure 9

The maximum natural channel scour depth for design of any structure placed below the streambed (i.e., siphon) or along the bank of a channel must

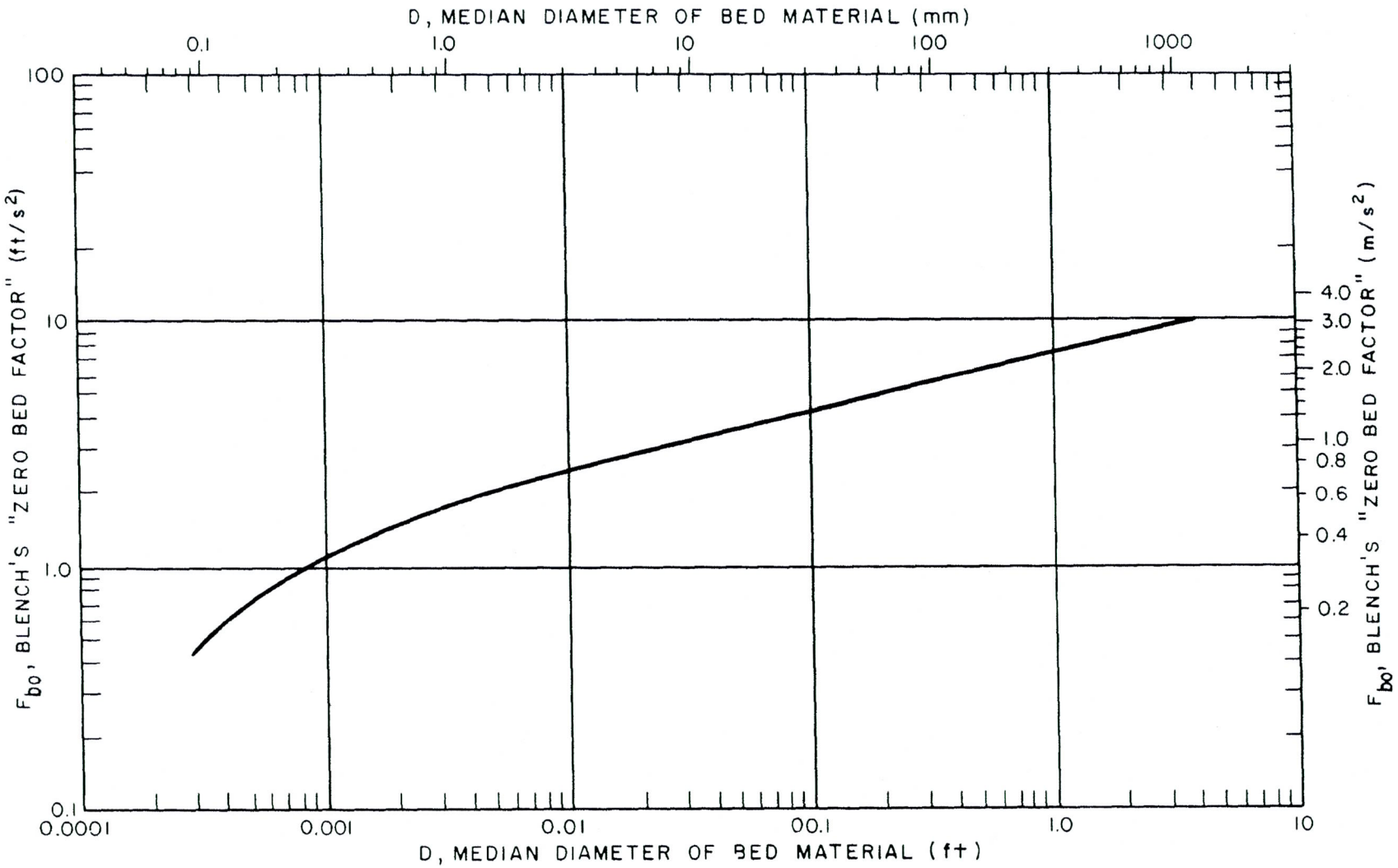

CHART FOR ESTIMATING F_{bo} (AFTER BLENCH)

Figure 9. - Chart for estimating F_{bo} (after Blench, 1969).

consider the probable concentration of floodflows in some portion of the natural channel. Equations 25, 26, or 27 for predicting this maximum depth are to be adjusted by the empirical multiplying factors, Z, shown for formula Types A and B (table 6), in table 7. An illustration of maximum scour depth associated with a flood discharge is shown in a sketch of a natural channel, figure 10. As shown in table 7 and on figure 10, the d_s equals depth of scour below streambed.

$$d_s = Z\ d_f \tag{28}$$

$$d_s = Z\ d_m \tag{29}$$

$$d_s = Z\ d_{fo} \tag{30}$$

Table 7. - Multiplying factors, Z, for use in scour depths by regime equations

Condition	Value of Z		
	Neill $d_s = Z\ d_f$	Lacey $d_s = Z\ d_m$	Blench $d_s = Z\ d_{fo}$
Equation Types A and B			
Straight reach	0.5	0.25	1/ 0.6
Moderate bend	0.6	0.5	
Severe bend	0.7	0.75	
Right angle bends		1.0	1.25
Vertical rock bank or wall		1.25	
Equation Types C and D			
Nose of piers	1.0		0.5 to 1.0
Nose of guide banks	0.4 to 0.7	1.50 to 1.75	1.0 to 1.75
Small dam or control across river		1.5	0.75 to 1.25

1/ Z value selected by USBR for use on bends in river.

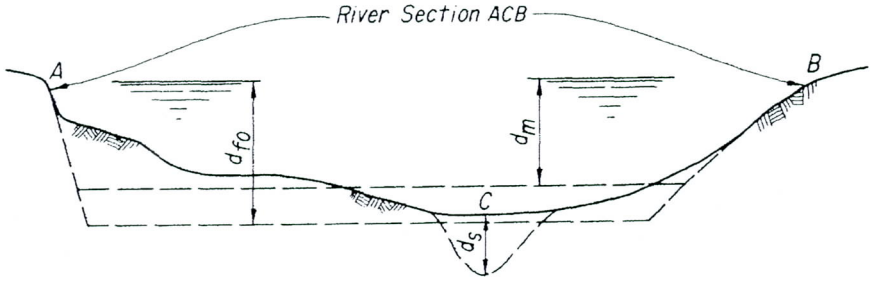

NOTE: $d_{fo} > d_f > d_m$. Point C is low point of natural section.

Figure 10. - Sketch of natural channel scour by regime method.

Although not shown on figure 10, the d_f from Neill's equation 25 is usually less than the d_{fo} from Blench's equation 27 but greater than the d_m from Lacey's equation 26.

The design of a structure under a river channel such as a siphon is based on applying the scoured depth, d_s, as obtained from table 7 to the low point in a surveyed section, as shown by point C on figure 10. This criteria is considered by Reclamation as an adequate safety factor for use in design. In an alluvial streambed, designs should also be based on scour occuring at any location in order to provide for channel shifting with time.

Mean velocity from field measurements method. - This approach represents an adjustment in surveyed channel geometry based on an extrapolated design flow velocity. In Reclamation's application of this method, a series of at least four cross sections are surveyed and backwater computations made for the design discharge by use of Reclamation's Water Surface Profile Computer Program. In addition to the surveyed cross sections observed, water surface elevations at a known or measured discharge are needed to provide a check on Manning's "n" channel roughness coefficient. This procedure allows for any proposed waterway restrictions to be analyzed for channel hydraulic characteristics including mean velocity at the design discharge. The usual Reclamation application of this method is to determine the mean channel depth, d_m, from the computer output data and apply the Z values defined by Lacey in table 7 to compute a scour depth, d_s, by equation 29 where $d_s = Z\ d_m$.

Examples of more unique solutions to scour problems were Reclamation studies on the Colorado River near Parker, Arizona, and Salt River near Granite Reef Diversion Dam, Arizona, where an adjustment in "n" based on particle size along with a Z value from table 7 provided a method of computing bed scour. The selection of a particle size "n" associated with scour in the above two examples was computed from the Strickler (1923) equation for roughness of a channel based on diameter of particles where:

$$K = \frac{C}{D_{90}^{1/6}} \qquad (31)$$

$C \approx 26$ from Nikuradse (1933) and "n" = 1/K. The appropriate "n" values for the two rivers based on particle size and engineering judgment were selected as follows:

River	D (mm)	Particle size "n"	Selected "n"
Colorado	0.2	0.01	0.014
Salt	18	0.02	0.02

In the Colorado River study, the existing channel "n" value of 0.022 was adjusted down to 0.014 due to bed material particle size to give a computed water surface at design discharge representative of a scoured channel. With a Z value of 0.5, the scoured section in the form of a trianglular section combined with the accepted "n" of 0.022 provided a close check on the water surface computed without scour. An illustration

of this technique is shown in sketch on figure 11a. Another example is shown on figure 11b for a Salt River scour study where the particle size "n" of 0.02 gave a reduced mean depth. Scour was assumed to be in the shape of a triangle where the average depth of scour would be equal the depth at an "n" equal to 0.02 subtracted from depth at an "n" equal to 0.03. (See example problem in subsequent paragraph.)

Competent or limiting velocity control to scour method. - This method assumes that scour will occur in the channel cross section until the mean velocity is reduced to that where little or no movement of bed material is taking place. It gives the maximum limit to scour existing in only the deep scour hole portion of the channel cross section and is similar to the Blench equation 27 for a "zero bed factor."

The empirical curves, figure 12, derived by Neill (1973) for competent velocity with sand or coarser bed material (>0.30 mm) represent a combining of regime criteria, Shields (1936) criterion for material >1.0 mm, and a mean velocity formula relating mean velocity V_m to the shear velocity. The competent velocities for erosion of cohesive materials recommended by Neill (1973) are given in table 8. The scour depth or increase in area of scoured channel section with corresponding increase in depth for competent velocity, V_c, is determined by relationship of mean velocity, V_m, to V_c in the equation:

$$d_s = d_m \left(\frac{V_m}{V_c} - 1 \right) \tag{32}$$

where:

d_s = Scour depth below streambed, ft (m)
d_m = Mean depth, ft (m)

Table 8. - Tentative guide to competent velocities for erosion of cohesive materials* (after Neill, 1973)

Depth of flow		Competent mean velocity					
		Low values - easily erodible material		Average values		High values - resistant material	
ft	m	ft/s	m/s	ft/s	m/s	ft/s	m/s
5	1.5	1.9	0.6	3.4	1.0	5.9	1.8
10	3	2.1	0.65	3.9	1.2	6.6	2.0
20	6	2.3	0.7	4.3	1.3	7.4	2.3
50	15	2.7	0.8	5.0	1.5	8.6	2.6

* Notes: (1) This table is to be regarded as a rough guide only, in the absence of data based on local experience. Account must be taken of the expected condition of the material after exposure to weathering and saturation. (2) It is not considered advisable to relate the suggested low, average, and high values to soil shear strength or other conventional indices, because of the predominating effects of weathering and saturation on the erodibility of many cohesive soils.

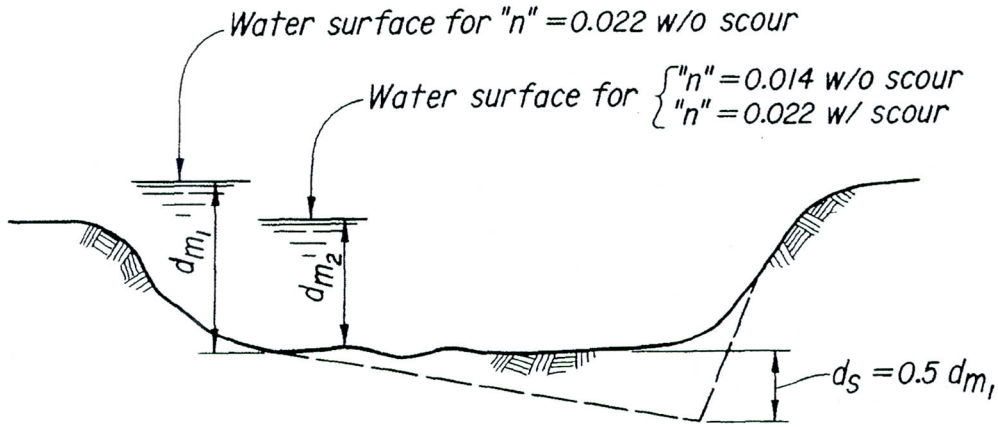

a. Colorado River Study

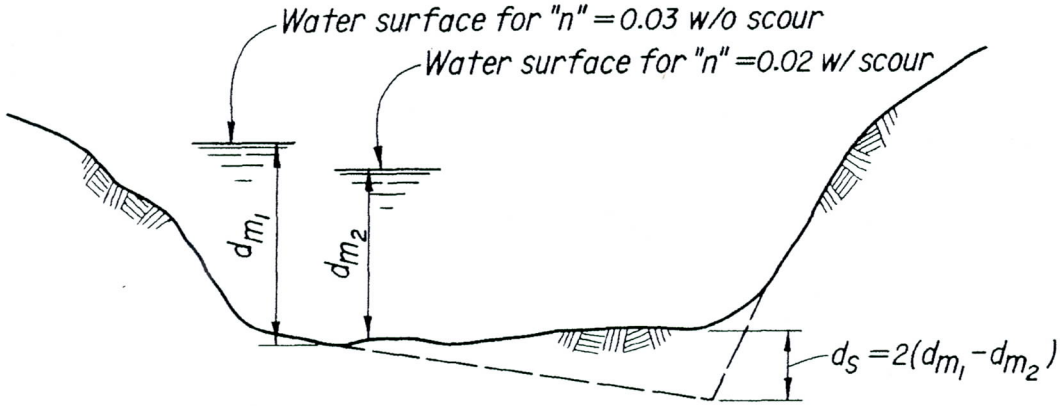

b. Salt River Study

Figure 11. - Sketch of scour from water surface profile computations and reduced "n" for scour.

The use of figure 12 and table 8 recommended by Neill (1973) has had limited application in Reclamation, but appears to be a potential useful technique for many Reclamation studies on scour and armoring of the channel.

Equation Type C (See Table 6)

The principal references for design of midchannel structures for scour such as at bridge piers are National Cooperative Highway Research Program Synthesis 5 (1970), C. R. Neill (1973), Federal Highway Administration, Training and Design Manual (1975), Federal Highway Administration (1980), and S. C. Jain (1981). The numerous empirical relationships for computing scour at bridge piers include one or more of the following hydraulic parameters: pier width and skewness, flow depth, velocity, and size of sediment. The many relations available were further broken down by Jain (1981) to two different approaches: (1) regime, and (2) rational.

The Federal Highway Administration has funded numerous research projects to assist in improving their designs of bridge piers. This research has not resulted in any one recommended procedure. Reclamation's need for scour estimates at midchannel structures is limited. The procedures adopted are to try at least two techniques and apply engineering judgment in selecting an average or most reliable method. The regime approach is to use either equations 26, 27, 28, or 30 and a Z value from table 7. An appropriate Z value to use for piers is 1.0 as found for the railway bridge piers applied to the Lacey equation 29 reported by Central Board of Irrigation and Power (1971).

The rational equation selected for scour at piers is described by Jain (1981) in the form:

$$\frac{d_s}{b} = 1.84 \left(\frac{d}{b}\right)^{0.3} \left(F_c\right)^{0.25} \qquad (33)$$

where:

d_s = Depth of scour below streambed, ft (m)
b = Pier size, ft (m)
d = Flow depth, ft (m)
$F_c = V_c/\sqrt{gd}$ = Threshold Froude number
V_c = Threshold velocity, ft/s (m/s) from figure 12
g = Acceleration due to gravity, 32.2 ft/s^2 (9.81 m/s^2)

Equation Type D (See Table 6)

Immediately downstream from any hydraulic structure the riverbed is subject to the erosive action created by the structure. Some type of stilling basin or energy dissipator as described by Reclamation (1977) is provided in the design of such structures to dissipate the energy thereby reducing the erosion potential. There still remains at most structures, below the point where the structure ends and the natural riverbed material begins, a potential for scour. The magnitude of this scour hole will depend on a combination of flow velocity, turbulence, and vortices generated by the structure. Simons and Senturk (1977) describe many of the available equations.

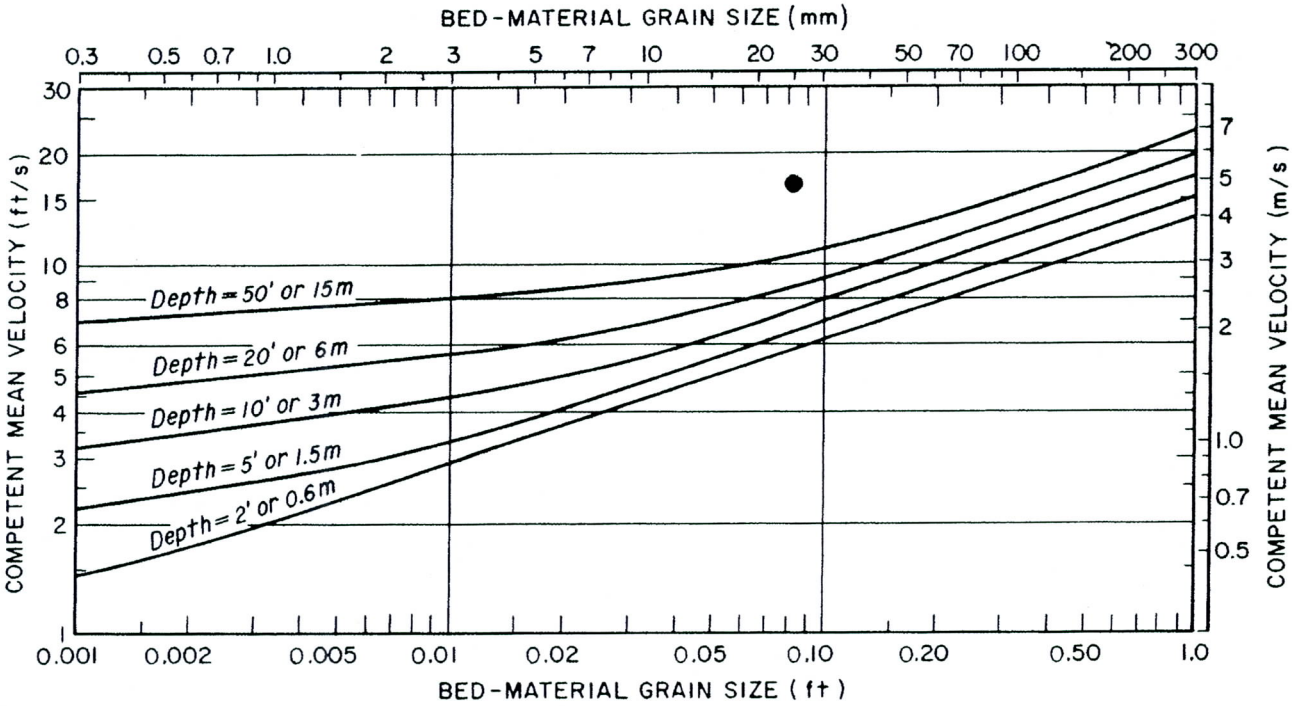

Figure 12. - Suggested competent mean velocities for significant bed movement of cohesionless materials, in terms of grain size and depth of flow (after Neill, 1973).

Methods adopted by Reclamation for computing local scour below a hydraulic structure across the river channel are based on either the regime or rational approach. Scour computations should be made by several methods and engineering judgment used to select the most appropriate. In the regime approach, the Lacey or Blench equations 26, 27, 29, and 30, respectively, with Z values from table 7 are applicable.

The most appropriate empirically developed rational methods for scour below a structure are those by Schoklitsch (1932), Veronese (1937), or Zimmerman and Maniak (1967). Scour computations by Schoklitsch are made by:

$$d_s = \frac{K\ (H)^{0.2}\ q^{0.57}}{D_{90}^{0.32}} - d_m \qquad (34)$$

where:

d_s = Depth of scour below streambed, ft (m)
K = 3.15 inch-pound units (K = 4.70 metric units)
H = Vertical distance between the water level upstream and downstream of the structure, ft (m)
q = Design discharge per unit width, ft^3/s per ft (m^3/s per m)
D_{90} = Particle size for which 90 percent is finer than, mm
d_m = Downstream mean water depth, ft (m)

The Veronese (1937) equation for computing the scour hole depth below a low head stilling basin design is as follows:

$$d_s = K\ H_T^{0.225}\ q^{0.54} - d_m \qquad (35)$$

where:

d_s = Maximum depth of scour below streambed, ft (m)
K = 1.32 inch-pound units (K = 1.90 metric units)
H_T = The head from upstream reservoir to tailwater level, ft (m)
q = Design discharge per unit width, ft^3/s per ft (m^3/s per m)
d_m = Downstream mean water depth, ft (m)

The Zimmerman and Maniak (1967) equation for local scour below a stilling basin can be calculated by:

$$d_s = K \left(\frac{q^{0.82}}{D_{85}^{0.23}}\right) \left(\frac{d_m}{q^{2/3}}\right)^{0.93} - d_m \qquad (36)$$

where:

d_s = Depth of scour below streambed, ft (m)
K = 1.95 inch-pound units (K = 2.89 metric units)
q = Design discharge per unit width, ft^3/s per ft (m^3/s per m)
D_{85} = Particle size for which 85 percent is finer than, mm
d_m = Downstream mean water depth, ft (m)

ATTACHMENT B

SITES MODELING

URS **EXHIBIT 4.7-2**

CALCULATION COVER SHEET

Client: FCDMC Project Name: White Tanks FRS No. 3

Project/Calculation Number: 23445887

Title: SITES Modeling for Emergency Spillway

Total Number of Pages (including cover sheet): _____

Total Number of Computer Runs: _____

Prepared by: Michael Johnson, E.I.T Date: 5/5/2010

Checked by: Todd Ringsmuth Date: 5/7/10

Description and Purpose:
Determine the impact of the concrete encased dual 72" pipeline alignment will have on the Emergency Spillway at White Tanks FRS No.3.

Design Basis/References/Assumptions
Based on the 60% design of the White Tanks FRS No.3 Outfall Channel (FCD PCN 470.04.32)

Remarks/Conclusions/Results:
See Pages 2-3

Calculation Approved by: Todd Ringsmuth 5/7/10
Project Manager/Date

Revision No.:	Description of Revision:	Approved by:

Project Manager/Date

SITES MODELING for the EMERGENCY SPILLWAY CHANNEL
with the PROPOSED PIPELINE STRUCTURE
WHITE TANKS FRS No. 3
FLOOD CONTROL DISTRICT OF MARICOPA COUNTY (FCDMC)

Problem Statement

The object of this calculation is to estimate any additional erosion that may occur in the channel downstream of the emergency spillway channel due to the proposed pipeline alignment. The proposed pipeline will be concrete encased and flush with the final design grade of the spillway channel. The proposed pipeline centerline intersects the spillway channel centerline at approximately Station 54+50.00 with a bearing of approximately N11°18'0"E, and intersects the left dike at approximately Station 55+50.00

Required Deliverables

The SITES model will be modified to add a concrete structure per the 60 percent design plans of the proposed pipeline. The Emergency Spillway Hydrograph (ESH) and the 24-hr General Storm Hydrograph model shall be analyzed for any additional erosion for the Left profile of the emergency spillway channel.

Data Available

- The SITES model from the October 2009 URS Design Report was used as the base model files for this calculation. For the complete calculation of the base models, refer to Volume 3, White Tanks FRS No. 3 Remediation Project - Phase 2, Appendix C-6, October 2009.
- The SITES base model chosen to be modifed was the model with the deepest headcut, which correlates to the 1.25 percent to 2.00 percent soil profile.
- The 60 percent design plans for the construction of the FRS No.3 outfall channel PCN 470.04.32.
- The concrete encased pipe structure is approximately 20 feet wide and 11 to 14.5 feet deep. The downstream edge of the concrete encased pipeline has a concrete cutoff wall which measures 1 foot wide and 13 feet deep.

Methodology

The erosion in the channel downstream of the spillway was calculated using the SITES 2005 computer program. The left profile was revised by adding a concrete structure centered at approximately Station 55+50. Table 1 presents the soil layer properties for each profile modeled.

TABLE 1
SITES Model Input Parameters

Soil Layer	Depth Range (Left Profile)	Density (pcf)	PI	D_{75} (in)	Kh	Kd (lb/ft/psf)
Upper	0 to 10 ft	114	7	0.097	0.01	1.17
Middle	10 to 40 ft	114	7	0.097	0.05	0.14
Lower	40 ft or deeper	118	0	0.27	0.75	0.08
Riprap	7 ft	165	0	20	20	0
Concrete Spillway and Pipeline Corridor	Varies	150	0	24	12000	0

Results

The SITES model provides an estimate of headcut depth and distance the headcut travels upstream to the spillway structure. Table 2 and 3 presents the headcut depth and distance for the revised analyses with and without the proposed pipeline. Neither profile shows a change in headcut depth for the ESH model.

TABLE 2
SITES Model Results –Without Pipeline (October 2009)

Erosion Location	Emergency Spillway Hydrograph		24-hour General Storm	
	Left Profile		Left Profile	
	Depth (ft)	Distance[3] (ft)	Depth (ft)	Distance[3] (ft)
Erosion at riprap apron[1,2]	0	N/A[1]	9.1	N/A[1]
Downstream Erosion (with 2.0 percent natural ground slope)	10.9	1,288	20.2	1,017

Notes:

1) In all models, the riprap apron does not erode.
2) The erosion depth at the riprap apron does not change with downstream natural ground slope beyond the constructed channel.
3) The distance is measured from the Emergency Spillway crest. The end of the spillway channel is approximately 1,400 feet from the spillway crest.

TABLE 3

SITES Model Results –With Pipeline

Erosion Location	Emergency Spillway Hydrograph		24-hour General Storm	
	Left Profile		Left Profile	
	Depth (ft)	Distance[3] (ft)	Depth (ft)	Distance[3] (ft)
Erosion at riprap apron[1,2]	0	N/A[1]	12.2	N/A[1]
Downstream Erosion (with 2.0 percent natural ground slope)	10.9	1,288	19.7	1,061

Notes:

1) In all models, the riprap apron does not erode.
2) The erosion depth at the riprap apron does not change with downstream natural ground slope beyond the constructed channel.
3) The distance is measured from the Emergency Spillway crest. The end of the spillway channel is approximately 1,400 feet from the spillway crest.

The left profile for the 24-hr storm shows a slight decrease in the maximum headcut depth from 20.2 feet to 19.7 feet, but shows a minor increase in headcut depth at the spillway structure from 9.1 feet to 12.2 feet.

In the 24-hr models with the proposed pipeline structure the headcut erosion began downstream of the proposed pipeline structure at spillway Station 59+00 and ended at the proposed pipeline structure's cutoff wall.

References

SITES 2005 Water Resource Site Analysis Computer Program. Version 2005. United States Department of Agriculture. Natural Resources Conservation Service.

Revised Design Report Volume 3. White Tanks FRS No. 3 Remediation Project - Phase 2. Prepared by URS. October 2009.

Geotechnical Data Report. White Tanks FRS No. 3 Remediation Project. Prepared by URS. March 2005.

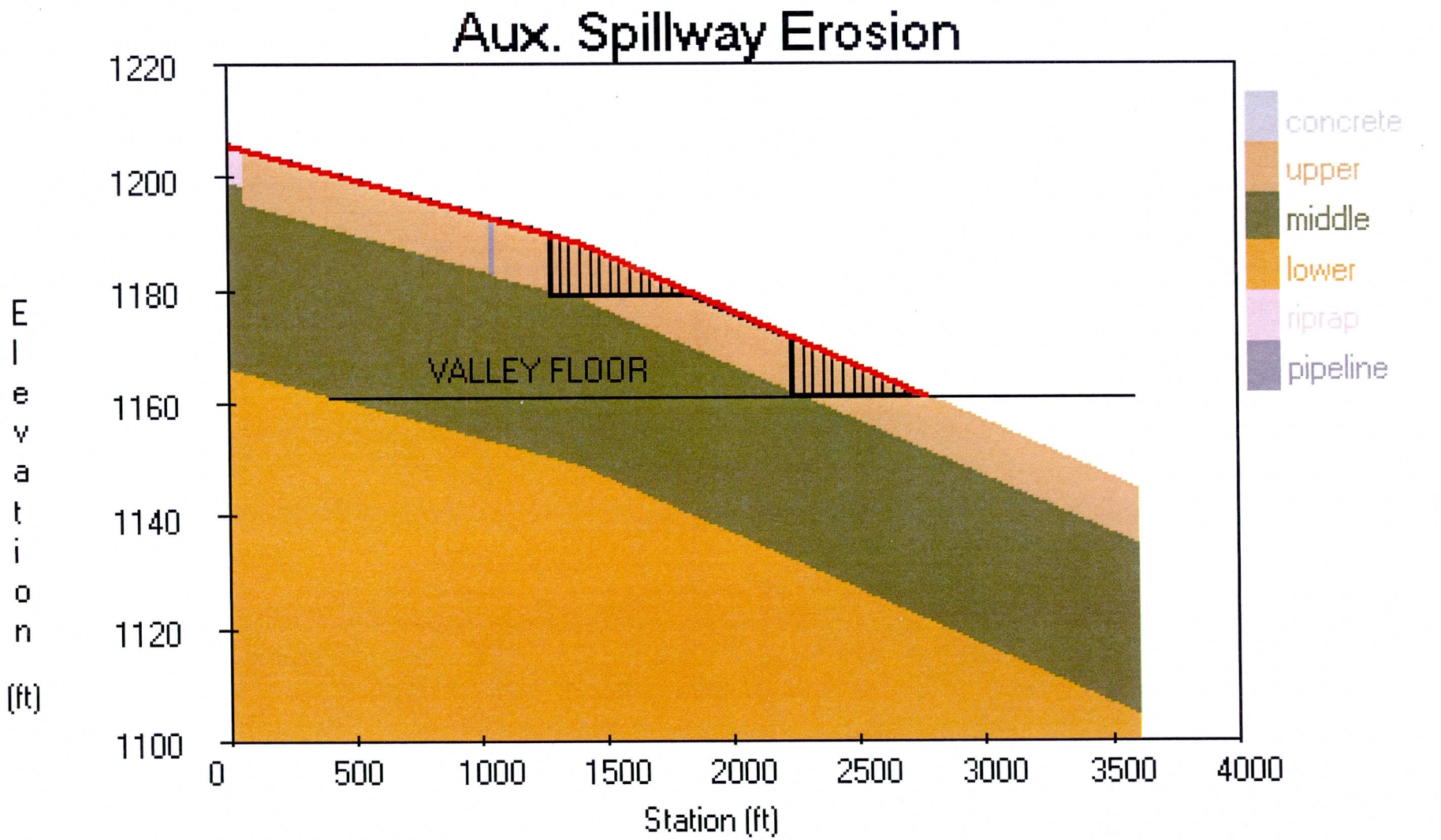

AUX. SPILLWAY:, Crest = N/A, BW = 1000.
WS = , STR = 05/04/2010, FILE = 1.25%_2.00%_ESH_Base Model (Left)

```
1.25%_2.00%_ESH_Base Model (Left) 4-30-2010.OUT
*************************************************************************
*********
 SITES XEQ 05/04/2010   WATER RESOURCE SITE ANALYSIS COMPUTER PROGRAM
      VER 2005.1.3                (USER MANUAL - DATED OCTOBER 2007)
      TIME 16:55:44

 ************************** 80-80 LIST OF INPUT DATA
***************************

 SITES     01/01/2005                                          20.57
L9
 SAVMOV    0    101                                                    1
 SAVMOV    101  1
 *         ESH hydrograph reduced for infiltration
 *         riprap was added 5 ft thick for 30 feet
 *         concrete basin modeled for 20 feet
 *         outlet channel pipeline modeled at STA 10+50
 *         21.4 feet wide and includes 13 feet deep cutoff wall
 *         left side of spillway modeled
 STRUCTURE FALSE     ZERO STOREAGE
                      1183.375                                  0
                      1212.00                                   0.03
 ENDTABLE
 HYD       9                    Emergency Spillway
                     .050
                     0          0          0          0          0
                     0          0          0          0          0
                     0          0          0          0          0
                     0          0          0          0          0
                     0          0          0          0          0
                     0          0          0          0          0
                     0          0          0          0          0
                     0          0          0          0          0
                     0          0          0          0          0
                     0          0          0          0          0
                     0          0          0          0          0
                     0          0          0          0          0
                     0          0          0          0          0
                     0          0          0          0          0
                     0          0          0          0          0
                     0          0          0          0          0
                     0          0          57         384        701
                     1007       1303       1588       1862       2124
                     2374       2634       3083       3496       3874
                     4219       4532       4816       5071       5299
                     5502       5681       5837       5973       6088
                     6186       6267       6332       6382       6418
                     6442       6454       6455       6446       6428
                     6402       6368       6327       6280       6227
                     6169       6105       6037       5964       5887
                     5806       5720       5630       5537       5439
                     5338       5233       5124       5012       4897
                     4779       4658       4535       4409       4282
                     4155       4028       3901       3777       3654
                     3534       3418       3304       3194       3087
                     2983       2882       2784       2689       2597
                     2549       2504       2459       2413       2368
                     2323       2277       2232       2187       2142
                     2098       2053       2009       1965       1922
                     1879       1836       1794       1752       1710
                     1669       1629       1589       1550       1511
```

```
                1473      1435      1398      1362      1326
                1291      1256      1222      1189      1156
                1124      1093      1062      1032      1002
                974       945       918       891       864
                838       813       789       765       741
                718       696       674       653       632
                612       592       573       554       536
                518       501       484       468       452
                436       421       406       392       378
                365       352       339       326       314
                303       291       280       269       259
                249       239       229       220       211
                202       194       185       177       170
                162       155       148       141       134
                127       121       115       109       103
                98        92        87        82        77
                72        67        63        58        54
                50        46        42        38        35
                31        28        24        21        18
                15        12        9         7         3.86
                1.27      0         0         0         0
                0         0         0         0         0
                0         0         0         0         0
                0         0         0         0         0
                0         0         0         0         0
                0         0         0         0         0
                0         0         0         0         0
                0         0         0         0         0
                0         0         0         0         0
                0         0         0         0         0
                0         0         0         0         0
                0         0         0         0         0
                0         0         0         0         0
                0         0         0         0         0
                0         0         0         0         0
                0         0         0         0         0
                0         0         0         0         0
                0         0         0         0         0
                0         0         0         0         0
                0         0         0         0         0
                0         0         0         0         0
                0         0         0         0         0
                0         0         0         0         0
                0         0         0         0         0
                0         0         0         0         0
                0         0         0         0         0
                0         0         0         0         0
                0         0         0         0         0
                0         0         0         0         0
                0         0         0         0         0
                0
ENDTABLE
WSDATA    2S A            20.57
POOLDATA  ELEV            1205.75                       1161      N
ASSURFACE 41    3600      .097
          0     3600      .025      0         1
ENDTABLE
ASDATA    41                        2.5                           4
BTMWIDTH  FEET  1000
ASMATERIAL
          1     0         24        0         150       12000
```

```
            2          7          0.097      - 1.17     114        .01
            3          7          0.097      - .14      114        .05
            4          0          0.27       - .08      118        .75
            5          0          20         0          165        20
            6          0          24         0          150        12000
ENDTABLE
ASCOORD      1         Concrete   Y
            0          1205.65    20         1205.65
ENDTABLE
ASCOORD      2         Upper
            0          1205.75    20         1205.75    1400       1188.5
            3600       1144.5
ENDTABLE
ASCOORD      3         Middle
            0          1198.25    20         1198.25    20         1198.75
            55         1198.2125  55         1195.3125  1039.8     1182.875
            1039.8     1182.5     1060.2     1182.5     1060.2     1179.6075
            1061.2     1179.6075  1061.2     1182.6075  1400       1178.5
            3600       1134.5
ENDTABLE
ASCOORD      4         Lower
            0          1165.75    1400       1148.5     3600       1104.5
ENDTABLE
ASCOORD      5         RIPRAP
            20         1205.65    55         1205.2125
ENDTABLE
ASCOORD      6         PIPELINE
            1039.8     1192.775   1061.2     1192.5075
ENDTABLE
GRAPHICS    I
GO,HYD      L
SAVMOV      2     101  1                     FALSE
ENDJOB

*************************************************************************
*******

1SITES XEQ 05/04/2010 ------------- COMMENT PAGE
-------------------------------
       VER 2005.1.3                                                WSID
=


 ESH hydrograph reduced for infiltration

 riprap was added 5 ft thick for 30 feet

 concrete basin modeled for 20 feet

 outlet channel pipeline modeled at STA 10+50

 21.4 feet wide and includes 13 feet deep cutoff wall

 left side of spillway modeled


 ***** MESSAGE - DEFAULT TOPSOIL FILL MATERIAL PARAMETERS USED.

 ***** MESSAGE - DETACHMENT RATE COFFICIENT  1.17 GIVEN FOR MATERIAL  2.
```

```
***** MESSAGE - DETACHMENT RATE COFFICIENT  0.14 GIVEN FOR MATERIAL  3.

***** MESSAGE - DETACHMENT RATE COFFICIENT  0.08 GIVEN FOR MATERIAL  4.

***** MESSAGE - MATERIAL  6, X-DISTANCES ARE NOT WITHIN THE RANGE
                OF THE MATERIAL ABOVE IT.

***** MESSAGE - AUXILIARY SPILLWAY CREST ELEVATION IS SET TO  1205.75
                FROM THE ASCOORD RECORDS.

***** MESSAGE - VALUES FROM ASSURFACE, REACH  1 IMPLY NO VEGETAL COVER
WITH
                "n" OF 0.025.


1SITES
-----------------------------------------------------------------------
-
 XEQ 05/04/2010                                                    WSID=
 VER 2005.1.3                    ZERO STOREAGE
SUBW= A
 TIME 16:55:44            SITE = FALSE             PASS=    1     PART=
1


 **********************    MATERIAL PROPERTIES
****************************
                            DRY                    PERCENT       DETACH.
REP.
     MATERIAL       PI   DENSITY        Kh         CLAY          RATE
DIAMETER
                        lbs/CuFt                           (Ft/H)/
(lb/SqFt)  inches
     Concrete       0.      150.  12000.00         0.0          --
24.00000
     Upper          7.      114.      0.01         --           1.170
0.09700
     Middle         7.      114.      0.05         --           0.140
0.09700
     Lower          0.      118.      0.75         --           0.080
0.27000
     RIPRAP         0.      165.     20.00         0.0          --
20.00000
     PIPELINE       0.      150.  12000.00         0.0          --
24.00000
     TS_FILL        0.      100.      0.05         0.0          --
0.05000
     GEN_FILL       0.      150.  12000.00         0.0          --
24.00000

  USER ENTERED AUXILIARY SPILLWAY OUTFLOW
  AUXILIARY SPILLWAY ANALYSIS ONLY

  FALSE STRUCTURE RELATED DATA REMOVED

 SUMMARY OF AUXILIARY SPILLWAY SURFACE CONDITIONS USED IN COMPUTATIONS
BY REACH

 REACH  FROM     TO    SLOPE  RETARDANCE  VEGETAL  MAINT. ROOTING  REACH
        STA     STA            CURVE      COVER    CODE   DEPTH
```

LOCATION	(ft)	(ft)	(%)	INDEX@	FACTOR	+	(ft)	*
1	0.	20.	0.0	0.025	**	**	**	CREST
2	20.	1400.	1.2	0.025	0.00	1		EXIT !
3	1400.	2775.	2.0	0.025	0.00	1		EXIT

@ The program interprets retardance curve index entries of less than 1 as
Manning's n values.
+ The minimum maintenance code value of 2 is used in INTEGRITY computations
(the program changes values of 1 to 2 during computation).
* Upper case indicates a reach of constructed spillway channel.
** The program does not use vegetal cover factor, maintenance code, and rooting depth for inlet and crest reaches in computations.
! Reach 2 used in computing exit channel velocities.

****

****

EROSIONALLY EFFECTIVE STRESS FOR STABILITY ANALYSIS OF AUX. EXIT CHANNEL
(Refer to Ag. Handbook 667, Chapt. 3, for allowable stresses.)
Aux. Spillway Discharge = 6455. cfs; Bottom Width = 1000. ft

REACH NO.	FROM STA	TO STA	SLOPE %	MANNING`S n	VELOCITY ft/s	TOTAL STRESS lb/ft^2	EFFECTIVE STRESS lb/ft^2
2	20.	1400.	1.25	0.025	6.55	0.77	0.370
3	1400.	2775.	2.00	0.025	7.55	1.06	0.514 max.

****

INTEGRITY ANALYSIS - REACH SURFACE PERFORMANCE SUMMARY
(The auxiliary spillway began flow at time = 3.8 hours and peaked at time = 5.4 hours.)

REACH 2: FROM STATION 20. TO 1400. ON 1.2% SLOPE.
Surface unfailed: Stressed to 99% of allowable.

REACH 3: FROM STATION 1400. TO 2775. ON 2.0% SLOPE.
Non-vegetated conditions implied: flow concentration assumed with minimal flow: Time = 4.5 hours.

INTEGRITY ANALYSIS - HEADCUT EROSION DAMAGE SUMMARY

```
The most upstream headcut began at station   1400.
and progressed upstream to station   1288.
The final height of the headcut was   10.9 ft.

The deepest headcut is also the furthest upstream.

                    DURATION    ATTACK   DIST. FROM MOST U/S
                      FLOW       OE/B    HEADCUT TO U/S EDGE
AUXILIARY             HRS      ACFT/FT     AUX. CREST, FT
SPILLWAY ---          9.9        1.8          1288.

EXIT CHANNEL FLOW SUPERCRITICAL: MAX VELOCITY=   6.6 FT/SEC
                                 EXIT SLOPE  = 0.013 FT/FT
                                 FLOW DEPTH  =   1.0 FT

-----------------------------------------------------------------------
-------

 Input--Storm Hyd, Peak =       6455.07 CFS at    5.40 hrs.,  Location
Point
HYDOUT   1     FALSE

1SITES....JOB NO.  1 COMPLETE.


 SITES.....COMPUTATIONS COMPLETE


 >>>   SITE    SUBWS    SUBWS DA   CURVE    TC    TOTAL DA   TYPE    STRUC
<<<
        ID      ID      (SQ MI)    NO.    (HRS)  (SQ MI)  DESIGN   CLASS
       -----   ----    --------   -----   ----   -------  -----   -----
       FALSE    A         20.57      0.   0.00     20.57    TR60     S

 PASS  DIA./  AUX.CREST  BTM.  MAX.    MAX.    EMB.  INTEGR.*  EXIT*
TYPE
  NO.  WIDTH    ELEV    WIDTH   HP     ELEV    VOL.   DIST.     VEL.
HYD
      (IN/FT)   (FT)     (FT)   (FT)    (FT)    (CY)   (FT)    (FT/SEC)
 ----  -----  -------  ------  ----  -------  -------  -----   ------
---------
    1    0.0   1205.8  1000.0   1.7   1207.5       0.  1288.      6.6
FLOOD HYD

 *  INTEGRITY DIST. AND EXIT VEL. VALUES ARE BASED ON THE ROUTED
    HYDROGRAPH SHOWN UNDER TYPE HYD.


 SITES.......SUMMARY TABLE 1 COMPLETED.

                    NRCS  SITES    VERSION 2005.1.3  ,01/01/2005
                                      FILES
```

INPUT = P:\WRES\FCDMC\23445608_White Tanks_Phase 2 Construction\Revised SITES Modeling\SITES\1.25%_2.00%_ESH_Base Model (Left) 4-30-2010.D2C
OUTPUT = P:\WRES\FCDMC\23445608_White Tanks_Phase 2 Construction\Revised SITES Modeling\SITES\1.25%_2.00%_ESH_Base Model (Left) 4-30-2010.OUT
DATED 05/04/2010 16:55:44

GRAPHICS FILES GENERATED

OPTION "L" = P:\WRES\FCDMC\23445608_White Tanks_Phase 2 Construction \Revised SITES Modeling\SITES\1.25%_2.00%_ESH_Base Model (Left) 4-30-2010.DRG DATED 05/04/2010 16:55:44

OPTION "P" = P:\WRES\FCDMC\23445608_White Tanks_Phase 2 Construction \Revised SITES Modeling\SITES\1.25%_2.00%_ESH_Base Model (Left) 4-30-2010.DHY DATED 05/04/2010 16:55:44

OPTION "E" = P:\WRES\FCDMC\23445608_White Tanks_Phase 2 Construction \Revised SITES Modeling\SITES\1.25%_2.00%_ESH_Base Model (Left) 4-30-2010.DEM DATED 05/04/2010 16:55:44

AUX.GRAPHICS = P:\WRES\FCDMC\23445608_White Tanks_Phase 2 Construction \Revised SITES Modeling\SITES\1.25%_2.00%_ESH_Base Model (Left) 4-30-2010.DG* DATED 05/04/2010 16:55:44

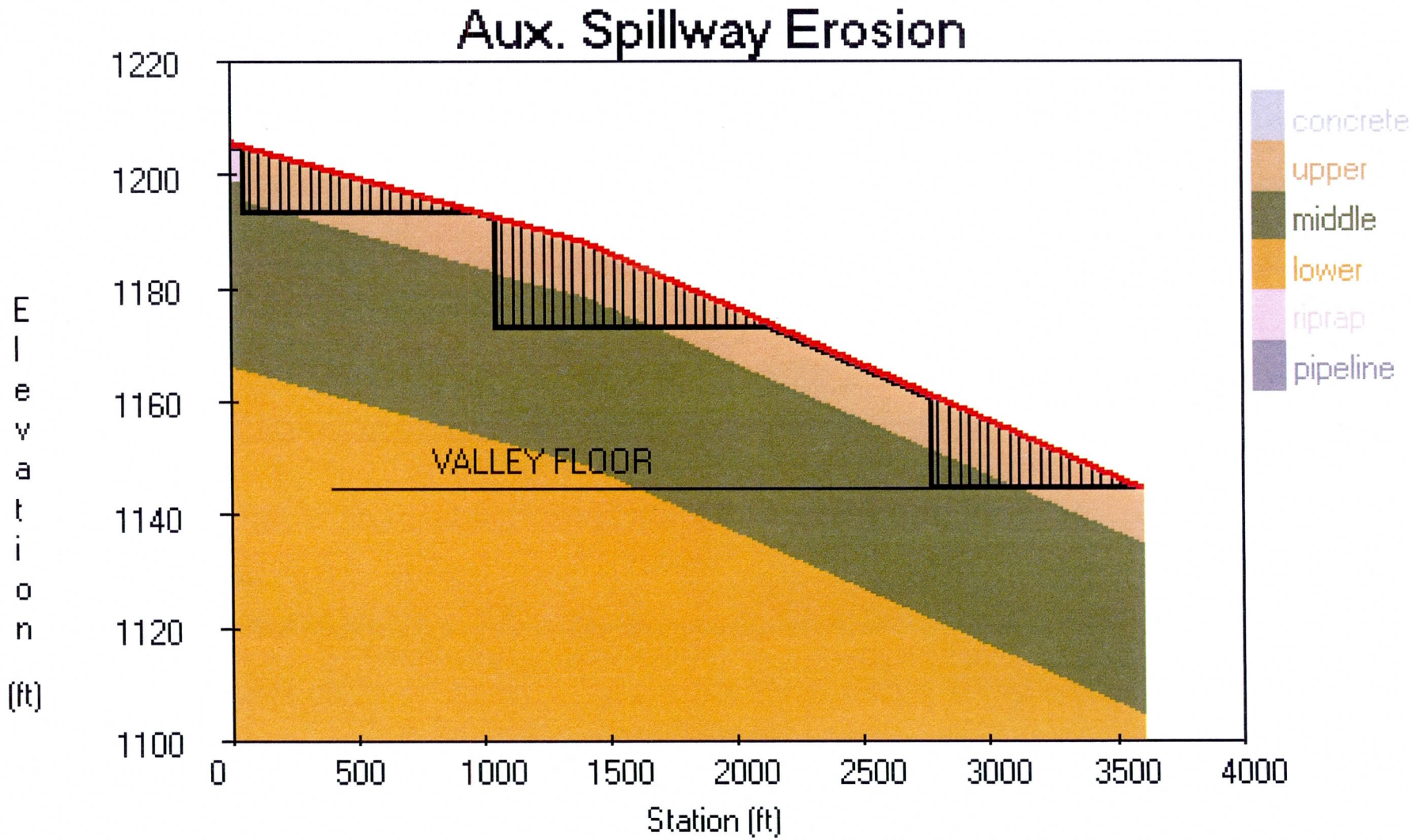

AUX. SPILLWAY:, Crest = N/A, BW = 1000.
WS = , STR = 05/04/2010, FILE = 1.25%_2.00%_24-hr_Base Model (Left)

```
1.25%_2.00%_24-hr_Base Model (Left) 4-30-2010.OUT
*************************************************************************
*******
 SITES XEQ 05/04/2010   WATER RESOURCE SITE ANALYSIS COMPUTER PROGRAM
      VER 2005.1.3                (USER MANUAL - DATED OCTOBER 2007)
      TIME 14:45:43

 ************************** 80-80 LIST OF INPUT DATA
****************************

 SITES     01/01/2005                                          20.57
L9
 SAVMOV    0    101
 SAVMOV    101  1                                                     1
 *         24 hour hydrograph reduced for infiltration
 *         riprap was added 7 ft thick for 35 feet
 *         concrete basin modeled for 20 feet
 *         outlet channel pipeline modeled at STA 10+50
 *         21.4 feet wide and includes 13 feet deep cutoff wall
 *         left side of spillway modeled
 STRUCTURE FALSE     ZERO STOREAGE
                      1183.375                                   0
                      1212.00                                    0.03
 ENDTABLE
 HYD       9                    Emergency Spillway
                     .10
                     0          0          0          0          0
                     0          0          0          0          0
                     0          0          0          0          0
                     0          0          0          0          0
                     0          0          0          0          0
                     0          0          0          0          0
                     0          0          0          0          0
                     0          0          0          0          0
                     0          0          0          0          0
                     0          0          0          0          0
                     0          0          0          0          0
                     0          0          0          0          0
                     0          0          0          0          0
                     0          0          0          0          0
                     0          0          0          0          0
                     0          0          0          0          0
                     0          0          0          0          0
                     0          443        1506       2579       4685
                     6698       8705       10875      12801      14465
                     15904      17159      18125      18858      19414
                     19844      20185      20455      20664      20817
                     20919      20974      20983      20944      20855
                     20718      20536      20313      20052      19754
                     19420      19054      18664      18256      17840
                     17421      16998      16563      16105      15618
                     15137      14642      14119      13573      13011
                     12444      11881      11333      10805      10303
                     9829       9383       8963       8565       8186
                     7883       7594       7310       7031       6758
                     6492       6236       5991       5758       5537
                     5330       5133       4946       4768       4598
                     4436       4283       4137       3999       3867
                     3740       3618       3500       3386       3276
                     3171       3072       2978       2892       2814
                     2741       2673       2611       2572       2543
                     2515       2487       2461       2437       2415
```

```
                    2396      2380      2368      2361      2359
                    2359      2360      2360      2358      2350
                    2337      2316      2288      2256      2219
                    2182      2144      2109      2077      2050
                    2026      2006      1989      1974      1960
                    1946      1931      1915      1899      1884
                    1869      1854      1840      1827      1815
                    1803      1791      1780      1770      1760
                    1751      1742      1734      1726      1718
                    1711      1705      1698      1692      1687
                    1681      1674      1667      1657      1644
                    1631      1615      1599      1583      1568
                    1555      1543      1531      1520      1508
                    1496      1483      1469      1453      1433
                    1409      1378      1342      1300      1255
                    1207      1159      1112      1067      1023
                    980       939       898       858       819
                    781       744       708       673       638
                    605       573       541       511       482
                    454       426       400       375       352
                    329       307       286       266       247
                    229       212       195       180       165
                    151       138       125       113       102
                    92        81        72        63        55
                    47        39        32        25        19
                    13        7.56      2.3       0         0
                    0         0         0         0         0
                    0         0         0         0         0
                    0         0         0         0         0
                    0         0         0         0         0
                    0         0         0         0         0
                    0         0         0         0         0
                    0         0         0         0         0
                    0         0         0         0         0
                    0         0         0         0         0
                    0         0         0         0         0
                    0         0         0         0         0
                    0         0         0         0         0
                    0         0         0         0         0
                    0         0         0         0         0
                    0         0         0         0         0
                    0         0         0         0         0
                    0         0         0         0         0
                    0         0         0         0         0
                    0         0         0         0         0
                    0         0         0         0         0
                    0         0         0         0         0
                    0         0         0         0         0
                    0         0         0         0         0
                    0         0         0         0         0
                    0
ENDTABLE
WSDATA    2S A                20.57
POOLDATA  ELEV                1205.75                     1144.50   N
ASSURFACE 41        3600      .097
          0         3600      .025      0         1
ENDTABLE
ASDATA    41                            2.5                         4
BTMWIDTH  FEET      1000
ASMATERIAL
          1         0         24        0         150       12000
          2         7         0.097     - 1.17    114       .01
```

```
            3          7          0.097      - .14      114        .05
            4          0          0.27       - .08      118        .75
            5          0          20         0          165        20
            6          0          24         0          150        12000
ENDTABLE
ASCOORD      1         Concrete   Y
            0          1205.65    20         1205.65
ENDTABLE
ASCOORD      2         Upper
            0          1205.75    20         1205.75    1400       1188.5
            3600       1144.5
ENDTABLE
ASCOORD      3         Middle
            0          1198.25    20         1198.25    20         1198.75
            55         1198.2125  55         1195.3125  1039.8     1182.875
            1039.8     1182.5     1060.2     1182.5     1060.2     1179.6075
            1061.2     1179.6075  1061.2     1182.6075  1400       1178.5
            3600       1134.5
ENDTABLE
ASCOORD      4         Lower
            0          1165.75    1400       1148.5     3600       1104.5
ENDTABLE
ASCOORD      5         RIPRAP
            20         1205.65    55         1205.2125
ENDTABLE
ASCOORD      6         PIPELINE
            1039.8     1192.775   1061.2     1192.5075
ENDTABLE
GRAPHICS    I
GO,HYD      L
SAVMOV      2     101  1                     FALSE
ENDJOB

*************************************************************************
*******

1SITES XEQ 05/04/2010 ------------- COMMENT PAGE
-------------------------------
       VER 2005.1.3                                                    WSID
=

 24 hour hydrograph reduced for infiltration

 riprap was added 7 ft thick for 35 feet

 concrete basin modeled for 20 feet

 outlet channel pipeline modeled at STA 10+50

 21.4 feet wide and includes 13 feet deep cutoff wall

 left side of spillway modeled

 ***** MESSAGE - DEFAULT TOPSOIL FILL MATERIAL PARAMETERS USED.

 ***** MESSAGE - DETACHMENT RATE COFFICIENT  1.17 GIVEN FOR MATERIAL  2.

 ***** MESSAGE - DETACHMENT RATE COFFICIENT  0.14 GIVEN FOR MATERIAL  3.
```

***** MESSAGE - DETACHMENT RATE COFFICIENT 0.08 GIVEN FOR MATERIAL 4.

***** MESSAGE - MATERIAL 6, X-DISTANCES ARE NOT WITHIN THE RANGE
OF THE MATERIAL ABOVE IT.

***** MESSAGE - AUXILIARY SPILLWAY CREST ELEVATION IS SET TO 1205.75
FROM THE ASCOORD RECORDS.

***** MESSAGE - VALUES FROM ASSURFACE, REACH 1 IMPLY NO VEGETAL COVER
WITH
"n" OF 0.025.

1SITES

-
XEQ 05/04/2010 WSID=
VER 2005.1.3 ZERO STOREAGE
SUBW= A
TIME 14:45:43 SITE = FALSE PASS= 1 PART=
1

********** MATERIAL PROPERTIES
****

MATERIAL	PI	DRY DENSITY lbs/CuFt	Kh	PERCENT CLAY	DETACH. RATE (Ft/H)/(lb/SqFt)	REP. DIAMETER inches
Concrete	0.	150.	12000.00	0.0	--	24.00000
Upper	7.	114.	0.01	--	1.170	0.09700
Middle	7.	114.	0.05	--	0.140	0.09700
Lower	0.	118.	0.75	--	0.080	0.27000
RIPRAP	0.	165.	20.00	0.0	--	20.00000
PIPELINE	0.	150.	12000.00	0.0	--	24.00000
TS_FILL	0.	100.	0.05	0.0	--	0.05000
GEN_FILL	0.	150.	12000.00	0.0	--	24.00000

USER ENTERED AUXILIARY SPILLWAY OUTFLOW
AUXILIARY SPILLWAY ANALYSIS ONLY

FALSE STRUCTURE RELATED DATA REMOVED

SUMMARY OF AUXILIARY SPILLWAY SURFACE CONDITIONS USED IN COMPUTATIONS
BY REACH

REACH	FROM STA	TO STA	SLOPE	RETARDANCE CURVE	VEGETAL COVER	MAINT. CODE	ROOTING DEPTH	REACH LOCATION

	(ft)	(ft)	(%)	INDEX@	FACTOR	+	(ft)	*
1	0.	20.	0.0	0.025	**	**	**	CREST
2	20.	1400.	1.2	0.025	0.00	1		EXIT !
3	1400.	3600.	2.0	0.025	0.00	1		EXIT

@ The program interprets retardance curve index entries of less than 1 as
Manning's n values.
+ The minimum maintenance code value of 2 is used in INTEGRITY computations
(the program changes values of 1 to 2 during computation).
* Upper case indicates a reach of constructed spillway channel.
** The program does not use vegetal cover factor, maintenance code, and rooting depth for inlet and crest reaches in computations.
! Reach 2 used in computing exit channel velocities.

****

EROSIONALLY EFFECTIVE STRESS FOR STABILITY ANALYSIS OF AUX. EXIT CHANNEL
(Refer to Ag. Handbook 667, Chapt. 3, for allowable stresses.)
Aux. Spillway Discharge = 20983. cfs; Bottom Width = 1000. ft

REACH NO.	FROM STA	TO STA	SLOPE %	MANNING`S n	VELOCITY ft/s	TOTAL STRESS lb/ft^2	EFFECTIVE STRESS lb/ft^2	
2	20.	1400.	1.25	0.025	10.48	1.55	0.750	
3	1400.	3600.	2.00	0.025	12.08	2.16	1.042	max.

****

INTEGRITY ANALYSIS - REACH SURFACE PERFORMANCE SUMMARY
(The auxiliary spillway began flow at time = 8.0 hours and peaked at time = 10.3 hours.)

REACH 2: FROM STATION 20. TO 1400. ON 1.2% SLOPE.
Non-vegetated conditions implied: flow concentration assumed with minimal flow: Time = 8.6 hours.

REACH 3: FROM STATION 1400. TO 3600. ON 2.0% SLOPE.
Non-vegetated conditions implied: flow concentration assumed with minimal flow: Time = 8.5 hours.

INTEGRITY ANALYSIS - HEADCUT EROSION DAMAGE SUMMARY

Surface (vegetal) damage with a computed depth of 0.5 ft or less
occurred up to station 20.

The most upstream headcut began at station 103.
and progressed upstream to station 55.
The final height of the headcut was 12.2 ft.

The headcut having the maximum final overfall height began at station 1400. and progressed upstream to station 1061.
The final height of the headcut was 19.7 ft.

AUXILIARY SPILLWAY ---	DURATION FLOW HRS	ATTACK OE/B ACFT/FT	DIST. FROM MOST U/S HEADCUT TO U/S EDGE AUX. CREST, FT
	21.9	9.4	55.

EXIT CHANNEL FLOW SUPERCRITICAL: MAX VELOCITY= 10.5 FT/SEC
EXIT SLOPE = 0.013 FT/FT
FLOW DEPTH = 2.0 FT

Input--Storm Hyd, Peak = 20983.01 CFS at 10.30 hrs., Location Point
HYDOUT 1 FALSE

1SITES....JOB NO. 1 COMPLETE.

SITES.....COMPUTATIONS COMPLETE

>>> <<<	SITE ID	SUBWS ID	SUBWS DA (SQ MI)	CURVE NO.	TC (HRS)	TOTAL DA (SQ MI)	TYPE DESIGN	STRUC CLASS
	FALSE	A	20.57	0.	0.00	20.57	TR60	S

PASS TYPE NO. HYD	DIA./ WIDTH (IN/FT)	AUX.CREST ELEV (FT)	BTM. WIDTH (FT)	MAX. HP (FT)	MAX. ELEV (FT)	EMB. VOL. (CY)	INTEGR.* DIST. (FT)	EXIT* VEL. (FT/SEC)
1 FLOOD HYD	0.0	1205.8	1000.0	3.6	1209.3	0.	55.	10.5

* INTEGRITY DIST. AND EXIT VEL. VALUES ARE BASED ON THE ROUTED HYDROGRAPH SHOWN UNDER TYPE HYD.

SITES.....SUMMARY TABLE 1 COMPLETED.

NRCS SITES VERSION 2005.1.3 ,01/01/2005
FILES

INPUT = P:\WRES\FCDMC\23445608_White Tanks_Phase 2 Construction\Revised SITES Modeling\SITES\1.25%_2.00%_24-hr_Base Model (Left) 4-30-2010.D2C
OUTPUT = P:\WRES\FCDMC\23445608_White Tanks_Phase 2 Construction\Revised SITES Modeling\SITES\1.25%_2.00%_24-hr_Base Model (Left) 4-30-2010.OUT
DATED 05/04/2010 14:45:43

GRAPHICS FILES GENERATED

OPTION "L" = P:\WRES\FCDMC\23445608_White Tanks_Phase 2 Construction \Revised SITES Modeling\SITES\1.25%_2.00%_24-hr_Base Model (Left) 4-30-2010.DRG DATED 05/04/2010 14:45:43

OPTION "P" = P:\WRES\FCDMC\23445608_White Tanks_Phase 2 Construction \Revised SITES Modeling\SITES\1.25%_2.00%_24-hr_Base Model (Left) 4-30-2010.DHY DATED 05/04/2010 14:45:43

OPTION "E" = P:\WRES\FCDMC\23445608_White Tanks_Phase 2 Construction \Revised SITES Modeling\SITES\1.25%_2.00%_24-hr_Base Model (Left) 4-30-2010.DEM DATED 05/04/2010 14:45:43

AUX.GRAPHICS = P:\WRES\FCDMC\23445608_White Tanks_Phase 2 Construction \Revised SITES Modeling\SITES\1.25%_2.00%_24-hr_Base Model (Left) 4-30-2010.DG* DATED 05/04/2010 14:45:43

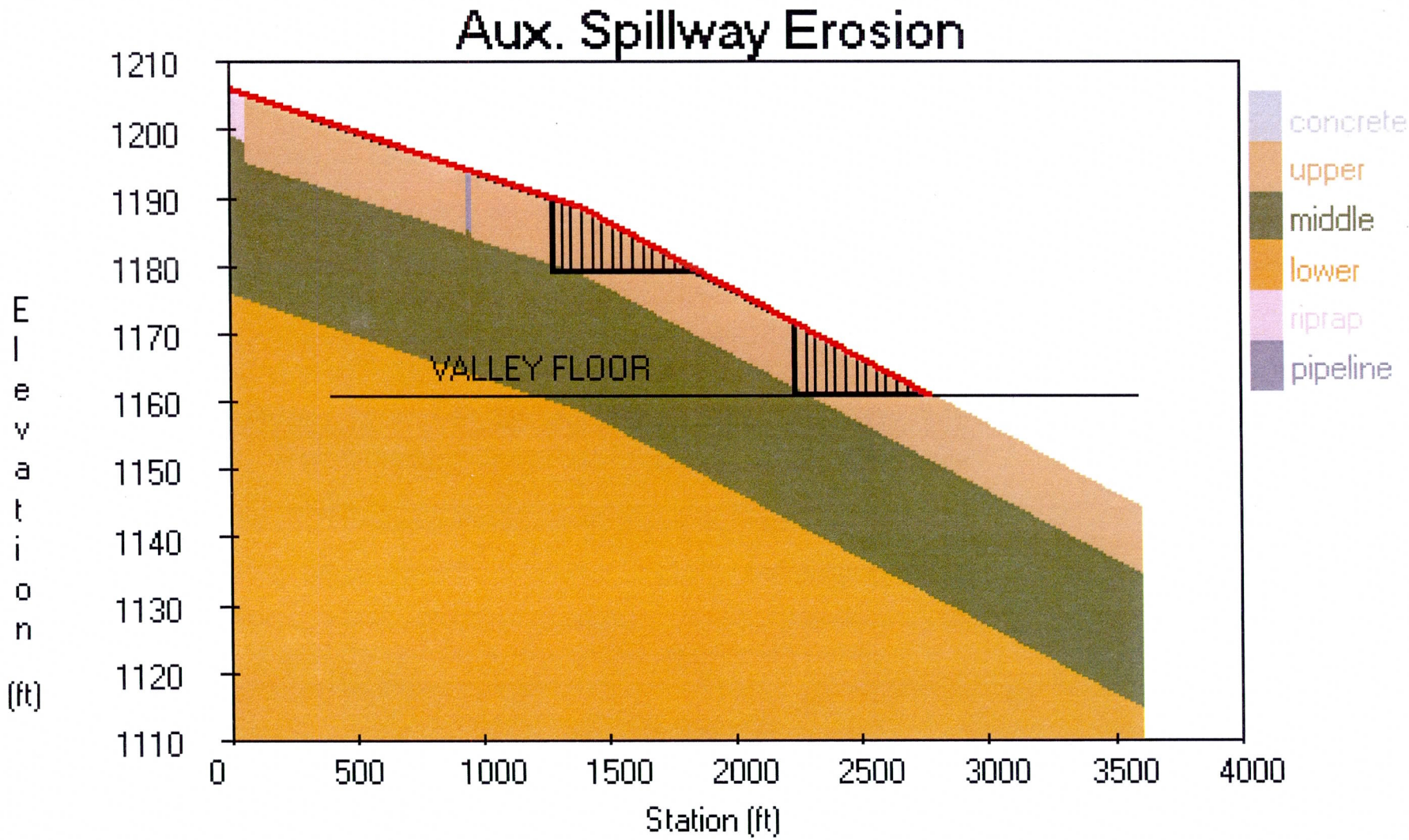

AUX. SPILLWAY:, Crest = N/A, BW = 1000.
WS = , STR = 05/06/2010, FILE = 1.25%_2.00%_ESH_Base Model (Cent

```
1.25%_2.00%_ESH_Base Model (Center) 4-30-2010.OUT
*************************************************************************
********
 SITES XEQ 05/06/2010   WATER RESOURCE SITE ANALYSIS COMPUTER PROGRAM
      VER 2005.1.3                (USER MANUAL - DATED OCTOBER 2007)
      TIME 09:18:33

 ************************** 80-80 LIST OF INPUT DATA
***************************

 SITES      01/01/2005                                          20.57
L9
 SAVMOV     0    101
 SAVMOV     101  1                                                     1
 *          ESH hydrograph reduced for infiltration
 *          riprap was added 5 ft thick for 30 feet
 *          concrete basin modeled for 20 feet
 *          outlet channel pipeline modeled at STA 10+50
 *          21.4 feet wide and includes 13 feet deep cutoff wall
 *          left side of spillway modeled
 STRUCTURE FALSE     ZERO STOREAGE
                      1183.375                                  0
                      1212.00                                   0.03
 ENDTABLE
 HYD        9                    Emergency Spillway
                     .050
                     0          0          0          0          0
                     0          0          0          0          0
                     0          0          0          0          0
                     0          0          0          0          0
                     0          0          0          0          0
                     0          0          0          0          0
                     0          0          0          0          0
                     0          0          0          0          0
                     0          0          0          0          0
                     0          0          0          0          0
                     0          0          0          0          0
                     0          0          0          0          0
                     0          0          0          0          0
                     0          0          0          0          0
                     0          0          0          0          0
                     0          0          0          0          0
                     0          0          57         384        701
                     1007       1303       1588       1862       2124
                     2374       2634       3083       3496       3874
                     4219       4532       4816       5071       5299
                     5502       5681       5837       5973       6088
                     6186       6267       6332       6382       6418
                     6442       6454       6455       6446       6428
                     6402       6368       6327       6280       6227
                     6169       6105       6037       5964       5887
                     5806       5720       5630       5537       5439
                     5338       5233       5124       5012       4897
                     4779       4658       4535       4409       4282
                     4155       4028       3901       3777       3654
                     3534       3418       3304       3194       3087
                     2983       2882       2784       2689       2597
                     2549       2504       2459       2413       2368
                     2323       2277       2232       2187       2142
                     2098       2053       2009       1965       1922
                     1879       1836       1794       1752       1710
                     1669       1629       1589       1550       1511
```

		1473	1435	1398	1362	1326	
		1291	1256	1222	1189	1156	
		1124	1093	1062	1032	1002	
		974	945	918	891	864	
		838	813	789	765	741	
		718	696	674	653	632	
		612	592	573	554	536	
		518	501	484	468	452	
		436	421	406	392	378	
		365	352	339	326	314	
		303	291	280	269	259	
		249	239	229	220	211	
		202	194	185	177	170	
		162	155	148	141	134	
		127	121	115	109	103	
		98	92	87	82	77	
		72	67	63	58	54	
		50	46	42	38	35	
		31	28	24	21	18	
		15	12	9	7	3.86	
		1.27	0	0	0	0	
		0	0	0	0	0	
		0	0	0	0	0	
		0	0	0	0	0	
		0	0	0	0	0	
		0	0	0	0	0	
		0	0	0	0	0	
		0	0	0	0	0	
		0	0	0	0	0	
		0	0	0	0	0	
		0	0	0	0	0	
		0	0	0	0	0	
		0	0	0	0	0	
		0	0	0	0	0	
		0	0	0	0	0	
		0	0	0	0	0	
		0	0	0	0	0	
		0	0	0	0	0	
		0	0	0	0	0	
		0	0	0	0	0	
		0	0	0	0	0	
		0	0	0	0	0	
		0	0	0	0	0	
		0	0	0	0	0	
		0	0	0	0	0	
		0	0	0	0	0	
		0	0	0	0	0	
		0	0	0	0	0	
		0	0	0	0	0	
		0	0	0	0	0	
		0					
ENDTABLE							
WSDATA	2S A		20.57			1161	N
POOLDATA	ELEV		1205.75				
ASSURFACE	41	3600	.097				
	0	3600	.025	0	1		
ENDTABLE							
ASDATA	41			2.5			4
BTMWIDTH	FEET	1000					
ASMATERIAL							
	1	0	24	0	150	12000	

```
            2          7          0.097      - 1.17     114        .01
            3          7          0.097      - .14      114        .05
            4          0          0.27       - .08      118        .75
            5          0          20         0          165        20
            6          0          24         0          150        12000
ENDTABLE
ASCOORD      1         Concrete   Y
            0          1205.65    20         1205.65
ENDTABLE
ASCOORD      2         Upper
            0          1205.75    20         1205.75    1400       1188.5
            3600       1144.5
ENDTABLE
ASCOORD      3         Middle
            0          1198.25    20         1198.25    20         1198.75
            55         1198.2125  55         1195.3125  939.8      1184.25
            939.8      1185.07    960.2      1184.82    960.2      1179.60
            961.2      1179.60    961.2      1183.98    1400       1178.5
            3600       1134.5
ENDTABLE
ASCOORD      4         Lower
            0          1175.75    1400       1158.5     3600       1114.5
ENDTABLE
ASCOORD      5         RIPRAP
            20         1205.65    55         1205.2125
ENDTABLE
ASCOORD      6         PIPELINE
            939.8      1194.25    961.2      1193.98
ENDTABLE
GRAPHICS    I
GO,HYD      L
SAVMOV      2     101  1                     FALSE
ENDJOB

*************************************************************************
*******

1SITES XEQ 05/06/2010 ------------- COMMENT PAGE
-------------------------------
       VER 2005.1.3                                                  WSID
=

 ESH hydrograph reduced for infiltration

 riprap was added 5 ft thick for 30 feet

 concrete basin modeled for 20 feet

 outlet channel pipeline modeled at STA 10+50

 21.4 feet wide and includes 13 feet deep cutoff wall

 left side of spillway modeled

 ***** MESSAGE - DEFAULT TOPSOIL FILL MATERIAL PARAMETERS USED.

 ***** MESSAGE - DETACHMENT RATE COFFICIENT  1.17 GIVEN FOR MATERIAL  2.
```

***** MESSAGE - DETACHMENT RATE COFFICIENT 0.14 GIVEN FOR MATERIAL 3.

***** MESSAGE - DETACHMENT RATE COFFICIENT 0.08 GIVEN FOR MATERIAL 4.

***** MESSAGE - MATERIAL 6, X-DISTANCES ARE NOT WITHIN THE RANGE
OF THE MATERIAL ABOVE IT.

***** MESSAGE - AUXILIARY SPILLWAY CREST ELEVATION IS SET TO 1205.75
FROM THE ASCOORD RECORDS.

***** MESSAGE - VALUES FROM ASSURFACE, REACH 1 IMPLY NO VEGETAL COVER
WITH
"n" OF 0.025.

1SITES

-
XEQ 05/06/2010 WSID=
VER 2005.1.3 ZERO STOREAGE
SUBW= A
TIME 09:18:33 SITE = FALSE PASS= 1 PART=
1

********** MATERIAL PROPERTIES
****

MATERIAL	PI	DRY DENSITY lbs/CuFt	Kh	PERCENT CLAY	DETACH. RATE (Ft/H)/	REP. DIAMETER (lb/SqFt) inches
Concrete	0.	150.	12000.00	0.0	--	24.00000
Upper	7.	114.	0.01	--	1.170	0.09700
Middle	7.	114.	0.05	--	0.140	0.09700
Lower	0.	118.	0.75	--	0.080	0.27000
RIPRAP	0.	165.	20.00	0.0	--	20.00000
PIPELINE	0.	150.	12000.00	0.0	--	24.00000
TS_FILL	0.	100.	0.05	0.0	--	0.05000
GEN_FILL	0.	150.	12000.00	0.0	--	24.00000

USER ENTERED AUXILIARY SPILLWAY OUTFLOW
AUXILIARY SPILLWAY ANALYSIS ONLY

FALSE STRUCTURE RELATED DATA REMOVED

SUMMARY OF AUXILIARY SPILLWAY SURFACE CONDITIONS USED IN COMPUTATIONS
BY REACH

REACH	FROM STA	TO STA	SLOPE	RETARDANCE CURVE	VEGETAL COVER	MAINT. CODE	ROOTING DEPTH	REACH

LOCATION	(ft)	(ft)	(%)	INDEX@	FACTOR	+	(ft)	*
1	0.	20.	0.0	0.025	**	**	**	CREST
2	20.	1400.	1.2	0.025	0.00	1		EXIT !
3	1400.	2775.	2.0	0.025	0.00	1		EXIT

@ The program interprets retardance curve index entries of less than 1 as
Manning's n values.
+ The minimum maintenance code value of 2 is used in INTEGRITY computations
(the program changes values of 1 to 2 during computation).
* Upper case indicates a reach of constructed spillway channel.
** The program does not use vegetal cover factor, maintenance code, and rooting depth for inlet and crest reaches in computations.
! Reach 2 used in computing exit channel velocities.

****

EROSIONALLY EFFECTIVE STRESS FOR STABILITY ANALYSIS OF AUX. EXIT CHANNEL
(Refer to Ag. Handbook 667, Chapt. 3, for allowable stresses.)
Aux. Spillway Discharge = 6455. cfs; Bottom Width = 1000. ft

REACH NO.	FROM STA	TO STA	SLOPE %	MANNING`S n	VELOCITY ft/s	TOTAL STRESS lb/ft^2	EFFECTIVE STRESS lb/ft^2
2	20.	1400.	1.25	0.025	6.55	0.77	0.370
3	1400.	2775.	2.00	0.025	7.55	1.06	0.514 max.

****

INTEGRITY ANALYSIS - REACH SURFACE PERFORMANCE SUMMARY
(The auxiliary spillway began flow at time = 3.8 hours and peaked at time = 5.4 hours.)

REACH 2: FROM STATION 20. TO 1400. ON 1.2% SLOPE.
Surface unfailed: Stressed to 99% of allowable.

REACH 3: FROM STATION 1400. TO 2775. ON 2.0% SLOPE.
Non-vegetated conditions implied: flow concentration assumed with minimal flow: Time = 4.5 hours.

INTEGRITY ANALYSIS - HEADCUT EROSION DAMAGE SUMMARY

The most upstream headcut began at station 1400.
and progressed upstream to station 1288.
The final height of the headcut was 10.9 ft.

The deepest headcut is also the furthest upstream.

	DURATION FLOW HRS	ATTACK OE/B ACFT/FT	DIST. FROM MOST U/S HEADCUT TO U/S EDGE AUX. CREST, FT
AUXILIARY SPILLWAY ---	9.9	1.8	1288.

EXIT CHANNEL FLOW SUPERCRITICAL: MAX VELOCITY= 6.6 FT/SEC
EXIT SLOPE = 0.013 FT/FT
FLOW DEPTH = 1.0 FT

Input--Storm Hyd, Peak = 6455.07 CFS at 5.40 hrs., Location Point
HYDOUT 1 FALSE

1SITES....JOB NO. 1 COMPLETE.

SITES.....COMPUTATIONS COMPLETE

>>> SITE ID <<<	SUBWS ID	SUBWS DA (SQ MI)	CURVE NO.	TC (HRS)	TOTAL DA (SQ MI)	TYPE DESIGN	STRUC CLASS
FALSE	A	20.57	0.	0.00	20.57	TR60	S

PASS TYPE NO. HYD	DIA./ WIDTH (IN/FT)	AUX.CREST ELEV (FT)	BTM. WIDTH (FT)	MAX. HP (FT)	MAX. ELEV (FT)	EMB. VOL. (CY)	INTEGR.* DIST. (FT)	EXIT* VEL. (FT/SEC)
1 FLOOD HYD	0.0	1205.8	1000.0	1.7	1207.5	0.	1288.	6.6

* INTEGRITY DIST. AND EXIT VEL. VALUES ARE BASED ON THE ROUTED HYDROGRAPH SHOWN UNDER TYPE HYD.

SITES.....SUMMARY TABLE 1 COMPLETED.

INPUT = P:\WRES\FCDMC\23445608_White Tanks_Phase 2 Construction
\Downstream Channel Design Review\SITES\1.25%_2.00%_ESH_Base Model
(Center) 4-30-2010.D2C
OUTPUT = P:\WRES\FCDMC\23445608_White Tanks_Phase 2 Construction
\Downstream Channel Design Review\SITES\1.25%_2.00%_ESH_Base Model
(Center) 4-30-2010.OUT
DATED 05/06/2010 09:18:33

GRAPHICS FILES GENERATED

OPTION "L" = P:\WRES\FCDMC\23445608_White Tanks_Phase 2 Construction
\Downstream Channel Design Review\SITES\1.25%_2.00%_ESH_Base Model
(Center) 4-30-2010.DRG DATED 05/06/2010 09:18:33

OPTION "P" = P:\WRES\FCDMC\23445608_White Tanks_Phase 2 Construction
\Downstream Channel Design Review\SITES\1.25%_2.00%_ESH_Base Model
(Center) 4-30-2010.DHY DATED 05/06/2010 09:18:33

OPTION "E" = P:\WRES\FCDMC\23445608_White Tanks_Phase 2 Construction
\Downstream Channel Design Review\SITES\1.25%_2.00%_ESH_Base Model
(Center) 4-30-2010.DEM DATED 05/06/2010 09:18:33

AUX.GRAPHICS = P:\WRES\FCDMC\23445608_White Tanks_Phase 2 Construction
\Downstream Channel Design Review\SITES\1.25%_2.00%_ESH_Base Model
(Center) 4-30-2010.DG* DATED 05/06/2010 09:18:33

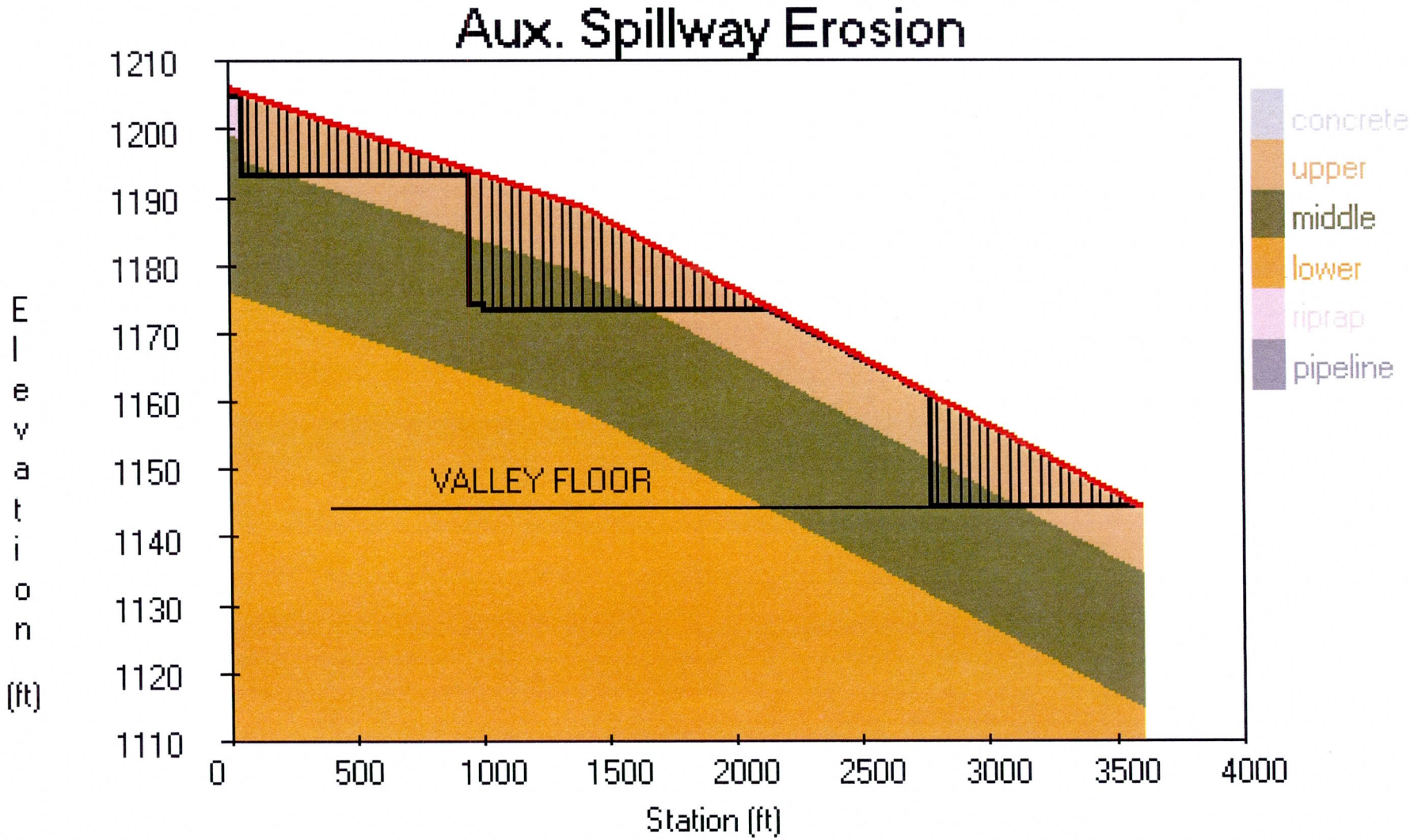

AUX. SPILLWAY:, Crest = N/A, BW = 1000.
WS = , STR = 05/04/2010, FILE = 1.25%_2.00%_24-hr_Base Model (Cent

```
1.25%_2.00%_24-hr_Base Model (Center) 4-30-2010.OUT
*************************************************************************
********
 SITES XEQ 05/04/2010   WATER RESOURCE SITE ANALYSIS COMPUTER PROGRAM
      VER 2005.1.3                (USER MANUAL - DATED OCTOBER 2007)
      TIME 15:02:20

 ************************** 80-80 LIST OF INPUT DATA
***************************

 SITES     01/01/2005                                          20.57
L9
 SAVMOV    0    101
 SAVMOV    101  1                                                      1
 *         24 hour hydrograph reduced for infiltration
 *         riprap was added 7 ft thick for 35 feet
 *         concrete basin modeled for 20 feet
 *         outlet channel pipeline modeled at STA 9+50
 *         21.4 feet wide and includes 13 feet deep cutoff wall
 *         centerline of spillway modeled with manhole
 STRUCTURE FALSE     ZERO STOREAGE
                      1183.375                                   0
                      1212.00                                    0.03
 ENDTABLE
 HYD       9                    Emergency Spillway
                     .10
                     0          0          0          0          0
                     0          0          0          0          0
                     0          0          0          0          0
                     0          0          0          0          0
                     0          0          0          0          0
                     0          0          0          0          0
                     0          0          0          0          0
                     0          0          0          0          0
                     0          0          0          0          0
                     0          0          0          0          0
                     0          0          0          0          0
                     0          0          0          0          0
                     0          0          0          0          0
                     0          0          0          0          0
                     0          0          0          0          0
                     0          0          0          0          0
                     0          0          0          0          0
                     0          443        1506       2579       4685
                     6698       8705       10875      12801      14465
                     15904      17159      18125      18858      19414
                     19844      20185      20455      20664      20817
                     20919      20974      20983      20944      20855
                     20718      20536      20313      20052      19754
                     19420      19054      18664      18256      17840
                     17421      16998      16563      16105      15618
                     15137      14642      14119      13573      13011
                     12444      11881      11333      10805      10303
                     9829       9383       8963       8565       8186
                     7883       7594       7310       7031       6758
                     6492       6236       5991       5758       5537
                     5330       5133       4946       4768       4598
                     4436       4283       4137       3999       3867
                     3740       3618       3500       3386       3276
                     3171       3072       2978       2892       2814
                     2741       2673       2611       2572       2543
                     2515       2487       2461       2437       2415
```

```
                    2396      2380      2368      2361      2359
                    2359      2360      2360      2358      2350
                    2337      2316      2288      2256      2219
                    2182      2144      2109      2077      2050
                    2026      2006      1989      1974      1960
                    1946      1931      1915      1899      1884
                    1869      1854      1840      1827      1815
                    1803      1791      1780      1770      1760
                    1751      1742      1734      1726      1718
                    1711      1705      1698      1692      1687
                    1681      1674      1667      1657      1644
                    1631      1615      1599      1583      1568
                    1555      1543      1531      1520      1508
                    1496      1483      1469      1453      1433
                    1409      1378      1342      1300      1255
                    1207      1159      1112      1067      1023
                    980       939       898       858       819
                    781       744       708       673       638
                    605       573       541       511       482
                    454       426       400       375       352
                    329       307       286       266       247
                    229       212       195       180       165
                    151       138       125       113       102
                    92        81        72        63        55
                    47        39        32        25        19
                    13        7.56      2.3       0         0
                    0         0         0         0         0
                    0         0         0         0         0
                    0         0         0         0         0
                    0         0         0         0         0
                    0         0         0         0         0
                    0         0         0         0         0
                    0         0         0         0         0
                    0         0         0         0         0
                    0         0         0         0         0
                    0         0         0         0         0
                    0         0         0         0         0
                    0         0         0         0         0
                    0         0         0         0         0
                    0         0         0         0         0
                    0         0         0         0         0
                    0         0         0         0         0
                    0         0         0         0         0
                    0         0         0         0         0
                    0         0         0         0         0
                    0         0         0         0         0
                    0         0         0         0         0
                    0         0         0         0         0
                    0         0         0         0         0
                    0         0         0         0         0
                    0         0         0         0         0
                    0         0         0         0         0
                    0         0         0         0         0
                    0
ENDTABLE
WSDATA      2S A                20.57
POOLDATA    ELEV                1205.75                     1144.50   N
ASSURFACE   41        3600      .097
            0         3600      .025      0         1
ENDTABLE
ASDATA      41                            2.5                           4
BTMWIDTH    FEET      1000
ASMATERIAL
            1         0         24        0         150       12000
            2         7         0.097     - 1.17    114       .01
```

```
          3         7         0.097     - .14     114       .05
          4         0         0.27      - .08     118       .75
          5         0         20        0         165       20
          6         0         24        0         150       12000
ENDTABLE
ASCOORD    1        Concrete  Y
          0         1205.65   20        1205.65
ENDTABLE
ASCOORD    2        Upper
          0         1205.75   20        1205.75   1400      1188.5
          3600      1144.5
ENDTABLE
ASCOORD    3        Middle
          0         1198.25   20        1198.25   20        1198.75
          55        1198.2125 55        1195.3125 939.8     1184.25
          939.8     1185.07   960.2     1184.82   960.2     1179.60
          961.2     1179.60   961.2     1183.98   1400      1178.5
          3600      1134.5
ENDTABLE
ASCOORD    4        Lower
          0         1175.75   1400      1158.5    3600      1114.5
ENDTABLE
ASCOORD    5        RIPRAP
          20        1205.65   55        1205.2125
ENDTABLE
ASCOORD    6        PIPELINE
          939.8     1194.25   961.2     1193.98
ENDTABLE
GRAPHICS  I
GO,HYD    L
SAVMOV    2    101  1                   FALSE
ENDJOB
```

```
*************************************************************************
*******

1SITES XEQ 05/04/2010 ------------- COMMENT PAGE
------------------------------
       VER 2005.1.3                                                WSID
=

 24 hour hydrograph reduced for infiltration

 riprap was added 7 ft thick for 35 feet

 concrete basin modeled for 20 feet

 outlet channel pipeline modeled at STA 9+50

 21.4 feet wide and includes 13 feet deep cutoff wall

 centerline of spillway modeled with manhole

 ***** MESSAGE - DEFAULT TOPSOIL FILL MATERIAL PARAMETERS USED.

 ***** MESSAGE - DETACHMENT RATE COFFICIENT  1.17 GIVEN FOR MATERIAL  2.

 ***** MESSAGE - DETACHMENT RATE COFFICIENT  0.14 GIVEN FOR MATERIAL  3.
```

***** MESSAGE - DETACHMENT RATE COFFICIENT 0.08 GIVEN FOR MATERIAL 4.

***** MESSAGE - MATERIAL 6, X-DISTANCES ARE NOT WITHIN THE RANGE
OF THE MATERIAL ABOVE IT.

***** MESSAGE - AUXILIARY SPILLWAY CREST ELEVATION IS SET TO 1205.75
FROM THE ASCOORD RECORDS.

***** MESSAGE - VALUES FROM ASSURFACE, REACH 1 IMPLY NO VEGETAL COVER
WITH
"n" OF 0.025.

1SITES

-
XEQ 05/04/2010 WSID=
VER 2005.1.3 ZERO STOREAGE
SUBW= A
TIME 15:02:20 SITE = FALSE PASS= 1 PART=
1

********** MATERIAL PROPERTIES
****

MATERIAL	PI	DRY DENSITY lbs/CuFt	Kh	PERCENT CLAY	DETACH. RATE (Ft/H)/(lb/SqFt)	REP. DIAMETER inches
Concrete	0.	150.	12000.00	0.0	--	24.00000
Upper	7.	114.	0.01	--	1.170	0.09700
Middle	7.	114.	0.05	--	0.140	0.09700
Lower	0.	118.	0.75	--	0.080	0.27000
RIPRAP	0.	165.	20.00	0.0	--	20.00000
PIPELINE	0.	150.	12000.00	0.0	--	24.00000
TS_FILL	0.	100.	0.05	0.0	--	0.05000
GEN_FILL	0.	150.	12000.00	0.0	--	24.00000

USER ENTERED AUXILIARY SPILLWAY OUTFLOW
AUXILIARY SPILLWAY ANALYSIS ONLY

FALSE STRUCTURE RELATED DATA REMOVED

SUMMARY OF AUXILIARY SPILLWAY SURFACE CONDITIONS USED IN COMPUTATIONS
BY REACH

REACH	FROM STA	TO STA	SLOPE	RETARDANCE CURVE	VEGETAL COVER	MAINT. CODE	ROOTING DEPTH	REACH LOCATION

	(ft)	(ft)	(%)	INDEX@	FACTOR	+	(ft)	*
1	0.	20.	0.0	0.025	**	**	**	CREST
2	20.	1400.	1.2	0.025	0.00	1		EXIT !
3	1400.	3600.	2.0	0.025	0.00	1		EXIT

@ The program interprets retardance curve index entries of less than 1 as
Manning's n values.
+ The minimum maintenance code value of 2 is used in INTEGRITY computations
(the program changes values of 1 to 2 during computation).
* Upper case indicates a reach of constructed spillway channel.
** The program does not use vegetal cover factor, maintenance code, and rooting depth for inlet and crest reaches in computations.
! Reach 2 used in computing exit channel velocities.

****

EROSIONALLY EFFECTIVE STRESS FOR STABILITY ANALYSIS OF AUX. EXIT CHANNEL
(Refer to Ag. Handbook 667, Chapt. 3, for allowable stresses.)
Aux. Spillway Discharge = 20983. cfs; Bottom Width = 1000. ft

REACH NO.	FROM STA	TO STA	SLOPE %	MANNING`S n	VELOCITY ft/s	TOTAL STRESS lb/ft^2	EFFECTIVE STRESS lb/ft^2
2	20.	1400.	1.25	0.025	10.48	1.55	0.750
3	1400.	3600.	2.00	0.025	12.08	2.16	1.042 max.

****

INTEGRITY ANALYSIS - REACH SURFACE PERFORMANCE SUMMARY
(The auxiliary spillway began flow at time = 8.0 hours and peaked at time = 10.3 hours.)

REACH 2: FROM STATION 20. TO 1400. ON 1.2% SLOPE.
Non-vegetated conditions implied: flow concentration assumed with minimal flow: Time = 8.6 hours.

REACH 3: FROM STATION 1400. TO 3600. ON 2.0% SLOPE.
Non-vegetated conditions implied: flow concentration assumed with minimal flow: Time = 8.5 hours.

INTEGRITY ANALYSIS - HEADCUT EROSION DAMAGE SUMMARY

Surface (vegetal) damage with a computed depth of 0.5 ft or less
occurred up to station 20.

The most upstream headcut began at station 103.
and progressed upstream to station 55.
The final height of the headcut was 12.2 ft.

The headcut having the maximum final overfall height began at station 1400. and progressed upstream to station 1017.
The final height of the headcut was 20.2 ft.

	DURATION FLOW HRS	ATTACK OE/B ACFT/FT	DIST. FROM MOST U/S HEADCUT TO U/S EDGE AUX. CREST, FT
AUXILIARY SPILLWAY ---	21.9	9.4	55.

EXIT CHANNEL FLOW SUPERCRITICAL: MAX VELOCITY= 10.5 FT/SEC
EXIT SLOPE = 0.013 FT/FT
FLOW DEPTH = 2.0 FT

Input--Storm Hyd, Peak = 20983.01 CFS at 10.30 hrs., Location Point
HYDOUT 1 FALSE

1SITES....JOB NO. 1 COMPLETE.

SITES.....COMPUTATIONS COMPLETE

>>> <<<	SITE ID	SUBWS ID	SUBWS DA (SQ MI)	CURVE NO.	TC (HRS)	TOTAL DA (SQ MI)	TYPE DESIGN	STRUC CLASS
	FALSE	A	20.57	0.	0.00	20.57	TR60	S

PASS TYPE NO. HYD	DIA./ WIDTH (IN/FT)	AUX.CREST ELEV (FT)	BTM. WIDTH (FT)	MAX. HP (FT)	MAX. ELEV (FT)	EMB. VOL. (CY)	INTEGR.* DIST. (FT)	EXIT* VEL. (FT/SEC)
1 FLOOD HYD	0.0	1205.8	1000.0	3.6	1209.3	0.	55.	10.5

* INTEGRITY DIST. AND EXIT VEL. VALUES ARE BASED ON THE ROUTED HYDROGRAPH SHOWN UNDER TYPE HYD.

SITES.....SUMMARY TABLE 1 COMPLETED.

NRCS SITES VERSION 2005.1.3 ,01/01/2005

FILES

INPUT = P:\WRES\FCDMC\23445608_White Tanks_Phase 2 Construction\Revised SITES Modeling\SITES\1.25%_2.00%_24-hr_Base Model (Center) 4-30-2010.D2C
OUTPUT = P:\WRES\FCDMC\23445608_White Tanks_Phase 2 Construction\Revised SITES Modeling\SITES\1.25%_2.00%_24-hr_Base Model (Center) 4-30-2010.OUT
DATED 05/04/2010 15:02:20

GRAPHICS FILES GENERATED

OPTION "L" = P:\WRES\FCDMC\23445608_White Tanks_Phase 2 Construction \Revised SITES Modeling\SITES\1.25%_2.00%_24-hr_Base Model (Center) 4-30-2010.DRG DATED 05/04/2010 15:02:20

OPTION "P" = P:\WRES\FCDMC\23445608_White Tanks_Phase 2 Construction \Revised SITES Modeling\SITES\1.25%_2.00%_24-hr_Base Model (Center) 4-30-2010.DHY DATED 05/04/2010 15:02:20

OPTION "E" = P:\WRES\FCDMC\23445608_White Tanks_Phase 2 Construction \Revised SITES Modeling\SITES\1.25%_2.00%_24-hr_Base Model (Center) 4-30-2010.DEM DATED 05/04/2010 15:02:20

AUX.GRAPHICS = P:\WRES\FCDMC\23445608_White Tanks_Phase 2 Construction \Revised SITES Modeling\SITES\1.25%_2.00%_24-hr_Base Model (Center) 4-30-2010.DG* DATED 05/04/2010 15:02:20

ATTACHMENT C

ELECTRONIC FILES

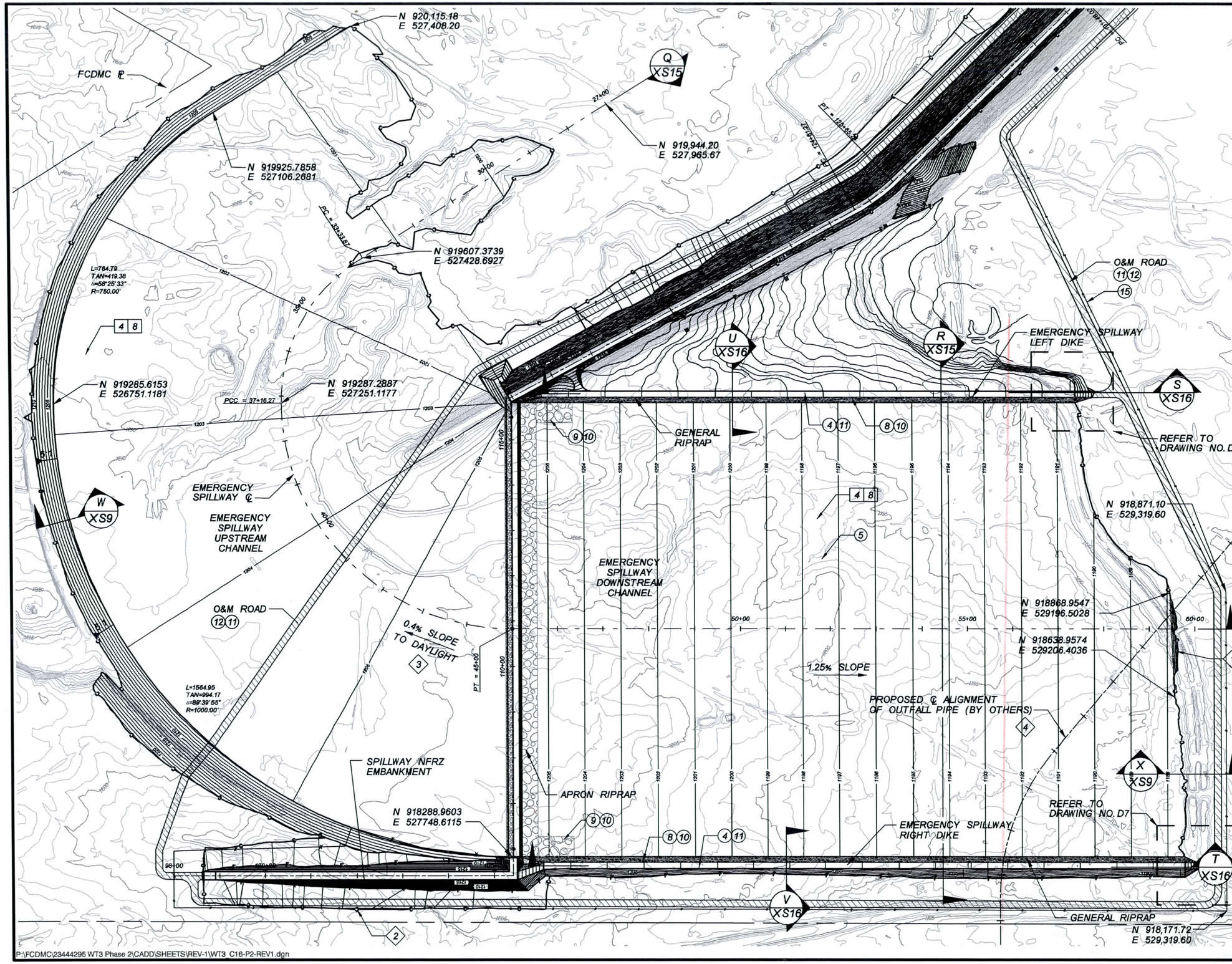

THE QUANTITIES SHOWN BELOW ARE FOR WORK WITHIN THE EMERGENCY SPILLWAY

REMOVE

4	BORROW EXCAVATION - EMERGENCY SPILLWAY CHANNEL (210-3)	257,800 CY
8	REMOVE AND STOCKPILE TOPSOIL (430-1)	SEE DWG C1

CONSTRUCT

4	STRUCTURAL FILL (211-3)	15,850 CY
5	COMMON FILL (211-4)	43,650 CY
8	GENERAL RIPRAP (220-2)	18,200 CY
9	APRON RIPRAP (220-1)	7,020 CY
10	GEOTEXTILE FOR RIPRAP (231-1)	37,600 SY
11	UNTREATED BASE (310-1)	SEE DWG C1
12	DECOMPOSED GRANITE ROAD SURFACE (344-1)	SEE DWG C1
15	FENCING (420-1)	SEE DWG C1

KEY NOTES

1. EXISTING CHANNEL WILL BE REMOVED AND EMERGENCY SPILLWAY CHANNEL WILL DAYLIGHT TO EXISTING GRADE AT A SLOPE OF 3:1.
2. EXISTING FENCE IS NOT DISTRICT PROPERTY AND NEEDS TO BE PROTECTED DURING CONSTRUCTION ACTIVITIES (NOT SHOWN).
3. UPSTREAM CHANNEL SLOPE IS 0.4% ALONG STATION LINE. CHANNEL SLOPE IS FLATTER AT OUTSIDE EDGE AND STEEPER AT INSIDE EDGE.
4. THE PROPOSED OUTFALL PIPE WILL BE CONSTRUCTED SEPERATELY AND WILL NOT IMPACT CONSTRUCTION OF THE SPILLWAY BORROW.

N

50 0 50 100
Scale in Feet

TWO WORKING DAYS BEFORE YOU DIG, CALL
263-1100
BLUE STAKE

NO.	REVISION	BY	DATE
1	REVISED PER AGENCY COMMENTS	TER	9-09

ADWR APPROVAL

FLOOD CONTROL DISTRICT OF MARICOPA COUNTY
ENGINEERING DIVISION

WHITE TANKS FRS NO 3
REMEDIATION PROJECT - PHASE 2
PCN 470.04.30, FCD CONTRACT NO. 2008C031

	BY	DATE
DESIGNED	MSJ	9-09
DRAWN	JEO, KLP	9-09
CHECKED	TER	9-09

Registered Professional Engineer (Civil) CERTIFICATE NO. 32847 TODD E. RINGSMUTH Date Signed 9-14-09 ARIZONA, U.S.A. EXPIRES 09-30-2010

URS
7720 NORTH 16TH STREET
SUITE 100
PHOENIX, AZ 85020

DRAWING NO. C16

EMERGENCY SPILLWAY CHANNEL PLAN

SHEET 21 OF 78

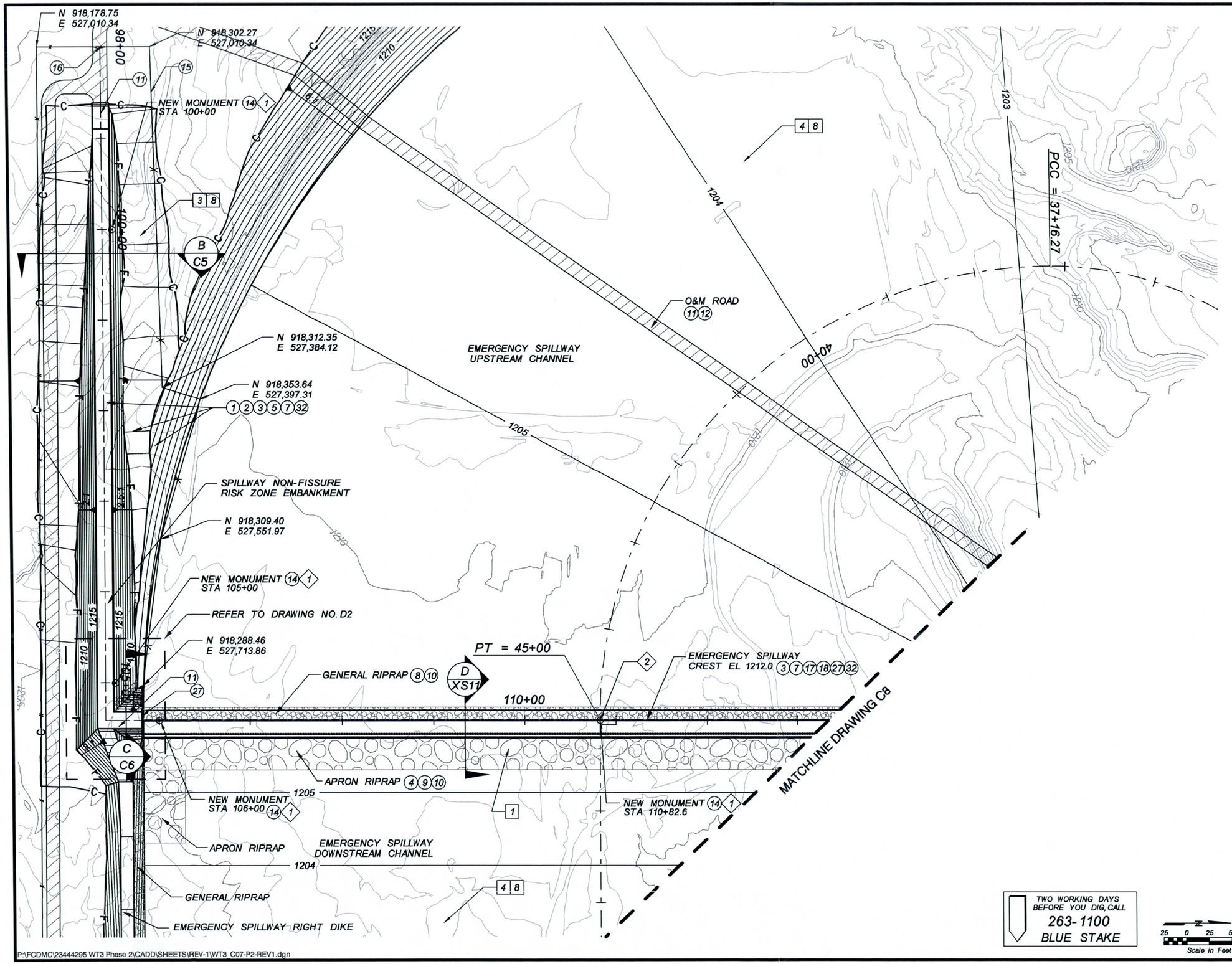

THE QUANTITIES SHOWN BELOW ARE FOR WORK FROM STA 98+00.0 TO STA 115+00.0

REMOVE

1	BORROW EXCAVATION - EMERGENCY SPILLWAY FOUNDATION (210-2)	47,200 CY
3	BORROW EXCAVATION - DAM FACE EMBANKMENT AND FOUNDATION (210-1)	35,180 CY
4	BORROW EXCAVATION - EMERGENCY SPILLWAY CHANNELS (210-3)	SEE DWG C16
8	REMOVE AND STOCKPILE TOPSOIL (430-1)	SEE DWG C1

CONSTRUCT

1	FOUNDATION SURFACE PREPARATION (206-6)	14,965 SY
2	STOCKPILING AND BLENDING OF EMBANKMENT FILL (211-1)	55,600 CY
3	EMBANKMENT FILL (211-2)	55,600 CY
4	STRUCTURAL FILL (211-3)	2,050 CY
5	COMMON FILL (211-4)	15,200 CY
17	SELECT FILL (211-5)	9,750 CY
7	FILTER (211-7)	7,420 CY
18	DRAIN (211-8)	695 CY
8	GENERAL RIPRAP (220-2)	SEE DWG C16
9	APRON RIPRAP (220-1)	SEE DWG C16
10	GEOTEXTILE FOR RIPRAP (231-1)	SEE DWG C16
32	GEOTEXTILE FOR FILTER (231-2)	7,400 SY
11	UNTREATED BASE (310-1)	SEE DWG C1
12	DECOMPOSED GRANITE ROAD SURFACE (344-1)	SEE DWG C1
14	MONUMENTS (405-1)	4 EA
15	FENCING (420-1)	SEE DWG C1
16	FENCE GATE (420-2)	1 EA
27	EMERGENCY SPILLWAY DROP STRUCTURE AND ABUTMENTS (505-1)	2,575 CY

KEY NOTES

1. NEW MONUMENTS TO BE CONSTRUCTED ON UPSTREAM SLOPE NEAR CREST OR IN EMERGENCY SPILLWAY CONCRETE AS DIRECTED BY THE ENGINEER.
2. STATION LINES INTERSECT AT DAM STATION 110+82.68 AND EMERGENCY SPILLWAY STATION 45+00.

GENERAL NOTES

1. EXISTING FENCE NEAR PROPERTY LINE IS TO BE PROTECTED AND REMAIN IN PLACE DURING CONSTRUCTION (NOT SHOWN).

NO.	REVISION	BY	DATE
1	REVISED PER AGENCY COMMENTS	TER	9-09

ADWR APPROVAL

FLOOD CONTROL DISTRICT OF MARICOPA COUNTY
ENGINEERING DIVISION

WHITE TANKS FRS NO 3
REMEDIATION PROJECT - PHASE 2
PCN 470.04.30, FCD CONTRACT NO. 2008C031

	BY	DATE
DESIGNED	MSJ	9-09
DRAWN	JEO, KLP	9-09
CHECKED	TER	9-09

Registered Professional Engineer (Civil) C-32847 DATE 10/2 32847 TODD E. RINGSMUTH ARIZONA, U.S.A. EXPIRES 09-30-2010

URS 7720 NORTH 16TH STREET SUITE 100 PHOENIX, AZ 85020

DRAWING NO. C7 | EMBANKMENT PLAN | SHEET 12 OF 78

P:\FCDMC\23444295 WT3 Phase 2\CADD\SHEETS\REV-1\WT3_C07-P2-REV1.dgn