June 30, 1994

Preliminary Hydraulics for Initial Plans

for

10th STREET WASH FEASIBILITY STUDY

Contract FCD 93-23

for the

FLOOD CONTROL DISTRICT of Maricopa County

File Copy

PRELIMINARY HYDRAULICS FOR INITIAL PLANS

for

Contract FCD 93-23

10th Street Wash Feasibility Study

Prepared by:

DMJM Arizona, Inc.
300 W. Clarendon Avenue
Suite 400
Phoenix, Arizona 85013
(602) 264-0217

DMJM Job No. 5652.00

June 30, 1994

DMJM

TABLE OF CONTENTS

I. Alternatives Matrix

II. Normal Depth Computations for Alternative No. 1

III. Normal Depth Computations for Alternative No. 2

IV. Normal Depth Computations for Alternative No. 3

REGISTERED PROFESSIONAL ENGINEER (CIVIL)
CERTIFICATE NO.
21029
MICHAEL S.
SHAPIRO
Date Signed 6-30-94
ARIZONA, U.S.A.

DMJM

I. Alternatives Matrix

10th Street Wash Feasibility Study

Hydraulics Runs

(Alternatives Selected for Further Study)

			Natural				Protected				Gunite				Concrete					
Segment No.	Alternative No.	Section Id.	Velocity (fps)	N Value	Q 10 (cfs)	Q 100 (cfs)	Velocity (fps)	N Value	Q 10 (cfs)	Q 100 (cfs)	Velocity (fps)	N Value	Q 10 (cfs)	Q 100 (cfs)	Velocity (fps)	N Values	Q 10 (cfs)	Q 100 (cfs)	Comments	Existing Grade
1	Alternative 1	I Box													20 Max	0.013		1296		5 Feet
1	Alternative 2	H Protected													20 Max	0.013		1296	Minus the Road	5 Feet
1	Alternative 3	G Protected									15 Max	0.019		1296					Minus the Road	5 Feet
2	Alternative 1	I Box													20 Max	0.013		1296		6 Feet
2	Alternative 2	E Protected	4.75	0.036		1296													Minus the Road	6 Feet
2	Alternative 3	E Natural					6.0 Max	0.036		1296									Minus the Road	6 Feet
3	Alternative 1	I Box													20 Max	0.013	877	1296		5 Feet
3	Alternative 2	E Protected					6.0 Max	0.036	877	1296										5 Feet
3	Alternative 3	G Protected									15 Max	0.019		1296						5 Feet
4	Alternative 1	B Modified Natural	4.75	0.036	453	1132													8' walk instead of 12'	7 Feet
4	Alternative 2	D Protected					6.0 Max	0.036	453	1132									Minus the Road	7 Feet
4	Alternative 3	D Natural	4.75	0.036	453	1132													Minus the Road	7 Feet
5	Alternative 1	D Protected					6.0 Max	0.036	780	1214										5 Feet
5	Alternative 2	D Protected					6.0 Max	0.036	780	1214										5 Feet
5	Alternative 3	D Modified Protected					6.0 Max	0.036	780	1214									Minus the Road	5 Feet
6	Alternative 1	F Natural	4.75	0.036	780	1214														6 Feet
6	Alternative 2	E Modified Natural	4.75	0.036	780	1214													Minus the Road	6 Feet
6	Alternative 3	F Natural	4.75	0.036	780	1214														6 Feet
7a.	Alternative 1 Hatcher to Vogel	F Protected					6.0 Max	0.036	780	1214										6 Feet
7a.	Alternative 2 Hatcher to Vogel	F Protected					6.0 Max	0.036	780	1214										6 Feet
7a.	Alternative 3 Hatcher to Vogel	F Protected					6.0 Max	0.036	780	1214										6 Feet
7b.	Alternative 1 Vogel to Mountain View	I Box													20 Max	0.013		616	Box, Baseline Flow	6 Feet
7b.	Alternative 2 Vogel to Mountain View	I Box													20 Max	0.013		616		6 Feet
7b.	Alternative 3 Vogel to Mountain View	I Box													20 Max	0.013		616		6 Feet
8	Alternative 1	B Protected					6.0 Max	0.036		616									Basin, New Structure at Mountain View	6 Feet
8	Alternative 2	G Protected									15 Max	0.019		616					Basin, New Structure at Mountain View	6 Feet
8	Alternative 3	B Protected					6.0 Max	0.036		616									New Structure at Mountain View	6 Feet
8	Alternative 4	G Protected									15 Max	0.019		616					New Structure at Moutnain View	6 Feet
9	Alternative 1	G Protected									15 Max	0.019		616						7 Feet
9	Alternative 2	H Protected													20 Max	0.013		616		7 Feet
9	Alternative 3	G Protected									15 Max	0.019		616					Minus the Road in the South Half	7 Feet
9	Alternative 4	H Protected													20 Max	0.013			Minus the Road in the South Half	7 Feet
10	Alternative 1	J Protected					6.0 Max	0.036		616									100 Year Bench	8 Feet

5/26/94
7/1/94

5652.01
Folder 7 and 26

II. Normal Depth Computations for Alternative No. 1

QC'd By: MS 6/16/94

BOX CULVERT ANALYSIS
COMPUTATION OF CULVERT PERFORMANCE CURVE

June 6, 1994
ALT 1, SEG 1, CHAN I (BOX @ S-MIN)

PROGRAM INPUT DATA:

DESCRIPTION	VALUE
Culvert Span (Width of Opening) (feet)	28.50
Culvert Rise (Height of Opening) (feet)	5.00
FHWA Chart Number (8,9,10,11,12 or 13)	9
Scale Number on Chart (Type of Culvert Entrance)	2
Manning's Roughness Coefficient (n-value)	0.0130
Entrance Loss Coefficient of Culvert Opening	0.20
Culvert Length (feet)	100.0
Culvert Slope (feet per foot)	0.0023

PROGRAM RESULTS:

Flow Rate (cfs)	Tailwater Depth (ft)	Headwater (ft) Inlet Control	Headwater (ft) Outlet Control	Normal Depth (ft)	Critical Depth (ft)	Depth at Outlet (ft)	Outlet Velocity (fps)
1296.0	2.00	6.21	6.04	3.92	4.00	3.92	11.59
1296.0	3.00	6.21	6.04	3.92	4.00	3.92	11.59
1296.0	4.00	6.21	6.04	3.92	4.00	3.92	11.59
1296.0	5.00	6.21	6.54	3.92	4.00	5.00	9.09

BOX CULVERT ANALYSIS COMPUTER PROGRAM Version 1.6 Copyright (c) 1986 Dodson & Associates, Inc., 7015 W. Tidwell, #107, Houston, TX 77092 (713) 895-8322. All Rights Reserved.

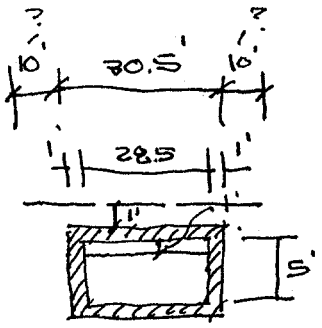

10th Street Wash
Initial Alts.
5632.01, File Folder 7
By: JS 6/6/94

BOX CULVERT ANALYSIS
COMPUTATION OF CULVERT PERFORMANCE CURVE

June 6, 1994
ALT 1, SEG 1, CHAN I (BOX @ S-MAX)

==========

PROGRAM INPUT DATA:

DESCRIPTION	VALUE
Culvert Span (Width of Opening) (feet).....	28.50
Culvert Rise (Height of Opening) (feet).....	5.00
FHWA Chart Number (8,9,10,11,12 or 13).....	9
Scale Number on Chart (Type of Culvert Entrance).....	2
Manning's Roughness Coefficient (n-value).....	0.0130
Entrance Loss Coefficient of Culvert Opening.....	0.20
Culvert Length (feet).....	100.0
Culvert Slope (feet per foot).....	0.0078

==========

PROGRAM RESULTS:

Flow Rate (cfs)	Tailwater Depth (ft)	Headwater (ft) Inlet Control	Headwater (ft) Outlet Control	Normal Depth (ft)	Critical Depth (ft)	Depth at Outlet (ft)	Outlet Velocity (fps)
1296.0	2.00	6.21	5.49	2.64	4.00	2.64	17.22
1296.0	3.00	6.21	5.49	2.64	4.00	2.64	17.22
1296.0	4.00	6.21	5.49	2.64	4.00	2.64	17.22
1296.0	5.00	6.21	5.99	2.64	4.00	2.64	17.22
1296.0	6.00	6.21	6.99	2.64	4.00	5.00	9.09

==========

BOX CULVERT ANALYSIS COMPUTER PROGRAM Version 1.6 Copyright (c) 1986
Dodson & Associates, Inc., 7015 W. Tidwell, #107, Houston, TX 77092
(713) 895-8322. All Rights Reserved.

BOX CULVERT ANALYSIS
COMPUTATION OF CULVERT PERFORMANCE CURVE

June 4, 1994
ALT 1, SEG 2, CHAN I (BOX @ S-NAT)

==========

PROGRAM INPUT DATA:

DESCRIPTION	VALUE
Culvert Span (Width of Opening) (feet).....	12.96
Culvert Rise (Height of Opening) (feet).....	5.00
FHWA Chart Number (8,9,10,11,12 or 13).....	9
Scale Number on Chart (Type of Culvert Entrance).....	2
Manning's Roughness Coefficient (n-value).....	0.0130
Entrance Loss Coefficient of Culvert Opening.....	0.20
Culvert Length (feet).....	100.0
Culvert Slope (feet per foot).....	0.0023 S NAT

==========

PROGRAM RESULTS:

Flow Rate (cfs)	Tailwater Depth (ft)	Headwater (ft) Inlet Control	Headwater (ft) Outlet Control	Normal Depth (ft)	Critical Depth (ft)	Depth at Outlet (ft)	Outlet Velocity (fps)
1296.0	2.00	14.11	13.61	5.00	5.00	5.00	20.00
1296.0	3.00	14.11	13.61	5.00	5.00	5.00	20.00
1296.0	4.00	14.11	13.61	5.00	5.00	5.00	20.00
1296.0	5.00	14.11	13.61	5.00	5.00	5.00	20.00
1296.0	6.00	14.11	14.61	5.00	5.00	5.00	20.00

OK

==========

BOX CULVERT ANALYSIS COMPUTER PROGRAM Version 1.6 Copyright (c) 1986
Dodson & Associates, Inc., 7015 W. Tidwell, #107, Houston, TX 77092
(713) 895-8322. All Rights Reserved.

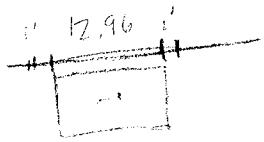

BOX CULVERT ANALYSIS
COMPUTATION OF CULVERT PERFORMANCE CURVE

June 4, 1994
ALT 1, SEG 2, CHAN I (BOX @ S-MIN)

==========

PROGRAM INPUT DATA:

DESCRIPTION	VALUE
Culvert Span (Width of Opening) (feet).....	12.96
Culvert Rise (Height of Opening) (feet).....	5.00
FHWA Chart Number (8,9,10,11,12 or 13).....	9
Scale Number on Chart (Type of Culvert Entrance).....	2
Manning's Roughness Coefficient (n-value).....	0.0130
Entrance Loss Coefficient of Culvert Opening.....	0.20
Culvert Length (feet).....	100.0
Culvert Slope (feet per foot).....	0.0010 S_{min}

==========

PROGRAM RESULTS:

Flow Rate (cfs)	Tailwater Depth (ft)	Headwater (ft) Inlet Control	Headwater (ft) Outlet Control	Normal Depth (ft)	Critical Depth (ft)	Depth at Outlet (ft)	Outlet Velocity (fps)
1296.0	2.00	14.11	13.74	~~5.00~~	~~5.00~~	~~5.00~~	20.00
1296.0	3.00	14.11	13.74	5.00	5.00	5.00	20.00
1296.0	4.00	14.11	13.74	5.00	5.00	5.00	20.00
1296.0	5.00	14.11	13.74	5.00	5.00	5.00	20.00
1296.0	6.00	14.11	14.74	5.00	5.00	5.00	20.00

USE 5' O.K.

==========

BOX CULVERT ANALYSIS COMPUTER PROGRAM Version 1.6 Copyright (c) 1986
Dodson & Associates, Inc., 7015 W. Tidwell, #107, Houston, TX 77092
(713) 895-8322. All Rights Reserved.

BOX CULVERT ANALYSIS
COMPUTATION OF CULVERT PERFORMANCE CURVE

June 6, 1994
ALT 1, SEG ~~1~~ 3, CHAN I (BOX @ S-MAX)

==========

PROGRAM INPUT DATA:

DESCRIPTION	VALUE
Culvert Span (Width of Opening) (feet).....	28.50
Culvert Rise (Height of Opening) (feet).....	5.00
FHWA Chart Number (8,9,10,11,12 or 13).....	9
Scale Number on Chart (Type of Culvert Entrance).....	2
Manning's Roughness Coefficient (n-value).....	0.0130
Entrance Loss Coefficient of Culvert Opening.....	0.20
Culvert Length (feet).....	100.0
Culvert Slope (feet per foot).....	0.0041 (WAT-MAX)

==========

PROGRAM RESULTS:

Flow Rate (cfs)	Tailwater Depth (ft)	Headwater (ft) Inlet Control	Headwater (ft) Outlet Control	Normal Depth (ft)	Critical Depth (ft)	Depth at Outlet (ft)	Outlet Velocity (fps)
1296.0	2.00	6.21	5.86	3.25	4.00	3.25	14.00
1296.0	3.00	6.21	5.86	3.25	4.00	3.25	14.00
1296.0	4.00	6.21	5.86	3.25	4.00	3.25	14.00
1296.0	5.00	6.21	6.36	3.25	4.00	5.00	9.09

==========

BOX CULVERT ANALYSIS COMPUTER PROGRAM Version 1.6 Copyright (c) 1986
Dodson & Associates, Inc., 7015 W. Tidwell, #107, Houston, TX 77092
(713) 895-8322. All Rights Reserved.

BOX CULVERT ANALYSIS
COMPUTATION OF CULVERT PERFORMANCE CURVE

June 6, 1994
ALT 1, SEG ~~1~~ 3, CHAN I (BOX @ S-MIN)

PROGRAM INPUT DATA:

DESCRIPTION	VALUE
Culvert Span (Width of Opening) (feet).....	40.10
Culvert Rise (Height of Opening) (feet).....	5.00
FHWA Chart Number (8,9,10,11,12 or 13).....	9
Scale Number on Chart (Type of Culvert Entrance).....	2
Manning's Roughness Coefficient (n-value).....	0.0130
Entrance Loss Coefficient of Culvert Opening.....	0.20
Culvert Length (feet).....	100.0
Culvert Slope (feet per foot).....	0.0010

MIN

PROGRAM RESULTS:

Flow Rate (cfs)	Tailwater Depth (ft)	Headwater (ft) Inlet Control	Headwater (ft) Outlet Control	Normal Depth (ft)	Critical Depth (ft)	Depth at Outlet (ft)	Outlet Velocity (fps)
1296.0	2.00	4.93	4.88	4.00	3.19	4.00	8.07
1296.0	3.00	4.93	4.88	4.00	3.19	4.00	8.07
1296.0	4.00	4.93	4.88	4.00	3.19	4.00	8.07
1296.0	5.00	4.93	5.79	4.00	3.19	5.00	6.46

BOX CULVERT ANALYSIS COMPUTER PROGRAM Version 1.6 Copyright (c) 1986
Dodson & Associates, Inc., 7015 W. Tidwell, #107, Houston, TX 77092
(713) 895-8322. All Rights Reserved.

TRAPEZOIDAL CHANNEL ANALYSIS
NORMAL DEPTH COMPUTATION

June 6, 1994
ALT 1, SEG 4, CHAN B (NAT)

==========

PROGRAM INPUT DATA:

DESCRIPTION	VALUE
Flow Rate (cubic feet per second)	1132.0
Channel Bottom Slope (feet per foot)	0.0021
Manning's Roughness Coefficient (n-value)	0.0360
Channel Side Slope - Left Side (horizontal/vertical)	3.00
Channel Side Slope - Right Side (horizontal/vertical)	3.00
Channel Bottom Width (feet)	21.7

==========

PROGRAM RESULTS: 1' freeboard

DESCRIPTION	VALUE
Normal Depth (feet)	6.00
Flow Velocity (feet per second)	4.75
Froude Number (Flow is Sub-Critical)	0.412
Velocity Head (feet)	0.35
Energy Head (feet)	6.35
Cross-Sectional Area of Flow (square feet)	238.29
Top Width of Flow (feet)	57.71

==========

TRAPEZOIDAL CHANNEL ANALYSIS COMPUTER PROGRAM, Version 1.3 (c) 1986
Dodson & Associates, Inc., 7015 W. Tidwell, #107, Houston, TX 77092
(713) 895-8322. A manual with equations & flow chart is available.

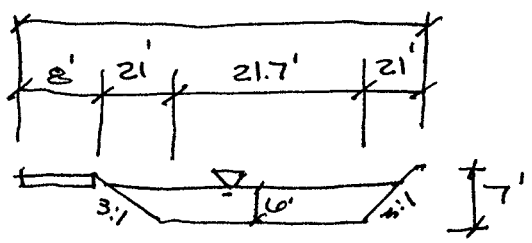

TRAPEZOIDAL CHANNEL ANALYSIS
NORMAL DEPTH COMPUTATION

June 3, 1994
ALT 1, SEG 5, CHAN D (PRO)

==========

PROGRAM INPUT DATA:

DESCRIPTION	VALUE
Flow Rate (cubic feet per second).....	780.0
Channel Bottom Slope (feet per foot).....	0.0072
Manning's Roughness Coefficient (n-value).....	0.0360
Channel Side Slope - Left Side (horizontal/vertical)....	0.00
Channel Side Slope - Right Side (horizontal/vertical)...	3.00
Channel Bottom Width (feet).....	47.7

==========

PROGRAM RESULTS:

DESCRIPTION	VALUE
Normal Depth (feet).....	2.52
Flow Velocity (feet per second).....	6.00
Froude Number (Flow is Sub-Critical).....	0.690
Velocity Head (feet).....	0.56
Energy Head (feet).....	3.08
Cross-Sectional Area of Flow (square feet).....	129.94
Top Width of Flow (feet).....	55.27

4' depth total: 1' freeboard

==========

TRAPEZOIDAL CHANNEL ANALYSIS COMPUTER PROGRAM, Version 1.3 (c) 1986
Dodson & Associates, Inc., 7015 W. Tidwell, #107, Houston, TX 77092
(713) 895-8322. A manual with equations & flow chart is available.

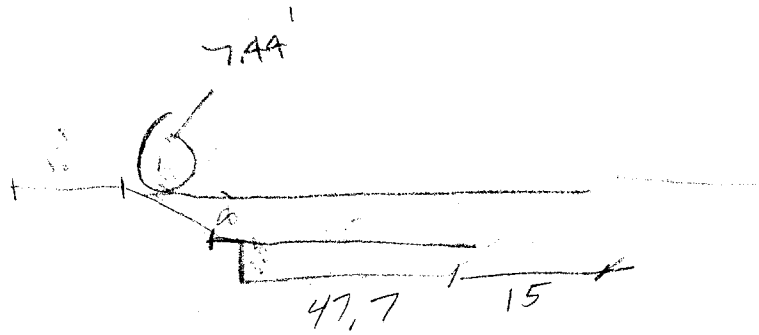

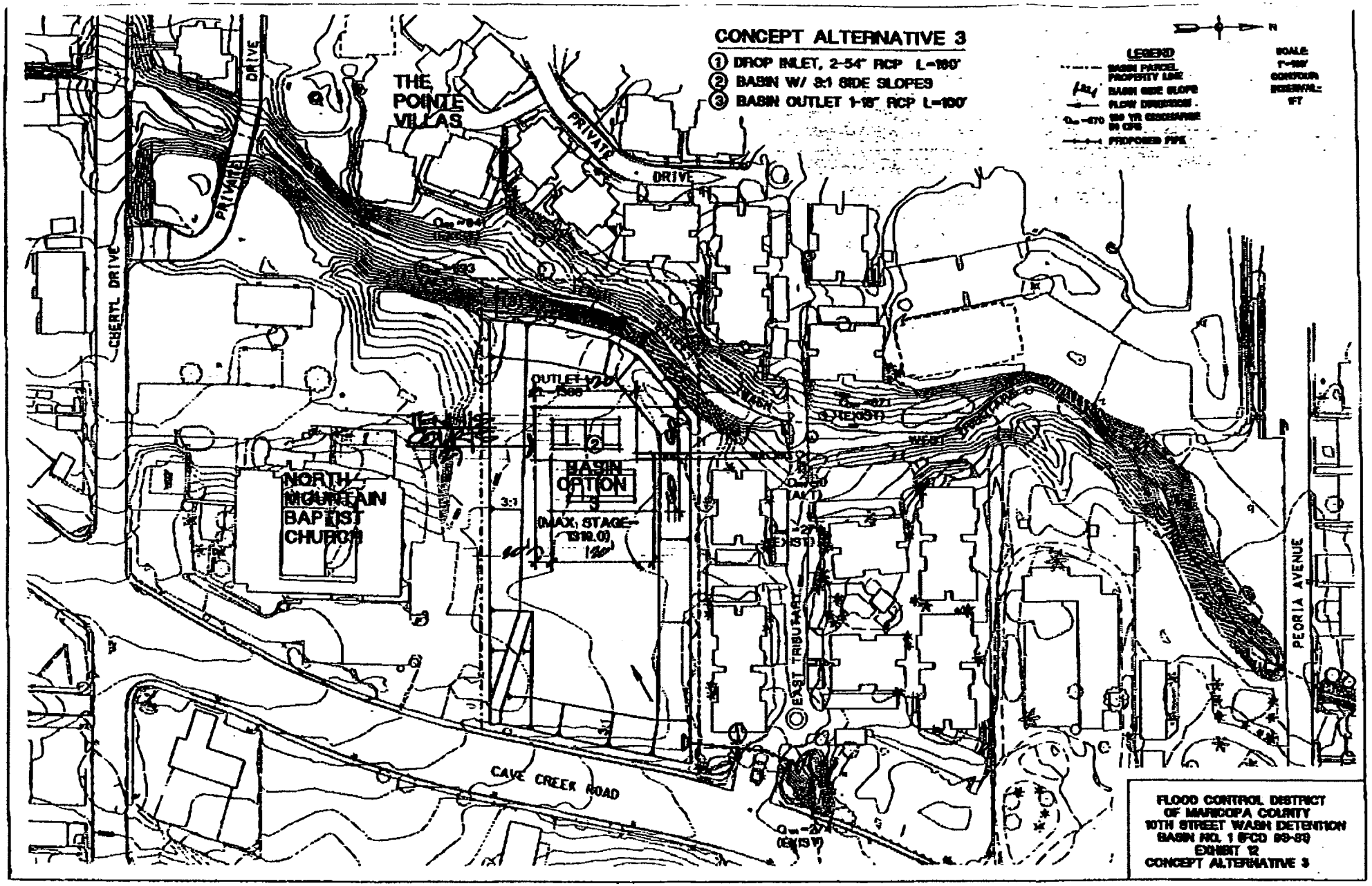

Attn: Michael Lopez

TRAPEZOIDAL CHANNEL ANALYSIS
NORMAL DEPTH COMPUTATION

June 3, 1994
ALT 1, SEG 5, CHAN D (PRO)

==========

PROGRAM INPUT DATA:

DESCRIPTION	VALUE
Flow Rate (cubic feet per second).....	434.0
Channel Bottom Slope (feet per foot).....	0.0072
Manning's Roughness Coefficient (n-value).....	0.0360
Channel Side Slope - Left Side (horizontal/vertical)....	3.00
Channel Side Slope - Right Side (horizontal/vertical)...	3.00
Channel Bottom Width (feet).....	63.3

==========

PROGRAM RESULTS:

DESCRIPTION	VALUE
Normal Depth (feet).....	1.48
Flow Velocity (feet per second).....	4.35
Froude Number (Flow is Sub-Critical).....	0.651
Velocity Head (feet).....	0.29
Energy Head (feet).....	1.77
Cross-Sectional Area of Flow (square feet).....	99.86
Top Width of Flow (feet).....	72.12

==========

TRAPEZOIDAL CHANNEL ANALYSIS COMPUTER PROGRAM, Version 1.3 (c) 1986
Dodson & Associates, Inc., 7015 W. Tidwell, #107, Houston, TX 77092
(713) 895-8322. A manual with equations & flow chart is available.

TRAPEZOIDAL CHANNEL ANALYSIS
NORMAL DEPTH COMPUTATION

June 6, 1994
ALT 1, SEG 6, CHAN F (NAT)

PROGRAM INPUT DATA:

DESCRIPTION	VALUE
Flow Rate (cubic feet per second)	780.0
Channel Bottom Slope (feet per foot)	0.0035
Manning's Roughness Coefficient (n-value)	0.0360
Channel Side Slope - Left Side (horizontal/vertical)	3.00
Channel Side Slope - Right Side (horizontal/vertical)	3.00
Channel Bottom Width (feet)	39.5

PROGRAM RESULTS:

DESCRIPTION	VALUE
Normal Depth (feet)	3.32
Flow Velocity (feet per second)	4.75
Froude Number (Flow is Sub-Critical)	0.504
Velocity Head (feet)	0.35
Energy Head (feet)	3.67
Cross-Sectional Area of Flow (square feet)	164.21
Top Width of Flow (feet)	59.42

TRAPEZOIDAL CHANNEL ANALYSIS COMPUTER PROGRAM, Version 1.3 (c) 1986
Dodson & Associates, Inc., 7015 W. Tidwell, #107, Houston, TX 77092
(713) 895-8322. A manual with equations & flow chart is available.

5.01' depth ∴ 0.99' freeboard ∴ O.K.

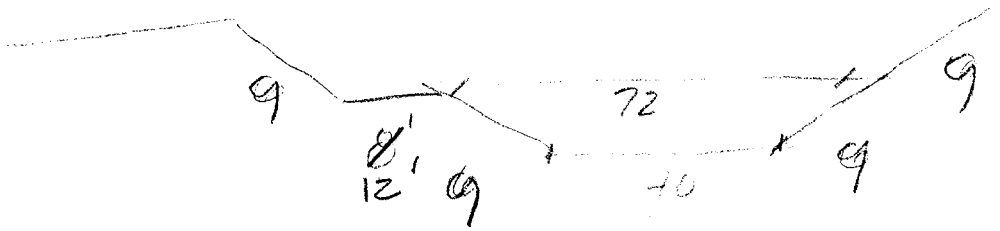

TRAPEZOIDAL CHANNEL ANALYSIS
NORMAL DEPTH COMPUTATION

June 6, 1994
ALT 1, SEG 6, CHAN F (NAT)

==========

PROGRAM INPUT DATA:

DESCRIPTION	VALUE
Flow Rate (cubic feet per second)	434.0
Channel Bottom Slope (feet per foot)	0.0035
Manning's Roughness Coefficient (n-value)	0.0360
Channel Side Slope - Left Side (horizontal/vertical)	3.00
Channel Side Slope - Right Side (horizontal/vertical)	3.00
Channel Bottom Width (feet)	72.4

==========

PROGRAM RESULTS:

DESCRIPTION	VALUE
Normal Depth (feet)	1.69
Flow Velocity (feet per second)	3.31
Froude Number (Flow is Sub-Critical)	0.463
Velocity Head (feet)	0.17
Energy Head (feet)	1.86
Cross-Sectional Area of Flow (square feet)	131.19
Top Width of Flow (feet)	82.60

==========

TRAPEZOIDAL CHANNEL ANALYSIS COMPUTER PROGRAM, Version 1.3 (c) 1986
Dodson & Associates, Inc., 7015 W. Tidwell, #107, Houston, TX 77092
(713) 895-8322. A manual with equations & flow chart is available.

TRAPEZOIDAL CHANNEL ANALYSIS
NORMAL DEPTH COMPUTATION

June 4, 1994
ALT 1, SEG 7A CHAN F (PRO)

==========

PROGRAM INPUT DATA:

DESCRIPTION	VALUE
Flow Rate (cubic feet per second).....	780.0
Channel Bottom Slope (feet per foot).....	0.0058
Manning's Roughness Coefficient (n-value).....	0.0360
Channel Side Slope - Left Side (horizontal/vertical)....	3.00
Channel Side Slope - Right Side (horizontal/vertical)...	3.00
Channel Bottom Width (feet).....	28.0

==========

PROGRAM RESULTS:

DESCRIPTION	VALUE
Normal Depth (feet).....	3.40
Flow Velocity (feet per second).....	6.00
Froude Number (Flow is Sub-Critical).....	0.646
Velocity Head (feet).....	0.56
Energy Head (feet).....	3.96
Cross-Sectional Area of Flow (square feet).....	129.89
Top Width of Flow (feet).....	48.40

==========

TRAPEZOIDAL CHANNEL ANALYSIS COMPUTER PROGRAM, Version 1.3 (c) 1986
Dodson & Associates, Inc., 7015 W. Tidwell, #107, Houston, TX 77092
(713) 895-8322. A manual with equations & flow chart is available.

5.01' depth: 0.99' freeboard: O.K.

TRAPEZOIDAL CHANNEL ANALYSIS
NORMAL DEPTH COMPUTATION

June 4, 1994
ALT 1, SEG 7A CHAN F (PRO)

==========

PROGRAM INPUT DATA:

DESCRIPTION	VALUE
Flow Rate (cubic feet per second).....	434.0
Channel Bottom Slope (feet per foot).....	0.0058
Manning's Roughness Coefficient (n-value).....	0.0360
Channel Side Slope - Left Side (horizontal/vertical)....	3.00
Channel Side Slope - Right Side (horizontal/vertical)...	3.00
Channel Bottom Width (feet).....	60.4

==========

PROGRAM RESULTS:

DESCRIPTION	VALUE
Normal Depth (feet).....	1.61 + 3.40 = 5.01
Flow Velocity (feet per second).....	4.12
Froude Number (Flow is Sub-Critical).....	0.592
Velocity Head (feet).....	0.26
Energy Head (feet).....	1.88
Cross-Sectional Area of Flow (square feet).....	105.33
Top Width of Flow (feet).....	70.09

==========

TRAPEZOIDAL CHANNEL ANALYSIS COMPUTER PROGRAM, Version 1.3 (c) 1986
Dodson & Associates, Inc., 7015 W. Tidwell, #107, Houston, TX 77092
(713) 895-8322. A manual with equations & flow chart is available.

BOX CULVERT ANALYSIS
COMPUTATION OF CULVERT PERFORMANCE CURVE

June 4, 1994
ALT 1, SEG 7B, CHAN I (BOX @ S-NAT)

==========

PROGRAM INPUT DATA:

DESCRIPTION	VALUE
Culvert Span (Width of Opening) (feet).....	6.16
Culvert Rise (Height of Opening) (feet).....	5.00
FHWA Chart Number (8,9,10,11,12 or 13).....	9
Scale Number on Chart (Type of Culvert Entrance).....	2
Manning's Roughness Coefficient (n-value).....	0.0130
Entrance Loss Coefficient of Culvert Opening.....	0.20
Culvert Length (feet).....	100.0
Culvert Slope (feet per foot).....	0.0098

==========

PROGRAM RESULTS:

Flow Rate (cfs)	Tailwater Depth (ft)	Headwater (ft) Inlet Control	Headwater (ft) Outlet Control	Normal Depth (ft)	Critical Depth (ft)	Depth at Outlet (ft)	Outlet Velocity (fps)
616.0	2.00	14.11	13.45	5.00	5.00	5.00	20.00
616.0	3.00	14.11	13.45	5.00	5.00	5.00	20.00
616.0	4.00	14.11	13.45	5.00	5.00	5.00	20.00
616.0	5.00	14.11	13.45	5.00	5.00	5.00	20.00
616.0	6.00	14.11	14.45	5.00	5.00	5.00	20.00

~~use~~ O.K.

==========

BOX CULVERT ANALYSIS COMPUTER PROGRAM Version 1.6 Copyright (c) 1986
Dodson & Associates, Inc., 7015 W. Tidwell, #107, Houston, TX 77092
(713) 895-8322. All Rights Reserved.

BOX CULVERT ANALYSIS
COMPUTATION OF CULVERT PERFORMANCE CURVE

June 4, 1994
ALT 1, SEG 7B, CHAN I (BOX @ S-MIN)

==========

PROGRAM INPUT DATA:

DESCRIPTION	VALUE
Culvert Span (Width of Opening) (feet).....	6.16
Culvert Rise (Height of Opening) (feet).....	5.00
FHWA Chart Number (8,9,10,11,12 or 13).....	9
Scale Number on Chart (Type of Culvert Entrance).....	2
Manning's Roughness Coefficient (n-value).....	0.0130
Entrance Loss Coefficient of Culvert Opening.....	0.20
Culvert Length (feet).....	100.0
Culvert Slope (feet per foot).....	0.0032

==========

PROGRAM RESULTS:

Flow Rate (cfs)	Tailwater Depth (ft)	Headwater (ft) Inlet Control	Headwater (ft) Outlet Control	Normal Depth (ft)	Critical Depth (ft)	Depth at Outlet (ft)	Outlet Velocity (fps)
616.0	2.00	14.11	14.11	5.00	5.00	5.00	20.00
616.0	3.00	14.11	14.11	5.00	5.00	5.00	20.00
616.0	4.00	14.11	14.11	5.00	5.00	5.00	20.00
616.0	5.00	14.11	14.11	5.00	5.00	5.00	20.00
616.0	6.00	14.11	15.11	5.00	5.00	5.00	20.00

==========

BOX CULVERT ANALYSIS COMPUTER PROGRAM Version 1.6 Copyright (c) 1986
Dodson & Associates, Inc., 7015 W. Tidwell, #107, Houston, TX 77092
(713) 895-8322. All Rights Reserved.

TRAPEZOIDAL CHANNEL ANALYSIS
NORMAL DEPTH COMPUTATION

June 3, 1994
ALT 1, SEG 8, CHAN B (PRO) · ← can go to natural due to nat. slope.

==========

PROGRAM INPUT DATA:

DESCRIPTION	VALUE
Flow Rate (cubic feet per second).....	616.0
Channel Bottom Slope (feet per foot).....	0.0019 (MAX) NAT SLOPE
Manning's Roughness Coefficient (n-value).....	0.0360
Channel Side Slope - Left Side (horizontal/vertical)....	3.00
Channel Side Slope - Right Side (horizontal/vertical)...	3.00
Channel Bottom Width (feet).....	16.1

==========

PROGRAM RESULTS:

DESCRIPTION	VALUE	
Normal Depth (feet).....	5.00	— 1.0' freeboard
Flow Velocity (feet per second).....	3.96	6.0 fps (max.)
Froude Number (Flow is Sub-Critical).....	0.379	
Velocity Head (feet).....	0.24	
Energy Head (feet).....	5.25	
Cross-Sectional Area of Flow (square feet).....	155.70	
Top Width of Flow (feet).....	46.13	

this can go to natural

==========

TRAPEZOIDAL CHANNEL ANALYSIS COMPUTER PROGRAM, Version 1.3 (c) 1986
Dodson & Associates, Inc., 7015 W. Tidwell, #107, Houston, TX 77092
(713) 895-8322. A manual with equations & flow chart is available.

TRAPEZOIDAL CHANNEL ANALYSIS
NORMAL DEPTH COMPUTATION

June 6, 1994
ALT 1, SEG 9, CHAN G (GUNITE) @ S_{max}.

==========

PROGRAM INPUT DATA:

DESCRIPTION	VALUE
Flow Rate (cubic feet per second)	616.0
Channel Bottom Slope (feet per foot)	0.0122
Manning's Roughness Coefficient (n-value)	0.0190
Channel Side Slope - Left Side (horizontal/vertical)	2.00
Channel Side Slope - Right Side (horizontal/vertical)	2.00
Channel Bottom Width (feet)	4.0

4' min. for constructability

==========

(see attached for min)

PROGRAM RESULTS:

DESCRIPTION	VALUE
Normal Depth (feet)	3.78
Flow Velocity (feet per second)	14.12
Froude Number (Flow is Super-Critical)	1.646
Velocity Head (feet)	3.09
Energy Head (feet)	6.87
Cross-Sectional Area of Flow (square feet)	43.64
Top Width of Flow (feet)	19.11

==========

TRAPEZOIDAL CHANNEL ANALYSIS COMPUTER PROGRAM, Version 1.3 (c) 1986
Dodson & Associates, Inc., 7015 W. Tidwell, #107, Houston, TX 77092
(713) 895-8322. A manual with equations & flow chart is available.

TRAPEZOIDAL CHANNEL ANALYSIS
NORMAL DEPTH COMPUTATION

June 4, 1994
ALT 1, SEG 9, CHAN G (GUNITE) @ S_{MAX}

==========

PROGRAM INPUT DATA:

DESCRIPTION	VALUE
Flow Rate (cubic feet per second).....	616.0
Channel Bottom Slope (feet per foot).....	0.0122 S_{MAX}
Manning's Roughness Coefficient (n-value).....	0.0190
Channel Side Slope - Left Side (horizontal/vertical)....	2.00
Channel Side Slope - Right Side (horizontal/vertical)...	2.00
Channel Bottom Width (feet).....	2.0

==========

PROGRAM RESULTS:

DESCRIPTION	VALUE
Normal Depth (feet).....	4.19 < 4'
Flow Velocity (feet per second).....	14.15 < 15 FPS
Froude Number (Flow is Super-Critical).....	1.638
Velocity Head (feet).....	3.11
Energy Head (feet).....	7.30
Cross-Sectional Area of Flow (square feet).....	43.52
Top Width of Flow (feet).....	18.77

==========

TRAPEZOIDAL CHANNEL ANALYSIS COMPUTER PROGRAM, Version 1.3 (c) 1986
Dodson & Associates, Inc., 7015 W. Tidwell, #107, Houston, TX 77092
(713) 895-8322. A manual with equations & flow chart is available.

TRAPEZOIDAL CHANNEL ANALYSIS
NORMAL DEPTH COMPUTATION

June 6, 1994
ALT 1, SEG 9, CHAN G (GUNITE) @ S_{min}.

==========

PROGRAM INPUT DATA:

DESCRIPTION	VALUE
Flow Rate (cubic feet per second)	616.0
Channel Bottom Slope (feet per foot)	0.0033
Manning's Roughness Coefficient (n-value)	0.0190
Channel Side Slope - Left Side (horizontal/vertical)	2.00
Channel Side Slope - Right Side (horizontal/vertical)	2.00
Channel Bottom Width (feet)	4.0

4' min. for constructability
(see attached for min)

==========

PROGRAM RESULTS:

DESCRIPTION	VALUE
Normal Depth (feet)	5.05
Flow Velocity (feet per second)	8.66
Froude Number (Flow is Sub-Critical)	0.890
Velocity Head (feet)	1.17
Energy Head (feet)	6.21
Cross-Sectional Area of Flow (square feet)	71.11
Top Width of Flow (feet)	24.18

==========

TRAPEZOIDAL CHANNEL ANALYSIS COMPUTER PROGRAM, Version 1.3 (c) 1986
Dodson & Associates, Inc., 7015 W. Tidwell, #107, Houston, TX 77092
(713) 895-8322. A manual with equations & flow chart is available.

TRAPEZOIDAL CHANNEL ANALYSIS
NORMAL DEPTH COMPUTATION

June 6, 1994
ALT 1, SEG 9, CHAN G (GUNITE) @ S min

==========

PROGRAM INPUT DATA:

DESCRIPTION	VALUE
Flow Rate (cubic feet per second)	616.0
Channel Bottom Slope (feet per foot)	0.0033
Manning's Roughness Coefficient (n-value)	0.0190
Channel Side Slope - Left Side (horizontal/vertical)	2.00
Channel Side Slope - Right Side (horizontal/vertical)	2.00
Channel Bottom Width (feet)	2.0

==========

PROGRAM RESULTS:

DESCRIPTION	VALUE
Normal Depth (feet)	5.47
Flow Velocity (feet per second)	8.71
Froude Number (Flow is Sub-Critical)	0.892
Velocity Head (feet)	1.18
Energy Head (feet)	6.65
Cross-Sectional Area of Flow (square feet)	70.69
Top Width of Flow (feet)	23.86

==========

TRAPEZOIDAL CHANNEL ANALYSIS COMPUTER PROGRAM, Version 1.3 (c) 1986
Dodson & Associates, Inc., 7015 W. Tidwell, #107, Houston, TX 77092
(713) 895-8322. A manual with equations & flow chart is available.

TRAPEZOIDAL CHANNEL ANALYSIS
NORMAL DEPTH COMPUTATION

June 3, 1994
ALT 1, SEG 10, CHAN J (PRO.-GRASS LINED)

==========

PROGRAM INPUT DATA:

DESCRIPTION	VALUE
Flow Rate (cubic feet per second).....	616.0
Channel Bottom Slope (feet per foot).....	0.0097
Manning's Roughness Coefficient (n-value).....	0.0360
Channel Side Slope - Left Side (horizontal/vertical)....	2.50
Channel Side Slope - Right Side (horizontal/vertical)...	2.66
Channel Bottom Width (feet).....	12.0

==========

PROGRAM RESULTS:

DESCRIPTION	VALUE
Normal Depth (feet).....	3.78 ← establish 12' maintenance road bench @ this elev.
Flow Velocity (feet per second).....	7.49
Froude Number (Flow is Sub-Critical).....	0.816
Velocity Head (feet).....	0.87
Energy Head (feet).....	4.65
Cross-Sectional Area of Flow (square feet).....	82.29
Top Width of Flow (feet).....	31.52

==========

TRAPEZOIDAL CHANNEL ANALYSIS COMPUTER PROGRAM, Version 1.3 (c) 1986
Dodson & Associates, Inc., 7015 W. Tidwell, #107, Houston, TX 77092
(713) 895-8322. A manual with equations & flow chart is available.

TRAPEZOIDAL CHANNEL ANALYSIS
NORMAL DEPTH COMPUTATION

ok.

June 4, 1994
ALT 1, SEG 8 CHAN G (GUNITE)

==========

PROGRAM INPUT DATA:

DESCRIPTION	VALUE
Flow Rate (cubic feet per second).....	616.0
Channel Bottom Slope (feet per foot).....	0.0019
Manning's Roughness Coefficient (n-value).....	0.0190
Channel Side Slope - Left Side (horizontal/vertical)....	2.00
Channel Side Slope - Right Side (horizontal/vertical)...	2.00
Channel Bottom Width (feet).....	7.6

MAX SLOPE

==========

PROGRAM RESULTS:

DESCRIPTION	VALUE
Normal Depth (feet).....	5.00
Flow Velocity (feet per second).....	6.99
Froude Number (Flow is Sub-Critical).....	0.690
Velocity Head (feet).....	0.76
Energy Head (feet).....	5.76
Cross-Sectional Area of Flow (square feet).....	88.07
Top Width of Flow (feet).....	27.61

1' freeboard

(HIGHEST CAN GET) 15 FPS MAX

==========

TRAPEZOIDAL CHANNEL ANALYSIS COMPUTER PROGRAM, Version 1.3 (c) 1986
Dodson & Associates, Inc., 7015 W. Tidwell, #107, Houston, TX 77092
(713) 895-8322. A manual with equations & flow chart is available.

III. Normal Depth Computations for Alternative No. 2

Alt No. 2
Q.C'd By: MSS 6/6/94

TRAPEZOIDAL CHANNEL ANALYSIS
NORMAL DEPTH COMPUTATION

June 4, 1994
ALT 2, SEG 1, CHAN H (ACDC)

==========

PROGRAM INPUT DATA:

DESCRIPTION	VALUE	
Flow Rate (cubic feet per second).....	1296.0	
Channel Bottom Slope (feet per foot).....	0.0078	S_{max}
Manning's Roughness Coefficient (n-value).....	0.0130	
Channel Side Slope - Left Side (horizontal/vertical)....	0.00	
Channel Side Slope - Right Side (horizontal/vertical)...	0.00	
Channel Bottom Width (feet).....	16.5	

==========

PROGRAM RESULTS:

DESCRIPTION	VALUE	
Normal Depth (feet).....	4.00	
Flow Velocity (feet per second).....	19.56	< 20
Froude Number (Flow is Super-Critical).....	1.723	
Velocity Head (feet).....	5.94	
Energy Head (feet).....	9.95	
Cross-Sectional Area of Flow (square feet).....	66.25	
Top Width of Flow (feet).....	16.55	

==========

TRAPEZOIDAL CHANNEL ANALYSIS COMPUTER PROGRAM, Version 1.3 (c) 1986
Dodson & Associates, Inc., 7015 W. Tidwell, #107, Houston, TX 77092
(713) 895-8322. A manual with equations & flow chart is available.

10th Street Wash
Initial Alts.
5652.01, File Folder 7
By: JS 6/4/94

TRAPEZOIDAL CHANNEL ANALYSIS
NORMAL DEPTH COMPUTATION

June 4, 1994
ALT 2, SEG 2, CHAN E (PRO) can go to natural

==========

PROGRAM INPUT DATA:

DESCRIPTION	VALUE
Flow Rate (cubic feet per second).....	877.0
Channel Bottom Slope (feet per foot).....	0.0023 MAX SLOPE
Manning's Roughness Coefficient (n-value).....	0.0360
Channel Side Slope - Left Side (horizontal/vertical)....	3.00
Channel Side Slope - Right Side (horizontal/vertical)...	3.00
Channel Bottom Width (feet).....	57.5

==========

PROGRAM RESULTS:

DESCRIPTION	VALUE
Normal Depth (feet).....	3.29 can go to natural
Flow Velocity (feet per second).....	3.96 < 6 FPS
Froude Number (Flow is Sub-Critical).....	0.412
Velocity Head (feet).....	0.24
Energy Head (feet).....	3.53
Cross-Sectional Area of Flow (square feet).....	221.50
Top Width of Flow (feet).....	77.23

==========

TRAPEZOIDAL CHANNEL ANALYSIS COMPUTER PROGRAM, Version 1.3 (c) 1986
Dodson & Associates, Inc., 7015 W. Tidwell, #107, Houston, TX 77092
(713) 895-8322. A manual with equations & flow chart is available.

TRAPEZOIDAL CHANNEL ANALYSIS
NORMAL DEPTH COMPUTATION

June 4, 1994
ALT 2, SEG 2, CHAN E (PRO)

==========

PROGRAM INPUT DATA:

DESCRIPTION	VALUE
Flow Rate (cubic feet per second).....	419.0
Channel Bottom Slope (feet per foot).....	0.0023 MAX Slope
Manning's Roughness Coefficient (n-value).....	0.0360
Channel Side Slope - Left Side (horizontal/vertical)....	3.00
Channel Side Slope - Right Side (horizontal/vertical)...	3.00
Channel Bottom Width (feet).....	85.2

==========

PROGRAM RESULTS:

DESCRIPTION	VALUE
Normal Depth (feet).....	1.71 + 3.29 = 5.0'
Flow Velocity (feet per second).....	2.71
Froude Number (Flow is Sub-Critical).....	0.376
Velocity Head (feet).....	0.11
Energy Head (feet).....	1.82
Cross-Sectional Area of Flow (square feet).....	154.33
Top Width of Flow (feet).....	95.48

==========

TRAPEZOIDAL CHANNEL ANALYSIS COMPUTER PROGRAM, Version 1.3 (c) 1986
Dodson & Associates, Inc., 7015 W. Tidwell, #107, Houston, TX 77092
(713) 895-8322. A manual with equations & flow chart is available.

TRAPEZOIDAL CHANNEL ANALYSIS
NORMAL DEPTH COMPUTATION

June 3, 1994
ALT 2, SEG 3, CHAN E (PRO) — cougo to natural

==========

PROGRAM INPUT DATA:

DESCRIPTION	VALUE
Flow Rate (cubic feet per second).....	877.0
Channel Bottom Slope (feet per foot).....	0.0041 SMAK
Manning's Roughness Coefficient (n-value).....	0.0360
Channel Side Slope - Left Side (horizontal/vertical)....	3.00
Channel Side Slope - Right Side (horizontal/vertical)...	3.00
Channel Bottom Width (feet).....	66.0

==========

PROGRAM RESULTS:

DESCRIPTION	VALUE
Normal Depth (feet).....	2.58
Flow Velocity (feet per second).....	4.61 — Not @ 6 fps cougo to natural
Froude Number (Flow is Sub-Critical).....	0.532
Velocity Head (feet).....	0.33
Energy Head (feet).....	2.91
Cross-Sectional Area of Flow (square feet).....	190.04
Top Width of Flow (feet).....	81.46

==========

TRAPEZOIDAL CHANNEL ANALYSIS COMPUTER PROGRAM, Version 1.3 (c) 1986
Dodson & Associates, Inc., 7015 W. Tidwell, #107, Houston, TX 77092
(713) 895-8322. A manual with equations & flow chart is available.

TRAPEZOIDAL CHANNEL ANALYSIS
NORMAL DEPTH COMPUTATION

June 3, 1994
ALT 2, SEG 3, CHAN E (PRO)

==========

PROGRAM INPUT DATA:

DESCRIPTION	VALUE
Flow Rate (cubic feet per second).....	419.0
Channel Bottom Slope (feet per foot).....	0.0041
Manning's Roughness Coefficient (n-value).....	0.0360
Channel Side Slope - Left Side (horizontal/vertical)....	3.00
Channel Side Slope - Right Side (horizontal/vertical)...	3.00
Channel Bottom Width (feet).....	89.5

==========

PROGRAM RESULTS:

DESCRIPTION	VALUE
Normal Depth (feet).....	1.40 + 2.58 = 3.98
Flow Velocity (feet per second).....	3.20
Froude Number (Flow is Sub-Critical).....	0.487
Velocity Head (feet).....	0.16
Energy Head (feet).....	1.56
Cross-Sectional Area of Flow (square feet).....	130.97
Top Width of Flow (feet).....	97.85

==========

TRAPEZOIDAL CHANNEL ANALYSIS COMPUTER PROGRAM, Version 1.3 (c) 1986
Dodson & Associates, Inc., 7015 W. Tidwell, #107, Houston, TX 77092
(713) 895-8322. A manual with equations & flow chart is available.

TRAPEZOIDAL CHANNEL ANALYSIS
NORMAL DEPTH COMPUTATION

June 6, 1994
ALT 2, SEG 4, CHAN D (PRO)

==========

PROGRAM INPUT DATA:

DESCRIPTION	VALUE
Flow Rate (cubic feet per second)	453.0
Channel Bottom Slope (feet per foot)	0.0066
Manning's Roughness Coefficient (n-value)	0.0360
Channel Side Slope - Left Side (horizontal/vertical)	0.00
Channel Side Slope - Right Side (horizontal/vertical)	3.00
Channel Bottom Width (feet)	17.9

==========

PROGRAM RESULTS:

DESCRIPTION	VALUE
Normal Depth (feet)	3.30
Flow Velocity (feet per second)	6.00
Froude Number (Flow is Sub-Critical)	0.641
Velocity Head (feet)	0.56
Energy Head (feet)	3.86
Cross-Sectional Area of Flow (square feet)	75.54
Top Width of Flow (feet)	27.81

==========

TRAPEZOIDAL CHANNEL ANALYSIS COMPUTER PROGRAM, Version 1.3 (c) 1986
Dodson & Associates, Inc., 7015 W. Tidwell, #107, Houston, TX 77092
(713) 895-8322. A manual with equations & flow chart is available.

5.99' depth : 1.01' freeboard

TRAPEZOIDAL CHANNEL ANALYSIS
NORMAL DEPTH COMPUTATION

June 6, 1994
ALT 2, SEG 4, CHAN D (PRO)

==========

PROGRAM INPUT DATA:

DESCRIPTION	VALUE
Flow Rate (cubic feet per second)	679.0
Channel Bottom Slope (feet per foot)	0.0066
Manning's Roughness Coefficient (n-value)	0.0360
Channel Side Slope - Left Side (horizontal/vertical)	3.00
Channel Side Slope - Right Side (horizontal/vertical)	3.00
Channel Bottom Width (feet)	35.8

==========

PROGRAM RESULTS:

DESCRIPTION	VALUE
Normal Depth (feet)	2.69
Flow Velocity (feet per second)	5.74
Froude Number (Flow is Sub-Critical)	0.671
Velocity Head (feet)	0.51
Energy Head (feet)	3.21
Cross-Sectional Area of Flow (square feet)	118.23
Top Width of Flow (feet)	51.97

==========

TRAPEZOIDAL CHANNEL ANALYSIS COMPUTER PROGRAM, Version 1.3 (c) 1986
Dodson & Associates, Inc., 7015 W. Tidwell, #107, Houston, TX 77092
(713) 895-8322. A manual with equations & flow chart is available.

TRAPEZOIDAL CHANNEL ANALYSIS
NORMAL DEPTH COMPUTATION

June 4, 1994
ALT 2, SEG 5, CHAN D (PRO)

==========

PROGRAM INPUT DATA:

DESCRIPTION	VALUE
Flow Rate (cubic feet per second).....	780.0
Channel Bottom Slope (feet per foot).....	0.0072
Manning's Roughness Coefficient (n-value).....	0.0360
Channel Side Slope - Left Side (horizontal/vertical)....	0.00
Channel Side Slope - Right Side (horizontal/vertical)...	3.00
Channel Bottom Width (feet).....	47.7

==========

PROGRAM RESULTS:

DESCRIPTION	VALUE
Normal Depth (feet).....	2.52
Flow Velocity (feet per second).....	6.00
Froude Number (Flow is Sub-Critical).....	0.690
Velocity Head (feet).....	0.56
Energy Head (feet).....	3.08
Cross-Sectional Area of Flow (square feet).....	129.98
Top Width of Flow (feet).....	55.32

==========

TRAPEZOIDAL CHANNEL ANALYSIS COMPUTER PROGRAM, Version 1.3 (c) 1986
Dodson & Associates, Inc., 7015 W. Tidwell, #107, Houston, TX 77092
(713) 895-8322. A manual with equations & flow chart is available.

TRAPEZOIDAL CHANNEL ANALYSIS
NORMAL DEPTH COMPUTATION

June 4, 1994
ALT 2, SEG 5, CHAN D (PRO)

==========

PROGRAM INPUT DATA:

DESCRIPTION	VALUE
Flow Rate (cubic feet per second).....	434.0
Channel Bottom Slope (feet per foot).....	0.0072
Manning's Roughness Coefficient (n-value).....	0.0360
Channel Side Slope - Left Side (horizontal/vertical)....	3.00
Channel Side Slope - Right Side (horizontal/vertical)...	3.00
Channel Bottom Width (feet).....	63.5

should be. 63.32

==========

PROGRAM RESULTS:

DESCRIPTION	VALUE
Normal Depth (feet).....	1.47 + 2.52 = 3.99
Flow Velocity (feet per second).....	4.34
Froude Number (Flow is Sub-Critical).....	0.651
Velocity Head (feet).....	0.29
Energy Head (feet).....	1.76
Cross-Sectional Area of Flow (square feet).....	99.99
Top Width of Flow (feet).....	72.35

==========

TRAPEZOIDAL CHANNEL ANALYSIS COMPUTER PROGRAM, Version 1.3 (c) 1986
Dodson & Associates, Inc., 7015 W. Tidwell, #107, Houston, TX 77092
(713) 895-8322. A manual with equations & flow chart is available.

TRAPEZOIDAL CHANNEL ANALYSIS
NORMAL DEPTH COMPUTATION

June 3, 1994
ALT 2, SEG 6, CHAN E (NAT)

==========

PROGRAM INPUT DATA:

DESCRIPTION	VALUE
Flow Rate (cubic feet per second).....	780.0
Channel Bottom Slope (feet per foot).....	0.0036
Manning's Roughness Coefficient (n-value).....	0.0360
Channel Side Slope - Left Side (horizontal/vertical)....	3.00
Channel Side Slope - Right Side (horizontal/vertical)...	3.00
Channel Bottom Width (feet).....	41.0

==========

PROGRAM RESULTS:

DESCRIPTION	VALUE
Normal Depth (feet).....	3.24
Flow Velocity (feet per second).....	4.75
Froude Number (Flow is Sub-Critical).....	0.508
Velocity Head (feet).....	0.35
Energy Head (feet).....	3.59
Cross-Sectional Area of Flow (square feet).....	164.15
Top Width of Flow (feet).....	60.42

==========

TRAPEZOIDAL CHANNEL ANALYSIS COMPUTER PROGRAM, Version 1.3 (c) 1986
Dodson & Associates, Inc., 7015 W. Tidwell, #107, Houston, TX 77092
(713) 895-8322. A manual with equations & flow chart is available.

TRAPEZOIDAL CHANNEL ANALYSIS
NORMAL DEPTH COMPUTATION

June 3, 1994
ALT 2, SEG 6, CHAN E (NAT)

==========

PROGRAM INPUT DATA:

DESCRIPTION	VALUE
Flow Rate (cubic feet per second).....	434.0
Channel Bottom Slope (feet per foot).....	0.0036
Manning's Roughness Coefficient (n-value).....	0.0360
Channel Side Slope - Left Side (horizontal/vertical)....	3.00
Channel Side Slope - Right Side (horizontal/vertical)...	3.00
Channel Bottom Width (feet).....	68.4

==========

PROGRAM RESULTS:

DESCRIPTION	VALUE
Normal Depth (feet).....	1.74 + 3.24 = 4.98
Flow Velocity (feet per second).....	3.39
Froude Number (Flow is Sub-Critical).....	0.469
Velocity Head (feet).....	0.18
Energy Head (feet).....	1.92
Cross-Sectional Area of Flow (square feet).....	127.92
Top Width of Flow (feet).....	78.84

==========

TRAPEZOIDAL CHANNEL ANALYSIS COMPUTER PROGRAM, Version 1.3 (c) 1986
Dodson & Associates, Inc., 7015 W. Tidwell, #107, Houston, TX 77092
(713) 895-8322. A manual with equations & flow chart is available.

Segs. 7a & 7b same as Alt 1

TRAPEZOIDAL CHANNEL ANALYSIS
NORMAL DEPTH COMPUTATION

June 4, 1994
ALT 2, SEG 9, CHAN H (CONC. ACDC)

==========

PROGRAM INPUT DATA:

DESCRIPTION	VALUE
Flow Rate (cubic feet per second).....	616.0
Channel Bottom Slope (feet per foot).....	0.0122 MAX SLOPE
Manning's Roughness Coefficient (n-value).....	0.0130
Channel Side Slope - Left Side (horizontal/vertical)....	0.00
Channel Side Slope - Right Side (horizontal/vertical)...	0.00
Channel Bottom Width (feet).....	5.4

==========

PROGRAM RESULTS:

DESCRIPTION	VALUE
Normal Depth (feet).....	6.00
Flow Velocity (feet per second).....	19.08
Froude Number (Flow is Super-Critical).....	1.372
Velocity Head (feet).....	5.65
Energy Head (feet).....	11.65
Cross-Sectional Area of Flow (square feet).....	32.29
Top Width of Flow (feet).....	5.38

==========

TRAPEZOIDAL CHANNEL ANALYSIS COMPUTER PROGRAM, Version 1.3 (c) 1986
Dodson & Associates, Inc., 7015 W. Tidwell, #107, Houston, TX 77092
(713) 895-8322. A manual with equations & flow chart is available.

IV. Normal Depth Computations for Alternative No. 3

ALT No. 3

QC'd By: JS 6/4/94

TRAPEZOIDAL CHANNEL ANALYSIS
NORMAL DEPTH COMPUTATION

June 4, 1994
ALT 3, SEG 1, CHAN G (GUNITE)

==========

PROGRAM INPUT DATA:

DESCRIPTION	VALUE
Flow Rate (cubic feet per second).....	1296.0
Channel Bottom Slope (feet per foot).....	0.0078 S MAX
Manning's Roughness Coefficient (n-value).....	0.0190
Channel Side Slope - Left Side (horizontal/vertical)....	2.00
Channel Side Slope - Right Side (horizontal/vertical)...	2.00
Channel Bottom Width (feet).....	15.5

==========

PROGRAM RESULTS:

DESCRIPTION	VALUE
Normal Depth (feet).....	4.00
Flow Velocity (feet per second).....	13.78
Froude Number (Flow is Super-Critical).....	1.405
Velocity Head (feet).....	2.95
Energy Head (feet).....	6.95
Cross-Sectional Area of Flow (square feet).....	94.08
Top Width of Flow (feet).....	31.51

==========

TRAPEZOIDAL CHANNEL ANALYSIS COMPUTER PROGRAM, Version 1.3 (c) 1986
Dodson & Associates, Inc., 7015 W. Tidwell, #107, Houston, TX 77092
(713) 895-8322. A manual with equations & flow chart is available.

10th Street Wash
Initial Alts.
5652.01, File Folder 7
By: JS 6/4/94

TRAPEZOIDAL CHANNEL ANALYSIS
NORMAL DEPTH COMPUTATION

June 4, 1994
ALT 3, SEG 2, CHAN E (NAT)

==========

PROGRAM INPUT DATA:

DESCRIPTION	VALUE
Flow Rate (cubic feet per second).....	877.0
Channel Bottom Slope (feet per foot).....	0.0023 MAX SLOPE
Manning's Roughness Coefficient (n-value).....	0.0360
Channel Side Slope - Left Side (horizontal/vertical)....	3.00
Channel Side Slope - Right Side (horizontal/vertical)...	3.00
Channel Bottom Width (feet).....	57.5

==========

PROGRAM RESULTS:

DESCRIPTION	VALUE
Normal Depth (feet).....	3.29
Flow Velocity (feet per second).....	3.96 < 4.75
Froude Number (Flow is Sub-Critical).....	0.412
Velocity Head (feet).....	0.24
Energy Head (feet).....	3.53
Cross-Sectional Area of Flow (square feet).....	221.50
Top Width of Flow (feet).....	77.23

do to freeboard & depth.

==========

TRAPEZOIDAL CHANNEL ANALYSIS COMPUTER PROGRAM, Version 1.3 (c) 1986
Dodson & Associates, Inc., 7015 W. Tidwell, #107, Houston, TX 77092
(713) 895-8322. A manual with equations & flow chart is available.

5' depth: 1' freeboard

TRAPEZOIDAL CHANNEL ANALYSIS
NORMAL DEPTH COMPUTATION

June 4, 1994
ALT 3, SEG 2, CHAN E (NAT)

==========

PROGRAM INPUT DATA:

DESCRIPTION	VALUE
Flow Rate (cubic feet per second).....	419.0
Channel Bottom Slope (feet per foot).....	0.0023 MAX SLOPE
Manning's Roughness Coefficient (n-value).....	0.0360
Channel Side Slope - Left Side (horizontal/vertical)....	3.00
Channel Side Slope - Right Side (horizontal/vertical)...	3.00
Channel Bottom Width (feet).....	85.2

==========

PROGRAM RESULTS:

DESCRIPTION	VALUE
Normal Depth (feet).....	1.71
Flow Velocity (feet per second).....	2.71
Froude Number (Flow is Sub-Critical).....	0.376
Velocity Head (feet).....	0.11
Energy Head (feet).....	1.82
Cross-Sectional Area of Flow (square feet).....	154.33
Top Width of Flow (feet).....	95.48

==========

TRAPEZOIDAL CHANNEL ANALYSIS COMPUTER PROGRAM, Version 1.3 (c) 1986
Dodson & Associates, Inc., 7015 W. Tidwell, #107, Houston, TX 77092
(713) 895-8322. A manual with equations & flow chart is available.

TRAPEZOIDAL CHANNEL ANALYSIS
NORMAL DEPTH COMPUTATION

June 6, 1994
ALT 3, SEG 3, CHAN G (GUNITE)

==========

PROGRAM INPUT DATA:

DESCRIPTION	VALUE
Flow Rate (cubic feet per second)	1296.0
Channel Bottom Slope (feet per foot)	0.0041
Manning's Roughness Coefficient (n-value)	0.0190
Channel Side Slope - Left Side (horizontal/vertical)	2.00
Channel Side Slope - Right Side (horizontal/vertical)	2.00
Channel Bottom Width (feet)	22.9

==========

PROGRAM RESULTS:

DESCRIPTION	VALUE
Normal Depth (feet)	4.00
Flow Velocity (feet per second)	10.48
Froude Number (Flow is Super-Critical)	1.037
Velocity Head (feet)	1.71
Energy Head (feet)	5.71
Cross-Sectional Area of Flow (square feet)	123.61
Top Width of Flow (feet)	38.90

==========

TRAPEZOIDAL CHANNEL ANALYSIS COMPUTER PROGRAM, Version 1.3 (c) 1986
Dodson & Associates, Inc., 7015 W. Tidwell, #107, Houston, TX 77092
(713) 895-8322. A manual with equations & flow chart is available.

1' freeboard

TRAPEZOIDAL CHANNEL ANALYSIS
NORMAL DEPTH COMPUTATION

June 6, 1994
ALT 3, SEG 4, CHAN ~~G (GUNITE)~~ D (NAT)

==========

PROGRAM INPUT DATA:

DESCRIPTION	VALUE
Flow Rate (cubic feet per second)	453.0
Channel Bottom Slope (feet per foot)	0.0040
Manning's Roughness Coefficient (n-value)	0.0360
Channel Side Slope - Left Side (horizontal/vertical)	0.00
Channel Side Slope - Right Side (horizontal/vertical)	3.00
Channel Bottom Width (feet)	25.5

==========

PROGRAM RESULTS:

DESCRIPTION	VALUE
Normal Depth (feet)	3.16
Flow Velocity (feet per second)	4.75
Froude Number (Flow is Sub-Critical)	0.506
Velocity Head (feet)	0.35
Energy Head (feet)	3.51
Cross-Sectional Area of Flow (square feet)	95.45
Top Width of Flow (feet)	34.97

==========

TRAPEZOIDAL CHANNEL ANALYSIS COMPUTER PROGRAM, Version 1.3 (c) 1986
Dodson & Associates, Inc., 7015 W. Tidwell, #107, Houston, TX 77092
(713) 895-8322. A manual with equations & flow chart is available.

6' deep ∴ 1' freeboard.

TRAPEZOIDAL CHANNEL ANALYSIS
NORMAL DEPTH COMPUTATION

June 6, 1994
ALT 3, SEG 4, CHAN ~~G (GUNITE)~~
(NAT)

==========

PROGRAM INPUT DATA:

DESCRIPTION	VALUE
Flow Rate (cubic feet per second)	679.0
Channel Bottom Slope (feet per foot)	0.0040
Manning's Roughness Coefficient (n-value)	0.0360
Channel Side Slope - Left Side (horizontal/vertical)	3.00
Channel Side Slope - Right Side (horizontal/vertical)	3.00
Channel Bottom Width (feet)	43.0

==========

PROGRAM RESULTS:

DESCRIPTION	VALUE
Normal Depth (feet)	2.84
Flow Velocity (feet per second)	4.65
Froude Number (Flow is Sub-Critical)	0.525
Velocity Head (feet)	0.34
Energy Head (feet)	3.17
Cross-Sectional Area of Flow (square feet)	146.00
Top Width of Flow (feet)	59.99

==========

TRAPEZOIDAL CHANNEL ANALYSIS COMPUTER PROGRAM, Version 1.3 (c) 1986
Dodson & Associates, Inc., 7015 W. Tidwell, #107, Houston, TX 77092
(713) 895-8322. A manual with equations & flow chart is available.

TRAPEZOIDAL CHANNEL ANALYSIS
NORMAL DEPTH COMPUTATION

June 4, 1994
ALT 3, SEG 5, CHAN D (PRO)

==========

PROGRAM INPUT DATA:

DESCRIPTION	VALUE
Flow Rate (cubic feet per second).....	780.0
Channel Bottom Slope (feet per foot).....	0.0072
Manning's Roughness Coefficient (n-value).....	0.0360
Channel Side Slope - Left Side (horizontal/vertical)....	0.00
Channel Side Slope - Right Side (horizontal/vertical)...	3.00
Channel Bottom Width (feet).....	47.7

==========

PROGRAM RESULTS:

DESCRIPTION	VALUE
Normal Depth (feet).....	2.52
Flow Velocity (feet per second).....	6.00
Froude Number (Flow is Sub-Critical).....	0.690
Velocity Head (feet).....	0.56
Energy Head (feet).....	3.08
Cross-Sectional Area of Flow (square feet).....	129.94
Top Width of Flow (feet).....	55.27

==========

TRAPEZOIDAL CHANNEL ANALYSIS COMPUTER PROGRAM, Version 1.3 (c) 1986
Dodson & Associates, Inc., 7015 W. Tidwell, #107, Houston, TX 77092
(713) 895-8322. A manual with equations & flow chart is available.

TRAPEZOIDAL CHANNEL ANALYSIS
NORMAL DEPTH COMPUTATION

June 4, 1994
ALT 3, SEG 5, CHAN D (PRO)

==========

PROGRAM INPUT DATA:

DESCRIPTION	VALUE
Flow Rate (cubic feet per second).....	434.0
Channel Bottom Slope (feet per foot).....	0.0072
Manning's Roughness Coefficient (n-value).....	0.0360
Channel Side Slope - Left Side (horizontal/vertical)....	3.00
Channel Side Slope - Right Side (horizontal/vertical)...	3.00
Channel Bottom Width (feet).....	63.3

==========

PROGRAM RESULTS:

DESCRIPTION	VALUE
Normal Depth (feet).....	1.48 + 2.52 = 4.00 ∴ 1' freeboard
Flow Velocity (feet per second).....	4.35
Froude Number (Flow is Sub-Critical).....	0.651
Velocity Head (feet).....	0.29
Energy Head (feet).....	1.77
Cross-Sectional Area of Flow (square feet).....	99.86
Top Width of Flow (feet).....	72.12

==========

TRAPEZOIDAL CHANNEL ANALYSIS COMPUTER PROGRAM, Version 1.3 (c) 1986
Dodson & Associates, Inc., 7015 W. Tidwell, #107, Houston, TX 77092
(713) 895-8322. A manual with equations & flow chart is available.

TRAPEZOIDAL CHANNEL ANALYSIS
NORMAL DEPTH COMPUTATION

June 4, 1994
ALT 3, SEG 6, CHAN F (NAT)

==========

PROGRAM INPUT DATA:

DESCRIPTION	VALUE
Flow Rate (cubic feet per second).....	780.0
Channel Bottom Slope (feet per foot).....	0.0035
Manning's Roughness Coefficient (n-value).....	0.0360
Channel Side Slope - Left Side (horizontal/vertical)....	3.00
Channel Side Slope - Right Side (horizontal/vertical)...	3.00
Channel Bottom Width (feet).....	39.8

==========

PROGRAM RESULTS:

DESCRIPTION	VALUE
Normal Depth (feet).....	3.30
Flow Velocity (feet per second).....	4.75
Froude Number (Flow is Sub-Critical).....	0.505
Velocity Head (feet).....	0.35
Energy Head (feet).....	3.65
Cross-Sectional Area of Flow (square feet).....	164.13
Top Width of Flow (feet).....	59.61

==========

TRAPEZOIDAL CHANNEL ANALYSIS COMPUTER PROGRAM, Version 1.3 (c) 1986
Dodson & Associates, Inc., 7015 W. Tidwell, #107, Houston, TX 77092
(713) 895-8322. A manual with equations & flow chart is available.

See next pg. for Seg. 7a, 8 & 9

TRAPEZOIDAL CHANNEL ANALYSIS
NORMAL DEPTH COMPUTATION

June 4, 1994
ALT 3, SEG 6, CHAN F (NAT)

==========

PROGRAM INPUT DATA:

DESCRIPTION	VALUE
Flow Rate (cubic feet per second).....	434.0
Channel Bottom Slope (feet per foot).....	0.0035
Manning's Roughness Coefficient (n-value).....	0.0360
Channel Side Slope - Left Side (horizontal/vertical)....	3.00
Channel Side Slope - Right Side (horizontal/vertical)...	3.00
Channel Bottom Width (feet).....	71.6

==========

PROGRAM RESULTS:

DESCRIPTION	VALUE
Normal Depth (feet).....	1.70 + 3.30 = 5.00 ∴ 1' freeboard
Flow Velocity (feet per second).....	3.33
Froude Number (Flow is Sub-Critical).....	0.464
Velocity Head (feet).....	0.17
Energy Head (feet).....	1.87
Cross-Sectional Area of Flow (square feet).....	130.47
Top Width of Flow (feet).....	81.81

==========

TRAPEZOIDAL CHANNEL ANALYSIS COMPUTER PROGRAM, Version 1.3 (c) 1986
Dodson & Associates, Inc., 7015 W. Tidwell, #107, Houston, TX 77092
(713) 895-8322. A manual with equations & flow chart is available.

NOTE:

ALT 3, SEG 7A SAME AS ALT 1 & ALT 2, SEG 7A F (PROTECTED)

ALT 3, SEG 8 SAME AS ALT 1 SEG 8 B (PROTECTED) & CHANNEL G

ALT 3, SEG 9 NOT LISTED