Maryvale Stadium West Inlet Storm Drain

FINAL DESIGN REPORT

Property of
Flood Control District of MC Library
Please Return to
2801 W. Durango
Phoenix, AZ 85009

February, 2000

Prepared For:
Flood Control District of Maricopa County
Chief Engineer & General Manager

Prepared by:
Engineering Division
Flood Control District of Maricopa County

Registered Professional Engineer (Civil)
CERTIFICATE NO.
28839
RICHARD P.
HARRIS
Date Signed 02/09/00
ARIZONA, U.S.A.

FCD Contract No. 2000C003
FCD PCN 6200431

Maryvale West Inlet Storm Drain
FINAL DESIGN REPORT

TABLE OF CONTENTS

Section	Page
COVER	1
TABLE OF CONTENTS	2
LIST OF APPENDICES	3
1.0 PROJECT DESCRIPTION	4
1.1 Purpose	4
1.2 Location	4
1.3 Rights-of-Way	4
1.4 Utilities	4
2.0 SELECTED STORM DRAIN ALTERNATIVE	4
3.0 LOCAL DRAINAGE IMPROVEMENTS	5
4.0 HYDROLOGIC ANALYSIS	5
5.0 HYDRAULIC ANALYSIS	6
6.0 GEOTECHNICAL INVESTIGATION	7
7.0 CONSTRUCTION COST ESTIMATE	7

LIST OF APPENDICES

I HYDROLOGIC ANALYSIS

II HYDRAULIC ANALYSIS

III GEOTECHNICAL ANALYSIS

IV CONSTRUCTION COST ESTIMATE

V COORDINATE GEOMETRY

VI HALF SIZED DESIGN PLANS

1.0 PROJECT DESCRIPTION

1.1 Purpose

The purpose of this project is to reduce damage caused by flooding problems in the location south of Whitton Avenue between 57th Avenue and the Maryvale Baseball Stadium. This report addresses the selected alternative design and plans. The Maryvale Baseball Stadium Preliminary Drainage Report, dated July 1996, prepared by Wood, Patel & Associates, Inc. of Phoenix, presented a drainage concept which would capture, collect, and convey storm water runoff to the Stadium that also serves as a Detention/Surge Basin.

1.2 Location

The project is located in an area of Phoenix known as Maryvale within Section 29, Township 2 North, Range 2 East of the Gila and Salt River Meridian.

Proposed drainage features are to be located south of Whitton Avenue along the north edge of SRP's Grand Canal between 57th and 55th Avenues, and along the south boundary of Borman Junior High School between 55th Avenue and the Maryvale Baseball Stadium.

The area west of 55th avenue is a residential development. The area east of 55th avenue is a junior high school playing field, and east beyond the playing field is the baseball stadium.

1.3 Rights-of-Way

Additional rights-of-way are necessary for the storm drain between 55th Avenue and the Stadium. A temporary construction easement will also be needed for this segment of the storm drain. For locations see Figure 1. Acquisition of a property located at 56th Drive and Whitton Avenue is required to construct this project.

1.4 Utilities

The storm drain alignment crosses several utilities lines including electric, sanitary sewer, and water. The two utility crossings that are key to this Project are a 10" sanitary sewer line near 57th Avenue and two electric utility boxes on the west side of 55th Avenue just north of the Grand Canal.

It is possible to construct the storm drain above the sanitary sewer with no interruption of flow in the sewer. However, because the sewer line will be close to the storm drain, lengths of the sewer will be replaced with ductile iron pipe (DIP). The electric utility boxes will need to be relocated or temporarily moved during construction.

2.0 EVALUATED STORM DRAIN ALTERNATES

The Consultant's original storm drain design was based upon a flow estimated to be between the 2-year and the 10-year events. However, the design did not account for existing storm drain interception upstream, and applied a high tailwater condition in the Stadium Basin towards modeling. This revised design did apply hydrologic analysis that accounts for the interception and a lower starting tailwater, and is discussed further in the Hydrology section of this report. During development of the 30% submittal for this project, four storm drain alternatives were developed to accommodate the 10-yr event modeled flow of 76 CFS. These alternatives were designed to meet the following criteria:

1. The storm drain is deep enough to meet minimum cover of 5 feet at 55th avenue.

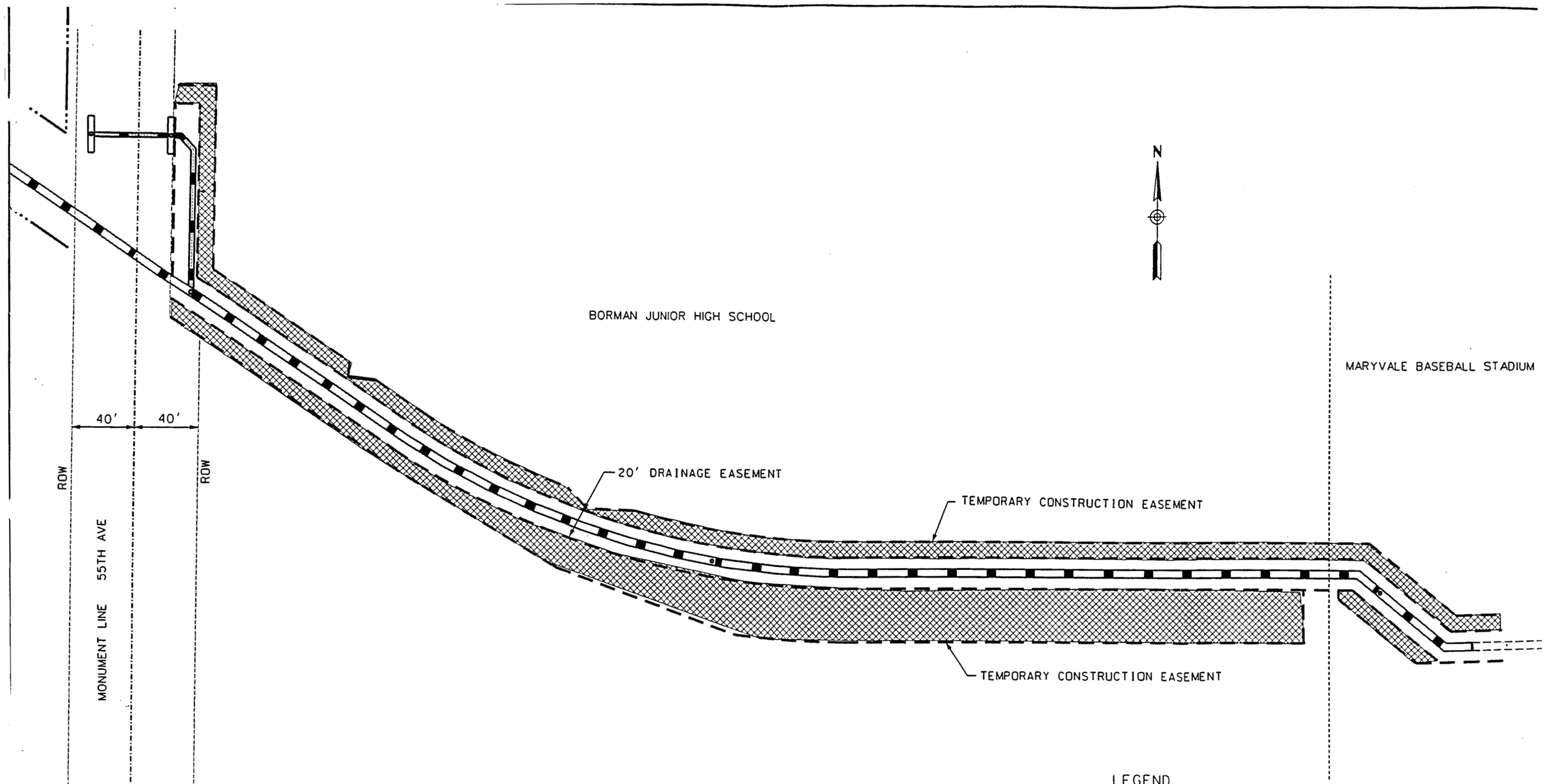

LEGEND

STORM DRAIN

TCE

30 0 30 60

Scale in Feet

NO.	REVISION	BY	DA
3			
2			
1			

FLOOD CONTROL DISTRICT OF MARICOPA COUNTY
ENGINEERING DIVISION

MARYVALE STADIUM WEST
INLET STORM DRAIN
FCD PROJECT NO. 6200231

PRELIMINARY NOT FOR CONSTRUCTION		BY	DATE
	DESIGNED	RPH	06/9
	DRAWN	FC	06/9
	CHECKED	MAL	

DRAWING NO. XX	DRAINAGE EASEMENT MAP	FIG 1

2. The storm drain alignment avoids conflict with the existing sanitary sewer located within the project corridor.
3. The project must be aesthetically pleasing and acceptable to the residents in the area.
4. The project must not require frequent maintenance.
5. The project must not require extensive utility relocation or replacement.

The fourth design alternative, which includes underground storm drain for both segment A and segment B (see Figure 2), was selected because it meets all of the above criteria. Discussion of the remaining alternates is not included in this submittal.

3.0 LOCAL DRAINAGE IMPROVEMENTS

Local open channel, storm drain lateral pipes, and catch basin improvements will be added to the system along Whitton, 55th, and 57th Avenues. These improvements will be added to provide immediate relief to local drainage problems.

4.0 HYDROLOGIC ANALYSIS

The hydrologic analysis uses the *Maryvale Area Drainage Master Study Floodplain Mitigation Study* prepared for the Flood Control District of Maricopa County by Wood, Patel & Associates, Inc. The watershed to the West Inlet stormdrain was isolated from the model and revised to include the existing storm drains within the contributing watershed. The analysis uses the 10-year storm frequency to design the storm drain.

The total drainage area to the detention basins at the Maryvale Stadium is approximately 3.3 square miles. The drainage area is bounded to the north by Camelback Road, on the east by 35th Avenue, on the south by the Grand Canal, and on the west by 57th Avenue. The drainage area that contributes directly to the West Inlet stormdrain is 0.65 square miles. Figure 3 schematically shows the overall drainage pattern.

The Maryvale study only models storm drains that are designed for the 10-year storm frequency or greater. There are two storm drains within the West Inlet Storm Drain watershed that are designed for the 2-year storm. The storm drains run east to west under Indian School Road and under Clarendon Avenue. A decision was made to model the storm drains and divert the water from the West Inlet Storm Drain. A simulation for the 2-year storm was conducted to determine the flow of runoff that should be diverted from the watershed. Table 4-1 shows the flow that is diverted. The remaining runoff is allowed to flow in the street to its next concentration point.

Diverted Flows
Table 4-1

Location	HEC-1 ID	Flow Diverted into Stormdrain
Indian School Road at 55th Ave.	L'S1	80 cfs
Indian School Road at 57th Ave.	L'W	9 cfs
Clarendon Ave. at 55th Ave.	KCNRW	8 cfs
Clarendon Ave. between 55th Ave. and 57th Ave.	DSDM'W	51 cfs

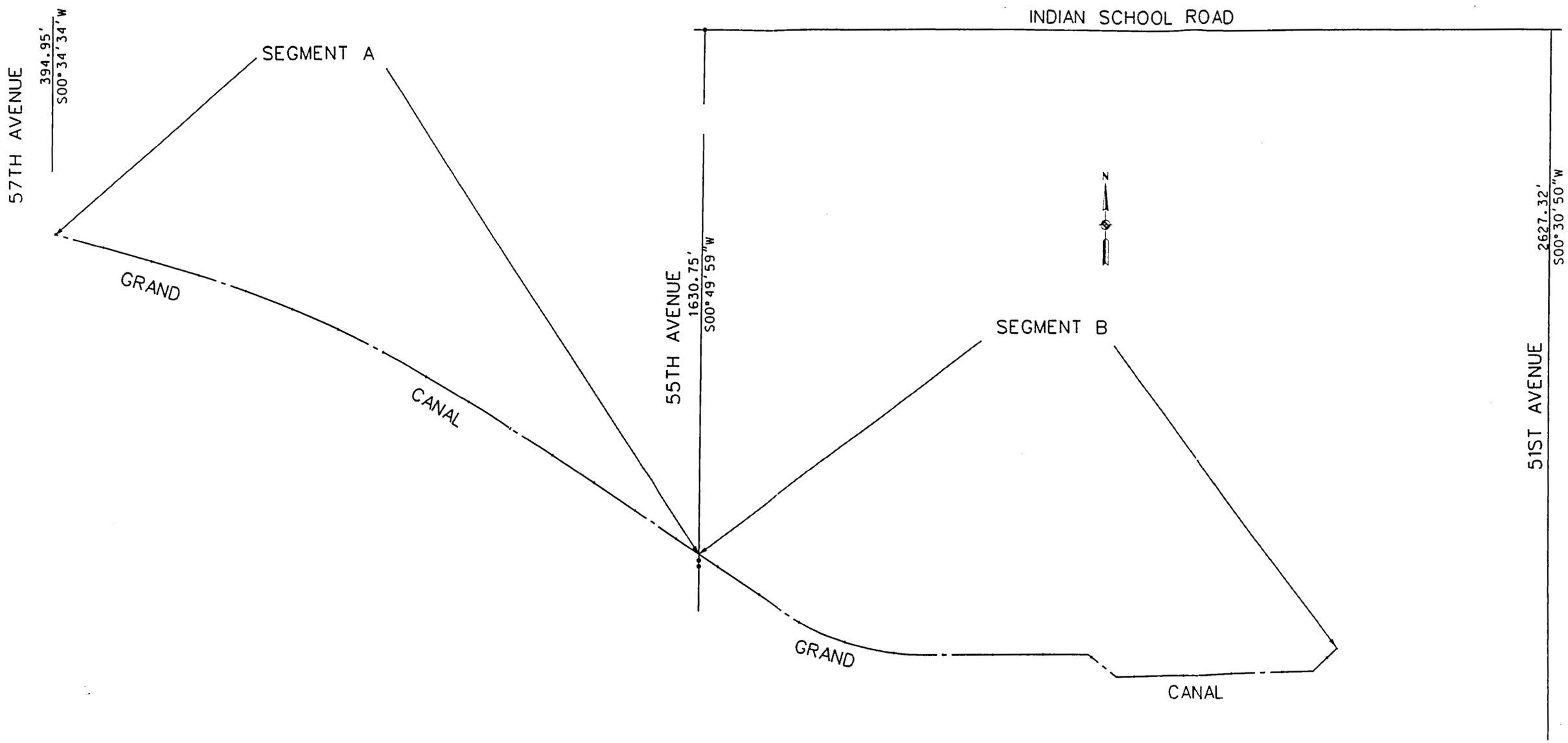

NTS

NO.	REVISION	BY	DATE
3			
2			
1			

FLOOD CONTROL DISTRICT OF MARICOPA COUNTY
ENGINEERING DIVISION

MARYVALE STADIUM WEST
INLET STORM DRAIN
FCD PROJECT NO. 6200231

PRELIMINARY NOT FOR CONSTRUCTION		BY	DATE
	DESIGNED	RPH	06/9
	DRAWN	FC	06/9
	CHECKED	MAL	

DRAWING NO. XX

PROJECT FEATURE SEGMENT MAP

FIG 2

Some of the area on the school property, on the southeast corner of 55th Avenue and Clarendon Avenue, provides retention and thus does not add runoff to the West Inlet Storm Drain. The retention is modeled with the excess runoff flowing across the school property to the east into the detention basins within the Maryvale Stadium practice fields.

Flows will enter the West Inlet Storm Drain at 57th Avenue flowing southeast. The storm drain will pick up additional flows from catch basins at 56th Drive and 55th Avenue. The storm drain will run east adjacent to the Grand Canal where it will discharge into the Maryvale Stadium Detention Basins. Table 4-2 shows the HEC-1 modeled flows for the West Inlet Storm Drain.

Table 4-2
West Inlet Storm Drain Flows
10-year, 6-hour

Location	HEC-1 ID	Flow (cfs)
57TH Ave. & Grand Canal	RM'	67
Inlet from 55th Ave.	RL'2	42
55TH Ave. & Grand Canal	CCHAN	76

Table 4-2 shows only a 9 cfs increase of flow for the trunkline at 55th avenue, a relatively small value resulting from the effect of varied hydrograph peak times. However, the hydraulic design used a conservative approach by inferring that the peak times will occur almost simultaneously. Therefore, the trunkline was sized to contain 104 cfs.

The flows from the West Inlet Storm Drain will enter the detention basin at the Stadium practice fields. Increases in runoff amounts resulting from future developments in the area are not anticipated since the study area is already developed. A summary of HEC-1 modeled discharges can be found in Appendix I.

5.0 HYDRAULIC ANALYSIS

Pipes were sized and hydraulic grade lines were calculated using the Flowmaster and Stormcad software packages. The Hydraulic Grade Line was determined based upon the modeling assumption that the beginning tailwater elevation equaled the existing top-of-grate elevation at the surge basin (see Appendix VI, plans sheet 11). This assumption is considered appropriate because of the relatively small size of the contributing drainage area for the subject project design in contrast with the large contributing drainage area for the basin. To protect the adjacent neighborhood against backwater within the storm drain during high ponding levels in the stadium basin, a flap gate will be installed near the storm drain outlet. If ponding levels exceed the ground level near the eastern end of the project, existing conditions that allow flows to pass westerly towards and beyond 59th avenue will be maintained, and will provide an outlet to minimize neighborhood flooding.

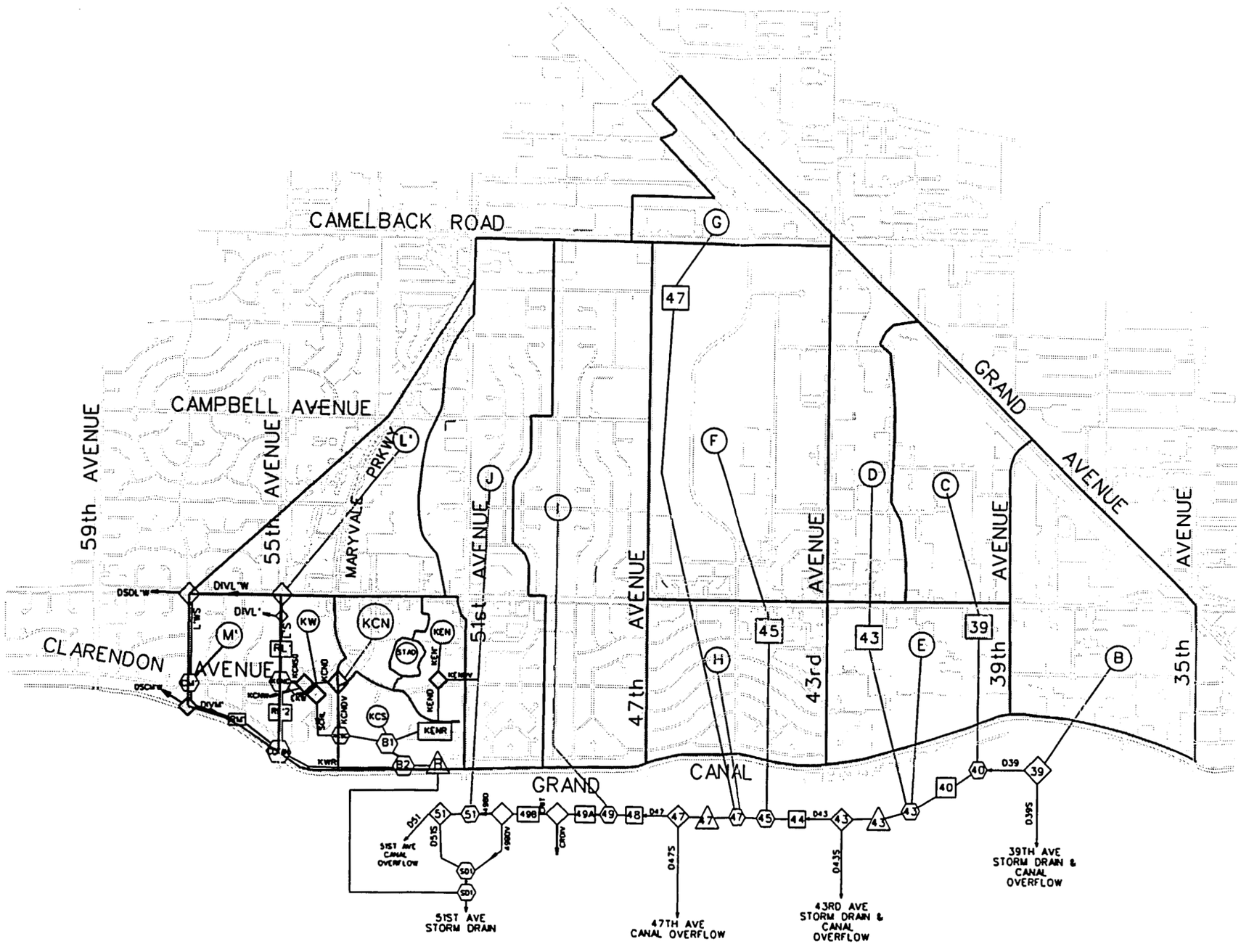

FLOOD CONTROL DISTRICT OF MARICOPA COUNTY

MARYVALE STADIUM WEST INLET STORM DRAIN

F.C.D. PROJECT NO. 6200231

EXISTING HEC-1 SCHEMATIC

FIGURE 3

LEGEND

- Drainage Basin Boundary
- Compute Runoff from Sub-Basin (T)
- Route Hydrograph (R57)
- Compute Runoff from Sub-Basin (S)
- Combine Hydrographs (C58)
- Divide Hydrograph (D59)
- D59S Divert South
- Route Hydrograph through Storage (S39)

VICINITY MAP

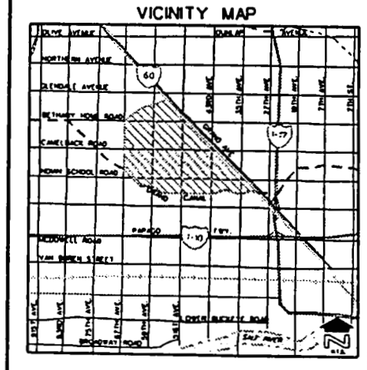

1000 0' 1000 2000

SCALE IN FEET

N

FIGURE 3

JOB NO. 6200231

Based upon observation of the contour lines near HEC-1 modeling concentration points adjacent to the trunkline, District staff agreed that the hydraulic design should reflect that 50% of the total modeled inlet flow near 57th avenue will enter the trunkline near station 5+00 (see Appendix VI, plans sheet 6), and 50% will enter the trunkline near plans station 7+00. Hydraulic analyses for the Maryvale Stadium West Inlet Storm Drain and for the related local drainage improvements are shown in Appendix II. Existing catch basins along 55th avenue near the Grand Canal were enlarged to accommodate 37 cfs, which is 5 cfs less than the HEC-1 modeled 42 cfs. The difference between these flows will pass to the east, into the existing school play field. The local drainage improvements were designed to accommodate the District modeled 10-year flow event and pass flows into the system trunkline.

The pipe sizes for this alternate were selected in order to keep the HGL within each catch basin below the adjacent top-of-curb elevation, and therefore below the finished floor elevations of nearby homes:

Catch Basin Number	Gutter Elevation	Top-of-curb Elevation	Calculated HGL Elevation
1	1099.56'	1100.06'	1100.00'
2	1099.13'*	1100.50'**	1100.50'
3	1099.85'	1100.19'	1099.68'
4	1099.84'	1100.17'	1099.30'

* Top of catch basin grate

** Top of inlet channel embankment

As can be seen above, the design meets criteria and is therefore acceptable. More detailed HGL output can be found in Appendix II.

6.0 GEOTECHNICAL INVESTIGATION

Speedie and Associates performed Geotechnical investigations for this project. A copy of their report is shown in Appendix III.

7.0 CONSTRUCTION COST ESTIMATE

The Construction Cost Estimate for the project is roughly $628,721.00 dollars. An itemized cost summary table is included in Appendix IV.

APPENDIX I

HYDROLOGIC ANALYSIS

```
1
 FLOOD HYDROGRAPH PACKAGE   HEC-1)                                U.S. ARMY CORPS OF ENGINEERS
                JUL   1997                                       HYDROLOGIC ENGINEERING CENTER
              VERSION 4.1                                            609 SECOND STREET
                                                                   DAVIS, CALIFORNIA 95616
  RUN DATE   18MAR99  TIME  19:17:39                                   916 756-1104
```

```
X     X  XXXXXXX   XXXXX          X
X     X  X        X     X        XX
X     X  X        X               X
XXXXXXX  XXXX     X        XXXXX  X
X     X  X        X               X
X     X  X        X     X         X
X     X  XXXXXXX   XXXXX         XXX
```

THIS PROGRAM REPLACES ALL PREVIOUS VERSIONS OF HEC-1 KNOWN AS HEC1 (JAN 73), HEC1GS, HEC1DB, AND HEC1KW.

THE DEFINITIONS OF VARIABLES -RTIMP- AND -RTIOR- HAVE CHANGED FROM THOSE USED WITH THE 1973-STYLE INPUT STRUCTURE.
THE DEFINITION OF -AMSKK- ON RM-CARD WAS CHANGED WITH REVISIONS DATED 29 SEP 81. THIS IS THE FORTRAN77 VERSION
NEW OPTIONS: DAMBREAK OUTFLOW SUBMERGENCE , SINGLE EVENT DAMAGE CALCULATION, DSS:WRITE STAGE FREQUENCY,
DSS:READ TIME SERIES AT DESIRED CALCULATION INTERVAL LOSS RATE:GREEN AND AMPT INFILTRATION
KINEMATIC WAVE: NEW FINITE DIFFERENCE ALGORITHM

1 HEC-1 INPUT PAGE 1

```
LINE          ID.......1.......2.......3.......4.......5.......6.......7.......8.......9......10

   1          ID        MARYVALE BASEBALL PARK
   2          ID        FLOOD CONTROL FACILITIES
   3          ID        WOOD, PATEL & ASSOCIATES, INC.
   4          ID        ************************************************
   5          ID        MODIFICATIONS BY VALERIE SWICK MARCH 1999
   6          ID        TO DETERMINE FLOWS INTO THE WHITTON CHANNEL
   7          ID        * DELETE UNNECESSARY SUBBASINS FROM MODEL (BEGINNING WITH L)
   8          ID        * DIVERT 2 YR INTO STORMDRAIN ALONG INDIAN SCHOOL ROAD AND
   9          ID             CLARENDON AVE.
  10          ID        * SOME STORAGE WITHIN THE SCHOOL PROPERTY
  11          ID
  12          ID        ************************************************
  13          ID        BASED ON MODEL FROM
  14          ID        MARYVALE FLOOD MITIGATION STUDY
  15          ID        FLOOD CONTROL DISTRICT OF MARICOPA COUNTY (CVL)
  16          ID        DESIGN CONDITION - DETENTION BASIN ADDITIONS
  17          ID        ************************************************
  18          ID        10-YEAR, 6-HOUR STORM
  19          ID        FILE: WHIT10C.dat          DATE:   10/14/96
  20          ID        JOB #: 96398
  21          ID        ***
  22          ID        *** THE FOLLOWING CHANGES HAVE BEEN MADE BY WOOD/PATEL IN CONJUNCTION
  23          ID        *** WITH THE DESIGN OF THE MARYVALE BASEBALL PARK FLOOD CONTROL
  24          ID        *** FACILITIES
  25          ID        ***
  26          ID        9/17/96: OUTFLOWS IN SB RATING CURVE MODIFIED
  27          ID        ***
  28          ID        9/16/96: 25 CFS DIVERT AT C51 REDUCED TO 0 CFS
  29          ID                 SV RECORD IN RATING CURVE AT SB MODIFIED
  30          ID        ***
  31          ID        8/13/96: FLOW FROM STAD REMOVED
  32          ID        ***
  33          ID        7/29/96: TC AND R AT BASIN H CORRECTED
  34          ID        ***
```

```
35          ID        7/10/96: FLOW IN EXCESS OF 108 CFS REMOVED AT DOHAN
36          ID        ***
37          ID        7/7/96:  DETENTION BASIN VOLUMES UPDATED
38          ID        ***
39          ID        7/3/96:  DETENTION BASIN OUTFLOW VALUES UPDATED; BRITTENDEN STREET'
40          ID                 STORM DRAIN DIVERSION INTO 81ST AVE STORM DRAIN MODIFIED
41          ID        ***
42          ID        6/4/96:  25 CFS MAX STORM DRAIN DIVERT TO SOUTH AT 051
43          ID        ***
44          ID        5/22/96: FLOW IN EXCESS OF 70 CFS REMOVED AT DOHAN
45          ID        ***
            *DIAGRAM
46          IT        5                    300
47          IO        5        0
48          IN       15
49          JD     1.95     0.01
50          PC     .000     .008     .016     .025     .033     .041     .050     .058     .066     .074
51          PC     .087     .099     .113     .138     .216     .377     .834     .911     .931     .950
52          PC     .962     .972     .983     .991    1.000
53          JD     1.94     0.50
54          JD     1.91     2.80
1                                          HEC-1 INPUT                                                    PAGE  2

LINE        ID.......1.......2.......3.......4.......5.......6.......7.......8.......9.......10

55          PC     .000     .009     .016     .025     .034     .042     .051     .059     .067     .076
56          PC     .087     .100     .120     .163     .252     .451     .694     .837     .900     .938
57          PC     .950     .963     .975     .988    1.000
58          JD     1.80     16.0
59          PC     .000     .015     .020     .030     .048     .063     .076     .090     .105     .119
60          PC     .135     .152     .175     .222     .304     .472     .670     .796     .868     .912
61          PC     .946     .960     .973     .987    1.000
62          JD     1.58     90.0
63          PC     .000     .021     .035     .051     .071     .087     .105     .125     .143     .160
64          PC     .179     .201     .232     .291     .364     .500     .658     .773     .841     .888
65          PC     .927     .945     .964     .982    1.000
66          JD     1.11    500.0
67          PC     .000     .024     .043     .059     .078     .098     .119     .141     .162     .186
68          PC     .212     .239     .271     .321     .408     .515     .627     .735     .814     .864
69          PC     .907     .930     .954     .977    1.000
            *

70          KK       B
71          KM   SUB-BASIN B
72          KM   6-HOUR RAINFALL, PATTERN NO. 1.00 WAS USED TO FIND TC & R FOR THIS BASIN
73          KM   THIS BASIN USED RAINFALL REDUCTION FACTOR OF  .996
74          KM     L = 1.03  Kb = .026  Adj. Slope =   16.5
75          BA    .294
76          LG    .150     .250   5.670     .279  55.000
77          UC    .446     .311
78          UA       0        5      16       30       65       77       84       90       94       97
79          UA     100
            *

80          KK     D39         FLOW DIVERSION AT 39TH AVE
81          DT    D39S
82          DI       0       50      200      600
83          DQ       0       84       84       84
            *

84          KK       C
85          KM   SUB-BASIN C
86          KM   6-HOUR RAINFALL, PATTERN NO. 1.00 WAS USED TO FIND TC & R FOR THIS BASIN
87          KM   THIS BASIN USED RAINFALL REDUCTION FACTOR OF  .997
88          KM     L =  .93  Kb = .027  Adj. Slope =   22.8
89          BA    .209
90          LG    .145     .250   3.500     .392  57.630
91          UC    .371     .282
92          UA       0        5      16       30       65       77       84       90       94       97
93          UA     100
            *

94          KK     R39
95          KM        ROUTING SUBBASIN C ALONG 39TH AVE. TO CP 40
96          RS       1     ELEV       0
97          RC   0.025    0.016    0.025    .1600   0.0042
98          RX    69.7     69.8     69.9       70      130    130.1    130.2    130.3
99          RY       5        2        1        0        0        1        2        5
            *
1                                          HEC-1 INPUT                                                    PAGE  3
```

```
LINE          ID.......1.......2.......3.......4.......5.......6.......7.......8.......9.......10

 100          KK     C40        CONCENTRATION POINT 40 - COMBINGING B AND C
 101          HC       2
              *

 102          KK     R40        ROUTE 40 TO C43
 103          RS       2    ELEV       0
 104          RC   0.050   0.035   0.050    2700   .0015
 105          RX     450     458     462     482     484     562     566     570
 106          RY       5       2       1       0       0       1       2       5
              *

 107          KK       D
 108          KM   SUB-BASIN D
 109          KM   6-HOUR RAINFALL, PATTERN NO. 1.00 WAS USED TO FIND TC & R FOR THIS BASIN
 110          KM   THIS BASIN USED RAINFALL REDUCTION FACTOR OF  .998
 111          KM     L =  .97  Kb = .027  Adj. Slope =   21.6
 112          BA    .168
 113          LG    .146    .250   3.500    .391  57.230
 114          UC    .392    .353
 115          UA       0       5      16      30      65      77      84      90      94      97
 116          UA     100
              *

 117          KK     R43        ROUTE 43 - CARRYS SUBBASIN D TO C43
 118          RS       1    ELEV       0
 119          RC   0.020   0.016   0.020    2150  0.0037
 120          RX   439.7   439.8   439.9     440     560   560.1   560.2   560.3
 121          RY       5       2       1       0       0       1       2       5
              *

 122          KK       E
 123          KM   SUB-BASIN E
 124          KM   6-HOUR RAINFALL, PATTERN NO. 1.00 WAS USED TO FIND TC & R FOR THIS BASIN
 125          KM   THIS BASIN USED RAINFALL REDUCTION FACTOR OF  .997
 126          KM     L =  .78  Kb = .027  Adj. Slope =   11.4
 127          BA    .197
 128          LG    .132    .250   5.980    .274  64.010
 129          UC    .438    .307
 130          UA       0       5      16      30      65      77      84      90      94      97
 131          UA     100
              *

 132          KK     C43        CONCENTRATION POINT 43
 133          HC       3
              *

 134          KK     S43        STORAGE ROUTING
 135          RS       1    FLOW      -1
 136          SV       0    0.01      .1    .645    4.77    6.79   29.76
 137          SE    1104  1104.1    1105    1106  1106.8    1107    1108
 138          SQ       0      27      27      27      27      54    1815
              *
```



```
LINE          ID.......1.......2.......3.......4.......5.......6.......7.......8.......9.......10

 139          KK     D43        FLOW DIVERSION AT 43RD AVE
 140          DT    D43S
 141          DI       0      27      27      27      27      54    1815
 142          DQ       0      27      27      27      27      27      27
              *

 143          KK     R44        ROUTE 44
 144          RS       1    ELEV      -1
 145          RC   0.025   0.016   0.025    1300  0.0027
 146          RX   469.7   469.8   469.9     470     530   530.1   530.2   530.3
 147          RY       5       2       1       0       0       1       2       5
              *

 148          KK       F
 149          KM   SUB-BASIN F
 150          KM   6-HOUR RAINFALL, PATTERN NO. 1.00 WAS USED TO FIND TC & R FOR THIS BASIN
 151          KM   THIS BASIN USED RAINFALL REDUCTION FACTOR OF  .993
 152          KM     L = 1.18  Kb = .041  Adj. Slope =   20.7
 153          BA    .500
 154          LG    .111    .345   4.740    .234  11.550
 155          UC    .654    .392
```

```
156          UA       0       5      16      30      65      77      84      90      94      97
157          UA     100
             *

158          KK     R45         ROUTE 45
159          RS       2    ELEV       0
160          RC   0.020   0.016   0.020    2200  0.0039
161          RX    69.7    69.8    69.9      70     135   135.1   135.2   135.3
162          RY       5       2       1       0       0       1       2       5
             *

163          KK     D45
164          HC       2
             *

165          KK       3
166          KM   SUB-BASIN 3
167          KM   6-HOUR RAINFALL, PATTERN NO. 1.00 WAS USED TO FIND TC & R FOR THIS BASIN
168          KM   THIS BASIN USED RAINFALL REDUCTION FACTOR OF  .998
169          KM     L =  .80  Kb = .028  Adj. Slope =    3.0
170          BA    .121
171          LG    .150    .250   3.550    .403  55.000
172          UC    .829    .837
173          UA       0       5      16      30      65      77      84      90      94      97
174          UA     100
             *

175          KK     R47         ROUTE 47
176          RS       5    ELEV       0
177          RC   0.025   0.016   0.025    7350  0.0043
178          RX    54.7    54.8    54.9      55     145   145.1   145.2   145.3
179          RY       5       2       1       0       0       1       2       5
             *
```



```
LINE         ID.......1.......2.......3.......4.......5.......6.......7.......8.......9......10

180          KK       H
181          KM   SUB-BASIN H
182          KM   6-HOUR RAINFALL, PATTERN NO. 1.00 WAS USED TO FIND TC & R FOR THIS BASIN
183          KM   THIS BASIN USED RAINFALL REDUCTION FACTOR OF  .997
184          KM     L = 1.03  Kb = .027  Adj. Slope =    3.2
185          BA    .217
186          LG    .233    .250   4.740    .309  37.470
187          UC   0.896   0.801
188          UA       0       5      16      30      65      77      84      90      94      97
189          UA     100
             *

190          KK     C47
191          HC       3
             *

192          KK     S47         STORAGE ROUTING AT 47TH AVE
193          RS       1    FLOW      -1
194          SV       0    0.01    4.04    6.31   28.74
195          SE    1104  1104.1  1104.8    1105    1106
196          SQ       0     105     115     182    1988
             *

197          KK     D47         DIVERSION AT 47TH AVE CANAL OVERFLOW SOUTH
198          DT    D47S
199          DI       0     155     165     210    2038
200          DQ       0       0       0      22     825
             *
             * KK  D47C         FLOW DIVERSION THROUGH CRITTENDEN STORM DRAIN
             * DT  CRIT
             * DI     0     155     200    2000
             * DQ     0     155     155     155
             *

201          KK     R48         ROUTE 48
202          RS       2    ELEV       0
203          RC   0.030   0.016   0.030    2650   .0020
204          RX    64.7    64.8    64.9      65     135   135.1   135.2   135.3
205          RY       5       2       1       0       0       1       2       5
             *

206          KK       I
207          KM   SUB-BASIN I
```

```
 208          KM   6-HOUR RAINFALL, PATTERN NO. 1.00 WAS USED TO FIND TC & R FOR THIS BASIN
 209          KM   THIS BASIN USED RAINFALL REDUCTION FACTOR OF  .994
 210          KM     L = 1.46  Kb = .025  Adj. Slope =   15.0
 211          BA    .445
 212          LG    .241    .254   3.810    .343  29.760
 213          UC    .600    .451
 214          UA       0       5      16      30      65      77      84      90      94      97
 215          UA     100
              *
1                                          HEC-1 INPUT                                          PAGE

LINE          ID.......1.......2.......3.......4.......5.......6.......7.......8.......9......10

 216          KK     C49        CONCENTRATION POINT 49
 217          HC       2
              *

 218          KK    R49A        ROUTE 49A
 219          KM   ROUTE C49 ALONG CRITTENDEN LN
 220          RS       2    ELEV       0
 221          RC   0.030   0.016   0.030    1325   .0020
 222          RX    64.7    64.8    64.9      65     135   135.1   135.2   135.3
 223          RY       5       2       1       0       0       1       2       5
              *

 224          KK    CRIT
 225          KM   DIVERT FLOW IN EXCESS OF CRITTENDEN STORM DRAIN + STREET CAPACITY
 226          DT   CRDIV
 227          DI       0     240    1000
 228          DQ       0       0     760
              *

 229          KK    R49B        ROUTE 49B
 230          KM   ROUTE CRIT ALONG CRITTENDEN LN
 231          RS       2    ELEV       0
 232          RC   0.030   0.016   0.030    1325   .0020
 233          RX    64.7    64.8    64.9      65     135   135.1   135.2   135.3
 234          RY       5       2       1       0       0       1       2       5
              *

 235          KK    49BD
 236          KM   DIVERT 200 CFS INTO 51ST AVE STORM DRAIN
 237          DT   49BDV
 238          DI       0     200    1000
 239          DQ       0     200     200
              *

 240          KK       J
 241          KM   SUB-BASIN J
 242          KM   6-HOUR RAINFALL, PATTERN NO. 1.00 WAS USED TO FIND TC & R FOR THIS BASIN
 243          KM   THIS BASIN USED RAINFALL REDUCTION FACTOR OF  .995
 244          KM     L = 1.60  Kb = .026  Adj. Slope =   12.3
 245          BA    .388
 246          LG    .200    .252   3.500    .378  44.870
 247          UC    .700    .622
 248          UA       0       5      16      30      65      77      84      90      94      97
 249          UA     100
              *

 250          KK     C51
 251          HC       2
              *
1                                          HEC-1 INPUT                                          PAGE

LINE          ID.......1.......2.......3.......4.......5.......6.......7.......8.......9......10

 252          KK     D51        STORM DRAIN DIVERSION TO SOUTH
 253          DT    D51S
 254          DI       0     .01    4000
 255          DQ       0     .01     .01
              *

 256          KK      L'
 257          KM   SUB-BASIN L'
 258          KM   6-HOUR RAINFALL, PATTERN NO. 1.05 WAS USED TO FIND TC & R FOR THIS BASIN
 259          KM   THIS BASIN USED RAINFALL REDUCTION FACTOR OF  .993
 260          KM     L = 1.98  Kb = .024  Adj. Slope =   14.0
 261          BA    .228
 262          LG    .217    .250   5.360    .285  45.930
```

```
 263          VC    .729    .640
 264          VA       0       5      16      30      65      77      84      90      94      97
 265          VA     100
              *

 266          KK    L'S1
 267          KM   DIVERT 9.6% OF SUBBASIN TO THE WEST TO ACCOUNT FOR THE SUBBASIN THAT IS WEST
 268          KM   OF 55TH AVE.
 269          DT   DIVL'W
 270          DI       0     100    1000
 271          DQ       0     9.6      96
              *

 272          KK     L'S
 273          KM   DIVERT 80 CFS THAT FLOWS INTO THE STORMDRAIN ALONG INDIAN SCHOOL RD.
 274          KM   THE 2YR STORM IS DIVERTED INTO STORMDRAIN
 275          DT   DIVL'
 276          DI       0      80    1000
 277          DQ       0      80      80
              *

 278          KK     RL'
 279          RS       1    ELEV       0
 280          RC   0.030   0.016   0.030    2300   .0028
 281          RX    49.7    49.8    49.9      50     150   150.1   150.2   150.3
 282          RY       3       2       1       0       0       1       2       3
              *

 283          KK     KCN
 284          KM   SUB-BASIN KCN
 285          KM   6-HOUR RAINFALL, PATTERN NO. 1.00 WAS USED TO FIND TC & R FOR THIS BASIN
 286          KM   THIS BASIN USED RAINFALL REDUCTION FACTOR OF 1.000
 287          KM     L =  .35  Kb = .035  Adj. Slope =   20.0
 288          BA    .038
 289          LG    .153    .290   4.430    .304  41.200
 290          VC    .329    .300
 291          VA       0       5      16      30      65      77      84      90      94      97
 292          VA     100
              *
1                                          HEC-1 INPUT                                          PAGE  8

LINE          ID.......1.......2.......3.......4.......5.......6.......7.......8.......9......10


 293          KK    KCN'
 294          KM   RETENTION IN PARKING LOT WITHIN BASIN KCN; DIVERT FIRST 0.6 AC-FT OF 20
 295          KM   PERCENT OF BASIN RUNOFF
 296          DT   KCNRT     0.6
 297          DI       0   10000
 298          DQ       0    2000
              *

 299          KK    KCND
 300          KM   DIVERT 50 PERCENT OF KCN TO SOUTH
 301          DT   KCNDV
 302          DI       0    1000
 303          DQ       0     500
              *

 304          KK   KCNRW
 305          KM   ROUTE KCND ALONG CLARENDON ST TO 55TH AVE
 306          RS       1    FLOW      -1
 307          RC    .030    .016    .030     750   .0023
 308          RX    49.7    49.8    49.9      50     130   130.1   130.2   130.3
 309          RY       3       2       1       0       0       1       2       3
              *

 310          KK   KCNSD
 311          KM   DIVERT 8 CFS THAT WILL ENTER INTO STORMDRAIN ALONG CLARENDON AVE.
 312          KM   THE 2 YR STORM IS DIVERTED INTO THE STORM DRAIN
 313          DT    KCNW
 314          DI       0       8    1000
 315          DQ       0       8       8
              *

 316          KK      KW
 317          KM   SUB-BASIN KW
 318          KM   6-HOUR RAINFALL, PATTERN NO. 1.00 WAS USED TO FIND TC & R FOR THIS BASIN
 319          KM   THIS BASIN USED RAINFALL REDUCTION FACTOR OF  .999
 320          KM     L =  .53  Kb = .035  Adj. Slope =   17.0
 321          BA    .069
```

```
LG    .153    .090   4.430    .304  41.200
UC    .475    .447
UA      0       5      16      30      65      77      84      90      94      97
UA    100
*

KK     EKW
KM   DIVERT FLOWS THAT ARE WITHIN THE SCHOOL GROUNDS (50% OF THE SUBBASIN)
DT    SCHL
DI      0      50     100    1000
DQ      0      25      50     500
*
```



```
LINE          ID.......1.......2.......3.......4.......5.......6.......7.......8.......9.......10

KK    KCNC
KM   COMBINE KCNR, RL', AND NORTH SECTION OF KW
HC      3
*

KK    RL'2
KM   ROUTE KCNC SOUTH ALONG 55TH AVE TO GRAND CANAL
RS      1    ELEV      0
RC   .030    .016    .030    1300   .0033
RX   49.7    49.8    49.9      50     150   150.1   150.2   150.3
RY      3       2       1       0       0       1       2       3
*

KK     L'W
KM   RETURN FLOWS FROM SUBBASIN L' THAT IS WEST OF 55TH AVE.
DR  DIVL'W
*

KK    L'WS
KM   DIVERT THE 9 CFS INTO STORMDRAIN ON INDIAN SCHOOL RD.
KM   THE 2YR FLOW IS DIVERTED INTO STORMDRAIN
DT  DSDL'W
DI      0       9    1000
DQ      0       9       9
*

KK   RL'WS
KM   ROUTE FLOWS TO CLARENDON RD.
RS      1    FLOW      -1
RC   .030    .016    .030    1300   .0023
RX   49.7    49.8    49.9      50     130   130.1   130.2   130.3
RY      3       2       1       0       0       1       2       3
*

KK      M'
KM   SUB-BASIN M'
KM   6-HOUR RAINFALL, PATTERN NO. 1.00 WAS USED TO FIND TC & R FOR THIS BASIN
KM   THIS BASIN USED RAINFALL REDUCTION FACTOR OF  .998
KM     L =  .64  Kb = .027  Adj. Slope =   15.2
BA    .09
LG   .235    .150   8.050    .117  34.940
UC   .342    .215
UA      0       5      16      30      65      77      84      90      94      97
UA    100
*

KK    CM'
KM   COMBINE FLOWS FROM NORTH OF INDIAN SCHOOL ROAD AND WEST OF 55TH DR.
HC      2
*
```



```
LINE          ID.......1.......2.......3.......4.......5.......6.......7.......8.......9.......10

KK   DIVM'
KM   DIVERT 51 CFS FLOWS FROM THE AREA NORTH OF CLARENDON AVE INTO THE STORM DRAIN
KM   2YR FLOWS
DT  DSDM'W
DI      0      51    1000
DQ      0      51      51
*

KK     RM'
```

```
375          KM   ROUTE FLOWS EAST ALONG THE GRAND CANAL
376          RS       1    ELEV       0
377          RC    .030    .016    .030     840    .002
378          RX       0       1       2      12      20      30      31      32
379          RY     100     100     100      95      95     100     100     100
             *

380          KK   CCHAN
381          KM   COMBINATION OF FLOWS IN THE CHANNEL ALONG CANAL
382          KM   COMBINE RM', AND RL'2
383          HC       2
             *

384          KK     KWR
385          KM   ROUTE CCHAN EAST TO CP CB
386          RS       1    ELEV       0
387          RC    .030    .016    .030    1750    .002
388          RX       0       1       2      12      20      30      31      32
389          RY     100     100     100      95      95     100     100     100
             *
             * KK   CHD
             * KM REMOVE FLOW IN EXCESS OF 108 CFS
             * DT CHDIV
             * DI       0     108    1000
             * DQ       0       0     892
             *

390          KK   KCNDV
391          KM   RETRIEVE DIVERTED FLOW
392          DR   KCNDV
             *

393          KK   KCNRS
394          KM   ROUTE KCNDV SOUTH TO CP KCSC
395          RS       1    FLOW      -1
396          RC    .030    .016    .030    1000   .0033
397          RX    49.7    49.8    49.9      50     130   130.1   130.2   130.3
398          RY       3       2       1       0       0       1       2       3
             *
```



```
LINE         ID.......1.......2.......3.......4.......5.......6.......7.......8.......9.......10

399          KK    SCHL
400          KM   RETRIEVE FLOWS FROM SCHOOL
401          DR    SCHL
             *

402          KK   SCHLE
403          KM   DIVERT RETAINED VOLUME FROM SCHOOL PLAYGROUND
404          DT  RETSCL    2.25
405          DI       0    1000
406          DQ       0    1000
             *

407          KK    KCSC
408          KM   COMBINE FLOWS FROM SCHOOL AND FLOWS FROM THE DITCH ALONG THE WESTERN
409          KM   BOUNDARY OF THE BALL FIELDS (KCNRS)
410          HC       2     .01
             *

411          KK     KEN
412          KM   SUB-BASIN KEN
413          KM   6-HOUR RAINFALL, PATTERN NO. 1.00 WAS USED TO FIND TC & R FOR THIS BASIN
414          KM   THIS BASIN USED RAINFALL REDUCTION FACTOR OF  .999
415          KM     L =  .44  Kb = .035  Adj. Slope =   16.0
416          BA    .050
417          LG    .153    .290   4.430    .304  41.200
418          UC    .429    .414
419          UA       0       5      16      30      65      77      84      90      94      97
420          UA     100
             *

421          KK    KEN'
422          KM   RETENTION IN PARKING LOT WITHIN BASIN KEN
423          KM   DIVERT 0.9 AC-FT OF FIRST 25 PERCENT OF BASIN RUNOFF
424          DT   KENRT     0.9
425          DI       0   10000
426          DQ       0    2500
             *
```

```
427          KK    KEND
428          KM   DIVERT FIRST 32 CFS INTO STORM DRAIN ALONG MARYVALE PARKWAY/CLARENDON AVE
429          DT   KENDV
430          DI       0       32     1000
431          DQ       0       32       32
             *

432          KK    KENR
433          KM   ROUTE KEND SOUTH TO BASIN
434          RS       1     FLOW       -1
435          RC    .030     .016     .030      550    .0029
436          RX       0       .1       .2       .3     50.3     50.4     50.5     50.6
437          RY     100      100      100       95       95      100      100      100
             *
1                                                HEC-1 INPUT                                                          PAGE 12

LINE         ID.......1.......2.......3.......4.......5.......6.......7.......8.......9......10


438          KK     KCS
439          KM   SUB-BASIN KCS
440          KM   6-HOUR RAINFALL, PATTERN NO. 1.00 WAS USED TO FIND TC & R FOR THIS BASIN
441          KM   THIS BASIN USED RAINFALL REDUCTION FACTOR OF  .999
442          KM     L =  .25  Kb = .035  Adj. Slope =   18.0
443          BA    .068
444          LG    .153     .290    4.430     .304   41.200
445          UC    .271     .133
446          UA       0        5       16       30       65       77       84       90       94       97
447          UA     100
             *

448          KK     CB1
449          KM   COMBINE OVERLAND FLOWS
450          KM   COMBINE KENR, KCS, AND D51, AT PRACTICE FIELDS/PARKING LOT
451          HC       3
             *

452          KK     CB2
453          KM   COMBINE ALL THE FLOWS STORM DRAIN FLOWS
454          KM   THE FLOWS FROM THE EAST, THE OVERLAND FLOWS FROM THE SCHOOL, AND THE STORM
455          KM    DRAIN
456          HC       3
             *

457          KK      SB         STORAGE ROUTING
458          KO       1
459          RS       1     STOR        0
460          SV       0        0      0.3     1.60      4.9      8.9     13.4     19.2     27.2     38.9
461          SV    55.7     67.9     70.9       75
462          SE  1086.2     1091     1094     1095     1096     1097     1098     1099     1100     1101
463          SE  1102.2   1103.0   1103.2   1103.8
464          SQ       0     28.2     37.1     39.8     42.4     45.4     48.1     51.0     53.8     56.7
465          SQ    60.0     62.4     63.0     1350
             *

466          KK   RTN51
467          KM   RETRIEVE 51ST AVE
468          DR    D51S
             *

469          KK   49BDV
470          KM   RETRIEVE CRITTENDEN STORM DRAIN FLOW
471          DR   49BDV
             *

472          KK    CSD1
473          KM   COMBINE 51ST AVE, CRITTENDEN, AND MARYVALE PKWY STORM DRAIN FLOWS
474          HC       2      .01
             *
1                                                HEC-1 INPUT                                                          PAGE 13

LINE         ID.......1.......2.......3.......4.......5.......6.......7.......8.......9......10


475          KK    STAD
476          KM   RUNOFF FROM BALL FIELD # 1
477          KM   8/13/96:  AREA SET SMALL TO ELIMINATE STAD FROM MODEL; FLOW WILL BE PUMPED
478          KM     L =  .095  Kb = .14  Adj. Slope =  10.0
479          BA    .001
480          LG    .153     .290    4.430     .304     .000
```

```
481            DC      .42      .30
482            UA       0        5       16       30       85       77       84       90       94       97
483            UA     100
               *
               *  ROUTING OPERATION DEACTIVATED FOR 10-YEAR STORM BECAUSE RUNOFF FROM STAD IS
               *  TOO SMALL
               *
               *  KK RSTAD
               *  KM ROUTE RUNOFF FROM STAD THROUGH 36-INCH PIPE TO 81ST AVENUE STORM DRAIN
               *  RD  2310   .0038    .013             DIRC       3
               *

484            KK    DSD1         TOTAL STORM DRAIN FLOW INCL. BASIN OUTLET & FIELD # 1 RUNOFF
485            KM   COMBINE DSD1 WITH BASIN OUTFLOW
486            HC        3
               *
487            ZZ
```

SCHEMATIC DIAGRAM OF STREAM NETWORK

```
INPUT
 LINE      (V) ROUTING          (---->) DIVERSION OR PUMP FLOW

  NO.      (.) CONNECTOR        (<----) RETURN OF DIVERTED OR PUMPED FLOW

   70          B
               .
               .
   81          .-------->    D39S
   80        D39
               .
               .
   84          .           D
               .           V
               .           V
   94          .         R39
               .           .
               .           .
  100        D40............
               V
               V
  102        R40
               .
               .
  107          .           D
               .           V
               .           V
  117          .         R43
               .           .
               .           .
  122          .           .           E
               .           .           .
               .           .           .
  132        D43........................
               V
               V
  134        S43
               .
               .
  140          .-------->    D43S
  139        D43
               V
               V
  143        R44
               .
               .
  148          .           F
               .           V
               .           V
  158          .         R45
               .           .
               .           .
  163        D45............
               .
               .
  165          .           G
               .           V
               .           V
  175          .         R47
               .           .
               .           .
  180          .           .           H
```

```
                .            .            .
                .            .            .
190          D47.........................
               /
              /
192          D47
                .
                .
198             .-------->    D47S
197          D47
               /
              /
201          R48
                .
                .
206             .            I
                .            .
                .            .
216          D49............
               /
              /
213         R49A
                .
                .
226             .-------->   DRDIV
224         DR1T
               /
              /
229         R49B
                .
                .
237             .-------->   49BDV
235         49BD
                .
                .
240             .            J
                .            .
                .            .
250          D51............
                .
                .
253             .-------->    D51S
252          D51
                .
                .
256             .           L'
                .            .
                .            .
269             .            .-------->  DIVL'W
266             .         L'S1
                .            .
                .            .
275             .            .-------->   DIVL'
272             .          L'S
                .            V
                .            V
278             .          RL'
                .            .
                .            .
283             .            .         KCN
                .            .           .
                .            .           .
296             .            .           .-------->   KCNRT
293             .            .        KCN'
                .            .           .
                .            .           .
301             .            .           .-------->   KCNDV
299             .            .        KCND
                .            .           V
                .            .           V
304             .            .       KCNRW
                .            .           .
                .            .           .
313             .            .           .-------->    KCNW
310             .            .       KCNSD
                .            .           .
                .            .           .
316             .            .           .           KW
                .            .           .            .
                .            .           .            .
328             .            .           .            .-------->    SCHL
```

```
326          .          .          .          ERW
             .          .          .            .
             .          .          .            .
331          .       KCNC.......................
             .          V
             .          V
334          .       RL'2
             .          .
             .          .
342          .          .          .<-------- DIVL'W
343          .          .       L'W
             .          .          .
             .          .          .
346          .          .          .--------> DSDL'W
348          .          .      L'WS
             .          .          V
             .          .          V
349          .          .     RL'WS
             .          .          .
             .          .          .
355          .          .          .          M'
             .          .          .            .
             .          .          .            .
365          .          .       DM'............
             .          .          .
             .          .          .
371          .          .          .--------> DSDM'W
368          .          .     DIVM'
             .          .          V
             .          .          V
374          .          .       RM'
             .          .          .
             .          .          .
380          .       CCHAN..........
             .          V
             .          V
384          .       KWR
             .          .
             .          .
392          .          .          .<-------- KCNDV
390          .          .     KCNDV
             .          .          V
             .          .          V
393          .          .     KCNRS
             .          .          .
             .          .          .
401          .          .          .            .<-------- SCHL
399          .          .          .        SCHL
             .          .          .            .
             .          .          .            .
404          .          .          .            .--------> RETSCL
402          .          .          .       SCHLE
             .          .          .            .
             .          .          .            .
407          .          .      KCSC............
             .          .          .
             .          .          .
411          .          .          .         KEN
             .          .          .            .
             .          .          .            .
424          .          .          .            .--------> KENRT
421          .          .          .        KEN'
             .          .          .            .
             .          .          .            .
429          .          .          .            .--------> KENDV
427          .          .          .        KEND
             .          .          .           V
             .          .          .           V
432          .          .          .        KENR
             .          .          .            .
             .          .          .            .
438          .          .          .            .         KCS
             .          .          .            .           .
             .          .          .            .           .
448          .          .       CB1........................
             .          .          .
             .          .          .
452       CB2........................
            V
            V
457        SB
```

```
                .
                .
  468           .          .<-------     D51S
  466           .      RTN51.
                .          .
                .          .
  471           .          .          .-------    43BDV
  469           .          .      43BDV
                .          .          .
                .          .          .
  472           .       ISD1............
                .          .
                .          .
  475           .          .       STAD
                .          .          .
                .          .          .
  434        ISD2........................
```

*** RUNOFF ALSO COMPUTED AT THIS LOCATION

```
****************************************
****************************************
*                                      *                                                    *
*                                      *                                                    *
*   FLOOD HYDROGRAPH PACKAGE (HEC-1)   *                                                    *    U.S. ARMY CORPS OF ENGINEERS
*                                      *                                                    *
*              JUL  1997               *                                                    *    HYDROLOGIC ENGINEERING CENTER
*                                      *                                                    *
*           VERSION 4.1                *                                                    *          609 SECOND STREET
*                                      *                                                    *
*                                      *                                                    *       DAVIS, CALIFORNIA 95616
*                                      *                                                    *
*  RUN DATE  23MAR99  TIME  09:27:39   *                                                    *           (916) 756-1104
*                                      *                                                    *
*                                      *                                                    *
****************************************
****************************************
```

```
MARYVALE BASEBALL PARK
FLOOD CONTROL FACILITIES
WOOD, PATEL & ASSOCIATES, INC.
**********************************************
MODIFICATIONS BY VALERIE SWICK MARCH 1999
TO DETERMINE FLOWS INTO THE WHITTON CHANNEL
* DELETE UNNECESSARY SUBBASINS FROM MODEL (BEGINNING WITH L)
* DIVERT 2 YR INTO STORMDRAIN ALONG INDIAN SCHOOL ROAD AND
     CLARENDON AVE.
* SOME STORAGE WITHIN THE SCHOOL PROPERTY

**********************************************
BASED ON MODEL FROM
MARYVALE FLOOD MITIGATION STUDY
FLOOD CONTROL DISTRICT OF MARICOPA COUNTY (CVL)
DESIGN CONDITION - DETENTION BASIN ADDITIONS
**********************************************
10-YEAR, 6-HOUR STORM
FILE: WHIT10C.dat          DATE:   10/14/96
JOB #: 96398
***
*** THE FOLLOWING CHANGES HAVE BEEN MADE BY WOOD/PATEL IN CONJUNCTION
*** WITH THE DESIGN OF THE MARYVALE BASEBALL PARK FLOOD CONTROL
*** FACILITIES
***
9/17/96: OUTFLOWS IN SB RATING CURVE MODIFIED
***
9/16/96: 25 CFS DIVERT AT C51 REDUCED TO 0 CFS
         SV RECORD IN RATING CURVE AT SB MODIFIED
***
8/13/96: FLOW FROM STAD REMOVED
***
7/29/96: TC AND R AT BASIN H CORRECTED
***
7/10/96: FLOW IN EXCESS OF 108 CFS REMOVED AT CCHAN
***
7/7/96:  DETENTION BASIN VOLUMES UPDATED
***
7/3/96:  DETENTION BASIN OUTFLOW VALUES UPDATED; CRITTENDEN STREET/
```

```
                                STORM DRAIN DIVERSION INTO 51ST AVE STORM DRAIN MODIFIED
                          ***
                          6/4/96:  25 CFS MAX STORM DRAIN DIVERT TO SOUTH AT 051
                          ***
                          5/22/96: FLOW IN EXCESS OF 70 CFS REMOVED AT 070HAN
                          ***

47 IT          OUTPUT CONTROL VARIABLES
                    IPRNT          5  PRINT CONTROL
                    IPLOT          0  PLOT CONTROL
                    ISCAL         0.  HYDROGRAPH PLOT SCALE

   IT          HYDROGRAPH TIME DATA
                     NMIN          5  MINUTES IN COMPUTATION INTERVAL
                    IDATE      1   0  STARTING DATE
                    ITIME       0000  STARTING TIME
                       NQ        300  NUMBER OF HYDROGRAPH ORDINATES
                   NDDATE      2   0  ENDING DATE
                   NDTIME       0055  ENDING TIME
                    ICENT         19  CENTURY MARK

              COMPUTATION INTERVAL     .08 HOURS
                   TOTAL TIME BASE   24.92 HOURS

        ENGLISH UNITS
             DRAINAGE AREA          SQUARE MILES
             PRECIPITATION DEPTH    INCHES
             LENGTH, ELEVATION      FEET
             FLOW                   CUBIC FEET PER SECOND
             STORAGE VOLUME         ACRE-FEET
             SURFACE AREA           ACRES
             TEMPERATURE            DEGREES FAHRENHEIT

49 JD          INDEX STORM NO. 1
                    STRM        1.95  PRECIPITATION DEPTH
                    TRDA         .01  TRANSPOSITION DRAINAGE AREA

50 PI            PRECIPITATION PATTERN
                  .00       .00       .00       .00       .00       .00       .00       .00       .00       .00
                  .00       .00       .00       .00       .00       .00       .00       .00       .00       .00
                  .00       .00       .00       .00       .00       .00       .00       .00       .00       .00
                  .00       .00       .00       .01       .01       .01       .01       .01       .01       .03
                  .03       .03       .05       .05       .05       .15       .15       .15       .03       .03
                  .03       .01       .01       .01       .01       .01       .01       .00       .00       .00
                  .00       .00       .00       .00       .00       .00       .00       .00       .00       .00
                  .00       .00

53 JD          INDEX STORM NO. 2
                    STRM        1.94  PRECIPITATION DEPTH
                    TRDA         .50  TRANSPOSITION DRAINAGE AREA

 0 PI            PRECIPITATION PATTERN
                  .00       .00       .00       .00       .00       .00       .00       .00       .00       .00
                  .00       .00       .00       .00       .00       .00       .00       .00       .00       .00
                  .00       .00       .00       .00       .00       .00       .00       .00       .00       .00
                  .00       .00       .00       .01       .01       .01       .01       .01       .01       .03
                  .03       .03       .05       .05       .05       .15       .15       .15       .03       .03
                  .03       .01       .01       .01       .01       .01       .01       .00       .00       .00
                  .00       .00       .00       .00       .00       .00       .00       .00       .00       .00
                  .00       .00

54 JD          INDEX STORM NO. 3
                    STRM        1.91  PRECIPITATION DEPTH
                    TRDA        2.80  TRANSPOSITION DRAINAGE AREA

55 PI            PRECIPITATION PATTERN
                  .00       .00       .00       .00       .00       .00       .00       .00       .00       .00
                  .00       .00       .00       .00       .00       .00       .00       .00       .00       .00
                  .00       .00       .00       .00       .00       .00       .00       .00       .00       .00
                  .00       .00       .00       .01       .01       .01       .01       .01       .01       .03
                  .03       .03       .07       .07       .07       .08       .08       .08       .05       .05
                  .05       .02       .02       .02       .01       .01       .01       .00       .00       .00
                  .00       .00       .00       .00       .00       .00       .00       .00       .00       .00
                  .00       .00

58 JD          INDEX STORM NO. 4
                    STRM        1.80  PRECIPITATION DEPTH
                    TRDA       16.00  TRANSPOSITION DRAINAGE AREA

59 PI            PRECIPITATION PATTERN
                  .01       .01       .00       .00       .00       .00       .00       .00       .00       .01
```

```
                    .01       .01       .00       .01       .00       .00       .00       .00       .01       .01
                    .00       .00       .01       .00       .00       .00       .00       .01       .01       .01
                    .01       .01       .01       .01       .01       .01       .02       .02       .02       .03
                    .03       .03       .06       .06       .06       .07       .07       .07       .04       .04
                    .04       .02       .02       .02       .01       .01       .01       .01       .01       .01
                    .00       .00       .00       .00       .00       .00       .00       .00       .00       .00
                    .00       .00

62 JD          INDEX STORM NO. 5
                    STRM        1.58  PRECIPITATION DEPTH
                    TRDA       40.00  TRANSPOSITION DRAINAGE AREA

63 PI            PRECIPITATION PATTERN
                    .01       .01       .01       .00       .00       .00       .01       .01       .01       .01
                    .01       .01       .01       .01       .01       .01       .01       .01       .01       .01
                    .01       .01       .01       .01       .01       .01       .01       .01       .01       .01
                    .01       .01       .01       .01       .01       .01       .02       .02       .02       .03
                    .03       .03       .05       .05       .05       .05       .05       .05       .04       .04
                    .04       .02       .02       .02       .02       .02       .02       .01       .01       .01
                    .01       .01       .01       .01       .01       .01       .01       .01       .01       .01
                    .01       .01

66 JD          INDEX STORM NO. 6
                    STRM        1.11  PRECIPITATION DEPTH
                    TRDA      500.00  TRANSPOSITION DRAINAGE AREA

67 PI            PRECIPITATION PATTERN
                    .01       .01       .01       .01       .01       .01       .01       .01       .01       .01
                    .01       .01       .01       .01       .01       .01       .01       .01       .01       .01
                    .01       .01       .01       .01       .01       .01       .01       .01       .01       .01
                    .01       .01       .01       .01       .01       .01       .02       .02       .02       .03
                    .03       .03       .04       .04       .04       .04       .04       .04       .04       .04
                    .04       .03       .03       .03       .02       .02       .02       .01       .01       .01
                    .01       .01       .01       .01       .01       .01       .01       .01       .01       .01
                    .01       .01


*** *** *** *** *** *** *** *** *** *** *** *** *** *** *** *** *** *** *** *** *** *** *** *** *** *** *** *** *** *** *** *** *** *** *** *** *** ***
***


              *************
              *           *
457 KK        *     SB    *          STORAGE ROUTING
              *           *
              *************

458 KO          OUTPUT CONTROL VARIABLES
                     IPRNT          1  PRINT CONTROL
                     IPLOT          0  PLOT CONTROL
                     QSCAL         0.  HYDROGRAPH PLOT SCALE

             HYDROGRAPH ROUTING DATA

459 RS          STORAGE ROUTING
                     NSTPS          1  NUMBER OF SUBREACHES
                      ITYP       STOR  TYPE OF INITIAL CONDITION
                    RSVRIC        .00  INITIAL CONDITION
                         X        .00  WORKING R AND D COEFFICIENT

460 SV            STORAGE          .0        .0        .3       1.6       4.9       8.9      13.4      19.2      27.2      38.4
                                 55.7      67.9      70.9      75.0

462 SE            ELEVATION     1086.20   1091.00   1094.00   1095.00   1096.00   1097.00   1098.00   1099.00   1100.00   1101.00
                                1102.20   1103.00   1103.20   1103.80

464 SQ            DISCHARGE         0.        28.       37.       40.       42.       45.       48.       51.       54.       57.
                                   60.       62.       63.     1350.
                                                              ***

*** WARNING *** MODIFIED PULS ROUTING MAY BE NUMERICALLY UNSTABLE FOR OUTFLOWS BETWEEN       63. TO     1350.
                THE ROUTED HYDROGRAPH SHOULD BE EXAMINED FOR OSCILLATIONS OR OUTFLOWS GREATER THAN PEAK INFLOWS.
                THIS CAN BE CORRECTED BY DECREASING THE TIME INTERVAL OR INCREASING STORAGE (USE A LONGER REACH.)

*****************************************************************************************************************

                                    HYDROGRAPH AT        SB
                                TRANSPOSITION AREA       .0 SQ MI
```

DA	MON	HRMN	IRD	OUTFLOW	STORAGE	STAGE	DA	MON	HRMN	IRD	OUTFLOW	STORAGE	STAGE	DA	MON	HRMN	IRD	OUTFLOW	STORAGE	STAGE
1	[illegible]	[illegible]	1	28.	.0	1091.0 *	1		0820	101	51.	20.1	1099.1 *	1		1640	201	0.	.1	1089.[illegible]
1	[illegible]	[illegible]	2	0.	.0	1086.2 *	1		0825	102	51.	19.8	1099.1 *	1		1645	202	0.	.1	1089.[illegible]
1	[illegible]	[illegible]	3	1.	.0	1086.3 *	1		0830	103	51.	19.4	1099.0 *	1		1650	203	0.	.1	1089.[illegible]
1	[illegible]	[illegible]	4	1.	.0	1086.4 *	1		0835	104	51.	19.1	1099.0 *	1		1655	204	0.	.1	1089.[illegible]
1	[illegible]	[illegible]	5	2.	.0	1086.5 *	1		0840	105	51.	18.7	1099.0 *	1		1700	205	0.	.1	1089.[illegible]
1	[illegible]	[illegible]	6	3.	.0	1086.6 *	1		0845	106	51.	18.4	1099.0 *	1		1705	206	0.	.1	1089.[illegible]
1	[illegible]	[illegible]	7	3.	.0	1086.7 *	1		0850	107	50.	18.0	1098.8 *	1		1710	207	0.	.1	1089.[illegible]
1	[illegible]	[illegible]	8	4.	.0	1086.9 *	1		0855	108	50.	17.7	1098.7 *	1		1715	208	0.	.1	1089.[illegible]
1	[illegible]	[illegible]	9	5.	.0	1087.0 *	1		0900	109	50.	17.3	1098.7 *	1		1720	209	0.	.1	1089.[illegible]
1	0045	10		5.	.0	1087.1 *	1		0905	110	50.	17.0	1098.6 *	1		1725	210	0.	.1	1089.[illegible]
1	0050	11		6.	.0	1087.2 *	1		0910	111	50.	16.6	1098.6 *	1		1730	211	0.	.1	1089.[illegible]
1	0055	12		6.	.0	1087.2 *	1		0915	112	50.	16.3	1098.5 *	1		1735	212	0.	.1	1089.[illegible]
1	0100	13		7.	.0	1087.3 *	1		0920	113	49.	16.0	1098.4 *	1		1740	213	0.	.1	1089.[illegible]
1	0105	14		7.	.0	1087.4 *	1		0925	114	49.	15.6	1098.4 *	1		1745	214	0.	.1	1089.[illegible]
1	0110	15		7.	.0	1087.4 *	1		0930	115	49.	15.3	1098.3 *	1		1750	215	0.	.1	1089.[illegible]
1	0115	16		7.	.0	1087.5 *	1		0935	116	49.	14.9	1098.3 *	1		1755	216	0.	.1	1089.[illegible]
1	0120	17		8.	.0	1087.5 *	1		0940	117	49.	14.6	1098.2 *	1		1800	217	0.	.1	1089.[illegible]
1	0125	18		8.	.0	1087.5 *	1		0945	118	49.	14.3	1098.2 *	1		1805	218	0.	.1	1089.[illegible]
1	0130	19		8.	.0	1087.6 *	1		0950	119	48.	13.9	1098.1 *	1		1810	219	0.	.1	1089.[illegible]
1	0135	20		8.	.0	1087.6 *	1		0955	120	48.	13.6	1098.0 *	1		1815	220	0.	.1	1089.[illegible]
1	0140	21		8.	.0	1087.6 *	1		1000	121	48.	13.3	1098.0 *	1		1820	221	0.	.1	1089.[illegible]
1	0145	22		9.	.0	1087.6 *	1		1005	122	48.	12.9	1097.9 *	1		1825	222	0.	.1	1089.[illegible]
1	0150	23		9.	.0	1087.7 *	1		1010	123	48.	12.6	1097.8 *	1		1830	223	0.	.1	1089.[illegible]
1	0155	24		9.	.0	1087.7 *	1		1015	124	47.	12.3	1097.8 *	1		1835	224	0.	.1	1089.[illegible]
1	0200	25		9.	.0	1087.7 *	1		1020	125	47.	12.0	1097.7 *	1		1840	225	0.	.1	1089.[illegible]
1	0205	26		9.	.0	1087.7 *	1		1025	126	47.	11.6	1097.6 *	1		1845	226	0.	.1	1089.[illegible]
1	0210	27		9.	.0	1087.7 *	1		1030	127	47.	11.3	1097.5 *	1		1850	227	0.	.1	1089.[illegible]
1	0215	28		9.	.0	1087.7 *	1		1035	128	47.	11.0	1097.5 *	1		1855	228	0.	.1	1089.[illegible]
1	0220	29		9.	.0	1087.7 *	1		1040	129	46.	10.7	1097.4 *	1		1900	229	0.	.1	1089.[illegible]
1	0225	30		9.	.0	1087.7 *	1		1045	130	46.	10.4	1097.3 *	1		1905	230	0.	.1	1089.[illegible]
1	0230	31		10.	.0	1087.8 *	1		1050	131	46.	10.0	1097.3 *	1		1910	231	0.	.1	1089.[illegible]
1	0235	32		10.	.0	1087.9 *	1		1055	132	46.	9.7	1097.2 *	1		1915	232	0.	.1	1089.[illegible]
1	0240	33		10.	.0	1088.0 *	1		1100	133	46.	9.4	1097.1 *	1		1920	233	0.	.1	1089.[illegible]
1	0245	34		11.	.0	1088.0 *	1		1105	134	46.	9.1	1097.0 *	1		1925	234	0.	.1	1089.[illegible]
1	0250	35		11.	.0	1088.1 *	1		1110	135	45.	8.8	1097.0 *	1		1930	235	0.	.1	1089.[illegible]
1	0255	36		12.	.0	1088.2 *	1		1115	136	45.	8.5	1096.9 *	1		1935	236	0.	.1	1089.[illegible]
1	0300	37		13.	.0	1088.3 *	1		1120	137	45.	8.2	1096.8 *	1		1940	237	0.	.1	1089.[illegible]
1	0305	38		14.	.0	1088.5 *	1		1125	138	45.	7.8	1096.7 *	1		1945	238	0.	.1	1089.[illegible]
1	0310	39		14.	.0	1088.6 *	1		1130	139	44.	7.5	1096.7 *	1		1950	239	0.	.1	1089.[illegible]
1	0315	40		15.	.0	1088.8 *	1		1135	140	44.	7.2	1096.6 *	1		1955	240	0.	.1	1089.[illegible]
1	0320	41		17.	.0	1089.1 *	1		1140	141	44.	6.9	1096.5 *	1		2000	241	0.	.1	1089.[illegible]
1	0325	42		21.	.0	1089.7 *	1		1145	142	44.	6.6	1096.4 *	1		2005	242	0.	.1	1089.[illegible]
1	0330	43		26.	.0	1090.6 *	1		1150	143	43.	6.3	1096.4 *	1		2010	243	0.	.1	1089.[illegible]
1	0335	44		29.	.0	1091.2 *	1		1155	144	43.	6.0	1096.3 *	1		2015	244	0.	.1	1089.[illegible]
1	0340	45		30.	.1	1091.8 *	1		1200	145	43.	5.7	1096.2 *	1		2020	245	0.	.1	1089.[illegible]
1	0345	46		34.	.2	1093.0 *	1		1205	146	43.	5.4	1096.1 *	1		2025	246	0.	.1	1089.[illegible]
1	0350	47		37.	.4	1094.1 *	1		1210	147	43.	5.1	1096.1 *	1		2030	247	0.	.1	1089.[illegible]
1	0355	48		38.	.9	1094.5 *	1		1215	148	42.	4.9	1096.0 *	1		2035	248	0.	.1	1089.[illegible]
1	0400	49		40.	1.8	1095.1 *	1		1220	149	42.	4.6	1095.9 *	1		2040	249	0.	.1	1089.[illegible]
1	0405	50		41.	3.3	1095.5 *	1		1225	150	42.	4.3	1095.8 *	1		2045	250	0.	.1	1089.[illegible]
1	0410	51		43.	5.2	1096.1 *	1		1230	151	42.	4.0	1095.7 *	1		2050	251	0.	.1	1089.[illegible]
1	0415	52		44.	7.6	1096.7 *	1		1235	152	41.	3.7	1095.6 *	1		2055	252	0.	.1	1089.[illegible]
1	0420	53		46.	10.1	1097.3 *	1		1240	153	41.	3.4	1095.5 *	1		2100	253	0.	.1	1089.[illegible]
1	0425	54		48.	12.4	1097.8 *	1		1245	154	41.	3.1	1095.5 *	1		2105	254	0.	.1	1089.[illegible]
1	0430	55		49.	14.5	1098.2 *	1		1250	155	41.	2.8	1095.4 *	1		2110	255	0.	.1	1089.[illegible]
1	0435	56		50.	16.4	1098.5 *	1		1255	156	41.	2.6	1095.3 *	1		2115	256	0.	.1	1089.[illegible]
1	0440	57		50.	18.1	1098.8 *	1		1300	157	40.	2.3	1095.2 *	1		2120	257	0.	.1	1089.[illegible]
1	0445	58		51.	19.6	1099.1 *	1		1305	158	40.	2.0	1095.1 *	1		2125	258	0.	.1	1089.[illegible]
1	0450	59		52.	21.0	1099.2 *	1		1310	159	40.	1.7	1095.0 *	1		2130	259	0.	.1	1089.[illegible]
1	0455	60		52.	22.1	1099.4 *	1		1315	160	40.	1.5	1094.9 *	1		2135	260	0.	.1	1089.[illegible]
1	0500	61		52.	23.2	1099.5 *	1		1320	161	39.	1.2	1094.7 *	1		2140	261	0.	.1	1089.[illegible]
1	0505	62		53.	24.1	1099.6 *	1		1325	162	38.	.9	1094.5 *	1		2145	262	0.	.1	1089.[illegible]
1	0510	63		53.	24.8	1099.7 *	1		1330	163	38.	.7	1094.3 *	1		2150	263	0.	.1	1089.[illegible]
1	0515	64		53.	25.5	1099.8 *	1		1335	164	37.	.4	1094.1 *	1		2155	264	0.	.1	1089.[illegible]
1	0520	65		53.	26.1	1099.9 *	1		1340	165	33.	.2	1092.6 *	1		2200	265	0.	.1	1089.[illegible]
1	0525	66		54.	26.6	1099.9 *	1		1345	166	0.	.1	1088.7 *	1		2205	266	0.	.1	1089.[illegible]
1	0530	67		54.	27.1	1100.0 *	1		1350	167	0.	.1	1088.7 *	1		2210	267	0.	.1	1088.[illegible]
1	0535	68		54.	27.5	1100.0 *	1		1355	168	0.	.1	1088.7 *	1		2215	268	0.	.1	1088.[illegible]
1	0540	69		54.	27.8	1100.1 *	1		1400	169	0.	.1	1088.7 *	1		2220	269	0.	.1	1089.[illegible]
1	0545	70		54.	28.1	1100.1 *	1		1405	170	0.	.1	1088.7 *	1		2225	270	0.	.1	1089.[illegible]
1	0550	71		54.	28.3	1100.1 *	1		1410	171	0.	.1	1088.7 *	1		2230	271	0.	.1	1089.[illegible]
1	0555	72		54.	28.4	1100.1 *	1		1415	172	0.	.1	1088.7 *	1		2235	272	0.	.1	1088.[illegible]
1	0600	73		54.	28.4	1100.1 *	1		1420	173	0.	.1	1088.7 *	1		2240	273	0.	.1	1088.[illegible]
1	0605	74		54.	28.3	1100.1 *	1		1425	174	0.	.1	1088.7 *	1		2245	274	0.	.1	1089.[illegible]
1	0610	75		54.	28.1	1100.1 *	1		1430	175	0.	.1	1088.7 *	1		2250	275	0.	.1	1089.[illegible]

1	0615	76	54.	27.9	1100.1	*	1	1435	176	0.	.1	1088.7	*	1	2255	276	0.	.1	1088.
1	0620	77	54.	27.7	1100.0	*	1	1440	177	0.	.1	1088.7	*	1	2300	277	0.	.1	1088.
1	0625	78	54.	27.5	1100.0	*	1	1445	178	0.	.1	1088.7	*	1	2305	278	0.	.1	1088.
1	0630	79	54.	27.3	1100.0	*	1	1450	179	0.	.1	1088.7	*	1	2310	279	0.	.1	1088.
1	0635	80	54.	27.0	1100.0	*	1	1455	180	0.	.1	1088.7	*	1	2315	280	0.	.1	1088.
1	0640	81	54.	26.8	1099.9	*	1	1500	181	0.	.1	1088.7	*	1	2320	281	0.	.1	1088.
1	0645	82	54.	26.5	1099.9	*	1	1505	182	0.	.1	1088.7	*	1	2325	282	0.	.1	1088.
1	0650	83	53.	26.2	1099.9	*	1	1510	183	0.	.1	1088.7	*	1	2330	283	0.	.1	1088.
1	0655	84	53.	25.9	1099.8	*	1	1515	184	0.	.1	1088.7	*	1	2335	284	0.	.1	1088.
1	0700	85	53.	25.6	1099.8	*	1	1520	185	0.	.1	1088.7	*	1	2340	285	0.	.1	1088.
1	0705	86	53.	25.3	1099.8	*	1	1525	186	0.	.1	1088.7	*	1	2345	286	0.	.1	1088.
1	0710	87	53.	25.0	1099.7	*	1	1530	187	0.	.1	1088.7	*	1	2350	287	0.	.1	1088.
1	0715	88	53.	24.6	1099.7	*	1	1535	188	0.	.1	1088.7	*	1	2355	288	0.	.1	1088.
1	0720	89	53.	24.3	1099.6	*	1	1540	189	0.	.1	1088.7	*	2	0000	289	0.	.1	1088.
1	0725	90	53.	24.0	1099.6	*	1	1545	190	0.	.1	1088.7	*	2	0005	290	0.	.1	1088.
1	0730	91	53.	23.6	1099.6	*	1	1550	191	0.	.1	1088.7	*	2	0010	291	0.	.1	1088.
1	0735	92	52.	23.3	1099.5	*	1	1555	192	0.	.1	1088.7	*	2	0015	292	0.	.1	1088.
1	0740	93	52.	22.9	1099.5	*	1	1600	193	0.	.1	1088.7	*	2	0020	293	0.	.1	1088.
1	0745	94	52.	22.6	1099.4	*	1	1605	194	0.	.1	1088.7	*	2	0025	294	0.	.1	1088.
1	0750	95	52.	22.2	1099.4	*	1	1610	195	0.	.1	1088.7	*	2	0030	295	0.	.1	1088.
1	0755	96	52.	21.9	1099.3	*	1	1615	196	0.	.1	1088.7	*	2	0035	296	0.	.1	1088.
1	0800	97	52.	21.5	1099.3	*	1	1620	197	0.	.1	1088.7	*	2	0040	297	0.	.1	1088.
1	0805	98	52.	21.2	1099.2	*	1	1625	198	0.	.1	1088.7	*	2	0045	298	0.	.1	1088.
1	0810	99	52.	20.8	1099.2	*	1	1630	199	0.	.1	1088.7	*	2	0050	299	0.	.1	1088.
1	0815	100	51.	20.5	1099.2	*	1	1635	200	0.	.1	1088.7	*	2	0055	300	0.	.1	1088.

****

PEAK FLOW (CFS)	TIME (HR)		MAXIMUM AVERAGE FLOW 6-HR	24-HR	72-HR	24.92-HR
54.	5.92	(CFS)	52.	21.	21.	21.
		(INCHES)	.144	.240	.240	.240
		(AC-FT)	26.	43.	43.	43.

PEAK STORAGE (AC-FT)	TIME (HR)	MAXIMUM AVERAGE STORAGE 6-HR	24-HR	72-HR	24.92-HR
28.	5.92	21.	6.	6.	6.

PEAK STAGE (FEET)	TIME (HR)	MAXIMUM AVERAGE STAGE 6-HR	24-HR	72-HR	24.92-HR
1100.10	5.92	1099.20	1092.47	1092.26	1092.26

CUMULATIVE AREA = 3.32 SQ MI

****

HYDROGRAPH AT SB
TRANSPOSITION AREA .5 SQ MI

****

DA	MON	HRMN	ORD	OUTFLOW	STORAGE	STAGE	*	DA	MON	HRMN	ORD	OUTFLOW	STORAGE	STAGE	*	DA	MON	HRMN	ORD	OUTFLOW	STORAGE	STAGE
1		0000	1	28.	.0	1091.0	*	1		0820	101	51.	19.9	1099.1	*	1		1640	201	0.	.0	1086.
1		0005	2	0.	.0	1086.2	*	1		0825	102	51.	19.5	1099.0	*	1		1645	202	0.	.0	1086.
1		0010	3	1.	.0	1086.3	*	1		0830	103	51.	19.2	1099.0	*	1		1650	203	0.	.0	1086.
1		0015	4	1.	.0	1086.4	*	1		0835	104	51.	18.8	1098.9	*	1		1655	204	0.	.0	1086.
1		0020	5	2.	.0	1086.5	*	1		0840	105	51.	18.5	1098.9	*	1		1700	205	0.	.0	1086.
1		0025	6	3.	.0	1086.6	*	1		0845	106	50.	18.1	1098.8	*	1		1705	206	0.	.0	1086.
1		0030	7	3.	.0	1086.7	*	1		0850	107	50.	17.8	1098.8	*	1		1710	207	0.	.0	1086.
1		0035	8	4.	.0	1086.9	*	1		0855	108	50.	17.4	1098.7	*	1		1715	208	0.	.0	1086.
1		0040	9	5.	.0	1087.0	*	1		0900	109	50.	17.1	1098.6	*	1		1720	209	0.	.0	1086.
1		0045	10	5.	.0	1087.1	*	1		0905	110	50.	16.7	1098.6	*	1		1725	210	0.	.0	1086.
1		0050	11	6.	.0	1087.2	*	1		0910	111	50.	16.4	1098.5	*	1		1730	211	0.	.0	1086.
1		0055	12	6.	.0	1087.2	*	1		0915	112	49.	16.1	1098.5	*	1		1735	212	0.	.0	1086.
1		0100	13	7.	.0	1087.3	*	1		0920	113	49.	15.7	1098.4	*	1		1740	213	0.	.0	1086.
1		0105	14	7.	.0	1087.4	*	1		0925	114	49.	15.4	1098.3	*	1		1745	214	0.	.0	1086.
1		0110	15	7.	.0	1087.4	*	1		0930	115	49.	15.0	1098.3	*	1		1750	215	0.	.0	1086.
1		0115	16	7.	.0	1087.4	*	1		0935	116	49.	14.7	1098.2	*	1		1755	216	0.	.0	1086.
1		0120	17	8.	.0	1087.5	*	1		0940	117	49.	14.4	1098.2	*	1		1800	217	0.	.0	1086.
1		0125	18	8.	.0	1087.5	*	1		0945	118	48.	14.0	1098.1	*	1		1805	218	0.	.0	1086.
1		0130	19	8.	.0	1087.6	*	1		0950	119	48.	13.7	1098.1	*	1		1810	219	0.	.0	1086.
1		0135	20	8.	.0	1087.6	*	1		0955	120	48.	13.4	1098.0	*	1		1815	220	0.	.0	1086.

1	0140	21	8.	.0	1087.6	*	1	1000	121	48.	13.0	1097.9	*	1	1820	221	0.	.0	1086.
1	0145	22	9.	.0	1087.6	*	1	1005	122	48.	12.7	1097.8	*	1	1825	222	0.	.0	1086.
1	0150	23	9.	.0	1087.6	*	1	1010	123	47.	12.4	1097.8	*	1	1830	223	0.	.0	1086.
1	0155	24	9.	.0	1087.7	*	1	1015	124	47.	12.1	1097.7	*	1	1835	224	0.	.0	1086.
1	0200	25	9.	.0	1087.7	*	1	1020	125	47.	11.7	1097.6	*	1	1840	225	0.	.0	1086.
1	0205	26	9.	.0	1087.7	*	1	1025	126	47.	11.4	1097.6	*	1	1845	226	0.	.0	1086.
1	0210	27	9.	.0	1087.7	*	1	1030	127	47.	11.1	1097.5	*	1	1850	227	0.	.0	1086.
1	0215	28	9.	.0	1087.7	*	1	1035	128	47.	10.8	1097.4	*	1	1855	228	0.	.0	1086.
1	0220	29	9.	.0	1087.7	*	1	1040	129	46.	10.4	1097.3	*	1	1900	229	0.	.0	1086.
1	0225	30	9.	.0	1087.7	*	1	1045	130	46.	10.1	1097.3	*	1	1905	230	0.	.0	1086.
1	0230	31	10.	.0	1087.8	*	1	1050	131	46.	9.8	1097.2	*	1	1910	231	0.	.0	1086.
1	0235	32	10.	.0	1087.9	*	1	1055	132	46.	9.5	1097.1	*	1	1915	232	0.	.0	1086.
1	0240	33	10.	.0	1088.0	*	1	1100	133	46.	9.2	1097.1	*	1	1920	233	0.	.0	1086.
1	0245	34	11.	.0	1088.0	*	1	1105	134	45.	8.9	1097.0	*	1	1925	234	0.	.0	1086.
1	0250	35	11.	.0	1088.1	*	1	1110	135	45.	8.5	1096.9	*	1	1930	235	0.	.0	1086.
1	0255	36	12.	.0	1088.2	*	1	1115	136	45.	8.2	1096.8	*	1	1935	236	0.	.0	1086.
1	0300	37	13.	.0	1088.3	*	1	1120	137	45.	7.9	1096.8	*	1	1940	237	0.	.0	1086.
1	0305	38	14.	.0	1088.5	*	1	1125	138	44.	7.6	1096.7	*	1	1945	238	0.	.0	1086.
1	0310	39	14.	.0	1088.6	*	1	1130	139	44.	7.3	1096.6	*	1	1950	239	0.	.0	1086.
1	0315	40	15.	.0	1088.8	*	1	1135	140	44.	7.0	1096.5	*	1	1955	240	0.	.0	1086.
1	0320	41	17.	.0	1089.1	*	1	1140	141	44.	6.7	1096.5	*	1	2000	241	0.	.0	1086.
1	0325	42	21.	.0	1089.7	*	1	1145	142	44.	6.4	1096.4	*	1	2005	242	0.	.0	1086.
1	0330	43	26.	.0	1090.6	*	1	1150	143	43.	6.1	1096.3	*	1	2010	243	0.	.0	1086.
1	0335	44	29.	.0	1091.1	*	1	1155	144	43.	5.8	1096.2	*	1	2015	244	0.	.0	1086.
1	0340	45	30.	.1	1091.7	*	1	1200	145	43.	5.5	1096.2	*	1	2020	245	0.	.0	1086.
1	0345	46	34.	.2	1092.9	*	1	1205	146	43.	5.2	1096.1	*	1	2025	246	0.	.0	1086.
1	0350	47	37.	.4	1094.1	*	1	1210	147	42.	4.9	1096.0	*	1	2030	247	0.	.0	1086.
1	0355	48	38.	.9	1094.5	*	1	1215	148	42.	4.6	1095.9	*	1	2035	248	0.	.0	1086.
1	0400	49	40.	1.8	1095.1	*	1	1220	149	42.	4.4	1095.8	*	1	2040	249	0.	.0	1086.
1	0405	50	41.	3.3	1095.5	*	1	1225	150	42.	4.1	1095.7	*	1	2045	250	0.	.0	1086.
1	0410	51	43.	5.2	1096.1	*	1	1230	151	42.	3.8	1095.7	*	1	2050	251	0.	.0	1086.
1	0415	52	44.	7.5	1096.7	*	1	1235	152	41.	3.5	1095.6	*	1	2055	252	0.	.0	1086.
1	0420	53	46.	10.0	1097.2	*	1	1240	153	41.	3.2	1095.5	*	1	2100	253	0.	.0	1086.
1	0425	54	47.	12.3	1097.8	*	1	1245	154	41.	2.9	1095.4	*	1	2105	254	0.	.0	1086.
1	0430	55	49.	14.4	1098.2	*	1	1250	155	41.	2.6	1095.3	*	1	2110	255	0.	.0	1086.
1	0435	56	50.	16.3	1098.5	*	1	1255	156	40.	2.4	1095.2	*	1	2115	256	0.	.0	1086.
1	0440	57	50.	18.0	1098.8	*	1	1300	157	40.	2.1	1095.1	*	1	2120	257	0.	.0	1086.
1	0445	58	51.	19.5	1099.0	*	1	1305	158	40.	1.8	1095.1	*	1	2125	258	0.	.0	1086.
1	0450	59	52.	20.8	1099.2	*	1	1310	159	40.	1.5	1095.0	*	1	2130	259	0.	.0	1086.
1	0455	60	52.	21.9	1099.3	*	1	1315	160	39.	1.3	1094.7	*	1	2135	260	0.	.0	1086.
1	0500	61	52.	23.0	1099.5	*	1	1320	161	39.	1.0	1094.5	*	1	2140	261	0.	.0	1086.
1	0505	62	53.	23.8	1099.6	*	1	1325	162	38.	.7	1094.3	*	1	2145	262	0.	.0	1086.
1	0510	63	53.	24.6	1099.7	*	1	1330	163	37.	.5	1094.1	*	1	2150	263	0.	.0	1086.
1	0515	64	53.	25.3	1099.8	*	1	1335	164	35.	.2	1093.3	*	1	2155	264	0.	.0	1086.
1	0520	65	53.	25.9	1099.8	*	1	1340	165	28.	.0	1091.1	*	1	2200	265	0.	.0	1086.
1	0525	66	54.	26.4	1099.9	*	1	1345	166	0.	.0	1086.2	*	1	2205	266	0.	.0	1086.
1	0530	67	54.	26.8	1100.0	*	1	1350	167	0.	.0	1086.2	*	1	2210	267	0.	.0	1086.
1	0535	68	54.	27.2	1100.0	*	1	1355	168	0.	.0	1086.2	*	1	2215	268	0.	.0	1086.
1	0540	69	54.	27.5	1100.0	*	1	1400	169	0.	.0	1086.2	*	1	2220	269	0.	.0	1086.
1	0545	70	54.	27.8	1100.1	*	1	1405	170	0.	.0	1086.2	*	1	2225	270	0.	.0	1086.
1	0550	71	54.	28.0	1100.1	*	1	1410	171	0.	.0	1086.2	*	1	2230	271	0.	.0	1086.
1	0555	72	54.	28.2	1100.1	*	1	1415	172	0.	.0	1086.2	*	1	2235	272	0.	.0	1086.
1	0600	73	54.	28.1	1100.1	*	1	1420	173	0.	.0	1086.2	*	1	2240	273	0.	.0	1086.
1	0605	74	54.	28.0	1100.1	*	1	1425	174	0.	.0	1086.2	*	1	2245	274	0.	.0	1086.
1	0610	75	54.	27.8	1100.1	*	1	1430	175	0.	.0	1086.2	*	1	2250	275	0.	.0	1086.
1	0615	76	54.	27.7	1100.0	*	1	1435	176	0.	.0	1086.2	*	1	2255	276	0.	.0	1086.
1	0620	77	54.	27.5	1100.0	*	1	1440	177	0.	.0	1086.2	*	1	2300	277	0.	.0	1086.
1	0625	78	54.	27.3	1100.0	*	1	1445	178	0.	.0	1086.2	*	1	2305	278	0.	.0	1086.
1	0630	79	54.	27.0	1100.0	*	1	1450	179	0.	.0	1086.2	*	1	2310	279	0.	.0	1086.
1	0635	80	54.	26.8	1099.9	*	1	1455	180	0.	.0	1086.2	*	1	2315	280	0.	.0	1086.
1	0640	81	54.	26.5	1099.9	*	1	1500	181	0.	.0	1086.2	*	1	2320	281	0.	.0	1086.
1	0645	82	53.	26.2	1099.9	*	1	1505	182	0.	.0	1086.2	*	1	2325	282	0.	.0	1086.
1	0650	83	53.	25.9	1099.8	*	1	1510	183	0.	.0	1086.2	*	1	2330	283	0.	.0	1086.
1	0655	84	53.	25.6	1099.8	*	1	1515	184	0.	.0	1086.2	*	1	2335	284	0.	.0	1086.
1	0700	85	53.	25.3	1099.8	*	1	1520	185	0.	.0	1086.2	*	1	2340	285	0.	.0	1086.
1	0705	86	53.	25.0	1099.7	*	1	1525	186	0.	.0	1086.2	*	1	2345	286	0.	.0	1086.
1	0710	87	53.	24.7	1099.7	*	1	1530	187	0.	.0	1086.2	*	1	2350	287	0.	.0	1086.
1	0715	88	53.	24.4	1099.6	*	1	1535	188	0.	.0	1086.2	*	1	2355	288	0.	.0	1086.
1	0720	89	53.	24.0	1099.6	*	1	1540	189	0.	.0	1086.2	*	2	0000	289	0.	.0	1086.
1	0725	90	53.	23.7	1099.6	*	1	1545	190	0.	.0	1086.2	*	2	0005	290	0.	.0	1086.
1	0730	91	52.	23.4	1099.5	*	1	1550	191	0.	.0	1086.2	*	2	0010	291	0.	.0	1086.
1	0735	92	52.	23.0	1099.5	*	1	1555	192	0.	.0	1086.2	*	2	0015	292	0.	.0	1086.
1	0740	93	52.	22.7	1099.4	*	1	1600	193	0.	.0	1086.2	*	2	0020	293	0.	.0	1086.
1	0745	94	52.	22.3	1099.4	*	1	1605	194	0.	.0	1086.2	*	2	0025	294	0.	.0	1086.
1	0750	95	52.	22.0	1099.3	*	1	1610	195	0.	.0	1086.2	*	2	0030	295	0.	.0	1086.
1	0755	96	52.	21.6	1099.3	*	1	1615	196	0.	.0	1086.2	*	2	0035	296	0.	.0	1086.
1	0800	97	52.	21.3	1099.3	*	1	1620	197	0.	.0	1086.2	*	2	0040	297	0.	.0	1086.
1	0805	98	52.	20.9	1099.2	*	1	1625	198	0.	.0	1086.2	*	2	0045	298	0.	.0	1086.
1	0810	99	51.	20.6	1099.2	*	1	1630	199	0.	.0	1086.2	*	2	0050	299	0.	.0	1086.
1	0815	100	51.	20.2	1099.1	*	1	1635	200	0.	.0	1086.2	*	2	0055	300	0.	.0	1086.
						*							*						

PEAK FLOW (CFS)	TIME (HR)		MAXIMUM AVERAGE FLOW 6-HR	24-HR	72-HR	24.92-HR
54.	5.92	(CFS)	51.	21.	21.	21.
		(INCHES)	.144	.240	.240	.240
		(AC-FT)	26.	42.	42.	42.

PEAK STORAGE (AC-FT)	TIME (HR)	MAXIMUM AVERAGE STORAGE 6-HR	24-HR	72-HR	24.92-HR
28.	5.92	21.	6.	6.	6.

PEAK STAGE (FEET)	TIME (HR)	MAXIMUM AVERAGE STAGE 6-HR	24-HR	72-HR	24.92-HR
1100.09	5.92	1099.16	1091.30	1091.11	1091.11

CUMULATIVE AREA = 3.32 SQ MI

HYDROGRAPH AT 3B
TRANSPOSITION AREA 2.8 SQ MI

DA	MON	HRMN	ORD	OUTFLOW	STORAGE	STAGE	DA	MON	HRMN	ORD	OUTFLOW	STORAGE	STAGE	DA	MON	HRMN	ORD	OUTFLOW	STORAGE	STA
1		0000	1	29.	.0	1091.0	1		0820	101	48.	13.4	1098.0	1		1640	201	0.	.0	108e
1		0005	2	0.	.0	1086.2	1		0825	102	48.	13.1	1097.9	1		1645	202	0.	.0	108e
1		0010	3	1.	.0	1086.3	1		0830	103	48.	12.8	1097.9	1		1650	203	0.	.0	108e
1		0015	4	1.	.0	1086.4	1		0835	104	48.	12.4	1097.8	1		1655	204	0.	.0	108e
1		0020	5	2.	.0	1086.5	1		0840	105	47.	12.1	1097.7	1		1700	205	0.	.0	1086
1		0025	6	3.	.0	1086.6	1		0845	106	47.	11.8	1097.6	1		1705	206	0.	.0	108e
1		0030	7	3.	.0	1086.8	1		0850	107	47.	11.5	1097.6	1		1710	207	0.	.0	108e
1		0035	8	4.	.0	1086.8	1		0855	108	47.	11.1	1097.5	1		1715	208	0.	.0	1086
1		0040	9	5.	.0	1086.9	1		0900	109	47.	10.8	1097.4	1		1720	209	0.	.0	108e
1		0045	10	5.	.0	1087.0	1		0905	110	46.	10.5	1097.4	1		1725	210	0.	.0	1086
1		0050	11	6.	.0	1087.1	1		0910	111	46.	10.2	1097.3	1		1730	211	0.	.0	108e
1		0055	12	6.	.0	1087.2	1		0915	112	46.	9.9	1097.2	1		1735	212	0.	.0	108e
1		0100	13	7.	.0	1087.3	1		0920	113	46.	9.5	1097.1	1		1740	213	0.	.0	108e
1		0105	14	7.	.0	1087.4	1		0925	114	46.	9.2	1097.1	1		1745	214	0.	.0	108e
1		0110	15	7.	.0	1087.4	1		0930	115	45.	8.9	1097.0	1		1750	215	0.	.0	1086
1		0115	16	8.	.0	1087.5	1		0935	116	45.	8.6	1096.9	1		1755	216	0.	.0	1086
1		0120	17	8.	.0	1087.5	1		0940	117	45.	8.3	1096.8	1		1800	217	0.	.0	1086
1		0125	18	8.	.0	1087.5	1		0945	118	45.	8.0	1096.8	1		1805	218	0.	.0	1086
1		0130	19	8.	.0	1087.6	1		0950	119	44.	7.7	1096.7	1		1810	219	0.	.0	108e
1		0135	20	8.	.0	1087.6	1		0955	120	44.	7.4	1096.6	1		1815	220	0.	.0	108e
1		0140	21	8.	.0	1087.6	1		1000	121	44.	7.1	1096.5	1		1820	221	0.	.0	1086
1		0145	22	9.	.0	1087.6	1		1005	122	44.	6.8	1096.5	1		1825	222	0.	.0	1086
1		0150	23	9.	.0	1087.6	1		1010	123	44.	6.5	1096.4	1		1830	223	0.	.0	1086
1		0155	24	9.	.0	1087.6	1		1015	124	43.	6.2	1096.3	1		1835	224	0.	.0	1086
1		0200	25	9.	.0	1087.7	1		1020	125	43.	5.9	1096.2	1		1840	225	0.	.0	1086
1		0205	26	9.	.0	1087.7	1		1025	126	43.	5.6	1096.2	1		1845	226	0.	.0	1086
1		0210	27	9.	.0	1087.7	1		1030	127	43.	5.3	1096.1	1		1850	227	0.	.0	1086
1		0215	28	9.	.0	1087.7	1		1035	128	42.	5.0	1096.0	1		1855	228	0.	.0	1086
1		0220	29	9.	.0	1087.7	1		1040	129	42.	4.7	1095.9	1		1900	229	0.	.0	1086
1		0225	30	9.	.0	1087.7	1		1045	130	42.	4.4	1095.8	1		1905	230	0.	.0	1086
1		0230	31	9.	.0	1087.8	1		1050	131	42.	4.1	1095.8	1		1910	231	0.	.0	1086
1		0235	32	10.	.0	1087.8	1		1055	132	42.	3.8	1095.7	1		1915	232	0.	.0	1086
1		0240	33	10.	.0	1087.9	1		1100	133	41.	3.5	1095.6	1		1920	233	0.	.0	1086
1		0245	34	10.	.0	1088.0	1		1105	134	41.	3.3	1095.5	1		1925	234	0.	.0	1086
1		0250	35	11.	.0	1088.0	1		1110	135	41.	3.0	1095.4	1		1930	235	0.	.0	1086
1		0255	36	12.	.0	1088.2	1		1115	136	41.	2.7	1095.3	1		1935	236	0.	.0	108e
1		0300	37	13.	.0	1088.3	1		1120	137	40.	2.4	1095.2	1		1940	237	0.	.0	1086
1		0305	38	14.	.0	1088.5	1		1125	138	40.	2.1	1095.2	1		1945	238	0.	.0	1086
1		0310	39	16.	.0	1088.9	1		1130	139	40.	1.9	1095.1	1		1950	239	0.	.0	1086
1		0315	40	19.	.0	1089.3	1		1135	140	40.	1.6	1095.0	1		1955	240	0.	.0	1086
1		0320	41	22.	.0	1089.9	1		1140	141	39.	1.3	1094.8	1		2000	241	0.	.0	1086
1		0325	42	27.	.0	1090.8	1		1145	142	39.	1.0	1094.6	1		2005	242	0.	.0	1086
1		0330	43	29.	.0	1091.2	1		1150	143	38.	.8	1094.4	1		2010	243	0.	.0	1086
1		0335	44	30.	.1	1091.7	1		1155	144	38.	.5	1094.2	1		2015	244	0.	.0	1086
1		0340	45	34.	.2	1092.9	1		1200	145	36.	.3	1093.6	1		2020	245	0.	.0	1086
1		0345	46	37.	.4	1094.1	1		1205	146	29.	.0	1091.4	1		2025	246	0.	.0	1086

1	0350	47	38.	.7	1094.3	*	1	1210	147	0.	.0	1086.2	*	1	2030	247	0.	.0	1086.
1	0355	48	39.	1.2	1094.7	*	1	1215	148	0.	.0	1086.2	*	1	2035	248	0.	.0	1086.
1	0400	49	40.	2.0	1095.1	*	1	1220	149	0.	.0	1086.2	*	1	2040	249	0.	.0	1086.
1	0405	50	41.	2.9	1095.4	*	1	1225	150	0.	.0	1086.2	*	1	2045	250	0.	.0	1086.
1	0410	51	42.	4.0	1095.7	*	1	1230	151	0.	.0	1086.2	*	1	2050	251	0.	.0	1086.
1	0415	52	43.	5.4	1096.1	*	1	1235	152	0.	.0	1086.2	*	1	2055	252	0.	.0	1086.
1	0420	53	44.	6.9	1096.5	*	1	1240	153	0.	.0	1086.2	*	1	2100	253	0.	.0	1086.
1	0425	54	45.	8.5	1096.9	*	1	1245	154	0.	.0	1086.2	*	1	2105	254	0.	.0	1086.
1	0430	55	46.	10.0	1097.2	*	1	1250	155	0.	.0	1086.2	*	1	2110	255	0.	.0	1086.
1	0435	56	47.	11.4	1097.6	*	1	1255	156	0.	.0	1086.2	*	1	2115	256	0.	.0	1086.
1	0440	57	48.	12.7	1097.8	*	1	1300	157	0.	.0	1086.2	*	1	2120	257	0.	.0	1086.
1	0445	58	48.	13.9	1098.1	*	1	1305	158	0.	.0	1086.2	*	1	2125	258	0.	.0	1086.
1	0450	59	49.	15.0	1098.3	*	1	1310	159	0.	.0	1086.2	*	1	2130	259	0.	.0	1086.
1	0455	60	49.	15.9	1098.4	*	1	1315	160	0.	.0	1086.2	*	1	2135	260	0.	.0	1086.
1	0500	61	50.	16.8	1098.6	*	1	1320	161	0.	.0	1086.2	*	1	2140	261	0.	.0	1086.
1	0505	62	50.	17.5	1098.7	*	1	1325	162	0.	.0	1086.2	*	1	2145	262	0.	.0	1086.
1	0510	63	50.	18.2	1098.8	*	1	1330	163	0.	.0	1086.2	*	1	2150	263	0.	.0	1086.
1	0515	64	51.	18.9	1098.9	*	1	1335	164	0.	.0	1086.2	*	1	2155	264	0.	.0	1086.
1	0520	65	51.	19.3	1099.0	*	1	1340	165	0.	.0	1086.2	*	1	2200	265	0.	.0	1086.
1	0525	66	51.	19.7	1099.1	*	1	1345	166	0.	.0	1086.2	*	1	2205	266	0.	.0	1086.
1	0530	67	51.	20.1	1099.1	*	1	1350	167	0.	.0	1086.2	*	1	2210	267	0.	.0	1086.
1	0535	68	51.	20.5	1099.2	*	1	1355	168	0.	.0	1086.2	*	1	2215	268	0.	.0	1086.
1	0540	69	52.	20.8	1099.2	*	1	1400	169	0.	.0	1086.2	*	1	2220	269	0.	.0	1086.
1	0545	70	52.	21.0	1099.2	*	1	1405	170	0.	.0	1086.2	*	1	2225	270	0.	.0	1086.
1	0550	71	52.	21.2	1099.2	*	1	1410	171	0.	.0	1086.2	*	1	2230	271	0.	.0	1086.
1	0555	72	52.	21.2	1099.3	*	1	1415	172	0.	.0	1086.2	*	1	2235	272	0.	.0	1086.
1	0600	73	52.	21.2	1099.2	*	1	1420	173	0.	.0	1086.2	*	1	2240	273	0.	.0	1086.
1	0605	74	52.	21.0	1099.2	*	1	1425	174	0.	.0	1086.2	*	1	2245	274	0.	.0	1086.
1	0610	75	52.	20.9	1099.2	*	1	1430	175	0.	.0	1086.2	*	1	2250	275	0.	.0	1086.
1	0615	76	52.	20.7	1099.2	*	1	1435	176	0.	.0	1086.2	*	1	2255	276	0.	.0	1086.
1	0620	77	51.	20.6	1099.2	*	1	1440	177	0.	.0	1086.2	*	1	2300	277	0.	.0	1086.
1	0625	78	51.	20.4	1099.1	*	1	1445	178	0.	.0	1086.2	*	1	2305	278	0.	.0	1086.
1	0630	79	51.	20.1	1099.1	*	1	1450	179	0.	.0	1086.2	*	1	2310	279	0.	.0	1086.
1	0635	80	51.	19.9	1099.1	*	1	1455	180	0.	.0	1086.2	*	1	2315	280	0.	.0	1086.
1	0640	81	51.	19.7	1099.1	*	1	1500	181	0.	.0	1086.2	*	1	2320	281	0.	.0	1086.
1	0645	82	51.	19.4	1099.0	*	1	1505	182	0.	.0	1086.2	*	1	2325	282	0.	.0	1086.
1	0650	83	51.	19.1	1099.0	*	1	1510	183	0.	.0	1086.2	*	1	2330	283	0.	.0	1086.
1	0655	84	51.	18.8	1098.9	*	1	1515	184	0.	.0	1086.2	*	1	2335	284	0.	.0	1086.
1	0700	85	51.	18.5	1098.9	*	1	1520	185	0.	.0	1086.2	*	1	2340	285	0.	.0	1086.
1	0705	86	51.	18.3	1098.8	*	1	1525	186	0.	.0	1086.2	*	1	2345	286	0.	.0	1086.
1	0710	87	50.	17.9	1098.8	*	1	1530	187	0.	.0	1086.2	*	1	2350	287	0.	.0	1086.
1	0715	88	50.	17.6	1098.7	*	1	1535	188	0.	.0	1086.2	*	1	2355	288	0.	.0	1086.
1	0720	89	50.	17.3	1098.7	*	1	1540	189	0.	.0	1086.2	*	2	0000	289	0.	.0	1086.
1	0725	90	50.	17.0	1098.6	*	1	1545	190	0.	.0	1086.2	*	2	0005	290	0.	.0	1086.
1	0730	91	50.	16.7	1098.6	*	1	1550	191	0.	.0	1086.2	*	2	0010	291	0.	.0	1086.
1	0735	92	50.	16.4	1098.5	*	1	1555	192	0.	.0	1086.2	*	2	0015	292	0.	.0	1086.
1	0740	93	49.	16.0	1098.5	*	1	1600	193	0.	.0	1086.2	*	2	0020	293	0.	.0	1086.
1	0745	94	49.	15.7	1098.4	*	1	1605	194	0.	.0	1086.2	*	2	0025	294	0.	.0	1086.
1	0750	95	49.	15.4	1098.3	*	1	1610	195	0.	.0	1086.2	*	2	0030	295	0.	.0	1086.
1	0755	96	49.	15.1	1098.3	*	1	1615	196	0.	.0	1086.2	*	2	0035	296	0.	.0	1086.
1	0800	97	49.	14.7	1098.2	*	1	1620	197	0.	.0	1086.2	*	2	0040	297	0.	.0	1086.
1	0805	98	49.	14.4	1098.2	*	1	1625	198	0.	.0	1086.2	*	2	0045	298	0.	.0	1086.
1	0810	99	48.	14.1	1098.1	*	1	1630	199	0.	.0	1086.2	*	2	0050	299	0.	.0	1086.
1	0815	100	48.	13.7	1098.1	*	1	1635	200	0.	.0	1086.2	*	2	0055	300	0.	.0	1086.
						*							*						

PEAK FLOW	TIME		MAXIMUM AVERAGE FLOW			
			6-HR	24-HR	72-HR	24.92-HR
* (CFS)	(HR)					
		(CFS)				
* 52.	5.92		49.	18.	17.	17.
		(INCHES)	.136	.199	.199	.199
		(AC-FT)	24.	35.	35.	35.

PEAK STORAGE	TIME	MAXIMUM AVERAGE STORAGE			
		6-HR	24-HR	72-HR	24.92-HR
* (AC-FT)	(HR)				
21.	5.92	15.	4.	4.	4.

PEAK STAGE	TIME	MAXIMUM AVERAGE STAGE			
		6-HR	24-HR	72-HR	24.92-HR
* (FEET)	(HR)				
1099.25	5.92	1098.14	1090.36	1090.20	1090.20

CUMULATIVE AREA = 3.32 SQ MI

HYDROGRAPH AT [illegible] JB
TRANSPOSITION AREA 16.0 SQ MI

DA	MON	HRMN	IRD	OUTFLOW	STORAGE	STAGE	DA	MON	HRMN	IRD	OUTFLOW	STORAGE	STAGE	DA	MON	HRMN	IRD	OUTFLOW	STORAGE	STAGE
1	0000	1	28.	.0	1091.0 *	1	0800	101	44.	7.8	1096.6 *	1	1640	201	0.	.0	1086.2
1	0005	2	0.	.0	1086.2 *	1	0805	102	44.	7.0	1096.5 *	1	1645	202	0.	.0	1086.2
1	0010	3	1.	.0	1086.3 *	1	0810	103	44.	6.7	1096.5 *	1	1650	203	0.	.0	1086.2
1	0015	4	2.	.0	1086.5 *	1	0815	104	44.	6.4	1096.4 *	1	1655	204	0.	.0	1086.2
1	0020	5	3.	.0	1086.7 *	1	0820	105	43.	6.1	1096.3 *	1	1700	205	0.	.0	1086.2
1	0025	6	4.	.0	1086.8 *	1	0825	106	43.	5.8	1096.2 *	1	1705	206	0.	.0	1086.2
1	0030	7	4.	.0	1086.9 *	1	0830	107	43.	5.5	1096.2 *	1	1710	207	0.	.0	1086.2
1	0035	8	5.	.0	1087.0 *	1	0835	108	43.	5.2	1096.1 *	1	1715	208	0.	.0	1086.2
1	0040	9	5.	.0	1087.0 *	1	0840	109	42.	4.9	1096.0 *	1	1720	209	0.	.0	1086.2
1	0045	10	6.	.0	1087.1 *	1	0845	110	42.	4.7	1095.9 *	1	1725	210	0.	.0	1086.2
1	0050	11	6.	.0	1087.2 *	1	0850	111	42.	4.4	1095.8 *	1	1730	211	0.	.0	1086.2
1	0055	12	7.	.0	1087.4 *	1	0855	112	42.	4.1	1095.8 *	1	1735	212	0.	.0	1086.2
1	0100	13	8.	.0	1087.6 *	1	0900	113	42.	3.8	1095.7 *	1	1740	213	0.	.0	1086.2
1	0105	14	9.	.0	1087.7 *	1	0905	114	41.	3.5	1095.6 *	1	1745	214	0.	.0	1086.2
1	0110	15	10.	.0	1087.9 *	1	0910	115	41.	3.2	1095.5 *	1	1750	215	0.	.0	1086.2
1	0115	16	11.	.0	1088.0 *	1	0915	116	41.	2.9	1095.4 *	1	1755	216	0.	.0	1086.2
1	0120	17	11.	.0	1088.1 *	1	0920	117	41.	2.7	1095.3 *	1	1800	217	0.	.0	1086.2
1	0125	18	12.	.0	1088.2 *	1	0925	118	40.	2.4	1095.2 *	1	1805	218	0.	.0	1086.2
1	0130	19	12.	.0	1088.2 *	1	0930	119	40.	2.1	1095.2 *	1	1810	219	0.	.0	1086.2
1	0135	20	12.	.0	1088.3 *	1	0935	120	40.	1.8	1095.1 *	1	1815	220	0.	.0	1086.2
1	0140	21	13.	.0	1088.3 *	1	0940	121	40.	1.6	1095.0 *	1	1820	221	0.	.0	1086.2
1	0145	22	13.	.0	1088.4 *	1	0945	122	39.	1.3	1094.8 *	1	1825	222	0.	.0	1086.2
1	0150	23	13.	.0	1088.4 *	1	0950	123	39.	1.0	1094.6 *	1	1830	223	0.	.0	1086.2
1	0155	24	13.	.0	1088.4 *	1	0955	124	38.	.8	1094.3 *	1	1835	224	0.	.0	1086.2
1	0200	25	13.	.0	1088.5 *	1	1000	125	37.	.5	1094.1 *	1	1840	225	0.	.0	1086.2
1	0205	26	14.	.0	1088.5 *	1	1005	126	35.	.2	1093.4 *	1	1845	226	0.	.0	1086.2
1	0210	27	14.	.0	1088.5 *	1	1010	127	29.	.0	1091.2 *	1	1850	227	0.	.0	1086.2
1	0215	28	14.	.0	1088.5 *	1	1015	128	0.	.0	1086.2 *	1	1855	228	0.	.0	1086.2
1	0220	29	14.	.0	1088.6 *	1	1020	129	0.	.0	1086.2 *	1	1900	229	0.	.0	1086.2
1	0225	30	14.	.0	1088.6 *	1	1025	130	0.	.0	1086.2 *	1	1905	230	0.	.0	1086.2
1	0230	31	14.	.0	1088.6 *	1	1030	131	0.	.0	1086.2 *	1	1910	231	0.	.0	1086.2
1	0235	32	15.	.0	1088.7 *	1	1035	132	0.	.0	1086.2 *	1	1915	232	0.	.0	1086.2
1	0240	33	15.	.0	1088.7 *	1	1040	133	0.	.0	1086.2 *	1	1920	233	0.	.0	1086.2
1	0245	34	15.	.0	1088.8 *	1	1045	134	0.	.0	1086.2 *	1	1925	234	0.	.0	1086.2
1	0250	35	16.	.0	1088.8 *	1	1050	135	0.	.0	1086.2 *	1	1930	235	0.	.0	1086.2
1	0255	36	16.	.0	1088.9 *	1	1055	136	0.	.0	1086.2 *	1	1935	236	0.	.0	1086.2
1	0300	37	17.	.0	1089.0 *	1	1100	137	0.	.0	1086.2 *	1	1940	237	0.	.0	1086.2
1	0305	38	18.	.0	1089.2 *	1	1105	138	0.	.0	1086.2 *	1	1945	238	0.	.0	1086.2
1	0310	39	20.	.0	1089.5 *	1	1110	139	0.	.0	1086.2 *	1	1950	239	0.	.0	1086.2
1	0315	40	22.	.0	1089.9 *	1	1115	140	0.	.0	1086.2 *	1	1955	240	0.	.0	1086.2
1	0320	41	25.	.0	1090.4 *	1	1120	141	0.	.0	1086.2 *	1	2000	241	0.	.0	1086.2
1	0325	42	28.	.0	1091.0 *	1	1125	142	0.	.0	1086.2 *	1	2005	242	0.	.0	1086.2
1	0330	43	29.	.0	1091.2 *	1	1130	143	0.	.0	1086.2 *	1	2010	243	0.	.0	1086.2
1	0335	44	31.	.1	1091.8 *	1	1135	144	0.	.0	1086.2 *	1	2015	244	0.	.0	1086.2
1	0340	45	33.	.2	1092.7 *	1	1200	145	0.	.0	1086.2 *	1	2020	245	0.	.0	1086.2
1	0345	46	37.	.3	1094.0 *	1	1205	146	0.	.0	1086.2 *	1	2025	246	0.	.0	1086.2
1	0350	47	38.	.6	1094.2 *	1	1210	147	0.	.0	1086.2 *	1	2030	247	0.	.0	1086.2
1	0355	48	38.	.9	1094.5 *	1	1215	148	0.	.0	1086.2 *	1	2035	248	0.	.0	1086.2
1	0400	49	39.	1.4	1094.8 *	1	1220	149	0.	.0	1086.2 *	1	2040	249	0.	.0	1086.2
1	0405	50	40.	2.0	1095.1 *	1	1225	150	0.	.0	1086.2 *	1	2045	250	0.	.0	1086.2
1	0410	51	41.	2.7	1095.3 *	1	1230	151	0.	.0	1086.2 *	1	2050	251	0.	.0	1086.2
1	0415	52	41.	3.5	1095.6 *	1	1235	152	0.	.0	1086.2 *	1	2055	252	0.	.0	1086.2
1	0420	53	42.	4.3	1095.8 *	1	1240	153	0.	.0	1086.2 *	1	2100	253	0.	.0	1086.2
1	0425	54	43.	5.2	1096.1 *	1	1245	154	0.	.0	1086.2 *	1	2105	254	0.	.0	1086.2
1	0430	55	43.	6.2	1096.3 *	1	1250	155	0.	.0	1086.2 *	1	2110	255	0.	.0	1086.2
1	0435	56	44.	7.1	1096.6 *	1	1255	156	0.	.0	1086.2 *	1	2115	256	0.	.0	1086.2
1	0440	57	45.	8.0	1096.8 *	1	1300	157	0.	.0	1086.2 *	1	2120	257	0.	.0	1086.2
1	0445	58	45.	8.8	1097.0 *	1	1305	158	0.	.0	1086.2 *	1	2125	258	0.	.0	1086.2
1	0450	59	46.	9.6	1097.2 *	1	1310	159	0.	.0	1086.2 *	1	2130	259	0.	.0	1086.2
1	0455	60	46.	10.4	1097.3 *	1	1315	160	0.	.0	1086.2 *	1	2135	260	0.	.0	1086.2
1	0500	61	47.	11.1	1097.5 *	1	1320	161	0.	.0	1086.2 *	1	2140	261	0.	.0	1086.2
1	0505	62	47.	11.7	1097.6 *	1	1325	162	0.	.0	1086.2 *	1	2145	262	0.	.0	1086.2
1	0510	63	47.	12.3	1097.8 *	1	1330	163	0.	.0	1086.2 *	1	2150	263	0.	.0	1086.2
1	0515	64	48.	12.8	1097.9 *	1	1335	164	0.	.0	1086.2 *	1	2155	264	0.	.0	1086.2
1	0520	65	48.	13.2	1098.0 *	1	1340	165	0.	.0	1086.2 *	1	2200	265	0.	.0	1086.2
1	0525	66	48.	13.6	1098.0 *	1	1345	166	0.	.0	1086.2 *	1	2205	266	0.	.0	1086.2
1	0530	67	48.	14.0	1098.1 *	1	1350	167	0.	.0	1086.2 *	1	2210	267	0.	.0	1086.2
1	0535	68	49.	14.3	1098.2 *	1	1355	168	0.	.0	1086.2 *	1	2215	268	0.	.0	1086.2
1	0540	69	49.	14.5	1098.2 *	1	1400	169	0.	.0	1086.2 *	1	2220	269	0.	.0	1086.2
1	0545	70	49.	14.7	1098.2 *	1	1405	170	0.	.0	1086.2 *	1	2225	270	0.	.0	1086.2
1	0550	71	49.	14.7	1098.2 *	1	1410	171	0.	.0	1086.2 *	1	2230	271	0.	.0	1086.2
1	0555	72	49.	14.6	1098.2 *	1	1415	172	0.	.0	1086.2 *	1	2235	272	0.	.0	1086.2

1	0600	73	49.	14.5	1098.2	*	1	1420	173	0.	.0	1086.2	*	1	2240	273	0.	.1	1086.
1	0605	74	49.	14.4	1098.2	*	1	1425	174	0.	.0	1086.2	*	1	2245	274	0.	.1	1086.
1	0610	75	49.	14.3	1098.2	*	1	1430	175	0.	.0	1086.2	*	1	2250	275	0.	.1	1086.
1	0615	76	48.	14.1	1098.1	*	1	1435	176	0.	.0	1086.2	*	1	2255	276	0.	.1	1086.
1	0620	77	48.	14.0	1098.1	*	1	1440	177	0.	.0	1086.2	*	1	2300	277	0.	.1	1086.
1	0625	78	48.	13.8	1098.1	*	1	1445	178	0.	.0	1086.2	*	1	2305	278	0.	.1	1086.
1	0630	79	48.	13.6	1098.0	*	1	1450	179	0.	.0	1086.2	*	1	2310	279	0.	.1	1086.
1	0635	80	48.	13.4	1098.0	*	1	1455	180	0.	.0	1086.2	*	1	2315	280	0.	.1	1086.
1	0640	81	48.	13.1	1097.9	*	1	1500	181	0.	.0	1086.2	*	1	2320	281	0.	.1	1086.
1	0645	82	48.	12.9	1097.9	*	1	1505	182	0.	.0	1086.2	*	1	2325	282	0.	.1	1086.
1	0650	83	48.	12.6	1097.8	*	1	1510	183	0.	.0	1086.2	*	1	2330	283	0.	.1	1086.
1	0655	84	47.	12.4	1097.8	*	1	1515	184	0.	.0	1086.2	*	1	2335	284	0.	.1	1086.
1	0700	85	47.	12.1	1097.7	*	1	1520	185	0.	.0	1086.2	*	1	2340	285	0.	.1	1086.
1	0705	86	47.	11.8	1097.6	*	1	1525	186	0.	.0	1086.2	*	1	2345	286	0.	.1	1086.
1	0710	87	47.	11.5	1097.6	*	1	1530	187	0.	.0	1086.2	*	1	2350	287	0.	.1	1086.
1	0715	88	47.	11.2	1097.5	*	1	1535	188	0.	.0	1086.2	*	1	2355	288	0.	.1	1086.
1	0720	89	47.	10.9	1097.5	*	1	1540	189	0.	.0	1086.2	*	2	0000	289	0.	.1	1086.
1	0725	90	46.	10.7	1097.4	*	1	1545	190	0.	.0	1086.2	*	2	0005	290	0.	.1	1086.
1	0730	91	46.	10.4	1097.3	*	1	1550	191	0.	.0	1086.2	*	2	0010	291	0.	.1	1086.
1	0735	92	46.	10.1	1097.3	*	1	1555	192	0.	.0	1086.2	*	2	0015	292	0.	.1	1086.
1	0740	93	46.	9.8	1097.2	*	1	1600	193	0.	.0	1086.2	*	2	0020	293	0.	.1	1086.
1	0745	94	46.	9.4	1097.1	*	1	1605	194	0.	.0	1086.2	*	2	0025	294	0.	.1	1086.
1	0750	95	46.	9.1	1097.1	*	1	1610	195	0.	.0	1086.2	*	2	0030	295	0.	.1	1086.
1	0755	96	45.	8.8	1097.0	*	1	1615	196	0.	.0	1086.2	*	2	0035	296	0.	.1	1086.
1	0800	97	45.	8.5	1096.9	*	1	1620	197	0.	.0	1086.2	*	2	0040	297	0.	.1	1086.
1	0805	98	45.	8.2	1096.8	*	1	1625	198	0.	.0	1086.2	*	2	0045	298	0.	.1	1086.
1	0810	99	45.	7.9	1096.8	*	1	1630	199	0.	.0	1086.2	*	2	0050	299	0.	.1	1086.
1	0815	100	44.	7.6	1096.7	*	1	1635	200	0.	.0	1086.2	*	2	0055	300	0.	.1	1086.

****

PEAK FLOW (CFS)	TIME (HR)		MAXIMUM AVERAGE FLOW 6-HR	24-HR	72-HR	24.92-HR
49.	5.83	(CFS)	45.	15.	14.	14.
		(INCHES)	.126	.164	.164	.164
		(AC-FT)	22.	29.	29.	29.

PEAK STORAGE (AC-FT)	TIME (HR)	MAXIMUM AVERAGE STORAGE 6-HR	24-HR	72-HR	24.92-HR
15.	5.83	9.	2.	2.	2.

PEAK STAGE (FEET)	TIME (HR)	MAXIMUM AVERAGE STAGE 6-HR	24-HR	72-HR	24.92-HR
1098.22	5.83	1096.93	1089.50	1089.38	1089.38

CUMULATIVE AREA = 3.32 SQ MI

****

HYDROGRAPH AT SB
TRANSPOSITION AREA 90.0 SQ MI

****

DA	MON	HRMN	ORD	OUTFLOW	STORAGE	STAGE	*	DA	MON	HRMN	ORD	OUTFLOW	STORAGE	STAGE	*	DA	MON	HRMN	ORD	OUTFLOW	STORAGE	STAG
1		0000	1	28.	.0	1091.0	*	1		0820	101	1.	.1	1090.8	*	1		1640	201	0.	.1	1090.
1		0005	2	0.	.0	1086.2	*	1		0825	102	0.	.1	1090.8	*	1		1645	202	0.	.1	1090.
1		0010	3	1.	.0	1086.3	*	1		0830	103	0.	.1	1090.8	*	1		1650	203	0.	.1	1090.
1		0015	4	2.	.0	1086.6	*	1		0835	104	0.	.1	1090.7	*	1		1655	204	0.	.1	1090.
1		0020	5	4.	.0	1086.8	*	1		0840	105	0.	.1	1090.7	*	1		1700	205	0.	.1	1090.
1		0025	6	5.	.0	1087.0	*	1		0845	106	0.	.1	1090.7	*	1		1705	206	0.	.1	1090.
1		0030	7	6.	.0	1087.2	*	1		0850	107	0.	.1	1090.7	*	1		1710	207	0.	.1	1090.
1		0035	8	7.	.0	1087.4	*	1		0855	108	0.	.1	1090.7	*	1		1715	208	0.	.1	1090.
1		0040	9	8.	.0	1087.5	*	1		0900	109	0.	.1	1090.7	*	1		1720	209	0.	.1	1090.
1		0045	10	9.	.0	1087.6	*	1		0905	110	0.	.1	1090.7	*	1		1725	210	0.	.1	1090.
1		0050	11	10.	.0	1087.8	*	1		0910	111	0.	.1	1090.7	*	1		1730	211	0.	.1	1090.
1		0055	12	10.	.0	1087.9	*	1		0915	112	0.	.1	1090.7	*	1		1735	212	0.	.1	1090.
1		0100	13	11.	.0	1088.0	*	1		0920	113	0.	.1	1090.7	*	1		1740	213	0.	.1	1090.
1		0105	14	12.	.0	1088.2	*	1		0925	114	0.	.1	1090.7	*	1		1745	214	0.	.1	1090.
1		0110	15	12.	.0	1088.3	*	1		0930	115	0.	.1	1090.7	*	1		1750	215	0.	.1	1090.
1		0115	16	13.	.0	1088.3	*	1		0935	116	0.	.1	1090.7	*	1		1755	216	0.	.1	1090.
1		0120	17	13.	.0	1088.4	*	1		0940	117	0.	.1	1090.7	*	1		1800	217	0.	.1	1090.

1	0125	18	13.	.0	1088.4	*	1	0945	118	0.	.1	1090.7	*	1	1805	218	0.	.1	1090.
1	0130	19	14.	.0	1088.5	*	1	0950	119	0.	.1	1090.7	*	1	1810	219	0.	.1	1090.
1	0135	20	14.	.0	1088.6	*	1	0955	120	0.	.1	1090.7	*	1	1815	220	0.	.1	1090.
1	0140	21	14.	.0	1088.6	*	1	1000	121	0.	.1	1090.7	*	1	1820	221	0.	.1	1090.
1	0145	22	15.	.0	1088.7	*	1	1005	122	0.	.1	1090.7	*	1	1825	222	0.	.1	1090.
1	0150	23	15.	.0	1088.7	*	1	1010	123	0.	.1	1090.7	*	1	1830	223	0.	.1	1090.
1	0155	24	15.	.0	1088.8	*	1	1015	124	0.	.1	1090.7	*	1	1835	224	0.	.1	1090.
1	0200	25	16.	.0	1088.8	*	1	1020	125	0.	.1	1090.7	*	1	1840	225	0.	.1	1090.
1	0205	26	16.	.0	1088.8	*	1	1025	126	0.	.1	1090.7	*	1	1845	226	0.	.1	1090.
1	0210	27	16.	.0	1088.8	*	1	1030	127	0.	.1	1090.7	*	1	1850	227	0.	.1	1090.
1	0215	28	16.	.0	1088.8	*	1	1035	128	0.	.1	1090.7	*	1	1855	228	0.	.1	1090.
1	0220	29	16.	.0	1088.8	*	1	1040	129	0.	.1	1090.7	*	1	1900	229	0.	.1	1090.
1	0225	30	16.	.0	1088.9	*	1	1045	130	0.	.1	1090.7	*	1	1905	230	0.	.1	1090.
1	0230	31	16.	.0	1088.9	*	1	1050	131	0.	.1	1090.7	*	1	1910	231	0.	.1	1090.
1	0235	32	16.	.0	1088.9	*	1	1055	132	0.	.1	1090.7	*	1	1915	232	0.	.1	1090.
1	0240	33	16.	.0	1088.9	*	1	1100	133	0.	.1	1090.7	*	1	1920	233	0.	.1	1090.
1	0245	34	17.	.0	1089.0	*	1	1105	134	0.	.1	1090.7	*	1	1925	234	0.	.1	1090.
1	0250	35	17.	.0	1089.1	*	1	1110	135	0.	.1	1090.7	*	1	1930	235	0.	.1	1090.
1	0255	36	18.	.0	1089.2	*	1	1115	136	0.	.1	1090.7	*	1	1935	236	0.	.1	1090.
1	0300	37	19.	.0	1089.3	*	1	1120	137	0.	.1	1090.7	*	1	1940	237	0.	.1	1090.
1	0305	38	20.	.0	1089.5	*	1	1125	138	0.	.1	1090.7	*	1	1945	238	0.	.1	1090.
1	0310	39	21.	.0	1089.8	*	1	1130	139	0.	.1	1090.7	*	1	1950	239	0.	.1	1090.
1	0315	40	24.	.0	1090.2	*	1	1135	140	0.	.1	1090.7	*	1	1955	240	0.	.1	1090.
1	0320	41	26.	.0	1090.6	*	1	1140	141	0.	.1	1090.7	*	1	2000	241	0.	.1	1090.
1	0325	42	28.	.0	1091.0	*	1	1145	142	0.	.1	1090.7	*	1	2005	242	0.	.1	1090.
1	0330	43	29.	.0	1091.2	*	1	1150	143	0.	.1	1090.7	*	1	2010	243	0.	.1	1090.
1	0335	44	30.	.1	1091.7	*	1	1155	144	0.	.1	1090.7	*	1	2015	244	0.	.1	1090.
1	0340	45	32.	.1	1092.4	*	1	1200	145	0.	.1	1090.7	*	1	2020	245	0.	.1	1090.
1	0345	46	35.	.2	1093.4	*	1	1205	146	0.	.1	1090.7	*	1	2025	246	0.	.1	1090.
1	0350	47	37.	.4	1094.1	*	1	1210	147	0.	.1	1090.7	*	1	2030	247	0.	.1	1090.
1	0355	48	38.	.6	1094.2	*	1	1215	148	0.	.1	1090.7	*	1	2035	248	0.	.1	1090.
1	0400	49	38.	.8	1094.4	*	1	1220	149	0.	.1	1090.7	*	1	2040	249	0.	.1	1090.
1	0405	50	39.	1.1	1094.6	*	1	1225	150	0.	.1	1090.7	*	1	2045	250	0.	.1	1090.
1	0410	51	40.	1.5	1094.9	*	1	1230	151	0.	.1	1090.7	*	1	2050	251	0.	.1	1090.
1	0415	52	40.	1.9	1095.1	*	1	1235	152	0.	.1	1090.7	*	1	2055	252	0.	.1	1090.
1	0420	53	40.	2.3	1095.2	*	1	1240	153	0.	.1	1090.7	*	1	2100	253	0.	.1	1090.
1	0425	54	41.	2.7	1095.3	*	1	1245	154	0.	.1	1090.7	*	1	2105	254	0.	.1	1090.
1	0430	55	41.	3.1	1095.5	*	1	1250	155	0.	.1	1090.7	*	1	2110	255	0.	.1	1090.
1	0435	56	41.	3.5	1095.6	*	1	1255	156	0.	.1	1090.7	*	1	2115	256	0.	.1	1090.
1	0440	57	42.	3.8	1095.7	*	1	1300	157	0.	.1	1090.7	*	1	2120	257	0.	.1	1090.
1	0445	58	42.	4.2	1095.8	*	1	1305	158	0.	.1	1090.7	*	1	2125	258	0.	.1	1090.
1	0450	59	42.	4.5	1095.9	*	1	1310	159	0.	.1	1090.7	*	1	2130	259	0.	.1	1090.
1	0455	60	42.	4.7	1095.9	*	1	1315	160	0.	.1	1090.7	*	1	2135	260	0.	.1	1090.
1	0500	61	42.	4.9	1096.0	*	1	1320	161	0.	.1	1090.7	*	1	2140	261	0.	.1	1090.
1	0505	62	43.	5.1	1096.1	*	1	1325	162	0.	.1	1090.7	*	1	2145	262	0.	.1	1090.
1	0510	63	43.	5.3	1096.1	*	1	1330	163	0.	.1	1090.7	*	1	2150	263	0.	.1	1090.
1	0515	64	43.	5.4	1096.1	*	1	1335	164	0.	.1	1090.7	*	1	2155	264	0.	.1	1090.
1	0520	65	43.	5.5	1096.1	*	1	1340	165	0.	.1	1090.7	*	1	2200	265	0.	.1	1090.
1	0525	66	43.	5.5	1096.2	*	1	1345	166	0.	.1	1090.7	*	1	2205	266	0.	.1	1090.
1	0530	67	43.	5.6	1096.2	*	1	1350	167	0.	.1	1090.7	*	1	2210	267	0.	.1	1090.
1	0535	68	43.	5.6	1096.2	*	1	1355	168	0.	.1	1090.7	*	1	2215	268	0.	.1	1090.
1	0540	69	43.	5.5	1096.2	*	1	1400	169	0.	.1	1090.7	*	1	2220	269	0.	.1	1090.
1	0545	70	43.	5.5	1096.1	*	1	1405	170	0.	.1	1090.7	*	1	2225	270	0.	.1	1090.
1	0550	71	43.	5.4	1096.1	*	1	1410	171	0.	.1	1090.7	*	1	2230	271	0.	.1	1090.
1	0555	72	43.	5.4	1096.1	*	1	1415	172	0.	.1	1090.7	*	1	2235	272	0.	.1	1090.
1	0600	73	43.	5.3	1096.1	*	1	1420	173	0.	.1	1090.7	*	1	2240	273	0.	.1	1090.
1	0605	74	43.	5.2	1096.1	*	1	1425	174	0.	.1	1090.7	*	1	2245	274	0.	.1	1090.
1	0610	75	43.	5.1	1096.0	*	1	1430	175	0.	.1	1090.7	*	1	2250	275	0.	.1	1090.
1	0615	76	42.	4.9	1096.0	*	1	1435	176	0.	.1	1090.7	*	1	2255	276	0.	.1	1090.
1	0620	77	42.	4.8	1096.0	*	1	1440	177	0.	.1	1090.7	*	1	2300	277	0.	.1	1090.
1	0625	78	42.	4.6	1095.9	*	1	1445	178	0.	.1	1090.7	*	1	2305	278	0.	.1	1090.
1	0630	79	42.	4.5	1095.9	*	1	1450	179	0.	.1	1090.7	*	1	2310	279	0.	.1	1090.
1	0635	80	42.	4.3	1095.8	*	1	1455	180	0.	.1	1090.7	*	1	2315	280	0.	.1	1090.
1	0640	81	42.	4.1	1095.7	*	1	1500	181	0.	.1	1090.7	*	1	2320	281	0.	.1	1090.
1	0645	82	42.	3.9	1095.7	*	1	1505	182	0.	.1	1090.7	*	1	2325	282	0.	.1	1090.
1	0650	83	41.	3.6	1095.6	*	1	1510	183	0.	.1	1090.7	*	1	2330	283	0.	.1	1090.
1	0655	84	41.	3.4	1095.6	*	1	1515	184	0.	.1	1090.7	*	1	2335	284	0.	.1	1090.
1	0700	85	41.	3.2	1095.5	*	1	1520	185	0.	.1	1090.7	*	1	2340	285	0.	.1	1090.
1	0705	86	41.	3.0	1095.4	*	1	1525	186	0.	.1	1090.7	*	1	2345	286	0.	.1	1090.
1	0710	87	41.	2.7	1095.3	*	1	1530	187	0.	.1	1090.7	*	1	2350	287	0.	.1	1090.
1	0715	88	40.	2.5	1095.3	*	1	1535	188	0.	.1	1090.7	*	1	2355	288	0.	.1	1090.
1	0720	89	40.	2.2	1095.2	*	1	1540	189	0.	.1	1090.7	*	2	0000	289	0.	.1	1090.
1	0725	90	40.	2.0	1095.1	*	1	1545	190	0.	.1	1090.7	*	2	0005	290	0.	.1	1090.
1	0730	91	40.	1.7	1095.0	*	1	1550	191	0.	.1	1090.7	*	2	0010	291	0.	.1	1090.
1	0735	92	40.	1.5	1094.9	*	1	1555	192	0.	.1	1090.7	*	2	0015	292	0.	.1	1090.
1	0740	93	39.	1.2	1094.7	*	1	1600	193	0.	.1	1090.7	*	2	0020	293	0.	.1	1090.
1	0745	94	38.	.9	1094.5	*	1	1605	194	0.	.1	1090.7	*	2	0025	294	0.	.1	1090.
1	0750	95	38.	.7	1094.3	*	1	1610	195	0.	.1	1090.7	*	2	0030	295	0.	.1	1090.
1	0755	96	37.	.4	1094.1	*	1	1615	196	0.	.1	1090.7	*	2	0035	296	0.	.1	1090.
1	0800	97	34.	.2	1093.1	*	1	1620	197	0.	.1	1090.7	*	2	0040	297	0.	.1	1090.
1	0805	98	1.	.1	1090.8	*	1	1625	198	0.	.1	1090.7	*	2	0045	298	0.	.1	1090.

1	0810	99	1.	.1	1090.8	*	1	1630	199	0.	.1	1090.7	*	2	0050	199	0.	.1	1090
1	0815	100	1.	.1	1090.8	*	1	1635	200	0.	.1	1090.7	*	2	0055	200	0.	.1	1090

****

PEAK FLOW	TIME		MAXIMUM AVERAGE FLOW			
			6-HR	24-HR	72-HR	24.92-HR
- (CFS)	(HR)					
		(CFS)				
- 48.	5.50		35.	10.	9.	9.
		(INCHES)	.098	.109	.109	.109
		(AC-FT)	17.	19.	19.	19.

PEAK STORAGE	TIME	MAXIMUM AVERAGE STORAGE			
		6-HR	24-HR	72-HR	24.92-HR
- (AC-FT)	(HR)				
6.	5.50	2.	1.	1.	1.

PEAK STAGE	TIME	MAXIMUM AVERAGE STAGE			
		6-HR	24-HR	72-HR	24.92-HR
- (FEET)	(HR)				
1096.16	5.58	1094.17	1091.38	1091.23	1091.23

CUMULATIVE AREA = 3.32 SQ MI

****

HYDROGRAPH AT SB
TRANSPOSITION AREA 500.0 SQ MI

****

DA	MON	HRMN	ORD	OUTFLOW	STORAGE	STAGE	*	DA	MON	HRMN	ORD	OUTFLOW	STORAGE	STAGE	*	DA	MON	HRMN	ORD	OUTFLOW	STORAGE	STA
1		0000	1	29.	.0	1091.0	*	1		0820	101	0.	.0	1088.4	*	1		1640	201	0.	.0	1088
1		0005	2	0.	.0	1086.2	*	1		0825	102	0.	.0	1088.4	*	1		1645	202	0.	.0	1088
1		0010	3	1.	.0	1086.3	*	1		0830	103	0.	.0	1088.3	*	1		1650	203	0.	.0	1088
1		0015	4	2.	.0	1086.5	*	1		0835	104	0.	.0	1088.3	*	1		1655	204	0.	.0	1088
1		0020	5	3.	.0	1086.7	*	1		0840	105	0.	.0	1088.3	*	1		1700	205	0.	.0	1088
1		0025	6	4.	.0	1086.9	*	1		0845	106	0.	.0	1088.3	*	1		1705	206	0.	.0	1088
1		0030	7	5.	.0	1087.1	*	1		0850	107	0.	.0	1088.3	*	1		1710	207	0.	.0	1088
1		0035	8	6.	.0	1087.2	*	1		0855	108	0.	.0	1088.3	*	1		1715	208	0.	.0	1088
1		0040	9	7.	.0	1087.3	*	1		0900	109	0.	.0	1088.3	*	1		1720	209	0.	.0	1088
1		0045	10	7.	.0	1087.4	*	1		0905	110	0.	.0	1088.3	*	1		1725	210	0.	.0	1088
1		0050	11	8.	.0	1087.5	*	1		0910	111	0.	.0	1088.3	*	1		1730	211	0.	.0	1088
1		0055	12	8.	.0	1087.6	*	1		0915	112	0.	.0	1088.3	*	1		1735	212	0.	.0	1088
1		0100	13	9.	.0	1087.6	*	1		0920	113	0.	.0	1088.3	*	1		1740	213	0.	.0	1088
1		0105	14	9.	.0	1087.7	*	1		0925	114	0.	.0	1088.3	*	1		1745	214	0.	.0	1088
1		0110	15	9.	.0	1087.8	*	1		0930	115	0.	.0	1088.3	*	1		1750	215	0.	.0	1088
1		0115	16	10.	.0	1087.8	*	1		0935	116	0.	.0	1088.3	*	1		1755	216	0.	.0	1088.
1		0120	17	10.	.0	1087.9	*	1		0940	117	0.	.0	1088.3	*	1		1800	217	0.	.0	1088.
1		0125	18	10.	.0	1088.0	*	1		0945	118	0.	.0	1088.3	*	1		1805	218	0.	.0	1088.
1		0130	19	11.	.0	1088.0	*	1		0950	119	0.	.0	1088.3	*	1		1810	219	0.	.0	1088.
1		0135	20	11.	.0	1088.1	*	1		0955	120	0.	.0	1088.3	*	1		1815	220	0.	.0	1088.
1		0140	21	11.	.0	1088.1	*	1		1000	121	0.	.0	1088.3	*	1		1820	221	0.	.0	1088.
1		0145	22	12.	.0	1088.2	*	1		1005	122	0.	.0	1088.3	*	1		1825	222	0.	.0	1088.
1		0150	23	12.	.0	1088.2	*	1		1010	123	0.	.0	1088.3	*	1		1830	223	0.	.0	1088
1		0155	24	12.	.0	1088.2	*	1		1015	124	0.	.0	1088.3	*	1		1835	224	0.	.0	1088
1		0200	25	12.	.0	1088.3	*	1		1020	125	0.	.0	1088.3	*	1		1840	225	0.	.0	1088
1		0205	26	13.	.0	1088.3	*	1		1025	126	0.	.0	1088.3	*	1		1845	226	0.	.0	1088
1		0210	27	13.	.0	1088.3	*	1		1030	127	0.	.0	1088.3	*	1		1850	227	0.	.0	1088
1		0215	28	13.	.0	1088.4	*	1		1035	128	0.	.0	1088.3	*	1		1855	228	0.	.0	1088
1		0220	29	13.	.0	1088.4	*	1		1040	129	0.	.0	1088.3	*	1		1900	229	0.	.0	1088
1		0225	30	14.	.0	1088.5	*	1		1045	130	0.	.0	1088.3	*	1		1905	230	0.	.0	1088
1		0230	31	14.	.0	1088.5	*	1		1050	131	0.	.0	1088.3	*	1		1910	231	0.	.0	1088
1		0235	32	14.	.0	1088.6	*	1		1055	132	0.	.0	1088.3	*	1		1915	232	0.	.0	1088
1		0240	33	14.	.0	1088.6	*	1		1100	133	0.	.0	1088.3	*	1		1920	233	0.	.0	1088
1		0245	34	15.	.0	1088.7	*	1		1105	134	0.	.0	1088.3	*	1		1925	234	0.	.0	1088
1		0250	35	15.	.0	1088.7	*	1		1110	135	0.	.0	1088.3	*	1		1930	235	0.	.0	1088
1		0255	36	15.	.0	1088.8	*	1		1115	136	0.	.0	1088.3	*	1		1935	236	0.	.0	1088
1		0300	37	16.	.0	1088.9	*	1		1120	137	0.	.0	1088.3	*	1		1940	237	0.	.0	1088
1		0305	38	17.	.0	1089.0	*	1		1125	138	0.	.0	1088.3	*	1		1945	238	0.	.0	1088
1		0310	39	18.	.0	1089.1	*	1		1130	139	0.	.0	1088.3	*	1		1950	239	0.	.0	1088
1		0315	40	19.	.0	1089.4	*	1		1135	140	0.	.0	1088.3	*	1		1955	240	0.	.0	1088
1		0320	41	20.	.0	1089.6	*	1		1140	141	0.	.0	1088.3	*	1		2000	241	0.	.0	1088
1		0325	42	23.	.0	1090.0	*	1		1145	142	0.	.0	1088.3	*	1		2005	242	0.	.0	1088
1		0330	43	26.	.0	1090.5	*	1		1150	143	0.	.0	1088.3	*	1		2010	243	0.	.0	1088

1	0335	44	28.	.0	1091.0	*	1	1155	144	0.	.0	1088.3	*	1	2015	244	0.	.0	1088.
1	0340	45	29.	.0	1091.2	*	1	1200	145	0.	.0	1088.3	*	1	2020	245	0.	.0	1088.
1	0345	46	30.	.0	1091.5	*	1	1205	146	0.	.0	1088.3	*	1	2025	246	0.	.0	1088.
1	0350	47	31.	.1	1092.0	*	1	1210	147	0.	.0	1088.3	*	1	2030	247	0.	.0	1088.
1	0355	48	33.	.2	1092.6	*	1	1215	148	0.	.0	1088.3	*	1	2035	248	0.	.0	1088.
1	0400	49	35.	.2	1093.4	*	1	1220	149	0.	.0	1088.3	*	1	2040	249	0.	.0	1088.
1	0405	50	37.	.3	1094.0	*	1	1225	150	0.	.0	1088.3	*	1	2045	250	0.	.0	1088.
1	0410	51	37.	.4	1094.1	*	1	1230	151	0.	.0	1088.3	*	1	2050	251	0.	.0	1088.
1	0415	52	38.	.5	1094.2	*	1	1235	152	0.	.0	1088.3	*	1	2055	252	0.	.0	1088.
1	0420	53	38.	.6	1094.3	*	1	1240	153	0.	.0	1088.3	*	1	2100	253	0.	.0	1088.
1	0425	54	38.	.8	1094.3	*	1	1245	154	0.	.0	1088.3	*	1	2105	254	0.	.0	1088.
1	0430	55	38.	.9	1094.4	*	1	1250	155	0.	.0	1088.3	*	1	2110	255	0.	.0	1088.
1	0435	56	39.	1.0	1094.5	*	1	1255	156	0.	.0	1088.3	*	1	2115	256	0.	.0	1088.
1	0440	57	39.	1.1	1094.6	*	1	1300	157	0.	.0	1088.3	*	1	2120	257	0.	.0	1088.
1	0445	58	39.	1.2	1094.7	*	1	1305	158	0.	.0	1088.3	*	1	2125	258	0.	.0	1088.
1	0450	59	39.	1.3	1094.8	*	1	1310	159	0.	.0	1088.3	*	1	2130	259	0.	.0	1088.
1	0455	60	39.	1.4	1094.8	*	1	1315	160	0.	.0	1088.3	*	1	2135	260	0.	.0	1088.
1	0500	61	39.	1.4	1094.9	*	1	1320	161	0.	.0	1088.3	*	1	2140	261	0.	.0	1088.
1	0505	62	40.	1.5	1094.9	*	1	1325	162	0.	.0	1088.3	*	1	2145	262	0.	.0	1088.
1	0510	63	40.	1.5	1094.9	*	1	1330	163	0.	.0	1088.3	*	1	2150	263	0.	.0	1088.
1	0515	64	40.	1.5	1094.9	*	1	1335	164	0.	.0	1088.3	*	1	2155	264	0.	.0	1088.
1	0520	65	40.	1.5	1094.9	*	1	1340	165	0.	.0	1088.3	*	1	2200	265	0.	.0	1088.
1	0525	66	40.	1.5	1094.9	*	1	1345	166	0.	.0	1088.3	*	1	2205	266	0.	.0	1088.
1	0530	67	39.	1.4	1094.9	*	1	1350	167	0.	.0	1088.3	*	1	2210	267	0.	.0	1088.
1	0535	68	39.	1.4	1094.8	*	1	1355	168	0.	.0	1088.3	*	1	2215	268	0.	.0	1088.
1	0540	69	39.	1.3	1094.8	*	1	1400	169	0.	.0	1088.3	*	1	2220	269	0.	.0	1088.
1	0545	70	39.	1.2	1094.7	*	1	1405	170	0.	.0	1088.3	*	1	2225	270	0.	.0	1088.
1	0550	71	39.	1.1	1094.6	*	1	1410	171	0.	.0	1088.3	*	1	2230	271	0.	.0	1088.
1	0555	72	39.	1.0	1094.5	*	1	1415	172	0.	.0	1088.3	*	1	2235	272	0.	.0	1088.
1	0600	73	38.	.9	1094.5	*	1	1420	173	0.	.0	1088.3	*	1	2240	273	0.	.0	1088.
1	0605	74	38.	.8	1094.4	*	1	1425	174	0.	.0	1088.3	*	1	2245	274	0.	.0	1088.
1	0610	75	38.	.7	1094.3	*	1	1430	175	0.	.0	1088.3	*	1	2250	275	0.	.0	1088.
1	0615	76	38.	.5	1094.2	*	1	1435	176	0.	.0	1088.3	*	1	2255	276	0.	.0	1088.
1	0620	77	37.	.4	1094.1	*	1	1440	177	0.	.0	1088.3	*	1	2300	277	0.	.0	1088.
1	0625	78	35.	.2	1093.5	*	1	1445	178	0.	.0	1088.3	*	1	2305	278	0.	.0	1088.
1	0630	79	31.	.1	1092.1	*	1	1450	179	0.	.0	1088.3	*	1	2310	279	0.	.0	1088.
1	0635	80	11.	.0	1090.2	*	1	1455	180	0.	.0	1088.3	*	1	2315	280	0.	.0	1088.
1	0640	81	10.	.0	1089.9	*	1	1500	181	0.	.0	1088.3	*	1	2320	281	0.	.0	1088.
1	0645	82	8.	.0	1089.7	*	1	1505	182	0.	.0	1088.3	*	1	2325	282	0.	.0	1088.
1	0650	83	7.	.0	1089.5	*	1	1510	183	0.	.0	1088.3	*	1	2330	283	0.	.0	1088.
1	0655	84	6.	.0	1089.4	*	1	1515	184	0.	.0	1088.3	*	1	2335	284	0.	.0	1088.
1	0700	85	6.	.0	1089.2	*	1	1520	185	0.	.0	1088.3	*	1	2340	285	0.	.0	1088.
1	0705	86	5.	.0	1089.1	*	1	1525	186	0.	.0	1088.3	*	1	2345	286	0.	.0	1088.
1	0710	87	4.	.0	1089.0	*	1	1530	187	0.	.0	1088.3	*	1	2350	287	0.	.0	1088.
1	0715	88	4.	.0	1088.9	*	1	1535	188	0.	.0	1088.3	*	1	2355	288	0.	.0	1088.
1	0720	89	3.	.0	1088.8	*	1	1540	189	0.	.0	1088.3	*	2	0000	289	0.	.0	1088.
1	0725	90	3.	.0	1088.8	*	1	1545	190	0.	.0	1088.3	*	2	0005	290	0.	.0	1088.
1	0730	91	2.	.0	1088.7	*	1	1550	191	0.	.0	1088.3	*	2	0010	291	0.	.0	1088.
1	0735	92	2.	.0	1088.6	*	1	1555	192	0.	.0	1088.3	*	2	0015	292	0.	.0	1088.
1	0740	93	2.	.0	1088.6	*	1	1600	193	0.	.0	1088.3	*	2	0020	293	0.	.0	1088.
1	0745	94	1.	.0	1088.5	*	1	1605	194	0.	.0	1088.3	*	2	0025	294	0.	.0	1088.
1	0750	95	1.	.0	1088.5	*	1	1610	195	0.	.0	1088.3	*	2	0030	295	0.	.0	1088.
1	0755	96	1.	.0	1088.5	*	1	1615	196	0.	.0	1088.3	*	2	0035	296	0.	.0	1088.
1	0800	97	1.	.0	1088.4	*	1	1620	197	0.	.0	1088.3	*	2	0040	297	0.	.0	1088.
1	0805	98	1.	.0	1088.4	*	1	1625	198	0.	.0	1088.3	*	2	0045	298	0.	.0	1088.
1	0810	99	1.	.0	1088.4	*	1	1630	199	0.	.0	1088.3	*	2	0050	299	0.	.0	1088.
1	0815	100	1.	.0	1088.4	*	1	1635	200	0.	.0	1088.3	*	2	0055	300	0.	.0	1088.
						*							*						

****

PEAK FLOW	TIME		MAXIMUM AVERAGE FLOW			
			6-HR	24-HR	72-HR	24.92-HR
+ (CFS)	(HR)					
		(CFS)				
+ 40.	5.25		25.	7.	6.	6.
		(INCHES)	.070	.074	.074	.074
		(AC-FT)	12.	13.	13.	13.

PEAK STORAGE	TIME	MAXIMUM AVERAGE STORAGE			
		6-HR	24-HR	72-HR	24.92-HR
+ (AC-FT)	(HR)				
2.	5.25	0.	0.	0.	0.

PEAK STAGE	TIME	MAXIMUM AVERAGE STAGE			
		6-HR	24-HR	72-HR	24.92-HR
+ (FEET)	(HR)				
1094.93	5.25	1091.50	1089.08	1089.01	1089.01

CUMULATIVE AREA = 3.32 SQ MI

INTERPOLATED HYDROGRAPH AT 3B

DA	MON	HRMN	IRD	FLOW	DA	MON	HRMN	IRD	FLOW	DA	MON	HRMN	IRD	FLOW	DA	MON	HRMN	IRD	FLOW
1		0000	1	28.	1		0615	76	51.	1		1230	151	0.	1		1845	226	0.
1		0005	2	0.	1		0620	77	51.	1		1235	152	0.	1		1850	227	0.
1		0010	3	1.	1		0625	78	51.	1		1240	153	0.	1		1855	228	0.
1		0015	4	1.	1		0630	79	51.	1		1245	154	0.	1		1900	229	0.
1		0020	5	2.	1		0635	80	51.	1		1250	155	0.	1		1905	230	0.
1		0025	6	3.	1		0640	81	51.	1		1255	156	0.	1		1910	231	0.
1		0030	7	3.	1		0645	82	51.	1		1300	157	0.	1		1915	232	0.
1		0035	8	4.	1		0650	83	51.	1		1305	158	0.	1		1920	233	0.
1		0040	9	5.	1		0655	84	50.	1		1310	159	0.	1		1925	234	0.
1		0045	10	5.	1		0700	85	50.	1		1315	160	0.	1		1930	235	0.
1		0050	11	6.	1		0705	86	50.	1		1320	161	0.	1		1935	236	0.
1		0055	12	6.	1		0710	87	50.	1		1325	162	0.	1		1940	237	0.
1		0100	13	7.	1		0715	88	50.	1		1330	163	0.	1		1945	238	0.
1		0105	14	7.	1		0720	89	50.	1		1335	164	0.	1		1950	239	0.
1		0110	15	8.	1		0725	90	50.	1		1340	165	0.	1		1955	240	0.
1		0115	16	8.	1		0730	91	49.	1		1345	166	0.	1		2000	241	0.
1		0120	17	8.	1		0735	92	49.	1		1350	167	0.	1		2005	242	0.
1		0125	18	8.	1		0740	93	49.	1		1355	168	0.	1		2010	243	0.
1		0130	19	9.	1		0745	94	49.	1		1400	169	0.	1		2015	244	0.
1		0135	20	9.	1		0750	95	49.	1		1405	170	0.	1		2020	245	0.
1		0140	21	9.	1		0755	96	49.	1		1410	171	0.	1		2025	246	0.
1		0145	22	9.	1		0800	97	48.	1		1415	172	0.	1		2030	247	0.
1		0150	23	9.	1		0805	98	48.	1		1420	173	0.	1		2035	248	0.
1		0155	24	9.	1		0810	99	48.	1		1425	174	0.	1		2040	249	0.
1		0200	25	9.	1		0815	100	48.	1		1430	175	0.	1		2045	250	0.
1		0205	26	9.	1		0820	101	48.	1		1435	176	0.	1		2050	251	0.
1		0210	27	9.	1		0825	102	48.	1		1440	177	0.	1		2055	252	0.
1		0215	28	9.	1		0830	103	47.	1		1445	178	0.	1		2100	253	0.
1		0220	29	9.	1		0835	104	47.	1		1450	179	0.	1		2105	254	0.
1		0225	30	10.	1		0840	105	47.	1		1455	180	0.	1		2110	255	0.
1		0230	31	10.	1		0845	106	47.	1		1500	181	0.	1		2115	256	0.
1		0235	32	10.	1		0850	107	47.	1		1505	182	0.	1		2120	257	0.
1		0240	33	11.	1		0855	108	46.	1		1510	183	0.	1		2125	258	0.
1		0245	34	11.	1		0900	109	46.	1		1515	184	0.	1		2130	259	0.
1		0250	35	11.	1		0905	110	46.	1		1520	185	0.	1		2135	260	0.
1		0255	36	12.	1		0910	111	46.	1		1525	186	0.	1		2140	261	0.
1		0300	37	13.	1		0915	112	46.	1		1530	187	0.	1		2145	262	0.
1		0305	38	14.	1		0920	113	45.	1		1535	188	0.	1		2150	263	0.
1		0310	39	16.	1		0925	114	45.	1		1540	189	0.	1		2155	264	0.
1		0315	40	19.	1		0930	115	45.	1		1545	190	0.	1		2200	265	0.
1		0320	41	22.	1		0935	116	45.	1		1550	191	0.	1		2205	266	0.
1		0325	42	27.	1		0940	117	45.	1		1555	192	0.	1		2210	267	0.
1		0330	43	29.	1		0945	118	44.	1		1600	193	0.	1		2215	268	0.
1		0335	44	30.	1		0950	119	44.	1		1605	194	0.	1		2220	269	0.
1		0340	45	34.	1		0955	120	44.	1		1610	195	0.	1		2225	270	0.
1		0345	46	37.	1		1000	121	44.	1		1615	196	0.	1		2230	271	0.
1		0350	47	38.	1		1005	122	43.	1		1620	197	0.	1		2235	272	0.
1		0355	48	39.	1		1010	123	43.	1		1625	198	0.	1		2240	273	0.
1		0400	49	40.	1		1015	124	43.	1		1630	199	0.	1		2245	274	0.
1		0405	50	41.	1		1020	125	43.	1		1635	200	0.	1		2250	275	0.
1		0410	51	42.	1		1025	126	42.	1		1640	201	0.	1		2255	276	0.
1		0415	52	43.	1		1030	127	41.	1		1645	202	0.	1		2300	277	0.
1		0420	53	44.	1		1035	128	38.	1		1650	203	0.	1		2305	278	0.
1		0425	54	45.	1		1040	129	38.	1		1655	204	0.	1		2310	279	0.
1		0430	55	46.	1		1045	130	38.	1		1700	205	0.	1		2315	280	0.
1		0435	56	47.	1		1050	131	38.	1		1705	206	0.	1		2320	281	0.
1		0440	57	47.	1		1055	132	37.	1		1710	207	0.	1		2325	282	0.
1		0445	58	48.	1		1100	133	37.	1		1715	208	0.	1		2330	283	0.
1		0450	59	49.	1		1105	134	37.	1		1720	209	0.	1		2335	284	0.
1		0455	60	49.	1		1110	135	37.	1		1725	210	0.	1		2340	285	0.
1		0500	61	49.	1		1115	136	37.	1		1730	211	0.	1		2345	286	0.
1		0505	62	50.	1		1120	137	36.	1		1735	212	0.	1		2350	287	0.
1		0510	63	50.	1		1125	138	36.	1		1740	213	0.	1		2355	288	0.
1		0515	64	50.	1		1130	139	36.	1		1745	214	0.	2		0000	289	0.
1		0520	65	51.	1		1135	140	36.	1		1750	215	0.	2		0005	290	0.
1		0525	66	51.	1		1140	141	35.	1		1755	216	0.	2		0010	291	0.
1		0530	67	51.	1		1145	142	35.	1		1800	217	0.	2		0015	292	0.
1		0535	68	51.	1		1150	143	34.	1		1805	218	0.	2		0020	293	0.
1		0540	69	51.	1		1155	144	34.	1		1810	219	0.	2		0025	294	0.
1		0545	70	51.	1		1200	145	33.	1		1815	220	0.	2		0030	295	0.

1	1550	71	51.	*	1	1205	146	26.	*	1	1800	221	0.	*	2	2035	296	0.
1	1555	72	51.	*	1	1210	147	0.	*	1	1805	222	0.	*	2	2040	297	0.
1	1600	73	51.	*	1	1215	148	0.	*	1	1810	223	0.	*	2	2045	298	0.
1	1605	74	51.	*	1	1220	149	0.	*	1	1815	224	0.	*	2	2050	299	0.
1	1610	75	51.	*	1	1225	150	0.	*	1	1840	225	0.	*	2	2055	300	0.
				*					*					*				

.....

PEAK FLOW (CFS)	TIME (HR)		MAXIMUM AVERAGE FLOW 6-HR	24-HR	72-HR	144-HR
51.	5.42	(CFS)	48.	17.	17.	17.
		(INCHES)	.135	.196	.196	.196
		(AC-FT)	24.	35.	35.	35.

CUMULATIVE AREA = 3.32 SQ MI

1

RUNOFF SUMMARY
FLOW IN CUBIC FEET PER SECOND
TIME IN HOURS, AREA IN SQUARE MILES

	OPERATION	STATION	PEAK FLOW	TIME OF PEAK	AVERAGE FLOW FOR MAXIMUM PERIOD 6-HOUR	24-HOUR	72-HOUR	BASIN AREA	MAXIMUM STAGE	TIME OF MAX STAGE
+	HYDROGRAPH AT	B	305.	4.17	43.	11.	10.	.29		
+	DIVERSION TO	D39S	84.	3.83	26.	7.	6.	.29		
+	HYDROGRAPH AT	D39	221.	4.17	17.	4.	4.	.29		
+	HYDROGRAPH AT	C	235.	4.17	31.	8.	8.	.21		
+	ROUTED TO	R39	224.	4.17	31.	8.	8.	.21		
+	2 COMBINED AT	C40	444.	4.17	48.	12.	12.	.50		
+	ROUTED TO	R40	337.	4.42	48.	12.	12.	.50		
+	HYDROGRAPH AT	D	169.	4.17	25.	6.	6.	.17		
+	ROUTED TO	R43	146.	4.33	25.	6.	6.	.17		
+	HYDROGRAPH AT	E	216.	4.17	31.	8.	8.	.20		
+	3 COMBINED AT	C43	556.	4.42	99.	25.	24.	.87		
+	ROUTED TO	S43	481.	4.58	94.	25.	24.	.87		
+	DIVERSION TO	D43S	27.	3.42	27.	8.	8.	.87		
+	HYDROGRAPH AT	D43	454.	4.58	67.	17.	16.	.87		
+	ROUTED TO	R44	454.	4.58	67.	17.	16.	.87		
+	HYDROGRAPH AT	F	337.	4.25	46.	12.	11.	.50		
+	ROUTED TO	R45	331.	4.33	46.	12.	11.	.50		
+	2 COMBINED AT	C45	623.	4.58	104.	26.	25.	1.37		

+	HYDROGRAPH AT	G	64.	4.42	17.	4.	4.	.12
-	ROUTED TO	R47	51.	5.33	17.	4.	4.	.12
-	HYDROGRAPH AT	H	102.	4.42	26.	7.	6.	.22
-	2 COMBINED AT	C47	694.	4.58	139.	35.	34.	1.71
-	ROUTED TO	R47	616.	4.75	139.	35.	34.	1.71
-	DIVERSION TO	D47S	200.	4.75	26.	7.	6.	1.71
+	HYDROGRAPH AT	D47	415.	4.75	113.	29.	28.	1.71
+	ROUTED TO	R48	408.	4.83	113.	29.	28.	1.71
-	HYDROGRAPH AT	I	307.	4.25	50.	12.	12.	.44
-	2 COMBINED AT	C49	503.	4.83	151.	39.	37.	2.15
+	ROUTED TO	R49A	500.	4.83	151.	39.	37.	2.15
-	DIVERSION TO	CRDIV	260.	4.83	34.	8.	8.	2.15
+	HYDROGRAPH AT	CRIT	240.	4.25	118.	30.	29.	2.15
+	ROUTED TO	R49B	241.	4.33	118.	30.	29.	2.15
-	DIVERSION TO	49BDV	200.	4.25	107.	28.	27.	2.15
-	HYDROGRAPH AT	49BD	41.	4.33	11.	3.	3.	2.15
-	HYDROGRAPH AT	J	238.	4.33	51.	13.	12.	.39
+	2 COMBINED AT	C51	213.	4.42	55.	14.	14.	2.54
-	DIVERSION TO	D51S	0.	.08	0.	0.	0.	2.54
-	HYDROGRAPH AT	D51	213.	4.42	55.	14.	14.	2.54
-	HYDROGRAPH AT	L'	138.	4.33	30.	8.	7.	.23
-	DIVERSION TO	DIVL'W	13.	4.33	3.	1.	1.	.23
-	HYDROGRAPH AT	L'S1	124.	4.33	27.	7.	7.	.23
+	DIVERSION TO	DIVL'	80.	4.17	24.	6.	6.	.23
+	HYDROGRAPH AT	L'S	44.	4.33	3.	1.	1.	.23
+	ROUTED TO	RL'	24.	4.58	3.	1.	1.	.23
+	HYDROGRAPH AT	KCN	39.	4.17	5.	1.	1.	.04

+	DIVERSION TO	KCNRT	8.	4.17	1.	0.	0.	.04
+	HYDROGRAPH AT	KCN'	31.	4.17	4.	1.	1.	.04
+	DIVERSION TO	KCNDV	16.	4.17	2.	0.	0.	.04
+	HYDROGRAPH AT	KCND	16.	4.17	2.	0.	0.	.04
+	ROUTED TO	KCNRW	13.	4.25	2.	0.	0.	.04
+	DIVERSION TO	KCNW	8.	4.08	2.	0.	0.	.04
+	HYDROGRAPH AT	KCNSD	5.	4.25	0.	0.	0.	.04
+	HYDROGRAPH AT	KW	54.	4.25	9.	2.	2.	.07
+	DIVERSION TO	SCHL	27.	4.25	4.	1.	1.	.07
+	HYDROGRAPH AT	EKW	27.	4.25	4.	1.	1.	.07
+	3 COMBINED AT	KCNC	43.	4.42	8.	2.	2.	.33
+	ROUTED TO	RL'2	42.	4.50	8.	2.	2.	.33
+	HYDROGRAPH AT	L'W	13.	4.33	3.	1.	1.	.23
+	DIVERSION TO	DSDL'W	9.	4.17	3.	1.	1.	.23
+	HYDROGRAPH AT	L'WS	4.	4.33	0.	0.	0.	.23
+	ROUTED TO	RL'WS	3.	4.58	0.	0.	0.	.23
+	HYDROGRAPH AT	M'	118.	4.08	13.	3.	3.	.09
+	2 COMBINED AT	CM'	118.	4.08	13.	3.	3.	.32
+	DIVERSION TO	DSDM'W	51.	3.92	9.	2.	2.	.32
+	HYDROGRAPH AT	DIVM'	67.	4.08	4.	1.	1.	.32
+	ROUTED TO	RM'	66.	4.17	4.	1.	1.	.32
+	2 COMBINED AT	CCHAN	76.	4.17	11.	3.	3.	.65
+	ROUTED TO	KWR	67.	4.25	11.	3.	3.	.65
+	HYDROGRAPH AT	KCNDV	16.	4.17	2.	0.	0.	.04
+	ROUTED TO	KCNRS	13.	4.25	2.	0.	0.	.04
+	HYDROGRAPH AT	SCHL	27.	4.25	4.	1.	1.	.07
+	DIVERSION TO	RETSCL	27.	4.25	4.	1.	1.	.07

+	HYDROGRAPH AT	SCHLE	0.	.00	0.	0.	0.	.07
+	2 COMBINED AT	KCSC	13.	4.05	2.	0.	0.	.01
+	HYDROGRAPH AT	KEN	42.	4.17	6.	2.	2.	.05
+	DIVERSION TO	KENRT	10.	4.17	2.	0.	0.	.05
+	HYDROGRAPH AT	KEN'	31.	4.17	5.	1.	1.	.05
+	DIVERSION TO	KENDV	31.	4.17	5.	1.	1.	.05
+	HYDROGRAPH AT	KEND	0.	.00	0.	0.	0.	.05
+	ROUTED TO	KENR	0.	.00	0.	0.	0.	.05
+	HYDROGRAPH AT	KCS	100.	4.08	9.	2.	2.	.07
+	3 COMBINED AT	CB1	109.	4.08	11.	3.	3.	.13
+	3 COMBINED AT	CB2	268.	4.33	68.	17.	17.	3.32
+	ROUTED TO	SB	51.	5.92	48.	17.	17.	3.32
+	HYDROGRAPH AT	RTN51	0.	.08	0.	0.	0.	2.54
+	HYDROGRAPH AT	49BDV	200.	4.25	107.	28.	27.	2.15
+	2 COMBINED AT	CSD1	200.	4.25	106.	27.	26.	.01
+	HYDROGRAPH AT	STAD	1.	4.17	0.	0.	0.	.00
+	3 COMBINED AT	CSD2	251.	5.83	153.	45.	43.	3.33

*** NORMAL END OF HEC-1 ***

```
.......................................
.......................................
*                                     *                                                   *
*                                     *                                                   *
*   FLOOD HYDROGRAPH PACKAGE  (HEC-1) *                                                   *   U.S. ARMY CORPS OF ENGINEERS
*                                     *                                                   *
*              JUL   1997             *                                                   *   HYDROLOGIC ENGINEERING CENTER
*                                     *                                                   *
*           VERSION 4.1               *                                                   *          609 SECOND STREET
*                                     *                                                   *
*                                     *                                                   *       DAVIS, CALIFORNIA 95616
*                                     *                                                   *
*  RUN DATE  [illegible]  TIME  [illegible]  *                                            *            (916) 756-1104
*                                     *                                                   *
*                                     *                                                   *
.......................................
.......................................
```

```
X     X  XXXXXXX   XXXXX          X
X     X  X        X     X        XX
X     X  X        X               X
XXXXXXX  XXXX     X        XXXXX  X
X     X  X        X               X
X     X  X        X     X         X
X     X  XXXXXXX   XXXXX         XXX
```

THIS PROGRAM REPLACES ALL PREVIOUS VERSIONS OF HEC-1 KNOWN AS HEC1 (JAN 73), HEC1GS, HEC1DB, AND HEC1KW.

THE DEFINITIONS OF VARIABLES -RTIMP- AND -RTIOR- HAVE CHANGED FROM THOSE USED WITH THE 1973-STYLE INPUT STRUCTURE.
THE DEFINITION OF -AMSKK- ON RM-CARD WAS CHANGED WITH REVISIONS DATED 28 SEP 81. THIS IS THE FORTRAN77 VERSION
NEW OPTIONS: DAMBREAK OUTFLOW SUBMERGENCE , SINGLE EVENT DAMAGE CALCULATION, DSS:WRITE STAGE FREQUENCY,
DSS:READ TIME SERIES AT DESIRED CALCULATION INTERVAL LOSS RATE:GREEN AND AMPT INFILTRATION
KINEMATIC WAVE: NEW FINITE DIFFERENCE ALGORITHM

1 HEC-1 INPUT PAGE 1

```
LINE          ID.......1.......2.......3.......4.......5.......6.......7.......8.......9.......10

   1          ID        MARYVALE BASEBALL PARK
   2          ID        FLOOD CONTROL FACILITIES
   3          ID        WOOD, PATEL & ASSOCIATES, INC.
   4          ID        ***********************************************
   5          ID        MODIFICATIONS BY VALERIE SWICK MARCH 1999
   6          ID        TO DETERMINE FLOWS INTO THE WHITTON CHANNEL
   7          ID        * DELETE UNNECESSARY SUBBASINS FROM MODEL (BEGINNING WITH L)
   8          ID        * DIVERT 2 YR INTO STORMDRAIN ALONG INDIAN SCHOOL ROAD AND
   9          ID             CLARENDON AVE.
  10          ID        * SOME STORAGE WITHIN THE SCHOOL PROPERTY
  11          ID
  12          ID        ***********************************************
  13          ID        BASED ON MODEL FROM
  14          ID        MARYVALE FLOOD MITIGATION STUDY
  15          ID        FLOOD CONTROL DISTRICT OF MARICOPA COUNTY (CVL)
  16          ID        DESIGN CONDITION - DETENTION BASIN ADDITIONS
  17          ID        ***********************************************
  18          ID         2-YEAR, 6-HOUR STORM
  19          ID        FILE: WHIT2A.dat          DATE:   10/14/96
  20          ID        JOB #: 96398
  21          ID        ***
  22          ID        *** THE FOLLOWING CHANGES HAVE BEEN MADE BY WOOD/PATEL IN CONJUNCTION
  23          ID        *** WITH THE DESIGN OF THE MARYVALE BASEBALL PARK FLOOD CONTROL
  24          ID        *** FACILITIES
  25          ID        ***
  26          ID        9/17/96: OUTFLOWS IN SB RATING CURVE MODIFIED
  27          ID        ***
  28          ID        9/16/96: 25 CFS DIVERT AT C51 REDUCED TO 0 CFS
  29          ID                 SV RECORD IN RATING CURVE AT SB MODIFIED
  30          ID        ***
  31          ID        8/13/96: FLOW FROM STAD REMOVED
  32          ID        ***
  33          ID        7/29/96: TC AND R AT BASIN H CORRECTED
  34          ID        ***
```

```
35          ID        7/10/96: FLOW IN EXCESS OF 109 CFS REMOVED AT DDHAN
36          ID        ***
37          ID        7/17/96:  DETENTION BASIN VOLUMES UPDATED
38          ID        ***
39          ID        7/23/96:  DETENTION BASIN OUTFLOW VALUES UPDATED; CRITTENDEN STREET
40          ID                  STORM DRAIN DIVERSION INTO 51ST AVE STORM DRAIN MODIFIED
41          ID        ***
42          ID        8/4/96:  25 CFS MAX STORM DRAIN DIVERT TO SOUTH AT 251
43          ID        ***
44          ID        8/22/96: FLOW IN EXCESS OF 70 CFS REMOVED AT DDHAN
45          ID        ***
            *DIAGRAM
46          IT       5                    100
47          IO       5       0
48          IN      15
49          JD    1.40    3.01
50          PC    .000    .008    .016    .025    .033    .041    .050    .058    .066    .074
51          PC    .087    .099    .118    .138    .216    .377    .834    .911    .931    .951
52          PC    .962    .972    .983    .991   1.000
53          JD    1.39    3.50
54          JD    1.37    2.80
```



```
LINE        ID.......1.......2.......3.......4.......5.......6.......7.......8.......9.......10

55          PC    .000    .009    .016    .025    .034    .042    .051    .059    .067    .076
56          PC    .087    .100    .120    .163    .252    .451    .694    .837    .900    .938
57          PC    .950    .963    .975    .988   1.000
58          JD    1.29    16.0
59          PC    .000    .015    .020    .030    .048    .063    .076    .090    .105    .119
60          PC    .135    .152    .175    .222    .304    .472    .670    .796    .868    .912
61          PC    .946    .960    .973    .987   1.000
62          JD    1.13    90.0
63          PC    .000    .021    .035    .051    .071    .087    .105    .125    .143    .160
64          PC    .179    .201    .232    .281    .364    .500    .658    .773    .841    .888
65          PC    .927    .945    .964    .982   1.000
66          JD     .80   500.0
67          PC    .000    .024    .043    .059    .078    .098    .119    .141    .162    .186
68          PC    .212    .239    .271    .321    .408    .515    .627    .735    .814    .864
69          PC    .907    .930    .954    .977   1.000
            *

70          KK       B
71          KM   SUB-BASIN B
72          KM   6-HOUR RAINFALL, PATTERN NO. 1.00 WAS USED TO FIND TC & R FOR THIS BASIN
73          KM   THIS BASIN USED RAINFALL REDUCTION FACTOR OF  .996
74          KM     L = 1.03  Kb = .026  Adj. Slope =   16.5
75          BA    .294
76          LG    .150    .250   5.670    .279  55.000
77          UC    .446    .311
78          UA       0       5      16      30      65      77      84      90      94      97
79          UA     100
            *

80          KK     D39        FLOW DIVERSION AT 39TH AVE
81          DT    D39S
82          DI       0      50     200     600
83          DQ       0      84      84      84
            *

84          KK       C
85          KM   SUB-BASIN C
86          KM   6-HOUR RAINFALL, PATTERN NO. 1.00 WAS USED TO FIND TC & R FOR THIS BASIN
87          KM   THIS BASIN USED RAINFALL REDUCTION FACTOR OF  .997
88          KM     L =  .93  Kb = .027  Adj. Slope =   22.8
89          BA    .209
90          LG    .145    .250   3.500    .392  57.630
91          UC    .371    .282
92          UA       0       5      16      30      65      77      84      90      94      97
93          UA     100
            *

94          KK     R39
95          KM        ROUTING SUBBASIN C ALONG 39TH AVE. TO CP 40
96          RS       1    ELEV       0
97          RC   0.025   0.016   0.025    1600  0.0042
98          RX    69.7    69.8    69.9      70     130   130.1   130.2   130.3
99          RY       5       2       1       0       0       1       2       5
            *
```

```
LINE          ID.......1.......2.......3.......4.......5.......6.......7.......8.......9.......10

 100          KK     C40        CONCENTRATION POINT 40 - COMBINGING B AND C
 101          HC       2
              *

 102          KK     R40        ROUTE 40 TO C43
 103          RS       2    ELEV       0
 104          RC   0.050   0.035   0.050    2700   .0015
 105          RX     450     458     462     482     484     562     566     570
 106          RY       5       2       1       0       0       1       2       5
              *

 107          KK       D
 108          KM   SUB-BASIN D
 109          KM   6-HOUR RAINFALL, PATTERN NO. 1.00 WAS USED TO FIND TC & R FOR THIS BASIN
 110          KM   THIS BASIN USED RAINFALL REDUCTION FACTOR OF  .998
 111          KM     L =  .97  Kb = .027  Adj. Slope =   21.6
 112          BA    .168
 113          LG    .146    .250   3.500    .391  57.230
 114          UC    .392    .353
 115          UA       0       5      16      30      65      77      84      90      94      97
 116          UA     100
              *

 117          KK     R43        ROUTE 43 - CARRYS SUBBASIN D TO C43
 118          RS       1    ELEV       0
 119          RC   0.020   0.016   0.020    2150  0.0037
 120          RX   439.7   439.8   439.9     440     560   560.1   560.2   560.3
 121          RY       5       2       1       0       0       1       2       5
              *

 122          KK       E
 123          KM   SUB-BASIN E
 124          KM   6-HOUR RAINFALL, PATTERN NO. 1.00 WAS USED TO FIND TC & R FOR THIS BASIN
 125          KM   THIS BASIN USED RAINFALL REDUCTION FACTOR OF  .997
 126          KM     L =  .78  Kb = .027  Adj. Slope =   11.4
 127          BA    .197
 128          LG    .132    .250   5.980    .274  64.010
 129          UC    .438    .307
 130          UA       0       5      16      30      65      77      84      90      94      97
 131          UA     100
              *

 132          KK     C43        CONCENTRATION POINT 43
 133          HC       3
              *

 134          KK     S43        STORAGE ROUTING
 135          RS       1    FLOW      -1
 136          SV       0    0.01      .1    .645    4.77    6.79   29.76
 137          SE    1104  1104.1    1105    1106  1106.8    1107    1108
 138          SQ       0      27      27      27      27      54    1815
              *
```



```
LINE          ID.......1.......2.......3.......4.......5.......6.......7.......8.......9.......10

 139          KK     D43        FLOW DIVERSION AT 43RD AVE
 140          DT    D43S
 141          DI       0      27      27      27      27      54    1815
 142          DQ       0      27      27      27      27      27      27
              *

 143          KK     R44        ROUTE 44
 144          RS       1    ELEV      -1
 145          RC   0.025   0.016   0.025    1300  0.0027
 146          RX   469.7   469.8   469.9     470     530   530.1   530.2   530.3
 147          RY       5       2       1       0       0       1       2       5
              *

 148          KK       F
 149          KM   SUB-BASIN F
 150          KM   6-HOUR RAINFALL, PATTERN NO. 1.00 WAS USED TO FIND TC & R FOR THIS BASIN
 151          KM   THIS BASIN USED RAINFALL REDUCTION FACTOR OF  .993
 152          KM     L = 1.18  Kb = .041  Adj. Slope =   20.7
 153          BA    .500
 154          LG    .111    .345   4.740    .234  11.550
 155          UC    .654    .392
```

```
156          UA       0       5      16      30      65      77      84      90      94      97
157          UA     100
             *

158          KK     R45         ROUTE 45
159          RS       2    ELEV       0
160          RC   0.020   0.016   0.020    2200  0.0039
161          RX    69.7    69.8    69.9      70     135   135.1   135.2   135.3
162          RY       5       2       1       0       0       1       2       5
             *

163          KK     R45
164          HC       2
             *

165          KK       G
166          KM   SUB-BASIN G
167          KM   6-HOUR RAINFALL, PATTERN NO. 1.00 WAS USED TO FIND TC & R FOR THIS BASIN
168          KM   THIS BASIN USED RAINFALL REDUCTION FACTOR OF  .998
169          KM     L =  .80  Kb = .028  Adj. Slope =    3.0
170          BA    .121
171          LG    .150    .250   3.550    .403  55.000
172          UC    .829    .837
173          UA       0       5      16      30      65      77      84      90      94      97
174          UA     100
             *

175          KK     R47         ROUTE 47
176          RS       5    ELEV       0
177          RC   0.025   0.016   0.025    7350  0.0043
178          RX    54.7    54.8    54.9      55     145   145.1   145.2   145.3
179          RY       5       2       1       0       0       1       2       5
             *
```



```
LINE         ID.......1.......2.......3.......4.......5.......6.......7.......8.......9......10

180          KK       H
181          KM   SUB-BASIN H
182          KM   6-HOUR RAINFALL, PATTERN NO. 1.00 WAS USED TO FIND TC & R FOR THIS BASIN
183          KM   THIS BASIN USED RAINFALL REDUCTION FACTOR OF  .997
184          KM     L = 1.03  Kb = .027  Adj. Slope =    8.2
185          BA    .217
186          LG    .233    .250   4.740    .309  37.470
187          UC   0.896   0.801
188          UA       0       5      16      30      65      77      84      90      94      97
189          UA     100
             *

190          KK     C47
191          HC       3
             *

192          KK     S47         STORAGE ROUTING AT 47TH AVE
193          RS       1    FLOW      -1
194          SV       0    0.01    4.04    6.31   28.74
195          SE    1104  1104.1  1104.8    1105    1106
196          SQ       0     105     115     182    1988
             *

197          KK     D47         DIVERSION AT 47TH AVE CANAL OVERFLOW SOUTH
198          DT    D47S
199          DI       0     155     165     210    2038
200          DQ       0       0       0      22     825
             *
             * KK  D47C         FLOW DIVERSION THROUGH CRITTENDEN STORM DRAIN
             * DT  CRIT
             * DI     0     155     200    2000
             * DQ     0     155     155     155
             *

201          KK     R48         ROUTE 48
202          RS       2    ELEV       0
203          RC   0.030   0.016   0.030    2650   .0020
204          RX    64.7    64.8    64.9      65     135   135.1   135.2   135.3
205          RY       5       2       1       0       0       1       2       5
             *

206          KK       I
207          KM   SUB-BASIN I
```

```
KM   6-HOUR RAINFALL, PATTERN NO. 1.00 WAS USED TO FIND TC & R FOR THIS BASIN
KM   THIS BASIN USED RAINFALL REDUCTION FACTOR OF  .994
KM     L = 1.46  Kb = .025  Adj. Slope =   15.0
BA    .445
LG    .241    .254   3.810    .343  29.760
UC    .600    .451
UA       0       5      16      30      65      77      84      90      94      97
UA     100
*
```



```
LINE  ID.......1.......2.......3.......4.......5.......6.......7.......8.......9.......10

KK     249         CONCENTRATION POINT 49
HC       2
*

KK    R49A         ROUTE 49A
KM   ROUTE 249 ALONG CRITTENDEN LN
RS       2    ELEV       0
RC   0.030   0.016   0.030    1325   .0020
RX    64.7    64.8    64.9      65     135   135.1   135.2   135.3
RY       5       2       1       0       0       1       2       5
*

KK    CRIT
KM   DIVERT FLOW IN EXCESS OF CRITTENDEN STORM DRAIN + STREET CAPACITY
DT   CRDIV
DI       0     240    1000
DQ       0       0     760
*

KK    R49B         ROUTE 49B
KM   ROUTE CRIT ALONG CRITTENDEN LN
RS       2    ELEV       0
RC   0.030   0.016   0.030    1325   .0020
RX    64.7    64.8    64.9      65     135   135.1   135.2   135.3
RY       5       2       1       0       0       1       2       5
*

KK    49BD
KM   DIVERT 200 CFS INTO 51ST AVE STORM DRAIN
DT   49BDV
DI       0     200    1000
DQ       0     200     200
*

KK       J
KM   SUB-BASIN J
KM   6-HOUR RAINFALL, PATTERN NO. 1.00 WAS USED TO FIND TC & R FOR THIS BASIN
KM   THIS BASIN USED RAINFALL REDUCTION FACTOR OF  .995
KM     L = 1.60  Kb = .026  Adj. Slope =   12.3
BA    .388
LG    .200    .252   3.500    .378  44.870
UC    .700    .622
UA       0       5      16      30      65      77      84      90      94      97
UA     100
*

KK     C51
HC       2
*
```



```
LINE  ID.......1.......2.......3.......4.......5.......6.......7.......8.......9.......10

KK     D51         STORM DRAIN DIVERSION TO SOUTH
DT    D51S
DI       0     .01    4000
DQ       0     .01     .01
*

KK      L'
KM   SUB-BASIN L'
KM   6-HOUR RAINFALL, PATTERN NO. 1.05 WAS USED TO FIND TC & R FOR THIS BASIN
KM   THIS BASIN USED RAINFALL REDUCTION FACTOR OF  .993
KM     L = 1.98  Kb = .024  Adj. Slope =   14.0
BA    .228
LG    .217    .250   5.360    .285  45.930
```

```
 283          UC    .729    .640
 284          UA       0       5      16      30      65      77      84      90      94      97
 285          UA     100
              *

 286          KK    L'S1
 287          KM   DIVERT 9.6% OF SUBBASIN TO THE WEST TO ACCOUNT FOR THE SUBBASIN THAT IS WEST
 288          KM   OF 55TH AVE.
 289          DT   DIVL'W
 290          DI       0     100    1000
 291          DQ       0     9.6      96
              *

 292          KK     L'S
 293          KM   DIVERT 80 CFS THAT FLOWS INTO THE STORMDRAIN ALONG INDIAN SCHOOL RD.
 294          KM   THE 2YR STORM IS DIVERTED INTO STORMDRAIN
 295          DT   DIVL'
 296          DI       0      80    1000
 297          DQ       0      80      80
              *

 298          KK     RL'
 299          RS       1    ELEV       0
 300          RC   0.030   0.016   0.030    2300   .0029
 301          RX    49.7    49.8    49.9      50     150   150.1   150.2   150.3
 302          RY       3       2       1       0       0       1       2       3
              *

 303          KK     KCN
 304          KM   SUB-BASIN KCN
 305          KM   6-HOUR RAINFALL, PATTERN NO. 1.00 WAS USED TO FIND TC & R FOR THIS BASIN
 306          KM   THIS BASIN USED RAINFALL REDUCTION FACTOR OF 1.000
 307          KM     L =  .35  Kb = .035  Adj. Slope =   20.0
 308          BA    .038
 309          LG    .153    .290   4.430    .304  41.200
 310          UC    .329    .300
 311          UA       0       5      16      30      65      77      84      90      94      97
 312          UA     100
              *
```



```
LINE          ID.......1.......2.......3.......4.......5.......6.......7.......8.......9......10

 313          KK    KCN'
 314          KM   RETENTION IN PARKING LOT WITHIN BASIN KCN; DIVERT FIRST 0.6 AC-FT OF 20
 315          KM   PERCENT OF BASIN RUNOFF
 316          DT   KCNRT     0.6
 317          DI       0   10000
 318          DQ       0    2000
              *

 319          KK    KCND
 320          KM   DIVERT 50 PERCENT OF KCN TO SOUTH
 321          DT   KCNDV
 322          DI       0    1000
 323          DQ       0     500
              *

 324          KK   KCNRW
 325          KM   ROUTE KCND ALONG CLARENDON ST TO 55TH AVE
 326          RS       1    FLOW      -1
 327          RC    .030    .016    .030     750   .0023
 328          RX    49.7    49.8    49.9      50     130   130.1   130.2   130.3
 329          RY       3       2       1       0       0       1       2       3
              *

 330          KK   KCNSD
 331          KM   DIVERT 8 CFS THAT WILL ENTER INTO STORMDRAIN ALONG CLARENDON AVE.
 332          KM   THE 2 YR STORM IS DIVERTED INTO THE STORM DRAIN
 333          DT    KCNW
 334          DI       0       8    1000
 335          DQ       0       8       8
              *

 336          KK      KW
 337          KM   SUB-BASIN KW
 338          KM   6-HOUR RAINFALL, PATTERN NO. 1.00 WAS USED TO FIND TC & R FOR THIS BASIN
 339          KM   THIS BASIN USED RAINFALL REDUCTION FACTOR OF  .999
 340          KM     L =  .53  Kb = .035  Adj. Slope =   17.0
 341          BA    .069
```

```
LG    .153    .090   4.430    .004  41.000
UC    .475    .447
UA       0       5      16      30      65      77      84      90      94      97
UA     100
*

KK     EKW
KM   DIVERT FLOWS THAT ARE WITHIN THE SCHOOL GROUNDS  50% OF THE SUBBASIN
DT    SCHL
DI       0      50     100    1000
DQ       0      25      50     500
*
```



```
LINE          ID.......1.......2.......3.......4.......5.......6.......7.......8.......9.......10

KK    KCNC
KM   COMBINE KCNR, RL', AND NORTH SECTION OF KW
HC       3
*

KK    RL'2
KM   ROUTE KCNC SOUTH ALONG 55TH AVE TO GRAND CANAL
RS       1    ELEV       0
RC    .030    .016    .030    1000   .0033
RX    49.7    49.8    49.9      50     150   150.1   150.2   150.3
RY       3       2       1       0       0       1       2       3
*

KK     L'W
KM   RETURN FLOWS FROM SUBBASIN L' THAT IS WEST OF 55TH AVE.
DR  DIVL'W
*

KK    L'WS
KM   DIVERT THE 9 CFS INTO STORMDRAIN ON INDIAN SCHOOL RD.
KM   THE 2YR FLOW IS DIVERTED INTO STORMDRAIN
DT  DSDL'W
DI       0       9    1000
DQ       0       9       9
*

KK   RL'WS
KM   ROUTE FLOWS TO CLARENDON RD.
RS       1    FLOW      -1
RC    .030    .016    .030    1300   .0023
RX    49.7    49.8    49.9      50     130   130.1   130.2   130.3
RY       3       2       1       0       0       1       2       3
*

KK      M'
KM   SUB-BASIN M'
KM   6-HOUR RAINFALL, PATTERN NO. 1.00 WAS USED TO FIND TC & R FOR THIS BASIN
KM   THIS BASIN USED RAINFALL REDUCTION FACTOR OF  .998
KM     L =  .64  Kb = .027  Adj. Slope =   15.2
BA     .09
LG    .235    .150   8.050    .117  34.940
UC    .342    .215
UA       0       5      16      30      65      77      84      90      94      97
UA     100
*

KK     CM'
KM   COMBINE FLOWS FROM NORTH OF INDIAN SCHOOL ROAD AND WEST OF 55TH DR.
HC       2
*
```



```
LINE          ID.......1.......2.......3.......4.......5.......6.......7.......8.......9.......10

KK   DIVM'
KM   DIVERT 51 CFS FLOWS FROM THE AREA NORTH OF CLARENDON AVE INTO THE STORM DRAIN
KM   2YR FLOWS
DT  DSDM'W
DI       0      51    1000
DQ       0      51      51
*

KK     RM'
```

```
375          KM   ROUTE FLOWS EAST ALONG THE GRAND CANAL
376          RS       1     ELEV       0
377          RC    .030     .016     .030      840     .002
378          RX       0        1        2       12       20       30       31       32
379          RY     100      100      100       95       95      100      100      100
             *

380          KK   CCHAN
381          KM   COMBINATION OF FLOWS IN THE CHANNEL ALONG CANAL
382          KM   COMBINE RM', AND RL'C
383          HC       2
             *

384          KK     CWR
385          KM   ROUTE CCHAN EAST TO CP CB
386          RS       1     ELEV       0
387          RC    .030     .016     .030     1750     .002
388          RX       0        1        2       12       20       30       31       32
389          RY     100      100      100       95       95      100      100      100
             *
             * KK   CHD
             * KM REMOVE FLOW IN EXCESS OF 108 CFS
             * DT CHDIV
             * DI       0      108     1000
             * DQ       0        0      892
             *

390          KK   KCNDV
391          KM   RETRIEVE DIVERTED FLOW
392          DR   KCNDV
             *

393          KK   KCNRS
394          KM   ROUTE KCNDV SOUTH TO CP KCSC
395          RS       1     FLOW      -1
396          RC    .030     .016     .030     1000   .0033
397          RX    49.7     49.8     49.9       50      130    130.1    130.2    130.3
398          RY       3        2        1        0        0        1        2        3
             *
```



```
LINE         ID.......1.......2.......3.......4.......5.......6.......7.......8.......9......10

399          KK    SCHL
400          KM   RETRIEVE FLOWS FROM SCHOOL
401          DR    SCHL
             *

402          KK   SCHLE
403          KM   DIVERT RETAINED VOLUME FROM SCHOOL PLAYGROUND
404          DT  RETSCL    2.25
405          DI       0    1000
406          DQ       0    1000
             *

407          KK    KCSC
408          KM   COMBINE FLOWS FROM SCHOOL AND FLOWS FROM THE DITCH ALONG THE WESTERN
409          KM   BOUNDARY OF THE BALL FIELDS (KCNRS)
410          HC       2     .01
             *

411          KK     KEN
412          KM   SUB-BASIN KEN
413          KM   6-HOUR RAINFALL, PATTERN NO. 1.00 WAS USED TO FIND TC & R FOR THIS BASIN
414          KM   THIS BASIN USED RAINFALL REDUCTION FACTOR OF  .999
415          KM     L =  .44  Kb = .035  Adj. Slope =   16.0
416          BA    .050
417          LG    .153    .290   4.430    .304  41.200
418          UC    .429    .414
419          UA       0       5      16       30       65       77       84       90       94       97
420          UA     100
             *

421          KK    KEN'
422          KM   RETENTION IN PARKING LOT WITHIN BASIN KEN
423          KM   DIVERT 0.9 AC-FT OF FIRST 25 PERCENT OF BASIN RUNOFF
424          DT   KENRT     0.9
425          DI       0   10000
426          DQ       0    2500
             *
```

```
427          KK    KEND
428          KM   DIVERT FIRST 32 CFS INTO STORM DRAIN ALONG MARYVALE PARKWAY/CLARENDON AVE
429          DT   KENDV
430          DI       0       32     1000
431          DQ       0       32       32
             *

432          KK    KENR
433          KM   ROUTE KEND SOUTH TO BASIN
434          RS       1     FLOW       -1
435          RC    .030     .016     .030      550    .0029
436          RX       0       .1       .2       .3     50.3     50.4     50.5     50.6
437          RY     100      100      100       95       95      100      100      100
             *
```



```
LINE         ID.......1.......2.......3.......4.......5.......6.......7.......8.......9.......10

438          KK     KCS
439          KM   SUB-BASIN KCS
440          KM   6-HOUR RAINFALL, PATTERN NO. 1.00 WAS USED TO FIND TC & R FOR THIS BASIN
441          KM   THIS BASIN USED RAINFALL REDUCTION FACTOR OF  .999
442          KM     L =  .25  Kb = .035  Adj. Slope =   18.0
443          BA    .068
444          LG    .153     .290    4.430     .304   41.200
445          UC    .271     .133
446          UA       0        5       16       30       65       77       84       90       94       97
447          UA     100
             *

448          KK     CB1
449          KM   COMBINE OVERLAND FLOWS
450          KM   COMBINE KENR, KCS, AND D51, AT PRACTICE FIELDS/PARKING LOT
451          HC       3
             *

452          KK     CB2
453          KM   COMBINE ALL THE FLOWS STORM DRAIN FLOWS
454          KM   THE FLOWS FROM THE EAST, THE OVERLAND FLOWS FROM THE SCHOOL, AND THE STORM
455          KM    DRAIN
456          HC       3
             *

457          KK      SB        STORAGE ROUTING
458          KO       1
459          RS       1     STOR        0
460          SV       0        0      0.3     1.60      4.9      8.9     13.4     19.2     27.2     38.9
461          SV    55.7     67.9     70.9       75
462          SE  1086.2     1091     1094     1095     1096     1097     1098     1099     1100     1101
463          SE  1102.2   1103.0   1103.2   1103.8
464          SQ       0     28.2     37.1     39.8     42.4     45.4     48.1     51.0     53.8     56.7
465          SQ    60.0     62.4     63.0     1350
             *

466          KK   RTN51
467          KM   RETRIEVE 51ST AVE
468          DR    D51S
             *

469          KK   49BDV
470          KM   RETRIEVE CRITTENDEN STORM DRAIN FLOW
471          DR   49BDV
             *

472          KK   CSD1
473          KM   COMBINE 51ST AVE, CRITTENDEN, AND MARYVALE PKWY STORM DRAIN FLOWS
474          HC       2      .01
             *
```



```
LINE         ID.......1.......2.......3.......4.......5.......6.......7.......8.......9.......10

475          KK    STAD
476          KM   RUNOFF FROM BALL FIELD # 1
477          KM   8/13/96:  AREA SET SMALL TO ELIMINATE STAD FROM MODEL; FLOW WILL BE PUMPED
478          KM     L =  .095  Kb = .14  Adj. Slope =  10.0
479          BA    .001
480          LG    .153     .290    4.430     .304     .000
```

```
431          DC     .42     .30
432          UA       0       5      16      40      68      77      84      90      94      97
433          UA     100
             *
             *  ROUTING OPERATION DEACTIVATED FOR 10-YEAR STORM BECAUSE RUNOFF FROM STAD 13
             *  TOO SMALL
             *
             *  KK RSTAD
             *  KM ROUTE RUNOFF FROM STAD THROUGH 36-INCH PIPE TO 61ST AVENUE STORM DRAIN
             *  RD  D313   .0038    .013            DIRC       3
             *

434          KK    DSD2        TOTAL STORM DRAIN FLOW INCL. BASIN OUTLET & FIELD # 1 RUNOFF
435          KM   COMBINE DSD1 WITH BASIN OUTFLOW
436          HC       3
             *
437          ZZ
```

SCHEMATIC DIAGRAM OF STREAM NETWORK

```
INPUT
LINE      (V) ROUTING          (----) DIVERSION OR PUMP FLOW

NO.       (.) CONNECTOR        (----) RETURN OF DIVERTED OR PUMPED FLOW

 70          B
             .
             .
 81          .-------->    D39S
 80        D39
             .
             .
 84          .           C
             .           V
             .           V
 94          .         R39
             .           .
             .           .
100        D40............
             V
             V
102        R40
             .
             .
107          .           D
             .           V
             .           V
117          .         R43
             .           .
             .           .
122          .           .           E
             .           .           .
             .           .           .
132        C43......................
             V
             V
134        S43
             .
             .
140          .------->    D43S
139        D43
             V
             V
143        R44
             .
             .
148          .           F
             .           V
             .           V
158          .         R45
             .           .
             .           .
163        C45............
             .
             .
165          .           G
             .           V
             .           V
175          .         R47
             .           .
             .           .
180          .           .           H
```

```
                .            .            .
                .            .            .
190           D47........................
                /
                V
192           S47
                .
                .
198             .-------->    D47S
197           D47
                V
                V
201           R48
                .
                .
206             .            I
                .            .
                .            .
206           D49............
                V
                V
208          R49A
                .
                .
206             .-------->   DRDIV
204          DRIT
                V
                V
209          R49B
                .
                .
207             .-------->   49BDV
205          49BD
                .
                .
240             .            J
                .            .
                .            .
250           D51............
                .
                .
253             .-------->    D51S
252           D51
                .
                .
256             .          L'
                .            .
                .            .
269             .            .-------->  DIVL'W
266             .        L'S1
                .            .
                .            .
275             .            .-------->   DIVL'
272             .         L'S
                .            V
                .            V
278             .         RL'
                .            .
                .            .
283             .            .         KCN
                .            .           .
                .            .           .
286             .            .           .-------->   KCNRT
293             .            .        KCN'
                .            .           .
                .            .           .
301             .            .           .-------->   KCNDV
299             .            .        KCND
                .            .           V
                .            .           V
304             .            .       KCNRW
                .            .           .
                .            .           .
313             .            .           .-------->    KCNW
310             .            .       KCNSD
                .            .           .
                .            .           .
316             .            .           .          KW
                .            .           .           .
                .            .           .           .
328             .            .           .           .-------->    SCHL
```

```
326                                                  EKW
                                                      .
                                                      .
331                 KCNC.......................
                      V
                      V
334                 RL'2
                      .
                      .
342                   .-------  DIVL'W
347                 L'W
                      .
                      .
346                   .-------  DSIL'W
343                 L'WS
                      V
                      V
349                RL'WS
                      .
                      .
355                   .          M'
                      .           .
                      .           .
365                 CM'............
                      .
                      .
371                   .-------  DSCM'W
368                DIVM'
                      V
                      V
374                 RM'
                      .
                      .
380              DCHAN............
                      V
                      V
384                KWR
                      .
                      .
392                   .<-------   KCNDV
390                KCNDV
                      V
                      V
393                KCNRS
                      .
                      .
401                   .           .-------    SCHL
399                   .        SCHL
                      .           .
                      .           .
404                   .           .-------  RETSCL
402                   .       SCHLE
                      .           .
                      .           .
407                   .       KCSC............
                      .
                      .
411                   .         KEN
                      .           .
                      .           .
424                   .           .------->   KENRT
421                   .        KEN'
                      .           .
                      .           .
429                   .           .------->   KENDV
427                   .        KEND
                      .           V
                      .           V
432                   .        KENR
                      .           .
                      .           .
438                   .           .          KCS
                      .           .           .
                      .           .           .
448                   .       CB1........................
                      .           .
                      .           .
452             CB2........................
                  V
                  V
457               SB
```

```
                 .
                 .
468              .            .<--------     D51S
469              .        RTN51.
                 .            .
                 .            .
471              .            .          .<--------    499DV
469              .            .       499DV
                 .            .           .
                 .            .           .
472              .         TSD1............
                 .            .
                 .            .
475              .            .        STAD
                 .            .           .
                 .            .           .
484           TSD2........................
```

```
 **** RUNOFF ALSO COMPUTED AT THIS LOCATION
1*************************************
*************************************
 *                                   *                                                   *
 *                                   *                                                   *
 *   FLOOD HYDROGRAPH PACKAGE  HEC-1 *                                                   *    U.S. ARMY CORPS  F ENGINEERS
 *                                   *                                                   *
 *              JUL   1997           *                                                   *    HYDROLOGIC ENGINEERING CENTER
 *                                   *                                                   *
 *           VERSION 4.1             *                                                   *          609 SECOND STREET
 *                                   *                                                   *
 *                                   *                                                   *       DAVIS, CALIFORNIA 95616
 *                                   *                                                   *
 *  RUN DATE   30MAR99  TIME  13:47:53 *                                                   *            (916) 756-1104
 *                                   *                                                   *
 *                                   *                                                   *
 *************************************
*************************************
```

```
MARYVALE BASEBALL PARK
FLOOD CONTROL FACILITIES
WOOD, PATEL & ASSOCIATES, INC.
*********************************************
MODIFICATIONS BY VALERIE SWICK MARCH 1999
TO DETERMINE FLOWS INTO THE WHITTON CHANNEL
* DELETE UNNECESSARY SUBBASINS FROM MODEL (BEGINNING WITH L)
* DIVERT 2 YR INTO STORMDRAIN ALONG INDIAN SCHOOL ROAD AND
     CLARENDON AVE.
* SOME STORAGE WITHIN THE SCHOOL PROPERTY

*********************************************
BASED ON MODEL FROM
MARYVALE FLOOD MITIGATION STUDY
FLOOD CONTROL DISTRICT OF MARICOPA COUNTY (CVL)
DESIGN CONDITION - DETENTION BASIN ADDITIONS
*********************************************
 2-YEAR, 6-HOUR STORM
FILE: WHIT2A.dat          DATE:   10/14/96
JOB #: 96398
***
*** THE FOLLOWING CHANGES HAVE BEEN MADE BY WOOD/PATEL IN CONJUNCTION
*** WITH THE DESIGN OF THE MARYVALE BASEBALL PARK FLOOD CONTROL
*** FACILITIES
***
9/17/96: OUTFLOWS IN SB RATING CURVE MODIFIED
***
9/16/96: 25 CFS DIVERT AT C51 REDUCED TO 0 CFS
         SV RECORD IN RATING CURVE AT SB MODIFIED
***
8/13/96: FLOW FROM STAD REMOVED
***
7/29/96: TC AND R AT BASIN H CORRECTED
***
7/10/96: FLOW IN EXCESS OF 108 CFS REMOVED AT CCHAN
***
7/7/96:  DETENTION BASIN VOLUMES UPDATED
***
7/3/96:  DETENTION BASIN OUTFLOW VALUES UPDATED; CRITTENDEN STREET/
```

```
                                    STORM DRAIN DIVERSION INTO 51ST AVE STORM DRAIN MODIFIED
                                ***
                                 6/4/96:  25 CFS MAX STORM DRAIN DIVERT TO SOUTH AT DS1
                                ***
                                 5/22/96: FLOW IN EXCESS OF 70 CFS REMOVED AT DCHAN
                                ***

47 IO          OUTPUT CONTROL VARIABLES
                     IPRNT          5  PRINT CONTROL
                     IPLOT          0  PLOT CONTROL
                     ISCAL         0.  HYDROGRAPH PLOT SCALE

   IT          HYDROGRAPH TIME DATA
                     NMIN           5  MINUTES IN COMPUTATION INTERVAL
                     IDATE      1   0  STARTING DATE
                     ITIME       0000  STARTING TIME
                       NQ         300  NUMBER OF HYDROGRAPH ORDINATES
                    NDDATE      2   0  ENDING DATE
                    NDTIME       0055  ENDING TIME
                     ICENT         19  CENTURY MARK

               COMPUTATION INTERVAL     .08 HOURS
                    TOTAL TIME BASE   24.92 HOURS

        ENGLISH UNITS
             DRAINAGE AREA          SQUARE MILES
             PRECIPITATION DEPTH    INCHES
             LENGTH, ELEVATION      FEET
             FLOW                   CUBIC FEET PER SECOND
             STORAGE VOLUME         ACRE-FEET
             SURFACE AREA           ACRES
             TEMPERATURE            DEGREES FAHRENHEIT

49 JD          INDEX STORM NO. 1
                     STRM       1.40  PRECIPITATION DEPTH
                     TRDA        .01  TRANSPOSITION DRAINAGE AREA

50 PI            PRECIPITATION PATTERN
                   .00       .00       .00       .00       .00       .00       .00       .00       .00       .00
                   .00       .00       .00       .00       .00       .00       .00       .00       .00       .00
                   .00       .00       .00       .00       .00       .00       .00       .00       .00       .00
                   .00       .00       .00       .01       .01       .01       .01       .01       .01       .03
                   .03       .03       .05       .05       .05       .15       .15       .15       .03       .03
                   .03       .01       .01       .01       .01       .01       .01       .00       .00       .00
                   .00       .00       .00       .00       .00       .00       .00       .00       .00       .00
                   .00       .00

53 JD          INDEX STORM NO. 2
                     STRM       1.39  PRECIPITATION DEPTH
                     TRDA        .50  TRANSPOSITION DRAINAGE AREA

 0 PI            PRECIPITATION PATTERN
                   .00       .00       .00       .00       .00       .00       .00       .00       .00       .00
                   .00       .00       .00       .00       .00       .00       .00       .00       .00       .00
                   .00       .00       .00       .00       .00       .00       .00       .00       .00       .00
                   .00       .00       .00       .01       .01       .01       .01       .01       .01       .03
                   .03       .03       .05       .05       .05       .15       .15       .15       .03       .03
                   .03       .01       .01       .01       .01       .01       .01       .00       .00       .00
                   .00       .00       .00       .00       .00       .00       .00       .00       .00       .00
                   .00       .00

54 JD          INDEX STORM NO. 3
                     STRM       1.37  PRECIPITATION DEPTH
                     TRDA       2.80  TRANSPOSITION DRAINAGE AREA

55 PI            PRECIPITATION PATTERN
                   .00       .00       .00       .00       .00       .00       .00       .00       .00       .00
                   .00       .00       .00       .00       .00       .00       .00       .00       .00       .00
                   .00       .00       .00       .00       .00       .00       .00       .00       .00       .00
                   .00       .00       .00       .01       .01       .01       .01       .01       .01       .03
                   .03       .03       .07       .07       .07       .08       .08       .08       .05       .05
                   .05       .02       .02       .02       .01       .01       .01       .00       .00       .00
                   .00       .00       .00       .00       .00       .00       .00       .00       .00       .00
                   .00       .00

58 JD          INDEX STORM NO. 4
                     STRM       1.29  PRECIPITATION DEPTH
                     TRDA      16.00  TRANSPOSITION DRAINAGE AREA

59 PI            PRECIPITATION PATTERN
                   .01       .01       .00       .00       .00       .00       .00       .00       .00       .01
```

```
                .01      .01      .00      .01      .00      .00      .00      .00      .00      .00
                .00      .00      .01      .00      .00      .00      .00      .01      .01      .01
                .01      .01      .01      .01      .01      .01      .02      .02      .02      .02
                .03      .03      .06      .06      .06      .07      .07      .07      .04      .04
                .04      .02      .02      .02      .01      .01      .01      .01      .01      .01
                .00      .00      .00      .00      .00      .00      .00      .00      .00      .00
                .00      .00

62 ID         INDEX STORM NO. 5
                STRM        1.13  PRECIPITATION DEPTH
                TRDA       90.00  TRANSPOSITION DRAINAGE AREA

63 PI           PRECIPITATION PATTERN
                .01      .01      .01      .00      .00      .00      .01      .01      .01      .01
                .01      .01      .01      .01      .01      .01      .01      .01      .01      .01
                .01      .01      .01      .01      .01      .01      .01      .01      .01      .01
                .01      .01      .01      .01      .01      .01      .02      .02      .02      .02
                .03      .03      .05      .05      .05      .05      .05      .05      .04      .04
                .04      .02      .02      .02      .02      .02      .02      .01      .01      .01
                .01      .01      .01      .01      .01      .01      .01      .01      .01      .01
                .01      .01

66 ID         INDEX STORM NO. 6
                STRM         .80  PRECIPITATION DEPTH
                TRDA      500.00  TRANSPOSITION DRAINAGE AREA

67 PI           PRECIPITATION PATTERN
                .01      .01      .01      .01      .01      .01      .01      .01      .01      .01
                .01      .01      .01      .01      .01      .01      .01      .01      .01      .01
                .01      .01      .01      .01      .01      .01      .01      .01      .01      .01
                .01      .01      .01      .01      .01      .01      .02      .02      .02      .03
                .03      .03      .04      .04      .04      .04      .04      .04      .04      .04
                .04      .03      .03      .03      .02      .02      .02      .01      .01      .01
                .01      .01      .01      .01      .01      .01      .01      .01      .01      .01
                .01      .01

*** *** *** *** *** *** *** *** *** *** *** *** *** *** *** *** *** *** *** *** *** *** *** *** *** *** *** *** *** *** *** *** *** *** ***
***

            *************
            *           *
457 KK      *    SB     *          STORAGE ROUTING
            *           *
            *************

458 KO        OUTPUT CONTROL VARIABLES
                IPRNT          1  PRINT CONTROL
                IPLOT          0  PLOT CONTROL
                QSCAL         0.  HYDROGRAPH PLOT SCALE

            HYDROGRAPH ROUTING DATA

459 RS        STORAGE ROUTING
                NSTPS          1  NUMBER OF SUBREACHES
                 ITYP       STOR  TYPE OF INITIAL CONDITION
               RSVRIC        .00  INITIAL CONDITION
                    X        .00  WORKING R AND D COEFFICIENT

460 SV          STORAGE        .0       .0       .3      1.6      4.9      8.9     13.4     19.2     27.2     38.9
                              55.7     67.9     70.9     75.0

462 SE        ELEVATION    1086.20  1091.00  1094.00  1095.00  1096.00  1097.00  1098.00  1099.00  1100.00  1101.00
                           1102.20  1103.00  1103.20  1103.80

464 SQ        DISCHARGE        0.       28.      37.      40.      42.      45.      48.      51.      54.      57.
                              60.       62.      63.    1350.
                                                        ***

*** WARNING *** MODIFIED PULS ROUTING MAY BE NUMERICALLY UNSTABLE FOR OUTFLOWS BETWEEN       63. TO     1350.
               THE ROUTED HYDROGRAPH SHOULD BE EXAMINED FOR OSCILLATIONS OR OUTFLOWS GREATER THAN PEAK INFLOWS.
               THIS CAN BE CORRECTED BY DECREASING THE TIME INTERVAL OR INCREASING STORAGE (USE A LONGER REACH.)

*****************************************************************************************************************

                                HYDROGRAPH AT        SB
                            TRANSPOSITION AREA       .0 SQ MI
```

DA	MON	HRMN	IRD	OUTFLOW	STORAGE	STAGE	DA	MON	HRMN	IRD	OUTFLOW	STORAGE	STAGE	DA	MON	HRMN	IRD	OUTFLOW	STORAGE	STAG
1	[illegible]	[illegible]	1	29.	.0	1091.0 *	1	[illegible]	1820	121	44.	7.1	1096.6 *	1	[illegible]	1840	221	0.	.0	1086.
1	[illegible]	[illegible]	2	0.	.0	1086.2 *	1	[illegible]	1825	122	44.	6.8	1096.5 *	1	[illegible]	1845	222	0.	.0	1086.[illegible]
1	[illegible]	[illegible]	3	0.	.0	1086.2 *	1	[illegible]	1830	123	44.	6.5	1096.4 *	1	[illegible]	1850	223	0.	.0	1086.[illegible]
1	[illegible]	[illegible]	4	1.	.0	1086.3 *	1	[illegible]	1835	124	43.	6.2	1096.3 *	1	[illegible]	1855	224	0.	.0	1086.[illegible]
1	[illegible]	[illegible]	5	1.	.0	1086.4 *	1	[illegible]	1840	125	43.	5.9	1096.3 *	1	[illegible]	1900	225	0.	.0	1086.
1	[illegible]	[illegible]	6	2.	.0	1086.5 *	1	[illegible]	1845	126	43.	5.6	1096.2 *	1	[illegible]	1905	226	0.	.0	1086.
1	[illegible]	[illegible]	7	2.	.0	1086.6 *	1	[illegible]	1850	127	43.	5.3	1096.1 *	1	[illegible]	1910	227	0.	.0	1086.
1	0035	8	3.	.0	1086.7 *	1	1855	128	42.	5.0	1096.0 *	1	1915	228	0.	.0	1086.
1	0040	9	3.	.0	1086.8 *	1	1900	129	42.	4.7	1095.9 *	1	1920	229	0.	.0	1086.
1	0045	10	4.	.0	1086.8 *	1	1905	110	42.	4.4	1095.9 *	1	1925	211	0.	.0	1086.
1	0050	11	4.	.0	1086.9 *	1	1910	111	42.	4.1	1095.8 *	1	1930	211	0.	.0	1086.
1	0055	12	4.	.0	1087.0 *	1	1915	112	42.	3.9	1095.7 *	1	1935	212	0.	.0	1086.
1	0100	13	5.	.0	1087.0 *	1	1920	113	41.	3.6	1095.6 *	1	1940	213	0.	.0	1086.
1	0105	14	5.	.0	1087.0 *	1	1925	114	41.	3.3	1095.5 *	1	1945	214	0.	.0	1086.
1	0110	15	5.	.0	1087.1 *	1	1930	115	41.	3.0	1095.4 *	1	1950	215	0.	.0	1086.
1	0115	16	5.	.0	1087.1 *	1	1935	116	41.	2.7	1095.3 *	1	1955	216	0.	.0	1086.
1	0120	17	6.	.0	1087.1 *	1	1940	117	40.	2.5	1095.3 *	1	1800	217	0.	.0	1086.
1	0125	18	6.	.0	1087.2 *	1	1945	118	40.	2.2	1095.2 *	1	1805	218	0.	.0	1086.
1	0130	19	6.	.0	1087.2 *	1	1950	119	40.	1.9	1095.1 *	1	1810	219	0.	.0	1086.
1	0135	20	6.	.0	1087.2 *	1	1955	120	40.	1.6	1095.0 *	1	1815	220	0.	.0	1086.
1	0140	21	6.	.0	1087.2 *	1	1100	121	39.	1.3	1094.8 *	1	1820	221	0.	.0	1086.
1	0145	22	6.	.0	1087.2 *	1	1105	122	39.	1.1	1094.6 *	1	1825	222	0.	.0	1086.
1	0150	23	6.	.0	1087.2 *	1	1110	123	39.	.8	1094.4 *	1	1830	223	0.	.0	1086.
1	0155	24	6.	.0	1087.3 *	1	1115	124	38.	.6	1094.2 *	1	1835	224	0.	.0	1086.
1	0200	25	6.	.0	1087.3 *	1	1020	125	37.	.3	1094.0 *	1	1840	225	0.	.0	1086.
1	0205	26	6.	.0	1087.3 *	1	1025	126	30.	.1	1091.7 *	1	1845	226	0.	.0	1086.
1	0210	27	6.	.0	1087.3 *	1	1030	127	0.	.0	1086.2 *	1	1850	227	0.	.0	1086.
1	0215	28	6.	.0	1087.3 *	1	1035	128	0.	.0	1086.2 *	1	1855	228	0.	.0	1086.
1	0220	29	6.	.0	1087.3 *	1	1040	129	0.	.0	1086.2 *	1	1900	229	0.	.0	1086.
1	0225	30	7.	.0	1087.3 *	1	1045	130	0.	.0	1086.2 *	1	1905	230	0.	.0	1086.
1	0230	31	7.	.0	1087.4 *	1	1050	131	0.	.0	1086.2 *	1	1910	231	0.	.0	1086.
1	0235	32	7.	.0	1087.4 *	1	1055	132	0.	.0	1086.2 *	1	1915	232	0.	.0	1086.
1	0240	33	8.	.0	1087.5 *	1	1100	133	0.	.0	1086.2 *	1	1920	233	0.	.0	1086.
1	0245	34	8.	.0	1087.5 *	1	1105	134	0.	.0	1086.2 *	1	1925	234	0.	.0	1086.
1	0250	35	8.	.0	1087.6 *	1	1110	135	0.	.0	1086.2 *	1	1930	235	0.	.0	1086.
1	0255	36	9.	.0	1087.6 *	1	1115	136	0.	.0	1086.2 *	1	1935	236	0.	.0	1086.
1	0300	37	9.	.0	1087.7 *	1	1120	137	0.	.0	1086.2 *	1	1940	237	0.	.0	1086.
1	0305	38	10.	.0	1087.8 *	1	1125	138	0.	.0	1086.2 *	1	1945	238	0.	.0	1086.
1	0310	39	10.	.0	1088.0 *	1	1130	139	0.	.0	1086.2 *	1	1950	239	0.	.0	1086.
1	0315	40	11.	.0	1088.1 *	1	1135	140	0.	.0	1086.2 *	1	1955	240	0.	.0	1086.
1	0320	41	12.	.0	1088.3 *	1	1140	141	0.	.0	1086.2 *	1	2000	241	0.	.0	1086.
1	0325	42	15.	.0	1088.7 *	1	1145	142	0.	.0	1086.2 *	1	2005	242	0.	.0	1086.
1	0330	43	19.	.0	1089.4 *	1	1150	143	0.	.0	1086.2 *	1	2010	243	0.	.0	1086.
1	0335	44	24.	.0	1090.2 *	1	1155	144	0.	.0	1086.2 *	1	2015	244	0.	.0	1086.[illegible]
1	0340	45	28.	.0	1091.1 *	1	1200	145	0.	.0	1086.2 *	1	2020	245	0.	.0	1086.[illegible]
1	0345	46	30.	.1	1091.5 *	1	1205	146	0.	.0	1086.2 *	1	2025	246	0.	.0	1086.[illegible]
1	0350	47	33.	.2	1092.6 *	1	1210	147	0.	.0	1086.2 *	1	2030	247	0.	.0	1086.
1	0355	48	37.	.4	1094.1 *	1	1215	148	0.	.0	1086.2 *	1	2035	248	0.	.0	1086.[illegible]
1	0400	49	38.	.9	1094.5 *	1	1220	149	0.	.0	1086.2 *	1	2040	249	0.	.0	1086.[illegible]
1	0405	50	40.	1.7	1095.0 *	1	1225	150	0.	.0	1086.2 *	1	2045	250	0.	.0	1086.[illegible]
1	0410	51	41.	2.8	1095.4 *	1	1230	151	0.	.0	1086.2 *	1	2050	251	0.	.0	1086.[illegible]
1	0415	52	42.	4.0	1095.7 *	1	1235	152	0.	.0	1086.2 *	1	2055	252	0.	.0	1086.[illegible]
1	0420	53	43.	5.2	1096.1 *	1	1240	153	0.	.0	1086.2 *	1	2100	253	0.	.0	1086.[illegible]
1	0425	54	44.	6.5	1096.4 *	1	1245	154	0.	.0	1086.2 *	1	2105	254	0.	.0	1086.[illegible]
1	0430	55	45.	7.8	1096.7 *	1	1250	155	0.	.0	1086.2 *	1	2110	255	0.	.0	1086.[illegible]
1	0435	56	45.	8.9	1097.0 *	1	1255	156	0.	.0	1086.2 *	1	2115	256	0.	.0	1086.[illegible]
1	0440	57	46.	9.9	1097.2 *	1	1300	157	0.	.0	1086.2 *	1	2120	257	0.	.0	1086.[illegible]
1	0445	58	47.	10.8	1097.4 *	1	1305	158	0.	.0	1086.2 *	1	2125	258	0.	.0	1086.[illegible]
1	0450	59	47.	11.6	1097.6 *	1	1310	159	0.	.0	1086.2 *	1	2130	259	0.	.0	1086.[illegible]
1	0455	60	47.	12.3	1097.8 *	1	1315	160	0.	.0	1086.2 *	1	2135	260	0.	.0	1086.[illegible]
1	0500	61	48.	12.9	1097.9 *	1	1320	161	0.	.0	1086.2 *	1	2140	261	0.	.0	1086.[illegible]
1	0505	62	48.	13.4	1098.0 *	1	1325	162	0.	.0	1086.2 *	1	2145	262	0.	.0	1086.[illegible]
1	0510	63	48.	13.9	1098.1 *	1	1330	163	0.	.0	1086.2 *	1	2150	263	0.	.0	1086.[illegible]
1	0515	64	49.	14.3	1098.1 *	1	1335	164	0.	.0	1086.2 *	1	2155	264	0.	.0	1086.[illegible]
1	0520	65	49.	14.6	1098.2 *	1	1340	165	0.	.0	1086.2 *	1	2200	265	0.	.0	1086.[illegible]
1	0525	66	49.	14.9	1098.3 *	1	1345	166	0.	.0	1086.2 *	1	2205	266	0.	.0	1086.[illegible]
1	0530	67	49.	15.2	1098.3 *	1	1350	167	0.	.0	1086.2 *	1	2210	267	0.	.0	1086.[illegible]
1	0535	68	49.	15.3	1098.3 *	1	1355	168	0.	.0	1086.2 *	1	2215	268	0.	.0	1086.[illegible]
1	0540	69	49.	15.4	1098.3 *	1	1400	169	0.	.0	1086.2 *	1	2220	269	0.	.0	1086.[illegible]
1	0545	70	49.	15.3	1098.3 *	1	1405	170	0.	.0	1086.2 *	1	2225	270	0.	.0	1086.[illegible]
1	0550	71	49.	15.2	1098.3 *	1	1410	171	0.	.0	1086.2 *	1	2230	271	0.	.0	1086.[illegible]
1	0555	72	49.	15.1	1098.3 *	1	1415	172	0.	.0	1086.2 *	1	2235	272	0.	.0	1086.[illegible]
1	0600	73	49.	14.9	1098.3 *	1	1420	173	0.	.0	1086.2 *	1	2240	273	0.	.0	1086.[illegible]
1	0605	74	49.	14.7	1098.2 *	1	1425	174	0.	.0	1086.2 *	1	2245	274	0.	.0	1086.[illegible]
1	0610	75	49.	14.5	1098.2 *	1	1430	175	0.	.0	1086.2 *	1	2250	275	0.	.0	1086.[illegible]

1	1615	76	49.	14.3	1098.2	*	1	1435	176	0.	.0	1086.2	*	1	2255	276	0.	.0	1086.
1	1620	77	48.	14.1	1098.1	*	1	1440	177	0.	.0	1086.2	*	1	2300	277	0.	.0	1086.
1	1625	78	48.	13.8	1098.1	*	1	1445	178	0.	.0	1086.2	*	1	2305	278	0.	.0	1086.
1	1630	79	48.	13.6	1098.0	*	1	1450	179	0.	.0	1086.2	*	1	2310	279	0.	.0	1086.
1	1635	80	49.	13.3	1098.0	*	1	1455	180	0.	.0	1086.2	*	1	2315	280	0.	.0	1086.
1	1640	81	48.	13.1	1097.9	*	1	1500	181	0.	.0	1086.2	*	1	2320	281	0.	.0	1086.
1	1645	82	48.	12.8	1097.9	*	1	1505	182	0.	.0	1086.2	*	1	2325	282	0.	.0	1086.
1	1650	83	48.	12.5	1097.8	*	1	1510	183	0.	.0	1086.2	*	1	2330	283	0.	.0	1086.
1	1655	84	47.	12.2	1097.7	*	1	1515	184	0.	.0	1086.2	*	1	2335	284	0.	.0	1086.
1	1700	85	47.	12.0	1097.7	*	1	1520	185	0.	.0	1086.2	*	1	2340	285	0.	.0	1086.
1	1705	86	47.	11.7	1097.6	*	1	1525	186	0.	.0	1086.2	*	1	2345	286	0.	.0	1086.
1	1710	87	47.	11.4	1097.5	*	1	1530	187	0.	.0	1086.2	*	1	2350	287	0.	.0	1086.
1	1715	88	47.	11.1	1097.5	*	1	1535	188	0.	.0	1086.2	*	1	2355	288	0.	.0	1086.
1	1720	89	47.	10.8	1097.4	*	1	1540	189	0.	.0	1086.2	*	2	0000	289	0.	.0	1086.
1	1725	90	46.	10.5	1097.3	*	1	1545	190	0.	.0	1086.2	*	2	0005	290	0.	.0	1086.
1	1730	91	46.	10.2	1097.3	*	1	1550	191	0.	.0	1086.2	*	2	0010	291	0.	.0	1086.
1	1735	92	46.	9.9	1097.2	*	1	1555	192	0.	.0	1086.2	*	2	0015	292	0.	.0	1086.
1	1740	93	46.	9.6	1097.1	*	1	1600	193	0.	.0	1086.2	*	2	0020	293	0.	.0	1086.
1	1745	94	46.	9.2	1097.1	*	1	1605	194	0.	.0	1086.2	*	2	0025	294	0.	.0	1086.
1	1750	95	45.	8.9	1097.0	*	1	1610	195	0.	.0	1086.2	*	2	0030	295	0.	.0	1086.
1	1755	96	45.	8.6	1096.9	*	1	1615	196	0.	.0	1086.2	*	2	0035	296	0.	.0	1086.
1	1800	97	45.	8.3	1096.9	*	1	1620	197	0.	.0	1086.2	*	2	0040	297	0.	.0	1086.
1	1805	98	45.	8.0	1096.8	*	1	1625	198	0.	.0	1086.2	*	2	0045	298	0.	.0	1086.
1	1810	99	45.	7.7	1096.7	*	1	1630	199	0.	.0	1086.2	*	2	0050	299	0.	.0	1086.
1	1815	100	44.	7.4	1096.6	*	1	1635	200	0.	.0	1086.2	*	2	0055	300	0.	.0	1086.

PEAK FLOW	TIME		MAXIMUM AVERAGE FLOW			
			6-HR	24-HR	72-HR	24.92-HR
* (CFS)	(HR)					
		(CFS)				
* 49.	5.67		45.	14.	13.	13.
		(INCHES)	.127	.152	.152	.152
		(AC-FT)	22.	27.	27.	27.

PEAK STORAGE	TIME	MAXIMUM AVERAGE STORAGE			
		6-HR	24-HR	72-HR	24.92-HR
* (AC-FT)	(HR)				
15.	5.67	9.	2.	2.	2.

PEAK STAGE	TIME	MAXIMUM AVERAGE STAGE			
		6-HR	24-HR	72-HR	24.92-HR
* (FEET)	(HR)				
1098.34	5.67	1096.98	1089.32	1089.20	1089.20

CUMULATIVE AREA = 3.32 SQ MI

HYDROGRAPH AT SB
TRANSPOSITION AREA .5 SQ MI

DA	MON	HRMN	ORD	OUTFLOW	STORAGE	STAGE	*	DA	MON	HRMN	ORD	OUTFLOW	STORAGE	STAGE	*	DA	MON	HRMN	ORD	OUTFLOW	STORAGE	STAG
1		0000	1	28.	.0	1091.0	*	1		0820	101	44.	6.9	1096.5	*	1		1640	201	0.	.0	1087.
1		0005	2	0.	.0	1086.2	*	1		0825	102	44.	6.6	1096.4	*	1		1645	202	0.	.0	1087.
1		0010	3	0.	.0	1086.2	*	1		0830	103	43.	6.3	1096.3	*	1		1650	203	0.	.0	1087.
1		0015	4	1.	.0	1086.3	*	1		0835	104	43.	6.0	1096.3	*	1		1655	204	0.	.0	1087.
1		0020	5	1.	.0	1086.4	*	1		0840	105	43.	5.7	1096.2	*	1		1700	205	0.	.0	1087.
1		0025	6	2.	.0	1086.5	*	1		0845	106	43.	5.4	1096.1	*	1		1705	206	0.	.0	1087.
1		0030	7	2.	.0	1086.6	*	1		0850	107	43.	5.1	1096.1	*	1		1710	207	0.	.0	1087.
1		0035	8	3.	.0	1086.7	*	1		0855	108	42.	4.8	1096.0	*	1		1715	208	0.	.0	1087.
1		0040	9	3.	.0	1086.7	*	1		0900	109	42.	4.5	1095.9	*	1		1720	209	0.	.0	1087.
1		0045	10	4.	.0	1086.8	*	1		0905	110	42.	4.2	1095.8	*	1		1725	210	0.	.0	1087.
1		0050	11	4.	.0	1086.9	*	1		0910	111	42.	3.9	1095.7	*	1		1730	211	0.	.0	1087.
1		0055	12	4.	.0	1086.9	*	1		0915	112	41.	3.7	1095.6	*	1		1735	212	0.	.0	1087.
1		0100	13	5.	.0	1087.0	*	1		0920	113	41.	3.4	1095.5	*	1		1740	213	0.	.0	1087.
1		0105	14	5.	.0	1087.0	*	1		0925	114	41.	3.1	1095.5	*	1		1745	214	0.	.0	1087.
1		0110	15	5.	.0	1087.1	*	1		0930	115	41.	2.8	1095.4	*	1		1750	215	0.	.0	1087.
1		0115	16	5.	.0	1087.1	*	1		0935	116	41.	2.5	1095.3	*	1		1755	216	0.	.0	1087.
1		0120	17	5.	.0	1087.1	*	1		0940	117	40.	2.3	1095.2	*	1		1800	217	0.	.0	1087.
1		0125	18	6.	.0	1087.1	*	1		0945	118	40.	2.0	1095.1	*	1		1805	218	0.	.0	1087.
1		0130	19	6.	.0	1087.2	*	1		0950	119	40.	1.7	1095.0	*	1		1810	219	0.	.0	1087.
1		0135	20	6.	.0	1087.2	*	1		0955	120	39.	1.4	1094.9	*	1		1815	220	0.	.0	1087.

1	0140	21	6.	.0	1087.2	*	1	1000	121	39.	1.2	1094.7	*	1	1800	221	0.	.0	1087.
1	0145	22	6.	.0	1087.2	*	1	1005	122	38.	.9	1094.5	*	1	1805	222	0.	.0	1087.
1	0150	23	6.	.0	1087.2	*	1	1010	123	38.	.6	1094.3	*	1	1810	223	0.	.0	1087.
1	0155	24	6.	.0	1087.2	*	1	1015	124	37.	.4	1094.1	*	1	1815	224	0.	.0	1087.
1	0200	25	6.	.0	1087.2	*	1	1020	125	32.	.1	1092.3	*	1	1820	225	0.	.0	1087.
1	0205	26	6.	.0	1087.3	*	1	1025	126	0.	.0	1087.3	*	1	1825	226	0.	.0	1087.
1	0210	27	6.	.0	1087.3	*	1	1030	127	0.	.0	1087.3	*	1	1830	227	0.	.0	1087.
1	0215	28	6.	.0	1087.3	*	1	1035	128	0.	.0	1087.3	*	1	1835	228	0.	.0	1087.
1	0220	29	6.	.0	1087.3	*	1	1040	129	0.	.0	1087.3	*	1	1840	229	0.	.0	1087.
1	0225	30	7.	.0	1087.3	*	1	1045	130	0.	.0	1087.3	*	1	1845	230	0.	.0	1087.
1	0230	31	7.	.0	1087.4	*	1	1050	131	0.	.0	1087.3	*	1	1850	231	0.	.0	1087.
1	0235	32	7.	.0	1087.4	*	1	1055	132	0.	.0	1087.3	*	1	1855	232	0.	.0	1087.
1	0240	33	7.	.0	1087.5	*	1	1100	133	0.	.0	1087.3	*	1	1900	233	0.	.0	1087.
1	0245	34	8.	.0	1087.5	*	1	1105	134	0.	.0	1087.3	*	1	1905	234	0.	.0	1087.
1	0250	35	8.	.0	1087.6	*	1	1110	135	0.	.0	1087.3	*	1	1910	235	0.	.0	1087.
1	0255	36	8.	.0	1087.6	*	1	1115	136	0.	.0	1087.3	*	1	1915	236	0.	.0	1087.
1	0300	37	9.	.0	1087.7	*	1	1120	137	0.	.0	1087.3	*	1	1920	237	0.	.0	1087.
1	0305	38	10.	.0	1087.8	*	1	1125	138	0.	.0	1087.3	*	1	1925	238	0.	.0	1087.
1	0310	39	10.	.0	1087.9	*	1	1130	139	0.	.0	1087.3	*	1	1930	239	0.	.0	1087.
1	0315	40	11.	.0	1088.0	*	1	1135	140	0.	.0	1087.3	*	1	1935	240	0.	.0	1087.
1	0320	41	12.	.0	1088.3	*	1	1140	141	0.	.0	1087.3	*	1	1940	241	0.	.0	1087.
1	0325	42	15.	.0	1089.7	*	1	1145	142	0.	.0	1087.3	*	1	1945	242	0.	.0	1087.
1	0330	43	19.	.0	1089.8	*	1	1150	143	0.	.0	1087.3	*	1	1950	243	0.	.0	1087.
1	0335	44	24.	.0	1090.2	*	1	1155	144	0.	.0	1087.3	*	1	1955	244	0.	.0	1087.
1	0340	45	28.	.0	1091.1	*	1	1200	145	0.	.0	1087.3	*	1	2000	245	0.	.0	1087.
1	0345	46	30.	.0	1091.5	*	1	1205	146	0.	.0	1087.3	*	1	2005	246	0.	.0	1087.
1	0350	47	33.	.2	1092.6	*	1	1210	147	0.	.0	1087.3	*	1	2010	247	0.	.0	1087.
1	0355	48	37.	.4	1094.1	*	1	1215	148	0.	.0	1087.3	*	1	2015	248	0.	.0	1087.
1	0400	49	38.	.9	1094.5	*	1	1220	149	0.	.0	1087.3	*	1	2020	249	0.	.0	1087.
1	0405	50	40.	1.7	1095.0	*	1	1225	150	0.	.0	1087.3	*	1	2025	250	0.	.0	1087.
1	0410	51	41.	2.7	1095.3	*	1	1230	151	0.	.0	1087.3	*	1	2030	251	0.	.0	1087.
1	0415	52	42.	3.9	1095.7	*	1	1235	152	0.	.0	1087.3	*	1	2035	252	0.	.0	1087.
1	0420	53	43.	5.1	1096.1	*	1	1240	153	0.	.0	1087.3	*	1	2040	253	0.	.0	1087.
1	0425	54	44.	6.4	1096.4	*	1	1245	154	0.	.0	1087.3	*	1	2045	254	0.	.0	1087.
1	0430	55	44.	7.7	1096.7	*	1	1250	155	0.	.0	1087.3	*	1	2050	255	0.	.0	1087.
1	0435	56	45.	8.8	1097.0	*	1	1255	156	0.	.0	1087.3	*	1	2055	256	0.	.0	1087.
1	0440	57	46.	9.8	1097.2	*	1	1300	157	0.	.0	1087.3	*	1	2100	257	0.	.0	1087.
1	0445	58	46.	10.7	1097.4	*	1	1305	158	0.	.0	1087.3	*	1	2105	258	0.	.0	1087.
1	0450	59	47.	11.4	1097.6	*	1	1310	159	0.	.0	1087.3	*	1	2110	259	0.	.0	1087.
1	0455	60	47.	12.1	1097.7	*	1	1315	160	0.	.0	1087.3	*	1	2115	260	0.	.0	1087.
1	0500	61	48.	12.7	1097.8	*	1	1320	161	0.	.0	1087.3	*	1	2120	261	0.	.0	1087.
1	0505	62	48.	13.2	1098.0	*	1	1325	162	0.	.0	1087.3	*	1	2125	262	0.	.0	1087.
1	0510	63	48.	13.7	1098.0	*	1	1330	163	0.	.0	1087.3	*	1	2130	263	0.	.0	1087.
1	0515	64	48.	14.1	1098.1	*	1	1335	164	0.	.0	1087.3	*	1	2135	264	0.	.0	1087.
1	0520	65	49.	14.4	1098.2	*	1	1340	165	0.	.0	1087.3	*	1	2140	265	0.	.0	1087.
1	0525	66	49.	14.7	1098.2	*	1	1345	166	0.	.0	1087.3	*	1	2145	266	0.	.0	1087.
1	0530	67	49.	15.0	1098.3	*	1	1350	167	0.	.0	1087.3	*	1	2150	267	0.	.0	1087.
1	0535	68	49.	15.1	1098.3	*	1	1355	168	0.	.0	1087.3	*	1	2155	268	0.	.0	1087.
1	0540	69	49.	15.2	1098.3	*	1	1400	169	0.	.0	1087.3	*	1	2200	269	0.	.0	1087.
1	0545	70	49.	15.1	1098.3	*	1	1405	170	0.	.0	1087.3	*	1	2205	270	0.	.0	1087.
1	0550	71	49.	15.0	1098.3	*	1	1410	171	0.	.0	1087.3	*	1	2230	271	0.	.0	1087.
1	0555	72	49.	14.8	1098.2	*	1	1415	172	0.	.0	1087.3	*	1	2235	272	0.	.0	1087.
1	0600	73	49.	14.7	1098.2	*	1	1420	173	0.	.0	1087.3	*	1	2240	273	0.	.0	1087.
1	0605	74	49.	14.5	1098.2	*	1	1425	174	0.	.0	1087.3	*	1	2245	274	0.	.0	1087.
1	0610	75	49.	14.3	1098.2	*	1	1430	175	0.	.0	1087.3	*	1	2250	275	0.	.0	1087.
1	0615	76	48.	14.1	1098.1	*	1	1435	176	0.	.0	1087.3	*	1	2255	276	0.	.0	1087.
1	0620	77	48.	13.9	1098.1	*	1	1440	177	0.	.0	1087.3	*	1	2300	277	0.	.0	1087.
1	0625	78	48.	13.6	1098.0	*	1	1445	178	0.	.0	1087.3	*	1	2305	278	0.	.0	1087.
1	0630	79	48.	13.4	1098.0	*	1	1450	179	0.	.0	1087.3	*	1	2310	279	0.	.0	1087.
1	0635	80	48.	13.1	1097.9	*	1	1455	180	0.	.0	1087.3	*	1	2315	280	0.	.0	1087.
1	0640	81	48.	12.9	1097.9	*	1	1500	181	0.	.0	1087.3	*	1	2320	281	0.	.0	1087.
1	0645	82	48.	12.6	1097.8	*	1	1505	182	0.	.0	1087.3	*	1	2325	282	0.	.0	1087.
1	0650	83	47.	12.3	1097.8	*	1	1510	183	0.	.0	1087.3	*	1	2330	283	0.	.0	1087.
1	0655	84	47.	12.0	1097.7	*	1	1515	184	0.	.0	1087.3	*	1	2335	284	0.	.0	1087.
1	0700	85	47.	11.7	1097.6	*	1	1520	185	0.	.0	1087.3	*	1	2340	285	0.	.0	1087.
1	0705	86	47.	11.4	1097.6	*	1	1525	186	0.	.0	1087.3	*	1	2345	286	0.	.0	1087.
1	0710	87	47.	11.1	1097.5	*	1	1530	187	0.	.0	1087.3	*	1	2350	287	0.	.0	1087.
1	0715	88	47.	10.8	1097.4	*	1	1535	188	0.	.0	1087.3	*	1	2355	288	0.	.0	1087.
1	0720	89	46.	10.5	1097.4	*	1	1540	189	0.	.0	1087.3	*	2	0000	289	0.	.0	1087.
1	0725	90	46.	10.2	1097.3	*	1	1545	190	0.	.0	1087.3	*	2	0005	290	0.	.0	1087.
1	0730	91	46.	9.9	1097.2	*	1	1550	191	0.	.0	1087.3	*	2	0010	291	0.	.0	1087.
1	0735	92	46.	9.6	1097.2	*	1	1555	192	0.	.0	1087.3	*	2	0015	292	0.	.0	1087.
1	0740	93	46.	9.3	1097.1	*	1	1600	193	0.	.0	1087.3	*	2	0020	293	0.	.0	1087.
1	0745	94	45.	9.0	1097.0	*	1	1605	194	0.	.0	1087.3	*	2	0025	294	0.	.0	1087.
1	0750	95	45.	8.7	1097.0	*	1	1610	195	0.	.0	1087.3	*	2	0030	295	0.	.0	1087.
1	0755	96	45.	8.4	1096.9	*	1	1615	196	0.	.0	1087.3	*	2	0035	296	0.	.0	1087.
1	0800	97	45.	8.1	1096.8	*	1	1620	197	0.	.0	1087.3	*	2	0040	297	0.	.0	1087.
1	0805	98	45.	7.8	1096.7	*	1	1625	198	0.	.0	1087.3	*	2	0045	298	0.	.0	1087.
1	0810	99	44.	7.5	1096.6	*	1	1630	199	0.	.0	1087.3	*	2	0050	299	0.	.0	1087.
1	0815	100	44.	7.2	1096.6	*	1	1635	200	0.	.0	1087.3	*	2	0055	300	0.	.0	1087.

PEAK FLOW	TIME		MAXIMUM AVERAGE FLOW			
			6-HR	24-HR	72-HR	24.92-HR
(CFS)	(HR)					
49.	5.67	(CFS)	45.	13.	13.	13.
		(INCHES)	.126	.150	.150	.150
		(AC-FT)	22.	27.	27.	27.

PEAK STORAGE	TIME		MAXIMUM AVERAGE STORAGE			
			6-HR	24-HR	72-HR	24.92-HR
(AC-FT)	(HR)					
15.	5.67		9.	2.	2.	2.

PEAK STAGE	TIME		MAXIMUM AVERAGE STAGE			
			6-HR	24-HR	72-HR	24.92-HR
(FEET)	(HR)					
1098.31	5.67		1096.93	1089.95	1089.83	1089.83

CUMULATIVE AREA = 3.32 SQ MI

HYDROGRAPH AT SB
TRANSPOSITION AREA 2.8 SQ MI

DA	MON	HRMN	ORD	OUTFLOW	STORAGE	STAGE	*	DA	MON	HRMN	ORD	OUTFLOW	STORAGE	STAGE	*	DA	MON	HRMN	ORD	OUTFLOW	STORAGE	STA
1		0000	1	28.	.0	1091.0	*	1		0820	101	0.	.0	1086.2	*	1		1640	201	0.	.0	1086
1		0005	2	0.	.0	1086.2	*	1		0825	102	0.	.0	1086.2	*	1		1645	202	0.	.0	1086
1		0010	3	0.	.0	1086.3	*	1		0830	103	0.	.0	1086.2	*	1		1650	203	0.	.0	1086
1		0015	4	1.	.0	1086.3	*	1		0835	104	0.	.0	1086.2	*	1		1655	204	0.	.0	1086
1		0020	5	1.	.0	1086.4	*	1		0840	105	0.	.0	1086.2	*	1		1700	205	0.	.0	1086
1		0025	6	2.	.0	1086.5	*	1		0845	106	0.	.0	1086.2	*	1		1705	206	0.	.0	1086
1		0030	7	2.	.0	1086.6	*	1		0850	107	0.	.0	1086.2	*	1		1710	207	0.	.0	1086
1		0035	8	3.	.0	1086.7	*	1		0855	108	0.	.0	1086.2	*	1		1715	208	0.	.0	1086
1		0040	9	3.	.0	1086.7	*	1		0900	109	0.	.0	1086.2	*	1		1720	209	0.	.0	1086
1		0045	10	4.	.0	1086.8	*	1		0905	110	0.	.0	1086.2	*	1		1725	210	0.	.0	1086
1		0050	11	4.	.0	1086.9	*	1		0910	111	0.	.0	1086.2	*	1		1730	211	0.	.0	1086
1		0055	12	4.	.0	1086.9	*	1		0915	112	0.	.0	1086.2	*	1		1735	212	0.	.0	1086
1		0100	13	5.	.0	1087.0	*	1		0920	113	0.	.0	1086.2	*	1		1740	213	0.	.0	1086
1		0105	14	5.	.0	1087.0	*	1		0925	114	0.	.0	1086.2	*	1		1745	214	0.	.0	1086
1		0110	15	5.	.0	1087.1	*	1		0930	115	0.	.0	1086.2	*	1		1750	215	0.	.0	1086
1		0115	16	5.	.0	1087.1	*	1		0935	116	0.	.0	1086.2	*	1		1755	216	0.	.0	1086
1		0120	17	6.	.0	1087.1	*	1		0940	117	0.	.0	1086.2	*	1		1800	217	0.	.0	1086
1		0125	18	6.	.0	1087.2	*	1		0945	118	0.	.0	1086.2	*	1		1805	218	0.	.0	1086
1		0130	19	6.	.0	1087.2	*	1		0950	119	0.	.0	1086.2	*	1		1810	219	0.	.0	1086
1		0135	20	6.	.0	1087.2	*	1		0955	120	0.	.0	1086.2	*	1		1815	220	0.	.0	1086
1		0140	21	6.	.0	1087.2	*	1		1000	121	0.	.0	1086.2	*	1		1820	221	0.	.0	1086
1		0145	22	6.	.0	1087.2	*	1		1005	122	0.	.0	1086.2	*	1		1825	222	0.	.0	1086
1		0150	23	6.	.0	1087.2	*	1		1010	123	0.	.0	1086.2	*	1		1830	223	0.	.0	1086
1		0155	24	6.	.0	1087.2	*	1		1015	124	0.	.0	1086.2	*	1		1835	224	0.	.0	1086
1		0200	25	6.	.0	1087.2	*	1		1020	125	0.	.0	1086.2	*	1		1840	225	0.	.0	1086
1		0205	26	6.	.0	1087.2	*	1		1025	126	0.	.0	1086.2	*	1		1845	226	0.	.0	1086
1		0210	27	6.	.0	1087.3	*	1		1030	127	0.	.0	1086.2	*	1		1850	227	0.	.0	1086
1		0215	28	6.	.0	1087.3	*	1		1035	128	0.	.0	1086.2	*	1		1855	228	0.	.0	1086
1		0220	29	6.	.0	1087.3	*	1		1040	129	0.	.0	1086.2	*	1		1900	229	0.	.0	1086
1		0225	30	7.	.0	1087.3	*	1		1045	130	0.	.0	1086.2	*	1		1905	230	0.	.0	1086
1		0230	31	7.	.0	1087.3	*	1		1050	131	0.	.0	1086.2	*	1		1910	231	0.	.0	1086
1		0235	32	7.	.0	1087.4	*	1		1055	132	0.	.0	1086.2	*	1		1915	232	0.	.0	1086
1		0240	33	7.	.0	1087.4	*	1		1100	133	0.	.0	1086.2	*	1		1920	233	0.	.0	1086
1		0245	34	8.	.0	1087.5	*	1		1105	134	0.	.0	1086.2	*	1		1925	234	0.	.0	1086
1		0250	35	8.	.0	1087.5	*	1		1110	135	0.	.0	1086.2	*	1		1930	235	0.	.0	1086
1		0255	36	8.	.0	1087.6	*	1		1115	136	0.	.0	1086.2	*	1		1935	236	0.	.0	1086
1		0300	37	9.	.0	1087.7	*	1		1120	137	0.	.0	1086.2	*	1		1940	237	0.	.0	1086
1		0305	38	10.	.0	1087.9	*	1		1125	138	0.	.0	1086.2	*	1		1945	238	0.	.0	1086
1		0310	39	11.	.0	1088.1	*	1		1130	139	0.	.0	1086.2	*	1		1950	239	0.	.0	1086
1		0315	40	13.	.0	1088.5	*	1		1135	140	0.	.0	1086.2	*	1		1955	240	0.	.0	1086
1		0320	41	16.	.0	1088.9	*	1		1140	141	0.	.0	1086.2	*	1		2000	241	0.	.0	1086
1		0325	42	19.	.0	1089.5	*	1		1145	142	0.	.0	1086.2	*	1		2005	242	0.	.0	1086
1		0330	43	24.	.0	1090.3	*	1		1150	143	0.	.0	1086.2	*	1		2010	243	0.	.0	1086
1		0335	44	28.	.0	1091.0	*	1		1155	144	0.	.0	1086.2	*	1		2015	244	0.	.0	1086
1		0340	45	29.	.0	1091.4	*	1		1200	145	0.	.0	1086.2	*	1		2020	245	0.	.0	1086
1		0345	46	32.	.1	1092.3	*	1		1205	146	0.	.0	1086.2	*	1		2025	246	0.	.0	1086

1	0350	47	36.	.3	1093.7	*	1	1210	147	0.	.0	1086.2	*	1	2040	247	0.	.0	1086.2
1	0355	48	37.	.5	1094.1	*	1	1215	148	0.	.0	1086.2	*	1	2045	248	0.	.0	1086.2
1	0400	49	38.	.8	1094.4	*	1	1220	149	0.	.0	1086.2	*	1	2040	249	0.	.0	1086.2
1	0405	50	39.	1.2	1094.7	*	1	1225	150	0.	.0	1086.2	*	1	2045	250	0.	.0	1086.2
1	0410	51	40.	1.7	1095.0	*	1	1230	151	0.	.0	1086.2	*	1	2050	251	0.	.0	1086.2
1	0415	52	40.	2.3	1095.2	*	1	1235	152	0.	.0	1086.2	*	1	2055	252	0.	.0	1086.2
1	0420	53	41.	2.9	1095.4	*	1	1240	153	0.	.0	1086.2	*	1	2100	253	0.	.0	1086.2
1	0425	54	41.	3.4	1095.6	*	1	1245	154	0.	.0	1086.2	*	1	2105	254	0.	.0	1086.2
1	0430	55	42.	4.0	1095.7	*	1	1250	155	0.	.0	1086.2	*	1	2110	255	0.	.0	1086.2
1	0435	56	42.	4.5	1095.9	*	1	1255	156	0.	.0	1086.2	*	1	2115	256	0.	.0	1086.2
1	0440	57	42.	4.9	1096.0	*	1	1300	157	0.	.0	1086.2	*	1	2120	257	0.	.0	1086.2
1	0445	58	43.	5.3	1096.1	*	1	1305	158	0.	.0	1086.2	*	1	2125	258	0.	.0	1086.2
1	0450	59	43.	5.7	1096.2	*	1	1310	159	0.	.0	1086.2	*	1	2130	259	0.	.0	1086.2
1	0455	60	43.	6.0	1096.3	*	1	1315	160	0.	.0	1086.2	*	1	2135	260	0.	.0	1086.2
1	0500	61	43.	6.2	1096.3	*	1	1320	161	0.	.0	1086.2	*	1	2140	261	0.	.0	1086.2
1	0505	62	44.	6.4	1096.4	*	1	1325	162	0.	.0	1086.2	*	1	2145	262	0.	.0	1086.2
1	0510	63	44.	6.5	1096.4	*	1	1330	163	0.	.0	1086.2	*	1	2150	263	0.	.0	1086.2
1	0515	64	44.	6.6	1096.4	*	1	1335	164	0.	.0	1086.2	*	1	2155	264	0.	.0	1086.2
1	0520	65	44.	6.6	1096.4	*	1	1340	165	0.	.0	1086.2	*	1	2200	265	0.	.0	1086.2
1	0525	66	44.	6.6	1096.4	*	1	1345	166	0.	.0	1086.2	*	1	2205	266	0.	.0	1086.2
1	0530	67	44.	6.6	1096.4	*	1	1350	167	0.	.0	1086.2	*	1	2210	267	0.	.0	1086.2
1	0535	68	44.	6.6	1096.4	*	1	1355	168	0.	.0	1086.2	*	1	2215	268	0.	.0	1086.2
1	0540	69	44.	6.5	1096.4	*	1	1400	169	0.	.0	1086.2	*	1	2220	269	0.	.0	1086.2
1	0545	70	44.	6.4	1096.4	*	1	1405	170	0.	.0	1086.2	*	1	2225	270	0.	.0	1086.2
1	0550	71	43.	6.3	1096.3	*	1	1410	171	0.	.0	1086.2	*	1	2230	271	0.	.0	1086.2
1	0555	72	43.	6.2	1096.3	*	1	1415	172	0.	.0	1086.2	*	1	2235	272	0.	.0	1086.2
1	0600	73	43.	6.0	1096.3	*	1	1420	173	0.	.0	1086.2	*	1	2240	273	0.	.0	1086.2
1	0605	74	43.	5.9	1096.2	*	1	1425	174	0.	.0	1086.2	*	1	2245	274	0.	.0	1086.2
1	0610	75	43.	5.7	1096.2	*	1	1430	175	0.	.0	1086.2	*	1	2250	275	0.	.0	1086.2
1	0615	76	43.	5.6	1096.2	*	1	1435	176	0.	.0	1086.2	*	1	2255	276	0.	.0	1086.2
1	0620	77	43.	5.4	1096.1	*	1	1440	177	0.	.0	1086.2	*	1	2300	277	0.	.0	1086.2
1	0625	78	43.	5.2	1096.1	*	1	1445	178	0.	.0	1086.2	*	1	2305	278	0.	.0	1086.2
1	0630	79	42.	5.0	1096.0	*	1	1450	179	0.	.0	1086.2	*	1	2310	279	0.	.0	1086.2
1	0635	80	42.	4.8	1096.0	*	1	1455	180	0.	.0	1086.2	*	1	2315	280	0.	.0	1086.2
1	0640	81	42.	4.5	1095.9	*	1	1500	181	0.	.0	1086.2	*	1	2320	281	0.	.0	1086.2
1	0645	82	42.	4.3	1095.8	*	1	1505	182	0.	.0	1086.2	*	1	2325	282	0.	.0	1086.2
1	0650	83	42.	4.1	1095.7	*	1	1510	183	0.	.0	1086.2	*	1	2330	283	0.	.0	1086.2
1	0655	84	42.	3.8	1095.7	*	1	1515	184	0.	.0	1086.2	*	1	2335	284	0.	.0	1086.2
1	0700	85	41.	3.6	1095.6	*	1	1520	185	0.	.0	1086.2	*	1	2340	285	0.	.0	1086.2
1	0705	86	41.	3.3	1095.5	*	1	1525	186	0.	.0	1086.2	*	1	2345	286	0.	.0	1086.2
1	0710	87	41.	3.1	1095.4	*	1	1530	187	0.	.0	1086.2	*	1	2350	287	0.	.0	1086.2
1	0715	88	41.	2.8	1095.4	*	1	1535	188	0.	.0	1086.2	*	1	2355	288	0.	.0	1086.2
1	0720	89	41.	2.5	1095.3	*	1	1540	189	0.	.0	1086.2	*	2	0000	289	0.	.0	1086.2
1	0725	90	40.	2.3	1095.2	*	1	1545	190	0.	.0	1086.2	*	2	0005	290	0.	.0	1086.2
1	0730	91	40.	2.0	1095.1	*	1	1550	191	0.	.0	1086.2	*	2	0010	291	0.	.0	1086.2
1	0735	92	40.	1.8	1095.0	*	1	1555	192	0.	.0	1086.2	*	2	0015	292	0.	.0	1086.2
1	0740	93	40.	1.5	1094.9	*	1	1600	193	0.	.0	1086.2	*	2	0020	293	0.	.0	1086.2
1	0745	94	39.	1.2	1094.7	*	1	1605	194	0.	.0	1086.2	*	2	0025	294	0.	.0	1086.2
1	0750	95	38.	1.0	1094.5	*	1	1610	195	0.	.0	1086.2	*	2	0030	295	0.	.0	1086.2
1	0755	96	38.	.7	1094.3	*	1	1615	196	0.	.0	1086.2	*	2	0035	296	0.	.0	1086.2
1	0800	97	37.	.5	1094.1	*	1	1620	197	0.	.0	1086.2	*	2	0040	297	0.	.0	1086.2
1	0805	98	35.	.2	1093.2	*	1	1625	198	0.	.0	1086.2	*	2	0045	298	0.	.0	1086.2
1	0810	99	28.	.0	1091.0	*	1	1630	199	0.	.0	1086.2	*	2	0050	299	0.	.0	1086.2
1	0815	100	0.	.0	1086.2	*	1	1635	200	0.	.0	1086.2	*	2	0055	300	0.	.0	1086.2
						*							*						

****

PEAK FLOW	TIME		MAXIMUM AVERAGE FLOW			
			6-HR	24-HR	72-HR	24.92-HR
+ (CFS)	(HR)					
		(CFS)				
+ 44.	5.42		34.	9.	9.	9.
		(INCHES)	.095	.100	.100	.100
		(AC-FT)	17.	18.	18.	18.

PEAK STORAGE	TIME	MAXIMUM AVERAGE STORAGE			
		6-HR	24-HR	72-HR	24.92-HR
+ (AC-FT)	(HR)				
7.	5.42	3.	1.	1.	1.

PEAK STAGE	TIME	MAXIMUM AVERAGE STAGE			
		6-HR	24-HR	72-HR	24.92-HR
+ (FEET)	(HR)				
1096.43	5.42	1093.67	1088.14	1088.07	1088.07

CUMULATIVE AREA = 3.32 SQ MI

****

HYDROGRAPH AT SB
TRANSPOSITION AREA 16.0 SQ MI

DA	MON	HRMN	IRD	OUTFLOW	STORAGE	STAGE	DA	MON	HRMN	IRD	OUTFLOW	STORAGE	STAGE	DA	MON	HRMN	IRD	OUTFLOW	STORAGE	STAGE
1		0000	1	28.	.0	1091.0	1		0820	101	0.	.0	1087.2	1		1640	201	0.	.0	1087.
1		0005	2	0.	.0	1086.2	1		0825	102	0.	.0	1087.2	1		1645	202	0.	.0	1087.
1		0010	3	1.	.0	1086.3	1		0830	103	0.	.0	1087.2	1		1650	203	0.	.0	1087.
1		0015	4	1.	.0	1086.4	1		0835	104	0.	.0	1087.2	1		1655	204	0.	.0	1087.
1		0020	5	2.	.0	1086.6	1		0840	105	0.	.0	1087.1	1		1700	205	0.	.0	1087.
1		0025	6	3.	.0	1086.7	1		0845	106	0.	.0	1087.1	1		1705	206	0.	.0	1087.
1		0030	7	3.	.0	1086.7	1		0850	107	0.	.0	1087.1	1		1710	207	0.	.0	1087.
1		0035	8	3.	.0	1086.8	1		0855	108	0.	.0	1087.1	1		1715	208	0.	.0	1087.
1		0040	9	4.	.0	1086.8	1		0900	109	0.	.0	1087.1	1		1720	209	0.	.0	1087.
1		0045	10	4.	.0	1086.9	1		0905	110	0.	.0	1087.1	1		1725	210	0.	.0	1087.
1		0050	11	5.	.0	1086.9	1		0910	111	0.	.0	1087.1	1		1730	211	0.	.0	1087.
1		0055	12	5.	.0	1087.0	1		0915	112	0.	.0	1087.1	1		1735	212	0.	.0	1087.
1		0100	13	6.	.0	1087.2	1		0920	113	0.	.0	1087.1	1		1740	213	0.	.0	1087.
1		0105	14	7.	.0	1087.3	1		0925	114	0.	.0	1087.1	1		1745	214	0.	.0	1087.
1		0110	15	7.	.0	1087.4	1		0930	115	0.	.0	1087.1	1		1750	215	0.	.0	1087.
1		0115	16	8.	.0	1087.5	1		0935	116	0.	.0	1087.1	1		1755	216	0.	.0	1087.
1		0120	17	8.	.0	1087.6	1		0940	117	0.	.0	1087.1	1		1800	217	0.	.0	1087.
1		0125	18	8.	.0	1087.6	1		0945	118	0.	.0	1087.1	1		1805	218	0.	.0	1087.
1		0130	19	9.	.0	1087.7	1		0950	119	0.	.0	1087.1	1		1810	219	0.	.0	1087.
1		0135	20	9.	.0	1087.7	1		0955	120	0.	.0	1087.1	1		1815	220	0.	.0	1087.
1		0140	21	9.	.0	1087.7	1		1000	121	0.	.0	1087.1	1		1820	221	0.	.0	1087.
1		0145	22	9.	.0	1087.7	1		1005	122	0.	.0	1087.1	1		1825	222	0.	.0	1087.
1		0150	23	9.	.0	1087.8	1		1010	123	0.	.0	1087.1	1		1830	223	0.	.0	1087.
1		0155	24	10.	.0	1087.8	1		1015	124	0.	.0	1087.1	1		1835	224	0.	.0	1087.
1		0200	25	10.	.0	1087.8	1		1020	125	0.	.0	1087.1	1		1840	225	0.	.0	1087.
1		0205	26	10.	.0	1087.8	1		1025	126	0.	.0	1087.1	1		1845	226	0.	.0	1087.
1		0210	27	10.	.0	1087.9	1		1030	127	0.	.0	1087.1	1		1850	227	0.	.0	1087.
1		0215	28	10.	.0	1087.9	1		1035	128	0.	.0	1087.1	1		1855	228	0.	.0	1087.
1		0220	29	10.	.0	1087.9	1		1040	129	0.	.0	1087.1	1		1900	229	0.	.0	1087.
1		0225	30	10.	.0	1087.9	1		1045	130	0.	.0	1087.1	1		1905	230	0.	.0	1087.
1		0230	31	10.	.0	1087.9	1		1050	131	0.	.0	1087.1	1		1910	231	0.	.0	1087.
1		0235	32	11.	.0	1088.0	1		1055	132	0.	.0	1087.1	1		1915	232	0.	.0	1087.
1		0240	33	11.	.0	1088.0	1		1100	133	0.	.0	1087.1	1		1920	233	0.	.0	1087.
1		0245	34	11.	.0	1088.0	1		1105	134	0.	.0	1087.1	1		1925	234	0.	.0	1087.
1		0250	35	11.	.0	1088.1	1		1110	135	0.	.0	1087.1	1		1930	235	0.	.0	1087.
1		0255	36	12.	.0	1088.1	1		1115	136	0.	.0	1087.1	1		1935	236	0.	.0	1087.
1		0300	37	12.	.0	1088.2	1		1120	137	0.	.0	1087.1	1		1940	237	0.	.0	1087.
1		0305	38	13.	.0	1088.3	1		1125	138	0.	.0	1087.1	1		1945	238	0.	.0	1087.
1		0310	39	14.	.0	1088.6	1		1130	139	0.	.0	1087.1	1		1950	239	0.	.0	1087.
1		0315	40	16.	.0	1088.9	1		1135	140	0.	.0	1087.1	1		1955	240	0.	.0	1087.
1		0320	41	18.	.0	1089.2	1		1140	141	0.	.0	1087.1	1		2000	241	0.	.0	1087.
1		0325	42	21.	.0	1089.7	1		1145	142	0.	.0	1087.1	1		2005	242	0.	.0	1087.
1		0330	43	25.	.0	1090.4	1		1150	143	0.	.0	1087.1	1		2010	243	0.	.0	1087.
1		0335	44	28.	.0	1091.0	1		1155	144	0.	.0	1087.1	1		2015	244	0.	.0	1087.
1		0340	45	29.	.0	1091.3	1		1200	145	0.	.0	1087.1	1		2020	245	0.	.0	1087.
1		0345	46	31.	.1	1091.9	1		1205	146	0.	.0	1087.1	1		2025	246	0.	.0	1087.
1		0350	47	34.	.2	1093.0	1		1210	147	0.	.0	1087.1	1		2030	247	0.	.0	1087.
1		0355	48	37.	.3	1094.0	1		1215	148	0.	.0	1087.1	1		2035	248	0.	.0	1087.
1		0400	49	38.	.5	1094.2	1		1220	149	0.	.0	1087.1	1		2040	249	0.	.0	1087.
1		0405	50	38.	.8	1094.4	1		1225	150	0.	.0	1087.1	1		2045	250	0.	.0	1087.
1		0410	51	39.	1.1	1094.6	1		1230	151	0.	.0	1087.1	1		2050	251	0.	.0	1087.
1		0415	52	39.	1.4	1094.9	1		1235	152	0.	.0	1087.1	1		2055	252	0.	.0	1087.
1		0420	53	40.	1.8	1095.1	1		1240	153	0.	.0	1087.1	1		2100	253	0.	.0	1087.
1		0425	54	40.	2.1	1095.2	1		1245	154	0.	.0	1087.1	1		2105	254	0.	.0	1087.
1		0430	55	40.	2.5	1095.3	1		1250	155	0.	.0	1087.1	1		2110	255	0.	.0	1087.
1		0435	56	41.	2.8	1095.4	1		1255	156	0.	.0	1087.1	1		2115	256	0.	.0	1087.
1		0440	57	41.	3.1	1095.4	1		1300	157	0.	.0	1087.1	1		2120	257	0.	.0	1087.
1		0445	58	41.	3.3	1095.5	1		1305	158	0.	.0	1087.1	1		2125	258	0.	.0	1087.
1		0450	59	41.	3.6	1095.6	1		1310	159	0.	.0	1087.1	1		2130	259	0.	.0	1087.
1		0455	60	41.	3.8	1095.7	1		1315	160	0.	.0	1087.1	1		2135	260	0.	.0	1087.
1		0500	61	42.	3.9	1095.7	1		1320	161	0.	.0	1087.1	1		2140	261	0.	.0	1087.
1		0505	62	42.	4.0	1095.7	1		1325	162	0.	.0	1087.1	1		2145	262	0.	.0	1087.
1		0510	63	42.	4.1	1095.8	1		1330	163	0.	.0	1087.1	1		2150	263	0.	.0	1087.
1		0515	64	42.	4.2	1095.8	1		1335	164	0.	.0	1087.1	1		2155	264	0.	.0	1087.
1		0520	65	42.	4.2	1095.8	1		1340	165	0.	.0	1087.1	1		2200	265	0.	.0	1087.
1		0525	66	42.	4.2	1095.8	1		1345	166	0.	.0	1087.1	1		2205	266	0.	.0	1087.
1		0530	67	42.	4.2	1095.8	1		1350	167	0.	.0	1087.1	1		2210	267	0.	.0	1087.
1		0535	68	42.	4.1	1095.8	1		1355	168	0.	.0	1087.1	1		2215	268	0.	.0	1087.
1		0540	69	42.	4.1	1095.7	1		1400	169	0.	.0	1087.1	1		2220	269	0.	.0	1087.
1		0545	70	42.	4.0	1095.7	1		1405	170	0.	.0	1087.1	1		2225	270	0.	.0	1087.
1		0550	71	42.	3.9	1095.7	1		1410	171	0.	.0	1087.1	1		2230	271	0.	.0	1087.
1		0555	72	42.	3.8	1095.7	1		1415	172	0.	.0	1087.1	1		2235	272	0.	.0	1087.

1	1600	73	41.	3.6	1095.6	*	1	1420	173	0.	.0	1087.1	*	1	2240	273	0.	.0	1087.1
1	1605	74	41.	3.5	1095.6	*	1	1425	174	0.	.0	1087.1	*	1	2245	274	0.	.0	1087.1
1	1610	75	41.	3.3	1095.5	*	1	1430	175	0.	.0	1087.1	*	1	2250	275	0.	.0	1087.1
1	1615	76	41.	3.2	1095.5	*	1	1435	176	0.	.0	1087.1	*	1	2255	276	0.	.0	1087.1
1	1620	77	41.	3.0	1095.4	*	1	1440	177	0.	.0	1087.1	*	1	2300	277	0.	.0	1087.1
1	1625	78	41.	2.8	1095.4	*	1	1445	178	0.	.0	1087.1	*	1	2305	278	0.	.0	1087.1
1	1630	79	41.	2.6	1095.3	*	1	1450	179	0.	.0	1087.1	*	1	2310	279	0.	.0	1087.1
1	1635	80	40.	2.4	1095.2	*	1	1455	180	0.	.0	1087.1	*	1	2315	280	0.	.0	1087.1
1	1640	81	40.	2.2	1095.2	*	1	1500	181	0.	.0	1087.1	*	1	2320	281	0.	.0	1087.1
1	1645	82	40.	2.0	1095.1	*	1	1505	182	0.	.0	1087.1	*	1	2325	282	0.	.0	1087.1
1	1650	83	40.	1.8	1095.0	*	1	1510	183	0.	.0	1087.1	*	1	2330	283	0.	.0	1087.1
1	1655	84	40.	1.5	1094.9	*	1	1515	184	0.	.0	1087.1	*	1	2335	284	0.	.0	1087.1
1	1700	85	39.	1.3	1094.8	*	1	1520	185	0.	.0	1087.1	*	1	2340	285	0.	.0	1087.1
1	1705	86	39.	1.1	1094.6	*	1	1525	186	0.	.0	1087.1	*	1	2345	286	0.	.0	1087.1
1	1710	87	38.	.8	1094.4	*	1	1530	187	0.	.0	1087.1	*	1	2350	287	0.	.0	1087.1
1	1715	88	38.	.6	1094.2	*	1	1535	188	0.	.0	1087.1	*	1	2355	288	0.	.0	1087.1
1	1720	89	37.	.3	1094.0	*	1	1540	189	0.	.0	1087.1	*	2	0000	289	0.	.0	1087.1
1	1725	90	32.	.1	1092.2	*	1	1545	190	0.	.0	1087.1	*	2	0005	290	0.	.0	1087.1
1	1730	91	2.	.0	1087.5	*	1	1550	191	0.	.0	1087.1	*	2	0010	291	0.	.0	1087.1
1	1735	92	2.	.0	1087.4	*	1	1555	192	0.	.0	1087.1	*	2	0015	292	0.	.0	1087.1
1	1740	93	1.	.0	1087.4	*	1	1600	193	0.	.0	1087.1	*	2	0020	293	0.	.0	1087.1
1	1745	94	1.	.0	1087.3	*	1	1605	194	0.	.0	1087.1	*	2	0025	294	0.	.0	1087.1
1	1750	95	1.	.0	1087.3	*	1	1610	195	0.	.0	1087.1	*	2	0030	295	0.	.0	1087.1
1	1755	96	1.	.0	1087.3	*	1	1615	196	0.	.0	1087.1	*	2	0035	296	0.	.0	1087.1
1	1800	97	1.	.0	1087.2	*	1	1620	197	0.	.0	1087.1	*	2	0040	297	0.	.0	1087.1
1	1805	98	1.	.0	1087.2	*	1	1625	198	0.	.0	1087.1	*	2	0045	298	0.	.0	1087.1
1	1810	99	0.	.0	1087.2	*	1	1630	199	0.	.0	1087.1	*	2	0050	299	0.	.0	1087.1
1	1815	100	0.	.0	1087.2	*	1	1635	200	0.	.0	1087.1	*	2	0055	300	0.	.0	1087.1

PEAK FLOW	TIME		MAXIMUM AVERAGE FLOW			
			6-HR	24-HR	72-HR	24.92-HR
* (CFS)	(HR)					
		(CFS)				
* 42.	5.33		30.	8.	3.	3.
		(INCHES)	.083	.087	.087	.087
		(AC-FT)	15.	15.	15.	15.

PEAK STORAGE	TIME	MAXIMUM AVERAGE STORAGE			
		6-HR	24-HR	72-HR	24.92-HR
* (AC-FT)	(HR)				
4.	5.33	2.	0.	0.	0.

PEAK STAGE	TIME	MAXIMUM AVERAGE STAGE			
		6-HR	24-HR	72-HR	24.92-HR
* (FEET)	(HR)				
1095.79	5.33	1092.56	1088.50	1088.44	1088.44

CUMULATIVE AREA = 3.32 SQ MI

HYDROGRAPH AT SB
TRANSPOSITION AREA 90.0 SQ MI

DA	MON	HRMN	ORD	OUTFLOW	STORAGE	STAGE	*	DA	MON	HRMN	ORD	OUTFLOW	STORAGE	STAGE	*	DA	MON	HRMN	ORD	OUTFLOW	STORAGE	STAGE
1		0000	1	28.	.0	1091.0	*	1		0820	101	0.	.0	1086.2	*	1		1640	201	0.	.0	1086.2
1		0005	2	0.	.0	1086.2	*	1		0825	102	0.	.0	1086.2	*	1		1645	202	0.	.0	1086.2
1		0010	3	[illegible]	.0	1086.3	*	1		0830	103	0.	.0	1086.2	*	1		1650	203	0.	.0	1086.2
1		0015	4	2.	.0	1086.5	*	1		0835	104	0.	.0	1086.2	*	1		1655	204	0.	.0	1086.2
1		0020	5	3.	.0	1086.6	*	1		0840	105	0.	.0	1086.2	*	1		1700	205	0.	.0	1086.2
1		0025	6	4.	.0	1086.8	*	1		0845	106	0.	.0	1086.2	*	1		1705	206	0.	.0	1086.2
1		0030	7	4.	.0	1086.9	*	1		0850	107	0.	.0	1086.2	*	1		1710	207	0.	.0	1086.2
1		0035	8	5.	.0	1087.0	*	1		0855	108	0.	.0	1086.2	*	1		1715	208	0.	.0	1086.2
1		0040	9	6.	.0	1087.1	*	1		0900	109	0.	.0	1086.2	*	1		1720	209	0.	.0	1086.2
1		0045	10	6.	.0	1087.2	*	1		0905	110	0.	.0	1086.2	*	1		1725	210	0.	.0	1086.2
1		0050	11	7.	.0	1087.3	*	1		0910	111	0.	.0	1086.2	*	1		1730	211	0.	.0	1086.2
1		0055	12	7.	.0	1087.4	*	1		0915	112	0.	.0	1086.2	*	1		1735	212	0.	.0	1086.2
1		0100	13	8.	.0	1087.5	*	1		0920	113	0.	.0	1086.2	*	1		1740	213	0.	.0	1086.2
1		0105	14	8.	.0	1087.6	*	1		0925	114	0.	.0	1086.2	*	1		1745	214	0.	.0	1086.2
1		0110	15	9.	.0	1087.7	*	1		0930	115	0.	.0	1086.2	*	1		1750	215	0.	.0	1086.2
1		0115	16	9.	.0	1087.7	*	1		0935	116	0.	.0	1086.2	*	1		1755	216	0.	.0	1086.2
1		0120	17	9.	.0	1087.8	*	1		0940	117	0.	.0	1086.2	*	1		1800	217	0.	.0	1086.2

1	0125	18	10.	.0	1087.8	*	1	1945	118	0.	.0	1086.2	*	1	1805	118	0.	.0	1086.
1	0130	19	10.	.0	1087.8	*	1	1950	119	0.	.0	1086.2	*	1	1810	119	0.	.0	1086.
1	0135	20	10.	.0	1087.9	*	1	0955	120	0.	.0	1086.2	*	1	1815	120	0.	.0	1086.
1	0140	21	10.	.0	1087.9	*	1	1000	121	0.	.0	1086.2	*	1	1820	121	0.	.0	1086.
1	0145	22	11.	.0	1088.0	*	1	1005	122	0.	.0	1086.2	*	1	1825	122	0.	.0	1086.
1	0150	23	11.	.0	1088.0	*	1	1010	123	0.	.0	1086.2	*	1	1830	123	0.	.0	1086.
1	0155	24	11.	.0	1088.0	*	1	1015	124	0.	.0	1086.2	*	1	1835	124	0.	.0	1086.
1	0200	25	11.	.0	1088.1	*	1	1020	125	0.	.0	1086.2	*	1	1840	125	0.	.0	1086.
1	0205	26	11.	.0	1088.1	*	1	1025	126	0.	.0	1086.2	*	1	1845	126	0.	.0	1086.
1	0210	27	11.	.0	1088.1	*	1	1030	127	0.	.0	1086.2	*	1	1850	127	0.	.0	1086.
1	0215	28	11.	.0	1088.1	*	1	1035	128	0.	.0	1086.2	*	1	1855	128	0.	.0	1086.
1	0220	29	11.	.0	1088.1	*	1	1040	129	0.	.0	1086.2	*	1	1900	129	0.	.0	1086.
1	0225	30	11.	.0	1088.1	*	1	1045	130	0.	.0	1086.2	*	1	1905	130	0.	.0	1086.
1	0230	31	11.	.0	1088.1	*	1	1050	131	0.	.0	1086.2	*	1	1910	131	0.	.0	1086.
1	0235	32	12.	.0	1088.1	*	1	1055	132	0.	.0	1086.2	*	1	1915	132	0.	.0	1086.
1	0240	33	12.	.0	1088.2	*	1	1100	133	0.	.0	1086.2	*	1	1920	133	0.	.0	1086.
1	0245	34	12.	.0	1088.2	*	1	1105	134	0.	.0	1086.2	*	1	1925	134	0.	.0	1086.
1	0250	35	12.	.0	1088.3	*	1	1110	135	0.	.0	1086.2	*	1	1930	135	0.	.0	1086.
1	0255	36	13.	.0	1088.3	*	1	1115	136	0.	.0	1086.2	*	1	1935	136	0.	.0	1086.
1	0300	37	13.	.0	1088.4	*	1	1120	137	0.	.0	1086.2	*	1	1940	137	0.	.0	1086.
1	0305	38	14.	.0	1088.6	*	1	1125	138	0.	.0	1086.2	*	1	1945	138	0.	.0	1086.
1	0310	39	15.	.0	1088.8	*	1	1130	139	0.	.0	1086.2	*	1	1950	139	0.	.0	1086.
1	0315	40	17.	.0	1089.0	*	1	1135	140	0.	.0	1086.2	*	1	1955	140	0.	.0	1086.
1	0320	41	19.	.0	1089.3	*	1	1140	141	0.	.0	1086.2	*	1	2000	141	0.	.0	1086.
1	0325	42	21.	.0	1089.8	*	1	1145	142	0.	.0	1086.2	*	1	2005	142	0.	.0	1086.
1	0330	43	24.	.0	1090.3	*	1	1150	143	0.	.0	1086.2	*	1	2010	143	0.	.0	1086.
1	0335	44	28.	.0	1090.9	*	1	1155	144	0.	.0	1086.2	*	1	2015	144	0.	.0	1086.
1	0340	45	29.	.0	1091.1	*	1	1200	145	0.	.0	1086.2	*	1	2020	145	0.	.0	1086.
1	0345	46	30.	.0	1091.5	*	1	1205	146	0.	.0	1086.2	*	1	2025	146	0.	.0	1086.
1	0350	47	32.	.1	1092.1	*	1	1210	147	0.	.0	1086.2	*	1	2030	147	0.	.0	1086.
1	0355	48	34.	.2	1093.0	*	1	1215	148	0.	.0	1086.2	*	1	2035	148	0.	.0	1086.
1	0400	49	37.	.3	1094.0	*	1	1220	149	0.	.0	1086.2	*	1	2040	149	0.	.0	1086.
1	0405	50	37.	.4	1094.1	*	1	1225	150	0.	.0	1086.2	*	1	2045	150	0.	.0	1086.
1	0410	51	38.	.6	1094.2	*	1	1230	151	0.	.0	1086.2	*	1	2050	151	0.	.0	1086.
1	0415	52	38.	.8	1094.4	*	1	1235	152	0.	.0	1086.2	*	1	2055	152	0.	.0	1086.
1	0420	53	39.	1.0	1094.5	*	1	1240	153	0.	.0	1086.2	*	1	2100	153	0.	.0	1086.
1	0425	54	39.	1.2	1094.7	*	1	1245	154	0.	.0	1086.2	*	1	2105	154	0.	.0	1086.
1	0430	55	39.	1.4	1094.8	*	1	1250	155	0.	.0	1086.2	*	1	2110	155	0.	.0	1086.
1	0435	56	40.	1.5	1095.0	*	1	1255	156	0.	.0	1086.2	*	1	2115	156	0.	.0	1086.
1	0440	57	40.	1.7	1095.0	*	1	1300	157	0.	.0	1086.2	*	1	2120	157	0.	.0	1086.
1	0445	58	40.	1.8	1095.1	*	1	1305	158	0.	.0	1086.2	*	1	2125	158	0.	.0	1086.
1	0450	59	40.	2.0	1095.1	*	1	1310	159	0.	.0	1086.2	*	1	2130	159	0.	.0	1086.
1	0455	60	40.	2.1	1095.1	*	1	1315	160	0.	.0	1086.2	*	1	2135	160	0.	.0	1086.
1	0500	61	40.	2.1	1095.2	*	1	1320	161	0.	.0	1086.2	*	1	2140	161	0.	.0	1086.
1	0505	62	40.	2.2	1095.2	*	1	1325	162	0.	.0	1086.2	*	1	2145	162	0.	.0	1086.
1	0510	63	40.	2.2	1095.2	*	1	1330	163	0.	.0	1086.2	*	1	2150	163	0.	.0	1086.
1	0515	64	40.	2.2	1095.2	*	1	1335	164	0.	.0	1086.2	*	1	2155	164	0.	.0	1086.
1	0520	65	40.	2.2	1095.2	*	1	1340	165	0.	.0	1086.2	*	1	2200	165	0.	.0	1086.
1	0525	66	40.	2.2	1095.2	*	1	1345	166	0.	.0	1086.2	*	1	2205	166	0.	.0	1086.
1	0530	67	40.	2.1	1095.2	*	1	1350	167	0.	.0	1086.2	*	1	2210	167	0.	.0	1086.
1	0535	68	40.	2.1	1095.1	*	1	1355	168	0.	.0	1086.2	*	1	2215	168	0.	.0	1086.
1	0540	69	40.	2.0	1095.1	*	1	1400	169	0.	.0	1086.2	*	1	2220	169	0.	.0	1086.
1	0545	70	40.	1.9	1095.1	*	1	1405	170	0.	.0	1086.2	*	1	2225	170	0.	.0	1086.
1	0550	71	40.	1.8	1095.1	*	1	1410	171	0.	.0	1086.2	*	1	2230	171	0.	.0	1086.
1	0555	72	40.	1.6	1095.0	*	1	1415	172	0.	.0	1086.2	*	1	2235	172	0.	.0	1086.
1	0600	73	40.	1.5	1094.9	*	1	1420	173	0.	.0	1086.2	*	1	2240	173	0.	.0	1086.
1	0605	74	39.	1.4	1094.8	*	1	1425	174	0.	.0	1086.2	*	1	2245	174	0.	.0	1086.
1	0610	75	39.	1.2	1094.7	*	1	1430	175	0.	.0	1086.2	*	1	2250	175	0.	.0	1086.
1	0615	76	39.	1.1	1094.6	*	1	1435	176	0.	.0	1086.2	*	1	2255	176	0.	.0	1086.
1	0620	77	38.	.9	1094.5	*	1	1440	177	0.	.0	1086.2	*	1	2300	177	0.	.0	1086.
1	0625	78	38.	.8	1094.4	*	1	1445	178	0.	.0	1086.2	*	1	2305	178	0.	.0	1086.
1	0630	79	38.	.6	1094.2	*	1	1450	179	0.	.0	1086.2	*	1	2310	179	0.	.0	1086.
1	0635	80	37.	.4	1094.1	*	1	1455	180	0.	.0	1086.2	*	1	2315	180	0.	.0	1086.
1	0640	81	35.	.2	1093.1	*	1	1500	181	0.	.0	1086.2	*	1	2320	181	0.	.0	1086.
1	0645	82	30.	.0	1091.5	*	1	1505	182	0.	.0	1086.2	*	1	2325	182	0.	.0	1086.
1	0650	83	7.	.0	1086.2	*	1	1510	183	0.	.0	1086.2	*	1	2330	183	0.	.0	1086.
1	0655	84	6.	.0	1086.2	*	1	1515	184	0.	.0	1086.2	*	1	2335	184	0.	.0	1086.
1	0700	85	5.	.0	1086.2	*	1	1520	185	0.	.0	1086.2	*	1	2340	185	0.	.0	1086.
1	0705	86	4.	.0	1086.2	*	1	1525	186	0.	.0	1086.2	*	1	2345	186	0.	.0	1086.
1	0710	87	4.	.0	1086.2	*	1	1530	187	0.	.0	1086.2	*	1	2350	187	0.	.0	1086.
1	0715	88	3.	.0	1086.2	*	1	1535	188	0.	.0	1086.2	*	1	2355	188	0.	.0	1086.
1	0720	89	3.	.0	1086.2	*	1	1540	189	0.	.0	1086.2	*	2	0000	189	0.	.0	1086.
1	0725	90	2.	.0	1086.2	*	1	1545	190	0.	.0	1086.2	*	2	0005	190	0.	.0	1086.
1	0730	91	2.	.0	1086.2	*	1	1550	191	0.	.0	1086.2	*	2	0010	191	0.	.0	1086.
1	0735	92	2.	.0	1086.2	*	1	1555	192	0.	.0	1086.2	*	2	0015	192	0.	.0	1086.
1	0740	93	1.	.0	1086.2	*	1	1600	193	0.	.0	1086.2	*	2	0020	193	0.	.0	1086.
1	0745	94	1.	.0	1086.2	*	1	1605	194	0.	.0	1086.2	*	2	0025	194	0.	.0	1086.
1	0750	95	1.	.0	1086.2	*	1	1610	195	0.	.0	1086.2	*	2	0030	195	0.	.0	1086.
1	0755	96	1.	.0	1086.2	*	1	1615	196	0.	.0	1086.2	*	2	0035	196	0.	.0	1086.
1	0800	97	1.	.0	1086.2	*	1	1620	197	0.	.0	1086.2	*	2	0040	197	0.	.0	1086.
1	0805	98	1.	.0	1086.2	*	1	1625	198	0.	.0	1086.2	*	2	0045	198	0.	.0	1086.

1	0810	99	1.	.0	1086.2	*	1	1630	199	0.	.0	1086.2	*	1	2050	299	0.	.0	1086.
1	0815	100	0.	.0	1086.2	*	1	1635	200	0.	.0	1086.2	*	1	2055	300	0.	.0	1086.
						*							*						

****

PEAK FLOW	TIME	MAXIMUM AVERAGE FLOW			
		6-HR	24-HR	72-HR	24.92-HR
(CFS)	(HR)				
40.	5.25	26.	7.	7.	7.
	(INCHES)	.273	.076	.076	.076
	(AC-FT)	13.	13.	13.	13.

PEAK STORAGE	TIME	MAXIMUM AVERAGE STORAGE			
		6-HR	24-HR	72-HR	24.92-HR
(AC-FT)	(HR)				
2.	5.25	1.	0.	0.	0.

PEAK STAGE	TIME	MAXIMUM AVERAGE STAGE			
		6-HR	24-HR	72-HR	24.92-HR
(FEET)	(HR)				
1095.19	5.25	1091.49	1087.55	1087.50	1087.50

CUMULATIVE AREA = 3.32 SQ MI

****

HYDROGRAPH AT SB
TRANSPOSITION AREA 500.0 SQ MI

****

DA	MON	HRMN	ORD	OUTFLOW	STORAGE	STAGE	*	DA	MON	HRMN	ORD	OUTFLOW	STORAGE	STAGE	*	DA	MON	HRMN	ORD	OUTFLOW	STORAGE	STA
1		0000	1	28.	.0	1091.0	*	1		0820	101	0.	.0	1086.2	*	1		1640	201	0.	.0	1086
1		0005	2	0.	.0	1086.2	*	1		0825	102	0.	.0	1086.2	*	1		1645	202	0.	.0	1086
1		0010	3	1.	.0	1086.3	*	1		0830	103	0.	.0	1086.2	*	1		1650	203	0.	.0	1086
1		0015	4	1.	.0	1086.4	*	1		0835	104	0.	.0	1086.2	*	1		1655	204	0.	.0	1086
1		0020	5	2.	.0	1086.6	*	1		0840	105	0.	.0	1086.2	*	1		1700	205	0.	.0	1086
1		0025	6	3.	.0	1086.7	*	1		0845	106	0.	.0	1086.2	*	1		1705	206	0.	.0	1086
1		0030	7	4.	.0	1086.8	*	1		0850	107	0.	.0	1086.2	*	1		1710	207	0.	.0	1086
1		0035	8	4.	.0	1086.9	*	1		0855	108	0.	.0	1086.2	*	1		1715	208	0.	.0	1086
1		0040	9	5.	.0	1087.0	*	1		0900	109	0.	.0	1086.2	*	1		1720	209	0.	.0	1086
1		0045	10	5.	.0	1087.1	*	1		0905	110	0.	.0	1086.2	*	1		1725	210	0.	.0	1086
1		0050	11	6.	.0	1087.1	*	1		0910	111	0.	.0	1086.2	*	1		1730	211	0.	.0	1086
1		0055	12	6.	.0	1087.2	*	1		0915	112	0.	.0	1086.2	*	1		1735	212	0.	.0	1086
1		0100	13	6.	.0	1087.2	*	1		0920	113	0.	.0	1086.2	*	1		1740	213	0.	.0	1086
1		0105	14	7.	.0	1087.3	*	1		0925	114	0.	.0	1086.2	*	1		1745	214	0.	.0	1086
1		0110	15	7.	.0	1087.3	*	1		0930	115	0.	.0	1086.2	*	1		1750	215	0.	.0	1086
1		0115	16	7.	.0	1087.4	*	1		0935	116	0.	.0	1086.2	*	1		1755	216	0.	.0	1086
1		0120	17	7.	.0	1087.4	*	1		0940	117	0.	.0	1086.2	*	1		1800	217	0.	.0	1086
1		0125	18	8.	.0	1087.5	*	1		0945	118	0.	.0	1086.2	*	1		1805	218	0.	.0	1086
1		0130	19	8.	.0	1087.5	*	1		0950	119	0.	.0	1086.2	*	1		1810	219	0.	.0	1086
1		0135	20	8.	.0	1087.5	*	1		0955	120	0.	.0	1086.2	*	1		1815	220	0.	.0	1086
1		0140	21	8.	.0	1087.6	*	1		1000	121	0.	.0	1086.2	*	1		1820	221	0.	.0	1086
1		0145	22	8.	.0	1087.6	*	1		1005	122	0.	.0	1086.2	*	1		1825	222	0.	.0	1086
1		0150	23	9.	.0	1087.6	*	1		1010	123	0.	.0	1086.2	*	1		1830	223	0.	.0	1086
1		0155	24	9.	.0	1087.7	*	1		1015	124	0.	.0	1086.2	*	1		1835	224	0.	.0	1086
1		0200	25	9.	.0	1087.7	*	1		1020	125	0.	.0	1086.2	*	1		1840	225	0.	.0	1086
1		0205	26	9.	.0	1087.7	*	1		1025	126	0.	.0	1086.2	*	1		1845	226	0.	.0	1086
1		0210	27	9.	.0	1087.7	*	1		1030	127	0.	.0	1086.2	*	1		1850	227	0.	.0	1086
1		0215	28	9.	.0	1087.8	*	1		1035	128	0.	.0	1086.2	*	1		1855	228	0.	.0	1086
1		0220	29	10.	.0	1087.8	*	1		1040	129	0.	.0	1086.2	*	1		1900	229	0.	.0	1086
1		0225	30	10.	.0	1087.8	*	1		1045	130	0.	.0	1086.2	*	1		1905	230	0.	.0	1086
1		0230	31	10.	.0	1087.9	*	1		1050	131	0.	.0	1086.2	*	1		1910	231	0.	.0	1086
1		0235	32	10.	.0	1087.9	*	1		1055	132	0.	.0	1086.2	*	1		1915	232	0.	.0	1086
1		0240	33	10.	.0	1087.9	*	1		1100	133	0.	.0	1086.2	*	1		1920	233	0.	.0	1086
1		0245	34	11.	.0	1088.0	*	1		1105	134	0.	.0	1086.2	*	1		1925	234	0.	.0	1086
1		0250	35	11.	.0	1088.0	*	1		1110	135	0.	.0	1086.2	*	1		1930	235	0.	.0	1086
1		0255	36	11.	.0	1088.1	*	1		1115	136	0.	.0	1086.2	*	1		1935	236	0.	.0	1086
1		0300	37	11.	.0	1088.1	*	1		1120	137	0.	.0	1086.2	*	1		1940	237	0.	.0	1086
1		0305	38	12.	.0	1088.2	*	1		1125	138	0.	.0	1086.2	*	1		1945	238	0.	.0	1086
1		0310	39	13.	.0	1088.3	*	1		1130	139	0.	.0	1086.2	*	1		1950	239	0.	.0	1086
1		0315	40	14.	.0	1088.5	*	1		1135	140	0.	.0	1086.2	*	1		1955	240	0.	.0	1086
1		0320	41	15.	.0	1088.7	*	1		1140	141	0.	.0	1086.2	*	1		2000	241	0.	.0	1086
1		0325	42	16.	.0	1089.0	*	1		1145	142	0.	.0	1086.2	*	1		2005	242	0.	.0	1086
1		0330	43	18.	.0	1089.3	*	1		1150	143	0.	.0	1086.2	*	1		2010	243	0.	.0	1086

1	0335	44	21.	.0	1089.7	*	1	1155	144	0.	.0	1086.2	*	1	2015	244	0.	.0	1086.
1	0340	45	23.	.0	1090.1	*	1	1200	145	0.	.0	1086.2	*	1	2020	245	0.	.0	1086.
1	0345	46	26.	.0	1090.6	*	1	1205	146	0.	.0	1086.2	*	1	2025	246	0.	.0	1086.
1	0350	47	28.	.0	1091.0	*	1	1210	147	0.	.0	1086.2	*	1	2030	247	0.	.0	1086.
1	0355	48	28.	.0	1091.1	*	1	1215	148	0.	.0	1086.2	*	1	2035	248	0.	.0	1086.
1	0400	49	29.	.0	1091.3	*	1	1220	149	0.	.0	1086.2	*	1	2040	249	0.	.0	1086.
1	0405	50	30.	.1	1091.7	*	1	1225	150	0.	.0	1086.2	*	1	2045	250	0.	.0	1086.
1	0410	51	31.	.1	1092.0	*	1	1230	151	0.	.0	1086.2	*	1	2050	251	0.	.0	1086.
1	0415	52	33.	.1	1092.5	*	1	1235	152	0.	.0	1086.2	*	1	2055	252	0.	.0	1086.
1	0420	53	34.	.2	1092.9	*	1	1240	153	0.	.0	1086.2	*	1	2100	253	0.	.0	1086.
1	0425	54	35.	.2	1093.3	*	1	1245	154	0.	.0	1086.2	*	1	2105	254	0.	.0	1086.
1	0430	55	36.	.3	1093.7	*	1	1250	155	0.	.0	1086.2	*	1	2110	255	0.	.0	1086.
1	0435	56	37.	.3	1093.9	*	1	1255	156	0.	.0	1086.2	*	1	2115	256	0.	.0	1086.
1	0440	57	37.	.3	1094.0	*	1	1300	157	0.	.0	1086.2	*	1	2120	257	0.	.0	1086.
1	0445	58	37.	.3	1094.0	*	1	1305	158	0.	.0	1086.2	*	1	2125	258	0.	.0	1086.
1	0450	59	37.	.3	1094.0	*	1	1310	159	0.	.0	1086.2	*	1	2130	259	0.	.0	1086.
1	0455	60	37.	.3	1094.0	*	1	1315	160	0.	.0	1086.2	*	1	2135	260	0.	.0	1086.
1	0500	61	37.	.3	1094.0	*	1	1320	161	0.	.0	1086.2	*	1	2140	261	0.	.0	1086.
1	0505	62	36.	.3	1093.7	*	1	1325	162	0.	.0	1086.2	*	1	2145	262	0.	.0	1086.
1	0510	63	35.	.2	1093.4	*	1	1330	163	0.	.0	1086.2	*	1	2150	263	0.	.0	1086.
1	0515	64	34.	.2	1093.0	*	1	1335	164	0.	.0	1086.2	*	1	2155	264	0.	.0	1086.
1	0520	65	33.	.2	1092.6	*	1	1340	165	0.	.0	1086.2	*	1	2200	265	0.	.0	1086.
1	0525	66	31.	.1	1092.1	*	1	1345	166	0.	.0	1086.2	*	1	2205	266	0.	.0	1086.
1	0530	67	30.	.1	1091.6	*	1	1350	167	0.	.0	1086.2	*	1	2210	267	0.	.0	1086.
1	0535	68	29.	.0	1091.1	*	1	1355	168	0.	.0	1086.2	*	1	2215	268	0.	.0	1086.
1	0540	69	20.	.0	1088.9	*	1	1400	169	0.	.0	1086.2	*	1	2220	269	0.	.0	1086.
1	0545	70	19.	.0	1088.7	*	1	1405	170	0.	.0	1086.2	*	1	2225	270	0.	.0	1086.
1	0550	71	18.	.0	1088.5	*	1	1410	171	0.	.0	1086.2	*	1	2230	271	0.	.0	1086.
1	0555	72	17.	.0	1088.4	*	1	1415	172	0.	.0	1086.2	*	1	2235	272	0.	.0	1086.
1	0600	73	16.	.0	1088.2	*	1	1420	173	0.	.0	1086.2	*	1	2240	273	0.	.0	1086.
1	0605	74	15.	.0	1088.1	*	1	1425	174	0.	.0	1086.2	*	1	2245	274	0.	.0	1086.
1	0610	75	14.	.0	1087.9	*	1	1430	175	0.	.0	1086.2	*	1	2250	275	0.	.0	1086.
1	0615	76	13.	.0	1087.7	*	1	1435	176	0.	.0	1086.2	*	1	2255	276	0.	.0	1086.
1	0620	77	11.	.0	1087.4	*	1	1440	177	0.	.0	1086.2	*	1	2300	277	0.	.0	1086.
1	0625	78	10.	.0	1087.2	*	1	1445	178	0.	.0	1086.2	*	1	2305	278	0.	.0	1086.
1	0630	79	9.	.0	1087.0	*	1	1450	179	0.	.0	1086.2	*	1	2310	279	0.	.0	1086.
1	0635	80	8.	.0	1086.8	*	1	1455	180	0.	.0	1086.2	*	1	2315	280	0.	.0	1086.
1	0640	81	7.	.0	1086.7	*	1	1500	181	0.	.0	1086.2	*	1	2320	281	0.	.0	1086.
1	0645	82	6.	.0	1086.5	*	1	1505	182	0.	.0	1086.2	*	1	2325	282	0.	.0	1086.
1	0650	83	5.	.0	1086.4	*	1	1510	183	0.	.0	1086.2	*	1	2330	283	0.	.0	1086.
1	0655	84	5.	.0	1086.3	*	1	1515	184	0.	.0	1086.2	*	1	2335	284	0.	.0	1086.
1	0700	85	4.	.0	1086.2	*	1	1520	185	0.	.0	1086.2	*	1	2340	285	0.	.0	1086.
1	0705	86	3.	.0	1086.2	*	1	1525	186	0.	.0	1086.2	*	1	2345	286	0.	.0	1086.
1	0710	87	3.	.0	1086.2	*	1	1530	187	0.	.0	1086.2	*	1	2350	287	0.	.0	1086.
1	0715	88	3.	.0	1086.2	*	1	1535	188	0.	.0	1086.2	*	1	2355	288	0.	.0	1086.
1	0720	89	2.	.0	1086.2	*	1	1540	189	0.	.0	1086.2	*	2	0000	289	0.	.0	1086.
1	0725	90	2.	.0	1086.2	*	1	1545	190	0.	.0	1086.2	*	2	0005	290	0.	.0	1086.
1	0730	91	2.	.0	1086.2	*	1	1550	191	0.	.0	1086.2	*	2	0010	291	0.	.0	1086.
1	0735	92	1.	.0	1086.2	*	1	1555	192	0.	.0	1086.2	*	2	0015	292	0.	.0	1086.
1	0740	93	1.	.0	1086.2	*	1	1600	193	0.	.0	1086.2	*	2	0020	293	0.	.0	1086.
1	0745	94	1.	.0	1086.2	*	1	1605	194	0.	.0	1086.2	*	2	0025	294	0.	.0	1086.
1	0750	95	1.	.0	1086.2	*	1	1610	195	0.	.0	1086.2	*	2	0030	295	0.	.0	1086.
1	0755	96	1.	.0	1086.2	*	1	1615	196	0.	.0	1086.2	*	2	0035	296	0.	.0	1086.
1	0800	97	1.	.0	1086.2	*	1	1620	197	0.	.0	1086.2	*	2	0040	297	0.	.0	1086.
1	0805	98	1.	.0	1086.2	*	1	1625	198	0.	.0	1086.2	*	2	0045	298	0.	.0	1086.
1	0810	99	0.	.0	1086.2	*	1	1630	199	0.	.0	1086.2	*	2	0050	299	0.	.0	1086.
1	0815	100	0.	.0	1086.2	*	1	1635	200	0.	.0	1086.2	*	2	0055	300	0.	.0	1086.

****

PEAK FLOW	TIME		MAXIMUM AVERAGE FLOW 6-HR	24-HR	72-HR	24.92-HR
+ (CFS)	(HR)					
		(CFS)	18.	5.	5.	5.
+ 37.	4.83	(INCHES)	.051	.054	.054	.054
		(AC-FT)	9.	10.	10.	10.

PEAK STORAGE	TIME	MAXIMUM AVERAGE STORAGE 6-HR	24-HR	72-HR	24.92-HR
+ (AC-FT)	(HR)				
0.	4.83	0.	0.	0.	0.

PEAK STAGE	TIME	MAXIMUM AVERAGE STAGE 6-HR	24-HR	72-HR	24.92-HR
+ (FEET)	(HR)				
1094.02	4.83	1089.43	1087.03	1087.00	1087.00

CUMULATIVE AREA = 3.32 SQ MI

INTERPOLATED HYDROGRAPH AT SB

DA	MON	HRMN	ORD	FLOW	DA	MON	HRMN	ORD	FLOW	DA	MON	HRMN	ORD	FLOW	DA	MON	HRMN	ORD	FLOW
1	0000	1	28.	*	1	0615	76	43.	*	1	1230	151	0.	*	1	1845	226		0.
1	0005	2	0.	*	1	0620	77	43.	*	1	1235	152	0.	*	1	1850	227		0.
1	0010	3	0.	*	1	0625	78	42.	*	1	1240	153	0.	*	1	1855	228		0.
1	0015	4	0.	*	1	0630	79	42.	*	1	1245	154	0.	*	1	1900	229		0.
1	0020	5	0.	*	1	0635	80	42.	*	1	1250	155	0.	*	1	1905	230		0.
1	0025	6	0.	*	1	0640	81	42.	*	1	1255	156	0.	*	1	1910	231		0.
1	0030	7	0.	*	1	0645	82	42.	*	1	1300	157	0.	*	1	1915	232		0.
1	0035	8	0.	*	1	0650	83	42.	*	1	1305	158	0.	*	1	1920	233		0.
1	0040	9	0.	*	1	0655	84	41.	*	1	1310	159	0.	*	1	1925	234		0.
1	0045	10	4.	*	1	0700	85	41.	*	1	1315	160	0.	*	1	1930	235		0.
1	0050	11	4.	*	1	0705	86	41.	*	1	1320	161	0.	*	1	1935	236		0.
1	0055	12	4.	*	1	0710	87	41.	*	1	1325	162	0.	*	1	1940	237		0.
1	0100	13	5.	*	1	0715	88	40.	*	1	1330	163	0.	*	1	1945	238		0.
1	0105	14	5.	*	1	0720	89	40.	*	1	1335	164	0.	*	1	1950	239		0.
1	0110	15	5.	*	1	0725	90	40.	*	1	1340	165	0.	*	1	1955	240		0.
1	0115	16	6.	*	1	0730	91	36.	*	1	1345	166	0.	*	1	2000	241		0.
1	0120	17	6.	*	1	0735	92	36.	*	1	1350	167	0.	*	1	2005	242		0.
1	0125	18	6.	*	1	0740	93	36.	*	1	1355	168	0.	*	1	2010	243		0.
1	0130	19	6.	*	1	0745	94	35.	*	1	1400	169	0.	*	1	2015	244		0.
1	0135	20	6.	*	1	0750	95	35.	*	1	1405	170	0.	*	1	2020	245		0.
1	0140	21	6.	*	1	0755	96	34.	*	1	1410	171	0.	*	1	2025	246		0.
1	0145	22	6.	*	1	0800	97	34.	*	1	1415	172	0.	*	1	2030	247		0.
1	0150	23	6.	*	1	0805	98	31.	*	1	1420	173	0.	*	1	2035	248		0.
1	0155	24	7.	*	1	0810	99	26.	*	1	1425	174	0.	*	1	2040	249		0.
1	0200	25	7.	*	1	0815	100	0.	*	1	1430	175	0.	*	1	2045	250		0.
1	0205	26	7.	*	1	0820	101	0.	*	1	1435	176	0.	*	1	2050	251		0.
1	0210	27	7.	*	1	0825	102	0.	*	1	1440	177	0.	*	1	2055	252		0.
1	0215	28	7.	*	1	0830	103	0.	*	1	1445	178	0.	*	1	2100	253		0.
1	0220	29	7.	*	1	0835	104	0.	*	1	1450	179	0.	*	1	2105	254		0.
1	0225	30	7.	*	1	0840	105	0.	*	1	1455	180	0.	*	1	2110	255		0.
1	0230	31	7.	*	1	0845	106	0.	*	1	1500	181	0.	*	1	2115	256		0.
1	0235	32	7.	*	1	0850	107	0.	*	1	1505	182	0.	*	1	2120	257		0.
1	0240	33	8.	*	1	0855	108	0.	*	1	1510	183	0.	*	1	2125	258		0.
1	0245	34	8.	*	1	0900	109	0.	*	1	1515	184	0.	*	1	2130	259		0.
1	0250	35	8.	*	1	0905	110	0.	*	1	1520	185	0.	*	1	2135	260		0.
1	0255	36	9.	*	1	0910	111	0.	*	1	1525	186	0.	*	1	2140	261		0.
1	0300	37	9.	*	1	0915	112	0.	*	1	1530	187	0.	*	1	2145	262		0.
1	0305	38	10.	*	1	0920	113	0.	*	1	1535	188	0.	*	1	2150	263		0.
1	0310	39	12.	*	1	0925	114	0.	*	1	1540	189	0.	*	1	2155	264		0.
1	0315	40	14.	*	1	0930	115	0.	*	1	1545	190	0.	*	1	2200	265		0.
1	0320	41	16.	*	1	0935	116	0.	*	1	1550	191	0.	*	1	2205	266		0.
1	0325	42	20.	*	1	0940	117	0.	*	1	1555	192	0.	*	1	2210	267		0.
1	0330	43	24.	*	1	0945	118	0.	*	1	1600	193	0.	*	1	2215	268		0.
1	0335	44	28.	*	1	0950	119	0.	*	1	1605	194	0.	*	1	2220	269		0.
1	0340	45	29.	*	1	0955	120	0.	*	1	1610	195	0.	*	1	2225	270		0.
1	0345	46	32.	*	1	1000	121	0.	*	1	1615	196	0.	*	1	2230	271		0.
1	0350	47	36.	*	1	1005	122	0.	*	1	1620	197	0.	*	1	2235	272		0.
1	0355	48	37.	*	1	1010	123	0.	*	1	1625	198	0.	*	1	2240	273		0.
1	0400	49	38.	*	1	1015	124	0.	*	1	1630	199	0.	*	1	2245	274		0.
1	0405	50	39.	*	1	1020	125	0.	*	1	1635	200	0.	*	1	2250	275		0.
1	0410	51	40.	*	1	1025	126	0.	*	1	1640	201	0.	*	1	2255	276		0.
1	0415	52	40.	*	1	1030	127	0.	*	1	1645	202	0.	*	1	2300	277		0.
1	0420	53	41.	*	1	1035	128	0.	*	1	1650	203	0.	*	1	2305	278		0.
1	0425	54	41.	*	1	1040	129	0.	*	1	1655	204	0.	*	1	2310	279		0.
1	0430	55	42.	*	1	1045	130	0.	*	1	1700	205	0.	*	1	2315	280		0.
1	0435	56	42.	*	1	1050	131	0.	*	1	1705	206	0.	*	1	2320	281		0.
1	0440	57	42.	*	1	1055	132	0.	*	1	1710	207	0.	*	1	2325	282		0.
1	0445	58	43.	*	1	1100	133	0.	*	1	1715	208	0.	*	1	2330	283		0.
1	0450	59	43.	*	1	1105	134	0.	*	1	1720	209	0.	*	1	2335	284		0.
1	0455	60	43.	*	1	1110	135	0.	*	1	1725	210	0.	*	1	2340	285		0.
1	0500	61	43.	*	1	1115	136	0.	*	1	1730	211	0.	*	1	2345	286		0.
1	0505	62	43.	*	1	1120	137	0.	*	1	1735	212	0.	*	1	2350	287		0.
1	0510	63	43.	*	1	1125	138	0.	*	1	1740	213	0.	*	1	2355	288		0.
1	0515	64	43.	*	1	1130	139	0.	*	1	1745	214	0.	*	2	0000	289		0.
1	0520	65	44.	*	1	1135	140	0.	*	1	1750	215	0.	*	2	0005	290		0.
1	0525	66	44.	*	1	1140	141	0.	*	1	1755	216	0.	*	2	0010	291		0.
1	0530	67	44.	*	1	1145	142	0.	*	1	1800	217	0.	*	2	0015	292		0.
1	0535	68	43.	*	1	1150	143	0.	*	1	1805	218	0.	*	2	0020	293		0.
1	0540	69	43.	*	1	1155	144	0.	*	1	1810	219	0.	*	2	0025	294		0.
1	0545	70	43.	*	1	1200	145	0.	*	1	1815	220	0.	*	2	0030	295		0.

1	1550	71	43.	*	1	1205	146	0.	*	1	1820	221	0.	*	2	2035	296	0.
1	1555	72	43.	*	1	1210	147	0.	*	1	1825	222	0.	*	2	2040	297	0.
1	1600	73	43.	*	1	1215	148	0.	*	1	1830	223	0.	*	2	2045	298	0.
1	1605	74	43.	*	1	1220	149	0.	*	1	1835	224	0.	*	2	2050	299	0.
1	1610	75	43.	*	1	1225	150	0.	*	1	1840	225	0.	*	2	2055	300	0.

PEAK FLOW (CFS)	TIME (HR)		MAXIMUM AVERAGE FLOW 6-HR	24-HR	72-HR	24.92-HR
44.	5.42	(CFS)	33.	9.	8.	8.
		(INCHES)	.093	.099	.099	.099
		(AC-FT)	17.	17.	17.	17.

CUMULATIVE AREA = 3.32 SQ MI

1

RUNOFF SUMMARY
FLOW IN CUBIC FEET PER SECOND
TIME IN HOURS, AREA IN SQUARE MILES

OPERATION	STATION	PEAK FLOW	TIME OF PEAK	AVERAGE FLOW FOR MAXIMUM PERIOD 6-HOUR	24-HOUR	72-HOUR	BASIN AREA	MAXIMUM STAGE	TIME OF MAX STAGE
HYDROGRAPH AT	B	201.	4.17	29.	7.	7.	.29		
DIVERSION TO	D39S	84.	3.92	21.	5.	5.	.29		
HYDROGRAPH AT	D39	117.	4.17	8.	2.	2.	.29		
HYDROGRAPH AT	C	156.	4.17	21.	5.	5.	.21		
ROUTED TO	R39	147.	4.25	21.	5.	5.	.21		
2 COMBINED AT	C40	262.	4.17	29.	7.	7.	.50		
ROUTED TO	R40	175.	4.50	28.	7.	7.	.50		
HYDROGRAPH AT	D	113.	4.17	17.	4.	4.	.17		
ROUTED TO	R43	92.	4.33	17.	4.	4.	.17		
HYDROGRAPH AT	E	145.	4.17	21.	5.	5.	.20		
3 COMBINED AT	C43	305.	4.42	62.	16.	15.	.87		
ROUTED TO	S43	247.	4.67	59.	16.	15.	.87		
DIVERSION TO	D43S	27.	3.58	27.	8.	8.	.87		
HYDROGRAPH AT	D43	220.	4.67	32.	8.	8.	.87		
ROUTED TO	R44	213.	4.75	32.	8.	8.	.87		
HYDROGRAPH AT	F	195.	4.25	27.	7.	7.	.50		
ROUTED TO	R45	188.	4.33	27.	7.	7.	.50		
2 COMBINED AT	C45	268.	4.67	49.	12.	12.	1.37		

+	HYDROGRAPH AT	G	43.	4.42	12.	3.	3.	.12
+	ROUTED TO	R47	34.	5.33	12.	3.	3.	.12
+	HYDROGRAPH AT	H	64.	4.42	17.	4.	4.	.22
+	2 COMBINED AT	D47	305.	4.75	69.	18.	17.	1.71
+	ROUTED TO	R47	209.	5.08	69.	18.	17.	1.71
+	DIVERSION TO	D47S	30.	4.83	3.	1.	1.	1.71
+	HYDROGRAPH AT	D47	186.	5.08	66.	17.	16.	1.71
+	ROUTED TO	R48	182.	5.25	66.	17.	16.	1.71
+	HYDROGRAPH AT	I	188.	4.25	31.	8.	8.	.44
+	2 COMBINED AT	D49	200.	5.25	86.	22.	21.	2.15
+	ROUTED TO	R49A	198.	5.33	86.	22.	21.	2.15
+	DIVERSION TO	CRDIV	17.	5.00	2.	0.	0.	2.15
+	HYDROGRAPH AT	CRIT	194.	5.42	84.	22.	21.	2.15
+	ROUTED TO	R49B	193.	5.50	84.	22.	21.	2.15
+	DIVERSION TO	49BDV	188.	5.50	83.	21.	21.	2.15
+	HYDROGRAPH AT	49BD	6.	4.42	1.	0.	0.	2.15
+	HYDROGRAPH AT	J	154.	4.33	34.	9.	8.	.39
+	2 COMBINED AT	C51	102.	4.42	28.	7.	7.	2.54
+	DIVERSION TO	D51S	0.	.08	0.	0.	0.	2.54
+	HYDROGRAPH AT	D51	102.	4.42	28.	7.	7.	2.54
+	HYDROGRAPH AT	L'	89.	4.33	20.	5.	5.	.23
+	DIVERSION TO	DIVL'W	9.	4.33	2.	0.	0.	.23
+	HYDROGRAPH AT	L'S1	80.	4.33	18.	5.	4.	.23
+	DIVERSION TO	DIVL'	80.	4.33	18.	5.	4.	.23
+	HYDROGRAPH AT	L'S	0.	4.33	0.	0.	0.	.23
+	ROUTED TO	RL'	0.	4.42	0.	0.	0.	.23
+	HYDROGRAPH AT	KCN	25.	4.17	3.	1.	1.	.04

+	DIVERSION TO	KCNRT	5.	4.17	1.	0.	0.	.04
+	HYDROGRAPH AT	KCN'	20.	4.17	3.	1.	1.	.04
+	DIVERSION TO	KCNDV	10.	4.17	1.	0.	0.	.04
+	HYDROGRAPH AT	KCND	10.	4.17	1.	0.	0.	.04
+	ROUTED TO	KCNRW	8.	4.25	1.	0.	0.	.04
+	DIVERSION TO	KCNW	8.	4.25	1.	0.	0.	.04
+	HYDROGRAPH AT	KCNSD	0.	4.25	0.	0.	0.	.04
+	HYDROGRAPH AT	KW	34.	4.25	6.	1.	1.	.07
+	DIVERSION TO	SCHL	17.	4.25	3.	1.	1.	.07
+	HYDROGRAPH AT	EKW	17.	4.25	3.	1.	1.	.07
+	3 COMBINED AT	KCNC	17.	4.25	3.	1.	1.	.33
+	ROUTED TO	RL'2	15.	4.42	3.	1.	1.	.33
+	HYDROGRAPH AT	L'W	9.	4.33	2.	0.	0.	.23
+	DIVERSION TO	DSDL'W	9.	4.33	2.	0.	0.	.23
+	HYDROGRAPH AT	L'WS	0.	.00	0.	0.	0.	.23
+	ROUTED TO	RL'WS	0.	.00	0.	0.	0.	.23
+	HYDROGRAPH AT	M'	77.	4.08	8.	2.	2.	.09
+	2 COMBINED AT	CM'	76.	4.08	8.	2.	2.	.32
+	DIVERSION TO	DSDM'W	51.	4.00	7.	2.	2.	.32
+	HYDROGRAPH AT	DIVM'	25.	4.08	1.	0.	0.	.32
+	ROUTED TO	RM'	23.	4.17	1.	0.	0.	.32
+	2 COMBINED AT	CCHAN	29.	4.17	4.	1.	1.	.65
+	ROUTED TO	KWR	22.	4.33	4.	1.	1.	.65
+	HYDROGRAPH AT	KCNDV	10.	4.17	1.	0.	0.	.04
+	ROUTED TO	KCNRS	8.	4.25	1.	0.	0.	.04
+	HYDROGRAPH AT	SCHL	17.	4.25	3.	1.	1.	.07
+	DIVERSION TO	RETSCL	17.	4.25	3.	1.	1.	.07

+	HYDROGRAPH AT	SCHLE	0.	.00	0.	0.	0.	.07
+	2 COMBINED AT	KCSC	8.	4.25	1.	0.	0.	.01
+	HYDROGRAPH AT	KEN	27.	4.17	4.	1.	1.	.05
+	DIVERSION TO	KENRT	7.	4.17	1.	0.	0.	.05
+	HYDROGRAPH AT	KEN'	20.	4.17	3.	1.	1.	.05
+	DIVERSION TO	KENDV	20.	4.17	3.	1.	1.	.05
+	HYDROGRAPH AT	KEND	0.	.00	0.	0.	0.	.05
+	ROUTED TO	KENR	0.	.00	0.	0.	0.	.05
+	HYDROGRAPH AT	KCS	64.	4.08	6.	1.	1.	.07
+	3 COMBINED AT	CB1	69.	4.08	7.	2.	2.	.13
+	3 COMBINED AT	CB2	122.	4.33	34.	9.	8.	3.32
+	ROUTED TO	SB	44.	5.42	33.	9.	8.	3.32
+	HYDROGRAPH AT	RTN51	0.	.08	0.	0.	0.	2.54
+	HYDROGRAPH AT	49BDV	188.	5.50	83.	21.	21.	2.15
+	2 COMBINED AT	CSD1	200.	4.33	94.	24.	23.	.01
+	HYDROGRAPH AT	STAD	0.	4.17	0.	0.	0.	.00
+	3 COMBINED AT	CSD2	224.	5.50	112.	29.	28.	3.33

*** NORMAL END OF HEC-1 ***

APPENDIX II

HYDRAULIC ANALYSIS

Scenario: Alternate 4

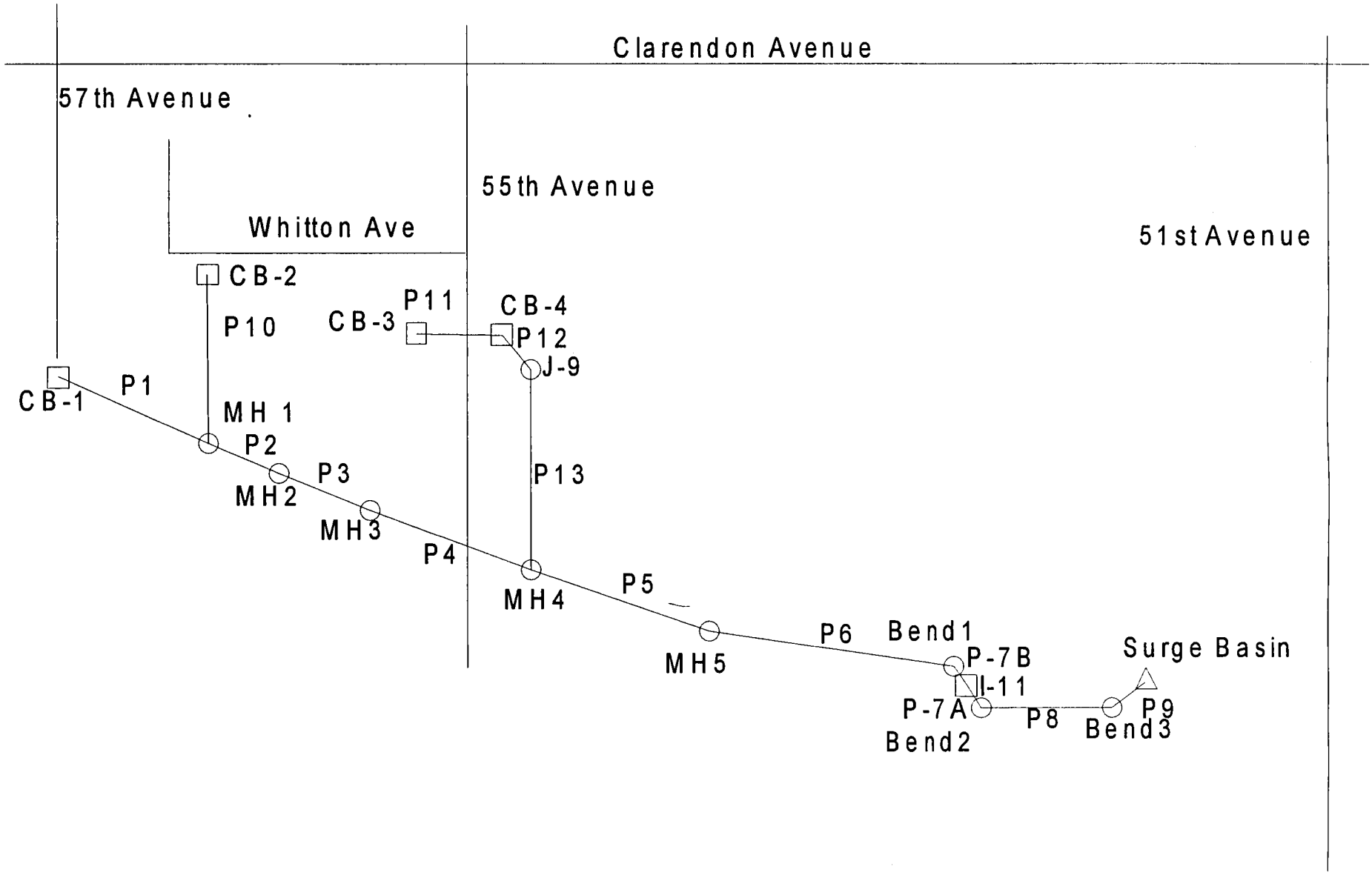

Title: Whitton AVE PIPE
s:\eng\whitto~1\hydrau~1\whit_mal.stm
09/30/99 02:59:27 PM

Maricopa County Flood Control
© Haestad Methods, Inc. 37 Brookside Road Waterbury, CT 06708 USA (203) 755-1666

Project Engineer: Richard Harris
StormCAD v3.0 [319]
Page 1 of 1

Scenario. Alternate 4

Combined Pipe/Node Report

Label	Upstream Node	Downstream Node	Length (ft)	Section Size	Average Velocity (ft/s)	Upstream Invert Elevation (ft)	Downstream Invert Elevation (ft)	Constructed Slope (ft/ft)	Hydraulic Grade In (ft)	Hydraulic Grade Out (ft)	Total System Flow (cfs)	Downstream Ground Elevation (ft)	Upstream Ground Elevation (ft)
P10	CB-2	MH 1	116.00	30 inch	N/A	1,095.38	1,094.43	0.008190	N/A	N/A	N/A	1,100.00	1,100.50
P1	CB-1	MH 1	228.00	48 inch	N/A	1,094.66	1,094.42	0.001053	N/A	N/A	N/A	1,100.00	1,100.00
P11	CB-3	CB-4	48.00	30 inch	N/A	1,095.39	1,094.37	0.021250	N/A	N/A	N/A	1,100.17	1,100.19
P2	MH 1	MH2	340.00	54 inch	N/A	1,093.92	1,093.25	0.001971	N/A	N/A	N/A	1,100.00	1,100.00
P12	CB-4	J-9	15.00	36 inch	N/A	1,093.98	1,093.72	0.017333	N/A	N/A	N/A	1,102.00	1,100.17
P3	MH2	MH3	390.00	54 inch	N/A	1,093.25	1,092.47	0.002000	N/A	N/A	N/A	1,100.00	1,100.00
P13	J-9	J-12	90.00	36 inch	N/A	1,093.72	1,092.18	0.017111	N/A	N/A	N/A	1,102.07	1,102.00
P4	MH3	J-12	559.00	54 inch	N/A	1,092.47	1,091.36	0.001986	N/A	N/A	N/A	1,102.07	1,100.00
P5	J-12	MH5	376.00	60 inch	N/A	1,090.86	1,090.10	0.002021	N/A	N/A	N/A	1,100.00	1,102.07
P6	MH5	Bend1	430.00	60 inch	N/A	1,090.10	1,089.53	0.001326	N/A	N/A	N/A	1,100.00	1,100.00
P-7B	Bend1	J-11	17.00	60 inch	N/A	1,089.53	1,089.50	0.001471	N/A	N/A	N/A	1,100.00	1,100.00
P-7A	J-11	Bend2	28.00	60 inch	N/A	1,089.50	1,088.93	0.020357	N/A	N/A	N/A	1,103.00	1,100.00
P8	Bend2	Bend3	441.00	60 inch	N/A	1,088.93	1,087.17	0.003991	N/A	N/A	N/A	1,101.00	1,103.00
P9	Bend3	Surge Basin	52.00	60 inch	N/A	1,087.17	1,086.96	0.004038	N/A	N/A	N/A	1,094.53	1,101.00

Scenario: Alternate 4

Node Report

Label	Total System Flow (cfs)	Ground Elevation (ft)	Rim Elevation (ft)	Hydraulic Grade In (ft)	Hydraulic Grade Out (ft)	Depth In (ft)	Depth Out (ft)	Absolute Headloss (ft)	Headloss Coefficient	Headloss Method	Known Flow (cfs)
CB-2	N/A	1,100.50	1,100.50	N/A	N/A	N/A	N/A		1.37	Standard	34.00
CB-1	N/A	1,100.00	1,100.00	N/A	N/A	N/A	N/A		1.53	Standard	33.00
CB-3	N/A	1,100.19	1,100.19	N/A	N/A	N/A	N/A		1.25	Standard	18.50
MH 1	N/A	1,100.00	1,100.00	N/A	N/A	N/A	N/A	0.43		Absolute	
CB-4	N/A	1,100.17	1,100.17	N/A	N/A	N/A	N/A		1.25	Standard	18.50
MH2	N/A	1,100.00	1,100.00	N/A	N/A	N/A	N/A		0.05	Standard	
J-9	N/A	1,102.00	1,102.00	N/A	N/A	N/A	N/A		0.05	Standard	
MH3	N/A	1,100.00	1,100.00	N/A	N/A	N/A	N/A		0.05	Standard	
J-12	N/A	1,102.07	1,102.07	N/A	N/A	N/A	N/A	0.47		Absolute	
MH5	N/A	1,100.00	1,100.00	N/A	N/A	N/A	N/A	0.52		Absolute	
Bend1	N/A	1,100.00	1,100.00	N/A	N/A	N/A	N/A		0.60	Standard	
J-11	N/A	1,100.00	1,100.00	N/A	N/A	N/A	N/A		0.05	Standard	
Bend2	N/A	1,103.00	1,103.00	N/A	N/A	N/A	N/A		0.60	Standard	
Bend3	N/A	1,101.00	1,101.00	N/A	N/A	N/A	N/A		0.50	Standard	
Surge Bas	N/A	1,094.53	1,094.53	N/A	N/A	N/A	N/A				

10/01/99
RPH

Special Junction Structure Headlosses

Station 7+15

$D_1 = 54''$, $D_2 = 48''$; $A_1 = 15.9\,\phi$, $A_2 = 12.56\,\phi$

$Q_1 = 67$ cfs , $Q_2 = 33$ cfs

$$H_j = \frac{\dfrac{67^2}{(32.2)(15.9)} - \dfrac{33^2}{(32.2)(12.56)}}{14.23} = 0.43'$$

Station 20+04

$D_1 = 60''$, $D_2 = 54''$; $A_1 = 19.63\,\phi$, $A_2 = 15.9\,\phi$

$Q_1 = 104$ cfs , $Q_2 = 67$ cfs

$$H_j = \frac{\dfrac{104^2}{(32.2)(19.63)} - \dfrac{67^2}{(32.2)(15.9)}}{17.76} = 0.47'$$

Scenario. Alternate 4

Wood, Patel + Associates Design

Combined Pipe/Node Report

Label	Upstream Node	Downstream Node	Length (ft)	Section Size	Average Velocity (ft/s)	Upstream Invert Elevation (ft)	Downstream Invert Elevation (ft)	Constructed Slope (ft/ft)	Hydraulic Grade In (ft)	Hydraulic Grade Out (ft)	Total System Flow (cfs)	Downstream Ground Elevation (ft)	Upstream Ground Elevation (ft)	Mannings n
P-16	I-9	I-6	16.00	30 inch	11.00	1,095.35	1,095.04	0.002672	1,102.01	1,100.00	54.00	1,100.00	1,100.50	0.013
P-9	I-7	I-6	20.00	48 inch	3.18	1,094.86	1,094.42	0.002000	1,100.17	1,100.00	40.00	1,100.00	1,100.00	0.013
P-15	I-12	I-11	47.00	30 inch	3.77	1,096.19	1,095.17	0.021702	1,099.32	1,099.23	18.50	1,100.17	1,100.19	0.013
P-8	I-6	J-6	35.00	48 inch	6.37	1,094.42	1,093.75	0.002000	1,099.80	1,098.76	80.00	1,100.00	1,100.00	0.013
P-14	I-11	J-9	5.00	36 inch	5.23	1,094.87	1,093.98	0.178000	1,098.70	1,098.68	37.00	1,102.00	1,100.17	0.013
P-7	J-6	J-5	91.00	60 inch	4.07	1,092.75	1,091.97	0.001995	1,098.75	1,098.38	80.00	1,100.00	1,100.00	0.013
P-13	J-9	I-5	90.00	36 inch	5.23	1,093.98	1,092.18	0.020000	1,098.10	1,097.83	37.00	1,100.00	1,102.00	0.013
P-6	J-5	I-5	75.50	60 inch	4.07	1,091.97	1,090.88	0.001894	1,098.37	1,097.83	80.00	1,100.00	1,100.00	0.013
P-5	I-5	J-4	59.00	60 inch	5.60	1,090.88	1,090.10	0.002173	1,097.72	1,097.07	110.00	1,100.00	1,100.00	0.013
P-4	J-4	J-3	10.15	60 inch	5.60	1,090.10	1,089.50	0.001463	1,097.05	1,096.32	110.00	1,100.00	1,100.00	0.013
P-3	J-3	J-2	69.55	60 inch	5.60	1,089.50	1,089.17	0.004745	1,096.03	1,095.90	110.00	1,103.00	1,100.00	0.013
P-2	J-2	J-1	93.21	60 inch	5.60	1,089.17	1,087.31	0.004730	1,095.61	1,094.91	110.00	1,101.00	1,103.00	0.013
P-1	J-1	O-1	75.00	60 inch	5.60	1,087.31	1,086.95	0.004800	1,094.66	1,094.53	110.00	1,094.53	1,101.00	0.013

Scenario: Alternate 4

Node Report

Wood, Patel + Associates Design

Label	Total System Flow (cfs)	Ground Elevation (ft)	Rim Elevation (ft)	Hydraulic Grade In (ft)	Hydraulic Grade Out (ft)	Depth In (ft)	Depth Out (ft)
I-9	54.00	1,100.50	1,100.50	1,100.50	1,100.50	5.15	5.15
I-7	40.00	1,100.00	1,100.00	1,100.00	1,100.00	5.14	5.14
I-12	18.50	1,100.19	1,100.19	1,099.60	1,099.32	3.41	3.13
I-6	80.00	1,100.00	1,100.00	1,100.00	1,099.80	5.58	5.38
I-11	37.00	1,100.17	1,100.17	1,099.23	1,098.70	4.36	3.83
J-6	80.00	1,100.00	1,100.00	1,098.76	1,098.75	6.01	6.00
J-9	37.00	1,102.00	1,102.00	1,098.68	1,098.10	4.70	4.12
J-5	80.00	1,100.00	1,100.00	1,098.38	1,098.37	6.41	6.40
I-5	110.00	1,100.00	1,100.00	1,097.83	1,097.72	6.95	6.84
J-4	110.00	1,100.00	1,100.00	1,097.07	1,097.05	6.97	6.95
J-3	110.00	1,100.00	1,100.00	1,096.32	1,096.03	6.82	6.53
J-2	110.00	1,103.00	1,103.00	1,095.90	1,095.61	6.73	6.44
J-1	110.00	1,101.00	1,101.00	1,094.91	1,094.66	7.60	7.35
O-1	110.00	1,094.53	1,094.53	1,094.53	1,094.53	7.58	7.58

```
*************************************************
*****   FHWA URBAN DRAINAGE DESIGN PROGRAMS   *****
*****          ROADWAY DRAINAGE DESIGN        *****
*************************************************
```

DESIGNER: rph

DATE: 10-01-1999

PROJECT: maryvale

PROJECT NO.: 1

INLET NO.: 1

STATION: 4+92

DRAINAGE AREA: - Acres

DESIGN FREQUENCY: 10 Years

ROADWAY & DISCHARGE DATA

Cross-Slope	Sx (ft/ft)	Sw (ft/ft)	n	W (ft)	a (in)
L. depression	0.011	0.071	0.016	0.00	1.00

INLET INTERCEPTION

Inlet Type * Sag *	L (ft)	h (in)	T (ft)	d (ft)	Qi (cfs)
Curb-Opening	29.60	6.00	45.91	0.59	33.00

Open Channel Inlet Capacity Calculation

Date: October 1, 1999

Water Depth	Ponding Elevation	Inlet Width	"C"	Qcap (cfs)
0	1099.43			0.00
0.1	1099.53	16	2.7	1.37
0.2	1099.63	16	2.7	3.86
0.3	1099.73	16	2.7	7.10
0.4	1099.83	16	2.7	10.93
0.5	1099.93	16	2.7	15.27
0.6	1100.03	16	2.7	20.08
0.7	1100.13	16	2.7	25.30
0.8	1100.23	16	2.7	30.91
0.9	1100.33	16	2.7	36.88
1	1100.43	16	2.7	43.20
1.1	1100.53	16	2.7	49.84
1.2	1100.63	16	2.7	56.79
1.3	1100.73	16	2.7	64.03

16' bw earthen channel, 4:1 SS
Worksheet for Trapezoidal Channel

Project Description	
Project File	c:\haestad\fmw\whitton.fm2
Worksheet	16' BW Lateral channel
Flow Element	Trapezoidal Channel
Method	Manning's Formula
Solve For	Channel Depth

Input Data		
Mannings Coefficient	0.030	
Channel Slope	0.010000	ft/ft
Left Side Slope	4.000000	H : V
Right Side Slope	4.000000	H : V
Bottom Width	16.00	ft
Discharge	34.00	cfs

Results		
Depth	0.58	ft
Flow Area	10.70	ft^2
Wetted Perimeter	20.81	ft
Top Width	20.67	ft
Critical Depth	0.50	ft
Critical Slope	0.017279	ft/ft
Velocity	3.18	ft/s
Velocity Head	0.16	ft
Specific Energy	0.74	ft
Froude Number	0.78	
Flow is subcritical.		

16' BW earthen channel, 4:1 SS
Cross Section for Trapezoidal Channel

Project Description	
Project File	c:\haestad\fmw\whitton.fm2
Worksheet	16' BW Lateral channel
Flow Element	Trapezoidal Channel
Method	Manning's Formula
Solve For	Channel Depth

Section Data		
Mannings Coefficient	0.030	
Channel Slope	0.010000	ft/ft
Depth	0.58	ft
Left Side Slope	4.000000	H : V
Right Side Slope	4.000000	H : V
Bottom Width	16.00	ft
Discharge	34.00	cfs

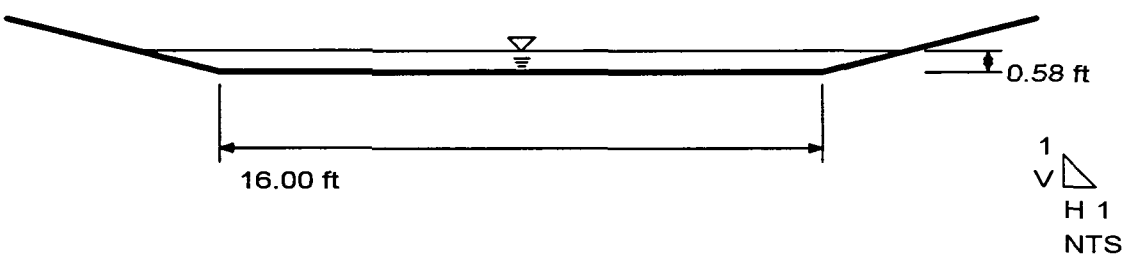

COP STD DTL P1570 TYPE I CATCH BASIN
FLOW CAPACITY CALCULATIONS

Clogging Factor = 0.8 Date: June 17, 1999

CB Station	Grate Length	Grate Width	# Of Grates	Open Area	Perimeter	Ponding Depth	Weir Flow Capacity	Orifice Flow Capacity
7+20	40	24	4	15.89	16.38	0.10	1.24	16.13
	40	24	4	15.89	16.38	0.20	3.52	22.81
	40	24	4	15.89	16.38	0.30	6.46	27.94
	40	24	4	15.89	16.38	0.40	9.94	32.26
	40	24	4	15.89	16.38	0.50	13.89	36.06
	40	24	4	15.89	16.38	0.60	18.26	39.51
	40	24	4	15.89	16.38	0.70	23.02	42.67
	40	24	4	15.89	16.38	0.80	28.12	45.62
	40	24	4	15.89	16.38	0.90	33.55	48.39
	40	24	4	15.89	16.38	1.00	39.30	51.00
	40	24	4	15.89	16.38	1.10	45.34	53.49
	40	24	4	15.89	16.38	1.25	54.92	57.02
	40	24	4	15.89	16.38	1.30	58.25	58.15
	40	24	4	15.89	16.38	1.37	63.02	59.70
	40	24	4	15.89	16.38	1.50	72.20	62.47
	40	24	4	15.89	16.38	1.60	79.54	64.51
	40	24	4	15.89	16.38	1.70	87.11	66.50
	40	24	4	15.89	16.38	1.75	90.98	67.47
	40	24	4	15.89	16.38	1.90	102.93	70.30
	40	24	4	15.89	16.38	2.00	111.16	72.13

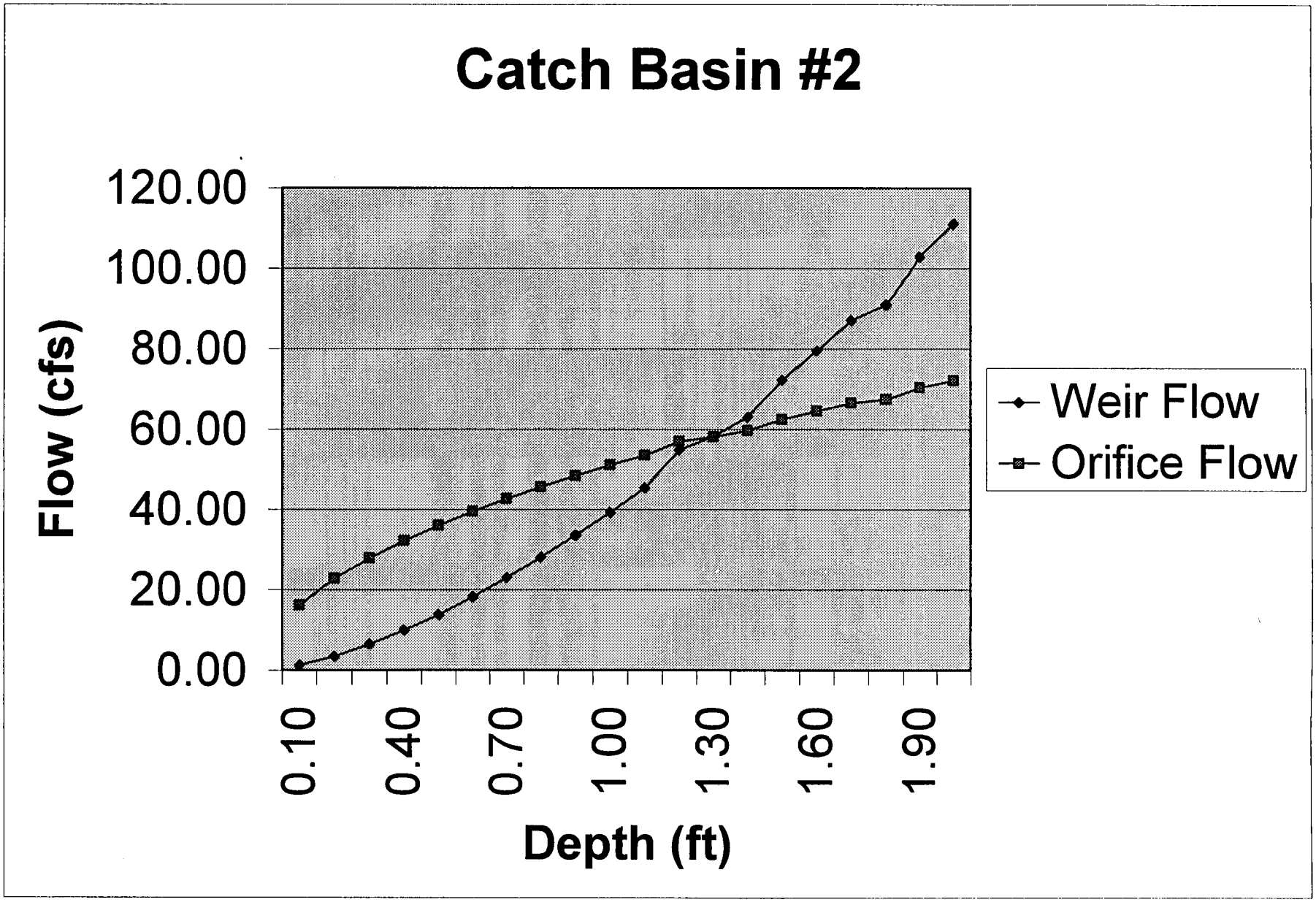
Catch Basin #2
120.00
100.00
80.00
60.00
40.00
20.00
0.00
Flow (cfs)
0.10
0.40
0.70
1.00
1.30
1.60
1.90
Depth (ft)
Weir Flow
Orifice Flow

55th Avenue Street Capacity
Worksheet for Irregular Channel

Project Description	
Project File	c:\haestad\fmw\55th.fm2
Worksheet	55th
Flow Element	Irregular Channel
Method	Manning's Formula
Solve For	Discharge

Input Data		
Channel Slope	0.003000	ft/ft
Water Surface Elevation	0.50	ft

Elevation range: 0.00 ft to 0.65 ft.

Station (ft)	Elevation (ft)	Start Station	End Station	Roughness
0.00	0.65	0.00	40.20	0.016
0.10	0.15			
20.10	0.25			
40.10	0.00			
40.20	0.50			

Results		
Wtd. Mannings Coefficient	0.016	
Discharge	32.97	cfs
Flow Area	13.54	ft^2
Wetted Perimeter	40.87	ft
Top Width	40.17	ft
Height	0.50	ft
Critical Depth	0.44	ft
Critical Slope	0.005846	ft/ft
Velocity	2.44	ft/s
Velocity Head	0.09	ft
Specific Energy	0.59	ft
Froude Number	0.74	
Flow is subcritical.		

55th Avenue Street Capacity
Cross Section for Irregular Channel

Project Description	
Project File	c:\haestad\fmw\55th.fm2
Worksheet	55th
Flow Element	Irregular Channel
Method	Manning's Formula
Solve For	Discharge

Section Data		
Wtd. Mannings Coefficient	0.016	
Channel Slope	0.003000	ft/ft
Water Surface Elevation	0.50	ft
Discharge	32.97	cfs

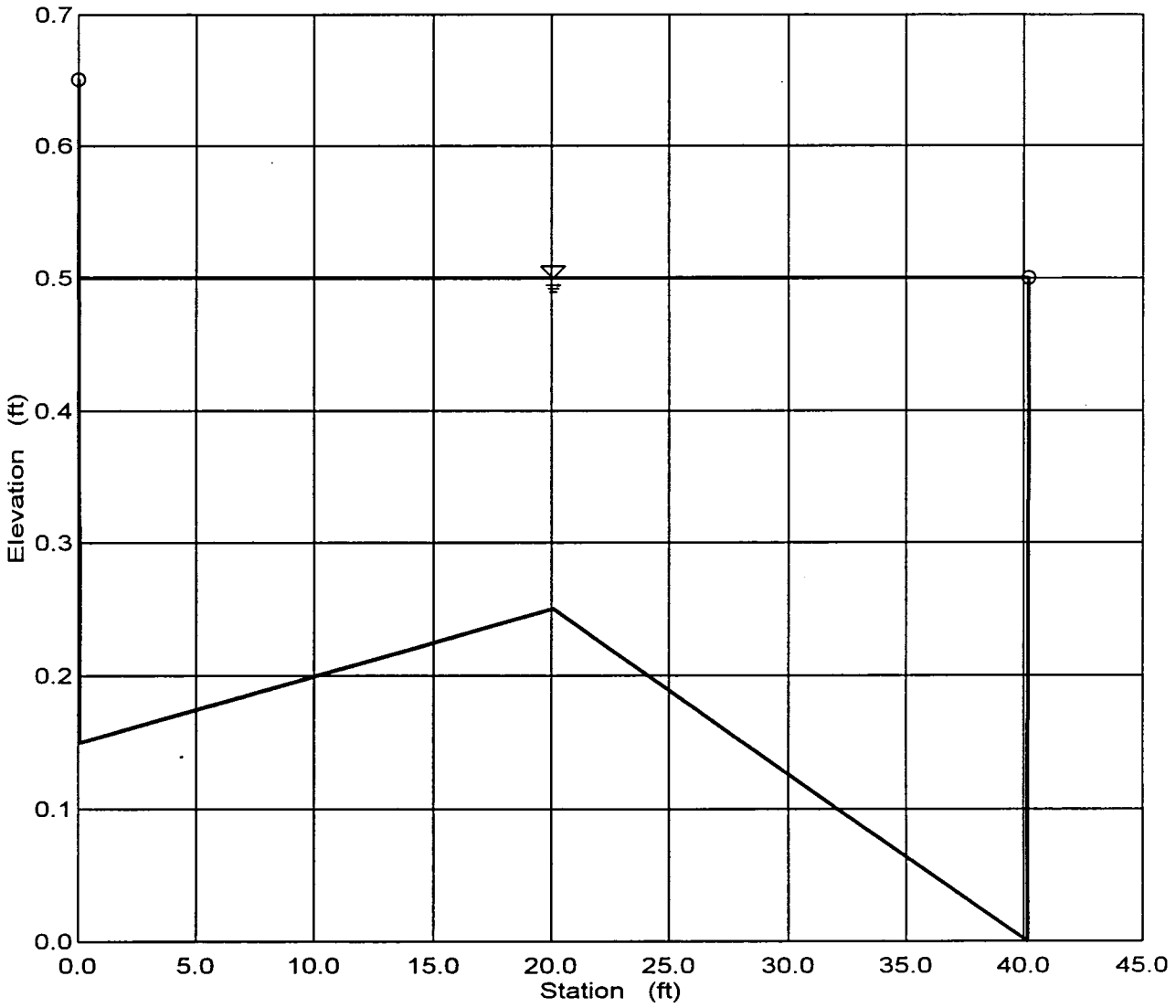

```
*************************************************
*****   FHWA URBAN DRAINAGE DESIGN PROGRAMS   *****
*****          ROADWAY DRAINAGE DESIGN        *****
*************************************************
```

DESIGNER: rph

DATE: 10-01-1999

PROJECT: maryvale

PROJECT NO.: 1

INLET NO.: 3

STATION: 19+00

DRAINAGE AREA: - Acres

DESIGN FREQUENCY: 10 Years

ROADWAY & DISCHARGE DATA

Cross-Slope	Sx (ft/ft)	Sw (ft/ft)	n	W (ft)	a (in)
L. depression	0.031	0.091	0.016	0.00	1.00

INLET INTERCEPTION

Inlet Type * Sag *	L (ft)	h (in)	T (ft)	d (ft)	Qi (cfs)
Curb-Opening	18.40	6.00	15.56	0.57	18.50

```
*************************************************
*****   FHWA URBAN DRAINAGE DESIGN PROGRAMS   *****
*****          ROADWAY DRAINAGE DESIGN        *****
*************************************************
```

DESIGNER: rph

DATE: 10-01-1999

PROJECT: maryvale

PROJECT NO.: 1

INLET NO.: 4

STATION: 19+38

DRAINAGE AREA: - Acres

DESIGN FREQUENCY: 10 Years

ROADWAY & DISCHARGE DATA

Cross-Slope	Sx (ft/ft)	Sw (ft/ft)	n	W (ft)	a (in)
L. depression	0.030	0.090	0.016	0.00	1.00

INLET INTERCEPTION

Inlet Type * Sag *	L (ft)	h (in)	T (ft)	d (ft)	Qi (cfs)
Curb-Opening	18.40	6.00	16.08	0.57	18.50

APPENDIX III

GEOTECHNICAL ANALYSIS

SPEEDIE AND ASSOCIATES
GEOTECHNICAL / ENVIRONMENTAL / MATERIALS ENGINEERS
11029 N. 24th AVE., SUITE 805 • PHOENIX, ARIZONA 85029 • (602) 997-6391 • FAX (602) 943-5508

HENRIETTA SPEEDIE, C.E.O.
JAMES A. SPEEDIE, P.E.
GREGG A. CREASER, P.E.
BRETT P. CREASER, P.E.
DONALD L. CORNELISON, P.E.
STEVEN A. GRIESS, P.E.
PRABHAKAR (PETER) RUPAL, P.E.

REPORT ON GEOTECHNICAL INVESTIGATION

DESIGNATION: Maryvale Stadium West Inlet Assignment #5

LOCATION: Grand Canal/57th Ave.-51st Ave. Maryvale, Arizona

CLIENT: Flood Control District of Maricopa County

PROJECT NO: 990658SA

DATE: August 30, 1999

Registered Professional Engineer (Civil)
CERTIFICATE NO. 14388
GREGG ALAN CREASER
Date Signed 8.30.99
ARIZONA U.S.A.

TABLE OF CONTENTS

1.0 INTRODUCTION 1

2.0 GENERAL SITE AND SOIL CONDITIONS 1

2.1 Site Conditions 1
2.2 General Subsurface Conditions 1

3.0 ANALYSIS AND RECOMMENDATIONS 2

3.1 Analysis 2
3.2 Soil Corrosion 3
3.3 Excavation And Temporary Cut Slopes 3
3.4 Fill And Backfill 4

4.0 GENERAL 5

APPENDIX

SPEEDIE
AND ASSOCIATES
GEOTECHNICAL / ENVIRONMENTAL / MATERIAL ENGINEERS
11029 N. 24th AVE., SUITE 805 • PHOENIX, ARIZONA 85029

1.0 INTRODUCTION

This report presents the results of a subsoil investigation carried out at the site of the proposed Maryvale Stadium West Inlet in Maryvale, Arizona.

Preliminary information calls for the construction of a new 48 to 60 inch diameter storm drain to be located along the north bank of the Grand Canal from 57th Avenue to 51st Avenue. The pipe material is not known at this time. The invert of the pipe is not expected to be more than 12 feet below existing grade.

2.0 GENERAL SITE AND SOIL CONDITIONS

2.1 Site Conditions

The storm drain is to be situated on the north side of the Grand Canal, running from Maryvale Stadium, under 55th Avenue, to 57th Avenue. The canal is an earthen canal with built up, unpaved access roads on both the north and south sides. This area is surrounded by residential properties, schools, and parks. Utilities, both underground and overhead, are present.

2.2 General Subsurface Conditions

Subsoil conditions consist mainly of sandy clay, although discontinuous silty sand/sand was encountered in boring B-1 between 4 and 9 feet. Boring B-4 drilled in 55th Avenue revealed a pavement structure made up of 4.5 inches of asphaltic concrete and 18 inches of aggregate base material. The borings were all terminated within the sandy clay unit at depths of 16 feet below existing grade. Borings B-2, B-3, B-5 and B-6, were drilled within the Grand Canal access roadway. The upper 5 to 10 feet is classified as 'possible fill' material. There are no obvious tell-tales to establish its exact vertical extent. The fill may have been produced as part of the excavation of the canal. Standard Penetration Test values generally range from 1 to 25 blows per foot indicating very soft to very stiff conditions within the clay stratum. In some of the borings, the very soft consistency was noted to extend the full boring depth.

No groundwater was encountered during this investigation. Based on visual and tactile observation of the field samples, the soils are described as ranging from dry to wet with the majority being moist to wet. This is mostly likely due to the proximity of and seepage from the unlined Grand Canal.

Laboratory testing indicates in-situ dry densities of the upper soils on the order of 98 to 104 pcf at about 8 to 22 percent moisture at the time of investigation. Liquid limits are in the 26 to 28 percent range with plasticity indices ranging from 6 to 8 percent. The upper clayey soils exhibit volume increase due

to wetting of 2.8 percent when under-compacted at near optimum moisture. Soluble sulfates in the soils are on the order of 0.0057 percent. Field and laboratory resistivities and pH values are as follows:.

Location	Depth (feet)	Field Resistivity (ohm-cm(	Lab Resistivity (ohm-cm)	pH
B-1	4.5	n/m	734	8.0
B-2	9.0	3,062	1,668	8.6
B-3	10.0	2,297	n/m	N/m
B-4	15.0	2,297	934	8.0
B-5	15.0	n/m	1,067	8.3
B-6	10.0	2,680	1,668	8.4

3.0 ANALYSIS AND RECOMMENDATIONS

3.1 Analysis

Excavation for the proposed storm drain are expected to be on the order of 10 to 12 feet deep, terminating within the soft, wet clays. Excavation operations should be relatively straightforward using conventional equipment. Open-cut excavation appears feasible for the alignment depending on proximity to the canal, roadways, sidewalks, utilities, etc. Depending on proximity, shoring, bracing or underpinning may be required to provide structural stability and protect personnel working in the excavation. Allowance should also be made for the presence of unaccounted buried elements and hazards.

The soil conditions encountered in the test borings along the alignment indicate no specific restrictions to any type of piping materials. Cast-in-place pipe is not recommended because of the presence of the soft, wet clays which are expected to be of low strength and may not provide a suitable medium against which to cast.

Bedding should be selected per the requirements of the pipe materials used and the trench loading conditions. Given the soft soil conditions, a minimum thickness of 12 inches of ASTM C 33 Size Number 57 aggregate is recommended for the bottom of the trench to support the pipe.

Soft, wet clays at the invert level may be or become unstable under excavating equipment. Additional time may be required to allow the soils to dry when exposed, or alternative methods such as lime

stabilization or rock fill may be required to stabilize the exposed grade. If any type of structure is anticipate such as junction boxes, manholes etc are expected, this office must be notified to determine the need for special foundations to limit settlement.

Ground water is not expected to be a factor in the design or construction of the storm drain. Depending on time of year and seepage from the adjacent canal, perched water may be encountered within the sand lens (see B-1). Nuisance water should be controllable by means of sumps and pumping. Higher inflows may require more aggressive removal techniques.

3.2 Soil Corrosion

Laboratory and field measured, minimum soil resistivity measurements indicate a severe degree of corrosiveness. Suitable and adequate protection to buried metal pipe and/or increased wall thickness per the American Iron and Steel Institute Handbook of Steel Drainage & Highway Construction Products will be essential for long term performance. Suitable pipe wall thickness and corrosion protection should also be selected per the trench/traffic load and lifetime requirements of the project.

Sulfate attack on buried concrete is considered negligible. Subsurface concrete may use either Type I or II cement, readily available and used in the area.

3.3 Excavation And Temporary Cut Slopes

All excavations must comply with current governmental regulations including the current OSHA Excavation and Trench Safety Standards. Side slopes for open-cut excavation should be cut back at 1.5:1 (horizontal to vertical). The slopes should be protected from erosion due to run-off or long term surcharge at the slope crest. Construction equipment, building materials, excavated soil and vehicular traffic should not be allowed within 10 feet or 1/3 the slope height, whichever is greater, from the top of slope. All cut slopes should be observed by the Soils Engineer during excavation. Adjustments to the recommended slopes may be necessary due to wet zones, loose strata and conditions not observed in the borings. Localized shoring may also be required. Shotcrete or soil stabilizer on the slope face may be useful in preventing erosion due to run-off and/or drying of the slope.

Depending on proximity to the canal, structures, roadways, sidewalks, utilities, etc., shoring, bracing or underpinning may be required to provide structural stability and protect personnel working in the excavation.

3.4 Fill And Backfill

Native soils are considered suitable for use as trench backfill and general fill. This material should be moisture-conditioned, placed in 8-inch lifts and mechanically compacted. Water settling is not recommended.

The soils are in a moist to wet state. These soils may require time to dry before they are replaced and compacted as trench backfill. These soils may also become unstable under excavating equipment. Additional time may be required to allow the soils to dry when exposed, or alternative methods such as lime stabilization or rock fill may be required to stabilize the exposed grade.

If imported common fill for use in site grading is required, it should be examined by a Soils Engineer to ensure that it is of low swell potential and free of organic or otherwise deleterious material. In general, the fill should have 100 percent passing the 3-inch sieve and no more than 60 percent passing the 200 sieve. For the fine fraction (passing the 40 sieve), the liquid limit and plasticity index should not exceed 30 percent and 10 percent, respectively. It should exhibit less than 1.5 percent swell potential when compacted to 95 percent of maximum dry density (ASTM D-698) at a moisture content of 2 percent below optimum, confined under a 100 psf surcharge, and inundated.

Fill should be placed on subgrade which has been properly prepared and approved by a Soils Engineer. Fill must be wetted and thoroughly mixed to achieve optimum moisture content, ±2 percent. Fill should be placed in horizontal lifts of 8-inch thickness (or as dictated by compaction equipment) and compacted to the percent of maximum dry density per ASTM D-698 set forth as follows, as a minimum:

A.	Pavement Subgrade or Fill		95
B.	Utility Trench Backfill		
	1.	More than 2.0' below finish S/G	90
	2.	Within 2.0' of finish S/G	95
C.	Aggregate Base Course		
	1.	Below asphalt paving	100
D.	Landscape Areas		
	1.	Miscellaneous fill	90
	2.	Utility trench - more than 1.0' below F/G	85
	3.	Utility trench - within 1.0' of F/G	90

4.0 GENERAL

The scope of this investigation and report does not include regional considerations such as seismic activity and ground fissures resulting from subsidence due to groundwater withdrawal, nor any considerations of hazardous releases or toxic contamination of any type.

Our analysis of data and the recommendations presented herein are based on the assumption that soil conditions do not vary significantly from those found at specific sample locations. Our work has been performed in accordance with generally accepted engineering principles and practice; this warranty is in lieu of all other warranties expressed or implied.

We recommend that a representative of the Soils Engineer observe and test the earthwork and foundation portions of this project to ensure compliance to project specifications and the field applicability of subsurface conditions which are the basis of the recommendations presented in this report. If any significant changes are made in the scope of work or type of construction that was assumed in this report, we must review such revised conditions to confirm our findings if the conclusions and recommendations presented herein are to apply.

Respectfully submitted,
SPEEDIE & ASSOCIATES, INC.

Keith R. Gravel, E.I.T.

Prabhakar (Peter) Rupal, P.E.

Registered Professional Engineer (Civil)
CERTIFICATE NO. 14388
GREGG ALAN CREASER
Date Signed 8-30-99
ARIZONA, U.S.A.

Gregg A. Creaser, P.E.

APPENDIX

FIELD AND LABORATORY INVESTIGATION

SOIL BORING LOCATION PLANS

SOIL LEGEND

LOG OF TEST BORINGS

TABULATION OF TEST DATA

MOISTURE-DENSITY RELATIONS

SWELL TEST DATA

SOLUBLE SULFATE RESULTS

FIELD AND LABORATORY INVESTIGATION

On August 6, 1999, soil test borings were drilled at the approximate locations shown on the attached Soil Boring Location Plan. All exploration work was carried out under the full-time supervision of our staff engineer, who recorded subsurface conditions and obtained samples for laboratory testing. The soil borings were advanced with a truck-mounted CME-55 drill rig utilizing 7-inch diameter hollow stem flight augers. Detailed information regarding the borings and samples obtained can be found on an individual Log of Test Boring prepared for each drilling location

Laboratory testing consisted of moisture content, dry density, grain-size distribution, plasticity (Atterberg Limits) tests, soluble sulfate, pH and resistivity measurements for classification and design parameters. Remolded swell tests were performed on samples compacted to densities and moisture contents expected during construction. All field and laboratory data is presented in this appendix.

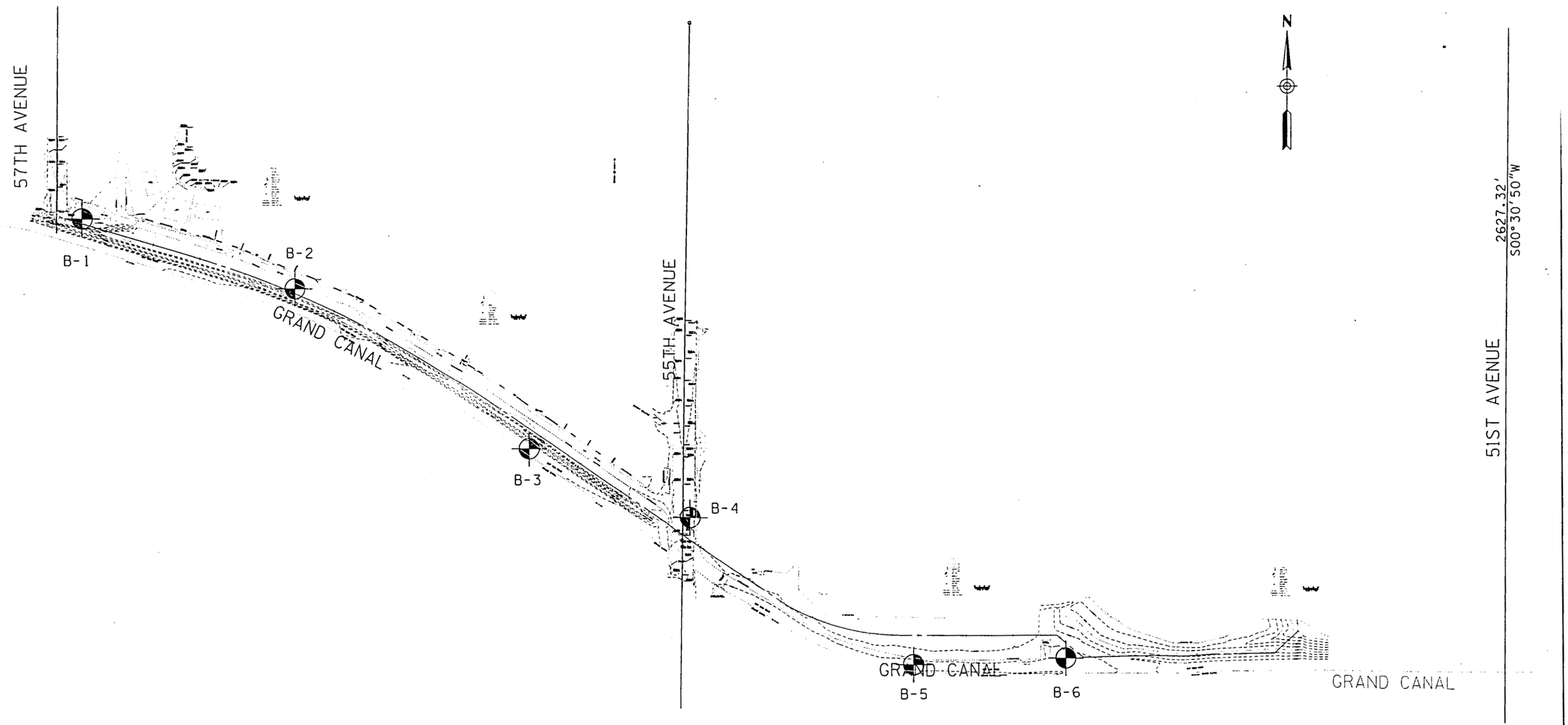

- APPROXIMATE SOIL BORING LOCATION

SOIL BORING LOCATION PLAN

MARYVALE STADIUM WEST INLET
GRAND CANAL/57th AVE.-51st AVE.
MARYVALE, ARIZONA

SPEEDIE AND ASSOCIATES
GEOTECHNICAL/ENVIRONMENTAL/MATERIALS ENGINEERS
11029 N. 24th AVE., SUITE 805 PHOENIX, ARIZONA 85029

SPEEDIE AND ASSOCIATES
GEOTECHNICAL / ENVIRONMENTAL / MATERIALS ENGINEERS
11029 N. 24th AVE., SUITE 805 • PHOENIX, ARIZONA 85029 • (602) 997-6391 • FAX (602) 943-5508

HENRIETTA SPEEDIE, C.E.O.
JAMES A. SPEEDIE, P.E.
GREGG A. CREASER, P.E.
BRETT P. CREASER, P.E.
DONALD L. CORNELISON, P.E.
STEVEN A. GRIESS, P.E.
PRABHAKAR (PETER) RUPAL, P.E.

September 30, 1999

Mr. Warren Rosebraugh
Flood Control District of Maricopa County
2801 W. Durango Street
Phoenix, AZ 85009

RE: Project No. 990658SA
Maryvale Stadium West Inlet
Assignment #5
Grand Canal/57th Ave-51st Ave
Maryvale, AZ
Addendum No. 1

Dear Warren:

It is understood that inlet/manhole structures are located along the pipeline at STA 7+15 (7 feet deep) , 10+55 (9.5 feet deep) and 20+02 (13 feet deep). These elements weigh about 53,000 pounds and occupy a volume of 13 cubic yards. The dimension of the base is 10 foot by 10 foot. This would imply a bearing pressure of 530 psf.

The subsoils at the anticipated invert depths at STA 7+15 and 20+02 are considered suitable for support of the proposed structures.

Subsoils at the proposed invert level at STA 10+55 are very soft and wet and are not suitable for support without remedial action. This may be in the form of widening of the structure base to reduce bearing pressure. An alternative may be to over-excavate to bearing soils to a depth of 4 feet below the structure base and re-place as engineered fill. Over-excavation should extend laterally 4 feet beyond the edges of the structure base. The resulting excavation will have to be widened as necessary to allow access for suitable compaction equipment. The owner should assess the feasibility of this option given the site restrictions.

Soft, wet clays at the invert level may be or become unstable under excavating equipment. Additional time may be required to allow the soils to dry when exposed, or alternative methods such as lime stabilization or rock fill may be required to stabilize the exposed grade.

Consideration should be given, if at all possible, to some type of flexible connections at the pipe/manhole connection, particularly at STA 10+55.

The following bearing capacities are available at each location. Settlement estimates are also provided. Within the clays, settlement will likely continue after construction is complete. Without additional sampling and testing, the time required for consolidation to take place is not known. A favorable factor is that the weight of soil to be removed is greater than the weight of the drop structure implying that some consolidation of the clays may have taken place.

Structure STA	Reference Boring	Depth (feet)	Bearing Medium	Bearing Capacity (psf)	Estimated Immediate Settlement (inches)
7+15	B-1	7	Medium Dense Sand	1,000	0.5-1.0
10+55	B-2	9.5	Very Soft Sandy Clay	150	2.0-3.0
			4' Engineered Fill	1,000	0.5-1.0
20+02	B-4	13	Stiff Sandy Clay	1,000	0.5-1.0

This addendum should be attached to the original report and made a part thereof.

Respectfully Submitted,
SPEEDIE & ASSOCIATES, INC.

Registered Professional Engineer (Civil) CERTIFICATE NO. 30524 PRABHAKAR RUPAL Date Signed 9-30-99 ARIZONA, U.S.A.

Prabhakar (Peter) Rupal, P.E.

SPEEDIE AND ASSOCIATES
GEOTECHNICAL / ENVIRONMENTAL / MATERIAL ENGINEERS
11029 N. 24th AVE., SUITE 805 • PHOENIX, ARIZONA 85029

SOIL LEGEND

SAMPLE DESIGNATION	DESCRIPTION	
AS	Auger Sample–	A grab sample taken directly from auger flights.
BS	Large Bulk Sample–	A grab sample taken directly from auger flights.
S	Spoon Sample–	Standard Penetration Test (ASTM D–1586) Driving a 2.0 inch outside diameter split spoon sampler into undisturbed soil for three successive 6–inch increments by means of a 140 lb. weight free falling through a distance of 30 inches. The cumulative number of blows for the final 12 inches of penetration is the Standard Penetration Resistance (N).
RS	Ring Sample–	Driving a 3.0 inch outside diameter spoon equipped with a series of 2.42 inside diameter, 1 inch long brass rings, into undisturbed soil for one 12 inch increment by the same means of the Spoon Sample. The blows required for the 12 inches of penetration are recorded.
LS	Liner Sample–	Standard Penetration Test driving a 2.0 inch outside diameter split spoon equipped with two 3 inch long, 3/8 inch inside diameter brass liners, separated by a 1 inch long spacer, into undisturbed soil by the same means of the spoon sample.
ST	Shelby Tube–	A 2.0 inch outside diameter thin–walled tube continuously pushed into undisturbed soil by a rapid motion, without impact or twisting (ASTM D–1587).
–	Continuous Penetration Resistance–	Driving a 2.0 inch outside diameter "Bullnose Penetrometer" continuously into undisturbed soil by the same means of the spoon sample. The blows for each successive 12 inch increment are recorded.

CONSISTENCY			RELATIVE DENSITY	
Clays & Silts	Blows/Foot *	Strength †	Sands & Gravels	Blows/Foot *
Very Soft	0–2	0–0.25	Very Loose	0–4
Soft	2–4	0.25–0.5	Loose	5–10
Firm	5–8	0.5–1.0	Medium Dense	11–30
Stiff	9–15	1–2	Dense	31–50
Very Stiff	16–30	2–4	Very Dense	> 50
Hard	> 30	> 4		

* Number of blows of a 140 lb hammer free falling 30 inches to drive a 2 inch O.D. split spoon sampler (ASTM D–1586)

† Unconfined compressive strength in tons/sq ft. Read from a pocket penetrometer.

MAJOR DIVISIONS			GRAPH SYMBOL	LETTER SYMBOL	TYPICAL DESCRIPTIONS
Coarse Grained Soils More than 50% of material is larger than #200 sieve size	Gravel and Gravelly Soils 50% Coarse Fraction is > #4 Sieve Size	Clean Gravels		GW	Well Graded Gravels
				GP	Poorly Graded Gravels
		Gravels w/ Fines		GM	Silty Gravels
				GC	Clayey Gravels
	Sand and Sandy Soils 50% Coarse Fraction is < #4 Sieve Size	Clean Sands		SW	Well Graded Sands
				SP	Poorly Graded Sands
		Sands w/ Fines		SM	Silty Sand
				SC	Clayey Sand
Fine Grained Soils More than 50% of material is smaller than #200 sieve size	Silts and Clays Liquid Limit is less than 50%			ML	Inorganic Silts, Low P.I.
				CL	Inorganic Clays, Low P.I.
				OL	Organic Silts, High P.I.
	Silts and Clays Liquid Limit is greater than 50%			MH	Inorganic Silts, High P.I.
				CH	Inorganic Clays, High P.I.
				OH	Organic Clays, High P.I.
Highly Organic Soils				PT	Peat and Humus, Highly Organic

MATERIAL SIZE	PARTICLE SIZE			
	Lower Limit		Upper Limit	
	mm	Sieve Size †	mm	Sieve Size †
Sands				
Fine	.075	#200	0.42	#40
Medium	0.42	#40	2.00	#10
Coarse	2.00	#10	4.76	#4
Gravels				
Fine	4.76	#4	191	3/4" ∘
Coarse	191	3/4" ∘	762	3" ∘
Cobbles	762	3" ∘	304.8	12" ∘
Boulders	304.8	12" ∘	914.4	36" ∘

† U.S. Standard ∘ Clear Square Openings

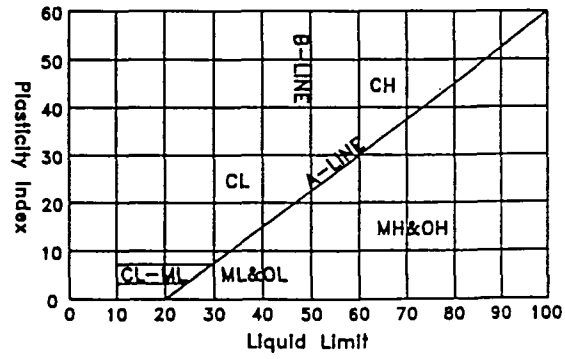

Rig Type: CME-55
Boring Type: Hollow Stem Auger
Surface Elevation: N/A
Sta. 5+40

Depth (feet)	Visual Classification	Sample Number	Depth of Sample	Natural Water Content (%)	In-place Dry Density (P.C.F.)	Penetration Resistance Blows per Foot (0 – 25 – 50)
0	Firm Brown SANDY CLAY (CL-Dry)	S-1	2.5	--	--	
4.0		BS-2	4.5	--	--	
5	Loose Brown SILTY FINE SAND (SM/SP-Dry)	RS-3	5.5	8.0	103.2	
6.5	Brown WELL GRADED SAND (SW-Moist)					
9.0						
10	Stiff to Very Stiff Brown SANDY SILTY CLAY (CL/ML-Moist)	S-4	11.0	--	--	
15						
16.0	End of Boring	S-5	16.0	--	--	
20						

Boring Date: 8-6-99
Field Engineer/Technician: K. Gravel
Driller: B. Freeman
Contractor: Heber Mining Co.

Water Level

Depth	Hour	Date
Dry		

SPEEDIE AND ASSOCIATES

Log of Test Boring Number: B- 1

Maryvale Stadium West Inlet

Grand Canal/57th-51st Ave.

Maryvale, Arizona

Project No.: 990658SA

Rig Type: CME-55
Boring Type: Hollow Stem Auger
Surface Elevation: N/A
Sta. 10+10

Depth (feet)	Visual Classification	Sample Number	Depth of Sample	Natural Water Content (%)	In-place Dry Density (P.C.F.)	Penetration Resistance Blows per Foot (0 – 25 – 50)
0	Firm Brown SANDY CLAY (CL-Moist)	RS-1	2.0	11.0	101.8	
4.0						
5	Very Soft to Soft Brown SANDY CLAY (CL-Moist to Wet)	S-2	6.0	--	--	2/18"
		BS-3	9.0	--	--	
10		S-4	11.0	--	--	2/18"
15						
16.0	End of Boring	S-5	16.0	--	--	
20						

Boring Date: 8-6-99
Field Engineer/Technician: K. Gravel
Driller: B. Freeman
Contractor: Heber Mining Co.

Water Level

Depth	Hour	Date
Dry		

SPEEDIE AND ASSOCIATES

Log of Test Boring Number: B- 2

Maryvale Stadium West Inlet

Grand Canal/57th-51st Ave.

Maryvale, Arizona

Project No.: 990658SA

Rig Type: CME-55
Boring Type: Hollow Stem Auger
Surface Elevation: N/A
Sta. 16+00

Depth (feet)	Visual Classification	Sample Number	Depth of Sample	Natural Water Content (%)	In-place Dry Density (P.C.F.)	Penetration Resistance Blows per Foot (0 – 25 – 50)
0	Stiff Brown SANDY CLAY (CL-Dry to Moist)	RS-1	2.0	8.3	105.5	
4.0						
5	Very Soft Brown SANDY CLAY (CL-Moist to Wet)	S-2	6.0	--	--	
10		S-3	11.0	--	--	2/18"
15						
16.0	End of Boring	S-4	16.0	--	--	2/18"
20						

Boring Date: 8-6-99
Field Engineer/Technician: K. Gravel
Driller: B. Freeman
Contractor: Heber Mining Co.

Water Level

Depth	Hour	Date
Dry		

SPEEDIE AND ASSOCIATES

Log of Test Boring Number: B- 3

Maryvale Stadium West Inlet

Grand Canal/57th-51st Ave.

Maryvale, Arizona

Project No.: 990658SA

Rig Type: CME-55
Boring Type: Hollow Stem Auger
Surface Elevation: N/A
Sta. 19+60

Depth (feet)	Visual Classification	Sample Number	Depth of Sample	Natural Water Content (%)	In-place Dry Density (P.C.F.)	Penetration Resistance Blows per Foot (0 – 25 – 50)
0	4" to 4.5" Asphalt 18" ABC					
1.8						
	Firm Brown SANDY CLAY (CL-Moist)					
4.0						
5		RS-1	5.5	11.4	98.0	
7.0						
	Soft Brown SANDY CLAY (CL-Moist)					
10		S-2	11.0	--	--	
13.0						
	Very Stiff Brown SANDY CLAY (CL-Moist)	BS-4	15.0	--	--	
15						
16.0		S-3	16.0	--	--	
	End of Boring					
20						

Boring Date: 8-6-99
Field Engineer/Technician: K. Gravel
Driller: B. Freeman
Contractor: Heber Mining Co.

Water Level

Depth	Hour	Date
Dry		

SPEEDIE AND ASSOCIATES

Log of Test Boring Number: B- 4

Maryvale Stadium West Inlet

Grand Canal/57th-51st Ave.

Maryvale, Arizona

Project No.: 990658SA

Rig Type: CME-55
Boring Type: Hollow Stem Auger
Surface Elevation: N/A
Sta. 25+00

Depth (feet)	Visual Classification	Sample Number	Depth of Sample	Natural Water Content (%)	In-place Dry Density (P.C.F.)	Penetration Resistance Blows per Foot (0–25–50)
0	Firm Brown SANDY CLAY (CL-Dry to Moist) with Small Clam Shells 2" Layer of Fine Sand	S-1	2.5	--	--	
3.0	Firm Brown SANDY CLAY (CL-Moist)	RS-2	5.5	22.2	99.7	
8.0	Soft Brown SANDY CLAY (CL-Moist to Wet)	S-3	11.0	--	--	
13.0	Firm Brown SANDY CLAY (CL-Moist)	BS-4	15.0	--	--	
16.0	End of Boring	S-5	16.0	--	--	

Boring Date: 8-6-99
Field Engineer/Technician: K. Gravel
Driller: B. Freeman
Contractor: Heber Mining Co.

Water Level

Depth	Hour	Date
Dry		

SPEEDIE AND ASSOCIATES

Log of Test Boring Number: B- 5

Maryvale Stadium West Inlet

Grand Canal/57th-51st Ave.

Maryvale, Arizona

Project No.: 990658SA

Rig Type: CME-55
Boring Type: Hollow Stem Auger
Surface Elevation: N/A
Sta. 28+15

Depth (feet)	Visual Classification	Sample Number	Depth of Sample	Natural Water Content (%)	In-place Dry Density (P.C.F.)	Penetration Resistance Blows per Foot (0–25–50)
0	Very Stiff Brown SANDY CLAY (CL-Dry)	RS-1	2.0	8.6	103.7	
3.0						
5	Firm Brown SANDY SILTY CLAY (CL/ML-Moist)	S-2	6.0	--	--	
10		BS-5	10.0	--	--	
		S-3	11.0	--	--	
12.0	Stiff Brown SANDY CLAY (CL-Moist)					
15						
16.0	End of Boring	S-4	16.0	--	--	
20						

Boring Date: 8-6-99
Field Engineer/Technician: K. Gravel
Driller: B. Freeman
Contractor: Heber Mining Co.

Water Level

Depth	Hour	Date
Dry		

SPEEDIE AND ASSOCIATES

Log of Test Boring Number: B- 6

Maryvale Stadium West Inlet

Grand Canal/57th-51st Ave.

Maryvale, Arizona

Project No.: 990658SA

TABULATION OF TEST DATA

SOIL BORING or TEST PIT NUMBER	SAMPLE NUMBER	SAMPLE TYPE	DEPTH OF SAMPLE TIP	NATURAL WATER CONTENT (Percent of Dry Weight)	IN-PLACE DRY DENSITY (Pounds Per Cubic Foot)	PARTICLE SIZE DISTRIBUTION (Percent Finer)					ATTERBERG LIMITS			pH	RESISTIVITY (Ohm-Centimeters)	UNIFIED SOIL CLASSIFICATION	SPECIMEN DESCRIPTION
						#200 SIEVE	#40 SIEVE	#10 SIEVE	#4 SIEVE	3" SIEVE	LIQUID LIMIT	PLASTIC LIMIT	PLASTICITY INDEX				
B- 1	BS-2	BS	4.5	--	--	71.6	89	95	97	100	26	20	6	8.0	734	CL-ML	SILTY CLAY with SAND
B- 1	RS-3	RS	5.5	8.0	103.2									--	--		
B- 2	RS-1	RS	2.0	11.0	101.8									--	--		
B- 2	BS-3	BS	9.0	--	--									8.6	1668		
B- 3	RS-1	RS	2.0	8.3	105.5									--	--		
B- 4	RS-1	RS	5.5	11.4	98.0									--	--		
B- 4	BS-4	BS	15.0	--	--									8.0	934		
B- 5	RS-2	RS	5.5	22.2	99.7									--	--		
B- 5	BS-4	BS	15.0	--	--	96.3	98	99	99	100	28	20	8	8.3	1067	CL	LEAN CLAY
B- 6	RS-1	RS	2.0	8.6	103.7									--	--		
B- 6	BS-5	BS	10.0	--	--									8.4	1668		

Sieve analysis results do not include material greater than 3". Refer to the actual boring logs for the possibility of cobble and boulder sized materials.

Maryvale Stadium West Inlet
Grand Canal/57th-51st Ave.
Maryvale, Arizona
Project No. 990658SA

SPEEDIE AND ASSOCIATES

MOISTURE-DENSITY RELATIONS

PROJECT: Maryvale Stadium West Inlet — PROJECT NO.: 990658SA

LOCATION: Grand Canal/57th-51st Ave. — DATE: 8/6/99

BORING NO.: B- 1 — SAMPLE NO.: BS-2' — SAMPLE DEPTH: 4.50

METHOD OF COMPACTION: ASTM D698A

LIQUID LIMIT: 26 — PLASTIC LIMIT: 20 — PLASTICITY INDEX: 6

CLASSIFICATION: CL-ML — ASTM SOIL DESCRIPTION: SILTY CLAY with SAND

MAXIMUM DRY DENSITY: 114.7 PCF — OPTIMUM MOISTURE CONTENT: 14.0 %

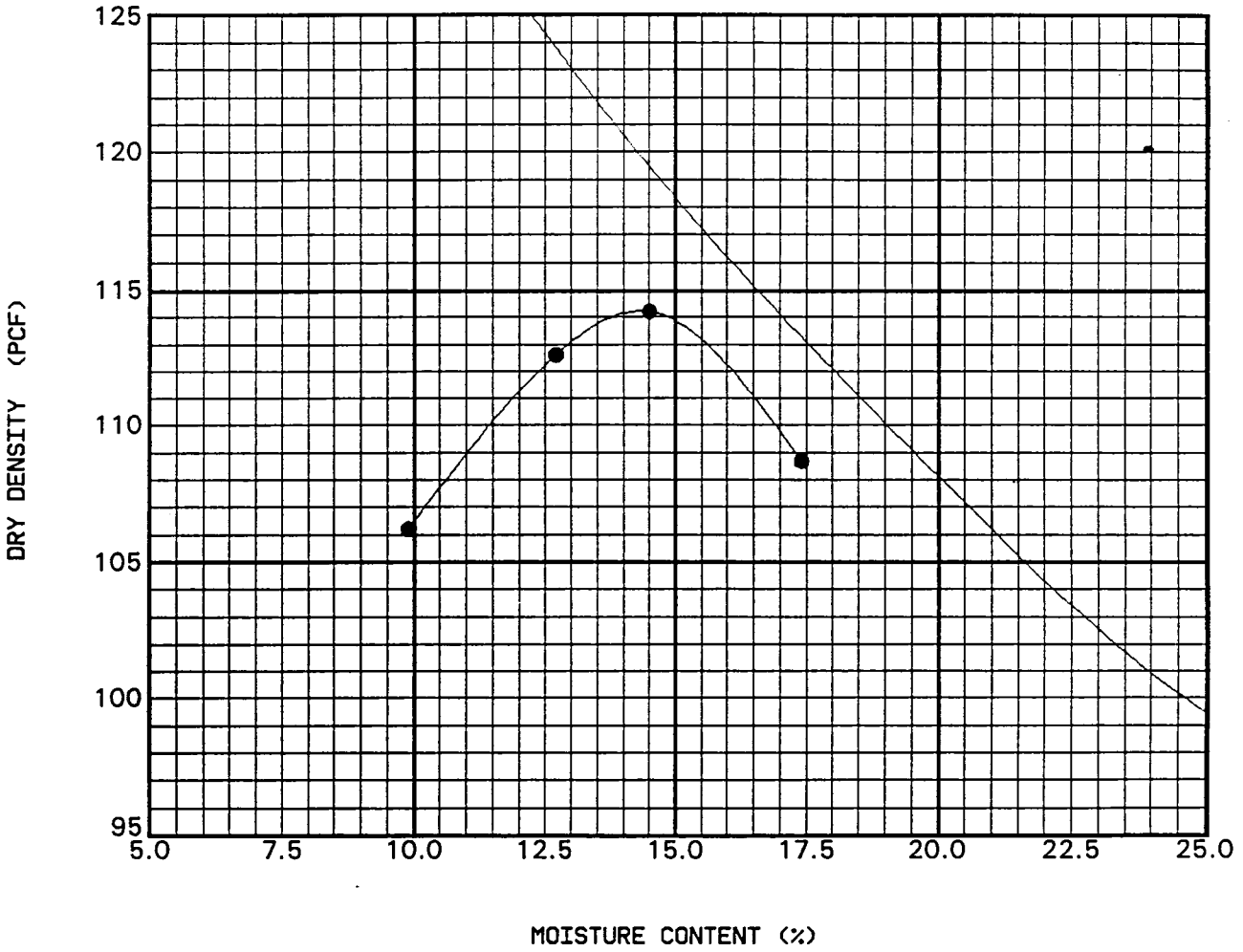

SPEEDIE AND ASSOCIATES

SWELL TEST DATA

BORING or TEST PIT No.	SAMPLE DEPTH, ft	REMOLDED DRY DENSITY (pcf)	INITIAL MOISTURE (%)	PERCENT COMPACTION	INITIAL DEGREE of SATURATION (%)	FINAL DEGREE of SATURATION (%)	TOTAL SWELL (%)
B- 1 BS-2	4.5	108.8	13.1	92.1	66.7	96.8	2.8

PERCENT COMPACTION BASED ON A MAXIMUM DRY DENSITY OF 114.7 pcf @ 14.0 % MOISTURE

Maryvale Stadium West Inlet
Grand Canal/57th-51st Ave.
Maryvale, Arizona
Project No. 990658SA

SPEEDIE AND ASSOCIATES

Laboratory Consultants, Ltd.

Speedie & Associates
Accounts Payable
11029 N. 24th Avenue
Phoenix, Az 85029

Sample Number: 991381-02
Date Reported: 8/16/99
Date Received: 8/16/99
Project Number: 990658SA

Analyses Results

Client Sample ID	Analysis	Method	Result	Units
59767	SOLUBLE SALTS	ENG. SOIL	0.042	%
59767	SULFATE	CA417	0.0057	%

Approved By: Dadang

There were no problems with the analyses and all data met laboratory quality assurance specifications.

Laboratory Consultants, Ltd.

Speedie & Associates
Accounts Payable
11029 N. 24th Avenue
Phoenix, Az 85029

Sample Number: 991381-01
Date Reported: 8/16/99
Date Received: 8/16/99
Project Number: 990658SA

Analyses Results

Client Sample ID	Analysis	Method	Result	Units
59753	SOLUBLE SALTS	ENG. SOIL	0.055	%
59753	SULFATE	CA417	0.0056	%

Approved By: Dadang

There were no problems with the analyses and all data met laboratory quality assurance specifications.

APPENDIX IV

CONSTRUCTION COST ESTIMATE

BIDDING SCHEDULE

ENGINEER'S ESTIMATE

PROJECT: MARYVALE STORM DRAIN

CONTRACT 2000C003

ITEM NO.	DESCRIPTION	UNIT	PROJECT QUANTITY	UNIT COST NUMBERS	EXTENDED AMOUNT
105 - 1	Partnering	LS	1	$ 5,000.00	$ 5,000.00
107 - 1	NPDES / SWPPP Permits	LS	1	$ 5,000.00	$ 5,000.00
107 - 2	Public Information and Notification Allowance	LS	1	$ 10,000.00	$ 10,000.00
107 - 3	Project Signs Allowance	LS	1	$ 2,000.00	$ 2,000.00
202 - 1	Mobilization	LS	1	$ 30,000.00	$ 30,000.00
336 - 1	Pavement Replacement Type A (4"AC/8"ABC)	SY	182	$ 24.00	$ 4,368.00
336 - 2	Pavement Replacement Type B (4"AC/10"ABC)	SY	53	$ 32.00	$ 1,696.00
340 - 1	Curb and Gutter, MAG DET 220, Type A	LF	69	$ 10.00	$ 690.00
340 - 2	Sidewalk, MAG DET 230	SF	280	$ 2.50	$ 700.00
340 - 3	Concrete Spillway	SF	166	$ 4.50	$ 747.00
350 - 1	Removal of Existing Structures	LS	1	$ 6,500.00	$ 6,500.00
401 - 1	Traffic Control Devices	LS	1	$ 10,000.00	$ 10,000.00
401 - 2	Off Duty Police Officer	MH	50	$ 25.00	$ 1,250.00
401 - 3	MAG DET 130 TYPE B Barrier (Modified)	LS	1	$ 2,750.00	$ 2,750.00
401 - 4	Removable Bollard Type Barrier, Special Detail	LS	1	$1,800.00	$ 1,800.00
505 - 1	Special Junction Structure, Detail D6	EA	1	$ 8,000.00	$ 8,000.00
505 - 2	Special Junction Structure, Detail D7	EA	1	$ 8,000.00	$ 8,000.00
505 - 3	Concrete Catch Basin COP Det P 1569-1, M-2, L=10	EA	2	$ 4,025.00	$ 8,050.00
505 - 4	Concrete Catch Basin Mod COP Det P 1571, Detail D4	EA	1	$ 5,175.00	$ 5,175.00
505 - 5	Concrete Catch Basin Mod COP Det P 1570, Detail D3	EA	1	$ 4,500.00	$ 4,500.00
505 - 6	Concrete Catch Basin Apron	SF	186	$ 10.00	$ 1,860.00
515 - 1	60" Flap Gate	EA	1	$ 7,000.00	$ 7,000.00
610 - 1	8" Ductile Iron Water Pipe and Fittings	LF	20	$ 55.00	$ 1,100.00
610 - 2	Relocate Water Meter	EA	1	$ 230.00	$ 230.00
610 - 3	Vertically Relocate 8" Water, MAG Det 370	LF	30	$ 55.00	$ 1,650.00
615 - 1	10" Ductile Iron Sewer Pipe and Fittings	LF	71	$ 65.00	$ 4,615.00
618 - 1	60" CLASS III RGRCP/ 66" CLCMP	LF	839	$ 190.00	$ 159,410.00
618 - 2	54" CLASS III RGRCP/ 60" CLCMP	LF	949	$ 180.00	$ 170,820.00
618 - 3	54" CLASS III RGRCP	LF	340	$ 170.00	$ 57,800.00
618 - 4	48" CLASS III RGRCP	LF	225	$ 155.00	$ 34,875.00
618 - 5	36" CLASS III RGRCP	LF	109	$ 145.00	$ 15,805.00
618 - 6	30" CLASS III RGRCP	LF	164	$ 120.00	$ 19,680.00
618 - 7	24" Pipe Plug, MAG Det 427	EA	1	$ 500.00	$ 500.00
618 - 8	Prefab 40 Degree Bend, 60 Inch Pipe	EA	2	$ 1,000.00	$ 2,000.00
618 - 9	Prefab 75 Degree Bend, 48 Inch Pipe	EA	1	$ 1,000.00	$ 1,000.00
618 - 10	Prefab 45 Degree Bend, 36 Inch Pipe	EA	2	$ 1,000.00	$ 2,000.00
618 - 11	Prefab 25 Degree Bend, 30 Inch Pipe	EA	1	$ 1,000.00	$ 1,000.00
618 - 12	Concrete Pipe Collar MAG DET 505 (24" & larger)	EA	1	$ 1,150.00	$ 1,150.00
625 - 1	Storm Drain Manhole MAG DET 521, 522 & 424	EA	4	$ 7,000.00	$ 28,000.00
792 - 1	Dust Palliative (contingency item)	AC	2	$ 1,000.00	$ 2,000.00

Total = $ 628,721.00

APPENDIX V

COORDINATE GEOMETRY

```
whitton
  POINT     4      N    905205.1000,  E    420921.6447

FIT CURVE  1 2 3 10 11 12 2000
  POINT    10      N    905974.8104,  E    419604.7554
  POINT    11      N    904057.0908,  E    419036.9953
  POINT    12      N    905781.8844,  E    420049.4612

2 3 4 13 14 37 1100
  POINT    13      N    905716.8145,  E    420160.3113
  POINT    14      N    904768.1781,  E    419603.4551
  POINT    37      N    905679.6455,  E    420219.2693

3 4 5 34 35 36 -500
  POINT    34      N    905290.7966,  E    420794.8050
  POINT    35      N    905705.1000,  E    421074.7205
  POINT    36      N    905205.1000,  E    421074.7205

STORE FIGURE  1 (1 2 3 4 5 6 7 8) *
     FIGURE      1        1 2 3 4 5 6 7 8

STORE FIGURE  2 (1 10 C 11 R 12 13 C 14 R 37 34 C 35 L 36 5 6 7 8 )
     FIGURE      2        1 10 C 11 R 12 13 C 14 R 37 34 C 35 L 36 5 6 7 8

PLOT LINES  2

DESCRIBE FIGURE BEARINGS  2

 POINT              BEARING         DISTANCE          NORTH            EAST
                                                   COORDINATE       COORDINATE
 ~~~~~  ~~~~~~~~~~~~~~~~~~  ~~~~~~~~~~~~~~~  ~~~~~~~~~~~~~~  ~~~~~~~~~~~~~~
     1                                          906056.6400     419328.3600
          S 73 30 29.103 E        288.2543
    10                                          905974.8104     419604.7554
          S 16 29 30.897 W       2000.0000(RADIAL)
    11                         CURVE CENTER     904057.0908     419036.9953
          N 30 24 47.630 E       2000.0000(RADIAL)
    12                                          905781.8844     420049.4612
          S 59 35 12.370 E        128.5373
    13                                          905716.8145     420160.3113
          S 30 24 47.630 W       1100.0000(RADIAL)
    14                         CURVE CENTER     904768.1781     419603.4551
          N 34 02 38.830 E       1100.0000(RADIAL)
    37                                          905679.6455     420219.2693
          S 55 57 21.170 E        694.5824
    34                                          905290.7966     420794.8050
          N 34 02 38.830 E        500.0000(RADIAL)
    35                         CURVE CENTER     905705.1000     421074.7205
          S 00 00 00.000 E        500.0000(RADIAL)
    36                                          905205.1000     421074.7205
```

whitton

	S 90 00 00.000 E	327.9195	
5			905205.1000 421402.6400
	S 50 30 51.041 E	72.0411	
6			905159.2900 421458.2400
	N 38 28 44.631 E	396.3496	
7			905169.8100 421854.4500
	N 46 23 17.152 E	67.4283	
8			905216.3200 421903.2700

```
CIRCULAR CURVE        10    11    12 R
CENTRAL ANGLE =        13 55 16.734
CHORD DIRECTION =    S 66 32 50.737 E
RADIUS =                   2000.0000
LENGTH =                    485.9456
TANGENT =                   244.1752
CHORD =                     484.7511
EXTERNAL =                   14.8503
MIDDLE ORDINATE =            14.7408

CIRCULAR CURVE        13    14    37 R
CENTRAL ANGLE =         3 37 51.199
CHORD DIRECTION =    S 57 46 16.770 E
RADIUS =                   1100.0000
LENGTH =                     69.7081
TANGENT =                    34.8657
CHORD =                      69.6964
EXTERNAL =                     .5524
MIDDLE ORDINATE =              .5521

CIRCULAR CURVE        34    35    36 L
CENTRAL ANGLE =        34 02 38.830
CHORD DIRECTION =    S 72 58 40.585 E
RADIUS =                    500.0000
LENGTH =                    297.0910
TANGENT =                   153.0759
CHORD =                     292.7399
EXTERNAL =                   22.9075
MIDDLE ORDINATE =            21.9039


LINE TYPE  1

START PLOTTER
*** END OF BATCH INPUT HAS BEEN REACHED ***
    NUMBER OF LINES IN BATCH INPUT IS     26
** PRINTER HAS BEEN TURNED OFF
```

```
whitton
STATIONS AND OFFSETS  2 1 500 (16 17)
   POINT      16  OFFSET =      10.4948, STATION =   1962.1845
                  LOCAL TANGENT    NORTH AZIMUTH  124 02 38.830
   POINT      17  OFFSET =      20.5350, STATION =   1968.7384
                  LOCAL TANGENT    NORTH AZIMUTH  124 02 38.830

2 1 500 2
   POINT       1  OFFSET =        .0000, STATION =    500.0000
                  LOCAL TANGENT    NORTH AZIMUTH  106 29 30.897
   POINT      10  OFFSET =        .0000, STATION =    788.2543
                  LOCAL TANGENT    NORTH AZIMUTH  106 29 30.897
   POINT      11  OFFSET =   2000.0000, STATION =    788.2543
                  LOCAL TANGENT    NORTH AZIMUTH  106 29 30.897
   POINT      12  OFFSET =        .0000, STATION =   1274.1998
                  LOCAL TANGENT    NORTH AZIMUTH  120 24 47.630
   POINT      13  OFFSET =        .0000, STATION =   1402.7371
                  LOCAL TANGENT    NORTH AZIMUTH  120 24 47.630
   POINT      14  OFFSET =   1100.0000, STATION =   1531.2744
                  LOCAL TANGENT    NORTH AZIMUTH  124 02 38.830
   POINT      37  OFFSET =        .0000, STATION =   1472.4452
                  LOCAL TANGENT    NORTH AZIMUTH  124 02 38.830
   POINT      34  OFFSET =        .0000, STATION =   2167.0276
                  LOCAL TANGENT    NORTH AZIMUTH  124 02 38.830
   POINT      35  OFFSET =   -500.0000, STATION =   2167.0276
                  LOCAL TANGENT    NORTH AZIMUTH  124 02 38.830
   POINT      36  OFFSET =        .0000, STATION =   2464.1186
                  LOCAL TANGENT    NORTH AZIMUTH   90 00 00.000
   POINT       5  OFFSET =        .0000, STATION =   2792.0380
                  LOCAL TANGENT    NORTH AZIMUTH   90 00 00.000
   POINT       6  OFFSET =        .0000, STATION =   2864.0791
                  LOCAL TANGENT    NORTH AZIMUTH  129 29 08.959
   POINT       7  OFFSET =        .0000, STATION =   3260.4287
                  LOCAL TANGENT    NORTH AZIMUTH   88 28 44.631
   POINT       8  OFFSET =        .0000, STATION =   3327.8570
                  LOCAL TANGENT    NORTH AZIMUTH   46 23 17.152

PRINTER OFF
** PRINTER HAS BEEN TURNED OFF
```

APPENDIX VI

HALF SIZED DESIGN PLANS

FLOOD CONTROL DISTRICT OF MARICOPA COUNTY

IN COOPERATION WITH THE CITY OF PHOENIX
PLANS FOR THE CONSTRUCTION OF
MARYVALE STADIUM WEST INLET STORM DRAIN
51ST AVENUE TO 57TH AVENUE
FCD PROJECT CONTROL NO. 6200431
FCD CONTRACT NO. 2000C003

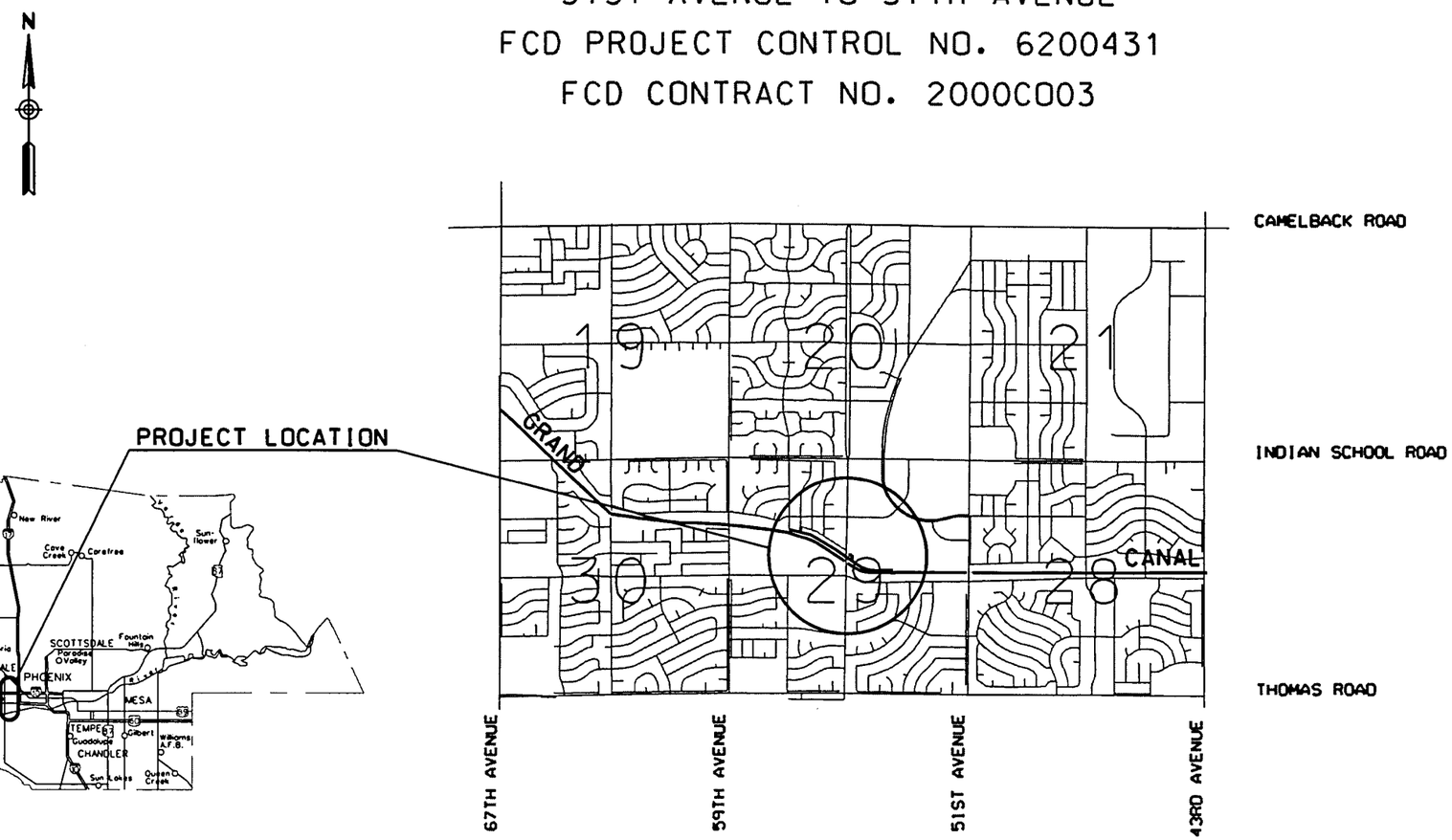

VICINITY MAP
Not to Scale

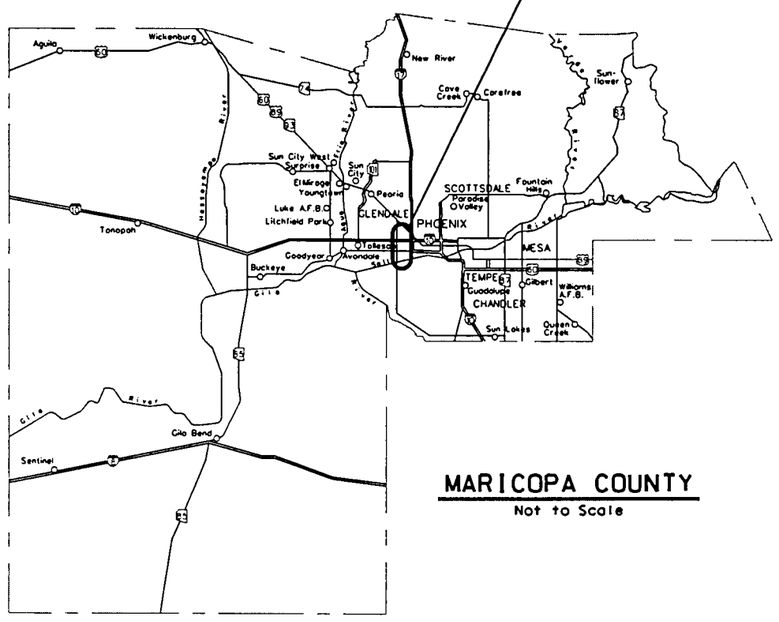

MARICOPA COUNTY
Not to Scale

CITY OF PHOENIX
STREET TRANSPORTATION DEPARTMENT

DATE

FLOOD CONTROL DISTRICT OF MARICOPA COUNTY

ISSUED FOR PUBLIC BIDDING BY:

CHIEF ENGINEER AND
GENERAL MANAGER

BOARD OF DIRECTORS OF
THE FLOOD CONTROL DISTRICT

ANDY KUNASEK - CHAIRMAN

DISTRICT 1	FULTON BROCK
DISTRICT 2	DON STAPLEY
DISTRICT 3	ANDY KUNASEK
DISTRICT 4	JAN BREWER
DISTRICT 5	MARY ROSE WILCOX

LEGEND

- BENCHMARK
- EXIST. SURVEY MONUMENT - BC FLUSH
- EXIST. SURVEY MONUMENT - BC IN HH
- EXIST. & PROPOSED COMBINED CURB & GUTTER - MAG DET. 220 TYPE "A"
- EXIST. CONCRETE SIDEWALK - COP STD. DET. P-1230
- EXISTING DITCH
- IRR — EXISTING IRRIGATION LINE (NOTE - PRIVATE, SALT RIVER OR R.I.D.)
- EXISTING IRRIGATION STRUCTURE
- EXISTING IRRIGATION STANDPIPE
- 12" W — EXISTING WATER LINE / SIZE
- EXISTING WATER METER & BOX
- EXISTING FIRE HYDRANT
- NEW OR RELOCATED FIRE HYDRANT BY CONTRACTOR
- EXISTING WATER VALVE OPERATING NUT ELEVATION
- 24" S — EXISTING SEWER LINE / SIZE
- EXISTING MANHOLE
- NEW MANHOLE
- CATCH BASIN, GUTTER INLET (LENGTH TO SCALE)
- CATCH BASIN, CURB INLET (LENGTH TO SCALE)
- CATCH BASIN, CURB & GUTTER INLET (LENGTH TO SCALE)
- 78" SD — EXISTING STORM DRAIN / SIZE
- NEW PIPE FOR STORM DRAIN OR IRRIGATION LINE
- CATV — EXISTING UNDERGROUND CABLE TELEVISION
- UGE — EXISTING UNDERGROUND ELECTRIC
- 4D — EXISTING UNDERGROUND TELEPHONE DUCTS (SPECIFY NUMBER)
- 2" G — EXISTING GAS LINE / SIZE
- UGT — EXISTING UNDERGROUND TELEPHONE CABLE
- EXISTING STREET SIGN
- EXISTING TRAFFIC SIGN
- PP — EXISTING UTILITY POLE
- EXISTING WIRE FENCE
- EXISTING WOOD FENCE
- EXISTING CHAIN LINK FENCE
- MAIL BOX
- DOWN ANCHOR
- STREET LIGHT
- EASEMENT LINE
- EXISTING OR NEW R/W LINE
- PAVEMENT CENTER LINE AND OR MOUNUMENT LINE (℄ AND / OR ⌖)
- PROPERTY LINE

ABREVIATIONS

- TELEPHONE RISER
- WM — WATER SERVICE BOX
- MST — MID SPAN TAP (OH UTILITIES)
- WV — WATER VALVE
- STORM MANHOLE
- TRAFFIC SIGNAL BOX
- TREE
- STOP — STOP SIGN
- P — MAILBOX
- GATE W/POSTS
- SW — SAWCUT & MATCH

CST	CONSTRUCTION
DTL	DETAIL
DESC	DESCRIPTION
EQ	EQUAL
FOC	FIBRE OPTIC CABLE
GE	GUTTER ELEVATION
OHE	OVERHEAD ELECTRIC
PE	PAVEMENT ELEVATION
PG	PAGE
P/L	PROPERTY LINE
PRV	PRIVATE
SPG	SPACING
UGT	UNDERGROUND TELE CABLE
TBM	TEMPORARY BENCHMARK
TC	TOP OF CURB ELEVATION
TW	TOP OF WALL ELEVATION
TG	TOP OF GRATE ELEVATION

STRUCTURAL NOTES:

1. ALL CONSTRUCTION SHALL CONFORM TO MAG STANDARD DETAILS. AND SPECIFICATIONS. DATED 1998. INCLUDING ALL REVISIONS THRU 2000.
2. DESIGN IS IN ACCORDANCE WITH AASHTO STANDARD SPECIFICATIONS FOR HIGHWAY BRIDGES. DIVISION 1. 16TH EDITION. 1996.
3. REINFORCING STEEL SHALL CONFORM TO ASTM SPECIFICATION A615. GRADE 60.
4. STRESSES - fs = 24.000 PSI - GRADE 60 REINFORCING STEEL.
5. ALL REINFORCING STEEL PLACEMENT DIMENSIONS SHALL BE TO CENTER OF BARS UNLESS OTHERWISE NOTED.
6. ALL REINFORCING STEEL SHALL HAVE 2" CLEAR COVER UNLESS OTHERWISE NOTED.
7. STRUCTURAL STEEL SHALL CONFORM TO ASTM SPECIFICATION A36.
8. ALL WELDING SHALL CONFORM TO THE REQUIREMENTS OF THE AMERICAN WELDING SOCIETY. STRUCTURAL WELDING CODE. REVISED 1996.
9. DIMENSIONS SHALL NOT BE SCALED FROM DRAWINGS.
10. CHAMFER ALL EXPOSED CORNERS 3/4" UNLESS OTHERWISE NOTED.
11. CONCRETE COMPRESSIVE STRENGTH SHALL BE 3.000 PSI MAG. CLASS A.

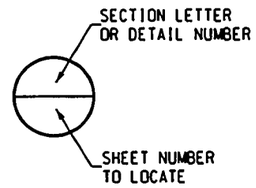

INDEX OF SHEETS

DRAWING NO.	TITLE	SHEET NO.
G1	COVER SHEET. & VICINITY MAP	1
G2	GENERAL NOTES & INDEX OF SHEETS	2
G3	KEY MAP	3
G4	GEOMETRIC LAYOUT	4
Q1	QUANTITY SUMMARY	5
A1	ALTERNATE PIPE SHEET	6
C1-C6	PLAN & PROFILE	7-12
C7	CONNECTOR PIPE PROFILE	13
D1	INLET CHANNEL DETAIL	14
D2	TRENCH AND PAVING DETAILS	15
D3	CATCH BASIN DETAILS	16
D4	CATCH BASIN DETAILS	17
D5	CATCH BASIN/BARRICADE DETAILS	18
D6-D7	SPECIAL STRUCTURES DETAILS	19-20

UTILITY NOTIFICATION

COMPANY	CONTACT NAME	PHONE NUMBER
CITY OF PHOENIX (WATER)	GERALD ARAKAKI	261-8229
CITY OF PHOENIX (SEWER)	GERALD ARAKAKI	261-8229
SOUTHWEST GAS	ROBERT SPRAGUE	484-5343
SRP (POWER)	WILLIAM G. PHILLIPS	236-8092
SRP (IRRIGATION)	ROBERT MAURER	236-2962
U.S. WEST	ROBERT ARRIETA	630-5473

GENERAL NOTES:

1. ALL CONSTRUCTION TO BE PERFORMED ACCORDING TO APPLICABLE MAG STANDARD DETAILS AND MAG SPECIFICATIONS. DATED 1998 . INCLUDING ALL REVISIONS THROUGH 1998 AND THE CITY OF PHOENIX ADDITIONS AND DELETIONS THROUGH 1998
2. FACILITIES WHICH ARE NOT SPECIFICALLY LOCATED WITH ACTUAL HORIZONTAL AND VERTICAL CONTROLS ARE APPROXIMATE AND TO THE BEST AVAILABLE INFORMATION.
3. EXISTING UTILITIES AND OTHER FACILITIES HAVE BEEN PLACED ON THE PLANS FROM FIELD SURVEYS. EXISTING MAPS AND OTHER CURRENT PLANS WITHIN THE AREA OF THIS PROJECT. THE CONTRACTOR WILL DETERMINE THE EXACT LOCATION AND/OR ELEVATION OF EXISTING UTILITIES WHICH PERTAIN TO AND AFFECT THE CONSTRUCTION OF THIS PROJECT.
4. TWO (2) WORKING DAYS PRIOR TO EXCAVATING. THE CONTRACTOR SHALL CALL FOR BLUE STAKES AT THE BLUE STAKE CENTER (PHONE: 602-263-1100).
5. THE CONTRACTOR SHALL OBTAIN ALL NECESSARY PERMITS PRIOR TO CONSTRUCTION.
6. THE FLOOD CONTROL DISTRICT OR CITY OF PHOENIX IS NOT RESPONSIBLE FOR LIABILITY ACCRUED DUE TO DELAYS AND/OR DAMAGE TO UTILITIES IN CONJUNCTION WITH THIS CONSTRUCTION.
7. ANY WORK PERFORMED WITHOUT THE APPROVAL OF THE FLOOD CONTROL DISTRICT AND/OR THE ENGINEER AND ALL WORK AND MATERIALS NOT IN CONFORMANCE WITH THE SPECIFICATIONS IS SUBJECT TO REMOVAL AND REPLACEMENT AT THE CONTRACTOR'S EXPENSE.
8. THE ENGINEER WILL DETERMINE THE NUMBER AND LOCATION OF THE REQUIRED COMPACTION TESTS FOR STRUCTURE BACKFILL.
9. TRAFFIC CONTROL SHALL BE MAINTAINED IN ACCORDANCE WITH MAG SPECIFICATION 401. PART VI OF THE MANUAL ON UNIFORM TRAFFIC CONTROL DEVICES (1988 EDITION INCLUDING REVISION 3 DATED SEPTEMBER 3. 1993).
10. CONTRACTOR SHALL REPLACE PAVEMENT TO THE EXISTING GRADES SHOWN ON THE PLANS
11. EXACT POINT OF MATCHING TERMINATION AND OVERLAY WILL BE DETERMINED IN THE FIELD BY THE ENGINEER.
12. NO JOB WILL BE CONSIDERED COMPLETED UNTIL CURBS. PAVEMENT AND SIDEWALKS HAVE BEEN SWEPT CLEAN OF ALL DIRT AND DEBRIS.
13. PRIOR TO FINAL APPROVAL AND ACCEPTANCE OF THE WORK. THE CONTRACTOR WILL BE REQUIRED TO CLEAN ADJACENT (OFF-PROJECT) ROADWAYS USED DURING THE COURSE OF CONSTRUCTION.
14. ALL UTILITIES SHALL BE PROTECTED IN PLACE UNLESS OTHERWISE NOTED ON THE PLANS
15. CATCH BASIN CONNECTOR PIPES SHALL BE LAID ON A STRAIGHT ALIGNMENT.BREAKS IN SLOPE SHALL NOT EXCEED THE MAXIMUM DEFLECTION OF 22.5 DEGREES.CONTRACTOR SHALL PROVIDE A PIPE COLLAR PER MAG DETAIL 505 AT EACH DEFLECTION.

PROJECT BENCHMARK: (NGVD 1929)

FD BC FLUSH
0.05' WEST OF ℄ 55TH AVENUE
STA 19+68.76. 20.71' RT
EL 1102.47'

NO.	REVISION	BY	DATE
3			
2			
1			

FLOOD CONTROL DISTRICT OF MARICOPA COUNTY
ENGINEERING DIVISION

MARYVALE STADIUM WEST
INLET STORM DRAIN
PROJECT CONTROL NO. 6200431

	BY	DATE
DESIGNED	RPH	12/99
DRAWN	FC	12/99
CHECKED	MAL	12/99

Registered Professional Engineer (Civil) CERTIFICATE NO. 28839 RICHARD P. HARRIS Date Signed ARIZONA, U.S.A.

DRAWING NO.		SHEET OF
G2	GENERAL NOTES & INDEX OF SHEETS	2 20

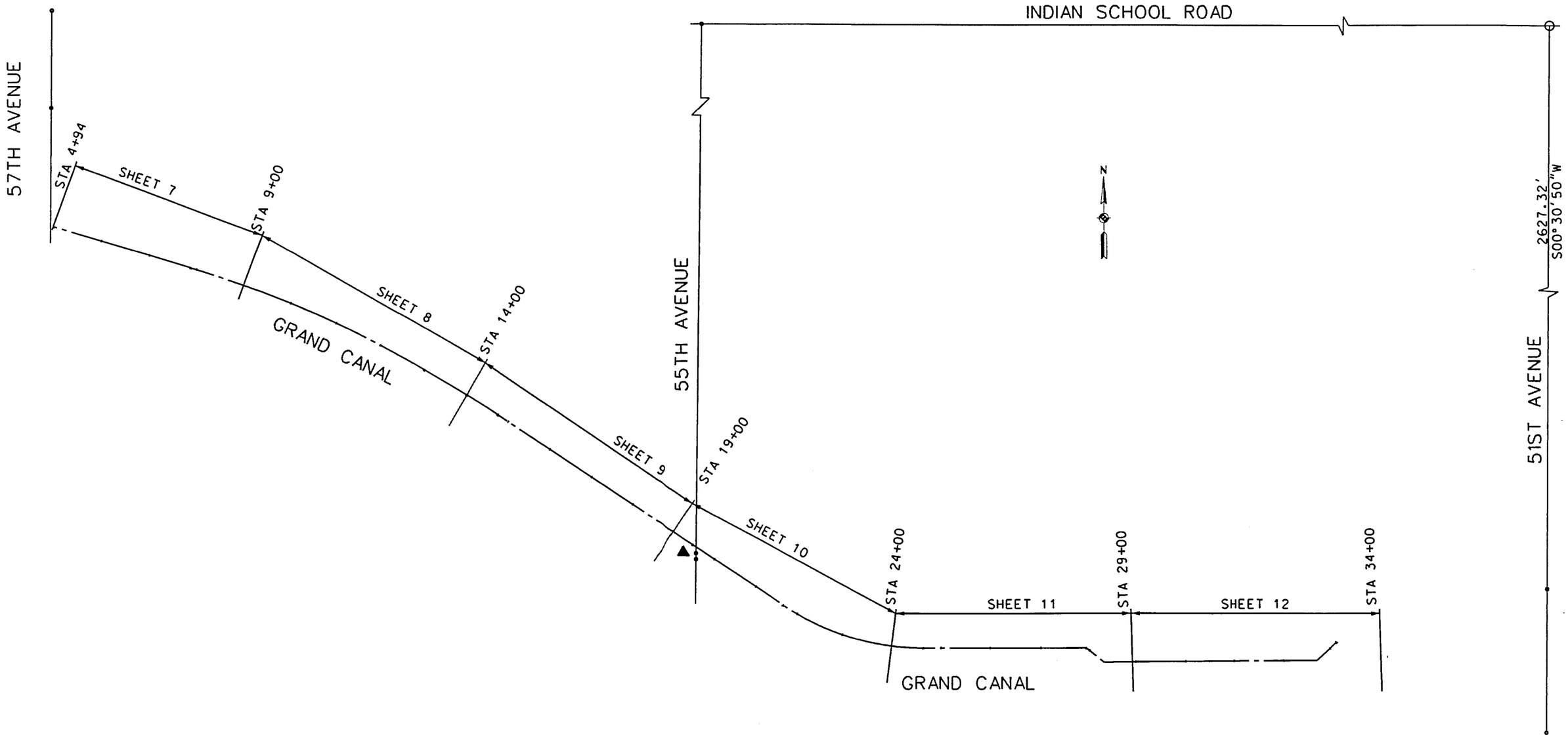

KEY MAP

NTS

TWO WORKING DAYS BEFORE YOU DIG, CALL 263-1100 BLUE STAKE

NO.	REVISION	BY	DATE
3			
2			
1			

FLOOD CONTROL DISTRICT OF MARICOPA COUNTY
ENGINEERING DIVISION

MARYVALE STADIUM WEST
INLET STORM DRAIN
PROJECT CONTROL NO. 6200431

	BY	DATE
DESIGNED	RPH	12/99
DRAWN	FC	12/99
CHECKED	MAL	12/99

Registered Professional Engineer (Civil) CERTIFICATE NO. 28839 RICHARD P. HARRIS Date Signed ..... ARIZONA, U.S.A.

DRAWING NO.		SHEET OF
G3	KEY MAP	3 20

\Whitton Ave\dgn\sh3_Keymap.dgn Mar 08 2000 14:51:27

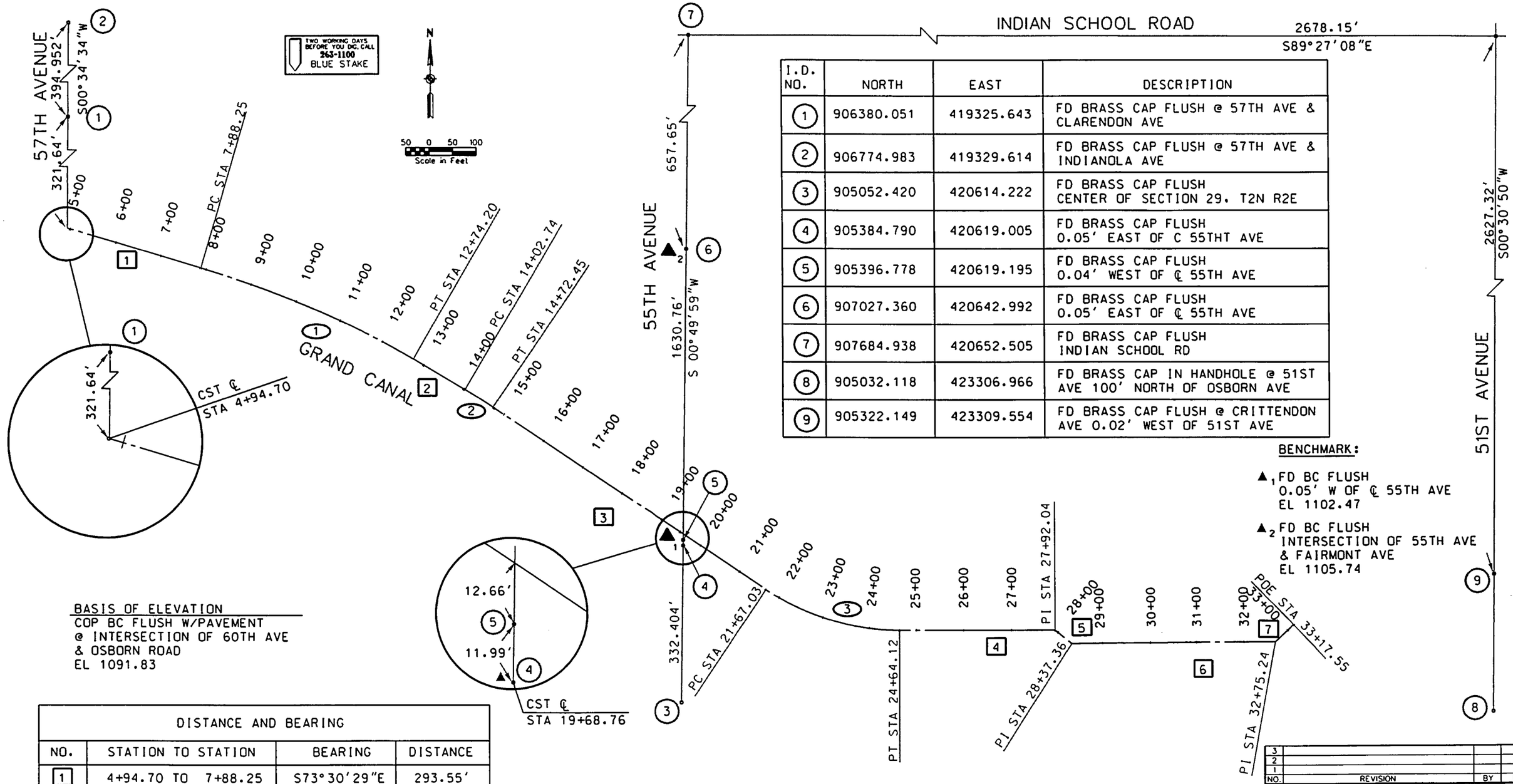

I.D. NO.	NORTH	EAST	DESCRIPTION
1	906380.051	419325.643	FD BRASS CAP FLUSH @ 57TH AVE & CLARENDON AVE
2	906774.983	419329.614	FD BRASS CAP FLUSH @ 57TH AVE & INDIANOLA AVE
3	905052.420	420614.222	FD BRASS CAP FLUSH CENTER OF SECTION 29. T2N R2E
4	905384.790	420619.005	FD BRASS CAP FLUSH 0.05' EAST OF C 55THT AVE
5	905396.778	420619.195	FD BRASS CAP FLUSH 0.04' WEST OF ℄ 55TH AVE
6	907027.360	420642.992	FD BRASS CAP FLUSH 0.05' EAST OF ℄ 55TH AVE
7	907684.938	420652.505	FD BRASS CAP FLUSH INDIAN SCHOOL RD
8	905032.118	423306.966	FD BRASS CAP IN HANDHOLE @ 51ST AVE 100' NORTH OF OSBORN AVE
9	905322.149	423309.554	FD BRASS CAP FLUSH @ CRITTENDON AVE 0.02' WEST OF 51ST AVE

BENCHMARK:

▲1 FD BC FLUSH
0.05' W OF ℄ 55TH AVE
EL 1102.47

▲2 FD BC FLUSH
INTERSECTION OF 55TH AVE
& FAIRMONT AVE
EL 1105.74

BASIS OF ELEVATION
COP BC FLUSH W/PAVEMENT
@ INTERSECTION OF 60TH AVE
& OSBORN ROAD
EL 1091.83

DISTANCE AND BEARING			
NO.	STATION TO STATION	BEARING	DISTANCE
1	4+94.70 TO 7+88.25	S73°30'29"E	293.55'
2	12+74.20 TO 14+02.74	S59°35'12"E	128.54'
3	14+72.45 TO 21+67.03	S55°57'21"E	694.58'
4	24+64.12 TO 27+92.04	S90°00'00"E	327.92'
5	27+92.04 TO 28+37.36	S50°30'51"E	45.32
6	28+37.36 TO 32+75.24	N88°28'45"E	437.88
7	32+75.24 TO 33+17.55	N46°23'17"E	42.31

CURVE DATA					
NO.	STATION TO STATION	CENTRAL ANGLE	LENGTH	RADIUS	TANGENT
1	7+88.25 TO 12+74.20	13°55'17"	485.95'	2000.00'	244.18'
2	14+02.74 TO 14+72.45	3°37'51"	69.71'	1100.00'	34.87'
3	21+67.03 TO 24+64.12	34°02'39"	297.09'	500.00'	153.08'

NO.	REVISION	BY	DATE
3			
2			
1			

FLOOD CONTROL DISTRICT OF MARICOPA COUNTY
ENGINEERING DIVISION

MARYVALE STADIUM WEST
INLET STORM DRAIN
PROJECT CONTROL NO. 6200431

	BY	DATE
DESIGNED	RPH	12/99
DRAWN	FC	12/99
CHECKED	MAL	12/99

RICHARD P. HARRIS 28839

DRAWING NO. G4 | GEOMETRIC LAYOUT | SHEET OF 4 20

\dgn\sh4 Geometric.dgn Mar 08 2000 14:52:14

QUANTITY SUMMARY
MARYVALE STADIUM WEST INLET STORM DRAIN
51ST AVENUE TO 57TH AVENUE

ITEM NO.	ITEM DESCRIPTION	UNIT	SHEET NUMBERS 7	8	9	10	11	12	13	14	15	16	TOTAL QUANTITY
336-1	PAVEMENT REPLACEMENT (TYPE "A", 4" AC/8" ABC)	SY	182	0	0	0	0	0	0	0	0	0	182
336-2	PAVEMENT REPLACEMENT (TYPE "B", 4" AC/10" ABC)	SY	0	0	0	53	0	0	0	0	0	0	53
340-1	CURB AND GUTTER, MAG DETAIL 220, TYPE A	LF	10	0	0	59	0	0	0	0	0	0	69
340-2	SIDEWALK, MAG DETAIL 230	SF	80	0	0	200	0	0	0	0	0	0	280
340-3	CONCRETE SPILLWAY	SF	166	0	0	0	0	0	0	0	0	0	166
350-1	REMOVAL OF EXISTING STRUCTURES	LS	0	0	0	0	0	0	0	0	0	0	1
401-3	MAG DETAIL 130 TYPE B BARRIER (MODIFIED)	LS	1	0	0	0	0	0	0	0	0	0	1
404-4	REMOVABLE BOLLARD TYPE BARRIER, SPECIAL DETAIL	LS	1	0	0	0	0	0	0	0	0	0	1
505-1	SPECIAL JUNCTION STRUCTURE DETAIL D6	EA	1	0	0	0	0	0	0	0	0	0	1
505-2	SPECIAL JUNCTION STRUCTURE DETAIL D7	EA	0	0	0	1	0	0	0	0	0	0	1
505-3	CONCRETE CATCH BASIN COP DETAIL P1569-1, M-2, L=10	EA	0	0	0	2	0	0	0	0	0	0	2
505-4	CONCRETE CATCH BASIN COP MODIFIED DETAIL P1571, DETAIL D4	EA	1	0	0	0	0	0	0	0	0	0	1
505-5	CONCRETE CATCH BASIN COP DETAIL P1570, N-QUAD, DETAIL D3	EA	1	0	0	0	0	0	0	0	0	0	1
505-6	CONCRETE CATCH BASIN APRON	SF	186	0	0	0	0	0	0	0	0	0	186
515-1	60 INCH FLAP GATE	EA	0	0	0	0	0	1	0	0	0	0	1
610-1	8 INCH DUCTILE IRON WATER PIPE AND FITTINGS	LF	0	0	0	20	0	0	0	0	0	0	20
610-2	RELOCATE WATER METER	LS	1	0	0	0	0	0	0	0	0	0	1
610-3	VERTICALLY RELOCATE 8 INCH WATER LINE PER MAG DETAIL 370	LF	0	0	0	30	0	0	0	0	0	0	30
615-1	10 INCH DUCTILE IRON SEWER PIPE AND FITTINGS	LF	71	0	0	0	0	0	0	0	0	0	71
618-1	60 INCH CLASS III RGRCP/66 INCH CLCMP	LF	0	0	0	396	443	0	0	0	0	0	839
618-2	54 INCH CLASS III RGRCP/60 INCH CLCMP	LF	0	345	500	104	0	0	0	0	0	0	949
618-3	54 INCH CLASS III RGRCP	LF	185	155	0	0	0	0	0	0	0	0	340
618-4	48 INCH CLASS III RGRCP	LF	225	0	0	0	0	0	0	0	0	0	225
618-5	36 INCH CLASS III RGRCP	LF	0	0	0	109	0	0	0	0	0	0	109
618-6	30 INCH CLASS III RGRCP	LF	116	0	0	48	0	0	0	0	0	0	164
618-7	24 INCH PIPE PLUG, MAG DETAIL 427	EA	1	0	0	0	0	0	0	0	0	0	1
618-8	PREFAB 40 DEGREE BEND, 60 INCH PIPE	EA	0	0	0	0	2	0	0	0	0	0	2
618-9	PREFAB 75 DEGREE BEND, 48 INCH PIPE	EA	1	0	0	0	0	0	0	0	0	0	1
618-10	PREFAB 45 DEGREE BEND, 36 INCH PIPE	EA	0	0	0	2	0	0	0	0	0	0	2
618-11	PREFAB 25 DEGREE BEND, 30 INCH PIPE	EA	1	0	0	0	0	0	0	0	0	0	1
618-12	CONCRETE PIPE COLLAR MAG DETAIL 505, (24" & LARGER)	EA	0	0	0	0	1	0	0	0	0	0	1
625-1	STORM DRAIN MANHOLE MAG DETAIL 521, 522 & 424	EA	0	1	1	1	1	0	0	0	0	0	4

NO.	REVISION	BY	DATE
3			
2			
1			

FLOOD CONTROL DISTRICT OF MARICOPA COUNTY
ENGINEERING DIVISION

MARYVALE STADIUM WEST
INLET STORM DRAIN
PROJECT CONTROL NO. 6200431

	BY	DATE
DESIGNED	RPH	12/99
DRAWN	FC	12/99
CHECKED	MAL	12/99

DRAWING NO. 01 — QUANTITY SUMMARY — SHEET 5 OF 20

\Whitton Ave\dgn\sh5_qs-wa.dgn Mar 08 2000 14:52:43

ALTERNATE PIPE MATERIALS

MAIN LINE PIPE

STATION		QUANTITY	PIPE DIAMETER		DEPTH TO TOP OF PIPE		MAX TRENCH WIDTH AT TOP OF PIPE	REINFORCED CONCRETE PIPE CLASS*	N.R.C.P.* ASTM C14 CLASS	CIPP CONCRETE PIPE	CONCRETE LINED ALUMINIZED CMP				
											PIPE DIAMETER	SLURRY BEDDING TO SPRING LINE		OPTIONAL SLURRY BEDDING TO 1' OVER TOP OF PIPE	
FROM	TO	LF	RCP (ID) IN	CIP (ID) IN	MIN (FT)	MAX (FT)	RCP FT			MINIMUM WALL THICKNESS IN	CLCMP (ID) IN	2 2/3"X1/2" CORR. TYPE"F" MIN GAGE	3"X1" CORR. TYPE"F" MIN GAGE	2 2/3"X1/2" CORR. TYPE"F" MIN GAGE	3"X1" CORR. TYPE"F" MIN GAGE
4+94	7+15	225	48	N/A	1	2	7.5	III	N/A	N/A	N/A	N/A	N/A	N/A	N/A
7+15	10+55	340	54	N/A	2	4	9.0	III	N/A	N/A	N/A	N/A	N/A	N/A	N/A
10+55	20+04	949	54	N/A	4	6	9.0	III	N/A	N/A	60	14	N/A	14	N/A
20+04	28+43	839	60	N/A	6	8.5	9.0	III	N/A	N/A	66	12	N/A	12	N/A

CONNECTOR PIPE

LOCATION	QUANTITY	DEPTH TO TOP OF PIPE		PIPE DIAMETER		RCP CLASS	N.R.C.P.* ASTM C14 CLASS	CMP
STATION (LT OR RT)	LF	MIN (FT)	MAX (FT)	RCP (ID) IN	CIP (ID) IN			2 2/3"X1/2" CORR. TYPE"A" MIN GAGE
7+15	116	2.5	3.0	30"	N/A	III	N/A	N/A
18+93.70 LT.	48	2.0	3.0	30"	N/A	III	N/A	N/A
20+04 LT.	105	3.0	6.0	36"	N/A	III	N/A	N/A

MAIN LINE PIPE

1- ONLY PIPE MATERIAL SPECIFIED ON THIS SHEET ARE ACCEPTABLE FOR THIS PROJECT.

2- WHERE MAXIMUM TRENCH WIDTH IS NOTED AS "UNRESTRICTED". PIPE STRENGTHS ARE SPECIFIED FOR A POSITIVE PROJECTING OR EMBANKMENT LOADING CONDITION.

N/A = NOT APPLICABLE

NO.	REVISION	BY	DATE
3			
2			
1			

FLOOD CONTROL DISTRICT OF MARICOPA COUNTY
ENGINEERING DIVISION

MARYVALE STADIUM WEST
INLET STORM DRAIN
FCD PROJECT NO. 6200431

	BY	DATE
DESIGNED	RPH	10/99
DRAWN	SRN	10/99
CHECKED	MAL	10/99

DRAWING NO. A1

ALTERNATE PIPE SHEET

SHEET 6 20

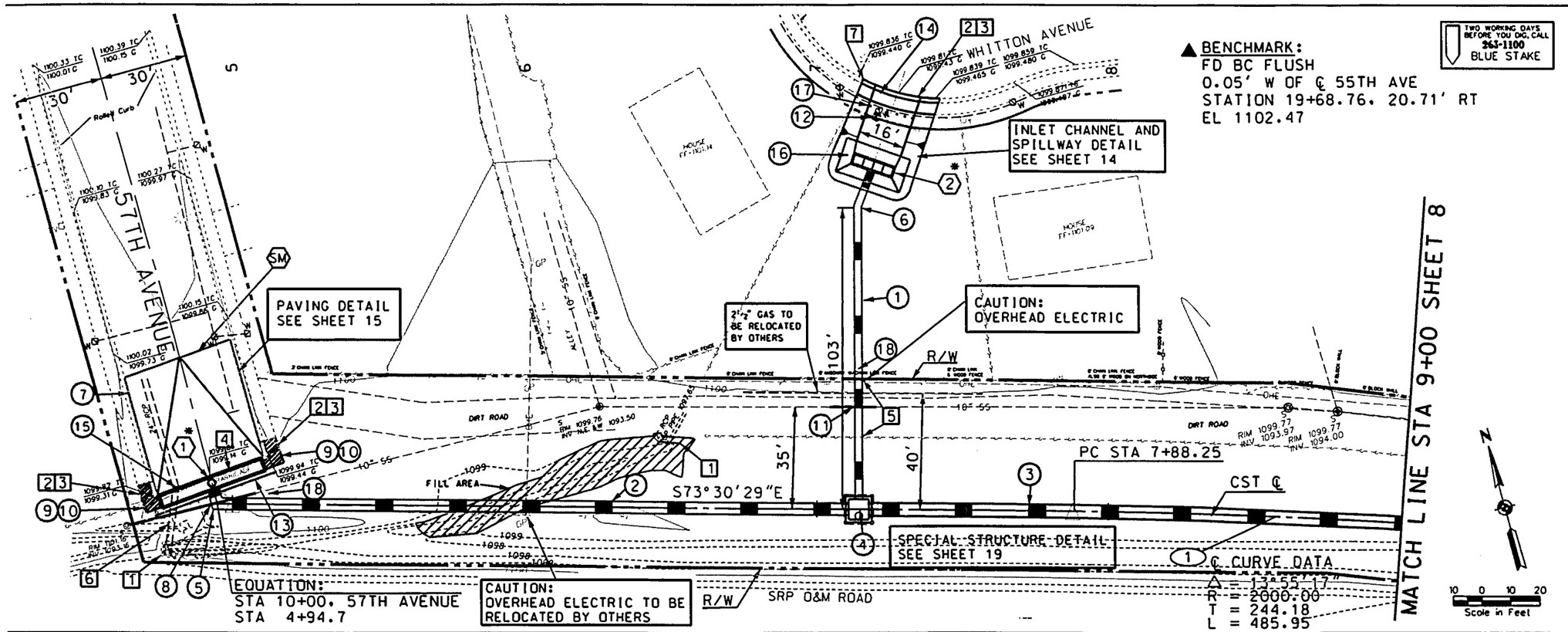

* SEE SHEET 13 FOR CONNECTOR PIPE PROFILES

(18) CONTRACTOR TO EXPOSE SEWER LINE FIRST AND ADJUST CONNECTOR PIPE SEGMENTS SUCH THAT BELLS ARE NOT LOCATED ABOVE SEWER LINES. (NPI)

(15) INSTALL 24" PIPE PLUG PER MAG STD DETAIL 427 — 1 EA

(16) CONSTRUCT CONCRETE CATCH BASIN APRON PER SECTION E, SHEET 16 — 186 SF

(17) CONSTRUCT REMOVABLE BOLLARDS SEE SHEET 15 — 1 LS

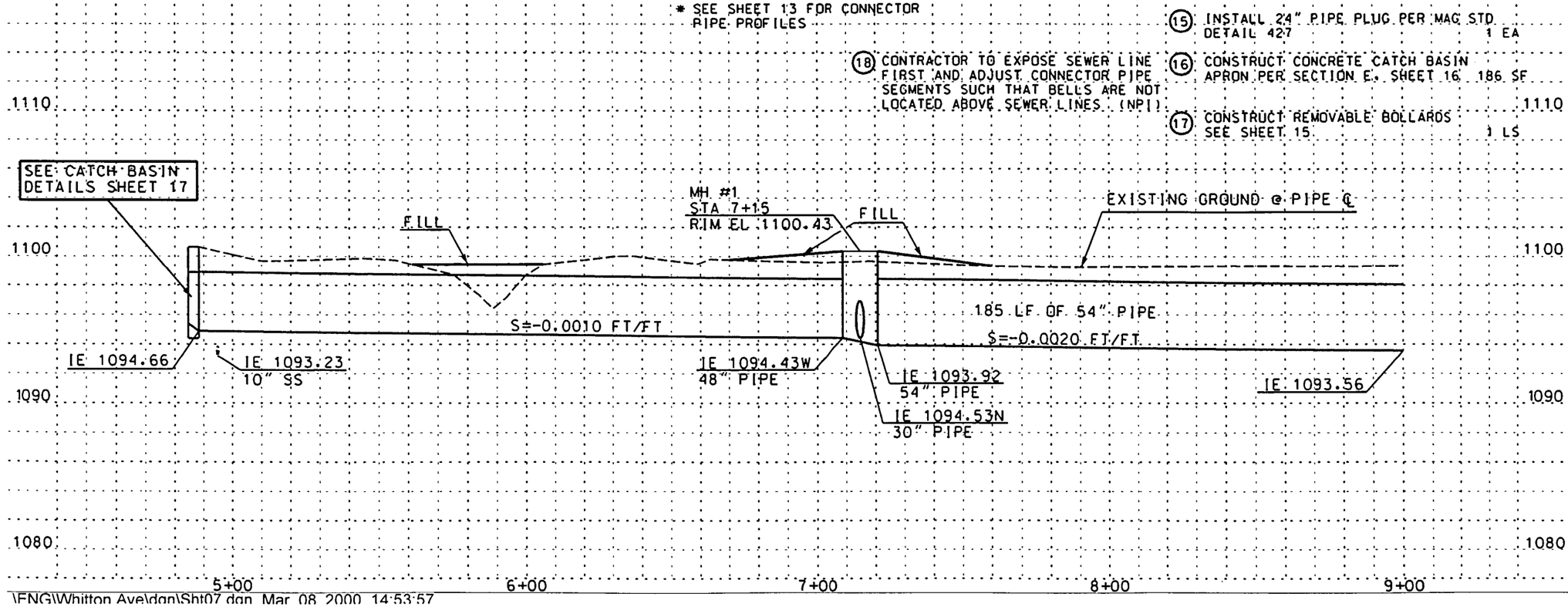

REMOVE

1	REMOVE EXIST HEADWALL	2 EA
2	REMOVE EXISTING SIDEWALK	80 SF
3	REMOVE ROLL CURB	10 LF
4	REMOVE BARRICADE (NPI)	1 EA
5	REMOVE AND REPLACE FENCE (NPI)	1 EA
6	REMOVE PIPE	20 LF
7	REMOVE CATCH BASIN	1 EA

CONSTRUCT

INSTALL NEW STORM DRAIN PIPE

NO.	STATION TO STATION	DIAMETER INCHES	LENGTH FEET
1	7+15 TO 7+20 LT	30	116
2	4+92 LT TO 7+15	48	225
3	7+15 TO 9+00	54	185

NEW STORM DRAIN MANHOLE

NO.	STATION	BASE DETAIL	SHAFT DETAIL	COVER DETAIL
4	7+15	DTL D6	N/A	MAG 424

NEW CATCH BASIN AND CONNECTOR PIPE

NO.	STATION	TYPE	SIZE
1	10+07 57TH AVE	DTL D4	N/A
2	7+20.117.5' LT	MODIFIED P-1570 N-QUAD, DTL D3	N/A

PREFABRICATED BEND

NO.	STATION	SIZE	ANGLE
5	4+93.8	48"	75°
6	7+15, 103' LT	30"	25°

INSTALL NEW PAVEMENT

NO.	STATION TO STATION	UNIT	QUANTITY
7	10+00 TO 10+51.5	SY	182

(8) REPLACE 10" VCP SANITARY SEWER PIPE WITH 10" DIP — 48 LF

(9) CONSTRUCT SIDEWALK PER MAG STD DETAIL 230 — 80 SF

(10) CONSTRUCT TRANSITION CURB PER MAG STD DETAIL 220 TYPE A — 10 LF

(11) REPLACE 10" VCP SANITARY SEWER PIPE WITH 10" DIP — 23 LF

(12) REPLACE WATER METER AT NEW GRADE PER COP P-1363 — 1 EA

(13) CONSTRUCT 45' MAG STD DETAIL 130 TYPE B MODIFIED BARRIER (SEE DETAIL SHEET 18) — 1 EA

(14) CONSTRUCT CONCRETE SPILLWAY PER MAG DETAIL 250, AND SHEET 14 — 166 SF

NO.	REVISION	BY	DATE
2			
1			

FLOOD CONTROL DISTRICT OF MARICOPA COUNTY
ENGINEERING DIVISION

MARYVALE STADIUM WEST
INLET STORM DRAIN
PROJECT CONTROL NO. 6200431

	BY	DATE
DESIGNED	RPH	12/99
DRAWN	FC	12/99
CHECKED	MAL	12/99

Registered Professional Engineer (Civil) CERTIFICATE NO. 28839 RICHARD P. HARRIS Date Signed ARIZONA, U.S.A.

DRAWING NO.	PLAN AND PROFILE	SHEET OF
C1	STA 4+92 TO 9+00	7 20

\ENG\Whitton Ave\dgn\Sht07.dgn Mar 08, 2000 14:53:57

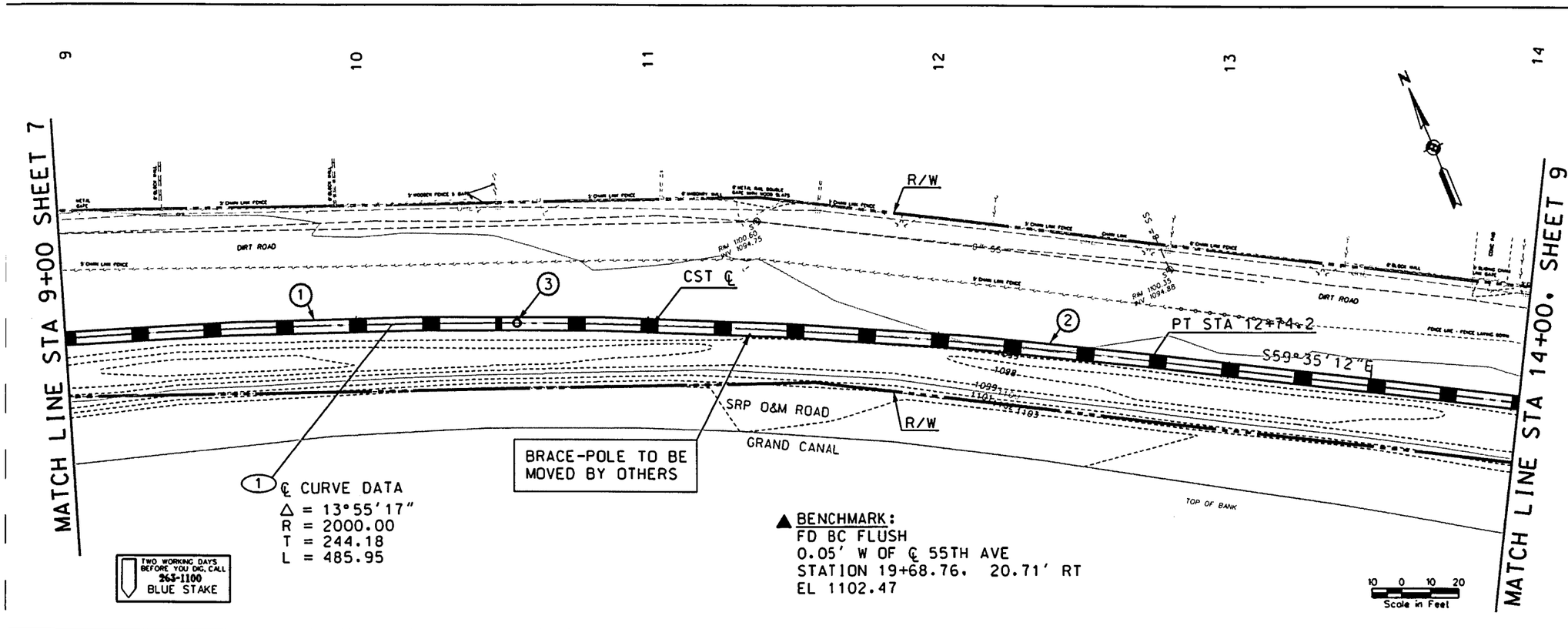

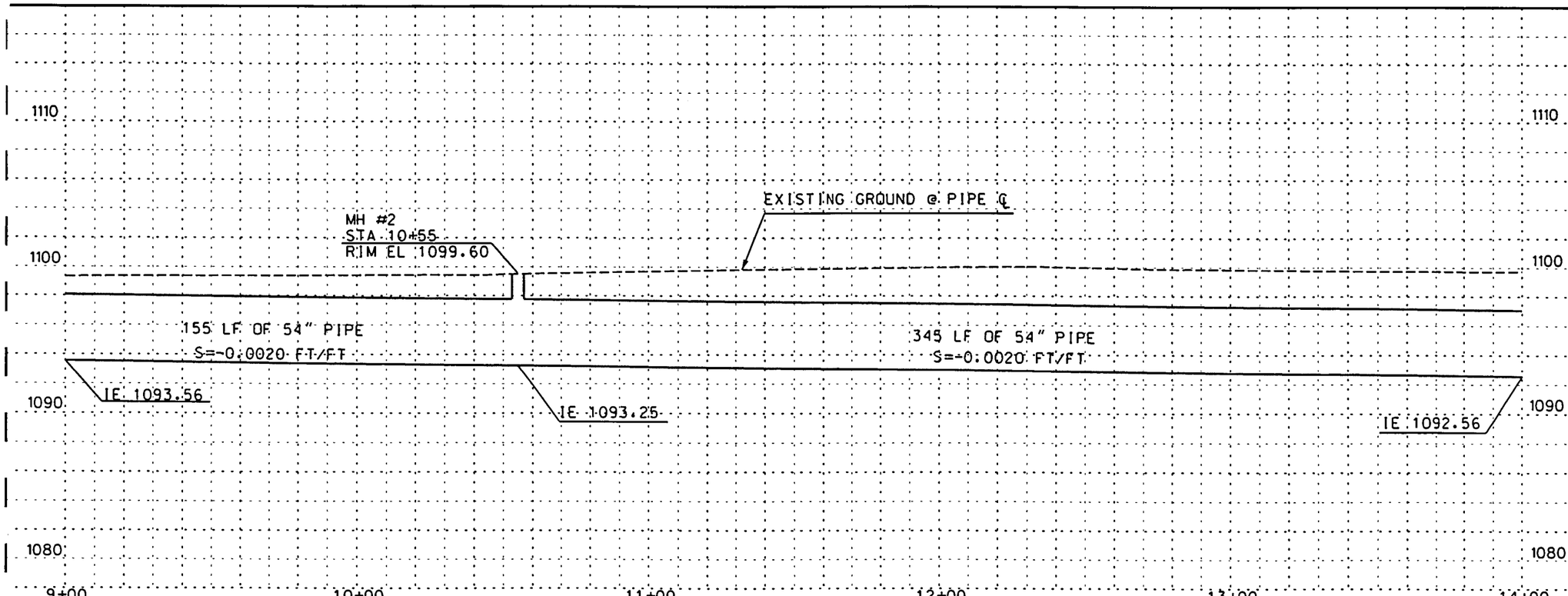

☐ REMOVE ☐

○ CONSTRUCT ○

INSTALL NEW STORM DRAIN PIPE

NO.	STATION TO STATION	DIAMETER INCHES	LENGTH FEET
1	9+00 TO 10+55	54	155
2	10+55 to 14+00	54	345

INSTALL NEW STORM DRAIN MANHOLE

NO.	STATION	BASE DETAIL	SHAFT DETAIL	COVER DETAIL
3	10+55	MAG 521	MAG 522	MAG 424

NO.	REVISION	BY	DATE
2			
1			

FLOOD CONTROL DISTRICT OF MARICOPA COUNTY
ENGINEERING DIVISION

MARYVALE STADIUM WEST
INLET STORM DRAIN
PROJECT CONTROL NO. 6200431

	BY	DATE
DESIGNED	RPH	12/99
DRAWN	FC	12/99
CHECKED	MAL	12/99

Registered Professional Engineer (Civil) CERTIFICATE NO. 28839 RICHARD P. HARRIS Date Signed 12/17/99 ARIZONA, U.S.A.

DRAWING NO. C2

PLAN AND PROFILE
STA 9+00.00 TO 14+00

SHEET 8 OF 20

\ENG\Whitton Ave\dgn\Sht08.dgn Mar 08 2000 14:54:28

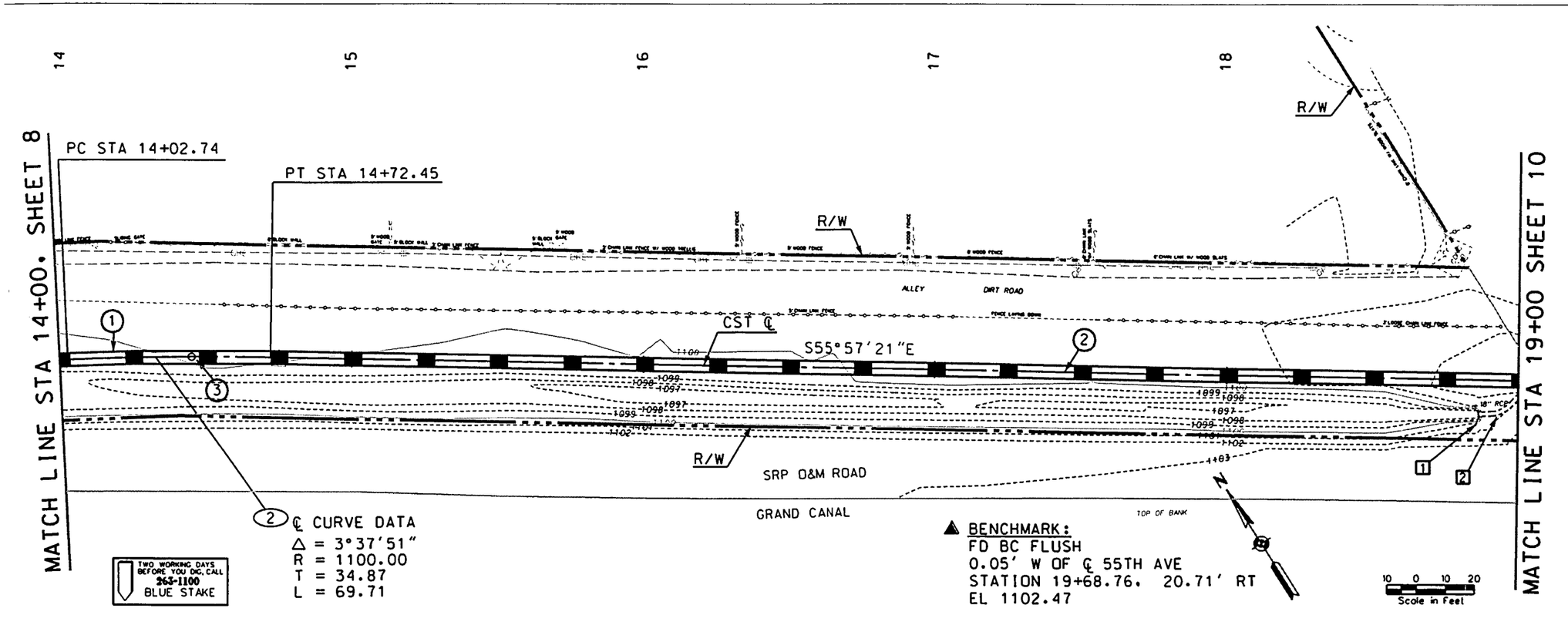

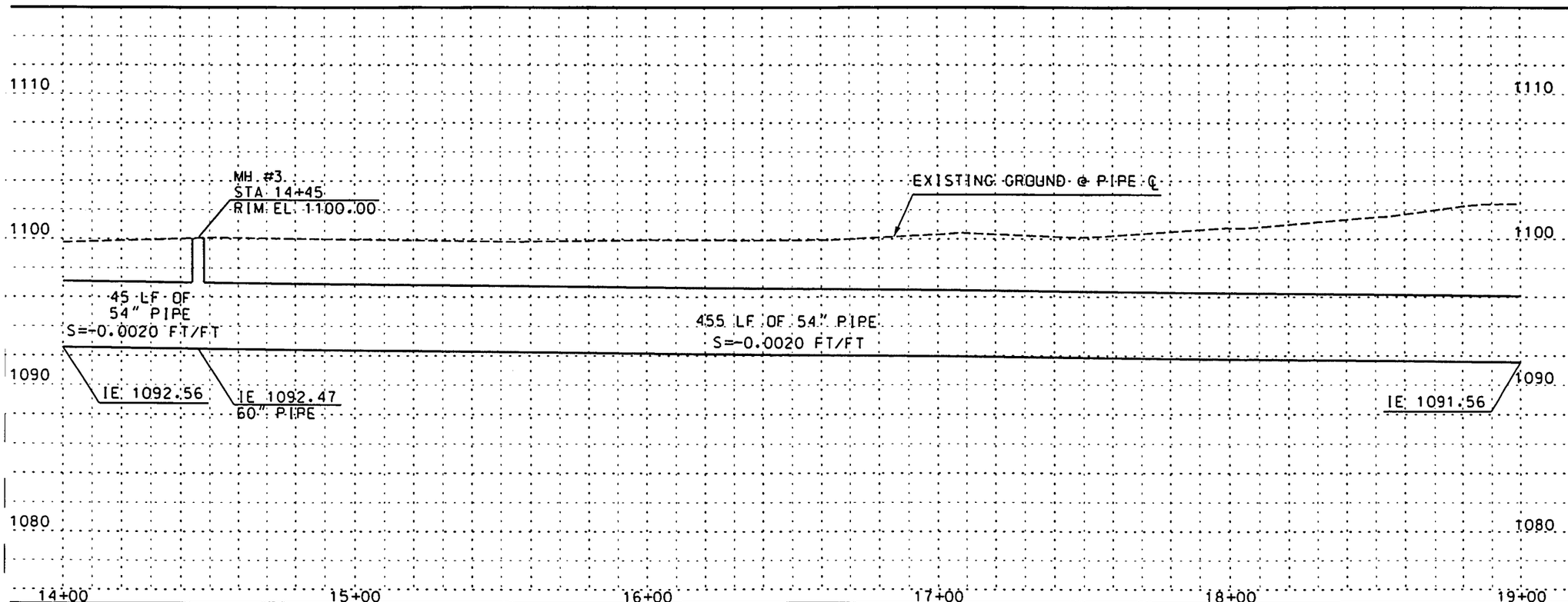

REMOVE	
1 REMOVE HEADWALL	1 EA
2 REMOVE PIPE	15 LF

CONSTRUCT

INSTALL NEW STORM DRAIN PIPE

NO.	STATION TO STATION	DIAMETER INCHES	LENGTH FEET
1	14+00 TO 14+45	54	45
2	14+45 TO 19+00	54	455

INSTALL NEW STORM DRAIN MANHOLE

NO.	STATION	BASE DETAIL	SHAFT DETAIL	COVER DETAIL
3	14+45	MAG 521	MAG 522	MAG 424

NO.	REVISION	BY	DATE
2			
1			

FLOOD CONTROL DISTRICT OF MARICOPA COUNTY
ENGINEERING DIVISION

MARYVALE STADIUM WEST
INLET STORM DRAIN
PROJECT CONTROL NO. 6200431

	BY	DATE
DESIGNED	RPH	12/99
DRAWN	FC	12/99
CHECKED	MAL	10/99

Registered Professional Engineer (Civil) CERTIFICATE NO. 28839 RICHARD P. HARRIS Date Signed ARIZONA, U.S.A.

DRAWING NO.	PLAN AND PROFILE	SHEET OF
C3	STA 14+00 TO STA 19+00	9 20

\ENG\Whitton Ave\dgn\Sht09.dgn Mar 08 2000 14:54:59

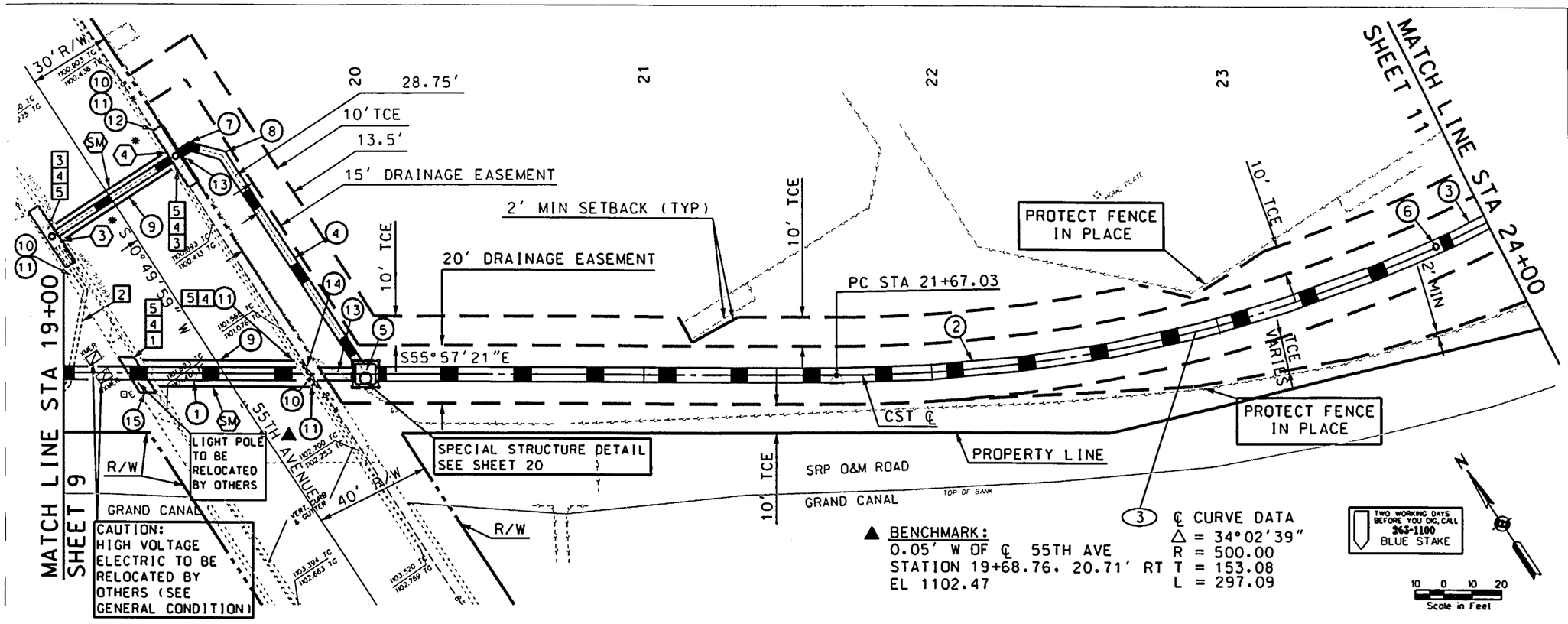

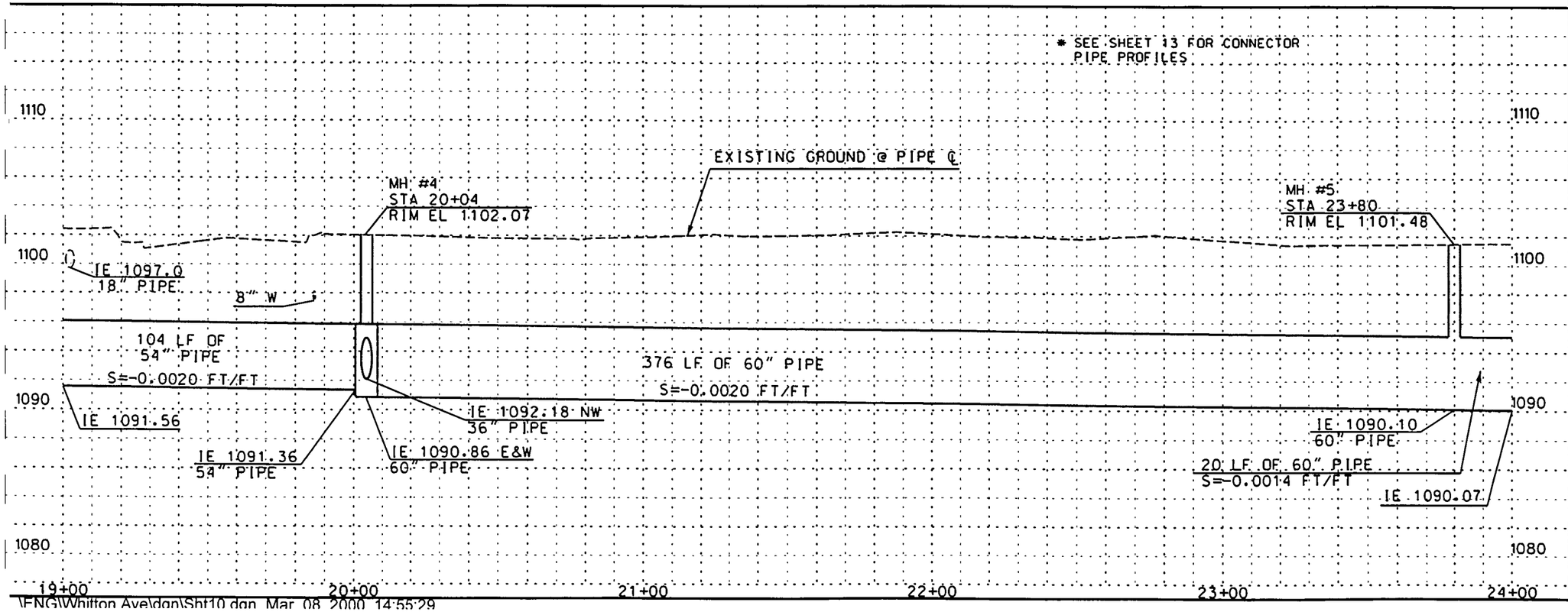

REMOVE		
1	REMOVE SECTION OF DRIVEWAY AS INDICATED	(NPI)
2	REMOVE PIPE	46 LF
3	REMOVE CATCH BASIN	2 EA
4	REMOVE CURB & GUTTER	(NPI)
5	REMOVE CONCRETE SIDEWALK	(NPI)

CONSTRUCT

INSTALL NEW STORM DRAIN PIPE

NO.	STATION TO STATION	DIAMETER INCHES	LENGTH FEET
1	19+00 TO 20+04	54	104
2	20+04 TO 23+80	60	376
3	23+80 TO 24+00	60	20
4	19+39.82. 76.82 LT TO 20+04	36	109

INSTALL NEW STORM DRAIN MANHOLE

NO.	STN	BASE DETAIL	SHAFT DETAIL	COVER DETAIL
5	20+04	DETAIL D7	MAG 522	MAG 424
6	23+80	MAG 521	MAG 522	MAG 424

NEW CATCH BASIN AND CONNECTOR PIPE

NO.	STATION	TYPE	SIZE	LENGTH
3	18+97 46' LT	P-1569 M=2.L=10'	30"	48'
4	19+39 75.1' LT	P-1569 M=2.L=10'	36"	N/A

PREFABRICATED BEND

NO.	STATION	SIZE	ANGLE
7	19+43.89 LT	36"	45°
8	19+55.12 LT	36"	45°

PAVEMENT REPLACEMENT TYPE 'B'

NO.	STA TO STA	UNIT	QUANTITY
9	19+28 LT TO 19+86 LT	SY	53

10. REPLACE SIDEWALK PER MAG STD DETAIL 230 — 200 SF
11. REPLACE CURB AND GUTTER PER MAG STD DETAIL 220 TYPE A — 59 LF
12. VERTICALLY RELOCATE 8" ACP WATER LINE PER MAG STD DTL 370 — 30 LF
13. REMOVE & REPLACE 5' CHAIN LINK FENCE. (NPI) — 40 LF
14. REPLACE 8" ACP WATER LINE WITH 8" DIP. CLASS 50 — 20 LF
15. RECONSTRUCT SECTION OF CONCRETE DRIVEWAY TO MATCH EXISTING (NPI)

NO.	REVISION	BY	DATE
2			
1			

FLOOD CONTROL DISTRICT OF MARICOPA COUNTY
ENGINEERING DIVISION

MARYVALE STADIUM WEST
INLET STORM DRAIN
PROJECT CONTROL NO. 6200431

	BY	DATE
DESIGNED	RPH	12/99
DRAWN	FC	12/99
CHECKED	MAL	12/99

Registered Professional Engineer (Civil) — CIVIL — 28839 — RICHARD P. HARRIS — Date Signed — ARIZONA, U.S.A.

DRAWING NO.	PLAN AND PROFILE	SHEET OF
C4	STA 19+00 TO STA 24+00	10 20

\ENG\Whilton Ave\dgn\Sht10.dgn Mar 08 2000 14:55:29

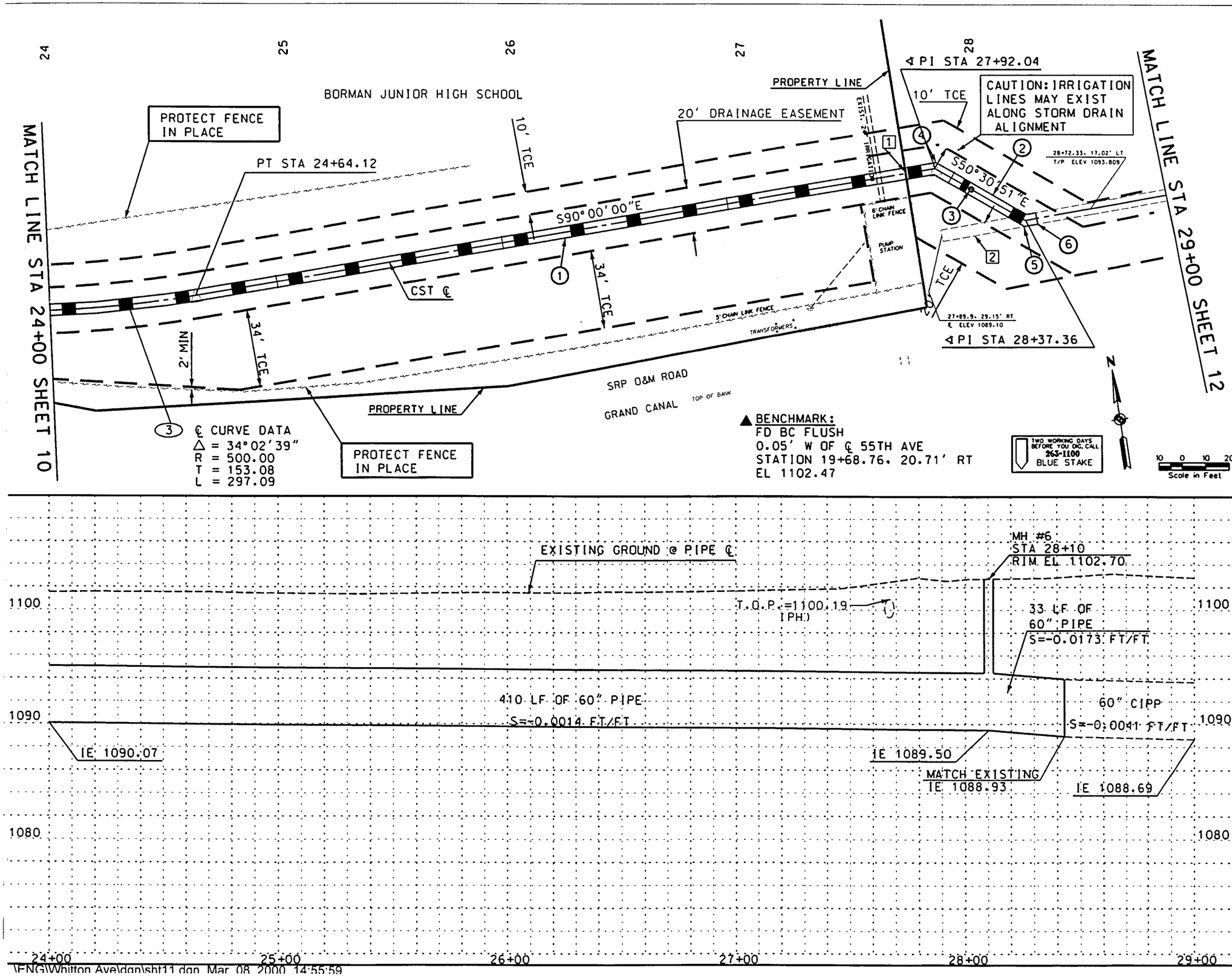

REMOVE

1. REMOVE & REPLACE FENCE (NPI) 30 LF
2. REMOVE CONCRETE PIPE 45 LF

CONSTRUCT

INSTALL NEW STORM DRAIN PIPE

NO.	STATION TO STATION	DIAMETER INCHES	LENGTH FEET
1	24+00 TO 28+10	60	410
2	28+10 TO 28+43	60	33

INSTALL NEW STORM DRAIN MANHOLE

NO.	STATION	BASE DETAIL	SHAFT DETAIL	COVER DETAIL
3	28+10	MAG 521	MAG 522	MAG 424

INSTALL PREFABRICATED BEND

NO.	STATION	SIZE	ANGLE
4	27+92	60"	40°
5	28+38	60"	40°

6 CONSTRUCT 60" PIPE COLLAR PER MAG STD DETAIL 505 1 EA

NO.	REVISION	BY	DATE
2			
1			

FLOOD CONTROL DISTRICT OF MARICOPA COUNTY
ENGINEERING DIVISION

MARYVALE STADIUM WEST
INLET STORM DRAIN
PROJECT CONTROL NO. 6200431

	BY	DATE
DESIGNED	RPH	12/99
DRAWN	FC	12/99
CHECKED	MAL	12/99

Registered Professional Engineer (Civil) CERTIFICATE NO. 28839 RICHARD P. HARRIS Date Signed ARIZONA, U.S.A.

DRAWING NO.	PLAN AND PROFILE	SHEET OF
C5	STA 24+00 TO STA 29+00	11 20

\ENG\Whitton Ave\dgn\sht11.dgn Mar 08 2000 14:55:59

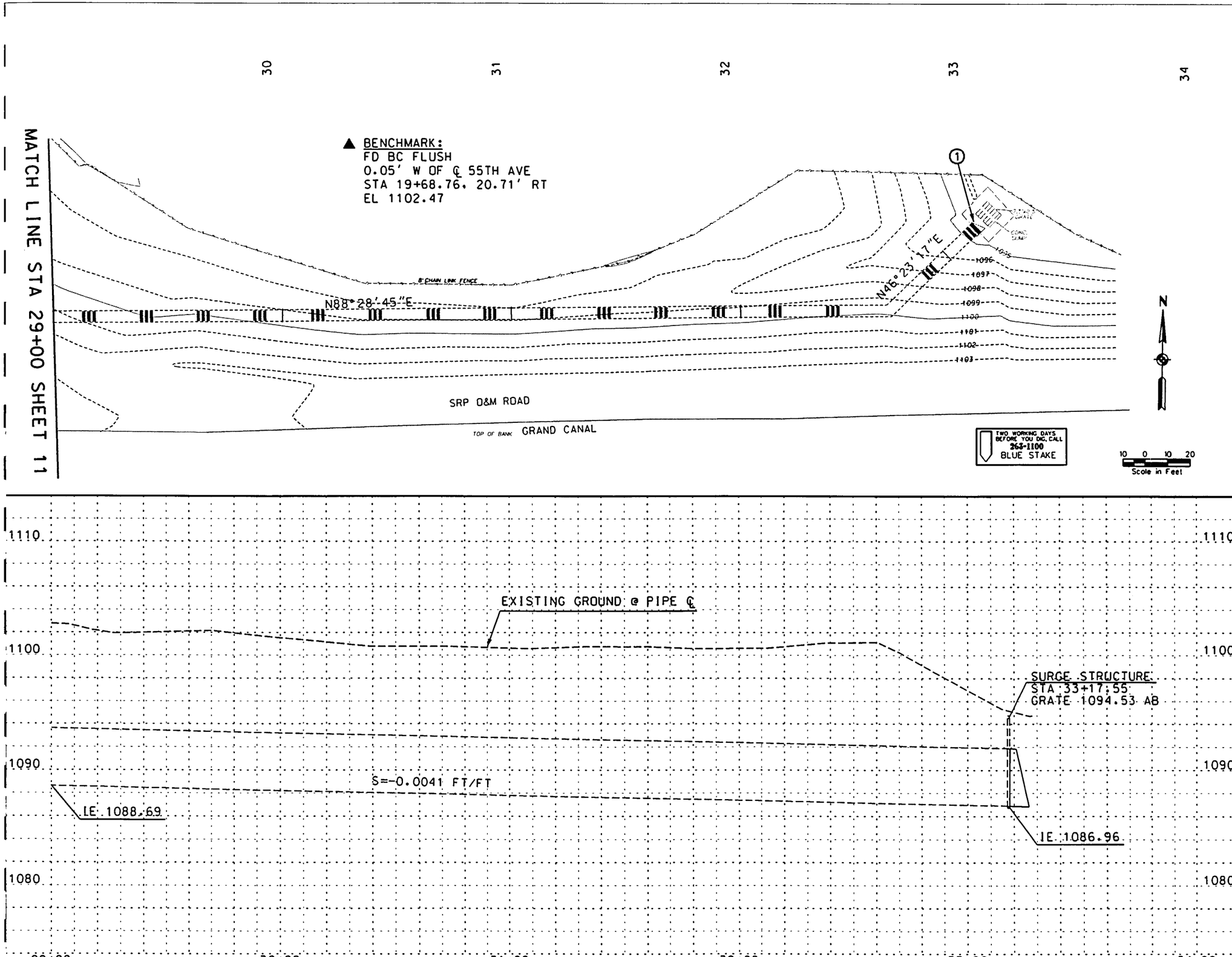

☐ REMOVE ☐

○ CONSTRUCT ○

① INSTALL WATERMAN 60" F-10 LIGHT DUTY DRAINAGE GATE. 1 EA

NO.	REVISION	BY	DATE
2			
1			

FLOOD CONTROL DISTRICT OF MARICOPA COUNTY
ENGINEERING DIVISION

MARYVALE STADIUM WEST
INLET STORM DRAIN
PROJECT CONTROL NO. 6200431

	BY	DATE
DESIGNED	RPH	12/99
DRAWN	FC	12/99
CHECKED	MAL	12/99

Registered Professional Engineer (Civil) CERTIFICATE NO. 28839 RICHARD P. HARRIS Date Signed ARIZONA, U.S.A.

DRAWING NO.	PLAN AND PROFILE	SHEET OF
C6	STA 29+00 TO STA 33+17.55	12 20

\ENG\Whitton Ave\dgn\Sht12.dgn Mar 08 2000 14:56:42

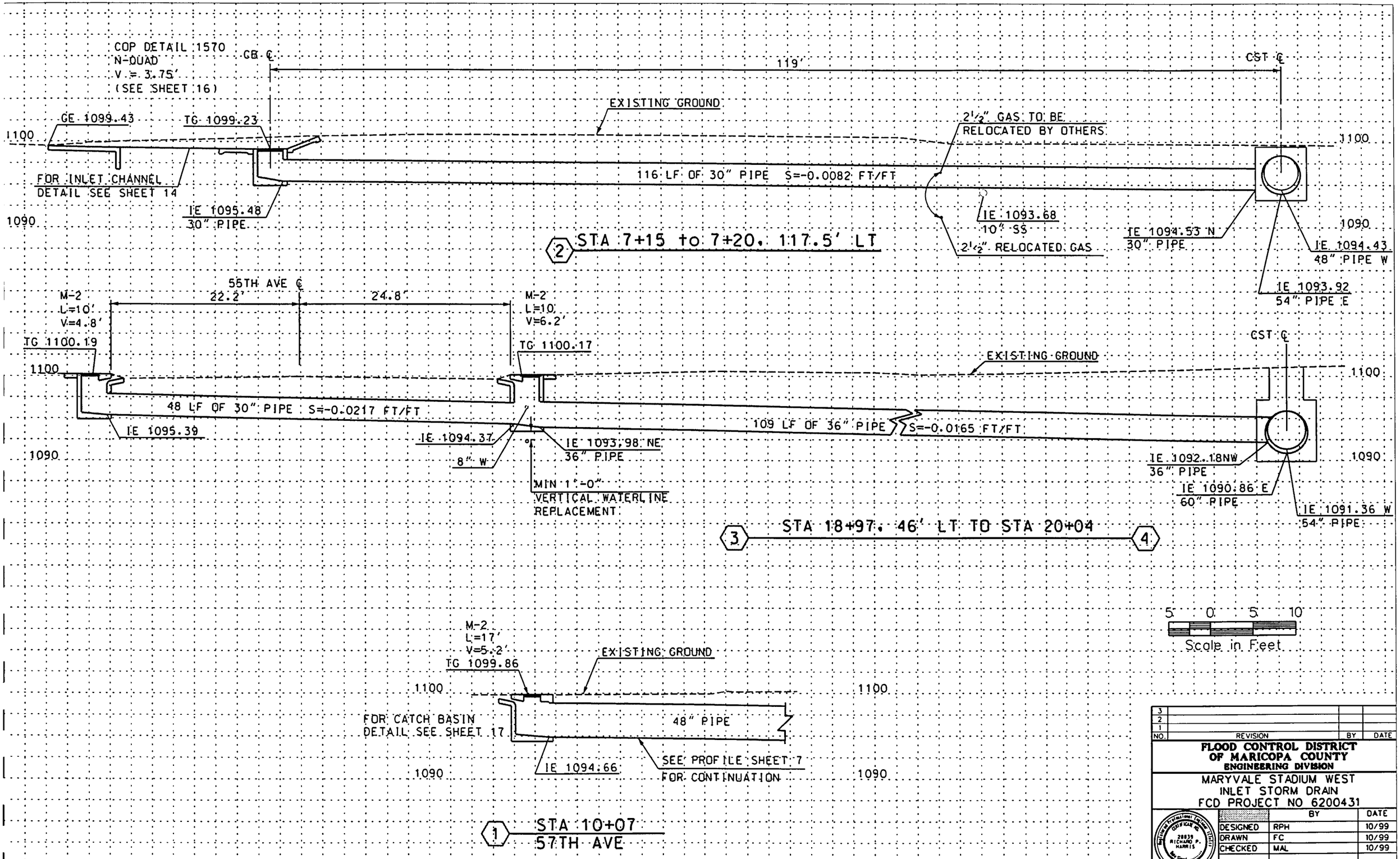

NO.	REVISION	BY	DATE
3			
2			
1			

FLOOD CONTROL DISTRICT OF MARICOPA COUNTY
ENGINEERING DIVISION

MARYVALE STADIUM WEST
INLET STORM DRAIN
FCD PROJECT NO 6200431

	BY	DATE
DESIGNED	RPH	10/99
DRAWN	FC	10/99
CHECKED	MAL	10/99

DRAWING NO. C7

CONNECTOR PIPE PROFILE

SHEET 13 OF 20

\ENG\Whitton Ave\dgn\sht13.dgn Mar 08 2000 14:57:28

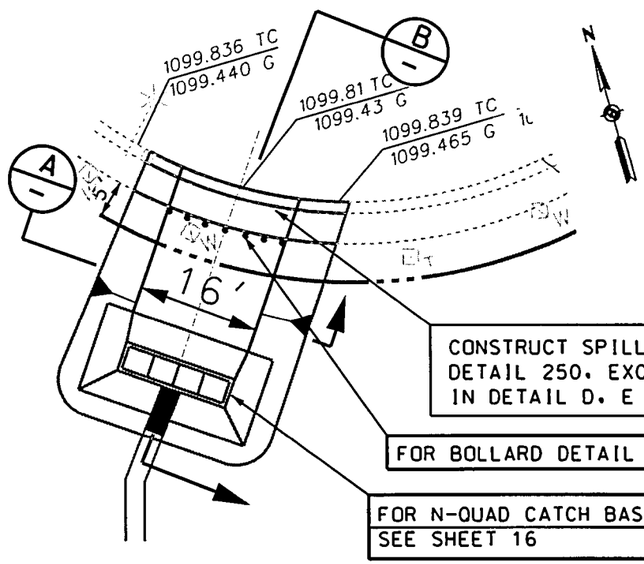

CONSTRUCT SPILLWAY PER MAG DETAIL 250. EXCEPT AS MODIFIED IN DETAIL D. E & F BELOW

FOR BOLLARD DETAIL SEE SHEET 15

FOR N-QUAD CATCH BASIN DETAIL SEE SHEET 16

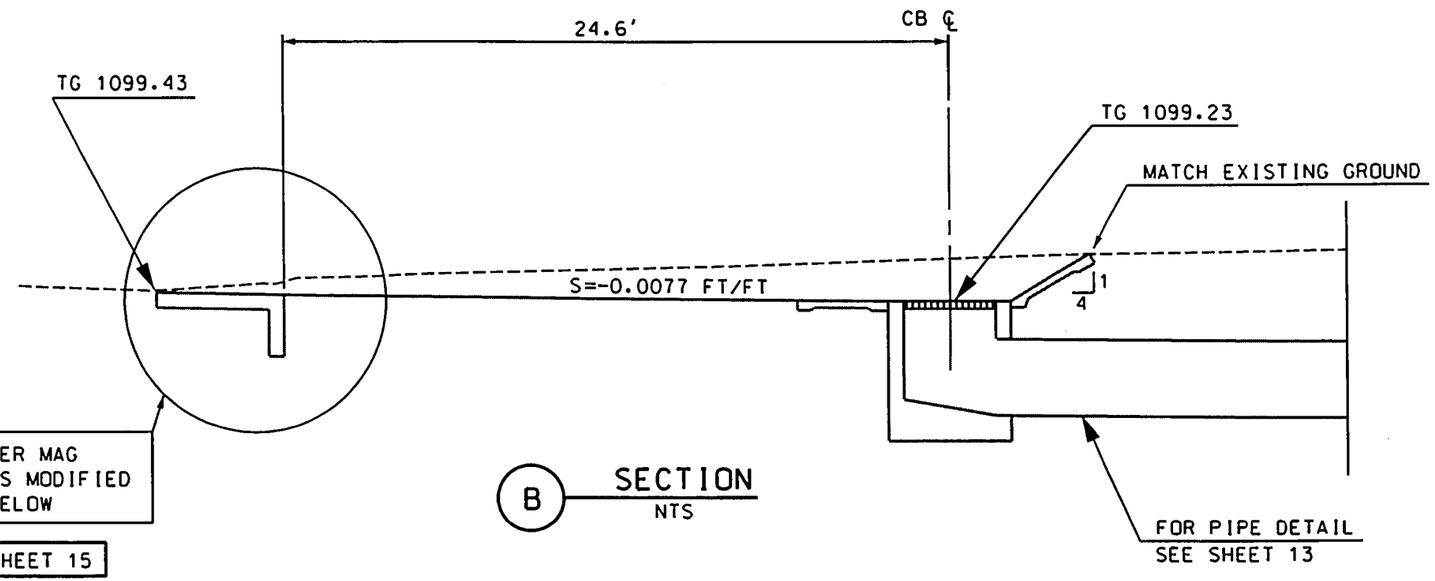

B SECTION
NTS

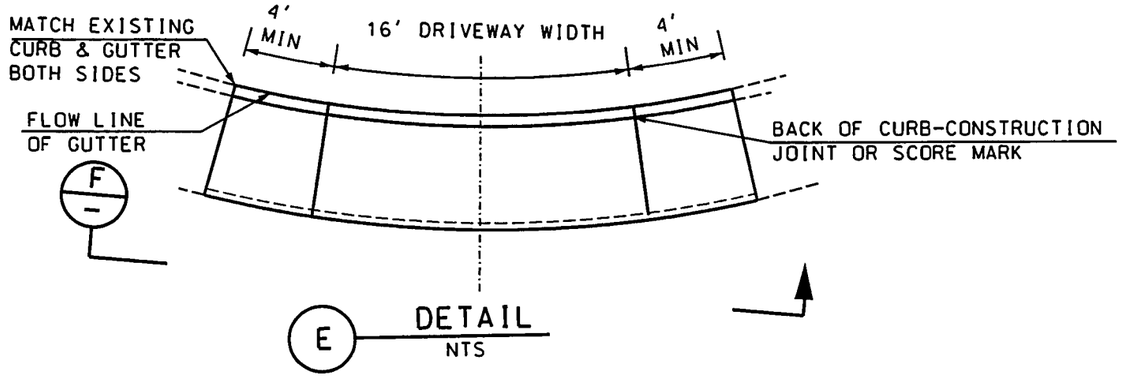

E DETAIL
NTS

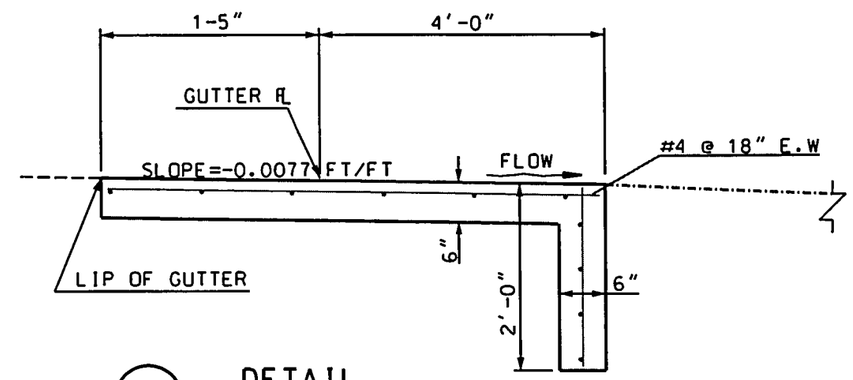

E DETAIL
NTS

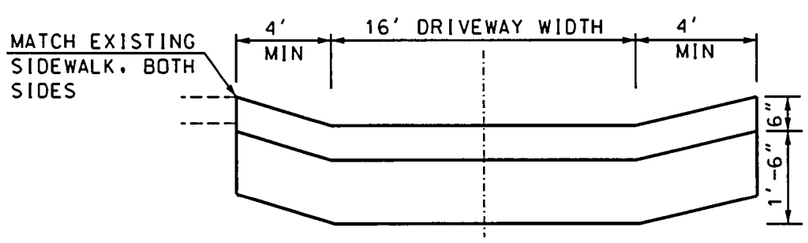

F DETAIL
NTS

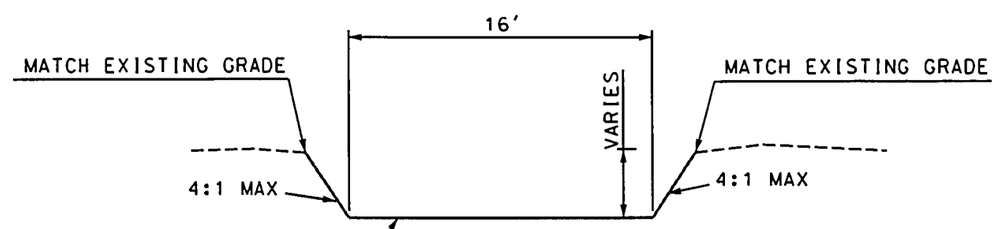

A SECTION
NTS

NO.	REVISION	BY	DATE
3			
2			
1			

FLOOD CONTROL DISTRICT OF MARICOPA COUNTY
ENGINEERING DIVISION

MARYVALE STADIUM WEST
INLET STORM DRAIN
PROJECT CONTROL NO. 6200431

	BY	DATE
DESIGNED	RPH	12/99
DRAWN	FC	12/99
CHECKED	MAL	12/99

DRAWING NO. D1

INLET CHANNEL DETAIL

SHEET 14 OF 20

\ENG\Whitton Ave\dgn\Sht14.dgn Mar 08 2000 14:57:56

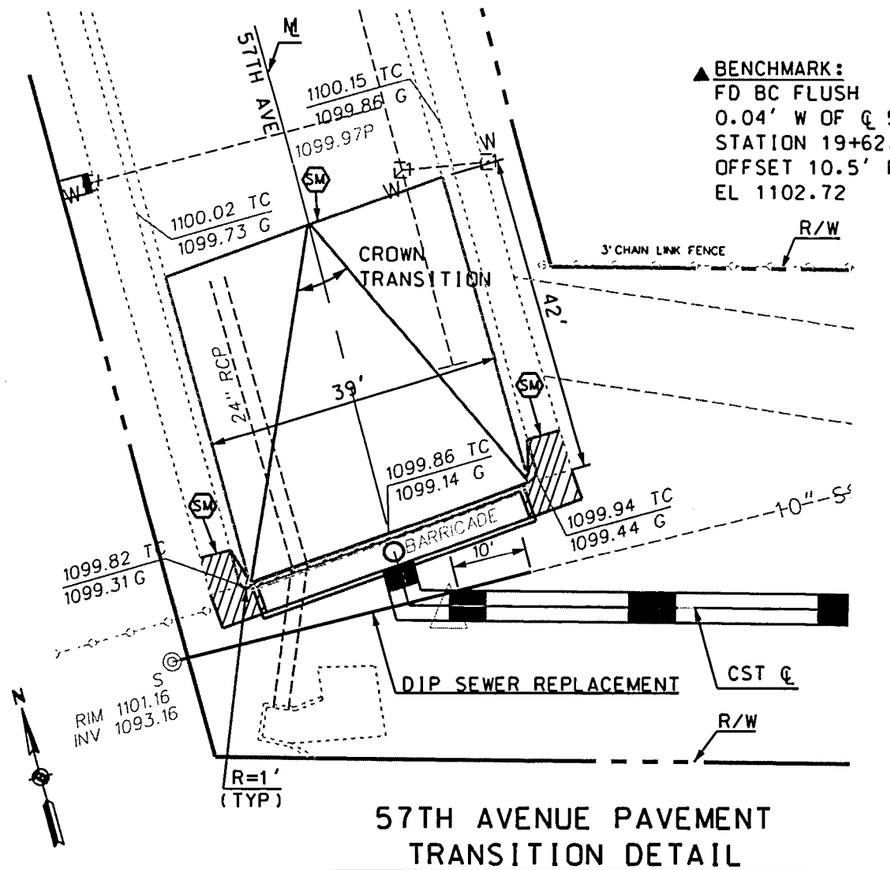

▲ BENCHMARK:
FD BC FLUSH
0.04' W OF ℄ 55TH AVE
STATION 19+62.18
OFFSET 10.5' RT
EL 1102.72

10 0 10 20
Scale in Feet

57TH AVENUE PAVEMENT TRANSITION DETAIL

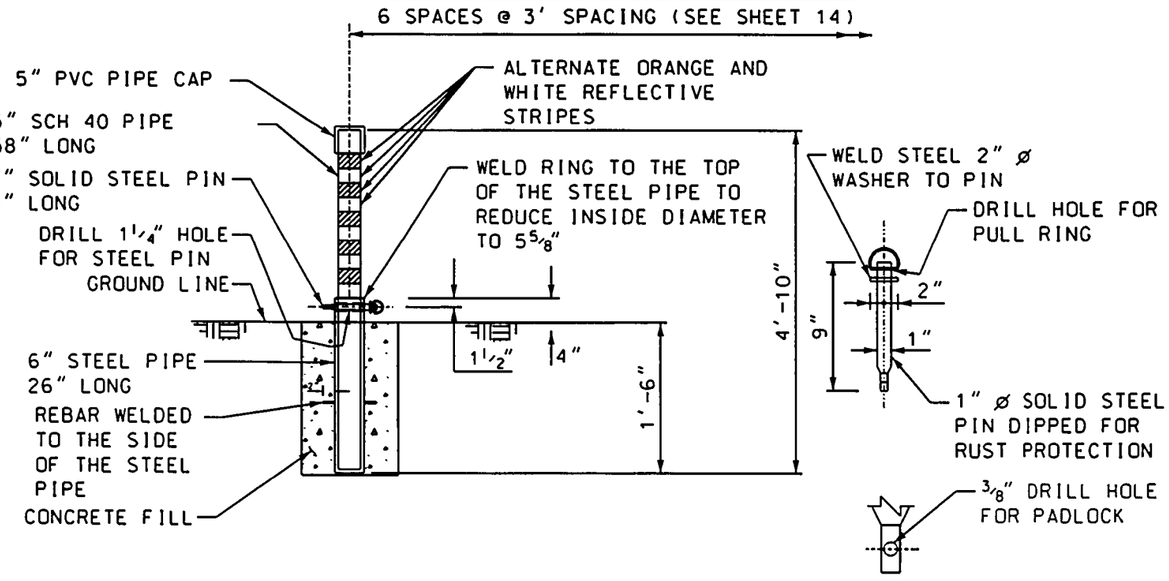

REMOVABLE BOLLARD DETAIL

NTS

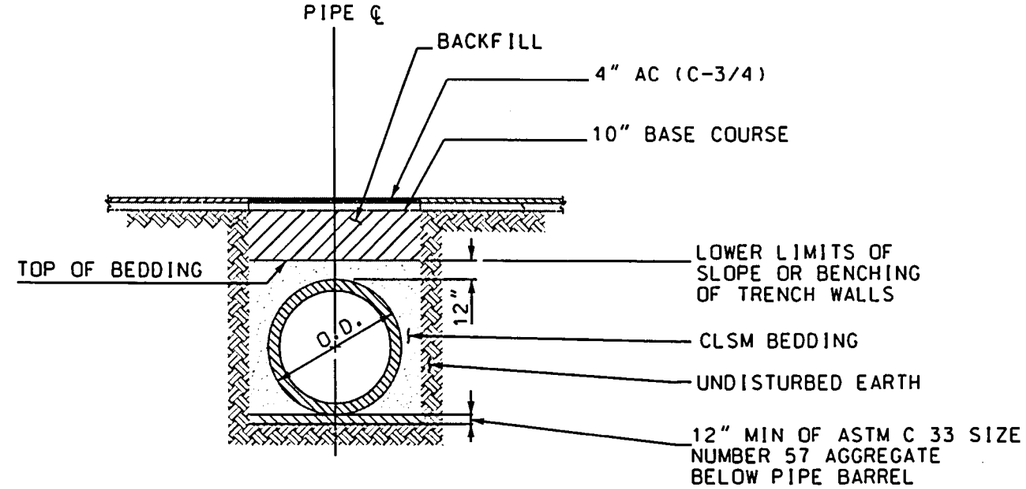

TYPICAL TRENCH DETAIL PAVED SURFACE STA 19+20 TO STA 19+90

NTS

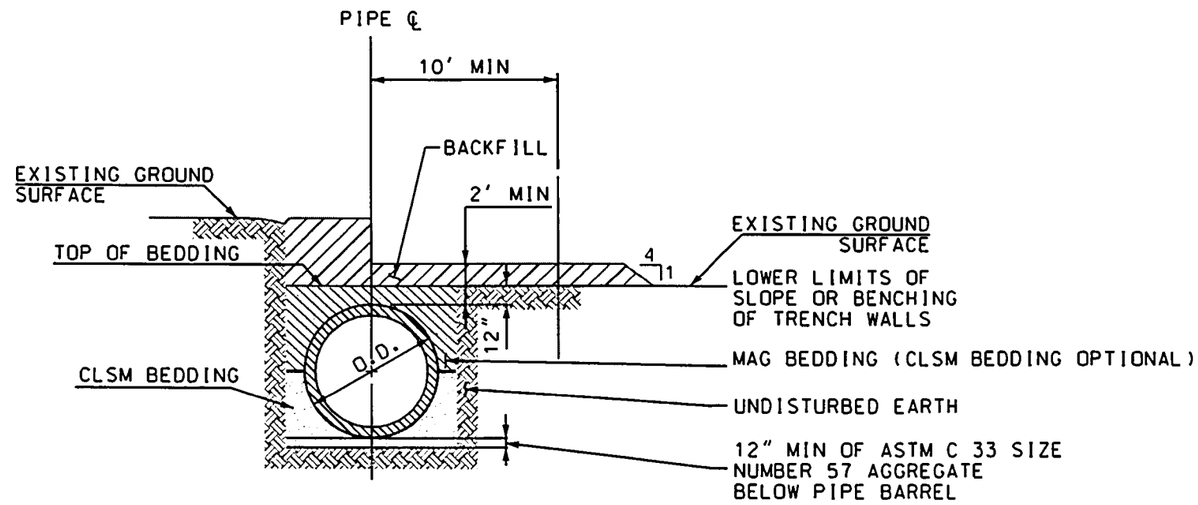

TYPICAL TRENCH DETAIL UNPAVED SURFACE STA 4+93.8 TO 19+20 AND STA 19+90 TO 28+42.2

NTS

TWO WORKING DAYS BEFORE YOU DIG, CALL 263-1100 BLUE STAKE

NO.	REVISION	BY	DATE
3			
2			
1			

FLOOD CONTROL DISTRICT OF MARICOPA COUNTY
ENGINEERING DIVISION

MARYVALE STADIUM WEST
INLET STORM DRAIN
PROJECT CONTROL NO. 6200431

	BY	DATE
DESIGNED	RPH	12/99
DRAWN	FC	12/99
CHECKED	MAL	12/99

REGISTERED PROFESSIONAL ENGINEER 28839 RICHARD P. HARRIS ARIZONA, U.S.A.

DRAWING NO.	TRENCH AND PAVEMENT DETAILS	SHEET OF
D2		15 20

\ENG\Whitton Ave\dgn\SHT15.DGN Mar 08 2000 14:58:27

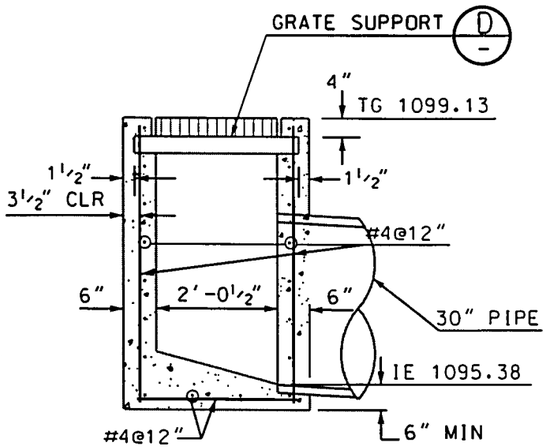

C SECTION
NTS

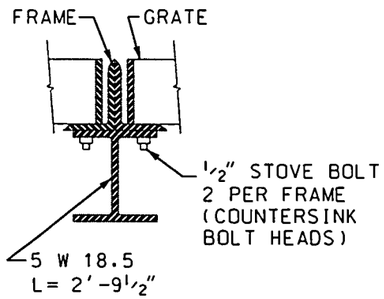

D SECTION
NTS

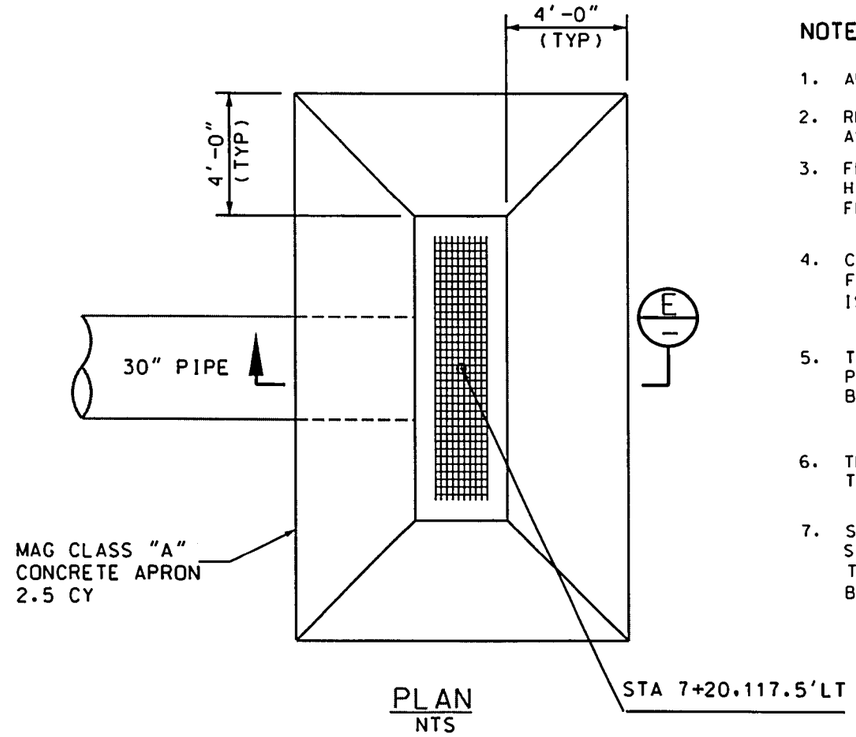

PLAN
NTS

NOTES:

1. ALL CONCRETE SHALL BE CLASS A.
2. REINFORCING STEEL SHALL CONFORM TO ASTM SPECIFICATION A615 GRADE-60
3. FLOOR OF BASIN SHALL BE TROWELLED TO A HARD, SMOOTH SURFACE AND SHALL SLOPE FROM ALL DIRECTIONS TO OUTLET.
4. CONNECTOR PIPE SHALL BE TRIMMED TO THE FINAL SHAPE AND LENGTH BEFORE CONCRETE IS POURED.
5. THE CATCH BASIN MAY BE PREFABRICATED PROVIDING A SHOP DRAWING IS APPROVED BY THE ENGINEER PRIOR TO FABRICATION.
6. THE FRAME SHALL BE DETAIL P1564, TYPE 1 AND THE GRATE SHALL BE DETAIL P1565, TYPE 1.
7. STEPS(MAG DETAIL 428 POLYPROPYLENE) PLACE STEPS AT 12" INTERVALS FROM THE FLOOR OF THE BASIN WITH THE TOP STEPS AT 12" (MIN) BELOW THE TOP OF THE GRATE.

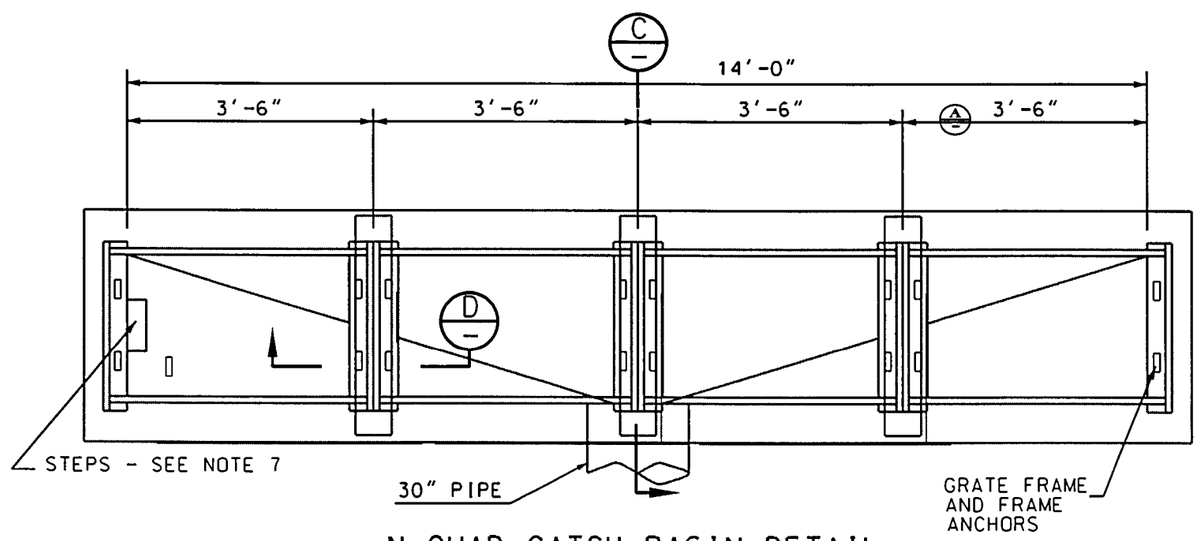

N-QUAD CATCH BASIN DETAIL
STA 7+20, 117.5' LT
NTS

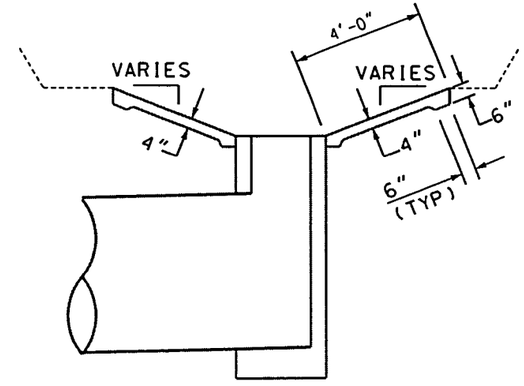

E SECTION
NTS

CONCRETE APRON DETAIL
NTS
FOR PROFILE DETAIL SEE SHEET 13

NO.	REVISION	BY	DATE
3			
2			
1			

FLOOD CONTROL DISTRICT OF MARICOPA COUNTY
ENGINEERING DIVISION

MARYVALE STADIUM WEST
INLET STORM DRAIN
PROJECT CONTROL NO. 6200431

	BY	DATE
DESIGNED	RPH	12/99
DRAWN	FC	12/99
CHECKED	MAL	12/99

DRAWING NO.	N-QUAD CATCH BASIN DETAILS	SHEET OF
D3		16 20

\ENG\Whitton Ave\dgn\sht16.dgn Mar 08 2000 14:58:55

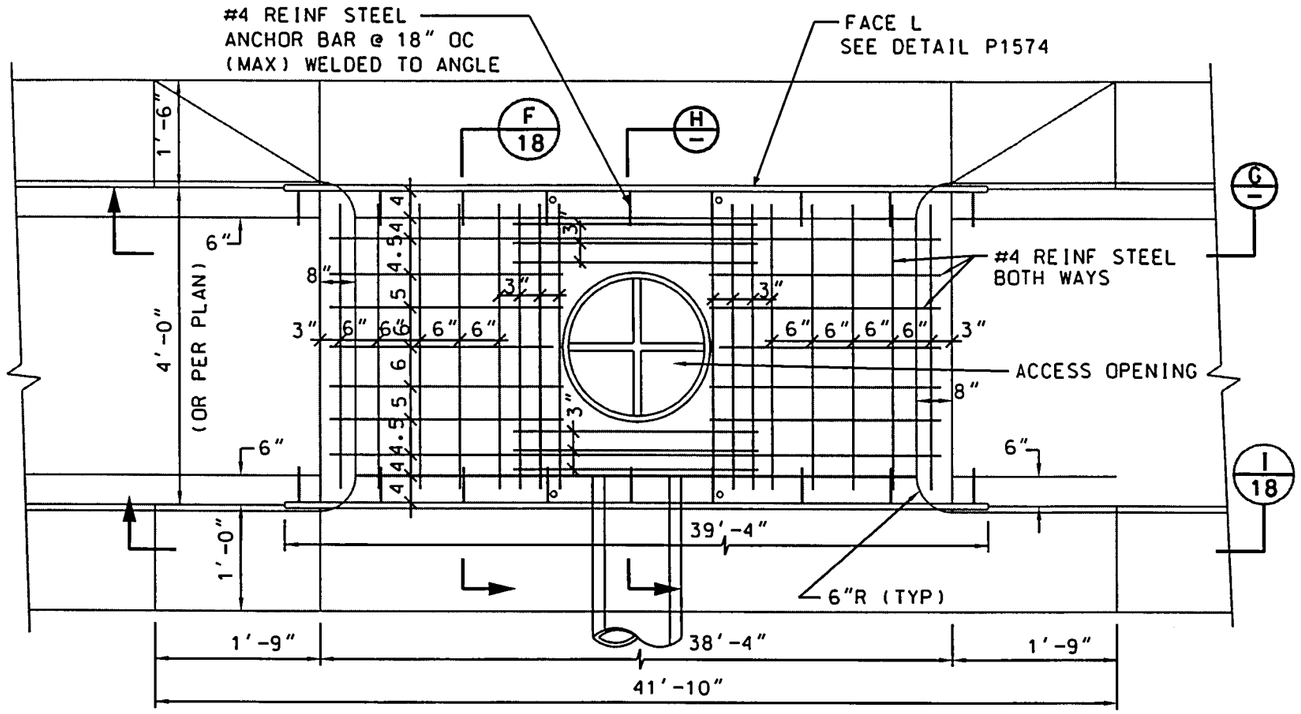

TYPE 'P' PLAN
NTS

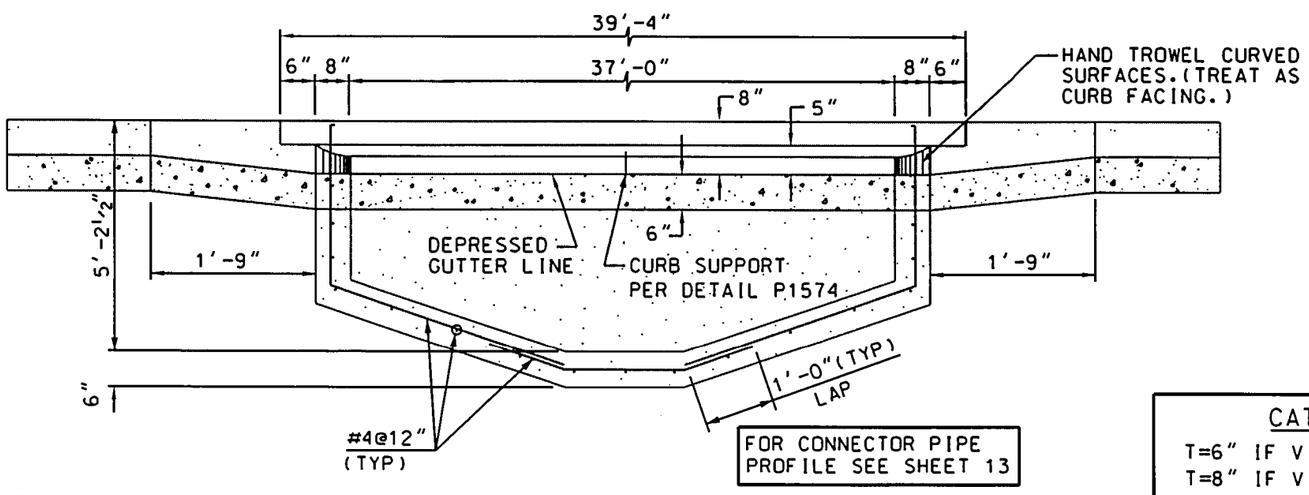

CURB	A	B
4"	3'-3"	15'-6"
5"	2'-6"	14'-0"
6"	1'-9"	41'-10"

G SECTION
NTS

NOTES:

1. ALL CONCRETE SHALL BE CLASS A.
2. ALL REINFORCING STEEL SHALL BE DEFORMED BARS AND SHALL CONFORM TO ASTM SPECIFICATION 615.
3. CONNECTOR PIPES MAY BE PLACED IN ANY WALL AS PER PLANS.
4. FLOOR OF BASIN SHALL BE TROWELLED TO A HARD, SMOOTH SURFACE AND SHALL SLOPE FROM ALL DIRECTIONS TO OUTLET.
5. CONSTRUCTION DRAINS SHALL BE INSTALLED IN ALL INLETS BUILT WITH PAVING PROJECTS. (SEE DETAIL P1575)
6. ACCESS FRAME AND COVER PER DETAIL P1561.

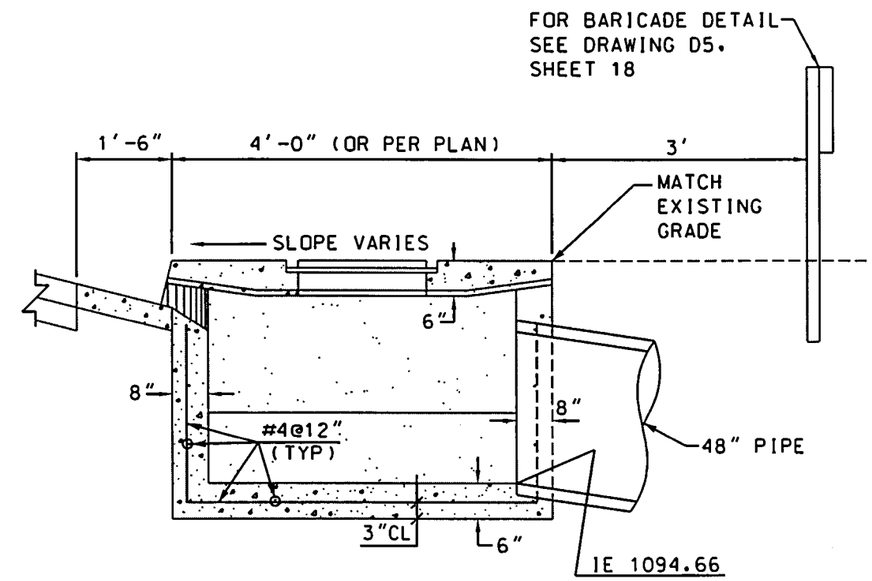

H SECTION
NTS

CATCH BASIN WALL THICKNESS

T=6" IF V = 4' OR LESS
T=8" IF V = 4' TO 8'
IF V EXCEEDS 8', SPECIAL DESIGN IS REQUIRED.
V=4'-0" UNLESS UNLESS OTHERWISE SPECIFIED.

CATCH BASIN DETAIL
STA 10+07, 57TH AVE
NTS

NO.	REVISION	BY	DATE
3			
2			
1			

FLOOD CONTROL DISTRICT
OF MARICOPA COUNTY
ENGINEERING DIVISION

MARYVALE STADIUM WEST
INLET STORM DRAIN
PROJECT CONTROL NO. 6200431

	BY	DATE
DESIGNED	RPH/KVH	12/99
DRAWN	SRN	12/99
CHECKED	MAL	12/99

DRAWING NO. D4 | CATCH BASIN DETAILS | SHEET 17 OF 20

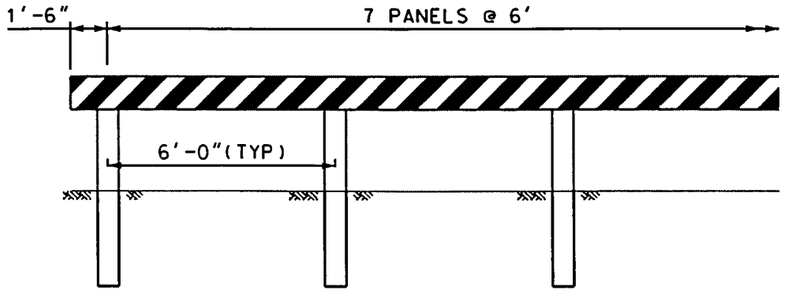

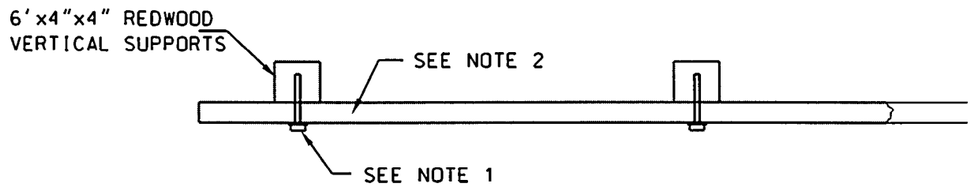

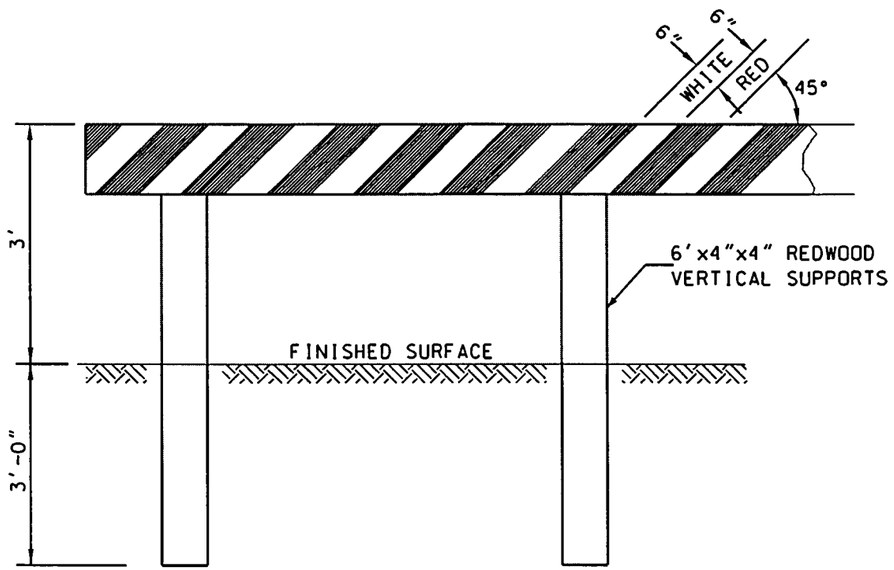

BARRICADE
NTS

NOTES:

1. FASTEN WITH 1/2"x5" LAG SCREWS WITH 2 FLAT WASHERS OR (2) 5/8" BOLTS. WITH 4 FLAT WASHERS.
2. 3"X10" DOUGLAS FIR PLANK.

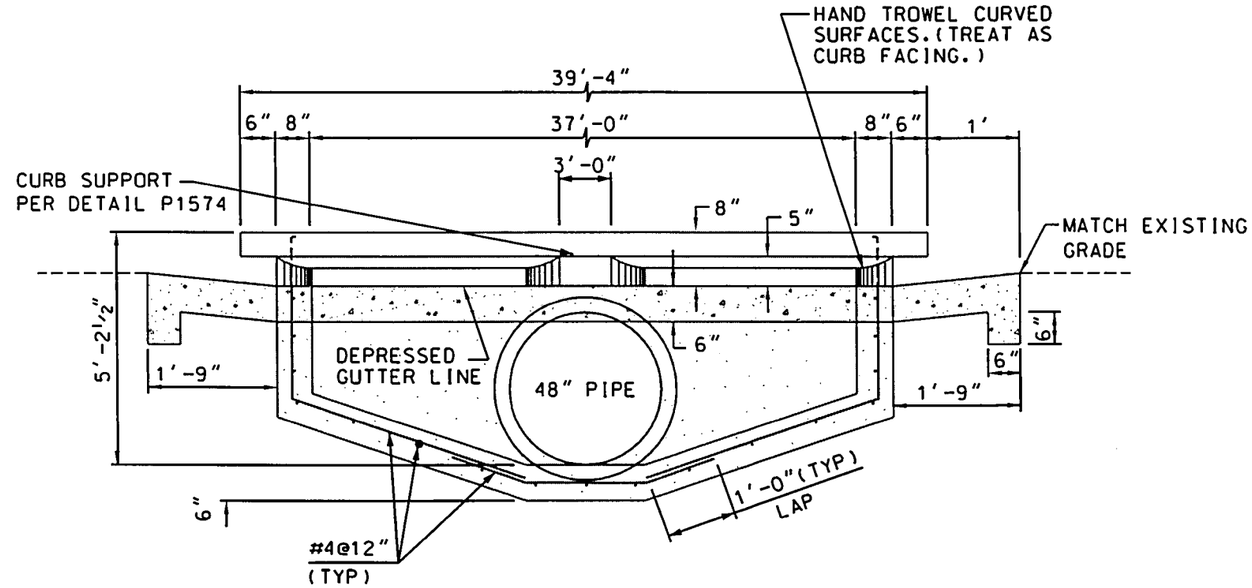

1/17 SECTION
NTS

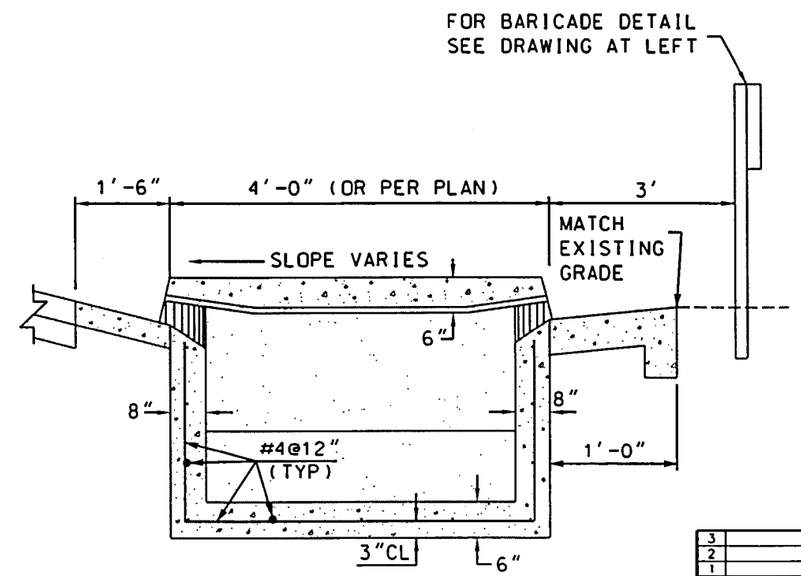

F/17 SECTION
NTS

NO.	REVISION	REVISION	BY	DATE
3				
2				
1				

FLOOD CONTROL DISTRICT OF MARICOPA COUNTY
ENGINEERING DIVISION

MARYVALE STADIUM WEST
INLET STORM DRAIN
PROJECT CONTROL NO. 6200431

	BY	DATE
DESIGNED	RPH	12/99
DRAWN	FC	12/99
CHECKED	MAL	12/99

Registered Professional Engineer (Civil) CERTIFICATE NO. 28839 RICHARD P. HARRIS Date Signed ARIZONA, U.S.A.

DRAWING NO.		SHEET OF
D5	CATCH BASIN/BARRICADE DETAIL	18 20

\ENG\Whitton Ave\dgn\sht18.dgn Mar 08 2000 15:00:00

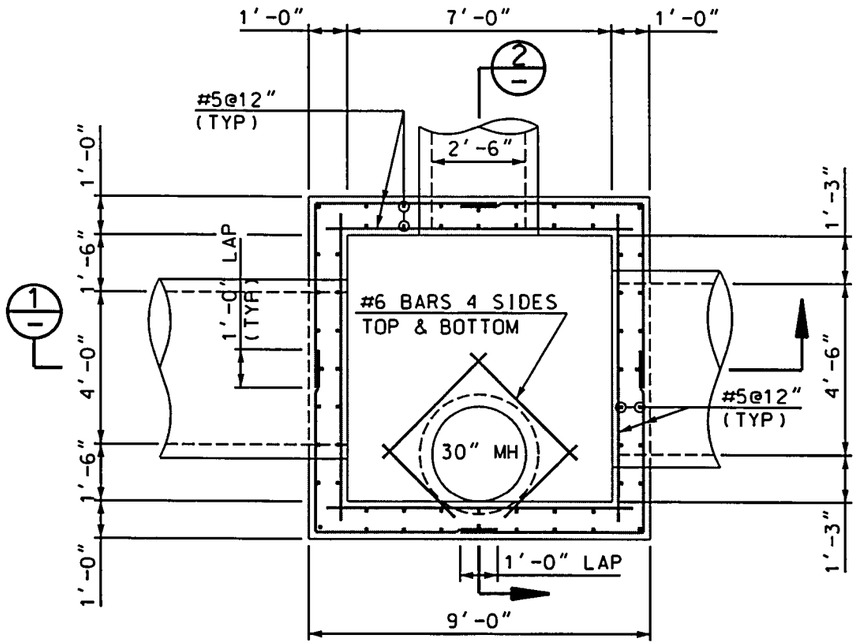

PLAN VIEW
SCALE: 1/2" = 1'-0"

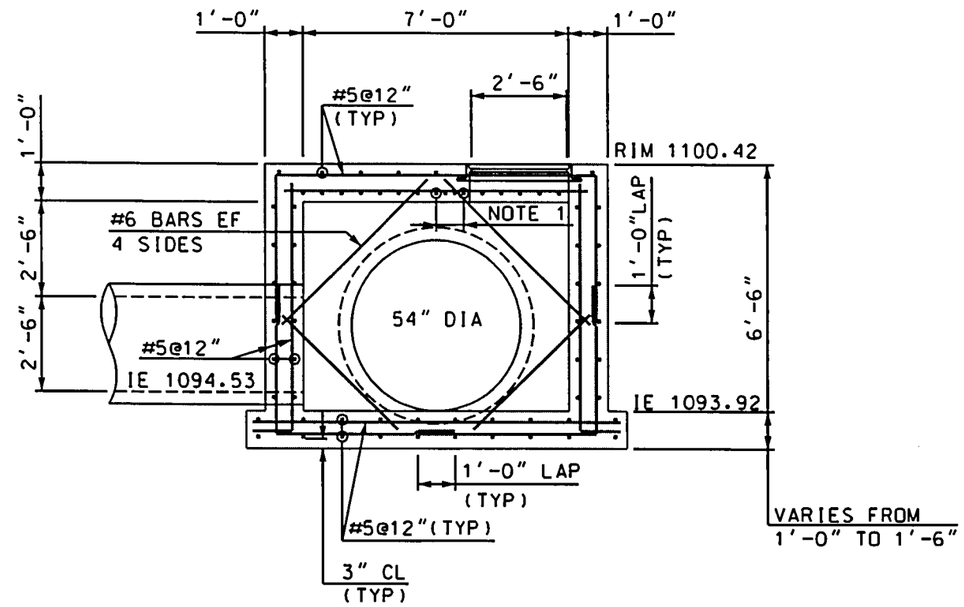

2 SECTION
SCALE: 1/2" = 1'-0"

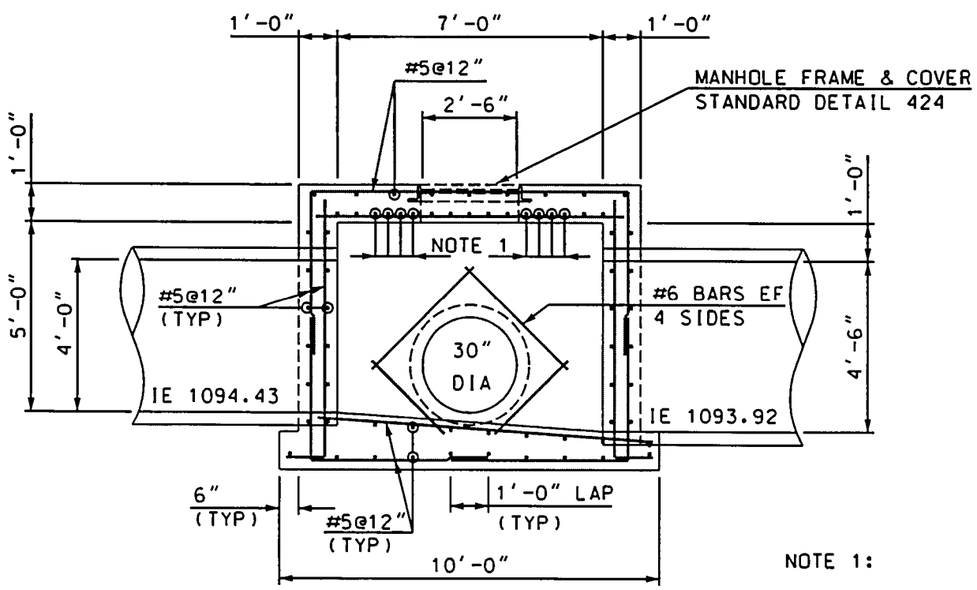

1 SECTION
SCALE: 1/2" = 1'-0"

NOTE 1:

4#6 BARS @ 3" OC AS SHOWN AND THE REST OF THE BOTTOM REINFORCING @ 6" OC

NO.	REVISION	BY	DATE
3			
2			
1			

FLOOD CONTROL DISTRICT OF MARICOPA COUNTY
ENGINEERING DIVISION

MARYVALE STADIUM WEST
INLET STORM DRAIN
PROJECT CONTROL NO. 6200431

	BY	DATE
DESIGNED	KVH/RPH	12/99
DRAWN	FC	12/99
CHECKED	MAL	12/99

Registered Professional Engineer (Civil) CERTIFICATE NO. 18600 KUMAR V. HANUMAIAH Date Signed ..... ARIZONA, U.S.A.

DRAWING NO.	SPECIAL STRUCTURE DETAIL STA 7+15	SHEET OF
D6		19 20

\ENG\Whitton Ave\dgn\SHT19.dgn Mar 08 2000 15:00:32

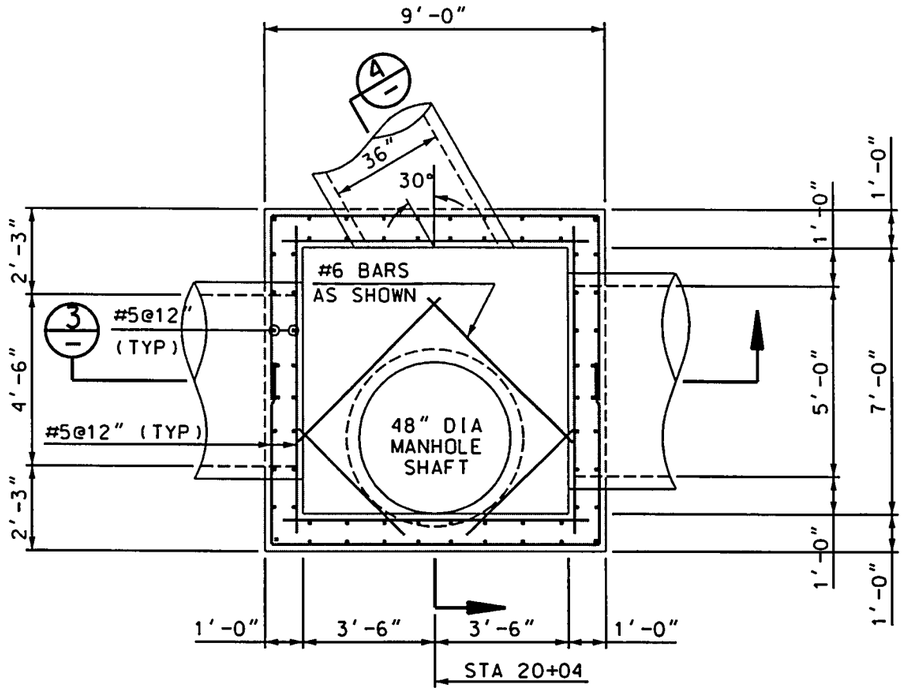

PLAN VIEW
SCALE: 1/2" = 1'-0"

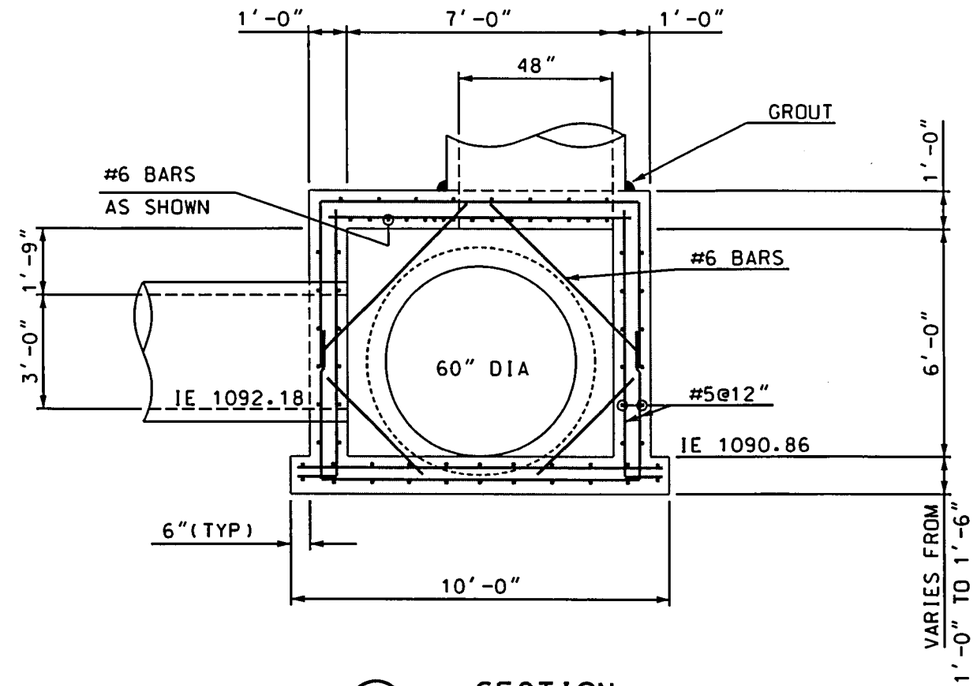

4 SECTION
SCALE: 1/2" = 1'-0"

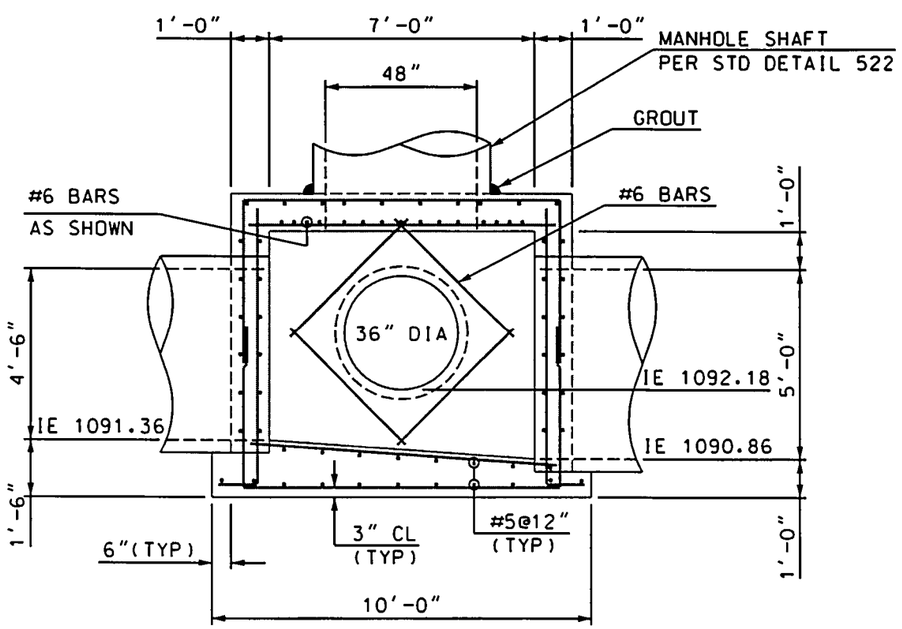

3 SECTION
SCALE: 1/2" = 1'-0"

NO.	REVISION	BY	DATE
3			
2			
1			

FLOOD CONTROL DISTRICT OF MARICOPA COUNTY
ENGINEERING DIVISION

MARYVALE STADIUM WEST
INLET STORM DRAIN
PROJECT CONTROL NO. 6200431

	BY	DATE
DESIGNED	KVH/RPH	12/99
DRAWN	FC	12/99
CHECKED	MAL	12/99

Registered Professional Engineer (Civil) CERTIFICATE NO. 28839 RICHARD P. HARRIS Date Signed 12/29/99 Arizona, U.S.A.

DRAWING NO.		SHEET OF
D7	SPECIAL STRUCTURE DETAIL STA 20+04	20 20

\ENG\Whitton Ave\dgn\SHT20.dgn Mar 08 2000 15:00:59