CSV

Structure Selection Report

August 2001

Bethany Home/Grand Canal Flood Control Project

Bethany Home Outfall Channel, Phase II

Project No. 98-46, PCN No. 620 03 32

Prepared for:
Flood Control District of Maricopa County
2801 West Durango Street
Phoenix, Arizona 85009
Project No. 98-46

Prepared by:
DMJM+HARRIS
2777 East Camelback Road, Suite 200
Phoenix, Arizona 85016
Project No. 6888

Prepared in Cooperation with:
The City of Glendale
5850 West Glendale Avenue
Glendale, Arizona 85301

Prepared in Cooperation with:
The City of Phoenix
200 West Washington
Phoenix, Arizona 85003

Registered Professional Engineer (Civil)
Certificate No. 23984
MARK K. GILLILAND
Date Signed 8/17/01
ARIZONA, U.S.A.

TABLE OF CONTENTS

1.0 INTRODUCTION 1
2.0 STRUCTURE TYPE SELECTION AND CRITERIA 2
3.0 STRUCTURE CONFIGURATION 2
4.0 GEOTECHNICAL AND FOUNDATIONS 3
5.0 CONSTRUCTION SEQUENCING AND TRAFFIC CONTROL 4
6.0 DRAINAGE 5
7.0 RIGHT-OF-WAY 5
8.0 UTILITIES 5
9.0 AESTHETICS 5
10.0 COST ESTIMATES 6
11.0 91ST AVENUE BRIDGE 7
12.0 83RD AVENUE BRIDGE 9
13.0 PEDESTRIAN STRUCTURES 12
14.0 REFERENCES 13

APPENDICES

APPENDIX A – Structure Plans and Typical Sections

APPENDIX B - Quantities and Cost Estimates

1.0 INTRODUCTION

DMJM+HARRIS completed a Pre-Design Study for the Bethany Home/Grand Canal Flood Control Project (BH/GC FCP) in September 2000. The study evaluated alternatives for mitigating flooding problems adjacent to the Grand Canal between the Sunset Detention Basin at 64th Avenue and Indian School Road to the Loop 101 Freeway (see FIGURE 1).

The Bethany Home Outfall Channel, Phase II (BHOC) is part of the overall BH/GC FCP. This particular phase of the overall project is located in Maricopa County and extends from the east of the Loop 101 Freeway to approximately 1,000 feet east of 83rd Avenue. In general, the proposed facility will be a grass lined trapezoidal channel with varying side slopes to provide a meandering appearance. The BHOC channel will be constructed on the north side of the Grand Canal from near the Loop 101 Freeway to approximately the 87th Avenue alignment. Immediately east of the 87th Avenue alignment, the channel will cross under the Grand Canal in a multi-cell box culvert and will continue along the south side of the canal around the SRP Welborn Substation. This channel will continue easterly to the second Grand Canal undercrossing located east of 83rd Avenue. A transition will be constructed at this location to accommodate a future connection of the Bethany Home Road storm drain and the BHOC box culvert to the south and east.

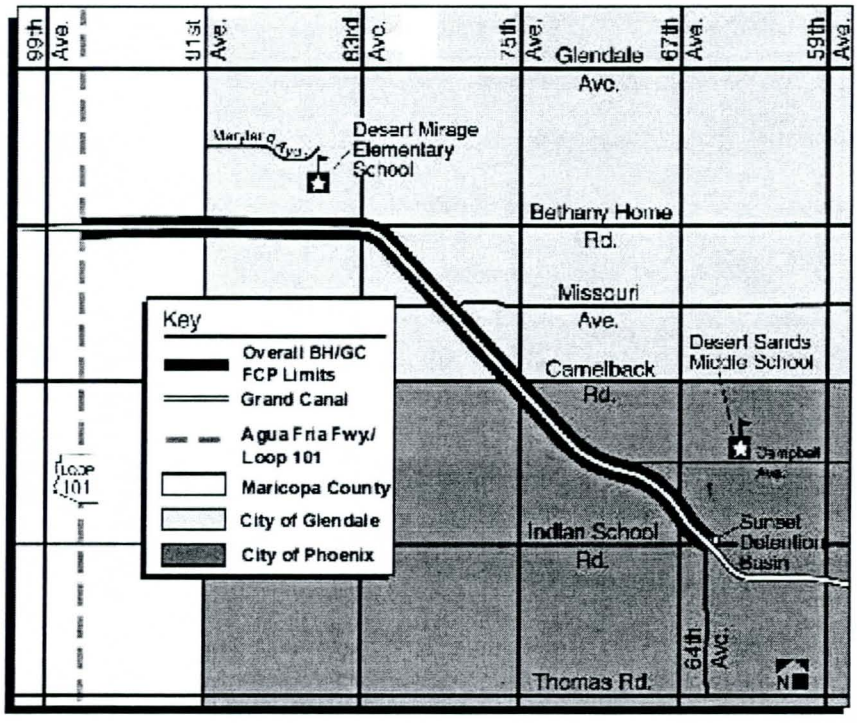

FIGURE 1

This report addresses the selection of bridge structure types and configurations for the BHOC project. The bridge structures included are:

1. 91st Avenue Bridge

2. 83rd Avenue Bridge

In addition, some general information concerning Pedestrian bridges is provided in the final section.

This Structure Selection Report is based on information subject to change, refinement or verification as the design is advanced to a final level of completion. The purpose of this Structure Selection Report is to evaluate viable structural options, establish the preliminary design for the structures, provide the most cost-effective structures, and make a recommendation on structure types.

2.0 STRUCTURE TYPE SELECTION AND CRITERIA

The structure type selection process is an evaluation of the functional requirements of a bridge with respect to the practical and economical constraints imposed by roadway geometrics, watercourse, hydraulics, construction sequencing, traffic control requirements, site conditions, and the physical limitations of bridge structural systems.

Bridge configurations evaluated in detail are those meeting the functional requirements which are known to be economical, constructable, serviceable, and aesthetically acceptable for the proposed site and application.

The conditions for the selection of a bridge configuration for a specific site may place greater or controlling significance on one or more of these parameters. The bridge configuration recommended for the final design is that which best satisfies all the constraints relative to their degree of importance for each particular site.

The technical design criteria used in developing the structural aspects of the alternatives are *the AASHTO Standard Specifications for Highway Bridges, Sixteenth Edition*, 1996, including the 1997, 1998, 1999, and 2000 Interim Specifications, and the *MAG Uniform Standard Specifications for Public Works Construction*. DMJM+HARRIS has also reviewed and utilized design criteria from the *ADOT Bridge Design and Detailing Manual*, 1994 that will cost effectively provide an enhanced structure.

3.0 STRUCTURE CONFIGURATION

In recent history the design and construction of bridges in Maricopa County has produced a knowledge base of economical and constructable bridge configurations for similar channel crossings.

The superstructure types commonly constructed over natural or man-made drainage channels and canals typically consists of side-by-side precast-prestressed concrete box beams, precast-prestressed voided slabs, continuous cast-in-place concrete slab bridges, and standard precast-prestressed AASHTO I-girders composite with a cast-in-place deck. A few bridges with post-tensioned box girder superstructures have also been constructed over natural drainage channels. Reinforced concrete box culverts and hybrid bridges supported on mat foundations are frequently used for smaller channels. The selection of one of these superstructure types is usually determined by a combination of the required freeboard, bridge span lengths, approach roadway vertical profile, and the constructability of the structure when channel flows and scour are a consideration. The historical service performance for all of these structure types has provided generally good service performance.

The selection of an abutment type or configuration is also a part of this evaluation process. The minimum bridge length is obtained by placing the abutments just outside the design high water limits. The maximum bridge length is obtained by placing the abutment nearer the top of the channel slope where the vertical abutment face exposure will be at a practical minimum between the slope and the superstructure soffit.

Abutments range from stub abutments to full-depth abutments. Stub abutments are typically supported on drilled shafts when loads or soil conditions are not conducive to the use of spread footings. Full-depth abutments are usually cantilevered from spread footings or shaft caps to resist lateral earth pressures and maintain stability. The shaft caps are supported by multiple rows of drilled shafts.

Piers are usually multi-column bents with integral cap beams for slab and post-tensioned box girder superstructures bridges, and exposed cap beams for precast superstructures. The columns are usually round concrete columns with no rustication.

A General Plan, Elevation & Typical Section Sheet has been completed for the 91st Avenue and 83rd Avenue structures and are included in Appendix A. The 60% drawings will incorporate the architectural enhancements that are additions to the basic bridge elements. All architectural enhancements will conform to the Landscape Aesthetics Design Guidelines established and the Corridor Master Plan.

4.0 GEOTECHNICAL AND FOUNDATIONS

DMJM+HARRIS prepared a *Geotechnical Investigation Report, August 2001,* for the BHOC project to supplement the preliminary geotechnical investigation report prepared by ATL during the Initial Design Study.

Typically, along the entire project limits, the subsurface soils consist of near surface clayey soils underlain by interbedded deposits of alluvial sands and finer grained silts and clays. The soils encountered in Borings 5 and 6 which are located at the 91st Avenue bridge consist of non-cemented to weakly cemented, medium plasticity sandy clays to depths of about 14 to 23 feet below existing site grades. Below the clayey

stratum are interbedded non-plastic sands and silty sands and low to medium plasticity sandy clays to clayey sands. The soils are moderately firm to firm in the upper 10 to 15 feet and are very firm to hard at depth. With regards to construction of drilled shafts, little to no caving is anticipated within the clayey soils and moderate to excessive caving would be expected within the cleaner sand layers. Stabilization of the sands by either casing or slurry methods will likely be required.

At 83rd Avenue, Borings 13 and 14 encountered finer grained soils at more depth as compared to 91st Avenue. Predominantly non-cemented to weakly lime cemented, medium plasticity clayey soils were encountered to depths of about 37 to 39 feet in the two borings. Sandy soils were encountered below the clayey stratum to a depth of about 48 feet in each boring. This sand layer may be subject to undesirable caving during advancement of drilled shafts. The sand layer is underlain by finer grained sandy to silty clay, and silty to clayey sand. The soils varied from soft to firm in the upper 15 to 25 feet, becoming very firm to hard to about 48 to 50 feet. The soils generally varied from moderately firm to very firm below those depths. With the exception of possible caving within the sand layers drilled shafts should be excavated with little difficulty. Less caving would be anticipated for the 83rd Avenue shafts as compared to 91st Avenue. Stabilization of the excavations may however be necessary in order to limit large overruns in concrete.

Given the presence of the near surface moisture-sensitive clay soils, it is recommended that the structures be supported on drilled, cast-in-place concrete shafts embedded below the channel invert. Drilled shafts will not be subject to significant movement should the upper clay soils experience substantial increases in moisture due to seepage from either, the BHOC channel, or the adjacent Grand Canal. Drilled shafts are also less susceptible to movements induced by scour. Alternately, the structure can be founded on a mat foundation. Groundwater was not encountered in any of the test borings.

The MAG *Uniform Standard Specifications for Public Works Construction* does not address the construction of drilled shafts. Special Provisions will be prepared for this project and submitted with the 60% submittal.

5.0 CONSTRUCTION SEQUENCING AND TRAFFIC CONTROL

A minimum of one through lane in each direction of traffic must be maintained on the existing 91st and 83rd Avenue roadways during construction. The proximity of the BHOC to the Grand Canal and the limited right-of-way does not allow the construction of shoofly detours around the proposed bridge sites. Thus, the 91st and 83rd Avenue bridges will be built in two stages. The Special Provisions will identify the requirements for public and private access within and across the project limits with the 60% submittal.

6.0 DRAINAGE

The channel has been designed to accommodate a 100-year flood event. The proposed structures will provide a minimum of two feet of freeboard to comply with the Flood Control District design guidelines. Erosion protection will be provided and will conform to the Landscape Aesthetics Design Guidelines for the project. The bridge structures will be designed for scour estimates, flow depths, and velocities in accordance with the type and extent of the selected channel protection. The 100-year scour at any unprotected piers has been estimated to be in the order of 7.5 feet during the design flood. A 500-year event or superflood will not be considered for evaluation since this criteria is usually associated with natural watercourses. Furthermore, the system has been designed for a 100-year capacity.

7.0 RIGHT-OF-WAY

The BHOC right-of-way is approximately 230 feet wide at both bridge locations. The 83rd Avenue Bridge construction falls within the BHOC right-of-way. The approach slab for the 91st Avenue Bridge falls in the SRP right-of-way and will need to be included in discussions and agreements with them.

8.0 UTILITIES

Typically, all utilities in conflict with the bridge construction will be removed or relocated even though the specific solution for each has not been determined at this time. These utilities include, but are not limited to, SRP irrigation lines and structures, gas lines, water lines, and sewer lines.

The City of Glendale has a sewer line along 91st Avenue that will be relocated to the east of the proposed bridge. The City of Glendale also has a sewer line at 83rd Avenue that will be siphoned under the BHOC. There are existing overhead power lines at 83rd Avenue; these might be relocated underground to improve the aesthetics of the multi-purpose facility. Overhead power lines in close proximity to the bridge construction may need to be de-energized or re-routed during construction. These requirements will be evaluated during the preparation of the 60% submittal.

The bridge construction does not require a dry-up period. However, SRP typically has dry-up periods for the Grand Canal which occur in the beginning of the year. These dry-up periods usually last two to four weeks.

9.0 AESTHETICS

The two primary factors in the appearance of typical brides are the superstructure type and span configuration. The uniform and simple lines of the cast-in-place slab bridge

and comparatively shallow structure depth give this structure a pleasing appearance superior to most other types. Precast-prestressed girder superstructures, while acceptable in their appearance, have more complex surfaces in elevation and a greater superstructure depth for a given span. The aesthetic preference is normally for the use of longer spans and stub abutments that provide for an open view when economically viable. The span configuration will depend on the width and depth of the channel.

DMJM+HARRIS is preparing a Corridor Master Plan and associated design guidelines that cover the bridge aesthetics specifically related to the slope paving, bridge railing and wall treatments for the parapet and bridge abutments. This document has been developed in cooperation with the Project Aesthetics Advisory Committee (PAAC) which is made up of representatives from the District, community members and representatives from the cities of Glendale and Phoenix. The purpose of the PAAC is to make recommendations on the landscape, aesthetic and multi-use elements of the project. The PAAC has been involved in the development and review of the Corridor Master Plan and has made recommendations on the direction of the aesthetic treatments for the bridges and other project elements.

During the PAAC review process one of the major issues identified as it relates to the recommended bridge design was to allow for a minimum of 10-feet of vertical clearance between the bottom of the bridge deck and the bottom of the drainage channel. This clearance is necessary to allow pedestrian and equestrian users to cross under the bridge structures on the multi-use paths that traverse the length of the corridor. Safety is also a consideration for the users of the facility as they cross under the bridge structures. The PAAC recommended that these areas provide as much "open feeling" as possible to enhance the perception of safety while crossing under these structures. In addition, it has been recommended that the slope and bottom of the channel under the 91st and 83rd Avenue bridges be paved with a hard surface to minimize scour potential and maintenance of the channel lining under the structure.

The Corridor Master Plan will be submitted for review at the 30% stage and the bridge aesthetic treatments found in this document will be implemented in the bridge design during the remaining stages of the final design process. In general the impacts to the bridge structure are mostly cosmetic and deal with surface treatments that would be implemented through the use of formliners with simple patterns on abutment and parapet walls, slope paving with various patterns and textures and an architectural rail design that utilizes standard materials.

10.0 COST ESTIMATES

Estimated costs for each structure have been developed by multiplying the approximate quantities by the derived unit costs to obtain totals for the structures. Itemized costs and totals for the structure configurations evaluated are included in Appendix B. The cost of the structures do not include any costs associated with utility relocations, roadway items, nor traffic control.

11.0 91ST AVENUE BRIDGE

The 91st Avenue structure will span the BHOC, multi-use trail, and equestrian under crossing which will be constructed as part of this project. An at-grade crossing for the trails at this intersection is not desirable.

The 91st Avenue Bridge is located immediately north of the existing Grand Canal alignment. Currently, the 91st Avenue roadway section consists of two through lanes in each direction of travel. A center turn-lane is added just north of the Grand Canal. The proposed ultimate roadway section will accommodate an Arterial Section A-1 per City of Glendale Standard Detail G-302. This project will build the bridge to the ultimate roadway section width.

The roadway section of 91st Avenue is symmetrical about the 91st Avenue construction centerline. The 91st Avenue Bridge will accommodate one 12'-0" and one 16'-3 ¼" through lanes for northbound and southbound traffic, and one 12'-0" center turn lane. Outside of the through lanes is a 32" high F-shape bridge concrete barrier on each side of the bridge to protect pedestrian traffic on the 6'-0" sidewalks and to prevent vehicles from coming off the bridge. Behind the sidewalks on the bridge deck is a 1'-0" wide architectural parapet and rail. The resulting out-to-out width of the bridge is a total of 85'-0".

The 91st Avenue alignment is concurrent with the section line and is on a tangent through the bridge with a normal crown and cross slopes of 0.015 ft/ft from the construction centerline to each edge of deck. The existing roadway profile will be closely matched in order to minimize reconstruction of the bridge approach roadways. Additionally, this eliminates any additional loading to the existing 91st Avenue Grand Canal Bridge from the construction of a higher profile. The existing roadway profile is on a vertical gradient.

The BHOC alignment is on tangent as it crosses 91st Avenue and crosses nearly perpendicular to the roadway construction centerline. The BHOC channel at 91st Avenue has a channel bottom width of 60 feet and 4:1 side slopes. The design water elevation is 1062.20 ft. The proposed structures must provide two-feet of freeboard, and allow a 10'-0" minimum vertical clearance to allow equestrian traffic.

The proposed structure shall meet the aesthetic composition of the project and maximize the openness of the channel. Standard reinforced concrete box culverts and hybrid bridges consisting of multiple cells with long continuous walls and founded in a mat type foundation do not meet the desired appearance of the project and will not be investigated further. In addition, these structures are typically not cost effective for larger crossings similar to this application. Other bridge structure types that meet the project requirements and provide a safe trail under-crossing are evaluated in the following sections.

ALTERNATIVE 1 – RECOMMENDED

The roadway profile of 91st Avenue, proposed vertical geometry of the BHOC and clearance requirements allow for a maximum superstructure depth of 2'-0". A cast-in-place concrete slab bridge with a structure depth less than 2'-0" was then initially evaluated for this structure to satisfy the vertical clearance requirements.

The recommended 1'-10" deep cast-in-place slab bridge has three equal spans of 44'-0" with a resulting total structure length of 136'-6". The abutments have been located outside the design 100-year water surface. This configuration is considered to enhance the aesthetics of the bridge and corridor, maintaining openness. The proposed structure is also similar to the existing three-span structure at the 99th Avenue crossing of the BHOC. The relatively short structure will not require the use of bridge deck joints or bearings. The bridge design will be performed to account for the additional stresses in the bridge from anticipated expansion and contraction forces.

The bridge pier centerlines are parallel to the BHOC construction centerline and the abutments are parallel to the same. A reinforced integral thickened cap beam transfers superstructure loads to the pier columns. Each pier has five 2-foot diameter round columns each supported by a 4-foot diameter drilled shaft. The stub abutments will be supported on 3-foot diameter drilled shafts and will have relatively short wingwalls which will terminate two feet beyond the channel catch point with the SRP maintenance road or existing ground.

The structure will be built in two phases. The bridge construction drawings will show the location and provide details for the longitudinal construction joint once the traffic control requirements have been determined. Barrier transitions will be required and will be included as part of the roadway plans.

The drainage of the bridge decks will be towards both faces of the concrete barriers. The deck runoff will drain into bridge scuppers to the channel below.

The 1'-10" thick slab would be able to accommodate small diameter utilities, conduits, and fixtures required for pedestrian lighting and underdeck lighting. Two 4-inch diameter PVC conduits for inter-connectivity will be placed in the bridge deck for the City of Glendale as well as two 4-inch diameter steel conduits for Cox Communications. No large utilities within the bridges have been identified at this time. The location of these utilities has not been determined and these are not shown in the plans.

ALTERNATIVE 2

An alternate to the recommended span arrangement also evaluated in detail is to provide a four-span cast-in-place concrete slab bridge while maintaining the same structure length. The bridge resembles the bridge recommended in Alternative 1 but has four equal spans 33'-0" long. This bridge requires an additional pier line but allows a reduction of the superstructure depth to 1'-6". This alternative would provide an additional four inches of clearance for equestrian traffic and costs slightly less than the

three-span cast-in-place concrete slab bridge. However, the three-span cast-in-place bridge provides a better appearance at a minimal increase in cost.

ALTERNATIVE 3

Yet another alternate to the recommended superstructure type is a three-span precast-prestressed voided slab bridge with a structure depth of 2'-3". This alternate consists of three 44'-0" spans and maintains the bridge length from Alternate 1. The cost of this structure is considerably more than the cast-in-place concrete slab bridge and the 10'-0" minimum vertical clearance is not satisfied with the current vertical geometry.

COST ESTIMATE

The estimated cost of these alternatives, including a 15% contingency but excluding the architectural enhancements is as follows:

Alternative 1 – Three-Span CIP Slab Bridge

Total cost	$ 591,069
Total cost per square foot	$ 50.94

Alternative 2 – Four-Span CIP Slab Bridge

Total cost for alternative comparison	$ 587,435
Total cost per square foot	$ 50.63

Alternative 3 – Three-Span Precast Voided Slab Bridge

Total cost for alternative comparison	$ 710,142
Total cost per square foot	$ 61.21

Alternative 1, a three-span cast-in-place concrete slab bridge superstructure and substructure as described, is recommended for this site based on comparable estimated cost, better appearance and performance.

12.0 83RD AVENUE BRIDGE

The 83rd Avenue structure will span the BHOC, multi-use trail, and equestrian under crossing which will be constructed as part of this project. An at-grade crossing for the trails at this intersection is not desirable.

The 83rd Avenue Bridge is located immediately south of the existing Grand Canal alignment. The Bethany Home Road intersection with 83rd Avenue is located about 200 feet north from the BHOC centerline. Currently, 83rd Avenue provides two through lanes in each direction of travel. The proposed ultimate roadway section will accommodate an

Arterial Section A-2 for northbound traffic and an Arterial Section A-3 for southbound traffic per City of Glendale Standard Detail G-302 and G-303 respectively. This project will build the bridge to the ultimate roadway section width.

The roadway section of 83rd Avenue is asymmetrical about the 83rd Avenue construction centerline. The 83rd Avenue Bridge will accommodate two 11'-0" and one 13'-3 ¼" through lanes for northbound traffic, one 12'-6", one 11'-0", and one 15'-9 ¼" through lanes for southbound traffic. Outside of the through lanes is a 32" high F-shape bridge concrete barrier on each side of the bridge to protect pedestrian traffic on the 6'-0" foot sidewalks and to prevent vehicles from coming off the bridge. Behind the sidewalks on the bridge deck is a 1'-0" wide architectural parapet and rail. The resulting out-to-out width of the bridge is a total of 91'-0".

The 83rd Avenue alignment is concurrent with the section line and is on a tangent through the bridge with a normal crown and cross slopes of 0.015 ft/ft from the construction centerline to each edge of deck. The existing roadway profile will be closely matched in order to minimize reconstruction of the bridge approach roadways. Additionally, this eliminates any additional loading to the existing 83rd Avenue Grand Canal Bridge from the construction of a higher profile. The existing roadway profile is on a vertical gradient.

The BHOC alignment is on tangent as it crosses the 83rd Avenue roadway and crosses nearly perpendicular to the roadway construction centerline. The BHOC channel at 83rd Avenue has a channel bottom width of 40 feet and 4:1 side slopes. The design water elevation is 1077.95 ft. The proposed structures must provide two-feet of freeboard, and allow a 10'-0" minimum vertical clearance for equestrian traffic.

The proposed structure shall meet the aesthetic composition of the project and maximize the openness of the channel. Standard reinforced concrete box culverts and hybrid bridges consisting of multiple cells with long continuous walls and founded in a mat type foundation do not meet the desired appearance of the project and will not be investigated further. In addition, these structures are typically not cost effective for larger crossings similar to this application. Other bridge structure types that meet the project requirements and provide a safe trail under-crossing are evaluated in the following sections.

ALTERNATIVE 1 – RECOMMENDED

The roadway profile for 83rd Avenue, proposed vertical geometry of the BHOC, and clearance requirements allow for a maximum superstructure depth of 3'-2". A similar cast-in-place concrete slab bridge with a structure depth of less than 3'-2" was then initially evaluated for this structure.

The recommended 2'-0" cast-in-place slab bridge has three equal spans of 48'-6" with a resulting total structure length of 150'-0". The abutments have been located outside the design 100-year water surface. The proposed structure is also similar to the existing three-span structure at 99th Avenue crossing of the BHOC. This configuration is

considered to enhance the aesthetics of the bridge and corridor, maintaining openness. The relative short structure will not require the use of bridge deck joints or bearings. The bridge design will be performed to account for the additional stresses in the bridge from anticipated expansion and contraction forces.

The bridge pier centerlines are parallel to the BHOC construction centerline and the abutments are parallel to the same. A reinforced integral cap beam transfers superstructure loads to the pier columns. Each pier has five 2-foot diameter round columns each supported by a 4-foot diameter drilled shaft. The stub abutments will be supported on 3-foot diameter drilled shafts and will have relatively short wingwalls which will terminate two feet beyond the channel catch point with the SRP maintenance road or existing ground.

The structure will be built in two phases. The bridge construction drawings will show the location and provide details for the longitudinal construction joint once the traffic control requirements have been determined. Barrier transitions will be required and will be included as part of the roadway plans.

The drainage of the bridge decks will be towards both faces of the concrete barriers. The deck runoff will drain into an on-site storm drain system or bridge scuppers to the channel below.

The two-foot thick slab would be able to accommodate small diameter utilities, conduits, and fixtures required for pedestrian lighting and underdeck lighting. Two 4-inch diameter PVC conduits for inter-connectivity will be placed in the bridge deck for the City of Glendale. No large utilities within the bridges have been identified at this time. The location of these utilities has not been determined and these are not shown in the plans.

ALTERNATIVE 2

An alternate to the recommended span arrangement is to provide a four-span cast-in-place concrete slab bridge. The bridge resembles the bridge recommended in Alternative 1 but has four equal spans 36'-4" long which allows a reduction of the superstructure depth to 1'-8". The additional vertical clearance for this alternative, however, does not provide additional benefits.

A detailed cost estimate was not developed for this alternative and its cost was estimated using the unit costs developed for the 91st Avenue Bridge. The unit cost utilized has been adjusted to account for the slab depth effects similarly to the results as determined in the 91st Avenue detailed estimate. The cost of the structure is slightly less than the three-span cast-in-place concrete slab bridge. However, the three span cast-in-place concrete slab bridge provides better appearance at a minimal increase in cost.

ALTERNATIVE 3

Yet another alternate to the recommended superstructure type is a three-span precast-prestressed voided slab bridge with a structure depth of 2'-3". This alternate consists of three 48'-6" spans and maintains the bridge length from Alternate 1. A detailed cost estimate was not developed for this alternative and its cost was estimated using the unit costs developed for the 91st Avenue Bridge. The cost of this structure is more than the cast-in-place concrete slab bridge.

COST ESTIMATE

The estimated cost of these alternatives, including a 15% contingency but excluding the architectural enhancements is as follows:

Alternative 1 – Three-span CIP Slab Bridge

Total cost	$ 755,797
Total cost per square foot	$ 55.07

Alternative 2 – Four-Span CIP Slab Bridge

Total estimated cost for alternative comparison	$ 751,236
Total estimated cost per square foot	$ 54.73

Alternative 3 – Three-Span Precast Voided Slab Bridge

Total estimated cost for alternative comparison	$ 840,107
Total estimated cost per square foot	$ 61.21

Alternative 1, a three-span cast-in-place concrete slab bridge superstructure and substructure as described, is recommended for this site based on comparable estimated cost, better appearance, equivalent performance, and superior future flexibility.

13.0 PEDESTRIAN STRUCTURES

The potential use of pedestrian structures at two locations has been requested by the project partners and discussed with the project team as part of the BHOC project. These bridges would primarily allow the passage of pedestrian/bicycle traffic and an occasional maintenance or emergency vehicle across the existing Grand Canal. The associated crossing of the proposed Bethany Home channel would be provided through the open channel section and would not require a matching structure at these locations.

One commonly utilized type of pedestrian structure is the prefabricated steel truss. A similar structure can be found within the project corridor providing access to a school. This type of structure would be designed and fabricated by a specialty supplier and

shipped to the site. Aesthetic treatments could then be applied in the form of lightweight graphic panels secured to the trusses. The geotechnical investigation, structural design and construction of the substructure elements and approaches would be required as part of the project in order to accommodate the truss elements. The construction and fabrication of the steel trusses would be controlled through the use of a project performance specification and review of design calculations and shop drawings. Contact with several of the prefabricated truss manufacturers has been made and costs are included with the estimate portion of these 30% documents for review and consideration.

Other structure types, in particular precast concrete sections, could also be used for this type of application. The structure type should be reconsidered if the intended pedestrian/bicycle use changes or the anticipated loading is greater than what the prefabricated trusses can economically support. The use of other structure types could also be considered to meet corridor aesthetic criteria.

14.0 REFERENCES

Standard Specifications for Highway Bridges, Sixteenth Edition, 1996, including the 1997, 1998, 1999, and 2000 Interim Specifications, American Association of State Highway and Transportation Officials (AASHTO).

Uniform Standard Specifications for Public Works Construction, Maricopa Association of Governments (MAG).

Bridge Design and Detailing Manual, 1994, Arizona Department of Transportation.

Preliminary Geotechnical Investigation Report (30% Design) – Bethany Home Outfall Channel, Phase II, DMJM+HARRIS, August 2001.

Pre-Design Study – Bethany Home/Grand Canal Flood Control Project, Bethany Home Outfall Channel, Phase II (Project No. 98-46), DMJM+HARRIS, September 2000.

APPENDIX A

Structure Plans and Typical Sections

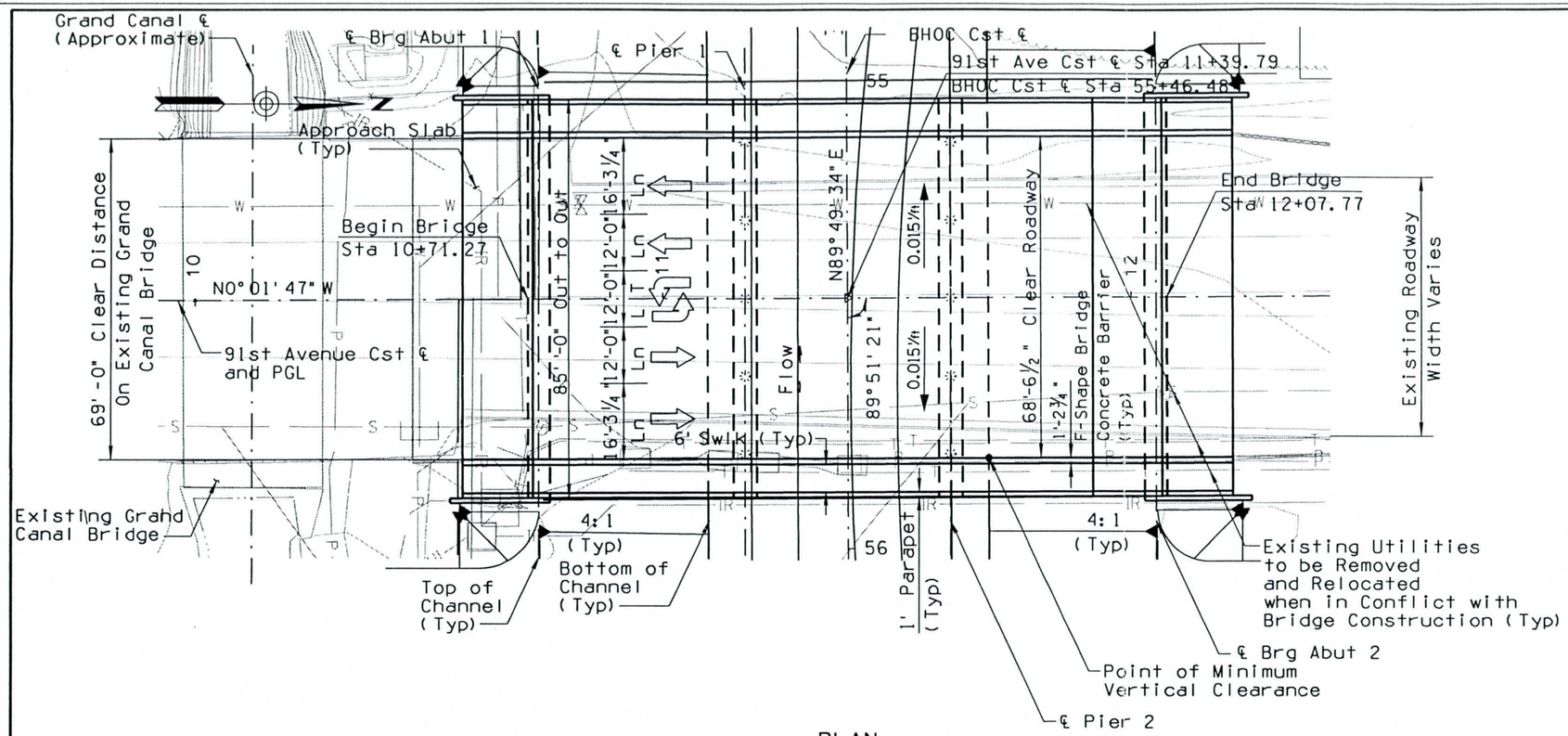

PLAN

Scale: 1" = 15'
New 3-Span Cast-In-Place
Continuous Concrete Slab Bridge
Skew 0°08'39" Lt
1' Contour Interval

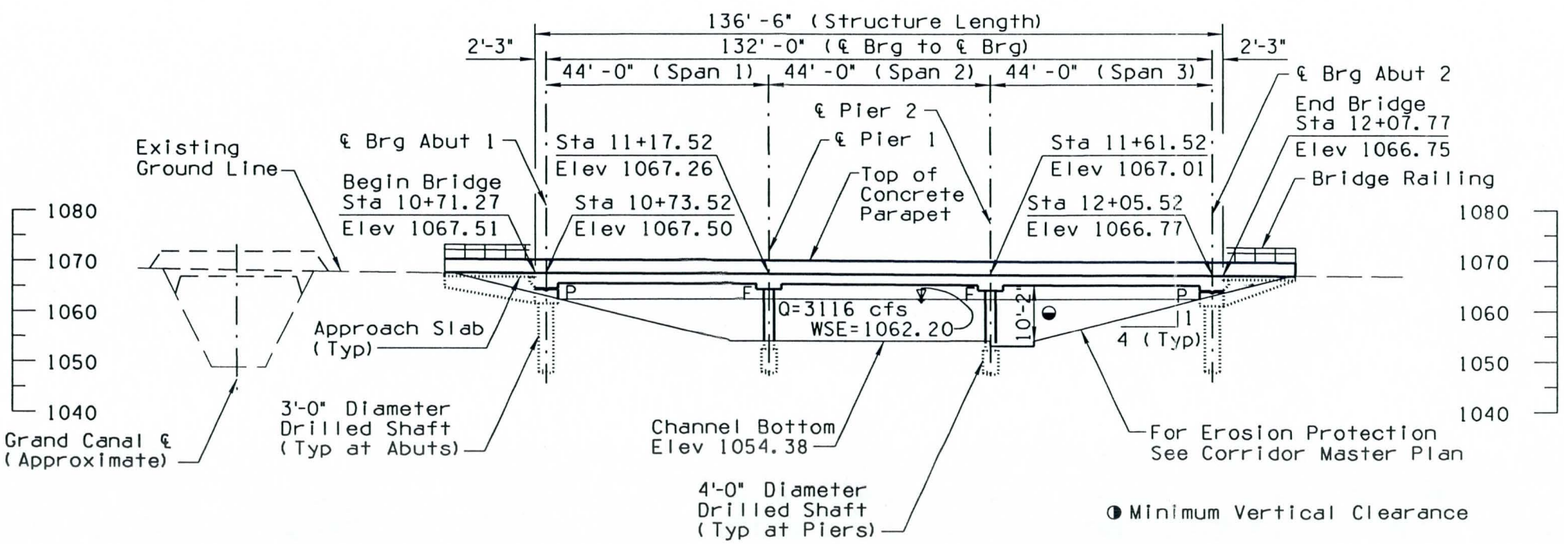

ELEVATION

Scale: 1" = 15'

INDEX OF DRAWINGS

S-1.01	General Plan & Elevation
S-1.02	General Notes & Quantities
S-1.03	Foundation Data Sheet
S-1.04	Foundation Data Sheet
S-1.05	Foundation Plan & Details
S-1.06	Abutment Plan & Elevation
S-1.07	Abutment Wingwall Details
S-1.08	Abutment Details
S-1.09	Deck Section & Details
S-1.10	Deck Reinforcing Plan
S-1.11	Approach Slab Details
S-1.12	Bridge Railing Details
S-1.13	Miscellaneous Details

NO.	REVISION	BY	DATE
3			
2			
1			

FLOOD CONTROL DISTRICT OF MARICOPA COUNTY

BETHANY HOME OUTFALL CHANNEL, PHASE II

PCN NO. 620 03 32

PRELIMINARY **30%** Review NOT FOR CONSTRUCTION OR RECORDING

	BY	DATE
DESIGNED	SEO	8-01
DRAWN	BAM	8-01
CHECKED	SFF	8-01

DMJM+HARRIS AN AECOM COMPANY
2777 E. CAMELBACK ROAD SUITE 200 PHOENIX, AZ. 85016-4302 (602) 337-2777

DRAWING NO. S-1.01 | GENERAL PLAN AND ELEVATION 91st AVENUE BRIDGE | SHEET OF

GENERAL NOTES

Construction Specification -
Maricopa Association of Governments (MAG) Uniform Standard Specifications for Public Works Construction, 1992 Edition and Interims to date.

Design Specifications -
AASHTO Standard Specifications for Highway Bridges, 16th Edition, 1996, 1997, 1998, 1999 and 2000 Interim revisions.

Dead Load -
Dead Load includes allowance of 25 pounds per square foot for future wearing surface.

Loading Class -
HS20-44

Design Scour -
7.5 feet (Elev 1046.88) @ 100 yr

Seismic Performance -
Category A, Acceleration Coefficient = 0.03g

Reinforcing steel shall conform to ASTM Specification A 615. All reinforcing shall be furnished as Grade 60.

All bend dimensions for reinforcing steel shall be out-to-out of bars. All placement dimensions for reinforcing steel shall be to center of bars unless noted otherwise. All bend or hook dimensions not shown shall be standard bends or hooks.

All reinforcing steel shall have 2" clear cover unless noted otherwise.

Stresses:
Superstructure except barriers Class AA ..... f'c = 4,000 psi
Abutments and Wing Walls Class AA ..... f'c = 4,000 psi
Drilled Shafts and Columns Class AA ..... f'c = 4,000 psi
All other Class A ..... f'c = 3,000 psi
Grade 60 reinf ..... f'c = 24,000 psi

All concrete shall be MAG Class A or AA unless noted otherwise.

Barriers shall be constructed after deck falsework has been removed. Barriers shall not be slip formed.

Chamfer all exposed corners ¾" per Standard B-19.10 unless noted otherwise.

Dimension shall not be scaled from the drawings.

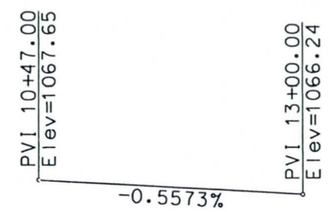

91st AVENUE PROFILE
N.T.S.

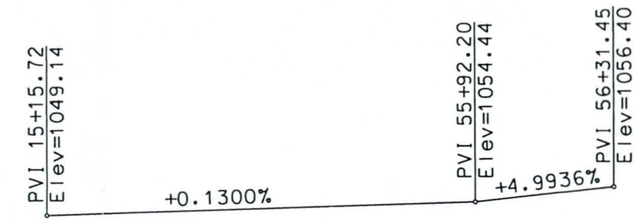

BHOC PROFILE
N.T.S.

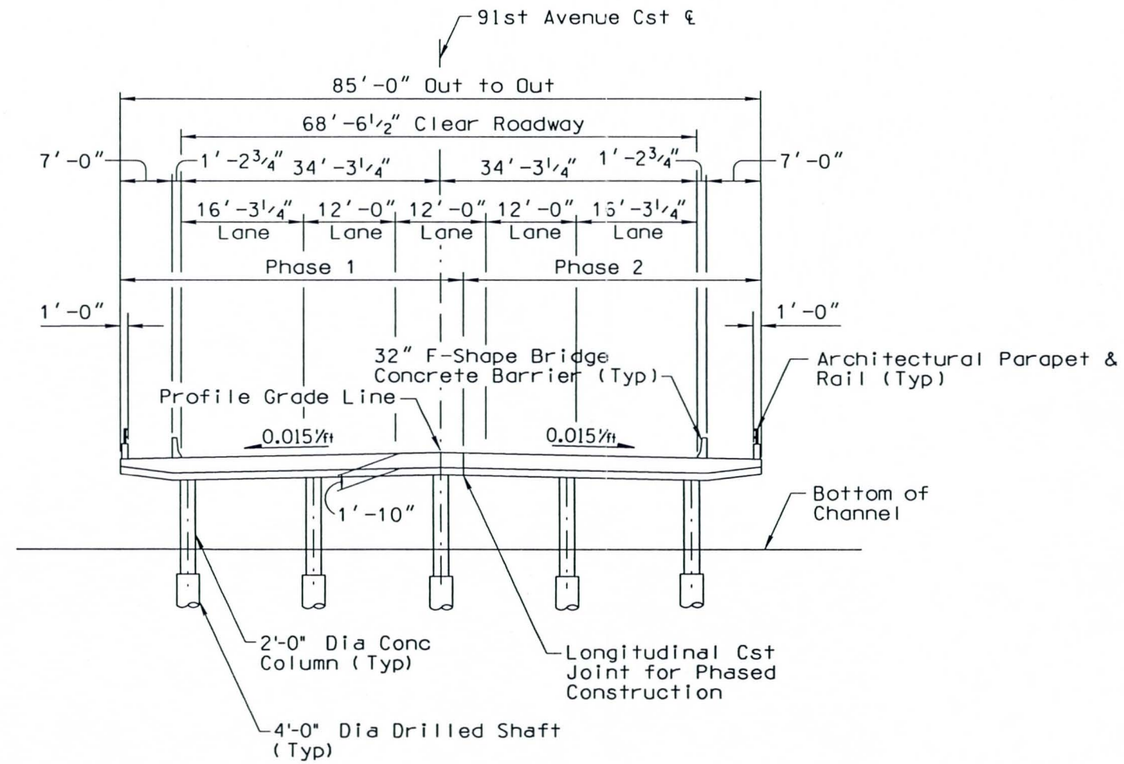

TYPICAL SECTION
Scale: 1" = 10'

APPROXIMATE QUANTITIES

ITEM DESCRIPTION	UNIT	ABUT #1	PIERS	ABUT #2	SUPER STRUCTURE	32" F-SHAPE CONC BARRIER & ARCHITECTURAL PARAPET	APPROACH SLAB	TOTAL	AS-BUILT TOTAL
Structural Excavation *	CY	95		90				185	
Structural Backfill *	CY	40		40				80	
Concrete Class A (f'c=3000)	CY						95	95	
Concrete Class AA (f'c=4000)	CY	91	60	90	703	49		993	
Architectural Rail	LF				329			329	
Steel Reinforcing	LB	7852	2326	7851	192094	9116	11806	231045	
36" Drilled Shaft Foundation	LF	155		152				307	
48" Drilled Shaft Foundation	LF		234					234	

* For Information only. Paid as incidental to other items

NO.	REVISION	BY	DATE
3			
2			
1			

FLOOD CONTROL DISTRICT OF MARICOPA COUNTY

BETHANY HOME OUTFALL CHANNEL, PHASE II

PCN NO. 620 03 32

PRELIMINARY **30%** Review NOT FOR CONSTRUCTION OR RECORDING

	BY	DATE
DESIGNED	SEO	8-01
DRAWN	BAM	8-01
CHECKED	SFF	8-01

DMJM+HARRIS AN AECOM COMPANY
2777 E. CAMELBACK ROAD SUITE 200 PHOENIX, AZ. 85016-4302 (602) 337-2777

DRAWING NO. S-1.02 | GENERAL NOTES & QUANTITIES 91st AVENUE BRIDGE | SHEET OF

n:\6888\Prod\str\91st ave\8891gnq01.dgn 08/17/2001

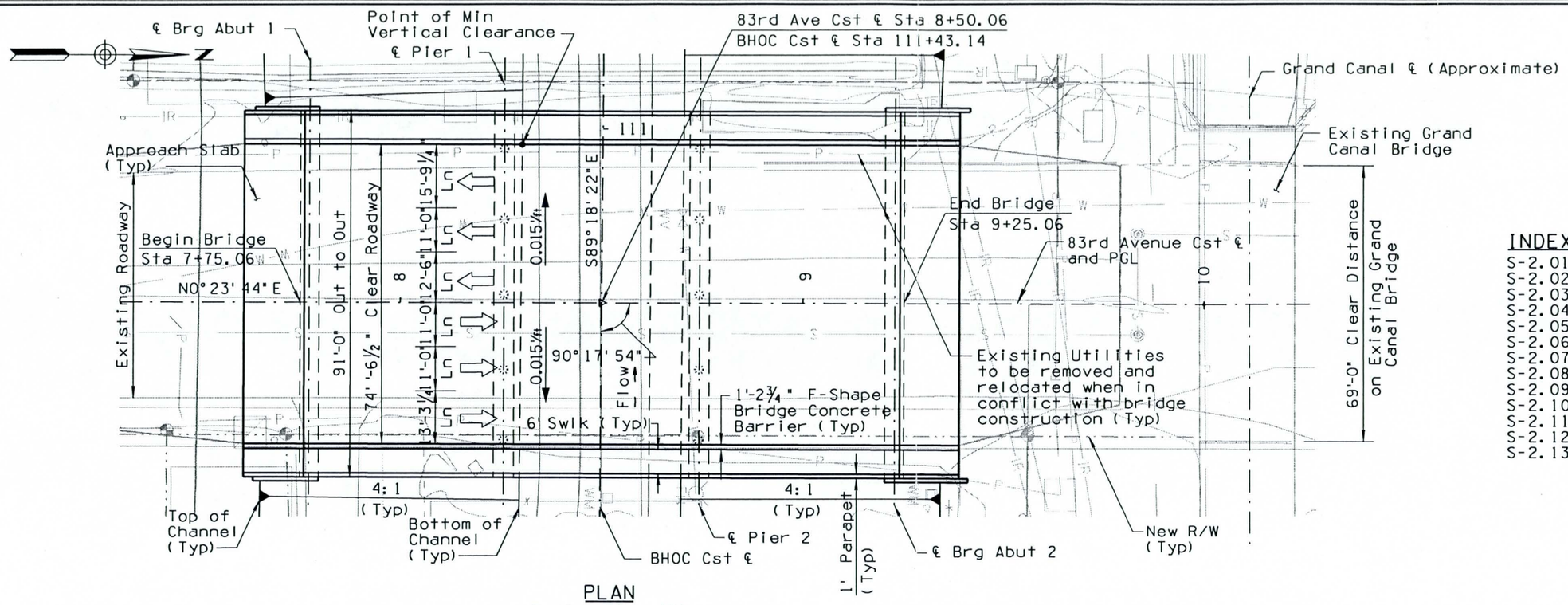

PLAN

Scale: 1" = 15'
New 3-Span Cast-In-Place
Continuous Concrete Slab Bridge
Skew 0°17'51" Rt
1' Contour Interval

INDEX OF DRAWINGS

S-2.01	General Plan & Elevation
S-2.02	General Notes & Quantities
S-2.03	Foundation Data Sheet
S-2.04	Foundation Data Sheet
S-2.05	Foundation Plan & Details
S-2.06	Abutment Plan & Elevation
S-2.07	Abutment Wingwall Details
S-2.08	Abutment Details
S-2.09	Deck Section & Details
S-2.10	Deck Reinforcing Plan
S-2.11	Approach Slab Details
S-2.12	Bridge Railing Details
S-2.13	Miscellaneous Details

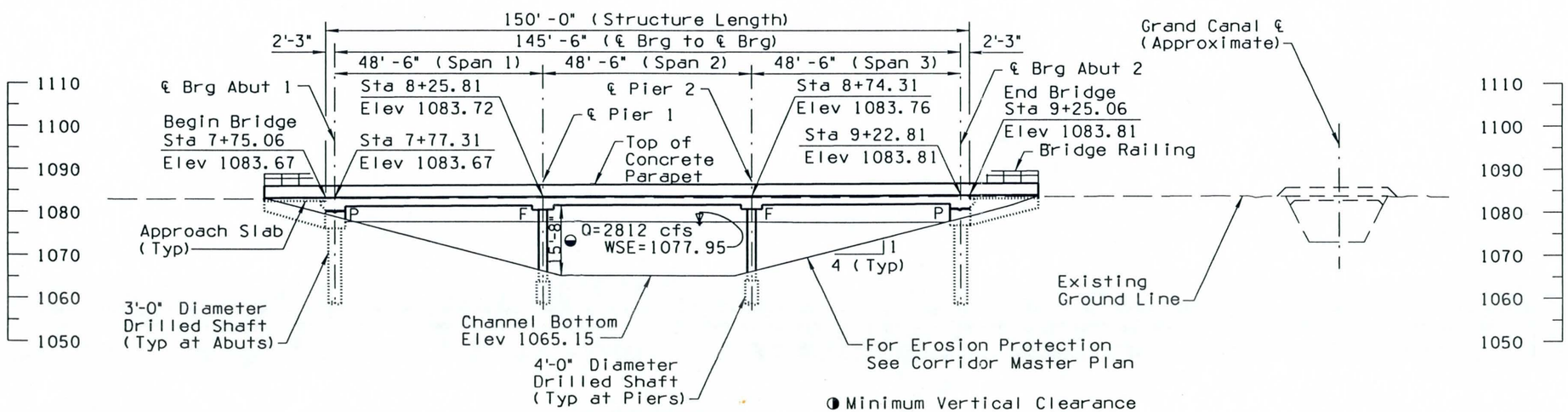

ELEVATION

Scale: 1" = 15"

NO.	REVISION	BY	DATE
3			
2			
1			

FLOOD CONTROL DISTRICT OF MARICOPA COUNTY

BETHANY HOME OUTFALL CHANNEL, PHASE II

PCN NO. 620 03 32

PRELIMINARY 30% Review NOT FOR CONSTRUCTION OR RECORDING		BY	DATE
	DESIGNED	SEO	8-01
	DRAWN	BAM	8-01
	CHECKED	SFF	8-01

DMJM+HARRIS AN AECOM COMPANY
2777 E. CAMELBACK ROAD
SUITE 200
PHOENIX, AZ. 85016-4302
(602) 337-2777

DRAWING NO. S-2.01 | GENERAL PLAN AND ELEVATION 83rd AVENUE BRIDGE | SHEET OF

n:\6888\Prod\str\83rd ave\8883bpp01.dgn 08/17/2001

GENERAL NOTES

Construction Specification -
Maricopa Association of Governments (MAG) Uniform Standard Specifications for Public Works Construction, 1992 Edition and Interims to date.

Design Specifications -
AASHTO Standard Specifications for Highway Bridges, 16th Edition, 1996, 1997, 1998, 1999 and 2000 Interim revisions.

Dead Load -
Dead Load includes allowance of 25 pounds per square foot for future wearing surface.

Loading Class -
HS20-44

Design Scour -
7.5 feet (Elev 1057.65) @ 100 yr

Seismic Performance -
Category A, Acceleration Coefficient = 0.03g

Reinforcing steel shall conform to ASTM Specification A 615. All reinforcing shall be furnished as Grade 60.

All bend dimensions for reinforcing steel shall be out-to-out of bars. All placement dimensions for reinforcing steel shall be to center of bars unless noted otherwise. All bend or hook dimensions not shown shall be standard bends or hooks.

All reinforcing steel shall have 2" clear cover unless noted otherwise.

Stresses:
Superstructure except barriers Class AA .....f'c = 4,000 psi
Abutments and Wing Walls Class AA .....f'c = 4,000 psi
Drilled Shafts and Columns Class AA .....f'c = 4,000 psi
All other Class A .....f'c = 3,000 psi
Grade 60 reinf .....f'c = 24,000 psi

All concrete shall be MAG Class A or AA unless noted otherwise.

Barriers shall be constructed after deck falsework has been removed. Barriers shall not be slip formed.

Chamfer all exposed corners 3/4" per Standard B-19.10 unless noted otherwise.

Dimension shall not be scaled from the drawings.

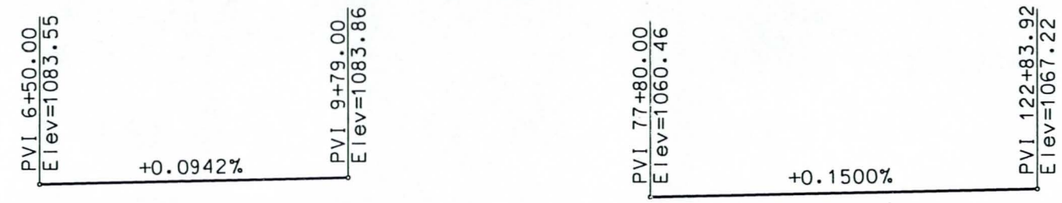

83rd AVENUE PROFILE
N.T.S.

BHOC PROFILE
N.T.S.

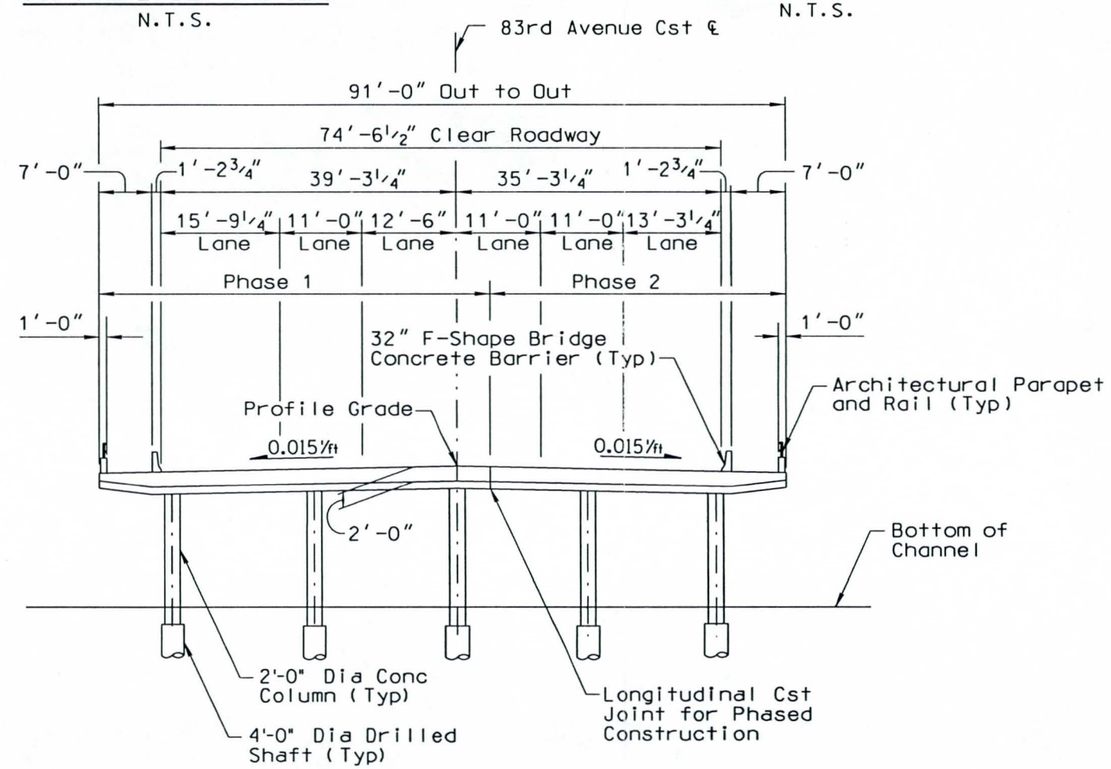

TYPICAL SECTION
Scale: 1" = 10'

APPROXIMATE QUANTITIES

ITEM DESCRIPTION	UNIT	ABUT #1	PIERS	ABUT #2	SUPER STRUCTURE	32" F-SHAPE BRIDGE CONCRETE BARRIER ARCHITECTURAL PARAPET	APPROACH SLAB	TOTAL	AS-BUILT TOTAL
Structural Excavation *	CY	105		110				215	
Structural Backfill *	CY	40		40				80	
Structural Concrete (Class A) (f'c=3000)	CY						102	102	
Structural Concrete (Class AA (f'c=4000)	CY	102	70	102	910	53		1237	
Architectural Rail	LF				356			356	
Steel Reinforcing	LB	8624	3313	8624	242896	9865	12708	286030	
36" Drilled Shaft Foundation	LF	245		246				491	
48" Drilled Shaft Foundation	EA		360					360	

* For information only. Paid as incidental to other items

NO.	REVISION	BY	DATE
3			
2			
1			

FLOOD CONTROL DISTRICT OF MARICOPA COUNTY

BETHANY HOME OUTFALL CHANNEL, PHASE II

PCN NO. 620 03 32

PRELIMINARY **30%** Review NOT FOR CONSTRUCTION OR RECORDING

	BY	DATE
DESIGNED	SEO	8-01
DRAWN	KJM	8-01
CHECKED	SFF	8-01

DMJM+HARRIS AN AECOM COMPANY
2777 E. CAMELBACK ROAD SUITE 200 PHOENIX, AZ. 85016-4302 (602) 337-2777

DRAWING NO. S-2.02 | GENERAL NOTES & QUANTITIES 83RD AVENUE BRIDGE | SHEET OF

APPENDIX B

Quantities and Cost Estimates

LUMP SUM STRUCTURE ITEMS					
ITEM NUMBER	DESCRIPTION	UNIT	UNIT COST	QUANTITY	COST
502.10000	36" Drilled Shaft Foundation (Bridge)	L.Ft.	$125.00	307	$38,375
502.11000	48" Drilled Shaft Foundation (Bridge)	L.Ft.	$175.00	234	$40,950
505.10000	Steel Reinforcement (Bridge)	Lb.	$0.50	231,045	$115,523
505.20000	Portland Cement Concrete (Bridge), Class AA	CY	$275.00	993	$273,075
505.30000	Portland Cement Concrete (Bridge), Class A	CY	$225.00	95	$21,375
520.10000	Architectural Rail (Bridge)	L.Ft.	$75.00	329	$24,675
					$0
			SUBTOTAL:		$513,973
			CONTINGENCY:	15%	$77,096
			TOTAL COST:		$591,069
			TOTAL COST/SF:		$50.94

ALTERNATIVE 1

Structure Name: **91st Avenue Bridge**
Superstructure Type: **C.I.P. Slab Bridge (1'-10" deep)**
Substructure Type: **Stub Abutments**
Foundation Type: **Drilled Shafts**
No. of Spans: **3**
Span Lengths (ft): **44**
Skew (deg): **0 08' 39"**

Total Length (ft): **136.5**
Width (Out to Out) (ft): **85**
Area (sq ft): **11602.50**

RECOMMENDED ALTERNATIVE

LUMP SUM STRUCTURE ITEMS					
ITEM NUMBER	DESCRIPTION	UNIT	UNIT COST	QUANTITY	COST
502.10000	36" Drilled Shaft Foundation (Bridge)	L.Ft.	$125.00	642	$80,250
505.10000	Steel Reinforcement (Bridge)	Lb.	$0.50	207,695	$103,848
505.20000	Portland Cement Concrete (Bridge), Class AA	CY	$315.00	891	$280,665
505.30000	Portland Cement Concrete (Bridge), Class A	CY	$225.00	95	$21,375
520.10000	Architectural Rail (Bridge)	L.Ft.	$75.00	329	$24,675
					$0
			SUBTOTAL:		$510,813
			CONTINGENCY:	15%	$76,622
			TOTAL COST:		$587,435
			TOTAL COST/SF:		$50.63

Structure Name: **91st Avenue Bridge** **ALTERNATIVE 2**
Superstructure Type: **C.I.P. Slab Bridge (1'-6" deep)**
Substructure Type: **Stub Abutments**
Foundation Type: **Drilled Shafts**
No. of Spans: **4**
Span Lengths (ft): **33**
Skew (deg): **0 08' 39"**

Total Length (ft): **136.5**
Width (Out to Out) (ft): **85**
Area (sq ft): **11602.50**

LUMP SUM STRUCTURE ITEMS					
ITEM NUMBER	DESCRIPTION	UNIT	UNIT COST	QUANTITY	COST
502.10000	36" Drilled Shaft Foundation (Bridge)	L.Ft.	$125.00	303	$37,875
502.11000	48" Drilled Shaft Foundation (Bridge)	L.Ft.	$175.00	224	$39,200
505.10000	Steel Reinforcement (Bridge)	Lb.	$0.50	120,770	$60,385
505.20000	Portland Cement Concrete (Bridge), Class AA	CY	$275.00	503	$138,325
505.30000	Portland Cement Concrete (Bridge), Class A	CY	$225.00	95	$21,375
520.10000	Architectural Rail (Bridge)	L.Ft.	$75.00	329	$24,675
602.10000	SIV-48 (modified) Prestressed Voided Concrete Slabs	L.Ft.	$105.00	2816	$295,680
					$0
			SUBTOTAL:		$617,515
			CONTINGENCY:	15%	$92,627
			TOTAL COST:		$710,142
			TOTAL COST/SF:		$61.21

Structure Name: **91st Avenue Bridge** **ALTERNATIVE 3**
Superstructure Type: **Voided Slab (SIV-48 Modified)**
Substructure Type: **Stub Abutments**
Foundation Type: **Drilled Shafts**
No. of Spans: **3**
Span Lengths (ft): **44**
Skew (deg): **0 08' 39"**
Total Length (ft): **136.5**
Width (Out to Out) (ft): **85**
Area (sq ft): **11602.50**

LUMP SUM STRUCTURE ITEMS					
ITEM NUMBER	DESCRIPTION	UNIT	UNIT COST	QUANTITY	COST
502.10000	36" Drilled Shaft Foundation (Bridge)	L.Ft.	$125.00	491	$61,375
502.11000	48" Drilled Shaft Foundation (Bridge)	L.Ft.	$175.00	360	$63,000
505.10000	Steel Reinforcement (Bridge)	Lb.	$0.50	286,030	$143,015
505.20000	Portland Cement Concrete (Bridge), Class AA	CY	$275.00	1,237	$340,175
505.30000	Portland Cement Concrete (Bridge), Class A	CY	$225.00	102	$22,950
520.10000	Architectural Rail (Bridge)	L.Ft.	$75.00	356	$26,700
					$0
			SUBTOTAL:		$657,215
			CONTINGENCY:	15%	$98,582
			TOTAL COST:		$755,797
			TOTAL COST/SF:		$55.07

Structure Name: **83rd Avenue Bridge** **ALTERNATIVE 1**
Superstructure Type: **C.I.P. Slab Bridge (2'-0" Deep)**
Substructure Type: **Stub Abutments**
Foundation Type: **Drilled Shafts**
No. of Spans: **3**
Span Lengths (ft): **48.5**
Skew (deg): **0 17' 54"**

Total Length (ft): **150**
Width (Out to Out) (ft): **91.5**
Area (sq ft): **13725.00**

RECOMMENDED ALTERNATIVE