2009P011

Registered Professional Engineer (Civil)
CERTIFICATE NO. 23663
DAVID J. SCHAUB
Date Signed 5-1-09
ARIZONA U.S.A.
Expires 6/30/2010

EXECUTIVE SUMMARY
SR 202L
Bridge Scour Evaluations
Indian Bend Wash Bridge

April 30, 2009

The Arizona Department of Transportation (ADOT) has contracted with Kiewit Sundt Joint Venture (KSJV) for the design/build widening of State Route 202L from SR51 to SR101. URS Corporation (URS) prepared a Draft Technical Drainage Memorandum to document the pier scour for the proposed widening of the SR 202L Bridges over Indian Bend Wash. This report has been reviewed by the General Engineering Consultant (GEC) for ADOT and by the Flood Control District of Maricopa County (FCDMC). The recommendations have been considered in the revision of the report.

At meetings with ADOT and the FCDMC, it was agreed that the bridge foundations would be structurally designed based on the ADOT Scour Methodology and that the "Zone-of Influence" on the FCDMC facilities would be checked based on the depths recommended by the FCDMC. Therefore, each agency is adhering to its respective design requirements and the design can proceed consistent with both methodologies.

(However, at an April 30, 2009 meeting, the FCDMC expressed a concern for the structural integrity of the proposed four new drilled shafts that are within the main channel and fairly close to the Indian Bend Wash (IBW) drop structure. These drilled shafts are located at Piers 6 and 7 Westbound and Piers 3 and 4 Eastbound. They also agreed that the other new drilled shafts are protected by the bank protection and drop structure, and therefore, they need not be designed for scour.

The FCDMC requested that these four piers be structurally designed for the scour depths calculated in accordance with the (Revised per SLA 1990 Report). The attendees at the meeting agreed to this request and the required scour design parameters are contained in the last two tables of this Executive Summary. These two tables are:

- ***Table ES-6A: Selected Pier Scour Design Parameters (Superflood Flow-64,000 cfs)***
- ***Table ES-6B: Selected Pier Scour Design Parameters (Critical Design Flow-30,000 cfs)***

The FCDMC also stated that additional protection or design for scour is not required for the new outside column for Pier 2 Eastbound, because it is located within the CSA bank protection. However, this Executive Summary recommends that this drilled shaft be structurally designed for the total scour depth for the Superflood Flow. The required scour depth is contained in the following table:

- ***Table ES-3A: Selected Foundation Design Parameters (Superflood Flow-64,000 cfs))***

Documents supporting this executive summary are:

- Appendix A – Technical Drainage Memorandum

- Appendix B – FCDMC Comments/URS Responses
- Appendix C – Supplemental Calculations

DESIGN FLOWS

ADOT stated in the Request for Proposals (RFP) that the scour depths shall be determined for the Critical Design Flow of 30,000 cfs and the Superflood Flow of 64,000 cfs. The U.S. Army Corps of Engineers stated that the Indian Bend Wash design flows are 30,000 cfs for the 100-year flow and 63,000 cfs for the Standard Project Flood Flow. ADOT requires that bridge foundations be designed to withstand scour from the lesser of the 500-year flood event or the event causing overtopping of the approach roadway. The bridge needs to also withstand the 100-year flood event. For these scour calculations, the 100-year flood event is assumed to be the Critical Design Flow of 30,000 cfs and the 500-year flood event is assumed to be the Standard Project Flood Event of 64,000 cfs. Throughout this document, in accordance with the RFP the design flows will be referred to as the Critical Design Flow and the Superflood Flow.

FOUNDATION UNITS IMPACTED BY SCOUR

The existing bank protection and drop structure have been sized for the Superflood Flow of 64,000 cfs, and therefore, new drilled shafts located within the grade control structure and bank protection do not need to be structurally designed for scour. The drilled shafts for the abutments are also outside the bank protection and do not need to be structurally designed for scour. New columns for Piers 3 and 4 Eastbound and for Piers 6 and 7 Westbound are within the streambed outside of any scour protection. The foundations for these columns will need to be structurally designed for total scour depths determined by the ADOT Methodology for the Critical Design Flow and the Superflood Flow. ***(Based on the April 30, 2009 meeting, these four drilled shafts will be designed based on the FCDMC Methodology for the Critical Design Flow and the Superflood Flow.)*** The new drilled shaft for Pier 2 Eastbound is located within the CSA bank protection at an approximate clear distance of 11 feet from the wash side of the CSA toe-down. This is the only new pier near the CSA toe-down, and therefore, it is considered prudent to structurally design the new drilled shaft for Pier 2 Eastbound for the total scour depth of the Superflood Flow. ***(Based on the April 30, 2009 meeting, this drilled shaft will be designed based on the ADOT Methodology for the Superflood Flow only.)***

Likewise, the new columns within the grade control structure and bank protection will not affect the structural integrity of these channel protection features. However, new columns for Pier 4 Eastbound and for Piers 6 and 7 Westbound are outside of any scour protection structure and may impact the channel protection features. The potential impacts on channel protection features were evaluated with scour depths recommended by the FCDMC for the Critical Design flow and the Superflood Flow. The pier scour "Zone-of-Influence" is determined based on methodologies contained in the FHWA report entitled, "Evaluating Scour at Bridges (HEC-18)," May 2001.

HISTORIC SCOUR REPORT FOR THE INDIAN BEND WASH BRIDGE

In 1990, Simons, Li and Associates, Inc. (SLA) performed a scour analysis for the current SR 202L Bridge crossing of Indian Bend Wash. This report entitled *"Hydraulic and Scour Analysis for the East Papago Crossing of the Indian Bend Wash,"* 1990 (SLA 1990 Report) was reviewed during the preparation of the *"Draft Technical Drainage Memorandum SR 202L Bridge Scour Evaluation, Indian Bend Wash,"*

(URS Drainage Memorandum). Additional review of this report was performed during the preparation of URS' response to the FCDMC's comments on the URS Drainage Memorandum. FCDMC's comments and URS' responses are contained in Appendix B. The URS April 7th response letter explains the methodology used by SLA and the current methodology used by ADOT. Further clarification of FCDMC's methodology is contained in the FCDMC's April 9th comment letter.

Based on these review comments and responses, one set of selected total scour depths has been determined for the design of the ADOT Bridge and another set of selected total scour depths has been determined for checking the pier scour "Zone-of-Influence" on the FCDMC facilities. ***(Based on the April 30, 2009 meeting, the four drilled shafts within the channel and near the drop structure will be designed based on the FCDMC Methodology for the Critical Design Flow and the Superflood Flow. Drilled shaft for Pier 2 Eastbound will be designed based on the ADOT Methodology for the Superflood flow.)***

SUMMARY OF SELECTED SCOUR DEPTHS (ADOT BRIDGE DESIGN)

The existing drop structure under the bridge causes different hydraulic conditions upstream and downstream of the structure. Therefore, separate scour calculations are required for the two hydraulic conditions. The URS Technical Drainage Memorandum contained in Appendix A includes the original calculations performed for the bridge design. An additional set of calculations has been performed based on information contained in the SLA 1990 Report. However, in accordance with the current ADOT Methodology, a 30% safety factor has not been applied to these scour numbers. The two sets of scour depths are tabulated below. The deepest scour depth of the two sets is selected for design of the bridge foundations. ***(At an April 30, 2009 meeting with FCDMC, it was agreed to use the scour depths determined in accordance with the (Revised per FCDMC comments) for both the "Zone-of-Influence" and the structural design of the four drilled shafts within the channel and near the drop structure. These design parameters are contained in Tables ES-6A and ES-6B.)***

The calculated design scour depths for the Indian Bend Wash (IBW) Bridge new columns located within the channel and upstream of the drop structure are contained in the following two tables.

Table ES-1A: Scour Summary for Bridge Foundation Design (Piers 6 and 7 WB) for Superflood Flow		
	64,000 cfs	
Description	**(URS Drainage Memorandum)**	**(Revised per SLA 1990 Report)**
Local Pier Scour (ft)	20.13[1]	20.13[1]
General Scour (ft)	0.98	0.00
Long Term Degradation (ft)	0.00	0.00
Bed Form Scour (ft)	1.96	0.00
Accelerated Flow Effect (ft)	0.00	2.00[2]
Total Scour (ft)	23.07	22.13

Table ES-1B: Scour Summary for Bridge Foundation Design (Piers 6 and 7 WB) for Critical Design Flow		
	30,000 cfs	
Description	**(URS Drainage Memorandum)**	**(Revised per SLA 1990 Report)**
Local Pier Scour (ft)	16.83[1]	16.83[1]
General Scour (ft)	0.13	0.00
Long Term Degradation (ft)	0.00	0.00
Bed Form Scour (ft)	1.01	0.00
Accelerated Flow Effect (ft)	0.00	2.00[2]
Total Scour (ft)	17.97	18.83

[1] Local Pier Scour determined assuming 2 feet of debris around the column. Values obtained from Table 1B, Appendix A.

[2] Values obtained from SLA 1990 Report, Table 4.2-Scour Analysis Summary Table, Condition III (U/S).

The calculated design scour depths for the IBW Bridge new columns located within the channel and downstream of the drop structure are contained in the following two tables.

Table ES-2A: Scour Summary for Bridge Foundation Design (Piers 2, 3 and 4 EB) for Superflood Flow[1]		
	64,000 cfs	
Description	**(URS Drainage Memorandum)**	**(Revised per SLA 1990 Report)**
Local Pier Scour (ft)	22.32[2]	22.32[2]
General Scour (ft)	1.01[2]	0.00
Long Term Degradation (ft)	0.0	0.50[3]
Bed Form Scour (ft)	3.15[2]	0.00
Accelerated Flow Effect (ft)	0.00	0.00
Local Drop Structure Scour (ft)	0.00	7.59[3]
30% Safety for Additional Scour Components	0.00	0.00
Total Scour (ft)	26.48	30.41

Table ES-2B: Scour Summary for Bridge Foundation Design (Piers 3 and 4 EB) for Critical Design Flow[1]		
	30,000 cfs	
Description	**(URS Drainage Memorandum)**	**(Revised per SLA 1990 Report)**
Local Pier Scour (ft)	16.25[2]	16.25[2]
General Scour (ft)	0.00	0.00
Long Term Degradation (ft)	0.0	0.50[3]
Bed Form Scour (ft)	0.70[2]	0.00
Accelerated Flow Effect (ft)	0.00	0.00
Local Drop Structure Scour (ft)	0.00	5.49[3]
Total Scour (ft)	16.95	22.24

[1] Pier 2 EB is recommended to be structurally design for the Superflood Event only. See discussion in the text of this document.

[2] Local Pier Scour determined assuming 2 feet of debris around the column. Values obtained from Table 1D (2 of 2), Appendix A.

[3] Values obtained from SLA 1990 Report, Table 4.2-Scour Analysis Summary Table, Condition IV (D/S).

The selected bridge foundation scour design parameters for the IBW Bridge new columns located within the channel and outside of the drop structure are contained in the following two tables. ***(Based on the April 30, 2009 meeting, the four drilled shafts within the channel and near the drop structure will be designed based on the FCDMC Methodology for the Critical Design Flow and the Superflood Flow. These values are contained in Table ES-6A AND ES-6B. Drilled shaft for Pier 2 Eastbound will be designed based on the ADOT Methodology for the Superflood flow. These values are contained in Table ES-3A.)***

TABLE ES-3A: Selected Bridge Foundation Scour Design Parameters (Superflood-64,000 cfs)					
(Location of New Columns)	**Streambed Invert[1]**	**Total Scour Depth[2]**	**Scour Invert**	**W.S.E.[1]**	**Average Velocity[1]**
	(ft)	(ft)	(ft)	(ft)	(fps)
Upstream of Drop Structure (Piers 6 & 7 WB)	1158.36	23.0	1135.4	1168.5	12.0
Downstream of Drop Structure (Piers 2, 3 & 4 EB)[2]	1140.92	31.0	1109.9	1149.7	15.2

TABLE ES-3B: Selected Bridge Foundation Scour Design Parameters (Critical Design Flow-30,000 cfs)					
(Location of New Columns)	**Streambed Invert[1]**	**Total Scour Depth[2]**	**Scour Invert**	**W.S.E.[1]**	**Average Velocity[1]**
	(ft)	(ft)	(ft)	(ft)	(fps)
Upstream of Drop Structure (Piers 6 & 7 WB)	1158.36	19.0	1139.4	1165.4	8.6
Downstream of Drop Structure (Piers 3 & 4 EB)[2]	1140.92	23.0	1117.9	1149.6	7.2

[1]Values obtained from Table 1B or Table 1D (2 of 2), Appendix A.

[2]Pier 2 EB is recommended to be structurally design for these Superflood Event scour depths only. See discussion in the text of this document.

SUMMARY OF SELECTED SCOUR DEPTHS (FCDMC Pier Scour "Zone-of-Influence")

Based on FCDMC review comments, the calculated pier scour "Zone-of-Influence" depths for the IBW Bridge new columns located within the channel and upstream of the drop structure are contained in the following two tables.

Table ES-4A: Scour Summary for Pier Scour "Zone-of-Influence" (Piers 6 and 7 WB) for Superflood Flow

	64,000 cfs	
Description	**(SLA 1990 Report)**	**(Revised per FCDMC Comments)**
Local Pier Scour (ft)	20.77[2]	20.13[1]
General Scour (ft)	0.00	4.66[1]
Long Term Degradation (ft)	0.00	0.00
Bed Form Scour (ft)	0.00	0.00
Accelerated Flow Effect (ft)	2.00[2]	2.00[2]
Local Drop Structure Scour (ft)	0.00	0.00
40% ± Safety Factor	9.11	0.00
30% Safety for Additional Scour Components	0.00	2.00[3]
Total Scour (ft)	31.88	28.79

Table ES-4B: Scour Summary for Pier Scour "Zone-of-Influence" (Pier 6 and 7 WB) for Critical Design Flow

	30,000 cfs	
Description	**(SLA 1990 Report)**	**(Revised per FCDMC Comments)**
Local Pier Scour (ft)	18.14[2]	16.83[1]
General Scour (ft)	0.00	3.05[1]
Long Term Degradation (ft)	0.00	0.00
Bed Form Scour (ft)	0.00	0.00
Accelerated Flow Effect (ft)	2.00[2]	2.00[2]
Local Drop Structure Scour (ft)	0.00	0.00
40% ± Safety Factor	8.06	0.00
30% Safety for Additional Scour Components	0.00	1.52[3]
Total Scour (ft)	28.20	23.40

[1] Local Pier Scour determined assuming 2 feet of debris around the column. Values obtained from Table 2B, Appendix A.

[2] Values obtained from SLA 1990 Report, Table 4.2-Scour Analysis Summary Table, Condition III (U/S).

[3] At previous meetings, FCDMC has stated that the debris around the column provides the necessary safety factor. Therefore, the 30% safety factor has not been applied to the local pier scour.

The calculated pier scour "Zone-of-Influence" depths for the IBW Bridge new columns located within the channel and downstream of the drop structure are contained in the following two tables.

TableES-5A: Scour Summary for Pier Scour "Zone-of-Influence" (Pier 4 EB) for Superflood Flow		
	64,000 cfs	
Description	**(SLA 1990 Report)**	**(Revised per FCDMC Comments)**
Local Pier Scour (ft)	21.33[2]	22.32[1]
General Scour (ft)	0.00	4.93[1]
Long Term Degradation (ft)	0.50[2]	0.50[2]
Bed Form Scour (ft)	0.00	0.00
Accelerated Flow Effect (ft)	0.00	0.00
Local Drop Structure Scour (ft)	7.59[2]	7.59[2]
40% ± Safety Factor	11.57	0.00
30% Safety for Additional Scour Components	0.00	3.91[3]
Total Scour (ft)	40.99	39.25

Table ES-5B Scour Summary for Pier Scour "Zone-of-Influence" (Pier 4 EB) for Critical Design Flow		
	30,000 cfs	
Description	**(SLA 1990 Report)**	**(Revised per FCDMC Comments)**
Local Pier Scour (ft)	18.59[2]	16.25[1]
General Scour (ft)	0.00	3.15[1]
Long Term Degradation (ft)	0.50[2]	0.00
Bed Form Scour (ft)	0.00	0.00
Accelerated Flow Effect (ft)	0.00	0.00
Local Drop Structure Scour (ft)	5.49[2]	5.49[2]
40% ± Safety Factor	9.63	0.00
30% Safety for Additional Scour Components		2.59
Total Scour (ft)	34.21	27.48

[1] Local Pier Scour determined assuming 2 feet of debris around the column. Values obtained from Table 2D (2 of 2), Appendix A.

[2] Values obtained from SLA 1990 Report, Table 4.2-Scour Analysis Summary Table, Condition IV (D/S).

[3] At previous meetings, FCDMC has stated that the debris around the column provides the necessary safety factor. Therefore, the 30% safety factor has not been applied to the local pier scour.

(At an April 30, 2009 meeting with FCDMC, it was agreed to use the scour depths determined in accordance with the (Revised per FCDMC comments) for both the "Zone-of-Influence" and the structural design of the four drilled shafts within the channel and near the drop structure.) The selected pier scour design parameters for these columns are contained in the following two tables.

TABLE ES-6A: Selected Pier Scour Design Parameters (Superflood-64,000 cfs)					
(Location of New Columns)	**Streambed Invert[2]**	**Total Scour Depth[1]**	**Scour Invert**	**W.S.E.[2]**	**Average Velocity[2]**
	(ft)	(ft)	(ft)	(ft)	(fps)
Upstream of Drop Structure (Piers 6 & 7 WB)[3]	1158.36	29.0	1129.4	1168.5	12.0
Downstream of Drop Structure (Pier 3 and 4 EB)[3]	1140.92	39.0	1101.9	1149.7	15.2

TABLE ES-6B: Selected Pier Scour Design Parameters (Critical Design Flow-30,000 cfs)					
(Location of New Columns)	**Streambed Invert[2]**	**Total Scour Depth[1]**	**Scour Invert**	**W.S.E.[2]**	**Average Velocity[2]**
	(ft)	(ft)	(ft)	(ft)	(fps)
Upstream of Drop Structure (Piers 6 & 7 WB)[3]	1158.36	23.5	1135.9	1165.4	8.6
Downstream of Drop Structure (Pier 3 and 4 EB)[3]	1140.92	27.5	1113.4	1149.6	7.2

[1] Values obtained from Tables ES-4A, ES-4B, ES-5A, and ES-5B.
[2] Values obtained from Table 2B or Table 2D (2 of 2), Appendix A.
[3] Piers 6 and 7 Westbound and Piers 3 and 4 Eastbound need to be structurally designed for these scour depths. Based on the pier scour "Zone-of-Influence," Piers 6 and 7 Westbound and Pier 4 Eastbound require scour countermeasures to prevent impacts to the existing bank protection and/or the roller compacted drop structure.

PIER AND BANK PROTECTION DETAILS FOR PIER SCOUR "ZONE-OF-INFLUENCE"

Using the pier scour "Zone-of-Influence" depths, the new downstream column on Pier 4 and the new upstream columns on Piers 6 and 7 would impact the existing channel protection features. The new downstream column for Pier 3 would not impact the existing channel protection features. Based on as-built plans (as depicted on Figure 2, Appendix A), the existing adjacent columns within these pier bents are currently protected with buried gabion mattresses (typically 40' (W) x 40' (L) x 1.5' (D).

For upstream Piers 6 and 7, these mattresses will be extended in kind to protect the existing channel features from the new piers' scour "Zone-of-Influence." Attached Detail D1 depicts the proposed construction of these gabion mattresses. The mattress will be extended to provide a 40' square by 1.5-foot deep mattress centered on the new outside column.

It is not possible to install gabion mattress protection at Pier 4 because it would be very difficult if not impossible to dewater the pier site located downstream of the drop structure. The static water level within the Tempe Town Lake is approximately 1149.65 and the proposed surface of the gabion mattress protection is 1129.7. The soil profile within the proposed work zone consists of Sand, Gravel, and Cobbles (GP-GM, GW-GM, GP, and GW) as shown by the soil borings contained in the bridge as-built plans. A 20-foot head on this porous material would make it nearly impossible to adequately dewater the site during the construction operation.

Therefore, dumped riprap will be used for downstream Pier 4. The scour "Zone-of-Influence" will be interrupted by a 40' square by 9-foot deep apron of dumped riprap centered on the new outside column. The dumped riprap protection will be placed with a top elevation that is level with the top of the existing tremied concrete block. It will be located just above the existing gabion mattress, which is located around the existing outside column. Attached Detail D1 depicts the proposed construction of the dumped riprap protection. Design calculations for this apron are contained in Appendix C.

LEVEE/FREEBOARD EVALUATION FOR WIDENED BRIDGE

The widening of the SR 202L Bridge over Indian Bend Wash will require 2 additional columns at each pier bent, one upstream and one downstream. These columns will be placed within 22 to 30 feet of existing columns upstream of the bridge and within 25' to 35' of existing columns downstream of the bridge. The new columns will be placed on the same alignment as the existing columns to prevent additional blockage of flow.

A HEC-RAS model has been developed for existing and proposed conditions. Due to the skew of the bridge, it was necessary to use the obstruction routine to model the 5.5' diameter piers. Columns were modeled at only Sections 14.0, 14.3 and 14.4, because all other columns are located downstream of Grade Control Structure Level I (Section 14.0). Flow passes through critical depth at Section 14, and therefore, the downstream columns would not affect the upstream water surface elevations. For both conditions, Section 14.3 is modeled with 2 columns and Section 14.4 is modeled with 1 column. For Section 14.0, the existing condition has 2 columns and the proposed condition will have 3 columns. The existing condition has one less column because only two columns are at or upstream of Section 14.0.

The results of the HEC-RAS models are documented in Tables C-3 through C-5, Appendix C. As requested by the FCDMC, the model was run for the Critical Design Flow of 30,000 cfs. In the

immediate vicinity of the bridge, the proposed widening would raise the water surface elevation an insignificant 0.03 to 0.08 feet. This increase dissipates within120 feet of the east bridge/bank intercept and within 590 feet of the west bridge/bank intercept. The existing freeboard ranges from 3.5 to 9.9 feet along the left bank (east bank), and from 5.2 feet to 7.2 feet along the right bank (west bank). The existing top of bank elevation within this area is adequate to contain this insignificant rise in water surface elevations.

APPENDIX A

TECHNICAL DRAINAGE MEMORANDUM

Technical Drainage Memorandum

SR 202L
Bridge Scour Evaluations
Indian Bend Wash Bridge

April 30, 2009

INTRODUCTION

The Arizona Department of Transportation (ADOT) has contracted with Kiewit Sundt Joint Venture (KSJV) for the design/build widening of State Route 202L from SR51 to SR101. URS Corporation (URS) has prepared the following memorandum to document the pier scour for the proposed widening of the SR 202L Bridges over Indian Bend Wash. Supporting figures and tables include:

FIGURES

- Figure 1 – Project Location Map
- Figure 2 – Indian Bend Wash Bridge Foundation Plans – Drawings S-20.12 thru S-20.14
- Figure 3 – HEC-RAS Cross-Sections Map
- Figure 4 – Existing Grade Drop Structure Plan
- Figure 5 – Chart for Estimating F_{bo} (After Blench)
- Figure 6 – HEC-RAS Water Surface Profiles, Critical Design Flow & Standard Project Flood
- Figure 7 – HEC-RAS Cross-Sections
- Figure 8 – Indian Bend Wash Drop Structure, As-Built 11-02-95
- Figure 9 – Pier 2, New Outside Column Eastbound and Existing Bank Cross-Section

TABLES

- Table 1 – Pier Scour Summary-ADOT Methodology
  - Table 1A – Pier 7 WB Scour Calculations (Upstream of Grade Control Structure)
  - Table 1B – Pier 6 WB Scour Calculations (Upstream of Grade Control Structure)
  - Table 1C – Pier 4 EB Scour Calculations (Downstream of Grade Control Structure)
  - Table 1D – Pier 3 EB Scour Calculations (Downstream of Grade Control Structure)
- Table 2 – Pier Scour Summary-FCDMC Methodology
  - Table 2A – Pier 7 WB Scour Calculations (Upstream of Grade Control Structure)
  - Table 2B – Pier 6 WB Scour Calculations (Upstream of Grade Control Structure)
  - Table 2C – Pier 4 EB Scour Calculations (Downstream of Grade Control Structure)
  - Table 2D – Pier 3 EB Scour Calculations (Downstream of Grade Control Structure)
- Table 3 – General Scour Summary-FCDMC Methodology
  - Table 3A – River Station 14.4 – Lacey Equation (Upstream of Grade Control Structure)
  - Table 3B – River Station 14.3 – Lacey Equation (Upstream of Grade Control Structure)
  - Table 3C – River Station 14.4 – Blench Equation (Upstream of Grade Control Structure)
  - Table 3D - River Station 14.3 – Blench Equation (Upstream of Grade Control Structure)
  - Table 3E – River Station 0.9 – Blench Equation (Downstream of Grade Control Structure)
  - Table 3F – River Station 0.8 – Blench Equation (Downstream of Grade Control Structure)
  - Table 3G – River Station 0.7 – Blench Equation (Downstream of Grade Control Structure)
- Table 4 – HEC-RAS Hydraulic Characteristics – FEMA 100-Year Flow (20,000 cfs)

- Table 5 – HEC-RAS Hydraulic Characteristics – Critical Design Flow (30,000 cfs)
- Table 6 – HEC-RAS Hydraulic Characteristics – Standard Project Flood Flow (64,000 cfs)
- Table 7 – HEC-RAS Report
- Table 8 – Hydraulic Characteristics at New Outside Columns, Eastbound
- Table 9 – Hydraulics Characteristics at New Outside Columns, Westbound

DETAIL

- Detail 1 – Pier & Bank Protection Details

DESIGN PROCEDURE

The following outline provides the reviewer the design procedure used. Arizona Department of Transportation (ADOT) and Flood Control District of Maricopa County (FCDMC) have slightly different methodologies on estimating scour depths. These differences are discussed in the following procedure. The procedure steps are summarized in the order they were performed and should be the approach taken when reviewed.

Scour Methodology for Piers

The total scour is comprised of several scour components. These are discussed as follows:

1. ***Contraction Scour:*** Contraction scour is a form of scour occurring at a particular location, such as a bridge crossing. The channelization and bank protection along Indian Bend Wash has significantly reduced the probability of contraction scour. The most significant portion of contraction scour is when overbank flow is redirected around the abutment into the main channel. The bank protection is in line with the flow-through abutments and therefore, scour contraction has been eliminated. The Initial Drainage Report recommended a value of 0 for contraction scour and this report concurs with this recommendation.
2. ***General Scour:*** General scour consists of the vertical lowering of the channel bed over relatively short time periods, usually during a single flood event. For the ADOT Methodology, the general scour is determined with the Zeller (1981) equation. For the FCDMC Methodology, the general scour is determined as the average of values determined with the Lacey and Blench equations.
3. ***Long-Term Degradation:*** Use a value of zero because of the drop structure (grade control) under the SR 202L Bridge and the confluence with the Salt River located between the upstream and downstream dams of Tempe Town Lake. These dams will limit the degradation of the Salt River, and therefore, the degradation of Indian Bend Wash.
4. ***Low-Flow Incisement***: Use a value of zero because of the drop structure (grade control) and the Salt River Dams located upstream and downstream of the confluence with the Salt River as explained for long-term degradation. Review of field surveys indicates that low-flow incisement has not occurred within the vicinity of the SR 202L Bridge crossing of Indian Bend Wash.
5. ***Bed-Form Scour:*** Two types of bed-form scour are anti-dune scour and dune scour. Anti-dunes can form either during transitional flow, between subcritical and supercritical flow, or during supercritical flow. Transitional flow conditions occur through the Indian Bend Wash Drop Structure, which consists of a series of four (4) grade control structures with three (3) drops and

four (4) stilling basins. The anti-dune scour is calculated with an equation developed by Simons, Li & Associates, 1982. Dune scour generally occurs in natural channels with sand beds. Indian Bend Wash and the Salt River are not sand bed watercourses and dune scour is not anticipated. Use a value of 0 for dune scour.

6. ***Local-Pier Scour:*** Local pier scour is computed with the CSU equation for both live-bed and clear-water pier scour. The equation predicts maximum pier scour depths. Values need to be determined for four (4) factors. These are K_1, K_2, K_3, and K_4. The ADOT Hydraulic Drainage Manual considers that debris on a pier creates a square nose, which results in $K_1 = 1.1$. The other factors, as stated in the ADOT manual, are $K_2 = 1.0$ (round columns, no correction for 15 degree angle of flow between flow direction and alignment of pier), $K_3 = 1.1$ (plane bed conditions), and $K_4 = 1.0$ (no decrease due to streambed armoring). For this equation, it is assumed that the bed material is sufficiently fine-grained so that the material gradation does not affect the predicted scour.

The total pier scour is determined as follows:

1. ***Design Flows:*** ADOT stated in the Request for Proposals (RFP) that the scour depths shall be determined for the Critical Design Flow of 30,000 cfs and the Superflood Flow of 64,000 cfs. The U.S. Army Corps of Engineers stated that the Indian Bend Wash design flows are 30,000 cfs for the 100-year flow and 63,000 cfs for the Standard Project Flood Flow. ADOT requires that bridge foundations be designed to withstand scour from the lesser of the 500-year flood event or the event causing overtopping of the approach roadway. The bridge needs to also withstand the 100-year flood event. For these scour calculations, the 100-year flood event is assumed to be the Critical Design Flow of 30,000 cfs and the 500-year flood event is assumed to be the Standard Project Flood Event of 64,000 cfs. Throughout this document, in accordance with the RFP the design flows will be referred to as the Critical Design Flow and the Superflood Flow.

2. ***Scour Components other than Local Pier Scour:*** Calculate these scour components as discussed above.

3. ***Local-Pier Scour:*** The ADOT Bridge Hydraulic Guidelines recommends increasing the pier width by 2 feet on both sides of the pier to account for debris. Other ADOT guidelines state that the debris should be assumed to be the depth of water, but no greater than 12 feet. Flow depths within Indian Bend Wash are less than 12 feet for all discharges. The guidelines also state that when the clear distance between columns is less than 16 feet, then methods described in HEC 18 shall be used to estimate equivalent effective widths. The proposed 5.5-foot diameter columns are placed at a clear distance of 16 feet or greater.

4. ***Factor of Safety:*** The ADOT Methodology does not recommend a factor of safety and none is applied to these calculations. The FCDMC Methodology recommends a thirty percent (30%) factor of safety. The factor of safety need not be applied to the local pier scour when it is computed with 2 feet of debris around the column. The factor of safety is applied to all scour components except the local pier scour.

HECRAS MODEL

Indian Bend Wash through the SR 202L Bridge site and Drop Structure is modeled using the U.S. Army Corps of Engineers' HEC-RAS (Version 4.0). The results of the model are summarized in Tables 4 through 7. The preparation of the HEC-RAS model is described below:

1. ***Methodology:*** The HEC-RAS model has the ability to compute water surface elevations for three (3) flow regimes: Subcritical, Supercritical, and Mixed. The Drop Structure under the SR 202L Bridge consists of three (3) vertical drops, which causes supercritical flow at these locations. Hence, the Mixed Flow Regime methodology was selected as the most realistic flow regime and the most applicable for design purposes.

2. ***Topographic Data Set:*** Topographic data was obtained from field surveys, recently flown contour maps, and as-built plans. The buried portion of the Drop Structure could not be field surveyed, and therefore, the structure geometrics were determined from as-built plans. These elevations were verified with field survey information on the visible portion of the Drop Structure. The as-built plans are based on the NGVD29 datum and the current project plans are based on the NAVD88 datum. The as-built elevations were converted to the NAVD88 datum by adding 1.92 feet to the as-built plan elevations. The HEC-RAS model is based on the NAVD88 datum. Construction of the Tempe Town Lake resulted in installing short retaining walls anchored into the Cement Stabilized Alluvium (CSA) bank protection or roller compacted concrete through the bridge area to provide for recreational and/or maintenance paths on both sides of the wash. Gabion baskets are buried under these paths to provide scour protection when major flows overtop the walls. Since these modifications would have an insignificant affect on the channel flow characteristics, they are not included in the model.

3. ***Boundary Conditions:*** Mixed flow regime was used for this analysis, and therefore, boundary conditions are required at both the 1st upstream and the 1st downstream cross-sections. The upstream flow is characterized as normal depth and the energy gradeline is assumed to be parallel to the channel gradient of 0.001449 ft/ft. The downstream flow discharges into Tempe Town Lake, which has a normal surface elevation of 1149.6 based on field survey. It is assumed that flow within the Salt River would be at the lake level or higher during a major event on Indian Bend Wash. Simultaneous major flows on the Salt River would increase the downstream water surface elevation and result in less critical flow conditions within Indian Bend Wash. These boundary conditions were used for all discharges.

4. ***Energy Loss Coefficients:*** Roughness coefficients were determined based on streambed material and upstream vegetation. Manning's 'n' roughness coefficients selected are: 0.02 for the concrete drop structure, 0.035 for any wired-tied riprap bank protection and the bottom of the channel upstream and within the lake, and 0.08 for the vegetated terraces in the upstream channel. Contraction/expansion loss coefficients were set at 0.1/0.3 for this relatively straight channel.

5. ***Channel Reach Lengths:*** Channel reach lengths between cross-sections were taken along and parallel to the channel thalweg.

INDIAN BEND WASH PEAK FLOW FREQUENCIES

The U.S. Army Corps of Engineers developed peak flow frequencies for Indian Bend Wash for the design of the Indian Bend Wash Channel improvement from Indian Bend Road to the Salt River

confluence. These flows were documented by Simons, Li and Associates, Inc., in a report entitled, "*Hydraulic and Scour Analysis for the East Papago Crossing of Indian Bend Wash*," March 1990. These peak flows and frequencies are:

Return Period or Description	Peak Discharge (cfs)
100-year	30,000
Bankfull	43,000
Superflood	51,000
Standard Project Flood	63,000

After construction of Indian Bend Wash channel, a FEMA study (July 1997) estimated 20,000 cfs for the 100-year Peak Discharge. Based on ADOT's methodology, the 500-year peak discharge would be 34,000 cfs ($Q_{500} = 1.7 \times Q_{100}$).

The FCDMC maintains a gaging station about 1/3 mile south of McKellips Road. Based on 21 years of record, estimated peak flows and frequencies are:

Return Period (years)	Peak Discharge (cfs)
2	944
5	2,590
10	4,370
20	6,710
50	10,800
100	14,900

ADOT stated in the RFP that the scour depths shall be determined for the Critical Design Flow of 30,000 cfs and the Super Flood Flow of 64,000 cfs. These values were used in this evaluation.

CHANNEL BED GRADATION

For the reach of the Salt River upstream of the confluence with Indian Bend Wash, armoring analysis was performed by Simons, Li and Associates, Inc., and documented in the report entitled, *"Final Hydraulic & Scour Analysis Report, Salt River, East Papago Freeway,"* July 1997. This analysis estimated an armor depth of 4.8 feet, and an equilibrium slope of 0.00037 ft/ft.

Sediment transport calculations were performed using the balanced hydrograph and the characteristic Salt River grain size distributions. This report states that, "Two bed-material populations are typically present in the Salt River. One represents a surface armor layer, while the other represents a subsurface parent material." The report also states that, "These representative gradations are consistent with composite sediment routing gradations used by SLA on several reaches of the Salt River. This report does not contain any additional references to a soils report to document these gradations. Cursory reviews of previous reports show some documentation for these values.

These two gradations are as follows:

Particle Size (mm)	Surface Material (Percent Finer)	Subsurface Material (Percent Finer)
362	100	100
181	89	95
90.5	52	76
45.2	44	69
22.6	35	60
11.31	28	52
5.66	21	44
2.00	16	36
0.500	8	21
0.125	3	11

For the ADOT Scour Methodology, these gradations are presented here for information only since ADOT does not consider a reduction in scour depth based on armoring of the bed material, and therefore, $K_4 = 1.0$ in the pier scour equation. However, the FCDMC Scour Methodology uses the Blench Equation for determining general scour and the median grain size is used to estimate the Bench's "Zero Bed Factor" (F_{bo}).

SCOUR CALCULATIONS FOR PIERS AND RECOMMENDATIONS

Total scour for the new columns at Piers 2, 3 and 4 Eastbound and the new columns at Piers 6 and 7 Westbound has been determined based on the above methodology. Based on a 20 January 2009 meeting with the FCDMC it was agreed that the design of the bridge piers may be in accordance with ADOT's scour methodology and the determination of the pier scour "Zone-of-Influence" on the existing bank protection and drop structure will be in accordance with FCDMC's scour methodology.

Table 1 summarizes the scour parameters and depths developed by the ADOT Methodology that should be used for the structural design of the new foundations.

Table 2 summarizes the scour parameters and depths developed by the FCDMC that should be used to determine the pier scour "Zone-of-Influence" on the existing bank protection and drop structure.

Tables 8 and 9 summarize the hydraulic characteristics (average velocities and flow depths) that should be used for lateral pressure on the columns that will be installed through the bottom of the existing concrete drop structure or through the sideslope of the Cement Stabilized Alluvium (CSA) bank protection.

The FCDMC stated via an E-Mail that the Drop Structure and the bank protection were designed for the SPF flow event of 63,000 cfs (Superflood Flow in accordance with ADOT terminology). This is confirmed by the report entitled, "*Hydraulic and Scour Analysis for the East Papago Crossing of Indian Bend Wash*," prepared by Simons, Li and Associates, Inc. in March 1990.

The HEC-RAS model prepared for the current widening project indicates that the Superflood Flow of 64,000 cfs would flow within the Indian Bend Wash banks from immediately upstream of the bridge

through the Drop Structure and into the Tempe Town Lake. The Indian Bend Wash channel transitions from a 4-point channel immediately upstream of the bridge to an 8-point channel further upstream. The beginning upstream section of this model also indicates that the 64,000 cfs cannot be contained by the upstream 8-point Indian Bend Wash channel. Previous reports on Indian Bend Wash by the U.S. Army Corps of Engineers state that 64 percent of the Standard Project Flood would be intercepted by Indian Bend Wash. The remaining 32 percent (approximately 20,000 cfs) would overflow the eastern bank for an average width of approximately 3400 feet. A detailed evaluation of how this flow enters the Salt River has not been completed.

Since the existing bank protection and drop structure have been sized for the Superflood Flow of 64,000 cfs, it is recommended that new columns located within the grade control structure and bank protection do not need to be structurally designed for scour. New columns for Piers 3 and 4 Eastbound and for Piers 6 and 7 Westbound are within the streambed outside of any scour protection. The foundations for these columns will need to be structurally designed for total scour depths determined by the ADOT Methodology for the Critical Design flow and the Superflood Flow. The new column for Pier 2 Eastbound is located within the CSA bank protection at an approximate clear distance of 10 feet from the wash side of the CSA toe-down. This is the only new pier near the CSA toe-down, and therefore, it is considered prudent to structurally design the new column for Pier 2 Eastbound for the total scour depth of the Superflood Flow.

Likewise, the new columns within the grade control structure and bank protection will not affect the structural integrity of these channel protection features. However, new columns for Pier 4 Eastbound and for Piers 6 and 7 Westbound are outside of any scour protection structure and may impact the channel protection features. The potential impacts on channel protection features were evaluated with scour depths determined with the FCDMC Methodology for the Critical Design flow and the Superflood Flow. The pier scour "Zone-of-Influence" is determined based on methodologies contained in the FHWA report entitled, "Evaluating Scour at Bridges (HEC-18)," May 2001.

Using a top-width of twice the scour depth for cohesionless material in water, the top-width from each side of the column would be as follows:

Pier No.	Location	Top-Width of Scour Cone from side of Column for	
		Critical Design Flow[1]	Superflood Flow[1]
		(feet)	(feet)
2, 3 & 4 Eastbound, New Outside Column	Downstream of Drop Structure	44	66
6 & 7 Westbound, New Outside Column	Upstream of Drop Structure	44	58

[1] Local Pier Scour obtained from Table 2. Top-Width from side of column = twice the total scour depth.

Using these values, the new downstream column on Pier 4 and the new upstream columns on Piers 6 and 7 would impact the existing channel protection features. Based on as-built plans (as depicted on Figure 2), the existing adjacent columns within these pier bents are currently protected with buried gabion mattresses (typically 40' (W) x 40' (L) x 1.5' (D).

For upstream Piers 6 and 7, these mattresses will be extended in kind to protect the existing channel features from the new piers' scour (Zone-of-Influence). Attached Detail D1 depicts the proposed construction of these gabion mattresses. The mattress will be extended to provide a 40' square by 1.5-foot deep mattress centered on the new outside column.

For downstream Pier 4, the scour "Zone-of-Influence" will be interrupted by a 40' square by 9-foot deep apron of dumped riprap centered on the new outside column. The dumped riprap protection will be placed with a top elevation that is level with the existing tremied concrete block located It will be located just above the existing gabion mattress located around the existing outside column. Attached Detail D1 depicts the proposed construction of the dumped riprap protection. Calculations for the design of this apron are contained in Appendix C.

It is not possible to install the gabion mattress protection at Pier 4 because it will be very difficult if not impossible to dewater the pier site located downstream of the drop structure. The static water level within the Tempe Town Lake is approximately 1149.65 and the proposed surface of the gabion mattress protection is 1129.7. The soil profile within the proposed work zone consists of Sand, Gravel, and Cobbles (GP-GM, GW-GM, GP, and GW) as shown by the soil borings contained in the bridge as-built plans. A 20-foot head on this porous material will make it nearly impossible to adequately dewater the site during the construction operation.

At Pier 2 Eastbound, the new outside column will be constructed through the existing bank protection similar to five existing Pier 2 columns. Gabion mattresses were not installed around those existing columns, but an evaluation of the new outside column was performed based on as-built information and current survey information. This evaluation, as shown in Figure 9, the wash side of the column to be 10 feet from the wash side of the CSA toe-down. This drawing is based on as-built plans and current field surveys of the visible portion of the hardbank. Additional gabion mattress protection is not considered necessary for this column.

F.H.W.A. REGION	STATE	PROJECT NO.	SHEET NO.	TOTAL SHEETS	AS BUILT
9	ARIZ.	202-A-NFA			
		202L MA 000			

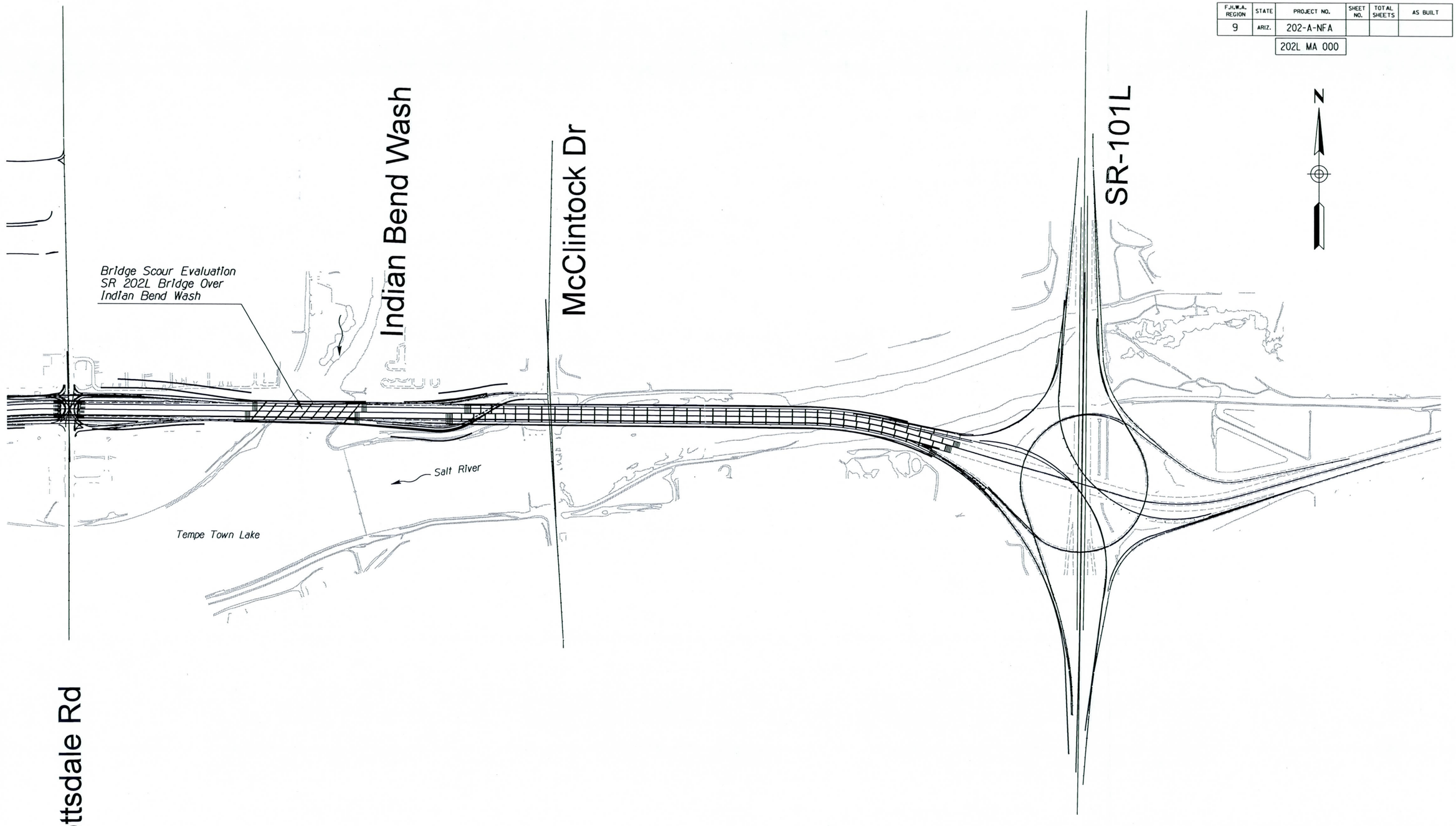

REV	DATE	DESCRIPTION	BY
	/ /		
	/ /		
	/ /		
	/ /		
	/ /		
	/ /		
	/ /		
	/ /		
	/ /		
	/ /		

	NAME	DATE
DESIGN	C. SCHAUB	02/09
DRAWN	K. BEGAY	02/09
CHECKED		02/09

URS

ARIZONA DEPARTMENT OF TRANSPORTATION
INTERMODAL TRANSPORTATION DIVISION
ROADWAY DESIGN SERVICES

FIGURE 1
PROJECT LOCATION MAP

ROUTE: SR 202L
LOCATION: SR 202/SR 51 TI TO SR 101L

TRACS NO. H6871 01C | 202-A-NFA

PRELIMINARY
sub%
Review
NOT FOR CONSTRUCTION OR RECORDING

DWG NO
___ OF ___

P:\TRANSPORTATION\Kiewit\SR 202 Design Build\CADD\Exhibits\Drainage\CADD\Plan\h6871ex7.dgn
3/3/2009 12:49:55 PM

F.H.W.A. REGION	STATE	PROJECT NO.	SHEET NO.	TOTAL SHEETS	AS BUILT
9	ARIZ.	202-A-NFA			
		202 MA 000			

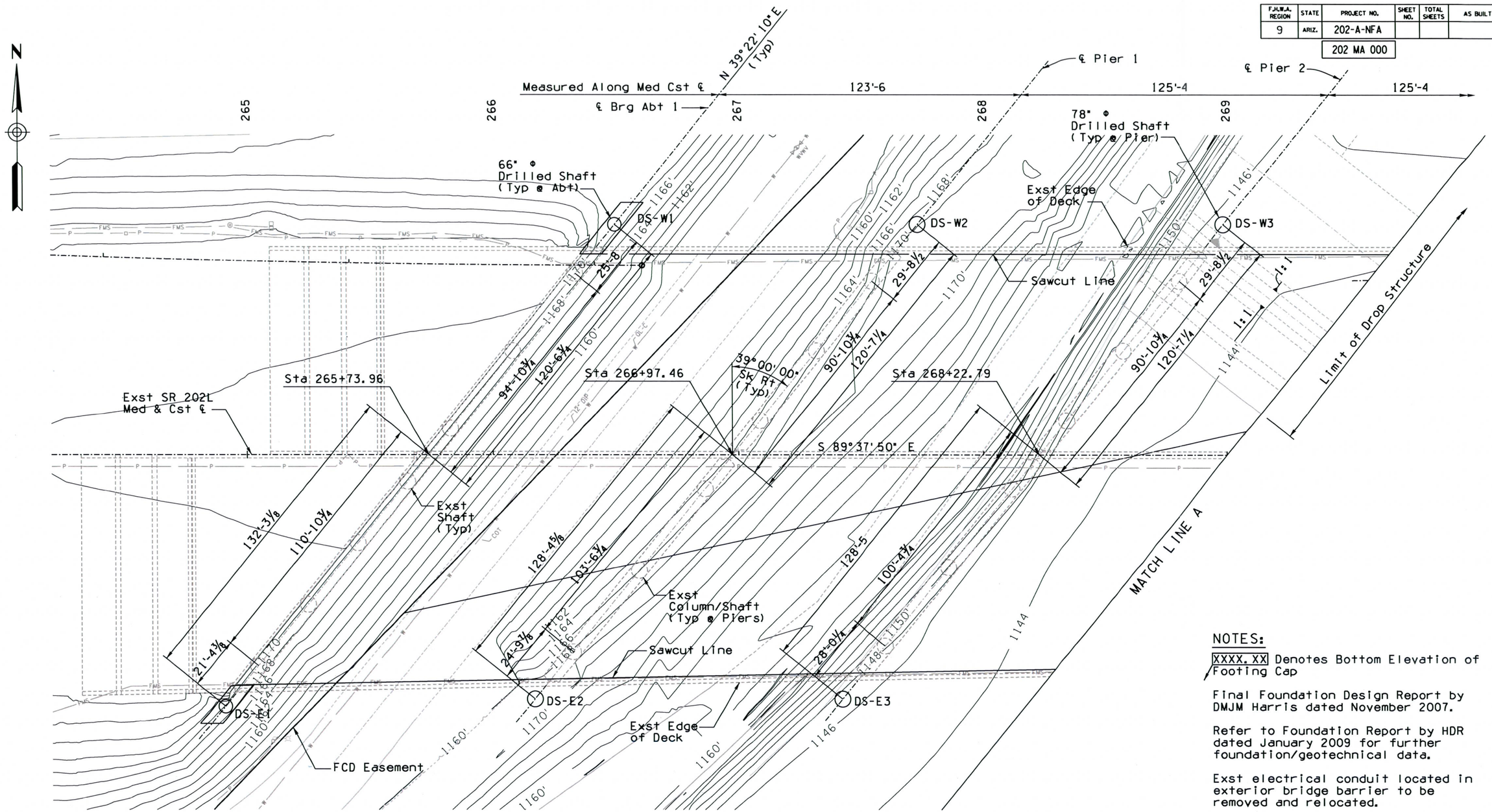

PARTIAL FOUNDATION PLAN

Scale: 1" = 20'-0

NOTES:

XXXX.XX Denotes Bottom Elevation of Footing Cap

Final Foundation Design Report by DMJM Harris dated November 2007.

Refer to Foundation Report by HDR dated January 2009 for further foundation/geotechnical data.

Exst electrical conduit located in exterior bridge barrier to be removed and relocated.

Exst FMS hung between exst exterior girders to remain. Protect in place.

Figure 2 (1 of 4)

REV	DATE	DESCRIPTION	BY
1	/ /		
	/ /		
	/ /		
	/ /		
	/ /		
	/ /		
	/ /		
	/ /		
	/ /		
	/ /		

	NAME	DATE
DESIGN	KLH	1/09
DRAWN	AJM	1/09
CHECKED	JRP	1/09

TY·LIN INTERNATIONAL
Civil and Structural Engineers

ROUTE	MILEPOST	STRUCTURE NO.
202L	8.06	2265

TRACS NO. H6871 01 C

ARIZONA DEPARTMENT OF TRANSPORTATION
INTERMODAL TRANSPORTATION DIVISION
BRIDGE GROUP

STA 265+
INDIAN BEND WASH BRIDGE
FOUNDATION PLAN 1

SR 202/SR 51 TI TO SR 101L

202-A-NFA

PRELIMINARY
95%
Review
NOT FOR CONSTRUCTION OR RECORDING

DWG. S-20.12

___ OF ___

CALL TWO WORKING DAYS BEFORE YOU DIG
263-1100
1-800-STAKE-IT
OUTSIDE MARICOPA COUNTY

DESIGN FILE: P:\SR 202 Design Build\CADD\Plans\Structures\TY Lin Bridges\221679.00 202 Design Build\CADD\2265 Indian Bend\100%\12_S2265_FL1.dgn 4:12:08 PM
DATE: 4/28/2009 TIME: 4:12:08 PM

F.H.W.A. REGION	STATE	PROJECT NO.	SHEET NO.	TOTAL SHEETS	AS BUILT
9	ARIZ.	202-A-NFA			
		202 MA 000			

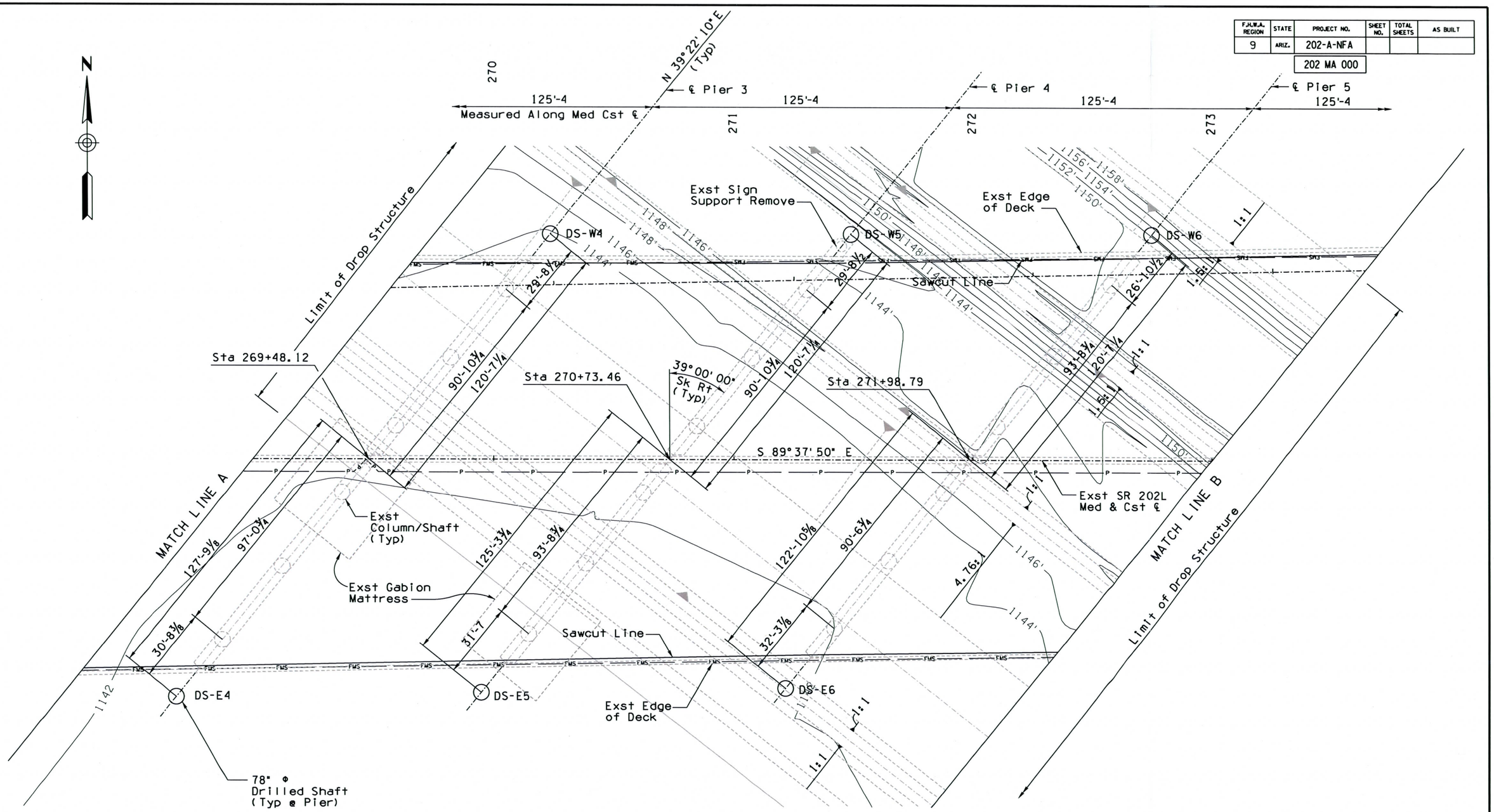

PARTIAL FOUNDATION PLAN

Scale: 1" = 20'-0

Figure 2 (2 of 4)

REV	DATE	DESCRIPTION	BY
1	/ /		
	/ /		
	/ /		
	/ /		
	/ /		
	/ /		
	/ /		
	/ /		
	/ /		
	/ /		
	/ /		

	NAME	DATE
DESIGN	KLH	1/09
DRAWN	AJM	1/09
CHECKED	JRP	1/09

TY-LIN INTERNATIONAL
Civil and Structural Engineers

ROUTE	MILEPOST	STRUCTURE NO.
202L	8.06	2265

TRACS NO. H6871 01 C

ARIZONA DEPARTMENT OF TRANSPORTATION
INTERMODAL TRANSPORTATION DIVISION
BRIDGE GROUP

STA 265+
INDIAN BEND WASH BRIDGE
FOUNDATION PLAN 2

SR 202/SR 51 TI TO SR 101L

202-A-NFA

PRELIMINARY
95%
Review
NOT FOR CONSTRUCTION OR RECORDING

DWG. S-20.13

___ OF ___

CALL TWO WORKING DAYS BEFORE YOU DIG
263-1100
1-800-STAKE-IT
OUTSIDE MARICOPA COUNTY

NO.	DESCRIPTION OF REVISION	MADE BY	DATE
1			
2			

DESIGN FILE: P:\SR 202 Design Build\CADD\Plans\Structures\TY Lin Bridges\221679.00 202 Design Build\CADD\2265 Indian Bend\100%\13_S2265_FL2.dgn 4:14:00 PM
DATE: 4/28/2009 TIME: 4:14:00 PM

F.H.W.A. REGION	STATE	PROJECT NO.	SHEET NO.	TOTAL SHEETS	AS BUILT
9	ARIZ.	202-A-NFA			
		202 MA 000			

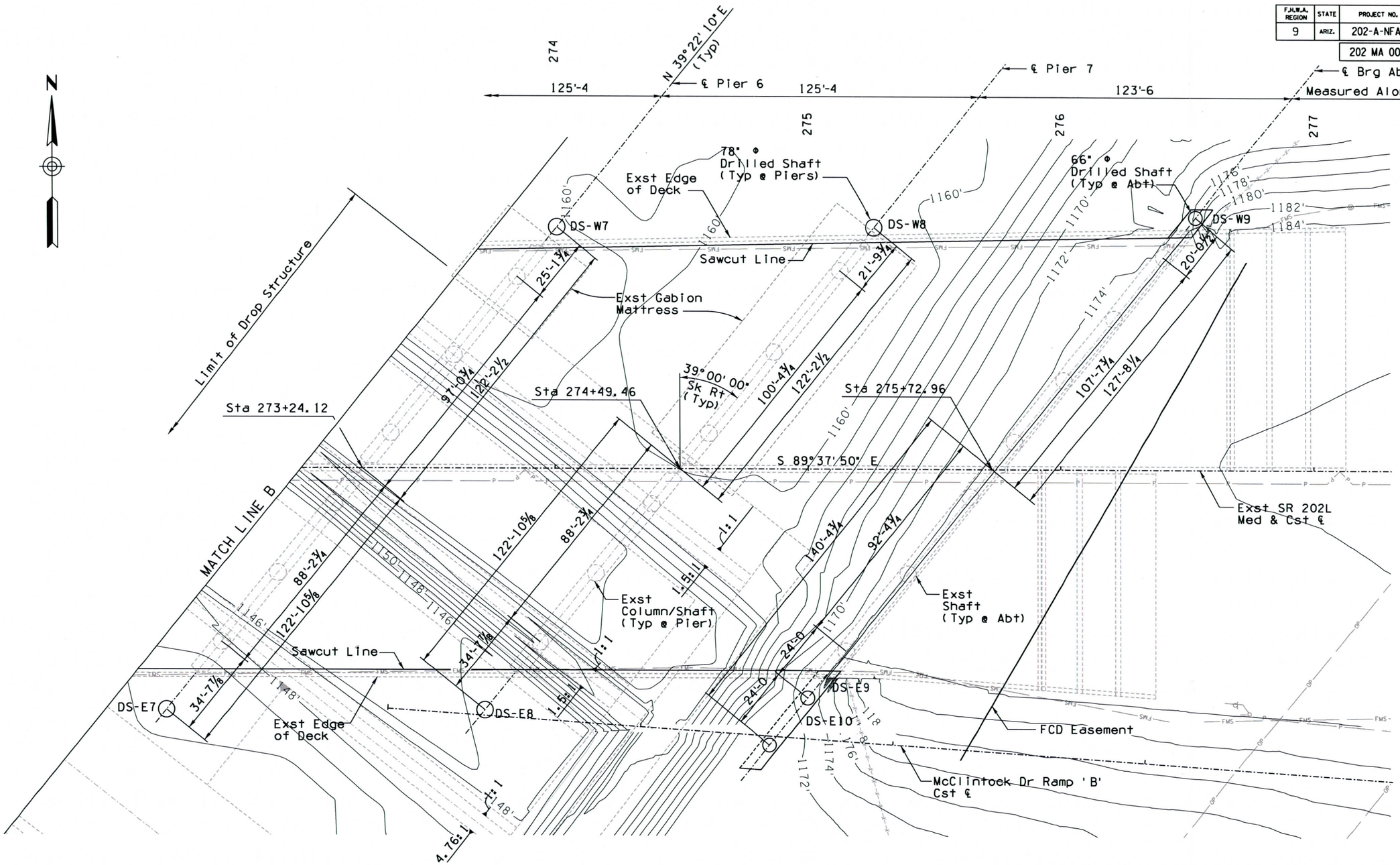

PARTIAL FOUNDATION PLAN

Scale: 1" = 20'-0

Figure 2 (3 of 4)

CALL TWO WORKING DAYS BEFORE YOU DIG 263-1100 1-800-STAKE-IT OUTSIDE MARICOPA COUNTY

REV	DATE	DESCRIPTION	BY
1	/ /		
	/ /		
	/ /		
	/ /		
	/ /		
	/ /		
	/ /		
	/ /		
	/ /		
	/ /		

	NAME	DATE
DESIGN	KLH	1/09
DRAWN	AJM	1/09
CHECKED	JRP	1/09

TY LIN INTERNATIONAL
Civil and Structural Engineers

ROUTE	MILEPOST	STRUCTURE NO.
202L	8.06	2265

TRACS NO. H6871 01 C

ARIZONA DEPARTMENT OF TRANSPORTATION
INTERMODAL TRANSPORTATION DIVISION
BRIDGE GROUP

STA 265+
INDIAN BEND WASH BRIDGE
FOUNDATION PLAN 3

SR 202/SR 51 TI TO SR 101L

202-A-NFA

PRELIMINARY
95%
Review
NOT FOR CONSTRUCTION OR RECORDING

DWG. S-20.14

___ OF ___

DESIGN FILE: P:\SR 202 Design Build\CADD\Plans\Structures\TY Lin Bridges\221679.00 202 Design Build\CADD\2265 Indian Bend\100%\14_S2265_FL3.dgn 4:17:55 PM
DATE: 4/28/2009 TIME: 4:17:55 PM

F.H.W.A. REGION	STATE	PROJECT NO.	SHEET NO.	TOTAL SHEETS	AS BUILT
9	ARIZ.	202-A-NFA			
		202 MA 000			

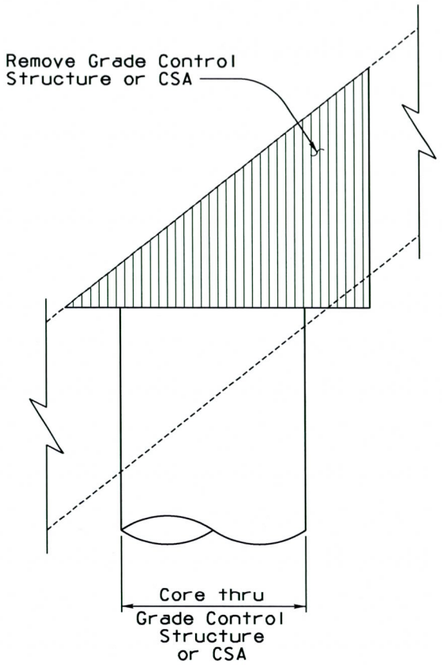

REMOVAL

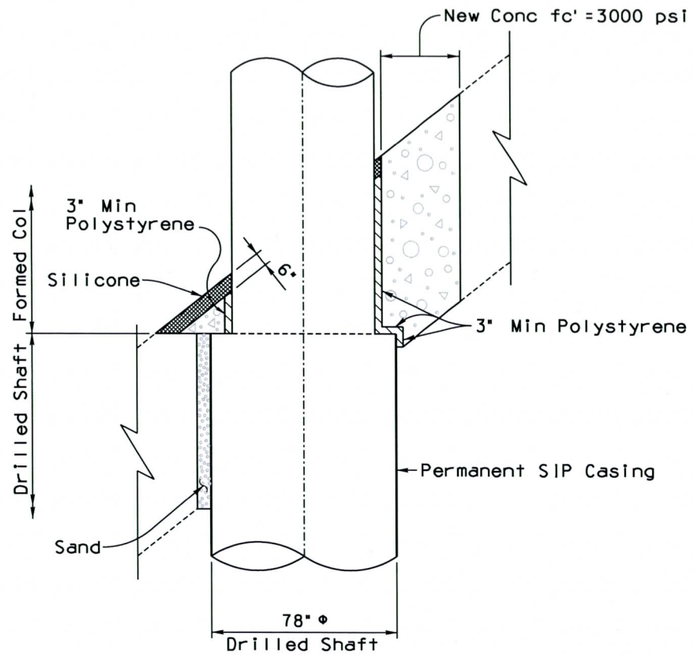

CONSTRUCTION

SLOPED DETAIL

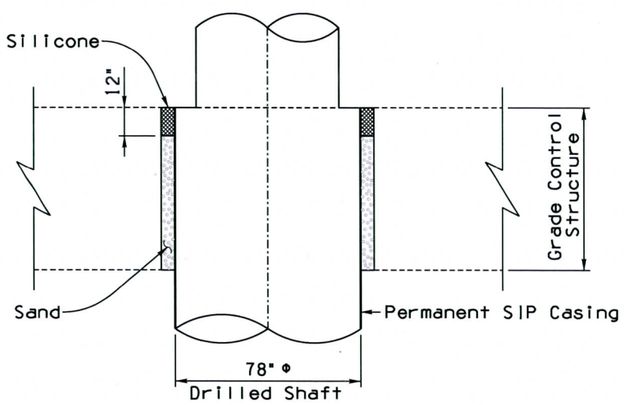

LEVEL DETAIL

NOTE:

The silicone joint sealant shall be applied according to the Provisions of the Standard Specifications, Section 1011-8.

DRILLED SHAFT SEAL

No Scale

DRILLED SHAFT TABLE

	Location	Diameter (inches)	Top Elev	Tip Elev	Design Load (kips)	Axial Capacity* (kips)	Group Efficiency Factor
East Bound	Abt 1	66	1164.95	1115.00	609	1156	0.68
	Pier 1	72	1166.00	1111.00	974	1675	0.73
	Pier 2	78	1153.15	1094.15	1,128	1673	0.76
	Pier 3	78	1141.12	1074.12	1,468	1548	0.77
	Pier 4	78	1140.80	1058.00	1,551	1779	0.81
	Pier 5	78	1141.81	1086.00	1,672	1697	0.81
	Pier 6	78	1144.58	1089.00	1,694	1731	0.82
	Pier 7	78	1152.28	1089.00	1,842	1849	0.84
	Abt 2	66	1170.29	1120.00	728	1420	0.71
West Bound	Abt 1	66	1165.93	1116.00	773	1314	0.73
	Pier 1	72	1166.00	1111.00	1,156	1547	0.77
	Pier 2	78	1145.76	1093.76	1,197	1470	0.77
	Pier 3	78	1143.95	1093.95	1,205	1470	0.77
	Pier 4	78	1148.19	1094.19	1,104	1470	0.77
	Pier 5	78	1151.88	1093.88	1,206	1564	0.74
	Pier 6	78	1159.74	1092.74	1,119	1672	0.73
	Pier 7	78	1159.45	1092.45	1,064	1613	0.70
	Abt 2	66	1170.85	1121.00	398	1307	0.67

NOTE:

* Axial Capacity is the product of the Group Efficiency Factor times the Capacity from the design chart.

Figure 2 (4 of 4)

REV	DATE	DESCRIPTION	BY
1	/ /		
	/ /		
	/ /		
	/ /		
	/ /		
	/ /		
	/ /		
	/ /		
	/ /		
	/ /		

	NAME	DATE
DESIGN	KLH	1/09
DRAWN	AJM	1/09
CHECKED	JRP	1/09

TY-LIN INTERNATIONAL
Civil and Structural Engineers

ROUTE	MILEPOST	STRUCTURE NO.
202L	8.06	2265

TRACS NO. H6871 01 C

ARIZONA DEPARTMENT OF TRANSPORTATION
INTERMODAL TRANSPORTATION DIVISION
BRIDGE GROUP

STA 265+
INDIAN BEND WASH BRIDGE
DRILLED SHAFT DETAILS 2

SR 202/SR 51 TI TO SR 101L

202-A-NFA

PRELIMINARY
95%
Review
NOT FOR CONSTRUCTION OR RECORDING

DWG. S-20.16

___ OF ___

DESIGN FILE: P:\SR 202 Design Build\CADD\Plans\Structures\TY Lin Bridges\221679.00 202 Design Build\CADD\2265 Indian Bend\100%\16_S2265_DS2.dgn 3:19:10 PM
DATE: 4/28/2009 TIME: 3:19:10 PM

F.H.W.A. REGION	STATE	PROJECT NO.	SHEET NO.	TOTAL SHEETS	AS BUILT
9	ARIZ.	202-A-NFA			
		202L MA 000			

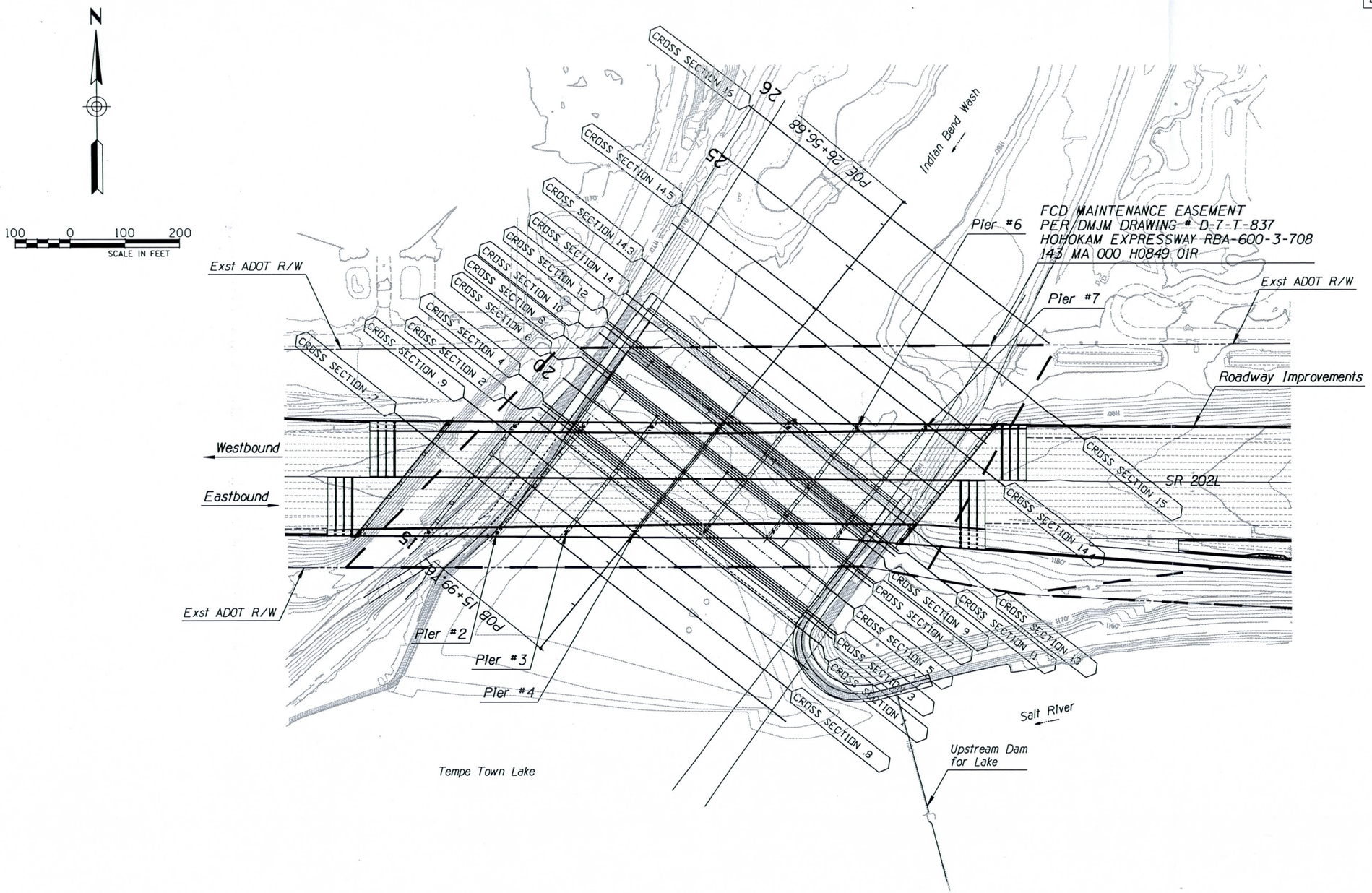

Notes:
New Columns Susceptible to Scour for Both Critical Design and Standard Project Flood Flows: Piers 3 & 4 Eastbound and Piers 6 & 7 Westbound

New Columns Potentially Susceptible to Scour for Standard Project Flood Flow: Pier 2 Eastbound (Located in the Cement Stabilized Alluvium Bank Protection)

REV	DATE	DESCRIPTION	BY
	/ /		
	/ /		
	/ /		
	/ /		
	/ /		
	/ /		
	/ /		
	/ /		
	/ /		
	/ /		

	NAME	DATE
DESIGN	D. SCHAUB	04/09
DRAWN	K. BEGAY	04/09
CHECKED		04/09

URS

ARIZONA DEPARTMENT OF TRANSPORTATION
INTERMODAL TRANSPORTATION DIVISION
ROADWAY DESIGN SERVICES

FIGURE 3
HEC-RAS CROSS SECTIONS MAP

ROUTE: SR 202L
LOCATION: SR 202/SR 51 TI TO SR 101L

TRACS NO. H6871 01C | 202-A-NFA

PRELIMINARY
60%
Review
NOT FOR CONSTRUCTION OR RECORDING

DWG NO
___ OF ___

P:\TRANSPORTATION\Kiewit\SR 202 Design Build\CADD\Exhibits\Drainage\CADD\Plan\h6871ex1.dgn
4/30/2009 8:25:33 AM

F.H.W.A. REGION	STATE	PROJECT NO.	SHEET NO.	TOTAL SHEETS	AS BUILT
9	ARIZ.	202-A-NFA			

202L MA 000

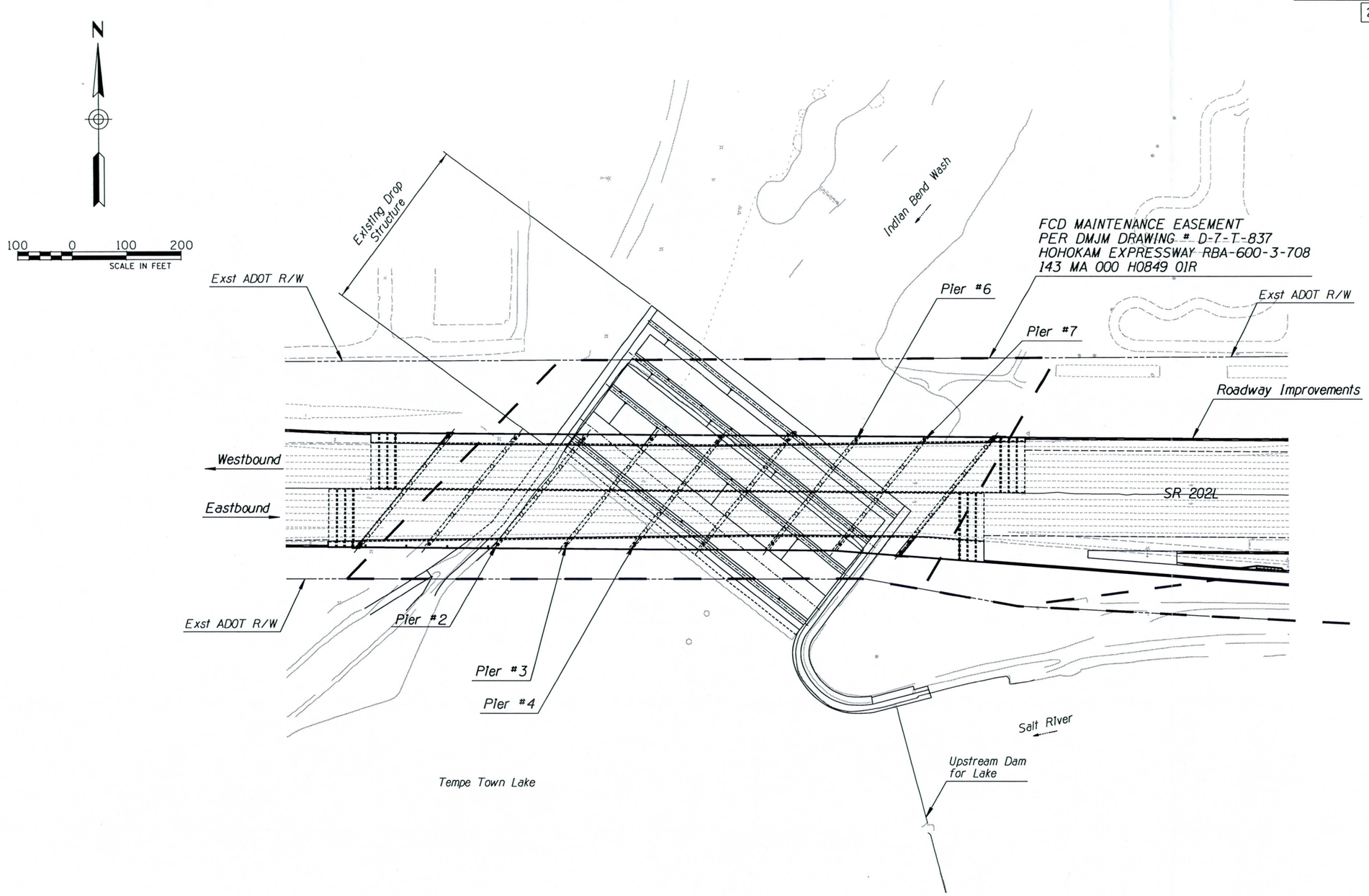

Notes:

New Columns Susceptible to Scour for Both Critical Design and Standard Project Flood Flows: Piers 3 & 4 Eastbound and Piers 6 & 7 Westbound

New Columns Potentially Susceptible to Scour for Standard Project Flood Flow: Pier 2 Eastbound (Located in the Cement Stabilized Alluvium Bank Protection)

REV	DATE	DESCRIPTION	BY
	/ /		
	/ /		
	/ /		
	/ /		
	/ /		
	/ /		
	/ /		
	/ /		
	/ /		
	/ /		

	NAME	DATE
DESIGN	D. SCHAUB	02/09
DRAWN	K. BEGAY	02/09
CHECKED		02/09

URS

ARIZONA DEPARTMENT OF TRANSPORTATION
INTERMODAL TRANSPORTATION DIVISION
ROADWAY DESIGN SERVICES

FIGURE 4
EXISTING DROP STRUCTURE PLAN

ROUTE: SR 202L
LOCATION: SR 202/SR 51 TI TO SR 101L

TRACS NO. H6871 01C | 202-A-NFA

PRELIMINARY
sub%
Review
NOT FOR CONSTRUCTION OR RECORDING

DWG NO ___ OF ___

DATE- | LOCATION- | REVISIONS- | FINISHED PLANS- | SURVEY NO.

P:\TRANSPORTATION\Kiewit\SR 202 Design Build\CADD\Exhibits\Drainage\CADD\Plan\h6871ex2.dgn
4/30/2009 8:27:14 AM

Figure 5
Chart for Estimating F_{bo} (After Blench)

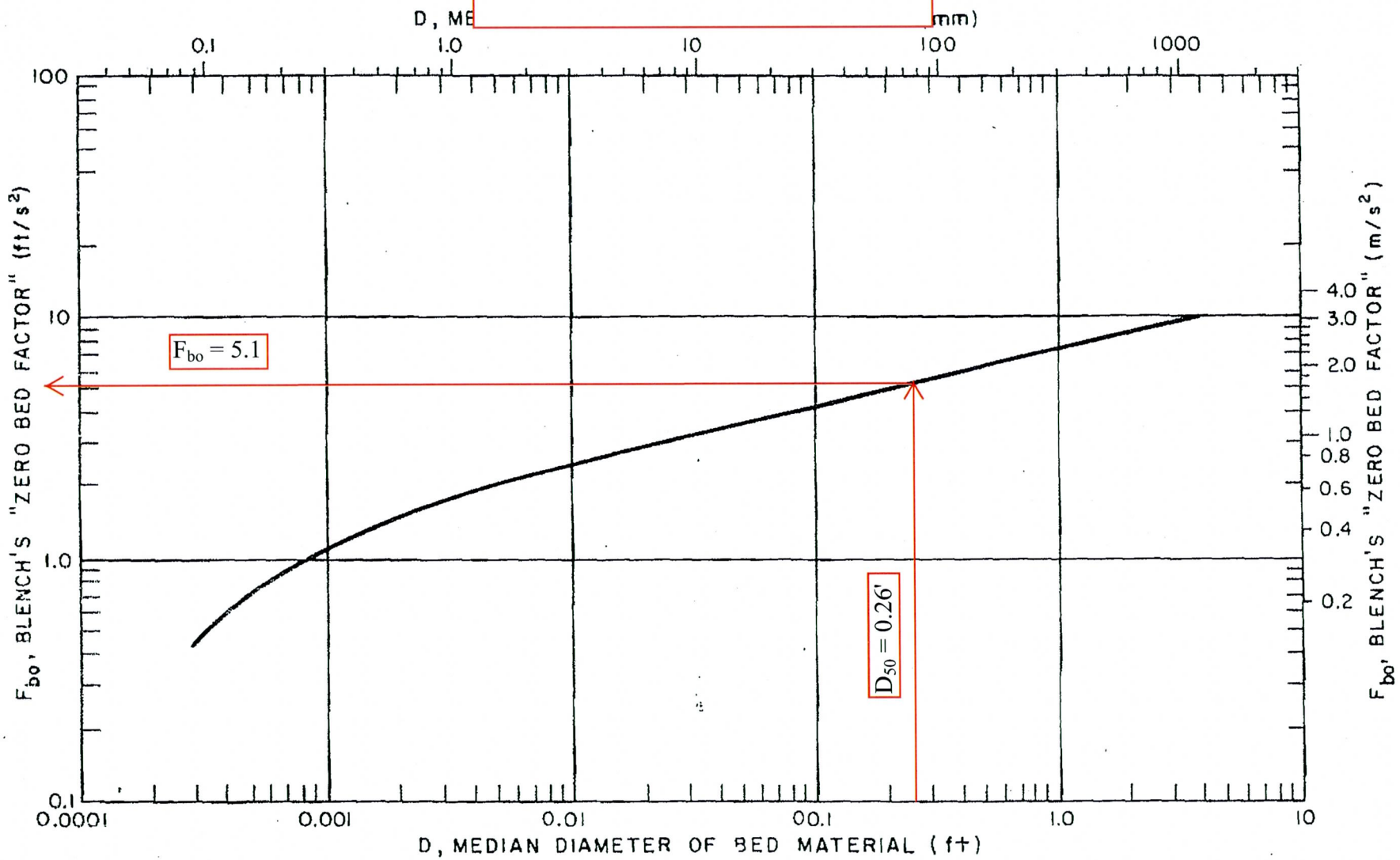

CHART FOR ESTIMATING F_{bo} (AFTER BLENCH)

Figure 9. - Chart for estimating F_{bo} (after Blench, 1969).

Figure 6 - HEC-RAS Water Surface Profiles for
Critical Design Flow and Standard Project Flood (Superflood Flow)

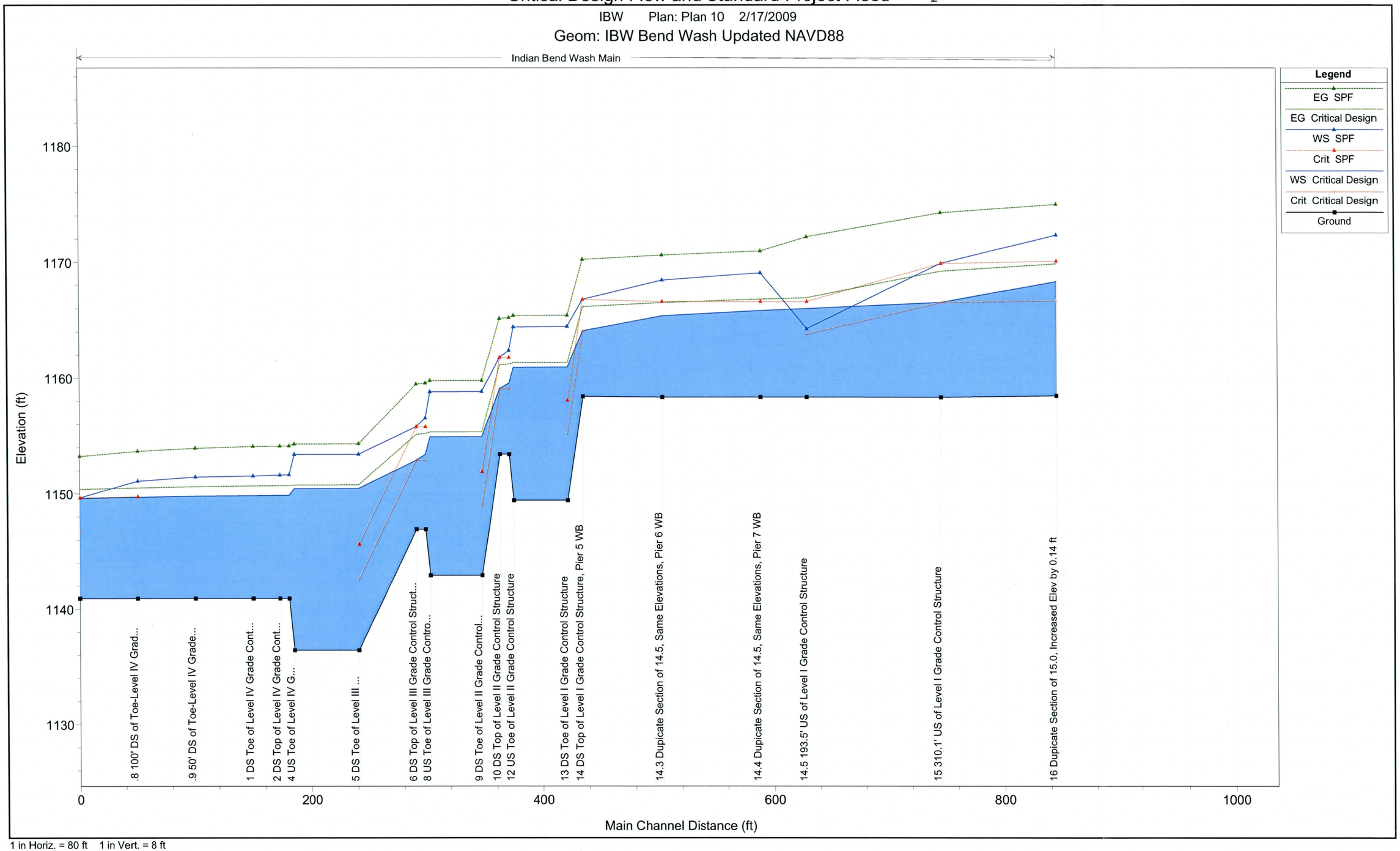

1 in Horiz. = 80 ft 1 in Vert. = 8 ft

Figure 7
Critical Design and Superflood Flows

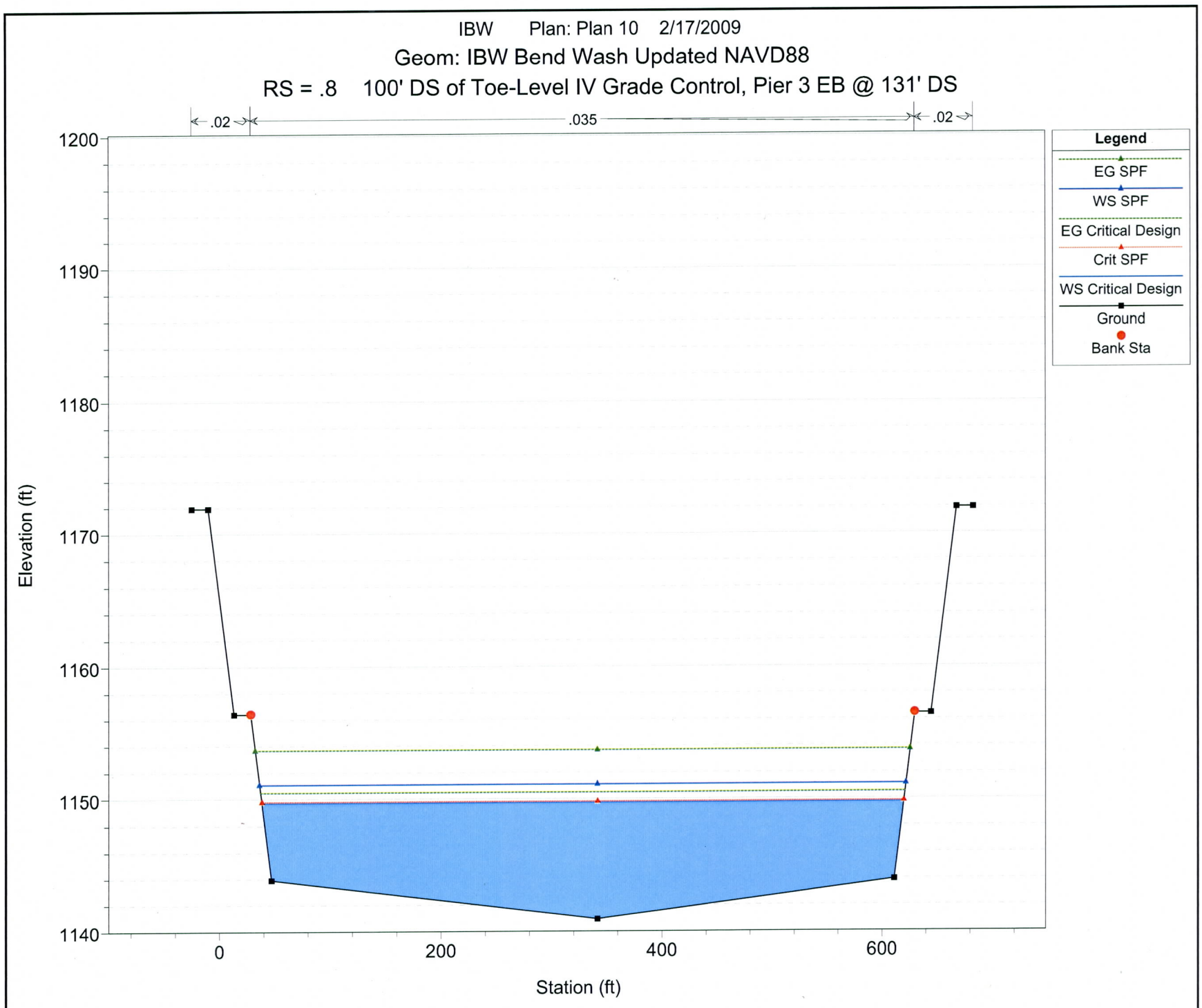

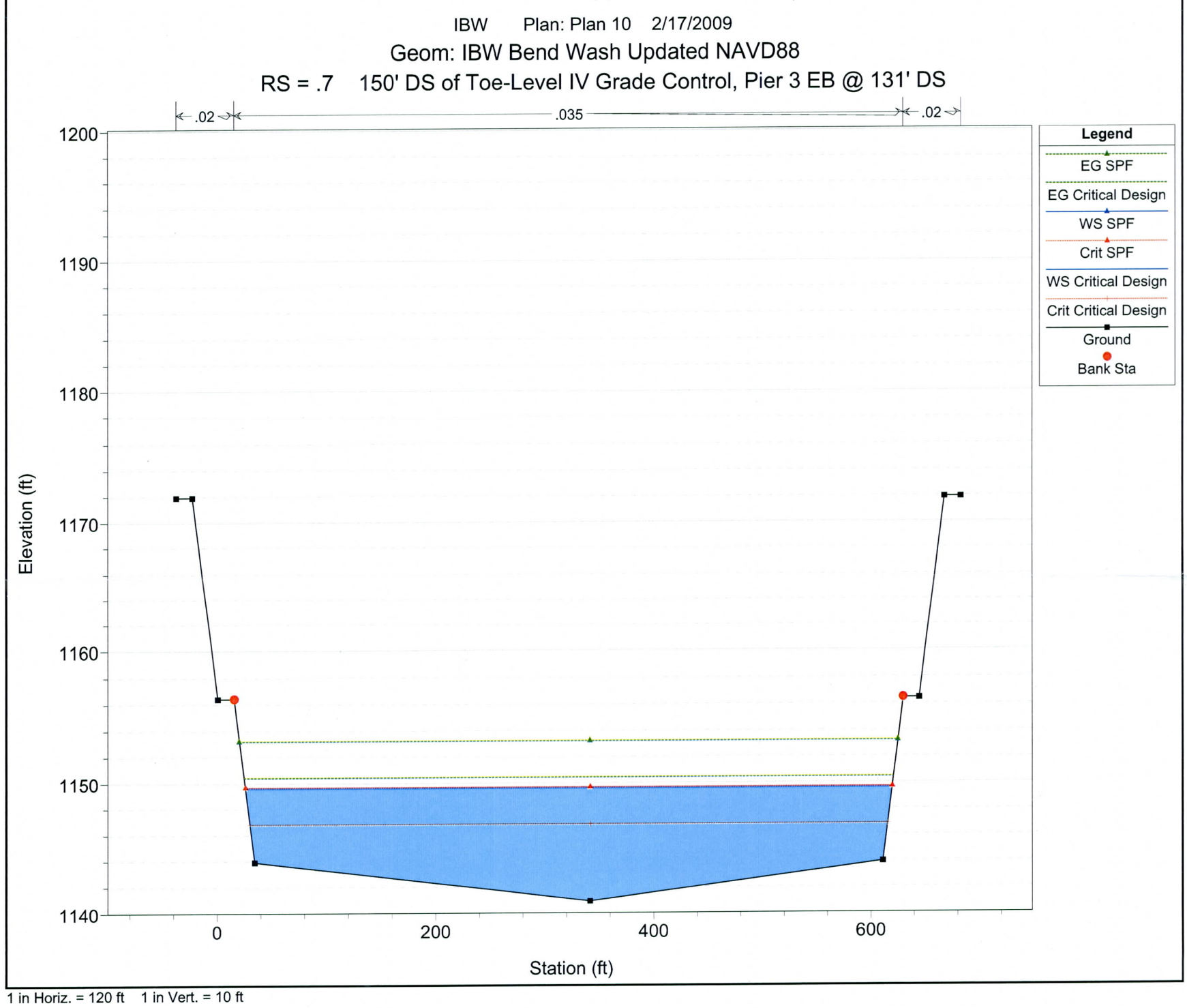

1 in Horiz. = 120 ft 1 in Vert. = 10 ft

Figure 7
Critical Design and Superflood Flows

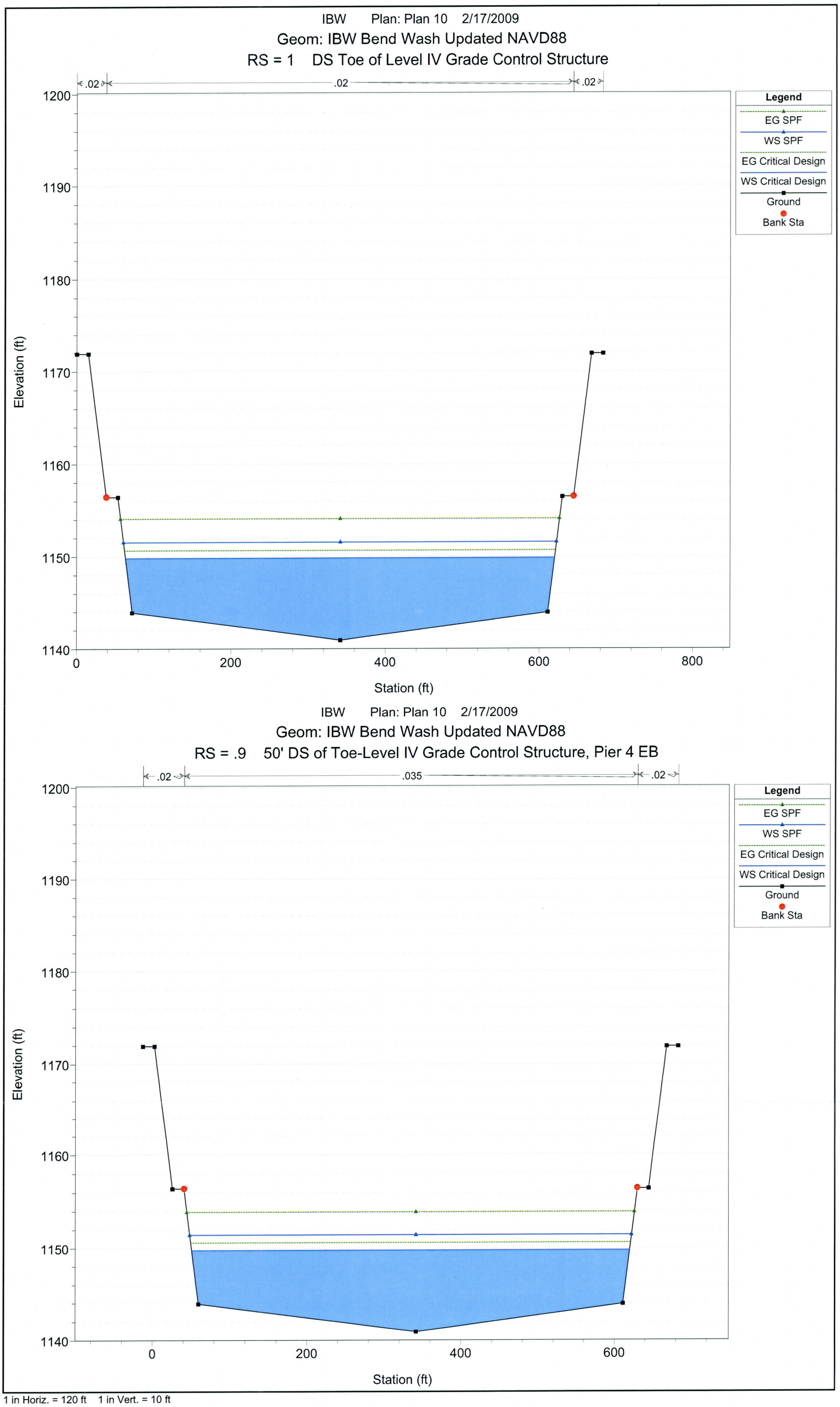

1 in Horiz. = 120 ft 1 in Vert. = 10 ft

Figure 7
Critical Design and Superflood Flows

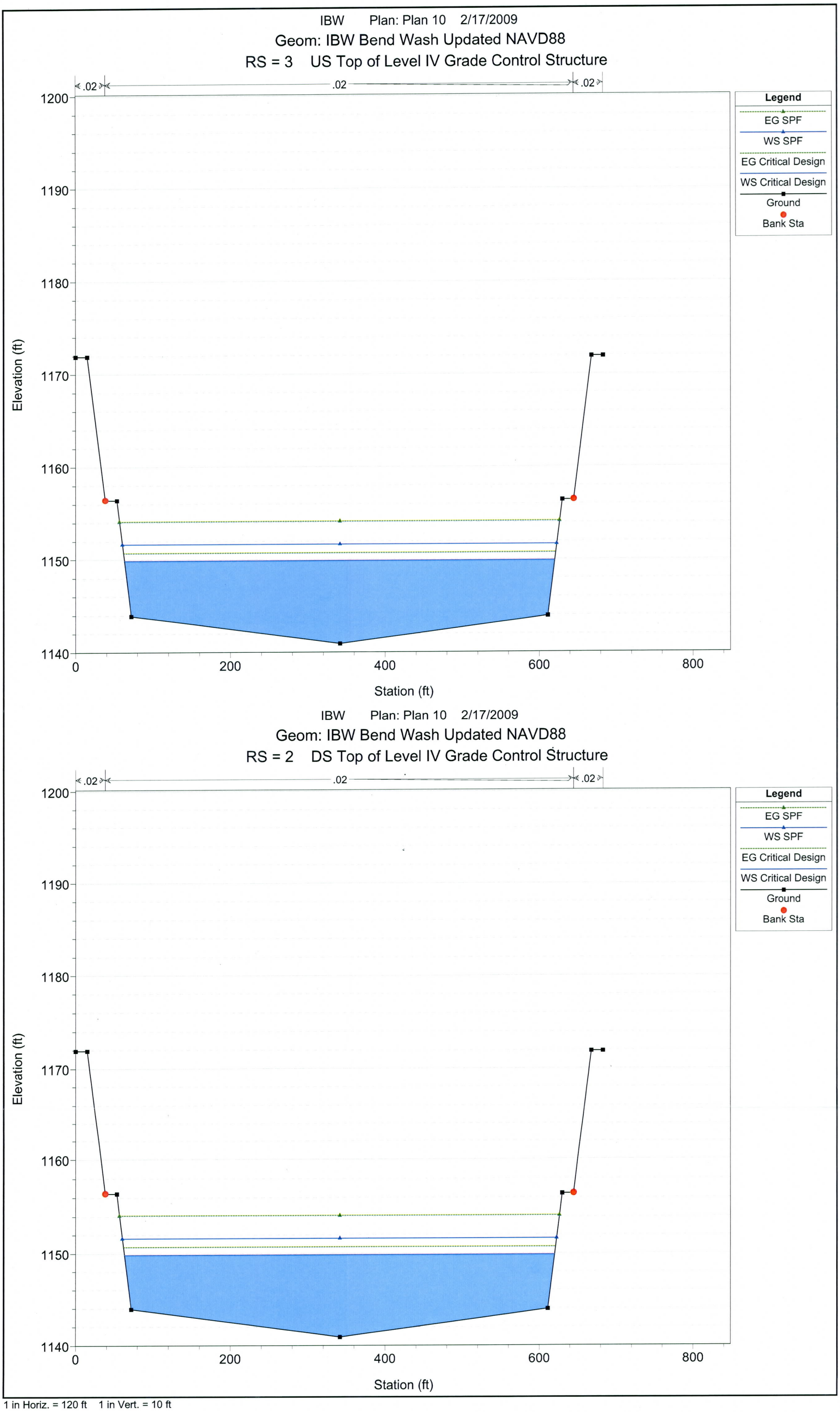

1 in Horiz. = 120 ft 1 in Vert. = 10 ft

Figure 7
Critical Design and Superflood Flows

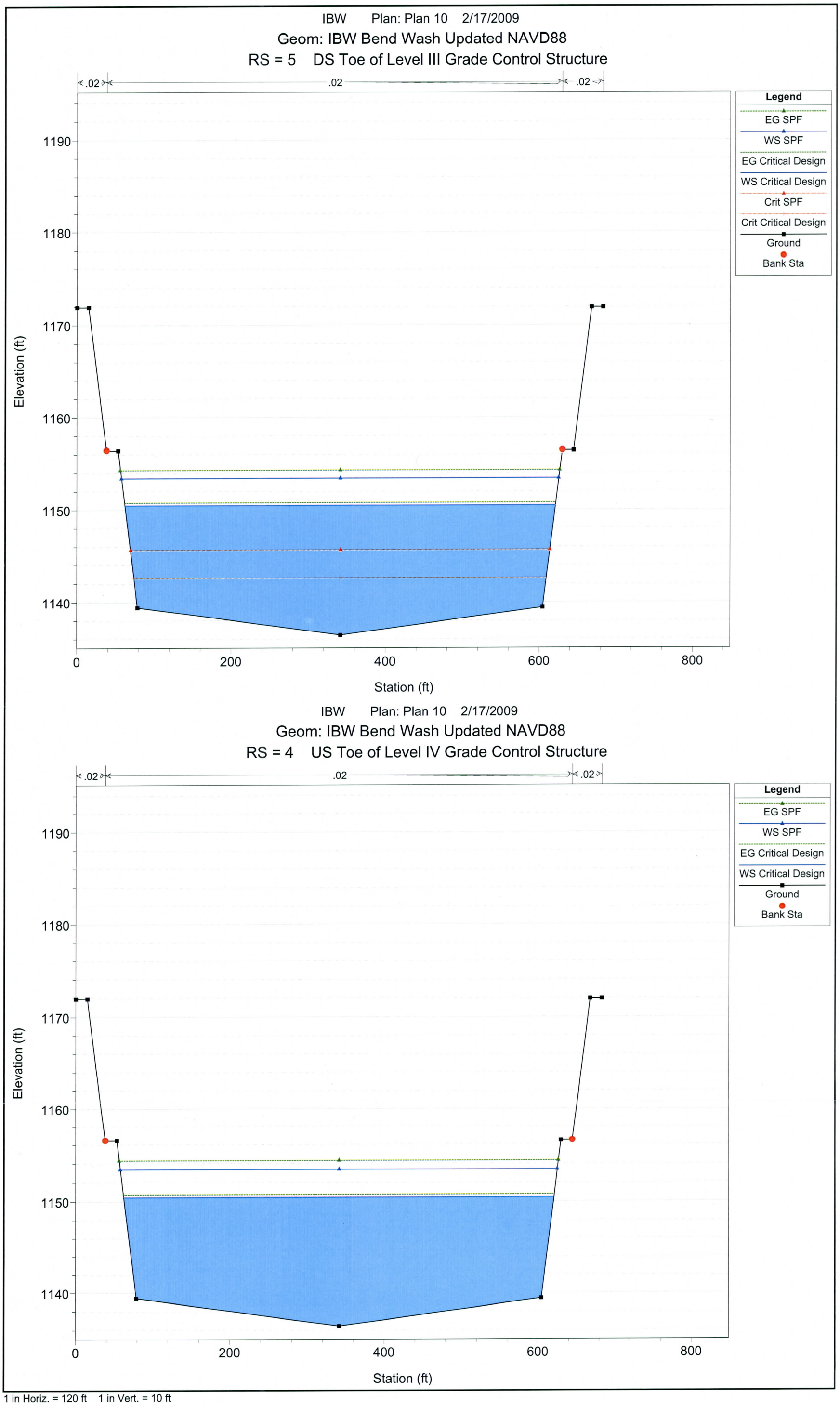

1 in Horiz. = 120 ft 1 in Vert. = 10 ft

Figure 7
Critical Design and Superflood Flows

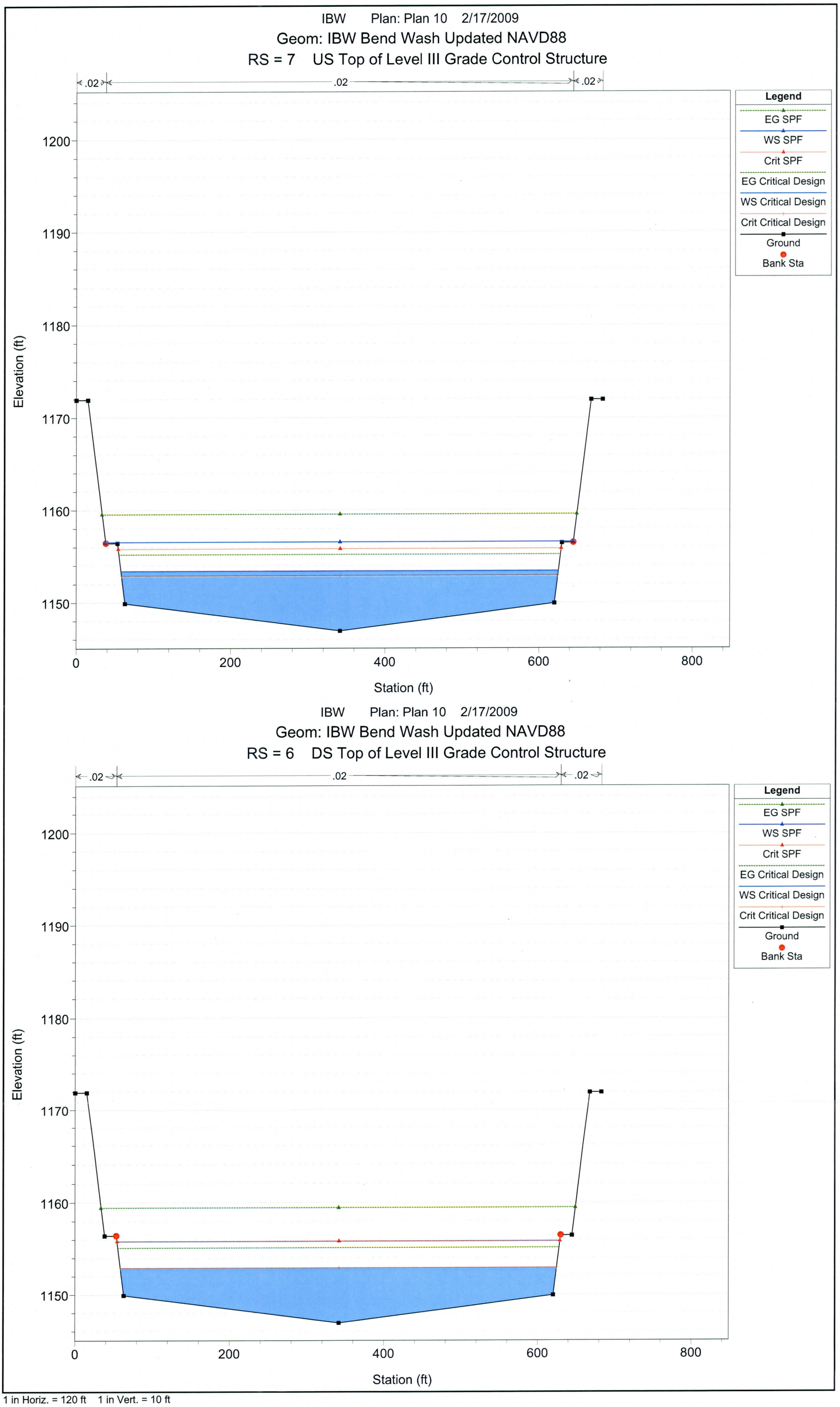

1 in Horiz. = 120 ft 1 in Vert. = 10 ft

Figure 7
Critical Design and Superflood Flows

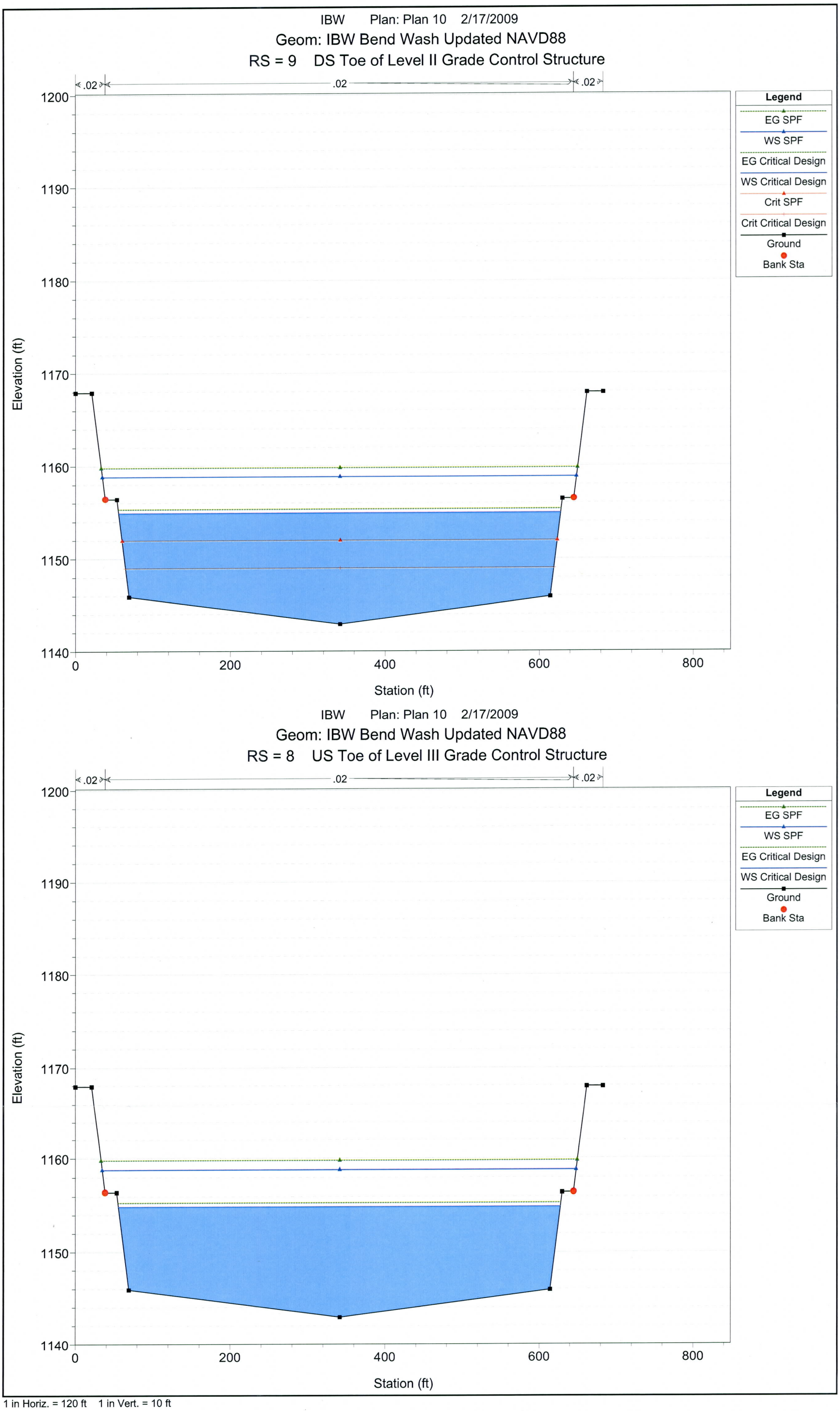

1 in Horiz. = 120 ft 1 in Vert. = 10 ft

Figure 7
Critical Design and Superflood Flows

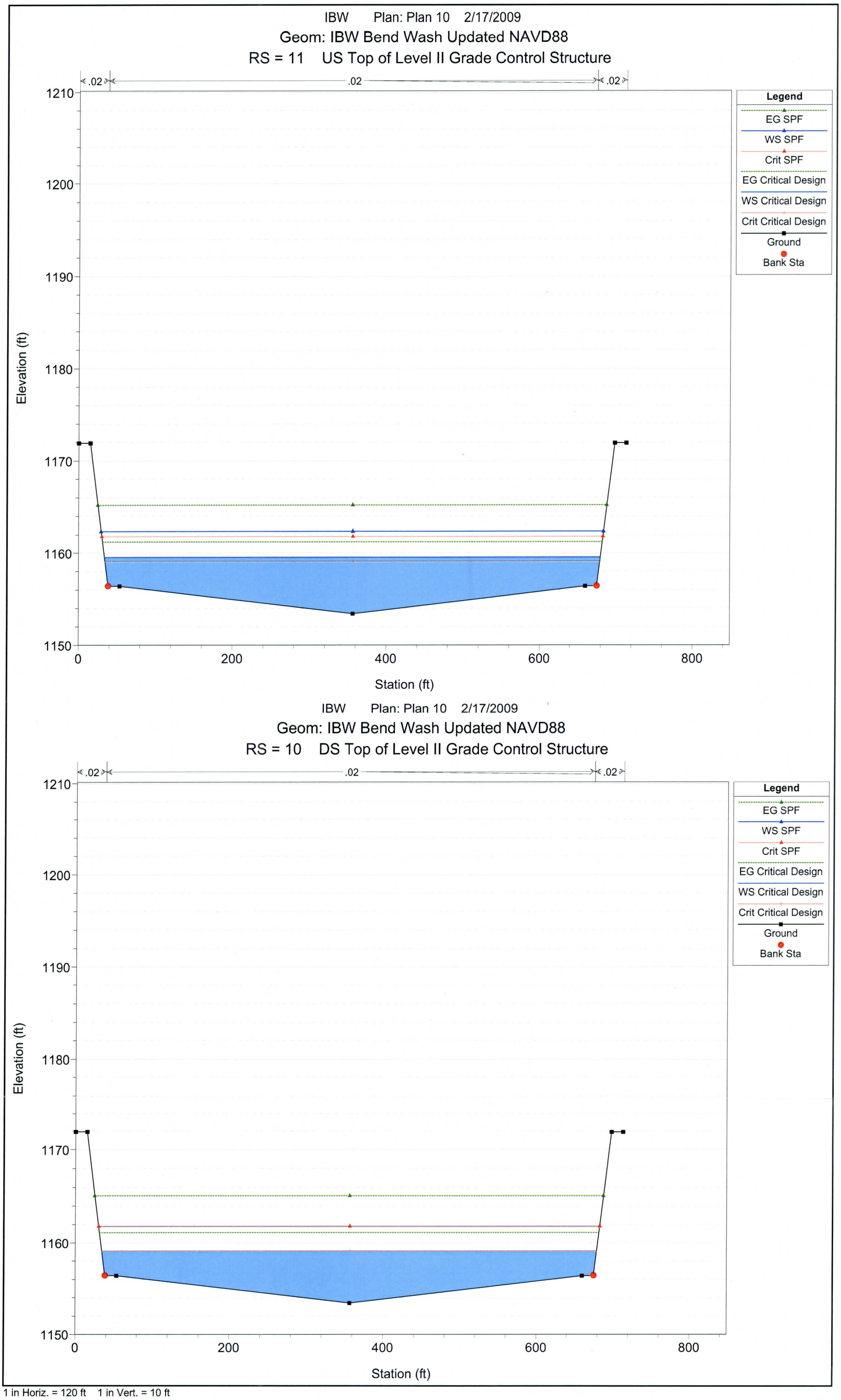

1 in Horiz. = 120 ft 1 in Vert. = 10 ft

Figure 7
Critical Design and Superflood Flows

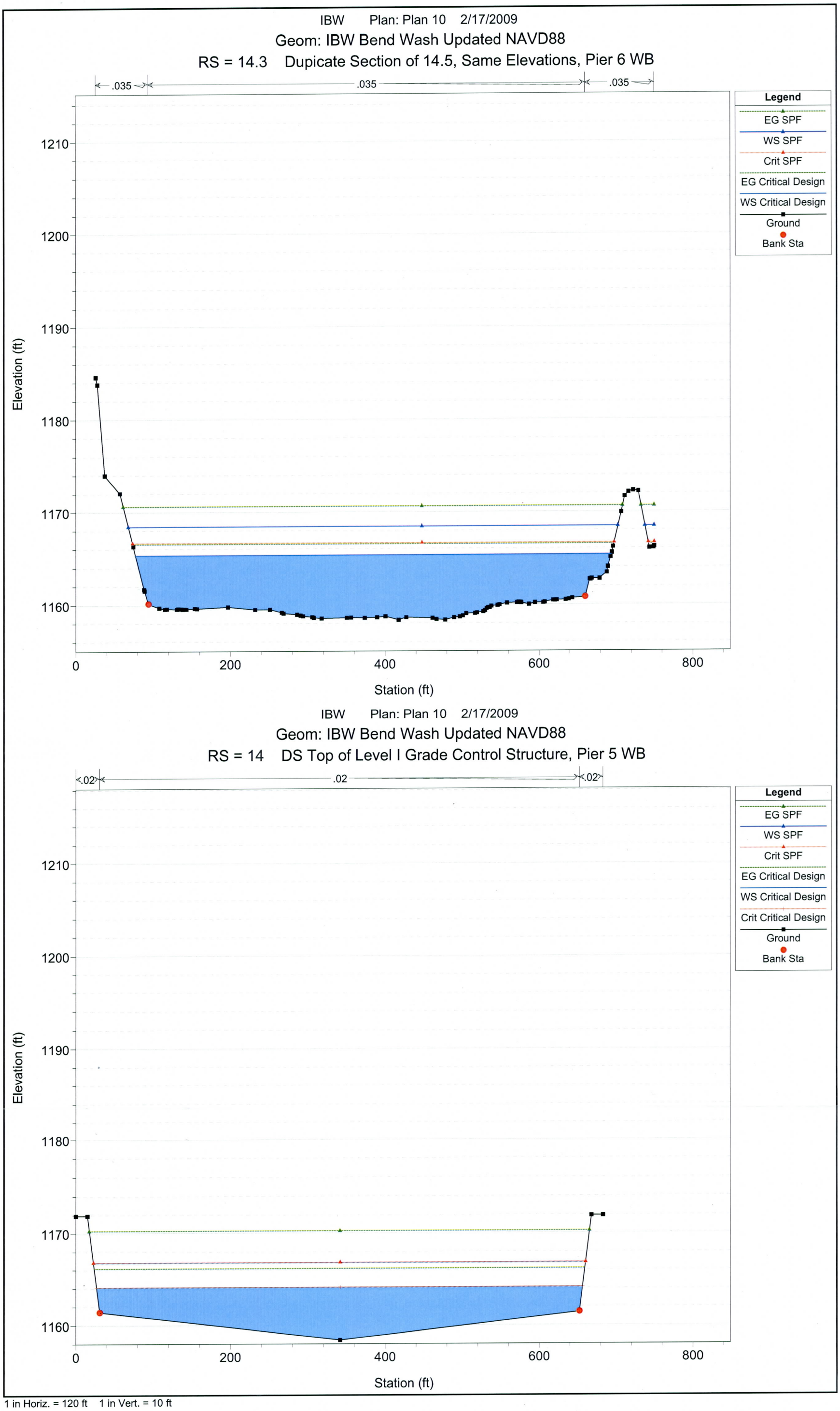

1 in Horiz. = 120 ft 1 in Vert. = 10 ft

Figure 7
Critical Design and Superflood Flows

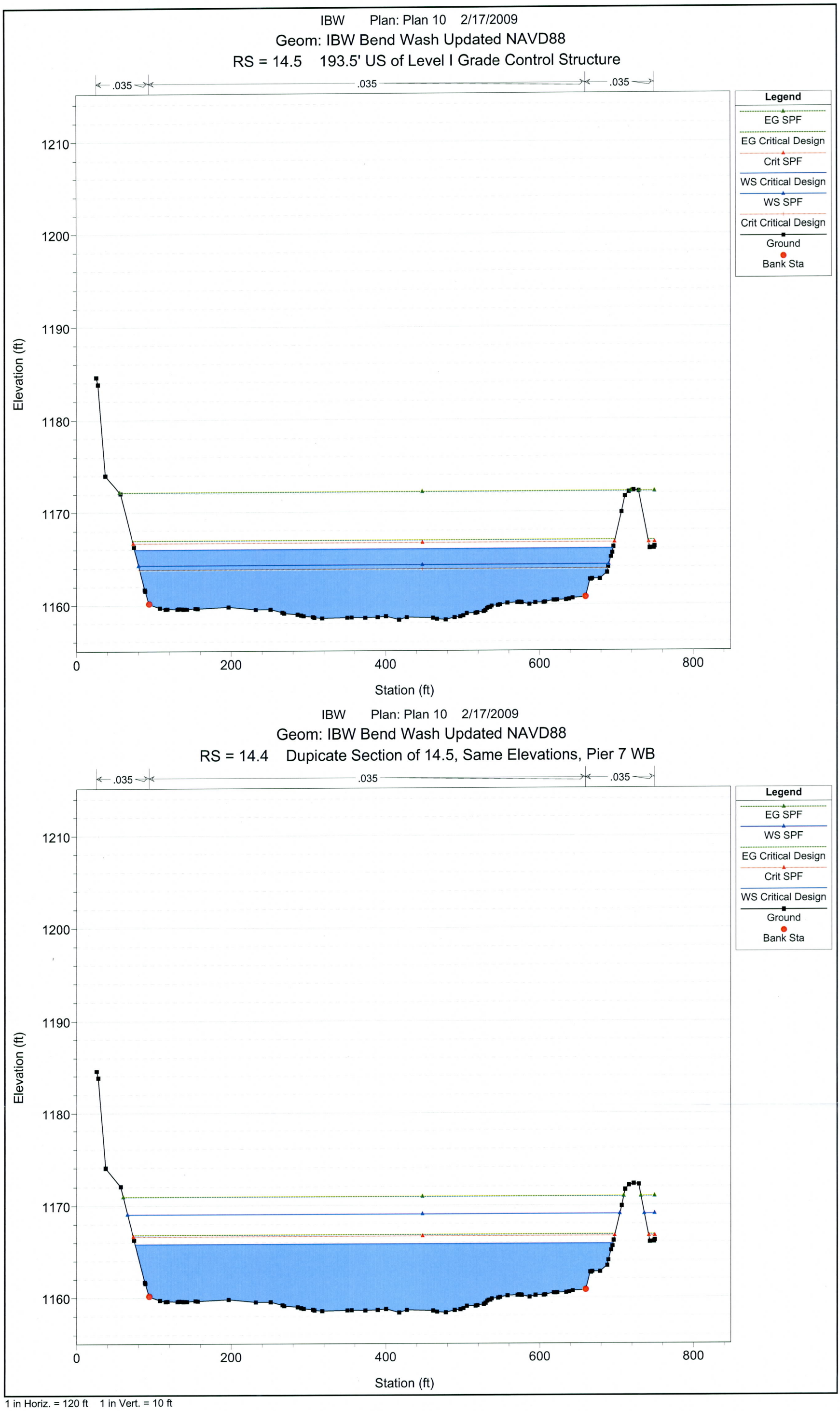

1 in Horiz. = 120 ft 1 in Vert. = 10 ft

Figure 7
Critical Design and Superflood Flows

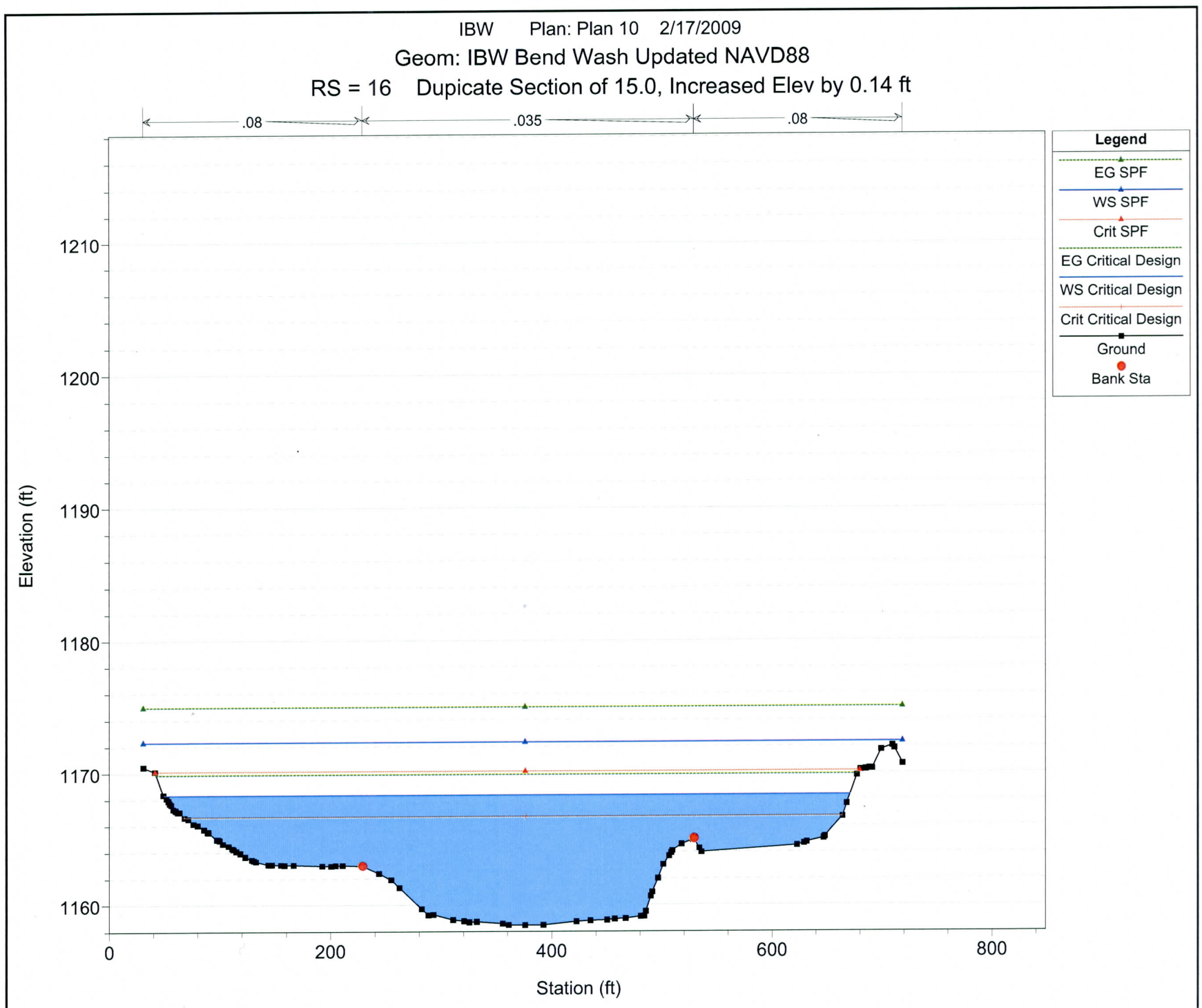

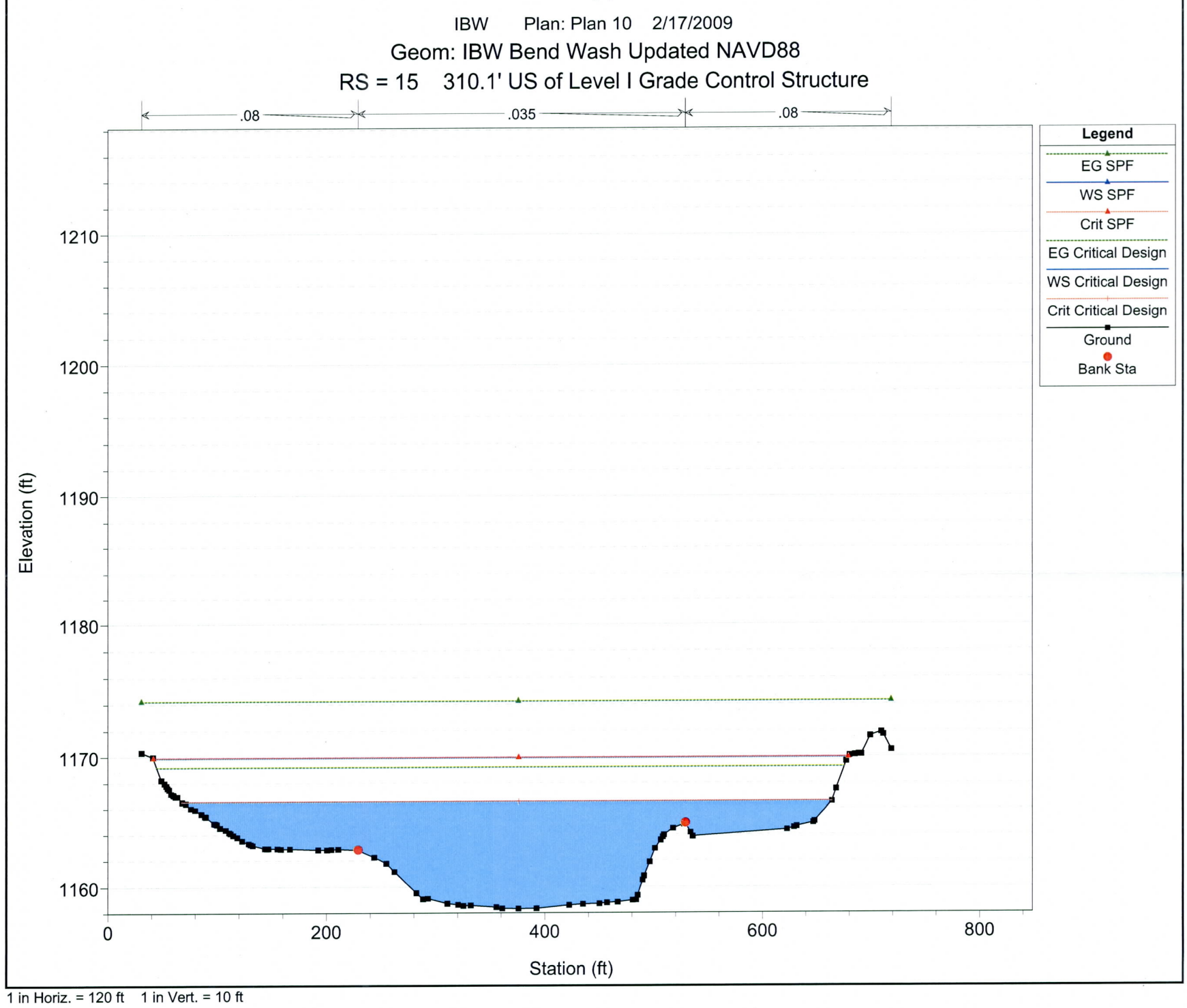

1 in Horiz. = 120 ft 1 in Vert. = 10 ft

9	AZ.	RAM 600-5-517	202L MA 8	TDH/7-24

CONSTRUCTION NOTES

* Channel Excavation Shall be No Deeper Than Shown for Channel Grading, and Shall be Uniform Over Excavation Area.

As-Built Plan Elevations are based on NGVD29 Datum and current SR 202L Design Build project elevations are based on NAVD88 Datum. Convert to NAVD88 elevations by adding 1.92' to NGVD29 elevations.

Figure 8 (1 of 3)
IBW Drop Stucture
As-Builts 11-02-95

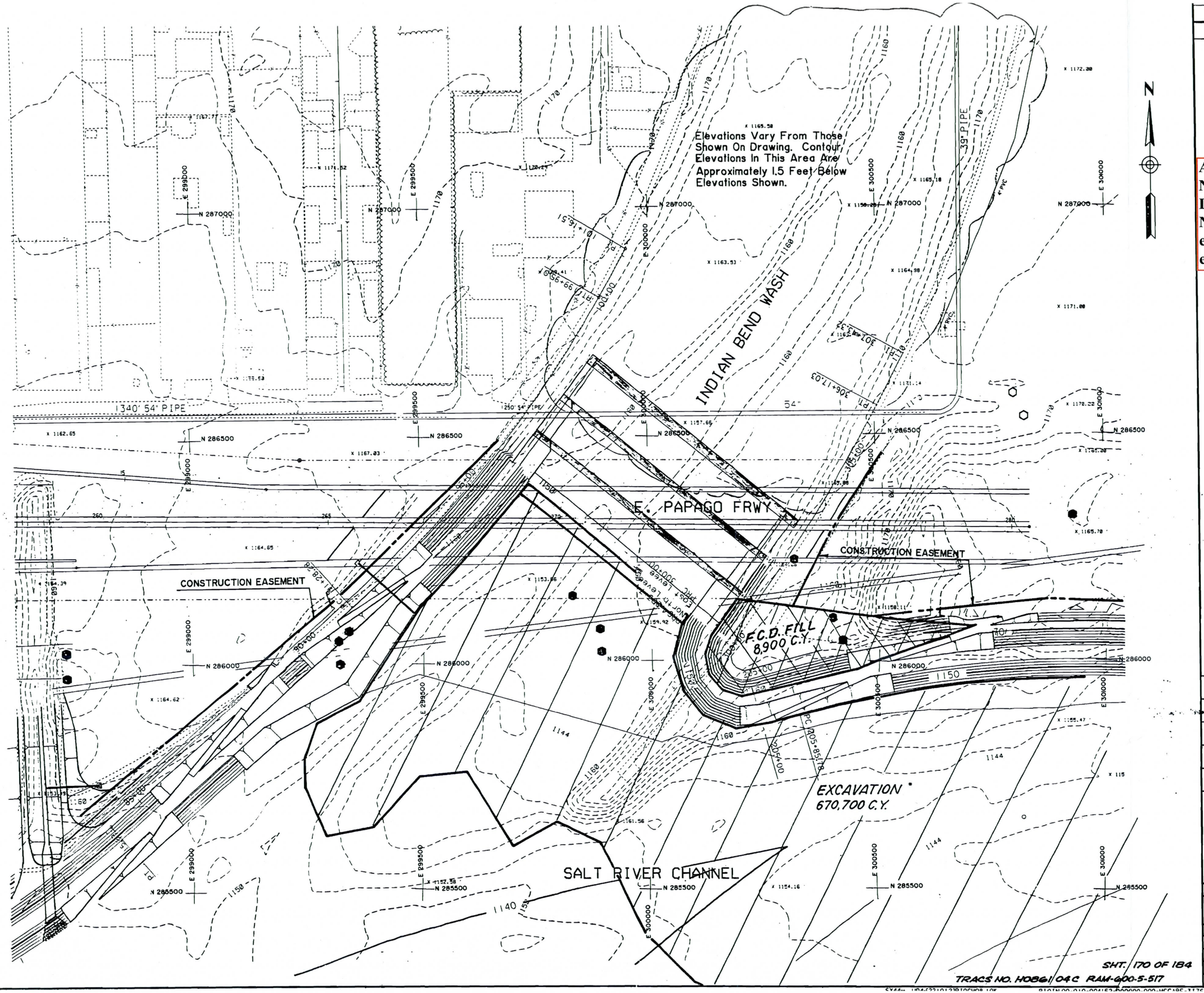

NO.	DATE	DESCRIPTION	APPRO
3			
2			
1	9-20-90	Revised Entire Sheet	GKC

REVISIONS

CRSS, INC.
PHOENIX, ARIZONA

RIO SALADO
CHANNEL DESIGN

DEPARTMENT OF PUBLIC WORKS
CITY OF TEMPE
DIVISION OF ENGINEERING
P.O. BOX 5002 TEMPE, ARIZONA

DESIGNED: JFM	CHANNEL EXCAVATION GRADING PLAN, F.C.D. FILL AREAS	DATE 7-30-90
DRAWN: PMP		PROJECT NO. 87619
APPROVED: GKC		
SCALE: 100		

AS BUILT	F.H.W.A. REGION	STATE	PROJECT NOS.		SHT. NO.
TDN/7-24-95	9	AZ.	RAM 600-5-517	202L MA 8	171 of 184

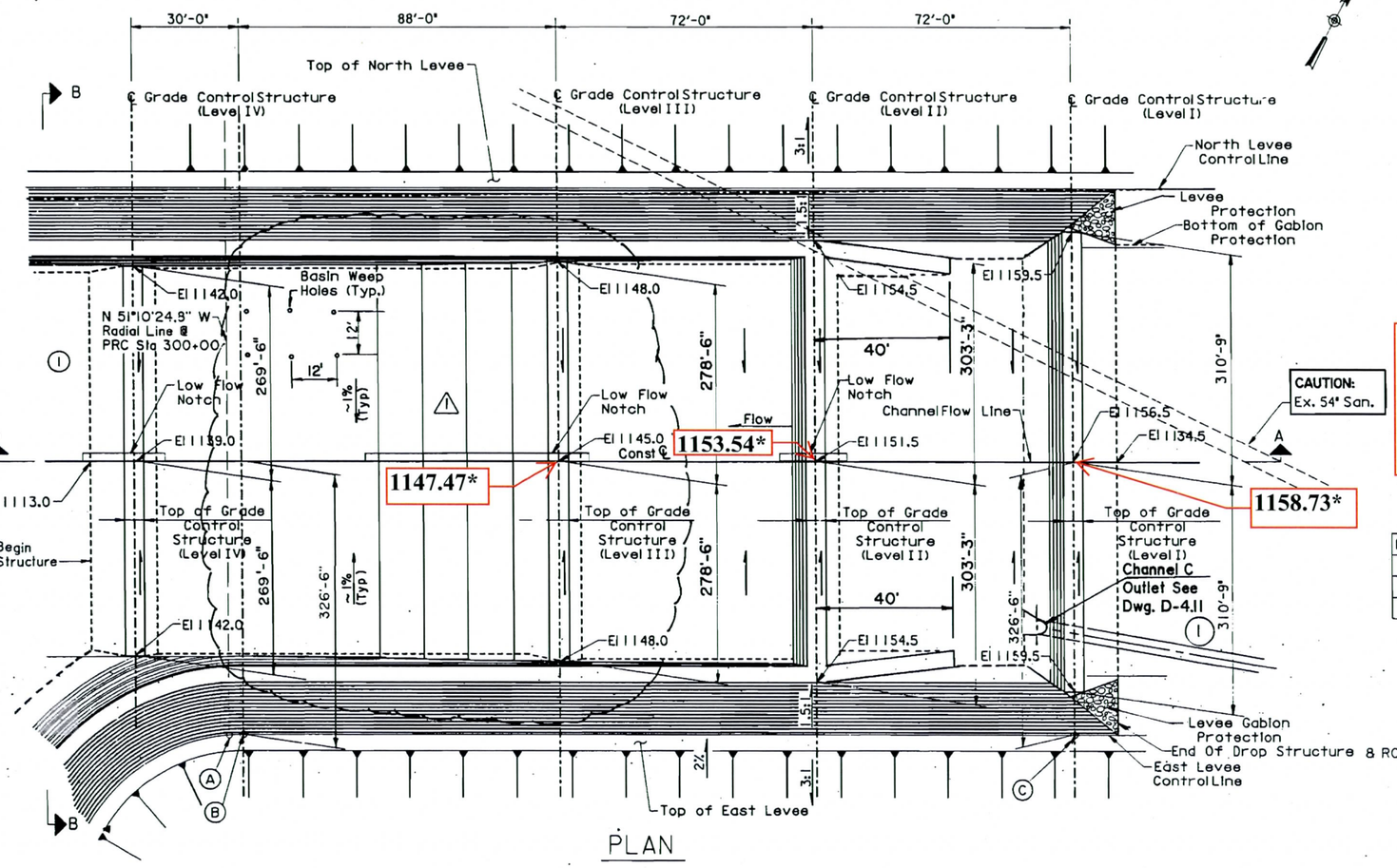

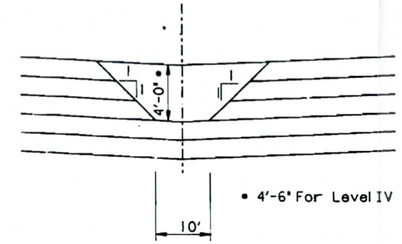

LOW FLOW NOTCH

As-Built Plan Elevations are based on NGVD29 Datum and current SR 202L Design Build project elevations are based on NAVD88 Datum. Convert to NAVD88 elevations by adding 1.92' to NGVD29 elevations.

STRUCTURE CONTROL

POINT	STA	NORTHING	EASTING	BEARING
A	300+00	286023.70	300173.23	N 38°38'47" E
B	300+04	286026.83	300175.73	N 36°40'33.5" E
C	302+36.05	286212.89	300314.30	

*** NAVD88, 2009 Survey**

Figure 8 (2 of 3)
IBW Drop Stucture
As-Builts 11-02-95

CONSTRUCTION NOTES

-For Additional Information Refer to DWG. NO. CH-7.2
-For Section A-A Refer to DWG. NO. CH-7.2

Roller Compacted Concrete:
Roller Compacted Concrete shall be placed in a Uniform manner that will Prevent voids or Segregation.

2" Dia. Weep Holes Will Be Provided at 12' Intervals Uniformly. Longitudinal and Traverse Throughout Each Stilling Basin. The Weep Hole Shall Fully Penetrate The Stilling Basin Slab To The Underlying Filter Layer. Weep Holes Shall Be Filled With Coarse Sand Or Fine Gravel Immediately Upon Construction To Prevent Clogging By Fine Material. See (2) for Gradation

(1) Gabion Mat Protection @ Piers
See Dwg. No. CH-2.9 & 2.10

(2) WEEP HOLE GRADATION

SIEVE SIZE	PERCENT BY WEIGHT PASSING SIEVE
1/2"	100%
No. 4	40%-50%
No. 8	5%-15%
No. 200	0%-5%

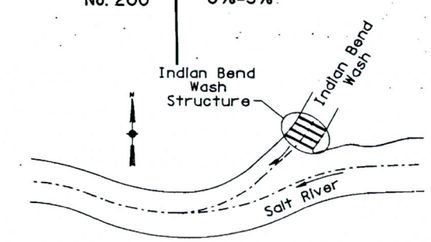

LOCATION PLAN

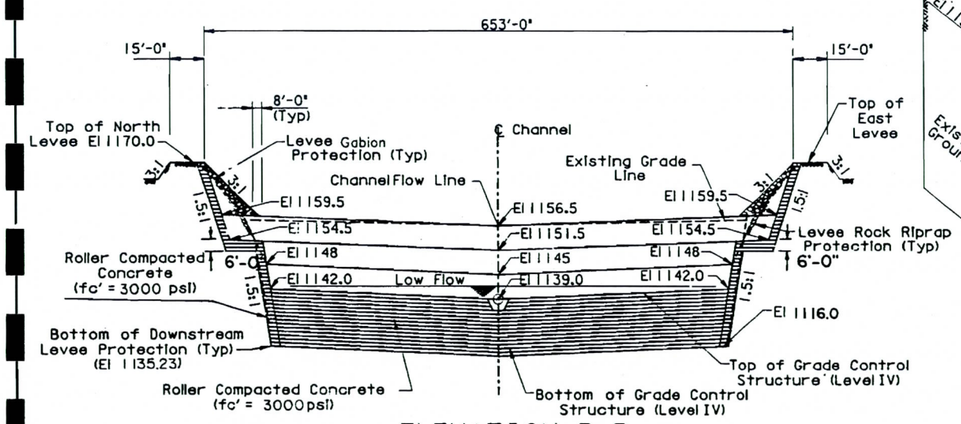

ELEVATION B-B

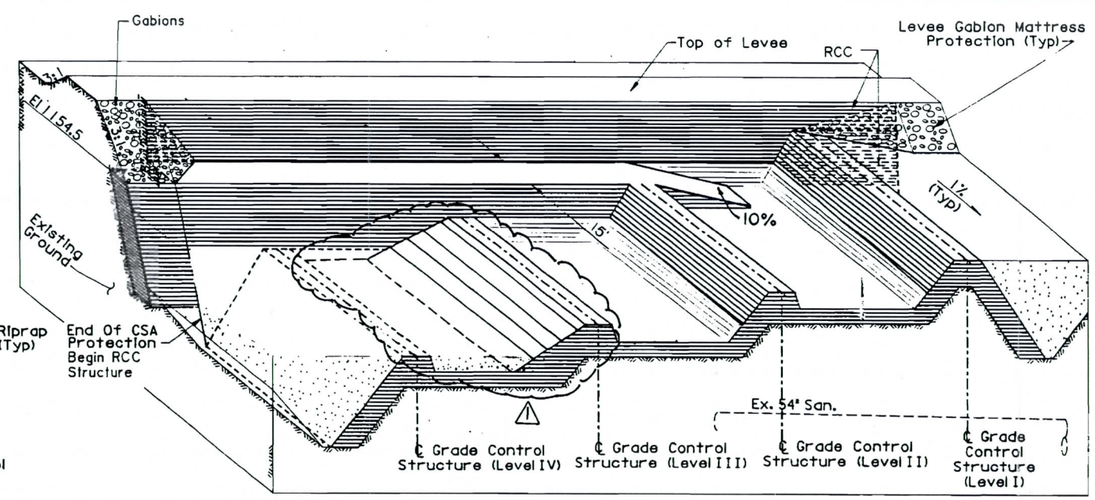

GRADE CONTROL STRUCTURE CONFIGURATION

N.T.S.

NO.	DATE	DESCRIPTION	APPROVAL
3			
2			
1	8-26-93	Modifications To Lower Stilling Basin	GKC

REVISIONS

CRSS, INC.
PHOENIX, ARIZONA

RIO SALADO CHANNEL DESIGN

DEPARTMENT OF PUBLIC WORKS
CITY OF TEMPE
DIVISION OF ENGINEERING
P.O. BOX 5002 TEMPE, ARIZONA

DESIGNED: J.V.
DRAWN: C.R.S.
APPROVED: GKC

IBW DROP STRUCTURE
PLAN AND ELEVATION

DATE 11/7/90
PROJECT NO. 876191

AS BUILT	F.H.W.A. REGION	STATE	PROJECT NOS.		SHT. NO.
JDN/7-24-95	9	AZ.	RAM 600-5-517	202L MA 8	172 of 184

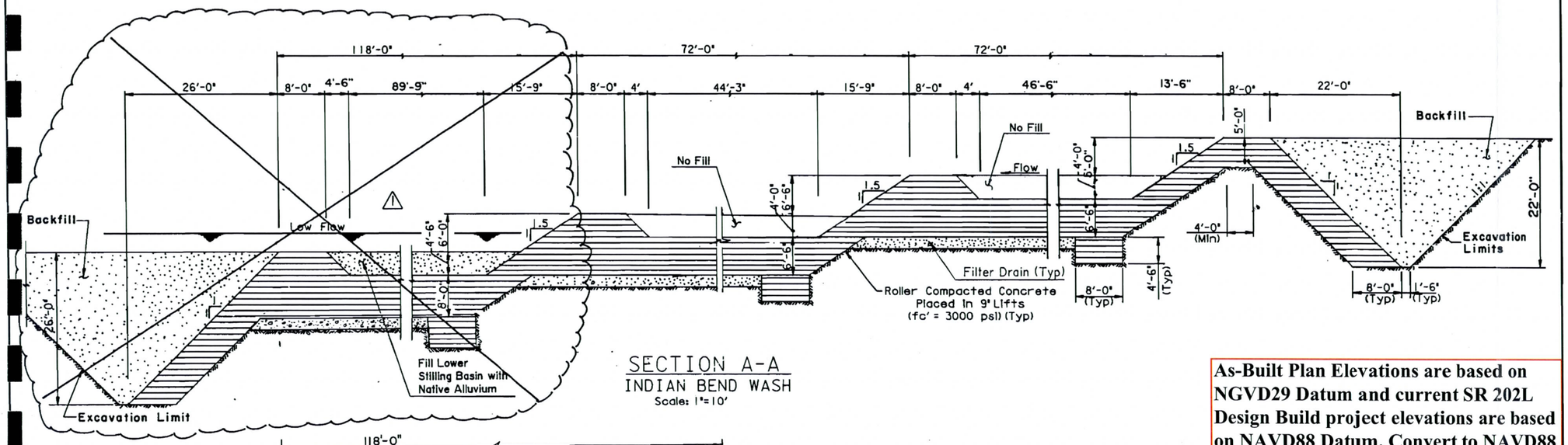

SECTION A-A
INDIAN BEND WASH
Scale: 1"=10'

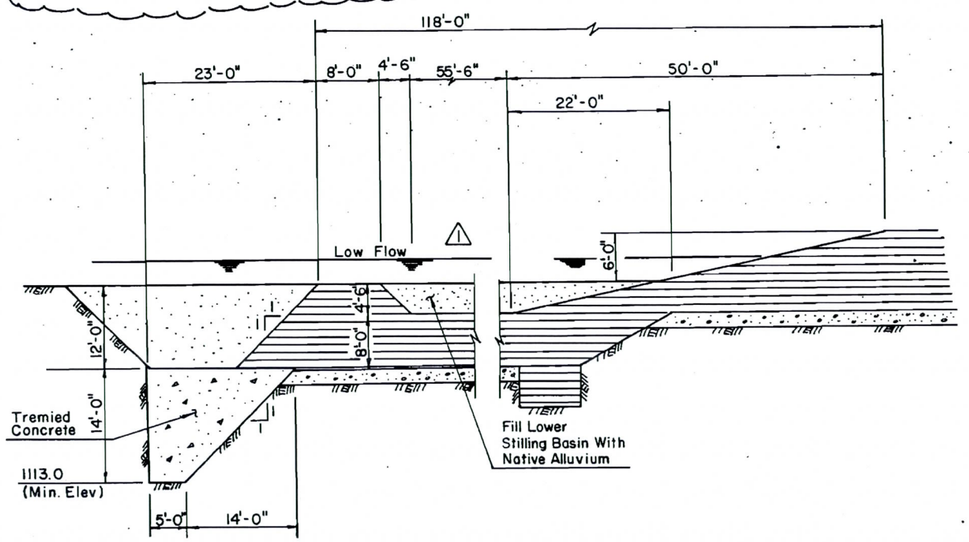

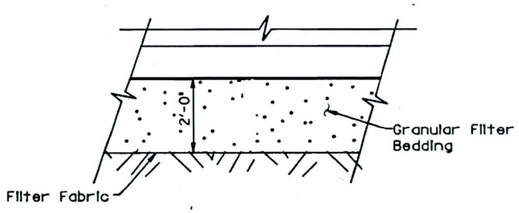

FILTER DRAIN DETAIL

As-Built Plan Elevations are based on NGVD29 Datum and current SR 202L Design Build project elevations are based on NAVD88 Datum. Convert to NAVD88 elevations by adding 1.92' to NGVD29 elevations.

APPROXIMATE QUANTITIES

IBW	
Roller Compacted Concrete	55,240 CY
Granular Filter Bedding	8,100 CY
Filter Fabric	12,100 SY
Backfill	32,900 CY
Excavation	106,700 CY
Native Alluvium	8,300 CY
Tremied Concrete	3,360 CY

CONSTRUCTION NOTES

-For Indian Bend Wash Structure Additional Details Refer to DWG. NO. CH-7.1

-All Work shall be done According to the Arizona Department of Transportation 'Standard Specifications For Road and Bridge Construction.' 1990 Edition Amended By Special Provisions.

Design:

In Accordance with ACI 318-83 and Arizona Department of Transportation Highway Division, Structures Section Drainage Manual, Edition August 1987.

Design Loads:

-Cement Stabilized Alluvium - 140 pcf
-Dry Alluvium - 110 pcf
-Hydraulic Uplift (Dynamic) - 21.2 psf
-Design Flow Velocity - 30fps

Materials:

~~-Cement Stabilized Alluvium fc' = 1000 psi (7 days)~~
-Roller Compacted Concrete - fc' = 3000 psi (28 days)
-CSA Levees - 750 psi (7 days)
-Granular Filter Bedding (1)
-Geosynthetic High Survivability (2)

Miscellaneous:

-All Dimensions Shown on the Plans are Measured Horizontally or Vertically Unless Otherwise Noted.

(1) GRADING

Sieve Size	Percent by Weight passing Sieve
3"	100%
2"	70-85%
1"	40-60%
0.5"	8-15%
#200	0-5%

(2) Overlap : 12" Min.

Figure 8 (3 of 3)
IBW Drop Stucture
As-Builts 11-02-95

NO.	DATE	DESCRIPTION	APPROVAL
3			
2			
1	8-26-93	Modifications To Lower Stilling Basin	GKC

REVISIONS

CRSS, INC.
PHOENIX, ARIZONA

RIO SALADO CHANNEL DESIGN

DEPARTMENT OF PUBLIC WORKS
CITY OF TEMPE
DIVISION OF ENGINEERING
P.O. BOX 5002 TEMPE, ARIZONA

DESIGNED: JV
DRAWN: CRS
APPROVED: GKC

IBW DROP STRUCTURE
CROSS SECTION & DETAILS

DATE 11/7/90
PROJECT NO. 876191

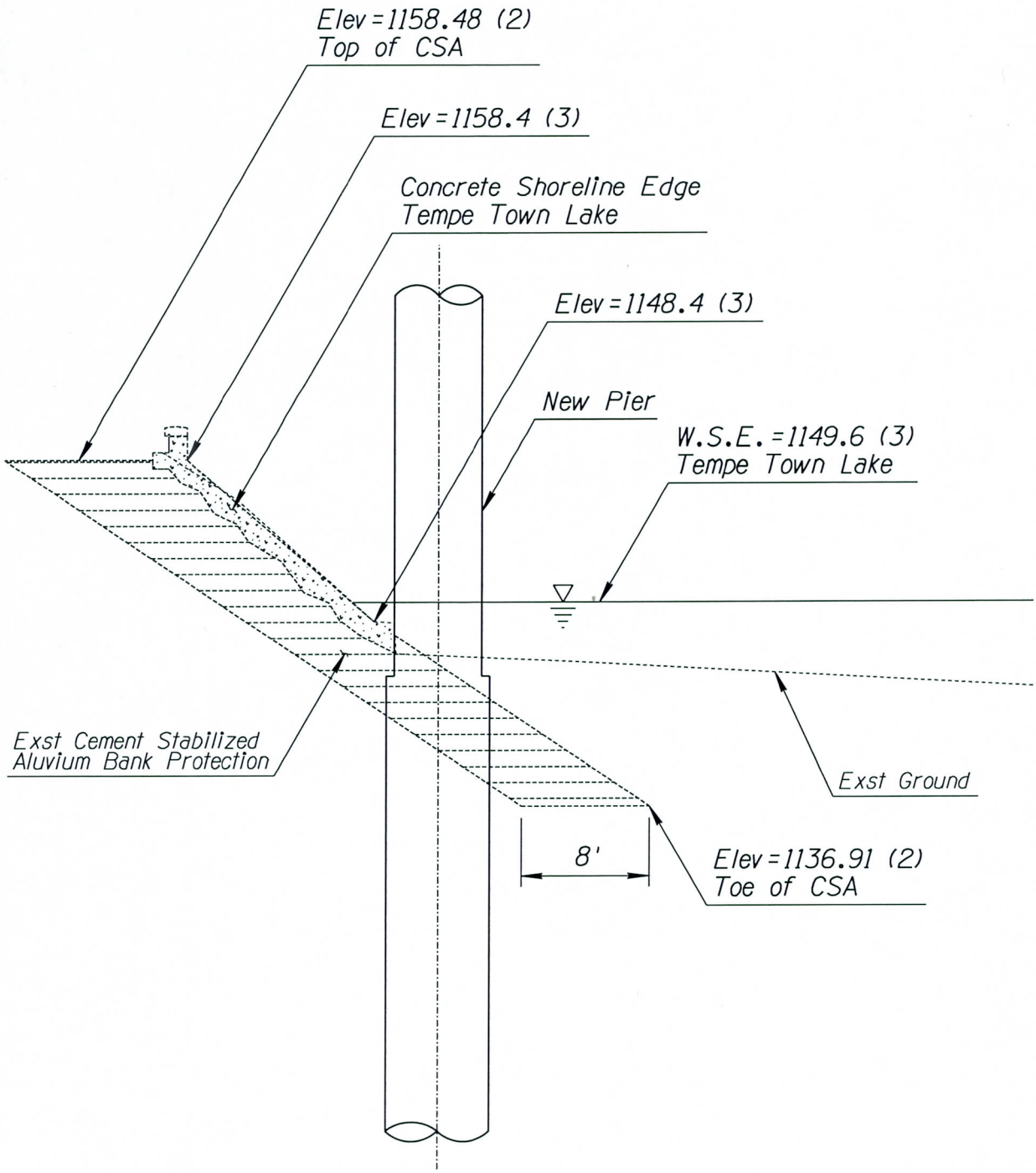

NOTES:

1. All Elevations Based NAVD88 Datum.
2. Elevations Obtained from As-Built Plans were corrected to NAVD88 Datum.
3. Elevations Field Surveyed 2009.

FIGURE 9

Pier 2, New Outside Column and Existing Bank Cross-Section

Table 1

Pier Scour Summary-Mixed Flow Hydraulics[1][4]

for

Indian Bend Wash Bridge

ADOT Methodology

13 February 2009

Pier Identification[6]	Scour Calculations for Information only[2]					Scour Calculations for Bridge Design[3]									
	FEMA 100-Yr Flow (20,000 cfs)					Critical Design Flow (30,000 cfs)					Superflood Flow (64,000 cfs)				
	Streambed Invert (1988 Datum)[1][4]	Scour Depth (1988 Datum)[5]	Scour Invert (1988 Datum)[5]	WSE (1988 Datum)[1]	Average Velocity	Streambed Invert (1988 Datum)[1][4]	Scour Depth (1988 Datum)[5]	Scour Invert (1988 Datum)[5]	WSE (1988 Datum)[1]	Average Velocity	Streambed Invert (1988 Datum)[1][4]	Scour Depth (1988 Datum)[5]	Scour Invert (1988 Datum)[5]	WSE (1988 Datum)[1]	Average Velocity
No.	(ft)	(ft)	(ft)	(ft)	(fps)	(ft)	(ft)	(ft)	(ft)	(fps)	(ft)	(ft)	(ft)	(ft)	(fps)
Upstream of Level I Grade Control Structure-Piers 6 and 7															
Pier 7WB US, RS14.4	1158.36	15.46	1142.90	1164.61	6.59	1158.36	17.24	1141.12	1165.83	7.97	1158.36	22.25	1136.11	1169.08	11.14
Pier 6WB US, RS14.3	1158.36	15.84	1142.52	1164.24	7.10	1158.36	17.97	1140.39	1165.37	8.60	1158.36	23.07	1135.29	1168.44	11.95
Selected for Design	1158.36	16.00	1142.36	1164.24	7.10	***1158.36***	***18.00***	***1140.36***	***1165.37***	***8.60***	***1158.36***	***23.00***	***1135.36***	***1168.44***	***11.95***
Downstream of Level IV Grade Control Structure-Piers 3 and 4															
Pier 4EB DS, RS0.9	1140.92	14.21	1126.71	1149.68	4.93	1140.92	17.10	1123.82	1149.79	7.28	1140.92	24.03	1116.89	1151.45	12.63
Pier 3EB DS, RS0.8	1140.92	13.99	1126.93	1149.64	4.85	1140.92	17.03	1123.89	1149.70	7.22	1140.92	24.25	1116.67	1151.10	12.88
Pier 3EB DS, RS0.7	1140.92	13.96	1126.96	1149.60	4.78	1140.92	16.95	1123.97	1149.60	7.16	1140.92	26.48	1114.44	1149.65	15.17
Pier 2EB DS, RS0.7	1140.92	13.96	1126.96	1149.60	4.78	1140.92	16.95	1123.97	1149.60	7.16	1140.92	26.48	1114.44	1149.65	15.17
Selected for Design	1140.92	14.00	1126.92	1149.60	4.78	***1140.92***	***18.00***	***1122.92***	***1149.60***	***7.16***	***1140.92***	***27.00***	***1113.92***	***1149.65***	***15.17***

NOTES:

1) The HEC-RAS model was developed from As-Built plans, but corrected to NAVD88 Datum by adding 1.92' to the NGVD29 Datum.
2) The scour calculations for the FEMA 100-Yr Flow of 20,000 cfs is for information only.
3) New outside columns for Piers 3 & 4 Eastbound and 6 & 7 Westbound will be structurally designed for 30,000 cfs (assumed to be 100-year flow) and 64,000 cfs (assumed to be 500-year flow). New outside column for Pier 2 Eastbound is located within the CSA bank protection (at least 100-Year protection) and it will be structurally designed for 64,000 cfs flow.
4) The HEC-RAS model x-sections compare very well with field surveys performed for the current project.
5) Scour invert obtained by subtracting computed total scour depth from lowest measured streambed invert. Local pier scour is determined with 2' of debris each side of the column.
6) US = Upstream and DS = Downstream

Table 1A

PIER SCOUR: FHWA (HEC 18) CSU Equation

ADOT CONTROLLING

Project:	SR 202 DB Crossing of IBW	**Computed by:**	Dave Schaub
Location:	**Pier 7WB US Scour Depth @ IBW Bridge**	**Date:**	13-Feb-09
Description:	**With Debris 2' each Side of Pier Column**	**Checked by:**	
		Date:	

HEC-RAS RS 14.4

ADOT Methodology

References:

1) FHWA, *Evaluating Scour At Bridges* (HEC-18), May 2001
2) ADOT, *Highway Drainage Design Manual-Hydraulics*, January 2006
3) Tucson, *Standards Manual for Drainage Design & Floodplain Management*, (Revised July 98)
4) SLA Inc., *Final Hydraulics & Scour Analysis Report-Salt River*, July 1007

Pier Input:

Pier Diameter:	5.50	ft
Debris:	2.00	ft on each side
Effective Pier Diameter (a):	9.50	ft

Hydraulic Input: (1988 Datum)

Storm Event (Years):	FEMA 100-yr	Design Flow	SF
Flow, Q (cfs):	20000	30000	64000
W.S.E., (ft):	1164.61	1165.83	1169.08
Depth of Flow, Y_1 (ft):	6.25	7.47	10.72
Average Velocity, V_1 (fps):	6.59	7.97	11.14
Froude Number, Fr_1:	0.51	0.55	0.63

Correction Factors:

Pier Type, K_1 (ADOT Policy):	***1.1***	***Cylindrical Columns***
Angle of Attack, K_2:	1.0	
Bed Condition, K_3:	1.1	
Armouring, K_4:	1.0	

Particle Size: (Ref. 4)

D_{52}:	90.5	mm	3.563	inches
D_{89}:	181.0	mm	7.126	inches

Scour Equation: $Y_s/Y_1 = 2*K_1*K_2*K_3*K_4*(a/Y_1)^{0.65}Fr_1^{0.43}$

Local Pier Scour

FEMA 100-yr Scour Depth (ft)	**Y_s (FEMA 100-yr) =**	14.86	
Design Flow Scour Depth (ft)	**Y_s (Design Flow) =**		16.34
SF Scour Depth (ft)	**Y_s (SPF) =**		19.66

Additional Scour Components

General Scour (ft): Zeller Equation 1981	0.00	0.02	0.89
Long Term Degradation (ft) DS G.C.S.	0	0	0
Bed Form Scour (ft): $y_{bf} = 0.0137V_m^2$ (Ref. 3)	0.59	0.87	1.70

Total Scour

Total FEMA 100-yr Scour Depth:	15.46		
Total Design Flow Scour Depth:		17.24	
Total SF Scour Depth:			22.25
Min. Channel Elevation (HEC-RAS)(1988 Datum):	1158.36	1158.36	1158.36
Scour Hole Bottom Elevation:	**1142.90**	**1141.12**	**1136.11**

Table 1B

PIER SCOUR: FHWA (HEC 18) CSU Equation

ADOT CONTROLLING

Project:	SR 202 DB Crossing of IBW	**Computed by:**	Dave Schaub
Location:	**Pier 6WB US Scour Depth @ IBW Bridge**	**Date:**	13-Feb-09
Description:	**With Debris 2' each Side of Pier Column**	**Checked by:**	
		Date:	

HEC-RAS RS 14.3

ADOT Methodology

References:

1) FHWA, *Evaluating Scour At Bridges* (HEC-18), May 2001
2) ADOT, *Highway Drainage Design Manual-Hydraulics*, January 2006
3) Tucson, *Standards Manual for Drainage Design & Floodplain Management*, (Revised July 98)
4) SLA Inc., *Final Hydraulics & Scour Analysis Report-Salt River*, July 1007

Pier Input:

Pier Diameter:	5.50	ft
Debris:	2.00	ft on each side
Effective Pier Diameter (a):	9.50	ft

(1988 Datum)

Hydraulic Input:

Storm Event (Years):	FEMA 100-yr	Design Flow	SF
Flow, Q (cfs):	20000	30000	64000
W.S.E., (ft):	1164.24	1165.37	1168.44
Depth of Flow, Y_1 (ft):	5.88	7.01	10.08
Average Velocity, V_1 (fps):	7.10	8.60	11.95
Froude Number, Fr_1:	0.56	0.62	0.70

Correction Factors:

Pier Type, K_1 (ADOT Policy):	***1.1***	***Cylindrical Columns***
Angle of Attack, K_2:	1.0	
Bed Condition, K_3:	1.1	
Armouring, K_4:	1.0	

Particle Size: (Ref. 4)

D_{52}:	90.5	mm	3.563	inches
D_{89}:	181.0	mm	7.126	inches

Scour Equation: $Y_s/Y_1 = 2*K_1*K_2*K_3*K_4*(a/Y_1)^{0.65}Fr_1^{0.43}$

Local Pier Scour

FEMA 100-yr Scour Depth (ft)	**Y_s (FEMA 100-yr) =**	15.15	
Design Flow Scour Depth (ft)	**Y_s (Design Flow) =**		16.83
SF Scour Depth (ft)	**Y_s (SPF) =**		20.13

Additional Scour Components

General Scour (ft): Zeller Equation 1981	0.00	0.13	0.98
Long Term Degradation (ft) DS G.C.S.	0	0	0
Bed Form Scour (ft): $y_{bf} = 0.0137V_m^2$ (Ref. 3)	0.69	1.01	1.96

Total Scour

Total FEMA 100-yr Scour Depth:	15.84		
Total Design Flow Scour Depth:		17.97	
Total SF Scour Depth:			23.07
Min. Channel Elevation (HEC-RAS)(1988 Datum):	1158.36	1158.36	1158.36
Scour Hole Bottom Elevation:	**1142.52**	**1140.39**	**1135.29**

Table 1C

PIER SCOUR: FHWA (HEC 18) CSU Equation

ADOT CONTROLLING

Project:	SR 202 DB Crossing of IBW	**Computed by:**	Dave Schaub
Location:	**Pier 4EB DS Scour Depth @ IBW Bridge**	**Date:**	13-Feb-09
Description:	**With Debris 2' each Side of Pier Column**	**Checked by:**	
		Date:	

HEC-RAS RS .9

ADOT Methodology

References:

1) FHWA, *Evaluating Scour At Bridges* (HEC-18), May 2001
2) ADOT, *Highway Drainage Design Manual-Hydraulics*, January 2006
3) Tucson, *Standards Manual for Drainage Design & Floodplain Management*, (Revised July 98)
4) SLA Inc., *Final Hydraulics & Scour Analysis Report-Salt River*, July 1007

Pier Input:

Pier Diameter:	5.50	ft
Debris:	2.00	ft on each side
Effective Pier Diameter (a):	9.50	ft

Hydraulic Input: (1988 Datum)

Storm Event (Years):	FEMA 100-yr	Design Flow	SF
Flow, Q (cfs):	20000	30000	64000
W.S.E., (ft):	1149.68	1149.79	1151.45
Depth of Flow, Y_1 (ft):	8.76	8.87	10.53
Average Velocity, V_1 (fps):	4.93	7.28	12.63
Froude Number, Fr_1:	0.33	0.48	0.75

Correction Factors:

Pier Type, K_1 (ADOT Policy):	***1.1***	***Cylindrical Columns***
Angle of Attack, K_2:	1.0	
Bed Condition, K_3:	1.1	
Armouring, K_4:	1.0	

Particle Size: (Ref. 4)

D_{52}:	90.5	mm	3.563	inches
D_{89}:	181.0	mm	7.126	inches

Scour Equation: $Y_s/Y_1 = 2*K_1*K_2*K_3*K_4*(a/Y_1)^{0.65}Fr_1^{0.43}$

Local Pier Scour

FEMA 100-yr Scour Depth (ft)	**Y_s (FEMA 100-yr) =**	13.87		
Design Flow Scour Depth (ft)	**Y_s (Design Flow) =**		16.37	
SF Scour Depth (ft)	**Y_s (SPF) =**			21.06

Additional Scour Components

General Scour (ft): Zeller Equation 1981	0.00	0.00	0.79
Long Term Degradation (ft) DS G.C.S.	0	0	0
Bed Form Scour (ft): $y_{bf} = 0.0137V_m^2$ (Ref. 3)	0.33	0.73	2.19

Total Scour

Total Post 100-yr Scour Depth:	14.21		
Total Pre 100-yr Scour Depth:		17.10	
Total SF Scour Depth:			24.03
Min. Channel Elevation (HEC-RAS)(1988 Datum):	1140.92	1140.92	1140.92
Scour Hole Bottom Elevation:	**1126.71**	**1123.82**	**1116.89**

Table 1D (1 of 2)

PIER SCOUR: FHWA (HEC 18) CSU Equation

ADOT CONTROLLING

Project:	SR 202 DB Crossing of IBW	**Computed by:**	Dave Schaub
Location:	**Pier 3EB DS Scour Depth @ IBW Bridge**	**Date:**	13-Feb-09
Description:	**With Debris 2' each Side of Pier Column**	**Checked by:**	
		Date:	

HEC-RAS RS .8

ADOT Methodology

References:

1) FHWA, *Evaluating Scour At Bridges* (HEC-18), May 2001
2) ADOT, *Highway Drainage Design Manual-Hydraulics*, January 2006
3) Tucson, *Standards Manual for Drainage Design & Floodplain Management*, (Revised July 98)
4) SLA Inc., *Final Hydraulics & Scour Analysis Report-Salt River*, July 1007

Pier Input:

Pier Diameter:	5.50	ft
Debris:	2.00	ft on each side
Effective Pier Diameter (a):	9.50	ft

(1988 Datum)

Hydraulic Input:

Storm Event (Years):	FEMA 100-yr	Design Flow	SF
Flow, Q (cfs):	20000	30000	64000
W.S.E., (ft):	1149.64	1149.70	1151.10
Depth of Flow, Y_1 (ft):	8.72	8.78	10.18
Average Velocity, V_1 (fps):	4.85	7.22	12.88
Froude Number, Fr_1:	0.32	0.48	0.78

Correction Factors:

Pier Type, K_1 (ADOT Policy):	***1.1***	***Cylindrical Columns***
Angle of Attack, K_2:	1.0	
Bed Condition, K_3:	1.1	
Armouring, K_4:	1.0	

Particle Size: (Ref. 4)

D_{52}:	90.5	mm	3.563	inches
D_{89}:	181.0	mm	7.126	inches

Scour Equation: $Y_s/Y_1 = 2*K_1*K_2*K_3*K_4*(a/Y_1)^{0.65}Fr_1^{0.43}$

Local Pier Scour

FEMA 100-yr Scour Depth (ft)	**Y_s (FEMA 100-yr) =**	13.67	
Design Flow Scour Depth (ft)	**Y_s (Design Flow) =**		16.31
SF Scour Depth (ft)	**Y_s (SPF) =**		21.17

Additional Scour Components

General Scour (ft): Zeller Equation 1981	0.00	0.00	0.81
Long Term Degradation (ft) DS G.C.S.	0	0	0
Bed Form Scour (ft): $y_{bf} = 0.0137V_m^2$ (Ref. 3)	0.32	0.71	2.27

Total Scour

Total Post 100-yr Scour Depth:	13.99		
Total Pre 100-yr Scour Depth:		17.03	
Total SF Scour Depth:			24.25
Min. Channel Elevation (HEC-RAS)(1989 Datum):	1140.92	1140.92	1140.92
Scour Hole Bottom Elevation:	**1126.93**	**1123.89**	**1116.67**

Table 1D (2 of 2)

PIER SCOUR: FHWA (HEC 18) CSU Equation

ADOT CONTROLLING

Project:	SR 202 DB Crossing of IBW	**Computed by:**	Dave Schaub
Location:	**Pier 3EB DS Scour Depth @ IBW Bridge**	**Date:**	13-Feb-09
Description:	**With Debris 2' each Side of Pier Column**	**Checked by:**	
		Date:	

HEC-RAS RS .7

ADOT Methodology

References:

1) FHWA, *Evaluating Scour At Bridges* (HEC-18), May 2001
2) ADOT, *Highway Drainage Design Manual-Hydraulics*, January 2006
3) Tucson, *Standards Manual for Drainage Design & Floodplain Management*, (Revised July 98)
4) SLA Inc., *Final Hydraulics & Scour Analysis Report-Salt River*, July 1007

Pier Input:

Pier Diameter:	5.50	ft
Debris:	2.00	ft on each side
Effective Pier Diameter (a):	9.50	ft

Hydraulic Input: (1988 Datum)

Storm Event (Years):	FEMA 100-yr	Design Flow	SF
Flow, Q (cfs):	20000	30000	64000
W.S.E., (ft):	1149.60	1149.60	1149.65
Depth of Flow, Y_1 (ft):	8.68	8.68	8.73
Average Velocity, V_1 (fps):	4.78	7.16	15.17
Froude Number, Fr_1:	0.32	0.48	1.00

Correction Factors:

Pier Type, K_1 (ADOT Policy):	***1.1***	***Cylindrical Columns***
Angle of Attack, K_2:	1.0	
Bed Condition, K_3:	1.1	
Armouring, K_4:	1.0	

Particle Size: (Ref. 4)

D_{52}:	90.5	mm	3.563	inches
D_{89}:	181.0	mm	7.126	inches

Scour Equation: $Y_s/Y_1 = 2*K_1*K_2*K_3*K_4*(a/Y_1)^{0.65}Fr_1^{0.43}$

Local Pier Scour

FEMA 100-yr Scour Depth (ft)	**Y_s (FEMA 100-yr) =**	13.65	
Design Flow Scour Depth (ft)	**Y_s (Design Flow) =**		16.25
SF Scour Depth (ft)	**Y_s (SPF) =**		22.32

Additional Scour Components

General Scour (ft): Zeller Equation 1981	0.00	0.00	1.01
Long Term Degradation (ft) DS G.C.S.	0	0	0
Bed Form Scour (ft): $y_{bf} = 0.0137V_m^2$ (Ref. 3)	0.31	0.70	3.15

Total Scour

Total Post 100-yr Scour Depth:	13.96		
Total Pre 100-yr Scour Depth:		16.95	
Total SF Scour Depth:			26.48
Min. Channel Elevation (HEC-RAS)(1988 Datum):	1140.92	1140.92	1140.92
Scour Hole Bottom Elevation:	**1126.96**	**1123.97**	**1114.44**

Table 2
Pier Scour Summary-Mixed Flow Hydraulics[1][4]
for
Indian Bend Wash Bridge
FCDMC Methodology
13 February 2009

Pier Identification[6]	Scour Calculations for Information only[2]					Scour Calculations for Pier "Zone-of-Influence" on the Bank Protection and Grade Control Structure[3]									
	FEMA 100-Yr Flow (20,000 cfs)					Critical Design Flow (30,000 cfs)					Superflood Flow (64,000 cfs)				
	Streambed Invert (1988 Datum)[1][4]	Scour Depth (1988 Datum)[5]	Scour Invert (1988 Datum)[5]	WSE (1988 Datum)[1]	Average Velocity	Streambed Invert (1988 Datum)[1][4]	Scour Depth (1988 Datum)[5]	Scour Invert (1988 Datum)[5]	WSE (1988 Datum)[1]	Average Velocity	Streambed Invert (1988 Datum)[1][4]	Scour Depth (1988 Datum)[5]	Scour Invert (1988 Datum)[5]	WSE (1988 Datum)[1]	Average Velocity
No.	(ft)	(ft)	(ft)	(ft)	(fps)	(ft)	(ft)	(ft)	(ft)	(fps)	(ft)	(ft)	(ft)	(ft)	(fps)
Upstream of Level I Grade Control Structure-Piers 6 and 7															
Pier 7WB US, RS14.4	1158.36	18.79	1139.57	1164.61	6.59	1158.36	21.44	1136.92	1165.83	7.97	1158.36	27.93	1130.43	1169.08	11.14
Pier 6WB US, RS14.3	1158.36	19.19	1139.17	1164.24	7.10	1158.36	22.11	1136.25	1165.37	8.60	1158.36	28.73	1129.63	1168.44	11.95
Selected for Bank Protection Evaluation	1158.36	19.00	1139.36	1164.61	6.59	***1158.36***	***22.00***	***1136.36***	***1165.37***	***8.60***	***1158.36***	***29.00***	***1129.36***	***1168.44***	***11.95***
Downstream of Level IV Grade Control Structure-Piers 3 and 4															
Pier 4EB DS, RS0.9	1140.92	17.53	1123.39	1149.68	4.93	1140.92	21.40	1119.52	1149.79	7.28	1140.92	30.31	1110.61	1151.45	12.63
Pier 3EB DS, RS0.8	1140.92	17.31	1123.61	1149.64	4.85	1140.92	21.33	1119.59	1149.70	7.22	1140.92	30.53	1110.39	1151.10	12.88
Pier 3EB DS, RS0.7	1140.92	17.28	1123.64	1149.60	4.78	1140.92	21.25	1119.67	1149.60	7.16	1140.92	32.83	1108.09	1149.65	15.17
Selected for Bank Protection Evaluation	1140.92	18.00	1122.92	1149.68	4.93	***1140.92***	***22.00***	***1118.92***	***1149.79***	***7.28***	***1140.92***	***33.00***	***1107.92***	***1149.65***	***15.17***

NOTES:

1) The HEC-RAS model was developed from As-Built plans, but corrected to NAVD88 Datum by adding 1.92' to the NGVD29 Datum.

2) The scour calculations for the FEMA 100-Yr Flow of 20,000 cfs is for information only.

3) New outside columns for Piers 3 & 4 Eastbound and 6 & 7 Westbound will be evaluated for "Zone-of-Influence" for existing bank protection and drop structure for 30,000 cfs (assumed to be 100-year flow) and 64,000 cfs (assumed to be 500-year flow). New outside column for Pier 2 Eastbound is located within the CSA bank protection (at least 100-Year protection) and it will not need evaluation for the "Zone-of-Influence" for existing bank protection. It is not within the "Zone-of-Influence" for the drop structure.

4) The HEC-RAS model x-sections compare very well with field surveys performed for the current project.

5) Scour invert obtained by subtracting computed scour depth from lowest measured streambed invert. Local pier scour is determined with 2' of debris each side of the column.

6) US = Upstream and DS = Downstream

Table 2A

PIER SCOUR: FHWA (HEC 18) CSU Equation

FCDMC CONTROLLING

Project:	SR 202 Crossing of the IBW	**Computed by:**	Dave Schaub
Location:	**Pier 7WB US Scour Depth @ IBW Bridge**	**Date:**	13-Feb-09
Description:	**With Debris 2' each Side of Pier Column**	**Checked by:**	
		Date:	

HEC-RAS RS 14.4

FCDMC Methodology

References:

1) FHWA, *Evaluating Scour At Bridges* (HEC-18), May 2001
2) ADOT, *Highway Drainage Design Manual-Hydraulics*, January 2006
3) Tucson, *Standards Manual for Drainage Design & Floodplain Management*, (Revised July 98)
4) SLA Inc., *Final Hydraulics & Scour Analysis Report-Salt River*, July 1007

Pier Input:

Pier Diameter:	5.50	ft
Debris:	2.00	ft on each side
Effective Pier Diameter (a):	9.50	ft

(1988 Datum)

Hydraulic Input:

Storm Event (Years):	FEMA 100-yr	Design Flow	SF
Flow, Q (cfs):	20000	30000	64000
W.S.E., (ft):	1164.61	1165.83	1169.08
Depth of Flow, Y_1 (ft):	6.25	7.47	10.72
Average Velocity, V_1 (fps):	6.59	7.97	11.14
Froude Number, Fr_1:	0.51	0.55	0.63

Correction Factors:

Pier Type, K_1 (ADOT Policy):	***1.1***	***Cylindrical Columns***
Angle of Attack, K_2:	1.0	
Bed Condition, K_3:	1.1	
Armouring, K_4:	1.0	

Particle Size: (Ref. 4)

D_{52}:	90.5	mm	3.563	inches
D_{89}:	181.0	mm	7.126	inches

Scour Equation: $Y_s/Y_1 = 2*K_1*K_2*K_3*K_4*(a/Y_1)^{0.65}Fr_1^{0.43}$

Local Pier Scour

FEMA 100-yr Scour Depth (ft)	**Y_s (FEMA 100-yr) =**	14.86		
Design Flow Scour Depth (ft)	**Y_s (Design Flow) =**		16.34	
SF Scour Depth (ft)	**Y_s (SPF) =**			19.66
Safety Factor provided by 2' Debris around Column				

Additional Scour Components

General Scour (ft): Ave. of Lacey & Blench Equations	2.42	3.05	4.66
Long Term Degradation (ft) DS G.C.S.	0	0	0
Bed Form Scour (ft): $y_{bf} = 0.0137V_m^2$ (Ref. 3)	0.59	0.87	1.70
30% Safety for Additional Scour Components	0.90	1.18	1.91

Total Scour

Total FEMA 100-yr Scour Depth:	18.79		
Total Design Flow Scour Depth:		21.44	
Total SF Scour Depth:			27.93
Min. Channel Elevation (HEC-RAS)(1988 Datum):	1158.36	1158.36	1158.36
Scour Hole Bottom Elevation:	**1139.57**	**1136.92**	**1130.43**

Table 2B

PIER SCOUR: FHWA (HEC 18) CSU Equation

FCDMC CONTROLLING

Project:	SR 202 Crossing of the IBW	**Computed by:**	Dave Schaub
Location:	**Pier 6WB US Scour Depth @ IBW Bridge**	**Date:**	13-Feb-09
Description:	**With Debris 2' each Side of Pier Column**	**Checked by:**	
		Date:	

HEC-RAS RS 14.3

FCDMC Methodology

References:

1) FHWA, *Evaluating Scour At Bridges* (HEC-18), May 2001
2) ADOT, *Highway Drainage Design Manual-Hydraulics*, January 2006
3) Tucson, *Standards Manual for Drainage Design & Floodplain Management*, (Revised July 98)
4) SLA Inc., *Final Hydraulics & Scour Analysis Report-Salt River*, July 1007

Pier Input:

Pier Diameter:	5.50	ft
Debris:	2.00	ft on each side
Effective Pier Diameter (a):	9.50	ft

(1988 Datum)

Hydraulic Input:

Storm Event (Years):	FEMA 100-yr	Design Flow	SF
Flow, Q (cfs):	20000	30000	64000
W.S.E., (ft):	1164.24	1165.37	1168.44
Depth of Flow, Y_1 (ft):	5.88	7.01	10.08
Average Velocity, V_1 (fps):	7.10	8.60	11.95
Froude Number, Fr_1:	0.56	0.62	0.70

Correction Factors:

Pier Type, K_1 (ADOT Policy):	***1.1***	***Cylindrical Columns***
Angle of Attack, K_2:	1.0	
Bed Condition, K_3:	1.1	
Armouring, K_4:	1.0	

Particle Size: (Ref. 4)

D_{52}:	90.5	mm	3.563	inches
D_{89}:	181.0	mm	7.126	inches

Scour Equation: $Y_s/Y_1 = 2*K_1*K_2*K_3*K_4*(a/Y_1)^{0.65}Fr_1^{0.43}$

Local Pier Scour

FEMA 100-yr Scour Depth (ft)	**Y_s (FEMA 100-yr) =**	15.15	
Design Flow Scour Depth (ft)	**Y_s (Design Flow) =**		16.83
SF Scour Depth (ft)	**Y_s (SPF) =**		20.13
Safety Factor provided by 2' Debris around Column			

Additional Scour Components

General Scour (ft): Ave. of Lacey & Blench Equations	2.42	3.05	4.66
Long Term Degradation (ft) DS G.C.S.	0	0	0
Bed Form Scour (ft): $y_{bf} = 0.0137V_m^2$ (Ref. 3)	0.69	1.01	1.96
30% Safety for Additional Scour Components	0.93	1.22	1.98

Total Scour

Total FEMA 100-yr Scour Depth:	19.19		
Total Design Flow Scour Depth:		22.11	
Total SF Scour Depth:			28.73
Min. Channel Elevation (HEC-RAS)(1988 Datum):	1158.36	1158.36	1158.36
Scour Hole Bottom Elevation:	**1139.17**	**1136.25**	**1129.63**

Table 2C

PIER SCOUR: FHWA (HEC 18) CSU Equation

FCDMC CONTROLLING

Project:	SR 202 Crossing of the IBW	**Computed by:**	Dave Schaub
Location:	**Pier 4EB DS Scour Depth @ IBW Bridge**	**Date:**	13-Feb-09
Description:	**With Debris 2' each Side of Pier Column**	**Checked by:**	
		Date:	

HEC-RAS RS .9

FCDMC Methodology

References:

1) FHWA, *Evaluating Scour At Bridges* (HEC-18), May 2001
2) ADOT, *Highway Drainage Design Manual-Hydraulics*, January 2006
3) Tucson, *Standards Manual for Drainage Design & Floodplain Management*, (Revised July 98)
4) SLA Inc., *Final Hydraulics & Scour Analysis Report-Salt River*, July 1007

Pier Input:

Pier Diameter:	5.50	ft
Debris:	2.00	ft on each side
Effective Pier Diameter (a):	9.50	ft

(1988 Datum)

Hydraulic Input:

Storm Event (Years):	FEMA 100-yr	Design Flow	SF
Flow, Q (cfs):	20000	30000	64000
W.S.E., (ft):	1149.68	1149.79	1151.45
Depth of Flow, Y_1 (ft):	8.76	8.87	10.53
Average Velocity, V_1 (fps):	4.93	7.28	12.63
Froude Number, Fr_1:	0.33	0.48	0.75

Correction Factors:

Pier Type, K_1 (ADOT Policy):	***1.1***	***Cylindrical Columns***
Angle of Attack, K_2:	1.0	
Bed Condition, K_3:	1.1	
Armouring, K_4:	1.0	

Particle Size: (Ref. 4)

D_{52}:	90.5	mm	3.563	inches
D_{89}:	181.0	mm	7.126	inches

Scour Equation: $Y_s/Y_1 = 2*K_1*K_2*K_3*K_4*(a/Y_1)^{0.65}Fr_1^{0.43}$

Local Pier Scour

FEMA 100-yr Scour Depth (ft)	**Y_s (FEMA 100-yr) =**	13.87	
Design Flow Scour Depth (ft)	**Y_s (Design Flow) =**		16.37
SF Scour Depth (ft)	**Y_s (SPF) =**		21.06
Safety Factor provided by 2' Debris around Column			

Additional Scour Components

General Scour (ft): Ave. of Lacey & Blench Equations	2.48	3.15	4.93
Long Term Degradation (ft) DS G.C.S.	0	0	0
Bed Form Scour (ft): $y_{bf} = 0.0137V_m^2$ (Ref. 3)	0.33	0.73	2.19
30% Safety for Additional Scour Components	0.84	1.16	2.13

Total Scour

Total FEMA 100-yr Scour Depth:	17.53		
Total Design Flow Scour Depth:		21.40	
Total SF Scour Depth:			30.31
Min. Channel Elevation (HEC-RAS)(1988 Datum):	1140.92	1140.92	1140.92
Scour Hole Bottom Elevation:	**1123.39**	**1119.52**	**1110.61**

Table 2D (1 OF 2)

PIER SCOUR: FHWA (HEC 18) CSU Equation

FCDMC CONTROLLING

Project:	SR 202 Crossing of the IBW	**Computed by:**	Dave Schaub
Location:	**Pier 3EB DS Scour Depth @ IBW Bridge**	**Date:**	13-Feb-09
Description:	**With Debris 2' each Side of Pier Column**	**Checked by:**	
		Date:	

HEC-RAS RS .8

FCDMC Methodology

References:

1) FHWA, *Evaluating Scour At Bridges* (HEC-18), May 2001
2) ADOT, *Highway Drainage Design Manual-Hydraulics*, January 2006
3) Tucson, *Standards Manual for Drainage Design & Floodplain Management*, (Revised July 98)
4) SLA Inc., *Final Hydraulics & Scour Analysis Report-Salt River*, July 1007

Pier Input:

Pier Diameter:	5.50	ft
Debris:	2.00	ft on each side
Effective Pier Diameter (a):	9.50	ft

(1988 Datum)

Hydraulic Input:

Storm Event (Years):	FEMA 100-yr	Design Flow	SF
Flow, Q (cfs):	20000	30000	64000
W.S.E., (ft):	1149.64	1149.70	1151.10
Depth of Flow, Y_1 (ft):	8.72	8.78	10.18
Average Velocity, V_1 (fps):	4.85	7.22	12.88
Froude Number, Fr_1:	0.32	0.48	0.78

Correction Factors:

Pier Type, K_1 (ADOT Policy):	***1.1***	***Cylindrical Columns***
Angle of Attack, K_2:	1.0	
Bed Condition, K_3:	1.1	
Armouring, K_4:	1.0	

Particle Size: (Ref. 4)

D_{52}:	90.5	mm	3.563	inches
D_{89}:	181.0	mm	7.126	inches

Scour Equation: $Y_s/Y_1 = 2*K_1*K_2*K_3*K_4*(a/Y_1)^{0.65}Fr_1^{0.43}$

Local Pier Scour

FEMA 100-yr Scour Depth (ft)	**Y_s (FEMA 100-yr) =**	13.67		
Design Flow Scour Depth (ft)	**Y_s (Design Flow) =**		16.31	
SF Scour Depth (ft)	**Y_s (SPF) =**			21.17
Safety Factor provided by 2' Debris around Column				

Additional Scour Components

General Scour (ft): Ave. of Lacey & Blench Equations	2.48	3.15	4.93
Long Term Degradation (ft) DS G.C.S.	0	0	0
Bed Form Scour (ft): $y_{bf} = 0.0137V_m^2$ (Ref. 3)	0.32	0.71	2.27
30% Safety for Additional Scour Components	0.84	1.16	2.16

Total Scour

Total FEMA 100-yr Scour Depth:	17.31		
Total Design Flow Scour Depth:		21.33	
Total SF Scour Depth:			30.53
Min. Channel Elevation (HEC-RAS)(1988 Datum):	1140.92	1140.92	1140.92
Scour Hole Bottom Elevation:	**1123.61**	**1119.59**	**1110.39**

Table 2D (2 OF 2)

PIER SCOUR: FHWA (HEC 18) CSU Equation

FCDMC CONTROLLING

Project:	SR 202 Crossing of the IBW	**Computed by:**	Dave Schaub
Location:	**Pier 3EB DS Scour Depth @ IBW Bridge**	**Date:**	13-Feb-09
Description:	**With Debris 2' each Side of Pier Column**	**Checked by:**	
		Date:	

HEC-RAS RS .7

FCDMC Methodology

References:

1) FHWA, *Evaluating Scour At Bridges* (HEC-18), May 2001
2) ADOT, *Highway Drainage Design Manual-Hydraulics*, January 2006
3) Tucson, *Standards Manual for Drainage Design & Floodplain Management*, (Revised July 98)
4) SLA Inc., *Final Hydraulics & Scour Analysis Report-Salt River*, July 1007

Pier Input:

Pier Diameter:	5.50	ft
Debris:	2.00	ft on each side
Effective Pier Diameter (a):	9.50	ft

(1988 Datum)

Hydraulic Input:

Storm Event (Years):	FEMA 100-yr	Design Flow	SF
Flow, Q (cfs):	20000	30000	64000
W.S.E., (ft):	1149.60	1149.60	1149.65
Depth of Flow, Y_1 (ft):	8.68	8.68	8.73
Average Velocity, V_1 (fps):	4.78	7.16	15.17
Froude Number, Fr_1:	0.32	0.48	1.00

Correction Factors:

Pier Type, K_1 (ADOT Policy):	***1.1***	***Cylindrical Columns***
Angle of Attack, K_2:	1.0	
Bed Condition, K_3:	1.1	
Armouring, K_4:	1.0	

Particle Size: (Ref. 4)

D_{52}:	90.5	mm	3.563	inches
D_{89}:	181.0	mm	7.126	inches

Scour Equation: $Y_s/Y_1 = 2*K_1*K_2*K_3*K_4*(a/Y_1)^{0.65}Fr_1^{0.43}$

Local Pier Scour

FEMA 100-yr Scour Depth (ft)	**Y_s (FEMA 100-yr) =**	13.65	
Design Flow Scour Depth (ft)	**Y_s (Design Flow) =**		16.25
SF Scour Depth (ft)	**Y_s (SPF) =**		22.32
Safety Factor provided by 2' Debris around Column			

Additional Scour Components

General Scour (ft): Ave. of Lacey & Blench Equations	2.48	3.15	4.93
Long Term Degradation (ft) DS G.C.S.	0	0	0
Bed Form Scour (ft): $y_{bf} = 0.0137V_m^2$ (Ref. 3)	0.31	0.70	3.15
30% Safety for Additional Scour Components	0.84	1.15	2.42

Total Scour

Total FEMA 100-yr Scour Depth:	17.28		
Total Design Flow Scour Depth:		21.25	
Total SF Scour Depth:			32.83
Min. Channel Elevation (HEC-RAS)(1988 Datum):	1140.92	1140.92	1140.92
Scour Hole Bottom Elevation:	**1123.64**	**1119.67**	**1108.09**

Table 3
General Scour Summary[1]
for
Indian Bend Wash Bridge
13 February 2009
Lacey and Blench Equations
FCDMC Methodology

Pier/RS Identification	FEMA 100-yr Flow (20,000 cfs) Scour Depth			Critical Design Flow (30,000 cfs) Scour Depth			Superflood Flow (64,000 cfs) Scour Depth		
	Lacey	Blench	Average	Lacey	Blench	Average	Lacey	Blench	Average
No.	(ft)	(ft)	(ft)	(ft)	(ft)	(ft)	(ft)	(ft)	(ft)
Pier 7 WB/R14.4	1.27	3.56	2.42	1.46	4.63	3.04	1.88	7.42	4.65
Pier 6 WB/R14.3	1.27	3.57	2.42	1.46	4.64	3.05	1.88	7.46	4.67
US Averages[2]	**1.27**	**3.57**	**2.42**	**1.46**	**4.64**	**3.05**	**1.88**	**7.44**	**4.66**
Pier 4 EB/R.9	1.27	3.74	2.51	1.46	4.90	3.18	1.88	8.07	4.98
Pier 3 EB/R.8	1.27	3.69	2.48	1.46	4.83	3.15	1.88	7.97	4.92
Pier 3 EB/R.7	1.27	3.64	2.46	1.46	4.77	3.11	1.88	7.90	4.89
DS Averages[3]	**1.27**	**3.69**	**2.48**	**1.46**	**4.83**	**3.15**	**1.88**	**7.98**	**4.93**

NOTES:

1) General scour in accordance with FCDMC Methodology.
2) Use these averages for General Scour upstream of the Level I Grade Control Structure. Level I is the most upstream structure.
3) Use these averages for General Scour downstream of the Level IV Grade Control Structure. Level IV is the most downstream structure.

Table 3A

LACEY EQUATION, TYPES A and B — GENERAL SCOUR

Project:	SR 202 DB	**Computed by:**	Dave Schaub
Location:	SR 202 Crossing of the IBW	**Date:**	13-Feb-09
Description:	**General Scour Depth @ IBW**	**Checked by:**	
	Bridge, Pier 7WB US RS14.4	**Date:**	

FCDMC Methodology

References: 1) Bureau of Reclamation, Computing Degradation and Local Scour, January 1984
FCDMC, Drainage Design Manual for Maricopa County, Chapter 11, February 2007
2) (Draft).

Lacey Equation: $d_m = 0.47(Q/f)^{1/3}$

where:

d_m = mean depth at design discharge, ft

Q = Design discharge, cfs

f = Lacey's silt factor equals $1.76(D_m)^{1/2}$ where D_m (D_{50}) equal mean grain size of bed material in millimeters

Scour Depth Equation: $d_s = Zd_m$

where:

d_s = Scour depth below thalweg of streambed, ft

Z = Empirical multiplying factor for river conditions

Soil Data:

D_{50}:	mm	79.20	79.20	79.20
D_{50}:	ft	0.26	0.26	0.26
f:		15.66	15.66	15.66

(1988 Datum)

Hydraulic Input:

Storm Event (Years):	**FEMA-100-yr**	**Design Flow**	**SF**
Flow, Q (cfs):	20000	30000	64000
W.S.E., (ft):	1164.61	1165.83	1169.08
Depth of Flow, Y_1 (ft):	6.25	7.47	10.72
Average Velocity, V_1 (fps):	6.59	7.97	11.14
Froude Number, Fr_1:	0.51	0.55	0.63

Computations:

dm (ft):	5.10	5.84	7.51
Z (Straight Reach):	0.25	0.25	0.25
ds (ft):	1.27	1.46	1.88

Table 3B

LACEY EQUATION, TYPES A and B — GENERAL SCOUR

Project:	SR 202 DB	**Computed by:**	Dave Schaub
Location:	SR 202 Crossing of the IBW	**Date:**	13-Feb-09
Description:	**General Scour Depth @ IBW**	**Checked by:**	
	Bridge, Pier 6WB US RS14.3	**Date:**	

FCDMC Methodology

References: 1) Bureau of Reclamation, Computing Degradation and Local Scour, January 1984
FCDMC, Drainage Design Manual for Maricopa County, Chapter 11, February 2007
2) (Draft).

Lacey Equation: $d_m = 0.47(Q/f)^{1/3}$

where:

d_m = mean depth at design discharge, ft

Q = Design discharge, cfs

f = Lacey's silt factor equals $1.76(D_m)^{1/2}$ where D_m (D_{50}) equal mean grain size of bed material in millimeters

Scour Depth Equation: $d_s = Zd_m$

where:

d_s = Scour depth below thalweg of streambed, ft

Z = Empirical multiplying factor for river conditions

Soil Data:

D_{50}:	mm	79.20	79.20	79.20
D_{50}:	ft	0.26	0.26	0.26
f:		15.66	15.66	15.66

(1988 Datum)

Hydraulic Input:

Storm Event (Years):	**FEMA-100-yr**	**Design Flow**	**SF**
Flow, Q (cfs):	20000	30000	64000
W.S.E., (ft):	1164.24	1165.37	1168.44
Depth of Flow, Y_1 (ft):	5.88	7.01	10.08
Average Velocity, V_1 (fps):	7.10	8.60	11.95
Froude Number, Fr_1:	0.56	0.62	0.70

Computations:

dm (ft):	5.10	5.84	7.51
Z (Straight Reach):	0.25	0.25	0.25
ds (ft):	1.27	1.46	1.88

Table 3C

BLENCH EQUATION, TYPES A and B — GENERAL SCOUR

Project:	SR 202 DB	**Computed by:**	Dave Schaub
Location:	SR 202 Crossing of the IBW	**Date:**	13-Feb-09
Description:	**General Scour Depth @ IBW**	**Checked by:**	
	Bridge, Pier7 WB US RS14.4	**Date:**	

FCDMC Methodology

References: 1) Bureau of Reclamation, Computing Degradation and Local Scour, January 1984
2) FCDMC, Drainage Design Manual for Maricopa County, Chapter 11, February 2007 (Draft).

Blench Equation: $d_{fo} = (q_f)^{(2/3)}/(F_{bo})^{(1/3)}$

where:

d_{fo} = Depth for zero bed sediment transport, ft

q_f = Design discharge per unit width, cfs/ft

F_{bo} = Blench's "zero bed factor" in ft/s^2 from figure 9, Source 1.

Scour Depth Equation: $d_s = Zd_{fo}$

where:

d_s = Scour depth below thalweg of streambed, ft

Z = Empirical multiplying factor for river conditions

Soil Data:

D_{50}:	mm	79.20	79.20	79.20
D_{50}:	ft	0.26	0.26	0.26
F_{bo} (figure 9, source 1):		5.10	5.10	5.10

Hydraulic Input: (1988 Datum)

Storm Event (Years):	FEMA-100-yr	Design Flow	SF
Flow, Q (cfs):	20000	30000	64000
W.S.E., (ft):	1164.61	1165.83	1169.08
Depth of Flow, Y_1 (ft):	6.25	7.47	10.72
Average Velocity, V_1 (fps):	6.59	7.97	11.14
Average Width, W (ft):	611.82	619.57	651.82
Froude Number, Fr_1:	0.51	0.55	0.63

Computations:

q_f (cfs/ft):	33	48	98
d_{fo} (ft):	5.9	7.7	12.4
Z (Moderate Bend):	0.60	0.60	0.60
d_s (ft):	***3.56***	***4.63***	***7.42***

Table 3D

BLENCH EQUATION, TYPES A and B — GENERAL SCOUR

Project:	SR 202 DB	**Computed by:**	Dave Schaub
Location:	SR 202 Crossing of the IBW	**Date:**	13-Feb-09
Description:	**General Scour Depth @ IBW**	**Checked by:**	
	Bridge, Pier 6WB US RS14.3	**Date:**	

FCDMC Methodology

References: 1) Bureau of Reclamation, Computing Degradation and Local Scour, January 1984
2) FCDMC, Drainage Design Manual for Maricopa County, Chapter 11, February 2007

Blench Equation: $d_{fo} = (q_f)^{(2/3)}/(F_{bo})^{(1/3)}$

where:

d_{fo} = Depth for zero bed sediment transport, ft

q_f = Design discharge per unit width, cfs/ft

F_{bo} = Blench's "zero bed factor" in ft/s^2 from figure 9, Source 1.

Scour Depth Equation: $d_s = Zd_{fo}$

where:

d_s = Scour depth below thalweg of streambed, ft

Z = Empirical multiplying factor for river conditions

Soil Data:

D_{50}:	mm	79.20	79.20	79.20
D_{50}:	ft	0.26	0.26	0.26
F_{bo} (figure 9, source 1):		5.10	5.10	5.10

Hydraulic Input: (1988 Datum)

Storm Event (Years):	FEMA-100-yr	Design Flow	SF
Flow, Q (cfs):	20000	30000	64000
W.S.E., (ft):	1164.24	1165.37	1168.44
Depth of Flow, Y_1 (ft):	5.88	7.01	10.08
Average Velocity, V_1 (fps):	7.10	8.60	11.95
Average Width, W (ft):	609.48	616.84	646.65
Froude Number, Fr_1:	0.56	0.62	0.70

Computations:

q_f (cfs/ft):	33	49	99
d_{fo} (ft):	6.0	7.7	12.4
Z (Moderate Bend):	0.60	0.60	0.60
d_s (ft):	***3.57***	***4.64***	***7.46***

Table 3E

BLENCH EQUATION, TYPES A and B — GENERAL SCOUR

Project:	SR 202 DB	**Computed by:**	Dave Schaub
Location:	SR 202 Crossing of the IBW	**Date:**	13-Feb-09
Description:	**General Scour Depth @ IBW**	**Checked by:**	
	Bridge, Pier 4EB DS RS.9	**Date:**	

FCDMC Methodology

References: 1) Bureau of Reclamation, Computing Degradation and Local Scour, January 1984
2) FCDMC, Drainage Design Manual for Maricopa County, Chapter 11, February 2007 (Draft).

Blench Equation: $d_{fo} = (q_f)^{(2/3)}/(F_{bo})^{(1/3)}$

where:

d_{fo} = Depth for zero bed sediment transport, ft

q_f = Design discharge per unit width, cfs/ft

F_{bo} = Blench's "zero bed factor" in ft/s^2 from figure 9, Source 1.

Scour Depth Equation: $d_s = Zd_{fo}$

where:

d_s = Scour depth below thalweg of streambed, ft

Z = Empirical multiplying factor for river conditions

Soil Data:

D_{50}:	mm	79.20	79.20	79.20
D_{50}:	ft	0.26	0.26	0.26
F_{bo} (figure 9, source 1):		5.10	5.10	5.10

Hydraulic Input: (1988 Datum)

Storm Event (Years):	FEMA-100-yr	Design Flow	SF
Flow, Q (cfs):	20000	30000	64000
W.S.E., (ft):	1149.68	1149.79	1151.45
Depth of Flow, Y_1 (ft):	8.76	8.87	10.53
Average Velocity, V_1 (fps):	4.93	7.28	12.63
Average Width, W (ft):	568.78	569.12	574.10
Froude Number, Fr_1:	0.33	0.48	0.75

Computations:

q_f (cfs/ft):	35	53	111
d_{fo} (ft):	6.2	8.2	13.5
Z (Moderate Bend):	0.60	0.60	0.60
d_s (ft):	***3.74***	***4.90***	***8.07***

Table 3F

BLENCH EQUATION, TYPES A and B — GENERAL SCOUR

Project:	SR 202 DB	**Computed by:**	Dave Schaub
Location:	SR 202 Crossing of the IBW	**Date:**	13-Feb-09
Description:	**General Scour Depth @ IBW**	**Checked by:**	
	Bridge, Pier 3EB DS RS.8	**Date:**	

FCDMC Methodology

References: 1) Bureau of Reclamation, Computing Degradation and Local Scour, January 1984
2) FCDMC, Drainage Design Manual for Maricopa County, Chapter 11, February 2007 (Draft).

Blench Equation: $d_{fo} = (q_f)^{(2/3)}/(F_{bo})^{(1/3)}$

where:

d_{fo} = Depth for zero bed sediment transport, ft

q_f = Design discharge per unit width, cfs/ft

F_{bo} = Blench's "zero bed factor" in ft/s^2 from figure 9, Source 1.

Scour Depth Equation: $d_s = Zd_{fo}$

where:

d_s = Scour depth below thalweg of streambed, ft

Z = Empirical multiplying factor for river conditions

Soil Data:

D_{50}:	mm	79.20	79.20	79.20
D_{50}:	ft	0.26	0.26	0.26
F_{bo} (figure 9, source 1):		5.10	5.10	5.10

Hydraulic Input: (1988 Datum)

Storm Event (Years):	FEMA-100-yr	Design Flow	SF
Flow, Q (cfs):	20000	30000	64000
W.S.E., (ft):	1149.64	1149.70	1151.10
Depth of Flow, Y_1 (ft):	8.72	8.78	10.18
Average Velocity, V_1 (fps):	4.85	7.22	12.88
Average Width, W (ft):	581.16	581.33	585.53
Froude Number, Fr_1:	0.32	0.48	0.78

Computations:

q_f (cfs/ft):	34	52	109
d_{fo} (ft):	6.1	8.1	13.3
Z (Moderate Bend):	0.60	0.60	0.60
d_s (ft):	***3.69***	***4.83***	***7.97***

Table 3G

BLENCH EQUATION, TYPES A and B — GENERAL SCOUR

Project:	SR 202 DB	**Computed by:**	Dave Schaub
Location:	SR 202 Crossing of the IBW	**Date:**	13-Feb-09
Description:	**General Scour Depth @ IBW**	**Checked by:**	
	Bridge, Pier 3EB DS RS.7	**Date:**	

FCDMC Methodology

References: 1) Bureau of Reclamation, Computing Degradation and Local Scour, January 1984
FCDMC, Drainage Design Manual for Maricopa County, Chapter 11, February 2007
2) (Draft).

Blench Equation: $d_{fo} = (q_f)^{(2/3)}/(F_{bo})^{(1/3)}$

where:

d_{fo} = Depth for zero bed sediment transport, ft

q_f = Design discharge per unit width, cfs/ft

F_{bo} = Blench's "zero bed factor" in ft/s^2 from figure 9, Source 1.

Scour Depth Equation: $d_s = Zd_{fo}$

where:

d_s = Scour depth below thalweg of streambed, ft

Z = Empirical multiplying factor for river conditions

Soil Data:

D_{50}:	mm	79.20	79.20	79.20
D_{50}:	ft	0.26	0.26	0.26
F_{bo} (figure 9, source 1):		5.10	5.10	5.10

Hydraulic Input: (1988 Datum)

Storm Event (Years):	FEMA-100-yr	Design Flow	SF
Flow, Q (cfs):	20000	30000	64000
W.S.E., (ft):	1149.60	1149.60	1149.65
Depth of Flow, Y_1 (ft):	8.68	8.68	8.73
Average Velocity, V_1 (fps):	4.78	7.16	15.17
Average Width, W (ft):	593.54	593.54	593.69
Froude Number, Fr_1:	0.32	0.48	1.00

Computations:

q_f (cfs/ft):	34	51	108
d_{fo} (ft):	6.1	7.9	13.2
Z (Moderate Bend):	0.60	0.60	0.60
d_s (ft):	***3.64***	***4.77***	***7.90***

Table 4

FEMA 100-Year Flow (20,000 cfs)[(1)(2)]
HEC-RAS Hydraulic Characteristics

Reach	River Sta	Profile	Q Total	Min Ch El	W.S. Elev	Flow Depth	Crit W.S.	E.G. Elev	E.G. Slope	Vel Chnl	Flow Area	Top Width	Froude # Chl	Hydraulic Depth[(3)]	General Scour[(4)]
			(cfs)	(ft)	(ft)	(ft)	(ft)	(ft)	(ft/ft)	(ft/s)	(sq ft)	(ft)		(ft)	(ft)
Main	16	FEMA 100-yr	20000	1158.48	1166.73	8.25	1165.23	1167.90	0.003527	9.03	2802.98	597.35	0.61	4.69	1.39
Main	15	FEMA 100-yr	20000	1158.34	1165.09	6.75	1165.09	1167.27	0.008854	12.10	1935.36	554.53	0.93	3.49	1.76
Main	14.5	FEMA 100-yr	20000	1158.36	1164.75	6.39	1162.69	1165.38	0.002400	6.42	3163.66	612.68	0.49	5.16	0.00
Main	14.4	FEMA 100-yr	20000	1158.36	1164.61	6.25		1165.28	0.002618	6.59	3080.03	611.82	0.51	5.03	0.00
Main	14.3	FEMA 100-yr	20000	1158.36	1164.24	5.88		1165.02	0.003355	7.10	2853.12	609.48	0.56	4.68	0.00
Main	14	FEMA 100-yr	20000	1158.42	1163.10	4.68	1163.10	1164.69	0.003961	10.11	1980.64	626.54	1.00	3.16	2.09
Main	13	FEMA 100-yr	20000	1149.42	1159.62	10.20	1154.27	1159.85	0.000154	3.87	5201.87	616.09	0.23	8.44	2.03
Main	12	FEMA 100-yr	20000	1149.42	1159.60	10.18		1159.84	0.000168	3.95	5069.99	616.03	0.24	8.23	2.04
	11	FEMA 100-yr	20000	1153.42	1158.48	5.06	1158.12	1159.74	0.002775	9.00	2226.09	642.67	0.85	3.46	2.09
	10	FEMA 100-yr	20000	1153.42	1158.12	4.70	1158.12	1159.68	0.003978	10.03	1997.12	641.60	1.00	3.11	2.09
Main	9	FEMA 100-yr	20000	1142.92	1153.48	10.56	1147.89	1153.73	0.000158	3.98	5024.99	567.69	0.24	8.85	2.05
	8	FEMA 100-yr	20000	1142.92	1153.48	10.56		1153.72	0.000159	3.98	5020.62	567.67	0.24	8.84	2.03
	7	FEMA 100-yr	20000	1146.92	1152.27	5.35	1151.84	1153.61	0.002634	9.29	2152.03	564.05	0.84	3.82	2.23
	6	FEMA 100-yr	20000	1146.92	1151.84	4.92	1151.84	1153.54	0.003923	10.49	1907.47	562.74	1.00	3.39	2.23
	5	FEMA 100-yr	20000	1136.42	1149.98	13.56	1141.48	1150.13	0.000066	3.07	6506.53	557.19	0.16	11.68	1.75
	4	FEMA 100-yr	20000	1136.42	1149.98	13.56		1150.13	0.000066	3.07	6504.43	557.18	0.16	11.67	1.75
	3	FEMA 100-yr	20000	1140.92	1149.71	8.79		1150.10	0.000335	5.03	3978.87	556.37	0.33	7.15	2.22
	2	FEMA 100-yr	20000	1140.92	1149.71	8.79		1150.10	0.000335	5.03	3977.17	556.36	0.33	7.15	2.22
	1	FEMA 100-yr	20000	1140.92	1149.70	8.78		1150.09	0.000337	5.04	3972.01	556.33	0.33	7.14	2.22
Main	0.9	FEMA 100-yr	20000	1140.92	1149.68	8.76		1150.06	0.000993	4.93	4053.94	568.78	0.33	7.13	0.00
Main	0.8	FEMA 100-yr	20000	1140.92	1149.64	8.72		1150.01	0.000967	4.85	4120.93	581.16	0.32	7.09	0.00
Main	0.7	FEMA 100-yr	20000	1140.92	1149.60	8.68	1145.74	1149.95	0.000943	4.78	4187.62	593.54	0.32	7.06	0.00
# Values =				22.00	22.00	22.00			22.00	22.00	22.00	22.00	22.00	22.00	22.00
Average =				1147.91	1156.06	8.15			0.001941	6.44	3714.43	587.18	0.50	6.38	1.46

Notes:

1) **The HEC-RAS model was developed from As-Built plans, but corrected to NAVD88 Datum by adding 1.92' to the NGVD29 Datum.**
2) **The HEC-RAS model x-sections compare very well with field surveys performed for the current project.**
3) **Hydraulic Depth Equation : HD = (Flow Area/Top Width)**
4) **General Scour with the Zeller (1981) equation, *Standards Manual for Drainage Design and Floodplain Management in Tucson, Arizona*, December 1989 (Revised July 1998). Computed negative values are set to zero.**

General Scour Equation: $y_{gs} = y_{max}\{[(0.0685V_m^{0.8})/(y_h^{0.4}S_e^{0.3})]-1\}$

Zeller Equation

Where:

y_{gs} = **general scour depth, (ft)**

y_{max} = **maximum depth of flow, (ft)**

V_m = **average velocity of flow, (fps)**

y_h = **hydraulic depth of flow, (ft)**

S_e = **energy slope, (ft/ft)**

Table 5

Critical Design Flow (30,000 cfs)[1][2]
HEC-RAS Hydraulic Characteristics

Reach	River Sta	Profile	Q Total	Min Ch El	W.S. Elev	Flow Depth	Crit W.S.	E.G. Elev	E.G. Slope	Vel Chnl	Flow Area	Top Width	Froude # Chl	Hydraulic Depth[3]	General Scour[4]
			(cfs)	(ft)	(ft)	(ft)	(ft)	(ft)	(ft/ft)	(ft/s)	(sq ft)	(ft)		(ft)	(ft)
Main	16	Critical Design	30000	1158.48	1168.33	9.85	1166.67	1169.86	0.003617	10.52	3777.62	621.58	0.64	6.08	1.78
Main	15	Critical Design	30000	1158.34	1166.53	8.19	1166.53	1169.23	0.008217	13.69	2765.09	596.47	0.93	4.64	2.21
Main	14.5	Critical Design	30000	1158.36	1166.00	7.64	1163.78	1166.92	0.002669	7.77	3931.92	620.48	0.53	6.34	0.00
Main	14.4	Critical Design	30000	1158.36	1165.83	7.47		1166.80	0.002910	7.97	3828.53	619.57	0.55	6.18	0.02
Main	14.3	Critical Design	30000	1158.36	1165.37	7.01		1166.51	0.003726	8.60	3547.54	616.84	0.62	5.75	0.13
Main	14	Critical Design	30000	1158.42	1164.09	5.67	1164.09	1166.16	0.003618	11.57	2599.53	629.50	1.00	4.13	2.76
Main	13	Critical Design	30000	1149.42	1160.95	11.53	1155.27	1161.34	0.000213	5.02	6027.30	620.09	0.28	9.72	3.08
Main	12	Critical Design	30000	1149.42	1160.92	11.50		1161.33	0.000231	5.11	5890.12	620.01	0.29	9.50	3.05
Main	11	Critical Design	30000	1153.42	1159.56	6.14	1159.09	1161.20	0.002532	10.29	2922.84	645.92	0.85	4.53	2.78
Main	10	Critical Design	30000	1153.42	1159.09	5.67	1159.09	1161.13	0.003640	11.48	2619.45	644.51	1.00	4.06	2.75
Main	9	Critical Design	30000	1142.92	1154.94	12.02	1148.97	1155.34	0.000217	5.13	5852.80	572.05	0.28	10.23	3.07
Main	8	Critical Design	30000	1142.92	1154.92	12.00		1155.33	0.000218	5.13	5846.51	572.01	0.28	10.22	3.05
Main	7	Critical Design	30000	1146.92	1153.40	6.48	1152.90	1155.19	0.002512	10.74	2792.01	567.44	0.85	4.92	2.97
Main	6	Critical Design	30000	1146.92	1152.89	5.97	1152.89	1155.12	0.003591	11.98	2505.01	565.92	1.00	4.43	2.93
Main	5	Critical Design	30000	1136.42	1150.47	14.05	1142.58	1150.77	0.000129	4.43	6775.55	558.64	0.22	12.13	3.08
Main	4	Critical Design	30000	1136.42	1150.46	14.04		1150.76	0.000130	4.43	6771.11	558.61	0.22	12.12	3.04
Main	3	Critical Design	30000	1140.92	1149.86	8.94		1150.71	0.000704	7.38	4063.33	556.82	0.48	7.30	3.14
Main	2	Critical Design	30000	1140.92	1149.85	8.93		1150.70	0.000706	7.39	4059.38	556.80	0.48	7.29	3.14
Main	1	Critical Design	30000	1140.92	1149.83	8.91		1150.68	0.000713	7.41	4046.54	556.73	0.48	7.27	3.14
Main	0.9	Critical Design	30000	1140.92	1149.79	8.87		1150.62	0.002121	7.28	4118.39	569.12	0.48	7.24	0.00
Main	0.8	Critical Design	30000	1140.92	1149.70	8.78		1150.51	0.002120	7.22	4153.99	581.33	0.48	7.15	0.00
Main	0.7	Critical Design	30000	1140.92	1149.60	8.68	1146.78	1150.40	0.002121	7.16	4187.62	593.54	0.48	7.06	0.00
# Values =				22.00	22.00	22.00			22.00	22.00	22.00	22.00	22.00	22.00	22.00
Average =				1147.91	1156.93	9.02			0.002121	8.08	4231.01	592.91	0.56	7.19	2.10

Notes:

1) **The HEC-RAS model was developed from As-Built plans, but corrected to NAVD88 Datum by adding 1.92' to the NGVD29 Datum.**
2) **The HEC-RAS model x-sections compare very well with field surveys performed for the current project.**
3) **Hydraulic Depth Equation : HD = (Flow Area/Top Width)**
4) **General Scour with the Zeller (1981) equation, *Standards Manual for Drainage Design and Floodplain Management in Tucson, Arizona*, December 1989 (Revised July 1998). Computed negative values are set to zero.**

General Scour Equation: $y_{gs} = y_{max}\{[(0.0685V_m^{0.8})/(y_h^{0.4}S_e^{0.3})]-1\}$

Zeller Equation

Where:
- y_{gs} = general scour depth, (ft)
- y_{max} = maximum depth of flow, (ft)
- V_m = average velocity of flow, (fps)
- y_h = hydraulic depth of flow, (ft)
- S_e = energy slope, (ft/ft)

Table 6

Superflood Flow (64,000 cfs)[(1)(2)]
HEC-RAS Hydraulic Characteristics

Reach	River Sta	Profile	Q Total	Min Ch El	W.S. Elev	Flow Depth	Crit W.S.	E.G. Elev	E.G. Slope	Vel Chnl	Flow Area	Top Width	Froude # Chl	Hydraulic Depth[(3)]	General Scour[(4)]
			(cfs)	(ft)	(ft)	(ft)	(ft)	(ft)	(ft/ft)	(ft/s)	(sq ft)	(ft)		(ft)	(ft)
Main	16	SF	64000	1158.48	1172.33	13.85	1170.10	1174.96	0.003911	14.20	6387.92	687.76	0.71	9.29	3.29
Main	15	SF	64000	1158.34	1169.90	11.56	1169.90	1174.25	0.008245	17.99	4855.89	637.68	1.00	7.61	3.41
Main	14.5	SF	64000	1158.36	1164.25	5.89	1166.60	1172.17	0.034175	22.70	2857.73	609.52	1.80	4.69	1.39
Main	14.4	SF	64000	1158.36	1169.08	10.72	1166.60	1170.95	0.003307	11.14	5901.55	651.82	0.63	9.05	0.89
Main	14.3	SF	64000	1158.36	1168.44	10.08	1166.61	1170.61	0.004166	11.95	5490.07	646.65	0.70	8.49	0.98
Main	14	SF	64000	1158.42	1166.80	8.38	1166.80	1170.23	0.003080	14.91	4316.15	637.63	1.00	6.77	4.77
Main	13	SF	64000	1149.42	1164.46	15.04	1158.10	1165.42	0.000352	7.88	8222.84	630.62	0.38	13.04	5.86
Main	12	SF	64000	1149.42	1164.41	14.99		1165.40	0.000374	7.99	8071.21	630.47	0.39	12.80	5.84
Main	11	SF	64000	1153.42	1162.37	8.95	1161.78	1165.21	0.002320	13.56	4747.6	654.34	0.88	7.26	4.83
Main	10	SF	64000	1153.42	1161.78	8.36	1161.78	1165.14	0.003062	14.74	4364.32	652.58	1.00	6.69	4.73
Main	9	SF	64000	1142.92	1158.83	15.91	1151.93	1159.78	0.000352	7.84	8174.2	613.72	0.38	13.32	5.92
Main	8	SF	64000	1142.92	1158.81	15.89		1159.76	0.000354	7.85	8162.29	613.66	0.38	13.30	5.91
Main	7	SF	64000	1146.92	1156.54	9.62	1155.79	1159.56	0.002393	13.95	4589.21	606.85	0.89	7.56	5.15
Main	6	SF	64000	1146.92	1155.80	8.88	1155.80	1159.47	0.003085	15.38	4161.05	574.63	1.01	7.24	5.02
Main	5	SF	64000	1136.42	1153.41	16.99	1145.62	1154.31	0.000291	7.59	8434.26	567.47	0.35	14.86	6.03
Main	4	SF	64000	1136.42	1153.39	16.97		1154.29	0.000292	7.60	8423.32	567.42	0.35	14.84	6.03
Main	3	SF	64000	1140.92	1151.65	10.73		1154.13	0.001564	12.64	5061.5	562.17	0.74	9.00	5.40
Main	2	SF	64000	1140.92	1151.62	10.70		1154.12	0.001575	12.67	5050.04	562.11	0.75	8.98	5.40
Main	1	SF	64000	1140.92	1151.54	10.62		1154.08	0.001625	12.79	5002.43	561.86	0.76	8.90	5.38
Main	0.9	SF	64000	1140.92	1151.45	10.53		1153.93	0.004904	12.63	5067.29	574.10	0.75	8.83	0.79
Main	0.8	SF	64000	1140.92	1151.10	10.18	1149.75	1153.67	0.005366	12.88	4970.24	585.53	0.78	8.49	0.81
Main	0.7	SF	64000	1140.92	1149.65	8.73	1149.65	1153.23	0.009425	15.17	4218.13	593.69	1.00	7.10	1.01
# Values =				22.00	22.00	22.00	15.00	22.00	22.00	22.00	22.00	22.00	22.00	22.00	22.00
Average =				1147.91	1159.44	11.53	1159.79	1162.03	0.004283	12.55	5751.33	610.10	0.76	9.46	4.04

Notes:

1) **The HEC-RAS model was developed from As-Built plans, but corrected to NAVD88 Datum by adding 1.92' to the NGVD29 Datum.**
2) **The HEC-RAS model x-sections compare very well with field surveys performed for the current project.**
3) **Hydraulic Depth Equation : HD = (Flow Area/Top Width)**
4) **General Scour with the Zeller (1981) equation, *Standards Manual for Drainage Design and Floodplain Management in Tucson, Arizona*, December 1989 (Revised July 1998). Computed negative values are set to zero.**

General Scour Equation: $y_{gs} = y_{max}\{[(0.0685V_m^{0.8})/(y_h^{0.4}S_e^{0.3})]-1\}$

Zeller Equation

Where:

y_{gs} = **general scour depth, (ft)**
y_{max} = **maximum depth of flow, (ft)**
V_m = **average velocity of flow, (fps)**
y_h = **hydraulic depth of flow, (ft)**
S_e = **energy slope, (ft/ft)**

Table 7
HEC-RAS Report

```
                    HEC-RAS Version 4.0.0 March 2008
                      U.S. Army Corps of Engineers
                     Hydrologic Engineering Center
                           609 Second Street
                           Davis, California

          X     X  XXXXXX    XXXX        XXXX       XX      XXXX
          X     X  X        X    X       X   X     X  X    X
          X     X  X        X            X   X    X    X   X
          XXXXXXX  XXXX     X       XXX  XXXX     XXXXXX    XXXX
          X     X  X        X            X  X     X    X        X
          X     X  X        X    X       X   X    X    X        X
          X     X  XXXXXX    XXXX        X    X   X    X   XXXXX


PROJECT DATA
Project Title: IBW
Project File : IBW.prj
Run Date and Time: 2/17/2009 3:14:53 PM

Project in English units

Project Description:
IBW Drop Structure



PLAN DATA

Plan Title: Plan 10
Plan File : p:\TRANSPORTATION\Kiewit\SR 202 Design Build\Engr\Drainage\HEC-RAS\IndianBendWash\HEC-RAS_Preliminary_Revised\IBW.p10

          Geometry Title: IBW Bend Wash Updated NAVD88
          Geometry File : p:\TRANSPORTATION\Kiewit\SR 202 Design Build\Engr\Drainage\HEC-RAS\IndianBendWash\HEC-
RAS_Preliminary_Revised\IBW.g03

          Flow Title    : Indian Bend Wash Updated Geo
          Flow File     : p:\TRANSPORTATION\Kiewit\SR 202 Design Build\Engr\Drainage\HEC-RAS\IndianBendWash\HEC-
RAS_Preliminary_Revised\IBW.f01

Plan Summary Information:
Number of:  Cross Sections =   22    Multiple Openings  =    0
            Culverts       =    0    Inline Structures  =    0
            Bridges        =    0    Lateral Structures =    0

Computational Information
```

Table 7
HEC-RAS Report

```
    Water surface calculation tolerance  =  0.01
    Critical depth calculation tolerance =  0.01
    Maximum number of iterations         =  20
    Maximum difference tolerance         =  0.3
    Flow tolerance factor                =  0.001

Computation Options
    Critical depth computed only where necessary
    Conveyance Calculation Method: At breaks in n values only
    Friction Slope Method:         Average Conveyance
    Computational Flow Regime:     Mixed Flow



FLOW DATA

Flow Title: Indian Bend Wash Updated Geo
Flow File : p:\TRANSPORTATION\Kiewit\SR 202 Design Build\Engr\Drainage\HEC-RAS\IndianBendWash\HEC-RAS_Preliminary_Revised\IBW.f01

Flow Data (cfs)

  River          Reach          RS            FEMA 100-yr Critical Design            SPF
  Indian Bend WashMain          16                 20000          30000           64000


Boundary Conditions

  River          Reach          Profile                      Upstream                Downstream

  Indian Bend WashMain          FEMA 100-yr            Normal S = 0.001449       Known WS = 1149.6
  Indian Bend WashMain          Critical Design        Normal S = 0.001449       Known WS = 1149.6
  Indian Bend WashMain          SPF                    Normal S = 0.001449       Known WS = 1149.6



GEOMETRY DATA

Geometry Title: IBW Bend Wash Updated NAVD88
Geometry File : p:\TRANSPORTATION\Kiewit\SR 202 Design Build\Engr\Drainage\HEC-RAS\IndianBendWash\HEC-RAS_Preliminary_Revised\IBW.g03

CROSS SECTION


RIVER: Indian Bend Wash
REACH: Main              RS: 16

INPUT
Description: Dupicate Section of 15.0, Increased Elev by 0.14 ft
Station Elevation Data    num=      94
```

Table 7
HEC-RAS Report

Sta	Elev	Sta	Elev	Sta	Elev	Sta	Elev	Sta	Elev
30.83	1170.48	41.17	1170.13	48.83	1168.38	51.67	1168.13	53.44	1167.94
54.54	1167.76	55.91	1167.65	57.68	1167.31	59.64	1167.24	60.13	1167.17
61.85	1167.07	63.45	1167.09	67.87	1166.65	71.43	1166.54	76.21	1166.17
80.03	1166.06	85.78	1165.75	85.8	1165.75	88.98	1165.56	89.91	1165.53
97.31	1165.02	98.64	1165	99.87	1164.95	102.82	1164.68	108.02	1164.52
111.16	1164.32	112.45	1164.26	114.77	1164.11	118.48	1163.96	122.87	1163.69
128.88	1163.47	130.62	1163.4	132.49	1163.33	143.66	1163.09	145.53	1163.07
146.94	1163.09	155.12	1163.07	158.17	1163.04	166.6	1163.06	192.47	1162.98
200.64	1162.97	204.46	1163.01	210.8	1163.02	228.81	1162.96	243.55	1162.4
254.65	1161.92	262.33	1161.31	282.26	1159.7	288.36	1159.23	292.8	1159.27
310.59	1158.88	320.51	1158.79	325.32	1158.71	332.04	1158.74	355.71	1158.6
361.1	1158.5	375.92	1158.48	392.41	1158.5	422.34	1158.75	434.93	1158.82
450.27	1158.86	457.24	1158.93	466.96	1158.97	480.75	1159.12	483.79	1159.14
485.23	1159.49	489.69	1160.64	491.02	1160.95	496.19	1162.01	500.97	1163.06
506.26	1163.7	508.16	1163.94	509.16	1164.1	517.57	1164.61	527.74	1164.93
528.94	1165	533.69	1164.29	535.63	1163.98	622.5	1164.51	628.88	1164.67
631.36	1164.75	646.92	1165.04	647.95	1165.14	664.11	1166.66	667.94	1167.63
677.2	1169.76	680.3	1170.19	685.18	1170.24	688.52	1170.29	691.06	1170.28
699.2	1171.7	709.44	1172.01	711.15	1171.81	718.59	1170.63		

Manning's n Values num= 3

Sta	n Val	Sta	n Val	Sta	n Val
30.83	.08	228.81	.035	528.94	.08

Bank Sta: Left	Right	Lengths: Left	Channel	Right	Coeff Contr.	Expan.
228.81	528.94	100	100	100	.1	.3

CROSS SECTION OUTPUT Profile #Critical Design

E.G. Elev (ft)	1169.86	Element	Left OB	Channel	Right OB
Vel Head (ft)	1.53	Wt. n-Val.	0.080	0.035	0.080
W.S. Elev (ft)	1168.33	Reach Len. (ft)	100.00	100.00	100.00
Crit W.S. (ft)	1166.67	Flow Area (sq ft)	745.31	2517.36	514.94
E.G. Slope (ft/ft)	0.003617	Area (sq ft)	745.31	2517.36	514.94
Q Total (cfs)	30000.00	Flow (cfs)	2149.96	26494.84	1355.20
Top Width (ft)	621.58	Top Width (ft)	179.41	300.13	142.04
Vel Total (ft/s)	7.94	Avg. Vel. (ft/s)	2.88	10.52	2.63
Max Chl Dpth (ft)	9.85	Hydr. Depth (ft)	4.15	8.39	3.63
Conv. Total (cfs)	498818.5	Conv. (cfs)	35748.0	440537.1	22533.4
Length Wtd. (ft)	100.00	Wetted Per. (ft)	179.61	300.80	142.40
Min Ch El (ft)	1158.48	Shear (lb/sq ft)	0.94	1.89	0.82
Alpha	1.57	Stream Power (lb/ft s)	2.70	19.89	2.15
Frctn Loss (ft)	0.52	Cum Volume (acre-ft)	2.32	76.52	1.84
C & E Loss (ft)	0.12	Cum SA (acres)	0.72	10.16	0.70

Warning: The velocity head has changed by more than 0.5 ft (0.15 m). This may indicate the need for additional cross sections.

Warning: The conveyance ratio (upstream conveyance divided by downstream conveyance) is less than 0.7 or greater than 1.4. This may indicate the need for additional cross sections.

Table 7
HEC-RAS Report

CROSS SECTION OUTPUT Profile #SPF

E.G. Elev (ft)	1174.96	Element	Left OB	Channel	Right OB
Vel Head (ft)	2.63	Wt. n-Val.	0.080	0.035	0.080
W.S. Elev (ft)	1172.33	Reach Len. (ft)	100.00	100.00	100.00
Crit W.S. (ft)	1170.10	Flow Area (sq ft)	1510.38	3718.91	1158.63
E.G. Slope (ft/ft)	0.003911	Area (sq ft)	1510.38	3718.91	1158.63
Q Total (cfs)	64000.00	Flow (cfs)	6747.82	52793.41	4458.78
Top Width (ft)	687.76	Top Width (ft)	197.98	300.13	189.65
Vel Total (ft/s)	10.02	Avg. Vel. (ft/s)	4.47	14.20	3.85
Max Chl Dpth (ft)	13.85	Hydr. Depth (ft)	7.63	12.39	6.11
Conv. Total (cfs)	1023369.0	Conv. (cfs)	107898.6	844174.3	71296.5
Length Wtd. (ft)	100.00	Wetted Per. (ft)	200.24	300.80	192.14
Min Ch El (ft)	1158.48	Shear (lb/sq ft)	1.84	3.02	1.47
Alpha	1.69	Stream Power (lb/ft s)	8.23	42.85	5.67
Frctn Loss (ft)	0.55	Cum Volume (acre-ft)	4.95	100.00	4.24
C & E Loss (ft)	0.17	Cum SA (acres)	0.84	10.24	0.87

Warning: The cross-section end points had to be extended vertically for the computed water surface.
Warning: The velocity head has changed by more than 0.5 ft (0.15 m). This may indicate the need for additional cross sections.
Warning: The conveyance ratio (upstream conveyance divided by downstream conveyance) is less than 0.7 or greater than 1.4. This may indicate the need for additional cross sections.

CROSS SECTION

RIVER: Indian Bend Wash
REACH: Main RS: 15

INPUT
Description: 310.1' US of Level I Grade Control Structure
Station Elevation Data num= 94

Sta	Elev	Sta	Elev	Sta	Elev	Sta	Elev	Sta	Elev
30.83	1170.34	41.17	1169.99	48.83	1168.24	51.67	1167.99	53.44	1167.8
54.54	1167.62	55.91	1167.51	57.68	1167.17	59.64	1167.1	60.13	1167.03
61.85	1166.93	63.45	1166.95	67.87	1166.51	71.43	1166.4	76.21	1166.03
80.03	1165.92	85.78	1165.61	85.81	1165.609	88.98	1165.42	89.91	1165.39
97.31	1164.88	98.64	1164.86	99.87	1164.81	102.82	1164.54	108.02	1164.38
111.16	1164.18	112.45	1164.12	114.77	1163.97	118.48	1163.82	122.87	1163.55
128.88	1163.33	130.62	1163.26	132.49	1163.19	143.66	1162.95	145.53	1162.93
146.94	1162.95	155.12	1162.93	158.17	1162.9	166.6	1162.92	192.47	1162.84
200.64	1162.83	204.46	1162.87	210.8	1162.88	228.81	1162.82	243.55	1162.26
254.65	1161.78	262.33	1161.17	282.26	1159.56	288.36	1159.09	292.8	1159.13
310.59	1158.74	320.51	1158.65	325.32	1158.57	332.04	1158.6	355.71	1158.46
361.1	1158.36	375.92	1158.34	392.41	1158.36	422.34	1158.61	434.93	1158.68
450.27	1158.72	457.24	1158.79	466.96	1158.83	480.75	1158.98	483.79	1159
485.23	1159.35	489.69	1160.5	491.02	1160.81	496.19	1161.87	500.97	1162.92
506.26	1163.56	508.16	1163.8	509.16	1163.96	517.57	1164.47	527.74	1164.79

528.94	1164.86	533.69	1164.15	535.63	1163.84	622.5	1164.37	628.88	1164.53
631.36	1164.61	646.92	1164.9	647.95	1165	664.11	1166.52	667.94	1167.49
677.2	1169.62	680.3	1170.05	685.18	1170.1	688.52	1170.15	691.06	1170.14
699.2	1171.56	709.44	1171.87	711.15	1171.67	718.59	1170.49		

Manning's n Values num= 3

Sta	n Val	Sta	n Val	Sta	n Val
30.83	.08	228.81	.035	528.94	.08

Bank Sta: Left	Right	Lengths: Left	Channel	Right	Coeff Contr.	Expan.
228.81	528.94	118.5	116.6	117.6	.1	.3

CROSS SECTION OUTPUT Profile #Critical Design

E.G. Elev (ft)	1169.23	Element	Left OB	Channel	Right OB
Vel Head (ft)	2.70	Wt. n-Val.	0.080	0.035	0.080
W.S. Elev (ft)	1166.53	Reach Len. (ft)	118.50	116.60	117.60
Crit W.S. (ft)	1166.53	Flow Area (sq ft)	461.27	2018.95	284.87
E.G. Slope (ft/ft)	0.008217	Area (sq ft)	461.27	2018.95	284.87
Q Total (cfs)	30000.00	Flow (cfs)	1565.17	27647.15	787.69
Top Width (ft)	596.47	Top Width (ft)	161.13	300.13	135.21
Vel Total (ft/s)	10.85	Avg. Vel. (ft/s)	3.39	13.69	2.77
Max Chl Dpth (ft)	8.19	Hydr. Depth (ft)	2.86	6.73	2.11
Conv. Total (cfs)	330942.4	Conv. (cfs)	17266.0	304987.1	8689.3
Length Wtd. (ft)	116.68	Wetted Per. (ft)	161.23	300.80	135.37
Min Ch El (ft)	1158.34	Shear (lb/sq ft)	1.47	3.44	1.08
Alpha	1.47	Stream Power (lb/ft s)	4.98	47.15	2.99
Frctn Loss (ft)	0.51	Cum Volume (acre-ft)	0.94	71.31	0.92
C & E Loss (ft)	0.53	Cum SA (acres)	0.33	9.47	0.38

Warning: The energy equation could not be balanced within the specified number of iterations. The program used critical depth for the water surface and continued on with the calculations.
Warning: The velocity head has changed by more than 0.5 ft (0.15 m). This may indicate the need for additional cross sections.
Warning: The conveyance ratio (upstream conveyance divided by downstream conveyance) is less than 0.7 or greater than 1.4. This may indicate the need for additional cross sections.
Warning: The energy loss was greater than 1.0 ft (0.3 m). between the current and previous cross section. This may indicate the need for additional cross sections.
Warning: During the standard step iterations, when the assumed water surface was set equal to critical depth, the calculated water surface came back below critical depth. This indicates that there is not a valid subcritical answer. The program defaulted to critical depth.

CROSS SECTION OUTPUT Profile #SPF

E.G. Elev (ft)	1174.25	Element	Left OB	Channel	Right OB
Vel Head (ft)	4.34	Wt. n-Val.	0.080	0.035	0.080
W.S. Elev (ft)	1169.90	Reach Len. (ft)	118.50	116.60	117.60
Crit W.S. (ft)	1169.90	Flow Area (sq ft)	1059.66	3031.48	764.76
E.G. Slope (ft/ft)	0.008245	Area (sq ft)	1059.66	3031.48	764.76
Q Total (cfs)	64000.00	Flow (cfs)	5667.45	54525.96	3806.59

Table 7
HEC-RAS Report

Top Width (ft)	637.68	Top Width (ft)	187.26	300.13	150.30
Vel Total (ft/s)	13.18	Avg. Vel. (ft/s)	5.35	17.99	4.98
Max Chl Dpth (ft)	11.56	Hydr. Depth (ft)	5.66	10.10	5.09
Conv. Total (cfs)	704815.1	Conv. (cfs)	62414.1	600480.1	41920.9
Length Wtd. (ft)	116.72	Wetted Per. (ft)	187.65	300.80	150.84
Min Ch El (ft)	1158.34	Shear (lb/sq ft)	2.91	5.19	2.61
Alpha	1.61	Stream Power (lb/ft s)	15.55	93.31	12.99
Frctn Loss (ft)	0.55	Cum Volume (acre-ft)	2.00	92.26	2.03
C & E Loss (ft)	0.77	Cum SA (acres)	0.40	9.56	0.48

Warning: The energy equation could not be balanced within the specified number of iterations. The program used critical depth for the water surface and continued on with the calculations.
Warning: The velocity head has changed by more than 0.5 ft (0.15 m). This may indicate the need for additional cross sections.
Warning: The conveyance ratio (upstream conveyance divided by downstream conveyance) is less than 0.7 or greater than 1.4. This may indicate the need for additional cross sections.
Warning: The energy loss was greater than 1.0 ft (0.3 m). between the current and previous cross section. This may indicate the need for additional cross sections.
Warning: During the standard step iterations, when the assumed water surface was set equal to critical depth, the calculated water surface came back below critical depth. This indicates that there is not a valid subcritical answer. The program defaulted to critical depth.

CROSS SECTION

RIVER: Indian Bend Wash
REACH: Main RS: 14.5

INPUT
Description: 193.5' US of Level I Grade Control Structure
Station Elevation Data num= 89

Sta	Elev	Sta	Elev	Sta	Elev	Sta	Elev	Sta	Elev
25.84	1184.59	27.87	1183.81	37.36	1174.01	56.94	1172.07	74.36	1166.28
88.4	1161.7	89.13	1161.55	94.02	1160.13	108.01	1159.71	108.05	1159.709
115.41	1159.57	117.64	1159.6	130.55	1159.57	132.43	1159.61	136.35	1159.6
138.34	1159.55	140.02	1159.58	142.84	1159.57	153.76	1159.65	156.46	1159.62
196.67	1159.79	231.72	1159.5	250.79	1159.51	266.31	1159.18	268.45	1159.08
285.87	1158.96	290.45	1158.86	293.64	1158.78	305.56	1158.68	307.45	1158.61
317.58	1158.53	350.23	1158.6	355.85	1158.62	373.61	1158.58	389.64	1158.64
400.36	1158.74	417.38	1158.36	427.29	1158.63	461.55	1158.56	466.67	1158.43
477.92	1158.36	489.35	1158.61	496.75	1158.69	500.67	1158.8	505.11	1159.04
516.47	1159.06	518.88	1159.12	527.22	1159.24	529.44	1159.36	531.46	1159.58
533.4	1159.68	535.54	1159.69	537.56	1159.83	546.04	1159.91	548.44	1159.98
558.15	1160.16	571.18	1160.2	572.96	1160.25	575.65	1160.23	576.64	1160.18
586.73	1160.01	594.42	1160.19	605.19	1160.2	607.08	1160.25	618.11	1160.45
620.22	1160.43	622.61	1160.47	634.39	1160.49	638.45	1160.55	643.13	1160.67
659.89	1160.76	665.72	1162.69	665.9	1162.68	666.75	1162.65	668.38	1162.75
678.6	1162.74	687.93	1163.41	689.34	1164.01	692.77	1165.07	694.6	1165.53
696.06	1166.14	706.65	1169.91	711.19	1171.64	716.06	1172.1	722.22	1172.27
729.07	1172.18	743.52	1166.01	748.8	1166.03	749.8	1166.19		

Table 7
HEC-RAS Report

Manning's n Values num= 3

Sta	n Val	Sta	n Val	Sta	n Val
25.84	.035	94.02	.035	659.89	.035

Bank Sta: Left	Right	Lengths: Left	Channel	Right	Coeff Contr.	Expan.
94.02	659.89	40	40	40	.1	.3

CROSS SECTION OUTPUT Profile #Critical Design

			Left OB	Channel	Right OB
E.G. Elev (ft)	1166.92	Element			
Vel Head (ft)	0.92	Wt. n-Val.	0.035	0.035	0.035
W.S. Elev (ft)	1166.00	Reach Len. (ft)	40.00	40.00	40.00
Crit W.S. (ft)	1163.78	Flow Area (sq ft)	56.67	3771.37	103.88
E.G. Slope (ft/ft)	0.002669	Area (sq ft)	56.67	3771.37	103.88
Q Total (cfs)	30000.00	Flow (cfs)	251.52	29291.67	456.82
Top Width (ft)	620.48	Top Width (ft)	18.79	565.87	35.82
Vel Total (ft/s)	7.63	Avg. Vel. (ft/s)	4.44	7.77	4.40
Max Chl Dpth (ft)	7.63	Hydr. Depth (ft)	3.02	6.66	2.90
Conv. Total (cfs)	580697.4	Conv. (cfs)	4868.5	566986.6	8842.4
Length Wtd. (ft)	40.00	Wetted Per. (ft)	19.69	565.95	36.59
Min Ch El (ft)	1158.36	Shear (lb/sq ft)	0.48	1.11	0.47
Alpha	1.02	Stream Power (lb/ft s)	2.13	8.62	2.08
Frctn Loss (ft)	0.11	Cum Volume (acre-ft)	0.23	63.56	0.39
C & E Loss (ft)	0.01	Cum SA (acres)	0.08	8.31	0.15

CROSS SECTION OUTPUT Profile #SPF

			Left OB	Channel	Right OB
E.G. Elev (ft)	1172.17	Element			
Vel Head (ft)	7.92	Wt. n-Val.	0.035	0.035	0.035
W.S. Elev (ft)	1164.25	Reach Len. (ft)	40.00	40.00	40.00
Crit W.S. (ft)	1166.60	Flow Area (sq ft)	28.54	2783.17	46.03
E.G. Slope (ft/ft)	0.034175	Area (sq ft)	28.54	2783.17	46.03
Q Total (cfs)	64000.00	Flow (cfs)	359.12	63167.88	473.00
Top Width (ft)	609.52	Top Width (ft)	13.43	565.87	30.22
Vel Total (ft/s)	22.40	Avg. Vel. (ft/s)	12.58	22.70	10.28
Max Chl Dpth (ft)	5.89	Hydr. Depth (ft)	2.12	4.92	1.52
Conv. Total (cfs)	346197.6	Conv. (cfs)	1942.6	341696.4	2558.6
Length Wtd. (ft)	40.00	Wetted Per. (ft)	14.05	565.95	30.72
Min Ch El (ft)	1158.36	Shear (lb/sq ft)	4.33	10.49	3.20
Alpha	1.02	Stream Power (lb/ft s)	54.52	238.13	32.85
Frctn Loss (ft)	1.71	Cum Volume (acre-ft)	0.52	84.47	0.94
C & E Loss (ft)	0.36	Cum SA (acres)	0.13	8.40	0.23

Warning: The velocity head has changed by more than 0.5 ft (0.15 m). This may indicate the need for additional cross sections.
Warning: The conveyance ratio (upstream conveyance divided by downstream conveyance) is less than 0.7 or greater than 1.4. This may indicate the need for additional cross sections.
Warning: The energy loss was greater than 1.0 ft (0.3 m). between the current and previous cross

```
        section.  This may indicate the need for additional cross sections.
Note:   Program found supercritical flow starting at this cross section.

CROSS SECTION


RIVER: Indian Bend Wash
REACH: Main                RS: 14.4

INPUT
Description: Dupicate Section of 14.5, Same Elevations, Pier 7 WB
Station Elevation Data    num=      89
     Sta    Elev     Sta    Elev     Sta    Elev     Sta    Elev     Sta    Elev
   25.84 1184.59   27.87 1183.81   37.36 1174.01   56.94 1172.07   74.36 1166.28
    88.4  1161.7   89.13 1161.55   94.02 1160.13  108.01 1159.71  108.051159.709
  115.41 1159.57  117.64  1159.6  130.55 1159.57  132.43 1159.61  136.35  1159.6
  138.34 1159.55  140.02 1159.58  142.84 1159.57  153.76 1159.65  156.46 1159.62
  196.67 1159.79  231.72  1159.5  250.79 1159.51  266.31 1159.18  268.45 1159.08
  285.87 1158.96  290.45 1158.86  293.64 1158.78  305.56 1158.68  307.45 1158.61
  317.58 1158.53  350.23  1158.6  355.85 1158.62  373.61 1158.58  389.64 1158.64
  400.36 1158.74  417.38 1158.36  427.29 1158.63  461.55 1158.56  466.67 1158.43
  477.92 1158.36  489.35 1158.61  496.75 1158.69  500.67  1158.8  505.11 1159.04
  516.47 1159.06  518.88 1159.12  527.22 1159.24  529.44 1159.36  531.46 1159.58
   533.4 1159.68  535.54 1159.69  537.56 1159.83  546.04 1159.91  548.44 1159.98
  558.15 1160.16  571.18  1160.2  572.96 1160.25  575.65 1160.23  576.64 1160.18
  586.73 1160.01  594.42 1160.19  605.19  1160.2  607.08 1160.25  618.11 1160.45
  620.22 1160.43  622.61 1160.47  634.39 1160.49  638.45 1160.55  643.13 1160.67
  659.89 1160.76  665.72 1162.69   665.9 1162.68  666.75 1162.65  668.38 1162.75
   678.6 1162.74  687.93 1163.41  689.34 1164.01  692.77 1165.07   694.6 1165.53
  696.06 1166.14  706.65 1169.91  711.19 1171.64  716.06  1172.1  722.22 1172.27
  729.07 1172.18  743.52 1166.01   748.8 1166.03   749.8 1166.19

Manning's n Values        num=       3
     Sta   n Val     Sta   n Val     Sta   n Val
   25.84    .035   94.02    .035  659.89    .035

Bank Sta: Left   Right    Lengths: Left Channel   Right     Coeff Contr.   Expan.
         94.02  659.89               85      85      85              .1       .3

CROSS SECTION OUTPUT  Profile #Critical Design

  E.G. Elev (ft)          1166.80   Element                  Left OB    Channel   Right OB
  Vel Head (ft)              0.97   Wt. n-Val.                0.035      0.035      0.035
  W.S. Elev (ft)          1165.83   Reach Len. (ft)           85.00      85.00      85.00
  Crit W.S. (ft)                    Flow Area (sq ft)         53.58    3677.01      97.94
  E.G. Slope (ft/ft)      0.002910  Area (sq ft)              53.58    3677.01      97.94
  Q Total (cfs)           30000.00  Flow (cfs)               243.65   29320.50     435.85
  Top Width (ft)            619.57  Top Width (ft)            18.27     565.87      35.42
  Vel Total (ft/s)            7.84  Avg. Vel. (ft/s)           4.55       7.97       4.45
  Max Chl Dpth (ft)           7.47  Hydr. Depth (ft)           2.93       6.50       2.76
  Conv. Total (cfs)       556137.9  Conv. (cfs)              4516.8   543541.4     8079.7
```

Table 7
HEC-RAS Report

Length Wtd. (ft)	85.00	Wetted Per. (ft)	19.15	565.95	36.16
Min Ch El (ft)	1158.36	Shear (lb/sq ft)	0.51	1.18	0.49
Alpha	1.02	Stream Power (lb/ft s)	2.31	9.41	2.19
Frctn Loss (ft)	0.28	Cum Volume (acre-ft)	0.18	60.14	0.30
C & E Loss (ft)	0.02	Cum SA (acres)	0.06	7.79	0.12

CROSS SECTION OUTPUT Profile #SPF

E.G. Elev (ft)	1170.95	Element	Left OB	Channel	Right OB
Vel Head (ft)	1.88	Wt. n-Val.	0.035	0.035	0.035
W.S. Elev (ft)	1169.08	Reach Len. (ft)	85.00	85.00	85.00
Crit W.S. (ft)	1166.60	Flow Area (sq ft)	128.89	5515.12	257.54
E.G. Slope (ft/ft)	0.003307	Area (sq ft)	128.89	5515.12	257.54
Q Total (cfs)	64000.00	Flow (cfs)	841.57	61432.81	1725.62
Top Width (ft)	651.82	Top Width (ft)	28.07	565.87	57.88
Vel Total (ft/s)	10.84	Avg. Vel. (ft/s)	6.53	11.14	6.70
Max Chl Dpth (ft)	10.72	Hydr. Depth (ft)	4.59	9.75	4.45
Conv. Total (cfs)	1112873.0	Conv. (cfs)	14633.8	1068233.0	30006.1
Length Wtd. (ft)	85.00	Wetted Per. (ft)	29.47	565.95	62.71
Min Ch El (ft)	1158.36	Shear (lb/sq ft)	0.90	2.01	0.85
Alpha	1.03	Stream Power (lb/ft s)	5.90	22.41	5.68
Frctn Loss (ft)	0.31	Cum Volume (acre-ft)	0.45	80.66	0.80
C & E Loss (ft)	0.03	Cum SA (acres)	0.11	7.88	0.19

Warning: Divided flow computed for this cross-section.
Warning: The cross-section end points had to be extended vertically for the computed water surface.
Note: Hydraulic jump has occurred between this cross section and the previous upstream section.

CROSS SECTION

RIVER: Indian Bend Wash
REACH: Main RS: 14.3

INPUT
Description: Dupicate Section of 14.5, Same Elevations, Pier 6 WB
Station Elevation Data num= 89

Sta	Elev	Sta	Elev	Sta	Elev	Sta	Elev	Sta	Elev
25.84	1184.59	27.87	1183.81	37.36	1174.01	56.94	1172.07	74.36	1166.28
88.4	1161.7	89.13	1161.55	94.02	1160.13	108.01	1159.71	108.05	1159.709
115.41	1159.57	117.64	1159.6	130.55	1159.57	132.43	1159.61	136.35	1159.6
138.34	1159.55	140.02	1159.58	142.84	1159.57	153.76	1159.65	156.46	1159.62
196.67	1159.79	231.72	1159.5	250.79	1159.51	266.31	1159.18	268.45	1159.08
285.87	1158.96	290.45	1158.86	293.64	1158.78	305.56	1158.68	307.45	1158.61
317.58	1158.53	350.23	1158.6	355.85	1158.62	373.61	1158.58	389.64	1158.64
400.36	1158.74	417.38	1158.36	427.29	1158.63	461.55	1158.56	466.67	1158.43
477.92	1158.36	489.35	1158.61	496.75	1158.69	500.67	1158.8	505.11	1159.04
516.47	1159.06	518.88	1159.12	527.22	1159.24	529.44	1159.36	531.46	1159.58
533.4	1159.68	535.54	1159.69	537.56	1159.83	546.04	1159.91	548.44	1159.98

558.15	1160.16	571.18	1160.2	572.96	1160.25	575.65	1160.23	576.64	1160.18
586.73	1160.01	594.42	1160.19	605.19	1160.2	607.08	1160.25	618.11	1160.45
620.22	1160.43	622.61	1160.47	634.39	1160.49	638.45	1160.55	643.13	1160.67
659.89	1160.76	665.72	1162.69	665.9	1162.68	666.75	1162.65	668.38	1162.75
678.6	1162.74	687.93	1163.41	689.34	1164.01	692.77	1165.07	694.6	1165.53
696.06	1166.14	706.65	1169.91	711.19	1171.64	716.06	1172.1	722.22	1172.27
729.07	1172.18	743.52	1166.01	748.8	1166.03	749.8	1166.19		

Manning's n Values num= 3

Sta	n Val	Sta	n Val	Sta	n Val
25.84	.035	94.02	.035	659.89	.035

Bank Sta: Left	Right	Lengths: Left	Channel	Right	Coeff Contr.	Expan.
94.02	659.89	62.8	68.5	74.6	.1	.3

CROSS SECTION OUTPUT Profile #Critical Design

			Left OB	Channel	Right OB
E.G. Elev (ft)	1166.51	Element			
Vel Head (ft)	1.13	Wt. n-Val.	0.035	0.035	0.035
W.S. Elev (ft)	1165.37	Reach Len. (ft)	62.80	68.50	74.60
Crit W.S. (ft)		Flow Area (sq ft)	45.59	3419.84	82.11
E.G. Slope (ft/ft)	0.003726	Area (sq ft)	45.59	3419.84	82.11
Q Total (cfs)	30000.00	Flow (cfs)	222.13	29400.36	377.51
Top Width (ft)	616.84	Top Width (ft)	16.88	565.87	34.09
Vel Total (ft/s)	8.46	Avg. Vel. (ft/s)	4.87	8.60	4.60
Max Chl Dpth (ft)	7.01	Hydr. Depth (ft)	2.70	6.04	2.41
Conv. Total (cfs)	491495.8	Conv. (cfs)	3639.2	481671.7	6184.9
Length Wtd. (ft)	68.52	Wetted Per. (ft)	17.68	565.95	34.75
Min Ch El (ft)	1158.36	Shear (lb/sq ft)	0.60	1.41	0.55
Alpha	1.02	Stream Power (lb/ft s)	2.92	12.08	2.53
Frctn Loss (ft)	0.25	Cum Volume (acre-ft)	0.09	53.22	0.12
C & E Loss (ft)	0.09	Cum SA (acres)	0.03	6.68	0.05

Warning: The velocity head has changed by more than 0.5 ft (0.15 m). This may indicate the need for additional cross sections.

CROSS SECTION OUTPUT Profile #SPF

			Left OB	Channel	Right OB
E.G. Elev (ft)	1170.61	Element			
Vel Head (ft)	2.17	Wt. n-Val.	0.035	0.035	0.035
W.S. Elev (ft)	1168.44	Reach Len. (ft)	62.80	68.50	74.60
Crit W.S. (ft)	1166.61	Flow Area (sq ft)	111.70	5156.48	221.89
E.G. Slope (ft/ft)	0.004166	Area (sq ft)	111.70	5156.48	221.89
Q Total (cfs)	64000.00	Flow (cfs)	779.90	61635.57	1584.53
Top Width (ft)	646.65	Top Width (ft)	26.17	565.87	54.61
Vel Total (ft/s)	11.66	Avg. Vel. (ft/s)	6.98	11.95	7.14
Max Chl Dpth (ft)	10.08	Hydr. Depth (ft)	4.27	9.11	4.06
Conv. Total (cfs)	991619.8	Conv. (cfs)	12083.8	954985.1	24550.8
Length Wtd. (ft)	68.54	Wetted Per. (ft)	27.46	565.95	58.58
Min Ch El (ft)	1158.36	Shear (lb/sq ft)	1.06	2.37	0.99

Alpha	1.03	Stream Power (lb/ft s)	7.39	28.32	7.03
Frctn Loss (ft)	0.24	Cum Volume (acre-ft)	0.22	70.25	0.33
C & E Loss (ft)	0.13	Cum SA (acres)	0.05	6.77	0.08

Warning: Divided flow computed for this cross-section.
Warning: The cross-section end points had to be extended vertically for the computed water surface.
Warning: The velocity head has changed by more than 0.5 ft (0.15 m). This may indicate the need for additional cross sections.

CROSS SECTION

RIVER: Indian Bend Wash
REACH: Main RS: 14

INPUT
Description: DS Top of Level I Grade Control Structure, Pier 5 WB
Station Elevation Data num= 7

Sta	Elev	Sta	Elev	Sta	Elev	Sta	Elev	Sta	Elev
0	1171.92	15	1171.92	30.75	1161.42	341.5	1158.42	652.25	1161.42
668	1171.92	683	1171.92						

Manning's n Values num= 3

Sta	n Val	Sta	n Val	Sta	n Val
0	.02	30.75	.02	652.25	.02

Bank Sta: Left	Right	Lengths: Left	Channel	Right	Coeff Contr.	Expan.
30.75	652.25	13.5	13.5	13.5	.1	.3

CROSS SECTION OUTPUT Profile #Critical Design

E.G. Elev (ft)	1166.16	Element	Left OB	Channel	Right OB
Vel Head (ft)	2.08	Wt. n-Val.	0.020	0.020	0.020
W.S. Elev (ft)	1164.09	Reach Len. (ft)	13.50	13.50	13.50
Crit W.S. (ft)	1164.09	Flow Area (sq ft)	5.33	2588.88	5.33
E.G. Slope (ft/ft)	0.003618	Area (sq ft)	5.33	2588.88	5.33
Q Total (cfs)	30000.00	Flow (cfs)	25.51	29948.98	25.51
Top Width (ft)	629.50	Top Width (ft)	4.00	621.50	4.00
Vel Total (ft/s)	11.54	Avg. Vel. (ft/s)	4.79	11.57	4.79
Max Chl Dpth (ft)	5.67	Hydr. Depth (ft)	1.33	4.17	1.33
Conv. Total (cfs)	498787.3	Conv. (cfs)	424.2	497939.0	424.2
Length Wtd. (ft)	13.50	Wetted Per. (ft)	4.81	621.53	4.81
Min Ch El (ft)	1158.42	Shear (lb/sq ft)	0.25	0.94	0.25
Alpha	1.00	Stream Power (lb/ft s)	1.20	10.88	1.20
Frctn Loss (ft)	0.01	Cum Volume (acre-ft)	0.05	48.49	0.05
C & E Loss (ft)	0.51	Cum SA (acres)	0.02	5.75	0.02

Warning: The energy equation could not be balanced within the specified number of iterations. The program used critical depth for the water surface and continued on with the calculations.

Warning: The velocity head has changed by more than 0.5 ft (0.15 m). This may indicate the need for additional cross sections.
Warning: The conveyance ratio (upstream conveyance divided by downstream conveyance) is less than 0.7 or greater than 1.4. This may indicate the need for additional cross sections.
Warning: The energy loss was greater than 1.0 ft (0.3 m). between the current and previous cross section. This may indicate the need for additional cross sections.
Warning: During the standard step iterations, when the assumed water surface was set equal to critical depth, the calculated water surface came back below critical depth. This indicates that there is not a valid subcritical answer. The program defaulted to critical depth.

CROSS SECTION OUTPUT Profile #SPF

E.G. Elev (ft)	1170.23	Element	Left OB	Channel	Right OB
Vel Head (ft)	3.44	Wt. n-Val.	0.020	0.020	0.020
W.S. Elev (ft)	1166.80	Reach Len. (ft)	13.50	13.50	13.50
Crit W.S. (ft)	1166.80	Flow Area (sq ft)	21.67	4272.81	21.67
E.G. Slope (ft/ft)	0.003080	Area (sq ft)	21.67	4272.81	21.67
Q Total (cfs)	64000.00	Flow (cfs)	152.77	63694.46	152.77
Top Width (ft)	637.63	Top Width (ft)	8.06	621.50	8.06
Vel Total (ft/s)	14.83	Avg. Vel. (ft/s)	7.05	14.91	7.05
Max Chl Dpth (ft)	8.38	Hydr. Depth (ft)	2.69	6.88	2.69
Conv. Total (cfs)	1153256.0	Conv. (cfs)	2752.8	1147750.0	2752.8
Length Wtd. (ft)	13.50	Wetted Per. (ft)	9.69	621.53	9.69
Min Ch El (ft)	1158.42	Shear (lb/sq ft)	0.43	1.32	0.43
Alpha	1.01	Stream Power (lb/ft s)	3.03	19.70	3.03
Frctn Loss (ft)	0.01	Cum Volume (acre-ft)	0.12	62.84	0.12
C & E Loss (ft)	0.74	Cum SA (acres)	0.03	5.84	0.03

Warning: The energy equation could not be balanced within the specified number of iterations. The program used critical depth for the water surface and continued on with the calculations.
Warning: The velocity head has changed by more than 0.5 ft (0.15 m). This may indicate the need for additional cross sections.
Warning: The conveyance ratio (upstream conveyance divided by downstream conveyance) is less than 0.7 or greater than 1.4. This may indicate the need for additional cross sections.
Warning: The energy loss was greater than 1.0 ft (0.3 m). between the current and previous cross section. This may indicate the need for additional cross sections.
Warning: During the standard step iterations, when the assumed water surface was set equal to critical depth, the calculated water surface came back below critical depth. This indicates that there is not a valid subcritical answer. The program defaulted to critical depth.

CROSS SECTION

RIVER: Indian Bend Wash
REACH: Main RS: 13

INPUT
Description: DS Toe of Level I Grade Control Structure
Station Elevation Data num= 9

Sta	Elev	Sta	Elev	Sta	Elev	Sta	Elev	Sta	Elev

```
      0 1167.92      36 1167.92   59.25 1152.42   74.25 1152.42   356.5 1149.42
  638.75 1152.42  653.75 1152.42     677 1167.92     713 1167.92

Manning's n Values         num=       3
     Sta   n Val     Sta   n Val     Sta   n Val
       0     .02   59.25     .02  653.75     .02

Bank Sta: Left   Right    Lengths: Left Channel   Right     Coeff Contr.   Expan.
         59.25  653.75             46.5    46.5    46.5              .1       .3

CROSS SECTION OUTPUT  Profile #Critical Design

  E.G. Elev (ft)           1161.34    Element                  Left OB    Channel   Right OB
  Vel Head (ft)               0.39    Wt. n-Val.                0.020      0.020      0.020
  W.S. Elev (ft)           1160.95    Reach Len. (ft)           46.50      46.50      46.50
  Crit W.S. (ft)           1155.27    Flow Area (sq ft)         54.58    5918.14      54.58
  E.G. Slope (ft/ft)      0.000213    Area (sq ft)              54.58    5918.14      54.58
  Q Total (cfs)           30000.00    Flow (cfs)               137.83   29724.35     137.83
  Top Width (ft)            620.09    Top Width (ft)            12.80     594.50      12.80
  Vel Total (ft/s)            4.98    Avg. Vel. (ft/s)           2.53       5.02       2.53
  Max Chl Dpth (ft)          11.53    Hydr. Depth (ft)           4.27       9.95       4.27
  Conv. Total (cfs)       2053524.0    Conv. (cfs)              9434.2  2034655.0     9434.2
  Length Wtd. (ft)           46.50    Wetted Per. (ft)          15.38     594.53      15.38
  Min Ch El (ft)           1149.42    Shear (lb/sq ft)           0.05       0.13       0.05
  Alpha                       1.01    Stream Power (lb/ft s)     0.12       0.67       0.12
  Frctn Loss (ft)             0.01    Cum Volume (acre-ft)       0.04      47.17       0.04
  C & E Loss (ft)             0.00    Cum SA (acres)             0.01       5.56       0.01


CROSS SECTION OUTPUT  Profile #SPF

  E.G. Elev (ft)           1165.42    Element                  Left OB    Channel   Right OB
  Vel Head (ft)               0.96    Wt. n-Val.                0.020      0.020      0.020
  W.S. Elev (ft)           1164.46    Reach Len. (ft)           46.50      46.50      46.50
  Crit W.S. (ft)           1158.10    Flow Area (sq ft)        108.75    8005.35     108.75
  E.G. Slope (ft/ft)      0.000352    Area (sq ft)             108.75    8005.35     108.75
  Q Total (cfs)           64000.00    Flow (cfs)               443.49   63113.03     443.49
  Top Width (ft)            630.62    Top Width (ft)            18.06     594.50      18.06
  Vel Total (ft/s)            7.78    Avg. Vel. (ft/s)           4.08       7.88       4.08
  Max Chl Dpth (ft)          15.04    Hydr. Depth (ft)           6.02      13.47       6.02
  Conv. Total (cfs)       3413580.0    Conv. (cfs)             23654.3  3366271.0    23654.3
  Length Wtd. (ft)           46.50    Wetted Per. (ft)          21.71     594.53      21.71
  Min Ch El (ft)           1149.42    Shear (lb/sq ft)           0.11       0.30       0.11
  Alpha                       1.02    Stream Power (lb/ft s)     0.45       2.33       0.45
  Frctn Loss (ft)             0.02    Cum Volume (acre-ft)       0.10      60.93       0.10
  C & E Loss (ft)             0.00    Cum SA (acres)             0.02       5.65       0.02


CROSS SECTION
```

Table 7
HEC-RAS Report

RIVER: Indian Bend Wash
REACH: Main RS: 12

INPUT
Description: US Toe of Level II Grade Control Structure
Station Elevation Data num= 11

Sta	Elev	Sta	Elev	Sta	Elev	Sta	Elev	Sta	Elev
0	1167.92	36	1167.92	53.25	1156.42	68.25	1156.42	74.25	1152.42
356.5	1149.42	638.75	1152.42	644.75	1156.42	659.75	1156.42	677	1167.92
713	1167.92								

Manning's n Values num= 3

Sta	n Val	Sta	n Val	Sta	n Val
0	.02	53.25	.02	659.75	.02

Bank Sta: Left	Right	Lengths: Left	Channel	Right	Coeff Contr.	Expan.
53.25	659.75	4	4	4	.1	.3

CROSS SECTION OUTPUT Profile #Critical Design

E.G. Elev (ft)	1161.33	Element	Left OB	Channel	Right OB
Vel Head (ft)	0.40	Wt. n-Val.	0.020	0.020	0.020
W.S. Elev (ft)	1160.92	Reach Len. (ft)	4.00	4.00	4.00
Crit W.S. (ft)		Flow Area (sq ft)	15.21	5859.70	15.21
E.G. Slope (ft/ft)	0.000231	Area (sq ft)	15.21	5859.70	15.21
Q Total (cfs)	30000.00	Flow (cfs)	26.11	29947.79	26.11
Top Width (ft)	620.01	Top Width (ft)	6.75	606.50	6.75
Vel Total (ft/s)	5.09	Avg. Vel. (ft/s)	1.72	5.11	1.72
Max Chl Dpth (ft)	11.50	Hydr. Depth (ft)	2.25	9.66	2.25
Conv. Total (cfs)	1972988.0	Conv. (cfs)	1716.8	1969555.0	1716.8
Length Wtd. (ft)	4.00	Wetted Per. (ft)	8.12	608.95	8.12
Min Ch El (ft)	1149.42	Shear (lb/sq ft)	0.03	0.14	0.03
Alpha	1.01	Stream Power (lb/ft s)	0.05	0.71	0.05
Frctn Loss (ft)	0.00	Cum Volume (acre-ft)	0.00	40.89	0.00
C & E Loss (ft)	0.12	Cum SA (acres)	0.00	4.92	0.00

Warning: The velocity head has changed by more than 0.5 ft (0.15 m). This may indicate the need for additional cross sections.
Warning: The conveyance ratio (upstream conveyance divided by downstream conveyance) is less than 0.7 or greater than 1.4. This may indicate the need for additional cross sections.

CROSS SECTION OUTPUT Profile #SPF

E.G. Elev (ft)	1165.40	Element	Left OB	Channel	Right OB
Vel Head (ft)	0.99	Wt. n-Val.	0.020	0.020	0.020
W.S. Elev (ft)	1164.41	Reach Len. (ft)	4.00	4.00	4.00
Crit W.S. (ft)		Flow Area (sq ft)	47.89	7975.42	47.89
E.G. Slope (ft/ft)	0.000374	Area (sq ft)	47.89	7975.42	47.89
Q Total (cfs)	64000.00	Flow (cfs)	153.34	63693.31	153.34
Top Width (ft)	630.47	Top Width (ft)	11.99	606.50	11.99

Vel Total (ft/s)	7.93	Avg. Vel. (ft/s)	3.20	7.99	3.20
Max Chl Dpth (ft)	14.99	Hydr. Depth (ft)	4.00	13.15	4.00
Conv. Total (cfs)	3308143.0	Conv. (cfs)	7926.3	3292290.0	7926.3
Length Wtd. (ft)	4.00	Wetted Per. (ft)	14.41	608.95	14.41
Min Ch El (ft)	1149.42	Shear (lb/sq ft)	0.08	0.31	0.08
Alpha	1.01	Stream Power (lb/ft s)	0.25	2.44	0.25
Frctn Loss (ft)	0.00	Cum Volume (acre-ft)	0.02	52.40	0.02
C & E Loss (ft)	0.19	Cum SA (acres)	0.01	5.01	0.01

Warning: The velocity head has changed by more than 0.5 ft (0.15 m). This may indicate the need for additional cross sections.
Warning: The conveyance ratio (upstream conveyance divided by downstream conveyance) is less than 0.7 or greater than 1.4. This may indicate the need for additional cross sections.

CROSS SECTION

RIVER: Indian Bend Wash
REACH: Main RS: 11

INPUT
Description: US Top of Level II Grade Control Structure
Station Elevation Data num= 9

Sta	Elev	Sta	Elev	Sta	Elev	Sta	Elev	Sta	Elev
0	1171.92	15	1171.92	38.25	1156.42	53.25	1156.42	356.5	1153.42
659.75	1156.42	674.75	1156.42	698	1171.92	713	1171.92		

Manning's n Values num= 3

Sta	n Val	Sta	n Val	Sta	n Val
0	.02	38.25	.02	674.75	.02

Bank Sta: Left	Right	Lengths: Left	Channel	Right	Coeff Contr.	Expan.
38.25	674.75	8	8	8	.1	.3

CROSS SECTION OUTPUT Profile #Critical Design

			Left OB	Channel	Right OB
E.G. Elev (ft)	1161.20	Element	Left OB	Channel	Right OB
Vel Head (ft)	1.64	Wt. n-Val.	0.020	0.020	0.020
W.S. Elev (ft)	1159.56	Reach Len. (ft)	8.00	8.00	8.00
Crit W.S. (ft)	1159.09	Flow Area (sq ft)	7.39	2908.06	7.39
E.G. Slope (ft/ft)	0.002532	Area (sq ft)	7.39	2908.06	7.39
Q Total (cfs)	30000.00	Flow (cfs)	33.02	29933.96	33.02
Top Width (ft)	645.92	Top Width (ft)	4.71	636.50	4.71
Vel Total (ft/s)	10.26	Avg. Vel. (ft/s)	4.47	10.29	4.47
Max Chl Dpth (ft)	6.14	Hydr. Depth (ft)	1.57	4.57	1.57
Conv. Total (cfs)	596186.1	Conv. (cfs)	656.3	594873.6	656.3
Length Wtd. (ft)	8.00	Wetted Per. (ft)	5.66	636.53	5.66
Min Ch El (ft)	1153.42	Shear (lb/sq ft)	0.21	0.72	0.21
Alpha	1.00	Stream Power (lb/ft s)	0.92	7.43	0.92
Frctn Loss (ft)	0.02	Cum Volume (acre-ft)	0.00	40.48	0.00

C & E Loss (ft)	0.04	Cum SA (acres)	0.00	4.86	0.00

CROSS SECTION OUTPUT Profile #SPF

			Left OB	Channel	Right OB
E.G. Elev (ft)	1165.21	Element			
Vel Head (ft)	2.84	Wt. n-Val.	0.020	0.020	0.020
W.S. Elev (ft)	1162.37	Reach Len. (ft)	8.00	8.00	8.00
Crit W.S. (ft)	1161.78	Flow Area (sq ft)	26.52	4694.56	26.52
E.G. Slope (ft/ft)	0.002320	Area (sq ft)	26.52	4694.56	26.52
Q Total (cfs)	64000.00	Flow (cfs)	173.58	63652.84	173.58
Top Width (ft)	654.34	Top Width (ft)	8.92	636.50	8.92
Vel Total (ft/s)	13.48	Avg. Vel. (ft/s)	6.55	13.56	6.55
Max Chl Dpth (ft)	8.95	Hydr. Depth (ft)	2.97	7.38	2.97
Conv. Total (cfs)	1328741.0	Conv. (cfs)	3603.8	1321533.0	3603.8
Length Wtd. (ft)	8.00	Wetted Per. (ft)	10.72	636.53	10.72
Min Ch El (ft)	1153.42	Shear (lb/sq ft)	0.36	1.07	0.36
Alpha	1.01	Stream Power (lb/ft s)	2.35	14.48	2.35
Frctn Loss (ft)	0.02	Cum Volume (acre-ft)	0.01	51.82	0.01
C & E Loss (ft)	0.05	Cum SA (acres)	0.01	4.95	0.01

Warning: The velocity head has changed by more than 0.5 ft (0.15 m). This may indicate the need for additional cross sections.

CROSS SECTION

RIVER: Indian Bend Wash
REACH: Main RS: 10

INPUT
Description: DS Top of Level II Grade Control Structure
Station Elevation Data num= 9

Sta	Elev	Sta	Elev	Sta	Elev	Sta	Elev	Sta	Elev
0	1171.92	15	1171.92	38.25	1156.42	53.25	1156.42	356.5	1153.42
659.75	1156.42	674.75	1156.42	698	1171.92	713	1171.92		

Manning's n Values num= 3

Sta	n Val	Sta	n Val	Sta	n Val
0	.02	38.25	.02	674.75	.02

Bank Sta: Left	Right	Lengths: Left	Channel	Right	Coeff Contr.	Expan.
38.25	674.75	15.75	15.75	15.75	.1	.3

CROSS SECTION OUTPUT Profile #Critical Design

			Left OB	Channel	Right OB
E.G. Elev (ft)	1161.13	Element			
Vel Head (ft)	2.04	Wt. n-Val.	0.020	0.020	0.020
W.S. Elev (ft)	1159.09	Reach Len. (ft)	15.75	15.75	15.75
Crit W.S. (ft)	1159.09	Flow Area (sq ft)	5.34	2608.77	5.34

Table 7
HEC-RAS Report

E.G. Slope (ft/ft)	0.003640	Area (sq ft)	5.34	2608.77	5.34
Q Total (cfs)	30000.00	Flow (cfs)	25.69	29948.62	25.69
Top Width (ft)	644.51	Top Width (ft)	4.00	636.50	4.00
Vel Total (ft/s)	11.45	Avg. Vel. (ft/s)	4.81	11.48	4.81
Max Chl Dpth (ft)	5.67	Hydr. Depth (ft)	1.33	4.10	1.33
Conv. Total (cfs)	497228.3	Conv. (cfs)	425.8	496376.8	425.8
Length Wtd. (ft)	15.75	Wetted Per. (ft)	4.81	636.53	4.81
Min Ch El (ft)	1153.42	Shear (lb/sq ft)	0.25	0.93	0.25
Alpha	1.00	Stream Power (lb/ft s)	1.21	10.69	1.21
Frctn Loss (ft)	0.01	Cum Volume (acre-ft)	0.00	39.98	0.00
C & E Loss (ft)	0.49	Cum SA (acres)	0.00	4.75	0.00

Warning: The energy equation could not be balanced within the specified number of iterations. The program used critical depth for the water surface and continued on with the calculations.
Warning: The velocity head has changed by more than 0.5 ft (0.15 m). This may indicate the need for additional cross sections.
Warning: The conveyance ratio (upstream conveyance divided by downstream conveyance) is less than 0.7 or greater than 1.4. This may indicate the need for additional cross sections.
Warning: The energy loss was greater than 1.0 ft (0.3 m). between the current and previous cross section. This may indicate the need for additional cross sections.
Warning: During the standard step iterations, when the assumed water surface was set equal to critical depth, the calculated water surface came back below critical depth. This indicates that there is not a valid subcritical answer. The program defaulted to critical depth.

CROSS SECTION OUTPUT Profile #SPF

		Element	Left OB	Channel	Right OB
E.G. Elev (ft)	1165.14				
Vel Head (ft)	3.36	Wt. n-Val.	0.020	0.020	0.020
W.S. Elev (ft)	1161.78	Reach Len. (ft)	15.75	15.75	15.75
Crit W.S. (ft)	1161.78	Flow Area (sq ft)	21.55	4321.23	21.55
E.G. Slope (ft/ft)	0.003062	Area (sq ft)	21.55	4321.23	21.55
Q Total (cfs)	64000.00	Flow (cfs)	151.19	63697.63	151.19
Top Width (ft)	652.58	Top Width (ft)	8.04	636.50	8.04
Vel Total (ft/s)	14.66	Avg. Vel. (ft/s)	7.02	14.74	7.02
Max Chl Dpth (ft)	8.36	Hydr. Depth (ft)	2.68	6.79	2.68
Conv. Total (cfs)	1156523.0	Conv. (cfs)	2732.1	1151059.0	2732.1
Length Wtd. (ft)	15.75	Wetted Per. (ft)	9.66	636.53	9.66
Min Ch El (ft)	1153.42	Shear (lb/sq ft)	0.43	1.30	0.43
Alpha	1.01	Stream Power (lb/ft s)	2.99	19.13	2.99
Frctn Loss (ft)	0.01	Cum Volume (acre-ft)	0.01	51.00	0.01
C & E Loss (ft)	0.72	Cum SA (acres)	0.01	4.84	0.01

Warning: The energy equation could not be balanced within the specified number of iterations. The program used critical depth for the water surface and continued on with the calculations.
Warning: The velocity head has changed by more than 0.5 ft (0.15 m). This may indicate the need for additional cross sections.
Warning: The conveyance ratio (upstream conveyance divided by downstream conveyance) is less than 0.7 or greater than 1.4. This may indicate the need for additional cross sections.
Warning: The energy loss was greater than 1.0 ft (0.3 m). between the current and previous cross

```
        section.  This may indicate the need for additional cross sections.
Warning: During the standard step iterations, when the assumed water surface was set equal to critical
         depth, the calculated water surface came back below critical depth.  This indicates that there
         is not a valid subcritical answer.  The program defaulted to critical depth.

CROSS SECTION


RIVER: Indian Bend Wash
REACH: Main                RS: 9

INPUT
Description: DS Toe of Level II Grade Control Structure
Station Elevation Data     num=      11
     Sta    Elev      Sta    Elev      Sta    Elev      Sta    Elev      Sta    Elev
       0 1167.92       21 1167.92   38.25 1156.42   53.25 1156.42      69 1145.92
   341.5 1142.92      614 1145.92  629.75 1156.42  644.75 1156.42     662 1167.92
     683 1167.92

Manning's n Values         num=       3
     Sta   n Val     Sta   n Val     Sta   n Val
       0     .02   38.25     .02  644.75     .02

Bank Sta: Left   Right    Lengths: Left Channel   Right     Coeff Contr.   Expan.
         38.25  644.75            44.25   44.25   44.25             .1       .3

CROSS SECTION OUTPUT  Profile #Critical Design

  E.G. Elev (ft)          1155.34    Element                  Left OB    Channel   Right OB
  Vel Head (ft)              0.41    Wt. n-Val.                          0.020
  W.S. Elev (ft)          1154.94    Reach Len. (ft)           44.25     44.25      44.25
  Crit W.S. (ft)          1148.97    Flow Area (sq ft)                 5852.80
  E.G. Slope (ft/ft)     0.000217    Area (sq ft)                      5852.80
  Q Total (cfs)          30000.00    Flow (cfs)                       30000.00
  Top Width (ft)           572.05    Top Width (ft)                     572.05
  Vel Total (ft/s)           5.13    Avg. Vel. (ft/s)                     5.13
  Max Chl Dpth (ft)         12.02    Hydr. Depth (ft)                    10.23
  Conv. Total (cfs)      2036341.0    Conv. (cfs)                    2036341.0
  Length Wtd. (ft)          44.25    Wetted Per. (ft)                   577.54
  Min Ch El (ft)          1142.92    Shear (lb/sq ft)                     0.14
  Alpha                      1.00    Stream Power (lb/ft s)               0.70
  Frctn Loss (ft)            0.01    Cum Volume (acre-ft)                38.45
  C & E Loss (ft)            0.00    Cum SA (acres)                       4.53


CROSS SECTION OUTPUT  Profile #SPF

  E.G. Elev (ft)          1159.78    Element                  Left OB    Channel   Right OB
  Vel Head (ft)              0.95    Wt. n-Val.                0.020     0.020      0.020
  W.S. Elev (ft)          1158.83    Reach Len. (ft)           44.25     44.25      44.25
  Crit W.S. (ft)          1151.93    Flow Area (sq ft)          4.35   8165.51       4.35
```

E.G. Slope (ft/ft)	0.000352	Area (sq ft)	4.35	8165.51	4.35
Q Total (cfs)	64000.00	Flow (cfs)	6.07	63987.87	6.07
Top Width (ft)	613.72	Top Width (ft)	3.61	606.50	3.61
Vel Total (ft/s)	7.83	Avg. Vel. (ft/s)	1.40	7.84	1.40
Max Chl Dpth (ft)	15.91	Hydr. Depth (ft)	1.20	13.46	1.20
Conv. Total (cfs)	3410073.0	Conv. (cfs)	323.3	3409427.0	323.3
Length Wtd. (ft)	44.25	Wetted Per. (ft)	4.34	612.89	4.34
Min Ch El (ft)	1142.92	Shear (lb/sq ft)	0.02	0.29	0.02
Alpha	1.00	Stream Power (lb/ft s)	0.03	2.30	0.03
Frctn Loss (ft)	0.02	Cum Volume (acre-ft)	0.00	48.74	0.00
C & E Loss (ft)	0.00	Cum SA (acres)	0.00	4.61	0.00

CROSS SECTION

RIVER: Indian Bend Wash
REACH: Main RS: 8

INPUT
Description: US Toe of Level III Grade Control Structure
Station Elevation Data num= 11

Sta	Elev	Sta	Elev	Sta	Elev	Sta	Elev	Sta	Elev
0	1167.92	21	1167.92	38.25	1156.42	53.25	1156.42	69	1145.92
341.5	1142.92	614	1145.92	629.75	1156.42	644.75	1156.42	662	1167.92
683	1167.92								

Manning's n Values num= 3

Sta	n Val	Sta	n Val	Sta	n Val
0	.02	38.25	.02	644.75	.02

Bank Sta: Left	Right	Lengths: Left	Channel	Right	Coeff Contr.	Expan.
38.25	644.75	4	4	4	.1	.3

CROSS SECTION OUTPUT Profile #Critical Design

			Left OB	Channel	Right OB
E.G. Elev (ft)	1155.33	Element			
Vel Head (ft)	0.41	Wt. n-Val.		0.020	
W.S. Elev (ft)	1154.92	Reach Len. (ft)	4.00	4.00	4.00
Crit W.S. (ft)		Flow Area (sq ft)		5846.51	
E.G. Slope (ft/ft)	0.000218	Area (sq ft)		5846.51	
Q Total (cfs)	30000.00	Flow (cfs)		30000.00	
Top Width (ft)	572.01	Top Width (ft)		572.01	
Vel Total (ft/s)	5.13	Avg. Vel. (ft/s)		5.13	
Max Chl Dpth (ft)	12.00	Hydr. Depth (ft)		10.22	
Conv. Total (cfs)	2032791.0	Conv. (cfs)		2032791.0	
Length Wtd. (ft)	4.00	Wetted Per. (ft)		577.50	
Min Ch El (ft)	1142.92	Shear (lb/sq ft)		0.14	
Alpha	1.00	Stream Power (lb/ft s)		0.71	
Frctn Loss (ft)	0.00	Cum Volume (acre-ft)		32.51	
C & E Loss (ft)	0.14	Cum SA (acres)		3.95	

Table 7
HEC-RAS Report

Warning: The velocity head has changed by more than 0.5 ft (0.15 m). This may indicate the need for additional cross sections.
Warning: The conveyance ratio (upstream conveyance divided by downstream conveyance) is less than 0.7 or greater than 1.4. This may indicate the need for additional cross sections.

CROSS SECTION OUTPUT Profile #SPF

E.G. Elev (ft)	1159.76	Element	Left OB	Channel	Right OB
Vel Head (ft)	0.96	Wt. n-Val.	0.020	0.020	0.020
W.S. Elev (ft)	1158.81	Reach Len. (ft)	4.00	4.00	4.00
Crit W.S. (ft)		Flow Area (sq ft)	4.28	8153.73	4.28
E.G. Slope (ft/ft)	0.000354	Area (sq ft)	4.28	8153.73	4.28
Q Total (cfs)	64000.00	Flow (cfs)	5.95	63988.10	5.95
Top Width (ft)	613.66	Top Width (ft)	3.58	606.50	3.58
Vel Total (ft/s)	7.84	Avg. Vel. (ft/s)	1.39	7.85	1.39
Max Chl Dpth (ft)	15.89	Hydr. Depth (ft)	1.19	13.44	1.19
Conv. Total (cfs)	3401871.0	Conv. (cfs)	316.4	3401239.0	316.4
Length Wtd. (ft)	4.00	Wetted Per. (ft)	4.31	612.89	4.31
Min Ch El (ft)	1142.92	Shear (lb/sq ft)	0.02	0.29	0.02
Alpha	1.00	Stream Power (lb/ft s)	0.03	2.31	0.03
Frctn Loss (ft)	0.00	Cum Volume (acre-ft)	0.00	40.45	0.00
C & E Loss (ft)	0.21	Cum SA (acres)	0.00	4.00	0.00

Warning: The velocity head has changed by more than 0.5 ft (0.15 m). This may indicate the need for additional cross sections.
Warning: The conveyance ratio (upstream conveyance divided by downstream conveyance) is less than 0.7 or greater than 1.4. This may indicate the need for additional cross sections.

CROSS SECTION

RIVER: Indian Bend Wash
REACH: Main RS: 7

INPUT
Description: US Top of Level III Grade Control Structure
Station Elevation Data num= 11

Sta	Elev	Sta	Elev	Sta	Elev	Sta	Elev	Sta	Elev
0	1171.92	15	1171.92	38.25	1156.42	53.25	1156.42	63	1149.92
341.5	1146.92	620	1149.92	629.75	1156.42	644.75	1156.42	668	1171.92
683	1171.92								

Manning's n Values num= 3

Sta	n Val	Sta	n Val	Sta	n Val
0	.02	38.25	.02	644.75	.02

Bank Sta: Left	Right	Lengths: Left	Channel	Right	Coeff Contr.	Expan.
38.25	644.75	8	8	8	.1	.3

Table 7
HEC-RAS Report

CROSS SECTION OUTPUT Profile #Critical Design

E.G. Elev (ft)	1155.19	Element	Left OB	Channel	Right OB
Vel Head (ft)	1.79	Wt. n-Val.		0.020	
W.S. Elev (ft)	1153.40	Reach Len. (ft)	8.00	8.00	8.00
Crit W.S. (ft)	1152.89	Flow Area (sq ft)		2792.22	
E.G. Slope (ft/ft)	0.002511	Area (sq ft)		2792.22	
Q Total (cfs)	30000.00	Flow (cfs)		30000.00	
Top Width (ft)	567.44	Top Width (ft)		567.44	
Vel Total (ft/s)	10.74	Avg. Vel. (ft/s)		10.74	
Max Chl Dpth (ft)	6.48	Hydr. Depth (ft)		4.92	
Conv. Total (cfs)	598657.3	Conv. (cfs)		598657.3	
Length Wtd. (ft)	8.00	Wetted Per. (ft)		569.58	
Min Ch El (ft)	1146.92	Shear (lb/sq ft)		0.77	
Alpha	1.00	Stream Power (lb/ft s)		8.26	
Frctn Loss (ft)	0.02	Cum Volume (acre-ft)		32.11	
C & E Loss (ft)	0.04	Cum SA (acres)		3.90	

CROSS SECTION OUTPUT Profile #SPF

E.G. Elev (ft)	1159.56	Element	Left OB	Channel	Right OB
Vel Head (ft)	3.02	Wt. n-Val.	0.020	0.020	0.020
W.S. Elev (ft)	1156.54	Reach Len. (ft)	8.00	8.00	8.00
Crit W.S. (ft)	1155.79	Flow Area (sq ft)	0.01	4589.19	0.01
E.G. Slope (ft/ft)	0.002393	Area (sq ft)	0.01	4589.19	0.01
Q Total (cfs)	64000.00	Flow (cfs)	0.00	63999.99	0.00
Top Width (ft)	606.85	Top Width (ft)	0.17	606.50	0.17
Vel Total (ft/s)	13.95	Avg. Vel. (ft/s)	0.48	13.95	0.48
Max Chl Dpth (ft)	9.62	Hydr. Depth (ft)	0.06	7.57	0.06
Conv. Total (cfs)	1308428.0	Conv. (cfs)	0.1	1308428.0	0.1
Length Wtd. (ft)	8.00	Wetted Per. (ft)	0.21	610.47	0.21
Min Ch El (ft)	1146.92	Shear (lb/sq ft)	0.01	1.12	0.01
Alpha	1.00	Stream Power (lb/ft s)	0.00	15.66	0.00
Frctn Loss (ft)	0.02	Cum Volume (acre-ft)	0.00	39.86	0.00
C & E Loss (ft)	0.07	Cum SA (acres)	0.00	3.94	0.00

Warning: The velocity head has changed by more than 0.5 ft (0.15 m). This may indicate the need for additional cross sections.

CROSS SECTION

RIVER: Indian Bend Wash
REACH: Main RS: 6

INPUT
Description: DS Top of Level III Grade Control Structure
Station Elevation Data num= 11

Table 7
HEC-RAS Report

Sta	Elev	Sta	Elev	Sta	Elev	Sta	Elev	Sta	Elev
0	1171.92	15	1171.92	38.25	1156.42	53.25	1156.42	63	1149.92
341.5	1146.92	620	1149.92	629.75	1156.42	644.75	1156.42	668	1171.92
683	1171.92								

Manning's n Values num= 3

Sta	n Val	Sta	n Val	Sta	n Val
0	.02	53.25	.02	629.75	.02

Bank Sta: Left	Right	Lengths: Left	Channel	Right	Coeff Contr.	Expan.
53.25	629.75	50	50	50	.1	.3

CROSS SECTION OUTPUT Profile #Critical Design

			Left OB	Channel	Right OB
E.G. Elev (ft)	1155.12	Element			
Vel Head (ft)	2.23	Wt. n-Val.		0.020	
W.S. Elev (ft)	1152.89	Reach Len. (ft)	50.00	50.00	50.00
Crit W.S. (ft)	1152.89	Flow Area (sq ft)		2504.46	
E.G. Slope (ft/ft)	0.003593	Area (sq ft)		2504.46	
Q Total (cfs)	30000.00	Flow (cfs)		30000.00	
Top Width (ft)	565.92	Top Width (ft)		565.92	
Vel Total (ft/s)	11.98	Avg. Vel. (ft/s)		11.98	
Max Chl Dpth (ft)	5.97	Hydr. Depth (ft)		4.43	
Conv. Total (cfs)	500475.3	Conv. (cfs)		500475.3	
Length Wtd. (ft)	50.00	Wetted Per. (ft)		567.75	
Min Ch El (ft)	1146.92	Shear (lb/sq ft)		0.99	
Alpha	1.00	Stream Power (lb/ft s)		11.85	
Frctn Loss (ft)	0.02	Cum Volume (acre-ft)		31.62	
C & E Loss (ft)	0.58	Cum SA (acres)		3.79	

Warning: The energy equation could not be balanced within the specified number of iterations. The program used critical depth for the water surface and continued on with the calculations.
Warning: The velocity head has changed by more than 0.5 ft (0.15 m). This may indicate the need for additional cross sections.
Warning: The conveyance ratio (upstream conveyance divided by downstream conveyance) is less than 0.7 or greater than 1.4. This may indicate the need for additional cross sections.
Warning: The energy loss was greater than 1.0 ft (0.3 m). between the current and previous cross section. This may indicate the need for additional cross sections.
Warning: During the standard step iterations, when the assumed water surface was set equal to critical depth, the calculated water surface came back below critical depth. This indicates that there is not a valid subcritical answer. The program defaulted to critical depth.

CROSS SECTION OUTPUT Profile #SPF

			Left OB	Channel	Right OB
E.G. Elev (ft)	1159.47	Element			
Vel Head (ft)	3.67	Wt. n-Val.		0.020	
W.S. Elev (ft)	1155.80	Reach Len. (ft)	50.00	50.00	50.00
Crit W.S. (ft)	1155.80	Flow Area (sq ft)		4161.05	
E.G. Slope (ft/ft)	0.003085	Area (sq ft)		4161.05	
Q Total (cfs)	64000.00	Flow (cfs)		64000.00	

Top Width (ft)	574.63	Top Width (ft)	574.63
Vel Total (ft/s)	15.38	Avg. Vel. (ft/s)	15.38
Max Chl Dpth (ft)	8.88	Hydr. Depth (ft)	7.24
Conv. Total (cfs)	1152320.0	Conv. (cfs)	1152320.0
Length Wtd. (ft)	50.00	Wetted Per. (ft)	578.22
Min Ch El (ft)	1146.92	Shear (lb/sq ft)	1.39
Alpha	1.00	Stream Power (lb/ft s)	21.32
Frctn Loss (ft)	0.03	Cum Volume (acre-ft)	39.06
C & E Loss (ft)	0.83	Cum SA (acres)	3.83

Warning: The energy equation could not be balanced within the specified number of iterations. The program used critical depth for the water surface and continued on with the calculations.
Warning: The velocity head has changed by more than 0.5 ft (0.15 m). This may indicate the need for additional cross sections.
Warning: The conveyance ratio (upstream conveyance divided by downstream conveyance) is less than 0.7 or greater than 1.4. This may indicate the need for additional cross sections.
Warning: The energy loss was greater than 1.0 ft (0.3 m). between the current and previous cross section. This may indicate the need for additional cross sections.
Warning: During the standard step iterations, when the assumed water surface was set equal to critical depth, the calculated water surface came back below critical depth. This indicates that there is not a valid subcritical answer. The program defaulted to critical depth.

CROSS SECTION

RIVER: Indian Bend Wash
REACH: Main RS: 5

INPUT
Description: DS Toe of Level III Grade Control Structure
Station Elevation Data num= 11

Sta	Elev	Sta	Elev	Sta	Elev	Sta	Elev	Sta	Elev
0	1171.92	15	1171.92	38.25	1156.42	53.25	1156.42	78.75	1139.42
341.5	1136.42	604.25	1139.42	629.75	1156.42	644.75	1156.42	668	1171.92
683	1171.92								

Manning's n Values num= 3

Sta	n Val	Sta	n Val	Sta	n Val
0	.02	38.25	.02	629.75	.02

Bank Sta: Left	Right	Lengths: Left	Channel	Right	Coeff Contr.	Expan.
38.25	629.75	55.5	55.5	55.5	.1	.3

CROSS SECTION OUTPUT Profile #Critical Design

E.G. Elev (ft)	1150.77	Element	Left OB	Channel	Right OB
Vel Head (ft)	0.30	Wt. n-Val.		0.020	
W.S. Elev (ft)	1150.47	Reach Len. (ft)	55.50	55.50	55.50
Crit W.S. (ft)	1142.58	Flow Area (sq ft)		6775.62	
E.G. Slope (ft/ft)	0.000129	Area (sq ft)		6775.62	

Q Total (cfs)	30000.00	Flow (cfs)	30000.00
Top Width (ft)	558.64	Top Width (ft)	558.64
Vel Total (ft/s)	4.43	Avg. Vel. (ft/s)	4.43
Max Chl Dpth (ft)	14.05	Hydr. Depth (ft)	12.13
Conv. Total (cfs)	2636312.0	Conv. (cfs)	2636312.0
Length Wtd. (ft)	55.50	Wetted Per. (ft)	565.36
Min Ch El (ft)	1136.42	Shear (lb/sq ft)	0.10
Alpha	1.00	Stream Power (lb/ft s)	0.43
Frctn Loss (ft)	0.01	Cum Volume (acre-ft)	26.30
C & E Loss (ft)	0.00	Cum SA (acres)	3.15

CROSS SECTION OUTPUT Profile #SPF

			Left OB	Channel	Right OB
E.G. Elev (ft)	1154.31	Element			
Vel Head (ft)	0.89	Wt. n-Val.		0.020	
W.S. Elev (ft)	1153.41	Reach Len. (ft)	55.50	55.50	55.50
Crit W.S. (ft)	1145.62	Flow Area (sq ft)		8434.26	
E.G. Slope (ft/ft)	0.000291	Area (sq ft)		8434.26	
Q Total (cfs)	64000.00	Flow (cfs)		64000.00	
Top Width (ft)	567.47	Top Width (ft)		567.47	
Vel Total (ft/s)	7.59	Avg. Vel. (ft/s)		7.59	
Max Chl Dpth (ft)	16.99	Hydr. Depth (ft)		14.86	
Conv. Total (cfs)	3750639.0	Conv. (cfs)		3750639.0	
Length Wtd. (ft)	55.50	Wetted Per. (ft)		575.98	
Min Ch El (ft)	1136.42	Shear (lb/sq ft)		0.27	
Alpha	1.00	Stream Power (lb/ft s)		2.02	
Frctn Loss (ft)	0.02	Cum Volume (acre-ft)		31.83	
C & E Loss (ft)	0.00	Cum SA (acres)		3.18	

CROSS SECTION

RIVER: Indian Bend Wash
REACH: Main RS: 4

INPUT
Description: US Toe of Level IV Grade Control Structure
Station Elevation Data num= 11

Sta	Elev	Sta	Elev	Sta	Elev	Sta	Elev	Sta	Elev
0	1171.92	15	1171.92	38.25	1156.42	53.25	1156.42	78.75	1139.42
341.5	1136.42	604.25	1139.42	629.75	1156.42	644.75	1156.42	668	1171.92
683	1171.92								

Manning's n Values num= 3

Sta	n Val	Sta	n Val	Sta	n Val
0	.02	38.25	.02	644.75	.02

Bank Sta: Left	Right	Lengths: Left	Channel	Right	Coeff Contr.	Expan.
38.25	644.75	4.5	4.5	4.5	.1	.3

Table 7
HEC-RAS Report

CROSS SECTION OUTPUT Profile #Critical Design

E.G. Elev (ft)	1150.76	Element	Left OB	Channel	Right OB
Vel Head (ft)	0.30	Wt. n-Val.		0.020	
W.S. Elev (ft)	1150.46	Reach Len. (ft)	4.50	4.50	4.50
Crit W.S. (ft)		Flow Area (sq ft)		6771.18	
E.G. Slope (ft/ft)	0.000130	Area (sq ft)		6771.18	
Q Total (cfs)	30000.00	Flow (cfs)		30000.00	
Top Width (ft)	558.61	Top Width (ft)		558.61	
Vel Total (ft/s)	4.43	Avg. Vel. (ft/s)		4.43	
Max Chl Dpth (ft)	14.04	Hydr. Depth (ft)		12.12	
Conv. Total (cfs)	2633527.0	Conv. (cfs)		2633527.0	
Length Wtd. (ft)	4.50	Wetted Per. (ft)		565.33	
Min Ch El (ft)	1136.42	Shear (lb/sq ft)		0.10	
Alpha	1.00	Stream Power (lb/ft s)		0.43	
Frctn Loss (ft)	0.00	Cum Volume (acre-ft)		17.67	
C & E Loss (ft)	0.05	Cum SA (acres)		2.43	

Warning: The velocity head has changed by more than 0.5 ft (0.15 m). This may indicate the need for additional cross sections.
Warning: The conveyance ratio (upstream conveyance divided by downstream conveyance) is less than 0.7 or greater than 1.4. This may indicate the need for additional cross sections.

CROSS SECTION OUTPUT Profile #SPF

E.G. Elev (ft)	1154.29	Element	Left OB	Channel	Right OB
Vel Head (ft)	0.90	Wt. n-Val.		0.020	
W.S. Elev (ft)	1153.39	Reach Len. (ft)	4.50	4.50	4.50
Crit W.S. (ft)		Flow Area (sq ft)		8423.32	
E.G. Slope (ft/ft)	0.000292	Area (sq ft)		8423.32	
Q Total (cfs)	64000.00	Flow (cfs)		64000.00	
Top Width (ft)	567.42	Top Width (ft)		567.42	
Vel Total (ft/s)	7.60	Avg. Vel. (ft/s)		7.60	
Max Chl Dpth (ft)	16.97	Hydr. Depth (ft)		14.85	
Conv. Total (cfs)	3742833.0	Conv. (cfs)		3742833.0	
Length Wtd. (ft)	4.50	Wetted Per. (ft)		575.91	
Min Ch El (ft)	1136.42	Shear (lb/sq ft)		0.27	
Alpha	1.00	Stream Power (lb/ft s)		2.03	
Frctn Loss (ft)	0.00	Cum Volume (acre-ft)		21.09	
C & E Loss (ft)	0.16	Cum SA (acres)		2.45	

Warning: The velocity head has changed by more than 0.5 ft (0.15 m). This may indicate the need for additional cross sections.
Warning: The conveyance ratio (upstream conveyance divided by downstream conveyance) is less than 0.7 or greater than 1.4. This may indicate the need for additional cross sections.

CROSS SECTION

Table 7
HEC-RAS Report

RIVER: Indian Bend Wash
REACH: Main RS: 3

INPUT
Description: US Top of Level IV Grade Control Structure
Station Elevation Data num= 11

Sta	Elev	Sta	Elev	Sta	Elev	Sta	Elev	Sta	Elev
0	1171.92	15	1171.92	38.25	1156.42	53.25	1156.42	72	1143.92
341.5	1140.92	611	1143.92	629.75	1156.42	644.75	1156.42	668	1171.92
683	1171.92								

Manning's n Values num= 3

Sta	n Val	Sta	n Val	Sta	n Val
0	.02	38.25	.02	644.75	.02

Bank Sta: Left	Right	Lengths: Left	Channel	Right	Coeff Contr.	Expan.
38.25	644.75	8	8	8	.1	.3

CROSS SECTION OUTPUT Profile #Critical Design

			Left OB	Channel	Right OB
E.G. Elev (ft)	1150.71	Element			
Vel Head (ft)	0.85	Wt. n-Val.		0.020	
W.S. Elev (ft)	1149.86	Reach Len. (ft)	8.00	8.00	8.00
Crit W.S. (ft)		Flow Area (sq ft)		4063.39	
E.G. Slope (ft/ft)	0.000704	Area (sq ft)		4063.39	
Q Total (cfs)	30000.00	Flow (cfs)		30000.00	
Top Width (ft)	556.82	Top Width (ft)		556.82	
Vel Total (ft/s)	7.38	Avg. Vel. (ft/s)		7.38	
Max Chl Dpth (ft)	8.94	Hydr. Depth (ft)		7.30	
Conv. Total (cfs)	1130891.0	Conv. (cfs)		1130891.0	
Length Wtd. (ft)	8.00	Wetted Per. (ft)		560.45	
Min Ch El (ft)	1140.92	Shear (lb/sq ft)		0.32	
Alpha	1.00	Stream Power (lb/ft s)		2.35	
Frctn Loss (ft)	0.01	Cum Volume (acre-ft)		17.11	
C & E Loss (ft)	0.00	Cum SA (acres)		2.38	

CROSS SECTION OUTPUT Profile #SPF

			Left OB	Channel	Right OB
E.G. Elev (ft)	1154.13	Element			
Vel Head (ft)	2.48	Wt. n-Val.		0.020	
W.S. Elev (ft)	1151.65	Reach Len. (ft)	8.00	8.00	8.00
Crit W.S. (ft)		Flow Area (sq ft)		5061.50	
E.G. Slope (ft/ft)	0.001564	Area (sq ft)		5061.50	
Q Total (cfs)	64000.00	Flow (cfs)		64000.00	
Top Width (ft)	562.17	Top Width (ft)		562.17	
Vel Total (ft/s)	12.64	Avg. Vel. (ft/s)		12.64	
Max Chl Dpth (ft)	10.72	Hydr. Depth (ft)		9.00	
Conv. Total (cfs)	1618456.0	Conv. (cfs)		1618456.0	
Length Wtd. (ft)	8.00	Wetted Per. (ft)		566.88	

Min Ch El (ft)	1140.92	Shear (lb/sq ft)	0.87
Alpha	1.00	Stream Power (lb/ft s)	11.02
Frctn Loss (ft)	0.01	Cum Volume (acre-ft)	20.40
C & E Loss (ft)	0.00	Cum SA (acres)	2.39

CROSS SECTION

RIVER: Indian Bend Wash
REACH: Main RS: 2

INPUT
Description: DS Top of Level IV Grade Control Structure
Station Elevation Data num= 11

Sta	Elev	Sta	Elev	Sta	Elev	Sta	Elev	Sta	Elev
0	1171.92	15	1171.92	38.25	1156.42	53.25	1156.42	72	1143.92
341.5	1140.92	611	1143.92	629.75	1156.42	644.75	1156.42	668	1171.92
683	1171.92								

Manning's n Values num= 3

Sta	n Val	Sta	n Val	Sta	n Val
0	.02	38.25	.02	644.75	.02

Bank Sta: Left	Right	Lengths: Left	Channel	Right	Coeff Contr.	Expan.
38.25	644.75	23	23	23	.1	.3

CROSS SECTION OUTPUT Profile #Critical Design

			Left OB	Channel	Right OB
E.G. Elev (ft)	1150.70	Element			
Vel Head (ft)	0.85	Wt. n-Val.		0.020	
W.S. Elev (ft)	1149.85	Reach Len. (ft)	23.00	23.00	23.00
Crit W.S. (ft)		Flow Area (sq ft)		4059.45	
E.G. Slope (ft/ft)	0.000706	Area (sq ft)		4059.45	
Q Total (cfs)	30000.00	Flow (cfs)		30000.00	
Top Width (ft)	556.80	Top Width (ft)		556.80	
Vel Total (ft/s)	7.39	Avg. Vel. (ft/s)		7.39	
Max Chl Dpth (ft)	8.93	Hydr. Depth (ft)		7.29	
Conv. Total (cfs)	1129097.0	Conv. (cfs)		1129097.0	
Length Wtd. (ft)	23.00	Wetted Per. (ft)		560.43	
Min Ch El (ft)	1140.92	Shear (lb/sq ft)		0.32	
Alpha	1.00	Stream Power (lb/ft s)		2.36	
Frctn Loss (ft)	0.02	Cum Volume (acre-ft)		16.36	
C & E Loss (ft)	0.00	Cum SA (acres)		2.27	

CROSS SECTION OUTPUT Profile #SPF

			Left OB	Channel	Right OB
E.G. Elev (ft)	1154.12	Element			
Vel Head (ft)	2.49	Wt. n-Val.		0.020	
W.S. Elev (ft)	1151.62	Reach Len. (ft)	23.00	23.00	23.00

Crit W.S. (ft)		Flow Area (sq ft)	5050.04
E.G. Slope (ft/ft)	0.001575	Area (sq ft)	5050.04
Q Total (cfs)	64000.00	Flow (cfs)	64000.00
Top Width (ft)	562.11	Top Width (ft)	562.11
Vel Total (ft/s)	12.67	Avg. Vel. (ft/s)	12.67
Max Chl Dpth (ft)	10.70	Hydr. Depth (ft)	8.98
Conv. Total (cfs)	1612493.0	Conv. (cfs)	1612493.0
Length Wtd. (ft)	23.00	Wetted Per. (ft)	566.81
Min Ch El (ft)	1140.92	Shear (lb/sq ft)	0.88
Alpha	1.00	Stream Power (lb/ft s)	11.10
Frctn Loss (ft)	0.04	Cum Volume (acre-ft)	19.47
C & E Loss (ft)	0.00	Cum SA (acres)	2.29

CROSS SECTION

RIVER: Indian Bend Wash
REACH: Main RS: 1

INPUT
Description: DS Toe of Level IV Grade Control Structure
Station Elevation Data num= 11

Sta	Elev	Sta	Elev	Sta	Elev	Sta	Elev	Sta	Elev
0	1171.92	15	1171.92	38.25	1156.42	53.25	1156.42	72	1143.92
341.5	1140.92	611	1143.92	629.75	1156.42	644.75	1156.42	668	1171.92
683	1171.92								

Manning's n Values num= 3

Sta	n Val	Sta	n Val	Sta	n Val
0	.02	38.25	.02	644.75	.02

Bank Sta: Left	Right	Lengths: Left	Channel	Right	Coeff Contr.	Expan.
38.25	644.75	50	50	50	.1	.3

CROSS SECTION OUTPUT Profile #Critical Design

E.G. Elev (ft)	1150.68	Element	Left OB	Channel	Right OB
Vel Head (ft)	0.85	Wt. n-Val.		0.020	
W.S. Elev (ft)	1149.83	Reach Len. (ft)	50.00	50.00	50.00
Crit W.S. (ft)		Flow Area (sq ft)		4046.61	
E.G. Slope (ft/ft)	0.000713	Area (sq ft)		4046.61	
Q Total (cfs)	30000.00	Flow (cfs)		30000.00	
Top Width (ft)	556.73	Top Width (ft)		556.73	
Vel Total (ft/s)	7.41	Avg. Vel. (ft/s)		7.41	
Max Chl Dpth (ft)	8.91	Hydr. Depth (ft)		7.27	
Conv. Total (cfs)	1123260.0	Conv. (cfs)		1123260.0	
Length Wtd. (ft)	50.00	Wetted Per. (ft)		560.34	
Min Ch El (ft)	1140.92	Shear (lb/sq ft)		0.32	
Alpha	1.00	Stream Power (lb/ft s)		2.38	
Frctn Loss (ft)	0.06	Cum Volume (acre-ft)		14.22	

C & E Loss (ft)	0.01	Cum SA (acres)	1.98

Warning: The conveyance ratio (upstream conveyance divided by downstream conveyance) is less than 0.7 or greater than 1.4. This may indicate the need for additional cross sections.

CROSS SECTION OUTPUT Profile #SPF

			Left OB	Channel	Right OB
E.G. Elev (ft)	1154.08	Element			
Vel Head (ft)	2.54	Wt. n-Val.		0.020	
W.S. Elev (ft)	1151.54	Reach Len. (ft)	50.00	50.00	50.00
Crit W.S. (ft)		Flow Area (sq ft)		5002.43	
E.G. Slope (ft/ft)	0.001625	Area (sq ft)		5002.43	
Q Total (cfs)	64000.00	Flow (cfs)		64000.00	
Top Width (ft)	561.86	Top Width (ft)		561.86	
Vel Total (ft/s)	12.79	Avg. Vel. (ft/s)		12.79	
Max Chl Dpth (ft)	10.62	Hydr. Depth (ft)		8.90	
Conv. Total (cfs)	1587807.0	Conv. (cfs)		1587807.0	
Length Wtd. (ft)	50.00	Wetted Per. (ft)		566.51	
Min Ch El (ft)	1140.92	Shear (lb/sq ft)		0.90	
Alpha	1.00	Stream Power (lb/ft s)		11.46	
Frctn Loss (ft)	0.13	Cum Volume (acre-ft)		16.81	
C & E Loss (ft)	0.02	Cum SA (acres)		1.99	

Warning: The conveyance ratio (upstream conveyance divided by downstream conveyance) is less than 0.7 or greater than 1.4. This may indicate the need for additional cross sections.

CROSS SECTION

RIVER: Indian Bend Wash
REACH: Main RS: .9

INPUT
Description: 50' DS of Toe-Level IV Grade Control Structure, Pier 4 EB
Station Elevation Data num= 11

Sta	Elev	Sta	Elev	Sta	Elev	Sta	Elev	Sta	Elev
-12.5	1171.92	2.5	1171.92	25.75	1156.42	40.75	1156.42	59.5	1143.92
341.5	1140.92	611	1143.92	629.75	1156.42	644.75	1156.42	668	1171.92
683	1171.92								

Manning's n Values num= 3

Sta	n Val	Sta	n Val	Sta	n Val
-12.5	.02	40.75	.035	629.75	.02

Bank Sta: Left	Right	Lengths: Left	Channel	Right	Coeff Contr.	Expan.
40.75	629.75	50	50	50	.1	.3

CROSS SECTION OUTPUT Profile #Critical Design

E.G. Elev (ft)	1150.62	Element	Left OB	Channel	Right OB
Vel Head (ft)	0.82	Wt. n-Val.		0.035	
W.S. Elev (ft)	1149.79	Reach Len. (ft)	50.00	50.00	50.00
Crit W.S. (ft)		Flow Area (sq ft)		4118.46	
E.G. Slope (ft/ft)	0.002121	Area (sq ft)		4118.46	
Q Total (cfs)	30000.00	Flow (cfs)		30000.00	
Top Width (ft)	569.12	Top Width (ft)		569.12	
Vel Total (ft/s)	7.28	Avg. Vel. (ft/s)		7.28	
Max Chl Dpth (ft)	8.87	Hydr. Depth (ft)		7.24	
Conv. Total (cfs)	651420.5	Conv. (cfs)		651420.5	
Length Wtd. (ft)	50.00	Wetted Per. (ft)		572.71	
Min Ch El (ft)	1140.92	Shear (lb/sq ft)		0.95	
Alpha	1.00	Stream Power (lb/ft s)		6.94	
Frctn Loss (ft)	0.11	Cum Volume (acre-ft)		9.54	
C & E Loss (ft)	0.00	Cum SA (acres)		1.33	

CROSS SECTION OUTPUT Profile #SPF

E.G. Elev (ft)	1153.93	Element	Left OB	Channel	Right OB
Vel Head (ft)	2.48	Wt. n-Val.		0.035	
W.S. Elev (ft)	1151.45	Reach Len. (ft)	50.00	50.00	50.00
Crit W.S. (ft)		Flow Area (sq ft)		5067.29	
E.G. Slope (ft/ft)	0.004904	Area (sq ft)		5067.29	
Q Total (cfs)	64000.00	Flow (cfs)		64000.00	
Top Width (ft)	574.10	Top Width (ft)		574.10	
Vel Total (ft/s)	12.63	Avg. Vel. (ft/s)		12.63	
Max Chl Dpth (ft)	10.53	Hydr. Depth (ft)		8.83	
Conv. Total (cfs)	913942.7	Conv. (cfs)		913942.7	
Length Wtd. (ft)	50.00	Wetted Per. (ft)		578.70	
Min Ch El (ft)	1140.92	Shear (lb/sq ft)		2.68	
Alpha	1.00	Stream Power (lb/ft s)		33.86	
Frctn Loss (ft)	0.26	Cum Volume (acre-ft)		11.03	
C & E Loss (ft)	0.01	Cum SA (acres)		1.34	

CROSS SECTION

RIVER: Indian Bend Wash
REACH: Main RS: .8

INPUT
Description: 100' DS of Toe-Level IV Grade Control, Pier 3 EB @ 131' DS
Station Elevation Data num= 11

Sta	Elev	Sta	Elev	Sta	Elev	Sta	Elev	Sta	Elev
-25	1171.92	-10	1171.92	13.25	1156.42	28.25	1156.42	47	1143.92
341.5	1140.92	611	1143.92	629.75	1156.42	644.75	1156.42	668	1171.92
683	1171.92								

Manning's n Values num= 3

Sta	n Val	Sta	n Val	Sta	n Val
-25	.02	28.25	.035	629.75	.02

Bank Sta: Left	Right	Lengths: Left	Channel	Right	Coeff Contr.	Expan.
28.25	629.75	50	50	50	.1	.3

CROSS SECTION OUTPUT Profile #Critical Design

			Left OB	Channel	Right OB
E.G. Elev (ft)	1150.51	Element			
Vel Head (ft)	0.81	Wt. n-Val.		0.035	
W.S. Elev (ft)	1149.70	Reach Len. (ft)	50.00	50.00	50.00
Crit W.S. (ft)		Flow Area (sq ft)		4154.06	
E.G. Slope (ft/ft)	0.002119	Area (sq ft)		4154.06	
Q Total (cfs)	30000.00	Flow (cfs)		30000.00	
Top Width (ft)	581.33	Top Width (ft)		581.33	
Vel Total (ft/s)	7.22	Avg. Vel. (ft/s)		7.22	
Max Chl Dpth (ft)	8.78	Hydr. Depth (ft)		7.15	
Conv. Total (cfs)	651649.8	Conv. (cfs)		651649.8	
Length Wtd. (ft)	50.00	Wetted Per. (ft)		584.86	
Min Ch El (ft)	1140.92	Shear (lb/sq ft)		0.94	
Alpha	1.00	Stream Power (lb/ft s)		6.79	
Frctn Loss (ft)	0.11	Cum Volume (acre-ft)		4.79	
C & E Loss (ft)	0.00	Cum SA (acres)		0.67	

CROSS SECTION OUTPUT Profile #SPF

			Left OB	Channel	Right OB
E.G. Elev (ft)	1153.67	Element			
Vel Head (ft)	2.57	Wt. n-Val.		0.035	
W.S. Elev (ft)	1151.10	Reach Len. (ft)	50.00	50.00	50.00
Crit W.S. (ft)	1149.75	Flow Area (sq ft)		4970.24	
E.G. Slope (ft/ft)	0.005366	Area (sq ft)		4970.24	
Q Total (cfs)	64000.00	Flow (cfs)		64000.00	
Top Width (ft)	585.53	Top Width (ft)		585.53	
Vel Total (ft/s)	12.88	Avg. Vel. (ft/s)		12.88	
Max Chl Dpth (ft)	10.18	Hydr. Depth (ft)		8.49	
Conv. Total (cfs)	873711.2	Conv. (cfs)		873711.2	
Length Wtd. (ft)	50.00	Wetted Per. (ft)		589.90	
Min Ch El (ft)	1140.92	Shear (lb/sq ft)		2.82	
Alpha	1.00	Stream Power (lb/ft s)		36.34	
Frctn Loss (ft)	0.35	Cum Volume (acre-ft)		5.27	
C & E Loss (ft)	0.10	Cum SA (acres)		0.68	

Warning: The velocity head has changed by more than 0.5 ft (0.15 m). This may indicate the need for additional cross sections.

CROSS SECTION

RIVER: Indian Bend Wash

Table 7
HEC-RAS Report

REACH: Main RS: .7

INPUT
Description: 150' DS of Toe-Level IV Grade Control, Pier 3 EB @ 131' DS
Station Elevation Data num= 11

Sta	Elev	Sta	Elev	Sta	Elev	Sta	Elev	Sta	Elev
-37.5	1171.92	-22.5	1171.92	.75	1156.42	15.75	1156.42	34.5	1143.92
341.5	1140.92	611	1143.92	629.75	1156.42	644.75	1156.42	668	1171.92
683	1171.92								

Manning's n Values num= 3

Sta	n Val	Sta	n Val	Sta	n Val
-37.5	.02	15.75	.035	629.75	.02

Bank Sta: Left	Right	Lengths: Left	Channel	Right	Coeff Contr.	Expan.
15.75	629.75	0	0	0	.1	.3

CROSS SECTION OUTPUT Profile #Critical Design

			Left OB	Channel	Right OB
E.G. Elev (ft)	1150.40	Element			
Vel Head (ft)	0.80	Wt. n-Val.		0.035	
W.S. Elev (ft)	1149.60	Reach Len. (ft)			
Crit W.S. (ft)	1146.79	Flow Area (sq ft)		4187.62	
E.G. Slope (ft/ft)	0.002121	Area (sq ft)		4187.62	
Q Total (cfs)	30000.00	Flow (cfs)		30000.00	
Top Width (ft)	593.54	Top Width (ft)		593.54	
Vel Total (ft/s)	7.16	Avg. Vel. (ft/s)		7.16	
Max Chl Dpth (ft)	8.68	Hydr. Depth (ft)		7.06	
Conv. Total (cfs)	651455.9	Conv. (cfs)		651455.9	
Length Wtd. (ft)		Wetted Per. (ft)		597.01	
Min Ch El (ft)	1140.92	Shear (lb/sq ft)		0.93	
Alpha	1.00	Stream Power (lb/ft s)		6.65	
Frctn Loss (ft)		Cum Volume (acre-ft)			
C & E Loss (ft)		Cum SA (acres)			

CROSS SECTION OUTPUT Profile #SPF

			Left OB	Channel	Right OB
E.G. Elev (ft)	1153.23	Element			
Vel Head (ft)	3.57	Wt. n-Val.		0.035	
W.S. Elev (ft)	1149.65	Reach Len. (ft)			
Crit W.S. (ft)	1149.65	Flow Area (sq ft)		4218.13	
E.G. Slope (ft/ft)	0.009425	Area (sq ft)		4218.13	
Q Total (cfs)	64000.00	Flow (cfs)		64000.00	
Top Width (ft)	593.69	Top Width (ft)		593.69	
Vel Total (ft/s)	15.17	Avg. Vel. (ft/s)		15.17	
Max Chl Dpth (ft)	8.73	Hydr. Depth (ft)		7.10	
Conv. Total (cfs)	659248.6	Conv. (cfs)		659248.6	
Length Wtd. (ft)		Wetted Per. (ft)		597.20	
Min Ch El (ft)	1140.92	Shear (lb/sq ft)		4.16	
Alpha	1.00	Stream Power (lb/ft s)		63.05	

Frctn Loss (ft)	Cum Volume (acre-ft)
C & E Loss (ft)	Cum SA (acres)

Warning: User specified water surface is not possible for the specified flow regime. The program used critical depth as the starting water surface.

SUMMARY OF MANNING'S N VALUES

River:Indian Bend Wash

Reach	River Sta.	n1	n2	n3
Main	16	.08	.035	.08
Main	15	.08	.035	.08
Main	14.5	.035	.035	.035
Main	14.4	.035	.035	.035
Main	14.3	.035	.035	.035
Main	14	.02	.02	.02
Main	13	.02	.02	.02
Main	12	.02	.02	.02
Main	11	.02	.02	.02
Main	10	.02	.02	.02
Main	9	.02	.02	.02
Main	8	.02	.02	.02
Main	7	.02	.02	.02
Main	6	.02	.02	.02
Main	5	.02	.02	.02
Main	4	.02	.02	.02
Main	3	.02	.02	.02
Main	2	.02	.02	.02
Main	1	.02	.02	.02
Main	.9	.02	.035	.02
Main	.8	.02	.035	.02
Main	.7	.02	.035	.02

SUMMARY OF REACH LENGTHS

River: Indian Bend Wash

Reach	River Sta.	Left	Channel	Right
Main	16	100	100	100
Main	15	118.5	116.6	117.6
Main	14.5	40	40	40
Main	14.4	85	85	85

Main	14.3	62.8	68.5	74.6
Main	14	13.5	13.5	13.5
Main	13	46.5	46.5	46.5
Main	12	4	4	4
Main	11	8	8	8
Main	10	15.75	15.75	15.75
Main	9	44.25	44.25	44.25
Main	8	4	4	4
Main	7	8	8	8
Main	6	50	50	50
Main	5	55.5	55.5	55.5
Main	4	4.5	4.5	4.5
Main	3	8	8	8
Main	2	23	23	23
Main	1	50	50	50
Main	.9	50	50	50
Main	.8	50	50	50
Main	.7	0	0	0

SUMMARY OF CONTRACTION AND EXPANSION COEFFICIENTS
River: Indian Bend Wash

Reach	River Sta.	Contr.	Expan.
Main	16	.1	.3
Main	15	.1	.3
Main	14.5	.1	.3
Main	14.4	.1	.3
Main	14.3	.1	.3
Main	14	.1	.3
Main	13	.1	.3
Main	12	.1	.3
Main	11	.1	.3
Main	10	.1	.3
Main	9	.1	.3
Main	8	.1	.3
Main	7	.1	.3
Main	6	.1	.3
Main	5	.1	.3
Main	4	.1	.3
Main	3	.1	.3
Main	2	.1	.3
Main	1	.1	.3
Main	.9	.1	.3
Main	.8	.1	.3
Main	.7	.1	.3

Table 7
HEC-RAS Report

Profile Output Table - Standard Table 1

Reach	River Sta	Profile	Q Total	Min Ch El	W.S. Elev	Crit W.S.	E.G. Elev	E.G. Slope	Vel Chnl
Flow Area	Top Width	Froude # Chl							
(sq ft)	(ft)		(cfs)	(ft)	(ft)	(ft)	(ft)	(ft/ft)	(ft/s)
Main	16	Critical Design	30000.00	1158.48	1168.33	1166.67	1169.86	0.003617	10.52
3777.62	621.58	0.64							
Main	16	SPF	64000.00	1158.48	1172.33	1170.10	1174.96	0.003911	14.20
6387.92	687.76	0.71							
Main	15	Critical Design	30000.00	1158.34	1166.53	1166.53	1169.23	0.008217	13.69
2765.09	596.47	0.93							
Main	15	SPF	64000.00	1158.34	1169.90	1169.90	1174.25	0.008245	17.99
4855.89	637.68	1.00							
Main	14.5	Critical Design	30000.00	1158.36	1166.00	1163.78	1166.92	0.002669	7.77
3931.92	620.48	0.53							
Main	14.5	SPF	64000.00	1158.36	1164.25	1166.60	1172.17	0.034175	22.70
2857.73	609.52	1.80							
Main	14.4	Critical Design	30000.00	1158.36	1165.83		1166.80	0.002910	7.97
3828.53	619.57	0.55							
Main	14.4	SPF	64000.00	1158.36	1169.08	1166.60	1170.95	0.003307	11.14
5901.55	651.82	0.63							
Main	14.3	Critical Design	30000.00	1158.36	1165.37		1166.51	0.003726	8.60
3547.54	616.84	0.62							
Main	14.3	SPF	64000.00	1158.36	1168.44	1166.61	1170.61	0.004166	11.95
5490.07	646.65	0.70							
Main	14	Critical Design	30000.00	1158.42	1164.09	1164.09	1166.16	0.003618	11.57
2599.53	629.50	1.00							
Main	14	SPF	64000.00	1158.42	1166.80	1166.80	1170.23	0.003080	14.91
4316.15	637.63	1.00							
Main	13	Critical Design	30000.00	1149.42	1160.95	1155.27	1161.34	0.000213	5.02
6027.30	620.09	0.28							
Main	13	SPF	64000.00	1149.42	1164.46	1158.10	1165.42	0.000352	7.88
8222.84	630.62	0.38							
Main	12	Critical Design	30000.00	1149.42	1160.92		1161.33	0.000231	5.11
5890.12	620.01	0.29							
Main	12	SPF	64000.00	1149.42	1164.41		1165.40	0.000374	7.99
8071.21	630.47	0.39							
Main	11	Critical Design	30000.00	1153.42	1159.56	1159.09	1161.20	0.002532	10.29
2922.84	645.92	0.85							

Main	11	SPF	64000.00	1153.42	1162.37	1161.78	1165.21	0.002320	13.56	4747.60
										654.34
										0.88
Main	10	Critical Design	30000.00	1153.42	1159.09	1159.09	1161.13	0.003640	11.48	2619.45
										644.51
										1.00
Main	10	SPF	64000.00	1153.42	1161.78	1161.78	1165.14	0.003062	14.74	4364.32
										652.58
										1.00
Main	9	Critical Design	30000.00	1142.92	1154.94	1148.97	1155.34	0.000217	5.13	5852.80
										572.05
										0.28
Main	9	SPF	64000.00	1142.92	1158.83	1151.93	1159.78	0.000352	7.84	8174.20
										613.72
										0.38
Main	8	Critical Design	30000.00	1142.92	1154.92		1155.33	0.000218	5.13	5846.51
										572.01
										0.28
Main	8	SPF	64000.00	1142.92	1158.81		1159.76	0.000354	7.85	8162.29
										613.66
										0.38
Main	7	Critical Design	30000.00	1146.92	1153.40	1152.89	1155.19	0.002511	10.74	2792.22
										567.44
										0.85
Main	7	SPF	64000.00	1146.92	1156.54	1155.79	1159.56	0.002393	13.95	4589.21
										606.85
										0.89
Main	6	Critical Design	30000.00	1146.92	1152.89	1152.89	1155.12	0.003593	11.98	2504.46
										565.92
										1.00
Main	6	SPF	64000.00	1146.92	1155.80	1155.80	1159.47	0.003085	15.38	4161.05
										574.63
										1.01
Main	5	Critical Design	30000.00	1136.42	1150.47	1142.58	1150.77	0.000129	4.43	6775.62
										558.64
										0.22
Main	5	SPF	64000.00	1136.42	1153.41	1145.62	1154.31	0.000291	7.59	8434.26
										567.47
										0.35
Main	4	Critical Design	30000.00	1136.42	1150.46		1150.76	0.000130	4.43	6771.18
										558.61
										0.22
Main	4	SPF	64000.00	1136.42	1153.39		1154.29	0.000292	7.60	8423.32
										567.42
										0.35
Main	3	Critical Design	30000.00	1140.92	1149.86		1150.71	0.000704	7.38	4063.39
										556.82
										0.48
Main	3	SPF	64000.00	1140.92	1151.65		1154.13	0.001564	12.64	5061.50
										562.17
										0.74
Main	2	Critical Design	30000.00	1140.92	1149.85		1150.70	0.000706	7.39	4059.45
										556.80
										0.48
Main	2	SPF	64000.00	1140.92	1151.62		1154.12	0.001575	12.67	5050.04
										562.11
										0.75
Main	1	Critical Design	30000.00	1140.92	1149.83		1150.68	0.000713	7.41	4046.61
										556.73
										0.48

Main	1	SPF	64000.00	1140.92	1151.54		1154.08	0.001625	12.79	5002.43	561.86	0.76
Main	.9	Critical Design	30000.00	1140.92	1149.79		1150.62	0.002121	7.28	4118.46	569.12	0.48
Main	.9	SPF	64000.00	1140.92	1151.45		1153.93	0.004904	12.63	5067.29	574.10	0.75
Main	.8	Critical Design	30000.00	1140.92	1149.70		1150.51	0.002119	7.22	4154.06	581.33	0.48
Main	.8	SPF	64000.00	1140.92	1151.10	1149.75	1153.67	0.005366	12.88	4970.24	585.53	0.78
Main	.7	Critical Design	30000.00	1140.92	1149.60	1146.79	1150.40	0.002121	7.16	4187.62	593.54	0.48
Main	.7	SPF	64000.00	1140.92	1149.65	1149.65	1153.23	0.009425	15.17	4218.13	593.69	1.00

Profile Output Table - Standard Table 2

Reach	River Sta	Profile	E.G. Elev (ft)	W.S. Elev (ft)	Vel Head (ft)	Frctn Loss (ft)	C & E Loss (ft)	Q Left (cfs)	Q Channel (cfs)	Q Right (cfs)	Top Width (ft)
Main	16	Critical Design	1169.86	1168.33	1.53	0.52	0.12	2149.96	26494.84	1355.20	621.58
Main	16	SPF	1174.96	1172.33	2.63	0.55	0.17	6747.82	52793.41	4458.78	687.76
Main	15	Critical Design	1169.23	1166.53	2.70	0.51	0.53	1565.17	27647.15	787.69	596.47
Main	15	SPF	1174.25	1169.90	4.34	0.55	0.77	5667.45	54525.96	3806.59	637.68
Main	14.5	Critical Design	1166.92	1166.00	0.92	0.11	0.01	251.52	29291.67	456.82	620.48
Main	14.5	SPF	1172.17	1164.25	7.92	1.71	0.36	359.12	63167.88	473.00	609.52
Main	14.4	Critical Design	1166.80	1165.83	0.97	0.28	0.02	243.65	29320.50	435.85	619.57
Main	14.4	SPF	1170.95	1169.08	1.88	0.31	0.03	841.57	61432.81	1725.62	651.82
Main	14.3	Critical Design	1166.51	1165.37	1.13	0.25	0.09	222.13	29400.36	377.51	616.84
Main	14.3	SPF	1170.61	1168.44	2.17	0.24	0.13	779.90	61635.57	1584.53	646.65

Table 7
HEC-RAS Report

Main	14	Critical Design	1166.16	1164.09	2.08	0.01	0.51	25.51	29948.98	25.51	629.50
Main	14	SPF	1170.23	1166.80	3.44	0.01	0.74	152.77	63694.46	152.77	637.63
Main	13	Critical Design	1161.34	1160.95	0.39	0.01	0.00	137.83	29724.35	137.83	620.09
Main	13	SPF	1165.42	1164.46	0.96	0.02	0.00	443.49	63113.03	443.49	630.62
Main	12	Critical Design	1161.33	1160.92	0.40	0.00	0.12	26.11	29947.79	26.11	620.01
Main	12	SPF	1165.40	1164.41	0.99	0.00	0.19	153.34	63693.31	153.34	630.47
Main	11	Critical Design	1161.20	1159.56	1.64	0.02	0.04	33.02	29933.96	33.02	645.92
Main	11	SPF	1165.21	1162.37	2.84	0.02	0.05	173.58	63652.84	173.58	654.34
Main	10	Critical Design	1161.13	1159.09	2.04	0.01	0.49	25.69	29948.62	25.69	644.51
Main	10	SPF	1165.14	1161.78	3.36	0.01	0.72	151.19	63697.63	151.19	652.58
Main	9	Critical Design	1155.34	1154.94	0.41	0.01	0.00		30000.00	572.05	
Main	9	SPF	1159.78	1158.83	0.95	0.02	0.00	6.07	63987.87	6.07	613.72
Main	8	Critical Design	1155.33	1154.92	0.41	0.00	0.14		30000.00	572.01	
Main	8	SPF	1159.76	1158.81	0.96	0.00	0.21	5.95	63988.10	5.95	613.66
Main	7	Critical Design	1155.19	1153.40	1.79	0.02	0.04		30000.00	567.44	
Main	7	SPF	1159.56	1156.54	3.02	0.02	0.07	0.00	63999.99	0.00	606.85
Main	6	Critical Design	1155.12	1152.89	2.23	0.02	0.58		30000.00	565.92	
Main	6	SPF	1159.47	1155.80	3.67	0.03	0.83		64000.00	574.63	
Main	5	Critical Design	1150.77	1150.47	0.30	0.01	0.00		30000.00	558.64	
Main	5	SPF	1154.31	1153.41	0.89	0.02	0.00		64000.00	567.47	

Table 7
HEC-RAS Report

Main	4	Critical Design	1150.76	1150.46	0.30	0.00	0.05	30000.00
558.61								
Main	4	SPF	1154.29	1153.39	0.90	0.00	0.16	64000.00
567.42								
Main	3	Critical Design	1150.71	1149.86	0.85	0.01	0.00	30000.00
556.82								
Main	3	SPF	1154.13	1151.65	2.48	0.01	0.00	64000.00
562.17								
Main	2	Critical Design	1150.70	1149.85	0.85	0.02	0.00	30000.00
556.80								
Main	2	SPF	1154.12	1151.62	2.49	0.04	0.00	64000.00
562.11								
Main	1	Critical Design	1150.68	1149.83	0.85	0.06	0.01	30000.00
556.73								
Main	1	SPF	1154.08	1151.54	2.54	0.13	0.02	64000.00
561.86								
Main	.9	Critical Design	1150.62	1149.79	0.82	0.11	0.00	30000.00
569.12								
Main	.9	SPF	1153.93	1151.45	2.48	0.26	0.01	64000.00
574.10								
Main	.8	Critical Design	1150.51	1149.70	0.81	0.11	0.00	30000.00
581.33								
Main	.8	SPF	1153.67	1151.10	2.57	0.35	0.10	64000.00
585.53								
Main	.7	Critical Design	1150.40	1149.60	0.80			30000.00
593.54								
Main	.7	SPF	1153.23	1149.65	3.57			64000.00
593.69								

Table 8
Hydraulic Characteristics at New Outside Columns[1]
Eastbound over Indian Bend Wash

Pier #	Surface Material	Critical Design Flow (36,000 cfs)										SPF Flow (64,000 cfs)									
		Condition 1					Condition 2					Condition 1					Condition 2				
		HEC-RAS X-Section	Channel Invert[4]	W.S.E.	Flow Depth	Flow Velocity	HEC-RAS X-Section	Channel Invert[4]	W.S.E.	Flow Depth	Flow Velocity	HEC-RAS X-Section	Channel Invert[4]	W.S.E.	Flow Depth	Flow Velocity	HEC-RAS X-Section	Channel Invert[4]	W.S.E.	Flow Depth	Flow Velocity
			NAVD88	NAVD88	(ft)	(fps)		NAVD88	NAVD88	(ft)	(fps)		NAVD88	NAVD88	(ft)	(fps)		NAVD88	NAVD88	(ft)	(fps)
1		N/A	N/A	N/A	N/A	N/A	N/A	N/A	N/A	N/A	N/A	N/A	N/A	N/A	N/A	N/A	N/A	N/A	N/A	N/A	N/A
2[2]	Cement Stabilized Alluvium	0.7	1140.92	1149.60	8.68	7.16	0.7	1140.92	1149.60	8.68	7.16	0.7	1140.92	1149.65	8.73	15.17	0.7	1140.92	1149.65	8.73	15.17
3[3]	Rock	0.8	1140.92	1149.70	8.78	7.22	0.7	1140.92	1149.60	8.68	7.16	0.8	1140.92	1151.10	10.18	12.88	0.7	1140.92	1149.65	8.73	15.17
4[3]	Rock	0.9	1140.92	1149.79	8.87	7.28	0.7	1140.92	1149.60	8.68	7.16	0.9	1140.92	1151.45	10.53	12.63	0.7	1140.92	1149.65	8.73	15.17
5[1]	Roller Compacted Concrete	4	1136.42	1150.46	14.04	4.43	3	1140.92	1149.86	8.94	7.38	4	1136.42	1153.39	16.97	7.60	3	1140.92	1151.65	10.73	12.64
6[1]	Roller Compacted Concrete	5	1136.42	1150.47	14.05	4.43	6	1146.92	1152.89	5.97	11.98	5	1136.42	1153.41	16.99	7.59	6	1146.92	1155.8	8.88	15.38
7[1]	Roller Compacted Concrete	9	1142.92	1154.94	12.02	5.13	10	1153.42	1159.09	5.67	11.48	9	1142.92	1158.83	15.91	7.84	10	1153.42	1161.78	8.36	14.74

Notes:

1) New outside columns for Piers 5 thru 7 are located within the Indian Bend Wash Drop Structure, which consists of a series of four (4) grade control structures with three (3) drops and four (4) stilling basins. This facility creates mixed flow conditions with critical flow over control structures and subcritical flow through the stilling basins. Each pier could be subjected to both flow conditions, and therefore, itis necessary to design for the most severe condition. The table contains these two conditions for each design flow event.
2) The new outside column for Pier 2 is located in the west bank downstream of the last Grade Control Structure (Level IV), and therefore, it may experience critical flow conditions. The Cement Stablilized Alluvium bank protection is assumed to fail during the SPF flow event, and therefore, the calculated SPF scour depths contained in Table 1 apply to this column.
3) New outside columns for Piers 3 and 4 are located downstream of the last Grade Control Structure (Level IV), and therefore, they may experience critical flow conditions. These columns, which are near River Cross-Section 0.7, are located in scourable rock, and therefore, they could experience the same critical flow conditions as experienced by Pier 2. The calculated scour depths for the outside columns of Piers 3 and 4 are contained in Table 1.
4) The channel invert elevation is the thalweg of the channel cross-section. This may not be the actual ground elevation at the new columns.

Table 9
Hydraulic Characteristics at New Outside Columns[1]
Westbound over Indian Bend Wash

Pier #	Surface Material	Critical Design Flow (36,000 cfs)										SPF Flow (64,000 cfs)									
		Condition 1					Condition 2					Condition 1					Condition 2				
		HEC-RAS X-Section	Channel Invert[4]	W.S.E.	Flow Depth	Flow Velocity	HEC-RAS X-Section	Channel Invert[4]	W.S.E.	Flow Depth	Flow Velocity	HEC-RAS X-Section	Channel Invert[4]	W.S.E.	Flow Depth	Flow Velocity	HEC-RAS X-Section	Channel Invert[4]	W.S.E.	Flow Depth	Flow Velocity
			NAVD88	NAVD88	(ft)	(fps)		NAVD88	NAVD88	(ft)	(fps)		NAVD88	NAVD88	(ft)	(fps)		NAVD88	NAVD88	(ft)	(fps)
1		N/A	N/A	N/A	N/A	N/A	N/A	N/A	N/A	N/A	N/A	N/A	N/A	N/A	N/A	N/A	N/A	N/A	N/A	N/A	N/A
2[1]	Cement Stabilized Alluvium	4	1136.42	1150.46	14.04	4.43	3	1140.92	1149.86	8.94	7.38	4	1136.42	1153.39	16.97	7.60	3	1140.92	1151.65	10.73	12.64
3[1]	Roller Compacted Concrete	5	1136.42	1150.47	14.05	4.43	6	1146.92	1152.89	5.97	11.98	5	1136.42	1153.41	16.99	7.59	6	1146.92	1155.80	8.88	15.38
4[1]	Roller Compacted Concrete	9	1142.92	1154.94	12.02	5.13	10	1153.42	1159.09	5.67	11.48	9	1142.92	1158.83	15.91	7.84	10	1153.42	1161.78	8.36	14.74
5[2]	Roller Compacted Concrete	14	1158.42	1164.09	5.67	11.57	14	1158.42	1164.09	5.67	11.57	14	1158.42	1166.80	8.38	14.91	14	1158.42	1166.80	8.38	14.91
6[3]	Rock	14.3	1158.36	1165.37	7.01	8.60	14	1158.42	1164.09	5.67	11.57	14.3	1158.36	1168.44	10.08	11.95	14	1158.42	1166.80	8.38	14.91
7[3]	Rock	14.4	1158.36	1165.83	7.47	7.97	14	1158.42	1164.09	5.67	11.57	14.4	1158.36	1169.08	10.72	11.14	14	1158.42	1166.80	8.38	14.91

Notes:

1) New outside columns for Piers 2 thru 4 are located within the Indian Bend Wash Drop Structure, which consists of a series of four (4) grade control structures with three (3) drops and four (4) stilling basins. This facility creates mixed flow conditions with critical flow over control structures and subcritical flow through the stilling basins. Each pier could be subjected to both flow conditions, and therefore, itis necessary to design for the most severe condition. The table contains these two conditions for each design flow event.
2) The new outside column for Pier 5 is located in the first upstream Grade Control Structure (Level I), and therefore, it will only experience critical flow conditions.
3) The new outside columns for Piers 6 and 7 are located upstream of the first Grade Control Structure (Level I), and therefore, they will experience subcritical flow conditions. These columns, which are near River Cross-Section 14, are located in scourable rock, and therefore, they could experience the same critical flow conditions as experienced by Pier 5. The calculated scour depths for the outside columns of Piers 6 and 7 are contained in Table 1.
4) The channel invert elevation is the thalweg of the channel cross-section. This may not be the actual ground elevation at the new columns.

F.H.W.A. REGION	STATE	PROJECT NO.	SHEET NO.	TOTAL SHEETS	AS BUILT
9	ARIZ.	202-A-NFA	159		
		202L MA 000			

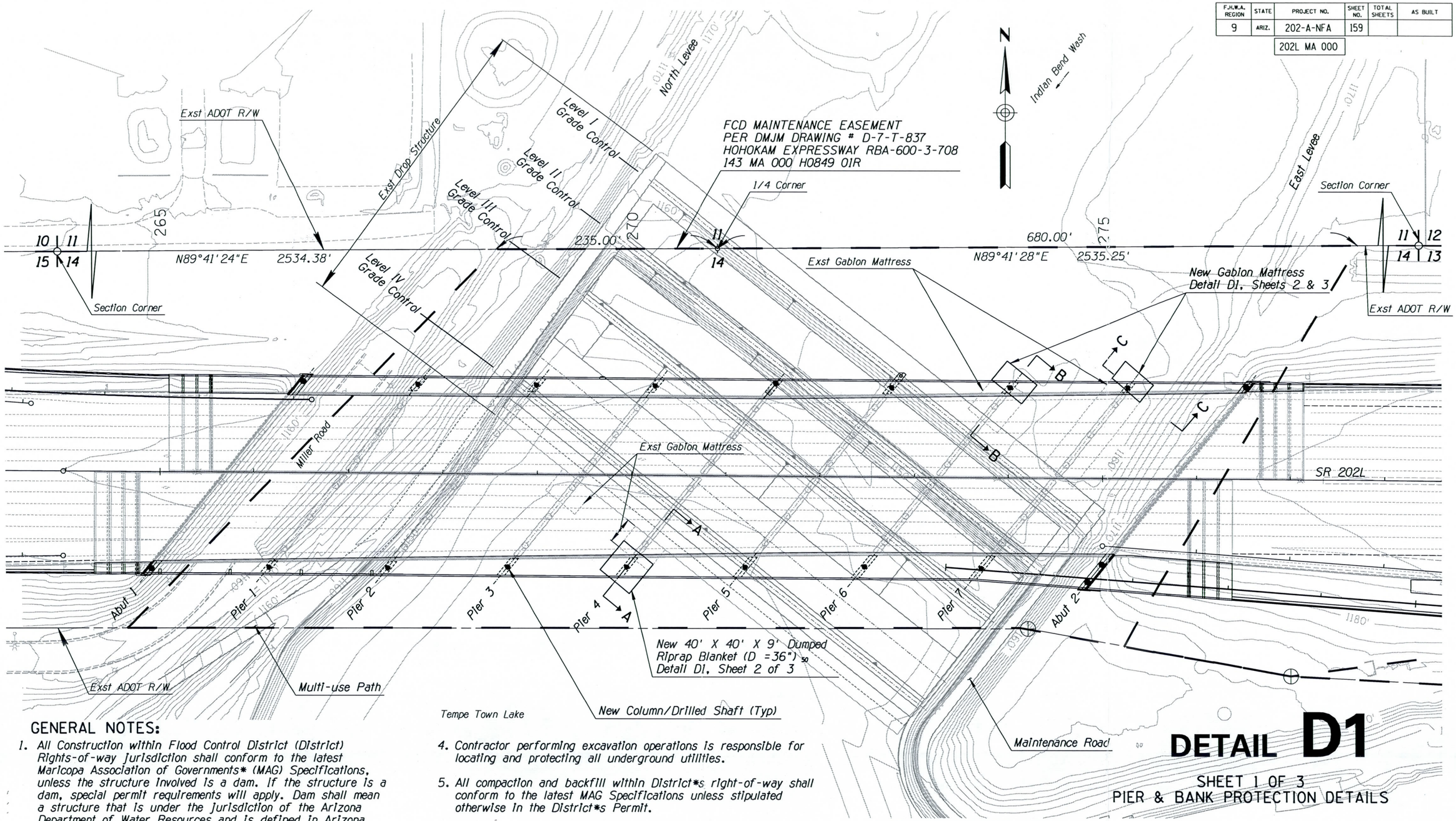

DETAIL D1

SHEET 1 OF 3

PIER & BANK PROTECTION DETAILS

GENERAL NOTES:

1. All Construction within Flood Control District (District) Rights-of-way jurisdiction shall conform to the latest Maricopa Association of Governments* (MAG) Specifications, unless the structure involved is a dam. If the structure is a dam, special permit requirements will apply. Dam shall mean a structure that is under the jurisdiction of the Arizona Department of Water Resources and is defined in Arizona Revised Statues 45-1201.
2. Contractor must obtain necessary District Permit prior to commencement of construction within District right-of-way and maintain a copy of the permit on the project site at all times.
3. Notify the District's Permits Inspector at 602-506-4727 or 602-506-4723 at least 48 hrs prior to any work being performed in the District's rights-of-way.
4. Contractor performing excavation operations is responsible for locating and protecting all underground utilities.
5. All compaction and backfill within District*s right-of-way shall conform to the latest MAG Specifications unless stipulated otherwise in the District*s Permit.
6. Any damage to District*s structures, equipment, materials, vegetation, and/or property shall be replaced and/or repaired in-kind to the satisfaction of the District.

NOT FOR CONSTRUCTION

REV	DATE	DESCRIPTION	BY
	/ /		
	/ /		
	/ /		
	/ /		
	/ /		
	/ /		
	/ /		
	/ /		
	/ /		
	/ /		
	/ /		

	NAME	DATE
DESIGN	D. SCHAUB	02/09
DRAWN	K. BEGAY	02/09
CHECKED	D JERMELAND	02/09

URS

ARIZONA DEPARTMENT OF TRANSPORTATION
INTERMODAL TRANSPORTATION DIVISION
ROADWAY DESIGN SERVICES

DETAIL SHEET
DETAIL D1 (1 OF 3)

REGISTERED PROFESSIONAL ENGINEER (CIVIL) CERTIFICATE NO. 23663 DAVID J. SCHAUB ARIZONA, U.S.A. Date Signed 04/29/09
Expires 6/30/2010

ROUTE	LOCATION	
SR 202L	SR 202/SR 51 TI TO SR 101L	
TRACS NO. H6871 01C		202-A-NFA

DWG NO D-01.01

___ OF ___

P:\TRANSPORTATION\Kiewit\SR 202 Design Build\CADD\Exhibits\Drainage\CADD\Plan\h6871d05.dgn
4/29/2009 3:08:56 PM

F.H.W.A. REGION	STATE	PROJECT NO.	SHEET NO.	TOTAL SHEETS	AS BUILT
9	ARIZ.	202-A-NFA			
		202L MA 000			

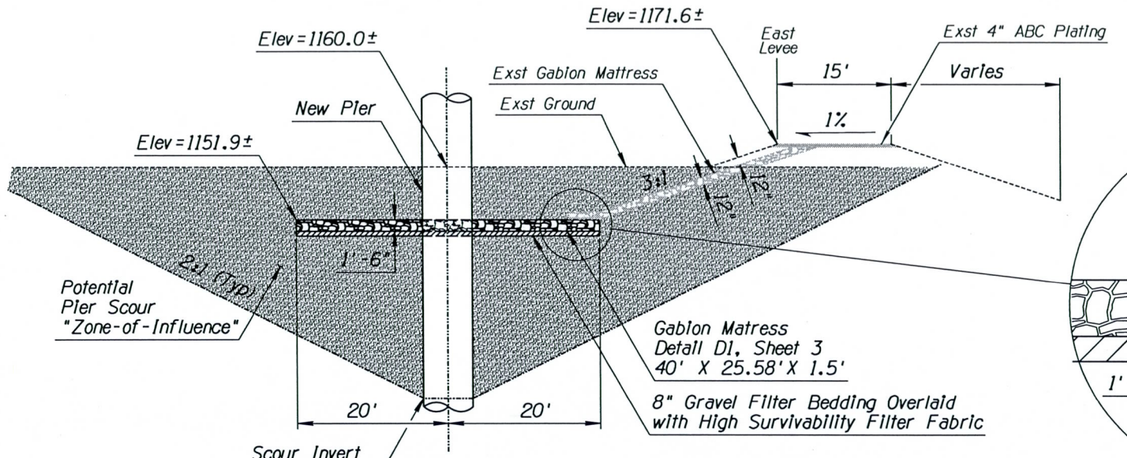

PIER 7, NEW OUTSIDE COLUMN WESTBOUND
SECTION C-C

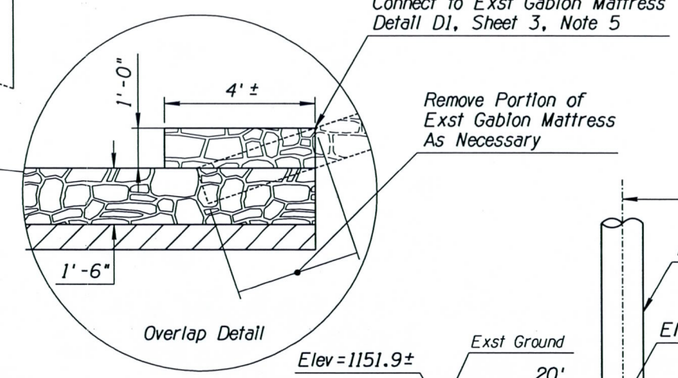

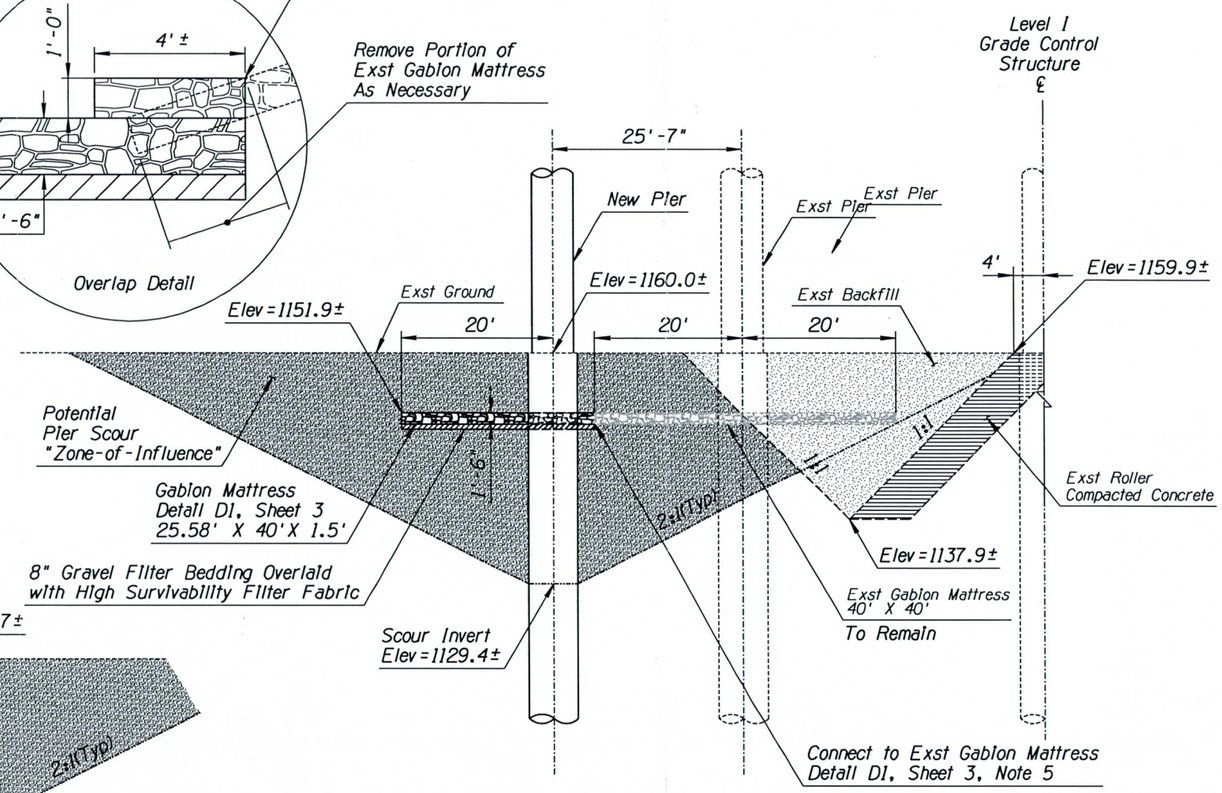

PIER 6, NEW OUTSIDE COLUMN WESTBOUND
SECTION B-B

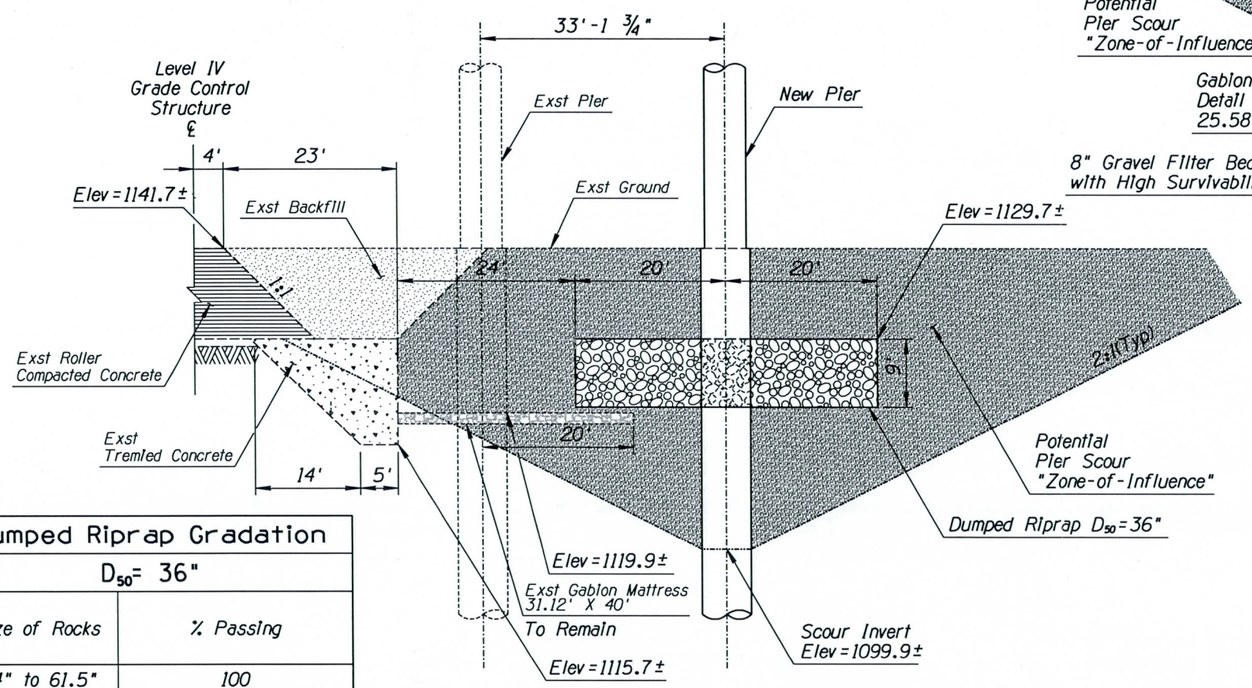

PIER 4, NEW OUTSIDE COLUMN EASTBOUND
SECTION A-A

Dumped Riprap Gradation	
D_{50} = 36"	
Size of Rocks	% Passing
54" to 61.5"	100
45" to 50.5"	85
36" to 41.5"	50
15" to 22"	15

DETAIL D1

SHEET 2 OF 3
PIER & BANK PROTECTION DETAILS

NOT FOR CONSTRUCTION

REV	DATE	DESCRIPTION	BY
	/ /		
	/ /		
	/ /		
	/ /		
	/ /		
	/ /		
	/ /		
	/ /		
	/ /		
	/ /		

	NAME	DATE
DESIGN	D SCHAUB	02/09
DRAWN	K BEGAY	02/09
CHECKED	D JERMELAND	02/09

URS

ARIZONA DEPARTMENT OF TRANSPORTATION
INTERMODAL TRANSPORTATION DIVISION
ROADWAY DESIGN SERVICES

DETAIL SHEET
DETAIL D1 (2 OF 3)

ROUTE: SR 202L
LOCATION: SR 202/SR 51 TI TO SR 101L

TRACS NO. H6871 01C | 202-A-NFA

REGISTERED PROFESSIONAL ENGINEER (CIVIL) CERTIFICATE NO. 23663 DAVID J. SCHAUB ARIZONA, U.S.A. Date Signed 04/17/09
Expires 6/30/2010

DWG NO D-01.02

___ OF ___

P:\TRANSPORTATION\Kiewit\SR 202 Design Build\CADD\Exhibits\Drainage\CADD\Plan\h6871dd14.dgn
5/1/2009 2:32:35 PM

F.H.W.A. REGION	STATE	PROJECT NO.	SHEET NO.	TOTAL SHEETS	AS BUILT
9	ARIZ.	202-A-NFA			
		202L MA 000			

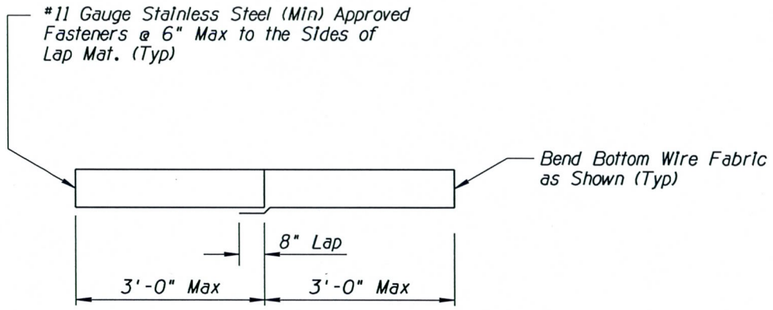

TYPICAL SECTION LAP SPLICE

NTS

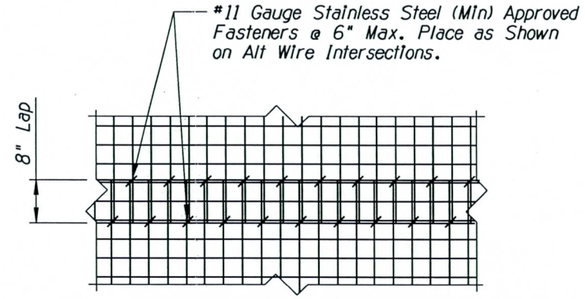

LAP SPLICE DETAIL

NTS

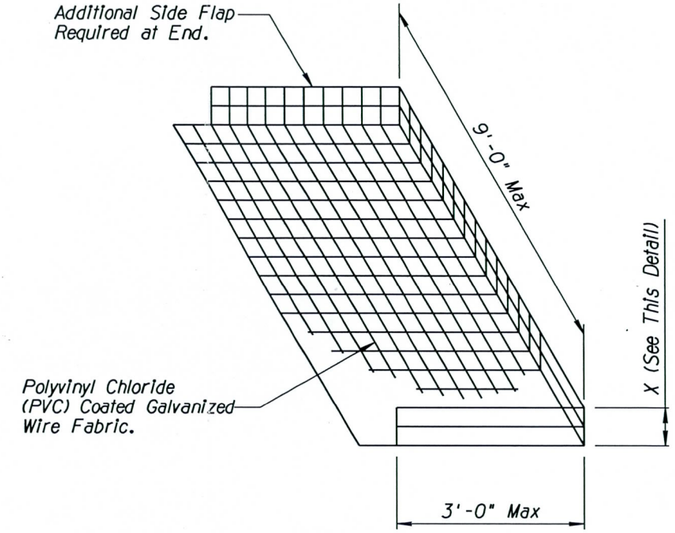

GABION MATTRESS DETAIL

NTS

Gravel Filter Bedding Gradation	
D_{50}= 1/2"	
Size of Rocks	% Passing
1"	85-100
1/2"	15-50
1/4"	0-15

Gabion Mattress Fill Gradation			
DIA.	X=1'	X=1.5'	X=3.0'
MAX	12"	18"	36"
MIN	3"	3"	3"
AVE	6"	9"	12"

NOTES:

1. Polyvinyl Chloride (PVC) Coating Shall be Used Over the Galvanized Wire Fabric. The PVC Coating Shall Have a Nominal Thickness of 0.02165 Inches and Shall Nowhere be Less Than 0.015 Inches.
2. The Gabion Mattress Shall Be Placed Over an 8" Gravel Filter Bedding. A Separation Barrier of High Survivability Filter Fabric Shall be Placed Between the Gabion Mattress and Gravel Filter Bedding.
3. Attach Diaphragms at 3' Intervals To The Base of the Mattress and Tie the Diaphragms to the Sides and the Dividers.
4. Gabion Mattress Material and Installation Shall be In Accordance with Section 913 of the ADOT Standard Specification.
5. Gabion Mattress Shall be Tied to Existing Gabion Mattress with a Lap Splice as Shown on This Detail.
6. Damaged to Existing Gabion Mattress Shall be Repaired to a Functioning Complete Mattress.

DETAIL D1

SHEET 3 OF 3

PIER & BANK PROTECTION DETAILS

NOT FOR CONSTRUCTION

REV	DATE	DESCRIPTION	BY
	/ /		
	/ /		
	/ /		
	/ /		
	/ /		
	/ /		
	/ /		
	/ /		
	/ /		
	/ /		

	NAME	DATE
DESIGN	D SCHAUB	02/09
DRAWN	K BEGAY	02/09
CHECKED	D JERMELAND	02/09

URS

ARIZONA DEPARTMENT OF TRANSPORTATION
INTERMODAL TRANSPORTATION DIVISION
ROADWAY DESIGN SERVICES

DETAIL SHEET
DETAIL D1 (3 OF 3)

REGISTERED PROFESSIONAL ENGINEER (CIVIL) CERTIFICATE NO. 23663 DAVID J. SCHAUB Date Signed 04/29/09 ARIZONA, U.S.A.

Expires 6/30/2010

ROUTE	LOCATION
SR 202L	SR 202/SR 51 TI TO SR 101L

DWG NO D-01.03

TRACS NO. H6871 01C | 202-A-NFA | ___ OF ___

SURVEY NO. | FINISHED PLANS- | REVISIONS- | LOCATION- | DATE-

P:\TRANSPORTATION\Kiewit\SR 202 Design Build\CADD\Exhibits\Drainage\CADD\Plan\h6871dd02.dgn
4/29/2009 3:12:21 PM

APPENDIX B

FCDMC COMMENTS / URS RESPONSES

Flood Control District
of Maricopa County

INTEROFFICE MEMORANDUM

Date: April 9, 2009

To: Shelby Brown, Civil/Structures Branch, Engineering Division.

From: J. Rafael Pacheco, PhD, Assoc. Engineer, Engineering Application Development and River Mechanics Branch, Engineering Division

CC: Bing Zhao, PhD, PE, Engineering Application Development and River Mechanics Branch Manager, Engineering Division; Kenneth Rakestraw, Engineering Division, Hydrology/Hydraulics Branch

Subject: Review on "Draft Technical Drainage Memorandum SR 202L Bridge Scour Evaluation, Indian Bend Wash Bridge" by URS Corporation, received by Engineering Application Development and River Mechanics Branch (EADRM) on March 3, 2009. Permit number **2009P011**.

The EADRM received the report on March 3, 2009. I have finished my review of the above referenced document and I have the following comments. Please address each of these comments, add your response below mine and provide a digital file of your response. Those comments that have been resolved are grayed out. Those that still need to be resolved remain in dark font.

1. **1A. (FCD 3/3/2009)**: The consultant should consider evaluating the influence of the drop structure on the proposed piers.

   1A. (URS 4/8/2009) Response: The Simons, Li & Associates (SLA) report entitled "Hydraulic and Scour Analysis for the East Papago Crossing of the Indian Bend Wash," 1990 was reviewed during the preparation of the "Draft Technical Drainage Memorandum SR 202L Bridge Scour Evaluation, Indian Bend Wash." The SLA 1990 report references another SLA document on the determination of local scour downstream of rigid grade-control structures. That SLA document is entitled, "Project Report, Hydraulic Model Study of Local Scour Downstream of Rigid Grade-Control Structures," 1986. This additional reference has been used in the preparation of these responses.

   1A. (FCD 4/8/2009): The SLA 1990 report is specifically for this project. The results from the 1990 report should be used instead of the 1986 report. The 1986

report is for general drop structure scour equation and it is not specific for this particular project.

1B. (FCD 3/3/2009): The scour-depth calculations for piers upstream of the drop structure should include local scour phenomenon associated with the accelerated flow condition which will exist immediately upstream of the drop structure (SLA 1990).

1B. (URS 4/8/2009) Response: The cited source states:
"This drop-structure system will effectively eliminate the need to consider the affect (sic) of general scour, bed-form scour, and bend scour."(p. 24). This source also states, *"This depth includes local scour at the bridge piers plus two feet to account for the local scour phenomenon associated with the accelerated flow condition which will exist immediately upstream of the Level I drop structure."(p. 24).*

Since the piers in question are located 69 feet and 146 feet upstream of the drop structure, the accelerated flow condition may produce a local scour effect of less than 2 feet. However, as a conservative estimate the local scour effect is set at 2 feet. The URS document includes general scour and bed-form scour, but not the 2 feet to account for the accelerated flow condition. These revisions would counteract each other and result in minor changes in the design scour depth for the SPF flow of 64,000 cfs as shown in the follow tables:

a. **ADOT Methodology Table (Pier 6 WB and 7 WB)**

Description	SPF (URS Draft Document)	SPF (Proposed Revision)
Local Pier Scour (ft)	20.13	20.13
General Scour (ft)	0.98	0.00
Long Term Degradation (ft)	0.00	0.00
Bed Form Scour (ft)	1.96	0.00
Accelerated Flow Effect (ft)	0.00	2.00[2]
Total Scour (ft)	23.07	22.13

b. **FCDMC Methodology Table (Pier 6 WB and 7 WB)**

Description	SPF (URS Draft Document)	SPF (Proposed Revision)
Local Pier Scour (ft)	20.13[1]	20.13[1]
General Scour (ft)	4.66	0.00
Long Term Degradation (ft)	0.00	0.00
Bed Form Scour (ft)	1.96	0.00
Accelerated Flow Effect (ft)	0.00	2.00[2]
30% Safety for Additional Scour Components	1.98	0.60
Total Scour (ft)	28.73	22.73

[1] Local Pier Scour determined assuming 2 feet of debris around the column. At previous meetings, FCDMC has stated that the debris provides the necessary safety factor. Therefore, the 30% safety factor has not been applied to the local pier scour.
[2] Values obtained from SLA 1990 report.

The Final Technical Drainage Memorandum will be revised to reflect these changes. The ADOT total scour depth for the structural design of the upstream piers will be revised from 23.07 feet to 22.13 feet. The recommended design scour depth will remain at 23.00 feet as shown in the Draft Technical Memorandum. The FCDMC total scour depth for evaluating the "Zone-of-Influence" will be revised from 28.73 feet to 22.73 feet. The recommended evaluation scour depth will be revised to 23.00 feet instead of the 29.00 feet as shown in the Draft Technical Memorandum.

1B . (FCD 4/8/2009): The total scour depth for the upstream pier must be 28.73 feet as you originally computed. This value is consistent with SLA approach.

1C. (FCD 3/3/2009): The scour-depth calculations for piers downstream of the drop structure should include local scour phenomenon associated with the impingement of the flow at the downstream of the drop structure. The total length of the zone of influence along the channel due to drop structure impact on the downstream area is approximately twelve times the depth of local scour due to flow over the drop structure: 'The maximum depth of local scour below a drop structure with respect to the projected bed elevation will terminate at a location downstream of the drop that is approximately six times the maximum depth of local scour associated with the flow over the structure' (SLA 1990). Then, the scour depth will taper at a 6:1 slope for another distance of about 6 times the maximum local depth due to drop structure. Please see the attached sketch.

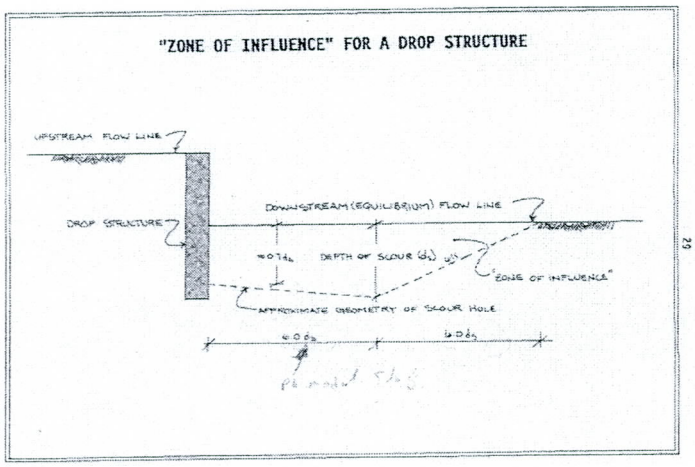

1C. (URS 4/8/2009) Response: The cited source states that the total depth of scour downstream of the drop-structure system is: *"...due to the combined effect of local scour at the bridge piers and local scour attributable to plunging flow created by an estimated one-half-foot drop in the bed elevation on the downstream side of the level IV structure. This drop, at Level IV, occurs after long-term degradation of the downstream channel is achieved." (p. 26).* The piers in question are located 76 feet and 154 feet downstream of the drop structure. The

cited source also states: "*The maximum depth of local scour below a drop structure with respect to the projected (equilibrium) bed elevation will terminate at a location downstream of the drop that is approximately six times the maximum depth of local scour associated with the flow over the structure. Downstream of this location, the "zone-of-influence" extends an additional distance that is again equal to approximately six times the depth of scour (see Figure 5). The geometry of this portion of the scour hole is approximated by a 6:1 return slope. Therefore, the total length of the "zone of influence" along the channel is approximately twelve times the depth of local scour due to flow over the drop structure. Again, this distance is measured from the downstream limit of the drop structure."(p. 27).*

The cited source estimates the local scour for the drop structure to be 7.59 feet for the SPF flow of 64,000 cfs. Twelve times that results in a 91-foot "zone of influence" in a downstream direction from the downstream limit of the drop structure. That would place one pier 15 feet inside the zone resulting in an estimated local scour of 2.50 feet and the other pier 63 feet beyond the zone resulting in no local scour. However, as a conservative estimate let's set the local scour effect to 7.59 feet. The URS document includes general scour and bed-form scour, but not the 7.59 feet to account for the accelerated flow condition. These revisions would counteract each other and result in minor changes in the design scour depth for the SPF flow of 64,000 cfs as shown in the follow tables:

a. **ADOT Methodology Table (Pier 3 EB and 4 EB)**

Description	SPF (URS Draft Document)	SPF (Proposed Revision)
Local Pier Scour (ft)	22.32	22.32
General Scour (ft)	1.01	0.00
Long Term Degradation (ft)	0.0	0.50[2]
Bed Form Scour (ft)	3.15	0.00
Accelerated Flow Effect (ft)	0.00	0.00
Local Drop Structure Scour (ft)	0.00	7.59[2]
30% Safety for Additional Scour Components	0.00	0.00
Total Scour (ft)	26.48	30.41

b. **FCDMC Methodology Table (Pier 3 EB and 4 EB)**

Description	SPF (URS Draft Document)	SPF (FCDMC Comments)
Local Pier Scour (ft)	22.32[1]	22.32[1]
General Scour (ft)	4.93	0.00
Long Term Degradation (ft)	0.0	0.50[2]
Bed Form Scour (ft)	3.15	0.00
Accelerated Flow Effect (ft)	0.00	0.00
Local Drop Structure Scour (ft)	0.00	7.59[2]
30% Safety for Additional Scour Components	2.42	2.43
Total Scour (ft)	32.82	32.84

[1] Local Pier Scour determined assuming 2 feet of debris around the column. At previous meetings, FCDMC has stated that the debris provides the necessary safety factor. Therefore, the 30% safety factor has not been applied to the local pier scour.

[2] Values obtained from SLA 1990 report.

The Final Technical Drainage Memorandum will be revised to reflect these changes. The ADOT total scour depth for the structural design of the downstream piers will be revised from 26.48 feet to 30.41 feet. The recommended design scour depth will be revised to 31.00 feet instead of 27.00 feet as shown in the Draft Technical Memorandum. The FCDMC total scour depth for evaluating the "Zone-of-Influence" will be revised from 32.82 feet to 32.84 feet. The recommended evaluation scour depth will remain at 33.00 feet as shown in the Draft Technical Memorandum.

1C. (FCD 4/8/2009): The local scour as well as the general scour must be added to the total scour.

1D. (FCD 3/3/2009): SLA (1990) already computed the total scour depth with the consideration of the drop structure for this location. Based on their scour depth results, the following table contains the scour depths for the proposed piers.

Pier No.	Total scour depth (ft)
2	32
3	32
4	32
6	28
7	28

Table 1: Q = 30,000 cfs.

Pier No.	Total scour depth (ft)
2	41
3	41
4	41
6	34
7	34

Table 2: Q = 63,000 cfs.

1D. (URS 4/8/2009) Response: As shown by Responses 1B and 1C, the URS document disagrees with these estimated scour depths. Table 4.2 of the cited report breaks the SLA total scour depths down into three components. These are local pier scour, local drop structure scour, and long-term degradation. General scour, bed-form scour and bend scour are listed as not applicable. Long-term degradation is also listed as not applicable upstream of the drop structure. The local pier scour was determined with 2 feet of debris around the column, which is the same as the URS draft document. The SLA document reports local pier scour to be very similar to those reported in the URS draft document. For example (for SPF of 64,000 cfs), upstream of the drop SLA reports 20.77 feet and URS reports 20.13 feet, and downstream of the drop SLA reports 21.33 feet and URS reports 22.32 feet. The major difference in determining the total scour is that the SLA document multiplies all scour components by an approximate 40% safety factor. Currently, ADOT does not use a safety factor and the FCDMC has stated that a 30% safety should be added to the scour components. FCDMC has also stated that a safety factor need not be applied when 2 feet of debris is assumed to surround the columns. Applying these changes to the values obtained from the SLA document would result in total scour depths similar to those computed above as shown in the following table.

a. **SLA Methodology Table (Pier 3 EB and 4 EB)**

Description	SPF (SLA Document)	SPF (Current ADOT Methodology)	SPF (Current FCDMC Methodology)
Local Pier Scour (ft)	21.33[2]	21.33[2]	21.33[1][2]
General Scour (ft)	0.00	0.00	0.00
Long Term Degradation (ft)	0.50[2]	0.50[2]	0.50[2]
Bed Form Scour (ft)	0.00	0.00	0.00
Accelerated Flow Effect (ft)	0.00	0.00	0.00
Local Drop Structure Scour (ft)	7.59[2]	7.59[2]	7.59[2]
40%– Safety	11.57	0.00	0.00
30% Safety for Additional Scour Components	0.00	0.00	2.43
Total Scour (ft)	40.99	29.42	31.85

[1] Local Pier Scour determined assuming 2 feet of debris around the column. At previous meetings, FCDMC has stated that the debris provides the necessary safety factor. Therefore, the 30% safety factor has not been applied to the local pier scour.
[2] Values obtained from SLA 1990 report.

b. **SLA Methodology Table (Pier 6 WB and 7 WB)**

Description	SPF (SLA Document)	SPF (Current ADOT Methodology)	SPF (Current FCDMC Methodology)
Local Pier Scour (ft)	20.77[2]	20.77[2]	20.77[1][2]
General Scour (ft)	0.00	0.00	0.00
Long Term Degradation (ft)	0.00	0.00	0.00
Bed Form Scour (ft)	0.00	0.00	0.00
Accelerated Flow Effect (ft)	2.00[2]	2.00[2]	2.00[2]
Local Drop Structure Scour (ft)	0.00	0.00	0.00
40%– Safety	9.11	0.00	0.00
30% Safety for Additional Scour Components	0.00	0.00	0.60
Total Scour (ft)	31.88	22.77	23.37

[1] Local Pier Scour determined assuming 2 feet of debris around the column. At previous meetings, FCDMC has stated that the debris provides the necessary safety factor. Therefore, the 30% safety factor has not been applied to the local pier scour.
[2] Values obtained from SLA 1990 report.

1D. (FCD 4/8/2009): The general scour and the local scour due to drop structure must be included.

1E. (FCD 3/3/2009): The consultants may fine-tune the results for downstream piers reported in Table 1 and Table 2 based on the drop structure influence zone sketch by considering the distance from each pier to the drop structure. This may reduce the total scour depth.

1E. (URS 4/8/2009) Response: See Response 1C.

1E. (FCD 4/8/2009): Issue resolved.

2. **(FCD 3/3/2009)** The influence of proposed piers may also have impact on existing drop structure toe protection at both upstream and downstream ends of the drop structure. If the piers and drop structure are too close, the drop structure toe will need to be protected by a certain structural solution.

(URS 4/8/2009) Response 2: The URS document states that the proposed outside columns for Pier 4 Eastbound and Pier 6 Westbound may impact the existing IBW Drop-Structure and the proposed outside column for Pier 7 Westbound may impact the existing Gabion Bank Protection. The IBW Drop-Structure as-built plans show Gabion Mattress protection for three (3) existing columns near the drop structure and one (1) existing column near the bank protection. Piers 3 and 4 Eastbound and Pier 6 Westbound are near the drop structure, and Pier 7 Westbound is near the bank protection. At a previous meeting with FCDMC personnel, it was agreed that similar protection could be used for the proposed columns that may impact these facilities. This protection is shown in Detail D1 of the URS Draft Memorandum.

(FCD 4/8/2009): issue resolved.

3. **(FCD 3/3/2009)** Since the bed condition factor is already chosen as 1.1 for local pier scour, the bed form scour should be zero because the local pier scour already includes the bed form scour. Therefore, the total scour should be reduced by this double-counting.

(URS 4/8/2009) Response 3: That is correct. ADOT requires that K_3 be set to 1.1 for most cases where plan bed conditions exist, dune height <10 feet. As stated in the URS Draft Memorandum, transitional flow (between subcritical and supercritical flow) would occur through the IBW Drop Structure, and it was decided to include the additional anti-dune scour determined with an equation developed by SLA, 1982. However, this double counting will be removed from the URS Final Technical Memorandum.

(FCD 4/8/2009) Issue resolved.

4. **4A. (FCD 3/3/2009):** Regarding the methodology differences between FCDMC and ADOT, we will need to clarify this because there are some misunderstandings in the submitted report. In fact, there is no essential difference between FCDMC's and ADOT's methodology. The differences are caused by the different interpretation by individual hydraulic engineers regarding which equation is to be used. In the report submitted by URS, if URS corrected the bed form scour error by not double-counting the bed form as discussed above, the major difference between the so-called "FCDMC Methodology" and "ADOT Methodology" is how to compute the general scour and the safety factor applied to the general scour. Based on URS's report, the general scour by "ADOT Methodology" is based on the 1981 Zeller general scour equation and the result is 0.89 feet for Pier No.7 (no safety factor is used), and the general scour by "FCDMC Methodology" is the average of Blench and Lacey equation and the result is 4.66 ft for Pier No.7 (6 feet with 1.3 safety factor). ADOT scour guideline refers to HEC-18 for scour calculations and does not specify the 1981

Zeller equation for general scour. FCDMC used Zeller equation before and found that the equation gives a rather small value of scour depth for most rivers. Please see the link to ADOT guideline http://www.azdot.gov/Highways/bridge/Guidelines/HydraulicGuidelines/PDF/HydDgnGuidelines.pdf . Please see the link to HEC-18 http://isddc.dot.gov/OLPFiles/FHWA/010590.pdf.

4A. (URS 4/8/2009) Response: The calculations contained in the URS Draft Memorandum are in accordance with ADOT Methodology based on a review of the preliminary scour calculations for this project and meetings with ADOT staff and representatives. Furthermore, it is felt that we followed the FCDMC Methodology as discussed at two meetings with FCDMC.

4A. (FCD 4/8/2009): The consultant must include both general scour and the local scour due to drop structure.

4B. (FCD 3/3/2009): The general scour defined by HEC-18 includes not only contraction scour but also other general scour. Please refer to section 5.8 in HEC-18 for further discussions on other general scour components. Here are some discussions from HEC-18: The causes for contraction scour are bridge constriction, natural stream constrictions, long highway approaches to the bridge over the floodplain, ice formations or jams, natural berms along the banks due to sediment deposits, debris, vegetative growth in the channel or floodplain, and pressure flow. Other general scour includes the follows. The relatively shallow straight reaches between bendway pools are called crossings. With changes in discharge and stage the patterns of scour and fill can also change in the crossing and pool sequence. These processes are considered part of general scour. They are cyclic and may be in equilibrium around some general bed elevation. There are no equations for predicting these changes in elevation. Some general scour conditions are associated with particular channel morphology. Braided channels will have deep scour holes when two channels come together downstream from a bar or island (confluence scour). Other general scour can be caused by short-term (daily, weekly, yearly, or seasonal) changes in the downstream water surface elevation that control backwater and hence, the velocity through the bridge opening. Similarly, a bridge located upstream or downstream of a confluence can experience general scour caused by variable flow conditions on the main river and tributary.

4B. (URS 4/8/2009) Response: Most of the conditions you refer to do not exist at this location. In my opinion the confluence with the Salt River would have no effect on the general scour at this location, since the bridge and drop structure are a substantial distance upstream from the confluence and the Salt River G.C.S. #5 and the Tempe Town Lake Dams have a controlling influence on the Salt River. As stated in the URS report, contraction scour is considered to be zero due to the fact that the bank protection is in line with the flowthrough abutments.

4B. (FCD 4/8/2009): We respectfully disagree with your opinion.

4C. (FCD 3/3/2009): Since the bridge is at a drop structure and is at the confluence with Salt River, this type of general scour is never accounted in Zeller's equation. A few feet of general scour as computed by Lacey/Blench equation is very reasonable in alluvial channels in Maricopa County especially for this case where there is a confluence and a drop structure. Due to the huge uncertainties in estimating general scour, a 1.3 safety factor should be used as required by FCDMC for the general scour component.

4C. (URS 4/8/2009) Response: These equations were used in the FCDMC Methodology as previously requested. The scour depths calculated with this methodology were used to determine impacts to flood control facilities.

4C. (FCD 4/8/2009): Both general scour and the local scour due to drop structure must be included.

4D. (FCD 3/3/2009): Based on reasons stated above, because FCDMC maintains the drop structure and bank protection and the bridge piers are so close to these two structures, the general scour of 6 feet (already including 1.3 safety-factor) should be added to the total scour. It must be pointed out that the impact of drop structure on upstream piers and downstream piers must be added to the total scour depth as documented in SLA 1990 report. The potential impact of bank protection on bridge pier scour or vice versa shall be evaluated. The impact of pier scour on drop structure must be evaluated.

4D. (URS 4/8/2009) Response: The URS Draft Technical Memorandum states that the impacts to the flood control facilities were determined based on the scour depths computed by the FCDMC Methodology. The proposed scour mitigation at the affected piers makes the need to fine-tune the scour depths moot since the local pier scour could not go any deeper than the proposed Gabion Mattress. Based on the report you cited and based on information in that report, we are proposing to remove the general scour estimates from all calculations in the Final Technical Memorandum. This conclusion is also supported by another report entitled, "*Computing Degradation and Local Scour, Technical Guideline for Bureau of Reclamation,*" January 1984. This report states:
"Methods adopted by Reclamation for computing local scour below a hydraulic structure across the river channel are based on either the regime or rational approach. Scour computations should be made by several methods and engineering judgment used to select the most appropriate. In the regime approach, the Lacey or Blench equations 26, 27, 29, and 30, respectively, with Z values from table 7 are applicable. The most appropriate empirically developed rational methods for scour below a structure are those by Schoklitsch (1932), Veronese (1937), or Zimmerman and Maniak (1967)." (p. 42)

SLA used the Zimmerman and Maniak equation to determine the local scour at the downstream end of the drop structure. The SLA 1990 report contains a modified version of the equation in Appendix E. It is the same equation contained in the Bureau of Reclamation 1984 Guideline, but in a slightly different format through mathematical manipulation of the parameters.

In summary, the discussed revisions will be included in the final Technical Drainage Memorandum, SR 202L, Bridge Scour Evaluations, Indian Bend Wash Bridge. The above outlined methodology and references to the SLA 1990 report will be included in the final memorandum. The structural foundation design for the 4 piers not protected by the bank protection or the drop structure will be in accordance with a scour depth calculated with the ADOT Method. The scour ''Zone-of-Influence'' of these 4 piers on the drop structure and bank protection will be in accordance with the scour depths calculated with the FCDMC method. These scour depths are as follows:

Pier No.	Total Scour Depth (feet)	
	ADOT Method	FCDMC Method
3 EB	31	33
4 EB	31	33
6 WB	23	23
7 WB	23	23

4D. (FCD 4/8/2009): Please see previous reponses.

Bibliography

Simons, Li and Associates, Inc (SLA 1990) 'Hydraulic and Scour Analysis for the East Papago Crossing of Indian Bend Wash', 1990.

URS

April 7, 2009

Ms. Shelby Brown
Civil/Structures Branch, Engineering Division
Flood Control District of Maricopa County
2801 West Durango Street
Phoenix, Arizona 85009

Re: SR 202L, Design Build Project
TRACS No. 202 MA 000 H6871 01C
FCDMC Permit Number **2009P011**
Responses to Review Comments on Indian Bend Wash Bridge

Dear Ms. Brown:

We received your comments dated March 16, 2009. A meeting of all stakeholders was held at the FCDMC office to discuss the comments and our responses. It was reaffirmed at that meeting that the bridge foundations would be structurally designed based on the Arizona Department of Transportation (ADOT) Scour Methodology and that the "Zone-of-Influence" on the FCDMC facilities would be checked based on the FCDMC Scour Methodology. For ease of responding, I have taken the liberty of breaking each of your comments into several sub-comments. These sub-comments are labeled with upper case letters, such as Comment 1 becomes 1A, 1B, etc.

Comment 1A: The consultant should consider evaluating the influence of the drop structure on the proposed piers.

Response 1A: The Simons, Li & Associates (SLA) report entitled "Hydraulic and Scour Analysis for the East Papago Crossing of the Indian Bend Wash," 1990 was reviewed during the preparation of the "Draft Technical Drainage Memorandum SR 202L Bridge Scour Evaluation, Indian Bend Wash." The SLA 1990 report references another SLA document on the determination of local scour downstream of rigid grade-control structures. That SLA document is entitled, "Project Report, Hydraulic Model Study of Local Scour Downstream of Rigid Grade-Control Structures," 1986. This additional reference has been used in the preparation of these responses.

Comment 1B: The scour-depth calculations for piers upstream of the drop structure should include local scour phenomenon associated with the accelerated flow condition which will exist immediately upstream of the drop structure (SLA 1990).

URS Corporation
7720 North 16th Street, Suite 100
Phoenix, AZ 85020
Tel: 602.371.1100
Fax: 602.371.1615

Response 1B: The cited source states:

> *"This drop-structure system will effectively eliminate the need to consider the affect (sic) of general scour, bed-form scour, and bend scour."(p. 24)* This source also states, *"This depth includes local scour at the bridge piers plus two feet to account for the local scour phenomenon associated with the accelerated flow condition which will exist immediately upstream of the Level I drop structure."(p. 24)*

Since the piers in question are located 69 feet and 146 feet upstream of the drop structure, the accelerated flow condition may produce a local scour effect of less than 2 feet. However, as a conservative estimate the local scour effect is set at 2 feet. The URS document includes general scour and bed-form scour, but not the 2 feet to account for the accelerated flow condition. These revisions would counteract each other and result in minor changes in the design scour depth for the SPF flow of 64,000 cfs as shown in the follow tables:

a. ADOT Methodology Table (Pier 6 WB and 7 WB)

Description	SPF (URS Draft Document)	SPF (Proposed Revision)
Local Pier Scour (ft)	20.13	20.13
General Scour (ft)	0.98	0.00
Long Term Degradation (ft)	0.00	0.00
Bed Form Scour (ft)	1.96	0.00
Accelerated Flow Effect (ft)	0.00	2.00(2)
Total Scour (ft)	23.07	22.13

b. FCDMC Methodology Table (Pier 6 WB and 7 WB)

Description	SPF (URS Draft Document)	SPF (Proposed Revision)
Local Pier Scour (ft)	20.13(1)	20.13(1)
General Scour (ft)	4.66	0.00
Long Term Degradation (ft)	0.00	0.00
Bed Form Scour (ft)	1.96	0.00
Accelerated Flow Effect (ft)	0.00	2.00(2)
30% Safety for Additional Scour Components	1.98	0.60
Total Scour (ft)	28.73	22.73

(1) Local Pier Scour determined assuming 2 feet of debris around the column. At previous meetings, FCDMC has stated that the debris provides the necessary safety factor. Therefore, the 30% safety factor has not been applied to the local pier scour.

(2) Values obtained from SLA 1990 report.

The Final Technical Drainage Memorandum will be revised to reflect these changes. The ADOT total scour depth for the structural design of the upstream piers will be revised from 23.07 feet to 22.13 feet. The recommended design scour depth will remain at 23.00 feet as shown in the Draft Technical Memorandum. The FCDMC total scour depth for evaluating the "Zone-of-Influence" will be revised from 28.73 feet to 22.73 feet. The

recommended evaluation scour depth will be revised to 23.00 feet instead of the 29.00 feet as shown in the Draft Technical Memorandum.

Comment 1C: The scour-depth calculations for piers downstream of the drop structure should include local scour phenomenon associated with the impingement of the flow at the downstream of the drop structure. The total length of the zone of influence along the channel due to drop structure impact on the downstream area is approximately twelve times the depth of local scour due to flow over the drop structure: "The maximum depth of local scour below a drop structure with respect to the projected bed elevation will terminate at a location downstream of the drop that is approximately six times the maximum depth of local scour associated with the flow over the structure" (SLA 1990). Then, the scour depth will taper at a 6:1 slope for another distance of about 6 times the maximum local depth due to drop structure.

Response 1C: The cited source states that the total depth of scour downstream of the drop-structure system is:

> *"...due to the combined effect of local scour at the bridge piers and local scour attributable to plunging flow created by an estimated one-half-foot drop in the bed elevation on the downstream side of the level IV structure. This drop, at Level IV, occurs after long-term degradation of the downstream channel is achieved." (p. 26)*

The piers in question are located 76 feet and 154 feet downstream of the drop structure. The cited source also states:

> *"The maximum depth of local scour below a drop structure with respect to the projected (equilibrium) bed elevation will terminate at a location downstream of the drop that is approximately six times the maximum depth of local scour associated with the flow over the structure. Downstream of this location, the "zone-of-influence" extends an additional distance that is again equal to approximately six times the depth of scour (see Figure 5). The geometry of this portion of the scour hole is approximated by a 6:1 return slope. Therefore, the total length of the "zone of influence" along the channel is approximately twelve times the depth of local scour due to flow over the drop structure. Again, this distance is measured from the downstream limit of the drop structure."(p. 27)*

The cited source estimates the local scour for the drop structure to be 7.59 feet for the SPF flow of 64,000 cfs. Twelve times that results in a 91-foot "zone of influence" in a downstream direction from the downstream limit of the drop structure. That would place one pier 15 feet inside the zone resulting in an estimated local scour of 2.50 feet and the other pier 63 feet beyond the zone resulting in no local scour. However, as a conservative estimate let's set the local scour effect to 7.59 feet. The URS document includes general scour and bed-form scour, but not the 7.59 feet to account for the accelerated flow condition. These revisions would counteract each other and result in minor changes in the design scour depth for the SPF flow of 64,000 cfs as shown in the follow tables:

a. ADOT Methodology Table (Pier 3 EB and 4 EB)

Description	SPF (URS Draft Document)	SPF (Proposed Revision)
Local Pier Scour (ft)	22.32	22.32
General Scour (ft)	1.01	0.00
Long Term Degradation (ft)	0.0	0.50[2]
Bed Form Scour (ft)	3.15	0.00
Accelerated Flow Effect (ft)	0.00	0.00
Local Drop Structure Scour (ft)	0.00	7.59[2]
30% Safety for Additional Scour Components	0.00	0.00
Total Scour (ft)	26.48	30.41

b. FCDMC Methodology Table (Pier 3 EB and 4 EB)

Description	SPF (URS Draft Document)	SPF (FCDMC Comments)
Local Pier Scour (ft)	22.32[1]	22.32[1]
General Scour (ft)	4.93	0.00
Long Term Degradation (ft)	0.0	0.50[2]
Bed Form Scour (ft)	3.15	0.00
Accelerated Flow Effect (ft)	0.00	0.00
Local Drop Structure Scour (ft)	0.00	7.59[2]
30% Safety for Additional Scour Components	2.42	2.43
Total Scour (ft)	32.82	32.84

[1] Local Pier Scour determined assuming 2 feet of debris around the column. At previous meetings, FCDMC has stated that the debris provides the necessary safety factor. Therefore, the 30% safety factor has not been applied to the local pier scour.

[2] Values obtained from SLA 1990 report.

The Final Technical Drainage Memorandum will be revised to reflect these changes. The ADOT total scour depth for the structural design of the downstream piers will be revised from 26.48 feet to 30.41 feet. The recommended design scour depth will be revised to 31.00 feet instead of 27.00 feet as shown in the Draft Technical Memorandum. The FCDMC total scour depth for evaluating the "Zone-of-Influence" will be revised from 32.82 feet to 32.84 feet. The recommended evaluation scour depth will remain at 33.00 feet as shown in the Draft Technical Memorandum.

Comment 1D: SLA (1990) already computed the total scour depth with the consideration of the drop structure for this location. Based on their scour depth results, the following table contains the scour depths for the proposed piers.

Table 1: Q = 30,000 cfs

Pier No.	Total Scour Depth (ft)
2	32
3	32
4	32
6	28
7	28

Table 2: Q = 63,000 cfs

Pier No.	Total Scour Depth (ft)
2	41
3	41
4	41
6	34
7	34

Response 1D: As shown by Responses 1B and 1C, the URS document disagrees with these estimated scour depths. Table 4.2 of the cited report breaks the SLA total scour depths down into three components. These are local pier scour, local drop structure scour, and long-term degradation. General scour, bed-form scour and bend scour are listed as not applicable. Long-term degradation is also listed as not applicable upstream of the drop structure. The local pier scour was determined with 2 feet of debris around the column, which is the same as the URS draft document. The SLA document reports local pier scour to be very similar to those reported in the URS draft document. For example (for SPF of 64,000 cfs), upstream of the drop SLA reports 20.77 feet and URS reports 20.13 feet, and downstream of the drop SLA reports 21.33 feet and URS reports 22.32 feet. The major difference in determining the total scour is that the SLA document multiplies all scour components by an approximate 40% safety factor. Currently, ADOT does not use a safety factor and the FCDMC has stated that a 30% safety should be added to the scour components. FCDMC has also stated that a safety factor need not be applied when 2 feet of debris is assumed to surround the columns. Applying these changes to the values obtained from the SLA document would result in total scour depths similar to those computed above as shown in the following table.

a. SLA Methodology Table (Pier 3 EB and 4 EB)

Description	SPF (SLA Document)	SPF (Current ADOT Methodology)	SPF (Current FCDMC Methodology)
Local Pier Scour (ft)	21.33[2]	21.33[2]	21.33[1][2]
General Scour (ft)	0.00	0.00	0.00
Long Term Degradation (ft)	0.50[2]	0.50[2]	0.50[2]
Bed Form Scour (ft)	0.00	0.00	0.00
Accelerated Flow Effect (ft)	0.00	0.00	0.00
Local Drop Structure Scour (ft)	7.59[2]	7.59[2]	7.59[2]
40%± Safety	11.57	0.00	0.00
30% Safety for Additional Scour Components	0.00	0.00	2.43
Total Scour (ft)	40.99	29.42	31.85

[1] Local Pier Scour determined assuming 2 feet of debris around the column. At previous meetings, FCDMC has stated that the debris provides the necessary safety factor. Therefore, the 30% safety factor has not been applied to the local pier scour.
[2] Values obtained from SLA 1990 report.

b. SLA Methodology Table (Pier 6 WB and 7 WB)

Description	SPF (SLA Document)	SPF (Current ADOT Methodology)	SPF (Current FCDMC Methodology)
Local Pier Scour (ft)	20.77[2]	20.77[2]	20.77[1][2]
General Scour (ft)	0.00	0.00	0.00
Long Term Degradation (ft)	0.00	0.00	0.00
Bed Form Scour (ft)	0.00	0.00	0.00
Accelerated Flow Effect (ft)	2.00[2]	2.00[2]	2.00[2]
Local Drop Structure Scour (ft)	0.00	0.00	0.00
40%± Safety	9.11	0.00	0.00
30% Safety for Additional Scour Components	0.00	0.00	0.60
Total Scour (ft)	31.88	22.77	23.37

[1] Local Pier Scour determined assuming 2 feet of debris around the column. At previous meetings, FCDMC has stated that the debris provides the necessary safety factor. Therefore, the 30% safety factor has not been applied to the local pier scour.
[2] Values obtained from SLA 1990 report.

Comment 1E: The consultants may fine-tune the results for downstream piers reported in Table 1 and Table 2 based on the drop structure influence zone sketch by considering the distance from each pier to the drop structure. This may reduce the total scour depth.

Response 1E: See Response 1C.

Comment 2: The influence of proposed piers may also have impact on existing drop structure toe protection at both upstream and downstream ends of the drop structure. If the piers and drop structure are too close, the drop structure toe will need to be protected by a certain structural solution.

Response 2: The URS document states that the proposed outside columns for Pier 4 Eastbound and Pier 6 Westbound may impact the existing IBW Drop-Structure and the proposed outside column for Pier 7 Westbound may impact the existing Gabion Bank Protection. The IBW Drop-Structure as-built plans show Gabion Mattress protection for three (3) existing columns near the drop structure and one (1) existing column near the bank protection. Piers 3 and 4 Eastbound and Pier 6 Westbound are near the drop structure, and Pier 7 Westbound is near the bank protection. At a previous meeting with FCDMC personnel, it was agreed that similar protection could be used for the proposed columns that may impact these facilities. This protection is shown in Detail D1 of the URS Draft Memorandum.

Comment 3: Since the bed condition factor is already chosen as 1.1 for local pier scour, the bed form scour should be zero because the local pier scour already includes the bed form scour. Therefore, the total scour should be reduced by this double-counting.

Response 3: That is correct. ADOT requires that K_3 be set to 1.1 for most cases where plan bed conditions exist, dune height $\leq$10 feet. As stated in the URS Draft Memorandum, transitional flow (between subcritical and supercritical flow) would occur through the IBW Drop Structure, and it was decided to include the additional anti-dune scour determined with an equation developed by SLA, 1982. However, this double counting will be removed from the URS Final Technical Memorandum.

Comment 4A: Regarding the methodology differences between FCDMC and ADOT, we will need to clarify this because there are some misunderstandings in the submitted report. In fact, there is no essential difference between FCDMC's and ADOT's methodology. The differences are caused by the different interpretation by individual hydraulic engineers regarding which equation is to be used.

Response 4A: The calculations contained in the URS Draft Memorandum are in accordance with ADOT Methodology based on a review of the preliminary scour calculations for this project and meetings with ADOT staff and representatives. Furthermore, it is felt that we followed the FCDMC Methodology as discussed at two meetings with FCDMC.

Comment 4B: The general scour defined by HEC-18 includes not only contraction scour but also other general scour.

Response 4B: Most of the conditions you refer to do not exist at this location. In my opinion the confluence with the Salt River would have no effect on the general scour at this location, since the bridge and drop structure are a substantial distance upstream from the confluence and the Salt River G.C.S. #5 and the Tempe Town Lake Dams have a

controlling influence on the Salt River. As stated in the URS report, contraction scour is considered to be zero due to the fact that the bank protection is in line with the flow-through abutments.

Comment 4C: Since the bridge is at a drop structure and is at the confluence with the Salt River, this type of general scour is never accounted in Zeller's equation. A few feet of general scour as computed by Lacey/Blench equation is very reasonable in alluvial channels in Maricopa County especially for this case where there is a confluence and a drop structure. Due to the huge uncertainties in estimating general scour, a 1.3 safety factor should be used as required by FCDMC for the general scour component.

Response 4C: These equations were used in the FCDMC Methodology as previously requested. The scour depths calculated with this methodology were used to determine impacts to flood control facilities.

Comment 4D: Based on reasons stated above, because FCDMC maintains the drop structure and bank protection and the bridge piers are so close to these two structures, the general scour of 6 feet (already including 1.3 safety-factor) should be added to the total scour. It must be pointed out that the impact of drop structure on upstream piers and downstream piers must be added to the total scour depth as documented in SLA 1990 report. The potential impact of bank protection on bridge pier scour or vice versa shall be evaluated. The impact of pier scour on drop structure must be evaluated.

Response 4D: The URS Draft Technical Memorandum states that the impacts to the flood control facilities were determined based on the scour depths computed by the FCDMC Methodology. The proposed scour mitigation at the affected piers makes the need to fine-tune the scour depths moot since the local pier scour could not go any deeper than the proposed Gabion Mattress. Based on the report you cited and based on information in that report, we are proposing to remove the general scour estimates from all calculations in the Final Technical Memorandum. This conclusion is also supported by another report entitled, "*Computing Degradation and Local Scour, Technical Guideline for Bureau of Reclamation,*" January 1984. This report states:

> *"Methods adopted by Reclamation for computing local scour below a hydraulic structure across the river channel are based on either the regime or rational approach. Scour computations should be made by several methods and engineering judgment used to select the most appropriate. In the regime approach, the Lacey or Blench equations 26, 27, 29, and 30, respectively, with Z values from table 7 are applicable.*
>
> *The most appropriate empirically developed rational methods for scour below a structure are those by Schoklitsch (1932), Veronese (1937), or Zimmerman and Maniak (1967)." (p. 42)*

SLA used the Zimmerman and Maniak equation to determine the local scour at the downstream end of the drop structure. The SLA 1990 report contains a modified version

of the equation in Appendix E. It is the same equation contained in the Bureau of Reclamation 1984 Guideline, but in a slightly different format through mathematical manipulation of the parameters.

In summary, the discussed revisions will be included in the Final Technical Drainage Memorandum, SR 202L, Bridge Scour Evaluations, Indian Bend Wash Bridge. The above outlined methodology and references to the SLA 1990 report will be included in the Final Memorandum. The structural foundation design for the 4 piers not protected by the bank protection or the drop structure will be in accordance with scour depths calculated with the ADOT Method. The scour "Zone-of-Influence" of these 4 piers on the drop structure and bank protection will be in accordance with the scour depths calculated with the FCDMC Method. These scour depths are as follows:

Pier No.	Total Scour Depth (feet)	
	ADOT Method	FCDMC Method
3 EB	31	33
4 EB	31	33
6 WB	23	23
7 WB	23	23

Please review this letter and our recommendations at your earliest opportunity and contact me with any questions or comments.

Sincerely,

URS Corporation

Dave Schaub

Dave Schaub, PE
Drainage Design Leader

P:\TRANSPORTATION\Kiewit\SR 202 Design Build\Docs\Review Comments\Comments Sub #93 Drainage Draft Technical Memo IBW\FCDMC-Comments_URS-Responses.doc

Flood Control District
of Maricopa County

INTEROFFICE MEMORANDUM

Date: March 16, 2009

To: Shelby Brown, Civil/Structures Branch, Engineering Division.

From: J. Rafael Pacheco, PhD, Assoc. Engineer, Engineering Application Development and River Mechanics Branch, Engineering Division

CC: Bing Zhao, PhD, PE, Engineering Application Development and River Mechanics Branch Manager, Engineering Division; Catherine W. Regester, Engineering Division, Hydrology/Hydraulics Branch

Subject: Review on "Draft Technical Drainage Memorandum SR 202L Bridge Scour Evaluation, Indian Bend Wash Bridge" by URS Corporation, received by Engineering Application Development and River Mechanics Branch (EADRM) on March 3, 2009. Permit number **2009P011**.

The EADRM received the report on March 3, 2009. I have finished my review of the above referenced document and I have the following comments. Please address each of these comments, add your response below mine and provide a digital file of your response.

1. The consultant should consider evaluating the influence of the drop structure on the proposed piers. The scour-depth calculations for piers upstream of the drop structure should include local scour phenomenon associated with the accelerated flow condition which will exist immediately upstream of the drop structure (SLA 1990). The scour-depth calculations for piers downstream of the drop structure should include local scour phenomenon associated with the impingement of the flow at the downstream of the drop structure. The total length of the zone of influence along the channel due to drop structure impact on the downstream area is approximately twelve times the depth of local scour due to flow over the drop structure: 'The maximum depth of local scour below a drop structure with respect to the projected bed elevation will terminate at a location downstream of the drop that is approximately six times the maximum depth of local scour associated with the flow over the structure' (SLA 1990). Then, the scour depth will taper at a 6:1 slope for another distance of about 6 times the maximum local depth due to drop structure. Please see the attached sketch.

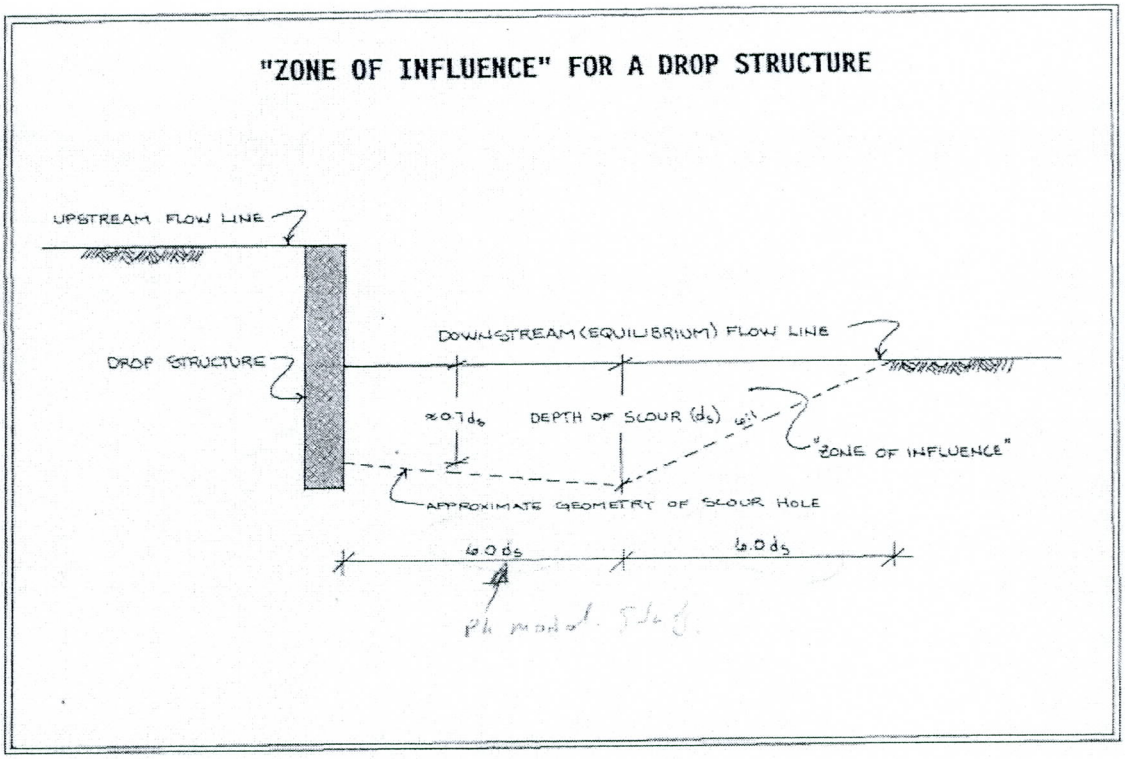

SLA (1990) already computed the total scour depth with the consideration of the drop structure for this location. Based on their scour depth results, the following table contains the scour depths for the proposed piers.

Pier No.	Total scour depth (ft)
2	32
3	32
4	32
6	28
7	28

Table 1: Q = 30,000 cfs.

Pier No.	Total scour depth (ft)
2	41
3	41
4	41
6	34
7	34

Table 2: Q = 63,000 cfs.

The consultants may fine-tune the results for downstream piers reported in Table 1 and Table 2 based on the drop structure influence zone sketch by considering the distance from each pier to the drop structure. This may reduce the total scour depth.

2. The influence of proposed piers may also have impact on existing drop structure toe protection at both upstream and downstream ends of the drop structure. If the piers and drop structure are too close, the drop structure toe will need to be protected by a certain structural solution.
3. Since the bed condition factor is already chosen as 1.1 for local pier scour, the bed form scour should be zero because the local pier scour already includes the bed form scour. Therefore, the total scour should be reduced by this double-counting.
4. Regarding the methodology differences between FCDMC and ADOT, we will need to clarify this because there are some misunderstandings in the submitted report. In fact, there is no essential difference between FCDMC's and ADOT's methodology. The differences are caused by the different interpretation by individual hydraulic engineers regarding which equation is to be used. In the report submitted by URS, if URS corrected the bed form scour error by not double-counting the bed form as discussed above, the major difference between the so-called "FCDMC Methodology" and "ADOT Methodology" is how to compute the general scour and the safety factor applied to the general scour. Based on URS's report, the general scour by "ADOT Methodology" is based on the 1981 Zeller general scour equation and the result is 0.89 feet for Pier No.7 (no safety factor is used), and the general scour by "FCDMC Methodology" is the average of Blench and Lacey equation and the result is 4.66 ft for Pier No.7 (6 feet with 1.3 safety factor). ADOT scour guideline refers to HEC-18 for scour calculations and does not specify the 1981 Zeller equation for general scour. FCDMC used Zeller equation before and found that the equation gives a rather small value of scour depth for most rivers. Please see the link to ADOT guideline http://www.azdot.gov/Highways/bridge/Guidelines/HydraulicGuidelines/PDF/HydDgnGuidelines.pdf . Please see the link to HEC-18 http://isddc.dot.gov/OLPFiles/FHWA/010590.pdf.

   The general scour defined by HEC-18 includes not only contraction scour but also other general scour. Please refer to section 5.8 in HEC-18 for further discussions on other general scour components. Here are some discussions from HEC-18: The causes for contraction scour are bridge constriction, natural stream constrictions, long highway approaches to the bridge over the floodplain, ice formations or jams, natural berms along the banks due to sediment deposits, debris, vegetative growth in the channel or floodplain, and pressure flow. Other general scour includes the follows. The relatively shallow straight reaches between bendway pools are called crossings. With changes in discharge and stage the patterns of scour and fill can also change in the crossing and pool sequence. These processes are considered part of general scour. They are cyclic and may be in equilibrium around some general bed elevation. There are no equations for predicting these changes in elevation. Some general scour conditions are associated with particular channel morphology. Braided channels will have deep scour holes when two channels come together downstream from a bar or island

(confluence scour). Other general scour can be caused by short-term (daily, weekly, yearly, or seasonal) changes in the downstream water surface elevation that control backwater and hence, the velocity through the bridge opening. Similarly, a bridge located upstream or downstream of a confluence can experience general scour caused by variable flow conditions on the main river and tributary.

Since the bridge is at a drop structure and is at the confluence with Salt River, this type of general scour is never accounted in Zeller's equation. A few feet of general scour as computed by Lacey/Blench equation is very reasonable in alluvial channels in Maricopa County especially for this case where there is a confluence and a drop structure. Due to the huge uncertainties in estimating general scour, a 1.3 safety factor should be used as required by FCDMC for the general scour component.

Based on reasons stated above, because FCDMC maintains the drop structure and bank protection and the bridge piers are so close to these two structures, the general scour of 6 feet (already including 1.3 safety-factor) should be added to the total scour. It must be pointed out that the impact of drop structure on upstream piers and downstream piers must be added to the total scour depth as documented in SLA 1990 report. The potential impact of bank protection on bridge pier scour or vice versa shall be evaluated. The impact of pier scour on drop structure must be evaluated.

Bibliography

Simons, Li and Associates, Inc (SLA 1990) 'Hydraulic and Scour Analysis for the East Papago Crossing of Indian Bend Wash', 1990.

Flood Control District
of Maricopa County

INTEROFFICE MEMORANDUM

Date: March 4, 2009

To: **Randy Simpson, PE, URS**

CC: **Shelby Brown, Right-of-Way Permit Specialist, Engineering Division**

From: **Michael Jones, P.E., Senior Civil Engineer, Civil Structures Branch**

Subject: 2009P011; SR 202; Indian Bend Wash & Salt River

I have finished my review of the plans for the above referenced project and I have the following comments. Please address each of these comments, add your response below mine and provide a Word file with your responses.

1. Add details for the levee penetration and construction of the Pier 2 EB column (see figure 9 in Scour Report) to plans. **Response: These will be added to the structure plans.**
2. Add details for the levee penetration and construction of the Pier 1 EB and WB columns including gabion repair to plans. **Response: Repair notes will be added to the structure plans.**
3. On sheet 11, show penetration and construction of piers through the Drop Structure. **Response: These details are already shown on Sheet 12.**
4. Add FCD standard Right-of-Way permit notes to plans. **Response: These standard notes will be added to the plans.**

If you have any questions, you can contact me at (602) 506-4718.

cc: Jeff Riddle
Mike Ramirez

2801 West Durango Street Phoenix, Arizona 85009 Phone: 602-506-1501 Fax: 602-506-4601

FCDMC E-Mail Comments- 17 March 2009
Dave Schaub, PE Responses-19 March 2009

1. **E-Mail Comment 1:** The submitted HECRAS model does not actually model the bridge piers for the portion of Loop 202 Bridge crossing Indian Bend Wash.
2. **Response 1:** That is correct. The model was setup to obtain the hydraulic parameters necessary to determine the potential total scour at the piers. This model accurately provided those parameters.
3. **E-Mail Comment 2:** The model should be modified to include the bridge/piers for 1) existing conditions and 2) with additional lane widening and piers in place to evaluate levee/freeboard in lower reach of Indian Bend Wash for the design flow of 30,000 cfs.
4. **Response 2:** The new columns are on the same alignment as the existing columns, and therefore, the existing and proposed model will show equivalent upstream water surface elevations. However, existing and proposed models will be created and documented with the tables in the appendices of the final document.
5. **E-Mail Comment 3:** The District's Real Estate Branch requires no less than 2 ties to known section corners in the plans. In addition, please call out the limits of the District's right-of-way on the plans.
6. **Response 3:** These will be added to the plans.

APPENDIX C

SUPPLEMENTAL CALCULATIONS

TABLE C-1

RIPRAP DESIGN
TO MITIGATE
PIER 4 COLUMN SCOUR "ZONE OF INFLUENCE" ON
THE DOWNSTREAM END OF THE EXISTING DROP STRUCTURE[1]

Location		Hydraulic Characteristics				Riprap Design[2]					Streambed Elevations		Exst Bank Protection[6]	
						Design		Recommended						
		Average Velocity (V_{local})	Pier Shape Factor (Round Nose Pier)	Velocity Adjust-ment (Set to 1 for V_{local})[3]	Design Velocity ($V_{des} = K_1K_2V_{ave}$)	D_{50}[4]	Riprap Thickness (t)	D_{50}	Riprap Thickness (t)[5]	Volume for 6.5' Drilled Shaft	Exst Streambed Elevation at Low Point	Exst Streambed Elevation at Pier	Toe Elevation	Depth to Toe
Pier	HEC-RAS RM	(fps)	(K_1)	(K_2)	(fps)	(ft)	(ft)	(ft)	(ft)	(cy)	(ft)	(ft)	(ft)	(ft)
Pier 4 EB	RS0.9	14.00	1.5	1	21.00	2.87	8.62	3.00	9.00	533	1140.9	1140.9	1119.9	21.0
									TOTAL =	533	CU.YD.			

Ref. Transportation Research Board, *"Countermeasures to Protect Bridge Piers from Scour,"* NACHRP Report 593, 2007.

NOTES:

(1) Columns located within the CSA embankment and roller compacted concrete drop structure do not need riprap protection.

(2) Place dumped riprap at twice the column diameter around the column. For a 6.5' column the diameter would be 16.25'.
Required Riprap Surface Area = 797 sf Actual Surface Area (40'x40') = 1600.0 sf

(3) Local velocity V_{local} was obtained from the flow distribution output from the HEC-RAS Model. K_2 is then set to 1.

(4) Riprap Size Computed per "Countermeasures to Protect Bridge Piers from Scour," NCHRP Report 593, © 2007 Transportation
$D50 = 0.692(V_{des})^2/((S_g-1)2g)$, $S_g = 2.65$ and $g = 32.2$ ft/s^2

(5) Riprap Thickness is set to three (3) times the D_{50} per "Countermeasures to Protect Bridge Piers from Scour," NCHRP Report 593, © 2007 Transportation Research Board.

(6) Toe Elevation assumed to be top of existing Gabion Mattress protection around existing outside column for Pier 4.

TABLE C-2
VELOCITY DISTRIBUTION- RIVER SECTION 0.9

Plan: Plan 10 Indian Bend Wash Main RS: .9 Profile: SPF

	Pos	Left Sta	Right Sta	Flow	Area	W.P.	Percent	Hydr	Velocity
		(ft)	(ft)	(cfs)	(sq ft)	(ft)	Conv	Depth(ft)	(ft/s)
1	Chan	40.75	55.48	82.30	17.65	8.74	0.13	2.43	4.66
2	Chan	55.48	70.20	1116.11	106.14	15.54	1.74	7.21	10.52
3	Chan	70.20	84.93	1298.49	113.76	14.73	2.03	7.73	11.41
4	Chan	84.93	99.65	1342.67	116.07	14.73	2.10	7.88	11.57
5	Chan	99.65	114.38	1387.43	118.38	14.73	2.17	8.04	11.72
6	Chan	114.38	129.10	1432.79	120.69	14.73	2.24	8.20	11.87
7	Chan	129.10	143.83	1478.73	122.99	14.73	2.31	8.35	12.02
8	Chan	143.83	158.55	1525.23	125.30	14.73	2.38	8.51	12.17
9	Chan	158.55	173.28	1572.30	127.60	14.73	2.46	8.67	12.32
10	Chan	173.28	188.00	1619.96	129.91	14.73	2.53	8.82	12.47
11	Chan	188.00	202.73	1668.19	132.22	14.73	2.61	8.98	12.62
12	Chan	202.73	217.45	1716.97	134.52	14.73	2.68	9.14	12.76
13	Chan	217.45	232.18	1766.31	136.83	14.73	2.76	9.29	12.91
14	Chan	232.18	246.90	1816.22	139.14	14.73	2.84	9.45	13.05
15	Chan	246.90	261.63	1866.69	141.45	14.73	2.92	9.61	13.20
16	Chan	261.63	276.35	1917.69	143.75	14.73	3.00	9.76	13.34
17	Chan	276.35	291.08	1969.26	146.06	14.73	3.08	9.92	13.48
18	Chan	291.08	305.80	2021.37	148.37	14.73	3.16	10.08	13.62
19	Chan	305.80	320.53	2074.01	150.67	14.73	3.24	10.23	13.77
20	Chan	320.53	335.25	2127.19	152.98	14.73	3.32	10.39	13.91
21	Chan	335.25	349.98	2162.65	154.50	14.73	3.38	10.49	14.00
22	Chan	349.98	364.70	2116.45	152.51	14.73	3.31	10.36	13.88
23	Chan	364.70	379.43	2060.92	150.10	14.73	3.22	10.19	13.73
24	Chan	379.43	394.15	2006.00	147.69	14.73	3.13	10.03	13.58
25	Chan	394.15	408.88	1951.65	145.27	14.73	3.05	9.87	13.43
26	Chan	408.88	423.60	1897.90	142.86	14.73	2.97	9.70	13.29
27	Chan	423.60	438.33	1844.75	140.45	14.73	2.88	9.54	13.13
28	Chan	438.33	453.05	1792.23	138.03	14.73	2.80	9.37	12.98
29	Chan	453.05	467.78	1740.31	135.62	14.73	2.72	9.21	12.83
30	Chan	467.78	482.50	1688.99	133.21	14.73	2.64	9.05	12.68
31	Chan	482.50	497.23	1638.29	130.79	14.73	2.56	8.88	12.53
32	Chan	497.23	511.95	1588.20	128.38	14.73	2.48	8.72	12.37
33	Chan	511.95	526.68	1538.75	125.96	14.73	2.40	8.55	12.22
34	Chan	526.68	541.40	1489.94	123.55	14.73	2.33	8.39	12.06
35	Chan	541.40	556.13	1441.73	121.14	14.73	2.25	8.23	11.90
36	Chan	556.13	570.85	1394.17	118.72	14.73	2.18	8.06	11.74
37	Chan	570.85	585.58	1347.27	116.31	14.73	2.11	7.90	11.58
38	Chan	585.58	600.30	1301.00	113.90	14.73	2.03	7.73	11.42
39	Chan	600.30	615.03	1116.61	106.17	15.54	1.74	7.21	10.52
40	Chan	615.03	629.75	82.30	17.65	8.74	0.13	2.43	4.66

TABLE C-3

Critical Design Flow (30,000 cfs)
Water Surface Elevation Comparisons
(Modeled IBW through Bridge Existing and Proposed Conditions)[1]

Reach	River Sta	Profile	W.S. Elev Existing Condition[2] (ft)	W.S. Elev Proposed Condition[2] (ft)	W.S. Elev Change (ft)	Bank Freeboard (FB) Conditions					
						Top Elev (ft)	Exst FB (ft)	New FB (ft)	Top Elev (ft)	Exst FB (ft)	New FB (ft)
Main	16	Critical Design	1168.33	1168.33	0.00						
Main	15	Critical Design	1166.53	1166.53	0.00	1170.0	3.47	3.47	1171.7	5.17	5.17
Main	14.5	Critical Design	1166.11	1166.16	**0.05**	1170.0	3.89	3.84	1172.2	6.09	6.04
Main	14.4	Critical Design	1165.93	1165.98	**0.05**	1174.0	8.07	8.02	1172.1	6.17	6.12
Main	14.3	Critical Design	1165.43	1165.51	**0.08**	1174.0	8.57	8.49	1171.9	6.47	6.39
Main	14	Critical Design	1164.13	1164.16	**0.03**	1174.0	9.87	9.84	1171.3	7.17	7.14
Main	13	Critical Design	1160.95	1160.95	0.00						
Main	12	Critical Design	1160.92	1160.92	0.00						
Main	11	Critical Design	1159.56	1159.56	0.00						
Main	10	Critical Design	1159.09	1159.09	0.00						
Main	9	Critical Design	1154.94	1154.94	0.00						
Main	8	Critical Design	1154.92	1154.92	0.00						
Main	7	Critical Design	1153.40	1153.40	0.00						
Main	6	Critical Design	1152.89	1152.89	0.00						
Main	5	Critical Design	1150.47	1150.47	0.00						
Main	4	Critical Design	1150.46	1150.46	0.00						
Main	3	Critical Design	1149.86	1149.86	0.00						
Main	2	Critical Design	1149.85	1149.85	0.00						
Main	1	Critical Design	1149.83	1149.83	0.00						
Main	0.9	Critical Design	1149.79	1149.79	0.00						
Main	0.8	Critical Design	1149.70	1149.70	0.00						
Main	0.7	Critical Design	1149.60	1149.60	0.00						

(1) Sections 14.0, 14.3 and 14.4 are the only sections that bridge columns were modeled at because all other bridge columns are downstream of Grade Control Structure Level I (Section 14.0). Flow goes through critical depth at Section 14, and therefore, downstream bridge columns would not affect the upstream water surface elevations.

(2) Section 14.3 is modeled with 2 columns and Section 14.4 is modeled with 1 column. Section 14.0 is modeled with 2 columns for the existing condition and 3 columns for the proposed condition. Section 14.0 has one more column for the proposed condition because the additional column is at section 14.0. In the existing condition only two columns are at or upstream of Section 14.0.

TABLE C-4

Critical Design Flow (30,000 cfs)
HEC-RAS Hydraulic Characteristics
(Modeled IBW through Bridge Existing Condition)[(1)(2)]

Reach	River Sta	Profile	E.G. Elev	W.S. Elev	Vel Head	Frctn Loss	C & E Loss	Q Left	Q Channel	Q Right	Top Width
			(ft)	(ft)	(ft)	(ft)	(ft)	(cfs)	(cfs)	(cfs)	(ft)
Main	16	Critical Design	1169.86	1168.33	1.53	0.52	0.12	2150	26495	1355	622
Main	15	Critical Design	1169.23	1166.53	2.70	0.49	0.54	1565	27647	788	596
Main	14.5	Critical Design	1167.00	1166.11	0.89	0.11	0.01	257	29271	472	627
Main	14.4	Critical Design	1166.89	1165.93	0.96	0.29	0.02	254	29286	459	615
Main	14.3	Critical Design	1166.58	1165.43	1.15	0.26	0.10	235	29362	403	606
Main	14	Critical Design	1166.23	1164.13	2.10	0.01	0.51	27	29946	27	619
Main	13	Critical Design	1161.34	1160.95	0.39	0.01	0.00	138	29724	138	620
Main	12	Critical Design	1161.33	1160.92	0.40	0.00	0.12	26	29948	26	620
Main	11	Critical Design	1161.20	1159.56	1.64	0.02	0.04	33	29934	33	646
Main	10	Critical Design	1161.13	1159.09	2.04	0.01	0.49	26	29949	26	645
Main	9	Critical Design	1155.34	1154.94	0.41	0.01	0.00		30000		572
Main	8	Critical Design	1155.33	1154.92	0.41	0.00	0.14		30000		572
Main	7	Critical Design	1155.19	1153.40	1.79	0.02	0.04		30000		567
Main	6	Critical Design	1155.12	1152.89	2.23	0.02	0.58		30000		566
Main	5	Critical Design	1150.77	1150.47	0.30	0.01	0.00		30000		559
Main	4	Critical Design	1150.76	1150.46	0.30	0.00	0.05		30000		559
Main	3	Critical Design	1150.71	1149.86	0.85	0.01	0.00		30000		557
Main	2	Critical Design	1150.70	1149.85	0.85	0.02	0.00		30000		557
Main	1	Critical Design	1150.68	1149.83	0.85	0.06	0.01		30000		557
Main	0.9	Critical Design	1150.62	1149.79	0.82	0.11	0.00		30000		569
Main	0.8	Critical Design	1150.51	1149.70	0.81	0.11	0.00		30000		581
Main	0.7	Critical Design	1150.40	1149.60	0.80				30000		594

(1) Sections 14.0, 14.3, and 14.4 are the only sections that bridge columns were modeled at because all other bridge columns are downstream of Grade Control Structure Level I (Section 14.0). Flow goes through critical depth at Section 14, and therefore, downstream bridge columns would not affect the upstream water surface elevations.

(2) Section 14.0 is modeled with 2 columns, Section 14.3 is modeled with 2 columns and Section 14.4 is modeled with 1 column. Section 14.0 has one more column for the proposed condition because the additional column is at section 14.0.

TABLE C-5

Critical Design Flow (30,000 cfs)
HEC-RAS Hydraulic Characteristics
(Modeled IBW through Bridge Proposed Condition)[(1)(2)]

Reach	River Sta	Profile	E.G. Elev	W.S. Elev	Vel Head	Frctn Loss	C & E Loss	Q Left	Q Channel	Q Right	Top Width
			(ft)	(ft)	(ft)	(ft)	(ft)	(cfs)	(cfs)	(cfs)	(ft)
Main	16	Critical Design	1169.86	1168.33	1.53	0.52	0.12	2150	26495	1355	622
Main	15	Critical Design	1169.23	1166.53	2.70	0.48	0.55	1565	27647	788	596
Main	14.5	Critical Design	1167.04	1166.16	0.88	0.11	0.01	259	29263	477	628
Main	14.4	Critical Design	1166.92	1165.98	0.94	0.28	0.02	257	29277	466	615
Main	14.3	Critical Design	1166.63	1165.51	1.12	0.26	0.10	239	29348	413	607
Main	14	Critical Design	1166.27	1164.16	2.12	0.01	0.52	28	29944	28	613
Main	13	Critical Design	1161.34	1160.95	0.39	0.01	0.00	138	29724	138	620
Main	12	Critical Design	1161.33	1160.92	0.40	0.00	0.12	26	29948	26	620
Main	11	Critical Design	1161.20	1159.56	1.64	0.02	0.04	33	29934	33	646
Main	10	Critical Design	1161.13	1159.09	2.04	0.01	0.49	26	29949	26	645
Main	9	Critical Design	1155.34	1154.94	0.41	0.01	0.00		30000		572
Main	8	Critical Design	1155.33	1154.92	0.41	0.00	0.14		30000		572
Main	7	Critical Design	1155.19	1153.40	1.79	0.02	0.04		30000		567
Main	6	Critical Design	1155.12	1152.89	2.23	0.02	0.58		30000		566
Main	5	Critical Design	1150.77	1150.47	0.30	0.01	0.00		30000		559
Main	4	Critical Design	1150.76	1150.46	0.30	0.00	0.05		30000		559
Main	3	Critical Design	1150.71	1149.86	0.85	0.01	0.00		30000		557
Main	2	Critical Design	1150.70	1149.85	0.85	0.02	0.00		30000		557
Main	1	Critical Design	1150.68	1149.83	0.85	0.06	0.01		30000		557
Main	0.9	Critical Design	1150.62	1149.79	0.82	0.11	0.00		30000		569
Main	0.8	Critical Design	1150.51	1149.70	0.81	0.11	0.00		30000		581
Main	0.7	Critical Design	1150.40	1149.60	0.80				30000		594

(1) Sections 14.0, 14.3, and 14.4 are the only sections that bridge columns were modeled at because all other bridge columns are downstream of Grade Control Structure Level I (Section 14.0). Flow goes through critical depth at Section 14, and therefore, downstream bridge columns would not affect the upstream water surface elevations.

(2) Section 14.0 is modeled with 3 columns, Section 14.3 is modeled with 2 columns and Section 14.4 is modeled with 1 column. Section 14.0 has one more column for the proposed condition because the additional column is at section 14.0.