Rio Verde Area Drainage Master Plan
Floodplain Delineation
FCD 2001C056

Volume 6
2-Dimensional Hydrology & Hydraulics
Technical Data Notebook

November 2007

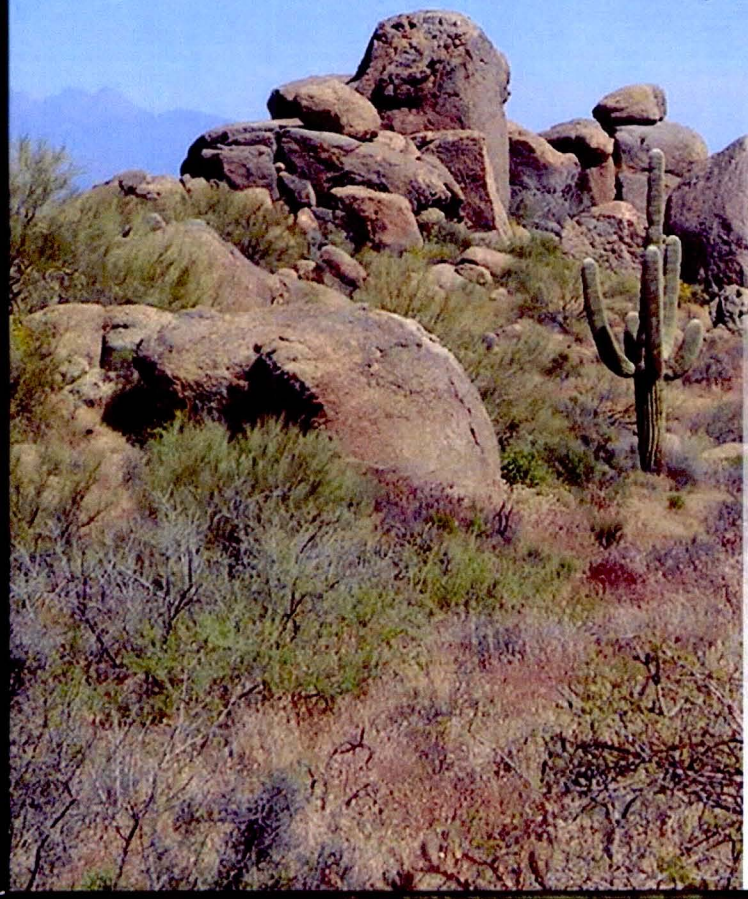

Registered Professional Engineer (Civil)
CERTIFICATE NO.
12739
THOMAS R.
LOOMIS
Date Signed 12/18/07
ARIZONA, U.S.A.

Prepared by:

Flood Control District of Maricopa County

Rio Verde Area Drainage Master Plan
Floodplain Delineation
FCD 2001C056

Volume 6
2-Dimensional Hydrology & Hydraulics
Technical Data Notebook

November 2007

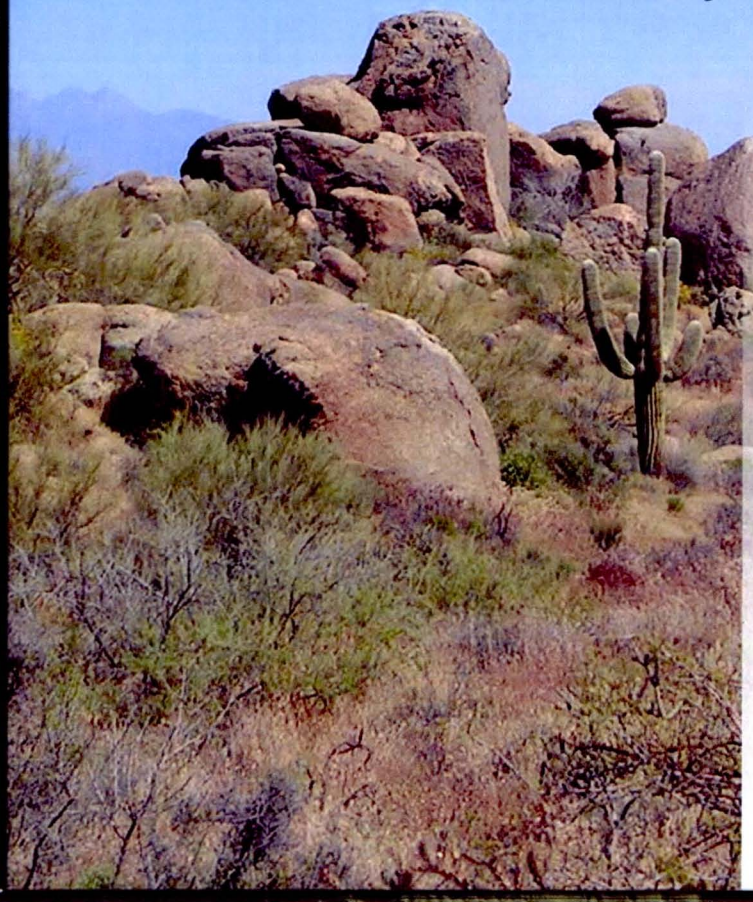

Registered Professional Engineer (Civil)
CERTIFICATE NO.
12739
THOMAS R.
LOOMIS
Date Signed 12/18/07
ARIZONA, U.S.A.

Prepared by:

Flood Control District of Maricopa County

RIO VERDE AREA DRAINAGE MASTER PLAN

F.C.D. PCN 681.01.20

VOLUME 6

2-DIMENSIONAL HYDROLOGY AND HYDRAULICS

TECHNICAL DATA NOTEBOOK

Prepared by:

FLOOD CONTROL DISTRICT OF MARICOPA COUNTY

2801 W. Durango Street

Phoenix, AZ 85009

(602) 506-1501

Registered Professional Engineer (Civil)
CERTIFICATE NO.
12739
THOMAS R.
LOOMIS
Date Signed 12/18/07
ARIZONA, U.S.A.

November 2007

TABLE OF CONTENTS

TABLE OF CONTENTS i
LIST OF TABLES iv
LIST OF FIGURES v
1 INTRODUCTION 1-1
2 STUDY DOCUMENTATION ABSTRACT/FEMA FORMS 2-1
2.1 Study Documentation Abstract 2-1
2.1.1 Date Study Accepted 2-1
2.1.2 Study Contractor 2-1
2.1.3 FEMA Technical Review Contractor 2-1
2.1.4 FEMA Regional Reviewer 2-1
2.1.5 State Technical Reviewer 2-1
2.1.6 Local Technical Reviewer 2-1
2.1.7 Reach Description 2-1
2.1.8 USGS Quad Sheets 2-2
2.1.9 Unique Conditions and Problems 2-2
2.1.10 Coordination of Peak Discharges 2-2
2.2 FEMA Forms 2-2
3 SURVEY AND MAPPING INFORMATION 3-1
4 HYDROLOGY 4-1
4.1 Method Description 4-1
4.2 Parameter Estimation 4-1
4.2.2 Drainage Area Boundaries 4-4
4.2.3 Watershed Work Maps 4-6
4.2.4 Gage Data 4-6
4.2.5 Statistical Parameters 4-8
4.2.6 Precipitation 4-8
4.2.7 Physical Parameters 4-12
4.2.7.1 Source of Soils Information 4-13
4.2.7.2 Estimation of Bare Ground Green and Ampt Parameters 4-20
4.2.7.3 Effects of Vegetation Cover 4-21
4.2.7.4 Estimation of Initial Abstraction 4-25
4.2.7.5 Natural Impervious Area Estimation 4-25
4.2.7.6 Developed Impervious Area Estimation 4-25
4.2.8 Hydrograph Routing 4-27
4.3 Problems Encountered During the Study 4-27
4.3.1 Special Problems and Solutions 4-27
4.3.1.1 Problem 1: Existing Cattle Stock Tanks and Diversion Dikes 4-27
4.3.1.2 Problem 2: Model Overlap Between Phase A and Phase B 4-28
4.3.1.3 Summary 4-31
4.3.2 Modeling Warning and Error Messages 4-31
4.4 Calibration 4-31

4.5 Final Results 4-31
4.5.1 Hydrologic Analysis Results 4-31
4.5.1.1 2D Modeling Peak Discharge Results 4-32
4.5.1.2 HEC-1 Inflow Hydrographs 4-32
4.5.1.3 FLO-2D Generated Inflow Hydrographs 4-40
4.5.1.4 FLO-2D Generated Outflow Hydrographs 4-41
4.5.1.5 Comparison of FLO-2D Model Results with Previous Studies 4-53
4.5.2 Verification of Results 4-65
4.5.2.2 Comparison with Maximum Unit Peak Discharge Envelope Curves.... 4-67
4.5.2.3 Comparison with 100-year Peak Discharge for Gaged Watersheds in Arizona 4-67
4.5.2.4 Comparison with USGS 100-year Regression Equation for Flood Region 12 4-70
4.5.2.5 Summary and Conclusions 4-70
5 HYDRAULICS 5-1
5.1 Method Description 5-1
5.2 Work Study Maps 5-1
5.3 Parameter Estimation 5-5
5.3.1 Roughness Coefficients 5-5
5.3.2 Expansion and Contraction Coefficients 5-9
5.3.3 Obstructions to Flow 5-12
5.3.4 Grid Size Selection 5-16
5.3.4.1 Grid Size Selection Based on FLO-2D Test Models 5-17
5.3.4.2 Grid Size Selection Based on Input from Mapping Companies 5-17
5.3.4.3 Grid Size Selection Based on Surface Analysis 5-17
5.3.4.4 Grid Size Selection Based on Ground Slope and Mapping Accuracy... 5-21
5.3.4.5 Summary of Grid Size Selection 5-21
5.4 Cross Section Description 5-22
5.5 Modeling Considerations 5-22
5.5.1 Hydraulic Jump and Drop Analysis 5-22
5.5.2 Bridge and Culverts 5-22
5.5.3 Levees and Dikes 5-38
5.5.4 Islands and Flow Splits 5-38
5.5.5 Ineffective Flow Areas 5-39
5.5.6 Supercritical Flow 5-39
5.5.7 FLO-2D Control and Tolerance Settings 5-39
5.6 Floodway Modeling 5-40
5.7 Problems Encountered During the Study 5-44
5.7.1 Special Problems and Solutions 5-44
5.7.1.1 Implementing an AE Zone Floodplain without a Traditional Floodway 5-44
5.7.2 Modeling Warning Messages 5-45
5.8 Calibration 5-45
5.9 Final Results 5-45
5.9.1 Hydraulic Analysis Results 5-45

5.9.1.1 Normal Stream Results 5-45
5.9.1.2 Culvert Results 5-46
5.9.1.3 Floodplain Delineation 5-46
5.9.2 Verification of Results 5-51
5.9.2.1 Comparison with Geomorphology 5-51
5.9.2.2 Post-Rainfall Event Field Checks 5-51
5.9.2.3 Comparison with Gage Results 5-55
5.9.2.4 Comparison with Existing FEMA Floodplains 5-55
6 EROSION AND SEDIMENT TRANSPORT 6-1
7 DRAFT FIS REPORT DATA 7-1
7.1 Summary of Discharges 7-1
7.2 Floodway Data 7-2
7.3 Annotated Flood Insurance Rate Maps 7-2
7.4 Flood Profiles 7-3
APPENDIX A: REFERENCES A-1
APPENDIX B: GENERAL DOCUMENTATION AND CORRESPONDENCE B-1
APPENDIX C: SURVEY FIELD NOTES C-1
APPENDIX D: HYDROLOGIC ANALYSIS SUPPORTING DOCUMENTATION D-1
D.1 Precipitation Data D-1
D.2 Physical Parameter Calculations D-1
D.3 Hydrograph Routing Data D-1
D.4 Reservoir Routing Data D-1
D.5 Flow Splits and Diversion Data D-1
D.6 Hydrologic Calculations D-1
D.7 Digital Data on DVD D-1
D.7.1 Soils (DVD 1) D-1
D.7.2 RTIMP (DVD 1) D-2
D.7.3 Precipitation (DVD 1) D-2
D.7.4 FLO2D Grid Data (DVD 1) D-2
D.7.5 Land Features (DVD's 3 and 4) D-2
D.7.6 Hydrograph Locations (DVD 1) D-3
D.7.7 Miscellaneous Data (DVD 1) D-3
APPENDIX E: HYDRAULIC ANALYSIS SUPPORTING DOCUMENTATION E-1
E.1 Roughness Coefficient Estimation E-1
E.2 Cross Section Plots E-1
E.3 Expansion and Contraction Coefficients E-1
E.4 Analysis of Structures E-3
E.4.1 Culvert and Wall Opening Hydraulic Analyses E-3
E.5 Hydraulic Calculations E-5
E.6 Digital Data on DVD E-11
E.6.1 Hydraulic Structures (DVD 1) E-11
E.6.2 Floodplain Delineation (DVD 1) E-12
E.6.3 Phase A FLO-2D Input and Output Data Files with Stock Tanks in Place (DVD 1) E-12

E.6.4 Phase A FLO-2D Input and Output Data Files without Stock Tanks (DVD 1) E-12
E.6.5 Phase A FLO2D ArcGIS Output Data (DVD 1) E-12
E.6.6 Phase B FLO-2D Input and Output Data Files with Stock Tanks in Place (DVD 2) E-13
E.6.7 Phase B FLO-2D Input and Output Data Files without Stock Tanks (DVD 2) E-13
E.6.8 Phase B FLO-2D Model ArcGIS Shape Files of Model Output Data (DVD 2) E-13
APPENDIX F: EROSION AND SEDIMENT TRANSPORT ANALYSIS SUPPORTING DOCUMENTATION F-1
APPENDIX G: EXHIBIT MAPS G-1
G.1 Watershed Work Maps G-1
G.2 Hydraulic Work Maps G-3
G.3 Flood Profiles G-5
G.4 Annotated Flood Insurance Rate Maps G-7

LIST OF TABLES

Table 4.1 Matrix of NRCS Soil Map Units within Geologic Map Units 4-20
Table 4.2 Vegetation Cover Classes 4-21
Table 4.3 List of GIS Shape Files Containing FLO-2D Results 4-34
Table 4.4 FLO-2D Outputs Used for the *flo2dgis.shp* Database Table 4-34
Table 4.5 FLO-2D Outputs Used for the *PHA(B)MaxResults.shp* Database Table 4-36
Table 4.6 Summary of 1D Model Inflow Parameters to 2D Study Area 4-39
Table 4.7 Summary of Results of FLO-2D Generated Inflow Hydrographs 4-43
Table 4.8 Summary of FLO-2D Hydrology Results at Cross Section Locations .. 4-48
Table 4.9 Comparison of 2D Results with Previous Studies: Overall Volumes ... 4-55
Table 4.10 Comparison of 2D Results with Previous Studies at Specific Locations 4-58
Table 5.1 List of Watercourse Abbreviations and Full Names 5-2
Table 5.2 Base n-value Assignments to Vegetation Cover Classes 5-8
Table 5.3 Average Fall for Various Grid Sizes 5-22
Table 5.4 Culvert Summary Data 5-26
Table 5.5 Summary of Culvert and Wall Opening Modeling Results 5-32
Table 5.6 Comparisons with Existing FEMA Floodplain Cross Sections 5-55
Table 7.1 Summary of Discharges 7-1

Figure 4.3 One-Dimensional Study Area Watershed Map 4-5
Figure 4.4 Precipitation Gage Locations 4-7
Figure 4.5 NOAA Atlas 2 100-year 24-hour Point Precipitation Isopluvials Map 4-9
Figure 4.6 Phase A Prefre Output 4-10
Figure 4.7 Phase B Prefre Output Table 4-11
Figure 4.8 24-hour Mass Curve for Maricopa County (NRCS Type II) 4-12
Figure 4.9 1D Overlap Areas Where Rainfall is Not Applied in the 2D Models 4-14
Figure 4.10 Soil Survey Map 4-15
Figure 4.11 NRCS Soil Map Units 4-16
Figure 4.12 Tonto National Forest Geologic Map Units 4-17
Figure 4.13 Tonto National Forest Soil Map Units 4-18
Figure 4.14 XKSAT Values for 2D Study Area 4-19
Figure 4.15 VCD Example - 17% 4-22
Figure 4.16 VCD Example – 24% 4-22
Figure 4.17 Vegetation Cover Map 4-23
Figure 4.18 Impervious Area Map 4-26
Figure 4.19 Stock Tank and Diversion Dike Locations 4-29
Figure 4.20 Peak Discharge Map 4-33
Figure 4.21 FLO-2D Phase A Model Inflow Hydrographs 4-38
Figure 4.22 FLO-2D Phase B Model Inflow Hydrographs 4-38
Figure 4.23 Location of Inflow Points from Phase B into Phase A 4-42
Figure 4.24 Phase B Outflow Hydrographs Used as Inflow to Phase A 4-43
Figure 4.25 Location of Phase A FLO-2D Cross Sections 4-44
Figure 4.26 FLO-2D Phase A Hydrographs 4-45
Figure 4.27 Location of Phase B FLO-2D Cross Sections 4-47
Figure 4.28 FLO-2D Phase B Hydrographs Downstream of Roy Rogers Tank 4-50
Figure 4.29 FLO-2D Phase B Hydrographs Downstream of Double Tank 4-51
Figure 4.30 FLO-2D Phase B Hydrographs Downstream of Asher Hills Tank 4-52
Figure 4.31 Boundaries of Previous Studies Map 4-54
Figure 4.32 Location of HEC-1 CP's from Previous Studies and FLO-2D Results... 4-57
Figure 4.33 Location HEC-1 CP's from Previous Studies and FEMA Floodplains ... 4-59
Figure 4.34 HEC-1 Cross Section Comparison Map 4-60
Figure 4.35 HEC-1 Cross Section Comparison Plots 4-61
Figure 4.36 C535 Bifurcation Area Map 4-64
Figure 4.37 Rio Verde Wash 11 Near Downstream Study Limits 4-66
Figure 4.38 Comparison of FLO-2D Results with Unit Peak Discharge Envelope Curves 4-68
Figure 4.39 Comparison of FLO-2D results with LP3 analysis results from USGS 1989 4-69
Figure 4.40 Comparison with scatter diagram of independent variables for Flood Region 12 4-71
Figure 4.41 Comparison with 100-year peak discharge relation for Flood Region 12... 4-71
Figure 5.1 Hydraulic Base Line Map 5-6

Figure 5.2 Base n-value Map 5-10
Figure 5.3 Fundamental Grid Cell Blocking Diagram 5-12
Figure 5.4 Using the WRF Method to Block a Grid Element 5-13
Figure 5.5 Blocking a Building Obstructions 5-14
Figure 5.6 Blocking a Wall Obstruction Example 5-15
Figure 5.7 Blocking a Building and Allowing Rainfall Runoff Example 5-16
Figure 5.8 Grid Element Sizing Test Area Location Map 5-18
Figure 5.9 Flow Depth Results for Various Test Area Grid Element Sizes 5-19
Figure 5.10 Comparison of TIN Surface to Grid Element Surfaces 5-21
Figure 5.11 Culvert Location Map 5-25
Figure 5.12 Rio Verde ADMP Floodplain Management Policy Directive 5-41
Figure 5.13 Average Flow Depth Per Grid Element Results Map 5-47
Figure 5.14 Average Velocity Per Grid Element Results Map 5-48
Figure 5.15 Average Peak Discharge Per Grid Element Results Map 5-49
Figure 5.16 100-year Floodplain Delineation Results Map 5-50
Figure 5.17 Geomorphic Conveyance Corridors 5-52
Figure 5.18 Comparison of Geomorphic Corridors with FLO-2D Peak Discharge Results 5-53
Figure 5.19 Comparison of Geomorphic Corridors with Proposed 100-year Floodplain 5-54

1 INTRODUCTION

Refer to Technical Data Notebook Master Volume.

2 STUDY DOCUMENTATION ABSTRACT/FEMA FORMS

2.1 Study Documentation Abstract

2.1.1 Date Study Accepted

_____

2.1.2 Study Contractor

Flood Control District of Maricopa County

2801 W. Durango Street

Phoenix, AZ 85009

(602) 506-4767

Contact: Thomas R. Loomis, P.E., R.L.S., CFM (602) 506-4767, trl@mail.maricopa.gov

2.1.3 FEMA Technical Review Contractor

_____

2.1.4 FEMA Regional Reviewer

_____

2.1.5 State Technical Reviewer

Not applicable.

2.1.6 Local Technical Reviewer

Catherine Register and Kathryn Gross, Flood Control District of Maricopa County.

2.1.7 Reach Description

The two-dimensional study area in Rio Verde, Maricopa County, Arizona is typified by defined distributary flow patterns and sheet flow. The study area is covered by FIRM Panels 04013C0845F, 04013C0865F, 04013C0870F, 04013C1260F, 04013C1276G, 04013C1277F, and 04013C1285G. The entire 26 square mile study area was modeled using FLO-2D.

2.1.8 USGS Quad Sheets

The following are the names of the 7.5 minute US Geological Survey Quadrangle Maps covering the two-dimensional study area:

Wildcat Hill, 1981

Bartlett Dam, 1964

McDowell Peak, 1982

Fort McDowell, 1978

2.1.9 Unique Conditions and Problems

2.1.10 Coordination of Peak Discharges

Flood Control District of Maricopa County is the agency responsible for approving peak discharge estimates.

2.2 FEMA Forms

FEDERAL EMERGENCY MANAGEMENT AGENCY

OVERVIEW & CONCURRENCE FORM

O.M.B No. 3067-0148
Expires September 30, 2005

PAPERWORK BURDEN DISCLOSURE NOTICE

Public reporting burden for this form is estimated to average 1 hour per response. The burden estimate includes the time for reviewing instructions, searching existing data sources, gathering and maintaining the needed data, and completing, reviewing, and submitting the form. You are not required to respond to this collection of information unless a valid OMB control number appears in the upper right corner of this form. Send comments regarding the accuracy of the burden estimate and any suggestions for reducing this burden to: Information Collections Management, Federal Emergency Management Agency, 500 C Street, SW, Washington DC 20472, Paperwork Reduction Project (3067-0148). Submission of the form is required to obtain or retain benefits under the National Flood Insurance Program. **Please do not send your completed survey to the above address.**

A. REQUESTED RESPONSE FROM FEMA

This request is for a (check one):

☐ CLOMR: A letter from FEMA commenting on whether a proposed project, if built as proposed, would justify a map revision, or proposed hydrology changes (See 44 CFR Ch. 1, Parts 60, 65 & 72).

☒ LOMR: A letter from FEMA officially revising the current NFIP map to show the changes to floodplains, regulatory floodway or flood elevations. (See Parts 60 & 65 of the NFIP Regulations.)

B. OVERVIEW

1. The NFIP map panel(s) affected for all impacted communities is (are):

Community No.	Community Name	State	Map No.	Panel No.	Effective Date
Ex: 480301 480287	City of Katy Harris County	TX TX	480301 48201C	0005D 0220G	02/08/83 09/28/90
040037	Maricopa County	AZ	04013C	0845F	N/A
045012	City of Scottsdale	AZ	040013	0845F	N/A

2. Flooding Source: See Attachment 1 for list of Panel Numbers and flooding sources.

3. Project Name/Identifier: Rio Verde ADMP

4. FEMA zone designations affected: D, X, AE (choices: A, AH, AO, A1-A30, A99, AE, AR, V, V1-V30, VE, B, C, D, X)

5. Basis for Request and Type of Revision:

a. The basis for this revision request is (check all that apply)

☐ Physical Change ☒ Improved Methodology/Data

☐ Regulatory Floodway Revision ☐ Other (Attach Description)

Note: A photograph and narrative description of the area of concern is not required, but is very helpful during review.

b. The area of revision encompasses the following types of flooding and structures (check all that apply)

Types of Flooding: ☒ Riverine ☐ Coastal ☐ Shallow Flooding (e.g., Zones AO and AH)

☐ Alluvial fan ☐ Lakes ☐ Other (Attach Description)

Structures: ☐ Channelization ☐ Levee/Floodwall ☐ Bridge/Culvert

☐ Dam ☐ Fill ☐ Other, Attach Description

C. REVIEW FEE

Has the review fee for the appropriate request category been included? ☒ Yes Fee amount: $0

☐ No, Attach Explanation

Please see the FEMA Web site at http://www.fema.gov/plan/prevent/fhm/frm_fees.shtm **for Fee Amounts and Exemptions.**

D. SIGNATURE

All documents submitted in support of this request are correct to the best of my knowledge. I understand that any false statement may be punishable by fine or imprisonment under Title 18 of the United States Code, Section 1001.

Name:	Company:	
Mailing Address:	Daytime Telephone No.:	Fax No.:
	E-Mail Address:	
Signature of Requester (required):		Date:

As the community official responsible for floodplain management, I hereby acknowledge that we have received and reviewed this Letter of Map Revision (LOMR) or conditional LOMR request. Based upon the community's review, we find the completed or proposed project meets or is designed to meet all of the community floodplain management requirements, including the requirement that no fill be placed in the regulatory floodway, and that all necessary Federal, State, and local permits have been, or in the case of a conditional LOMR, will be obtained. In addition, we have determined that the land and any existing or proposed structures to be removed from the SFHA are or will be reasonably safe from flooding as defined in 44CFR 65.2(c), and that we have available upon request by FEMA, all analyses and documentation used to make this determination.

Community Official's Name and Title: Kathryn Gross CFM, Floddplain Reviewer		Telephone No.: (602) 506-4837
Community Name: Flood Control District of Maricopa County	Community Official's Signature (required):	Date:

CERTIFICATION BY REGISTERED PROFESSIONAL ENGINEER AND/OR LAND SURVEYOR

This certification is to be signed and sealed by a licensed land surveyor, registered professional engineer, or architect authorized by law to certify elevation information. All documents submitted in support of this request are correct to the best of my knowledge. I understand that any false statement may be punishable by fine or imprisonment under Title 18 of the United States Code, Section 1001.

Certifier's Name: Thomas R. Loomis, P.E., R.L.S. CFM	License No.: 12739 Civil	Expiration Date: 06/30/2009
Company Name: Flood Control District of Maricopa County	Telephone No.: (602) 506-4767	Fax No.: (602) 506-4601
Signature:		Date:

Ensure the forms that are appropriate to your revision request are included in your submittal.

Form Name and (Number)	Required if ...
☒ Riverine Hydrology and Hydraulics Form (Form 2)	New or revised discharges or water-surface elevations
☐ Riverine Structures Form (Form 3)	Channel is modified, addition/revision of bridge/culverts, addition/revision of levee/floodwall, addition/revision of dam
☐ Coastal Analysis Form (Form 4)	New or revised coastal elevations
☐ Coastal Structures Form (Form 5)	Addition/revision of coastal structure
☐ Alluvial Fan Flooding Form (Form 6)	Flood control measures on alluvial fans

Seal (Optional)

Attachment 1 to FEMA MT-2 Form 1

Flooding Sources Contained in FIRM Panel Number **0845F**

Abbreviated River Name	Full River Name	Zone
RVWA	Rio Verde Wash A	D
RVWAS4	Rio Verde Wash A Split 4	D
RVWF	Rio Verde Wash F	D
RVWFS6	Rio Verde Wash F Split 6	D
RVWFT2	Rio Verde Wash F Tributary 2	D
RVWI	Rio Verde Wash I	D
RVWK	Rio Verde Wash K	D
RVWKS3	Rio Verde Wash K Split 3	D
RVWKT6A	Rio Verde Wash K Tributary 6A	D
RVWKT6A1	Rio Verde Wash K Tributary 6A1	D
RVWKT6C	Rio Verde Wash K Tributary 6C	D
RVWKT10	Rio Verde Wash K Tributary 10	D
RVWKT11	Rio Verde Wash K Tributary 11	D
RVWKT11A	Rio Verde Wash K Tributary 11A	D
RVWKT12	Rio Verde Wash K Tributary 12	D

RVWKT9	Rio Verde Wash K Tributary 9	D (Scottsdale)

Attachment 1 to FEMA MT-2 Form 1 continued...

Flooding Sources Contained in FIRM Panel Number **0865F**

Abbreviated River Name	Full River Name	Zone
RVWF	Rio Verde Wash F	D
RVWI	Rio Verde Wash I	D
RVWIS4	Rio Verde Wash I Split 4	D
RVWIT1	Rio Verde Wash I Tributary 1	D
RVWJ	Rio Verde Wash J	D
RVWK	Rio Verde Wash K	D
RVWKS1	Rio Verde Wash K Split 1	D
RVWKS3	Rio Verde Wash K Split 3	D
RVWKS3A	Rio Verde Wash K Split 3A	D
RVWKT4	Rio Verde Wash K Tributary 4	D
RVWKT4A	Rio Verde Wash K Tributary 4A	D
RVWKT6	Rio Verde Wash K Tributary 6	D
RVWKT6A	Rio Verde Wash K Tributary 6A	D
RVWKT6A1	Rio Verde Wash K Tributary 6A1	D
RVWKT6A2	Rio Verde Wash K Tributary 6A2	D
RVWKT6B	Rio Verde Wash K Tributary 6B	D
RVWKT6C	Rio Verde Wash K Tributary 6C	D
RVWKT6S1	Rio Verde Wash K Tributary 6 Split 1	D
RVWKT6S2	Rio Verde Wash K Tributary 6 Split 2	D
RVWKT6S3	Rio Verde Wash K Tributary 6 Split 3	D
RVWKT7	Rio Verde Wash K Tributary 7	D
RVWKT8	Rio Verde Wash K Tributary 8	D
RVWL	Rio Verde Wash L	D

Attachment 1 to FEMA MT-2 Form 1 continued...

Flooding Sources Contained in FIRM Panel Number **0870F**

Abbreviated River Name	Full River Name	Zone
RVWI	Rio Verde Wash I	D, X, AE
RVWIT1	Rio Verde Wash I Tributary 1	D, X, AE
RVWJ	Rio Verde Wash J	D
RVWK	Rio Verde Wash K	D
RVWKT1	Rio Verde Wash K Tributary 1	D
RVWKT4	Rio Verde Wash K Tributary 4	D
RVWL	Rio Verde Wash L	D

Attachment 1 to FEMA MT-2 Form 1 continued...

Flooding Sources Contained in FIRM Panel Number **1260F**

Abbreviated River Name	Full River Name	Zone
RVW10	Rio Verde Wash 10	D
RVW10S7	Rio Verde Wash 10 Split 7	D
RVW10S7T1	Rio Verde Wash 10 Split 7 Tributary 1	D
RVW10T1	Rio Verde Wash 10 Tributary 1	D
RVWA	Rio Verde Wash A	D
RVWAS8	Rio Verde Wash A Split 8	D
RVWAS9	Rio Verde Wash A Split 9	D

Attachment 1 to FEMA MT-2 Form 1 continued...

Flooding Sources Contained in FIRM Panel Number **1276G**

Abbreviated River Name	Full River Name	Zone
RVW10	Rio Verde Wash 10	X, AE
RVW10S4	Rio Verde Wash 10 Split 4	X, AE
RVW10S7	Rio Verde Wash 10 Split 7	X
RVW10S7T1	Rio Verde Wash 10 Split7 Tributary 1	X
RVW11	Rio Verde Wash 11	X, AE
RVW11S8	Rio Verde Wash 11 Split 8	X, AE
RVW12	Rio Verde Wash 12	X, AE
RVW12S6	Rio Verde Wash 12 Split 6	X, AE
RVWA	Rio Verde Wash A	X
RVWAS3	Rio Verde Wash A Split 3	X
RVWAS8	Rio Verde Wash A Split 8	X, AE
RVWAS9	Rio Verde Wash A Split 9	X, AE
RVWF	Rio Verde Wash F	X

Attachment 1 to FEMA MT-2 Form 1 continued...

Flooding Sources Contained in FIRM Panel Number **1277G**

Abbreviated River Name	Full River Name	Zone
RVW10	Rio Verde Wash 10	X, AE
RVW10S4	Rio Verde Wash 10 Split 4	X, AE
RVW10S7	Rio Verde Wash 10 Split 7	X
RVW11	Rio Verde Wash 11	AE
RVW11S1	Rio Verde Wash 11 Split 1	X, AE
RVW11S2	Rio Verde Wash 11 Split 2	X, AE
RVW11S8	Rio Verde Wash 11 Split 8	AE
RVW12	Rio Verde Wash 12	X, AE
RVW12S3	Rio Verde Wash 12 Split 3	AE
RVW12S6	Rio Verde Wash 12 Split 6	X, AE
RVWA	Rio Verde Wash A	X, AE
RVWAS1	Rio Verde Wash A Split 1	X
RVWF	Rio Verde Wash F	X
RVWI	Rio Verde Wash I	X

Attachment 1 to FEMA MT-2 Form 1 continued...

Flooding Sources Contained in FIRM Panel Number **1285G**

Abbreviated River Name	Full River Name	Zone
RVW10	Rio Verde Wash 10	X, AE
RVW11	Rio Verde Wash 11	AE
RVW11S1	Rio Verde Wash 11 Split 1	X
RVW11S2	Rio Verde Wash 11 Split 2	X, AE
RVW12	Rio Verde Wash 12	AE
RVW12S3	Rio Verde Wash 12 Split 3	AE
RVWA	Rio Verde Wash A	X, AE
RVWAS1	Rio Verde Wash A Split 1	X, AE
RVWD	Rio Verde Wash D	X, AE
RVWF	Rio Verde Wash F	X, AE

FEDERAL EMERGENCY MANAGEMENT AGENCY

RIVERINE HYDROLOGY & HYDRAULICS FORM

O.M.B No. 3067-0148
Expires September 30, 2005

PAPERWORK REDUCTION ACT

Public reporting burden for this form is estimated to average 3 hours per response. The burden estimate includes the time for reviewing instructions, searching existing data sources, gathering and maintaining the needed data, and completing, reviewing, and submitting the form. You are not required to respond to this collection of information unless a valid OMB control number appears in the upper right corner of this form. Send comments regarding the accuracy of the burden estimate and any suggestions for reducing this burden to: Information Collections Management, Federal Emergency Management Agency, 500 C Street, SW, Washington DC 20472, Paperwork Reduction Project (3067-0148). Submission of the form is required to obtain or retain benefits under the National Flood Insurance Program. **Please do not send your completed survey to the above address.**

Flooding Source: Rio Verde Wash K Trib 9
Note: Fill out one form for each flooding source studied

A. HYDROLOGY

1. Reason for New Hydrologic Analysis (check all that apply)

☐ Not revised (skip to section 2) ☒ No existing analysis ☐ Improved data
☐ Alternative methodology ☐ Proposed Conditions (CLOMR) ☐ Changed physical condition of watershed

2. Comparison of Representative 1%-Annual-Chance Discharges

Location	Drainage Area (Sq. Mi.)	FIS (cfs)	Revised (cfs)

3. Methodology for New Hydrologic Analysis (check all that apply)

☐ Statistical Analysis of Gage Records ☒ Precipitation/Runoff Model HEC-1 and/or FLO-2D [TR-20, HEC-1, HEC-HMS etc.]
☐ Regional Regression Equations ☐ Other (please attach description)

Please enclose all relevant models in digital format, maps, computations (including computation of parameters) and documentation to support the new analysis. The document, "Numerical Models Accepted by FEMA for NFIP Usage" lists the models accepted by FEMA. This document can be found at: http://www.fema.gov/plan/prevent/fhm/en_modl.shtm.

4. Review/Approval of Analysis

If your community requires a regional, state, or federal agency to review the hydrologic analysis, please attach evidence of approval/review.

5. Impacts of Sediment Transport on Hydrology

Was sediment transport considered? ☐ Yes ☒ No If yes, then fill out Section F (Sediment Transport) of Form 3. If No, then attach your explanation for why sediment transport was not considered.

B. HYDRAULICS

1. Reach to be Revised

	Description	Cross Section	Water-Surface Elevations (ft.) Effective	Proposed/Revised
Downstream Limit	710'S & 1340'W of Chaparosa Wy & 152nd S	0		2312.86
Upstream Limit	2600'N & 3700'W of Lone Mnt Rd & 136th S	2.733		2761.31

2. Hydraulic Method Used

Hydraulic Analysis FLO-2D [HEC-2 , HEC-RAS, Other (Attach description)]

B. HYDRAULICS (CONTINUED)

3. Pre-Submittal Review of Hydraulic Models

FEMA has developed two review programs, CHECK-2 and CHECK-RAS, to aid in the review of HEC-2 and HEC-RAS hydraulic models, respectively. These review programs verify that the hydraulic estimates and assumptions in the model data are in accordance with NFIP requirements, and that the data are comparable with the assumptions and limitations of HEC-2/HEC-RAS. CHECK-2 and CHECK-RAS identify areas of potential error or concern. These tools do not replace engineering judgment. CHECK-2 and CHECK-RAS can be downloaded from http://www.fema.gov/plan/prevent/fhm/frm_soft.shtm. We recommend that you review your HEC-2 and HEC-RAS models with CHECK-2 and CHECK-RAS. If you disagree with a message, please attach an explanation of why the message is not valid in this case. Review of your submittal and resolution of valid modeling discrepancies will result in reduced review time.

HEC-2/HEC-RAS models reviewed with CHECK-2/CHECK-RAS? ☐ Yes ☐ No

4. Models Submitted

Duplicate Effective Model*	Natural File Name:	Floodway File Name:
Corrected Effective Model*	Natural File Name:	Floodway File Name:
Existing or Pre-Project Conditions Model	Natural File Name:	Floodway File Name:
Revised or Post-Project Conditions Model	Natural File Name:	Floodway File Name:
Other - (attach description)	Natural File Name:	Floodway File Name:

*Not required for revisions to approximate 1%-annual-chance floodplains (Zone A) – for details, refer to the corresponding section of the instructions.

The document "Numerical Models Accepted by FEMA for NFIP Usage" lists the models accepted by FEMA. This document can be found at: http://www.fema.gov/plan/prevent/fhm/en_modl.shtm.

C. MAPPING REQUIREMENTS

A **certified topographic map** must be submitted showing the following information (where applicable): the boundaries of the effective, existing, and proposed conditions 1%-annual-chance floodplain (for approximate Zone A revisions) or the boundaries of the 1%- and 0.2%-annual-chance floodplains and regulatory floodway (for detailed Zone AE, AO, and AH revisions); location and alignment of all cross sections with stationing control indicated; stream, road, and other alignments (e.g., dams, levees, etc.); current community easements and boundaries; boundaries of the requester's property; certification of a registered professional engineer registered in the subject State; location and description of reference marks; and the referenced vertical datum (NGVD, NAVD, etc.).

Note that the boundaries of the existing or proposed conditions floodplains and regulatory floodway to be shown on the revised FIRM and/or FBFM must tie-in with the effective floodplain and regulatory floodway boundaries. Please attach **a copy of the effective FIRM and/or FBFM,** annotated to show the boundaries of the revised 1%- and 0.2%-annual-chance floodplains and regulatory floodway that tie-in with the boundaries of the effective 1%- and 0.2%-annual-chance floodplain and regulatory floodway at the upstream and downstream limits of the area of revision.

D. COMMON REGULATORY REQUIREMENTS

1. For CLOMR requests, do Base Flood Elevations (BFEs) increase? ☐ Yes ☐ No

For CLOMR requests, if either of the following is true, please submit evidence of compliance with Section 65.12 of the NFIP regulations:
- The proposed project encroaches upon a regulatory floodway and would result in increases above 0.00 foot.
- The proposed project encroaches upon a SFHA with BFEs established and would result in increases above 1.00 foot.

2. Does the request involve the placement or proposed placement of fill? ☐ Yes ☒ No

If Yes, the community must be able to certify that the area to be removed from the special flood hazard area, to include any structures or proposed structures, meets all of the standards of the local floodplain ordinances, and is reasonably safe from flooding in accordance with the NFIP regulations set forth at 44 CFR 60.3(a)(3), 65.5(a)(4), and 65.6(a)(14). Please see the MT-2 instructions for more information.

3. For LOMR requests, is the regulatory floodway being revised? ☐ Yes ☒ No

If Yes, attach evidence of regulatory floodway revision notification. As per Paragraph 65.7(b)(1) of the NFIP Regulations, notification is required for requests involving revisions to the regulatory floodway. (Not required for revisions to approximate 1%-annual-chance floodplains [studied Zone A designation] unless a regulatory floodway is being added. Elements and examples of regulatory floodway revision notification can be found in the MT-2 Form 2 Instructions.)

4. For LOMR requests, does this request require property owner notification and acceptance of BFE increases? ☐ Yes ☒ No

If Yes, please attach proof of property owner notification and acceptance (if available). Elements of and examples of property owner notification can be found in the MT-2 Form 2 Instructions.

FEDERAL EMERGENCY MANAGEMENT AGENCY

RIVERINE HYDROLOGY & HYDRAULICS FORM

O.M.B No. 3067-0148
Expires September 30, 2005

PAPERWORK REDUCTION ACT

Public reporting burden for this form is estimated to average 3 hours per response. The burden estimate includes the time for reviewing instructions, searching existing data sources, gathering and maintaining the needed data, and completing, reviewing, and submitting the form. You are not required to respond to this collection of information unless a valid OMB control number appears in the upper right corner of this form. Send comments regarding the accuracy of the burden estimate and any suggestions for reducing this burden to: Information Collections Management, Federal Emergency Management Agency, 500 C Street, SW, Washington DC 20472, Paperwork Reduction Project (3067-0148). Submission of the form is required to obtain or retain benefits under the National Flood Insurance Program. **Please do not send your completed survey to the above address.**

Flooding Source: Rio Verde Wash I
Note: Fill out one form for each flooding source studied

A. HYDROLOGY

1. Reason for New Hydrologic Analysis (check all that apply)

☐ Not revised (skip to section 2) ☐ No existing analysis ☒ Improved data
☐ Alternative methodology ☐ Proposed Conditions (CLOMR) ☐ Changed physical condition of watershed

2. Comparison of Representative 1%-Annual-Chance Discharges

Location	Drainage Area (Sq. Mi.)	FIS (cfs)	Revised (cfs)

3. Methodology for New Hydrologic Analysis (check all that apply)

☐ Statistical Analysis of Gage Records ☒ Precipitation/Runoff Model HEC-1and/or FLO-2D [TR-20, HEC-1, HEC-HMS etc.]
☐ Regional Regression Equations ☐ Other (please attach description)

Please enclose all relevant models in digital format, maps, computations (including computation of parameters) and documentation to support the new analysis. The document, "Numerical Models Accepted by FEMA for NFIP Usage" lists the models accepted by FEMA. This document can be found at: http://www.fema.gov/plan/prevent/fhm/en_modl.shtm.

4. Review/Approval of Analysis

If your community requires a regional, state, or federal agency to review the hydrologic analysis, please attach evidence of approval/review.

5. Impacts of Sediment Transport on Hydrology

Was sediment transport considered? ☐ Yes ☒ No If yes, then fill out Section F (Sediment Transport) of Form 3. If No, then attach your explanation for why sediment transport was not considered.

B. HYDRAULICS

1. Reach to be Revised

	Description	Cross Section	Water-Surface Elevations (ft.) Effective	Proposed/Revised
Downstream Limit	4400'N & 890'E RioVerde Dr & Needlerock	0	1530 (NGVD29)	1532.35
Upstream Limit	1100'S & 1500'W Lone Mnt Rd & 144th St.	6.423		2456.01

2. Hydraulic Method Used

Hydraulic Analysis FLO-2D [HEC-2 , HEC-RAS, Other (Attach description)]

B. HYDRAULICS (CONTINUED)

3. Pre-Submittal Review of Hydraulic Models

FEMA has developed two review programs, CHECK-2 and CHECK-RAS, to aid in the review of HEC-2 and HEC-RAS hydraulic models, respectively. These review programs verify that the hydraulic estimates and assumptions in the model data are in accordance with NFIP requirements, and that the data are comparable with the assumptions and limitations of HEC-2/HEC-RAS. CHECK-2 and CHECK-RAS identify areas of potential error or concern. These tools do not replace engineering judgment. CHECK-2 and CHECK-RAS can be downloaded from http://www.fema.gov/plan/prevent/fhm/frm_soft.shtm. We recommend that you review your HEC-2 and HEC-RAS models with CHECK-2 and CHECK-RAS. If you disagree with a message, please attach an explanation of why the message is not valid in this case. Review of your submittal and resolution of valid modeling discrepancies will result in reduced review time.

HEC-2/HEC-RAS models reviewed with CHECK-2/CHECK-RAS? ☐ Yes ☐ No

4. Models Submitted

Duplicate Effective Model*	Natural File Name:	Floodway File Name:
Corrected Effective Model*	Natural File Name:	Floodway File Name:
Existing or Pre-Project Conditions Model	Natural File Name:	Floodway File Name:
Revised or Post-Project Conditions Model	Natural File Name:	Floodway File Name:
Other - (attach description)	Natural File Name:	Floodway File Name:

*Not required for revisions to approximate 1%-annual-chance floodplains (Zone A) – for details, refer to the corresponding section of the instructions.

The document "Numerical Models Accepted by FEMA for NFIP Usage" lists the models accepted by FEMA. This document can be found at: http://www.fema.gov/plan/prevent/fhm/en_modl.shtm.

C. MAPPING REQUIREMENTS

A **certified topographic map** must be submitted showing the following information (where applicable): the boundaries of the effective, existing, and proposed conditions 1%-annual-chance floodplain (for approximate Zone A revisions) or the boundaries of the 1%- and 0.2%-annual-chance floodplains and regulatory floodway (for detailed Zone AE, AO, and AH revisions); location and alignment of all cross sections with stationing control indicated; stream, road, and other alignments (e.g., dams, levees, etc.); current community easements and boundaries; boundaries of the requester's property; certification of a registered professional engineer registered in the subject State; location and description of reference marks; and the referenced vertical datum (NGVD, NAVD, etc.).

Note that the boundaries of the existing or proposed conditions floodplains and regulatory floodway to be shown on the revised FIRM and/or FBFM must tie-in with the effective floodplain and regulatory floodway boundaries. Please attach **a copy of the effective FIRM and/or FBFM,** annotated to show the boundaries of the revised 1%- and 0.2%-annual-chance floodplains and regulatory floodway that tie-in with the boundaries of the effective 1%- and 0.2%-annual-chance floodplain and regulatory floodway at the upstream and downstream limits of the area of revision.

D. COMMON REGULATORY REQUIREMENTS

1. For CLOMR requests, do Base Flood Elevations (BFEs) increase? ☐ Yes ☐ No

For CLOMR requests, if either of the following is true, please submit evidence of compliance with Section 65.12 of the NFIP regulations:
- The proposed project encroaches upon a regulatory floodway and would result in increases above 0.00 foot.
- The proposed project encroaches upon a SFHA with BFEs established and would result in increases above 1.00 foot.

2. Does the request involve the placement or proposed placement of fill? ☐ Yes ☒ No

If Yes, the community must be able to certify that the area to be removed from the special flood hazard area, to include any structures or proposed structures, meets all of the standards of the local floodplain ordinances, and is reasonably safe from flooding in accordance with the NFIP regulations set forth at 44 CFR 60.3(a)(3), 65.5(a)(4), and 65.6(a)(14). Please see the MT-2 instructions for more information.

3. For LOMR requests, is the regulatory floodway being revised? ☒ Yes ☐ No

If Yes, attach evidence of regulatory floodway revision notification. As per Paragraph 65.7(b)(1) of the NFIP Regulations, notification is required for requests involving revisions to the regulatory floodway. (Not required for revisions to approximate 1%-annual-chance floodplains [studied Zone A designation] unless a regulatory floodway is being added. Elements and examples of regulatory floodway revision notification can be found in the MT-2 Form 2 Instructions.)

4. For LOMR requests, does this request require property owner notification and acceptance of BFE increases? ☐ Yes ☒ No

If Yes, please attach proof of property owner notification and acceptance (if available). Elements of and examples of property owner notification can be found in the MT-2 Form 2 Instructions.

FEDERAL EMERGENCY MANAGEMENT AGENCY

RIVERINE HYDROLOGY & HYDRAULICS FORM

O.M.B No. 3067-0148
Expires September 30, 2005

PAPERWORK REDUCTION ACT

Public reporting burden for this form is estimated to average 3 hours per response. The burden estimate includes the time for reviewing instructions, searching existing data sources, gathering and maintaining the needed data, and completing, reviewing, and submitting the form. You are not required to respond to this collection of information unless a valid OMB control number appears in the upper right corner of this form. Send comments regarding the accuracy of the burden estimate and any suggestions for reducing this burden to: Information Collections Management, Federal Emergency Management Agency, 500 C Street, SW, Washington DC 20472, Paperwork Reduction Project (3067-0148). Submission of the form is required to obtain or retain benefits under the National Flood Insurance Program. **Please do not send your completed survey to the above address.**

Flooding Source: Rio Verde Wash K Trib 6
Note: Fill out one form for each flooding source studied

A. HYDROLOGY

1. Reason for New Hydrologic Analysis (check all that apply)

☐ Not revised (skip to section 2) ☒ No existing analysis ☐ Improved data
☐ Alternative methodology ☐ Proposed Conditions (CLOMR) ☐ Changed physical condition of watershed

2. Comparison of Representative 1%-Annual-Chance Discharges

Location	Drainage Area (Sq. Mi.)	FIS (cfs)	Revised (cfs)

3. Methodology for New Hydrologic Analysis (check all that apply)

☐ Statistical Analysis of Gage Records ☒ Precipitation/Runoff Model HEC-1 and/or FLO-2D [TR-20, HEC-1, HEC-HMS etc.]
☐ Regional Regression Equations ☐ Other (please attach description)

Please enclose all relevant models in digital format, maps, computations (including computation of parameters) and documentation to support the new analysis. The document, "Numerical Models Accepted by FEMA for NFIP Usage" lists the models accepted by FEMA. This document can be found at: http://www.fema.gov/plan/prevent/fhm/en_modl.shtm.

4. Review/Approval of Analysis

If your community requires a regional, state, or federal agency to review the hydrologic analysis, please attach evidence of approval/review.

5. Impacts of Sediment Transport on Hydrology

Was sediment transport considered? ☐ Yes ☒ No If yes, then fill out Section F (Sediment Transport) of Form 3. If No, then attach your explanation for why sediment transport was not considered.

B. HYDRAULICS

1. Reach to be Revised

	Description	Cross Section	Water-Surface Elevations (ft.) Effective	Proposed/Revised
Downstream Limit	170'N & 2360'E of Dixileta Dr & 175th St	0		1757.52
Upstream Limit	300'S & 6300'E of DoveValley & 144th St	3.875		2317.57

2. Hydraulic Method Used

Hydraulic Analysis FLO-2D [HEC-2 , HEC-RAS, Other (Attach description)]

B. HYDRAULICS (CONTINUED)

3. Pre-Submittal Review of Hydraulic Models

FEMA has developed two review programs, CHECK-2 and CHECK-RAS, to aid in the review of HEC-2 and HEC-RAS hydraulic models, respectively. These review programs verify that the hydraulic estimates and assumptions in the model data are in accordance with NFIP requirements, and that the data are comparable with the assumptions and limitations of HEC-2/HEC-RAS. CHECK-2 and CHECK-RAS identify areas of potential error or concern. These tools do not replace engineering judgment. CHECK-2 and CHECK-RAS can be downloaded from http://www.fema.gov/plan/prevent/fhm/frm_soft.shtm. We recommend that you review your HEC-2 and HEC-RAS models with CHECK-2 and CHECK-RAS. If you disagree with a message, please attach an explanation of why the message is not valid in this case. Review of your submittal and resolution of valid modeling discrepancies will result in reduced review time.

HEC-2/HEC-RAS models reviewed with CHECK-2/CHECK-RAS? ☐ Yes ☐ No

4. Models Submitted

Duplicate Effective Model*	Natural File Name:	Floodway File Name:
Corrected Effective Model*	Natural File Name:	Floodway File Name:
Existing or Pre-Project Conditions Model	Natural File Name:	Floodway File Name:
Revised or Post-Project Conditions Model	Natural File Name:	Floodway File Name:
Other - (attach description)	Natural File Name:	Floodway File Name:

*Not required for revisions to approximate 1%-annual-chance floodplains (Zone A) – for details, refer to the corresponding section of the instructions.

The document "Numerical Models Accepted by FEMA for NFIP Usage" lists the models accepted by FEMA. This document can be found at: http://www.fema.gov/plan/prevent/fhm/en_modl.shtm.

C. MAPPING REQUIREMENTS

A **certified topographic map** must be submitted showing the following information (where applicable): the boundaries of the effective, existing, and proposed conditions 1%-annual-chance floodplain (for approximate Zone A revisions) or the boundaries of the 1%- and 0.2%-annual-chance floodplains and regulatory floodway (for detailed Zone AE, AO, and AH revisions); location and alignment of all cross sections with stationing control indicated; stream, road, and other alignments (e.g., dams, levees, etc.); current community easements and boundaries; boundaries of the requester's property; certification of a registered professional engineer registered in the subject State; location and description of reference marks; and the referenced vertical datum (NGVD, NAVD, etc.).

Note that the boundaries of the existing or proposed conditions floodplains and regulatory floodway to be shown on the revised FIRM and/or FBFM must tie-in with the effective floodplain and regulatory floodway boundaries. Please attach **a copy of the effective FIRM and/or FBFM,** annotated to show the boundaries of the revised 1%- and 0.2%-annual-chance floodplains and regulatory floodway that tie-in with the boundaries of the effective 1%- and 0.2%-annual-chance floodplain and regulatory floodway at the upstream and downstream limits of the area of revision.

D. COMMON REGULATORY REQUIREMENTS

1. For CLOMR requests, do Base Flood Elevations (BFEs) increase? ☐ Yes ☐ No

For CLOMR requests, if either of the following is true, please submit evidence of compliance with Section 65.12 of the NFIP regulations:
- The proposed project encroaches upon a regulatory floodway and would result in increases above 0.00 foot.
- The proposed project encroaches upon a SFHA with BFEs established and would result in increases above 1.00 foot.

2. Does the request involve the placement or proposed placement of fill? ☐ Yes ☒ No

If Yes, the community must be able to certify that the area to be removed from the special flood hazard area, to include any structures or proposed structures, meets all of the standards of the local floodplain ordinances, and is reasonably safe from flooding in accordance with the NFIP regulations set forth at 44 CFR 60.3(a)(3), 65.5(a)(4), and 65.6(a)(14). Please see the MT-2 instructions for more information.

3. For LOMR requests, is the regulatory floodway being revised? ☐ Yes ☒ No

If Yes, attach evidence of regulatory floodway revision notification. As per Paragraph 65.7(b)(1) of the NFIP Regulations, notification is required for requests involving revisions to the regulatory floodway. (Not required for revisions to approximate 1%-annual-chance floodplains [studied Zone A designation] unless a regulatory floodway is being added. Elements and examples of regulatory floodway revision notification can be found in the MT-2 Form 2 Instructions.)

4. For LOMR requests, does this request require property owner notification and acceptance of BFE increases? ☐ Yes ☒ No

If Yes, please attach proof of property owner notification and acceptance (if available). Elements of and examples of property owner notification can be found in the MT-2 Form 2 Instructions.

FEDERAL EMERGENCY MANAGEMENT AGENCY

RIVERINE HYDROLOGY & HYDRAULICS FORM

O.M.B No. 3067-0148
Expires September 30, 2005

PAPERWORK REDUCTION ACT

Public reporting burden for this form is estimated to average 3 hours per response. The burden estimate includes the time for reviewing instructions, searching existing data sources, gathering and maintaining the needed data, and completing, reviewing, and submitting the form. You are not required to respond to this collection of information unless a valid OMB control number appears in the upper right corner of this form. Send comments regarding the accuracy of the burden estimate and any suggestions for reducing this burden to: Information Collections Management, Federal Emergency Management Agency, 500 C Street, SW, Washington DC 20472, Paperwork Reduction Project (3067-0148). Submission of the form is required to obtain or retain benefits under the National Flood Insurance Program. **Please do not send your completed survey to the above address.**

Flooding Source: Rio Verde Wash K Trib 11
Note: Fill out one form for each flooding source studied

A. HYDROLOGY

1. Reason for New Hydrologic Analysis (check all that apply)

☐ Not revised (skip to section 2) ☒ No existing analysis ☐ Improved data
☐ Alternative methodology ☐ Proposed Conditions (CLOMR) ☐ Changed physical condition of watershed

2. Comparison of Representative 1%-Annual-Chance Discharges

Location	Drainage Area (Sq. Mi.)	FIS (cfs)	Revised (cfs)

3. Methodology for New Hydrologic Analysis (check all that apply)

☐ Statistical Analysis of Gage Records ☒ Precipitation/Runoff Model HEC-1 and/or FLO-2D [TR-20, HEC-1, HEC-HMS etc.]
☐ Regional Regression Equations ☐ Other (please attach description)

Please enclose all relevant models in digital format, maps, computations (including computation of parameters) and documentation to support the new analysis. The document, "Numerical Models Accepted by FEMA for NFIP Usage" lists the models accepted by FEMA. This document can be found at: http://www.fema.gov/plan/prevent/fhm/en_modl.shtm.

4. Review/Approval of Analysis

If your community requires a regional, state, or federal agency to review the hydrologic analysis, please attach evidence of approval/review.

5. Impacts of Sediment Transport on Hydrology

Was sediment transport considered? ☐ Yes ☒ No If yes, then fill out Section F (Sediment Transport) of Form 3. If No, then attach your explanation for why sediment transport was not considered.

B. HYDRAULICS

1. Reach to be Revised

	Description	Cross Section	Water-Surface Elevations (ft.) Effective	Proposed/Revised
Downstream Limit	1500'N & 1400'E of Lone Mnt Rd & 144th	0		2397.00
Upstream Limit	2100'N & 2700'E of Lone Mnt Rd & 136th S	0.798		2501.90

2. Hydraulic Method Used

Hydraulic Analysis FLO-2D [HEC-2 , HEC-RAS, Other (Attach description)]

B. HYDRAULICS (CONTINUED)

3. Pre-Submittal Review of Hydraulic Models

FEMA has developed two review programs, CHECK-2 and CHECK-RAS, to aid in the review of HEC-2 and HEC-RAS hydraulic models, respectively. These review programs verify that the hydraulic estimates and assumptions in the model data are in accordance with NFIP requirements, and that the data are comparable with the assumptions and limitations of HEC-2/HEC-RAS. CHECK-2 and CHECK-RAS identify areas of potential error or concern. These tools do not replace engineering judgment. CHECK-2 and CHECK-RAS can be downloaded from http://www.fema.gov/plan/prevent/fhm/frm_soft.shtm. We recommend that you review your HEC-2 and HEC-RAS models with CHECK-2 and CHECK-RAS. If you disagree with a message, please attach an explanation of why the message is not valid in this case. Review of your submittal and resolution of valid modeling discrepancies will result in reduced review time.

HEC-2/HEC-RAS models reviewed with CHECK-2/CHECK-RAS? ☐ Yes ☐ No

4. Models Submitted

Duplicate Effective Model*	Natural File Name:	Floodway File Name:
Corrected Effective Model*	Natural File Name:	Floodway File Name:
Existing or Pre-Project Conditions Model	Natural File Name:	Floodway File Name:
Revised or Post-Project Conditions Model	Natural File Name:	Floodway File Name:
Other - (attach description)	Natural File Name:	Floodway File Name:

*Not required for revisions to approximate 1%-annual-chance floodplains (Zone A) – for details, refer to the corresponding section of the instructions.

The document "Numerical Models Accepted by FEMA for NFIP Usage" lists the models accepted by FEMA. This document can be found at: http://www.fema.gov/plan/prevent/fhm/en_modl.shtm.

C. MAPPING REQUIREMENTS

A **certified topographic map** must be submitted showing the following information (where applicable): the boundaries of the effective, existing, and proposed conditions 1%-annual-chance floodplain (for approximate Zone A revisions) or the boundaries of the 1%- and 0.2%-annual-chance floodplains and regulatory floodway (for detailed Zone AE, AO, and AH revisions); location and alignment of all cross sections with stationing control indicated; stream, road, and other alignments (e.g., dams, levees, etc.); current community easements and boundaries; boundaries of the requester's property; certification of a registered professional engineer registered in the subject State; location and description of reference marks; and the referenced vertical datum (NGVD, NAVD, etc.).

Note that the boundaries of the existing or proposed conditions floodplains and regulatory floodway to be shown on the revised FIRM and/or FBFM must tie-in with the effective floodplain and regulatory floodway boundaries. Please attach **a copy of the effective FIRM and/or FBFM,** annotated to show the boundaries of the revised 1%- and 0.2%-annual-chance floodplains and regulatory floodway that tie-in with the boundaries of the effective 1%- and 0.2%-annual-chance floodplain and regulatory floodway at the upstream and downstream limits of the area of revision.

D. COMMON REGULATORY REQUIREMENTS

1. For CLOMR requests, do Base Flood Elevations (BFEs) increase? ☐ Yes ☐ No

For CLOMR requests, if either of the following is true, please submit evidence of compliance with Section 65.12 of the NFIP regulations:
- The proposed project encroaches upon a regulatory floodway and would result in increases above 0.00 foot.
- The proposed project encroaches upon a SFHA with BFEs established and would result in increases above 1.00 foot.

2. Does the request involve the placement or proposed placement of fill? ☐ Yes ☒ No

If Yes, the community must be able to certify that the area to be removed from the special flood hazard area, to include any structures or proposed structures, meets all of the standards of the local floodplain ordinances, and is reasonably safe from flooding in accordance with the NFIP regulations set forth at 44 CFR 60.3(a)(3), 65.5(a)(4), and 65.6(a)(14). Please see the MT-2 instructions for more information.

3. For LOMR requests, is the regulatory floodway being revised? ☐ Yes ☒ No

If Yes, attach evidence of regulatory floodway revision notification. As per Paragraph 65.7(b)(1) of the NFIP Regulations, notification is required for requests involving revisions to the regulatory floodway. (Not required for revisions to approximate 1%-annual-chance floodplains [studied Zone A designation] unless a regulatory floodway is being added. Elements and examples of regulatory floodway revision notification can be found in the MT-2 Form 2 Instructions.)

4. For LOMR requests, does this request require property owner notification and acceptance of BFE increases? ☐ Yes ☒ No

If Yes, please attach proof of property owner notification and acceptance (if available). Elements of and examples of property owner notification can be found in the MT-2 Form 2 Instructions.

FEDERAL EMERGENCY MANAGEMENT AGENCY

RIVERINE HYDROLOGY & HYDRAULICS FORM

O.M.B No. 3067-0148
Expires September 30, 2005

PAPERWORK REDUCTION ACT

Public reporting burden for this form is estimated to average 3 hours per response. The burden estimate includes the time for reviewing instructions, searching existing data sources, gathering and maintaining the needed data, and completing, reviewing, and submitting the form. You are not required to respond to this collection of information unless a valid OMB control number appears in the upper right corner of this form. Send comments regarding the accuracy of the burden estimate and any suggestions for reducing this burden to: Information Collections Management, Federal Emergency Management Agency, 500 C Street, SW, Washington DC 20472, Paperwork Reduction Project (3067-0148). Submission of the form is required to obtain or retain benefits under the National Flood Insurance Program. **Please do not send your completed survey to the above address.**

Flooding Source: Rio Verde Wash K Trib 11A
Note: Fill out one form for each flooding source studied

A. HYDROLOGY

1. Reason for New Hydrologic Analysis (check all that apply)

☐ Not revised (skip to section 2) ☒ No existing analysis ☐ Improved data
☐ Alternative methodology ☐ Proposed Conditions (CLOMR) ☐ Changed physical condition of watershed

2. Comparison of Representative 1%-Annual-Chance Discharges

Location	Drainage Area (Sq. Mi.)	FIS (cfs)	Revised (cfs)

3. Methodology for New Hydrologic Analysis (check all that apply)

☐ Statistical Analysis of Gage Records ☒ Precipitation/Runoff Model HEC-1 and/or FLO-2D [TR-20, HEC-1, HEC-HMS etc.]
☐ Regional Regression Equations ☐ Other (please attach description)

Please enclose all relevant models in digital format, maps, computations (including computation of parameters) and documentation to support the new analysis. The document, "Numerical Models Accepted by FEMA for NFIP Usage" lists the models accepted by FEMA. This document can be found at: http://www.fema.gov/plan/prevent/fhm/en_modl.shtm.

4. Review/Approval of Analysis

If your community requires a regional, state, or federal agency to review the hydrologic analysis, please attach evidence of approval/review.

5. Impacts of Sediment Transport on Hydrology

Was sediment transport considered? ☐ Yes ☒ No If yes, then fill out Section F (Sediment Transport) of Form 3. If No, then attach your explanation for why sediment transport was not considered.

B. HYDRAULICS

1. Reach to be Revised

	Description	Cross Section	Water-Surface Elevations (ft.) Effective	Proposed/Revised
Downstream Limit	160'N & 250'W of Ranch Rd & 144th St.	0		2438.25
Upstream Limit	2400'N & 750'W of Lone Mnt Rd &144th St.	0.182		2457.29

2. Hydraulic Method Used

Hydraulic Analysis FLO-2D [HEC-2 , HEC-RAS, Other (Attach description)]

B. HYDRAULICS (CONTINUED)

3. Pre-Submittal Review of Hydraulic Models

FEMA has developed two review programs, CHECK-2 and CHECK-RAS, to aid in the review of HEC-2 and HEC-RAS hydraulic models, respectively. These review programs verify that the hydraulic estimates and assumptions in the model data are in accordance with NFIP requirements, and that the data are comparable with the assumptions and limitations of HEC-2/HEC-RAS. CHECK-2 and CHECK-RAS identify areas of potential error or concern. These tools do not replace engineering judgment. CHECK-2 and CHECK-RAS can be downloaded from http://www.fema.gov/plan/prevent/fhm/frm_soft.shtm. We recommend that you review your HEC-2 and HEC-RAS models with CHECK-2 and CHECK-RAS. If you disagree with a message, please attach an explanation of why the message is not valid in this case. Review of your submittal and resolution of valid modeling discrepancies will result in reduced review time.

HEC-2/HEC-RAS models reviewed with CHECK-2/CHECK-RAS? ☐ Yes ☐ No

4. Models Submitted

Duplicate Effective Model*	Natural File Name:	Floodway File Name:
Corrected Effective Model*	Natural File Name:	Floodway File Name:
Existing or Pre-Project Conditions Model	Natural File Name:	Floodway File Name:
Revised or Post-Project Conditions Model	Natural File Name:	Floodway File Name:
Other - (attach description)	Natural File Name:	Floodway File Name:

*Not required for revisions to approximate 1%-annual-chance floodplains (Zone A) – for details, refer to the corresponding section of the instructions.

The document "Numerical Models Accepted by FEMA for NFIP Usage" lists the models accepted by FEMA. This document can be found at: http://www.fema.gov/plan/prevent/fhm/en_modl.shtm.

C. MAPPING REQUIREMENTS

A **certified topographic map** must be submitted showing the following information (where applicable): the boundaries of the effective, existing, and proposed conditions 1%-annual-chance floodplain (for approximate Zone A revisions) or the boundaries of the 1%- and 0.2%-annual-chance floodplains and regulatory floodway (for detailed Zone AE, AO, and AH revisions); location and alignment of all cross sections with stationing control indicated; stream, road, and other alignments (e.g., dams, levees, etc.); current community easements and boundaries; boundaries of the requester's property; certification of a registered professional engineer registered in the subject State; location and description of reference marks; and the referenced vertical datum (NGVD, NAVD, etc.).

Note that the boundaries of the existing or proposed conditions floodplains and regulatory floodway to be shown on the revised FIRM and/or FBFM must tie-in with the effective floodplain and regulatory floodway boundaries. Please attach **a copy of the effective FIRM and/or FBFM,** annotated to show the boundaries of the revised 1%- and 0.2%-annual-chance floodplains and regulatory floodway that tie-in with the boundaries of the effective 1%- and 0.2%-annual-chance floodplain and regulatory floodway at the upstream and downstream limits of the area of revision.

D. COMMON REGULATORY REQUIREMENTS

1. For CLOMR requests, do Base Flood Elevations (BFEs) increase? ☐ Yes ☐ No

For CLOMR requests, if either of the following is true, please submit evidence of compliance with Section 65.12 of the NFIP regulations:
- The proposed project encroaches upon a regulatory floodway and would result in increases above 0.00 foot.
- The proposed project encroaches upon a SFHA with BFEs established and would result in increases above 1.00 foot.

2. Does the request involve the placement or proposed placement of fill? ☐ Yes ☒ No

If Yes, the community must be able to certify that the area to be removed from the special flood hazard area, to include any structures or proposed structures, meets all of the standards of the local floodplain ordinances, and is reasonably safe from flooding in accordance with the NFIP regulations set forth at 44 CFR 60.3(a)(3), 65.5(a)(4), and 65.6(a)(14). Please see the MT-2 instructions for more information.

3. For LOMR requests, is the regulatory floodway being revised? ☐ Yes ☒ No

If Yes, attach evidence of regulatory floodway revision notification. As per Paragraph 65.7(b)(1) of the NFIP Regulations, notification is required for requests involving revisions to the regulatory floodway. (Not required for revisions to approximate 1%-annual-chance floodplains [studied Zone A designation] unless a regulatory floodway is being added. Elements and examples of regulatory floodway revision notification can be found in the MT-2 Form 2 Instructions.)

4. For LOMR requests, does this request require property owner notification and acceptance of BFE increases? ☐ Yes ☒ No

If Yes, please attach proof of property owner notification and acceptance (if available). Elements of and examples of property owner notification can be found in the MT-2 Form 2 Instructions.

FEDERAL EMERGENCY MANAGEMENT AGENCY

RIVERINE HYDROLOGY & HYDRAULICS FORM

O.M.B No. 3067-0148
Expires September 30, 2005

PAPERWORK REDUCTION ACT

Public reporting burden for this form is estimated to average 3 hours per response. The burden estimate includes the time for reviewing instructions, searching existing data sources, gathering and maintaining the needed data, and completing, reviewing, and submitting the form. You are not required to respond to this collection of information unless a valid OMB control number appears in the upper right corner of this form. Send comments regarding the accuracy of the burden estimate and any suggestions for reducing this burden to: Information Collections Management, Federal Emergency Management Agency, 500 C Street, SW, Washington DC 20472, Paperwork Reduction Project (3067-0148). Submission of the form is required to obtain or retain benefits under the National Flood Insurance Program. **Please do not send your completed survey to the above address.**

Flooding Source: Rio Verde Wash K Trib 12
Note: Fill out one form for each flooding source studied

A. HYDROLOGY

1. Reason for New Hydrologic Analysis (check all that apply)

☐ Not revised (skip to section 2) ☒ No existing analysis ☐ Improved data
☐ Alternative methodology ☐ Proposed Conditions (CLOMR) ☐ Changed physical condition of watershed

2. Comparison of Representative 1%-Annual-Chance Discharges

Location	Drainage Area (Sq. Mi.)	FIS (cfs)	Revised (cfs)

3. Methodology for New Hydrologic Analysis (check all that apply)

☐ Statistical Analysis of Gage Records ☒ Precipitation/Runoff Model HEC-1 and/or FLO-2D [TR-20, HEC-1, HEC-HMS etc.]
☐ Regional Regression Equations ☐ Other (please attach description)

Please enclose all relevant models in digital format, maps, computations (including computation of parameters) and documentation to support the new analysis. The document, "Numerical Models Accepted by FEMA for NFIP Usage" lists the models accepted by FEMA. This document can be found at: http://www.fema.gov/plan/prevent/fhm/en_modl.shtm.

4. Review/Approval of Analysis

If your community requires a regional, state, or federal agency to review the hydrologic analysis, please attach evidence of approval/review.

5. Impacts of Sediment Transport on Hydrology

Was sediment transport considered? ☐ Yes ☒ No If yes, then fill out Section F (Sediment Transport) of Form 3. If No, then attach your explanation for why sediment transport was not considered.

B. HYDRAULICS

1. Reach to be Revised

	Description	Cross Section	Water-Surface Elevations (ft.) Effective	Proposed/Revised
Downstream Limit	815'S & 430'E of 144th St & Aloe Vera Dr	0		2437.10
Upstream Limit	2000'S & 1250'W of 144th St & Dove Valle	0.324		2478.45

2. Hydraulic Method Used

Hydraulic Analysis FLO-2D [HEC-2 , HEC-RAS, Other (Attach description)]

B. HYDRAULICS (CONTINUED)

3. Pre-Submittal Review of Hydraulic Models

FEMA has developed two review programs, CHECK-2 and CHECK-RAS, to aid in the review of HEC-2 and HEC-RAS hydraulic models, respectively. These review programs verify that the hydraulic estimates and assumptions in the model data are in accordance with NFIP requirements, and that the data are comparable with the assumptions and limitations of HEC-2/HEC-RAS. CHECK-2 and CHECK-RAS identify areas of potential error or concern. These tools do not replace engineering judgment. CHECK-2 and CHECK-RAS can be downloaded from http://www.fema.gov/plan/prevent/fhm/frm_soft.shtm. We recommend that you review your HEC-2 and HEC-RAS models with CHECK-2 and CHECK-RAS. If you disagree with a message, please attach an explanation of why the message is not valid in this case. Review of your submittal and resolution of valid modeling discrepancies will result in reduced review time.

HEC-2/HEC-RAS models reviewed with CHECK-2/CHECK-RAS? ☐ Yes ☐ No

4. Models Submitted

Duplicate Effective Model*	Natural File Name:	Floodway File Name:
Corrected Effective Model*	Natural File Name:	Floodway File Name:
Existing or Pre-Project Conditions Model	Natural File Name:	Floodway File Name:
Revised or Post-Project Conditions Model	Natural File Name:	Floodway File Name:
Other - (attach description)	Natural File Name:	Floodway File Name:

*Not required for revisions to approximate 1%-annual-chance floodplains (Zone A) – for details, refer to the corresponding section of the instructions.

The document "Numerical Models Accepted by FEMA for NFIP Usage" lists the models accepted by FEMA. This document can be found at: http://www.fema.gov/plan/prevent/fhm/en_modl.shtm.

C. MAPPING REQUIREMENTS

A **certified topographic map** must be submitted showing the following information (where applicable): the boundaries of the effective, existing, and proposed conditions 1%-annual-chance floodplain (for approximate Zone A revisions) or the boundaries of the 1%- and 0.2%-annual-chance floodplains and regulatory floodway (for detailed Zone AE, AO, and AH revisions); location and alignment of all cross sections with stationing control indicated; stream, road, and other alignments (e.g., dams, levees, etc.); current community easements and boundaries; boundaries of the requester's property; certification of a registered professional engineer registered in the subject State; location and description of reference marks; and the referenced vertical datum (NGVD, NAVD, etc.).

Note that the boundaries of the existing or proposed conditions floodplains and regulatory floodway to be shown on the revised FIRM and/or FBFM must tie-in with the effective floodplain and regulatory floodway boundaries. Please attach **a copy of the effective FIRM and/or FBFM,** annotated to show the boundaries of the revised 1%- and 0.2%-annual-chance floodplains and regulatory floodway that tie-in with the boundaries of the effective 1%- and 0.2%-annual-chance floodplain and regulatory floodway at the upstream and downstream limits of the area of revision.

D. COMMON REGULATORY REQUIREMENTS

1. For CLOMR requests, do Base Flood Elevations (BFEs) increase? ☐ Yes ☐ No

For CLOMR requests, if either of the following is true, please submit evidence of compliance with Section 65.12 of the NFIP regulations:
- The proposed project encroaches upon a regulatory floodway and would result in increases above 0.00 foot.
- The proposed project encroaches upon a SFHA with BFEs established and would result in increases above 1.00 foot.

2. Does the request involve the placement or proposed placement of fill? ☐ Yes ☒ No

If Yes, the community must be able to certify that the area to be removed from the special flood hazard area, to include any structures or proposed structures, meets all of the standards of the local floodplain ordinances, and is reasonably safe from flooding in accordance with the NFIP regulations set forth at 44 CFR 60.3(a)(3), 65.5(a)(4), and 65.6(a)(14). Please see the MT-2 instructions for more information.

3. For LOMR requests, is the regulatory floodway being revised? ☐ Yes ☒ No

If Yes, attach evidence of regulatory floodway revision notification. As per Paragraph 65.7(b)(1) of the NFIP Regulations, notification is required for requests involving revisions to the regulatory floodway. (Not required for revisions to approximate 1%-annual-chance floodplains [studied Zone A designation] unless a regulatory floodway is being added. Elements and examples of regulatory floodway revision notification can be found in the MT-2 Form 2 Instructions.)

4. For LOMR requests, does this request require property owner notification and acceptance of BFE increases? ☐ Yes ☒ No

If Yes, please attach proof of property owner notification and acceptance (if available). Elements of and examples of property owner notification can be found in the MT-2 Form 2 Instructions.

FEDERAL EMERGENCY MANAGEMENT AGENCY

RIVERINE HYDROLOGY & HYDRAULICS FORM

O.M.B No. 3067-0148
Expires September 30, 2005

PAPERWORK REDUCTION ACT

Public reporting burden for this form is estimated to average 3 hours per response. The burden estimate includes the time for reviewing instructions, searching existing data sources, gathering and maintaining the needed data, and completing, reviewing, and submitting the form. You are not required to respond to this collection of information unless a valid OMB control number appears in the upper right corner of this form. Send comments regarding the accuracy of the burden estimate and any suggestions for reducing this burden to: Information Collections Management, Federal Emergency Management Agency, 500 C Street, SW, Washington DC 20472, Paperwork Reduction Project (3067-0148). Submission of the form is required to obtain or retain benefits under the National Flood Insurance Program. **Please do not send your completed survey to the above address.**

Flooding Source: Rio Verde Wash K
Note: Fill out one form for each flooding source studied

A. HYDROLOGY

1. Reason for New Hydrologic Analysis (check all that apply)

☐ Not revised (skip to section 2) ☒ No existing analysis ☐ Improved data
☐ Alternative methodology ☐ Proposed Conditions (CLOMR) ☐ Changed physical condition of watershed

2. Comparison of Representative 1%-Annual-Chance Discharges

Location	Drainage Area (Sq. Mi.)	FIS (cfs)	Revised (cfs)

3. Methodology for New Hydrologic Analysis (check all that apply)

☐ Statistical Analysis of Gage Records ☒ Precipitation/Runoff Model HEC-1 and/or FLO-2D [TR-20, HEC-1, HEC-HMS etc.]
☐ Regional Regression Equations ☐ Other (please attach description)

Please enclose all relevant models in digital format, maps, computations (including computation of parameters) and documentation to support the new analysis. The document, "Numerical Models Accepted by FEMA for NFIP Usage" lists the models accepted by FEMA. This document can be found at: http://www.fema.gov/plan/prevent/fhm/en_modl.shtm.

4. Review/Approval of Analysis

If your community requires a regional, state, or federal agency to review the hydrologic analysis, please attach evidence of approval/review.

5. Impacts of Sediment Transport on Hydrology

Was sediment transport considered? ☐ Yes ☒ No If yes, then fill out Section F (Sediment Transport) of Form 3. If No, then attach your explanation for why sediment transport was not considered.

B. HYDRAULICS

1. Reach to be Revised

	Description	Cross Section	Water-Surface Elevations (ft.) Effective	Proposed/Revised
Downstream Limit	6000'N & 2400'E Rio Verde Dr Needlerock	0		1519.57
Upstream Limit	1800'S of 144th St & Dove Valley Rd.	6.381		2448.48

2. Hydraulic Method Used

Hydraulic Analysis FLO-2D [HEC-2 , HEC-RAS, Other (Attach description)]

B. HYDRAULICS (CONTINUED)

3. Pre-Submittal Review of Hydraulic Models

FEMA has developed two review programs, CHECK-2 and CHECK-RAS, to aid in the review of HEC-2 and HEC-RAS hydraulic models, respectively. These review programs verify that the hydraulic estimates and assumptions in the model data are in accordance with NFIP requirements, and that the data are comparable with the assumptions and limitations of HEC-2/HEC-RAS. CHECK-2 and CHECK-RAS identify areas of potential error or concern. These tools do not replace engineering judgment. CHECK-2 and CHECK-RAS can be downloaded from http://www.fema.gov/plan/prevent/fhm/frm_soft.shtm. We recommend that you review your HEC-2 and HEC-RAS models with CHECK-2 and CHECK-RAS. If you disagree with a message, please attach an explanation of why the message is not valid in this case. Review of your submittal and resolution of valid modeling discrepancies will result in reduced review time.

HEC-2/HEC-RAS models reviewed with CHECK-2/CHECK-RAS? ☐ Yes ☐ No

4. Models Submitted

Duplicate Effective Model*	Natural File Name:	Floodway File Name:
Corrected Effective Model*	Natural File Name:	Floodway File Name:
Existing or Pre-Project Conditions Model	Natural File Name:	Floodway File Name:
Revised or Post-Project Conditions Model	Natural File Name:	Floodway File Name:
Other - (attach description)	Natural File Name:	Floodway File Name:

*Not required for revisions to approximate 1%-annual-chance floodplains (Zone A) – for details, refer to the corresponding section of the instructions.

The document "Numerical Models Accepted by FEMA for NFIP Usage" lists the models accepted by FEMA. This document can be found at: http://www.fema.gov/plan/prevent/fhm/en_modl.shtm.

C. MAPPING REQUIREMENTS

A **certified topographic map** must be submitted showing the following information (where applicable): the boundaries of the effective, existing, and proposed conditions 1%-annual-chance floodplain (for approximate Zone A revisions) or the boundaries of the 1%- and 0.2%-annual-chance floodplains and regulatory floodway (for detailed Zone AE, AO, and AH revisions); location and alignment of all cross sections with stationing control indicated; stream, road, and other alignments (e.g., dams, levees, etc.); current community easements and boundaries; boundaries of the requester's property; certification of a registered professional engineer registered in the subject State; location and description of reference marks; and the referenced vertical datum (NGVD, NAVD, etc.).

Note that the boundaries of the existing or proposed conditions floodplains and regulatory floodway to be shown on the revised FIRM and/or FBFM must tie-in with the effective floodplain and regulatory floodway boundaries. Please attach **a copy of the effective FIRM and/or FBFM,** annotated to show the boundaries of the revised 1%- and 0.2%-annual-chance floodplains and regulatory floodway that tie-in with the boundaries of the effective 1%- and 0.2%-annual-chance floodplain and regulatory floodway at the upstream and downstream limits of the area of revision.

D. COMMON REGULATORY REQUIREMENTS

1. For CLOMR requests, do Base Flood Elevations (BFEs) increase? ☐ Yes ☐ No

For CLOMR requests, if either of the following is true, please submit evidence of compliance with Section 65.12 of the NFIP regulations:
- The proposed project encroaches upon a regulatory floodway and would result in increases above 0.00 foot.
- The proposed project encroaches upon a SFHA with BFEs established and would result in increases above 1.00 foot.

2. Does the request involve the placement or proposed placement of fill? ☐ Yes ☒ No

If Yes, the community must be able to certify that the area to be removed from the special flood hazard area, to include any structures or proposed structures, meets all of the standards of the local floodplain ordinances, and is reasonably safe from flooding in accordance with the NFIP regulations set forth at 44 CFR 60.3(a)(3), 65.5(a)(4), and 65.6(a)(14). Please see the MT-2 instructions for more information.

3. For LOMR requests, is the regulatory floodway being revised? ☐ Yes ☒ No

If Yes, attach evidence of regulatory floodway revision notification. As per Paragraph 65.7(b)(1) of the NFIP Regulations, notification is required for requests involving revisions to the regulatory floodway. (Not required for revisions to approximate 1%-annual-chance floodplains [studied Zone A designation] unless a regulatory floodway is being added. Elements and examples of regulatory floodway revision notification can be found in the MT-2 Form 2 Instructions.)

4. For LOMR requests, does this request require property owner notification and acceptance of BFE increases? ☐ Yes ☒ No

If Yes, please attach proof of property owner notification and acceptance (if available). Elements of and examples of property owner notification can be found in the MT-2 Form 2 Instructions.

FEDERAL EMERGENCY MANAGEMENT AGENCY

RIVERINE HYDROLOGY & HYDRAULICS FORM

O.M.B No. 3067-0148
Expires September 30, 2005

PAPERWORK REDUCTION ACT

Public reporting burden for this form is estimated to average 3 hours per response. The burden estimate includes the time for reviewing instructions, searching existing data sources, gathering and maintaining the needed data, and completing, reviewing, and submitting the form. You are not required to respond to this collection of information unless a valid OMB control number appears in the upper right corner of this form. Send comments regarding the accuracy of the burden estimate and any suggestions for reducing this burden to: Information Collections Management, Federal Emergency Management Agency, 500 C Street, SW, Washington DC 20472, Paperwork Reduction Project (3067-0148). Submission of the form is required to obtain or retain benefits under the National Flood Insurance Program. **Please do not send your completed survey to the above address.**

Flooding Source: Rio Verde Wash 10 Trib 1
Note: Fill out one form for each flooding source studied

A. HYDROLOGY

1. Reason for New Hydrologic Analysis (check all that apply)

☐ Not revised (skip to section 2) ☒ No existing analysis ☐ Improved data
☐ Alternative methodology ☐ Proposed Conditions (CLOMR) ☐ Changed physical condition of watershed

2. Comparison of Representative 1%-Annual-Chance Discharges

Location	Drainage Area (Sq. Mi.)	FIS (cfs)	Revised (cfs)

3. Methodology for New Hydrologic Analysis (check all that apply)

☐ Statistical Analysis of Gage Records ☒ Precipitation/Runoff Model HEC-1 and/or FLO-2D [TR-20, HEC-1, HEC-HMS etc.]
☐ Regional Regression Equations ☐ Other (please attach description)

Please enclose all relevant models in digital format, maps, computations (including computation of parameters) and documentation to support the new analysis. The document, "Numerical Models Accepted by FEMA for NFIP Usage" lists the models accepted by FEMA. This document can be found at: http://www.fema.gov/plan/prevent/fhm/en_modl.shtm.

4. Review/Approval of Analysis

If your community requires a regional, state, or federal agency to review the hydrologic analysis, please attach evidence of approval/review.

5. Impacts of Sediment Transport on Hydrology

Was sediment transport considered? ☐ Yes ☒ No If yes, then fill out Section F (Sediment Transport) of Form 3. If No, then attach your explanation for why sediment transport was not considered.

B. HYDRAULICS

1. Reach to be Revised

	Description	Cross Section	Water-Surface Elevations (ft.) Effective	Proposed/Revised
Downstream Limit	1300'S & 1370'E of RioVerde Dr & 144th S	0		2322.18
Upstream Limit	1000'S & 50'W of RioVerde Dr & 144th St.	0.288		2356.24

2. Hydraulic Method Used

Hydraulic Analysis FLO-2D [HEC-2 , HEC-RAS, Other (Attach description)]

B. HYDRAULICS (CONTINUED)

3. Pre-Submittal Review of Hydraulic Models

FEMA has developed two review programs, CHECK-2 and CHECK-RAS, to aid in the review of HEC-2 and HEC-RAS hydraulic models, respectively. These review programs verify that the hydraulic estimates and assumptions in the model data are in accordance with NFIP requirements, and that the data are comparable with the assumptions and limitations of HEC-2/HEC-RAS. CHECK-2 and CHECK-RAS identify areas of potential error or concern. These tools do not replace engineering judgment. CHECK-2 and CHECK-RAS can be downloaded from http://www.fema.gov/plan/prevent/fhm/frm_soft.shtm. We recommend that you review your HEC-2 and HEC-RAS models with CHECK-2 and CHECK-RAS. If you disagree with a message, please attach an explanation of why the message is not valid in this case. Review of your submittal and resolution of valid modeling discrepancies will result in reduced review time.

HEC-2/HEC-RAS models reviewed with CHECK-2/CHECK-RAS? ☐ Yes ☐ No

4. Models Submitted

Duplicate Effective Model*	Natural File Name:	Floodway File Name:
Corrected Effective Model*	Natural File Name:	Floodway File Name:
Existing or Pre-Project Conditions Model	Natural File Name:	Floodway File Name:
Revised or Post-Project Conditions Model	Natural File Name:	Floodway File Name:
Other - (attach description)	Natural File Name:	Floodway File Name:

*Not required for revisions to approximate 1%-annual-chance floodplains (Zone A) – for details, refer to the corresponding section of the instructions.

The document "Numerical Models Accepted by FEMA for NFIP Usage" lists the models accepted by FEMA. This document can be found at: http://www.fema.gov/plan/prevent/fhm/en_modl.shtm.

C. MAPPING REQUIREMENTS

A **certified topographic map** must be submitted showing the following information (where applicable): the boundaries of the effective, existing, and proposed conditions 1%-annual-chance floodplain (for approximate Zone A revisions) or the boundaries of the 1%- and 0.2%-annual-chance floodplains and regulatory floodway (for detailed Zone AE, AO, and AH revisions); location and alignment of all cross sections with stationing control indicated; stream, road, and other alignments (e.g., dams, levees, etc.); current community easements and boundaries; boundaries of the requester's property; certification of a registered professional engineer registered in the subject State; location and description of reference marks; and the referenced vertical datum (NGVD, NAVD, etc.).

Note that the boundaries of the existing or proposed conditions floodplains and regulatory floodway to be shown on the revised FIRM and/or FBFM must tie-in with the effective floodplain and regulatory floodway boundaries. Please attach **a copy of the effective FIRM and/or FBFM,** annotated to show the boundaries of the revised 1%- and 0.2%-annual-chance floodplains and regulatory floodway that tie-in with the boundaries of the effective 1%- and 0.2%-annual-chance floodplain and regulatory floodway at the upstream and downstream limits of the area of revision.

D. COMMON REGULATORY REQUIREMENTS

1. For CLOMR requests, do Base Flood Elevations (BFEs) increase? ☐ Yes ☐ No

For CLOMR requests, if either of the following is true, please submit evidence of compliance with Section 65.12 of the NFIP regulations:
- The proposed project encroaches upon a regulatory floodway and would result in increases above 0.00 foot.
- The proposed project encroaches upon a SFHA with BFEs established and would result in increases above 1.00 foot.

2. Does the request involve the placement or proposed placement of fill? ☐ Yes ☒ No

If Yes, the community must be able to certify that the area to be removed from the special flood hazard area, to include any structures or proposed structures, meets all of the standards of the local floodplain ordinances, and is reasonably safe from flooding in accordance with the NFIP regulations set forth at 44 CFR 60.3(a)(3), 65.5(a)(4), and 65.6(a)(14). Please see the MT-2 instructions for more information.

3. For LOMR requests, is the regulatory floodway being revised? ☐ Yes ☒ No

If Yes, attach evidence of regulatory floodway revision notification. As per Paragraph 65.7(b)(1) of the NFIP Regulations, notification is required for requests involving revisions to the regulatory floodway. (Not required for revisions to approximate 1%-annual-chance floodplains [studied Zone A designation] unless a regulatory floodway is being added. Elements and examples of regulatory floodway revision notification can be found in the MT-2 Form 2 Instructions.)

4. For LOMR requests, does this request require property owner notification and acceptance of BFE increases? ☐ Yes ☒ No

If Yes, please attach proof of property owner notification and acceptance (if available). Elements of and examples of property owner notification can be found in the MT-2 Form 2 Instructions.

FEDERAL EMERGENCY MANAGEMENT AGENCY

RIVERINE HYDROLOGY & HYDRAULICS FORM

O.M.B No. 3067-0148
Expires September 30, 2005

PAPERWORK REDUCTION ACT

Public reporting burden for this form is estimated to average 3 hours per response. The burden estimate includes the time for reviewing instructions, searching existing data sources, gathering and maintaining the needed data, and completing, reviewing, and submitting the form. You are not required to respond to this collection of information unless a valid OMB control number appears in the upper right corner of this form. Send comments regarding the accuracy of the burden estimate and any suggestions for reducing this burden to: Information Collections Management, Federal Emergency Management Agency, 500 C Street, SW, Washington DC 20472, Paperwork Reduction Project (3067-0148). Submission of the form is required to obtain or retain benefits under the National Flood Insurance Program. **Please do not send your completed survey to the above address.**

Flooding Source: Rio Verde Wash 10
Note: Fill out one form for each flooding source studied

A. HYDROLOGY

1. Reason for New Hydrologic Analysis (check all that apply)

☐ Not revised (skip to section 2) ☐ No existing analysis ☒ Improved data
☐ Alternative methodology ☐ Proposed Conditions (CLOMR) ☐ Changed physical condition of watershed

2. Comparison of Representative 1%-Annual-Chance Discharges

Location	Drainage Area (Sq. Mi.)	FIS (cfs)	Revised (cfs)

3. Methodology for New Hydrologic Analysis (check all that apply)

☐ Statistical Analysis of Gage Records ☒ Precipitation/Runoff Model HEC-1 and/or FLO-2D [TR-20, HEC-1, HEC-HMS etc.]
☐ Regional Regression Equations ☐ Other (please attach description)

Please enclose all relevant models in digital format, maps, computations (including computation of parameters) and documentation to support the new analysis. The document, "Numerical Models Accepted by FEMA for NFIP Usage" lists the models accepted by FEMA. This document can be found at: http://www.fema.gov/plan/prevent/fhm/en_modl.shtm.

4. Review/Approval of Analysis

If your community requires a regional, state, or federal agency to review the hydrologic analysis, please attach evidence of approval/review.

5. Impacts of Sediment Transport on Hydrology

Was sediment transport considered? ☐ Yes ☒ No If yes, then fill out Section F (Sediment Transport) of Form 3. If No, then attach your explanation for why sediment transport was not considered.

B. HYDRAULICS

1. Reach to be Revised

	Description	Cross Section	Water-Surface Elevations (ft.) Effective	Proposed/Revised
Downstream Limit	830'S & 3800'E of Jomax Rd& McDowell Mnt	1.305	1665.5 (NGVD 29)	1666.36
Upstream Limit	2350'S & 350'E of RioVerde Dr & 144th St	6.697		2346.45

2. Hydraulic Method Used

Hydraulic Analysis FLO-2D [HEC-2 , HEC-RAS, Other (Attach description)]

B. HYDRAULICS (CONTINUED)

3. Pre-Submittal Review of Hydraulic Models

FEMA has developed two review programs, CHECK-2 and CHECK-RAS, to aid in the review of HEC-2 and HEC-RAS hydraulic models, respectively. These review programs verify that the hydraulic estimates and assumptions in the model data are in accordance with NFIP requirements, and that the data are comparable with the assumptions and limitations of HEC-2/HEC-RAS. CHECK-2 and CHECK-RAS identify areas of potential error or concern. These tools do not replace engineering judgment. CHECK-2 and CHECK-RAS can be downloaded from http://www.fema.gov/plan/prevent/fhm/frm_soft.shtm. We recommend that you review your HEC-2 and HEC-RAS models with CHECK-2 and CHECK-RAS. If you disagree with a message, please attach an explanation of why the message is not valid in this case. Review of your submittal and resolution of valid modeling discrepancies will result in reduced review time.

HEC-2/HEC-RAS models reviewed with CHECK-2/CHECK-RAS? ☐ Yes ☐ No

4. Models Submitted

Duplicate Effective Model*	Natural File Name:	Floodway File Name:
Corrected Effective Model*	Natural File Name:	Floodway File Name:
Existing or Pre-Project Conditions Model	Natural File Name:	Floodway File Name:
Revised or Post-Project Conditions Model	Natural File Name:	Floodway File Name:
Other - (attach description)	Natural File Name:	Floodway File Name:

*Not required for revisions to approximate 1%-annual-chance floodplains (Zone A) – for details, refer to the corresponding section of the instructions.

The document "Numerical Models Accepted by FEMA for NFIP Usage" lists the models accepted by FEMA. This document can be found at: http://www.fema.gov/plan/prevent/fhm/en_modl.shtm.

C. MAPPING REQUIREMENTS

A **certified topographic map** must be submitted showing the following information (where applicable): the boundaries of the effective, existing, and proposed conditions 1%-annual-chance floodplain (for approximate Zone A revisions) or the boundaries of the 1%- and 0.2%-annual-chance floodplains and regulatory floodway (for detailed Zone AE, AO, and AH revisions); location and alignment of all cross sections with stationing control indicated; stream, road, and other alignments (e.g., dams, levees, etc.); current community easements and boundaries; boundaries of the requester's property; certification of a registered professional engineer registered in the subject State; location and description of reference marks; and the referenced vertical datum (NGVD, NAVD, etc.).

Note that the boundaries of the existing or proposed conditions floodplains and regulatory floodway to be shown on the revised FIRM and/or FBFM must tie-in with the effective floodplain and regulatory floodway boundaries. Please attach **a copy of the effective FIRM and/or FBFM,** annotated to show the boundaries of the revised 1%- and 0.2%-annual-chance floodplains and regulatory floodway that tie-in with the boundaries of the effective 1%- and 0.2%-annual-chance floodplain and regulatory floodway at the upstream and downstream limits of the area of revision.

D. COMMON REGULATORY REQUIREMENTS

1. For CLOMR requests, do Base Flood Elevations (BFEs) increase? ☐ Yes ☐ No

For CLOMR requests, if either of the following is true, please submit evidence of compliance with Section 65.12 of the NFIP regulations:
- The proposed project encroaches upon a regulatory floodway and would result in increases above 0.00 foot.
- The proposed project encroaches upon a SFHA with BFEs established and would result in increases above 1.00 foot.

2. Does the request involve the placement or proposed placement of fill? ☐ Yes ☒ No

If Yes, the community must be able to certify that the area to be removed from the special flood hazard area, to include any structures or proposed structures, meets all of the standards of the local floodplain ordinances, and is reasonably safe from flooding in accordance with the NFIP regulations set forth at 44 CFR 60.3(a)(3), 65.5(a)(4), and 65.6(a)(14). Please see the MT-2 instructions for more information.

3. For LOMR requests, is the regulatory floodway being revised? ☒ Yes ☐ No

If Yes, attach evidence of regulatory floodway revision notification. As per Paragraph 65.7(b)(1) of the NFIP Regulations, notification is required for requests involving revisions to the regulatory floodway. (Not required for revisions to approximate 1%-annual-chance floodplains [studied Zone A designation] unless a regulatory floodway is being added. Elements and examples of regulatory floodway revision notification can be found in the MT-2 Form 2 Instructions.)

4. For LOMR requests, does this request require property owner notification and acceptance of BFE increases? ☐ Yes ☒ No

If Yes, please attach proof of property owner notification and acceptance (if available). Elements of and examples of property owner notification can be found in the MT-2 Form 2 Instructions.

FEDERAL EMERGENCY MANAGEMENT AGENCY

RIVERINE HYDROLOGY & HYDRAULICS FORM

O.M.B No. 3067-0148
Expires September 30, 2005

PAPERWORK REDUCTION ACT

Public reporting burden for this form is estimated to average 3 hours per response. The burden estimate includes the time for reviewing instructions, searching existing data sources, gathering and maintaining the needed data, and completing, reviewing, and submitting the form. You are not required to respond to this collection of information unless a valid OMB control number appears in the upper right corner of this form. Send comments regarding the accuracy of the burden estimate and any suggestions for reducing this burden to: Information Collections Management, Federal Emergency Management Agency, 500 C Street, SW, Washington DC 20472, Paperwork Reduction Project (3067-0148). Submission of the form is required to obtain or retain benefits under the National Flood Insurance Program. **Please do not send your completed survey to the above address.**

Flooding Source: Rio Verde Wash A
Note: Fill out one form for each flooding source studied

A. HYDROLOGY

1. Reason for New Hydrologic Analysis (check all that apply)

☐ Not revised (skip to section 2) ☐ No existing analysis ☒ Improved data
☐ Alternative methodology ☐ Proposed Conditions (CLOMR) ☐ Changed physical condition of watershed

2. Comparison of Representative 1%-Annual-Chance Discharges

Location	Drainage Area (Sq. Mi.)	FIS (cfs)	Revised (cfs)

3. Methodology for New Hydrologic Analysis (check all that apply)

☐ Statistical Analysis of Gage Records ☒ Precipitation/Runoff Model HEC-1 and/or FLO-2D [TR-20, HEC-1, HEC-HMS etc.]
☐ Regional Regression Equations ☐ Other (please attach description)

Please enclose all relevant models in digital format, maps, computations (including computation of parameters) and documentation to support the new analysis. The document, "Numerical Models Accepted by FEMA for NFIP Usage" lists the models accepted by FEMA. This document can be found at: http://www.fema.gov/plan/prevent/fhm/en_modl.shtm.

4. Review/Approval of Analysis

If your community requires a regional, state, or federal agency to review the hydrologic analysis, please attach evidence of approval/review.

5. Impacts of Sediment Transport on Hydrology

Was sediment transport considered? ☐ Yes ☒ No If yes, then fill out Section F (Sediment Transport) of Form 3. If No, then attach your explanation for why sediment transport was not considered.

B. HYDRAULICS

1. Reach to be Revised

	Description	Cross Section	Water-Surface Elevations (ft.) Effective	Proposed/Revised
Downstream Limit	800'N & 1900' W RioVerde D Needlerock R	1.117	1628 (NGVD29)	1630.93
Upstream Limit	2200'N & 1300'W of RioVerde Dr 144th St	7.050		2410.00

2. Hydraulic Method Used

Hydraulic Analysis FLO-2D [HEC-2 , HEC-RAS, Other (Attach description)]

B. HYDRAULICS (CONTINUED)

3. Pre-Submittal Review of Hydraulic Models

FEMA has developed two review programs, CHECK-2 and CHECK-RAS, to aid in the review of HEC-2 and HEC-RAS hydraulic models, respectively. These review programs verify that the hydraulic estimates and assumptions in the model data are in accordance with NFIP requirements, and that the data are comparable with the assumptions and limitations of HEC-2/HEC-RAS. CHECK-2 and CHECK-RAS identify areas of potential error or concern. These tools do not replace engineering judgment. CHECK-2 and CHECK-RAS can be downloaded from http://www.fema.gov/plan/prevent/fhm/frm_soft.shtm. We recommend that you review your HEC-2 and HEC-RAS models with CHECK-2 and CHECK-RAS. If you disagree with a message, please attach an explanation of why the message is not valid in this case. Review of your submittal and resolution of valid modeling discrepancies will result in reduced review time.

HEC-2/HEC-RAS models reviewed with CHECK-2/CHECK-RAS? ☐ Yes ☐ No

4. Models Submitted

Duplicate Effective Model*	Natural File Name:	Floodway File Name:
Corrected Effective Model*	Natural File Name:	Floodway File Name:
Existing or Pre-Project Conditions Model	Natural File Name:	Floodway File Name:
Revised or Post-Project Conditions Model	Natural File Name:	Floodway File Name:
Other - (attach description)	Natural File Name:	Floodway File Name:

*Not required for revisions to approximate 1%-annual-chance floodplains (Zone A) – for details, refer to the corresponding section of the instructions.

The document "Numerical Models Accepted by FEMA for NFIP Usage" lists the models accepted by FEMA. This document can be found at: http://www.fema.gov/plan/prevent/fhm/en_modl.shtm.

C. MAPPING REQUIREMENTS

A **certified topographic map** must be submitted showing the following information (where applicable): the boundaries of the effective, existing, and proposed conditions 1%-annual-chance floodplain (for approximate Zone A revisions) or the boundaries of the 1%- and 0.2%-annual-chance floodplains and regulatory floodway (for detailed Zone AE, AO, and AH revisions); location and alignment of all cross sections with stationing control indicated; stream, road, and other alignments (e.g., dams, levees, etc.); current community easements and boundaries; boundaries of the requester's property; certification of a registered professional engineer registered in the subject State; location and description of reference marks; and the referenced vertical datum (NGVD, NAVD, etc.).

Note that the boundaries of the existing or proposed conditions floodplains and regulatory floodway to be shown on the revised FIRM and/or FBFM must tie-in with the effective floodplain and regulatory floodway boundaries. Please attach **a copy of the effective FIRM and/or FBFM,** annotated to show the boundaries of the revised 1%- and 0.2%-annual-chance floodplains and regulatory floodway that tie-in with the boundaries of the effective 1%- and 0.2%-annual-chance floodplain and regulatory floodway at the upstream and downstream limits of the area of revision.

D. COMMON REGULATORY REQUIREMENTS

1. For CLOMR requests, do Base Flood Elevations (BFEs) increase? ☐ Yes ☐ No

For CLOMR requests, if either of the following is true, please submit evidence of compliance with Section 65.12 of the NFIP regulations:
- The proposed project encroaches upon a regulatory floodway and would result in increases above 0.00 foot.
- The proposed project encroaches upon a SFHA with BFEs established and would result in increases above 1.00 foot.

2. Does the request involve the placement or proposed placement of fill? ☐ Yes ☒ No

If Yes, the community must be able to certify that the area to be removed from the special flood hazard area, to include any structures or proposed structures, meets all of the standards of the local floodplain ordinances, and is reasonably safe from flooding in accordance with the NFIP regulations set forth at 44 CFR 60.3(a)(3), 65.5(a)(4), and 65.6(a)(14). Please see the MT-2 instructions for more information.

3. For LOMR requests, is the regulatory floodway being revised? ☒ Yes ☐ No

If Yes, attach evidence of regulatory floodway revision notification. As per Paragraph 65.7(b)(1) of the NFIP Regulations, notification is required for requests involving revisions to the regulatory floodway. (Not required for revisions to approximate 1%-annual-chance floodplains [studied Zone A designation] unless a regulatory floodway is being added. Elements and examples of regulatory floodway revision notification can be found in the MT-2 Form 2 Instructions.)

4. For LOMR requests, does this request require property owner notification and acceptance of BFE increases? ☐ Yes ☒ No

If Yes, please attach proof of property owner notification and acceptance (if available). Elements of and examples of property owner notification can be found in the MT-2 Form 2 Instructions.

FEDERAL EMERGENCY MANAGEMENT AGENCY

RIVERINE HYDROLOGY & HYDRAULICS FORM

O.M.B No. 3067-0148
Expires September 30, 2005

PAPERWORK REDUCTION ACT

Public reporting burden for this form is estimated to average 3 hours per response. The burden estimate includes the time for reviewing instructions, searching existing data sources, gathering and maintaining the needed data, and completing, reviewing, and submitting the form. You are not required to respond to this collection of information unless a valid OMB control number appears in the upper right corner of this form. Send comments regarding the accuracy of the burden estimate and any suggestions for reducing this burden to: Information Collections Management, Federal Emergency Management Agency, 500 C Street, SW, Washington DC 20472, Paperwork Reduction Project (3067-0148). Submission of the form is required to obtain or retain benefits under the National Flood Insurance Program. **Please do not send your completed survey to the above address.**

Flooding Source: Rio Verde Wash 10 Split 4
Note: Fill out one form for each flooding source studied

A. HYDROLOGY

1. Reason for New Hydrologic Analysis (check all that apply)

☐ Not revised (skip to section 2) ☐ No existing analysis ☒ Improved data
☐ Alternative methodology ☐ Proposed Conditions (CLOMR) ☐ Changed physical condition of watershed

2. Comparison of Representative 1%-Annual-Chance Discharges

Location	Drainage Area (Sq. Mi.)	FIS (cfs)	Revised (cfs)

3. Methodology for New Hydrologic Analysis (check all that apply)

☐ Statistical Analysis of Gage Records ☒ Precipitation/Runoff Model HEC-1 and/or FLO-2D [TR-20, HEC-1, HEC-HMS etc.]
☐ Regional Regression Equations ☐ Other (please attach description)

Please enclose all relevant models in digital format, maps, computations (including computation of parameters) and documentation to support the new analysis. The document, "Numerical Models Accepted by FEMA for NFIP Usage" lists the models accepted by FEMA. This document can be found at: http://www.fema.gov/plan/prevent/fhm/en_modl.shtm.

4. Review/Approval of Analysis

If your community requires a regional, state, or federal agency to review the hydrologic analysis, please attach evidence of approval/review.

5. Impacts of Sediment Transport on Hydrology

Was sediment transport considered? ☐ Yes ☒ No If yes, then fill out Section F (Sediment Transport) of Form 3. If No, then attach your explanation for why sediment transport was not considered.

B. HYDRAULICS

1. Reach to be Revised

	Description	Cross Section	Water-Surface Elevations (ft.) Effective	Proposed/Revised
Downstream Limit	4100'S & 1400'W of RioVerde Dr 174th St.	0	1862.5 (NGVD 29)	1864.40
Upstream Limit	1480'S & 630'E PinnacleVista Dr & 162nd	1.157	2035 * See Sec. 5.9	2034.61

2. Hydraulic Method Used

Hydraulic Analysis FLO-2D [HEC-2 , HEC-RAS, Other (Attach description)]

B. HYDRAULICS (CONTINUED)

3. Pre-Submittal Review of Hydraulic Models

FEMA has developed two review programs, CHECK-2 and CHECK-RAS, to aid in the review of HEC-2 and HEC-RAS hydraulic models, respectively. These review programs verify that the hydraulic estimates and assumptions in the model data are in accordance with NFIP requirements, and that the data are comparable with the assumptions and limitations of HEC-2/HEC-RAS. CHECK-2 and CHECK-RAS identify areas of potential error or concern. These tools do not replace engineering judgment. CHECK-2 and CHECK-RAS can be downloaded from http://www.fema.gov/plan/prevent/fhm/frm_soft.shtm. We recommend that you review your HEC-2 and HEC-RAS models with CHECK-2 and CHECK-RAS. If you disagree with a message, please attach an explanation of why the message is not valid in this case. Review of your submittal and resolution of valid modeling discrepancies will result in reduced review time.

HEC-2/HEC-RAS models reviewed with CHECK-2/CHECK-RAS? ☐ Yes ☐ No

4. Models Submitted

Duplicate Effective Model*	Natural File Name:	Floodway File Name:
Corrected Effective Model*	Natural File Name:	Floodway File Name:
Existing or Pre-Project Conditions Model	Natural File Name:	Floodway File Name:
Revised or Post-Project Conditions Model	Natural File Name:	Floodway File Name:
Other - (attach description)	Natural File Name:	Floodway File Name:

*Not required for revisions to approximate 1%-annual-chance floodplains (Zone A) – for details, refer to the corresponding section of the instructions.

The document "Numerical Models Accepted by FEMA for NFIP Usage" lists the models accepted by FEMA. This document can be found at: http://www.fema.gov/plan/prevent/fhm/en_modl.shtm.

C. MAPPING REQUIREMENTS

A **certified topographic map** must be submitted showing the following information (where applicable): the boundaries of the effective, existing, and proposed conditions 1%-annual-chance floodplain (for approximate Zone A revisions) or the boundaries of the 1%- and 0.2%-annual-chance floodplains and regulatory floodway (for detailed Zone AE, AO, and AH revisions); location and alignment of all cross sections with stationing control indicated; stream, road, and other alignments (e.g., dams, levees, etc.); current community easements and boundaries; boundaries of the requester's property; certification of a registered professional engineer registered in the subject State; location and description of reference marks; and the referenced vertical datum (NGVD, NAVD, etc.).

Note that the boundaries of the existing or proposed conditions floodplains and regulatory floodway to be shown on the revised FIRM and/or FBFM must tie-in with the effective floodplain and regulatory floodway boundaries. Please attach **a copy of the effective FIRM and/or FBFM,** annotated to show the boundaries of the revised 1%- and 0.2%-annual-chance floodplains and regulatory floodway that tie-in with the boundaries of the effective 1%- and 0.2%-annual-chance floodplain and regulatory floodway at the upstream and downstream limits of the area of revision.

D. COMMON REGULATORY REQUIREMENTS

1. For CLOMR requests, do Base Flood Elevations (BFEs) increase? ☐ Yes ☐ No

For CLOMR requests, if either of the following is true, please submit evidence of compliance with Section 65.12 of the NFIP regulations:
- The proposed project encroaches upon a regulatory floodway and would result in increases above 0.00 foot.
- The proposed project encroaches upon a SFHA with BFEs established and would result in increases above 1.00 foot.

2. Does the request involve the placement or proposed placement of fill? ☐ Yes ☒ No

If Yes, the community must be able to certify that the area to be removed from the special flood hazard area, to include any structures or proposed structures, meets all of the standards of the local floodplain ordinances, and is reasonably safe from flooding in accordance with the NFIP regulations set forth at 44 CFR 60.3(a)(3), 65.5(a)(4), and 65.6(a)(14). Please see the MT-2 instructions for more information.

3. For LOMR requests, is the regulatory floodway being revised? ☒ Yes ☐ No

If Yes, attach evidence of regulatory floodway revision notification. As per Paragraph 65.7(b)(1) of the NFIP Regulations, notification is required for requests involving revisions to the regulatory floodway. (Not required for revisions to approximate 1%-annual-chance floodplains [studied Zone A designation] unless a regulatory floodway is being added. Elements and examples of regulatory floodway revision notification can be found in the MT-2 Form 2 Instructions.)

4. For LOMR requests, does this request require property owner notification and acceptance of BFE increases? ☐ Yes ☒ No

If Yes, please attach proof of property owner notification and acceptance (if available). Elements of and examples of property owner notification can be found in the MT-2 Form 2 Instructions.

FEDERAL EMERGENCY MANAGEMENT AGENCY

RIVERINE HYDROLOGY & HYDRAULICS FORM

O.M.B No. 3067-0148
Expires September 30, 2005

PAPERWORK REDUCTION ACT

Public reporting burden for this form is estimated to average 3 hours per response. The burden estimate includes the time for reviewing instructions, searching existing data sources, gathering and maintaining the needed data, and completing, reviewing, and submitting the form. You are not required to respond to this collection of information unless a valid OMB control number appears in the upper right corner of this form. Send comments regarding the accuracy of the burden estimate and any suggestions for reducing this burden to: Information Collections Management, Federal Emergency Management Agency, 500 C Street, SW, Washington DC 20472, Paperwork Reduction Project (3067-0148). Submission of the form is required to obtain or retain benefits under the National Flood Insurance Program. **Please do not send your completed survey to the above address.**

Flooding Source: Rio Verde Wash 10 Split 7
Note: Fill out one form for each flooding source studied

A. HYDROLOGY

1. Reason for New Hydrologic Analysis (check all that apply)

☐ Not revised (skip to section 2) ☒ No existing analysis ☐ Improved data
☐ Alternative methodology ☐ Proposed Conditions (CLOMR) ☐ Changed physical condition of watershed

2. Comparison of Representative 1%-Annual-Chance Discharges

Location	Drainage Area (Sq. Mi.)	FIS (cfs)	Revised (cfs)

3. Methodology for New Hydrologic Analysis (check all that apply)

☐ Statistical Analysis of Gage Records ☒ Precipitation/Runoff Model HEC-1 and/or FLO-2D [TR-20, HEC-1, HEC-HMS etc.]
☐ Regional Regression Equations ☐ Other (please attach description)

Please enclose all relevant models in digital format, maps, computations (including computation of parameters) and documentation to support the new analysis. The document, "Numerical Models Accepted by FEMA for NFIP Usage" lists the models accepted by FEMA. This document can be found at: http://www.fema.gov/plan/prevent/fhm/en_modl.shtm.

4. Review/Approval of Analysis

If your community requires a regional, state, or federal agency to review the hydrologic analysis, please attach evidence of approval/review.

5. Impacts of Sediment Transport on Hydrology

Was sediment transport considered? ☐ Yes ☒ No If yes, then fill out Section F (Sediment Transport) of Form 3. If No, then attach your explanation for why sediment transport was not considered.

B. HYDRAULICS

1. Reach to be Revised

	Description	Cross Section	Water-Surface Elevations (ft.) Effective	Proposed/Revised
Downstream Limit	6000'S & 2700'E of RioVerde Dr& 168th St	0		1852.70
Upstream Limit	1410'S & 380'W of RioVerde Dr & 148th St	3.383		2302.90

2. Hydraulic Method Used

Hydraulic Analysis FLO-2D [HEC-2 , HEC-RAS, Other (Attach description)]

B. HYDRAULICS (CONTINUED)

3. Pre-Submittal Review of Hydraulic Models

FEMA has developed two review programs, CHECK-2 and CHECK-RAS, to aid in the review of HEC-2 and HEC-RAS hydraulic models, respectively. These review programs verify that the hydraulic estimates and assumptions in the model data are in accordance with NFIP requirements, and that the data are comparable with the assumptions and limitations of HEC-2/HEC-RAS. CHECK-2 and CHECK-RAS identify areas of potential error or concern. These tools do not replace engineering judgment. CHECK-2 and CHECK-RAS can be downloaded from http://www.fema.gov/plan/prevent/fhm/frm_soft.shtm. We recommend that you review your HEC-2 and HEC-RAS models with CHECK-2 and CHECK-RAS. If you disagree with a message, please attach an explanation of why the message is not valid in this case. Review of your submittal and resolution of valid modeling discrepancies will result in reduced review time.

HEC-2/HEC-RAS models reviewed with CHECK-2/CHECK-RAS? ☐ Yes ☐ No

4. Models Submitted

Duplicate Effective Model*	Natural File Name:	Floodway File Name:
Corrected Effective Model*	Natural File Name:	Floodway File Name:
Existing or Pre-Project Conditions Model	Natural File Name:	Floodway File Name:
Revised or Post-Project Conditions Model	Natural File Name:	Floodway File Name:
Other - (attach description)	Natural File Name:	Floodway File Name:

*Not required for revisions to approximate 1%-annual-chance floodplains (Zone A) – for details, refer to the corresponding section of the instructions.

The document "Numerical Models Accepted by FEMA for NFIP Usage" lists the models accepted by FEMA. This document can be found at: http://www.fema.gov/plan/prevent/fhm/en_modl.shtm.

C. MAPPING REQUIREMENTS

A **certified topographic map** must be submitted showing the following information (where applicable): the boundaries of the effective, existing, and proposed conditions 1%-annual-chance floodplain (for approximate Zone A revisions) or the boundaries of the 1%- and 0.2%-annual-chance floodplains and regulatory floodway (for detailed Zone AE, AO, and AH revisions); location and alignment of all cross sections with stationing control indicated; stream, road, and other alignments (e.g., dams, levees, etc.); current community easements and boundaries; boundaries of the requester's property; certification of a registered professional engineer registered in the subject State; location and description of reference marks; and the referenced vertical datum (NGVD, NAVD, etc.).

Note that the boundaries of the existing or proposed conditions floodplains and regulatory floodway to be shown on the revised FIRM and/or FBFM must tie-in with the effective floodplain and regulatory floodway boundaries. Please attach **a copy of the effective FIRM and/or FBFM,** annotated to show the boundaries of the revised 1%- and 0.2%-annual-chance floodplains and regulatory floodway that tie-in with the boundaries of the effective 1%- and 0.2%-annual-chance floodplain and regulatory floodway at the upstream and downstream limits of the area of revision.

D. COMMON REGULATORY REQUIREMENTS

1. For CLOMR requests, do Base Flood Elevations (BFEs) increase? ☐ Yes ☐ No

For CLOMR requests, if either of the following is true, please submit evidence of compliance with Section 65.12 of the NFIP regulations:
- The proposed project encroaches upon a regulatory floodway and would result in increases above 0.00 foot.
- The proposed project encroaches upon a SFHA with BFEs established and would result in increases above 1.00 foot.

2. Does the request involve the placement or proposed placement of fill? ☐ Yes ☒ No

If Yes, the community must be able to certify that the area to be removed from the special flood hazard area, to include any structures or proposed structures, meets all of the standards of the local floodplain ordinances, and is reasonably safe from flooding in accordance with the NFIP regulations set forth at 44 CFR 60.3(a)(3), 65.5(a)(4), and 65.6(a)(14). Please see the MT-2 instructions for more information.

3. For LOMR requests, is the regulatory floodway being revised? ☐ Yes ☒ No

If Yes, attach evidence of regulatory floodway revision notification. As per Paragraph 65.7(b)(1) of the NFIP Regulations, notification is required for requests involving revisions to the regulatory floodway. (Not required for revisions to approximate 1%-annual-chance floodplains [studied Zone A designation] unless a regulatory floodway is being added. Elements and examples of regulatory floodway revision notification can be found in the MT-2 Form 2 Instructions.)

4. For LOMR requests, does this request require property owner notification and acceptance of BFE increases? ☐ Yes ☒ No

If Yes, please attach proof of property owner notification and acceptance (if available). Elements of and examples of property owner notification can be found in the MT-2 Form 2 Instructions.

FEDERAL EMERGENCY MANAGEMENT AGENCY

RIVERINE HYDROLOGY & HYDRAULICS FORM

O.M.B No. 3067-0148
Expires September 30, 2005

PAPERWORK REDUCTION ACT

Public reporting burden for this form is estimated to average 3 hours per response. The burden estimate includes the time for reviewing instructions, searching existing data sources, gathering and maintaining the needed data, and completing, reviewing, and submitting the form. You are not required to respond to this collection of information unless a valid OMB control number appears in the upper right corner of this form. Send comments regarding the accuracy of the burden estimate and any suggestions for reducing this burden to: Information Collections Management, Federal Emergency Management Agency, 500 C Street, SW, Washington DC 20472, Paperwork Reduction Project (3067-0148). Submission of the form is required to obtain or retain benefits under the National Flood Insurance Program. **Please do not send your completed survey to the above address.**

Flooding Source: Rio Verde Wash 11
Note: Fill out one form for each flooding source studied

A. HYDROLOGY

1. Reason for New Hydrologic Analysis (check all that apply)

☐ Not revised (skip to section 2) ☐ No existing analysis ☒ Improved data
☐ Alternative methodology ☐ Proposed Conditions (CLOMR) ☐ Changed physical condition of watershed

2. Comparison of Representative 1%-Annual-Chance Discharges

Location	Drainage Area (Sq. Mi.)	FIS (cfs)	Revised (cfs)

3. Methodology for New Hydrologic Analysis (check all that apply)

☐ Statistical Analysis of Gage Records ☒ Precipitation/Runoff Model HEC-1 and/or FLO-2D [TR-20, HEC-1, HEC-HMS etc.]
☐ Regional Regression Equations ☐ Other (please attach description)

Please enclose all relevant models in digital format, maps, computations (including computation of parameters) and documentation to support the new analysis. The document, "Numerical Models Accepted by FEMA for NFIP Usage" lists the models accepted by FEMA. This document can be found at: http://www.fema.gov/plan/prevent/fhm/en_modl.shtm.

4. Review/Approval of Analysis

If your community requires a regional, state, or federal agency to review the hydrologic analysis, please attach evidence of approval/review.

5. Impacts of Sediment Transport on Hydrology

Was sediment transport considered? ☐ Yes ☒ No If yes, then fill out Section F (Sediment Transport) of Form 3. If No, then attach your explanation for why sediment transport was not considered.

B. HYDRAULICS

1. Reach to be Revised

	Description	Cross Section	Water-Surface Elevations (ft.) Effective	Proposed/Revised
Downstream Limit	3050'S & 4200'E of RioVerde Dr & 176th S	2.109	1688 (NGVD29)	1690.89
Upstream Limit	2000'S of Rio Verde Dr &154th Pl.	6.065		2203.13

2. Hydraulic Method Used

Hydraulic Analysis FLO-2D [HEC-2 , HEC-RAS, Other (Attach description)]

B. HYDRAULICS (CONTINUED)

3. Pre-Submittal Review of Hydraulic Models

FEMA has developed two review programs, CHECK-2 and CHECK-RAS, to aid in the review of HEC-2 and HEC-RAS hydraulic models, respectively. These review programs verify that the hydraulic estimates and assumptions in the model data are in accordance with NFIP requirements, and that the data are comparable with the assumptions and limitations of HEC-2/HEC-RAS. CHECK-2 and CHECK-RAS identify areas of potential error or concern. These tools do not replace engineering judgment. CHECK-2 and CHECK-RAS can be downloaded from http://www.fema.gov/plan/prevent/fhm/frm_soft.shtm. We recommend that you review your HEC-2 and HEC-RAS models with CHECK-2 and CHECK-RAS. If you disagree with a message, please attach an explanation of why the message is not valid in this case. Review of your submittal and resolution of valid modeling discrepancies will result in reduced review time.

HEC-2/HEC-RAS models reviewed with CHECK-2/CHECK-RAS? ☐ Yes ☐ No

4. Models Submitted

Duplicate Effective Model*	Natural File Name:	Floodway File Name:
Corrected Effective Model*	Natural File Name:	Floodway File Name:
Existing or Pre-Project Conditions Model	Natural File Name:	Floodway File Name:
Revised or Post-Project Conditions Model	Natural File Name:	Floodway File Name:
Other - (attach description)	Natural File Name:	Floodway File Name:

*Not required for revisions to approximate 1%-annual-chance floodplains (Zone A) – for details, refer to the corresponding section of the instructions.

The document "Numerical Models Accepted by FEMA for NFIP Usage" lists the models accepted by FEMA. This document can be found at: http://www.fema.gov/plan/prevent/fhm/en_modl.shtm.

C. MAPPING REQUIREMENTS

A **certified topographic map** must be submitted showing the following information (where applicable): the boundaries of the effective, existing, and proposed conditions 1%-annual-chance floodplain (for approximate Zone A revisions) or the boundaries of the 1%- and 0.2%-annual-chance floodplains and regulatory floodway (for detailed Zone AE, AO, and AH revisions); location and alignment of all cross sections with stationing control indicated; stream, road, and other alignments (e.g., dams, levees, etc.); current community easements and boundaries; boundaries of the requester's property; certification of a registered professional engineer registered in the subject State; location and description of reference marks; and the referenced vertical datum (NGVD, NAVD, etc.).

Note that the boundaries of the existing or proposed conditions floodplains and regulatory floodway to be shown on the revised FIRM and/or FBFM must tie-in with the effective floodplain and regulatory floodway boundaries. Please attach **a copy of the effective FIRM and/or FBFM,** annotated to show the boundaries of the revised 1%- and 0.2%-annual-chance floodplains and regulatory floodway that tie-in with the boundaries of the effective 1%- and 0.2%-annual-chance floodplain and regulatory floodway at the upstream and downstream limits of the area of revision.

D. COMMON REGULATORY REQUIREMENTS

1. For CLOMR requests, do Base Flood Elevations (BFEs) increase? ☐ Yes ☐ No

For CLOMR requests, if either of the following is true, please submit evidence of compliance with Section 65.12 of the NFIP regulations:
- The proposed project encroaches upon a regulatory floodway and would result in increases above 0.00 foot.
- The proposed project encroaches upon a SFHA with BFEs established and would result in increases above 1.00 foot.

2. Does the request involve the placement or proposed placement of fill? ☐ Yes ☒ No

If Yes, the community must be able to certify that the area to be removed from the special flood hazard area, to include any structures or proposed structures, meets all of the standards of the local floodplain ordinances, and is reasonably safe from flooding in accordance with the NFIP regulations set forth at 44 CFR 60.3(a)(3), 65.5(a)(4), and 65.6(a)(14). Please see the MT-2 instructions for more information.

3. For LOMR requests, is the regulatory floodway being revised? ☒ Yes ☐ No

If Yes, attach evidence of regulatory floodway revision notification. As per Paragraph 65.7(b)(1) of the NFIP Regulations, notification is required for requests involving revisions to the regulatory floodway. (Not required for revisions to approximate 1%-annual-chance floodplains [studied Zone A designation] unless a regulatory floodway is being added. Elements and examples of regulatory floodway revision notification can be found in the MT-2 Form 2 Instructions.)

4. For LOMR requests, does this request require property owner notification and acceptance of BFE increases? ☐ Yes ☒ No

If Yes, please attach proof of property owner notification and acceptance (if available). Elements of and examples of property owner notification can be found in the MT-2 Form 2 Instructions.

FEDERAL EMERGENCY MANAGEMENT AGENCY

RIVERINE HYDROLOGY & HYDRAULICS FORM

O.M.B No. 3067-0148
Expires September 30, 2005

PAPERWORK REDUCTION ACT

Public reporting burden for this form is estimated to average 3 hours per response. The burden estimate includes the time for reviewing instructions, searching existing data sources, gathering and maintaining the needed data, and completing, reviewing, and submitting the form. You are not required to respond to this collection of information unless a valid OMB control number appears in the upper right corner of this form. Send comments regarding the accuracy of the burden estimate and any suggestions for reducing this burden to: Information Collections Management, Federal Emergency Management Agency, 500 C Street, SW, Washington DC 20472, Paperwork Reduction Project (3067-0148). Submission of the form is required to obtain or retain benefits under the National Flood Insurance Program. **Please do not send your completed survey to the above address.**

Flooding Source: Rio Verde Wash 11 Split 1
Note: Fill out one form for each flooding source studied

A. HYDROLOGY

1. Reason for New Hydrologic Analysis (check all that apply)

☐ Not revised (skip to section 2) ☐ No existing analysis ☒ Improved data
☐ Alternative methodology ☐ Proposed Conditions (CLOMR) ☐ Changed physical condition of watershed

2. Comparison of Representative 1%-Annual-Chance Discharges

Location	Drainage Area (Sq. Mi.)	FIS (cfs)	Revised (cfs)

3. Methodology for New Hydrologic Analysis (check all that apply)

☐ Statistical Analysis of Gage Records ☒ Precipitation/Runoff Model HEC-1 and/or FLO-2D [TR-20, HEC-1, HEC-HMS etc.]
☐ Regional Regression Equations ☐ Other (please attach description)

Please enclose all relevant models in digital format, maps, computations (including computation of parameters) and documentation to support the new analysis. The document, "Numerical Models Accepted by FEMA for NFIP Usage" lists the models accepted by FEMA. This document can be found at: http://www.fema.gov/plan/prevent/fhm/en_modl.shtm.

4. Review/Approval of Analysis

If your community requires a regional, state, or federal agency to review the hydrologic analysis, please attach evidence of approval/review.

5. Impacts of Sediment Transport on Hydrology

Was sediment transport considered? ☐ Yes ☒ No If yes, then fill out Section F (Sediment Transport) of Form 3. If No, then attach your explanation for why sediment transport was not considered.

B. HYDRAULICS

1. Reach to be Revised

	Description	Cross Section	Water-Surface Elevations (ft.) Effective	Proposed/Revised
Downstream Limit	3800'S & 4000'E of RioVerde Dr & 176th	0		1685.73
Upstream Limit	3700'S & 1350'E of RioVerde Dr & 174th	0.876	1793 (NGVD29)	1795.24

2. Hydraulic Method Used

Hydraulic Analysis FLO-2D [HEC-2 , HEC-RAS, Other (Attach description)]

B. HYDRAULICS (CONTINUED)

3. Pre-Submittal Review of Hydraulic Models

FEMA has developed two review programs, CHECK-2 and CHECK-RAS, to aid in the review of HEC-2 and HEC-RAS hydraulic models, respectively. These review programs verify that the hydraulic estimates and assumptions in the model data are in accordance with NFIP requirements, and that the data are comparable with the assumptions and limitations of HEC-2/HEC-RAS. CHECK-2 and CHECK-RAS identify areas of potential error or concern. These tools do not replace engineering judgment. CHECK-2 and CHECK-RAS can be downloaded from http://www.fema.gov/plan/prevent/fhm/frm_soft.shtm. We recommend that you review your HEC-2 and HEC-RAS models with CHECK-2 and CHECK-RAS. If you disagree with a message, please attach an explanation of why the message is not valid in this case. Review of your submittal and resolution of valid modeling discrepancies will result in reduced review time.

HEC-2/HEC-RAS models reviewed with CHECK-2/CHECK-RAS? ☐ Yes ☐ No

4. Models Submitted

Duplicate Effective Model*	Natural File Name:	Floodway File Name:
Corrected Effective Model*	Natural File Name:	Floodway File Name:
Existing or Pre-Project Conditions Model	Natural File Name:	Floodway File Name:
Revised or Post-Project Conditions Model	Natural File Name:	Floodway File Name:
Other - (attach description)	Natural File Name:	Floodway File Name:

*Not required for revisions to approximate 1%-annual-chance floodplains (Zone A) – for details, refer to the corresponding section of the instructions.

The document "Numerical Models Accepted by FEMA for NFIP Usage" lists the models accepted by FEMA. This document can be found at: http://www.fema.gov/plan/prevent/fhm/en_modl.shtm.

C. MAPPING REQUIREMENTS

A **certified topographic map** must be submitted showing the following information (where applicable): the boundaries of the effective, existing, and proposed conditions 1%-annual-chance floodplain (for approximate Zone A revisions) or the boundaries of the 1%- and 0.2%-annual-chance floodplains and regulatory floodway (for detailed Zone AE, AO, and AH revisions); location and alignment of all cross sections with stationing control indicated; stream, road, and other alignments (e.g., dams, levees, etc.); current community easements and boundaries; boundaries of the requester's property; certification of a registered professional engineer registered in the subject State; location and description of reference marks; and the referenced vertical datum (NGVD, NAVD, etc.).

Note that the boundaries of the existing or proposed conditions floodplains and regulatory floodway to be shown on the revised FIRM and/or FBFM must tie-in with the effective floodplain and regulatory floodway boundaries. Please attach **a copy of the effective FIRM and/or FBFM,** annotated to show the boundaries of the revised 1%- and 0.2%-annual-chance floodplains and regulatory floodway that tie-in with the boundaries of the effective 1%- and 0.2%-annual-chance floodplain and regulatory floodway at the upstream and downstream limits of the area of revision.

D. COMMON REGULATORY REQUIREMENTS

1. For CLOMR requests, do Base Flood Elevations (BFEs) increase? ☐ Yes ☐ No

For CLOMR requests, if either of the following is true, please submit evidence of compliance with Section 65.12 of the NFIP regulations:
- The proposed project encroaches upon a regulatory floodway and would result in increases above 0.00 foot.
- The proposed project encroaches upon a SFHA with BFEs established and would result in increases above 1.00 foot.

2. Does the request involve the placement or proposed placement of fill? ☐ Yes ☒ No

If Yes, the community must be able to certify that the area to be removed from the special flood hazard area, to include any structures or proposed structures, meets all of the standards of the local floodplain ordinances, and is reasonably safe from flooding in accordance with the NFIP regulations set forth at 44 CFR 60.3(a)(3), 65.5(a)(4), and 65.6(a)(14). Please see the MT-2 instructions for more information.

3. For LOMR requests, is the regulatory floodway being revised? ☒ Yes ☐ No

If Yes, attach evidence of regulatory floodway revision notification. As per Paragraph 65.7(b)(1) of the NFIP Regulations, notification is required for requests involving revisions to the regulatory floodway. (Not required for revisions to approximate 1%-annual-chance floodplains [studied Zone A designation] unless a regulatory floodway is being added. Elements and examples of regulatory floodway revision notification can be found in the MT-2 Form 2 Instructions.)

4. For LOMR requests, does this request require property owner notification and acceptance of BFE increases? ☐ Yes ☒ No

If Yes, please attach proof of property owner notification and acceptance (if available). Elements of and examples of property owner notification can be found in the MT-2 Form 2 Instructions.

FEDERAL EMERGENCY MANAGEMENT AGENCY

RIVERINE HYDROLOGY & HYDRAULICS FORM

O.M.B No. 3067-0148
Expires September 30, 2005

PAPERWORK REDUCTION ACT

Public reporting burden for this form is estimated to average 3 hours per response. The burden estimate includes the time for reviewing instructions, searching existing data sources, gathering and maintaining the needed data, and completing, reviewing, and submitting the form. You are not required to respond to this collection of information unless a valid OMB control number appears in the upper right corner of this form. Send comments regarding the accuracy of the burden estimate and any suggestions for reducing this burden to: Information Collections Management, Federal Emergency Management Agency, 500 C Street, SW, Washington DC 20472, Paperwork Reduction Project (3067-0148). Submission of the form is required to obtain or retain benefits under the National Flood Insurance Program. **Please do not send your completed survey to the above address.**

Flooding Source: Rio Verde Wash 11 Split 2
Note: Fill out one form for each flooding source studied

A. HYDROLOGY

1. Reason for New Hydrologic Analysis (check all that apply)

☐ Not revised (skip to section 2) ☐ No existing analysis ☒ Improved data
☐ Alternative methodology ☐ Proposed Conditions (CLOMR) ☐ Changed physical condition of watershed

2. Comparison of Representative 1%-Annual-Chance Discharges

Location	Drainage Area (Sq. Mi.)	FIS (cfs)	Revised (cfs)

3. Methodology for New Hydrologic Analysis (check all that apply)

☐ Statistical Analysis of Gage Records ☒ Precipitation/Runoff Model HEC-1 and/or FLO-2D [TR-20, HEC-1, HEC-HMS etc.]
☐ Regional Regression Equations ☐ Other (please attach description)

Please enclose all relevant models in digital format, maps, computations (including computation of parameters) and documentation to support the new analysis. The document, "Numerical Models Accepted by FEMA for NFIP Usage" lists the models accepted by FEMA. This document can be found at: http://www.fema.gov/plan/prevent/fhm/en_modl.shtm.

4. Review/Approval of Analysis

If your community requires a regional, state, or federal agency to review the hydrologic analysis, please attach evidence of approval/review.

5. Impacts of Sediment Transport on Hydrology

Was sediment transport considered? ☐ Yes ☒ No If yes, then fill out Section F (Sediment Transport) of Form 3. If No, then attach your explanation for why sediment transport was not considered.

B. HYDRAULICS

1. Reach to be Revised

	Description	Cross Section	Water-Surface Elevations (ft.) Effective	Proposed/Revised
Downstream Limit	2200'S & 4200'E of RioVerde Dr & 176th S	0		1688.27
Upstream Limit	3700'S & 950'E of RioVerde Dr & 174th St	0.97	1803 (NGVD 29)	1806.20

2. Hydraulic Method Used

Hydraulic Analysis FLO-2D [HEC-2 , HEC-RAS, Other (Attach description)]

B. HYDRAULICS (CONTINUED)

3. Pre-Submittal Review of Hydraulic Models

FEMA has developed two review programs, CHECK-2 and CHECK-RAS, to aid in the review of HEC-2 and HEC-RAS hydraulic models, respectively. These review programs verify that the hydraulic estimates and assumptions in the model data are in accordance with NFIP requirements, and that the data are comparable with the assumptions and limitations of HEC-2/HEC-RAS. CHECK-2 and CHECK-RAS identify areas of potential error or concern. These tools do not replace engineering judgment. CHECK-2 and CHECK-RAS can be downloaded from http://www.fema.gov/plan/prevent/fhm/frm_soft.shtm. We recommend that you review your HEC-2 and HEC-RAS models with CHECK-2 and CHECK-RAS. If you disagree with a message, please attach an explanation of why the message is not valid in this case. Review of your submittal and resolution of valid modeling discrepancies will result in reduced review time.

HEC-2/HEC-RAS models reviewed with CHECK-2/CHECK-RAS? ☐ Yes ☐ No

4. Models Submitted

Duplicate Effective Model*	Natural File Name:	Floodway File Name:
Corrected Effective Model*	Natural File Name:	Floodway File Name:
Existing or Pre-Project Conditions Model	Natural File Name:	Floodway File Name:
Revised or Post-Project Conditions Model	Natural File Name:	Floodway File Name:
Other - (attach description)	Natural File Name:	Floodway File Name:

*Not required for revisions to approximate 1%-annual-chance floodplains (Zone A) – for details, refer to the corresponding section of the instructions.

The document "Numerical Models Accepted by FEMA for NFIP Usage" lists the models accepted by FEMA. This document can be found at: http://www.fema.gov/plan/prevent/fhm/en_modl.shtm.

C. MAPPING REQUIREMENTS

A **certified topographic map** must be submitted showing the following information (where applicable): the boundaries of the effective, existing, and proposed conditions 1%-annual-chance floodplain (for approximate Zone A revisions) or the boundaries of the 1%- and 0.2%-annual-chance floodplains and regulatory floodway (for detailed Zone AE, AO, and AH revisions); location and alignment of all cross sections with stationing control indicated; stream, road, and other alignments (e.g., dams, levees, etc.); current community easements and boundaries; boundaries of the requester's property; certification of a registered professional engineer registered in the subject State; location and description of reference marks; and the referenced vertical datum (NGVD, NAVD, etc.).

Note that the boundaries of the existing or proposed conditions floodplains and regulatory floodway to be shown on the revised FIRM and/or FBFM must tie-in with the effective floodplain and regulatory floodway boundaries. Please attach **a copy of the effective FIRM and/or FBFM,** annotated to show the boundaries of the revised 1%- and 0.2%-annual-chance floodplains and regulatory floodway that tie-in with the boundaries of the effective 1%- and 0.2%-annual-chance floodplain and regulatory floodway at the upstream and downstream limits of the area of revision.

D. COMMON REGULATORY REQUIREMENTS

1. For CLOMR requests, do Base Flood Elevations (BFEs) increase? ☐ Yes ☐ No

For CLOMR requests, if either of the following is true, please submit evidence of compliance with Section 65.12 of the NFIP regulations:
- The proposed project encroaches upon a regulatory floodway and would result in increases above 0.00 foot.
- The proposed project encroaches upon a SFHA with BFEs established and would result in increases above 1.00 foot.

2. Does the request involve the placement or proposed placement of fill? ☐ Yes ☒ No

If Yes, the community must be able to certify that the area to be removed from the special flood hazard area, to include any structures or proposed structures, meets all of the standards of the local floodplain ordinances, and is reasonably safe from flooding in accordance with the NFIP regulations set forth at 44 CFR 60.3(a)(3), 65.5(a)(4), and 65.6(a)(14). Please see the MT-2 instructions for more information.

3. For LOMR requests, is the regulatory floodway being revised? ☒ Yes ☐ No

If Yes, attach evidence of regulatory floodway revision notification. As per Paragraph 65.7(b)(1) of the NFIP Regulations, notification is required for requests involving revisions to the regulatory floodway. (Not required for revisions to approximate 1%-annual-chance floodplains [studied Zone A designation] unless a regulatory floodway is being added. Elements and examples of regulatory floodway revision notification can be found in the MT-2 Form 2 Instructions.)

4. For LOMR requests, does this request require property owner notification and acceptance of BFE increases? ☐ Yes ☒ No

If Yes, please attach proof of property owner notification and acceptance (if available). Elements of and examples of property owner notification can be found in the MT-2 Form 2 Instructions.

FEDERAL EMERGENCY MANAGEMENT AGENCY

RIVERINE HYDROLOGY & HYDRAULICS FORM

O.M.B No. 3067-0148
Expires September 30, 2005

PAPERWORK REDUCTION ACT

Public reporting burden for this form is estimated to average 3 hours per response. The burden estimate includes the time for reviewing instructions, searching existing data sources, gathering and maintaining the needed data, and completing, reviewing, and submitting the form. You are not required to respond to this collection of information unless a valid OMB control number appears in the upper right corner of this form. Send comments regarding the accuracy of the burden estimate and any suggestions for reducing this burden to: Information Collections Management, Federal Emergency Management Agency, 500 C Street, SW, Washington DC 20472, Paperwork Reduction Project (3067-0148). Submission of the form is required to obtain or retain benefits under the National Flood Insurance Program. **Please do not send your completed survey to the above address.**

Flooding Source: Rio Verde Wash 11 Split 8
Note: Fill out one form for each flooding source studied

A. HYDROLOGY

1. Reason for New Hydrologic Analysis (check all that apply)

☐ Not revised (skip to section 2) ☐ No existing analysis ☒ Improved data
☐ Alternative methodology ☐ Proposed Conditions (CLOMR) ☐ Changed physical condition of watershed

2. Comparison of Representative 1%-Annual-Chance Discharges

Location	Drainage Area (Sq. Mi.)	FIS (cfs)	Revised (cfs)

3. Methodology for New Hydrologic Analysis (check all that apply)

☐ Statistical Analysis of Gage Records ☒ Precipitation/Runoff Model HEC-1 and/or FLO-2D [TR-20, HEC-1, HEC-HMS etc.]
☐ Regional Regression Equations ☐ Other (please attach description)

Please enclose all relevant models in digital format, maps, computations (including computation of parameters) and documentation to support the new analysis. The document, "Numerical Models Accepted by FEMA for NFIP Usage" lists the models accepted by FEMA. This document can be found at: http://www.fema.gov/plan/prevent/fhm/en_modl.shtm.

4. Review/Approval of Analysis

If your community requires a regional, state, or federal agency to review the hydrologic analysis, please attach evidence of approval/review.

5. Impacts of Sediment Transport on Hydrology

Was sediment transport considered? ☐ Yes ☒ No If yes, then fill out Section F (Sediment Transport) of Form 3. If No, then attach your explanation for why sediment transport was not considered.

B. HYDRAULICS

1. Reach to be Revised

	Description	Cross Section	Water-Surface Elevations (ft.) Effective	Proposed/Revised
Downstream Limit	4100'S & 240'W of RioVerde Dr & 174th St	0	1833.7 (NGVD 29)	1836.81
Upstream Limit	1950'S & 120'E of RioVerde Dr & 156th St	2.403		2165.87

2. Hydraulic Method Used

Hydraulic Analysis FLO-2D [HEC-2 , HEC-RAS, Other (Attach description)]

B. HYDRAULICS (CONTINUED)

3. Pre-Submittal Review of Hydraulic Models

FEMA has developed two review programs, CHECK-2 and CHECK-RAS, to aid in the review of HEC-2 and HEC-RAS hydraulic models, respectively. These review programs verify that the hydraulic estimates and assumptions in the model data are in accordance with NFIP requirements, and that the data are comparable with the assumptions and limitations of HEC-2/HEC-RAS. CHECK-2 and CHECK-RAS identify areas of potential error or concern. These tools do not replace engineering judgment. CHECK-2 and CHECK-RAS can be downloaded from http://www.fema.gov/plan/prevent/fhm/frm_soft.shtm. We recommend that you review your HEC-2 and HEC-RAS models with CHECK-2 and CHECK-RAS. If you disagree with a message, please attach an explanation of why the message is not valid in this case. Review of your submittal and resolution of valid modeling discrepancies will result in reduced review time.

HEC-2/HEC-RAS models reviewed with CHECK-2/CHECK-RAS? ☐ Yes ☐ No

4. Models Submitted

Duplicate Effective Model*	Natural File Name:	Floodway File Name:
Corrected Effective Model*	Natural File Name:	Floodway File Name:
Existing or Pre-Project Conditions Model	Natural File Name:	Floodway File Name:
Revised or Post-Project Conditions Model	Natural File Name:	Floodway File Name:
Other - (attach description)	Natural File Name:	Floodway File Name:

*Not required for revisions to approximate 1%-annual-chance floodplains (Zone A) – for details, refer to the corresponding section of the instructions.

The document "Numerical Models Accepted by FEMA for NFIP Usage" lists the models accepted by FEMA. This document can be found at: http://www.fema.gov/plan/prevent/fhm/en_modl.shtm.

C. MAPPING REQUIREMENTS

A **certified topographic map** must be submitted showing the following information (where applicable): the boundaries of the effective, existing, and proposed conditions 1%-annual-chance floodplain (for approximate Zone A revisions) or the boundaries of the 1%- and 0.2%-annual-chance floodplains and regulatory floodway (for detailed Zone AE, AO, and AH revisions); location and alignment of all cross sections with stationing control indicated; stream, road, and other alignments (e.g., dams, levees, etc.); current community easements and boundaries; boundaries of the requester's property; certification of a registered professional engineer registered in the subject State; location and description of reference marks; and the referenced vertical datum (NGVD, NAVD, etc.).

Note that the boundaries of the existing or proposed conditions floodplains and regulatory floodway to be shown on the revised FIRM and/or FBFM must tie-in with the effective floodplain and regulatory floodway boundaries. Please attach **a copy of the effective FIRM and/or FBFM,** annotated to show the boundaries of the revised 1%- and 0.2%-annual-chance floodplains and regulatory floodway that tie-in with the boundaries of the effective 1%- and 0.2%-annual-chance floodplain and regulatory floodway at the upstream and downstream limits of the area of revision.

D. COMMON REGULATORY REQUIREMENTS

1. For CLOMR requests, do Base Flood Elevations (BFEs) increase? ☐ Yes ☐ No

For CLOMR requests, if either of the following is true, please submit evidence of compliance with Section 65.12 of the NFIP regulations:
- The proposed project encroaches upon a regulatory floodway and would result in increases above 0.00 foot.
- The proposed project encroaches upon a SFHA with BFEs established and would result in increases above 1.00 foot.

2. Does the request involve the placement or proposed placement of fill? ☐ Yes ☒ No

If Yes, the community must be able to certify that the area to be removed from the special flood hazard area, to include any structures or proposed structures, meets all of the standards of the local floodplain ordinances, and is reasonably safe from flooding in accordance with the NFIP regulations set forth at 44 CFR 60.3(a)(3), 65.5(a)(4), and 65.6(a)(14). Please see the MT-2 instructions for more information.

3. For LOMR requests, is the regulatory floodway being revised? ☒ Yes ☐ No

If Yes, attach evidence of regulatory floodway revision notification. As per Paragraph 65.7(b)(1) of the NFIP Regulations, notification is required for requests involving revisions to the regulatory floodway. (Not required for revisions to approximate 1%-annual-chance floodplains [studied Zone A designation] unless a regulatory floodway is being added. Elements and examples of regulatory floodway revision notification can be found in the MT-2 Form 2 Instructions.)

4. For LOMR requests, does this request require property owner notification and acceptance of BFE increases? ☐ Yes ☒ No

If Yes, please attach proof of property owner notification and acceptance (if available). Elements of and examples of property owner notification can be found in the MT-2 Form 2 Instructions.

FEDERAL EMERGENCY MANAGEMENT AGENCY

RIVERINE HYDROLOGY & HYDRAULICS FORM

O.M.B No. 3067-0148
Expires September 30, 2005

PAPERWORK REDUCTION ACT

Public reporting burden for this form is estimated to average 3 hours per response. The burden estimate includes the time for reviewing instructions, searching existing data sources, gathering and maintaining the needed data, and completing, reviewing, and submitting the form. You are not required to respond to this collection of information unless a valid OMB control number appears in the upper right corner of this form. Send comments regarding the accuracy of the burden estimate and any suggestions for reducing this burden to: Information Collections Management, Federal Emergency Management Agency, 500 C Street, SW, Washington DC 20472, Paperwork Reduction Project (3067-0148). Submission of the form is required to obtain or retain benefits under the National Flood Insurance Program. **Please do not send your completed survey to the above address.**

Flooding Source: Rio Verde Wash 12
Note: Fill out one form for each flooding source studied

A. HYDROLOGY

1. Reason for New Hydrologic Analysis (check all that apply)

☐ Not revised (skip to section 2) ☐ No existing analysis ☒ Improved data
☐ Alternative methodology ☐ Proposed Conditions (CLOMR) ☐ Changed physical condition of watershed

2. Comparison of Representative 1%-Annual-Chance Discharges

Location	Drainage Area (Sq. Mi.)	FIS (cfs)	Revised (cfs)

3. Methodology for New Hydrologic Analysis (check all that apply)

☐ Statistical Analysis of Gage Records ☒ Precipitation/Runoff Model HEC-1 and/or FLO-2D [TR-20, HEC-1, HEC-HMS etc.]
☐ Regional Regression Equations ☐ Other (please attach description)

Please enclose all relevant models in digital format, maps, computations (including computation of parameters) and documentation to support the new analysis. The document, "Numerical Models Accepted by FEMA for NFIP Usage" lists the models accepted by FEMA. This document can be found at: http://www.fema.gov/plan/prevent/fhm/en_modl.shtm.

4. Review/Approval of Analysis

If your community requires a regional, state, or federal agency to review the hydrologic analysis, please attach evidence of approval/review.

5. Impacts of Sediment Transport on Hydrology

Was sediment transport considered? ☐ Yes ☒ No If yes, then fill out Section F (Sediment Transport) of Form 3. If No, then attach your explanation for why sediment transport was not considered.

B. HYDRAULICS

1. Reach to be Revised

	Description	Cross Section	Water-Surface Elevations (ft.) Effective	Proposed/Revised
Downstream Limit	460'S & 4300'E of RioVerde Dr & 176th St	1.731	1682 (NGVD 29)	1684.04
Upstream Limit	2200'S & 580'W of RioVerde Dr & 164th St	4.352	2034.5 (NGVD 29)	2037.25

2. Hydraulic Method Used

Hydraulic Analysis FLO-2D [HEC-2 , HEC-RAS, Other (Attach description)]

B. HYDRAULICS (CONTINUED)

3. Pre-Submittal Review of Hydraulic Models

FEMA has developed two review programs, CHECK-2 and CHECK-RAS, to aid in the review of HEC-2 and HEC-RAS hydraulic models, respectively. These review programs verify that the hydraulic estimates and assumptions in the model data are in accordance with NFIP requirements, and that the data are comparable with the assumptions and limitations of HEC-2/HEC-RAS. CHECK-2 and CHECK-RAS identify areas of potential error or concern. These tools do not replace engineering judgment. CHECK-2 and CHECK-RAS can be downloaded from http://www.fema.gov/plan/prevent/fhm/frm_soft.shtm. We recommend that you review your HEC-2 and HEC-RAS models with CHECK-2 and CHECK-RAS. If you disagree with a message, please attach an explanation of why the message is not valid in this case. Review of your submittal and resolution of valid modeling discrepancies will result in reduced review time.

HEC-2/HEC-RAS models reviewed with CHECK-2/CHECK-RAS? ☐ Yes ☐ No

4. Models Submitted

Duplicate Effective Model*	Natural File Name:	Floodway File Name:
Corrected Effective Model*	Natural File Name:	Floodway File Name:
Existing or Pre-Project Conditions Model	Natural File Name:	Floodway File Name:
Revised or Post-Project Conditions Model	Natural File Name:	Floodway File Name:
Other - (attach description)	Natural File Name:	Floodway File Name:

*Not required for revisions to approximate 1%-annual-chance floodplains (Zone A) – for details, refer to the corresponding section of the instructions.

The document "Numerical Models Accepted by FEMA for NFIP Usage" lists the models accepted by FEMA. This document can be found at: http://www.fema.gov/plan/prevent/fhm/en_modl.shtm.

C. MAPPING REQUIREMENTS

A **certified topographic map** must be submitted showing the following information (where applicable): the boundaries of the effective, existing, and proposed conditions 1%-annual-chance floodplain (for approximate Zone A revisions) or the boundaries of the 1%- and 0.2%-annual-chance floodplains and regulatory floodway (for detailed Zone AE, AO, and AH revisions); location and alignment of all cross sections with stationing control indicated; stream, road, and other alignments (e.g., dams, levees, etc.); current community easements and boundaries; boundaries of the requester's property; certification of a registered professional engineer registered in the subject State; location and description of reference marks; and the referenced vertical datum (NGVD, NAVD, etc.).

Note that the boundaries of the existing or proposed conditions floodplains and regulatory floodway to be shown on the revised FIRM and/or FBFM must tie-in with the effective floodplain and regulatory floodway boundaries. Please attach **a copy of the effective FIRM and/or FBFM,** annotated to show the boundaries of the revised 1%- and 0.2%-annual-chance floodplains and regulatory floodway that tie-in with the boundaries of the effective 1%- and 0.2%-annual-chance floodplain and regulatory floodway at the upstream and downstream limits of the area of revision.

D. COMMON REGULATORY REQUIREMENTS

1. For CLOMR requests, do Base Flood Elevations (BFEs) increase? ☐ Yes ☐ No

For CLOMR requests, if either of the following is true, please submit evidence of compliance with Section 65.12 of the NFIP regulations:
- The proposed project encroaches upon a regulatory floodway and would result in increases above 0.00 foot.
- The proposed project encroaches upon a SFHA with BFEs established and would result in increases above 1.00 foot.

2. Does the request involve the placement or proposed placement of fill? ☐ Yes ☒ No

If Yes, the community must be able to certify that the area to be removed from the special flood hazard area, to include any structures or proposed structures, meets all of the standards of the local floodplain ordinances, and is reasonably safe from flooding in accordance with the NFIP regulations set forth at 44 CFR 60.3(a)(3), 65.5(a)(4), and 65.6(a)(14). Please see the MT-2 instructions for more information.

3. For LOMR requests, is the regulatory floodway being revised? ☒ Yes ☐ No

If Yes, attach evidence of regulatory floodway revision notification. As per Paragraph 65.7(b)(1) of the NFIP Regulations, notification is required for requests involving revisions to the regulatory floodway. (Not required for revisions to approximate 1%-annual-chance floodplains [studied Zone A designation] unless a regulatory floodway is being added. Elements and examples of regulatory floodway revision notification can be found in the MT-2 Form 2 Instructions.)

4. For LOMR requests, does this request require property owner notification and acceptance of BFE increases? ☐ Yes ☒ No

If Yes, please attach proof of property owner notification and acceptance (if available). Elements of and examples of property owner notification can be found in the MT-2 Form 2 Instructions.

FEDERAL EMERGENCY MANAGEMENT AGENCY

RIVERINE HYDROLOGY & HYDRAULICS FORM

O.M.B No. 3067-0148
Expires September 30, 2005

PAPERWORK REDUCTION ACT

Public reporting burden for this form is estimated to average 3 hours per response. The burden estimate includes the time for reviewing instructions, searching existing data sources, gathering and maintaining the needed data, and completing, reviewing, and submitting the form. You are not required to respond to this collection of information unless a valid OMB control number appears in the upper right corner of this form. Send comments regarding the accuracy of the burden estimate and any suggestions for reducing this burden to: Information Collections Management, Federal Emergency Management Agency, 500 C Street, SW, Washington DC 20472, Paperwork Reduction Project (3067-0148). Submission of the form is required to obtain or retain benefits under the National Flood Insurance Program. **Please do not send your completed survey to the above address.**

Flooding Source: Rio Verde Wash 12 Split 3
Note: Fill out one form for each flooding source studied

A. HYDROLOGY

1. Reason for New Hydrologic Analysis (check all that apply)

☐ Not revised (skip to section 2) ☐ No existing analysis ☒ Improved data
☐ Alternative methodology ☐ Proposed Conditions (CLOMR) ☐ Changed physical condition of watershed

2. Comparison of Representative 1%-Annual-Chance Discharges

Location	Drainage Area (Sq. Mi.)	FIS (cfs)	Revised (cfs)

3. Methodology for New Hydrologic Analysis (check all that apply)

☐ Statistical Analysis of Gage Records ☒ Precipitation/Runoff Model HEC-1 and/or FLO-2D [TR-20, HEC-1, HEC-HMS etc.]
☐ Regional Regression Equations ☐ Other (please attach description)

Please enclose all relevant models in digital format, maps, computations (including computation of parameters) and documentation to support the new analysis. The document, "Numerical Models Accepted by FEMA for NFIP Usage" lists the models accepted by FEMA. This document can be found at: http://www.fema.gov/plan/prevent/fhm/en_modl.shtm.

4. Review/Approval of Analysis

If your community requires a regional, state, or federal agency to review the hydrologic analysis, please attach evidence of approval/review.

5. Impacts of Sediment Transport on Hydrology

Was sediment transport considered? ☐ Yes ☒ No If yes, then fill out Section F (Sediment Transport) of Form 3. If No, then attach your explanation for why sediment transport was not considered.

B. HYDRAULICS

1. Reach to be Revised

	Description	Cross Section	Water-Surface Elevations (ft.)	
			Effective	Proposed/Revised
Downstream Limit	1900'S & 4200'E of RioVerde Dr &176th St	0	1684 (NGVD 29)	1686.34
Upstream Limit	1320'S & 150'W of RioVerde Dr & 174th St	1.207	1839 (NGVD 29)	1841.06

2. Hydraulic Method Used

Hydraulic Analysis FLO-2D [HEC-2 , HEC-RAS, Other (Attach description)]

B. HYDRAULICS (CONTINUED)

3. Pre-Submittal Review of Hydraulic Models

FEMA has developed two review programs, CHECK-2 and CHECK-RAS, to aid in the review of HEC-2 and HEC-RAS hydraulic models, respectively. These review programs verify that the hydraulic estimates and assumptions in the model data are in accordance with NFIP requirements, and that the data are comparable with the assumptions and limitations of HEC-2/HEC-RAS. CHECK-2 and CHECK-RAS identify areas of potential error or concern. These tools do not replace engineering judgment. CHECK-2 and CHECK-RAS can be downloaded from http://www.fema.gov/plan/prevent/fhm/frm_soft.shtm. We recommend that you review your HEC-2 and HEC-RAS models with CHECK-2 and CHECK-RAS. If you disagree with a message, please attach an explanation of why the message is not valid in this case. Review of your submittal and resolution of valid modeling discrepancies will result in reduced review time.

HEC-2/HEC-RAS models reviewed with CHECK-2/CHECK-RAS? ☐ Yes ☐ No

4. Models Submitted

Duplicate Effective Model*	Natural File Name:	Floodway File Name:
Corrected Effective Model*	Natural File Name:	Floodway File Name:
Existing or Pre-Project Conditions Model	Natural File Name:	Floodway File Name:
Revised or Post-Project Conditions Model	Natural File Name:	Floodway File Name:
Other - (attach description)	Natural File Name:	Floodway File Name:

*Not required for revisions to approximate 1%-annual-chance floodplains (Zone A) – for details, refer to the corresponding section of the instructions.

The document "Numerical Models Accepted by FEMA for NFIP Usage" lists the models accepted by FEMA. This document can be found at: http://www.fema.gov/plan/prevent/fhm/en_modl.shtm.

C. MAPPING REQUIREMENTS

A **certified topographic map** must be submitted showing the following information (where applicable): the boundaries of the effective, existing, and proposed conditions 1%-annual-chance floodplain (for approximate Zone A revisions) or the boundaries of the 1%- and 0.2%-annual-chance floodplains and regulatory floodway (for detailed Zone AE, AO, and AH revisions); location and alignment of all cross sections with stationing control indicated; stream, road, and other alignments (e.g., dams, levees, etc.); current community easements and boundaries; boundaries of the requester's property; certification of a registered professional engineer registered in the subject State; location and description of reference marks; and the referenced vertical datum (NGVD, NAVD, etc.).

Note that the boundaries of the existing or proposed conditions floodplains and regulatory floodway to be shown on the revised FIRM and/or FBFM must tie-in with the effective floodplain and regulatory floodway boundaries. Please attach **a copy of the effective FIRM and/or FBFM,** annotated to show the boundaries of the revised 1%- and 0.2%-annual-chance floodplains and regulatory floodway that tie-in with the boundaries of the effective 1%- and 0.2%-annual-chance floodplain and regulatory floodway at the upstream and downstream limits of the area of revision.

D. COMMON REGULATORY REQUIREMENTS

1. For CLOMR requests, do Base Flood Elevations (BFEs) increase? ☐ Yes ☐ No

For CLOMR requests, if either of the following is true, please submit evidence of compliance with Section 65.12 of the NFIP regulations:
- The proposed project encroaches upon a regulatory floodway and would result in increases above 0.00 foot.
- The proposed project encroaches upon a SFHA with BFEs established and would result in increases above 1.00 foot.

2. Does the request involve the placement or proposed placement of fill? ☐ Yes ☒ No

If Yes, the community must be able to certify that the area to be removed from the special flood hazard area, to include any structures or proposed structures, meets all of the standards of the local floodplain ordinances, and is reasonably safe from flooding in accordance with the NFIP regulations set forth at 44 CFR 60.3(a)(3), 65.5(a)(4), and 65.6(a)(14). Please see the MT-2 instructions for more information.

3. For LOMR requests, is the regulatory floodway being revised? ☒ Yes ☐ No

If Yes, attach evidence of regulatory floodway revision notification. As per Paragraph 65.7(b)(1) of the NFIP Regulations, notification is required for requests involving revisions to the regulatory floodway. (Not required for revisions to approximate 1%-annual-chance floodplains [studied Zone A designation] unless a regulatory floodway is being added. Elements and examples of regulatory floodway revision notification can be found in the MT-2 Form 2 Instructions.)

4. For LOMR requests, does this request require property owner notification and acceptance of BFE increases? ☐ Yes ☒ No

If Yes, please attach proof of property owner notification and acceptance (if available). Elements of and examples of property owner notification can be found in the MT-2 Form 2 Instructions.

FEDERAL EMERGENCY MANAGEMENT AGENCY

RIVERINE HYDROLOGY & HYDRAULICS FORM

O.M.B No. 3067-0148
Expires September 30, 2005

PAPERWORK REDUCTION ACT

Public reporting burden for this form is estimated to average 3 hours per response. The burden estimate includes the time for reviewing instructions, searching existing data sources, gathering and maintaining the needed data, and completing, reviewing, and submitting the form. You are not required to respond to this collection of information unless a valid OMB control number appears in the upper right corner of this form. Send comments regarding the accuracy of the burden estimate and any suggestions for reducing this burden to: Information Collections Management, Federal Emergency Management Agency, 500 C Street, SW, Washington DC 20472, Paperwork Reduction Project (3067-0148). Submission of the form is required to obtain or retain benefits under the National Flood Insurance Program. **Please do not send your completed survey to the above address.**

Flooding Source: Rio Verde Wash 12 Split 6
Note: Fill out one form for each flooding source studied

A. HYDROLOGY

1. Reason for New Hydrologic Analysis (check all that apply)

☐ Not revised (skip to section 2) ☐ No existing analysis ☒ Improved data
☐ Alternative methodology ☐ Proposed Conditions (CLOMR) ☐ Changed physical condition of watershed

2. Comparison of Representative 1%-Annual-Chance Discharges

Location	Drainage Area (Sq. Mi.)	FIS (cfs)	Revised (cfs)

3. Methodology for New Hydrologic Analysis (check all that apply)

☐ Statistical Analysis of Gage Records ☒ Precipitation/Runoff Model HEC-1 and/or FLO-2D [TR-20, HEC-1, HEC-HMS etc.]
☐ Regional Regression Equations ☐ Other (please attach description)

Please enclose all relevant models in digital format, maps, computations (including computation of parameters) and documentation to support the new analysis. The document, "Numerical Models Accepted by FEMA for NFIP Usage" lists the models accepted by FEMA. This document can be found at: http://www.fema.gov/plan/prevent/fhm/en_modl.shtm.

4. Review/Approval of Analysis

If your community requires a regional, state, or federal agency to review the hydrologic analysis, please attach evidence of approval/review.

5. Impacts of Sediment Transport on Hydrology

Was sediment transport considered? ☐ Yes ☒ No If yes, then fill out Section F (Sediment Transport) of Form 3. If No, then attach your explanation for why sediment transport was not considered.

B. HYDRAULICS

1. Reach to be Revised

	Description	Cross Section	Water-Surface Elevations (ft.) Effective	Proposed/Revised
Downstream Limit	1100'S & 520'W of RioVerde Dr & 176th St	0	1807.5 (NGVD 29)	1810.32
Upstream Limit	1720'S & 600'E of RioVerde Dr & 164th St	1.389	2001 (NGVD 29)	2003.29

2. Hydraulic Method Used

Hydraulic Analysis FLO-2D [HEC-2 , HEC-RAS, Other (Attach description)]

B. HYDRAULICS (CONTINUED)

3. Pre-Submittal Review of Hydraulic Models

FEMA has developed two review programs, CHECK-2 and CHECK-RAS, to aid in the review of HEC-2 and HEC-RAS hydraulic models, respectively. These review programs verify that the hydraulic estimates and assumptions in the model data are in accordance with NFIP requirements, and that the data are comparable with the assumptions and limitations of HEC-2/HEC-RAS. CHECK-2 and CHECK-RAS identify areas of potential error or concern. These tools do not replace engineering judgment. CHECK-2 and CHECK-RAS can be downloaded from http://www.fema.gov/plan/prevent/fhm/frm_soft.shtm. We recommend that you review your HEC-2 and HEC-RAS models with CHECK-2 and CHECK-RAS. If you disagree with a message, please attach an explanation of why the message is not valid in this case. Review of your submittal and resolution of valid modeling discrepancies will result in reduced review time.

HEC-2/HEC-RAS models reviewed with CHECK-2/CHECK-RAS? ☐ Yes ☐ No

4. Models Submitted

Duplicate Effective Model*	Natural File Name:	Floodway File Name:
Corrected Effective Model*	Natural File Name:	Floodway File Name:
Existing or Pre-Project Conditions Model	Natural File Name:	Floodway File Name:
Revised or Post-Project Conditions Model	Natural File Name:	Floodway File Name:
Other - (attach description)	Natural File Name:	Floodway File Name:

*Not required for revisions to approximate 1%-annual-chance floodplains (Zone A) – for details, refer to the corresponding section of the instructions.

The document "Numerical Models Accepted by FEMA for NFIP Usage" lists the models accepted by FEMA. This document can be found at: http://www.fema.gov/plan/prevent/fhm/en_modl.shtm.

C. MAPPING REQUIREMENTS

A **certified topographic map** must be submitted showing the following information (where applicable): the boundaries of the effective, existing, and proposed conditions 1%-annual-chance floodplain (for approximate Zone A revisions) or the boundaries of the 1%- and 0.2%-annual-chance floodplains and regulatory floodway (for detailed Zone AE, AO, and AH revisions); location and alignment of all cross sections with stationing control indicated; stream, road, and other alignments (e.g., dams, levees, etc.); current community easements and boundaries; boundaries of the requester's property; certification of a registered professional engineer registered in the subject State; location and description of reference marks; and the referenced vertical datum (NGVD, NAVD, etc.).

Note that the boundaries of the existing or proposed conditions floodplains and regulatory floodway to be shown on the revised FIRM and/or FBFM must tie-in with the effective floodplain and regulatory floodway boundaries. Please attach **a copy of the effective FIRM and/or FBFM,** annotated to show the boundaries of the revised 1%- and 0.2%-annual-chance floodplains and regulatory floodway that tie-in with the boundaries of the effective 1%- and 0.2%-annual-chance floodplain and regulatory floodway at the upstream and downstream limits of the area of revision.

D. COMMON REGULATORY REQUIREMENTS

1. For CLOMR requests, do Base Flood Elevations (BFEs) increase? ☐ Yes ☐ No

For CLOMR requests, if either of the following is true, please submit evidence of compliance with Section 65.12 of the NFIP regulations:
- The proposed project encroaches upon a regulatory floodway and would result in increases above 0.00 foot.
- The proposed project encroaches upon a SFHA with BFEs established and would result in increases above 1.00 foot.

2. Does the request involve the placement or proposed placement of fill? ☐ Yes ☒ No

If Yes, the community must be able to certify that the area to be removed from the special flood hazard area, to include any structures or proposed structures, meets all of the standards of the local floodplain ordinances, and is reasonably safe from flooding in accordance with the NFIP regulations set forth at 44 CFR 60.3(a)(3), 65.5(a)(4), and 65.6(a)(14). Please see the MT-2 instructions for more information.

3. For LOMR requests, is the regulatory floodway being revised? ☒ Yes ☐ No

If Yes, attach evidence of regulatory floodway revision notification. As per Paragraph 65.7(b)(1) of the NFIP Regulations, notification is required for requests involving revisions to the regulatory floodway. (Not required for revisions to approximate 1%-annual-chance floodplains [studied Zone A designation] unless a regulatory floodway is being added. Elements and examples of regulatory floodway revision notification can be found in the MT-2 Form 2 Instructions.)

4. For LOMR requests, does this request require property owner notification and acceptance of BFE increases? ☐ Yes ☒ No

If Yes, please attach proof of property owner notification and acceptance (if available). Elements of and examples of property owner notification can be found in the MT-2 Form 2 Instructions.

FEDERAL EMERGENCY MANAGEMENT AGENCY

RIVERINE HYDROLOGY & HYDRAULICS FORM

O.M.B No. 3067-0148
Expires September 30, 2005

PAPERWORK REDUCTION ACT

Public reporting burden for this form is estimated to average 3 hours per response. The burden estimate includes the time for reviewing instructions, searching existing data sources, gathering and maintaining the needed data, and completing, reviewing, and submitting the form. You are not required to respond to this collection of information unless a valid OMB control number appears in the upper right corner of this form. Send comments regarding the accuracy of the burden estimate and any suggestions for reducing this burden to: Information Collections Management, Federal Emergency Management Agency, 500 C Street, SW, Washington DC 20472, Paperwork Reduction Project (3067-0148). Submission of the form is required to obtain or retain benefits under the National Flood Insurance Program. **Please do not send your completed survey to the above address.**

Flooding Source: Rio Verde Wash A Split 1
Note: Fill out one form for each flooding source studied

A. HYDROLOGY

1. Reason for New Hydrologic Analysis (check all that apply)

☐ Not revised (skip to section 2) ☐ No existing analysis ☒ Improved data
☐ Alternative methodology ☐ Proposed Conditions (CLOMR) ☐ Changed physical condition of watershed

2. Comparison of Representative 1%-Annual-Chance Discharges

Location	Drainage Area (Sq. Mi.)	FIS (cfs)	Revised (cfs)

3. Methodology for New Hydrologic Analysis (check all that apply)

☐ Statistical Analysis of Gage Records ☒ Precipitation/Runoff Model HEC-1 and/or FLO-2D [TR-20, HEC-1, HEC-HMS etc.]
☐ Regional Regression Equations ☐ Other (please attach description)

Please enclose all relevant models in digital format, maps, computations (including computation of parameters) and documentation to support the new analysis. The document, "Numerical Models Accepted by FEMA for NFIP Usage" lists the models accepted by FEMA. This document can be found at: http://www.fema.gov/plan/prevent/fhm/en_modl.shtm.

4. Review/Approval of Analysis

If your community requires a regional, state, or federal agency to review the hydrologic analysis, please attach evidence of approval/review.

5. Impacts of Sediment Transport on Hydrology

Was sediment transport considered? ☐ Yes ☒ No If yes, then fill out Section F (Sediment Transport) of Form 3. If No, then attach your explanation for why sediment transport was not considered.

B. HYDRAULICS

1. Reach to be Revised

	Description	Cross Section	Water-Surface Elevations (ft.) Effective	Proposed/Revised
Downstream Limit	460'S & 4300'E of RioVerde Dr & 176th St	0	1682 (NGVD 29)	1684.04
Upstream Limit	1050'N & 200'E of RioVerde Dr & 169th St	1.752		1927.25

2. Hydraulic Method Used

Hydraulic Analysis FLO-2D [HEC-2 , HEC-RAS, Other (Attach description)]

B. HYDRAULICS (CONTINUED)

3. Pre-Submittal Review of Hydraulic Models

FEMA has developed two review programs, CHECK-2 and CHECK-RAS, to aid in the review of HEC-2 and HEC-RAS hydraulic models, respectively. These review programs verify that the hydraulic estimates and assumptions in the model data are in accordance with NFIP requirements, and that the data are comparable with the assumptions and limitations of HEC-2/HEC-RAS. CHECK-2 and CHECK-RAS identify areas of potential error or concern. These tools do not replace engineering judgment. CHECK-2 and CHECK-RAS can be downloaded from http://www.fema.gov/plan/prevent/fhm/frm_soft.shtm. We recommend that you review your HEC-2 and HEC-RAS models with CHECK-2 and CHECK-RAS. If you disagree with a message, please attach an explanation of why the message is not valid in this case. Review of your submittal and resolution of valid modeling discrepancies will result in reduced review time.

HEC-2/HEC-RAS models reviewed with CHECK-2/CHECK-RAS? ☐ Yes ☐ No

4. Models Submitted

Duplicate Effective Model*	Natural File Name:	Floodway File Name:
Corrected Effective Model*	Natural File Name:	Floodway File Name:
Existing or Pre-Project Conditions Model	Natural File Name:	Floodway File Name:
Revised or Post-Project Conditions Model	Natural File Name:	Floodway File Name:
Other - (attach description)	Natural File Name:	Floodway File Name:

*Not required for revisions to approximate 1%-annual-chance floodplains (Zone A) – for details, refer to the corresponding section of the instructions.

The document "Numerical Models Accepted by FEMA for NFIP Usage" lists the models accepted by FEMA. This document can be found at: http://www.fema.gov/plan/prevent/fhm/en_modl.shtm.

C. MAPPING REQUIREMENTS

A **certified topographic map** must be submitted showing the following information (where applicable): the boundaries of the effective, existing, and proposed conditions 1%-annual-chance floodplain (for approximate Zone A revisions) or the boundaries of the 1%- and 0.2%-annual-chance floodplains and regulatory floodway (for detailed Zone AE, AO, and AH revisions); location and alignment of all cross sections with stationing control indicated; stream, road, and other alignments (e.g., dams, levees, etc.); current community easements and boundaries; boundaries of the requester's property; certification of a registered professional engineer registered in the subject State; location and description of reference marks; and the referenced vertical datum (NGVD, NAVD, etc.).

Note that the boundaries of the existing or proposed conditions floodplains and regulatory floodway to be shown on the revised FIRM and/or FBFM must tie-in with the effective floodplain and regulatory floodway boundaries. Please attach **a copy of the effective FIRM and/or FBFM,** annotated to show the boundaries of the revised 1%- and 0.2%-annual-chance floodplains and regulatory floodway that tie-in with the boundaries of the effective 1%- and 0.2%-annual-chance floodplain and regulatory floodway at the upstream and downstream limits of the area of revision.

D. COMMON REGULATORY REQUIREMENTS

1. For CLOMR requests, do Base Flood Elevations (BFEs) increase? ☐ Yes ☐ No

For CLOMR requests, if either of the following is true, please submit evidence of compliance with Section 65.12 of the NFIP regulations:
- The proposed project encroaches upon a regulatory floodway and would result in increases above 0.00 foot.
- The proposed project encroaches upon a SFHA with BFEs established and would result in increases above 1.00 foot.

2. Does the request involve the placement or proposed placement of fill? ☐ Yes ☒ No

If Yes, the community must be able to certify that the area to be removed from the special flood hazard area, to include any structures or proposed structures, meets all of the standards of the local floodplain ordinances, and is reasonably safe from flooding in accordance with the NFIP regulations set forth at 44 CFR 60.3(a)(3), 65.5(a)(4), and 65.6(a)(14). Please see the MT-2 instructions for more information.

3. For LOMR requests, is the regulatory floodway being revised? ☒ Yes ☐ No

If Yes, attach evidence of regulatory floodway revision notification. As per Paragraph 65.7(b)(1) of the NFIP Regulations, notification is required for requests involving revisions to the regulatory floodway. (Not required for revisions to approximate 1%-annual-chance floodplains [studied Zone A designation] unless a regulatory floodway is being added. Elements and examples of regulatory floodway revision notification can be found in the MT-2 Form 2 Instructions.)

4. For LOMR requests, does this request require property owner notification and acceptance of BFE increases? ☐ Yes ☒ No

If Yes, please attach proof of property owner notification and acceptance (if available). Elements of and examples of property owner notification can be found in the MT-2 Form 2 Instructions.

FEDERAL EMERGENCY MANAGEMENT AGENCY

RIVERINE HYDROLOGY & HYDRAULICS FORM

O.M.B No. 3067-0148
Expires September 30, 2005

PAPERWORK REDUCTION ACT

Public reporting burden for this form is estimated to average 3 hours per response. The burden estimate includes the time for reviewing instructions, searching existing data sources, gathering and maintaining the needed data, and completing, reviewing, and submitting the form. You are not required to respond to this collection of information unless a valid OMB control number appears in the upper right corner of this form. Send comments regarding the accuracy of the burden estimate and any suggestions for reducing this burden to: Information Collections Management, Federal Emergency Management Agency, 500 C Street, SW, Washington DC 20472, Paperwork Reduction Project (3067-0148). Submission of the form is required to obtain or retain benefits under the National Flood Insurance Program. **Please do not send your completed survey to the above address.**

Flooding Source: Rio Verde Wash A Split 3
Note: Fill out one form for each flooding source studied

A. HYDROLOGY

1. Reason for New Hydrologic Analysis (check all that apply)

☐ Not revised (skip to section 2) ☒ No existing analysis ☐ Improved data
☐ Alternative methodology ☐ Proposed Conditions (CLOMR) ☐ Changed physical condition of watershed

2. Comparison of Representative 1%-Annual-Chance Discharges

Location	Drainage Area (Sq. Mi.)	FIS (cfs)	Revised (cfs)

3. Methodology for New Hydrologic Analysis (check all that apply)

☐ Statistical Analysis of Gage Records ☒ Precipitation/Runoff Model HEC-1 and/or FLO-2D [TR-20, HEC-1, HEC-HMS etc.]
☐ Regional Regression Equations ☐ Other (please attach description)

Please enclose all relevant models in digital format, maps, computations (including computation of parameters) and documentation to support the new analysis. The document, "Numerical Models Accepted by FEMA for NFIP Usage" lists the models accepted by FEMA. This document can be found at: http://www.fema.gov/plan/prevent/fhm/en_modl.shtm.

4. Review/Approval of Analysis

If your community requires a regional, state, or federal agency to review the hydrologic analysis, please attach evidence of approval/review.

5. Impacts of Sediment Transport on Hydrology

Was sediment transport considered? ☐ Yes ☒ No If yes, then fill out Section F (Sediment Transport) of Form 3. If No, then attach your explanation for why sediment transport was not considered.

B. HYDRAULICS

1. Reach to be Revised

	Description	Cross Section	Water-Surface Elevations (ft.) Effective	Proposed/Revised
Downstream Limit	2600'N & 820'E of RioVerde Dr & 160th St	0		2079.18
Upstream Limit	2200'N & 490'E of RioVerde Dr & 154th St	1.002		2193.68

2. Hydraulic Method Used

Hydraulic Analysis FLO-2D [HEC-2 , HEC-RAS, Other (Attach description)]

B. HYDRAULICS (CONTINUED)

3. Pre-Submittal Review of Hydraulic Models

FEMA has developed two review programs, CHECK-2 and CHECK-RAS, to aid in the review of HEC-2 and HEC-RAS hydraulic models, respectively. These review programs verify that the hydraulic estimates and assumptions in the model data are in accordance with NFIP requirements, and that the data are comparable with the assumptions and limitations of HEC-2/HEC-RAS. CHECK-2 and CHECK-RAS identify areas of potential error or concern. These tools do not replace engineering judgment. CHECK-2 and CHECK-RAS can be downloaded from http://www.fema.gov/plan/prevent/fhm/frm_soft.shtm. We recommend that you review your HEC-2 and HEC-RAS models with CHECK-2 and CHECK-RAS. If you disagree with a message, please attach an explanation of why the message is not valid in this case. Review of your submittal and resolution of valid modeling discrepancies will result in reduced review time.

HEC-2/HEC-RAS models reviewed with CHECK-2/CHECK-RAS? ☐ Yes ☐ No

4. Models Submitted

Duplicate Effective Model*	Natural File Name:	Floodway File Name:
Corrected Effective Model*	Natural File Name:	Floodway File Name:
Existing or Pre-Project Conditions Model	Natural File Name:	Floodway File Name:
Revised or Post-Project Conditions Model	Natural File Name:	Floodway File Name:
Other - (attach description)	Natural File Name:	Floodway File Name:

*Not required for revisions to approximate 1%-annual-chance floodplains (Zone A) – for details, refer to the corresponding section of the instructions.

The document "Numerical Models Accepted by FEMA for NFIP Usage" lists the models accepted by FEMA. This document can be found at: http://www.fema.gov/plan/prevent/fhm/en_modl.shtm.

C. MAPPING REQUIREMENTS

A **certified topographic map** must be submitted showing the following information (where applicable): the boundaries of the effective, existing, and proposed conditions 1%-annual-chance floodplain (for approximate Zone A revisions) or the boundaries of the 1%- and 0.2%-annual-chance floodplains and regulatory floodway (for detailed Zone AE, AO, and AH revisions); location and alignment of all cross sections with stationing control indicated; stream, road, and other alignments (e.g., dams, levees, etc.); current community easements and boundaries; boundaries of the requester's property; certification of a registered professional engineer registered in the subject State; location and description of reference marks; and the referenced vertical datum (NGVD, NAVD, etc.).

Note that the boundaries of the existing or proposed conditions floodplains and regulatory floodway to be shown on the revised FIRM and/or FBFM must tie-in with the effective floodplain and regulatory floodway boundaries. Please attach **a copy of the effective FIRM and/or FBFM,** annotated to show the boundaries of the revised 1%- and 0.2%-annual-chance floodplains and regulatory floodway that tie-in with the boundaries of the effective 1%- and 0.2%-annual-chance floodplain and regulatory floodway at the upstream and downstream limits of the area of revision.

D. COMMON REGULATORY REQUIREMENTS

1. For CLOMR requests, do Base Flood Elevations (BFEs) increase? ☐ Yes ☐ No

For CLOMR requests, if either of the following is true, please submit evidence of compliance with Section 65.12 of the NFIP regulations:
- The proposed project encroaches upon a regulatory floodway and would result in increases above 0.00 foot.
- The proposed project encroaches upon a SFHA with BFEs established and would result in increases above 1.00 foot.

2. Does the request involve the placement or proposed placement of fill? ☐ Yes ☒ No

If Yes, the community must be able to certify that the area to be removed from the special flood hazard area, to include any structures or proposed structures, meets all of the standards of the local floodplain ordinances, and is reasonably safe from flooding in accordance with the NFIP regulations set forth at 44 CFR 60.3(a)(3), 65.5(a)(4), and 65.6(a)(14). Please see the MT-2 instructions for more information.

3. For LOMR requests, is the regulatory floodway being revised? ☐ Yes ☒ No

If Yes, attach evidence of regulatory floodway revision notification. As per Paragraph 65.7(b)(1) of the NFIP Regulations, notification is required for requests involving revisions to the regulatory floodway. (Not required for revisions to approximate 1%-annual-chance floodplains [studied Zone A designation] unless a regulatory floodway is being added. Elements and examples of regulatory floodway revision notification can be found in the MT-2 Form 2 Instructions.)

4. For LOMR requests, does this request require property owner notification and acceptance of BFE increases? ☐ Yes ☒ No

If Yes, please attach proof of property owner notification and acceptance (if available). Elements of and examples of property owner notification can be found in the MT-2 Form 2 Instructions.

FEDERAL EMERGENCY MANAGEMENT AGENCY

RIVERINE HYDROLOGY & HYDRAULICS FORM

O.M.B No. 3067-0148
Expires September 30, 2005

PAPERWORK REDUCTION ACT

Public reporting burden for this form is estimated to average 3 hours per response. The burden estimate includes the time for reviewing instructions, searching existing data sources, gathering and maintaining the needed data, and completing, reviewing, and submitting the form. You are not required to respond to this collection of information unless a valid OMB control number appears in the upper right corner of this form. Send comments regarding the accuracy of the burden estimate and any suggestions for reducing this burden to: Information Collections Management, Federal Emergency Management Agency, 500 C Street, SW, Washington DC 20472, Paperwork Reduction Project (3067-0148). Submission of the form is required to obtain or retain benefits under the National Flood Insurance Program. **Please do not send your completed survey to the above address.**

Flooding Source: Rio Verde Wash A Split4
Note: Fill out one form for each flooding source studied

A. HYDROLOGY

1. Reason for New Hydrologic Analysis (check all that apply)

☐ Not revised (skip to section 2) ☒ No existing analysis ☐ Improved data
☐ Alternative methodology ☐ Proposed Conditions (CLOMR) ☐ Changed physical condition of watershed

2. Comparison of Representative 1%-Annual-Chance Discharges

Location	Drainage Area (Sq. Mi.)	FIS (cfs)	Revised (cfs)

3. Methodology for New Hydrologic Analysis (check all that apply)

☐ Statistical Analysis of Gage Records ☒ Precipitation/Runoff Model HEC-1 and/or FLO-2D [TR-20, HEC-1, HEC-HMS etc.]
☐ Regional Regression Equations ☐ Other (please attach description)

Please enclose all relevant models in digital format, maps, computations (including computation of parameters) and documentation to support the new analysis. The document, "Numerical Models Accepted by FEMA for NFIP Usage" lists the models accepted by FEMA. This document can be found at: http://www.fema.gov/plan/prevent/fhm/en_modl.shtm.

4. Review/Approval of Analysis

If your community requires a regional, state, or federal agency to review the hydrologic analysis, please attach evidence of approval/review.

5. Impacts of Sediment Transport on Hydrology

Was sediment transport considered? ☐ Yes ☒ No If yes, then fill out Section F (Sediment Transport) of Form 3. If No, then attach your explanation for why sediment transport was not considered.

B. HYDRAULICS

1. Reach to be Revised

	Description	Cross Section	Water-Surface Elevations (ft.) Effective	Proposed/Revised
Downstream Limit	1400'S & 60'W of Dixileta Dr & 152nd St.	0		2241.19
Upstream Limit	1900'S & 350'E of Dixileta Dr & 148th S	0.439		2300.43

2. Hydraulic Method Used

Hydraulic Analysis FLO-2D [HEC-2 , HEC-RAS, Other (Attach description)]

B. HYDRAULICS (CONTINUED)

3. Pre-Submittal Review of Hydraulic Models

FEMA has developed two review programs, CHECK-2 and CHECK-RAS, to aid in the review of HEC-2 and HEC-RAS hydraulic models, respectively. These review programs verify that the hydraulic estimates and assumptions in the model data are in accordance with NFIP requirements, and that the data are comparable with the assumptions and limitations of HEC-2/HEC-RAS. CHECK-2 and CHECK-RAS identify areas of potential error or concern. These tools do not replace engineering judgment. CHECK-2 and CHECK-RAS can be downloaded from http://www.fema.gov/plan/prevent/fhm/frm_soft.shtm. We recommend that you review your HEC-2 and HEC-RAS models with CHECK-2 and CHECK-RAS. If you disagree with a message, please attach an explanation of why the message is not valid in this case. Review of your submittal and resolution of valid modeling discrepancies will result in reduced review time.

HEC-2/HEC-RAS models reviewed with CHECK-2/CHECK-RAS? ☐ Yes ☐ No

4. Models Submitted

Duplicate Effective Model*	Natural File Name:	Floodway File Name:
Corrected Effective Model*	Natural File Name:	Floodway File Name:
Existing or Pre-Project Conditions Model	Natural File Name:	Floodway File Name:
Revised or Post-Project Conditions Model	Natural File Name:	Floodway File Name:
Other - (attach description)	Natural File Name:	Floodway File Name:

*Not required for revisions to approximate 1%-annual-chance floodplains (Zone A) – for details, refer to the corresponding section of the instructions.

The document "Numerical Models Accepted by FEMA for NFIP Usage" lists the models accepted by FEMA. This document can be found at: http://www.fema.gov/plan/prevent/fhm/en_modl.shtm.

C. MAPPING REQUIREMENTS

A **certified topographic map** must be submitted showing the following information (where applicable): the boundaries of the effective, existing, and proposed conditions 1%-annual-chance floodplain (for approximate Zone A revisions) or the boundaries of the 1%- and 0.2%-annual-chance floodplains and regulatory floodway (for detailed Zone AE, AO, and AH revisions); location and alignment of all cross sections with stationing control indicated; stream, road, and other alignments (e.g., dams, levees, etc.); current community easements and boundaries; boundaries of the requester's property; certification of a registered professional engineer registered in the subject State; location and description of reference marks; and the referenced vertical datum (NGVD, NAVD, etc.).

Note that the boundaries of the existing or proposed conditions floodplains and regulatory floodway to be shown on the revised FIRM and/or FBFM must tie-in with the effective floodplain and regulatory floodway boundaries. Please attach **a copy of the effective FIRM and/or FBFM,** annotated to show the boundaries of the revised 1%- and 0.2%-annual-chance floodplains and regulatory floodway that tie-in with the boundaries of the effective 1%- and 0.2%-annual-chance floodplain and regulatory floodway at the upstream and downstream limits of the area of revision.

D. COMMON REGULATORY REQUIREMENTS

1. For CLOMR requests, do Base Flood Elevations (BFEs) increase? ☐ Yes ☐ No

For CLOMR requests, if either of the following is true, please submit evidence of compliance with Section 65.12 of the NFIP regulations:
- The proposed project encroaches upon a regulatory floodway and would result in increases above 0.00 foot.
- The proposed project encroaches upon a SFHA with BFEs established and would result in increases above 1.00 foot.

2. Does the request involve the placement or proposed placement of fill? ☐ Yes ☒ No

If Yes, the community must be able to certify that the area to be removed from the special flood hazard area, to include any structures or proposed structures, meets all of the standards of the local floodplain ordinances, and is reasonably safe from flooding in accordance with the NFIP regulations set forth at 44 CFR 60.3(a)(3), 65.5(a)(4), and 65.6(a)(14). Please see the MT-2 instructions for more information.

3. For LOMR requests, is the regulatory floodway being revised? ☐ Yes ☒ No

If Yes, attach evidence of regulatory floodway revision notification. As per Paragraph 65.7(b)(1) of the NFIP Regulations, notification is required for requests involving revisions to the regulatory floodway. (Not required for revisions to approximate 1%-annual-chance floodplains [studied Zone A designation] unless a regulatory floodway is being added. Elements and examples of regulatory floodway revision notification can be found in the MT-2 Form 2 Instructions.)

4. For LOMR requests, does this request require property owner notification and acceptance of BFE increases? ☐ Yes ☒ No

If Yes, please attach proof of property owner notification and acceptance (if available). Elements of and examples of property owner notification can be found in the MT-2 Form 2 Instructions.

FEDERAL EMERGENCY MANAGEMENT AGENCY

RIVERINE HYDROLOGY & HYDRAULICS FORM

O.M.B No. 3067-0148
Expires September 30, 2005

PAPERWORK REDUCTION ACT

Public reporting burden for this form is estimated to average 3 hours per response. The burden estimate includes the time for reviewing instructions, searching existing data sources, gathering and maintaining the needed data, and completing, reviewing, and submitting the form. You are not required to respond to this collection of information unless a valid OMB control number appears in the upper right corner of this form. Send comments regarding the accuracy of the burden estimate and any suggestions for reducing this burden to: Information Collections Management, Federal Emergency Management Agency, 500 C Street, SW, Washington DC 20472, Paperwork Reduction Project (3067-0148). Submission of the form is required to obtain or retain benefits under the National Flood Insurance Program. **Please do not send your completed survey to the above address.**

Flooding Source: Rio Verde Wash A Split 8
Note: Fill out one form for each flooding source studied

A. HYDROLOGY

1. Reason for New Hydrologic Analysis (check all that apply)

☐ Not revised (skip to section 2) ☐ No existing analysis ☐ Improved data
☐ Alternative methodology ☐ Proposed Conditions (CLOMR) ☐ Changed physical condition of watershed

2. Comparison of Representative 1%-Annual-Chance Discharges

Location	Drainage Area (Sq. Mi.)	FIS (cfs)	Revised (cfs)

3. Methodology for New Hydrologic Analysis (check all that apply)

☐ Statistical Analysis of Gage Records ☒ Precipitation/Runoff Model HEC-1 and/or FLO-2D [TR-20, HEC-1, HEC-HMS etc.]
☐ Regional Regression Equations ☐ Other (please attach description)

Please enclose all relevant models in digital format, maps, computations (including computation of parameters) and documentation to support the new analysis. The document, "Numerical Models Accepted by FEMA for NFIP Usage" lists the models accepted by FEMA. This document can be found at: http://www.fema.gov/plan/prevent/fhm/en_modl.shtm.

4. Review/Approval of Analysis

If your community requires a regional, state, or federal agency to review the hydrologic analysis, please attach evidence of approval/review.

5. Impacts of Sediment Transport on Hydrology

Was sediment transport considered? ☐ Yes ☒ No If yes, then fill out Section F (Sediment Transport) of Form 3. If No, then attach your explanation for why sediment transport was not considered.

B. HYDRAULICS

1. Reach to be Revised

	Description	Cross Section	Water-Surface Elevations (ft.) Effective	Proposed/Revised
Downstream Limit	1460'N & 890'W of RioVerde Dr & 168th St	0		1978.24
Upstream Limit	490'S & 340'E of PeakView Rd & 142nd St	3.244		2398.41

2. Hydraulic Method Used

Hydraulic Analysis FLO-2D [HEC-2 , HEC-RAS, Other (Attach description)]

B. HYDRAULICS (CONTINUED)

3. Pre-Submittal Review of Hydraulic Models

FEMA has developed two review programs, CHECK-2 and CHECK-RAS, to aid in the review of HEC-2 and HEC-RAS hydraulic models, respectively. These review programs verify that the hydraulic estimates and assumptions in the model data are in accordance with NFIP requirements, and that the data are comparable with the assumptions and limitations of HEC-2/HEC-RAS. CHECK-2 and CHECK-RAS identify areas of potential error or concern. These tools do not replace engineering judgment. CHECK-2 and CHECK-RAS can be downloaded from http://www.fema.gov/plan/prevent/fhm/frm_soft.shtm. We recommend that you review your HEC-2 and HEC-RAS models with CHECK-2 and CHECK-RAS. If you disagree with a message, please attach an explanation of why the message is not valid in this case. Review of your submittal and resolution of valid modeling discrepancies will result in reduced review time.

HEC-2/HEC-RAS models reviewed with CHECK-2/CHECK-RAS? ☐ Yes ☐ No

4. Models Submitted

Duplicate Effective Model*	Natural File Name:	Floodway File Name:
Corrected Effective Model*	Natural File Name:	Floodway File Name:
Existing or Pre-Project Conditions Model	Natural File Name:	Floodway File Name:
Revised or Post-Project Conditions Model	Natural File Name:	Floodway File Name:
Other - (attach description)	Natural File Name:	Floodway File Name:

*Not required for revisions to approximate 1%-annual-chance floodplains (Zone A) – for details, refer to the corresponding section of the instructions.

The document "Numerical Models Accepted by FEMA for NFIP Usage" lists the models accepted by FEMA. This document can be found at: http://www.fema.gov/plan/prevent/fhm/en_modl.shtm.

C. MAPPING REQUIREMENTS

A **certified topographic map** must be submitted showing the following information (where applicable): the boundaries of the effective, existing, and proposed conditions 1%-annual-chance floodplain (for approximate Zone A revisions) or the boundaries of the 1%- and 0.2%-annual-chance floodplains and regulatory floodway (for detailed Zone AE, AO, and AH revisions); location and alignment of all cross sections with stationing control indicated; stream, road, and other alignments (e.g., dams, levees, etc.); current community easements and boundaries; boundaries of the requester's property; certification of a registered professional engineer registered in the subject State; location and description of reference marks; and the referenced vertical datum (NGVD, NAVD, etc.).

Note that the boundaries of the existing or proposed conditions floodplains and regulatory floodway to be shown on the revised FIRM and/or FBFM must tie-in with the effective floodplain and regulatory floodway boundaries. Please attach **a copy of the effective FIRM and/or FBFM,** annotated to show the boundaries of the revised 1%- and 0.2%-annual-chance floodplains and regulatory floodway that tie-in with the boundaries of the effective 1%- and 0.2%-annual-chance floodplain and regulatory floodway at the upstream and downstream limits of the area of revision.

D. COMMON REGULATORY REQUIREMENTS

1. For CLOMR requests, do Base Flood Elevations (BFEs) increase? ☐ Yes ☐ No

For CLOMR requests, if either of the following is true, please submit evidence of compliance with Section 65.12 of the NFIP regulations:
- The proposed project encroaches upon a regulatory floodway and would result in increases above 0.00 foot.
- The proposed project encroaches upon a SFHA with BFEs established and would result in increases above 1.00 foot.

2. Does the request involve the placement or proposed placement of fill? ☐ Yes ☒ No

If Yes, the community must be able to certify that the area to be removed from the special flood hazard area, to include any structures or proposed structures, meets all of the standards of the local floodplain ordinances, and is reasonably safe from flooding in accordance with the NFIP regulations set forth at 44 CFR 60.3(a)(3), 65.5(a)(4), and 65.6(a)(14). Please see the MT-2 instructions for more information.

3. For LOMR requests, is the regulatory floodway being revised? ☐ Yes ☐ No

If Yes, attach evidence of regulatory floodway revision notification. As per Paragraph 65.7(b)(1) of the NFIP Regulations, notification is required for requests involving revisions to the regulatory floodway. (Not required for revisions to approximate 1%-annual-chance floodplains [studied Zone A designation] unless a regulatory floodway is being added. Elements and examples of regulatory floodway revision notification can be found in the MT-2 Form 2 Instructions.)

4. For LOMR requests, does this request require property owner notification and acceptance of BFE increases? ☐ Yes ☒ No

If Yes, please attach proof of property owner notification and acceptance (if available). Elements of and examples of property owner notification can be found in the MT-2 Form 2 Instructions.

FEDERAL EMERGENCY MANAGEMENT AGENCY

RIVERINE HYDROLOGY & HYDRAULICS FORM

O.M.B No. 3067-0148
Expires September 30, 2005

PAPERWORK REDUCTION ACT

Public reporting burden for this form is estimated to average 3 hours per response. The burden estimate includes the time for reviewing instructions, searching existing data sources, gathering and maintaining the needed data, and completing, reviewing, and submitting the form. You are not required to respond to this collection of information unless a valid OMB control number appears in the upper right corner of this form. Send comments regarding the accuracy of the burden estimate and any suggestions for reducing this burden to: Information Collections Management, Federal Emergency Management Agency, 500 C Street, SW, Washington DC 20472, Paperwork Reduction Project (3067-0148). Submission of the form is required to obtain or retain benefits under the National Flood Insurance Program. **Please do not send your completed survey to the above address.**

Flooding Source: Rio Verde Wash A Split 9
Note: Fill out one form for each flooding source studied

A. HYDROLOGY

1. Reason for New Hydrologic Analysis (check all that apply)

☐ Not revised (skip to section 2) ☐ No existing analysis ☒ Improved data
☐ Alternative methodology ☐ Proposed Conditions (CLOMR) ☐ Changed physical condition of watershed

2. Comparison of Representative 1%-Annual-Chance Discharges

Location	Drainage Area (Sq. Mi.)	FIS (cfs)	Revised (cfs)

3. Methodology for New Hydrologic Analysis (check all that apply)

☐ Statistical Analysis of Gage Records ☒ Precipitation/Runoff Model HEC-1 and/or FLO-2D [TR-20, HEC-1, HEC-HMS etc.]
☐ Regional Regression Equations ☐ Other (please attach description)

Please enclose all relevant models in digital format, maps, computations (including computation of parameters) and documentation to support the new analysis. The document, "Numerical Models Accepted by FEMA for NFIP Usage" lists the models accepted by FEMA. This document can be found at: http://www.fema.gov/plan/prevent/fhm/en_modl.shtm.

4. Review/Approval of Analysis

If your community requires a regional, state, or federal agency to review the hydrologic analysis, please attach evidence of approval/review.

5. Impacts of Sediment Transport on Hydrology

Was sediment transport considered? ☐ Yes ☒ No If yes, then fill out Section F (Sediment Transport) of Form 3. If No, then attach your explanation for why sediment transport was not considered.

B. HYDRAULICS

1. Reach to be Revised

	Description	Cross Section	Water-Surface Elevations (ft.) Effective	Proposed/Revised
Downstream Limit	1740'S & 560'E of RioVerde Dr & 164th St	0	2001 (NGVD 29)	2004.11
Upstream Limit	520'S & 120'E of PeakView Rd & 141st St.	3.384		2409.52

2. Hydraulic Method Used

Hydraulic Analysis FLO-2D [HEC-2 , HEC-RAS, Other (Attach description)]

B. HYDRAULICS (CONTINUED)

3. Pre-Submittal Review of Hydraulic Models

FEMA has developed two review programs, CHECK-2 and CHECK-RAS, to aid in the review of HEC-2 and HEC-RAS hydraulic models, respectively. These review programs verify that the hydraulic estimates and assumptions in the model data are in accordance with NFIP requirements, and that the data are comparable with the assumptions and limitations of HEC-2/HEC-RAS. CHECK-2 and CHECK-RAS identify areas of potential error or concern. These tools do not replace engineering judgment. CHECK-2 and CHECK-RAS can be downloaded from http://www.fema.gov/plan/prevent/fhm/frm_soft.shtm. We recommend that you review your HEC-2 and HEC-RAS models with CHECK-2 and CHECK-RAS. If you disagree with a message, please attach an explanation of why the message is not valid in this case. Review of your submittal and resolution of valid modeling discrepancies will result in reduced review time.

HEC-2/HEC-RAS models reviewed with CHECK-2/CHECK-RAS? ☐ Yes ☐ No

4. Models Submitted

Duplicate Effective Model*	Natural File Name:	Floodway File Name:
Corrected Effective Model*	Natural File Name:	Floodway File Name:
Existing or Pre-Project Conditions Model	Natural File Name:	Floodway File Name:
Revised or Post-Project Conditions Model	Natural File Name:	Floodway File Name:
Other - (attach description)	Natural File Name:	Floodway File Name:

*Not required for revisions to approximate 1%-annual-chance floodplains (Zone A) – for details, refer to the corresponding section of the instructions.

The document "Numerical Models Accepted by FEMA for NFIP Usage" lists the models accepted by FEMA. This document can be found at: http://www.fema.gov/plan/prevent/fhm/en_modl.shtm.

C. MAPPING REQUIREMENTS

A **certified topographic map** must be submitted showing the following information (where applicable): the boundaries of the effective, existing, and proposed conditions 1%-annual-chance floodplain (for approximate Zone A revisions) or the boundaries of the 1%- and 0.2%-annual-chance floodplains and regulatory floodway (for detailed Zone AE, AO, and AH revisions); location and alignment of all cross sections with stationing control indicated; stream, road, and other alignments (e.g., dams, levees, etc.); current community easements and boundaries; boundaries of the requester's property; certification of a registered professional engineer registered in the subject State; location and description of reference marks; and the referenced vertical datum (NGVD, NAVD, etc.).

Note that the boundaries of the existing or proposed conditions floodplains and regulatory floodway to be shown on the revised FIRM and/or FBFM must tie-in with the effective floodplain and regulatory floodway boundaries. Please attach **a copy of the effective FIRM and/or FBFM,** annotated to show the boundaries of the revised 1%- and 0.2%-annual-chance floodplains and regulatory floodway that tie-in with the boundaries of the effective 1%- and 0.2%-annual-chance floodplain and regulatory floodway at the upstream and downstream limits of the area of revision.

D. COMMON REGULATORY REQUIREMENTS

1. For CLOMR requests, do Base Flood Elevations (BFEs) increase? ☐ Yes ☐ No

For CLOMR requests, if either of the following is true, please submit evidence of compliance with Section 65.12 of the NFIP regulations:
- The proposed project encroaches upon a regulatory floodway and would result in increases above 0.00 foot.
- The proposed project encroaches upon a SFHA with BFEs established and would result in increases above 1.00 foot.

2. Does the request involve the placement or proposed placement of fill? ☐ Yes ☒ No

If Yes, the community must be able to certify that the area to be removed from the special flood hazard area, to include any structures or proposed structures, meets all of the standards of the local floodplain ordinances, and is reasonably safe from flooding in accordance with the NFIP regulations set forth at 44 CFR 60.3(a)(3), 65.5(a)(4), and 65.6(a)(14). Please see the MT-2 instructions for more information.

3. For LOMR requests, is the regulatory floodway being revised? ☒ Yes ☐ No

If Yes, attach evidence of regulatory floodway revision notification. As per Paragraph 65.7(b)(1) of the NFIP Regulations, notification is required for requests involving revisions to the regulatory floodway. (Not required for revisions to approximate 1%-annual-chance floodplains [studied Zone A designation] unless a regulatory floodway is being added. Elements and examples of regulatory floodway revision notification can be found in the MT-2 Form 2 Instructions.)

4. For LOMR requests, does this request require property owner notification and acceptance of BFE increases? ☐ Yes ☒ No

If Yes, please attach proof of property owner notification and acceptance (if available). Elements of and examples of property owner notification can be found in the MT-2 Form 2 Instructions.

FEDERAL EMERGENCY MANAGEMENT AGENCY

RIVERINE HYDROLOGY & HYDRAULICS FORM

O.M.B No. 3067-0148
Expires September 30, 2005

PAPERWORK REDUCTION ACT

Public reporting burden for this form is estimated to average 3 hours per response. The burden estimate includes the time for reviewing instructions, searching existing data sources, gathering and maintaining the needed data, and completing, reviewing, and submitting the form. You are not required to respond to this collection of information unless a valid OMB control number appears in the upper right corner of this form. Send comments regarding the accuracy of the burden estimate and any suggestions for reducing this burden to: Information Collections Management, Federal Emergency Management Agency, 500 C Street, SW, Washington DC 20472, Paperwork Reduction Project (3067-0148). Submission of the form is required to obtain or retain benefits under the National Flood Insurance Program. **Please do not send your completed survey to the above address.**

Flooding Source: Rio Verde Wash D
Note: Fill out one form for each flooding source studied

A. HYDROLOGY

1. Reason for New Hydrologic Analysis (check all that apply)

☐ Not revised (skip to section 2) ☐ No existing analysis ☒ Improved data
☐ Alternative methodology ☐ Proposed Conditions (CLOMR) ☐ Changed physical condition of watershed

2. Comparison of Representative 1%-Annual-Chance Discharges

Location	Drainage Area (Sq. Mi.)	FIS (cfs)	Revised (cfs)

3. Methodology for New Hydrologic Analysis (check all that apply)

☐ Statistical Analysis of Gage Records ☒ Precipitation/Runoff Model HEC-1 and/or FLO-2D [TR-20, HEC-1, HEC-HMS etc.]
☐ Regional Regression Equations ☐ Other (please attach description)

Please enclose all relevant models in digital format, maps, computations (including computation of parameters) and documentation to support the new analysis. The document, "Numerical Models Accepted by FEMA for NFIP Usage" lists the models accepted by FEMA. This document can be found at: http://www.fema.gov/plan/prevent/fhm/en_modl.shtm.

4. Review/Approval of Analysis

If your community requires a regional, state, or federal agency to review the hydrologic analysis, please attach evidence of approval/review.

5. Impacts of Sediment Transport on Hydrology

Was sediment transport considered? ☐ Yes ☒ No If yes, then fill out Section F (Sediment Transport) of Form 3. If No, then attach your explanation for why sediment transport was not considered.

B. HYDRAULICS

1. Reach to be Revised

	Description	Cross Section	Water-Surface Elevations (ft.) Effective	Proposed/Revised
Downstream Limit	2000'N & 2000'E of BoxBar R Needlerock R	0		1525.24
Upstream Limit	750'N &1930'W of RioVerde & Needlerock R	0.864	1628 (NGVD 29)	1630.93

2. Hydraulic Method Used

Hydraulic Analysis FLO-2D [HEC-2 , HEC-RAS, Other (Attach description)]

B. HYDRAULICS (CONTINUED)

3. Pre-Submittal Review of Hydraulic Models

FEMA has developed two review programs, CHECK-2 and CHECK-RAS, to aid in the review of HEC-2 and HEC-RAS hydraulic models, respectively. These review programs verify that the hydraulic estimates and assumptions in the model data are in accordance with NFIP requirements, and that the data are comparable with the assumptions and limitations of HEC-2/HEC-RAS. CHECK-2 and CHECK-RAS identify areas of potential error or concern. These tools do not replace engineering judgment. CHECK-2 and CHECK-RAS can be downloaded from http://www.fema.gov/plan/prevent/fhm/frm_soft.shtm. We recommend that you review your HEC-2 and HEC-RAS models with CHECK-2 and CHECK-RAS. If you disagree with a message, please attach an explanation of why the message is not valid in this case. Review of your submittal and resolution of valid modeling discrepancies will result in reduced review time.

HEC-2/HEC-RAS models reviewed with CHECK-2/CHECK-RAS? ☐ Yes ☐ No

4. Models Submitted

Duplicate Effective Model*	Natural File Name:	Floodway File Name:
Corrected Effective Model*	Natural File Name:	Floodway File Name:
Existing or Pre-Project Conditions Model	Natural File Name:	Floodway File Name:
Revised or Post-Project Conditions Model	Natural File Name:	Floodway File Name:
Other - (attach description)	Natural File Name:	Floodway File Name:

*Not required for revisions to approximate 1%-annual-chance floodplains (Zone A) – for details, refer to the corresponding section of the instructions.

The document "Numerical Models Accepted by FEMA for NFIP Usage" lists the models accepted by FEMA. This document can be found at: http://www.fema.gov/plan/prevent/fhm/en_modl.shtm.

C. MAPPING REQUIREMENTS

A **certified topographic map** must be submitted showing the following information (where applicable): the boundaries of the effective, existing, and proposed conditions 1%-annual-chance floodplain (for approximate Zone A revisions) or the boundaries of the 1%- and 0.2%-annual-chance floodplains and regulatory floodway (for detailed Zone AE, AO, and AH revisions); location and alignment of all cross sections with stationing control indicated; stream, road, and other alignments (e.g., dams, levees, etc.); current community easements and boundaries; boundaries of the requester's property; certification of a registered professional engineer registered in the subject State; location and description of reference marks; and the referenced vertical datum (NGVD, NAVD, etc.).

Note that the boundaries of the existing or proposed conditions floodplains and regulatory floodway to be shown on the revised FIRM and/or FBFM must tie-in with the effective floodplain and regulatory floodway boundaries. Please attach **a copy of the effective FIRM and/or FBFM,** annotated to show the boundaries of the revised 1%- and 0.2%-annual-chance floodplains and regulatory floodway that tie-in with the boundaries of the effective 1%- and 0.2%-annual-chance floodplain and regulatory floodway at the upstream and downstream limits of the area of revision.

D. COMMON REGULATORY REQUIREMENTS

1. For CLOMR requests, do Base Flood Elevations (BFEs) increase? ☐ Yes ☐ No

For CLOMR requests, if either of the following is true, please submit evidence of compliance with Section 65.12 of the NFIP regulations:
- The proposed project encroaches upon a regulatory floodway and would result in increases above 0.00 foot.
- The proposed project encroaches upon a SFHA with BFEs established and would result in increases above 1.00 foot.

2. Does the request involve the placement or proposed placement of fill? ☐ Yes ☒ No

If Yes, the community must be able to certify that the area to be removed from the special flood hazard area, to include any structures or proposed structures, meets all of the standards of the local floodplain ordinances, and is reasonably safe from flooding in accordance with the NFIP regulations set forth at 44 CFR 60.3(a)(3), 65.5(a)(4), and 65.6(a)(14). Please see the MT-2 instructions for more information.

3. For LOMR requests, is the regulatory floodway being revised? ☒ Yes ☐ No

If Yes, attach evidence of regulatory floodway revision notification. As per Paragraph 65.7(b)(1) of the NFIP Regulations, notification is required for requests involving revisions to the regulatory floodway. (Not required for revisions to approximate 1%-annual-chance floodplains [studied Zone A designation] unless a regulatory floodway is being added. Elements and examples of regulatory floodway revision notification can be found in the MT-2 Form 2 Instructions.)

4. For LOMR requests, does this request require property owner notification and acceptance of BFE increases? ☐ Yes ☒ No

If Yes, please attach proof of property owner notification and acceptance (if available). Elements of and examples of property owner notification can be found in the MT-2 Form 2 Instructions.

FEDERAL EMERGENCY MANAGEMENT AGENCY

RIVERINE HYDROLOGY & HYDRAULICS FORM

O.M.B No. 3067-0148
Expires September 30, 2005

PAPERWORK REDUCTION ACT

Public reporting burden for this form is estimated to average 3 hours per response. The burden estimate includes the time for reviewing instructions, searching existing data sources, gathering and maintaining the needed data, and completing, reviewing, and submitting the form. You are not required to respond to this collection of information unless a valid OMB control number appears in the upper right corner of this form. Send comments regarding the accuracy of the burden estimate and any suggestions for reducing this burden to: Information Collections Management, Federal Emergency Management Agency, 500 C Street, SW, Washington DC 20472, Paperwork Reduction Project (3067-0148). Submission of the form is required to obtain or retain benefits under the National Flood Insurance Program. **Please do not send your completed survey to the above address.**

Flooding Source: Rio Verde Wash F
Note: Fill out one form for each flooding source studied

A. HYDROLOGY

1. Reason for New Hydrologic Analysis (check all that apply)

☐ Not revised (skip to section 2) ☐ No existing analysis ☒ Improved data
☐ Alternative methodology ☐ Proposed Conditions (CLOMR) ☐ Changed physical condition of watershed

2. Comparison of Representative 1%-Annual-Chance Discharges

Location	Drainage Area (Sq. Mi.)	FIS (cfs)	Revised (cfs)

3. Methodology for New Hydrologic Analysis (check all that apply)

☐ Statistical Analysis of Gage Records ☒ Precipitation/Runoff Model HEC-1 and/or FLO-2D [TR-20, HEC-1, HEC-HMS etc.]
☐ Regional Regression Equations ☐ Other (please attach description)

Please enclose all relevant models in digital format, maps, computations (including computation of parameters) and documentation to support the new analysis. The document, "Numerical Models Accepted by FEMA for NFIP Usage" lists the models accepted by FEMA. This document can be found at: http://www.fema.gov/plan/prevent/fhm/en_modl.shtm.

4. Review/Approval of Analysis

If your community requires a regional, state, or federal agency to review the hydrologic analysis, please attach evidence of approval/review.

5. Impacts of Sediment Transport on Hydrology

Was sediment transport considered? ☐ Yes ☒ No If yes, then fill out Section F (Sediment Transport) of Form 3. If No, then attach your explanation for why sediment transport was not considered.

B. HYDRAULICS

1. Reach to be Revised

	Description	Cross Section	Water-Surface Elevations (ft.) Effective	Proposed/Revised
Downstream Limit	3000'N &1700'E of BoxBar Rd Needlerock R	0	N/A	1524.58
Upstream Limit	3800'S of Lone Mnt Rd & 136th St.	7.408		2538.02

2. Hydraulic Method Used

Hydraulic Analysis FLO-2D [HEC-2 , HEC-RAS, Other (Attach description)]

B. HYDRAULICS (CONTINUED)

3. Pre-Submittal Review of Hydraulic Models

FEMA has developed two review programs, CHECK-2 and CHECK-RAS, to aid in the review of HEC-2 and HEC-RAS hydraulic models, respectively. These review programs verify that the hydraulic estimates and assumptions in the model data are in accordance with NFIP requirements, and that the data are comparable with the assumptions and limitations of HEC-2/HEC-RAS. CHECK-2 and CHECK-RAS identify areas of potential error or concern. These tools do not replace engineering judgment. CHECK-2 and CHECK-RAS can be downloaded from http://www.fema.gov/plan/prevent/fhm/frm_soft.shtm. We recommend that you review your HEC-2 and HEC-RAS models with CHECK-2 and CHECK-RAS. If you disagree with a message, please attach an explanation of why the message is not valid in this case. Review of your submittal and resolution of valid modeling discrepancies will result in reduced review time.

HEC-2/HEC-RAS models reviewed with CHECK-2/CHECK-RAS? ☐ Yes ☐ No

4. Models Submitted

Duplicate Effective Model*	Natural File Name:	Floodway File Name:
Corrected Effective Model*	Natural File Name:	Floodway File Name:
Existing or Pre-Project Conditions Model	Natural File Name:	Floodway File Name:
Revised or Post-Project Conditions Model	Natural File Name:	Floodway File Name:
Other - (attach description)	Natural File Name:	Floodway File Name:

*Not required for revisions to approximate 1%-annual-chance floodplains (Zone A) – for details, refer to the corresponding section of the instructions.

The document "Numerical Models Accepted by FEMA for NFIP Usage" lists the models accepted by FEMA. This document can be found at: http://www.fema.gov/plan/prevent/fhm/en_modl.shtm.

C. MAPPING REQUIREMENTS

A **certified topographic map** must be submitted showing the following information (where applicable): the boundaries of the effective, existing, and proposed conditions 1%-annual-chance floodplain (for approximate Zone A revisions) or the boundaries of the 1%- and 0.2%-annual-chance floodplains and regulatory floodway (for detailed Zone AE, AO, and AH revisions); location and alignment of all cross sections with stationing control indicated; stream, road, and other alignments (e.g., dams, levees, etc.); current community easements and boundaries; boundaries of the requester's property; certification of a registered professional engineer registered in the subject State; location and description of reference marks; and the referenced vertical datum (NGVD, NAVD, etc.).

Note that the boundaries of the existing or proposed conditions floodplains and regulatory floodway to be shown on the revised FIRM and/or FBFM must tie-in with the effective floodplain and regulatory floodway boundaries. Please attach **a copy of the effective FIRM and/or FBFM,** annotated to show the boundaries of the revised 1%- and 0.2%-annual-chance floodplains and regulatory floodway that tie-in with the boundaries of the effective 1%- and 0.2%-annual-chance floodplain and regulatory floodway at the upstream and downstream limits of the area of revision.

D. COMMON REGULATORY REQUIREMENTS

1. For CLOMR requests, do Base Flood Elevations (BFEs) increase? ☐ Yes ☐ No

For CLOMR requests, if either of the following is true, please submit evidence of compliance with Section 65.12 of the NFIP regulations:
- The proposed project encroaches upon a regulatory floodway and would result in increases above 0.00 foot.
- The proposed project encroaches upon a SFHA with BFEs established and would result in increases above 1.00 foot.

2. Does the request involve the placement or proposed placement of fill? ☐ Yes ☒ No

If Yes, the community must be able to certify that the area to be removed from the special flood hazard area, to include any structures or proposed structures, meets all of the standards of the local floodplain ordinances, and is reasonably safe from flooding in accordance with the NFIP regulations set forth at 44 CFR 60.3(a)(3), 65.5(a)(4), and 65.6(a)(14). Please see the MT-2 instructions for more information.

3. For LOMR requests, is the regulatory floodway being revised? ☒ Yes ☐ No

If Yes, attach evidence of regulatory floodway revision notification. As per Paragraph 65.7(b)(1) of the NFIP Regulations, notification is required for requests involving revisions to the regulatory floodway. (Not required for revisions to approximate 1%-annual-chance floodplains [studied Zone A designation] unless a regulatory floodway is being added. Elements and examples of regulatory floodway revision notification can be found in the MT-2 Form 2 Instructions.)

4. For LOMR requests, does this request require property owner notification and acceptance of BFE increases? ☐ Yes ☒ No

If Yes, please attach proof of property owner notification and acceptance (if available). Elements of and examples of property owner notification can be found in the MT-2 Form 2 Instructions.

FEDERAL EMERGENCY MANAGEMENT AGENCY

RIVERINE HYDROLOGY & HYDRAULICS FORM

O.M.B No. 3067-0148
Expires September 30, 2005

PAPERWORK REDUCTION ACT

Public reporting burden for this form is estimated to average 3 hours per response. The burden estimate includes the time for reviewing instructions, searching existing data sources, gathering and maintaining the needed data, and completing, reviewing, and submitting the form. You are not required to respond to this collection of information unless a valid OMB control number appears in the upper right corner of this form. Send comments regarding the accuracy of the burden estimate and any suggestions for reducing this burden to: Information Collections Management, Federal Emergency Management Agency, 500 C Street, SW, Washington DC 20472, Paperwork Reduction Project (3067-0148). Submission of the form is required to obtain or retain benefits under the National Flood Insurance Program. **Please do not send your completed survey to the above address.**

Flooding Source: Rio Verde Wash F Split 6
Note: Fill out one form for each flooding source studied

A. HYDROLOGY

1. Reason for New Hydrologic Analysis (check all that apply)

☐ Not revised (skip to section 2) ☒ No existing analysis ☐ Improved data
☐ Alternative methodology ☐ Proposed Conditions (CLOMR) ☐ Changed physical condition of watershed

2. Comparison of Representative 1%-Annual-Chance Discharges

Location	Drainage Area (Sq. Mi.)	FIS (cfs)	Revised (cfs)

3. Methodology for New Hydrologic Analysis (check all that apply)

☐ Statistical Analysis of Gage Records ☒ Precipitation/Runoff Model HEC-1 and/or FLO-2D [TR-20, HEC-1, HEC-HMS etc.]
☐ Regional Regression Equations ☐ Other (please attach description)

Please enclose all relevant models in digital format, maps, computations (including computation of parameters) and documentation to support the new analysis. The document, "Numerical Models Accepted by FEMA for NFIP Usage" lists the models accepted by FEMA. This document can be found at: http://www.fema.gov/plan/prevent/fhm/en_modl.shtm.

4. Review/Approval of Analysis

If your community requires a regional, state, or federal agency to review the hydrologic analysis, please attach evidence of approval/review.

5. Impacts of Sediment Transport on Hydrology

Was sediment transport considered? ☐ Yes ☒ No If yes, then fill out Section F (Sediment Transport) of Form 3. If No, then attach your explanation for why sediment transport was not considered.

B. HYDRAULICS

1. Reach to be Revised

	Description	Cross Section	Water-Surface Elevations (ft.) Effective	Proposed/Revised
Downstream Limit	940'S & 440'W of Dixileta Dr & 148th St.	0		2323.28
Upstream Limit	3900'N of Peak View Rd & 136th St.	1.550		2533.97

2. Hydraulic Method Used

Hydraulic Analysis FLO-2D [HEC-2 , HEC-RAS, Other (Attach description)]

B. HYDRAULICS (CONTINUED)

3. Pre-Submittal Review of Hydraulic Models

FEMA has developed two review programs, CHECK-2 and CHECK-RAS, to aid in the review of HEC-2 and HEC-RAS hydraulic models, respectively. These review programs verify that the hydraulic estimates and assumptions in the model data are in accordance with NFIP requirements, and that the data are comparable with the assumptions and limitations of HEC-2/HEC-RAS. CHECK-2 and CHECK-RAS identify areas of potential error or concern. These tools do not replace engineering judgment. CHECK-2 and CHECK-RAS can be downloaded from http://www.fema.gov/plan/prevent/fhm/frm_soft.shtm. We recommend that you review your HEC-2 and HEC-RAS models with CHECK-2 and CHECK-RAS. If you disagree with a message, please attach an explanation of why the message is not valid in this case. Review of your submittal and resolution of valid modeling discrepancies will result in reduced review time.

HEC-2/HEC-RAS models reviewed with CHECK-2/CHECK-RAS? ☐ Yes ☐ No

4. Models Submitted

Duplicate Effective Model*	Natural File Name:	Floodway File Name:
Corrected Effective Model*	Natural File Name:	Floodway File Name:
Existing or Pre-Project Conditions Model	Natural File Name:	Floodway File Name:
Revised or Post-Project Conditions Model	Natural File Name:	Floodway File Name:
Other - (attach description)	Natural File Name:	Floodway File Name:

*Not required for revisions to approximate 1%-annual-chance floodplains (Zone A) – for details, refer to the corresponding section of the instructions.

The document "Numerical Models Accepted by FEMA for NFIP Usage" lists the models accepted by FEMA. This document can be found at: http://www.fema.gov/plan/prevent/fhm/en_modl.shtm.

C. MAPPING REQUIREMENTS

A **certified topographic map** must be submitted showing the following information (where applicable): the boundaries of the effective, existing, and proposed conditions 1%-annual-chance floodplain (for approximate Zone A revisions) or the boundaries of the 1%- and 0.2%-annual-chance floodplains and regulatory floodway (for detailed Zone AE, AO, and AH revisions); location and alignment of all cross sections with stationing control indicated; stream, road, and other alignments (e.g., dams, levees, etc.); current community easements and boundaries; boundaries of the requester's property; certification of a registered professional engineer registered in the subject State; location and description of reference marks; and the referenced vertical datum (NGVD, NAVD, etc.).

Note that the boundaries of the existing or proposed conditions floodplains and regulatory floodway to be shown on the revised FIRM and/or FBFM must tie-in with the effective floodplain and regulatory floodway boundaries. Please attach **a copy of the effective FIRM and/or FBFM,** annotated to show the boundaries of the revised 1%- and 0.2%-annual-chance floodplains and regulatory floodway that tie-in with the boundaries of the effective 1%- and 0.2%-annual-chance floodplain and regulatory floodway at the upstream and downstream limits of the area of revision.

D. COMMON REGULATORY REQUIREMENTS

1. For CLOMR requests, do Base Flood Elevations (BFEs) increase? ☐ Yes ☐ No

For CLOMR requests, if either of the following is true, please submit evidence of compliance with Section 65.12 of the NFIP regulations:
- The proposed project encroaches upon a regulatory floodway and would result in increases above 0.00 foot.
- The proposed project encroaches upon a SFHA with BFEs established and would result in increases above 1.00 foot.

2. Does the request involve the placement or proposed placement of fill? ☐ Yes ☒ No

If Yes, the community must be able to certify that the area to be removed from the special flood hazard area, to include any structures or proposed structures, meets all of the standards of the local floodplain ordinances, and is reasonably safe from flooding in accordance with the NFIP regulations set forth at 44 CFR 60.3(a)(3), 65.5(a)(4), and 65.6(a)(14). Please see the MT-2 instructions for more information.

3. For LOMR requests, is the regulatory floodway being revised? ☐ Yes ☒ No

If Yes, attach evidence of regulatory floodway revision notification. As per Paragraph 65.7(b)(1) of the NFIP Regulations, notification is required for requests involving revisions to the regulatory floodway. (Not required for revisions to approximate 1%-annual-chance floodplains [studied Zone A designation] unless a regulatory floodway is being added. Elements and examples of regulatory floodway revision notification can be found in the MT-2 Form 2 Instructions.)

4. For LOMR requests, does this request require property owner notification and acceptance of BFE increases? ☐ Yes ☒ No

If Yes, please attach proof of property owner notification and acceptance (if available). Elements of and examples of property owner notification can be found in the MT-2 Form 2 Instructions.

FEDERAL EMERGENCY MANAGEMENT AGENCY

RIVERINE HYDROLOGY & HYDRAULICS FORM

O.M.B No. 3067-0148
Expires September 30, 2005

PAPERWORK REDUCTION ACT

Public reporting burden for this form is estimated to average 3 hours per response. The burden estimate includes the time for reviewing instructions, searching existing data sources, gathering and maintaining the needed data, and completing, reviewing, and submitting the form. You are not required to respond to this collection of information unless a valid OMB control number appears in the upper right corner of this form. Send comments regarding the accuracy of the burden estimate and any suggestions for reducing this burden to: Information Collections Management, Federal Emergency Management Agency, 500 C Street, SW, Washington DC 20472, Paperwork Reduction Project (3067-0148). Submission of the form is required to obtain or retain benefits under the National Flood Insurance Program. **Please do not send your completed survey to the above address.**

Flooding Source: Rio Verde Wash F Trib 2
Note: Fill out one form for each flooding source studied

A. HYDROLOGY

1. Reason for New Hydrologic Analysis (check all that apply)

☐ Not revised (skip to section 2) ☒ No existing analysis ☐ Improved data
☐ Alternative methodology ☐ Proposed Conditions (CLOMR) ☐ Changed physical condition of watershed

2. Comparison of Representative 1%-Annual-Chance Discharges

Location	Drainage Area (Sq. Mi.)	FIS (cfs)	Revised (cfs)

3. Methodology for New Hydrologic Analysis (check all that apply)

☐ Statistical Analysis of Gage Records ☒ Precipitation/Runoff Model HEC-1 and/or FLO-2D [TR-20, HEC-1, HEC-HMS etc.]
☐ Regional Regression Equations ☐ Other (please attach description)

Please enclose all relevant models in digital format, maps, computations (including computation of parameters) and documentation to support the new analysis. The document, "Numerical Models Accepted by FEMA for NFIP Usage" lists the models accepted by FEMA. This document can be found at: http://www.fema.gov/plan/prevent/fhm/en_modl.shtm.

4. Review/Approval of Analysis

If your community requires a regional, state, or federal agency to review the hydrologic analysis, please attach evidence of approval/review.

5. Impacts of Sediment Transport on Hydrology

Was sediment transport considered? ☐ Yes ☒ No If yes, then fill out Section F (Sediment Transport) of Form 3. If No, then attach your explanation for why sediment transport was not considered.

B. HYDRAULICS

1. Reach to be Revised

	Description	Cross Section	Water-Surface Elevations (ft.) Effective	Proposed/Revised
Downstream Limit	1300'S & 170'E of Dixileta Dr & 152nd St	0		2235.64
Upstream Limit	2100'S of Lone Mnt Rd & 136th St.	2.301		2552.63

2. Hydraulic Method Used

Hydraulic Analysis FLO-2D [HEC-2 , HEC-RAS, Other (Attach description)]

B. HYDRAULICS (CONTINUED)

3. Pre-Submittal Review of Hydraulic Models

FEMA has developed two review programs, CHECK-2 and CHECK-RAS, to aid in the review of HEC-2 and HEC-RAS hydraulic models, respectively. These review programs verify that the hydraulic estimates and assumptions in the model data are in accordance with NFIP requirements, and that the data are comparable with the assumptions and limitations of HEC-2/HEC-RAS. CHECK-2 and CHECK-RAS identify areas of potential error or concern. These tools do not replace engineering judgment. CHECK-2 and CHECK-RAS can be downloaded from http://www.fema.gov/plan/prevent/fhm/frm_soft.shtm. We recommend that you review your HEC-2 and HEC-RAS models with CHECK-2 and CHECK-RAS. If you disagree with a message, please attach an explanation of why the message is not valid in this case. Review of your submittal and resolution of valid modeling discrepancies will result in reduced review time.

HEC-2/HEC-RAS models reviewed with CHECK-2/CHECK-RAS? ☐ Yes ☐ No

4. Models Submitted

Duplicate Effective Model*	Natural File Name:	Floodway File Name:
Corrected Effective Model*	Natural File Name:	Floodway File Name:
Existing or Pre-Project Conditions Model	Natural File Name:	Floodway File Name:
Revised or Post-Project Conditions Model	Natural File Name:	Floodway File Name:
Other - (attach description)	Natural File Name:	Floodway File Name:

*Not required for revisions to approximate 1%-annual-chance floodplains (Zone A) – for details, refer to the corresponding section of the instructions.

The document "Numerical Models Accepted by FEMA for NFIP Usage" lists the models accepted by FEMA. This document can be found at: http://www.fema.gov/plan/prevent/fhm/en_modl.shtm.

C. MAPPING REQUIREMENTS

A **certified topographic map** must be submitted showing the following information (where applicable): the boundaries of the effective, existing, and proposed conditions 1%-annual-chance floodplain (for approximate Zone A revisions) or the boundaries of the 1%- and 0.2%-annual-chance floodplains and regulatory floodway (for detailed Zone AE, AO, and AH revisions); location and alignment of all cross sections with stationing control indicated; stream, road, and other alignments (e.g., dams, levees, etc.); current community easements and boundaries; boundaries of the requester's property; certification of a registered professional engineer registered in the subject State; location and description of reference marks; and the referenced vertical datum (NGVD, NAVD, etc.).

Note that the boundaries of the existing or proposed conditions floodplains and regulatory floodway to be shown on the revised FIRM and/or FBFM must tie-in with the effective floodplain and regulatory floodway boundaries. Please attach **a copy of the effective FIRM and/or FBFM,** annotated to show the boundaries of the revised 1%- and 0.2%-annual-chance floodplains and regulatory floodway that tie-in with the boundaries of the effective 1%- and 0.2%-annual-chance floodplain and regulatory floodway at the upstream and downstream limits of the area of revision.

D. COMMON REGULATORY REQUIREMENTS

1. For CLOMR requests, do Base Flood Elevations (BFEs) increase? ☐ Yes ☐ No

For CLOMR requests, if either of the following is true, please submit evidence of compliance with Section 65.12 of the NFIP regulations:
- The proposed project encroaches upon a regulatory floodway and would result in increases above 0.00 foot.
- The proposed project encroaches upon a SFHA with BFEs established and would result in increases above 1.00 foot.

2. Does the request involve the placement or proposed placement of fill? ☐ Yes ☒ No

If Yes, the community must be able to certify that the area to be removed from the special flood hazard area, to include any structures or proposed structures, meets all of the standards of the local floodplain ordinances, and is reasonably safe from flooding in accordance with the NFIP regulations set forth at 44 CFR 60.3(a)(3), 65.5(a)(4), and 65.6(a)(14). Please see the MT-2 instructions for more information.

3. For LOMR requests, is the regulatory floodway being revised? ☐ Yes ☒ No

If Yes, attach evidence of regulatory floodway revision notification. As per Paragraph 65.7(b)(1) of the NFIP Regulations, notification is required for requests involving revisions to the regulatory floodway. (Not required for revisions to approximate 1%-annual-chance floodplains [studied Zone A designation] unless a regulatory floodway is being added. Elements and examples of regulatory floodway revision notification can be found in the MT-2 Form 2 Instructions.)

4. For LOMR requests, does this request require property owner notification and acceptance of BFE increases? ☐ Yes ☒ No

If Yes, please attach proof of property owner notification and acceptance (if available). Elements of and examples of property owner notification can be found in the MT-2 Form 2 Instructions.

FEDERAL EMERGENCY MANAGEMENT AGENCY

RIVERINE HYDROLOGY & HYDRAULICS FORM

O.M.B No. 3067-0148
Expires September 30, 2005

PAPERWORK REDUCTION ACT

Public reporting burden for this form is estimated to average 3 hours per response. The burden estimate includes the time for reviewing instructions, searching existing data sources, gathering and maintaining the needed data, and completing, reviewing, and submitting the form. You are not required to respond to this collection of information unless a valid OMB control number appears in the upper right corner of this form. Send comments regarding the accuracy of the burden estimate and any suggestions for reducing this burden to: Information Collections Management, Federal Emergency Management Agency, 500 C Street, SW, Washington DC 20472, Paperwork Reduction Project (3067-0148). Submission of the form is required to obtain or retain benefits under the National Flood Insurance Program. **Please do not send your completed survey to the above address.**

Flooding Source: Rio Verde Wash I Split 4
Note: Fill out one form for each flooding source studied

A. HYDROLOGY

1. Reason for New Hydrologic Analysis (check all that apply)

☐ Not revised (skip to section 2) ☒ No existing analysis ☐ Improved data
☐ Alternative methodology ☐ Proposed Conditions (CLOMR) ☐ Changed physical condition of watershed

2. Comparison of Representative 1%-Annual-Chance Discharges

Location	Drainage Area (Sq. Mi.)	FIS (cfs)	Revised (cfs)

3. Methodology for New Hydrologic Analysis (check all that apply)

☐ Statistical Analysis of Gage Records ☒ Precipitation/Runoff Model HEC-1 and/or FLO-2D [TR-20, HEC-1, HEC-HMS etc.]
☐ Regional Regression Equations ☐ Other (please attach description)

Please enclose all relevant models in digital format, maps, computations (including computation of parameters) and documentation to support the new analysis. The document, "Numerical Models Accepted by FEMA for NFIP Usage" lists the models accepted by FEMA. This document can be found at: http://www.fema.gov/plan/prevent/fhm/en_modl.shtm.

4. Review/Approval of Analysis

If your community requires a regional, state, or federal agency to review the hydrologic analysis, please attach evidence of approval/review.

5. Impacts of Sediment Transport on Hydrology

Was sediment transport considered? ☐ Yes ☒ No If yes, then fill out Section F (Sediment Transport) of Form 3. If No, then attach your explanation for why sediment transport was not considered.

B. HYDRAULICS

1. Reach to be Revised

	Description	Cross Section	Water-Surface Elevations (ft.) Effective	Proposed/Revised
Downstream Limit	750'N & 200'W of Dixileta Dr & 164th St.	0		2048.95
Upstream Limit	1090'N & 220'E of Dixileta Dr & 154th St	1.214		2218.09

2. Hydraulic Method Used

Hydraulic Analysis FLO-2D [HEC-2 , HEC-RAS, Other (Attach description)]

B. HYDRAULICS (CONTINUED)

3. Pre-Submittal Review of Hydraulic Models

FEMA has developed two review programs, CHECK-2 and CHECK-RAS, to aid in the review of HEC-2 and HEC-RAS hydraulic models, respectively. These review programs verify that the hydraulic estimates and assumptions in the model data are in accordance with NFIP requirements, and that the data are comparable with the assumptions and limitations of HEC-2/HEC-RAS. CHECK-2 and CHECK-RAS identify areas of potential error or concern. These tools do not replace engineering judgment. CHECK-2 and CHECK-RAS can be downloaded from http://www.fema.gov/plan/prevent/fhm/frm_soft.shtm. We recommend that you review your HEC-2 and HEC-RAS models with CHECK-2 and CHECK-RAS. If you disagree with a message, please attach an explanation of why the message is not valid in this case. Review of your submittal and resolution of valid modeling discrepancies will result in reduced review time.

HEC-2/HEC-RAS models reviewed with CHECK-2/CHECK-RAS? ☐ Yes ☐ No

4. Models Submitted

Duplicate Effective Model*	Natural File Name:	Floodway File Name:
Corrected Effective Model*	Natural File Name:	Floodway File Name:
Existing or Pre-Project Conditions Model	Natural File Name:	Floodway File Name:
Revised or Post-Project Conditions Model	Natural File Name:	Floodway File Name:
Other - (attach description)	Natural File Name:	Floodway File Name:

*Not required for revisions to approximate 1%-annual-chance floodplains (Zone A) – for details, refer to the corresponding section of the instructions.

The document "Numerical Models Accepted by FEMA for NFIP Usage" lists the models accepted by FEMA. This document can be found at: http://www.fema.gov/plan/prevent/fhm/en_modl.shtm.

C. MAPPING REQUIREMENTS

A **certified topographic map** must be submitted showing the following information (where applicable): the boundaries of the effective, existing, and proposed conditions 1%-annual-chance floodplain (for approximate Zone A revisions) or the boundaries of the 1%- and 0.2%-annual-chance floodplains and regulatory floodway (for detailed Zone AE, AO, and AH revisions); location and alignment of all cross sections with stationing control indicated; stream, road, and other alignments (e.g., dams, levees, etc.); current community easements and boundaries; boundaries of the requester's property; certification of a registered professional engineer registered in the subject State; location and description of reference marks; and the referenced vertical datum (NGVD, NAVD, etc.).

Note that the boundaries of the existing or proposed conditions floodplains and regulatory floodway to be shown on the revised FIRM and/or FBFM must tie-in with the effective floodplain and regulatory floodway boundaries. Please attach **a copy of the effective FIRM and/or FBFM,** annotated to show the boundaries of the revised 1%- and 0.2%-annual-chance floodplains and regulatory floodway that tie-in with the boundaries of the effective 1%- and 0.2%-annual-chance floodplain and regulatory floodway at the upstream and downstream limits of the area of revision.

D. COMMON REGULATORY REQUIREMENTS

1. For CLOMR requests, do Base Flood Elevations (BFEs) increase? ☐ Yes ☐ No

For CLOMR requests, if either of the following is true, please submit evidence of compliance with Section 65.12 of the NFIP regulations:
- The proposed project encroaches upon a regulatory floodway and would result in increases above 0.00 foot.
- The proposed project encroaches upon a SFHA with BFEs established and would result in increases above 1.00 foot.

2. Does the request involve the placement or proposed placement of fill? ☐ Yes ☒ No

If Yes, the community must be able to certify that the area to be removed from the special flood hazard area, to include any structures or proposed structures, meets all of the standards of the local floodplain ordinances, and is reasonably safe from flooding in accordance with the NFIP regulations set forth at 44 CFR 60.3(a)(3), 65.5(a)(4), and 65.6(a)(14). Please see the MT-2 instructions for more information.

3. For LOMR requests, is the regulatory floodway being revised? ☐ Yes ☒ No

If Yes, attach evidence of regulatory floodway revision notification. As per Paragraph 65.7(b)(1) of the NFIP Regulations, notification is required for requests involving revisions to the regulatory floodway. (Not required for revisions to approximate 1%-annual-chance floodplains [studied Zone A designation] unless a regulatory floodway is being added. Elements and examples of regulatory floodway revision notification can be found in the MT-2 Form 2 Instructions.)

4. For LOMR requests, does this request require property owner notification and acceptance of BFE increases? ☐ Yes ☒ No

If Yes, please attach proof of property owner notification and acceptance (if available). Elements of and examples of property owner notification can be found in the MT-2 Form 2 Instructions.

FEDERAL EMERGENCY MANAGEMENT AGENCY

RIVERINE HYDROLOGY & HYDRAULICS FORM

O.M.B No. 3067-0148
Expires September 30, 2005

PAPERWORK REDUCTION ACT

Public reporting burden for this form is estimated to average 3 hours per response. The burden estimate includes the time for reviewing instructions, searching existing data sources, gathering and maintaining the needed data, and completing, reviewing, and submitting the form. You are not required to respond to this collection of information unless a valid OMB control number appears in the upper right corner of this form. Send comments regarding the accuracy of the burden estimate and any suggestions for reducing this burden to: Information Collections Management, Federal Emergency Management Agency, 500 C Street, SW, Washington DC 20472, Paperwork Reduction Project (3067-0148). Submission of the form is required to obtain or retain benefits under the National Flood Insurance Program. **Please do not send your completed survey to the above address.**

Flooding Source: Rio Verde Wash I Trib 1
Note: Fill out one form for each flooding source studied

A. HYDROLOGY

1. Reason for New Hydrologic Analysis (check all that apply)

☐ Not revised (skip to section 2) ☐ No existing analysis ☒ Improved data
☐ Alternative methodology ☐ Proposed Conditions (CLOMR) ☐ Changed physical condition of watershed

2. Comparison of Representative 1%-Annual-Chance Discharges

Location	Drainage Area (Sq. Mi.)	FIS (cfs)	Revised (cfs)

3. Methodology for New Hydrologic Analysis (check all that apply)

☐ Statistical Analysis of Gage Records ☒ Precipitation/Runoff Model HEC-1 and/or FLO-2D [TR-20, HEC-1, HEC-HMS etc.]
☐ Regional Regression Equations ☐ Other (please attach description)

Please enclose all relevant models in digital format, maps, computations (including computation of parameters) and documentation to support the new analysis. The document, "Numerical Models Accepted by FEMA for NFIP Usage" lists the models accepted by FEMA. This document can be found at: http://www.fema.gov/plan/prevent/fhm/en_modl.shtm.

4. Review/Approval of Analysis

If your community requires a regional, state, or federal agency to review the hydrologic analysis, please attach evidence of approval/review.

5. Impacts of Sediment Transport on Hydrology

Was sediment transport considered? ☐ Yes ☒ No If yes, then fill out Section F (Sediment Transport) of Form 3. If No, then attach your explanation for why sediment transport was not considered.

B. HYDRAULICS

1. Reach to be Revised

	Description	Cross Section	Water-Surface Elevations (ft.) Effective	Proposed/Revised
Downstream Limit	4100'N & 90'E of RioVerde D Needlerock R	0	1574 (NGVD 29)	1574.82
Upstream Limit	815'S & 3000'E of Dixileta Dr & 175th St	1.019		1742.19

2. Hydraulic Method Used

Hydraulic Analysis FLO-2D [HEC-2 , HEC-RAS, Other (Attach description)]

B. HYDRAULICS (CONTINUED)

3. Pre-Submittal Review of Hydraulic Models

FEMA has developed two review programs, CHECK-2 and CHECK-RAS, to aid in the review of HEC-2 and HEC-RAS hydraulic models, respectively. These review programs verify that the hydraulic estimates and assumptions in the model data are in accordance with NFIP requirements, and that the data are comparable with the assumptions and limitations of HEC-2/HEC-RAS. CHECK-2 and CHECK-RAS identify areas of potential error or concern. These tools do not replace engineering judgment. CHECK-2 and CHECK-RAS can be downloaded from http://www.fema.gov/plan/prevent/fhm/frm_soft.shtm. We recommend that you review your HEC-2 and HEC-RAS models with CHECK-2 and CHECK-RAS. If you disagree with a message, please attach an explanation of why the message is not valid in this case. Review of your submittal and resolution of valid modeling discrepancies will result in reduced review time.

HEC-2/HEC-RAS models reviewed with CHECK-2/CHECK-RAS? ☐ Yes ☐ No

4. Models Submitted

Duplicate Effective Model*	Natural File Name:	Floodway File Name:
Corrected Effective Model*	Natural File Name:	Floodway File Name:
Existing or Pre-Project Conditions Model	Natural File Name:	Floodway File Name:
Revised or Post-Project Conditions Model	Natural File Name:	Floodway File Name:
Other - (attach description)	Natural File Name:	Floodway File Name:

*Not required for revisions to approximate 1%-annual-chance floodplains (Zone A) – for details, refer to the corresponding section of the instructions.

The document "Numerical Models Accepted by FEMA for NFIP Usage" lists the models accepted by FEMA. This document can be found at: http://www.fema.gov/plan/prevent/fhm/en_modl.shtm.

C. MAPPING REQUIREMENTS

A **certified topographic map** must be submitted showing the following information (where applicable): the boundaries of the effective, existing, and proposed conditions 1%-annual-chance floodplain (for approximate Zone A revisions) or the boundaries of the 1%- and 0.2%-annual-chance floodplains and regulatory floodway (for detailed Zone AE, AO, and AH revisions); location and alignment of all cross sections with stationing control indicated; stream, road, and other alignments (e.g., dams, levees, etc.); current community easements and boundaries; boundaries of the requester's property; certification of a registered professional engineer registered in the subject State; location and description of reference marks; and the referenced vertical datum (NGVD, NAVD, etc.).

Note that the boundaries of the existing or proposed conditions floodplains and regulatory floodway to be shown on the revised FIRM and/or FBFM must tie-in with the effective floodplain and regulatory floodway boundaries. Please attach **a copy of the effective FIRM and/or FBFM,** annotated to show the boundaries of the revised 1%- and 0.2%-annual-chance floodplains and regulatory floodway that tie-in with the boundaries of the effective 1%- and 0.2%-annual-chance floodplain and regulatory floodway at the upstream and downstream limits of the area of revision.

D. COMMON REGULATORY REQUIREMENTS

1. For CLOMR requests, do Base Flood Elevations (BFEs) increase? ☐ Yes ☐ No

For CLOMR requests, if either of the following is true, please submit evidence of compliance with Section 65.12 of the NFIP regulations:
- The proposed project encroaches upon a regulatory floodway and would result in increases above 0.00 foot.
- The proposed project encroaches upon a SFHA with BFEs established and would result in increases above 1.00 foot.

2. Does the request involve the placement or proposed placement of fill? ☐ Yes ☒ No

If Yes, the community must be able to certify that the area to be removed from the special flood hazard area, to include any structures or proposed structures, meets all of the standards of the local floodplain ordinances, and is reasonably safe from flooding in accordance with the NFIP regulations set forth at 44 CFR 60.3(a)(3), 65.5(a)(4), and 65.6(a)(14). Please see the MT-2 instructions for more information.

3. For LOMR requests, is the regulatory floodway being revised? ☒ Yes ☐ No

If Yes, attach evidence of regulatory floodway revision notification. As per Paragraph 65.7(b)(1) of the NFIP Regulations, notification is required for requests involving revisions to the regulatory floodway. (Not required for revisions to approximate 1%-annual-chance floodplains [studied Zone A designation] unless a regulatory floodway is being added. Elements and examples of regulatory floodway revision notification can be found in the MT-2 Form 2 Instructions.)

4. For LOMR requests, does this request require property owner notification and acceptance of BFE increases? ☐ Yes ☒ No

If Yes, please attach proof of property owner notification and acceptance (if available). Elements of and examples of property owner notification can be found in the MT-2 Form 2 Instructions.

FEDERAL EMERGENCY MANAGEMENT AGENCY

RIVERINE HYDROLOGY & HYDRAULICS FORM

O.M.B No. 3067-0148
Expires September 30, 2005

PAPERWORK REDUCTION ACT

Public reporting burden for this form is estimated to average 3 hours per response. The burden estimate includes the time for reviewing instructions, searching existing data sources, gathering and maintaining the needed data, and completing, reviewing, and submitting the form. You are not required to respond to this collection of information unless a valid OMB control number appears in the upper right corner of this form. Send comments regarding the accuracy of the burden estimate and any suggestions for reducing this burden to: Information Collections Management, Federal Emergency Management Agency, 500 C Street, SW, Washington DC 20472, Paperwork Reduction Project (3067-0148). Submission of the form is required to obtain or retain benefits under the National Flood Insurance Program. **Please do not send your completed survey to the above address.**

Flooding Source: Rio Verde Wash J
Note: Fill out one form for each flooding source studied

A. HYDROLOGY

1. Reason for New Hydrologic Analysis (check all that apply)

☐ Not revised (skip to section 2) ☒ No existing analysis ☐ Improved data
☐ Alternative methodology ☐ Proposed Conditions (CLOMR) ☐ Changed physical condition of watershed

2. Comparison of Representative 1%-Annual-Chance Discharges

Location	Drainage Area (Sq. Mi.)	FIS (cfs)	Revised (cfs)

3. Methodology for New Hydrologic Analysis (check all that apply)

☐ Statistical Analysis of Gage Records ☒ Precipitation/Runoff Model HEC-1 and/or FLO-2D [TR-20, HEC-1, HEC-HMS etc.]
☐ Regional Regression Equations ☐ Other (please attach description)

Please enclose all relevant models in digital format, maps, computations (including computation of parameters) and documentation to support the new analysis. The document, "Numerical Models Accepted by FEMA for NFIP Usage" lists the models accepted by FEMA. This document can be found at: http://www.fema.gov/plan/prevent/fhm/en_modl.shtm.

4. Review/Approval of Analysis

If your community requires a regional, state, or federal agency to review the hydrologic analysis, please attach evidence of approval/review.

5. Impacts of Sediment Transport on Hydrology

Was sediment transport considered? ☐ Yes ☒ No If yes, then fill out Section F (Sediment Transport) of Form 3. If No, then attach your explanation for why sediment transport was not considered.

B. HYDRAULICS

1. Reach to be Revised

	Description	Cross Section	Water-Surface Elevations (ft.) Effective	Proposed/Revised
Downstream Limit	6000'N & 2300'E of RioVerde Needlerock R	0		1519.77
Upstream Limit	5400'N & 2300'W of RioVerde Needlerock R	1.002		1711.28

2. Hydraulic Method Used

Hydraulic Analysis FLO-2D [HEC-2 , HEC-RAS, Other (Attach description)]

B. HYDRAULICS (CONTINUED)

3. Pre-Submittal Review of Hydraulic Models

FEMA has developed two review programs, CHECK-2 and CHECK-RAS, to aid in the review of HEC-2 and HEC-RAS hydraulic models, respectively. These review programs verify that the hydraulic estimates and assumptions in the model data are in accordance with NFIP requirements, and that the data are comparable with the assumptions and limitations of HEC-2/HEC-RAS. CHECK-2 and CHECK-RAS identify areas of potential error or concern. These tools do not replace engineering judgment. CHECK-2 and CHECK-RAS can be downloaded from http://www.fema.gov/plan/prevent/fhm/frm_soft.shtm. We recommend that you review your HEC-2 and HEC-RAS models with CHECK-2 and CHECK-RAS. If you disagree with a message, please attach an explanation of why the message is not valid in this case. Review of your submittal and resolution of valid modeling discrepancies will result in reduced review time.

HEC-2/HEC-RAS models reviewed with CHECK-2/CHECK-RAS? ☐ Yes ☐ No

4. Models Submitted

Duplicate Effective Model*	Natural File Name:	Floodway File Name:
Corrected Effective Model*	Natural File Name:	Floodway File Name:
Existing or Pre-Project Conditions Model	Natural File Name:	Floodway File Name:
Revised or Post-Project Conditions Model	Natural File Name:	Floodway File Name:
Other - (attach description)	Natural File Name:	Floodway File Name:

*Not required for revisions to approximate 1%-annual-chance floodplains (Zone A) – for details, refer to the corresponding section of the instructions.

The document "Numerical Models Accepted by FEMA for NFIP Usage" lists the models accepted by FEMA. This document can be found at: http://www.fema.gov/plan/prevent/fhm/en_modl.shtm.

C. MAPPING REQUIREMENTS

A **certified topographic map** must be submitted showing the following information (where applicable): the boundaries of the effective, existing, and proposed conditions 1%-annual-chance floodplain (for approximate Zone A revisions) or the boundaries of the 1%- and 0.2%-annual-chance floodplains and regulatory floodway (for detailed Zone AE, AO, and AH revisions); location and alignment of all cross sections with stationing control indicated; stream, road, and other alignments (e.g., dams, levees, etc.); current community easements and boundaries; boundaries of the requester's property; certification of a registered professional engineer registered in the subject State; location and description of reference marks; and the referenced vertical datum (NGVD, NAVD, etc.).

Note that the boundaries of the existing or proposed conditions floodplains and regulatory floodway to be shown on the revised FIRM and/or FBFM must tie-in with the effective floodplain and regulatory floodway boundaries. Please attach **a copy of the effective FIRM and/or FBFM,** annotated to show the boundaries of the revised 1%- and 0.2%-annual-chance floodplains and regulatory floodway that tie-in with the boundaries of the effective 1%- and 0.2%-annual-chance floodplain and regulatory floodway at the upstream and downstream limits of the area of revision.

D. COMMON REGULATORY REQUIREMENTS

1. For CLOMR requests, do Base Flood Elevations (BFEs) increase? ☐ Yes ☐ No

For CLOMR requests, if either of the following is true, please submit evidence of compliance with Section 65.12 of the NFIP regulations:
- The proposed project encroaches upon a regulatory floodway and would result in increases above 0.00 foot.
- The proposed project encroaches upon a SFHA with BFEs established and would result in increases above 1.00 foot.

2. Does the request involve the placement or proposed placement of fill? ☐ Yes ☒ No

If Yes, the community must be able to certify that the area to be removed from the special flood hazard area, to include any structures or proposed structures, meets all of the standards of the local floodplain ordinances, and is reasonably safe from flooding in accordance with the NFIP regulations set forth at 44 CFR 60.3(a)(3), 65.5(a)(4), and 65.6(a)(14). Please see the MT-2 instructions for more information.

3. For LOMR requests, is the regulatory floodway being revised? ☐ Yes ☒ No

If Yes, attach evidence of regulatory floodway revision notification. As per Paragraph 65.7(b)(1) of the NFIP Regulations, notification is required for requests involving revisions to the regulatory floodway. (Not required for revisions to approximate 1%-annual-chance floodplains [studied Zone A designation] unless a regulatory floodway is being added. Elements and examples of regulatory floodway revision notification can be found in the MT-2 Form 2 Instructions.)

4. For LOMR requests, does this request require property owner notification and acceptance of BFE increases? ☐ Yes ☒ No

If Yes, please attach proof of property owner notification and acceptance (if available). Elements of and examples of property owner notification can be found in the MT-2 Form 2 Instructions.

FEDERAL EMERGENCY MANAGEMENT AGENCY

RIVERINE HYDROLOGY & HYDRAULICS FORM

O.M.B No. 3067-0148
Expires September 30, 2005

PAPERWORK REDUCTION ACT

Public reporting burden for this form is estimated to average 3 hours per response. The burden estimate includes the time for reviewing instructions, searching existing data sources, gathering and maintaining the needed data, and completing, reviewing, and submitting the form. You are not required to respond to this collection of information unless a valid OMB control number appears in the upper right corner of this form. Send comments regarding the accuracy of the burden estimate and any suggestions for reducing this burden to: Information Collections Management, Federal Emergency Management Agency, 500 C Street, SW, Washington DC 20472, Paperwork Reduction Project (3067-0148). Submission of the form is required to obtain or retain benefits under the National Flood Insurance Program. **Please do not send your completed survey to the above address.**

Flooding Source: Rio Verde Wash K Split 1
Note: Fill out one form for each flooding source studied

A. HYDROLOGY

1. Reason for New Hydrologic Analysis (check all that apply)

☐ Not revised (skip to section 2) ☒ No existing analysis ☐ Improved data
☐ Alternative methodology ☐ Proposed Conditions (CLOMR) ☐ Changed physical condition of watershed

2. Comparison of Representative 1%-Annual-Chance Discharges

Location	Drainage Area (Sq. Mi.)	FIS (cfs)	Revised (cfs)

3. Methodology for New Hydrologic Analysis (check all that apply)

☐ Statistical Analysis of Gage Records ☒ Precipitation/Runoff Model HEC-1 and/or FLO-2D [TR-20, HEC-1, HEC-HMS etc.]
☐ Regional Regression Equations ☐ Other (please attach description)

Please enclose all relevant models in digital format, maps, computations (including computation of parameters) and documentation to support the new analysis. The document, "Numerical Models Accepted by FEMA for NFIP Usage" lists the models accepted by FEMA. This document can be found at: http://www.fema.gov/plan/prevent/fhm/en_modl.shtm.

4. Review/Approval of Analysis

If your community requires a regional, state, or federal agency to review the hydrologic analysis, please attach evidence of approval/review.

5. Impacts of Sediment Transport on Hydrology

Was sediment transport considered? ☐ Yes ☒ No If yes, then fill out Section F (Sediment Transport) of Form 3. If No, then attach your explanation for why sediment transport was not considered.

B. HYDRAULICS

1. Reach to be Revised

	Description	Cross Section	Water-Surface Elevations (ft.) Effective	Proposed/Revised
Downstream Limit	460'N & 40'E of Dixileta Dr & 168th St.	0		1962.53
Upstream Limit	100'S & 100' E of Montgomery Rd 164th St	0.651		2055.07

2. Hydraulic Method Used

Hydraulic Analysis FLO-2D [HEC-2 , HEC-RAS, Other (Attach description)]

B. HYDRAULICS (CONTINUED)

3. Pre-Submittal Review of Hydraulic Models

FEMA has developed two review programs, CHECK-2 and CHECK-RAS, to aid in the review of HEC-2 and HEC-RAS hydraulic models, respectively. These review programs verify that the hydraulic estimates and assumptions in the model data are in accordance with NFIP requirements, and that the data are comparable with the assumptions and limitations of HEC-2/HEC-RAS. CHECK-2 and CHECK-RAS identify areas of potential error or concern. These tools do not replace engineering judgment. CHECK-2 and CHECK-RAS can be downloaded from http://www.fema.gov/plan/prevent/fhm/frm_soft.shtm. We recommend that you review your HEC-2 and HEC-RAS models with CHECK-2 and CHECK-RAS. If you disagree with a message, please attach an explanation of why the message is not valid in this case. Review of your submittal and resolution of valid modeling discrepancies will result in reduced review time.

HEC-2/HEC-RAS models reviewed with CHECK-2/CHECK-RAS? ☐ Yes ☐ No

4. Models Submitted

Duplicate Effective Model*	Natural File Name:	Floodway File Name:
Corrected Effective Model*	Natural File Name:	Floodway File Name:
Existing or Pre-Project Conditions Model	Natural File Name:	Floodway File Name:
Revised or Post-Project Conditions Model	Natural File Name:	Floodway File Name:
Other - (attach description)	Natural File Name:	Floodway File Name:

*Not required for revisions to approximate 1%-annual-chance floodplains (Zone A) – for details, refer to the corresponding section of the instructions.

The document "Numerical Models Accepted by FEMA for NFIP Usage" lists the models accepted by FEMA. This document can be found at: http://www.fema.gov/plan/prevent/fhm/en_modl.shtm.

C. MAPPING REQUIREMENTS

A **certified topographic map** must be submitted showing the following information (where applicable): the boundaries of the effective, existing, and proposed conditions 1%-annual-chance floodplain (for approximate Zone A revisions) or the boundaries of the 1%- and 0.2%-annual-chance floodplains and regulatory floodway (for detailed Zone AE, AO, and AH revisions); location and alignment of all cross sections with stationing control indicated; stream, road, and other alignments (e.g., dams, levees, etc.); current community easements and boundaries; boundaries of the requester's property; certification of a registered professional engineer registered in the subject State; location and description of reference marks; and the referenced vertical datum (NGVD, NAVD, etc.).

Note that the boundaries of the existing or proposed conditions floodplains and regulatory floodway to be shown on the revised FIRM and/or FBFM must tie-in with the effective floodplain and regulatory floodway boundaries. Please attach **a copy of the effective FIRM and/or FBFM,** annotated to show the boundaries of the revised 1%- and 0.2%-annual-chance floodplains and regulatory floodway that tie-in with the boundaries of the effective 1%- and 0.2%-annual-chance floodplain and regulatory floodway at the upstream and downstream limits of the area of revision.

D. COMMON REGULATORY REQUIREMENTS

1. For CLOMR requests, do Base Flood Elevations (BFEs) increase? ☐ Yes ☐ No

For CLOMR requests, if either of the following is true, please submit evidence of compliance with Section 65.12 of the NFIP regulations:
- The proposed project encroaches upon a regulatory floodway and would result in increases above 0.00 foot.
- The proposed project encroaches upon a SFHA with BFEs established and would result in increases above 1.00 foot.

2. Does the request involve the placement or proposed placement of fill? ☐ Yes ☒ No

If Yes, the community must be able to certify that the area to be removed from the special flood hazard area, to include any structures or proposed structures, meets all of the standards of the local floodplain ordinances, and is reasonably safe from flooding in accordance with the NFIP regulations set forth at 44 CFR 60.3(a)(3), 65.5(a)(4), and 65.6(a)(14). Please see the MT-2 instructions for more information.

3. For LOMR requests, is the regulatory floodway being revised? ☐ Yes ☒ No

If Yes, attach evidence of regulatory floodway revision notification. As per Paragraph 65.7(b)(1) of the NFIP Regulations, notification is required for requests involving revisions to the regulatory floodway. (Not required for revisions to approximate 1%-annual-chance floodplains [studied Zone A designation] unless a regulatory floodway is being added. Elements and examples of regulatory floodway revision notification can be found in the MT-2 Form 2 Instructions.)

4. For LOMR requests, does this request require property owner notification and acceptance of BFE increases? ☐ Yes ☒ No

If Yes, please attach proof of property owner notification and acceptance (if available). Elements of and examples of property owner notification can be found in the MT-2 Form 2 Instructions.

FEDERAL EMERGENCY MANAGEMENT AGENCY

RIVERINE HYDROLOGY & HYDRAULICS FORM

O.M.B No. 3067-0148
Expires September 30, 2005

PAPERWORK REDUCTION ACT

Public reporting burden for this form is estimated to average 3 hours per response. The burden estimate includes the time for reviewing instructions, searching existing data sources, gathering and maintaining the needed data, and completing, reviewing, and submitting the form. You are not required to respond to this collection of information unless a valid OMB control number appears in the upper right corner of this form. Send comments regarding the accuracy of the burden estimate and any suggestions for reducing this burden to: Information Collections Management, Federal Emergency Management Agency, 500 C Street, SW, Washington DC 20472, Paperwork Reduction Project (3067-0148). Submission of the form is required to obtain or retain benefits under the National Flood Insurance Program. **Please do not send your completed survey to the above address.**

Flooding Source: Rio Verde Wash K Split 3
Note: Fill out one form for each flooding source studied

A. HYDROLOGY

1. Reason for New Hydrologic Analysis (check all that apply)

☐ Not revised (skip to section 2) ☒ No existing analysis ☐ Improved data
☐ Alternative methodology ☐ Proposed Conditions (CLOMR) ☐ Changed physical condition of watershed

2. Comparison of Representative 1%-Annual-Chance Discharges

Location	Drainage Area (Sq. Mi.)	FIS (cfs)	Revised (cfs)

3. Methodology for New Hydrologic Analysis (check all that apply)

☐ Statistical Analysis of Gage Records ☒ Precipitation/Runoff Model HEC-1 and/or FLO-2D [TR-20, HEC-1, HEC-HMS etc.]
☐ Regional Regression Equations ☐ Other (please attach description)

Please enclose all relevant models in digital format, maps, computations (including computation of parameters) and documentation to support the new analysis. The document, "Numerical Models Accepted by FEMA for NFIP Usage" lists the models accepted by FEMA. This document can be found at: http://www.fema.gov/plan/prevent/fhm/en_modl.shtm.

4. Review/Approval of Analysis

If your community requires a regional, state, or federal agency to review the hydrologic analysis, please attach evidence of approval/review.

5. Impacts of Sediment Transport on Hydrology

Was sediment transport considered? ☐ Yes ☒ No If yes, then fill out Section F (Sediment Transport) of Form 3. If No, then attach your explanation for why sediment transport was not considered.

B. HYDRAULICS

1. Reach to be Revised

	Description	Cross Section	Water-Surface Elevations (ft.) Effective	Proposed/Revised
Downstream Limit	2500'N & 600'W of Dixileta Dr & 160th St	0		2146.20
Upstream Limit	920'N of Montgomery Rd & 152nd St.	1.032		2279.85

2. Hydraulic Method Used

Hydraulic Analysis FLO-2D [HEC-2 , HEC-RAS, Other (Attach description)]

B. HYDRAULICS (CONTINUED)

3. Pre-Submittal Review of Hydraulic Models

FEMA has developed two review programs, CHECK-2 and CHECK-RAS, to aid in the review of HEC-2 and HEC-RAS hydraulic models, respectively. These review programs verify that the hydraulic estimates and assumptions in the model data are in accordance with NFIP requirements, and that the data are comparable with the assumptions and limitations of HEC-2/HEC-RAS. CHECK-2 and CHECK-RAS identify areas of potential error or concern. These tools do not replace engineering judgment. CHECK-2 and CHECK-RAS can be downloaded from http://www.fema.gov/plan/prevent/fhm/frm_soft.shtm. We recommend that you review your HEC-2 and HEC-RAS models with CHECK-2 and CHECK-RAS. If you disagree with a message, please attach an explanation of why the message is not valid in this case. Review of your submittal and resolution of valid modeling discrepancies will result in reduced review time.

HEC-2/HEC-RAS models reviewed with CHECK-2/CHECK-RAS? ☐ Yes ☐ No

4. Models Submitted

Duplicate Effective Model*	Natural File Name:	Floodway File Name:
Corrected Effective Model*	Natural File Name:	Floodway File Name:
Existing or Pre-Project Conditions Model	Natural File Name:	Floodway File Name:
Revised or Post-Project Conditions Model	Natural File Name:	Floodway File Name:
Other - (attach description)	Natural File Name:	Floodway File Name:

*Not required for revisions to approximate 1%-annual-chance floodplains (Zone A) – for details, refer to the corresponding section of the instructions.

The document "Numerical Models Accepted by FEMA for NFIP Usage" lists the models accepted by FEMA. This document can be found at: http://www.fema.gov/plan/prevent/fhm/en_modl.shtm.

C. MAPPING REQUIREMENTS

A **certified topographic map** must be submitted showing the following information (where applicable): the boundaries of the effective, existing, and proposed conditions 1%-annual-chance floodplain (for approximate Zone A revisions) or the boundaries of the 1%- and 0.2%-annual-chance floodplains and regulatory floodway (for detailed Zone AE, AO, and AH revisions); location and alignment of all cross sections with stationing control indicated; stream, road, and other alignments (e.g., dams, levees, etc.); current community easements and boundaries; boundaries of the requester's property; certification of a registered professional engineer registered in the subject State; location and description of reference marks; and the referenced vertical datum (NGVD, NAVD, etc.).

Note that the boundaries of the existing or proposed conditions floodplains and regulatory floodway to be shown on the revised FIRM and/or FBFM must tie-in with the effective floodplain and regulatory floodway boundaries. Please attach **a copy of the effective FIRM and/or FBFM,** annotated to show the boundaries of the revised 1%- and 0.2%-annual-chance floodplains and regulatory floodway that tie-in with the boundaries of the effective 1%- and 0.2%-annual-chance floodplain and regulatory floodway at the upstream and downstream limits of the area of revision.

D. COMMON REGULATORY REQUIREMENTS

1. For CLOMR requests, do Base Flood Elevations (BFEs) increase? ☐ Yes ☐ No

For CLOMR requests, if either of the following is true, please submit evidence of compliance with Section 65.12 of the NFIP regulations:
- The proposed project encroaches upon a regulatory floodway and would result in increases above 0.00 foot.
- The proposed project encroaches upon a SFHA with BFEs established and would result in increases above 1.00 foot.

2. Does the request involve the placement or proposed placement of fill? ☐ Yes ☒ No

If Yes, the community must be able to certify that the area to be removed from the special flood hazard area, to include any structures or proposed structures, meets all of the standards of the local floodplain ordinances, and is reasonably safe from flooding in accordance with the NFIP regulations set forth at 44 CFR 60.3(a)(3), 65.5(a)(4), and 65.6(a)(14). Please see the MT-2 instructions for more information.

3. For LOMR requests, is the regulatory floodway being revised? ☐ Yes ☒ No

If Yes, attach evidence of regulatory floodway revision notification. As per Paragraph 65.7(b)(1) of the NFIP Regulations, notification is required for requests involving revisions to the regulatory floodway. (Not required for revisions to approximate 1%-annual-chance floodplains [studied Zone A designation] unless a regulatory floodway is being added. Elements and examples of regulatory floodway revision notification can be found in the MT-2 Form 2 Instructions.)

4. For LOMR requests, does this request require property owner notification and acceptance of BFE increases? ☐ Yes ☒ No

If Yes, please attach proof of property owner notification and acceptance (if available). Elements of and examples of property owner notification can be found in the MT-2 Form 2 Instructions.

FEDERAL EMERGENCY MANAGEMENT AGENCY

RIVERINE HYDROLOGY & HYDRAULICS FORM

O.M.B No. 3067-0148
Expires September 30, 2005

PAPERWORK REDUCTION ACT

Public reporting burden for this form is estimated to average 3 hours per response. The burden estimate includes the time for reviewing instructions, searching existing data sources, gathering and maintaining the needed data, and completing, reviewing, and submitting the form. You are not required to respond to this collection of information unless a valid OMB control number appears in the upper right corner of this form. Send comments regarding the accuracy of the burden estimate and any suggestions for reducing this burden to: Information Collections Management, Federal Emergency Management Agency, 500 C Street, SW, Washington DC 20472, Paperwork Reduction Project (3067-0148). Submission of the form is required to obtain or retain benefits under the National Flood Insurance Program. **Please do not send your completed survey to the above address.**

Flooding Source: Rio Verde Wash K Split 3A
Note: Fill out one form for each flooding source studied

A. HYDROLOGY

1. Reason for New Hydrologic Analysis (check all that apply)

☐ Not revised (skip to section 2) ☒ No existing analysis ☐ Improved data
☐ Alternative methodology ☐ Proposed Conditions (CLOMR) ☐ Changed physical condition of watershed

2. Comparison of Representative 1%-Annual-Chance Discharges

Location	Drainage Area (Sq. Mi.)	FIS (cfs)	Revised (cfs)

3. Methodology for New Hydrologic Analysis (check all that apply)

☐ Statistical Analysis of Gage Records ☒ Precipitation/Runoff Model HEC-1 and/or FLO-2D [TR-20, HEC-1, HEC-HMS etc.]
☐ Regional Regression Equations ☐ Other (please attach description)

Please enclose all relevant models in digital format, maps, computations (including computation of parameters) and documentation to support the new analysis. The document, "Numerical Models Accepted by FEMA for NFIP Usage" lists the models accepted by FEMA. This document can be found at: http://www.fema.gov/plan/prevent/fhm/en_modl.shtm.

4. Review/Approval of Analysis

If your community requires a regional, state, or federal agency to review the hydrologic analysis, please attach evidence of approval/review.

5. Impacts of Sediment Transport on Hydrology

Was sediment transport considered? ☐ Yes ☒ No If yes, then fill out Section F (Sediment Transport) of Form 3. If No, then attach your explanation for why sediment transport was not considered.

B. HYDRAULICS

1. Reach to be Revised

	Description	Cross Section	Water-Surface Elevations (ft.) Effective	Proposed/Revised
Downstream Limit	380'N of Dixileta Dr & 174th St.	0		1847.19
Upstream Limit	2300'N & 1400'W of Dixileta Dr &160th St	2.143		2170.46

2. Hydraulic Method Used

Hydraulic Analysis FLO-2D [HEC-2 , HEC-RAS, Other (Attach description)]

B. HYDRAULICS (CONTINUED)

3. Pre-Submittal Review of Hydraulic Models

FEMA has developed two review programs, CHECK-2 and CHECK-RAS, to aid in the review of HEC-2 and HEC-RAS hydraulic models, respectively. These review programs verify that the hydraulic estimates and assumptions in the model data are in accordance with NFIP requirements, and that the data are comparable with the assumptions and limitations of HEC-2/HEC-RAS. CHECK-2 and CHECK-RAS identify areas of potential error or concern. These tools do not replace engineering judgment. CHECK-2 and CHECK-RAS can be downloaded from http://www.fema.gov/plan/prevent/fhm/frm_soft.shtm. We recommend that you review your HEC-2 and HEC-RAS models with CHECK-2 and CHECK-RAS. If you disagree with a message, please attach an explanation of why the message is not valid in this case. Review of your submittal and resolution of valid modeling discrepancies will result in reduced review time.

HEC-2/HEC-RAS models reviewed with CHECK-2/CHECK-RAS? ☐ Yes ☐ No

4. Models Submitted

Duplicate Effective Model*	Natural File Name:	Floodway File Name:
Corrected Effective Model*	Natural File Name:	Floodway File Name:
Existing or Pre-Project Conditions Model	Natural File Name:	Floodway File Name:
Revised or Post-Project Conditions Model	Natural File Name:	Floodway File Name:
Other - (attach description)	Natural File Name:	Floodway File Name:

*Not required for revisions to approximate 1%-annual-chance floodplains (Zone A) – for details, refer to the corresponding section of the instructions.

The document "Numerical Models Accepted by FEMA for NFIP Usage" lists the models accepted by FEMA. This document can be found at: http://www.fema.gov/plan/prevent/fhm/en_modl.shtm.

C. MAPPING REQUIREMENTS

A **certified topographic map** must be submitted showing the following information (where applicable): the boundaries of the effective, existing, and proposed conditions 1%-annual-chance floodplain (for approximate Zone A revisions) or the boundaries of the 1%- and 0.2%-annual-chance floodplains and regulatory floodway (for detailed Zone AE, AO, and AH revisions); location and alignment of all cross sections with stationing control indicated; stream, road, and other alignments (e.g., dams, levees, etc.); current community easements and boundaries; boundaries of the requester's property; certification of a registered professional engineer registered in the subject State; location and description of reference marks; and the referenced vertical datum (NGVD, NAVD, etc.).

Note that the boundaries of the existing or proposed conditions floodplains and regulatory floodway to be shown on the revised FIRM and/or FBFM must tie-in with the effective floodplain and regulatory floodway boundaries. Please attach **a copy of the effective FIRM and/or FBFM,** annotated to show the boundaries of the revised 1%- and 0.2%-annual-chance floodplains and regulatory floodway that tie-in with the boundaries of the effective 1%- and 0.2%-annual-chance floodplain and regulatory floodway at the upstream and downstream limits of the area of revision.

D. COMMON REGULATORY REQUIREMENTS

1. For CLOMR requests, do Base Flood Elevations (BFEs) increase? ☐ Yes ☐ No

For CLOMR requests, if either of the following is true, please submit evidence of compliance with Section 65.12 of the NFIP regulations:
- The proposed project encroaches upon a regulatory floodway and would result in increases above 0.00 foot.
- The proposed project encroaches upon a SFHA with BFEs established and would result in increases above 1.00 foot.

2. Does the request involve the placement or proposed placement of fill? ☐ Yes ☒ No

If Yes, the community must be able to certify that the area to be removed from the special flood hazard area, to include any structures or proposed structures, meets all of the standards of the local floodplain ordinances, and is reasonably safe from flooding in accordance with the NFIP regulations set forth at 44 CFR 60.3(a)(3), 65.5(a)(4), and 65.6(a)(14). Please see the MT-2 instructions for more information.

3. For LOMR requests, is the regulatory floodway being revised? ☐ Yes ☒ No

If Yes, attach evidence of regulatory floodway revision notification. As per Paragraph 65.7(b)(1) of the NFIP Regulations, notification is required for requests involving revisions to the regulatory floodway. (Not required for revisions to approximate 1%-annual-chance floodplains [studied Zone A designation] unless a regulatory floodway is being added. Elements and examples of regulatory floodway revision notification can be found in the MT-2 Form 2 Instructions.)

4. For LOMR requests, does this request require property owner notification and acceptance of BFE increases? ☐ Yes ☒ No

If Yes, please attach proof of property owner notification and acceptance (if available). Elements of and examples of property owner notification can be found in the MT-2 Form 2 Instructions.

FEDERAL EMERGENCY MANAGEMENT AGENCY

RIVERINE HYDROLOGY & HYDRAULICS FORM

O.M.B No. 3067-0148
Expires September 30, 2005

PAPERWORK REDUCTION ACT

Public reporting burden for this form is estimated to average 3 hours per response. The burden estimate includes the time for reviewing instructions, searching existing data sources, gathering and maintaining the needed data, and completing, reviewing, and submitting the form. You are not required to respond to this collection of information unless a valid OMB control number appears in the upper right corner of this form. Send comments regarding the accuracy of the burden estimate and any suggestions for reducing this burden to: Information Collections Management, Federal Emergency Management Agency, 500 C Street, SW, Washington DC 20472, Paperwork Reduction Project (3067-0148). Submission of the form is required to obtain or retain benefits under the National Flood Insurance Program. **Please do not send your completed survey to the above address.**

Flooding Source: Rio Verde Wash K Trib 1
Note: Fill out one form for each flooding source studied

A. HYDROLOGY

1. Reason for New Hydrologic Analysis (check all that apply)

☐ Not revised (skip to section 2) ☒ No existing analysis ☐ Improved data
☐ Alternative methodology ☐ Proposed Conditions (CLOMR) ☐ Changed physical condition of watershed

2. Comparison of Representative 1%-Annual-Chance Discharges

Location	Drainage Area (Sq. Mi.)	FIS (cfs)	Revised (cfs)

3. Methodology for New Hydrologic Analysis (check all that apply)

☐ Statistical Analysis of Gage Records ☒ Precipitation/Runoff Model HEC-1 and/or FLO-2D [TR-20, HEC-1, HEC-HMS etc.]
☐ Regional Regression Equations ☐ Other (please attach description)

Please enclose all relevant models in digital format, maps, computations (including computation of parameters) and documentation to support the new analysis. The document, "Numerical Models Accepted by FEMA for NFIP Usage" lists the models accepted by FEMA. This document can be found at: http://www.fema.gov/plan/prevent/fhm/en_modl.shtm.

4. Review/Approval of Analysis

If your community requires a regional, state, or federal agency to review the hydrologic analysis, please attach evidence of approval/review.

5. Impacts of Sediment Transport on Hydrology

Was sediment transport considered? ☐ Yes ☒ No If yes, then fill out Section F (Sediment Transport) of Form 3. If No, then attach your explanation for why sediment transport was not considered.

B. HYDRAULICS

1. Reach to be Revised

	Description	Cross Section	Water-Surface Elevations (ft.) Effective	Proposed/Revised
Downstream Limit	750'N & 8500'E of Dixileta Dr & 175th St	0		1530.98
Upstream Limit	2200'N & 4670'E of Dixileta Dr & 175th S	0.852		1700.09

2. Hydraulic Method Used

Hydraulic Analysis FLO-2D [HEC-2 , HEC-RAS, Other (Attach description)]

B. HYDRAULICS (CONTINUED)

3. Pre-Submittal Review of Hydraulic Models

FEMA has developed two review programs, CHECK-2 and CHECK-RAS, to aid in the review of HEC-2 and HEC-RAS hydraulic models, respectively. These review programs verify that the hydraulic estimates and assumptions in the model data are in accordance with NFIP requirements, and that the data are comparable with the assumptions and limitations of HEC-2/HEC-RAS. CHECK-2 and CHECK-RAS identify areas of potential error or concern. These tools do not replace engineering judgment. CHECK-2 and CHECK-RAS can be downloaded from http://www.fema.gov/plan/prevent/fhm/frm_soft.shtm. We recommend that you review your HEC-2 and HEC-RAS models with CHECK-2 and CHECK-RAS. If you disagree with a message, please attach an explanation of why the message is not valid in this case. Review of your submittal and resolution of valid modeling discrepancies will result in reduced review time.

HEC-2/HEC-RAS models reviewed with CHECK-2/CHECK-RAS? ☐ Yes ☐ No

4. Models Submitted

Duplicate Effective Model*	Natural File Name:	Floodway File Name:
Corrected Effective Model*	Natural File Name:	Floodway File Name:
Existing or Pre-Project Conditions Model	Natural File Name:	Floodway File Name:
Revised or Post-Project Conditions Model	Natural File Name:	Floodway File Name:
Other - (attach description)	Natural File Name:	Floodway File Name:

*Not required for revisions to approximate 1%-annual-chance floodplains (Zone A) – for details, refer to the corresponding section of the instructions.

The document "Numerical Models Accepted by FEMA for NFIP Usage" lists the models accepted by FEMA. This document can be found at: http://www.fema.gov/plan/prevent/fhm/en_modl.shtm.

C. MAPPING REQUIREMENTS

A **certified topographic map** must be submitted showing the following information (where applicable): the boundaries of the effective, existing, and proposed conditions 1%-annual-chance floodplain (for approximate Zone A revisions) or the boundaries of the 1%- and 0.2%-annual-chance floodplains and regulatory floodway (for detailed Zone AE, AO, and AH revisions); location and alignment of all cross sections with stationing control indicated; stream, road, and other alignments (e.g., dams, levees, etc.); current community easements and boundaries; boundaries of the requester's property; certification of a registered professional engineer registered in the subject State; location and description of reference marks; and the referenced vertical datum (NGVD, NAVD, etc.).

Note that the boundaries of the existing or proposed conditions floodplains and regulatory floodway to be shown on the revised FIRM and/or FBFM must tie-in with the effective floodplain and regulatory floodway boundaries. Please attach **a copy of the effective FIRM and/or FBFM,** annotated to show the boundaries of the revised 1%- and 0.2%-annual-chance floodplains and regulatory floodway that tie-in with the boundaries of the effective 1%- and 0.2%-annual-chance floodplain and regulatory floodway at the upstream and downstream limits of the area of revision.

D. COMMON REGULATORY REQUIREMENTS

1. For CLOMR requests, do Base Flood Elevations (BFEs) increase? ☐ Yes ☐ No

For CLOMR requests, if either of the following is true, please submit evidence of compliance with Section 65.12 of the NFIP regulations:
- The proposed project encroaches upon a regulatory floodway and would result in increases above 0.00 foot.
- The proposed project encroaches upon a SFHA with BFEs established and would result in increases above 1.00 foot.

2. Does the request involve the placement or proposed placement of fill? ☐ Yes ☒ No

If Yes, the community must be able to certify that the area to be removed from the special flood hazard area, to include any structures or proposed structures, meets all of the standards of the local floodplain ordinances, and is reasonably safe from flooding in accordance with the NFIP regulations set forth at 44 CFR 60.3(a)(3), 65.5(a)(4), and 65.6(a)(14). Please see the MT-2 instructions for more information.

3. For LOMR requests, is the regulatory floodway being revised? ☐ Yes ☒ No

If Yes, attach evidence of regulatory floodway revision notification. As per Paragraph 65.7(b)(1) of the NFIP Regulations, notification is required for requests involving revisions to the regulatory floodway. (Not required for revisions to approximate 1%-annual-chance floodplains [studied Zone A designation] unless a regulatory floodway is being added. Elements and examples of regulatory floodway revision notification can be found in the MT-2 Form 2 Instructions.)

4. For LOMR requests, does this request require property owner notification and acceptance of BFE increases? ☐ Yes ☒ No

If Yes, please attach proof of property owner notification and acceptance (if available). Elements of and examples of property owner notification can be found in the MT-2 Form 2 Instructions.

FEDERAL EMERGENCY MANAGEMENT AGENCY

RIVERINE HYDROLOGY & HYDRAULICS FORM

O.M.B No. 3067-0148
Expires September 30, 2005

PAPERWORK REDUCTION ACT

Public reporting burden for this form is estimated to average 3 hours per response. The burden estimate includes the time for reviewing instructions, searching existing data sources, gathering and maintaining the needed data, and completing, reviewing, and submitting the form. You are not required to respond to this collection of information unless a valid OMB control number appears in the upper right corner of this form. Send comments regarding the accuracy of the burden estimate and any suggestions for reducing this burden to: Information Collections Management, Federal Emergency Management Agency, 500 C Street, SW, Washington DC 20472, Paperwork Reduction Project (3067-0148). Submission of the form is required to obtain or retain benefits under the National Flood Insurance Program. **Please do not send your completed survey to the above address.**

Flooding Source: Rio Verde Wash K Trib 10
Note: Fill out one form for each flooding source studied

A. HYDROLOGY

1. Reason for New Hydrologic Analysis (check all that apply)

☐ Not revised (skip to section 2) ☒ No existing analysis ☐ Improved data
☐ Alternative methodology ☐ Proposed Conditions (CLOMR) ☐ Changed physical condition of watershed

2. Comparison of Representative 1%-Annual-Chance Discharges

Location	Drainage Area (Sq. Mi.)	FIS (cfs)	Revised (cfs)

3. Methodology for New Hydrologic Analysis (check all that apply)

☐ Statistical Analysis of Gage Records ☒ Precipitation/Runoff Model HEC-1 and/or FLO-2D [TR-20, HEC-1, HEC-HMS etc.]
☐ Regional Regression Equations ☐ Other (please attach description)

Please enclose all relevant models in digital format, maps, computations (including computation of parameters) and documentation to support the new analysis. The document, "Numerical Models Accepted by FEMA for NFIP Usage" lists the models accepted by FEMA. This document can be found at: http://www.fema.gov/plan/prevent/fhm/en_modl.shtm.

4. Review/Approval of Analysis

If your community requires a regional, state, or federal agency to review the hydrologic analysis, please attach evidence of approval/review.

5. Impacts of Sediment Transport on Hydrology

Was sediment transport considered? ☐ Yes ☒ No If yes, then fill out Section F (Sediment Transport) of Form 3. If No, then attach your explanation for why sediment transport was not considered.

B. HYDRAULICS

1. Reach to be Revised

	Description	Cross Section	Water-Surface Elevations (ft.) Effective	Proposed/Revised
Downstream Limit	850'N & 2100'E of Lone Mnt Rd & 144th St	0		2376.01
Upstream Limit	730'E of Ranch Rd & 140th St.	0.919		2487.40

2. Hydraulic Method Used

Hydraulic Analysis FLO-2D [HEC-2 , HEC-RAS, Other (Attach description)]

B. HYDRAULICS (CONTINUED)

3. Pre-Submittal Review of Hydraulic Models

FEMA has developed two review programs, CHECK-2 and CHECK-RAS, to aid in the review of HEC-2 and HEC-RAS hydraulic models, respectively. These review programs verify that the hydraulic estimates and assumptions in the model data are in accordance with NFIP requirements, and that the data are comparable with the assumptions and limitations of HEC-2/HEC-RAS. CHECK-2 and CHECK-RAS identify areas of potential error or concern. These tools do not replace engineering judgment. CHECK-2 and CHECK-RAS can be downloaded from http://www.fema.gov/plan/prevent/fhm/frm_soft.shtm. We recommend that you review your HEC-2 and HEC-RAS models with CHECK-2 and CHECK-RAS. If you disagree with a message, please attach an explanation of why the message is not valid in this case. Review of your submittal and resolution of valid modeling discrepancies will result in reduced review time.

HEC-2/HEC-RAS models reviewed with CHECK-2/CHECK-RAS? ☐ Yes ☐ No

4. Models Submitted

Duplicate Effective Model*	Natural File Name:	Floodway File Name:
Corrected Effective Model*	Natural File Name:	Floodway File Name:
Existing or Pre-Project Conditions Model	Natural File Name:	Floodway File Name:
Revised or Post-Project Conditions Model	Natural File Name:	Floodway File Name:
Other - (attach description)	Natural File Name:	Floodway File Name:

*Not required for revisions to approximate 1%-annual-chance floodplains (Zone A) – for details, refer to the corresponding section of the instructions.

The document "Numerical Models Accepted by FEMA for NFIP Usage" lists the models accepted by FEMA. This document can be found at: http://www.fema.gov/plan/prevent/fhm/en_modl.shtm.

C. MAPPING REQUIREMENTS

A **certified topographic map** must be submitted showing the following information (where applicable): the boundaries of the effective, existing, and proposed conditions 1%-annual-chance floodplain (for approximate Zone A revisions) or the boundaries of the 1%- and 0.2%-annual-chance floodplains and regulatory floodway (for detailed Zone AE, AO, and AH revisions); location and alignment of all cross sections with stationing control indicated; stream, road, and other alignments (e.g., dams, levees, etc.); current community easements and boundaries; boundaries of the requester's property; certification of a registered professional engineer registered in the subject State; location and description of reference marks; and the referenced vertical datum (NGVD, NAVD, etc.).

Note that the boundaries of the existing or proposed conditions floodplains and regulatory floodway to be shown on the revised FIRM and/or FBFM must tie-in with the effective floodplain and regulatory floodway boundaries. Please attach **a copy of the effective FIRM and/or FBFM,** annotated to show the boundaries of the revised 1%- and 0.2%-annual-chance floodplains and regulatory floodway that tie-in with the boundaries of the effective 1%- and 0.2%-annual-chance floodplain and regulatory floodway at the upstream and downstream limits of the area of revision.

D. COMMON REGULATORY REQUIREMENTS

1. For CLOMR requests, do Base Flood Elevations (BFEs) increase? ☐ Yes ☐ No

For CLOMR requests, if either of the following is true, please submit evidence of compliance with Section 65.12 of the NFIP regulations:
- The proposed project encroaches upon a regulatory floodway and would result in increases above 0.00 foot.
- The proposed project encroaches upon a SFHA with BFEs established and would result in increases above 1.00 foot.

2. Does the request involve the placement or proposed placement of fill? ☐ Yes ☒ No

If Yes, the community must be able to certify that the area to be removed from the special flood hazard area, to include any structures or proposed structures, meets all of the standards of the local floodplain ordinances, and is reasonably safe from flooding in accordance with the NFIP regulations set forth at 44 CFR 60.3(a)(3), 65.5(a)(4), and 65.6(a)(14). Please see the MT-2 instructions for more information.

3. For LOMR requests, is the regulatory floodway being revised? ☐ Yes ☒ No

If Yes, attach evidence of regulatory floodway revision notification. As per Paragraph 65.7(b)(1) of the NFIP Regulations, notification is required for requests involving revisions to the regulatory floodway. (Not required for revisions to approximate 1%-annual-chance floodplains [studied Zone A designation] unless a regulatory floodway is being added. Elements and examples of regulatory floodway revision notification can be found in the MT-2 Form 2 Instructions.)

4. For LOMR requests, does this request require property owner notification and acceptance of BFE increases? ☐ Yes ☒ No

If Yes, please attach proof of property owner notification and acceptance (if available). Elements of and examples of property owner notification can be found in the MT-2 Form 2 Instructions.

FEDERAL EMERGENCY MANAGEMENT AGENCY

RIVERINE HYDROLOGY & HYDRAULICS FORM

O.M.B No. 3067-0148
Expires September 30, 2005

PAPERWORK REDUCTION ACT

Public reporting burden for this form is estimated to average 3 hours per response. The burden estimate includes the time for reviewing instructions, searching existing data sources, gathering and maintaining the needed data, and completing, reviewing, and submitting the form. You are not required to respond to this collection of information unless a valid OMB control number appears in the upper right corner of this form. Send comments regarding the accuracy of the burden estimate and any suggestions for reducing this burden to: Information Collections Management, Federal Emergency Management Agency, 500 C Street, SW, Washington DC 20472, Paperwork Reduction Project (3067-0148). Submission of the form is required to obtain or retain benefits under the National Flood Insurance Program. **Please do not send your completed survey to the above address.**

Flooding Source: Rio Verde Wash K Trib 4
Note: Fill out one form for each flooding source studied

A. HYDROLOGY

1. Reason for New Hydrologic Analysis (check all that apply)

☐ Not revised (skip to section 2) ☒ No existing analysis ☐ Improved data
☐ Alternative methodology ☐ Proposed Conditions (CLOMR) ☐ Changed physical condition of watershed

2. Comparison of Representative 1%-Annual-Chance Discharges

Location	Drainage Area (Sq. Mi.)	FIS (cfs)	Revised (cfs)

3. Methodology for New Hydrologic Analysis (check all that apply)

☐ Statistical Analysis of Gage Records ☒ Precipitation/Runoff Model HEC-1 and/or FLO-2D [TR-20, HEC-1, HEC-HMS etc.]
☐ Regional Regression Equations ☐ Other (please attach description)

Please enclose all relevant models in digital format, maps, computations (including computation of parameters) and documentation to support the new analysis. The document, "Numerical Models Accepted by FEMA for NFIP Usage" lists the models accepted by FEMA. This document can be found at: http://www.fema.gov/plan/prevent/fhm/en_modl.shtm.

4. Review/Approval of Analysis

If your community requires a regional, state, or federal agency to review the hydrologic analysis, please attach evidence of approval/review.

5. Impacts of Sediment Transport on Hydrology

Was sediment transport considered? ☐ Yes ☒ No If yes, then fill out Section F (Sediment Transport) of Form 3. If No, then attach your explanation for why sediment transport was not considered.

B. HYDRAULICS

1. Reach to be Revised

	Description	Cross Section	Water-Surface Elevations (ft.) Effective	Proposed/Revised
Downstream Limit	600'N & 4990'E of Dixileta Dr & 175th St	0		1672.84
Upstream Limit	1400'N & 6400'E of Dove Valley 144th St	4.499		2330.36

2. Hydraulic Method Used

Hydraulic Analysis FLO-2D [HEC-2 , HEC-RAS, Other (Attach description)]

B. HYDRAULICS (CONTINUED)

3. Pre-Submittal Review of Hydraulic Models

FEMA has developed two review programs, CHECK-2 and CHECK-RAS, to aid in the review of HEC-2 and HEC-RAS hydraulic models, respectively. These review programs verify that the hydraulic estimates and assumptions in the model data are in accordance with NFIP requirements, and that the data are comparable with the assumptions and limitations of HEC-2/HEC-RAS. CHECK-2 and CHECK-RAS identify areas of potential error or concern. These tools do not replace engineering judgment. CHECK-2 and CHECK-RAS can be downloaded from http://www.fema.gov/plan/prevent/fhm/frm_soft.shtm. We recommend that you review your HEC-2 and HEC-RAS models with CHECK-2 and CHECK-RAS. If you disagree with a message, please attach an explanation of why the message is not valid in this case. Review of your submittal and resolution of valid modeling discrepancies will result in reduced review time.

HEC-2/HEC-RAS models reviewed with CHECK-2/CHECK-RAS? ☐ Yes ☐ No

4. Models Submitted

Duplicate Effective Model*	Natural File Name:	Floodway File Name:
Corrected Effective Model*	Natural File Name:	Floodway File Name:
Existing or Pre-Project Conditions Model	Natural File Name:	Floodway File Name:
Revised or Post-Project Conditions Model	Natural File Name:	Floodway File Name:
Other - (attach description)	Natural File Name:	Floodway File Name:

*Not required for revisions to approximate 1%-annual-chance floodplains (Zone A) – for details, refer to the corresponding section of the instructions.

The document "Numerical Models Accepted by FEMA for NFIP Usage" lists the models accepted by FEMA. This document can be found at: http://www.fema.gov/plan/prevent/fhm/en_modl.shtm.

C. MAPPING REQUIREMENTS

A **certified topographic map** must be submitted showing the following information (where applicable): the boundaries of the effective, existing, and proposed conditions 1%-annual-chance floodplain (for approximate Zone A revisions) or the boundaries of the 1%- and 0.2%-annual-chance floodplains and regulatory floodway (for detailed Zone AE, AO, and AH revisions); location and alignment of all cross sections with stationing control indicated; stream, road, and other alignments (e.g., dams, levees, etc.); current community easements and boundaries; boundaries of the requester's property; certification of a registered professional engineer registered in the subject State; location and description of reference marks; and the referenced vertical datum (NGVD, NAVD, etc.).

Note that the boundaries of the existing or proposed conditions floodplains and regulatory floodway to be shown on the revised FIRM and/or FBFM must tie-in with the effective floodplain and regulatory floodway boundaries. Please attach **a copy of the effective FIRM and/or FBFM,** annotated to show the boundaries of the revised 1%- and 0.2%-annual-chance floodplains and regulatory floodway that tie-in with the boundaries of the effective 1%- and 0.2%-annual-chance floodplain and regulatory floodway at the upstream and downstream limits of the area of revision.

D. COMMON REGULATORY REQUIREMENTS

1. For CLOMR requests, do Base Flood Elevations (BFEs) increase? ☐ Yes ☐ No

For CLOMR requests, if either of the following is true, please submit evidence of compliance with Section 65.12 of the NFIP regulations:
- The proposed project encroaches upon a regulatory floodway and would result in increases above 0.00 foot.
- The proposed project encroaches upon a SFHA with BFEs established and would result in increases above 1.00 foot.

2. Does the request involve the placement or proposed placement of fill? ☐ Yes ☒ No

If Yes, the community must be able to certify that the area to be removed from the special flood hazard area, to include any structures or proposed structures, meets all of the standards of the local floodplain ordinances, and is reasonably safe from flooding in accordance with the NFIP regulations set forth at 44 CFR 60.3(a)(3), 65.5(a)(4), and 65.6(a)(14). Please see the MT-2 instructions for more information.

3. For LOMR requests, is the regulatory floodway being revised? ☐ Yes ☒ No

If Yes, attach evidence of regulatory floodway revision notification. As per Paragraph 65.7(b)(1) of the NFIP Regulations, notification is required for requests involving revisions to the regulatory floodway. (Not required for revisions to approximate 1%-annual-chance floodplains [studied Zone A designation] unless a regulatory floodway is being added. Elements and examples of regulatory floodway revision notification can be found in the MT-2 Form 2 Instructions.)

4. For LOMR requests, does this request require property owner notification and acceptance of BFE increases? ☐ Yes ☒ No

If Yes, please attach proof of property owner notification and acceptance (if available). Elements of and examples of property owner notification can be found in the MT-2 Form 2 Instructions.

FEDERAL EMERGENCY MANAGEMENT AGENCY

RIVERINE HYDROLOGY & HYDRAULICS FORM

O.M.B No. 3067-0148
Expires September 30, 2005

PAPERWORK REDUCTION ACT

Public reporting burden for this form is estimated to average 3 hours per response. The burden estimate includes the time for reviewing instructions, searching existing data sources, gathering and maintaining the needed data, and completing, reviewing, and submitting the form. You are not required to respond to this collection of information unless a valid OMB control number appears in the upper right corner of this form. Send comments regarding the accuracy of the burden estimate and any suggestions for reducing this burden to: Information Collections Management, Federal Emergency Management Agency, 500 C Street, SW, Washington DC 20472, Paperwork Reduction Project (3067-0148). Submission of the form is required to obtain or retain benefits under the National Flood Insurance Program. **Please do not send your completed survey to the above address.**

Flooding Source: Rio Verde Wash K Trib 4A
Note: Fill out one form for each flooding source studied

A. HYDROLOGY

1. Reason for New Hydrologic Analysis (check all that apply)

☐ Not revised (skip to section 2) ☒ No existing analysis ☐ Improved data
☐ Alternative methodology ☐ Proposed Conditions (CLOMR) ☐ Changed physical condition of watershed

2. Comparison of Representative 1%-Annual-Chance Discharges

Location	Drainage Area (Sq. Mi.)	FIS (cfs)	Revised (cfs)

3. Methodology for New Hydrologic Analysis (check all that apply)

☐ Statistical Analysis of Gage Records ☒ Precipitation/Runoff Model HEC-1 and/or FLO-2D [TR-20, HEC-1, HEC-HMS etc.]
☐ Regional Regression Equations ☐ Other (please attach description)

Please enclose all relevant models in digital format, maps, computations (including computation of parameters) and documentation to support the new analysis. The document, "Numerical Models Accepted by FEMA for NFIP Usage" lists the models accepted by FEMA. This document can be found at: http://www.fema.gov/plan/prevent/fhm/en_modl.shtm.

4. Review/Approval of Analysis

If your community requires a regional, state, or federal agency to review the hydrologic analysis, please attach evidence of approval/review.

5. Impacts of Sediment Transport on Hydrology

Was sediment transport considered? ☐ Yes ☒ No If yes, then fill out Section F (Sediment Transport) of Form 3. If No, then attach your explanation for why sediment transport was not considered.

B. HYDRAULICS

1. Reach to be Revised

	Description	Cross Section	Water-Surface Elevations (ft.) Effective	Proposed/Revised
Downstream Limit	1900'N & 2200'E of Dixileta Dr & 175th S	0		1776.01
Upstream Limit	4700'N & 515'W of Lone Mnt Rd & 162nd S	2.759		2199.39

2. Hydraulic Method Used

Hydraulic Analysis FLO-2D [HEC-2 , HEC-RAS, Other (Attach description)]

B. HYDRAULICS (CONTINUED)

3. Pre-Submittal Review of Hydraulic Models

FEMA has developed two review programs, CHECK-2 and CHECK-RAS, to aid in the review of HEC-2 and HEC-RAS hydraulic models, respectively. These review programs verify that the hydraulic estimates and assumptions in the model data are in accordance with NFIP requirements, and that the data are comparable with the assumptions and limitations of HEC-2/HEC-RAS. CHECK-2 and CHECK-RAS identify areas of potential error or concern. These tools do not replace engineering judgment. CHECK-2 and CHECK-RAS can be downloaded from http://www.fema.gov/plan/prevent/fhm/frm_soft.shtm. We recommend that you review your HEC-2 and HEC-RAS models with CHECK-2 and CHECK-RAS. If you disagree with a message, please attach an explanation of why the message is not valid in this case. Review of your submittal and resolution of valid modeling discrepancies will result in reduced review time.

HEC-2/HEC-RAS models reviewed with CHECK-2/CHECK-RAS? ☐ Yes ☐ No

4. Models Submitted

Duplicate Effective Model*	Natural File Name:	Floodway File Name:
Corrected Effective Model*	Natural File Name:	Floodway File Name:
Existing or Pre-Project Conditions Model	Natural File Name:	Floodway File Name:
Revised or Post-Project Conditions Model	Natural File Name:	Floodway File Name:
Other - (attach description)	Natural File Name:	Floodway File Name:

*Not required for revisions to approximate 1%-annual-chance floodplains (Zone A) – for details, refer to the corresponding section of the instructions.

The document "Numerical Models Accepted by FEMA for NFIP Usage" lists the models accepted by FEMA. This document can be found at: http://www.fema.gov/plan/prevent/fhm/en_modl.shtm.

C. MAPPING REQUIREMENTS

A **certified topographic map** must be submitted showing the following information (where applicable): the boundaries of the effective, existing, and proposed conditions 1%-annual-chance floodplain (for approximate Zone A revisions) or the boundaries of the 1%- and 0.2%-annual-chance floodplains and regulatory floodway (for detailed Zone AE, AO, and AH revisions); location and alignment of all cross sections with stationing control indicated; stream, road, and other alignments (e.g., dams, levees, etc.); current community easements and boundaries; boundaries of the requester's property; certification of a registered professional engineer registered in the subject State; location and description of reference marks; and the referenced vertical datum (NGVD, NAVD, etc.).

Note that the boundaries of the existing or proposed conditions floodplains and regulatory floodway to be shown on the revised FIRM and/or FBFM must tie-in with the effective floodplain and regulatory floodway boundaries. Please attach **a copy of the effective FIRM and/or FBFM,** annotated to show the boundaries of the revised 1%- and 0.2%-annual-chance floodplains and regulatory floodway that tie-in with the boundaries of the effective 1%- and 0.2%-annual-chance floodplain and regulatory floodway at the upstream and downstream limits of the area of revision.

D. COMMON REGULATORY REQUIREMENTS

1. For CLOMR requests, do Base Flood Elevations (BFEs) increase? ☐ Yes ☐ No

For CLOMR requests, if either of the following is true, please submit evidence of compliance with Section 65.12 of the NFIP regulations:
- The proposed project encroaches upon a regulatory floodway and would result in increases above 0.00 foot.
- The proposed project encroaches upon a SFHA with BFEs established and would result in increases above 1.00 foot.

2. Does the request involve the placement or proposed placement of fill? ☐ Yes ☒ No

If Yes, the community must be able to certify that the area to be removed from the special flood hazard area, to include any structures or proposed structures, meets all of the standards of the local floodplain ordinances, and is reasonably safe from flooding in accordance with the NFIP regulations set forth at 44 CFR 60.3(a)(3), 65.5(a)(4), and 65.6(a)(14). Please see the MT-2 instructions for more information.

3. For LOMR requests, is the regulatory floodway being revised? ☐ Yes ☒ No

If Yes, attach evidence of regulatory floodway revision notification. As per Paragraph 65.7(b)(1) of the NFIP Regulations, notification is required for requests involving revisions to the regulatory floodway. (Not required for revisions to approximate 1%-annual-chance floodplains [studied Zone A designation] unless a regulatory floodway is being added. Elements and examples of regulatory floodway revision notification can be found in the MT-2 Form 2 Instructions.)

4. For LOMR requests, does this request require property owner notification and acceptance of BFE increases? ☐ Yes ☒ No

If Yes, please attach proof of property owner notification and acceptance (if available). Elements of and examples of property owner notification can be found in the MT-2 Form 2 Instructions.

FEDERAL EMERGENCY MANAGEMENT AGENCY

RIVERINE HYDROLOGY & HYDRAULICS FORM

O.M.B No. 3067-0148
Expires September 30, 2005

PAPERWORK REDUCTION ACT

Public reporting burden for this form is estimated to average 3 hours per response. The burden estimate includes the time for reviewing instructions, searching existing data sources, gathering and maintaining the needed data, and completing, reviewing, and submitting the form. You are not required to respond to this collection of information unless a valid OMB control number appears in the upper right corner of this form. Send comments regarding the accuracy of the burden estimate and any suggestions for reducing this burden to: Information Collections Management, Federal Emergency Management Agency, 500 C Street, SW, Washington DC 20472, Paperwork Reduction Project (3067-0148). Submission of the form is required to obtain or retain benefits under the National Flood Insurance Program. **Please do not send your completed survey to the above address.**

Flooding Source: Rio Verde Wash K Trib 6 Split 1
Note: Fill out one form for each flooding source studied

A. HYDROLOGY

1. Reason for New Hydrologic Analysis (check all that apply)

☐ Not revised (skip to section 2) ☒ No existing analysis ☐ Improved data
☐ Alternative methodology ☐ Proposed Conditions (CLOMR) ☐ Changed physical condition of watershed

2. Comparison of Representative 1%-Annual-Chance Discharges

Location	Drainage Area (Sq. Mi.)	FIS (cfs)	Revised (cfs)

3. Methodology for New Hydrologic Analysis (check all that apply)

☐ Statistical Analysis of Gage Records ☒ Precipitation/Runoff Model HEC-1 and/or FLO-2D [TR-20, HEC-1, HEC-HMS etc.]
☐ Regional Regression Equations ☐ Other (please attach description)

Please enclose all relevant models in digital format, maps, computations (including computation of parameters) and documentation to support the new analysis. The document, "Numerical Models Accepted by FEMA for NFIP Usage" lists the models accepted by FEMA. This document can be found at: http://www.fema.gov/plan/prevent/fhm/en_modl.shtm.

4. Review/Approval of Analysis

If your community requires a regional, state, or federal agency to review the hydrologic analysis, please attach evidence of approval/review.

5. Impacts of Sediment Transport on Hydrology

Was sediment transport considered? ☐ Yes ☒ No If yes, then fill out Section F (Sediment Transport) of Form 3. If No, then attach your explanation for why sediment transport was not considered.

B. HYDRAULICS

1. Reach to be Revised

	Description	Cross Section	Water-Surface Elevations (ft.) Effective	Proposed/Revised
Downstream Limit	380'N & 3290'E of Dixileta Dr & 175th St	0		1727.24
Upstream Limit	1190'N &250'W of Montgomery Rd 168th St	1.724		2198.90

2. Hydraulic Method Used

Hydraulic Analysis FLO-2D [HEC-2 , HEC-RAS, Other (Attach description)]

B. HYDRAULICS (CONTINUED)

3. Pre-Submittal Review of Hydraulic Models

FEMA has developed two review programs, CHECK-2 and CHECK-RAS, to aid in the review of HEC-2 and HEC-RAS hydraulic models, respectively. These review programs verify that the hydraulic estimates and assumptions in the model data are in accordance with NFIP requirements, and that the data are comparable with the assumptions and limitations of HEC-2/HEC-RAS. CHECK-2 and CHECK-RAS identify areas of potential error or concern. These tools do not replace engineering judgment. CHECK-2 and CHECK-RAS can be downloaded from http://www.fema.gov/plan/prevent/fhm/frm_soft.shtm. We recommend that you review your HEC-2 and HEC-RAS models with CHECK-2 and CHECK-RAS. If you disagree with a message, please attach an explanation of why the message is not valid in this case. Review of your submittal and resolution of valid modeling discrepancies will result in reduced review time.

HEC-2/HEC-RAS models reviewed with CHECK-2/CHECK-RAS? ☐ Yes ☐ No

4. Models Submitted

Duplicate Effective Model*	Natural File Name:	Floodway File Name:
Corrected Effective Model*	Natural File Name:	Floodway File Name:
Existing or Pre-Project Conditions Model	Natural File Name:	Floodway File Name:
Revised or Post-Project Conditions Model	Natural File Name:	Floodway File Name:
Other - (attach description)	Natural File Name:	Floodway File Name:

*Not required for revisions to approximate 1%-annual-chance floodplains (Zone A) – for details, refer to the corresponding section of the instructions.

The document "Numerical Models Accepted by FEMA for NFIP Usage" lists the models accepted by FEMA. This document can be found at: http://www.fema.gov/plan/prevent/fhm/en_modl.shtm.

C. MAPPING REQUIREMENTS

A **certified topographic map** must be submitted showing the following information (where applicable): the boundaries of the effective, existing, and proposed conditions 1%-annual-chance floodplain (for approximate Zone A revisions) or the boundaries of the 1%- and 0.2%-annual-chance floodplains and regulatory floodway (for detailed Zone AE, AO, and AH revisions); location and alignment of all cross sections with stationing control indicated; stream, road, and other alignments (e.g., dams, levees, etc.); current community easements and boundaries; boundaries of the requester's property; certification of a registered professional engineer registered in the subject State; location and description of reference marks; and the referenced vertical datum (NGVD, NAVD, etc.).

Note that the boundaries of the existing or proposed conditions floodplains and regulatory floodway to be shown on the revised FIRM and/or FBFM must tie-in with the effective floodplain and regulatory floodway boundaries. Please attach **a copy of the effective FIRM and/or FBFM,** annotated to show the boundaries of the revised 1%- and 0.2%-annual-chance floodplains and regulatory floodway that tie-in with the boundaries of the effective 1%- and 0.2%-annual-chance floodplain and regulatory floodway at the upstream and downstream limits of the area of revision.

D. COMMON REGULATORY REQUIREMENTS

1. For CLOMR requests, do Base Flood Elevations (BFEs) increase? ☐ Yes ☐ No

For CLOMR requests, if either of the following is true, please submit evidence of compliance with Section 65.12 of the NFIP regulations:
- The proposed project encroaches upon a regulatory floodway and would result in increases above 0.00 foot.
- The proposed project encroaches upon a SFHA with BFEs established and would result in increases above 1.00 foot.

2. Does the request involve the placement or proposed placement of fill? ☐ Yes ☒ No

If Yes, the community must be able to certify that the area to be removed from the special flood hazard area, to include any structures or proposed structures, meets all of the standards of the local floodplain ordinances, and is reasonably safe from flooding in accordance with the NFIP regulations set forth at 44 CFR 60.3(a)(3), 65.5(a)(4), and 65.6(a)(14). Please see the MT-2 instructions for more information.

3. For LOMR requests, is the regulatory floodway being revised? ☐ Yes ☒ No

If Yes, attach evidence of regulatory floodway revision notification. As per Paragraph 65.7(b)(1) of the NFIP Regulations, notification is required for requests involving revisions to the regulatory floodway. (Not required for revisions to approximate 1%-annual-chance floodplains [studied Zone A designation] unless a regulatory floodway is being added. Elements and examples of regulatory floodway revision notification can be found in the MT-2 Form 2 Instructions.)

4. For LOMR requests, does this request require property owner notification and acceptance of BFE increases? ☐ Yes ☒ No

If Yes, please attach proof of property owner notification and acceptance (if available). Elements of and examples of property owner notification can be found in the MT-2 Form 2 Instructions.

FEDERAL EMERGENCY MANAGEMENT AGENCY

RIVERINE HYDROLOGY & HYDRAULICS FORM

O.M.B No. 3067-0148
Expires September 30, 2005

PAPERWORK REDUCTION ACT

Public reporting burden for this form is estimated to average 3 hours per response. The burden estimate includes the time for reviewing instructions, searching existing data sources, gathering and maintaining the needed data, and completing, reviewing, and submitting the form. You are not required to respond to this collection of information unless a valid OMB control number appears in the upper right corner of this form. Send comments regarding the accuracy of the burden estimate and any suggestions for reducing this burden to: Information Collections Management, Federal Emergency Management Agency, 500 C Street, SW, Washington DC 20472, Paperwork Reduction Project (3067-0148). Submission of the form is required to obtain or retain benefits under the National Flood Insurance Program. **Please do not send your completed survey to the above address.**

Flooding Source: Rio Verde Wash K Trib 6 Split 2
Note: Fill out one form for each flooding source studied

A. HYDROLOGY

1. Reason for New Hydrologic Analysis (check all that apply)

☐ Not revised (skip to section 2) ☒ No existing analysis ☐ Improved data
☐ Alternative methodology ☐ Proposed Conditions (CLOMR) ☐ Changed physical condition of watershed

2. Comparison of Representative 1%-Annual-Chance Discharges

Location	Drainage Area (Sq. Mi.)	FIS (cfs)	Revised (cfs)

3. Methodology for New Hydrologic Analysis (check all that apply)

☐ Statistical Analysis of Gage Records ☒ Precipitation/Runoff Model HEC-1 and/or FLO-2D [TR-20, HEC-1, HEC-HMS etc.]
☐ Regional Regression Equations ☐ Other (please attach description)

Please enclose all relevant models in digital format, maps, computations (including computation of parameters) and documentation to support the new analysis. The document, "Numerical Models Accepted by FEMA for NFIP Usage" lists the models accepted by FEMA. This document can be found at: http://www.fema.gov/plan/prevent/fhm/en_modl.shtm.

4. Review/Approval of Analysis

If your community requires a regional, state, or federal agency to review the hydrologic analysis, please attach evidence of approval/review.

5. Impacts of Sediment Transport on Hydrology

Was sediment transport considered? ☐ Yes ☒ No If yes, then fill out Section F (Sediment Transport) of Form 3. If No, then attach your explanation for why sediment transport was not considered.

B. HYDRAULICS

1. Reach to be Revised

	Description	Cross Section	Water-Surface Elevations (ft.) Effective	Proposed/Revised
Downstream Limit	980'N & 1740'E of Dixileta Dr & 175th St	0		1783.59
Upstream Limit	360'N & 1200'E of Lone Mnt Rd & 162nd St	2.055		2104.59

2. Hydraulic Method Used

Hydraulic Analysis FLO-2D [HEC-2 , HEC-RAS, Other (Attach description)]

B. HYDRAULICS (CONTINUED)

3. Pre-Submittal Review of Hydraulic Models

FEMA has developed two review programs, CHECK-2 and CHECK-RAS, to aid in the review of HEC-2 and HEC-RAS hydraulic models, respectively. These review programs verify that the hydraulic estimates and assumptions in the model data are in accordance with NFIP requirements, and that the data are comparable with the assumptions and limitations of HEC-2/HEC-RAS. CHECK-2 and CHECK-RAS identify areas of potential error or concern. These tools do not replace engineering judgment. CHECK-2 and CHECK-RAS can be downloaded from http://www.fema.gov/plan/prevent/fhm/frm_soft.shtm. We recommend that you review your HEC-2 and HEC-RAS models with CHECK-2 and CHECK-RAS. If you disagree with a message, please attach an explanation of why the message is not valid in this case. Review of your submittal and resolution of valid modeling discrepancies will result in reduced review time.

HEC-2/HEC-RAS models reviewed with CHECK-2/CHECK-RAS? ☐ Yes ☐ No

4. Models Submitted

Duplicate Effective Model*	Natural File Name:	Floodway File Name:
Corrected Effective Model*	Natural File Name:	Floodway File Name:
Existing or Pre-Project Conditions Model	Natural File Name:	Floodway File Name:
Revised or Post-Project Conditions Model	Natural File Name:	Floodway File Name:
Other - (attach description)	Natural File Name:	Floodway File Name:

*Not required for revisions to approximate 1%-annual-chance floodplains (Zone A) – for details, refer to the corresponding section of the instructions.

The document "Numerical Models Accepted by FEMA for NFIP Usage" lists the models accepted by FEMA. This document can be found at: http://www.fema.gov/plan/prevent/fhm/en_modl.shtm.

C. MAPPING REQUIREMENTS

A **certified topographic map** must be submitted showing the following information (where applicable): the boundaries of the effective, existing, and proposed conditions 1%-annual-chance floodplain (for approximate Zone A revisions) or the boundaries of the 1%- and 0.2%-annual-chance floodplains and regulatory floodway (for detailed Zone AE, AO, and AH revisions); location and alignment of all cross sections with stationing control indicated; stream, road, and other alignments (e.g., dams, levees, etc.); current community easements and boundaries; boundaries of the requester's property; certification of a registered professional engineer registered in the subject State; location and description of reference marks; and the referenced vertical datum (NGVD, NAVD, etc.).

Note that the boundaries of the existing or proposed conditions floodplains and regulatory floodway to be shown on the revised FIRM and/or FBFM must tie-in with the effective floodplain and regulatory floodway boundaries. Please attach **a copy of the effective FIRM and/or FBFM,** annotated to show the boundaries of the revised 1%- and 0.2%-annual-chance floodplains and regulatory floodway that tie-in with the boundaries of the effective 1%- and 0.2%-annual-chance floodplain and regulatory floodway at the upstream and downstream limits of the area of revision.

D. COMMON REGULATORY REQUIREMENTS

1. For CLOMR requests, do Base Flood Elevations (BFEs) increase? ☐ Yes ☐ No

For CLOMR requests, if either of the following is true, please submit evidence of compliance with Section 65.12 of the NFIP regulations:
- The proposed project encroaches upon a regulatory floodway and would result in increases above 0.00 foot.
- The proposed project encroaches upon a SFHA with BFEs established and would result in increases above 1.00 foot.

2. Does the request involve the placement or proposed placement of fill? ☐ Yes ☒ No

If Yes, the community must be able to certify that the area to be removed from the special flood hazard area, to include any structures or proposed structures, meets all of the standards of the local floodplain ordinances, and is reasonably safe from flooding in accordance with the NFIP regulations set forth at 44 CFR 60.3(a)(3), 65.5(a)(4), and 65.6(a)(14). Please see the MT-2 instructions for more information.

3. For LOMR requests, is the regulatory floodway being revised? ☐ Yes ☒ No

If Yes, attach evidence of regulatory floodway revision notification. As per Paragraph 65.7(b)(1) of the NFIP Regulations, notification is required for requests involving revisions to the regulatory floodway. (Not required for revisions to approximate 1%-annual-chance floodplains [studied Zone A designation] unless a regulatory floodway is being added. Elements and examples of regulatory floodway revision notification can be found in the MT-2 Form 2 Instructions.)

4. For LOMR requests, does this request require property owner notification and acceptance of BFE increases? ☐ Yes ☒ No

If Yes, please attach proof of property owner notification and acceptance (if available). Elements of and examples of property owner notification can be found in the MT-2 Form 2 Instructions.

FEDERAL EMERGENCY MANAGEMENT AGENCY

RIVERINE HYDROLOGY & HYDRAULICS FORM

O.M.B No. 3067-0148
Expires September 30, 2005

PAPERWORK REDUCTION ACT

Public reporting burden for this form is estimated to average 3 hours per response. The burden estimate includes the time for reviewing instructions, searching existing data sources, gathering and maintaining the needed data, and completing, reviewing, and submitting the form. You are not required to respond to this collection of information unless a valid OMB control number appears in the upper right corner of this form. Send comments regarding the accuracy of the burden estimate and any suggestions for reducing this burden to: Information Collections Management, Federal Emergency Management Agency, 500 C Street, SW, Washington DC 20472, Paperwork Reduction Project (3067-0148). Submission of the form is required to obtain or retain benefits under the National Flood Insurance Program. **Please do not send your completed survey to the above address.**

Flooding Source: Rio Verde Wash K Trib 6 Split 3
Note: Fill out one form for each flooding source studied

A. HYDROLOGY

1. Reason for New Hydrologic Analysis (check all that apply)

☐ Not revised (skip to section 2) ☒ No existing analysis ☐ Improved data
☐ Alternative methodology ☐ Proposed Conditions (CLOMR) ☐ Changed physical condition of watershed

2. Comparison of Representative 1%-Annual-Chance Discharges

Location	Drainage Area (Sq. Mi.)	FIS (cfs)	Revised (cfs)

3. Methodology for New Hydrologic Analysis (check all that apply)

☐ Statistical Analysis of Gage Records ☒ Precipitation/Runoff Model HEC-1 and/or FLO-2D [TR-20, HEC-1, HEC-HMS etc.]
☐ Regional Regression Equations ☐ Other (please attach description)

Please enclose all relevant models in digital format, maps, computations (including computation of parameters) and documentation to support the new analysis. The document, "Numerical Models Accepted by FEMA for NFIP Usage" lists the models accepted by FEMA. This document can be found at: http://www.fema.gov/plan/prevent/fhm/en_modl.shtm.

4. Review/Approval of Analysis

If your community requires a regional, state, or federal agency to review the hydrologic analysis, please attach evidence of approval/review.

5. Impacts of Sediment Transport on Hydrology

Was sediment transport considered? ☐ Yes ☒ No If yes, then fill out Section F (Sediment Transport) of Form 3. If No, then attach your explanation for why sediment transport was not considered.

B. HYDRAULICS

1. Reach to be Revised

	Description	Cross Section	Water-Surface Elevations (ft.) Effective	Proposed/Revised
Downstream Limit	420'S & 500'E of Lone Mnt Rd & 164th St	0		2073.57
Upstream Limit	3500'N of Lone Mnt Rd & 156th St.	1.381		2266.36

2. Hydraulic Method Used

Hydraulic Analysis FLO-2D [HEC-2 , HEC-RAS, Other (Attach description)]

B. HYDRAULICS (CONTINUED)

3. Pre-Submittal Review of Hydraulic Models

FEMA has developed two review programs, CHECK-2 and CHECK-RAS, to aid in the review of HEC-2 and HEC-RAS hydraulic models, respectively. These review programs verify that the hydraulic estimates and assumptions in the model data are in accordance with NFIP requirements, and that the data are comparable with the assumptions and limitations of HEC-2/HEC-RAS. CHECK-2 and CHECK-RAS identify areas of potential error or concern. These tools do not replace engineering judgment. CHECK-2 and CHECK-RAS can be downloaded from http://www.fema.gov/plan/prevent/fhm/frm_soft.shtm. We recommend that you review your HEC-2 and HEC-RAS models with CHECK-2 and CHECK-RAS. If you disagree with a message, please attach an explanation of why the message is not valid in this case. Review of your submittal and resolution of valid modeling discrepancies will result in reduced review time.

HEC-2/HEC-RAS models reviewed with CHECK-2/CHECK-RAS? ☐ Yes ☐ No

4. Models Submitted

Duplicate Effective Model*	Natural File Name:	Floodway File Name:
Corrected Effective Model*	Natural File Name:	Floodway File Name:
Existing or Pre-Project Conditions Model	Natural File Name:	Floodway File Name:
Revised or Post-Project Conditions Model	Natural File Name:	Floodway File Name:
Other - (attach description)	Natural File Name:	Floodway File Name:

*Not required for revisions to approximate 1%-annual-chance floodplains (Zone A) – for details, refer to the corresponding section of the instructions.

The document "Numerical Models Accepted by FEMA for NFIP Usage" lists the models accepted by FEMA. This document can be found at: http://www.fema.gov/plan/prevent/fhm/en_modl.shtm.

C. MAPPING REQUIREMENTS

A **certified topographic map** must be submitted showing the following information (where applicable): the boundaries of the effective, existing, and proposed conditions 1%-annual-chance floodplain (for approximate Zone A revisions) or the boundaries of the 1%- and 0.2%-annual-chance floodplains and regulatory floodway (for detailed Zone AE, AO, and AH revisions); location and alignment of all cross sections with stationing control indicated; stream, road, and other alignments (e.g., dams, levees, etc.); current community easements and boundaries; boundaries of the requester's property; certification of a registered professional engineer registered in the subject State; location and description of reference marks; and the referenced vertical datum (NGVD, NAVD, etc.).

Note that the boundaries of the existing or proposed conditions floodplains and regulatory floodway to be shown on the revised FIRM and/or FBFM must tie-in with the effective floodplain and regulatory floodway boundaries. Please attach **a copy of the effective FIRM and/or FBFM,** annotated to show the boundaries of the revised 1%- and 0.2%-annual-chance floodplains and regulatory floodway that tie-in with the boundaries of the effective 1%- and 0.2%-annual-chance floodplain and regulatory floodway at the upstream and downstream limits of the area of revision.

D. COMMON REGULATORY REQUIREMENTS

1. For CLOMR requests, do Base Flood Elevations (BFEs) increase? ☐ Yes ☐ No

For CLOMR requests, if either of the following is true, please submit evidence of compliance with Section 65.12 of the NFIP regulations:
- The proposed project encroaches upon a regulatory floodway and would result in increases above 0.00 foot.
- The proposed project encroaches upon a SFHA with BFEs established and would result in increases above 1.00 foot.

2. Does the request involve the placement or proposed placement of fill? ☐ Yes ☒ No

If Yes, the community must be able to certify that the area to be removed from the special flood hazard area, to include any structures or proposed structures, meets all of the standards of the local floodplain ordinances, and is reasonably safe from flooding in accordance with the NFIP regulations set forth at 44 CFR 60.3(a)(3), 65.5(a)(4), and 65.6(a)(14). Please see the MT-2 instructions for more information.

3. For LOMR requests, is the regulatory floodway being revised? ☐ Yes ☒ No

If Yes, attach evidence of regulatory floodway revision notification. As per Paragraph 65.7(b)(1) of the NFIP Regulations, notification is required for requests involving revisions to the regulatory floodway. (Not required for revisions to approximate 1%-annual-chance floodplains [studied Zone A designation] unless a regulatory floodway is being added. Elements and examples of regulatory floodway revision notification can be found in the MT-2 Form 2 Instructions.)

4. For LOMR requests, does this request require property owner notification and acceptance of BFE increases? ☐ Yes ☒ No

If Yes, please attach proof of property owner notification and acceptance (if available). Elements of and examples of property owner notification can be found in the MT-2 Form 2 Instructions.

FEDERAL EMERGENCY MANAGEMENT AGENCY

RIVERINE HYDROLOGY & HYDRAULICS FORM

O.M.B No. 3067-0148
Expires September 30, 2005

PAPERWORK REDUCTION ACT

Public reporting burden for this form is estimated to average 3 hours per response. The burden estimate includes the time for reviewing instructions, searching existing data sources, gathering and maintaining the needed data, and completing, reviewing, and submitting the form. You are not required to respond to this collection of information unless a valid OMB control number appears in the upper right corner of this form. Send comments regarding the accuracy of the burden estimate and any suggestions for reducing this burden to: Information Collections Management, Federal Emergency Management Agency, 500 C Street, SW, Washington DC 20472, Paperwork Reduction Project (3067-0148). Submission of the form is required to obtain or retain benefits under the National Flood Insurance Program. **Please do not send your completed survey to the above address.**

Flooding Source: Rio Verde Wash K Trib 6A
Note: Fill out one form for each flooding source studied

A. HYDROLOGY

1. Reason for New Hydrologic Analysis (check all that apply)

☐ Not revised (skip to section 2) ☒ No existing analysis ☐ Improved data
☐ Alternative methodology ☐ Proposed Conditions (CLOMR) ☐ Changed physical condition of watershed

2. Comparison of Representative 1%-Annual-Chance Discharges

Location	Drainage Area (Sq. Mi.)	FIS (cfs)	Revised (cfs)

3. Methodology for New Hydrologic Analysis (check all that apply)

☐ Statistical Analysis of Gage Records ☒ Precipitation/Runoff Model HEC-1 and/or FLO-2D [TR-20, HEC-1, HEC-HMS etc.]
☐ Regional Regression Equations ☐ Other (please attach description)

Please enclose all relevant models in digital format, maps, computations (including computation of parameters) and documentation to support the new analysis. The document, "Numerical Models Accepted by FEMA for NFIP Usage" lists the models accepted by FEMA. This document can be found at: http://www.fema.gov/plan/prevent/fhm/en_modl.shtm.

4. Review/Approval of Analysis

If your community requires a regional, state, or federal agency to review the hydrologic analysis, please attach evidence of approval/review.

5. Impacts of Sediment Transport on Hydrology

Was sediment transport considered? ☐ Yes ☒ No If yes, then fill out Section F (Sediment Transport) of Form 3. If No, then attach your explanation for why sediment transport was not considered.

B. HYDRAULICS

1. Reach to be Revised

	Description	Cross Section	Water-Surface Elevations (ft.) Effective	Proposed/Revised
Downstream Limit	1900'N & 520'E of Dixileta Dr & 172nd St	0		1889.53
Upstream Limit	950'S & 3600'E of DoveValley R & 144th S	3.516		2377.02

2. Hydraulic Method Used

Hydraulic Analysis FLO-2D [HEC-2 , HEC-RAS, Other (Attach description)]

B. HYDRAULICS (CONTINUED)

3. Pre-Submittal Review of Hydraulic Models

FEMA has developed two review programs, CHECK-2 and CHECK-RAS, to aid in the review of HEC-2 and HEC-RAS hydraulic models, respectively. These review programs verify that the hydraulic estimates and assumptions in the model data are in accordance with NFIP requirements, and that the data are comparable with the assumptions and limitations of HEC-2/HEC-RAS. CHECK-2 and CHECK-RAS identify areas of potential error or concern. These tools do not replace engineering judgment. CHECK-2 and CHECK-RAS can be downloaded from http://www.fema.gov/plan/prevent/fhm/frm_soft.shtm. We recommend that you review your HEC-2 and HEC-RAS models with CHECK-2 and CHECK-RAS. If you disagree with a message, please attach an explanation of why the message is not valid in this case. Review of your submittal and resolution of valid modeling discrepancies will result in reduced review time.

HEC-2/HEC-RAS models reviewed with CHECK-2/CHECK-RAS? ☐ Yes ☐ No

4. Models Submitted

Duplicate Effective Model*	Natural File Name:	Floodway File Name:
Corrected Effective Model*	Natural File Name:	Floodway File Name:
Existing or Pre-Project Conditions Model	Natural File Name:	Floodway File Name:
Revised or Post-Project Conditions Model	Natural File Name:	Floodway File Name:
Other - (attach description)	Natural File Name:	Floodway File Name:

*Not required for revisions to approximate 1%-annual-chance floodplains (Zone A) – for details, refer to the corresponding section of the instructions.

The document "Numerical Models Accepted by FEMA for NFIP Usage" lists the models accepted by FEMA. This document can be found at: http://www.fema.gov/plan/prevent/fhm/en_modl.shtm.

C. MAPPING REQUIREMENTS

A **certified topographic map** must be submitted showing the following information (where applicable): the boundaries of the effective, existing, and proposed conditions 1%-annual-chance floodplain (for approximate Zone A revisions) or the boundaries of the 1%- and 0.2%-annual-chance floodplains and regulatory floodway (for detailed Zone AE, AO, and AH revisions); location and alignment of all cross sections with stationing control indicated; stream, road, and other alignments (e.g., dams, levees, etc.); current community easements and boundaries; boundaries of the requester's property; certification of a registered professional engineer registered in the subject State; location and description of reference marks; and the referenced vertical datum (NGVD, NAVD, etc.).

Note that the boundaries of the existing or proposed conditions floodplains and regulatory floodway to be shown on the revised FIRM and/or FBFM must tie-in with the effective floodplain and regulatory floodway boundaries. Please attach **a copy of the effective FIRM and/or FBFM,** annotated to show the boundaries of the revised 1%- and 0.2%-annual-chance floodplains and regulatory floodway that tie-in with the boundaries of the effective 1%- and 0.2%-annual-chance floodplain and regulatory floodway at the upstream and downstream limits of the area of revision.

D. COMMON REGULATORY REQUIREMENTS

1. For CLOMR requests, do Base Flood Elevations (BFEs) increase? ☐ Yes ☐ No

For CLOMR requests, if either of the following is true, please submit evidence of compliance with Section 65.12 of the NFIP regulations:
- The proposed project encroaches upon a regulatory floodway and would result in increases above 0.00 foot.
- The proposed project encroaches upon a SFHA with BFEs established and would result in increases above 1.00 foot.

2. Does the request involve the placement or proposed placement of fill? ☐ Yes ☒ No

If Yes, the community must be able to certify that the area to be removed from the special flood hazard area, to include any structures or proposed structures, meets all of the standards of the local floodplain ordinances, and is reasonably safe from flooding in accordance with the NFIP regulations set forth at 44 CFR 60.3(a)(3), 65.5(a)(4), and 65.6(a)(14). Please see the MT-2 instructions for more information.

3. For LOMR requests, is the regulatory floodway being revised? ☐ Yes ☒ No

If Yes, attach evidence of regulatory floodway revision notification. As per Paragraph 65.7(b)(1) of the NFIP Regulations, notification is required for requests involving revisions to the regulatory floodway. (Not required for revisions to approximate 1%-annual-chance floodplains [studied Zone A designation] unless a regulatory floodway is being added. Elements and examples of regulatory floodway revision notification can be found in the MT-2 Form 2 Instructions.)

4. For LOMR requests, does this request require property owner notification and acceptance of BFE increases? ☐ Yes ☒ No

If Yes, please attach proof of property owner notification and acceptance (if available). Elements of and examples of property owner notification can be found in the MT-2 Form 2 Instructions.

FEDERAL EMERGENCY MANAGEMENT AGENCY

RIVERINE HYDROLOGY & HYDRAULICS FORM

O.M.B No. 3067-0148
Expires September 30, 2005

PAPERWORK REDUCTION ACT

Public reporting burden for this form is estimated to average 3 hours per response. The burden estimate includes the time for reviewing instructions, searching existing data sources, gathering and maintaining the needed data, and completing, reviewing, and submitting the form. You are not required to respond to this collection of information unless a valid OMB control number appears in the upper right corner of this form. Send comments regarding the accuracy of the burden estimate and any suggestions for reducing this burden to: Information Collections Management, Federal Emergency Management Agency, 500 C Street, SW, Washington DC 20472, Paperwork Reduction Project (3067-0148). Submission of the form is required to obtain or retain benefits under the National Flood Insurance Program. **Please do not send your completed survey to the above address.**

Flooding Source: Rio Verde Wash K Trib 6A1
Note: Fill out one form for each flooding source studied

A. HYDROLOGY

1. Reason for New Hydrologic Analysis (check all that apply)

☐ Not revised (skip to section 2) ☒ No existing analysis ☐ Improved data
☐ Alternative methodology ☐ Proposed Conditions (CLOMR) ☐ Changed physical condition of watershed

2. Comparison of Representative 1%-Annual-Chance Discharges

Location	Drainage Area (Sq. Mi.)	FIS (cfs)	Revised (cfs)

3. Methodology for New Hydrologic Analysis (check all that apply)

☐ Statistical Analysis of Gage Records ☒ Precipitation/Runoff Model HEC-1 and/or FLO-2D [TR-20, HEC-1, HEC-HMS etc.]
☐ Regional Regression Equations ☐ Other (please attach description)

Please enclose all relevant models in digital format, maps, computations (including computation of parameters) and documentation to support the new analysis. The document, "Numerical Models Accepted by FEMA for NFIP Usage" lists the models accepted by FEMA. This document can be found at: http://www.fema.gov/plan/prevent/fhm/en_modl.shtm.

4. Review/Approval of Analysis

If your community requires a regional, state, or federal agency to review the hydrologic analysis, please attach evidence of approval/review.

5. Impacts of Sediment Transport on Hydrology

Was sediment transport considered? ☐ Yes ☒ No If yes, then fill out Section F (Sediment Transport) of Form 3. If No, then attach your explanation for why sediment transport was not considered.

B. HYDRAULICS

1. Reach to be Revised

	Description	Cross Section	Water-Surface Elevations (ft.) Effective	Proposed/Revised
Downstream Limit	260'N & 660'W of Lone Mnt Rd & 160th St	0		2176.99
Upstream Limit	1600'N & 1100'W of LoneMnt Rd & 152nd St	1.175		2339.97

2. Hydraulic Method Used

Hydraulic Analysis FLO-2D [HEC-2 , HEC-RAS, Other (Attach description)]

B. HYDRAULICS (CONTINUED)

3. Pre-Submittal Review of Hydraulic Models

FEMA has developed two review programs, CHECK-2 and CHECK-RAS, to aid in the review of HEC-2 and HEC-RAS hydraulic models, respectively. These review programs verify that the hydraulic estimates and assumptions in the model data are in accordance with NFIP requirements, and that the data are comparable with the assumptions and limitations of HEC-2/HEC-RAS. CHECK-2 and CHECK-RAS identify areas of potential error or concern. These tools do not replace engineering judgment. CHECK-2 and CHECK-RAS can be downloaded from http://www.fema.gov/plan/prevent/fhm/frm_soft.shtm. We recommend that you review your HEC-2 and HEC-RAS models with CHECK-2 and CHECK-RAS. If you disagree with a message, please attach an explanation of why the message is not valid in this case. Review of your submittal and resolution of valid modeling discrepancies will result in reduced review time.

HEC-2/HEC-RAS models reviewed with CHECK-2/CHECK-RAS? ☐ Yes ☐ No

4. Models Submitted

Duplicate Effective Model*	Natural File Name:	Floodway File Name:
Corrected Effective Model*	Natural File Name:	Floodway File Name:
Existing or Pre-Project Conditions Model	Natural File Name:	Floodway File Name:
Revised or Post-Project Conditions Model	Natural File Name:	Floodway File Name:
Other - (attach description)	Natural File Name:	Floodway File Name:

*Not required for revisions to approximate 1%-annual-chance floodplains (Zone A) – for details, refer to the corresponding section of the instructions.

The document "Numerical Models Accepted by FEMA for NFIP Usage" lists the models accepted by FEMA. This document can be found at: http://www.fema.gov/plan/prevent/fhm/en_modl.shtm.

C. MAPPING REQUIREMENTS

A **certified topographic map** must be submitted showing the following information (where applicable): the boundaries of the effective, existing, and proposed conditions 1%-annual-chance floodplain (for approximate Zone A revisions) or the boundaries of the 1%- and 0.2%-annual-chance floodplains and regulatory floodway (for detailed Zone AE, AO, and AH revisions); location and alignment of all cross sections with stationing control indicated; stream, road, and other alignments (e.g., dams, levees, etc.); current community easements and boundaries; boundaries of the requester's property; certification of a registered professional engineer registered in the subject State; location and description of reference marks; and the referenced vertical datum (NGVD, NAVD, etc.).

Note that the boundaries of the existing or proposed conditions floodplains and regulatory floodway to be shown on the revised FIRM and/or FBFM must tie-in with the effective floodplain and regulatory floodway boundaries. Please attach **a copy of the effective FIRM and/or FBFM,** annotated to show the boundaries of the revised 1%- and 0.2%-annual-chance floodplains and regulatory floodway that tie-in with the boundaries of the effective 1%- and 0.2%-annual-chance floodplain and regulatory floodway at the upstream and downstream limits of the area of revision.

D. COMMON REGULATORY REQUIREMENTS

1. For CLOMR requests, do Base Flood Elevations (BFEs) increase? ☐ Yes ☐ No

For CLOMR requests, if either of the following is true, please submit evidence of compliance with Section 65.12 of the NFIP regulations:
- The proposed project encroaches upon a regulatory floodway and would result in increases above 0.00 foot.
- The proposed project encroaches upon a SFHA with BFEs established and would result in increases above 1.00 foot.

2. Does the request involve the placement or proposed placement of fill? ☐ Yes ☒ No

If Yes, the community must be able to certify that the area to be removed from the special flood hazard area, to include any structures or proposed structures, meets all of the standards of the local floodplain ordinances, and is reasonably safe from flooding in accordance with the NFIP regulations set forth at 44 CFR 60.3(a)(3), 65.5(a)(4), and 65.6(a)(14). Please see the MT-2 instructions for more information.

3. For LOMR requests, is the regulatory floodway being revised? ☐ Yes ☒ No

If Yes, attach evidence of regulatory floodway revision notification. As per Paragraph 65.7(b)(1) of the NFIP Regulations, notification is required for requests involving revisions to the regulatory floodway. (Not required for revisions to approximate 1%-annual-chance floodplains [studied Zone A designation] unless a regulatory floodway is being added. Elements and examples of regulatory floodway revision notification can be found in the MT-2 Form 2 Instructions.)

4. For LOMR requests, does this request require property owner notification and acceptance of BFE increases? ☐ Yes ☒ No

If Yes, please attach proof of property owner notification and acceptance (if available). Elements of and examples of property owner notification can be found in the MT-2 Form 2 Instructions.

FEDERAL EMERGENCY MANAGEMENT AGENCY

RIVERINE HYDROLOGY & HYDRAULICS FORM

O.M.B No. 3067-0148
Expires September 30, 2005

PAPERWORK REDUCTION ACT

Public reporting burden for this form is estimated to average 3 hours per response. The burden estimate includes the time for reviewing instructions, searching existing data sources, gathering and maintaining the needed data, and completing, reviewing, and submitting the form. You are not required to respond to this collection of information unless a valid OMB control number appears in the upper right corner of this form. Send comments regarding the accuracy of the burden estimate and any suggestions for reducing this burden to: Information Collections Management, Federal Emergency Management Agency, 500 C Street, SW, Washington DC 20472, Paperwork Reduction Project (3067-0148). Submission of the form is required to obtain or retain benefits under the National Flood Insurance Program. **Please do not send your completed survey to the above address.**

Flooding Source: Rio Verde Wash K Trib 6 A2
Note: Fill out one form for each flooding source studied

A. HYDROLOGY

1. Reason for New Hydrologic Analysis (check all that apply)

☐ Not revised (skip to section 2) ☒ No existing analysis ☐ Improved data
☐ Alternative methodology ☐ Proposed Conditions (CLOMR) ☐ Changed physical condition of watershed

2. Comparison of Representative 1%-Annual-Chance Discharges

Location	Drainage Area (Sq. Mi.)	FIS (cfs)	Revised (cfs)

3. Methodology for New Hydrologic Analysis (check all that apply)

☐ Statistical Analysis of Gage Records ☒ Precipitation/Runoff Model HEC-1 and/or FLO-2D [TR-20, HEC-1, HEC-HMS etc.]
☐ Regional Regression Equations ☐ Other (please attach description)

Please enclose all relevant models in digital format, maps, computations (including computation of parameters) and documentation to support the new analysis. The document, "Numerical Models Accepted by FEMA for NFIP Usage" lists the models accepted by FEMA. This document can be found at: http://www.fema.gov/plan/prevent/fhm/en_modl.shtm.

4. Review/Approval of Analysis

If your community requires a regional, state, or federal agency to review the hydrologic analysis, please attach evidence of approval/review.

5. Impacts of Sediment Transport on Hydrology

Was sediment transport considered? ☐ Yes ☒ No If yes, then fill out Section F (Sediment Transport) of Form 3. If No, then attach your explanation for why sediment transport was not considered.

B. HYDRAULICS

1. Reach to be Revised

	Description	Cross Section	Water-Surface Elevations (ft.) Effective	Proposed/Revised
Downstream Limit	900'N & 1150'W of Lone Mnt Rd & 160th St	0		2200.40
Upstream Limit	1630'N of Lone Mnt Rd & 154th St.	0.597		2274.83

2. Hydraulic Method Used

Hydraulic Analysis FLO-2D [HEC-2 , HEC-RAS, Other (Attach description)]

B. HYDRAULICS (CONTINUED)

3. Pre-Submittal Review of Hydraulic Models

FEMA has developed two review programs, CHECK-2 and CHECK-RAS, to aid in the review of HEC-2 and HEC-RAS hydraulic models, respectively. These review programs verify that the hydraulic estimates and assumptions in the model data are in accordance with NFIP requirements, and that the data are comparable with the assumptions and limitations of HEC-2/HEC-RAS. CHECK-2 and CHECK-RAS identify areas of potential error or concern. These tools do not replace engineering judgment. CHECK-2 and CHECK-RAS can be downloaded from http://www.fema.gov/plan/prevent/fhm/frm_soft.shtm. We recommend that you review your HEC-2 and HEC-RAS models with CHECK-2 and CHECK-RAS. If you disagree with a message, please attach an explanation of why the message is not valid in this case. Review of your submittal and resolution of valid modeling discrepancies will result in reduced review time.

HEC-2/HEC-RAS models reviewed with CHECK-2/CHECK-RAS? ☐ Yes ☐ No

4. Models Submitted

Duplicate Effective Model*	Natural File Name:	Floodway File Name:
Corrected Effective Model*	Natural File Name:	Floodway File Name:
Existing or Pre-Project Conditions Model	Natural File Name:	Floodway File Name:
Revised or Post-Project Conditions Model	Natural File Name:	Floodway File Name:
Other - (attach description)	Natural File Name:	Floodway File Name:

*Not required for revisions to approximate 1%-annual-chance floodplains (Zone A) – for details, refer to the corresponding section of the instructions.

The document "Numerical Models Accepted by FEMA for NFIP Usage" lists the models accepted by FEMA. This document can be found at: http://www.fema.gov/plan/prevent/fhm/en_modl.shtm.

C. MAPPING REQUIREMENTS

A **certified topographic map** must be submitted showing the following information (where applicable): the boundaries of the effective, existing, and proposed conditions 1%-annual-chance floodplain (for approximate Zone A revisions) or the boundaries of the 1%- and 0.2%-annual-chance floodplains and regulatory floodway (for detailed Zone AE, AO, and AH revisions); location and alignment of all cross sections with stationing control indicated; stream, road, and other alignments (e.g., dams, levees, etc.); current community easements and boundaries; boundaries of the requester's property; certification of a registered professional engineer registered in the subject State; location and description of reference marks; and the referenced vertical datum (NGVD, NAVD, etc.).

Note that the boundaries of the existing or proposed conditions floodplains and regulatory floodway to be shown on the revised FIRM and/or FBFM must tie-in with the effective floodplain and regulatory floodway boundaries. Please attach **a copy of the effective FIRM and/or FBFM,** annotated to show the boundaries of the revised 1%- and 0.2%-annual-chance floodplains and regulatory floodway that tie-in with the boundaries of the effective 1%- and 0.2%-annual-chance floodplain and regulatory floodway at the upstream and downstream limits of the area of revision.

D. COMMON REGULATORY REQUIREMENTS

1. For CLOMR requests, do Base Flood Elevations (BFEs) increase? ☐ Yes ☐ No

For CLOMR requests, if either of the following is true, please submit evidence of compliance with Section 65.12 of the NFIP regulations:
- The proposed project encroaches upon a regulatory floodway and would result in increases above 0.00 foot.
- The proposed project encroaches upon a SFHA with BFEs established and would result in increases above 1.00 foot.

2. Does the request involve the placement or proposed placement of fill? ☐ Yes ☒ No

If Yes, the community must be able to certify that the area to be removed from the special flood hazard area, to include any structures or proposed structures, meets all of the standards of the local floodplain ordinances, and is reasonably safe from flooding in accordance with the NFIP regulations set forth at 44 CFR 60.3(a)(3), 65.5(a)(4), and 65.6(a)(14). Please see the MT-2 instructions for more information.

3. For LOMR requests, is the regulatory floodway being revised? ☐ Yes ☒ No

If Yes, attach evidence of regulatory floodway revision notification. As per Paragraph 65.7(b)(1) of the NFIP Regulations, notification is required for requests involving revisions to the regulatory floodway. (Not required for revisions to approximate 1%-annual-chance floodplains [studied Zone A designation] unless a regulatory floodway is being added. Elements and examples of regulatory floodway revision notification can be found in the MT-2 Form 2 Instructions.)

4. For LOMR requests, does this request require property owner notification and acceptance of BFE increases? ☐ Yes ☒ No

If Yes, please attach proof of property owner notification and acceptance (if available). Elements of and examples of property owner notification can be found in the MT-2 Form 2 Instructions.

FEDERAL EMERGENCY MANAGEMENT AGENCY

RIVERINE HYDROLOGY & HYDRAULICS FORM

O.M.B No. 3067-0148
Expires September 30, 2005

PAPERWORK REDUCTION ACT

Public reporting burden for this form is estimated to average 3 hours per response. The burden estimate includes the time for reviewing instructions, searching existing data sources, gathering and maintaining the needed data, and completing, reviewing, and submitting the form. You are not required to respond to this collection of information unless a valid OMB control number appears in the upper right corner of this form. Send comments regarding the accuracy of the burden estimate and any suggestions for reducing this burden to: Information Collections Management, Federal Emergency Management Agency, 500 C Street, SW, Washington DC 20472, Paperwork Reduction Project (3067-0148). Submission of the form is required to obtain or retain benefits under the National Flood Insurance Program. **Please do not send your completed survey to the above address.**

Flooding Source: Rio Verde Wash K Trib 6B
Note: Fill out one form for each flooding source studied

A. HYDROLOGY

1. Reason for New Hydrologic Analysis (check all that apply)

☐ Not revised (skip to section 2) ☒ No existing analysis ☐ Improved data
☐ Alternative methodology ☐ Proposed Conditions (CLOMR) ☐ Changed physical condition of watershed

2. Comparison of Representative 1%-Annual-Chance Discharges

Location	Drainage Area (Sq. Mi.)	FIS (cfs)	Revised (cfs)

3. Methodology for New Hydrologic Analysis (check all that apply)

☐ Statistical Analysis of Gage Records ☒ Precipitation/Runoff Model HEC-1 and/or FLO-2D [TR-20, HEC-1, HEC-HMS etc.]
☐ Regional Regression Equations ☐ Other (please attach description)

Please enclose all relevant models in digital format, maps, computations (including computation of parameters) and documentation to support the new analysis. The document, "Numerical Models Accepted by FEMA for NFIP Usage" lists the models accepted by FEMA. This document can be found at: http://www.fema.gov/plan/prevent/fhm/en_modl.shtm.

4. Review/Approval of Analysis

If your community requires a regional, state, or federal agency to review the hydrologic analysis, please attach evidence of approval/review.

5. Impacts of Sediment Transport on Hydrology

Was sediment transport considered? ☐ Yes ☒ No If yes, then fill out Section F (Sediment Transport) of Form 3. If No, then attach your explanation for why sediment transport was not considered.

B. HYDRAULICS

1. Reach to be Revised

	Description	Cross Section	Water-Surface Elevations (ft.) Effective	Proposed/Revised
Downstream Limit	350'N & 90'W of Lone Mnt Rd & 164th St	0		2104.59
Upstream Limit	870'S & 6800'E of DoveValley & 144th St	1.580		2301.42

2. Hydraulic Method Used

Hydraulic Analysis FLO-2D [HEC-2 , HEC-RAS, Other (Attach description)]

B. HYDRAULICS (CONTINUED)

3. Pre-Submittal Review of Hydraulic Models

FEMA has developed two review programs, CHECK-2 and CHECK-RAS, to aid in the review of HEC-2 and HEC-RAS hydraulic models, respectively. These review programs verify that the hydraulic estimates and assumptions in the model data are in accordance with NFIP requirements, and that the data are comparable with the assumptions and limitations of HEC-2/HEC-RAS. CHECK-2 and CHECK-RAS identify areas of potential error or concern. These tools do not replace engineering judgment. CHECK-2 and CHECK-RAS can be downloaded from http://www.fema.gov/plan/prevent/fhm/frm_soft.shtm. We recommend that you review your HEC-2 and HEC-RAS models with CHECK-2 and CHECK-RAS. If you disagree with a message, please attach an explanation of why the message is not valid in this case. Review of your submittal and resolution of valid modeling discrepancies will result in reduced review time.

HEC-2/HEC-RAS models reviewed with CHECK-2/CHECK-RAS? ☐ Yes ☐ No

4. Models Submitted

Duplicate Effective Model*	Natural File Name:	Floodway File Name:
Corrected Effective Model*	Natural File Name:	Floodway File Name:
Existing or Pre-Project Conditions Model	Natural File Name:	Floodway File Name:
Revised or Post-Project Conditions Model	Natural File Name:	Floodway File Name:
Other - (attach description)	Natural File Name:	Floodway File Name:

*Not required for revisions to approximate 1%-annual-chance floodplains (Zone A) – for details, refer to the corresponding section of the instructions.

The document "Numerical Models Accepted by FEMA for NFIP Usage" lists the models accepted by FEMA. This document can be found at: http://www.fema.gov/plan/prevent/fhm/en_modl.shtm.

C. MAPPING REQUIREMENTS

A **certified topographic map** must be submitted showing the following information (where applicable): the boundaries of the effective, existing, and proposed conditions 1%-annual-chance floodplain (for approximate Zone A revisions) or the boundaries of the 1%- and 0.2%-annual-chance floodplains and regulatory floodway (for detailed Zone AE, AO, and AH revisions); location and alignment of all cross sections with stationing control indicated; stream, road, and other alignments (e.g., dams, levees, etc.); current community easements and boundaries; boundaries of the requester's property; certification of a registered professional engineer registered in the subject State; location and description of reference marks; and the referenced vertical datum (NGVD, NAVD, etc.).

Note that the boundaries of the existing or proposed conditions floodplains and regulatory floodway to be shown on the revised FIRM and/or FBFM must tie-in with the effective floodplain and regulatory floodway boundaries. Please attach **a copy of the effective FIRM and/or FBFM,** annotated to show the boundaries of the revised 1%- and 0.2%-annual-chance floodplains and regulatory floodway that tie-in with the boundaries of the effective 1%- and 0.2%-annual-chance floodplain and regulatory floodway at the upstream and downstream limits of the area of revision.

D. COMMON REGULATORY REQUIREMENTS

1. For CLOMR requests, do Base Flood Elevations (BFEs) increase? ☐ Yes ☐ No

For CLOMR requests, if either of the following is true, please submit evidence of compliance with Section 65.12 of the NFIP regulations:
- The proposed project encroaches upon a regulatory floodway and would result in increases above 0.00 foot.
- The proposed project encroaches upon a SFHA with BFEs established and would result in increases above 1.00 foot.

2. Does the request involve the placement or proposed placement of fill? ☐ Yes ☒ No

If Yes, the community must be able to certify that the area to be removed from the special flood hazard area, to include any structures or proposed structures, meets all of the standards of the local floodplain ordinances, and is reasonably safe from flooding in accordance with the NFIP regulations set forth at 44 CFR 60.3(a)(3), 65.5(a)(4), and 65.6(a)(14). Please see the MT-2 instructions for more information.

3. For LOMR requests, is the regulatory floodway being revised? ☐ Yes ☒ No

If Yes, attach evidence of regulatory floodway revision notification. As per Paragraph 65.7(b)(1) of the NFIP Regulations, notification is required for requests involving revisions to the regulatory floodway. (Not required for revisions to approximate 1%-annual-chance floodplains [studied Zone A designation] unless a regulatory floodway is being added. Elements and examples of regulatory floodway revision notification can be found in the MT-2 Form 2 Instructions.)

4. For LOMR requests, does this request require property owner notification and acceptance of BFE increases? ☐ Yes ☒ No

If Yes, please attach proof of property owner notification and acceptance (if available). Elements of and examples of property owner notification can be found in the MT-2 Form 2 Instructions.

FEDERAL EMERGENCY MANAGEMENT AGENCY

RIVERINE HYDROLOGY & HYDRAULICS FORM

O.M.B No. 3067-0148
Expires September 30, 2005

PAPERWORK REDUCTION ACT

Public reporting burden for this form is estimated to average 3 hours per response. The burden estimate includes the time for reviewing instructions, searching existing data sources, gathering and maintaining the needed data, and completing, reviewing, and submitting the form. You are not required to respond to this collection of information unless a valid OMB control number appears in the upper right corner of this form. Send comments regarding the accuracy of the burden estimate and any suggestions for reducing this burden to: Information Collections Management, Federal Emergency Management Agency, 500 C Street, SW, Washington DC 20472, Paperwork Reduction Project (3067-0148). Submission of the form is required to obtain or retain benefits under the National Flood Insurance Program. **Please do not send your completed survey to the above address.**

Flooding Source: Rio Verde Wash K Trib 7
Note: Fill out one form for each flooding source studied

A. HYDROLOGY

1. Reason for New Hydrologic Analysis (check all that apply)

☐ Not revised (skip to section 2) ☒ No existing analysis ☐ Improved data
☐ Alternative methodology ☐ Proposed Conditions (CLOMR) ☐ Changed physical condition of watershed

2. Comparison of Representative 1%-Annual-Chance Discharges

Location	Drainage Area (Sq. Mi.)	FIS (cfs)	Revised (cfs)

3. Methodology for New Hydrologic Analysis (check all that apply)

☐ Statistical Analysis of Gage Records ☒ Precipitation/Runoff Model HEC-1 and/or FLO-2D [TR-20, HEC-1, HEC-HMS etc.]
☐ Regional Regression Equations ☐ Other (please attach description)

Please enclose all relevant models in digital format, maps, computations (including computation of parameters) and documentation to support the new analysis. The document, "Numerical Models Accepted by FEMA for NFIP Usage" lists the models accepted by FEMA. This document can be found at: http://www.fema.gov/plan/prevent/fhm/en_modl.shtm.

4. Review/Approval of Analysis

If your community requires a regional, state, or federal agency to review the hydrologic analysis, please attach evidence of approval/review.

5. Impacts of Sediment Transport on Hydrology

Was sediment transport considered? ☐ Yes ☒ No If yes, then fill out Section F (Sediment Transport) of Form 3. If No, then attach your explanation for why sediment transport was not considered.

B. HYDRAULICS

1. Reach to be Revised

	Description	Cross Section	Water-Surface Elevations (ft.) Effective	Proposed/Revised
Downstream Limit	150'N & 420'W of Montgomery Rd & 164th S	0		2069.96
Upstream Limit	460'S & 240'W of Lone Mnt Rd & 155th St.	1.202		2248.67

2. Hydraulic Method Used

Hydraulic Analysis FLO-2D [HEC-2 , HEC-RAS, Other (Attach description)]

B. HYDRAULICS (CONTINUED)

3. Pre-Submittal Review of Hydraulic Models

FEMA has developed two review programs, CHECK-2 and CHECK-RAS, to aid in the review of HEC-2 and HEC-RAS hydraulic models, respectively. These review programs verify that the hydraulic estimates and assumptions in the model data are in accordance with NFIP requirements, and that the data are comparable with the assumptions and limitations of HEC-2/HEC-RAS. CHECK-2 and CHECK-RAS identify areas of potential error or concern. These tools do not replace engineering judgment. CHECK-2 and CHECK-RAS can be downloaded from http://www.fema.gov/plan/prevent/fhm/frm_soft.shtm. We recommend that you review your HEC-2 and HEC-RAS models with CHECK-2 and CHECK-RAS. If you disagree with a message, please attach an explanation of why the message is not valid in this case. Review of your submittal and resolution of valid modeling discrepancies will result in reduced review time.

HEC-2/HEC-RAS models reviewed with CHECK-2/CHECK-RAS? ☐ Yes ☐ No

4. Models Submitted

Duplicate Effective Model*	Natural File Name:	Floodway File Name:
Corrected Effective Model*	Natural File Name:	Floodway File Name:
Existing or Pre-Project Conditions Model	Natural File Name:	Floodway File Name:
Revised or Post-Project Conditions Model	Natural File Name:	Floodway File Name:
Other - (attach description)	Natural File Name:	Floodway File Name:

*Not required for revisions to approximate 1%-annual-chance floodplains (Zone A) – for details, refer to the corresponding section of the instructions.

The document "Numerical Models Accepted by FEMA for NFIP Usage" lists the models accepted by FEMA. This document can be found at: http://www.fema.gov/plan/prevent/fhm/en_modl.shtm.

C. MAPPING REQUIREMENTS

A **certified topographic map** must be submitted showing the following information (where applicable): the boundaries of the effective, existing, and proposed conditions 1%-annual-chance floodplain (for approximate Zone A revisions) or the boundaries of the 1%- and 0.2%-annual-chance floodplains and regulatory floodway (for detailed Zone AE, AO, and AH revisions); location and alignment of all cross sections with stationing control indicated; stream, road, and other alignments (e.g., dams, levees, etc.); current community easements and boundaries; boundaries of the requester's property; certification of a registered professional engineer registered in the subject State; location and description of reference marks; and the referenced vertical datum (NGVD, NAVD, etc.).

Note that the boundaries of the existing or proposed conditions floodplains and regulatory floodway to be shown on the revised FIRM and/or FBFM must tie-in with the effective floodplain and regulatory floodway boundaries. Please attach **a copy of the effective FIRM and/or FBFM,** annotated to show the boundaries of the revised 1%- and 0.2%-annual-chance floodplains and regulatory floodway that tie-in with the boundaries of the effective 1%- and 0.2%-annual-chance floodplain and regulatory floodway at the upstream and downstream limits of the area of revision.

D. COMMON REGULATORY REQUIREMENTS

1. For CLOMR requests, do Base Flood Elevations (BFEs) increase? ☐ Yes ☐ No

For CLOMR requests, if either of the following is true, please submit evidence of compliance with Section 65.12 of the NFIP regulations:
- The proposed project encroaches upon a regulatory floodway and would result in increases above 0.00 foot.
- The proposed project encroaches upon a SFHA with BFEs established and would result in increases above 1.00 foot.

2. Does the request involve the placement or proposed placement of fill? ☐ Yes ☒ No

If Yes, the community must be able to certify that the area to be removed from the special flood hazard area, to include any structures or proposed structures, meets all of the standards of the local floodplain ordinances, and is reasonably safe from flooding in accordance with the NFIP regulations set forth at 44 CFR 60.3(a)(3), 65.5(a)(4), and 65.6(a)(14). Please see the MT-2 instructions for more information.

3. For LOMR requests, is the regulatory floodway being revised? ☐ Yes ☒ No

If Yes, attach evidence of regulatory floodway revision notification. As per Paragraph 65.7(b)(1) of the NFIP Regulations, notification is required for requests involving revisions to the regulatory floodway. (Not required for revisions to approximate 1%-annual-chance floodplains [studied Zone A designation] unless a regulatory floodway is being added. Elements and examples of regulatory floodway revision notification can be found in the MT-2 Form 2 Instructions.)

4. For LOMR requests, does this request require property owner notification and acceptance of BFE increases? ☐ Yes ☒ No

If Yes, please attach proof of property owner notification and acceptance (if available). Elements of and examples of property owner notification can be found in the MT-2 Form 2 Instructions.

FEDERAL EMERGENCY MANAGEMENT AGENCY

RIVERINE HYDROLOGY & HYDRAULICS FORM

O.M.B No. 3067-0148
Expires September 30, 2005

PAPERWORK REDUCTION ACT

Public reporting burden for this form is estimated to average 3 hours per response. The burden estimate includes the time for reviewing instructions, searching existing data sources, gathering and maintaining the needed data, and completing, reviewing, and submitting the form. You are not required to respond to this collection of information unless a valid OMB control number appears in the upper right corner of this form. Send comments regarding the accuracy of the burden estimate and any suggestions for reducing this burden to: Information Collections Management, Federal Emergency Management Agency, 500 C Street, SW, Washington DC 20472, Paperwork Reduction Project (3067-0148). Submission of the form is required to obtain or retain benefits under the National Flood Insurance Program. **Please do not send your completed survey to the above address.**

Flooding Source: Rio Verde Wash K Trib 8
Note: Fill out one form for each flooding source studied

A. HYDROLOGY

1. Reason for New Hydrologic Analysis (check all that apply)

☐ Not revised (skip to section 2) ☒ No existing analysis ☐ Improved data
☐ Alternative methodology ☐ Proposed Conditions (CLOMR) ☐ Changed physical condition of watershed

2. Comparison of Representative 1%-Annual-Chance Discharges

Location	Drainage Area (Sq. Mi.)	FIS (cfs)	Revised (cfs)

3. Methodology for New Hydrologic Analysis (check all that apply)

☐ Statistical Analysis of Gage Records ☒ Precipitation/Runoff Model HEC-1 and/or FLO-2D [TR-20, HEC-1, HEC-HMS etc.]
☐ Regional Regression Equations ☐ Other (please attach description)

Please enclose all relevant models in digital format, maps, computations (including computation of parameters) and documentation to support the new analysis. The document, "Numerical Models Accepted by FEMA for NFIP Usage" lists the models accepted by FEMA. This document can be found at: http://www.fema.gov/plan/prevent/fhm/en_modl.shtm.

4. Review/Approval of Analysis

If your community requires a regional, state, or federal agency to review the hydrologic analysis, please attach evidence of approval/review.

5. Impacts of Sediment Transport on Hydrology

Was sediment transport considered? ☐ Yes ☒ No If yes, then fill out Section F (Sediment Transport) of Form 3. If No, then attach your explanation for why sediment transport was not considered.

B. HYDRAULICS

1. Reach to be Revised

	Description	Cross Section	Water-Surface Elevations (ft.) Effective	Proposed/Revised
Downstream Limit	1600'S & 480'W of Lone Mnt Rd & 156th St	0		2224.12
Upstream Limit	1140'S of Lone Mnt Rd & 154th St.	0.188		2248.04

2. Hydraulic Method Used

Hydraulic Analysis FLO-2D [HEC-2 , HEC-RAS, Other (Attach description)]

B. HYDRAULICS (CONTINUED)

3. Pre-Submittal Review of Hydraulic Models

FEMA has developed two review programs, CHECK-2 and CHECK-RAS, to aid in the review of HEC-2 and HEC-RAS hydraulic models, respectively. These review programs verify that the hydraulic estimates and assumptions in the model data are in accordance with NFIP requirements, and that the data are comparable with the assumptions and limitations of HEC-2/HEC-RAS. CHECK-2 and CHECK-RAS identify areas of potential error or concern. These tools do not replace engineering judgment. CHECK-2 and CHECK-RAS can be downloaded from http://www.fema.gov/plan/prevent/fhm/frm_soft.shtm. We recommend that you review your HEC-2 and HEC-RAS models with CHECK-2 and CHECK-RAS. If you disagree with a message, please attach an explanation of why the message is not valid in this case. Review of your submittal and resolution of valid modeling discrepancies will result in reduced review time.

HEC-2/HEC-RAS models reviewed with CHECK-2/CHECK-RAS? ☐ Yes ☐ No

4. Models Submitted

Duplicate Effective Model*	Natural File Name:	Floodway File Name:
Corrected Effective Model*	Natural File Name:	Floodway File Name:
Existing or Pre-Project Conditions Model	Natural File Name:	Floodway File Name:
Revised or Post-Project Conditions Model	Natural File Name:	Floodway File Name:
Other - (attach description)	Natural File Name:	Floodway File Name:

*Not required for revisions to approximate 1%-annual-chance floodplains (Zone A) – for details, refer to the corresponding section of the instructions.

The document "Numerical Models Accepted by FEMA for NFIP Usage" lists the models accepted by FEMA. This document can be found at: http://www.fema.gov/plan/prevent/fhm/en_modl.shtm.

C. MAPPING REQUIREMENTS

A **certified topographic map** must be submitted showing the following information (where applicable): the boundaries of the effective, existing, and proposed conditions 1%-annual-chance floodplain (for approximate Zone A revisions) or the boundaries of the 1%- and 0.2%-annual-chance floodplains and regulatory floodway (for detailed Zone AE, AO, and AH revisions); location and alignment of all cross sections with stationing control indicated; stream, road, and other alignments (e.g., dams, levees, etc.); current community easements and boundaries; boundaries of the requester's property; certification of a registered professional engineer registered in the subject State; location and description of reference marks; and the referenced vertical datum (NGVD, NAVD, etc.).

Note that the boundaries of the existing or proposed conditions floodplains and regulatory floodway to be shown on the revised FIRM and/or FBFM must tie-in with the effective floodplain and regulatory floodway boundaries. Please attach **a copy of the effective FIRM and/or FBFM,** annotated to show the boundaries of the revised 1%- and 0.2%-annual-chance floodplains and regulatory floodway that tie-in with the boundaries of the effective 1%- and 0.2%-annual-chance floodplain and regulatory floodway at the upstream and downstream limits of the area of revision.

D. COMMON REGULATORY REQUIREMENTS

1. For CLOMR requests, do Base Flood Elevations (BFEs) increase? ☐ Yes ☐ No

For CLOMR requests, if either of the following is true, please submit evidence of compliance with Section 65.12 of the NFIP regulations:
- The proposed project encroaches upon a regulatory floodway and would result in increases above 0.00 foot.
- The proposed project encroaches upon a SFHA with BFEs established and would result in increases above 1.00 foot.

2. Does the request involve the placement or proposed placement of fill? ☐ Yes ☒ No

If Yes, the community must be able to certify that the area to be removed from the special flood hazard area, to include any structures or proposed structures, meets all of the standards of the local floodplain ordinances, and is reasonably safe from flooding in accordance with the NFIP regulations set forth at 44 CFR 60.3(a)(3), 65.5(a)(4), and 65.6(a)(14). Please see the MT-2 instructions for more information.

3. For LOMR requests, is the regulatory floodway being revised? ☐ Yes ☒ No

If Yes, attach evidence of regulatory floodway revision notification. As per Paragraph 65.7(b)(1) of the NFIP Regulations, notification is required for requests involving revisions to the regulatory floodway. (Not required for revisions to approximate 1%-annual-chance floodplains [studied Zone A designation] unless a regulatory floodway is being added. Elements and examples of regulatory floodway revision notification can be found in the MT-2 Form 2 Instructions.)

4. For LOMR requests, does this request require property owner notification and acceptance of BFE increases? ☐ Yes ☒ No

If Yes, please attach proof of property owner notification and acceptance (if available). Elements of and examples of property owner notification can be found in the MT-2 Form 2 Instructions.

FEDERAL EMERGENCY MANAGEMENT AGENCY

RIVERINE HYDROLOGY & HYDRAULICS FORM

O.M.B No. 3067-0148
Expires September 30, 2005

PAPERWORK REDUCTION ACT

Public reporting burden for this form is estimated to average 3 hours per response. The burden estimate includes the time for reviewing instructions, searching existing data sources, gathering and maintaining the needed data, and completing, reviewing, and submitting the form. You are not required to respond to this collection of information unless a valid OMB control number appears in the upper right corner of this form. Send comments regarding the accuracy of the burden estimate and any suggestions for reducing this burden to: Information Collections Management, Federal Emergency Management Agency, 500 C Street, SW, Washington DC 20472, Paperwork Reduction Project (3067-0148). Submission of the form is required to obtain or retain benefits under the National Flood Insurance Program. **Please do not send your completed survey to the above address.**

Flooding Source: Rio Verde Wash L
Note: Fill out one form for each flooding source studied

A. HYDROLOGY

1. Reason for New Hydrologic Analysis (check all that apply)

☐ Not revised (skip to section 2) ☒ No existing analysis ☐ Improved data
☐ Alternative methodology ☐ Proposed Conditions (CLOMR) ☐ Changed physical condition of watershed

2. Comparison of Representative 1%-Annual-Chance Discharges

Location	Drainage Area (Sq. Mi.)	FIS (cfs)	Revised (cfs)

3. Methodology for New Hydrologic Analysis (check all that apply)

☐ Statistical Analysis of Gage Records ☒ Precipitation/Runoff Model HEC-1 and/or FLO-2D [TR-20, HEC-1, HEC-HMS etc.]
☐ Regional Regression Equations ☐ Other (please attach description)

Please enclose all relevant models in digital format, maps, computations (including computation of parameters) and documentation to support the new analysis. The document, "Numerical Models Accepted by FEMA for NFIP Usage" lists the models accepted by FEMA. This document can be found at: http://www.fema.gov/plan/prevent/fhm/en_modl.shtm.

4. Review/Approval of Analysis

If your community requires a regional, state, or federal agency to review the hydrologic analysis, please attach evidence of approval/review.

5. Impacts of Sediment Transport on Hydrology

Was sediment transport considered? ☐ Yes ☒ No If yes, then fill out Section F (Sediment Transport) of Form 3. If No, then attach your explanation for why sediment transport was not considered.

B. HYDRAULICS

1. Reach to be Revised

	Description	Cross Section	Water-Surface Elevations (ft.) Effective	Proposed/Revised
Downstream Limit	6600'N & 710'E of RioVerde Needlerock Rd	0		1541.82
Upstream Limit	1840'N & 470'E of Lone Mnt Rd & 168th St	2.861		2040.86

2. Hydraulic Method Used

Hydraulic Analysis FLO-2D [HEC-2 , HEC-RAS, Other (Attach description)]

B. HYDRAULICS (CONTINUED)

3. Pre-Submittal Review of Hydraulic Models

FEMA has developed two review programs, CHECK-2 and CHECK-RAS, to aid in the review of HEC-2 and HEC-RAS hydraulic models, respectively. These review programs verify that the hydraulic estimates and assumptions in the model data are in accordance with NFIP requirements, and that the data are comparable with the assumptions and limitations of HEC-2/HEC-RAS. CHECK-2 and CHECK-RAS identify areas of potential error or concern. These tools do not replace engineering judgment. CHECK-2 and CHECK-RAS can be downloaded from http://www.fema.gov/plan/prevent/fhm/frm_soft.shtm. We recommend that you review your HEC-2 and HEC-RAS models with CHECK-2 and CHECK-RAS. If you disagree with a message, please attach an explanation of why the message is not valid in this case. Review of your submittal and resolution of valid modeling discrepancies will result in reduced review time.

HEC-2/HEC-RAS models reviewed with CHECK-2/CHECK-RAS? ☐ Yes ☐ No

4. Models Submitted

Duplicate Effective Model*	Natural File Name:	Floodway File Name:
Corrected Effective Model*	Natural File Name:	Floodway File Name:
Existing or Pre-Project Conditions Model	Natural File Name:	Floodway File Name:
Revised or Post-Project Conditions Model	Natural File Name:	Floodway File Name:
Other - (attach description)	Natural File Name:	Floodway File Name:

*Not required for revisions to approximate 1%-annual-chance floodplains (Zone A) – for details, refer to the corresponding section of the instructions.

The document "Numerical Models Accepted by FEMA for NFIP Usage" lists the models accepted by FEMA. This document can be found at: http://www.fema.gov/plan/prevent/fhm/en_modl.shtm.

C. MAPPING REQUIREMENTS

A **certified topographic map** must be submitted showing the following information (where applicable): the boundaries of the effective, existing, and proposed conditions 1%-annual-chance floodplain (for approximate Zone A revisions) or the boundaries of the 1%- and 0.2%-annual-chance floodplains and regulatory floodway (for detailed Zone AE, AO, and AH revisions); location and alignment of all cross sections with stationing control indicated; stream, road, and other alignments (e.g., dams, levees, etc.); current community easements and boundaries; boundaries of the requester's property; certification of a registered professional engineer registered in the subject State; location and description of reference marks; and the referenced vertical datum (NGVD, NAVD, etc.).

Note that the boundaries of the existing or proposed conditions floodplains and regulatory floodway to be shown on the revised FIRM and/or FBFM must tie-in with the effective floodplain and regulatory floodway boundaries. Please attach **a copy of the effective FIRM and/or FBFM,** annotated to show the boundaries of the revised 1%- and 0.2%-annual-chance floodplains and regulatory floodway that tie-in with the boundaries of the effective 1%- and 0.2%-annual-chance floodplain and regulatory floodway at the upstream and downstream limits of the area of revision.

D. COMMON REGULATORY REQUIREMENTS

1. For CLOMR requests, do Base Flood Elevations (BFEs) increase? ☐ Yes ☐ No

For CLOMR requests, if either of the following is true, please submit evidence of compliance with Section 65.12 of the NFIP regulations:
- The proposed project encroaches upon a regulatory floodway and would result in increases above 0.00 foot.
- The proposed project encroaches upon a SFHA with BFEs established and would result in increases above 1.00 foot.

2. Does the request involve the placement or proposed placement of fill? ☐ Yes ☒ No

If Yes, the community must be able to certify that the area to be removed from the special flood hazard area, to include any structures or proposed structures, meets all of the standards of the local floodplain ordinances, and is reasonably safe from flooding in accordance with the NFIP regulations set forth at 44 CFR 60.3(a)(3), 65.5(a)(4), and 65.6(a)(14). Please see the MT-2 instructions for more information.

3. For LOMR requests, is the regulatory floodway being revised? ☐ Yes ☒ No

If Yes, attach evidence of regulatory floodway revision notification. As per Paragraph 65.7(b)(1) of the NFIP Regulations, notification is required for requests involving revisions to the regulatory floodway. (Not required for revisions to approximate 1%-annual-chance floodplains [studied Zone A designation] unless a regulatory floodway is being added. Elements and examples of regulatory floodway revision notification can be found in the MT-2 Form 2 Instructions.)

4. For LOMR requests, does this request require property owner notification and acceptance of BFE increases? ☐ Yes ☒ No

If Yes, please attach proof of property owner notification and acceptance (if available). Elements of and examples of property owner notification can be found in the MT-2 Form 2 Instructions.

FEDERAL EMERGENCY MANAGEMENT AGENCY

RIVERINE HYDROLOGY & HYDRAULICS FORM

O.M.B No. 3067-0148
Expires September 30, 2005

PAPERWORK REDUCTION ACT

Public reporting burden for this form is estimated to average 3 hours per response. The burden estimate includes the time for reviewing instructions, searching existing data sources, gathering and maintaining the needed data, and completing, reviewing, and submitting the form. You are not required to respond to this collection of information unless a valid OMB control number appears in the upper right corner of this form. Send comments regarding the accuracy of the burden estimate and any suggestions for reducing this burden to: Information Collections Management, Federal Emergency Management Agency, 500 C Street, SW, Washington DC 20472, Paperwork Reduction Project (3067-0148). Submission of the form is required to obtain or retain benefits under the National Flood Insurance Program. **Please do not send your completed survey to the above address.**

Flooding Source: Rio Verde Wash 10 Split 7 Trib 1
Note: Fill out one form for each flooding source studied

A. HYDROLOGY

1. Reason for New Hydrologic Analysis (check all that apply)

☐ Not revised (skip to section 2) ☒ No existing analysis ☐ Improved data
☐ Alternative methodology ☐ Proposed Conditions (CLOMR) ☐ Changed physical condition of watershed

2. Comparison of Representative 1%-Annual-Chance Discharges

Location	Drainage Area (Sq. Mi.)	FIS (cfs)	Revised (cfs)

3. Methodology for New Hydrologic Analysis (check all that apply)

☐ Statistical Analysis of Gage Records ☒ Precipitation/Runoff Model HEC-1 and/or FLO-2D [TR-20, HEC-1, HEC-HMS etc.]
☐ Regional Regression Equations ☐ Other (please attach description)

Please enclose all relevant models in digital format, maps, computations (including computation of parameters) and documentation to support the new analysis. The document, "Numerical Models Accepted by FEMA for NFIP Usage" lists the models accepted by FEMA. This document can be found at: http://www.fema.gov/plan/prevent/fhm/en_modl.shtm.

4. Review/Approval of Analysis

If your community requires a regional, state, or federal agency to review the hydrologic analysis, please attach evidence of approval/review.

5. Impacts of Sediment Transport on Hydrology

Was sediment transport considered? ☐ Yes ☒ No If yes, then fill out Section F (Sediment Transport) of Form 3. If No, then attach your explanation for why sediment transport was not considered.

B. HYDRAULICS

1. Reach to be Revised

	Description	Cross Section	Water-Surface Elevations (ft.) Effective	Proposed/Revised
Downstream Limit	3100'S &1650'E of PinnacleVista &164th S	0		1962.51
Upstream Limit	3600'S & 60'W of RioVerde Dr & 148th St	2.511		2290.41

2. Hydraulic Method Used

Hydraulic Analysis FLO-2D [HEC-2 , HEC-RAS, Other (Attach description)]

B. HYDRAULICS (CONTINUED)

3. Pre-Submittal Review of Hydraulic Models

FEMA has developed two review programs, CHECK-2 and CHECK-RAS, to aid in the review of HEC-2 and HEC-RAS hydraulic models, respectively. These review programs verify that the hydraulic estimates and assumptions in the model data are in accordance with NFIP requirements, and that the data are comparable with the assumptions and limitations of HEC-2/HEC-RAS. CHECK-2 and CHECK-RAS identify areas of potential error or concern. These tools do not replace engineering judgment. CHECK-2 and CHECK-RAS can be downloaded from http://www.fema.gov/plan/prevent/fhm/frm_soft.shtm. We recommend that you review your HEC-2 and HEC-RAS models with CHECK-2 and CHECK-RAS. If you disagree with a message, please attach an explanation of why the message is not valid in this case. Review of your submittal and resolution of valid modeling discrepancies will result in reduced review time.

HEC-2/HEC-RAS models reviewed with CHECK-2/CHECK-RAS? ☐ Yes ☐ No

4. Models Submitted

Duplicate Effective Model*	Natural File Name:	Floodway File Name:
Corrected Effective Model*	Natural File Name:	Floodway File Name:
Existing or Pre-Project Conditions Model	Natural File Name:	Floodway File Name:
Revised or Post-Project Conditions Model	Natural File Name:	Floodway File Name:
Other - (attach description)	Natural File Name:	Floodway File Name:

*Not required for revisions to approximate 1%-annual-chance floodplains (Zone A) – for details, refer to the corresponding section of the instructions.

The document "Numerical Models Accepted by FEMA for NFIP Usage" lists the models accepted by FEMA. This document can be found at: http://www.fema.gov/plan/prevent/fhm/en_modl.shtm.

C. MAPPING REQUIREMENTS

A **certified topographic map** must be submitted showing the following information (where applicable): the boundaries of the effective, existing, and proposed conditions 1%-annual-chance floodplain (for approximate Zone A revisions) or the boundaries of the 1%- and 0.2%-annual-chance floodplains and regulatory floodway (for detailed Zone AE, AO, and AH revisions); location and alignment of all cross sections with stationing control indicated; stream, road, and other alignments (e.g., dams, levees, etc.); current community easements and boundaries; boundaries of the requester's property; certification of a registered professional engineer registered in the subject State; location and description of reference marks; and the referenced vertical datum (NGVD, NAVD, etc.).

Note that the boundaries of the existing or proposed conditions floodplains and regulatory floodway to be shown on the revised FIRM and/or FBFM must tie-in with the effective floodplain and regulatory floodway boundaries. Please attach **a copy of the effective FIRM and/or FBFM,** annotated to show the boundaries of the revised 1%- and 0.2%-annual-chance floodplains and regulatory floodway that tie-in with the boundaries of the effective 1%- and 0.2%-annual-chance floodplain and regulatory floodway at the upstream and downstream limits of the area of revision.

D. COMMON REGULATORY REQUIREMENTS

1. For CLOMR requests, do Base Flood Elevations (BFEs) increase? ☐ Yes ☐ No

For CLOMR requests, if either of the following is true, please submit evidence of compliance with Section 65.12 of the NFIP regulations:
- The proposed project encroaches upon a regulatory floodway and would result in increases above 0.00 foot.
- The proposed project encroaches upon a SFHA with BFEs established and would result in increases above 1.00 foot.

2. Does the request involve the placement or proposed placement of fill? ☐ Yes ☒ No

If Yes, the community must be able to certify that the area to be removed from the special flood hazard area, to include any structures or proposed structures, meets all of the standards of the local floodplain ordinances, and is reasonably safe from flooding in accordance with the NFIP regulations set forth at 44 CFR 60.3(a)(3), 65.5(a)(4), and 65.6(a)(14). Please see the MT-2 instructions for more information.

3. For LOMR requests, is the regulatory floodway being revised? ☐ Yes ☒ No

If Yes, attach evidence of regulatory floodway revision notification. As per Paragraph 65.7(b)(1) of the NFIP Regulations, notification is required for requests involving revisions to the regulatory floodway. (Not required for revisions to approximate 1%-annual-chance floodplains [studied Zone A designation] unless a regulatory floodway is being added. Elements and examples of regulatory floodway revision notification can be found in the MT-2 Form 2 Instructions.)

4. For LOMR requests, does this request require property owner notification and acceptance of BFE increases? ☐ Yes ☒ No

If Yes, please attach proof of property owner notification and acceptance (if available). Elements of and examples of property owner notification can be found in the MT-2 Form 2 Instructions.

FEDERAL EMERGENCY MANAGEMENT AGENCY

RIVERINE HYDROLOGY & HYDRAULICS FORM

O.M.B No. 3067-0148
Expires September 30, 2005

PAPERWORK REDUCTION ACT

Public reporting burden for this form is estimated to average 3 hours per response. The burden estimate includes the time for reviewing instructions, searching existing data sources, gathering and maintaining the needed data, and completing, reviewing, and submitting the form. You are not required to respond to this collection of information unless a valid OMB control number appears in the upper right corner of this form. Send comments regarding the accuracy of the burden estimate and any suggestions for reducing this burden to: Information Collections Management, Federal Emergency Management Agency, 500 C Street, SW, Washington DC 20472, Paperwork Reduction Project (3067-0148). Submission of the form is required to obtain or retain benefits under the National Flood Insurance Program. **Please do not send your completed survey to the above address.**

Flooding Source: Rio Verde Wash K Trib 6C
Note: Fill out one form for each flooding source studied

A. HYDROLOGY

1. Reason for New Hydrologic Analysis (check all that apply)

☐ Not revised (skip to section 2) ☒ No existing analysis ☐ Improved data
☐ Alternative methodology ☐ Proposed Conditions (CLOMR) ☐ Changed physical condition of watershed

2. Comparison of Representative 1%-Annual-Chance Discharges

Location	Drainage Area (Sq. Mi.)	FIS (cfs)	Revised (cfs)

3. Methodology for New Hydrologic Analysis (check all that apply)

☐ Statistical Analysis of Gage Records ☒ Precipitation/Runoff Model HEC-1 and/or FLO-2D [TR-20, HEC-1, HEC-HMS etc.]
☐ Regional Regression Equations ☐ Other (please attach description)

Please enclose all relevant models in digital format, maps, computations (including computation of parameters) and documentation to support the new analysis. The document, "Numerical Models Accepted by FEMA for NFIP Usage" lists the models accepted by FEMA. This document can be found at: http://www.fema.gov/plan/prevent/fhm/en_modl.shtm.

4. Review/Approval of Analysis

If your community requires a regional, state, or federal agency to review the hydrologic analysis, please attach evidence of approval/review.

5. Impacts of Sediment Transport on Hydrology

Was sediment transport considered? ☐ Yes ☒ No If yes, then fill out Section F (Sediment Transport) of Form 3. If No, then attach your explanation for why sediment transport was not considered.

B. HYDRAULICS

1. Reach to be Revised

	Description	Cross Section	Water-Surface Elevations (ft.) Effective	Proposed/Revised
Downstream Limit	4200'N & 330'E of LoneMnt Rd & 154th St.	0		2298.03
Upstream Limit	330'S & 4500'E of DoveValley Rd 144th St	0.496		2359.80

2. Hydraulic Method Used

Hydraulic Analysis FLO-2D [HEC-2 , HEC-RAS, Other (Attach description)]

B. HYDRAULICS (CONTINUED)

3. Pre-Submittal Review of Hydraulic Models

FEMA has developed two review programs, CHECK-2 and CHECK-RAS, to aid in the review of HEC-2 and HEC-RAS hydraulic models, respectively. These review programs verify that the hydraulic estimates and assumptions in the model data are in accordance with NFIP requirements, and that the data are comparable with the assumptions and limitations of HEC-2/HEC-RAS. CHECK-2 and CHECK-RAS identify areas of potential error or concern. These tools do not replace engineering judgment. CHECK-2 and CHECK-RAS can be downloaded from http://www.fema.gov/plan/prevent/fhm/frm_soft.shtm. We recommend that you review your HEC-2 and HEC-RAS models with CHECK-2 and CHECK-RAS. If you disagree with a message, please attach an explanation of why the message is not valid in this case. Review of your submittal and resolution of valid modeling discrepancies will result in reduced review time.

HEC-2/HEC-RAS models reviewed with CHECK-2/CHECK-RAS? ☐ Yes ☐ No

4. Models Submitted

Duplicate Effective Model*	Natural File Name:	Floodway File Name:
Corrected Effective Model*	Natural File Name:	Floodway File Name:
Existing or Pre-Project Conditions Model	Natural File Name:	Floodway File Name:
Revised or Post-Project Conditions Model	Natural File Name:	Floodway File Name:
Other - (attach description)	Natural File Name:	Floodway File Name:

*Not required for revisions to approximate 1%-annual-chance floodplains (Zone A) – for details, refer to the corresponding section of the instructions.

The document "Numerical Models Accepted by FEMA for NFIP Usage" lists the models accepted by FEMA. This document can be found at: http://www.fema.gov/plan/prevent/fhm/en_modl.shtm.

C. MAPPING REQUIREMENTS

A **certified topographic map** must be submitted showing the following information (where applicable): the boundaries of the effective, existing, and proposed conditions 1%-annual-chance floodplain (for approximate Zone A revisions) or the boundaries of the 1%- and 0.2%-annual-chance floodplains and regulatory floodway (for detailed Zone AE, AO, and AH revisions); location and alignment of all cross sections with stationing control indicated; stream, road, and other alignments (e.g., dams, levees, etc.); current community easements and boundaries; boundaries of the requester's property; certification of a registered professional engineer registered in the subject State; location and description of reference marks; and the referenced vertical datum (NGVD, NAVD, etc.).

Note that the boundaries of the existing or proposed conditions floodplains and regulatory floodway to be shown on the revised FIRM and/or FBFM must tie-in with the effective floodplain and regulatory floodway boundaries. Please attach **a copy of the effective FIRM and/or FBFM,** annotated to show the boundaries of the revised 1%- and 0.2%-annual-chance floodplains and regulatory floodway that tie-in with the boundaries of the effective 1%- and 0.2%-annual-chance floodplain and regulatory floodway at the upstream and downstream limits of the area of revision.

D. COMMON REGULATORY REQUIREMENTS

1. For CLOMR requests, do Base Flood Elevations (BFEs) increase? ☐ Yes ☐ No

For CLOMR requests, if either of the following is true, please submit evidence of compliance with Section 65.12 of the NFIP regulations:
- The proposed project encroaches upon a regulatory floodway and would result in increases above 0.00 foot.
- The proposed project encroaches upon a SFHA with BFEs established and would result in increases above 1.00 foot.

2. Does the request involve the placement or proposed placement of fill? ☐ Yes ☒ No

If Yes, the community must be able to certify that the area to be removed from the special flood hazard area, to include any structures or proposed structures, meets all of the standards of the local floodplain ordinances, and is reasonably safe from flooding in accordance with the NFIP regulations set forth at 44 CFR 60.3(a)(3), 65.5(a)(4), and 65.6(a)(14). Please see the MT-2 instructions for more information.

3. For LOMR requests, is the regulatory floodway being revised? ☐ Yes ☒ No

If Yes, attach evidence of regulatory floodway revision notification. As per Paragraph 65.7(b)(1) of the NFIP Regulations, notification is required for requests involving revisions to the regulatory floodway. (Not required for revisions to approximate 1%-annual-chance floodplains [studied Zone A designation] unless a regulatory floodway is being added. Elements and examples of regulatory floodway revision notification can be found in the MT-2 Form 2 Instructions.)

4. For LOMR requests, does this request require property owner notification and acceptance of BFE increases? ☐ Yes ☒ No

If Yes, please attach proof of property owner notification and acceptance (if available). Elements of and examples of property owner notification can be found in the MT-2 Form 2 Instructions.

FEDERAL EMERGENCY MANAGEMENT AGENCY

RIVERINE HYDROLOGY & HYDRAULICS FORM

O.M.B No. 3067-0148
Expires September 30, 2005

PAPERWORK REDUCTION ACT

Public reporting burden for this form is estimated to average 3 hours per response. The burden estimate includes the time for reviewing instructions, searching existing data sources, gathering and maintaining the needed data, and completing, reviewing, and submitting the form. You are not required to respond to this collection of information unless a valid OMB control number appears in the upper right corner of this form. Send comments regarding the accuracy of the burden estimate and any suggestions for reducing this burden to: Information Collections Management, Federal Emergency Management Agency, 500 C Street, SW, Washington DC 20472, Paperwork Reduction Project (3067-0148). Submission of the form is required to obtain or retain benefits under the National Flood Insurance Program. **Please do not send your completed survey to the above address.**

Flooding Source: Rio Verde Wash K Trib 6A3
Note: Fill out one form for each flooding source studied

A. HYDROLOGY

1. Reason for New Hydrologic Analysis (check all that apply)

☐ Not revised (skip to section 2) ☒ No existing analysis ☐ Improved data
☐ Alternative methodology ☐ Proposed Conditions (CLOMR) ☐ Changed physical condition of watershed

2. Comparison of Representative 1%-Annual-Chance Discharges

Location	Drainage Area (Sq. Mi.)	FIS (cfs)	Revised (cfs)

3. Methodology for New Hydrologic Analysis (check all that apply)

☐ Statistical Analysis of Gage Records ☒ Precipitation/Runoff Model HEC-1 and/or FLO-2D [TR-20, HEC-1, HEC-HMS etc.]
☐ Regional Regression Equations ☐ Other (please attach description)

Please enclose all relevant models in digital format, maps, computations (including computation of parameters) and documentation to support the new analysis. The document, "Numerical Models Accepted by FEMA for NFIP Usage" lists the models accepted by FEMA. This document can be found at: http://www.fema.gov/plan/prevent/fhm/en_modl.shtm.

4. Review/Approval of Analysis

If your community requires a regional, state, or federal agency to review the hydrologic analysis, please attach evidence of approval/review.

5. Impacts of Sediment Transport on Hydrology

Was sediment transport considered? ☐ Yes ☒ No If yes, then fill out Section F (Sediment Transport) of Form 3. If No, then attach your explanation for why sediment transport was not considered.

B. HYDRAULICS

1. Reach to be Revised

	Description	Cross Section	Water-Surface Elevations (ft.) Effective	Proposed/Revised
Downstream Limit	910'N & 600'W of Lone Mnt Rd & 154th St.	0		2290.30
Upstream Limit	1060'N & 920'W of Lone Mnt Rd & 152nd St	0.308		2327.87

2. Hydraulic Method Used

Hydraulic Analysis FLO-2D [HEC-2 , HEC-RAS, Other (Attach description)]

B. HYDRAULICS (CONTINUED)

3. Pre-Submittal Review of Hydraulic Models

FEMA has developed two review programs, CHECK-2 and CHECK-RAS, to aid in the review of HEC-2 and HEC-RAS hydraulic models, respectively. These review programs verify that the hydraulic estimates and assumptions in the model data are in accordance with NFIP requirements, and that the data are comparable with the assumptions and limitations of HEC-2/HEC-RAS. CHECK-2 and CHECK-RAS identify areas of potential error or concern. These tools do not replace engineering judgment. CHECK-2 and CHECK-RAS can be downloaded from http://www.fema.gov/plan/prevent/fhm/frm_soft.shtm. We recommend that you review your HEC-2 and HEC-RAS models with CHECK-2 and CHECK-RAS. If you disagree with a message, please attach an explanation of why the message is not valid in this case. Review of your submittal and resolution of valid modeling discrepancies will result in reduced review time.

HEC-2/HEC-RAS models reviewed with CHECK-2/CHECK-RAS? ☐ Yes ☐ No

4. Models Submitted

Duplicate Effective Model*	Natural File Name:	Floodway File Name:
Corrected Effective Model*	Natural File Name:	Floodway File Name:
Existing or Pre-Project Conditions Model	Natural File Name:	Floodway File Name:
Revised or Post-Project Conditions Model	Natural File Name:	Floodway File Name:
Other - (attach description)	Natural File Name:	Floodway File Name:

*Not required for revisions to approximate 1%-annual-chance floodplains (Zone A) – for details, refer to the corresponding section of the instructions.

The document "Numerical Models Accepted by FEMA for NFIP Usage" lists the models accepted by FEMA. This document can be found at: http://www.fema.gov/plan/prevent/fhm/en_modl.shtm.

C. MAPPING REQUIREMENTS

A **certified topographic map** must be submitted showing the following information (where applicable): the boundaries of the effective, existing, and proposed conditions 1%-annual-chance floodplain (for approximate Zone A revisions) or the boundaries of the 1%- and 0.2%-annual-chance floodplains and regulatory floodway (for detailed Zone AE, AO, and AH revisions); location and alignment of all cross sections with stationing control indicated; stream, road, and other alignments (e.g., dams, levees, etc.); current community easements and boundaries; boundaries of the requester's property; certification of a registered professional engineer registered in the subject State; location and description of reference marks; and the referenced vertical datum (NGVD, NAVD, etc.).

Note that the boundaries of the existing or proposed conditions floodplains and regulatory floodway to be shown on the revised FIRM and/or FBFM must tie-in with the effective floodplain and regulatory floodway boundaries. Please attach **a copy of the effective FIRM and/or FBFM,** annotated to show the boundaries of the revised 1%- and 0.2%-annual-chance floodplains and regulatory floodway that tie-in with the boundaries of the effective 1%- and 0.2%-annual-chance floodplain and regulatory floodway at the upstream and downstream limits of the area of revision.

D. COMMON REGULATORY REQUIREMENTS

1. For CLOMR requests, do Base Flood Elevations (BFEs) increase? ☐ Yes ☐ No

For CLOMR requests, if either of the following is true, please submit evidence of compliance with Section 65.12 of the NFIP regulations:
- The proposed project encroaches upon a regulatory floodway and would result in increases above 0.00 foot.
- The proposed project encroaches upon a SFHA with BFEs established and would result in increases above 1.00 foot.

2. Does the request involve the placement or proposed placement of fill? ☐ Yes ☒ No

If Yes, the community must be able to certify that the area to be removed from the special flood hazard area, to include any structures or proposed structures, meets all of the standards of the local floodplain ordinances, and is reasonably safe from flooding in accordance with the NFIP regulations set forth at 44 CFR 60.3(a)(3), 65.5(a)(4), and 65.6(a)(14). Please see the MT-2 instructions for more information.

3. For LOMR requests, is the regulatory floodway being revised? ☐ Yes ☒ No

If Yes, attach evidence of regulatory floodway revision notification. As per Paragraph 65.7(b)(1) of the NFIP Regulations, notification is required for requests involving revisions to the regulatory floodway. (Not required for revisions to approximate 1%-annual-chance floodplains [studied Zone A designation] unless a regulatory floodway is being added. Elements and examples of regulatory floodway revision notification can be found in the MT-2 Form 2 Instructions.)

4. For LOMR requests, does this request require property owner notification and acceptance of BFE increases? ☐ Yes ☒ No

If Yes, please attach proof of property owner notification and acceptance (if available). Elements of and examples of property owner notification can be found in the MT-2 Form 2 Instructions.

U.S. DEPARTMENT OF HOMELAND SECURITY - FEDERAL EMERGENCY MANAGEMENT AGENCY

RIVERINE STRUCTURES FORM

O.M.B No. 1660-0016
Expires: August 31, 2007

PAPERWORK REDUCTION ACT

Public reporting burden for this form is estimated to average 7 hours per response. The burden estimate includes the time for reviewing instructions, searching existing data sources, gathering and maintaining the needed data, and completing, reviewing, and submitting the form. You are not required to respond to this collection of information unless a valid OMB control number appears in the upper right corner of this form. Send comments regarding the accuracy of the burden estimate and any suggestions for reducing this burden to: Information Collections Management, U.S. Department of Homeland Security, Federal Emergency Management Agency, 500 C Street, SW, Washington DC 20472, Paperwork Reduction Project (1660-0016). Submission of the form is required to obtain or retain benefits under the National Flood Insurance Program. **Please do not send your completed survey to the above address.**

Flooding Source: **RVWFT2**
Note: Fill out one form for each flooding source studied

A. GENERAL

Complete the appropriate section(s) for each Structure listed below:

Channelization ..... complete Section B
Bridge/Culvert ..... complete Section C
Dam..... complete Section D
Levee/Floodwall ..... complete Section E
Sediment Transport..... complete Section F (if required)

Description Of Structure

1. **Name of Structure: Culv4** (Not in the Floodplain)

   Type (check one): ☐ Channelization X Bridge/Culvert ☐ Levee/Floodwall ☐ Dam

   Location of Structure: On 142nd St, 501' North of Milton Ct.

   Downstream Limit/Cross Section:

   Upstream Limit/Cross Section:

2. **Name of Structure: Culv5**

   Type (check one): ☐ Channelization X Bridge/Culvert ☐ Levee/Floodwall ☐ Dam

   Location of Structure: On 142nd St, 301' North of Windstone Ct.

   Downstream Limit/Cross Section: 1.480 mi.

   Upstream Limit/Cross Section: 1.491 mi.

3. **Name of Structure: Culv6**

   Type (check one) ☐ Channelization X Bridge/Culvert ☐ Levee/Floodwall ☐ Dam

   Location of Structure: On Windstone Tr, 130' West of Cowboy Ct.

   Downstream Limit/Cross Section: 1.326 mi.

   Upstream Limit/Cross Section: 1.335 mi.

NOTE: For more structures, attach additional pages as needed.

4. **Name of Structure: Culv10** (Not in the Floodplain)

Type (check one): ☐ Channelization X Bridge/Culvert ☐ Levee/Floodwall ☐ Dam

Location of Structure: On 144th St, Windstone Tr.

Downstream Limit/Cross Section:

Upstream Limit/Cross Section:

5. **Name of Structure: Culv11**

Type (check one) ☐ Channelization X Bridge/Culvert ☐ Levee/Floodwall ☐ Dam

Location of Structure: On 144th St, 624' South of Windstone Tr.

Downstream Limit/Cross Section: 1.136 mi.

Upstream Limit/Cross Section: 1.148 mi.

6. **Name of Structure: Culv19** (Not in the Floodplain)

Type (check one): ☐ Channelization X Bridge/Culvert ☐ Levee/Floodwall ☐ Dam

Location of Structure: On 142nd St, 304' North of Milton Ct.

Downstream Limit/Cross Section:

Upstream Limit/Cross Section:

7. **Name of Structure: Culv20**

Type (check one) ☐ Channelization X Bridge/Culvert ☐ Levee/Floodwall ☐ Dam

Location of Structure: On 142nd St, 481' North of Windstone Ct.

Downstream Limit/Cross Section: 1.505 mi.

Upstream Limit/Cross Section: 1.513 mi.

8. **Name of Structure: Culv21** (Not in the Floodplain)

Type (check one): ☐ Channelization X Bridge/Culvert ☐ Levee/Floodwall ☐ Dam

Location of Structure: On 142nd St, 46' North of Windstone Ct.

Downstream Limit/Cross Section:

Upstream Limit/Cross Section:

9. **Name of Structure: Culv24**

Type (check one): ☐ Channelization X Bridge/Culvert ☐ Levee/Floodwall ☐ Dam

Location of Structure: On cowboy Ct, 362' North of Windstone Tr.

Downstream Limit/Cross Section: 1.366 mi.

Upstream Limit/Cross Section: 1.375 mi.

10. **Name of Structure: Culv25**

Type (check one): ☐ Channelization X Bridge/Culvert ☐ Levee/Floodwall ☐ Dam

Location of Structure: On Windstone Tr, 338' East of Cowboy Ct.

Downstream Limit/Cross Section: 1.265 mi.

Upstream Limit/Cross Section: 1.274 mi.

11. Name of Structure: Culv26

Type (check one) ☐ Channelization X Bridge/Culvert ☐ Levee/Floodwall ☐ Dam

Location of Structure: On 144th St, 264' South of Windstone Tr.

Downstream Limit/Cross Section: 1.141 mi.

Upstream Limit/Cross Section: 1.154 mi.

U.S. DEPARTMENT OF HOMELAND SECURITY - FEDERAL EMERGENCY MANAGEMENT AGENCY

RIVERINE STRUCTURES FORM

O.M.B No. 1660-0016
Expires: August 31, 2007

PAPERWORK REDUCTION ACT

Public reporting burden for this form is estimated to average 7 hours per response. The burden estimate includes the time for reviewing instructions, searching existing data sources, gathering and maintaining the needed data, and completing, reviewing, and submitting the form. You are not required to respond to this collection of information unless a valid OMB control number appears in the upper right corner of this form. Send comments regarding the accuracy of the burden estimate and any suggestions for reducing this burden to: Information Collections Management, U.S. Department of Homeland Security, Federal Emergency Management Agency, 500 C Street, SW, Washington DC 20472, Paperwork Reduction Project (1660-0016). Submission of the form is required to obtain or retain benefits under the National Flood Insurance Program. **Please do not send your completed survey to the above address.**

Flooding Source: **RVWA**
Note: Fill out one form for each flooding source studied

A. GENERAL

Complete the appropriate section(s) for each Structure listed below:

Channelization ..... complete Section B
Bridge/Culvert ..... complete Section C
Dam..... complete Section D
Levee/Floodwall ..... complete Section E
Sediment Transport..... complete Section F (if required)

Description Of Structure

12. Name of Structure: Culv9

Type (check one): ☐ Channelization X Bridge/Culvert ☐ Levee/Floodwall ☐ Dam

Location of Structure: Wall obstruction 75' East of 160th St, 2266' North of Rio Verde Dr.

Downstream Limit/Cross Section: 4.572 mi.

Upstream Limit/Cross Section: 4.574 mi.

13. Name of Structure: Culv14

Type (check one): ☐ Channelization X Bridge/Culvert ☐ Levee/Floodwall ☐ Dam

Location of Structure: On 144th St, 374' South of Peak View Rd.

Downstream Limit/Cross Section: 6.755 mi.

Upstream Limit/Cross Section: 6.767 mi.

14. Name of Structure: Culv33 (Not in the Floodplain)

Type (check one) ☐ Channelization X Bridge/Culvert ☐ Levee/Floodwall ☐ Dam

Location of Structure: On 144th St, 540' North of Peak View Rd.

Downstream Limit/Cross Section:

Upstream Limit/Cross Section:

NOTE: For more structures, attach additional pages as needed.

15. **Name of Structure: Culv34** (Not in the Floodplain)

Type (check one) ☐ Channelization X Bridge/Culvert ☐ Levee/Floodwall ☐ Dam

Location of Structure: On 144th St, 263' North of Peak View Rd.

Downstream Limit/Cross Section:

Upstream Limit/Cross Section:

16. **Name of Structure: Culv35** (Not in the Floodplain)

Type (check one) ☐ Channelization X Bridge/Culvert ☐ Levee/Floodwall ☐ Dam

Location of Structure: On 144th St, 50' North of Peak View Rd.

Downstream Limit/Cross Section:

Upstream Limit/Cross Section:

17. **Name of Structure: Culv36** (Not in the Floodplain)

Type (check one) ☐ Channelization X Bridge/Culvert ☐ Levee/Floodwall ☐ Dam

Location of Structure: On 144th St, 128' South of Peak View Rd.

Downstream Limit/Cross Section:

Upstream Limit/Cross Section:

18. **Name of Structure: Culv49**

Type (check one): ☐ Channelization X Bridge/Culvert ☐ Levee/Floodwall ☐ Dam

Location of Structure: On 150th St, 225'South of Peak View Rd.

Downstream Limit/Cross Section: 5.903 mi.

Upstream Limit/Cross Section: 5.907 mi.

19. **Name of Structure: Culv50**

Type (check one): ☐ Channelization X Bridge/Culvert ☐ Levee/Floodwall ☐ Dam

Location of Structure: On 150th St, 55' South of Peak View Rd.

Downstream Limit/Cross Section: 5.903 mi.

Upstream Limit/Cross Section: 5.914 mi.

20. **Name of Structure: Culv51**

Type (check one) ☐ Channelization X Bridge/Culvert ☐ Levee/Floodwall ☐ Dam

Location of Structure: On 151st St, 1521' North of Monument Dr.

Downstream Limit/Cross Section: 5.880 mi.

Upstream Limit/Cross Section: 5.891 mi.

21. **Name of Structure: Culv52**

Type (check one): ☐ Channelization X Bridge/Culvert ☐ Levee/Floodwall ☐ Dam

Location of Structure: On 151st St, 1010' North of Monument Dr.

Downstream Limit/Cross Section: 5.845 mi.

Upstream Limit/Cross Section: 5.858 mi.

22. Name of Structure: Culv54

Type (check one): ☐ Channelization X Bridge/Culvert ☐ Levee/Floodwall ☐ Dam

Location of Structure: On Rio Mountain Ct, 82' North of Saguaro Vista Ct.

Downstream Limit/Cross Section: 5.694 mi.

Upstream Limit/Cross Section: 5.698 mi.

23. Name of Structure: Culv58

Type (check one) ☐ Channelization X Bridge/Culvert ☐ Levee/Floodwall ☐ Dam

Location of Structure: On 151st St, 1793' North of Monument Dr.

Downstream Limit/Cross Section: 5.880 mi.

Upstream Limit/Cross Section: 5.890 mi.

24. Name of Structure: Culv65

Type (check one) ☐ Channelization X Bridge/Culvert ☐ Levee/Floodwall ☐ Dam

Location of Structure: Wall opening 80' East of 160th St, 2155' North of Rio Verde Dr.

Downstream Limit/Cross Section: 4.571 mi.

Upstream Limit/Cross Section: 4.573 mi.

U.S. DEPARTMENT OF HOMELAND SECURITY - FEDERAL EMERGENCY MANAGEMENT AGENCY

RIVERINE STRUCTURES FORM

O.M.B No. 1660-0016
Expires: August 31, 2007

PAPERWORK REDUCTION ACT

Public reporting burden for this form is estimated to average 7 hours per response. The burden estimate includes the time for reviewing instructions, searching existing data sources, gathering and maintaining the needed data, and completing, reviewing, and submitting the form. You are not required to respond to this collection of information unless a valid OMB control number appears in the upper right corner of this form. Send comments regarding the accuracy of the burden estimate and any suggestions for reducing this burden to: Information Collections Management, U.S. Department of Homeland Security, Federal Emergency Management Agency, 500 C Street, SW, Washington DC 20472, Paperwork Reduction Project (1660-0016). Submission of the form is required to obtain or retain benefits under the National Flood Insurance Program. **Please do not send your completed survey to the above address.**

Flooding Source: **RVWAS8**
Note: Fill out one form for each flooding source studied

A. GENERAL

Complete the appropriate section(s) for each Structure listed below:

Channelization ..... complete Section B
Bridge/Culvert ..... complete Section C
Dam..... complete Section D
Levee/Floodwall ..... complete Section E
Sediment Transport..... complete Section F (if required)

Description Of Structure

25. Name of Structure: Culv37

Type (check one): ☐ Channelization X Bridge/Culvert ☐ Levee/Floodwall ☐ Dam

Location of Structure: On 144th St, 732' South of Peak View Rd.

Downstream Limit/Cross Section: 3.038 mi.

Upstream Limit/Cross Section: 3.050 mi.

26. Name of Structure: Culv38

Type (check one) ☐ Channelization X Bridge/Culvert ☐ Levee/Floodwall ☐ Dam

Location of Structure: On 144th St, 44' South of Monument Dr.

Downstream Limit/Cross Section: 3.037 mi.

Upstream Limit/Cross Section: 3.050 mi.

27. Name of Structure: Culv46

Type (check one): ☐ Channelization X Bridge/Culvert ☐ Levee/Floodwall ☐ Dam

Location of Structure: On 150th St, 110' North of Rio Verde Dr.

Downstream Limit/Cross Section: 2.121 mi.

Upstream Limit/Cross Section: 2.131 mi.

NOTE: For more structures, attach additional pages as needed.

28. Name of Structure: Culv47

Type (check one) ☐ Channelization X Bridge/Culvert ☐ Levee/Floodwall ☐ Dam

Location of Structure: On 150th St, 760' North of Rio Verde Dr.

Downstream Limit/Cross Section: 2.172 mi.

Upstream Limit/Cross Section: 2.180 mi.

29. Name of Structure: Culv48

Type (check one): ☐ Channelization X Bridge/Culvert ☐ Levee/Floodwall ☐ Dam

Location of Structure: On 150th St, 400' South of Roy Rogers Rd.

Downstream Limit/Cross Section: 2.206 mi.

Upstream Limit/Cross Section: 2.214 mi.

30. Name of Structure: Culv53

Type (check one) ☐ Channelization X Bridge/Culvert ☐ Levee/Floodwall ☐ Dam

Location of Structure: On 151st St, 168' North of Monument Dr.

Downstream Limit/Cross Section: 2.108 mi.

Upstream Limit/Cross Section: 2.117 mi.

31. Name of Structure: Culv55 (Not in the Floodplain)

Type (check one): ☐ Channelization X Bridge/Culvert ☐ Levee/Floodwall ☐ Dam

Location of Structure: On 152nd St, 358' North of Rio Verde Dr.

Downstream Limit/Cross Section:

Upstream Limit/Cross Section:

32. Name of Structure: Culv56 (Not in the Floodplain)

Type (check one): ☐ Channelization X Bridge/Culvert ☐ Levee/Floodwall ☐ Dam

Location of Structure: On 152nd St, 113' North of Rio Verde Dr.

Downstream Limit/Cross Section:

Upstream Limit/Cross Section:

33. Name of Structure: Culv57 (Not in the Floodplain)

Type (check one): ☐ Channelization X Bridge/Culvert ☐ Levee/Floodwall ☐ Dam

Location of Structure: On 152nd St, 665' North of Rio Verde Dr.

Downstream Limit/Cross Section:

Upstream Limit/Cross Section:

U.S. DEPARTMENT OF HOMELAND SECURITY - FEDERAL EMERGENCY MANAGEMENT AGENCY

RIVERINE STRUCTURES FORM

O.M.B No. 1660-0016
Expires: August 31, 2007

PAPERWORK REDUCTION ACT

Public reporting burden for this form is estimated to average 7 hours per response. The burden estimate includes the time for reviewing instructions, searching existing data sources, gathering and maintaining the needed data, and completing, reviewing, and submitting the form. You are not required to respond to this collection of information unless a valid OMB control number appears in the upper right corner of this form. Send comments regarding the accuracy of the burden estimate and any suggestions for reducing this burden to: Information Collections Management, U.S. Department of Homeland Security, Federal Emergency Management Agency, 500 C Street, SW, Washington DC 20472, Paperwork Reduction Project (1660-0016). Submission of the form is required to obtain or retain benefits under the National Flood Insurance Program. **Please do not send your completed survey to the above address.**

Flooding Source: **RVWAS9**
Note: Fill out one form for each flooding source studied

A. GENERAL

Complete the appropriate section(s) for each Structure listed below:

Channelization ..... complete Section B
Bridge/Culvert ..... complete Section C
Dam..... complete Section D
Levee/Floodwall ..... complete Section E
Sediment Transport..... complete Section F (if required)

Description Of Structure

34. Name of Structure: Culv15 (Not in the Floodplain)

Type (check one): ☐ Channelization X Bridge/Culvert ☐ Levee/Floodwall ☐ Dam

Location of Structure: Wall opening, 44' West of 156th St, 134' South of Rio Verde Dr.

Downstream Limit/Cross Section:

Upstream Limit/Cross Section:

35. Name of Structure: Culv16 (Not in the Floodplain)

Type (check one): ☐ Channelization X Bridge/Culvert ☐ Levee/Floodwall ☐ Dam

Location of Structure: Wall opening, 176' East of 146th Pl, 651' North of Rio Verde.

Downstream Limit/Cross Section:

Upstream Limit/Cross Section:

36. Name of Structure: Culv39

Type (check one): ☐ Channelization X Bridge/Culvert ☐ Levee/Floodwall ☐ Dam

Location of Structure: On 144th St, 252' South of Monument Dr.

Downstream Limit/Cross Section: 2.963 mi.

Upstream Limit/Cross Section: 2.976 mi.

NOTE: For more structures, attach additional pages as needed.

37. Name of Structure: Culv40

Type (check one) ☐ Channelization X Bridge/Culvert ☐ Levee/Floodwall ☐ Dam

Location of Structure: On 144th St, 247' South of Dale Ln.

Downstream Limit/Cross Section: 2.936 mi.

Upstream Limit/Cross Section: 2.949 mi.

38. Name of Structure: Culv41

Type (check one) ☐ Channelization X Bridge/Culvert ☐ Levee/Floodwall ☐ Dam

Location of Structure: On 144th St, 375' South of Dale Ln.

Downstream Limit/Cross Section: 2.908 mi.

Upstream Limit/Cross Section: 2.922 mi.

39. Name of Structure: Culv42

Type (check one) ☐ Channelization X Bridge/Culvert ☐ Levee/Floodwall ☐ Dam

Location of Structure: On 144th St, 451' South of Dale Ln.

Downstream Limit/Cross Section: 2.903 mi.

Upstream Limit/Cross Section: 2.906 mi.

40. Name of Structure: Culv43

Type (check one): ☐ Channelization X Bridge/Culvert ☐ Levee/Floodwall ☐ Dam

Location of Structure: On 144th St, 718' North of Rio Verde Dr.

Downstream Limit/Cross Section: 2.896 mi.

Upstream Limit/Cross Section: 2.909 mi.

41. Name of Structure: Culv44

Type (check one) ☐ Channelization X Bridge/Culvert ☐ Levee/Floodwall ☐ Dam

Location of Structure: On 144th St, 448' North of Rio Verde Dr.

Downstream Limit/Cross Section: 2.858 mi.

Upstream Limit/Cross Section: 2.891 mi.

42. Name of Structure: Culv45

Type (check one): ☐ Channelization X Bridge/Culvert ☐ Levee/Floodwall ☐ Dam

Location of Structure: On 144th St, 75' North of Rio Verde Dr.

Downstream Limit/Cross Section: 2.765 mi.

Upstream Limit/Cross Section: 2.775 mi.

43. Name of Structure: Culv68 (Not in the Floodplain)

Type (check one) ☐ Channelization X Bridge/Culvert ☐ Levee/Floodwall ☐ Dam

Location of Structure: Wall opening 15' East of 146th St, 652' North of Rio Verde Dr.

Downstream Limit/Cross Section:

Upstream Limit/Cross Section:

44. Name of Structure: Culv70 (Not in the Floodplain)

Type (check one): ☐ Channelization X Bridge/Culvert ☐ Levee/Floodwall ☐ Dam

Location of Structure: Wall opening, 229' South of Rio Verde Dr, 656' West of 156th St.

Downstream Limit/Cross Section:

Upstream Limit/Cross Section:

U.S. DEPARTMENT OF HOMELAND SECURITY - FEDERAL EMERGENCY MANAGEMENT AGENCY

RIVERINE STRUCTURES FORM

O.M.B No. 1660-0016
Expires: August 31, 2007

PAPERWORK REDUCTION ACT

Public reporting burden for this form is estimated to average 7 hours per response. The burden estimate includes the time for reviewing instructions, searching existing data sources, gathering and maintaining the needed data, and completing, reviewing, and submitting the form. You are not required to respond to this collection of information unless a valid OMB control number appears in the upper right corner of this form. Send comments regarding the accuracy of the burden estimate and any suggestions for reducing this burden to: Information Collections Management, U.S. Department of Homeland Security, Federal Emergency Management Agency, 500 C Street, SW, Washington DC 20472, Paperwork Reduction Project (1660-0016). Submission of the form is required to obtain or retain benefits under the National Flood Insurance Program. **Please do not send your completed survey to the above address.**

Flooding Source: **RVWAS3**
Note: Fill out one form for each flooding source studied

A. GENERAL

Complete the appropriate section(s) for each Structure listed below:

Channelization ..... complete Section B
Bridge/Culvert ..... complete Section C
Dam..... complete Section D
Levee/Floodwall ..... complete Section E
Sediment Transport..... complete Section F (if required)

Description Of Structure

45. Name of Structure: Culv66

Type (check one) ☐ Channelization X Bridge/Culvert ☐ Levee/Floodwall ☐ Dam

Location of Structure: Wall opening, 69' East of 160th St, 2427' North of Rio Verde Dr.

Downstream Limit/Cross Section: 0.134 mi.

Upstream Limit/Cross Section: 0.136 mi.

46. Name of Structure: Culv67

Type (check one): ☐ Channelization X Bridge/Culvert ☐ Levee/Floodwall ☐ Dam

Location of Structure: Wall opening, 64' East of 160th St, 2573' North of Rio Verde Dr.

Downstream Limit/Cross Section: 0.132 mi.

Upstream Limit/Cross Section: 0.134 mi.

NOTE: For more structures, attach additional pages as needed.

U.S. DEPARTMENT OF HOMELAND SECURITY - FEDERAL EMERGENCY MANAGEMENT AGENCY

RIVERINE STRUCTURES FORM

O.M.B No. 1660-0016
Expires: August 31, 2007

PAPERWORK REDUCTION ACT

Public reporting burden for this form is estimated to average 7 hours per response. The burden estimate includes the time for reviewing instructions, searching existing data sources, gathering and maintaining the needed data, and completing, reviewing, and submitting the form. You are not required to respond to this collection of information unless a valid OMB control number appears in the upper right corner of this form. Send comments regarding the accuracy of the burden estimate and any suggestions for reducing this burden to: Information Collections Management, U.S. Department of Homeland Security, Federal Emergency Management Agency, 500 C Street, SW, Washington DC 20472, Paperwork Reduction Project (1660-0016). Submission of the form is required to obtain or retain benefits under the National Flood Insurance Program. **Please do not send your completed survey to the above address.**

Flooding Source: **RVWKT9**
Note: Fill out one form for each flooding source studied

A. GENERAL

Complete the appropriate section(s) for each Structure listed below:

Channelization ..... complete Section B
Bridge/Culvert ..... complete Section C
Dam..... complete Section D
Levee/Floodwall ..... complete Section E
Sediment Transport..... complete Section F (if required)

Description Of Structure

47. Name of Structure: Culv1 (Not in the Floodplain)

Type (check one): ☐ Channelization X Bridge/Culvert ☐ Levee/Floodwall ☐ Dam

Location of Structure: On 142nd St, 303' South of Lone Mountain Rd.

Downstream Limit/Cross Section:

Upstream Limit/Cross Section:

48. Name of Structure: Culv2 (Not in the Floodplain)

Type (check one): ☐ Channelization X Bridge/Culvert ☐ Levee/Floodwall ☐ Dam

Location of Structure: on 142nd St, 477' Southwest of Lone Mountain Rd.

Downstream Limit/Cross Section:

Upstream Limit/Cross Section:

49. Name of Structure: Culv30

Type (check one) ☐ Channelization X Bridge/Culvert ☐ Levee/Floodwall ☐ Dam

Location of Structure: On Lone Mountain Rd, 85' East of 140th St.

Downstream Limit/Cross Section: 1.296 mi.

Upstream Limit/Cross Section: 1.306 mi.

NOTE: For more structures, attach additional pages as needed.

50. **Name of Structure: Culv59** (Not in the Floodplain)

Type (check one) ☐ Channelization X Bridge/Culvert ☐ Levee/Floodwall ☐ Dam

Location of Structure: Wall opening, 43' East of 142nd St, 572' North of Lone Mountain Rd.

Downstream Limit/Cross Section:

Upstream Limit/Cross Section:

51. **Name of Structure: Culv60** (Not in the Floodplain)

Type (check one): ☐ Channelization X Bridge/Culvert ☐ Levee/Floodwall ☐ Dam

Location of Structure: Wall opening, 40' East of 142nd St, 328' North of Lone Mountain Rd.

Downstream Limit/Cross Section:

Upstream Limit/Cross Section:

52. **Name of Structure: Culv61** (Not in the Floodplain)

Type (check one) ☐ Channelization X Bridge/Culvert ☐ Levee/Floodwall ☐ Dam

Location of Structure: Wall opening 38' East of 142nd St, 165' North of Lone Mountain Rd.

Downstream Limit/Cross Section:

Upstream Limit/Cross Section:

53. **Name of Structure: Culv62** (Not in the Floodplain)

Type (check one): ☐ Channelization X Bridge/Culvert ☐ Levee/Floodwall ☐ Dam

Location of Structure: Wall opening, 170' North of Lone Mountain Rd, 343' East of 142nd St.

Downstream Limit/Cross Section:

Upstream Limit/Cross Section:

54. **Name of Structure: Culv63**

Type (check one) ☐ Channelization X Bridge/Culvert ☐ Levee/Floodwall ☐ Dam

Location of Structure: Wall opening, 80' North of Lone Mountain Road, 497' East of 142nd St.

Downstream Limit/Cross Section: 0.992 mi.

Upstream Limit/Cross Section: 0.997 mi.

55. **Name of Structure: Culv64** (Not in the Floodplain)

Type (check one): ☐ Channelization X Bridge/Culvert ☐ Levee/Floodwall ☐ Dam

Location of Structure: Wall opening, 260' North of Lone Mountain Rd, 650' West of 144th St.

Downstream Limit/Cross Section:

Upstream Limit/Cross Section:

56. **Name of Structure: Culv73** (Not in the Floodplain)

Type (check one): ☐ Channelization X Bridge/Culvert ☐ Levee/Floodwall ☐ Dam

Location of Structure: Wall opening, 41' East of 142nd St, 281' North of Lone Mountain Rd.

Downstream Limit/Cross Section:

Upstream Limit/Cross Section:

U.S. DEPARTMENT OF HOMELAND SECURITY - FEDERAL EMERGENCY MANAGEMENT AGENCY

RIVERINE STRUCTURES FORM

O.M.B No. 1660-0016
Expires: August 31, 2007

PAPERWORK REDUCTION ACT

Public reporting burden for this form is estimated to average 7 hours per response. The burden estimate includes the time for reviewing instructions, searching existing data sources, gathering and maintaining the needed data, and completing, reviewing, and submitting the form. You are not required to respond to this collection of information unless a valid OMB control number appears in the upper right corner of this form. Send comments regarding the accuracy of the burden estimate and any suggestions for reducing this burden to: Information Collections Management, U.S. Department of Homeland Security, Federal Emergency Management Agency, 500 C Street, SW, Washington DC 20472, Paperwork Reduction Project (1660-0016). Submission of the form is required to obtain or retain benefits under the National Flood Insurance Program. **Please do not send your completed survey to the above address.**

Flooding Source: **RVW10S7T1**
Note: Fill out one form for each flooding source studied

A. GENERAL

Complete the appropriate section(s) for each Structure listed below:

Channelization ..... complete Section B
Bridge/Culvert ..... complete Section C
Dam..... complete Section D
Levee/Floodwall ..... complete Section E
Sediment Transport..... complete Section F (if required)

Description Of Structure

57. Name of Structure: Culv69

Type (check one): ☐ Channelization X Bridge/Culvert ☐ Levee/Floodwall ☐ Dam

Location of Structure: Wall opening 43' East of 150th St, 1126' North of Jomax Rd.

Downstream Limit/Cross Section: 2.183 mi.

Upstream Limit/Cross Section: 2.184 mi.

NOTE: For more structures, attach additional pages as needed.

U.S. DEPARTMENT OF HOMELAND SECURITY - FEDERAL EMERGENCY MANAGEMENT AGENCY

RIVERINE STRUCTURES FORM

O.M.B No. 1660-0016
Expires: August 31, 2007

PAPERWORK REDUCTION ACT

Public reporting burden for this form is estimated to average 7 hours per response. The burden estimate includes the time for reviewing instructions, searching existing data sources, gathering and maintaining the needed data, and completing, reviewing, and submitting the form. You are not required to respond to this collection of information unless a valid OMB control number appears in the upper right corner of this form. Send comments regarding the accuracy of the burden estimate and any suggestions for reducing this burden to: Information Collections Management, U.S. Department of Homeland Security, Federal Emergency Management Agency, 500 C Street, SW, Washington DC 20472, Paperwork Reduction Project (1660-0016). Submission of the form is required to obtain or retain benefits under the National Flood Insurance Program. **Please do not send your completed survey to the above address.**

Flooding Source: **RVWK**
Note: Fill out one form for each flooding source studied

A. GENERAL

Complete the appropriate section(s) for each Structure listed below:

Channelization ..... complete Section B
Bridge/Culvert ..... complete Section C
Dam..... complete Section D
Levee/Floodwall ..... complete Section E
Sediment Transport..... complete Section F (if required)

Description Of Structure

58. Name of Structure: Culv71

Type (check one): ☐ Channelization X Bridge/Culvert ☐ Levee/Floodwall ☐ Dam

Location of Structure: 190' Southeast of Montgomery Rd, 729' East of 160th St.

Downstream Limit/Cross Section: 3.643 mi.

Upstream Limit/Cross Section: 3.647 mi.

59. Name of Structure: Culv74

Type (check one): ☐ Channelization X Bridge/Culvert ☐ Levee/Floodwall ☐ Dam

Location of Structure: 340' Southeast of Montgomery Rd, 865' East of 160th St.

Downstream Limit/Cross Section: 3.597 mi.

Upstream Limit/Cross Section: 3.600 mi.

NOTE: For more structures, attach additional pages as needed.

U.S. DEPARTMENT OF HOMELAND SECURITY - FEDERAL EMERGENCY MANAGEMENT AGENCY

RIVERINE STRUCTURES FORM

O.M.B No. 1660-0016
Expires: August 31, 2007

PAPERWORK REDUCTION ACT

Public reporting burden for this form is estimated to average 7 hours per response. The burden estimate includes the time for reviewing instructions, searching existing data sources, gathering and maintaining the needed data, and completing, reviewing, and submitting the form. You are not required to respond to this collection of information unless a valid OMB control number appears in the upper right corner of this form. Send comments regarding the accuracy of the burden estimate and any suggestions for reducing this burden to: Information Collections Management, U.S. Department of Homeland Security, Federal Emergency Management Agency, 500 C Street, SW, Washington DC 20472, Paperwork Reduction Project (1660-0016). Submission of the form is required to obtain or retain benefits under the National Flood Insurance Program. **Please do not send your completed survey to the above address.**

Flooding Source: **RVWF**
Note: Fill out one form for each flooding source studied

A. GENERAL

Complete the appropriate section(s) for each Structure listed below:

Channelization ..... complete Section B
Bridge/Culvert ..... complete Section C
Dam..... complete Section D
Levee/Floodwall ..... complete Section E
Sediment Transport..... complete Section F (if required)

Description Of Structure

60. Name of Structure: Culv7 (Not in the Floodplain)

Type (check one): ☐ Channelization X Bridge/Culvert ☐ Levee/Floodwall ☐ Dam

Location of Structure: On Miradar Ct, 487' Southwest of Windstone Ct.

Downstream Limit/Cross Section:

Upstream Limit/Cross Section:

61. Name of Structure: Culv8

Type (check one): ☐ Channelization X Bridge/Culvert ☐ Levee/Floodwall ☐ Dam

Location of Structure: On Barwick Ct, 398' Southwest of Baker Ct.

Downstream Limit/Cross Section: 6.588 mi.

Upstream Limit/Cross Section: 6.598 mi.

62. Name of Structure: Culv12

Type (check one): ☐ Channelization X Bridge/Culvert ☐ Levee/Floodwall ☐ Dam

Location of Structure: On 144th St, 130' South of Dixileta Dr.

Downstream Limit/Cross Section: 6.290 mi.

Upstream Limit/Cross Section: 6.302 mi.

NOTE: For more structures, attach additional pages as needed.

63. **Name of Structure: Culv22** (Not in the Floodplain)

Type (check one): ☐ Channelization X Bridge/Culvert ☐ Levee/Floodwall ☐ Dam

Location of Structure: On Miradar Ct, 628' Southwest of Windstone Ct.

Downstream Limit/Cross Section:

Upstream Limit/Cross Section

64. **Name of Structure: Culv23**

Type (check one): ☐ Channelization X Bridge/Culvert ☐ Levee/Floodwall ☐ Dam

Location of Structure: On Miradar Ct, 757' Southwest of Windstone Ct.

Downstream Limit/Cross Section: 6.752 mi.

Upstream Limit/Cross Section 6.760 mi.

65. **Name of Structure: Culv27**

Type (check one): ☐ Channelization X Bridge/Culvert ☐ Levee/Floodwall ☐ Dam

Location of Structure: On 144th St. 217' North of Dixileta Dr.

Downstream Limit/Cross Section: 6.287 mi.

Upstream Limit/Cross Section: 6.299 mi.

66. **Name of Structure: Culv28** (Not in the Floodplain)

Type (check one): ☐ Channelization X Bridge/Culvert ☐ Levee/Floodwall ☐ Dam

Location of Structure: On 144th St, 442' South of Dixileta Dr.

Downstream Limit/Cross Section:

Upstream Limit/Cross Section

67. **Name of Structure: Culv29** (Not in the Floodplain)

Type (check one): ☐ Channelization X Bridge/Culvert ☐ Levee/Floodwall ☐ Dam

Location of Structure: On 144th St, 638' North of Morning Vista Ln.

Downstream Limit/Cross Section:

Upstream Limit/Cross Section

U.S. DEPARTMENT OF HOMELAND SECURITY - FEDERAL EMERGENCY MANAGEMENT AGENCY

RIVERINE STRUCTURES FORM

O.M.B No. 1660-0016
Expires: August 31, 2007

PAPERWORK REDUCTION ACT

Public reporting burden for this form is estimated to average 7 hours per response. The burden estimate includes the time for reviewing instructions, searching existing data sources, gathering and maintaining the needed data, and completing, reviewing, and submitting the form. You are not required to respond to this collection of information unless a valid OMB control number appears in the upper right corner of this form. Send comments regarding the accuracy of the burden estimate and any suggestions for reducing this burden to: Information Collections Management, U.S. Department of Homeland Security, Federal Emergency Management Agency, 500 C Street, SW, Washington DC 20472, Paperwork Reduction Project (1660-0016). Submission of the form is required to obtain or retain benefits under the National Flood Insurance Program. **Please do not send your completed survey to the above address.**

Flooding Source: **RVWFS6**
Note: Fill out one form for each flooding source studied

A. GENERAL

Complete the appropriate section(s) for each Structure listed below:

Channelization ..... complete Section B
Bridge/Culvert ..... complete Section C
Dam..... complete Section D
Levee/Floodwall ..... complete Section E
Sediment Transport..... complete Section F (if required)

Description Of Structure

68. Name of Structure: Culv13

Type (check one): ☐ Channelization X Bridge/Culvert ☐ Levee/Floodwall ☐ Dam

Location of Structure: On 144th St, 90' North of Morning Vista Ln.

Downstream Limit/Cross Section: 0.428 mi.

Upstream Limit/Cross Section: 0.442 mi.

69. Name of Structure: Culv31

Type (check one): ☐ Channelization X Bridge/Culvert ☐ Levee/Floodwall ☐ Dam

Location of Structure: On 144th St, 458' North of Morning Vista Ln.

Downstream Limit/Cross Section: 0.418 mi.

Upstream Limit/Cross Section: 0.431 mi.

70. Name of Structure: Culv32 (Not in the Floodplain)

Type (check one): ☐ Channelization X Bridge/Culvert ☐ Levee/Floodwall ☐ Dam

Location of Structure: On 144th St, 314' South of Morning Vista Ln.

Downstream Limit/Cross Section:

Upstream Limit/Cross Section

NOTE: For more structures, attach additional pages as needed.

71. Name of Structure: Culv72

Type (check one): ☐ Channelization X Bridge/Culvert ☐ Levee/Floodwall ☐ Dam

Location of Structure: On 144th St, 263' North of Morning Vista Ln.

Downstream Limit/Cross Section: 0.424 mi.

Upstream Limit/Cross Section: 0.436 mi.

U.S. DEPARTMENT OF HOMELAND SECURITY - FEDERAL EMERGENCY MANAGEMENT AGENCY

RIVERINE STRUCTURES FORM

O.M.B No. 1660-0016
Expires: August 31, 2007

PAPERWORK REDUCTION ACT

Public reporting burden for this form is estimated to average 7 hours per response. The burden estimate includes the time for reviewing instructions, searching existing data sources, gathering and maintaining the needed data, and completing, reviewing, and submitting the form. You are not required to respond to this collection of information unless a valid OMB control number appears in the upper right corner of this form. Send comments regarding the accuracy of the burden estimate and any suggestions for reducing this burden to: Information Collections Management, U.S. Department of Homeland Security, Federal Emergency Management Agency, 500 C Street, SW, Washington DC 20472, Paperwork Reduction Project (1660-0016). Submission of the form is required to obtain or retain benefits under the National Flood Insurance Program. **Please do not send your completed survey to the above address.**

Flooding Source: **RVW1**
Note: Fill out one form for each flooding source studied

A. GENERAL

Complete the appropriate section(s) for each Structure listed below:

Channelization ..... complete Section B
Bridge/Culvert ..... complete Section C
Dam..... complete Section D
Levee/Floodwall ..... complete Section E
Sediment Transport..... complete Section F (if required)

Description Of Structure

72. Name of Structure: Culv17 (Not in the Floodplain)

Type (check one): ☐ Channelization X Bridge/Culvert ☐ Levee/Floodwall ☐ Dam

Location of Structure: On 142nd St, 115' Northeast of Rancho del Oro Ct.

Downstream Limit/Cross Section:

Upstream Limit/Cross Section:

73. Name of Structure: Culv18 (Not in the Floodplain)

Type (check one): ☐ Channelization X Bridge/Culvert ☐ Levee/Floodwall ☐ Dam

Location of Structure: On 142nd St, 248' Southwest of Rancho del Oro Ct.

Downstream Limit/Cross Section:

Upstream Limit/Cross Section:

NOTE: For more structures, attach additional pages as needed.

C:BRIDGE/CULVERT

Flooding Source: **RVWFT2**

Name of Structure: Culv4 (Not in the Floodplain)

1. This revision reflects (check one):

   X New bridge/culvert not modeled in the FIS
   ☐ Modified bridge/culvert previously modeled in the FIS
   ☐ New analysis of bridge/culvert previously modeled in the FIS

2. Hydraulic model used to analyze the structure (e.g., HEC-2 with special bridge routine, WSPRO, HY8): HY8
   If different than hydraulic analysis for the flooding source, justify why the hydraulic analysis used for the flooding source could not analyze the structures. Attach justification. Refer to Two-Dimensional Modeling TDN, Section 5.5.2

3. Attach plans of the structures certified by a registered professional engineer. The plan detail and information should include the following (check the information that has been provided): Refer to Two-Dimensional Modeling TDN, Appendix E.

   X Dimensions (height, width, span, radius, length)
   X Shape (culverts only)
   X Material
   X Beveling or Rounding
   X Wing Wall Angle
   ☐ Skew Angle
   ☐ Distances Between Cross Sections
   ☐ Erosion Protection
   X Low Chord Elevations – Upstream and Downstream
   X Top of Road Elevations – Upstream and Downstream
   X Structure Invert Elevations – Upstream and Downstream
   X Stream Invert Elevations – Upstream and Downstream
   X Cross-Section Locations

4. Sediment Transport Considerations

   Was sediment transport considered? ☐ Yes X No If yes, then fill out Section F (Sediment Transport).
   If No, then attach your explanation for why sediment transport was not considered.

Flooding Source: **RVWFT2**

Name of Structure: Culv5

1. This revision reflects (check one):

   X New bridge/culvert not modeled in the FIS
   ☐ Modified bridge/culvert previously modeled in the FIS
   ☐ New analysis of bridge/culvert previously modeled in the FIS

2. Hydraulic model used to analyze the structure (e.g., HEC-2 with special bridge routine, WSPRO, HY8): HY8
   If different than hydraulic analysis for the flooding source, justify why the hydraulic analysis used for the flooding source could not analyze the structures. Attach justification. Refer to Two-Dimensional Modeling TDN, Section 5.5.2

3. Attach plans of the structures certified by a registered professional engineer. The plan detail and information should include the following (check the information that has been provided): Refer to Two Dimensional Modeling TDN, Appendix E.

   X Dimensions (height, width, span, radius, length)
   X Shape (culverts only)
   X Material
   X Beveling or Rounding
   X Wing Wall Angle
   ☐ Skew Angle
   ☐ Distances Between Cross Sections
   ☐ Erosion Protection
   X Low Chord Elevations – Upstream and Downstream
   X Top of Road Elevations – Upstream and Downstream
   X Structure Invert Elevations – Upstream and Downstream
   X Stream Invert Elevations – Upstream and Downstream
   X Cross-Section Locations

4. Sediment Transport Considerations

   Was sediment transport considered? ☐ Yes X No If yes, then fill out Section F (Sediment Transport).
   If No, then attach your explanation for why sediment transport was not considered.

C. BRIDGE/ CULVERT

Flooding Source: **RVWFT2**

Name of Structure: Culv6

1. This revision reflects (check one):

   X New bridge/culvert not modeled in the FIS
   ☐ Modified bridge/culvert previously modeled in the FIS
   ☐ New analysis of bridge/culvert previously modeled in the FIS

2. Hydraulic model used to analyze the structure (e.g., HEC-2 with special bridge routine, WSPRO, HY8): HY8
   If different than hydraulic analysis for the flooding source, justify why the hydraulic analysis used for the flooding source could not analyze the structures. Attach justification. Refer to Two-Dimensional Modeling TDN, Section 5.5.2

3. Attach plans of the structures certified by a registered professional engineer. The plan detail and information should include the following (check the information that has been provided): Refer to Two-Dimensional Modeling TDN, Appendix E.

   X Dimensions (height, width, span, radius, length)
   X Shape (culverts only)
   X Material
   X Beveling or Rounding
   X Wing Wall Angle
   ☐ Skew Angle
   ☐ Distances Between Cross Sections
   ☐ Erosion Protection
   X Low Chord Elevations – Upstream and Downstream
   X Top of Road Elevations – Upstream and Downstream
   X Structure Invert Elevations – Upstream and Downstream
   X Stream Invert Elevations – Upstream and Downstream
   X Cross-Section Locations

4. Sediment Transport Considerations

   Was sediment transport considered? ☐ Yes X No If yes, then fill out Section F (Sediment Transport).
   If No, then attach your explanation for why sediment transport was not considered

---

Flooding Source: **RVWFT2**

Name of Structure: Culv10

1. This revision reflects (check one):

   X New bridge/culvert not modeled in the FIS
   ☐ Modified bridge/culvert previously modeled in the FIS
   ☐ New analysis of bridge/culvert previously modeled in the FIS

2. Hydraulic model used to analyze the structure (e.g., HEC-2 with special bridge routine, WSPRO, HY8): HY8
   If different than hydraulic analysis for the flooding source, justify why the hydraulic analysis used for the flooding source could not analyze the structures. Attach justification. Refer to Two-Dimensional Modeling TDN, Section 5.5.2

3. Attach plans of the structures certified by a registered professional engineer. The plan detail and information should include the following (check the information that has been provided): Refer to Two-Dimensional Modeling TDN, Appendix E.

   X Dimensions (height, width, span, radius, length)
   X Shape (culverts only)
   X Material
   X Beveling or Rounding
   X Wing Wall Angle
   ☐ Skew Angle
   ☐ Distances Between Cross Sections
   ☐ Erosion Protection
   X Low Chord Elevations – Upstream and Downstream
   X Top of Road Elevations – Upstream and Downstream
   X Structure Invert Elevations – Upstream and Downstream
   X Stream Invert Elevations – Upstream and Downstream
   X Cross-Section Locations

4. Sediment Transport Considerations

   Was sediment transport considered? ☐ Yes X No If yes, then fill out Section F (Sediment Transport).
   If No, then attach your explanation for why sediment transport was not considered

C. BRIDGE/ CULVERT

Flooding Source: **RVWFT2**

Name of Structure: Culv11

1. This revision reflects (check one):

   X New bridge/culvert not modeled in the FIS
   ☐ Modified bridge/culvert previously modeled in the FIS
   ☐ New analysis of bridge/culvert previously modeled in the FIS

2. Hydraulic model used to analyze the structure (e.g., HEC-2 with special bridge routine, WSPRO, HY8): HY8
   If different than hydraulic analysis for the flooding source, justify why the hydraulic analysis used for the flooding source could not analyze the structures. Attach justification. Refer to Two-Dimensional Modeling TDN, Section 5.5.2

3. Attach plans of the structures certified by a registered professional engineer. The plan detail and information should include the following (check the information that has been provided): Refer to Two-Dimensional Modeling TDN, Appendix E.

   X Dimensions (height, width, span, radius, length)
   X Shape (culverts only)
   X Material
   X Beveling or Rounding
   X Wing Wall Angle
   ☐ Skew Angle
   ☐ Distances Between Cross Sections
   ☐ Erosion Protection
   X Low Chord Elevations – Upstream and Downstream
   X Top of Road Elevations – Upstream and Downstream
   X Structure Invert Elevations – Upstream and Downstream
   X Stream Invert Elevations – Upstream and Downstream
   X Cross-Section Locations

4. Sediment Transport Considerations

   Was sediment transport considered? ☐ Yes X No If yes, then fill out Section F (Sediment Transport).
   If No, then attach your explanation for why sediment transport was not considered

---

Flooding Source: **RVWFT2**

Name of Structure: Culv19 (Not in the Floodplain)

1. This revision reflects (check one):

   X New bridge/culvert not modeled in the FIS
   ☐ Modified bridge/culvert previously modeled in the FIS
   ☐ New analysis of bridge/culvert previously modeled in the FIS

2. Hydraulic model used to analyze the structure (e.g., HEC-2 with special bridge routine, WSPRO, HY8): HY8
   If different than hydraulic analysis for the flooding source, justify why the hydraulic analysis used for the flooding source could not analyze the structures. Attach justification. Refer to Two-Dimensional Modeling TDN, Section 5.5.2

3. Attach plans of the structures certified by a registered professional engineer. The plan detail and information should include the following (check the information that has been provided): Refer to Two-Dimensional Modeling TDN, Appendix E.

   X Dimensions (height, width, span, radius, length)
   X Shape (culverts only)
   X Material
   X Beveling or Rounding
   X Wing Wall Angle
   ☐ Skew Angle
   ☐ Distances Between Cross Sections
   ☐ Erosion Protection
   X Low Chord Elevations – Upstream and Downstream
   X Top of Road Elevations – Upstream and Downstream
   X Structure Invert Elevations – Upstream and Downstream
   X Stream Invert Elevations – Upstream and Downstream
   X Cross-Section Locations

4. Sediment Transport Considerations

   Was sediment transport considered? ☐ Yes X No If yes, then fill out Section F (Sediment Transport).
   If No, then attach your explanation for why sediment transport was not considered

C. BRIDGE/ CULVERT

Flooding Source: **RVWFT2**

Name of Structure: Culv20

1. This revision reflects (check one):

   X New bridge/culvert not modeled in the FIS
   ☐ Modified bridge/culvert previously modeled in the FIS
   ☐ New analysis of bridge/culvert previously modeled in the FIS

2. Hydraulic model used to analyze the structure (e.g., HEC-2 with special bridge routine, WSPRO, HY8): HY8
   If different than hydraulic analysis for the flooding source, justify why the hydraulic analysis used for the flooding source could not analyze the structures. Attach justification. Refer to Two-Dimensional Modeling TDN, Section 5.5.2

3. Attach plans of the structures certified by a registered professional engineer. The plan detail and information should include the following (check the information that has been provided): Refer to Two-Dimensional Modeling TDN, Appendix E.

   X Dimensions (height, width, span, radius, length)
   X Shape (culverts only)
   X Material
   X Beveling or Rounding
   X Wing Wall Angle
   ☐ Skew Angle
   ☐ Distances Between Cross Sections
   ☐ Erosion Protection
   X Low Chord Elevations – Upstream and Downstream
   X Top of Road Elevations – Upstream and Downstream
   X Structure Invert Elevations – Upstream and Downstream
   X Stream Invert Elevations – Upstream and Downstream
   X Cross-Section Locations

4. Sediment Transport Considerations

   Was sediment transport considered? ☐ Yes X No If yes, then fill out Section F (Sediment Transport).
   If No, then attach your explanation for why sediment transport was not considered

---

Flooding Source: **RVWFT2**

Name of Structure: Culv21 (Not in the Floodplain)

1. This revision reflects (check one):

   X New bridge/culvert not modeled in the FIS
   ☐ Modified bridge/culvert previously modeled in the FIS
   ☐ New analysis of bridge/culvert previously modeled in the FIS

2. Hydraulic model used to analyze the structure (e.g., HEC-2 with special bridge routine, WSPRO, HY8): HY8
   If different than hydraulic analysis for the flooding source, justify why the hydraulic analysis used for the flooding source could not analyze the structures. Attach justification. Refer to Two-Dimensional Modeling TDN, Section 5.5.2

3. Attach plans of the structures certified by a registered professional engineer. The plan detail and information should include the following (check the information that has been provided): Refer to Two-Dimensional Modeling TDN, Appendix E.

   X Dimensions (height, width, span, radius, length)
   X Shape (culverts only)
   X Material
   X Beveling or Rounding
   X Wing Wall Angle
   ☐ Skew Angle
   ☐ Distances Between Cross Sections
   ☐ Erosion Protection
   X Low Chord Elevations – Upstream and Downstream
   X Top of Road Elevations – Upstream and Downstream
   X Structure Invert Elevations – Upstream and Downstream
   X Stream Invert Elevations – Upstream and Downstream
   X Cross-Section Locations

4. Sediment Transport Considerations

   Was sediment transport considered? ☐ Yes X No If yes, then fill out Section F (Sediment Transport).
   If No, then attach your explanation for why sediment transport was not considered

C. BRIDGE/ CULVERT

Flooding Source: **RVWFT2**

Name of Structure: Culv24

1. This revision reflects (check one):

   X New bridge/culvert not modeled in the FIS
   ☐ Modified bridge/culvert previously modeled in the FIS
   ☐ New analysis of bridge/culvert previously modeled in the FIS

2. Hydraulic model used to analyze the structure (e.g., HEC-2 with special bridge routine, WSPRO, HY8): HY8
   If different than hydraulic analysis for the flooding source, justify why the hydraulic analysis used for the flooding source could not analyze the structures. Attach justification. Refer to Two-Dimensional Modeling TDN, Section 5.5.2

3. Attach plans of the structures certified by a registered professional engineer. The plan detail and information should include the following (check the information that has been provided): Refer to Two-Dimensional Modeling TDN, Appendix E.

   X Dimensions (height, width, span, radius, length)
   X Shape (culverts only)
   X Material
   X Beveling or Rounding
   X Wing Wall Angle
   ☐ Skew Angle
   ☐ Distances Between Cross Sections
   ☐ Erosion Protection
   X Low Chord Elevations – Upstream and Downstream
   X Top of Road Elevations – Upstream and Downstream
   X Structure Invert Elevations – Upstream and Downstream
   X Stream Invert Elevations – Upstream and Downstream
   X Cross-Section Locations

4. Sediment Transport Considerations

   Was sediment transport considered? ☐ Yes X No If yes, then fill out Section F (Sediment Transport).
   If No, then attach your explanation for why sediment transport was not considered

---

Flooding Source: **RVWFT2**

Name of Structure: Culv25

1. This revision reflects (check one):

   X New bridge/culvert not modeled in the FIS
   ☐ Modified bridge/culvert previously modeled in the FIS
   ☐ New analysis of bridge/culvert previously modeled in the FIS

2. Hydraulic model used to analyze the structure (e.g., HEC-2 with special bridge routine, WSPRO, HY8): HY8
   If different than hydraulic analysis for the flooding source, justify why the hydraulic analysis used for the flooding source could not analyze the structures. Attach justification. Refer to Two-Dimensional Modeling TDN, Section 5.5.2

3. Attach plans of the structures certified by a registered professional engineer. The plan detail and information should include the following (check the information that has been provided): Refer to Two-Dimensional Modeling TDN, Appendix E.

   X Dimensions (height, width, span, radius, length)
   X Shape (culverts only)
   X Material
   X Beveling or Rounding
   X Wing Wall Angle
   ☐ Skew Angle
   ☐ Distances Between Cross Sections
   ☐ Erosion Protection
   X Low Chord Elevations – Upstream and Downstream
   X Top of Road Elevations – Upstream and Downstream
   X Structure Invert Elevations – Upstream and Downstream
   X Stream Invert Elevations – Upstream and Downstream
   X Cross-Section Locations

4. Sediment Transport Considerations

   Was sediment transport considered? ☐ Yes X No If yes, then fill out Section F (Sediment Transport).
   If No, then attach your explanation for why sediment transport was not considered

C. BRIDGE/ CULVERT

Flooding Source: **RVWFT2**

Name of Structure: Culv26

1. This revision reflects (check one):

   X New bridge/culvert not modeled in the FIS
   ☐ Modified bridge/culvert previously modeled in the FIS
   ☐ New analysis of bridge/culvert previously modeled in the FIS

2. Hydraulic model used to analyze the structure (e.g., HEC-2 with special bridge routine, WSPRO, HY8): HY8
   If different than hydraulic analysis for the flooding source, justify why the hydraulic analysis used for the flooding source could not analyze the structures. Attach justification. Refer to Two-Dimensional Modeling TDN, Section 5.5.2

3. Attach plans of the structures certified by a registered professional engineer. The plan detail and information should include the following (check the information that has been provided): Refer to Two-Dimensional Modeling TDN, Appendix E.

   X Dimensions (height, width, span, radius, length)
   X Shape (culverts only)
   X Material
   X Beveling or Rounding
   X Wing Wall Angle
   ☐ Skew Angle
   ☐ Distances Between Cross Sections
   ☐ Erosion Protection
   X Low Chord Elevations – Upstream and Downstream
   X Top of Road Elevations – Upstream and Downstream
   X Structure Invert Elevations – Upstream and Downstream
   X Stream Invert Elevations – Upstream and Downstream
   X Cross-Section Locations

4. Sediment Transport Considerations

   Was sediment transport considered? ☐ Yes X No If yes, then fill out Section F (Sediment Transport).
   If No, then attach your explanation for why sediment transport was not considered

C. BRIDGE/ CULVERT

Flooding Source: **RVWA**

Name of Structure: Culv9

1. This revision reflects (check one):

   X New bridge/culvert not modeled in the FIS
   ☐ Modified bridge/culvert previously modeled in the FIS
   ☐ New analysis of bridge/culvert previously modeled in the FIS

2. Hydraulic model used to analyze the structure (e.g., HEC-2 with special bridge routine, WSPRO, HY8): HY8
   If different than hydraulic analysis for the flooding source, justify why the hydraulic analysis used for the flooding source could not analyze the structures. Attach justification. Refer to Two-Dimensional Modeling TDN, Section 5.5.2

3. Attach plans of the structures certified by a registered professional engineer. The plan detail and information should include the following (check the information that has been provided): Refer to Two-Dimensional Modeling TDN, Appendix E.

   X Dimensions (height, width, span, radius, length)
   X Shape (culverts only)
   X Material
   X Beveling or Rounding
   X Wing Wall Angle
   ☐ Skew Angle
   ☐ Distances Between Cross Sections
   ☐ Erosion Protection
   X Low Chord Elevations – Upstream and Downstream
   X Top of Road Elevations – Upstream and Downstream
   X Structure Invert Elevations – Upstream and Downstream
   X Stream Invert Elevations – Upstream and Downstream
   X Cross-Section Locations

4. Sediment Transport Considerations

   Was sediment transport considered? ☐ Yes X No If yes, then fill out Section F (Sediment Transport).
   If No, then attach your explanation for why sediment transport was not considered

---

Flooding Source: **RVWA**

Name of Structure: Culv14

1. This revision reflects (check one):

   X New bridge/culvert not modeled in the FIS
   ☐ Modified bridge/culvert previously modeled in the FIS
   ☐ New analysis of bridge/culvert previously modeled in the FIS

2. Hydraulic model used to analyze the structure (e.g., HEC-2 with special bridge routine, WSPRO, HY8): HY8
   If different than hydraulic analysis for the flooding source, justify why the hydraulic analysis used for the flooding source could not analyze the structures. Attach justification. Refer to Two-Dimensional Modeling TDN, Section 5.5.2

3. Attach plans of the structures certified by a registered professional engineer. The plan detail and information should include the following (check the information that has been provided): Refer to Two-Dimensional Modeling TDN, Appendix E.

   X Dimensions (height, width, span, radius, length)
   X Shape (culverts only)
   X Material
   X Beveling or Rounding
   X Wing Wall Angle
   ☐ Skew Angle
   ☐ Distances Between Cross Sections
   ☐ Erosion Protection
   X Low Chord Elevations – Upstream and Downstream
   X Top of Road Elevations – Upstream and Downstream
   X Structure Invert Elevations – Upstream and Downstream
   X Stream Invert Elevations – Upstream and Downstream
   X Cross-Section Locations

4. Sediment Transport Considerations

   Was sediment transport considered? ☐ Yes X No If yes, then fill out Section F (Sediment Transport).
   If No, then attach your explanation for why sediment transport was not considered

C. BRIDGE/ CULVERT

Flooding Source: **RVWA**

Name of Structure: Culv33 (Not in the Floodplain)

1. This revision reflects (check one):

   X New bridge/culvert not modeled in the FIS
   ☐ Modified bridge/culvert previously modeled in the FIS
   ☐ New analysis of bridge/culvert previously modeled in the FIS

2. Hydraulic model used to analyze the structure (e.g., HEC-2 with special bridge routine, WSPRO, HY8): HY8
   If different than hydraulic analysis for the flooding source, justify why the hydraulic analysis used for the flooding source could not analyze the structures. Attach justification. Refer to Two-Dimensional Modeling TDN, Section 5.5.2

3. Attach plans of the structures certified by a registered professional engineer. The plan detail and information should include the following (check the information that has been provided): Refer to Two-Dimensional Modeling TDN, Appendix E.

   X Dimensions (height, width, span, radius, length)
   X Shape (culverts only)
   X Material
   X Beveling or Rounding
   X Wing Wall Angle
   ☐ Skew Angle
   ☐ Distances Between Cross Sections
   ☐ Erosion Protection
   X Low Chord Elevations – Upstream and Downstream
   X Top of Road Elevations – Upstream and Downstream
   X Structure Invert Elevations – Upstream and Downstream
   X Stream Invert Elevations – Upstream and Downstream
   X Cross-Section Locations

4. Sediment Transport Considerations

   Was sediment transport considered? ☐ Yes X No If yes, then fill out Section F (Sediment Transport).
   If No, then attach your explanation for why sediment transport was not considered

---

Flooding Source: **RVWA**

Name of Structure: Culv34 (Not in the Floodplain)

1. This revision reflects (check one):

   X New bridge/culvert not modeled in the FIS
   ☐ Modified bridge/culvert previously modeled in the FIS
   ☐ New analysis of bridge/culvert previously modeled in the FIS

2. Hydraulic model used to analyze the structure (e.g., HEC-2 with special bridge routine, WSPRO, HY8): HY8
   If different than hydraulic analysis for the flooding source, justify why the hydraulic analysis used for the flooding source could not analyze the structures. Attach justification. Refer to Two-Dimensional Modeling TDN, Section 5.5.2

3. Attach plans of the structures certified by a registered professional engineer. The plan detail and information should include the following (check the information that has been provided): Refer to Two-Dimensional Modeling TDN, Appendix E.

   X Dimensions (height, width, span, radius, length)
   X Shape (culverts only)
   X Material
   X Beveling or Rounding
   X Wing Wall Angle
   ☐ Skew Angle
   ☐ Distances Between Cross Sections
   ☐ Erosion Protection
   X Low Chord Elevations – Upstream and Downstream
   X Top of Road Elevations – Upstream and Downstream
   X Structure Invert Elevations – Upstream and Downstream
   X Stream Invert Elevations – Upstream and Downstream
   X Cross-Section Locations

4. Sediment Transport Considerations

   Was sediment transport considered? ☐ Yes X No If yes, then fill out Section F (Sediment Transport).
   If No, then attach your explanation for why sediment transport was not considered

C. BRIDGE/ CULVERT

Flooding Source: **RVWA**

Name of Structure: Culv35 (Not in the Floodplain)

1. This revision reflects (check one):

   X New bridge/culvert not modeled in the FIS
   ☐ Modified bridge/culvert previously modeled in the FIS
   ☐ New analysis of bridge/culvert previously modeled in the FIS

2. Hydraulic model used to analyze the structure (e.g., HEC-2 with special bridge routine, WSPRO, HY8): HY8
   If different than hydraulic analysis for the flooding source, justify why the hydraulic analysis used for the flooding source could not analyze the structures. Attach justification. Refer to Two-Dimensional Modeling TDN, Section 5.5.2

3. Attach plans of the structures certified by a registered professional engineer. The plan detail and information should include the following (check the information that has been provided): Refer to Two-Dimensional Modeling TDN, Appendix E.

   X Dimensions (height, width, span, radius, length)
   X Shape (culverts only)
   X Material
   X Beveling or Rounding
   X Wing Wall Angle
   ☐ Skew Angle
   ☐ Distances Between Cross Sections
   ☐ Erosion Protection
   X Low Chord Elevations – Upstream and Downstream
   X Top of Road Elevations – Upstream and Downstream
   X Structure Invert Elevations – Upstream and Downstream
   X Stream Invert Elevations – Upstream and Downstream
   X Cross-Section Locations

4. Sediment Transport Considerations

   Was sediment transport considered? ☐ Yes X No If yes, then fill out Section F (Sediment Transport).
   If No, then attach your explanation for why sediment transport was not considered

---

Flooding Source: **RVWA**

Name of Structure: Culv36 (Not in the Floodplain)

1. This revision reflects (check one):

   X New bridge/culvert not modeled in the FIS
   ☐ Modified bridge/culvert previously modeled in the FIS
   ☐ New analysis of bridge/culvert previously modeled in the FIS

2. Hydraulic model used to analyze the structure (e.g., HEC-2 with special bridge routine, WSPRO, HY8): HY8
   If different than hydraulic analysis for the flooding source, justify why the hydraulic analysis used for the flooding source could not analyze the structures. Attach justification. Refer to Two-Dimensional Modeling TDN, Section 5.5.2

3. Attach plans of the structures certified by a registered professional engineer. The plan detail and information should include the following (check the information that has been provided): Refer to Two-Dimensional Modeling TDN, Appendix E.

   X Dimensions (height, width, span, radius, length)
   X Shape (culverts only)
   X Material
   X Beveling or Rounding
   X Wing Wall Angle
   ☐ Skew Angle
   ☐ Distances Between Cross Sections
   ☐ Erosion Protection
   X Low Chord Elevations – Upstream and Downstream
   X Top of Road Elevations – Upstream and Downstream
   X Structure Invert Elevations – Upstream and Downstream
   X Stream Invert Elevations – Upstream and Downstream
   X Cross-Section Locations

4. Sediment Transport Considerations

   Was sediment transport considered? ☐ Yes X No If yes, then fill out Section F (Sediment Transport).
   If No, then attach your explanation for why sediment transport was not considered

C. BRIDGE/ CULVERT

Flooding Source: **RVWA**

Name of Structure: Culv49

1. This revision reflects (check one):

   X New bridge/culvert not modeled in the FIS
   ☐ Modified bridge/culvert previously modeled in the FIS
   ☐ New analysis of bridge/culvert previously modeled in the FIS

2. Hydraulic model used to analyze the structure (e.g., HEC-2 with special bridge routine, WSPRO, HY8): HY8
   If different than hydraulic analysis for the flooding source, justify why the hydraulic analysis used for the flooding source could not analyze the structures. Attach justification. Refer to Two-Dimensional Modeling TDN, Section 5.5.2

3. Attach plans of the structures certified by a registered professional engineer. The plan detail and information should include the following (check the information that has been provided): Refer to Two-Dimensional Modeling TDN, Appendix E.

   X Dimensions (height, width, span, radius, length)
   X Shape (culverts only)
   X Material
   X Beveling or Rounding
   X Wing Wall Angle
   ☐ Skew Angle
   ☐ Distances Between Cross Sections
   ☐ Erosion Protection
   X Low Chord Elevations – Upstream and Downstream
   X Top of Road Elevations – Upstream and Downstream
   X Structure Invert Elevations – Upstream and Downstream
   X Stream Invert Elevations – Upstream and Downstream
   X Cross-Section Locations

4. Sediment Transport Considerations

   Was sediment transport considered? ☐ Yes X No If yes, then fill out Section F (Sediment Transport).
   If No, then attach your explanation for why sediment transport was not considered

---

Flooding Source: **RVWA**

Name of Structure: Culv50

1. This revision reflects (check one):

   X New bridge/culvert not modeled in the FIS
   ☐ Modified bridge/culvert previously modeled in the FIS
   ☐ New analysis of bridge/culvert previously modeled in the FIS

2. Hydraulic model used to analyze the structure (e.g., HEC-2 with special bridge routine, WSPRO, HY8): HY8
   If different than hydraulic analysis for the flooding source, justify why the hydraulic analysis used for the flooding source could not analyze the structures. Attach justification. Refer to Two-Dimensional Modeling TDN, Section 5.5.2

3. Attach plans of the structures certified by a registered professional engineer. The plan detail and information should include the following (check the information that has been provided): Refer to Two-Dimensional Modeling TDN, Appendix E.

   X Dimensions (height, width, span, radius, length)
   X Shape (culverts only)
   X Material
   X Beveling or Rounding
   X Wing Wall Angle
   ☐ Skew Angle
   ☐ Distances Between Cross Sections
   ☐ Erosion Protection
   X Low Chord Elevations – Upstream and Downstream
   X Top of Road Elevations – Upstream and Downstream
   X Structure Invert Elevations – Upstream and Downstream
   X Stream Invert Elevations – Upstream and Downstream
   X Cross-Section Locations

4. Sediment Transport Considerations

   Was sediment transport considered? ☐ Yes X No If yes, then fill out Section F (Sediment Transport).
   If No, then attach your explanation for why sediment transport was not considered

C. BRIDGE/ CULVERT

Flooding Source: **RVWA**

Name of Structure: Culv51

1. This revision reflects (check one):

   X New bridge/culvert not modeled in the FIS
   ☐ Modified bridge/culvert previously modeled in the FIS
   ☐ New analysis of bridge/culvert previously modeled in the FIS

2. Hydraulic model used to analyze the structure (e.g., HEC-2 with special bridge routine, WSPRO, HY8): HY8
   If different than hydraulic analysis for the flooding source, justify why the hydraulic analysis used for the flooding source could not analyze the structures. Attach justification. Refer to Two-Dimensional Modeling TDN, Section 5.5.2

3. Attach plans of the structures certified by a registered professional engineer. The plan detail and information should include the following (check the information that has been provided): Refer to Two-Dimensional Modeling TDN, Appendix E.

   X Dimensions (height, width, span, radius, length)
   X Shape (culverts only)
   X Material
   X Beveling or Rounding
   X Wing Wall Angle
   ☐ Skew Angle
   ☐ Distances Between Cross Sections
   ☐ Erosion Protection
   X Low Chord Elevations – Upstream and Downstream
   X Top of Road Elevations – Upstream and Downstream
   X Structure Invert Elevations – Upstream and Downstream
   X Stream Invert Elevations – Upstream and Downstream
   X Cross-Section Locations

4. Sediment Transport Considerations

   Was sediment transport considered? ☐ Yes X No If yes, then fill out Section F (Sediment Transport).
   If No, then attach your explanation for why sediment transport was not considered

---

Flooding Source: **RVWA**

Name of Structure: Culv52

1. This revision reflects (check one):

   X New bridge/culvert not modeled in the FIS
   ☐ Modified bridge/culvert previously modeled in the FIS
   ☐ New analysis of bridge/culvert previously modeled in the FIS

2. Hydraulic model used to analyze the structure (e.g., HEC-2 with special bridge routine, WSPRO, HY8): HY8
   If different than hydraulic analysis for the flooding source, justify why the hydraulic analysis used for the flooding source could not analyze the structures. Attach justification. Refer to Two-Dimensional Modeling TDN, Section 5.5.2

3. Attach plans of the structures certified by a registered professional engineer. The plan detail and information should include the following (check the information that has been provided): Refer to Two-Dimensional Modeling TDN, Appendix E.

   X Dimensions (height, width, span, radius, length)
   X Shape (culverts only)
   X Material
   X Beveling or Rounding
   X Wing Wall Angle
   ☐ Skew Angle
   ☐ Distances Between Cross Sections
   ☐ Erosion Protection
   X Low Chord Elevations – Upstream and Downstream
   X Top of Road Elevations – Upstream and Downstream
   X Structure Invert Elevations – Upstream and Downstream
   X Stream Invert Elevations – Upstream and Downstream
   X Cross-Section Locations

4. Sediment Transport Considerations

   Was sediment transport considered? ☐ Yes X No If yes, then fill out Section F (Sediment Transport).
   If No, then attach your explanation for why sediment transport was not considered

C. BRIDGE/ CULVERT

Flooding Source: **RVWA**

Name of Structure: Culv54

1. This revision reflects (check one):

   X New bridge/culvert not modeled in the FIS
   ☐ Modified bridge/culvert previously modeled in the FIS
   ☐ New analysis of bridge/culvert previously modeled in the FIS

2. Hydraulic model used to analyze the structure (e.g., HEC-2 with special bridge routine, WSPRO, HY8): HY8
   If different than hydraulic analysis for the flooding source, justify why the hydraulic analysis used for the flooding source could not analyze the structures. Attach justification. Refer to Two-Dimensional Modeling TDN, Section 5.5.2

3. Attach plans of the structures certified by a registered professional engineer. The plan detail and information should include the following (check the information that has been provided): Refer to Two-Dimensional Modeling TDN, Appendix E.

   X Dimensions (height, width, span, radius, length)
   X Shape (culverts only)
   X Material
   X Beveling or Rounding
   X Wing Wall Angle
   ☐ Skew Angle
   ☐ Distances Between Cross Sections
   ☐ Erosion Protection
   X Low Chord Elevations – Upstream and Downstream
   X Top of Road Elevations – Upstream and Downstream
   X Structure Invert Elevations – Upstream and Downstream
   X Stream Invert Elevations – Upstream and Downstream
   X Cross-Section Locations

4. Sediment Transport Considerations

   Was sediment transport considered? ☐ Yes X No If yes, then fill out Section F (Sediment Transport).
   If No, then attach your explanation for why sediment transport was not considered

---

Flooding Source: **RVWA**

Name of Structure: Culv58

1. This revision reflects (check one):

   X New bridge/culvert not modeled in the FIS
   ☐ Modified bridge/culvert previously modeled in the FIS
   ☐ New analysis of bridge/culvert previously modeled in the FIS

2. Hydraulic model used to analyze the structure (e.g., HEC-2 with special bridge routine, WSPRO, HY8): HY8
   If different than hydraulic analysis for the flooding source, justify why the hydraulic analysis used for the flooding source could not analyze the structures. Attach justification. Refer to Two-Dimensional Modeling TDN, Section 5.5.2

3. Attach plans of the structures certified by a registered professional engineer. The plan detail and information should include the following (check the information that has been provided): Refer to Two-Dimensional Modeling TDN, Appendix E.

   X Dimensions (height, width, span, radius, length)
   X Shape (culverts only)
   X Material
   X Beveling or Rounding
   X Wing Wall Angle
   ☐ Skew Angle
   ☐ Distances Between Cross Sections
   ☐ Erosion Protection
   X Low Chord Elevations – Upstream and Downstream
   X Top of Road Elevations – Upstream and Downstream
   X Structure Invert Elevations – Upstream and Downstream
   X Stream Invert Elevations – Upstream and Downstream
   X Cross-Section Locations

4. Sediment Transport Considerations

   Was sediment transport considered? ☐ Yes X No If yes, then fill out Section F (Sediment Transport).
   If No, then attach your explanation for why sediment transport was not considered

C. BRIDGE/ CULVERT

Flooding Source: **RVWA**

Name of Structure: Culv65

1. This revision reflects (check one):

   X New bridge/culvert not modeled in the FIS
   ☐ Modified bridge/culvert previously modeled in the FIS
   ☐ New analysis of bridge/culvert previously modeled in the FIS

2. Hydraulic model used to analyze the structure (e.g., HEC-2 with special bridge routine, WSPRO, HY8): HY8
   If different than hydraulic analysis for the flooding source, justify why the hydraulic analysis used for the flooding source could not analyze the structures. Attach justification. Refer to Two-Dimensional Modeling TDN, Section 5.5.2

3. Attach plans of the structures certified by a registered professional engineer. The plan detail and information should include the following (check the information that has been provided): Refer to Two-Dimensional Modeling TDN, Appendix E.

   X Dimensions (height, width, span, radius, length)
   X Shape (culverts only)
   X Material
   X Beveling or Rounding
   X Wing Wall Angle
   ☐ Skew Angle
   ☐ Distances Between Cross Sections
   ☐ Erosion Protection
   X Low Chord Elevations – Upstream and Downstream
   X Top of Road Elevations – Upstream and Downstream
   X Structure Invert Elevations – Upstream and Downstream
   X Stream Invert Elevations – Upstream and Downstream
   X Cross-Section Locations

4. Sediment Transport Considerations

   Was sediment transport considered? ☐ Yes X No If yes, then fill out Section F (Sediment Transport).
   If No, then attach your explanation for why sediment transport was not considered

---

C. BRIDGE/ CULVERT

Flooding Source: **RVWAS8**

Name of Structure: Culv37

1. This revision reflects (check one):

   X New bridge/culvert not modeled in the FIS
   ☐ Modified bridge/culvert previously modeled in the FIS
   ☐ New analysis of bridge/culvert previously modeled in the FIS

2. Hydraulic model used to analyze the structure (e.g., HEC-2 with special bridge routine, WSPRO, HY8): HY8
   If different than hydraulic analysis for the flooding source, justify why the hydraulic analysis used for the flooding source could not analyze the structures. Attach justification. Refer to Two-Dimensional Modeling TDN, Section 5.5.2

3. Attach plans of the structures certified by a registered professional engineer. The plan detail and information should include the following (check the information that has been provided): Refer to Two-Dimensional Modeling TDN, Appendix E.

   X Dimensions (height, width, span, radius, length)
   X Shape (culverts only)
   X Material
   X Beveling or Rounding
   X Wing Wall Angle
   ☐ Skew Angle
   ☐ Distances Between Cross Sections
   ☐ Erosion Protection
   X Low Chord Elevations – Upstream and Downstream
   X Top of Road Elevations – Upstream and Downstream
   X Structure Invert Elevations – Upstream and Downstream
   X Stream Invert Elevations – Upstream and Downstream
   X Cross-Section Locations

4. Sediment Transport Considerations

   Was sediment transport considered? ☐ Yes X No If yes, then fill out Section F (Sediment Transport).
   If No, then attach your explanation for why sediment transport was not considered

---

Flooding Source: **RVWAS8**

Name of Structure: Culv38

1. This revision reflects (check one):

   X New bridge/culvert not modeled in the FIS
   ☐ Modified bridge/culvert previously modeled in the FIS
   ☐ New analysis of bridge/culvert previously modeled in the FIS

2. Hydraulic model used to analyze the structure (e.g., HEC-2 with special bridge routine, WSPRO, HY8): HY8
   If different than hydraulic analysis for the flooding source, justify why the hydraulic analysis used for the flooding source could not analyze the structures. Attach justification. Refer to Two-Dimensional Modeling TDN, Section 5.5.2

3. Attach plans of the structures certified by a registered professional engineer. The plan detail and information should include the following (check the information that has been provided): Refer to Two-Dimensional Modeling TDN, Appendix E.

   X Dimensions (height, width, span, radius, length)
   X Shape (culverts only)
   X Material
   X Beveling or Rounding
   X Wing Wall Angle
   ☐ Skew Angle
   ☐ Distances Between Cross Sections
   ☐ Erosion Protection
   X Low Chord Elevations – Upstream and Downstream
   X Top of Road Elevations – Upstream and Downstream
   X Structure Invert Elevations – Upstream and Downstream
   X Stream Invert Elevations – Upstream and Downstream
   X Cross-Section Locations

4. Sediment Transport Considerations

   Was sediment transport considered? ☐ Yes X No If yes, then fill out Section F (Sediment Transport).
   If No, then attach your explanation for why sediment transport was not considered

C. BRIDGE/ CULVERT

Flooding Source: **RVWAS8**

Name of Structure: Culv46

1. This revision reflects (check one):

   X New bridge/culvert not modeled in the FIS
   ☐ Modified bridge/culvert previously modeled in the FIS
   ☐ New analysis of bridge/culvert previously modeled in the FIS

2. Hydraulic model used to analyze the structure (e.g., HEC-2 with special bridge routine, WSPRO, HY8): HY8
   If different than hydraulic analysis for the flooding source, justify why the hydraulic analysis used for the flooding source could not analyze the structures. Attach justification. Refer to Two-Dimensional Modeling TDN, Section 5.5.2

3. Attach plans of the structures certified by a registered professional engineer. The plan detail and information should include the following (check the information that has been provided): Refer to Two-Dimensional Modeling TDN, Appendix E.

   X Dimensions (height, width, span, radius, length)
   X Shape (culverts only)
   X Material
   X Beveling or Rounding
   X Wing Wall Angle
   ☐ Skew Angle
   ☐ Distances Between Cross Sections
   ☐ Erosion Protection
   X Low Chord Elevations – Upstream and Downstream
   X Top of Road Elevations – Upstream and Downstream
   X Structure Invert Elevations – Upstream and Downstream
   X Stream Invert Elevations – Upstream and Downstream
   X Cross-Section Locations

4. Sediment Transport Considerations

   Was sediment transport considered? ☐ Yes X No If yes, then fill out Section F (Sediment Transport).
   If No, then attach your explanation for why sediment transport was not considered

---

Flooding Source: **RVWAS8**

Name of Structure: Culv47

1. This revision reflects (check one):

   X New bridge/culvert not modeled in the FIS
   ☐ Modified bridge/culvert previously modeled in the FIS
   ☐ New analysis of bridge/culvert previously modeled in the FIS

2. Hydraulic model used to analyze the structure (e.g., HEC-2 with special bridge routine, WSPRO, HY8): HY8
   If different than hydraulic analysis for the flooding source, justify why the hydraulic analysis used for the flooding source could not analyze the structures. Attach justification. Refer to Two-Dimensional Modeling TDN, Section 5.5.2

3. Attach plans of the structures certified by a registered professional engineer. The plan detail and information should include the following (check the information that has been provided): Refer to Two-Dimensional Modeling TDN, Appendix E.

   X Dimensions (height, width, span, radius, length)
   X Shape (culverts only)
   X Material
   X Beveling or Rounding
   X Wing Wall Angle
   ☐ Skew Angle
   ☐ Distances Between Cross Sections
   ☐ Erosion Protection
   X Low Chord Elevations – Upstream and Downstream
   X Top of Road Elevations – Upstream and Downstream
   X Structure Invert Elevations – Upstream and Downstream
   X Stream Invert Elevations – Upstream and Downstream
   X Cross-Section Locations

4. Sediment Transport Considerations

   Was sediment transport considered? ☐ Yes X No If yes, then fill out Section F (Sediment Transport).
   If No, then attach your explanation for why sediment transport was not considered

C. BRIDGE/ CULVERT

Flooding Source: **RVWAS8**

Name of Structure: Culv48

1. This revision reflects (check one):

   X New bridge/culvert not modeled in the FIS
   ☐ Modified bridge/culvert previously modeled in the FIS
   ☐ New analysis of bridge/culvert previously modeled in the FIS

2. Hydraulic model used to analyze the structure (e.g., HEC-2 with special bridge routine, WSPRO, HY8): HY8
   If different than hydraulic analysis for the flooding source, justify why the hydraulic analysis used for the flooding source could not analyze the structures. Attach justification. Refer to Two-Dimensional Modeling TDN, Section 5.5.2

3. Attach plans of the structures certified by a registered professional engineer. The plan detail and information should include the following (check the information that has been provided): Refer to Two-Dimensional Modeling TDN, Appendix E.

   X Dimensions (height, width, span, radius, length)
   X Shape (culverts only)
   X Material
   X Beveling or Rounding
   X Wing Wall Angle
   ☐ Skew Angle
   ☐ Distances Between Cross Sections
   ☐ Erosion Protection
   X Low Chord Elevations – Upstream and Downstream
   X Top of Road Elevations – Upstream and Downstream
   X Structure Invert Elevations – Upstream and Downstream
   X Stream Invert Elevations – Upstream and Downstream
   X Cross-Section Locations

4. Sediment Transport Considerations

   Was sediment transport considered? ☐ Yes X No If yes, then fill out Section F (Sediment Transport).
   If No, then attach your explanation for why sediment transport was not considered

---

Flooding Source: **RVWAS8**

Name of Structure: Culv53

1. This revision reflects (check one):

   X New bridge/culvert not modeled in the FIS
   ☐ Modified bridge/culvert previously modeled in the FIS
   ☐ New analysis of bridge/culvert previously modeled in the FIS

2. Hydraulic model used to analyze the structure (e.g., HEC-2 with special bridge routine, WSPRO, HY8): HY8
   If different than hydraulic analysis for the flooding source, justify why the hydraulic analysis used for the flooding source could not analyze the structures. Attach justification. Refer to Two-Dimensional Modeling TDN, Section 5.5.2

3. Attach plans of the structures certified by a registered professional engineer. The plan detail and information should include the following (check the information that has been provided): Refer to Two-Dimensional Modeling TDN, Appendix E.

   X Dimensions (height, width, span, radius, length)
   X Shape (culverts only)
   X Material
   X Beveling or Rounding
   X Wing Wall Angle
   ☐ Skew Angle
   ☐ Distances Between Cross Sections
   ☐ Erosion Protection
   X Low Chord Elevations – Upstream and Downstream
   X Top of Road Elevations – Upstream and Downstream
   X Structure Invert Elevations – Upstream and Downstream
   X Stream Invert Elevations – Upstream and Downstream
   X Cross-Section Locations

4. Sediment Transport Considerations

   Was sediment transport considered? ☐ Yes X No If yes, then fill out Section F (Sediment Transport).
   If No, then attach your explanation for why sediment transport was not considered

C. BRIDGE/ CULVERT

Flooding Source: **RVWAS8**

Name of Structure: Culv55 (Not in the Floodplain)

1. This revision reflects (check one):

   X New bridge/culvert not modeled in the FIS
   ☐ Modified bridge/culvert previously modeled in the FIS
   ☐ New analysis of bridge/culvert previously modeled in the FIS

2. Hydraulic model used to analyze the structure (e.g., HEC-2 with special bridge routine, WSPRO, HY8): HY8
   If different than hydraulic analysis for the flooding source, justify why the hydraulic analysis used for the flooding source could not analyze the structures. Attach justification. Refer to Two-Dimensional Modeling TDN, Section 5.5.2

3. Attach plans of the structures certified by a registered professional engineer. The plan detail and information should include the following (check the information that has been provided): Refer to Two-Dimensional Modeling TDN, Appendix E.

   X Dimensions (height, width, span, radius, length)
   X Shape (culverts only)
   X Material
   X Beveling or Rounding
   X Wing Wall Angle
   ☐ Skew Angle
   ☐ Distances Between Cross Sections
   ☐ Erosion Protection
   X Low Chord Elevations – Upstream and Downstream
   X Top of Road Elevations – Upstream and Downstream
   X Structure Invert Elevations – Upstream and Downstream
   X Stream Invert Elevations – Upstream and Downstream
   X Cross-Section Locations

4. Sediment Transport Considerations

   Was sediment transport considered? ☐ Yes X No If yes, then fill out Section F (Sediment Transport).
   If No, then attach your explanation for why sediment transport was not considered

---

Flooding Source: **RVWAS8**

Name of Structure: Culv56 (Not in the Floodplain)

1. This revision reflects (check one):

   X New bridge/culvert not modeled in the FIS
   ☐ Modified bridge/culvert previously modeled in the FIS
   ☐ New analysis of bridge/culvert previously modeled in the FIS

2. Hydraulic model used to analyze the structure (e.g., HEC-2 with special bridge routine, WSPRO, HY8): HY8
   If different than hydraulic analysis for the flooding source, justify why the hydraulic analysis used for the flooding source could not analyze the structures. Attach justification. Refer to Two-Dimensional Modeling TDN, Section 5.5.2

3. Attach plans of the structures certified by a registered professional engineer. The plan detail and information should include the following (check the information that has been provided): Refer to Two-Dimensional Modeling TDN, Appendix E.

   X Dimensions (height, width, span, radius, length)
   X Shape (culverts only)
   X Material
   X Beveling or Rounding
   X Wing Wall Angle
   ☐ Skew Angle
   ☐ Distances Between Cross Sections
   ☐ Erosion Protection
   X Low Chord Elevations – Upstream and Downstream
   X Top of Road Elevations – Upstream and Downstream
   X Structure Invert Elevations – Upstream and Downstream
   X Stream Invert Elevations – Upstream and Downstream
   X Cross-Section Locations

4. Sediment Transport Considerations

   Was sediment transport considered? ☐ Yes X No If yes, then fill out Section F (Sediment Transport).
   If No, then attach your explanation for why sediment transport was not considered

C. BRIDGE/ CULVERT

Flooding Source: **RVWAS8**

Name of Structure: Culv57 (Not in the Floodplain)

1. This revision reflects (check one):

   X New bridge/culvert not modeled in the FIS
   ☐ Modified bridge/culvert previously modeled in the FIS
   ☐ New analysis of bridge/culvert previously modeled in the FIS

2. Hydraulic model used to analyze the structure (e.g., HEC-2 with special bridge routine, WSPRO, HY8): HY8
   If different than hydraulic analysis for the flooding source, justify why the hydraulic analysis used for the flooding source could not analyze the structures. Attach justification. Refer to Two-Dimensional Modeling TDN, Section 5.5.2

3. Attach plans of the structures certified by a registered professional engineer. The plan detail and information should include the following (check the information that has been provided): Refer to Two-Dimensional Modeling TDN, Appendix E.

   X Dimensions (height, width, span, radius, length)
   X Shape (culverts only)
   X Material
   X Beveling or Rounding
   X Wing Wall Angle
   ☐ Skew Angle
   ☐ Distances Between Cross Sections
   ☐ Erosion Protection
   X Low Chord Elevations – Upstream and Downstream
   X Top of Road Elevations – Upstream and Downstream
   X Structure Invert Elevations – Upstream and Downstream
   X Stream Invert Elevations – Upstream and Downstream
   X Cross-Section Locations

4. Sediment Transport Considerations

   Was sediment transport considered? ☐ Yes X No If yes, then fill out Section F (Sediment Transport).
   If No, then attach your explanation for why sediment transport was not considered

C. BRIDGE/ CULVERT

Flooding Source: **RVWAS9**

Name of Structure: Culv15 (Not in the Floodplain)

1. This revision reflects (check one):

   X New bridge/culvert not modeled in the FIS
   ☐ Modified bridge/culvert previously modeled in the FIS
   ☐ New analysis of bridge/culvert previously modeled in the FIS

2. Hydraulic model used to analyze the structure (e.g., HEC-2 with special bridge routine, WSPRO, HY8): HY8
   If different than hydraulic analysis for the flooding source, justify why the hydraulic analysis used for the flooding source could not analyze the structures. Attach justification. Refer to Two-Dimensional Modeling TDN, Section 5.5.2

3. Attach plans of the structures certified by a registered professional engineer. The plan detail and information should include the following (check the information that has been provided): Refer to Two-Dimensional Modeling TDN, Appendix E.

   X Dimensions (height, width, span, radius, length)
   X Shape (culverts only)
   X Material
   X Beveling or Rounding
   X Wing Wall Angle
   ☐ Skew Angle
   ☐ Distances Between Cross Sections
   ☐ Erosion Protection
   X Low Chord Elevations – Upstream and Downstream
   X Top of Road Elevations – Upstream and Downstream
   X Structure Invert Elevations – Upstream and Downstream
   X Stream Invert Elevations – Upstream and Downstream
   X Cross-Section Locations

4. Sediment Transport Considerations

   Was sediment transport considered? ☐ Yes X No If yes, then fill out Section F (Sediment Transport).
   If No, then attach your explanation for why sediment transport was not considered

---

Flooding Source: **RVWAS9**

Name of Structure: Culv16 (Not in the Floodplain)

1. This revision reflects (check one):

   X New bridge/culvert not modeled in the FIS
   ☐ Modified bridge/culvert previously modeled in the FIS
   ☐ New analysis of bridge/culvert previously modeled in the FIS

2. Hydraulic model used to analyze the structure (e.g., HEC-2 with special bridge routine, WSPRO, HY8): HY8
   If different than hydraulic analysis for the flooding source, justify why the hydraulic analysis used for the flooding source could not analyze the structures. Attach justification. Refer to Two-Dimensional Modeling TDN, Section 5.5.2

3. Attach plans of the structures certified by a registered professional engineer. The plan detail and information should include the following (check the information that has been provided): Refer to Two-Dimensional Modeling TDN, Appendix E.

   X Dimensions (height, width, span, radius, length)
   X Shape (culverts only)
   X Material
   X Beveling or Rounding
   X Wing Wall Angle
   ☐ Skew Angle
   ☐ Distances Between Cross Sections
   ☐ Erosion Protection
   X Low Chord Elevations – Upstream and Downstream
   X Top of Road Elevations – Upstream and Downstream
   X Structure Invert Elevations – Upstream and Downstream
   X Stream Invert Elevations – Upstream and Downstream
   X Cross-Section Locations

4. Sediment Transport Considerations

   Was sediment transport considered? ☐ Yes X No If yes, then fill out Section F (Sediment Transport).
   If No, then attach your explanation for why sediment transport was not considered

C. BRIDGE/ CULVERT

Flooding Source: **RVWAS9**

Name of Structure: Culv39

1. This revision reflects (check one):

   X New bridge/culvert not modeled in the FIS
   ☐ Modified bridge/culvert previously modeled in the FIS
   ☐ New analysis of bridge/culvert previously modeled in the FIS

2. Hydraulic model used to analyze the structure (e.g., HEC-2 with special bridge routine, WSPRO, HY8): HY8
   If different than hydraulic analysis for the flooding source, justify why the hydraulic analysis used for the flooding source could not analyze the structures. Attach justification. Refer to Two-Dimensional Modeling TDN, Section 5.5.2

3. Attach plans of the structures certified by a registered professional engineer. The plan detail and information should include the following (check the information that has been provided): Refer to Two-Dimensional Modeling TDN, Appendix E.

   X Dimensions (height, width, span, radius, length)
   X Shape (culverts only)
   X Material
   X Beveling or Rounding
   X Wing Wall Angle
   ☐ Skew Angle
   ☐ Distances Between Cross Sections
   ☐ Erosion Protection
   X Low Chord Elevations – Upstream and Downstream
   X Top of Road Elevations – Upstream and Downstream
   X Structure Invert Elevations – Upstream and Downstream
   X Stream Invert Elevations – Upstream and Downstream
   X Cross-Section Locations

4. Sediment Transport Considerations

   Was sediment transport considered? ☐ Yes X No If yes, then fill out Section F (Sediment Transport).
   If No, then attach your explanation for why sediment transport was not considered

---

Flooding Source: **RVWAS9**

Name of Structure: Culv40

1. This revision reflects (check one):

   X New bridge/culvert not modeled in the FIS
   ☐ Modified bridge/culvert previously modeled in the FIS
   ☐ New analysis of bridge/culvert previously modeled in the FIS

2. Hydraulic model used to analyze the structure (e.g., HEC-2 with special bridge routine, WSPRO, HY8): HY8
   If different than hydraulic analysis for the flooding source, justify why the hydraulic analysis used for the flooding source could not analyze the structures. Attach justification. Refer to Two-Dimensional Modeling TDN, Section 5.5.2

3. Attach plans of the structures certified by a registered professional engineer. The plan detail and information should include the following (check the information that has been provided): Refer to Two-Dimensional Modeling TDN, Appendix E.

   X Dimensions (height, width, span, radius, length)
   X Shape (culverts only)
   X Material
   X Beveling or Rounding
   X Wing Wall Angle
   ☐ Skew Angle
   ☐ Distances Between Cross Sections
   ☐ Erosion Protection
   X Low Chord Elevations – Upstream and Downstream
   X Top of Road Elevations – Upstream and Downstream
   X Structure Invert Elevations – Upstream and Downstream
   X Stream Invert Elevations – Upstream and Downstream
   X Cross-Section Locations

4. Sediment Transport Considerations

   Was sediment transport considered? ☐ Yes X No If yes, then fill out Section F (Sediment Transport).
   If No, then attach your explanation for why sediment transport was not considered

C. BRIDGE/ CULVERT

Flooding Source: **RVWAS9**

Name of Structure: Culv41

1. This revision reflects (check one):

   X New bridge/culvert not modeled in the FIS
   ☐ Modified bridge/culvert previously modeled in the FIS
   ☐ New analysis of bridge/culvert previously modeled in the FIS

2. Hydraulic model used to analyze the structure (e.g., HEC-2 with special bridge routine, WSPRO, HY8): HY8
   If different than hydraulic analysis for the flooding source, justify why the hydraulic analysis used for the flooding source could not analyze the structures. Attach justification. Refer to Two-Dimensional Modeling TDN, Section 5.5.2

3. Attach plans of the structures certified by a registered professional engineer. The plan detail and information should include the following (check the information that has been provided): Refer to Two-Dimensional Modeling TDN, Appendix E.

   X Dimensions (height, width, span, radius, length)
   X Shape (culverts only)
   X Material
   X Beveling or Rounding
   X Wing Wall Angle
   ☐ Skew Angle
   ☐ Distances Between Cross Sections
   ☐ Erosion Protection
   X Low Chord Elevations – Upstream and Downstream
   X Top of Road Elevations – Upstream and Downstream
   X Structure Invert Elevations – Upstream and Downstream
   X Stream Invert Elevations – Upstream and Downstream
   X Cross-Section Locations

4. Sediment Transport Considerations

   Was sediment transport considered? ☐ Yes X No If yes, then fill out Section F (Sediment Transport).
   If No, then attach your explanation for why sediment transport was not considered

---

Flooding Source: **RVWAS9**

Name of Structure: Culv42

1. This revision reflects (check one):

   X New bridge/culvert not modeled in the FIS
   ☐ Modified bridge/culvert previously modeled in the FIS
   ☐ New analysis of bridge/culvert previously modeled in the FIS

2. Hydraulic model used to analyze the structure (e.g., HEC-2 with special bridge routine, WSPRO, HY8): HY8
   If different than hydraulic analysis for the flooding source, justify why the hydraulic analysis used for the flooding source could not analyze the structures. Attach justification. Refer to Two-Dimensional Modeling TDN, Section 5.5.2

3. Attach plans of the structures certified by a registered professional engineer. The plan detail and information should include the following (check the information that has been provided): Refer to Two-Dimensional Modeling TDN, Appendix E.

   X Dimensions (height, width, span, radius, length)
   X Shape (culverts only)
   X Material
   X Beveling or Rounding
   X Wing Wall Angle
   ☐ Skew Angle
   ☐ Distances Between Cross Sections
   ☐ Erosion Protection
   X Low Chord Elevations – Upstream and Downstream
   X Top of Road Elevations – Upstream and Downstream
   X Structure Invert Elevations – Upstream and Downstream
   X Stream Invert Elevations – Upstream and Downstream
   X Cross-Section Locations

4. Sediment Transport Considerations

   Was sediment transport considered? ☐ Yes X No If yes, then fill out Section F (Sediment Transport).
   If No, then attach your explanation for why sediment transport was not considered

C. BRIDGE/ CULVERT

Flooding Source: **RVWAS9**

Name of Structure: Culv43

1. This revision reflects (check one):

   X New bridge/culvert not modeled in the FIS
   ☐ Modified bridge/culvert previously modeled in the FIS
   ☐ New analysis of bridge/culvert previously modeled in the FIS

2. Hydraulic model used to analyze the structure (e.g., HEC-2 with special bridge routine, WSPRO, HY8): HY8
   If different than hydraulic analysis for the flooding source, justify why the hydraulic analysis used for the flooding source could not analyze the structures. Attach justification. Refer to Two-Dimensional Modeling TDN, Section 5.5.2

3. Attach plans of the structures certified by a registered professional engineer. The plan detail and information should include the following (check the information that has been provided): Refer to Two-Dimensional Modeling TDN, Appendix E.

   X Dimensions (height, width, span, radius, length)
   X Shape (culverts only)
   X Material
   X Beveling or Rounding
   X Wing Wall Angle
   ☐ Skew Angle
   ☐ Distances Between Cross Sections
   ☐ Erosion Protection
   X Low Chord Elevations – Upstream and Downstream
   X Top of Road Elevations – Upstream and Downstream
   X Structure Invert Elevations – Upstream and Downstream
   X Stream Invert Elevations – Upstream and Downstream
   X Cross-Section Locations

4. Sediment Transport Considerations

   Was sediment transport considered? ☐ Yes X No If yes, then fill out Section F (Sediment Transport).
   If No, then attach your explanation for why sediment transport was not considered

---

Flooding Source: **RVWAS9**

Name of Structure: Culv44

1. This revision reflects (check one):

   X New bridge/culvert not modeled in the FIS
   ☐ Modified bridge/culvert previously modeled in the FIS
   ☐ New analysis of bridge/culvert previously modeled in the FIS

2. Hydraulic model used to analyze the structure (e.g., HEC-2 with special bridge routine, WSPRO, HY8): HY8
   If different than hydraulic analysis for the flooding source, justify why the hydraulic analysis used for the flooding source could not analyze the structures. Attach justification. Refer to Two-Dimensional Modeling TDN, Section 5.5.2

3. Attach plans of the structures certified by a registered professional engineer. The plan detail and information should include the following (check the information that has been provided): Refer to Two-Dimensional Modeling TDN, Appendix E.

   X Dimensions (height, width, span, radius, length)
   X Shape (culverts only)
   X Material
   X Beveling or Rounding
   X Wing Wall Angle
   ☐ Skew Angle
   ☐ Distances Between Cross Sections
   ☐ Erosion Protection
   X Low Chord Elevations – Upstream and Downstream
   X Top of Road Elevations – Upstream and Downstream
   X Structure Invert Elevations – Upstream and Downstream
   X Stream Invert Elevations – Upstream and Downstream
   X Cross-Section Locations

4. Sediment Transport Considerations

   Was sediment transport considered? ☐ Yes X No If yes, then fill out Section F (Sediment Transport).
   If No, then attach your explanation for why sediment transport was not considered

C. BRIDGE/ CULVERT

Flooding Source: **RVWAS9**

Name of Structure: Culv45

1. This revision reflects (check one):

   X New bridge/culvert not modeled in the FIS
   ☐ Modified bridge/culvert previously modeled in the FIS
   ☐ New analysis of bridge/culvert previously modeled in the FIS

2. Hydraulic model used to analyze the structure (e.g., HEC-2 with special bridge routine, WSPRO, HY8): HY8
   If different than hydraulic analysis for the flooding source, justify why the hydraulic analysis used for the flooding source could not analyze the structures. Attach justification. Refer to Two-Dimensional Modeling TDN, Section 5.5.2

3. Attach plans of the structures certified by a registered professional engineer. The plan detail and information should include the following (check the information that has been provided): Refer to Two-Dimensional Modeling TDN, Appendix E.

   X Dimensions (height, width, span, radius, length)
   X Shape (culverts only)
   X Material
   X Beveling or Rounding
   X Wing Wall Angle
   ☐ Skew Angle
   ☐ Distances Between Cross Sections
   ☐ Erosion Protection
   X Low Chord Elevations – Upstream and Downstream
   X Top of Road Elevations – Upstream and Downstream
   X Structure Invert Elevations – Upstream and Downstream
   X Stream Invert Elevations – Upstream and Downstream
   X Cross-Section Locations

4. Sediment Transport Considerations

   Was sediment transport considered? ☐ Yes X No If yes, then fill out Section F (Sediment Transport).
   If No, then attach your explanation for why sediment transport was not considered

---

Flooding Source: **RVWAS9**

Name of Structure: Culv68 (Not in the Floodplain)

1. This revision reflects (check one):

   X New bridge/culvert not modeled in the FIS
   ☐ Modified bridge/culvert previously modeled in the FIS
   ☐ New analysis of bridge/culvert previously modeled in the FIS

2. Hydraulic model used to analyze the structure (e.g., HEC-2 with special bridge routine, WSPRO, HY8): HY8
   If different than hydraulic analysis for the flooding source, justify why the hydraulic analysis used for the flooding source could not analyze the structures. Attach justification. Refer to Two-Dimensional Modeling TDN, Section 5.5.2

3. Attach plans of the structures certified by a registered professional engineer. The plan detail and information should include the following (check the information that has been provided): Refer to Two-Dimensional Modeling TDN, Appendix E.

   X Dimensions (height, width, span, radius, length)
   X Shape (culverts only)
   X Material
   X Beveling or Rounding
   X Wing Wall Angle
   ☐ Skew Angle
   ☐ Distances Between Cross Sections
   ☐ Erosion Protection
   X Low Chord Elevations – Upstream and Downstream
   X Top of Road Elevations – Upstream and Downstream
   X Structure Invert Elevations – Upstream and Downstream
   X Stream Invert Elevations – Upstream and Downstream
   X Cross-Section Locations

4. Sediment Transport Considerations

   Was sediment transport considered? ☐ Yes X No If yes, then fill out Section F (Sediment Transport).
   If No, then attach your explanation for why sediment transport was not considered

C. BRIDGE/ CULVERT

Flooding Source: **RVWAS9**

Name of Structure: Culv70 (Not in the Floodplain)

1. This revision reflects (check one):

   X New bridge/culvert not modeled in the FIS
   ☐ Modified bridge/culvert previously modeled in the FIS
   ☐ New analysis of bridge/culvert previously modeled in the FIS

2. Hydraulic model used to analyze the structure (e.g., HEC-2 with special bridge routine, WSPRO, HY8): HY8
   If different than hydraulic analysis for the flooding source, justify why the hydraulic analysis used for the flooding source could not analyze the structures. Attach justification. Refer to Two-Dimensional Modeling TDN, Section 5.5.2

3. Attach plans of the structures certified by a registered professional engineer. The plan detail and information should include the following (check the information that has been provided): Refer to Two-Dimensional Modeling TDN, Appendix E.

   X Dimensions (height, width, span, radius, length)
   X Shape (culverts only)
   X Material
   X Beveling or Rounding
   X Wing Wall Angle
   ☐ Skew Angle
   ☐ Distances Between Cross Sections
   ☐ Erosion Protection
   X Low Chord Elevations – Upstream and Downstream
   X Top of Road Elevations – Upstream and Downstream
   X Structure Invert Elevations – Upstream and Downstream
   X Stream Invert Elevations – Upstream and Downstream
   X Cross-Section Locations

4. Sediment Transport Considerations

   Was sediment transport considered? ☐ Yes X No If yes, then fill out Section F (Sediment Transport).
   If No, then attach your explanation for why sediment transport was not considered

C. BRIDGE/ CULVERT

Flooding Source: **RVWAS3**

Name of Structure: Culv66

1. This revision reflects (check one):

   X New bridge/culvert not modeled in the FIS
   ☐ Modified bridge/culvert previously modeled in the FIS
   ☐ New analysis of bridge/culvert previously modeled in the FIS

2. Hydraulic model used to analyze the structure (e.g., HEC-2 with special bridge routine, WSPRO, HY8): HY8
   If different than hydraulic analysis for the flooding source, justify why the hydraulic analysis used for the flooding source could not analyze the structures. Attach justification. Refer to Two-Dimensional Modeling TDN, Section 5.5.2

3. Attach plans of the structures certified by a registered professional engineer. The plan detail and information should include the following (check the information that has been provided): Refer to Two-Dimensional Modeling TDN, Appendix E.

   X Dimensions (height, width, span, radius, length)
   X Shape (culverts only)
   X Material
   X Beveling or Rounding
   X Wing Wall Angle
   ☐ Skew Angle
   ☐ Distances Between Cross Sections
   ☐ Erosion Protection
   X Low Chord Elevations – Upstream and Downstream
   X Top of Road Elevations – Upstream and Downstream
   X Structure Invert Elevations – Upstream and Downstream
   X Stream Invert Elevations – Upstream and Downstream
   X Cross-Section Locations

4. Sediment Transport Considerations

   Was sediment transport considered? ☐ Yes X No If yes, then fill out Section F (Sediment Transport).
   If No, then attach your explanation for why sediment transport was not considered

---

Flooding Source: **RVWAS3**

Name of Structure: Culv67

1. This revision reflects (check one):

   X New bridge/culvert not modeled in the FIS
   ☐ Modified bridge/culvert previously modeled in the FIS
   ☐ New analysis of bridge/culvert previously modeled in the FIS

2. Hydraulic model used to analyze the structure (e.g., HEC-2 with special bridge routine, WSPRO, HY8): HY8
   If different than hydraulic analysis for the flooding source, justify why the hydraulic analysis used for the flooding source could not analyze the structures. Attach justification. Refer to Two-Dimensional Modeling TDN, Section 5.5.2

3. Attach plans of the structures certified by a registered professional engineer. The plan detail and information should include the following (check the information that has been provided): Refer to Two-Dimensional Modeling TDN, Appendix E.

   X Dimensions (height, width, span, radius, length)
   X Shape (culverts only)
   X Material
   X Beveling or Rounding
   X Wing Wall Angle
   ☐ Skew Angle
   ☐ Distances Between Cross Sections
   ☐ Erosion Protection
   X Low Chord Elevations – Upstream and Downstream
   X Top of Road Elevations – Upstream and Downstream
   X Structure Invert Elevations – Upstream and Downstream
   X Stream Invert Elevations – Upstream and Downstream
   X Cross-Section Locations

4. Sediment Transport Considerations

   Was sediment transport considered? ☐ Yes X No If yes, then fill out Section F (Sediment Transport).
   If No, then attach your explanation for why sediment transport was not considered

C. BRIDGE/ CULVERT

Flooding Source: **RVWKT9**

Name of Structure: Culv1 (Not in the Floodplain)

1. This revision reflects (check one):

   X New bridge/culvert not modeled in the FIS
   ☐ Modified bridge/culvert previously modeled in the FIS
   ☐ New analysis of bridge/culvert previously modeled in the FIS

2. Hydraulic model used to analyze the structure (e.g., HEC-2 with special bridge routine, WSPRO, HY8): HY8
   If different than hydraulic analysis for the flooding source, justify why the hydraulic analysis used for the flooding source could not analyze the structures. Attach justification. Refer to Two-Dimensional Modeling TDN, Section 5.5.2

3. Attach plans of the structures certified by a registered professional engineer. The plan detail and information should include the following (check the information that has been provided): Refer to Two-Dimensional Modeling TDN, Appendix E.

   X Dimensions (height, width, span, radius, length)
   X Shape (culverts only)
   X Material
   X Beveling or Rounding
   X Wing Wall Angle
   ☐ Skew Angle
   ☐ Distances Between Cross Sections
   ☐ Erosion Protection
   X Low Chord Elevations – Upstream and Downstream
   X Top of Road Elevations – Upstream and Downstream
   X Structure Invert Elevations – Upstream and Downstream
   X Stream Invert Elevations – Upstream and Downstream
   X Cross-Section Locations

4. Sediment Transport Considerations

   Was sediment transport considered? ☐ Yes X No If yes, then fill out Section F (Sediment Transport).
   If No, then attach your explanation for why sediment transport was not considered

---

Flooding Source: **RVWKT9**

Name of Structure: Culv2 (Not in the Floodplain)

1. This revision reflects (check one):

   X New bridge/culvert not modeled in the FIS
   ☐ Modified bridge/culvert previously modeled in the FIS
   ☐ New analysis of bridge/culvert previously modeled in the FIS

2. Hydraulic model used to analyze the structure (e.g., HEC-2 with special bridge routine, WSPRO, HY8): HY8
   If different than hydraulic analysis for the flooding source, justify why the hydraulic analysis used for the flooding source could not analyze the structures. Attach justification. Refer to Two-Dimensional Modeling TDN, Section 5.5.2

3. Attach plans of the structures certified by a registered professional engineer. The plan detail and information should include the following (check the information that has been provided): Refer to Two-Dimensional Modeling TDN, Appendix E.

   X Dimensions (height, width, span, radius, length)
   X Shape (culverts only)
   X Material
   X Beveling or Rounding
   X Wing Wall Angle
   ☐ Skew Angle
   ☐ Distances Between Cross Sections
   ☐ Erosion Protection
   X Low Chord Elevations – Upstream and Downstream
   X Top of Road Elevations – Upstream and Downstream
   X Structure Invert Elevations – Upstream and Downstream
   X Stream Invert Elevations – Upstream and Downstream
   X Cross-Section Locations

4. Sediment Transport Considerations

   Was sediment transport considered? ☐ Yes X No If yes, then fill out Section F (Sediment Transport).
   If No, then attach your explanation for why sediment transport was not considered

C. BRIDGE/ CULVERT

Flooding Source: **RVWKT9**

Name of Structure: Culv30

1. This revision reflects (check one):

   X New bridge/culvert not modeled in the FIS
   ☐ Modified bridge/culvert previously modeled in the FIS
   ☐ New analysis of bridge/culvert previously modeled in the FIS

2. Hydraulic model used to analyze the structure (e.g., HEC-2 with special bridge routine, WSPRO, HY8): HY8
   If different than hydraulic analysis for the flooding source, justify why the hydraulic analysis used for the flooding source could not analyze the structures. Attach justification. Refer to Two-Dimensional Modeling TDN, Section 5.5.2

3. Attach plans of the structures certified by a registered professional engineer. The plan detail and information should include the following (check the information that has been provided): Refer to Two-Dimensional Modeling TDN, Appendix E.

   X Dimensions (height, width, span, radius, length)
   X Shape (culverts only)
   X Material
   X Beveling or Rounding
   X Wing Wall Angle
   ☐ Skew Angle
   ☐ Distances Between Cross Sections
   ☐ Erosion Protection
   X Low Chord Elevations – Upstream and Downstream
   X Top of Road Elevations – Upstream and Downstream
   X Structure Invert Elevations – Upstream and Downstream
   X Stream Invert Elevations – Upstream and Downstream
   X Cross-Section Locations

4. Sediment Transport Considerations

   Was sediment transport considered? ☐ Yes X No If yes, then fill out Section F (Sediment Transport).
   If No, then attach your explanation for why sediment transport was not considered

---

Flooding Source: **RVWKT9**

Name of Structure: Culv59 (Not in the Floodplain)

1. This revision reflects (check one):

   X New bridge/culvert not modeled in the FIS
   ☐ Modified bridge/culvert previously modeled in the FIS
   ☐ New analysis of bridge/culvert previously modeled in the FIS

2. Hydraulic model used to analyze the structure (e.g., HEC-2 with special bridge routine, WSPRO, HY8): HY8
   If different than hydraulic analysis for the flooding source, justify why the hydraulic analysis used for the flooding source could not analyze the structures. Attach justification. Refer to Two-Dimensional Modeling TDN, Section 5.5.2

3. Attach plans of the structures certified by a registered professional engineer. The plan detail and information should include the following (check the information that has been provided): Refer to Two-Dimensional Modeling TDN, Appendix E.

   X Dimensions (height, width, span, radius, length)
   X Shape (culverts only)
   X Material
   X Beveling or Rounding
   X Wing Wall Angle
   ☐ Skew Angle
   ☐ Distances Between Cross Sections
   ☐ Erosion Protection
   X Low Chord Elevations – Upstream and Downstream
   X Top of Road Elevations – Upstream and Downstream
   X Structure Invert Elevations – Upstream and Downstream
   X Stream Invert Elevations – Upstream and Downstream
   X Cross-Section Locations

4. Sediment Transport Considerations

   Was sediment transport considered? ☐ Yes X No If yes, then fill out Section F (Sediment Transport).
   If No, then attach your explanation for why sediment transport was not considered

C. BRIDGE/ CULVERT

Flooding Source: **RVWKT9**

Name of Structure: Culv60 (Not in the Floodplain)

1. This revision reflects (check one):

   X New bridge/culvert not modeled in the FIS
   ☐ Modified bridge/culvert previously modeled in the FIS
   ☐ New analysis of bridge/culvert previously modeled in the FIS

2. Hydraulic model used to analyze the structure (e.g., HEC-2 with special bridge routine, WSPRO, HY8): HY8
   If different than hydraulic analysis for the flooding source, justify why the hydraulic analysis used for the flooding source could not analyze the structures. Attach justification. Refer to Two-Dimensional Modeling TDN, Section 5.5.2

3. Attach plans of the structures certified by a registered professional engineer. The plan detail and information should include the following (check the information that has been provided): Refer to Two-Dimensional Modeling TDN, Appendix E.

   X Dimensions (height, width, span, radius, length)
   X Shape (culverts only)
   X Material
   X Beveling or Rounding
   X Wing Wall Angle
   ☐ Skew Angle
   ☐ Distances Between Cross Sections
   ☐ Erosion Protection
   X Low Chord Elevations – Upstream and Downstream
   X Top of Road Elevations – Upstream and Downstream
   X Structure Invert Elevations – Upstream and Downstream
   X Stream Invert Elevations – Upstream and Downstream
   X Cross-Section Locations

4. Sediment Transport Considerations

   Was sediment transport considered? ☐ Yes X No If yes, then fill out Section F (Sediment Transport).
   If No, then attach your explanation for why sediment transport was not considered

---

Flooding Source: **RVWKT9**

Name of Structure: Culv61 (Not in the Floodplain)

1. This revision reflects (check one):

   X New bridge/culvert not modeled in the FIS
   ☐ Modified bridge/culvert previously modeled in the FIS
   ☐ New analysis of bridge/culvert previously modeled in the FIS

2. Hydraulic model used to analyze the structure (e.g., HEC-2 with special bridge routine, WSPRO, HY8): HY8
   If different than hydraulic analysis for the flooding source, justify why the hydraulic analysis used for the flooding source could not analyze the structures. Attach justification. Refer to Two-Dimensional Modeling TDN, Section 5.5.2

3. Attach plans of the structures certified by a registered professional engineer. The plan detail and information should include the following (check the information that has been provided): Refer to Two-Dimensional Modeling TDN, Appendix E.

   X Dimensions (height, width, span, radius, length)
   X Shape (culverts only)
   X Material
   X Beveling or Rounding
   X Wing Wall Angle
   ☐ Skew Angle
   ☐ Distances Between Cross Sections
   ☐ Erosion Protection
   X Low Chord Elevations – Upstream and Downstream
   X Top of Road Elevations – Upstream and Downstream
   X Structure Invert Elevations – Upstream and Downstream
   X Stream Invert Elevations – Upstream and Downstream
   X Cross-Section Locations

4. Sediment Transport Considerations

   Was sediment transport considered? ☐ Yes X No If yes, then fill out Section F (Sediment Transport).
   If No, then attach your explanation for why sediment transport was not considered

C. BRIDGE/ CULVERT

Flooding Source: **RVWKT9**

Name of Structure: Culv62 (Not in the Floodplain)

1. This revision reflects (check one):

   X New bridge/culvert not modeled in the FIS
   ☐ Modified bridge/culvert previously modeled in the FIS
   ☐ New analysis of bridge/culvert previously modeled in the FIS

2. Hydraulic model used to analyze the structure (e.g., HEC-2 with special bridge routine, WSPRO, HY8): HY8
   If different than hydraulic analysis for the flooding source, justify why the hydraulic analysis used for the flooding source could not analyze the structures. Attach justification. Refer to Two-Dimensional Modeling TDN, Section 5.5.2

3. Attach plans of the structures certified by a registered professional engineer. The plan detail and information should include the following (check the information that has been provided): Refer to Two-Dimensional Modeling TDN, Appendix E.

   X Dimensions (height, width, span, radius, length)
   X Shape (culverts only)
   X Material
   X Beveling or Rounding
   X Wing Wall Angle
   ☐ Skew Angle
   ☐ Distances Between Cross Sections
   ☐ Erosion Protection
   X Low Chord Elevations – Upstream and Downstream
   X Top of Road Elevations – Upstream and Downstream
   X Structure Invert Elevations – Upstream and Downstream
   X Stream Invert Elevations – Upstream and Downstream
   X Cross-Section Locations

4. Sediment Transport Considerations

   Was sediment transport considered? ☐ Yes X No If yes, then fill out Section F (Sediment Transport).
   If No, then attach your explanation for why sediment transport was not considered.

Flooding Source: **RVWKT9**

Name of Structure: Culv63

1. This revision reflects (check one):

   X New bridge/culvert not modeled in the FIS
   ☐ Modified bridge/culvert previously modeled in the FIS
   ☐ New analysis of bridge/culvert previously modeled in the FIS

2. Hydraulic model used to analyze the structure (e.g., HEC-2 with special bridge routine, WSPRO, HY8): HY8
   If different than hydraulic analysis for the flooding source, justify why the hydraulic analysis used for the flooding source could not analyze the structures. Attach justification. Refer to Two-Dimensional Modeling TDN, Section 5.5.2

3. Attach plans of the structures certified by a registered professional engineer. The plan detail and information should include the following (check the information that has been provided): Refer to Two-Dimensional Modeling TDN, Appendix E.

   X Dimensions (height, width, span, radius, length)
   X Shape (culverts only)
   X Material
   X Beveling or Rounding
   X Wing Wall Angle
   ☐ Skew Angle
   ☐ Distances Between Cross Sections
   ☐ Erosion Protection
   X Low Chord Elevations – Upstream and Downstream
   X Top of Road Elevations – Upstream and Downstream
   X Structure Invert Elevations – Upstream and Downstream
   X Stream Invert Elevations – Upstream and Downstream
   X Cross-Section Locations

4. Sediment Transport Considerations

   Was sediment transport considered? ☐ Yes X No If yes, then fill out Section F (Sediment Transport).
   If No, then attach your explanation for why sediment transport was not considered.

C. BRIDGE/ CULVERT

Flooding Source: **RVWKT9**

Name of Structure: Culv64 (Not in the Floodplain)

1. This revision reflects (check one):

   X New bridge/culvert not modeled in the FIS
   ☐ Modified bridge/culvert previously modeled in the FIS
   ☐ New analysis of bridge/culvert previously modeled in the FIS

2. Hydraulic model used to analyze the structure (e.g., HEC-2 with special bridge routine, WSPRO, HY8): HY8
   If different than hydraulic analysis for the flooding source, justify why the hydraulic analysis used for the flooding source could not analyze the structures. Attach justification. Refer to Two-Dimensional Modeling TDN, Section 5.5.2

3. Attach plans of the structures certified by a registered professional engineer. The plan detail and information should include the following (check the information that has been provided): Refer to Two-Dimensional Modeling TDN, Appendix E.

   X Dimensions (height, width, span, radius, length)
   X Shape (culverts only)
   X Material
   X Beveling or Rounding
   X Wing Wall Angle
   ☐ Skew Angle
   ☐ Distances Between Cross Sections
   ☐ Erosion Protection
   X Low Chord Elevations – Upstream and Downstream
   X Top of Road Elevations – Upstream and Downstream
   X Structure Invert Elevations – Upstream and Downstream
   X Stream Invert Elevations – Upstream and Downstream
   X Cross-Section Locations

4. Sediment Transport Considerations

   Was sediment transport considered? ☐ Yes X No If yes, then fill out Section F (Sediment Transport).
   If No, then attach your explanation for why sediment transport was not considered.

Flooding Source: **RVWKT9**

Name of Structure: Culv73 (Not in the Floodplain)

1. This revision reflects (check one):

   X New bridge/culvert not modeled in the FIS
   ☐ Modified bridge/culvert previously modeled in the FIS
   ☐ New analysis of bridge/culvert previously modeled in the FIS

2. Hydraulic model used to analyze the structure (e.g., HEC-2 with special bridge routine, WSPRO, HY8): HY8
   If different than hydraulic analysis for the flooding source, justify why the hydraulic analysis used for the flooding source could not analyze the structures. Attach justification. Refer to Two-Dimensional Modeling TDN, Section 5.5.2

3. Attach plans of the structures certified by a registered professional engineer. The plan detail and information should include the following (check the information that has been provided): Refer to Two-Dimensional Modeling TDN, Appendix E.

   X Dimensions (height, width, span, radius, length)
   X Shape (culverts only)
   X Material
   X Beveling or Rounding
   X Wing Wall Angle
   ☐ Skew Angle
   ☐ Distances Between Cross Sections
   ☐ Erosion Protection
   X Low Chord Elevations – Upstream and Downstream
   X Top of Road Elevations – Upstream and Downstream
   X Structure Invert Elevations – Upstream and Downstream
   X Stream Invert Elevations – Upstream and Downstream
   X Cross-Section Locations

4. Sediment Transport Considerations

   Was sediment transport considered? ☐ Yes X No If yes, then fill out Section F (Sediment Transport).
   If No, then attach your explanation for why sediment transport was not considered

C. BRIDGE/ CULVERT

Flooding Source: **RVW10S7T1**

Name of Structure: Culv69

1. This revision reflects (check one):

   X New bridge/culvert not modeled in the FIS
   ☐ Modified bridge/culvert previously modeled in the FIS
   ☐ New analysis of bridge/culvert previously modeled in the FIS

2. Hydraulic model used to analyze the structure (e.g., HEC-2 with special bridge routine, WSPRO, HY8): HY8
   If different than hydraulic analysis for the flooding source, justify why the hydraulic analysis used for the flooding source could not analyze the structures. Attach justification. Refer to Two-Dimensional Modeling TDN, Section 5.5.2

3. Attach plans of the structures certified by a registered professional engineer. The plan detail and information should include the following (check the information that has been provided): Refer to Two-Dimensional Modeling TDN, Appendix E.

   X Dimensions (height, width, span, radius, length)
   X Shape (culverts only)
   X Material
   X Beveling or Rounding
   X Wing Wall Angle
   ☐ Skew Angle
   ☐ Distances Between Cross Sections
   ☐ Erosion Protection
   X Low Chord Elevations – Upstream and Downstream
   X Top of Road Elevations – Upstream and Downstream
   X Structure Invert Elevations – Upstream and Downstream
   X Stream Invert Elevations – Upstream and Downstream
   X Cross-Section Locations

4. Sediment Transport Considerations

   Was sediment transport considered? ☐ Yes X No If yes, then fill out Section F (Sediment Transport).
   If No, then attach your explanation for why sediment transport was not considered

C. BRIDGE/ CULVERT

Flooding Source: **RVWK**

Name of Structure: Culv71

1. This revision reflects (check one):

   X New bridge/culvert not modeled in the FIS
   ☐ Modified bridge/culvert previously modeled in the FIS
   ☐ New analysis of bridge/culvert previously modeled in the FIS

2. Hydraulic model used to analyze the structure (e.g., HEC-2 with special bridge routine, WSPRO, HY8): HY8
   If different than hydraulic analysis for the flooding source, justify why the hydraulic analysis used for the flooding source could not analyze the structures. Attach justification. Refer to Two-Dimensional Modeling TDN, Section 5.5.2

3. Attach plans of the structures certified by a registered professional engineer. The plan detail and information should include the following (check the information that has been provided): Refer to Two-Dimensional Modeling TDN, Appendix E.

   X Dimensions (height, width, span, radius, length)
   X Shape (culverts only)
   X Material
   X Beveling or Rounding
   X Wing Wall Angle
   ☐ Skew Angle
   ☐ Distances Between Cross Sections
   ☐ Erosion Protection
   X Low Chord Elevations – Upstream and Downstream
   X Top of Road Elevations – Upstream and Downstream
   X Structure Invert Elevations – Upstream and Downstream
   X Stream Invert Elevations – Upstream and Downstream
   X Cross-Section Locations

4. Sediment Transport Considerations

   Was sediment transport considered? ☐ Yes X No If yes, then fill out Section F (Sediment Transport).
   If No, then attach your explanation for why sediment transport was not considered

---

Flooding Source: **RVWK**

Name of Structure: Culv74

1. This revision reflects (check one):

   X New bridge/culvert not modeled in the FIS
   ☐ Modified bridge/culvert previously modeled in the FIS
   ☐ New analysis of bridge/culvert previously modeled in the FIS

2. Hydraulic model used to analyze the structure (e.g., HEC-2 with special bridge routine, WSPRO, HY8): HY8
   If different than hydraulic analysis for the flooding source, justify why the hydraulic analysis used for the flooding source could not analyze the structures. Attach justification. Refer to Two-Dimensional Modeling TDN, Section 5.5.2

3. Attach plans of the structures certified by a registered professional engineer. The plan detail and information should include the following (check the information that has been provided): Refer to Two-Dimensional Modeling TDN, Appendix E.

   X Dimensions (height, width, span, radius, length)
   X Shape (culverts only)
   X Material
   X Beveling or Rounding
   X Wing Wall Angle
   ☐ Skew Angle
   ☐ Distances Between Cross Sections
   ☐ Erosion Protection
   X Low Chord Elevations – Upstream and Downstream
   X Top of Road Elevations – Upstream and Downstream
   X Structure Invert Elevations – Upstream and Downstream
   X Stream Invert Elevations – Upstream and Downstream
   X Cross-Section Locations

4. Sediment Transport Considerations

   Was sediment transport considered? ☐ Yes X No If yes, then fill out Section F (Sediment Transport).
   If No, then attach your explanation for why sediment transport was not considered

C. BRIDGE/ CULVERT

Flooding Source: **RVWF**

Name of Structure: Culv7 (Not in the Floodplain)

1. This revision reflects (check one):

   X New bridge/culvert not modeled in the FIS
   ☐ Modified bridge/culvert previously modeled in the FIS
   ☐ New analysis of bridge/culvert previously modeled in the FIS

2. Hydraulic model used to analyze the structure (e.g., HEC-2 with special bridge routine, WSPRO, HY8): HY8
   If different than hydraulic analysis for the flooding source, justify why the hydraulic analysis used for the flooding source could not analyze the structures. Attach justification. Refer to Two-Dimensional Modeling TDN, Section 5.5.2

3. Attach plans of the structures certified by a registered professional engineer. The plan detail and information should include the following (check the information that has been provided): Refer to Two-Dimensional Modeling TDN, Appendix E.

   X Dimensions (height, width, span, radius, length)
   X Shape (culverts only)
   X Material
   X Beveling or Rounding
   X Wing Wall Angle
   ☐ Skew Angle
   ☐ Distances Between Cross Sections
   ☐ Erosion Protection
   X Low Chord Elevations – Upstream and Downstream
   X Top of Road Elevations – Upstream and Downstream
   X Structure Invert Elevations – Upstream and Downstream
   X Stream Invert Elevations – Upstream and Downstream
   X Cross-Section Locations

4. Sediment Transport Considerations

   Was sediment transport considered? ☐ Yes X No If yes, then fill out Section F (Sediment Transport).
   If No, then attach your explanation for why sediment transport was not considered

---

Flooding Source: **RVWF**

Name of Structure: Culv8

1. This revision reflects (check one):

   X New bridge/culvert not modeled in the FIS
   ☐ Modified bridge/culvert previously modeled in the FIS
   ☐ New analysis of bridge/culvert previously modeled in the FIS

2. Hydraulic model used to analyze the structure (e.g., HEC-2 with special bridge routine, WSPRO, HY8): HY8
   If different than hydraulic analysis for the flooding source, justify why the hydraulic analysis used for the flooding source could not analyze the structures. Attach justification. Refer to Two-Dimensional Modeling TDN, Section 5.5.2

3. Attach plans of the structures certified by a registered professional engineer. The plan detail and information should include the following (check the information that has been provided): Refer to Two-Dimensional Modeling TDN, Appendix E.

   X Dimensions (height, width, span, radius, length)
   X Shape (culverts only)
   X Material
   X Beveling or Rounding
   X Wing Wall Angle
   ☐ Skew Angle
   ☐ Distances Between Cross Sections
   ☐ Erosion Protection
   X Low Chord Elevations – Upstream and Downstream
   X Top of Road Elevations – Upstream and Downstream
   X Structure Invert Elevations – Upstream and Downstream
   X Stream Invert Elevations – Upstream and Downstream
   X Cross-Section Locations

4. Sediment Transport Considerations

   Was sediment transport considered? ☐ Yes X No If yes, then fill out Section F (Sediment Transport).
   If No, then attach your explanation for why sediment transport was not considered

C. BRIDGE/ CULVERT

Flooding Source: **RVWF**

Name of Structure: Culv12

1. This revision reflects (check one):

   X New bridge/culvert not modeled in the FIS
   ☐ Modified bridge/culvert previously modeled in the FIS
   ☐ New analysis of bridge/culvert previously modeled in the FIS

2. Hydraulic model used to analyze the structure (e.g., HEC-2 with special bridge routine, WSPRO, HY8): HY8
   If different than hydraulic analysis for the flooding source, justify why the hydraulic analysis used for the flooding source could not analyze the structures. Attach justification. Refer to Two-Dimensional Modeling TDN, Section 5.5.2

3. Attach plans of the structures certified by a registered professional engineer. The plan detail and information should include the following (check the information that has been provided): Refer to Two-Dimensional Modeling TDN, Appendix E.

   X Dimensions (height, width, span, radius, length)
   X Shape (culverts only)
   X Material
   X Beveling or Rounding
   X Wing Wall Angle
   ☐ Skew Angle
   ☐ Distances Between Cross Sections
   ☐ Erosion Protection
   X Low Chord Elevations – Upstream and Downstream
   X Top of Road Elevations – Upstream and Downstream
   X Structure Invert Elevations – Upstream and Downstream
   X Stream Invert Elevations – Upstream and Downstream
   X Cross-Section Locations

4. Sediment Transport Considerations

   Was sediment transport considered? ☐ Yes X No If yes, then fill out Section F (Sediment Transport).
   If No, then attach your explanation for why sediment transport was not considered

---

Flooding Source: **RVWF**

Name of Structure: Culv22 (Not in the Floodplain)

1. This revision reflects (check one):

   X New bridge/culvert not modeled in the FIS
   ☐ Modified bridge/culvert previously modeled in the FIS
   ☐ New analysis of bridge/culvert previously modeled in the FIS

2. Hydraulic model used to analyze the structure (e.g., HEC-2 with special bridge routine, WSPRO, HY8): HY8
   If different than hydraulic analysis for the flooding source, justify why the hydraulic analysis used for the flooding source could not analyze the structures. Attach justification. Refer to Two-Dimensional Modeling TDN, Section 5.5.2

3. Attach plans of the structures certified by a registered professional engineer. The plan detail and information should include the following (check the information that has been provided): Refer to Two-Dimensional Modeling TDN, Appendix E.

   X Dimensions (height, width, span, radius, length)
   X Shape (culverts only)
   X Material
   X Beveling or Rounding
   X Wing Wall Angle
   ☐ Skew Angle
   ☐ Distances Between Cross Sections
   ☐ Erosion Protection
   X Low Chord Elevations – Upstream and Downstream
   X Top of Road Elevations – Upstream and Downstream
   X Structure Invert Elevations – Upstream and Downstream
   X Stream Invert Elevations – Upstream and Downstream
   X Cross-Section Locations

4. Sediment Transport Considerations

   Was sediment transport considered? ☐ Yes X No If yes, then fill out Section F (Sediment Transport).
   If No, then attach your explanation for why sediment transport was not considered

C. BRIDGE/ CULVERT

Flooding Source: **RVWF**

Name of Structure: Culv23

1. This revision reflects (check one):

   X New bridge/culvert not modeled in the FIS
   ☐ Modified bridge/culvert previously modeled in the FIS
   ☐ New analysis of bridge/culvert previously modeled in the FIS

2. Hydraulic model used to analyze the structure (e.g., HEC-2 with special bridge routine, WSPRO, HY8): HY8
   If different than hydraulic analysis for the flooding source, justify why the hydraulic analysis used for the flooding source could not analyze the structures. Attach justification. Refer to Two-Dimensional Modeling TDN, Section 5.5.2

3. Attach plans of the structures certified by a registered professional engineer. The plan detail and information should include the following (check the information that has been provided): Refer to Two-Dimensional Modeling TDN, Appendix E.

   X Dimensions (height, width, span, radius, length)
   X Shape (culverts only)
   X Material
   X Beveling or Rounding
   X Wing Wall Angle
   ☐ Skew Angle
   ☐ Distances Between Cross Sections
   ☐ Erosion Protection
   X Low Chord Elevations – Upstream and Downstream
   X Top of Road Elevations – Upstream and Downstream
   X Structure Invert Elevations – Upstream and Downstream
   X Stream Invert Elevations – Upstream and Downstream
   X Cross-Section Locations

4. Sediment Transport Considerations

   Was sediment transport considered? ☐ Yes X No If yes, then fill out Section F (Sediment Transport).
   If No, then attach your explanation for why sediment transport was not considered

---

Flooding Source: **RVWF**

Name of Structure: Culv27

1. This revision reflects (check one):

   X New bridge/culvert not modeled in the FIS
   ☐ Modified bridge/culvert previously modeled in the FIS
   ☐ New analysis of bridge/culvert previously modeled in the FIS

2. Hydraulic model used to analyze the structure (e.g., HEC-2 with special bridge routine, WSPRO, HY8): HY8
   If different than hydraulic analysis for the flooding source, justify why the hydraulic analysis used for the flooding source could not analyze the structures. Attach justification. Refer to Two-Dimensional Modeling TDN, Section 5.5.2

3. Attach plans of the structures certified by a registered professional engineer. The plan detail and information should include the following (check the information that has been provided): Refer to Two-Dimensional Modeling TDN, Appendix E.

   X Dimensions (height, width, span, radius, length)
   X Shape (culverts only)
   X Material
   X Beveling or Rounding
   X Wing Wall Angle
   ☐ Skew Angle
   ☐ Distances Between Cross Sections
   ☐ Erosion Protection
   X Low Chord Elevations – Upstream and Downstream
   X Top of Road Elevations – Upstream and Downstream
   X Structure Invert Elevations – Upstream and Downstream
   X Stream Invert Elevations – Upstream and Downstream
   X Cross-Section Locations

4. Sediment Transport Considerations

   Was sediment transport considered? ☐ Yes X No If yes, then fill out Section F (Sediment Transport).
   If No, then attach your explanation for why sediment transport was not considered

C. BRIDGE/ CULVERT

Flooding Source: **RVWF**

Name of Structure: Culv28 (Not in the Floodplain)

1. This revision reflects (check one):

   X New bridge/culvert not modeled in the FIS
   ☐ Modified bridge/culvert previously modeled in the FIS
   ☐ New analysis of bridge/culvert previously modeled in the FIS

2. Hydraulic model used to analyze the structure (e.g., HEC-2 with special bridge routine, WSPRO, HY8): HY8
   If different than hydraulic analysis for the flooding source, justify why the hydraulic analysis used for the flooding source could not analyze the structures. Attach justification. Refer to Two-Dimensional Modeling TDN, Section 5.5.2

3. Attach plans of the structures certified by a registered professional engineer. The plan detail and information should include the following (check the information that has been provided): Refer to Two-Dimensional Modeling TDN, Appendix E.

   X Dimensions (height, width, span, radius, length)
   X Shape (culverts only)
   X Material
   X Beveling or Rounding
   X Wing Wall Angle
   ☐ Skew Angle
   ☐ Distances Between Cross Sections
   ☐ Erosion Protection
   X Low Chord Elevations – Upstream and Downstream
   X Top of Road Elevations – Upstream and Downstream
   X Structure Invert Elevations – Upstream and Downstream
   X Stream Invert Elevations – Upstream and Downstream
   X Cross-Section Locations

4. Sediment Transport Considerations

   Was sediment transport considered? ☐ Yes X No If yes, then fill out Section F (Sediment Transport).
   If No, then attach your explanation for why sediment transport was not considered

---

Flooding Source: **RVWF**

Name of Structure: Culv29 (Not in the Floodplain)

1. This revision reflects (check one):

   X New bridge/culvert not modeled in the FIS
   ☐ Modified bridge/culvert previously modeled in the FIS
   ☐ New analysis of bridge/culvert previously modeled in the FIS

2. Hydraulic model used to analyze the structure (e.g., HEC-2 with special bridge routine, WSPRO, HY8): HY8
   If different than hydraulic analysis for the flooding source, justify why the hydraulic analysis used for the flooding source could not analyze the structures. Attach justification. Refer to Two-Dimensional Modeling TDN, Section 5.5.2

3. Attach plans of the structures certified by a registered professional engineer. The plan detail and information should include the following (check the information that has been provided): Refer to Two-Dimensional Modeling TDN, Appendix E.

   X Dimensions (height, width, span, radius, length)
   X Shape (culverts only)
   X Material
   X Beveling or Rounding
   X Wing Wall Angle
   ☐ Skew Angle
   ☐ Distances Between Cross Sections
   ☐ Erosion Protection
   X Low Chord Elevations – Upstream and Downstream
   X Top of Road Elevations – Upstream and Downstream
   X Structure Invert Elevations – Upstream and Downstream
   X Stream Invert Elevations – Upstream and Downstream
   X Cross-Section Locations

4. Sediment Transport Considerations

   Was sediment transport considered? ☐ Yes X No If yes, then fill out Section F (Sediment Transport).
   If No, then attach your explanation for why sediment transport was not considered

C. BRIDGE/ CULVERT

Flooding Source: **RVWFS6**

Name of Structure: Culv13

1. This revision reflects (check one):

   X New bridge/culvert not modeled in the FIS
   ☐ Modified bridge/culvert previously modeled in the FIS
   ☐ New analysis of bridge/culvert previously modeled in the FIS

2. Hydraulic model used to analyze the structure (e.g., HEC-2 with special bridge routine, WSPRO, HY8): HY8
   If different than hydraulic analysis for the flooding source, justify why the hydraulic analysis used for the flooding source could not analyze the structures. Attach justification. Refer to Two-Dimensional Modeling TDN, Section 5.5.2

3. Attach plans of the structures certified by a registered professional engineer. The plan detail and information should include the following (check the information that has been provided): Refer to Two-Dimensional Modeling TDN, Appendix E.

   X Dimensions (height, width, span, radius, length)
   X Shape (culverts only)
   X Material
   X Beveling or Rounding
   X Wing Wall Angle
   ☐ Skew Angle
   ☐ Distances Between Cross Sections
   ☐ Erosion Protection
   X Low Chord Elevations – Upstream and Downstream
   X Top of Road Elevations – Upstream and Downstream
   X Structure Invert Elevations – Upstream and Downstream
   X Stream Invert Elevations – Upstream and Downstream
   X Cross-Section Locations

4. Sediment Transport Considerations

   Was sediment transport considered? ☐ Yes X No If yes, then fill out Section F (Sediment Transport).
   If No, then attach your explanation for why sediment transport was not considered

---

Flooding Source: **RVWFS6**

Name of Structure: Culv31

1. This revision reflects (check one):

   X New bridge/culvert not modeled in the FIS
   ☐ Modified bridge/culvert previously modeled in the FIS
   ☐ New analysis of bridge/culvert previously modeled in the FIS

2. Hydraulic model used to analyze the structure (e.g., HEC-2 with special bridge routine, WSPRO, HY8): HY8
   If different than hydraulic analysis for the flooding source, justify why the hydraulic analysis used for the flooding source could not analyze the structures. Attach justification. Refer to Two-Dimensional Modeling TDN, Section 5.5.2

3. Attach plans of the structures certified by a registered professional engineer. The plan detail and information should include the following (check the information that has been provided): Refer to Two-Dimensional Modeling TDN, Appendix E.

   X Dimensions (height, width, span, radius, length)
   X Shape (culverts only)
   X Material
   X Beveling or Rounding
   X Wing Wall Angle
   ☐ Skew Angle
   ☐ Distances Between Cross Sections
   ☐ Erosion Protection
   X Low Chord Elevations – Upstream and Downstream
   X Top of Road Elevations – Upstream and Downstream
   X Structure Invert Elevations – Upstream and Downstream
   X Stream Invert Elevations – Upstream and Downstream
   X Cross-Section Locations

4. Sediment Transport Considerations

   Was sediment transport considered? ☐ Yes X No If yes, then fill out Section F (Sediment Transport).
   If No, then attach your explanation for why sediment transport was not considered

C. BRIDGE/ CULVERT

Flooding Source: **RVWFS6**

Name of Structure: Culv32 (Not in the Floodplain)

1. This revision reflects (check one):

   X New bridge/culvert not modeled in the FIS
   ☐ Modified bridge/culvert previously modeled in the FIS
   ☐ New analysis of bridge/culvert previously modeled in the FIS

2. Hydraulic model used to analyze the structure (e.g., HEC-2 with special bridge routine, WSPRO, HY8): HY8
   If different than hydraulic analysis for the flooding source, justify why the hydraulic analysis used for the flooding source could not analyze the structures. Attach justification. Refer to Two-Dimensional Modeling TDN, Section 5.5.2

3. Attach plans of the structures certified by a registered professional engineer. The plan detail and information should include the following (check the information that has been provided): Refer to Two-Dimensional Modeling TDN, Appendix E.

   X Dimensions (height, width, span, radius, length)
   X Shape (culverts only)
   X Material
   X Beveling or Rounding
   X Wing Wall Angle
   ☐ Skew Angle
   ☐ Distances Between Cross Sections
   ☐ Erosion Protection
   X Low Chord Elevations – Upstream and Downstream
   X Top of Road Elevations – Upstream and Downstream
   X Structure Invert Elevations – Upstream and Downstream
   X Stream Invert Elevations – Upstream and Downstream
   X Cross-Section Locations

4. Sediment Transport Considerations

   Was sediment transport considered? ☐ Yes X No If yes, then fill out Section F (Sediment Transport).
   If No, then attach your explanation for why sediment transport was not considered

---

Flooding Source: **RVWFS6**

Name of Structure: Culv72

1. This revision reflects (check one):

   X New bridge/culvert not modeled in the FIS
   ☐ Modified bridge/culvert previously modeled in the FIS
   ☐ New analysis of bridge/culvert previously modeled in the FIS

2. Hydraulic model used to analyze the structure (e.g., HEC-2 with special bridge routine, WSPRO, HY8): HY8
   If different than hydraulic analysis for the flooding source, justify why the hydraulic analysis used for the flooding source could not analyze the structures. Attach justification. Refer to Two-Dimensional Modeling TDN, Section 5.5.2

3. Attach plans of the structures certified by a registered professional engineer. The plan detail and information should include the following (check the information that has been provided): Refer to Two-Dimensional Modeling TDN, Appendix E.

   X Dimensions (height, width, span, radius, length)
   X Shape (culverts only)
   X Material
   X Beveling or Rounding
   X Wing Wall Angle
   ☐ Skew Angle
   ☐ Distances Between Cross Sections
   ☐ Erosion Protection
   X Low Chord Elevations – Upstream and Downstream
   X Top of Road Elevations – Upstream and Downstream
   X Structure Invert Elevations – Upstream and Downstream
   X Stream Invert Elevations – Upstream and Downstream
   X Cross-Section Locations

4. Sediment Transport Considerations

   Was sediment transport considered? ☐ Yes X No If yes, then fill out Section F (Sediment Transport).
   If No, then attach your explanation for why sediment transport was not considered

C. BRIDGE/ CULVERT

Flooding Source: **RVW1**

Name of Structure: Culv17 (Not in the Floodplain)

1. This revision reflects (check one):

   X New bridge/culvert not modeled in the FIS
   ☐ Modified bridge/culvert previously modeled in the FIS
   ☐ New analysis of bridge/culvert previously modeled in the FIS

2. Hydraulic model used to analyze the structure (e.g., HEC-2 with special bridge routine, WSPRO, HY8): HY8
   If different than hydraulic analysis for the flooding source, justify why the hydraulic analysis used for the flooding source could not analyze the structures. Attach justification. Refer to Two-Dimensional Modeling TDN, Section 5.5.2

3. Attach plans of the structures certified by a registered professional engineer. The plan detail and information should include the following (check the information that has been provided): Refer to Two-Dimensional Modeling TDN, Appendix E.

   X Dimensions (height, width, span, radius, length)
   X Shape (culverts only)
   X Material
   X Beveling or Rounding
   X Wing Wall Angle
   ☐ Skew Angle
   ☐ Distances Between Cross Sections
   ☐ Erosion Protection
   X Low Chord Elevations – Upstream and Downstream
   X Top of Road Elevations – Upstream and Downstream
   X Structure Invert Elevations – Upstream and Downstream
   X Stream Invert Elevations – Upstream and Downstream
   X Cross-Section Locations

4. Sediment Transport Considerations

   Was sediment transport considered? ☐ Yes X No If yes, then fill out Section F (Sediment Transport).
   If No, then attach your explanation for why sediment transport was not considered

---

Flooding Source: **RVW1**

Name of Structure: Culv18 (Not in the Floodplain)

1. This revision reflects (check one):

   X New bridge/culvert not modeled in the FIS
   ☐ Modified bridge/culvert previously modeled in the FIS
   ☐ New analysis of bridge/culvert previously modeled in the FIS

2. Hydraulic model used to analyze the structure (e.g., HEC-2 with special bridge routine, WSPRO, HY8): HY8
   If different than hydraulic analysis for the flooding source, justify why the hydraulic analysis used for the flooding source could not analyze the structures. Attach justification. Refer to Two-Dimensional Modeling TDN, Section 5.5.2

3. Attach plans of the structures certified by a registered professional engineer. The plan detail and information should include the following (check the information that has been provided): Refer to Two-Dimensional Modeling TDN, Appendix E.

   X Dimensions (height, width, span, radius, length)
   X Shape (culverts only)
   X Material
   X Beveling or Rounding
   X Wing Wall Angle
   ☐ Skew Angle
   ☐ Distances Between Cross Sections
   ☐ Erosion Protection
   X Low Chord Elevations – Upstream and Downstream
   X Top of Road Elevations – Upstream and Downstream
   X Structure Invert Elevations – Upstream and Downstream
   X Stream Invert Elevations – Upstream and Downstream
   X Cross-Section Locations

4. Sediment Transport Considerations

   Was sediment transport considered? ☐ Yes X No If yes, then fill out Section F (Sediment Transport).
   If No, then attach your explanation for why sediment transport was not considered

To continue

3 SURVEY AND MAPPING INFORMATION

Refer to Volume 2, Survey and Mapping.

4 HYDROLOGY

4.1 Method Description

The hydrology for the study was done using the District's methodology, applying two different computer-based methods. Hydrology for the one-dimensional study area (1D) was done using the US Army Corps of Engineers HEC-1 program, version 4.1 dated June 1998. Hydrology for the two-dimensional study area (2D) was done using the FLO-2D computer program by FLO-2D Software, Inc., version 2006.01 dated November 8, 2006. Refer to Figure 4.1 for the boundaries of the 1D and 2D study areas. Refer to the Dibble and Associates Technical Data Notebook (1D TDN) for complete documentation of the hydrology for the 1D study area. This section documents the hydrologic modeling done for the 2D study area.

The 2D hydrology was accomplished using two methods, both applied in conformance with the procedures set forth in the *Drainage Design Manual for Maricopa County – Hydrology* (FCDMC, 1995). First, hydrographs from the 1D study area HEC-1 models were used as input to the 2D FLO-2D models. Second, the hydrology of the 2D area was done by computing rainfall excess for each grid using the same design storm that was used for the 1D HEC-1 models. The rainfall excess was then routed downstream as a part of the 2D hydraulic computations.

4.2 Parameter Estimation

The 2D study area was divided into two areas, Phase A and Phase B, because of the size of the study area. The large area results in excessively long run times for FLO-2D and would result in the Microsoft Windows XP 2.1 GB file size limit for databases being exceeded for computation of several parameters.

The limits of each phase are shown on Figure 4.2. The total 2D study area is 25.12 square miles. The overlap is 0.29 square miles in area, with Phase A being 8.56 square miles and Phase B 16.85 square miles in area. The 2D grid size is 25 feet by 25 feet. The total number of 2D grid elements for the study area is 1,133,204. It was not practical to run a single FLO-2D model of this size because of computer hardware and software limitations. Also, the FLO-2D data input programs will not efficiently handle a model that large. ESRI ArcGIS was used to assemble the input data files. Refer to Section 5 for a more complete discussion and for a discussion on grid size selection.

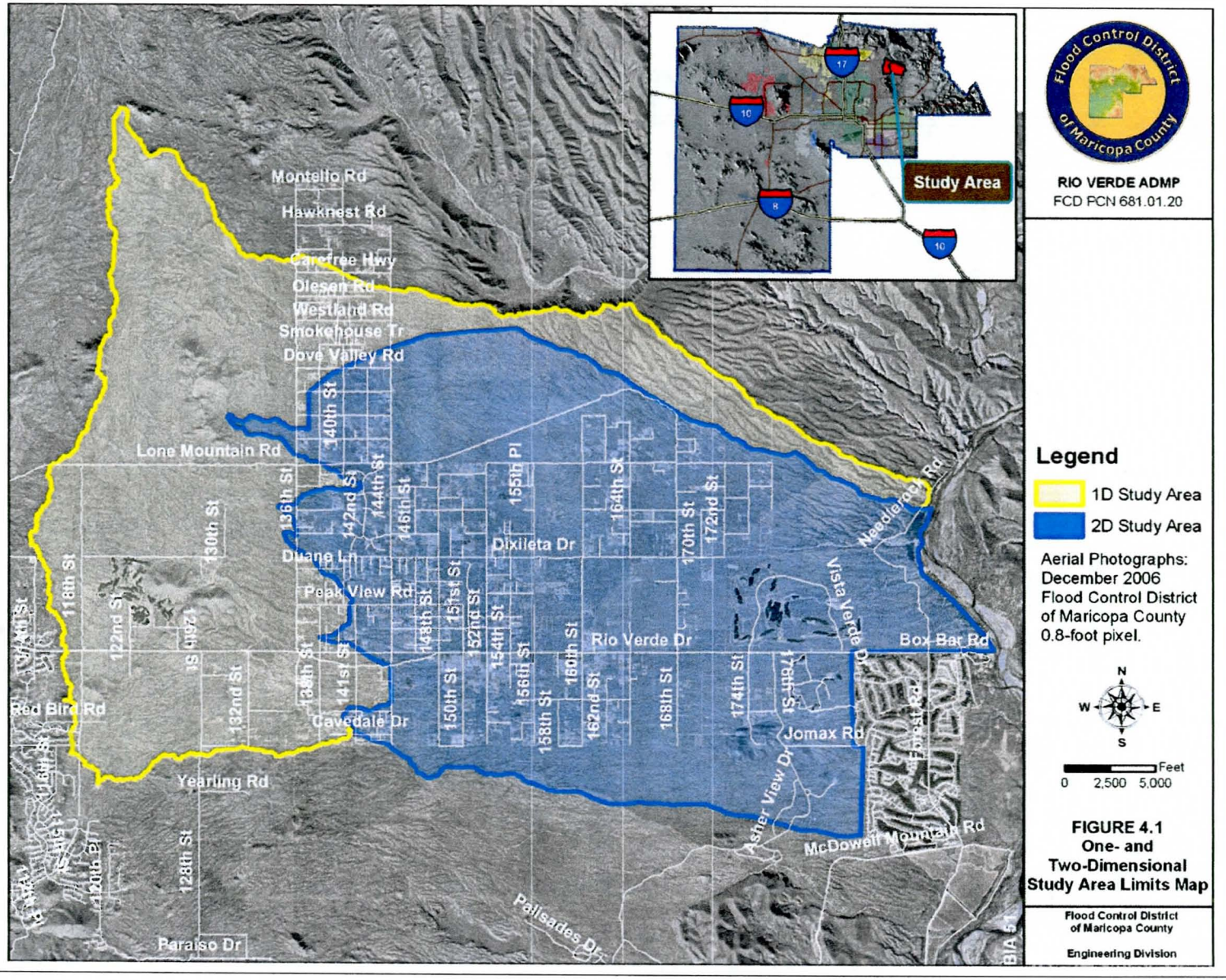

Figure 4.1 One- and Two-Dimensional Study Area Limits

Figure 4.2 Two-Dimensional Study Area Phase Boundaries

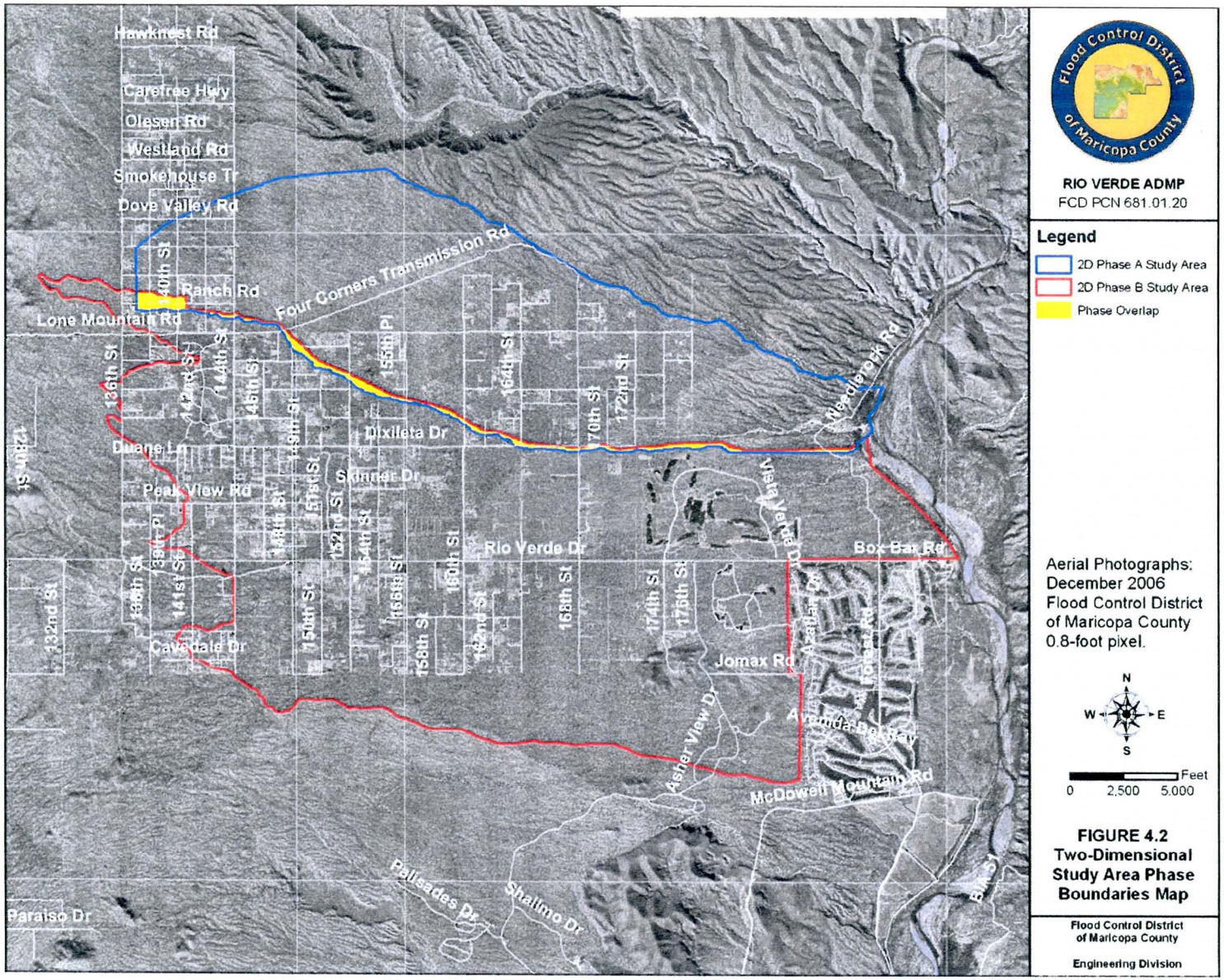

The boundaries between Phase A and Phase B overlap. There is not an absolute watershed divide within the 2D study area due to the distributary flow system, so there are locations where runoff crosses the boundary from Phase A into Phase B and from Phase B into Phase A. An overlap was intentionally created to allow for a determination to be made on how the two areas interact and how and where flow should be interchanged between the two FLO-2D models.

The key hydrologic parameters applied for the 2D modeling are:

1. Rainfall losses. Included are:
   A. Initial abstraction (IA).
   B. Hydraulic conductivity at natural saturation (XKSAT).
   C. Wetting front capillary suction (PSIF).
   D. Volumetric soil moisture deficit at the start of rainfall (DTHETA).
   E. Impervious area (RTIMP).
2. Precipitation

4.2.2 Drainage Area Boundaries

The watersheds in the 1D study area that drain into the 2D study area are shown on Figure 4.3. The hydrologic inflow points indicated on Figure 4.3 are the locations where hydrographs were generated in the HEC-1 models and used as inflow to the 2D models. The 1D watershed is composed primarily of hillslopes and pediments with slopes ranging from 1 to 10%. Drainage is from west to east and the dominant flow patterns are tributary. The pediment areas are characterized by weathered bedrock covered locally with a thin veneer of alluvium. Bedrock outcrops are common. There are some braided channel sections, but these are confined by geologic constraints. There is also a piedmont zone located along the bottom of the 1D study area. The drainage networks within this area are also generally tributary, but there are several split flow locations. The definition of the 1D and 2D study areas was made based on the results of a geomorphologic study of the Rio Verde area (Fuller, 2002).

The upper 75 percent of the entire 2D study area and the lower 25 percent of the Phase B area are characterized by steep slopes (2-3%) and distributary flow patterns. The lower 25 percent of the Phase A 2D study area is typically characterized by well-incised tributary channels as the drainage system nears the Verde River. Average slopes range from 2.5 to 4.5%. Vegetation is typical of the Sonoran Desert, but is lush and abundant except where wildfires have occurred recently (within the previous 10-15 years). Soils are typically loams to sandy loams with moderate runoff potential.

Id	HEC-1 Sub-basin ID	Grid No.	Discharge	Source	Id	HEC-1 Sub-basin ID	Grid No.	Discharge	Source
1	CP11H	87978	3,130	South HEC-1 Model	15	CB5W4B	86038	206	North North HEC-1 Model
2	CP8B2A	38688	510	North-South HEC-1 Model	16	CB4W4	113796	717	North North HEC-1 Model
3	CP9BA	39186	630	North-South HEC-1 Model	17	B1W3	115925	474	North North HEC-1 Model
4	CP6B	6766	301	North-South HEC-1 Model	18	B1W2	266775	119	North North HEC-1 Model
5	2A	6630	58	North-South HEC-1 Model	19	B2W2	266777	164	North North HEC-1 Model
6	4A	6837	125	North-South HEC-1 Model	20	B4W2	346771	172	North North HEC-1 Model
7	CP4N	54943	1,111	North-South HEC-1 Model	21	B14W6	26152	178	North North HEC-1 Model
8	1N	13	331	North-South HEC-1 Model	22	CB11W6	9499	627	North North HEC-1 Model
9	CB9W6	32550	3,124	North North HEC-1 Model	23	B5W5	80813	118	North North HEC-1 Model
10	CB12W6	19424	398	North North HEC-1 Model	24	8B1	38699	132	North-South HEC-1 Model
11	CB7W5	118645	298	North North HEC-1 Model	25	509A5	44291	46	South HEC-1 Model
12	B5W5A	84415	142	North North HEC-1 Model	26	CP3B2	39622	1838*	North-South HEC-1 Model
13	B1W5	73407	304	North North HEC-1 Model	27	CPG-G4	88025	964	South HEC-1 Model
14	CB6W5	141132	192	North North HEC-1 Model					

* 722 cfs with Black Hills Tank effective

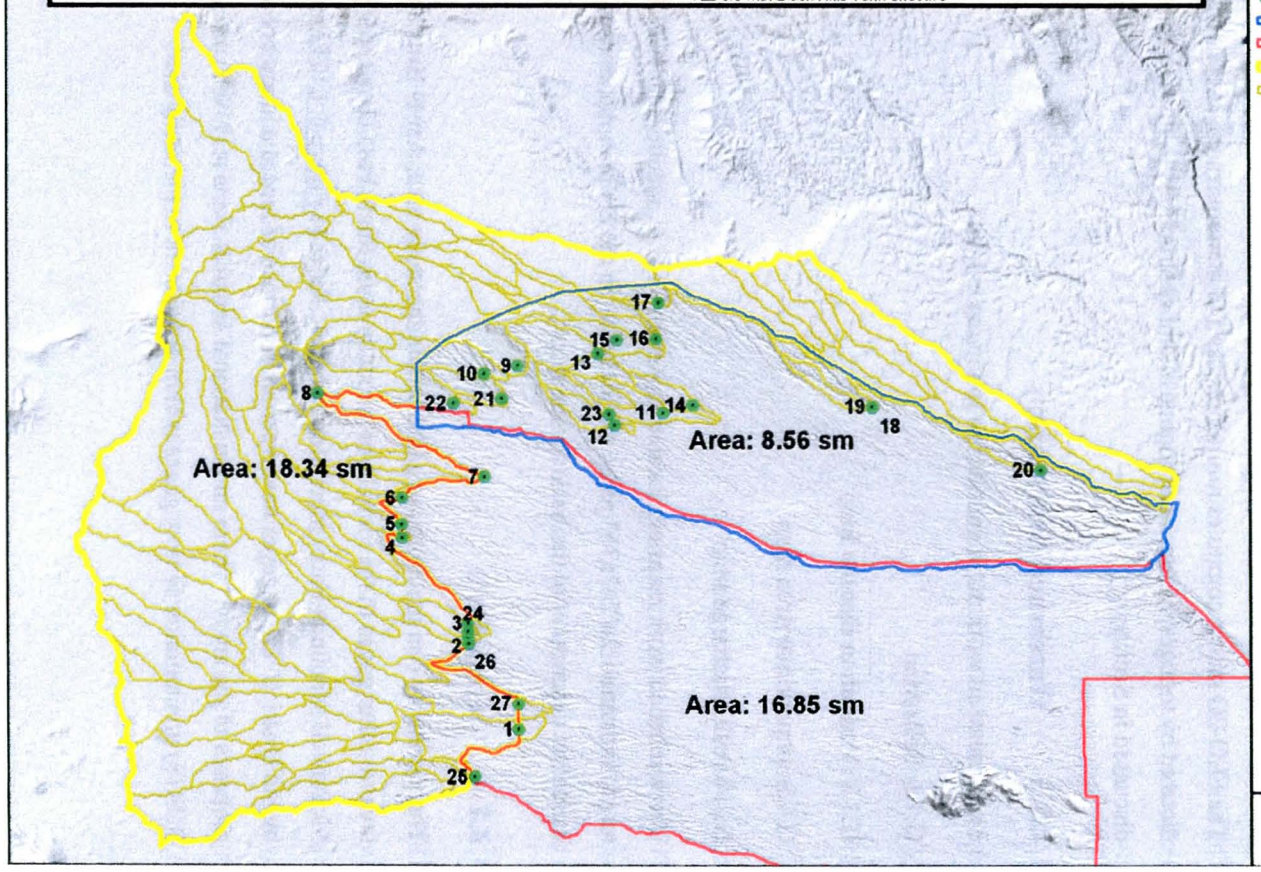

Flood Control District of Maricopa County

RIO VERDE ADMP
FCD PCN 681.01.20

Legend
- 1D Hydrograph Inflow
- 2D Phase A Study Area
- 2D Phase B Study Area
- 1D Study Area
- 1D HEC-1 Watersheds

N W E S

0 2,500 5,000 Feet

FIGURE 4.3
One-Dimensional Study Area Watershed Map

Flood Control District of Maricopa County
Engineering Division

Figure 4.3 One-Dimensional Study Area Watershed Map

Delineation of sub-basin boundaries is not necessary for the 2D study area. Instead, each 2D grid element (25 ft x 25 ft) serves as an individual sub-basin. Due to the small grid size and large number of grid elements (over 1 million) it is not practical to display the grid outlines and grid identification numbers on paper watershed maps. Therefore, the grid information is provided in ESRI ArcGIS shape files located in Appendix **Error! Reference source not found.**. The file names are *phagridonly.shp* for the Phase A study area, and *phbgridonly.shp* for Phase B. A table listing all hydrologic digital data file names with descriptions is included at the beginning of Appendix D.7.

The FLO-2D model computes rainfall excess and then routes the excess downstream using the patterns dictated by topography, surface roughness, and obstructions to flow. The model results are presented and discussed in Section 4.5.

4.2.3 Watershed Work Maps

The watershed work maps include the following exhibits:

G.1.1 Soils Map

G.1.2 Vegetation Density Map

G.1.3 Impervious Area Map

G.1.4 Peak Discharge Map

The watershed work maps are located in Appendix G.1. Adobe Reader PDF files of the watershed work maps, formatted for 24"x36" plots, are included on the DVD in Appendix D.7. Refer to Section 4.2.7 for a detailed description of the basis for the maps.

4.2.4 Gage Data

There are only two precipitation gages within the study area; Asher Hills and Fraesfield Mountain. There are two other gages in the vicinity of the study area; Reata Pass Dam (precipitation and stream flow) and McDowell Mountain Park (precipitation only). Refer to Figure 4.4. These gages are owned and operated by the District. These gages have very short periods of record and are not of significant use for the purposes of the study. There are no National Weather Service (NWS) or U. S. Geological Survey (USGS) precipitation or flow gages within or adjacent to the study area.

Figure 4.4 Precipitation Gage Locations

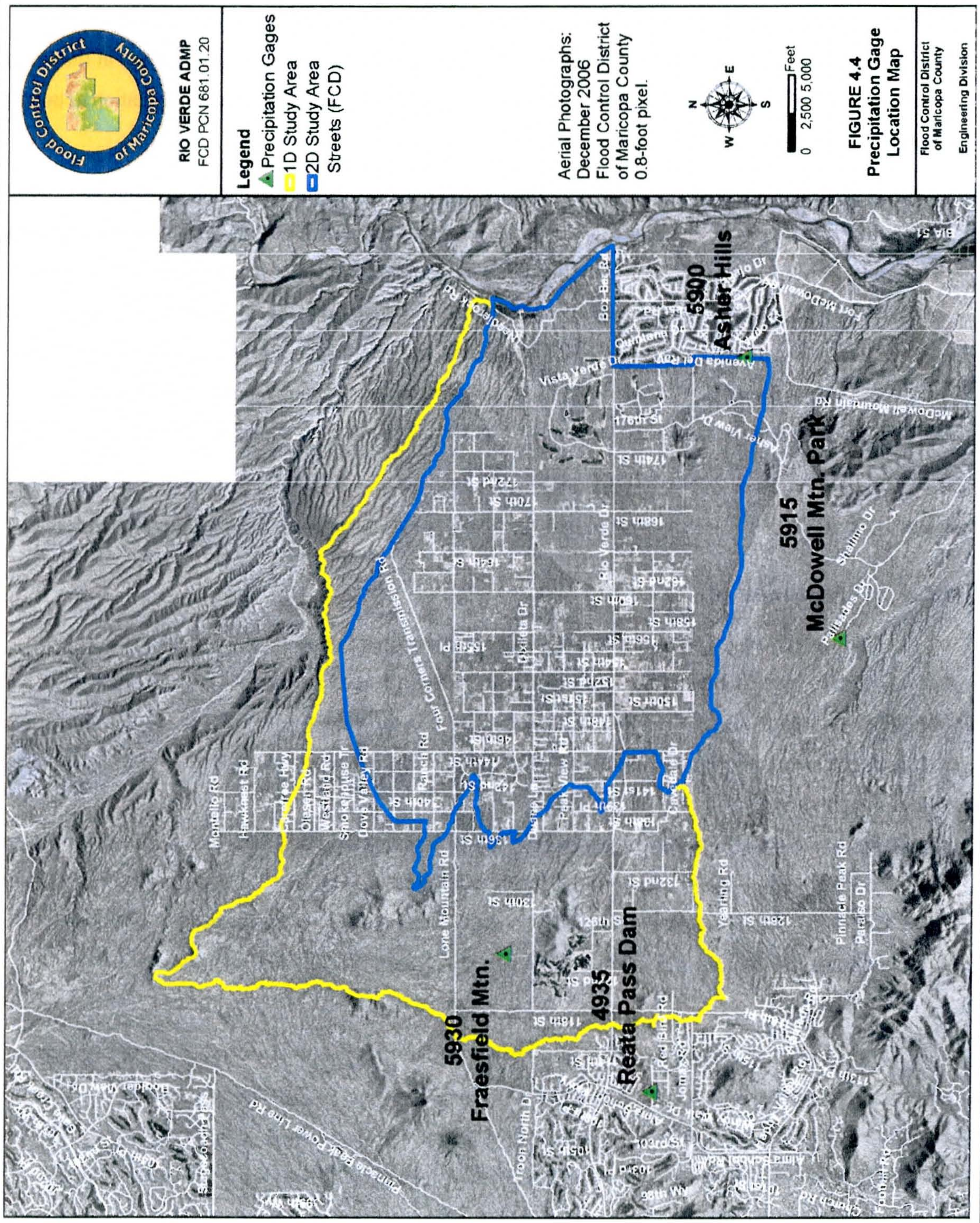

4.2.5 Statistical Parameters

The most comprehensive precipitation data records available for this watershed are the NOAA Atlas 2, Arizona (NOAA 2) and the NOAA Atlas 14 for the Semiarid Southwest (NOAA 14). The District and Maricopa County have adopted NOAA 2 for use in Maricopa County and this was in effect at the start of this study in 2003. For this reason, NOAA 2 was used as the source of statistical precipitation data for the purposes of this study.

There are no flow gage records available for the study watershed. Also, the study watershed is predominantly a distributary flow area. The unique physical characteristics of this watershed, including distributary flow, relatively steep slopes (2-3%), precipitation orographics, dense vegetation, and soil characteristics prohibit use of flow gage information from similar watersheds. There are no other watersheds in Maricopa County with similar characteristics that are also gaged. For this reason, Water Resources Council Bulletin 17B (March 1982) is not appropriate for application to this watershed. Another reason is that the watershed is rapidly being developed with single family residences.

Instead, USGS Regional Regression equations and envelope curves contained in the District's Hydrology Manual (FCDMC, 1995), are used as an indirect check of reasonableness of hydrologic model results.

4.2.6 Precipitation

NOAA 2 was used to estimate watershed average point precipitation values for the 1D and 2D study areas. The 100-year, 24-hour storm was used for hydrologic modeling of both the 1D and 2D study areas. The NOAA 2 isopluvials for the 100-year, 24-hour storm in the vicinity of the 2D study area are shown on Figure 4.5. The latitude and longitude of the centroids of the Phase A and Phase B study areas were used in conjunction with the NOAA Atlas 2 website at http://hydrology.nws.noaa.gov/oh/hdsc/noaaatlas2.htm to compute point precipitation values of the 2-year and 100-year, 6-hour and 24-hour storms. Those results were then used as input to the PreFre computer program (USBR, 1988) to compute precipitation-duration-frequency values for both 2D study areas. Refer to Figure 4.6 and Figure 4.7 for the PreFre output data for the Phase A and Phase B study areas, respectively.

The 100-year, 24-hour point precipitation values were reduced to account for the reduction due to aerial extent of the design storm. The design storm area is assumed to be the same size as the study watershed. The areas of the Phase A and Phase B study areas are 8.56 and 16.65 square miles, respectively. The depth-area reduction factors used were taken from Figure 15 of the NWS Hydro-40 (Zehr and Myers,

Figure 4.5 NOAA Atlas 2 100-year 24-hour Point Precipitation Isopluvials Map

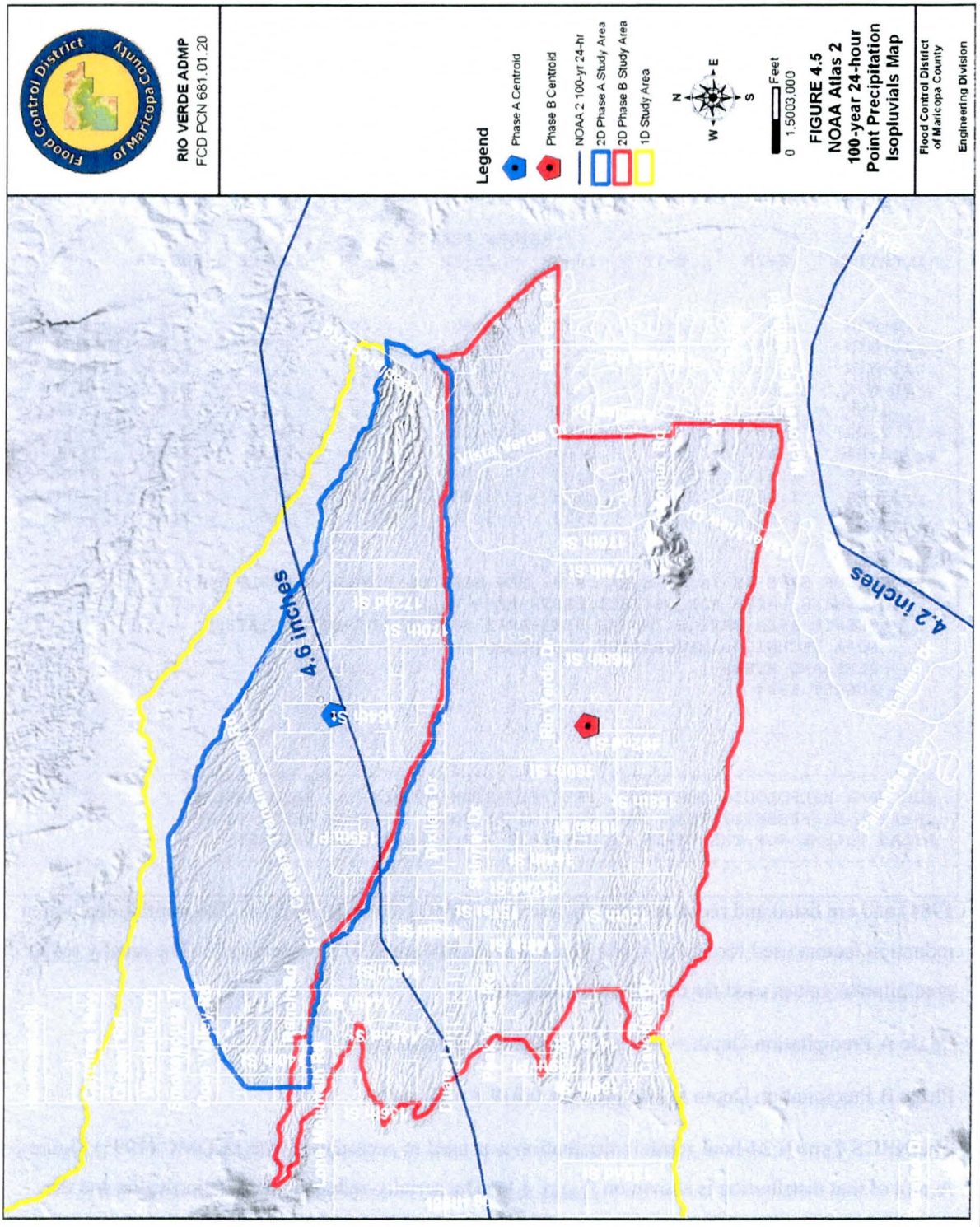

Figure 4.6 Phase A Prefre Output

```
              ** P R E F R E   O U T P U T   D A T A **
   REVISED JUNE 1988 TO UPDATE COMPUTATION OF SHORT-DURATION VALUES

  PRECIPITATION FREQUENCY VALUES FOR Rio Verde Phase A at Centroid
   PRIMARY ZONE NUMBER=   7
   SHORT-DURATION ZONE NUMBER=   8


                                POINT VALUES


                                RETURN PERIOD
 DURATION    2-YR     5-YR    10-YR    25-YR    50-YR   100-YR   500-YR


   5-MIN     .39      .46      .52      .60      .66      .72      .87   5-MIN
  10-MIN     .58      .70      .79      .91     1.01     1.11     1.34  10-MIN
  15-MIN     .71      .87      .99     1.16     1.29     1.42     1.73  15-MIN
  30-MIN     .94     1.17     1.33     1.57     1.75     1.93     2.35  30-MIN
    1-HR    1.14     1.44     1.65     1.95     2.18     2.41     2.95    1-HR
    2-HR    1.30     1.64     1.88     2.23     2.49     2.76     3.37    2-HR
    3-HR    1.41     1.78     2.04     2.41     2.70     2.99     3.65    3-HR
    6-HR    1.61     2.04     2.34     2.76     3.09     3.42     4.18    6-HR
   12-HR    1.87     2.37     2.73     3.23     3.62     4.01     4.91   12-HR
   24-HR    2.12     2.71     3.12     3.70     4.15     4.60     5.64   24-HR


 * IF YOUR SITE IS IN ARIZONA OR W. NEW MEXICO, PLEASE CONSULT THE
   FOLLOWING PAPER FOR REVISED DEPTH-AREA VALUES:
     "DEPTH-AREA RATIOS IN THE SEMI-ARID SOUTHWEST UNITED STATES"
     NOAA TECHNICAL MEMORANDUM NWS HYDRO-40
     ZEHR AND MYERS
     AUGUST 1984


-------------------------------------------------------------------
FOR MANY HYDROLOGIC PURPOSES, PRECIPITATION FALLING AS RAIN MUST BE
TREATED DIFFERENTLY THAN THAT FALLING AS SNOW.  PLEASE REFER TO THE
ATLAS VOLUME FOR THE STATE OF INTEREST FOR SEASONAL ADJUSTMENTS.
-------------------------------------------------------------------
```

1984) and are listed and recommended for use in FCDMC (1995) Table 2.1a. The rainfall depth-area reduction factors used for Phase A and Phase B are 0.949 and 0.919, respectively. The areally reduced precipitation values used for the 2D study area are:

Phase A Precipitation Depth = 4.60 inches x 0.949 = 4.36 inches

Phase B Precipitation Depth = 4.48 inches x 0.919 = 4.12 inches

The NRCS Type II 24-hour rainfall distribution was used in accordance with FCDMC (1995) Figure 2.6. A plot of that distribution is shown on Figure 4.8. The aerially-reduced precipitation value and the rainfall distribution are entered as input to the FLO-2D model in the *rain.dat* input data file.

Figure 4.7 Phase B Prefre Output Table

```
                ** P R E F R E   O U T P U T   D A T A **
    REVISED JUNE 1988 TO UPDATE COMPUTATION OF SHORT-DURATION VALUES

   PRECIPITATION FREQUENCY VALUES FOR Rio Verde Phase B at Centroid
    PRIMARY ZONE NUMBER=   7
    SHORT-DURATION ZONE NUMBER=   8


                                POINT VALUES


                                RETURN PERIOD
 DURATION    2-YR     5-YR    10-YR    25-YR    50-YR   100-YR   500-YR


   5-MIN     .39      .47      .52      .60      .67      .73      .88   5-MIN
  10-MIN     .58      .70      .79      .92     1.02     1.12     1.36  10-MIN
  15-MIN     .71      .88     1.00     1.17     1.31     1.44     1.75  15-MIN
  30-MIN     .94     1.17     1.34     1.58     1.77     1.95     2.38  30-MIN
    1-HR    1.14     1.45     1.66     1.97     2.21     2.44     2.99    1-HR
    2-HR    1.30     1.65     1.89     2.23     2.50     2.77     3.39    2-HR
    3-HR    1.41     1.78     2.04     2.41     2.70     2.99     3.65    3-HR
    6-HR    1.61     2.03     2.33     2.75     3.07     3.40     4.15    6-HR
   12-HR    1.87     2.35     2.70     3.18     3.56     3.94     4.81   12-HR
   24-HR    2.12     2.68     3.07     3.62     4.05     4.48     5.47   24-HR


 * IF YOUR SITE IS IN ARIZONA OR W. NEW MEXICO, PLEASE CONSULT THE
   FOLLOWING PAPER FOR REVISED DEPTH-AREA VALUES:
     "DEPTH-AREA RATIOS IN THE SEMI-ARID SOUTHWEST UNITED STATES"
     NOAA TECHNICAL MEMORANDUM NWS HYDRO-40
     ZEHR AND MYERS
     AUGUST 1984


-------------------------------------------------------------------
FOR MANY HYDROLOGIC PURPOSES, PRECIPITATION FALLING AS RAIN MUST BE
TREATED DIFFERENTLY THAN THAT FALLING AS SNOW.  PLEASE REFER TO THE
ATLAS VOLUME FOR THE STATE OF INTEREST FOR SEASONAL ADJUSTMENTS.
-------------------------------------------------------------------
```

The 1D model watershed sub-basins overlap the 2D model study area grid. The 1D study area overlaps the 2D grid in order to allow for flow transition, expansion, and stabilization downstream from the concentrated inflow locations. Since rainfall-runoff computations were already completed for the areas within the 1D study area, 1D areas overlapping 2D grid elements must be identified as not receiving rainfall for the 2D hydrology computations. These overlap areas are shown graphically on Figure 4.9. This was accomplished in the FLO-2D model using line 5 of the *rain.dat* input data file. The rainfall depth-area reduction variable *RAINARF(I)* was set for every grid element in the model. If the grid is to receive rainfall, the variable was set to 1.0. If the grid element lies within a 1D watershed, the variable was set to 0.0.

Figure 4.8 24-hour Mass Curve for Maricopa County (NRCS Type II)

(from FCDMC 1995 Figure 2.6)

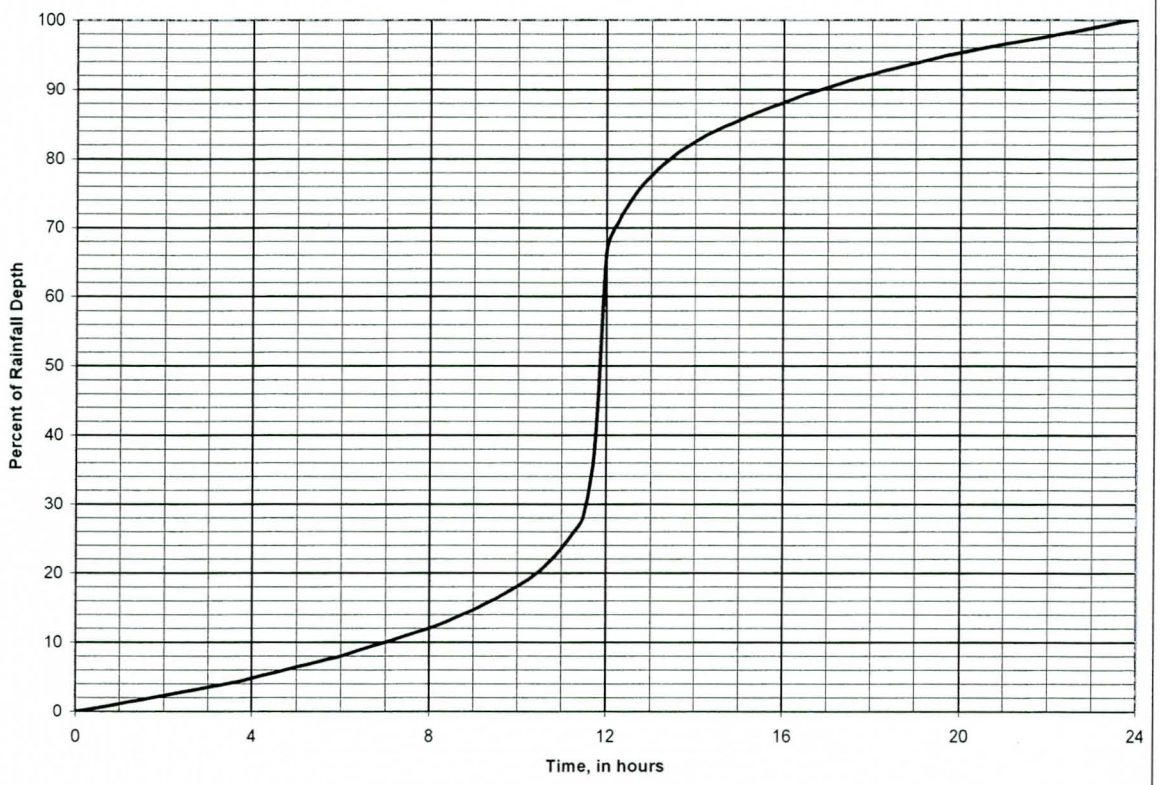

4.2.7 Physical Parameters

The hydrologic modeling physical parameters for the 2D study area are all associated with estimation of rainfall losses. The unit hydrograph method was not used because FLO-2D can compute rainfall excess for each grid element and then dynamically route it downstream. A unit hydrograph transformation is therefore not necessary. The rainfall loss discussion that follows includes the following sections:

1. Source of soils information;
2. Estimation of bare ground Green and Ampt parameters;
3. Estimation of initial abstraction;
4. Natural impervious area estimation;
5. Developed impervious area estimation; and
6. Effects of vegetation cover.

4.2.7.1 Source of Soils Information

The District's Hydrology Manual (FCDMC, 1995) specifies use of the Green and Ampt method (G&A) for estimation of rainfall losses. This method requires detailed soils information in order to estimate the key parameter, hydraulic conductivity at natural saturation (XKSAT). The District has published accepted values of XKSAT for every Soil Map Unit (SMU) in the soil survey publications from the Natural Resources Conservation Service (NRCS) that cover Maricopa County. The NRCS soil survey that covers the 2D study area is *AZ645 Aguila-Carefree Area, Parts of Maricopa and Pinal Counties, AZ* (NRCS, 1986). The limits of coverage of that soil survey for the Rio Verde ADMP are shown on Figure 4.10. Also shown is the remainder of the study area, which lies within the Tonto National Forest (TNF). There is currently no published detailed soils information available for most of the south TNF, other than the statewide NRCS U.S. General Soil Map (STATSGO) Data for Arizona (NRCS, STATSGO). The NRCS SMU's from NRCS (1986) are shown on Figure 4.11.

The District met with the soil scientist for the TNF to discuss alternatives for obtaining more accurate soils information than can be derived from the STATSGO soil survey. The TNF provided the District with a draft GIS coverage of the surface geology categories for the area in question. The geology coverage was created by the Arizona State Geological Survey. Refer to Figure 4.12. This information was used in conjunction with the high resolution aerial photographs of the study area and the adjacent NRCS (1986) soil survey. The geology map units are more detailed than NRCS STATSGO soil survey.

Soil textures were not a part of the database for the geology coverage. However, most of the geology map unit polygons lined up with the NRCS soil survey polygon boundaries along the TNF boundary. With the help of the TNF soil scientist the geology map units were matched up with equivalent NRCS SMU's. Several of the geology map units could include multiple NRCS SMU's, as shown in Table 4.1. The individual geology map unit polygons for these cases were assigned an NRCS soil map unit based on guidance from the NRCS using the adjacent NRCS soil map unit polygons and the digital aerial photographs. The results are shown on Figure 4.13. The resulting XKSAT values are shown graphically on Figure 4.14. A GIS shape file named *2D Soils XKSAT.shp* is provided on the DVD in Appendix D.7.

Figure 4.9 1D Overlap Areas Where Rainfall is Not Applied in the 2D Models

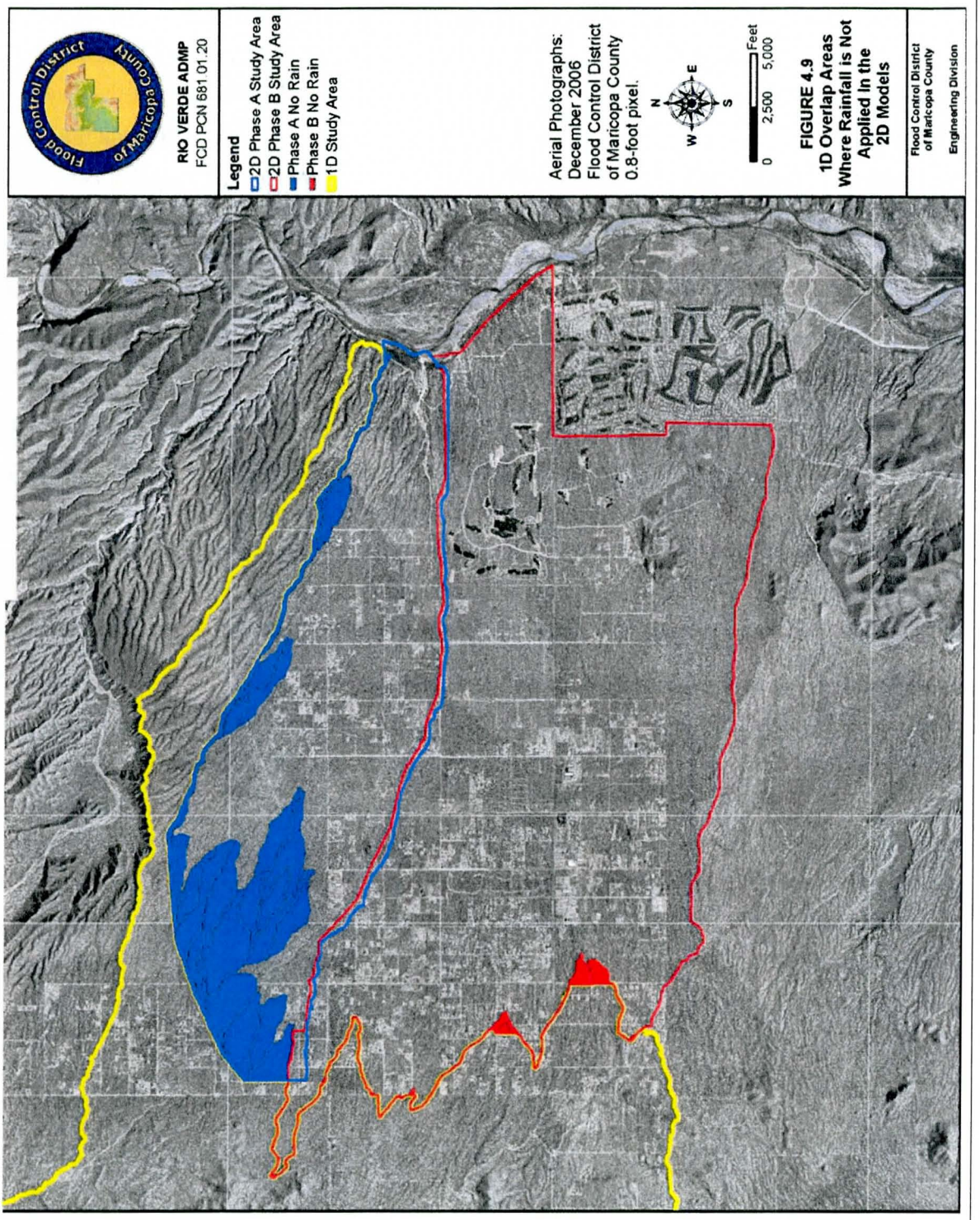

Figure 4.10 Soil Survey Map

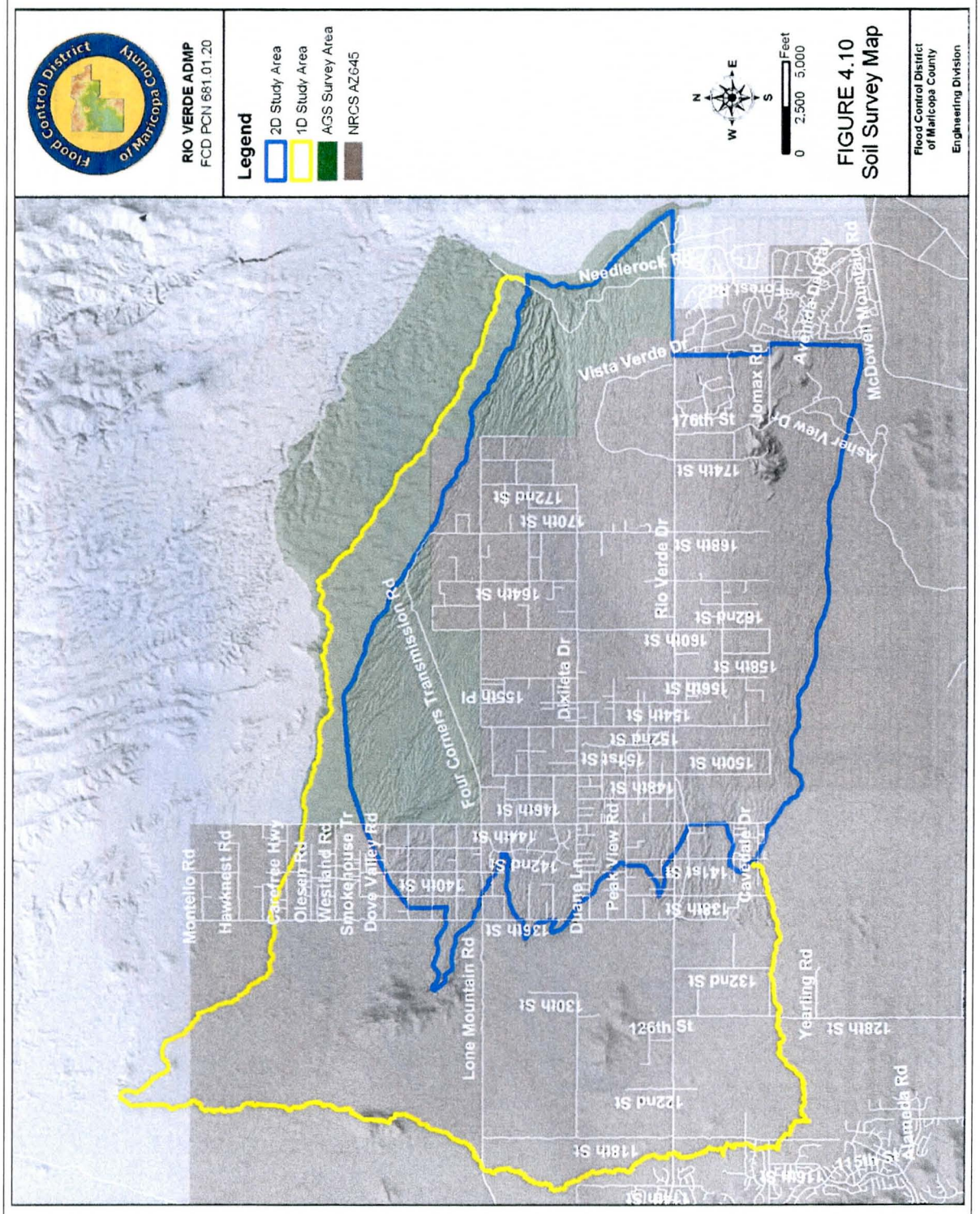

Source:
NRCS Soil Survey AZ645
Aguila-Carefree Area,
Parts of Maricopa and Pinal Counties, AZ

SMU	ROCK OUTCROP, %	DESCRIPTION
6	0.00	Anthony-Arizo complex
12	0.00	Carefree cobbly clay loam, 1 to 8 percent slopes
33	0.00	Eba very gravelly loam, 1 to 8 percent slopes
40	0.00	Eba-Pinaleno complex, 3 to 20 percent slopes
41	0.00	Eba-Pinaleno complex, 20 to 40 percent slopes
54	0.00	Gila fine sandy loams
61	0.00	Gran-Wickenburg complex, 1 to 10 percent slopes
63	25.00	Gran-Wickenburg-Rock outcrop complex, 1 to 7 percent slopes
96	0.00	Pinaleno-Tres Hermanos complex, 1 to 10 percent slopes
111	0.00	Torriorthents, 15 to 40 percent slopes
121	0.00	Tres Hermanos-Anthony complex, 1 to 5 percent slopes
122	0.00	Vado gravelly sandy loam, 1 to 5 percent slopes
126	0.00	Water

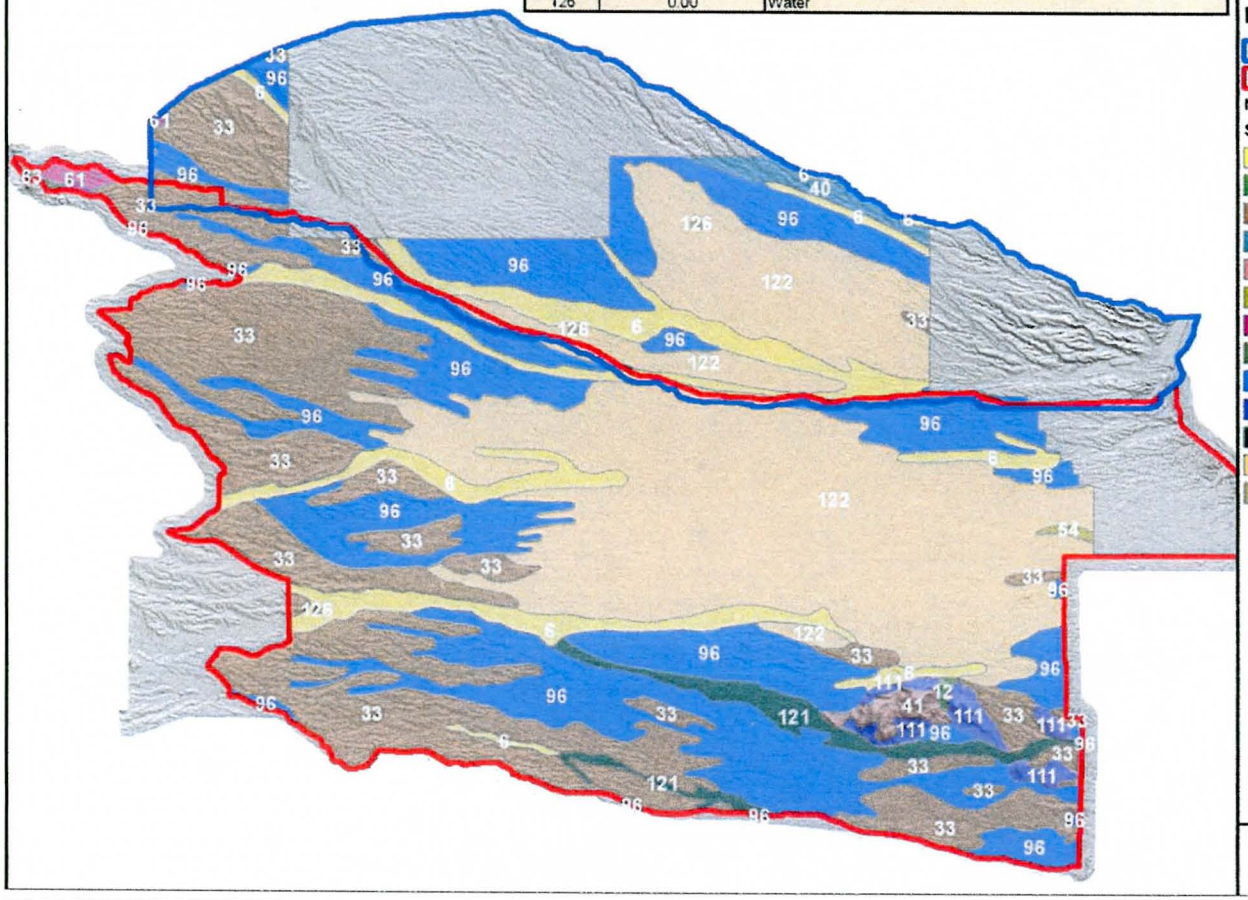

RIO VERDE ADMP
FCD PCN 681.01.20

Legend

- 2D Phase A Study Area
- 2D Phase B Study Area

NRCS Soil Map Units

SMU
- 6
- 12
- 33
- 40
- 41
- 54
- 61
- 63
- 96
- 111
- 121
- 122
- 126

N W E S

0 2,500 5,000 Feet

FIGURE 4.11
NRCS
Soil Map Units

Flood Control District of Maricopa County
Engineering Division

Figure 4.11 NRCS Soil Map Units

Figure 4.12 Tonto National Forest Geologic Map Units

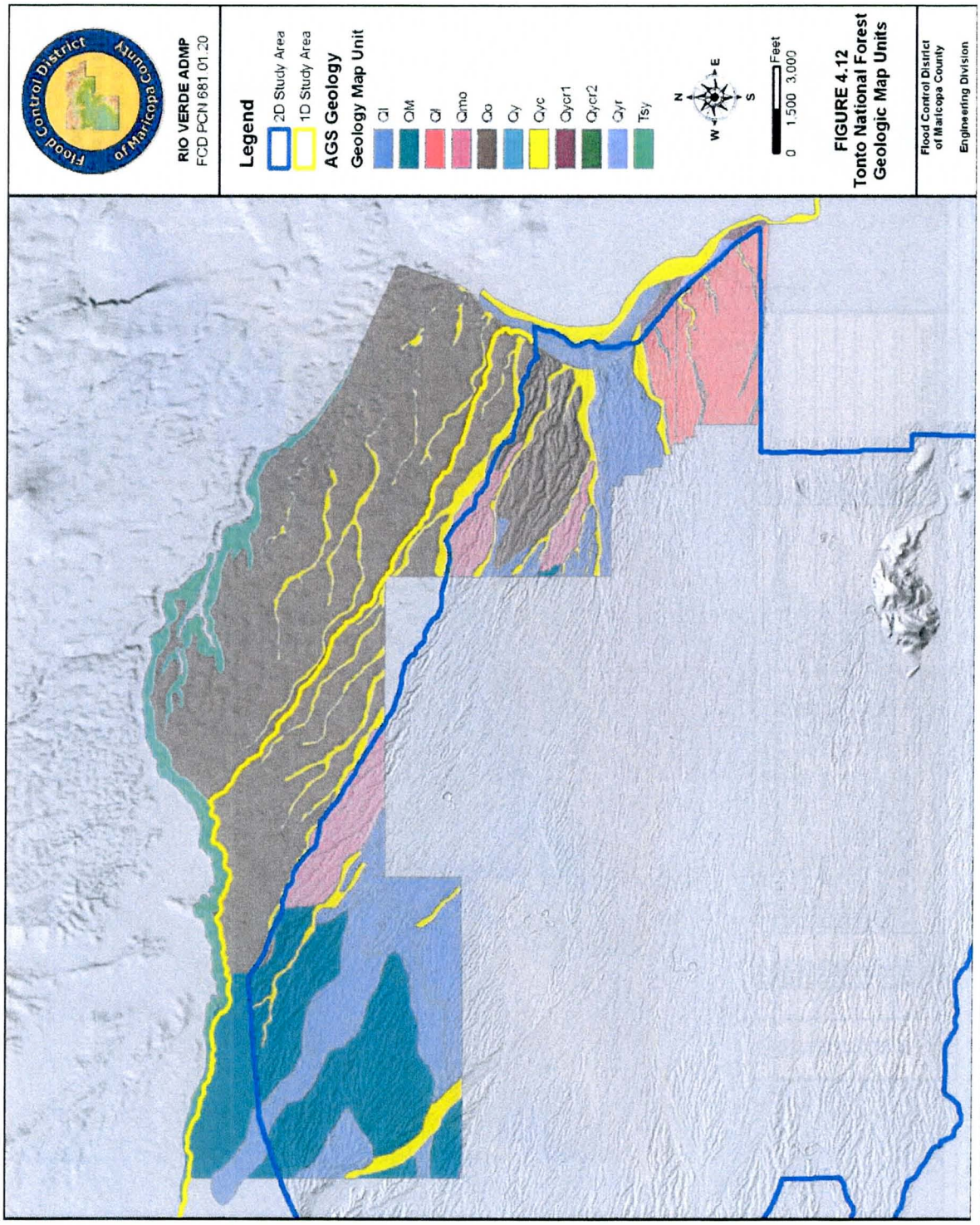

Figure 4.13 Tonto National Forest Soil Map Units

TYPE	ROCKOUT	DESCRIPTION	GEOLOGY MAP UNIT
6	0.00	Anthony-Arizo complex	Qy
10	0.00	Brios-Carrizo complex, 1 to 5 percent slopes	Qyc
33	0.00	Eba very gravelly loam, 1 to 8 percent slopes	QM
37	0.00	Eba-Continental-Cave association, 3 to 20 percent slo	Qo
40	0.00	Eba-Pinaleno complex, 3 to 20 percent slopes	Qmo
41	0.00	Eba-Pinaleno complex, 20 to 40 percent slopes	Tsy
96	0.00	Pinaleno-Tres Hermanos complex, 1 to 10 percent slope	Ql
122	0.00	Vado gravelly sandy loam, 1 to 5 percent slopes	Qycr1

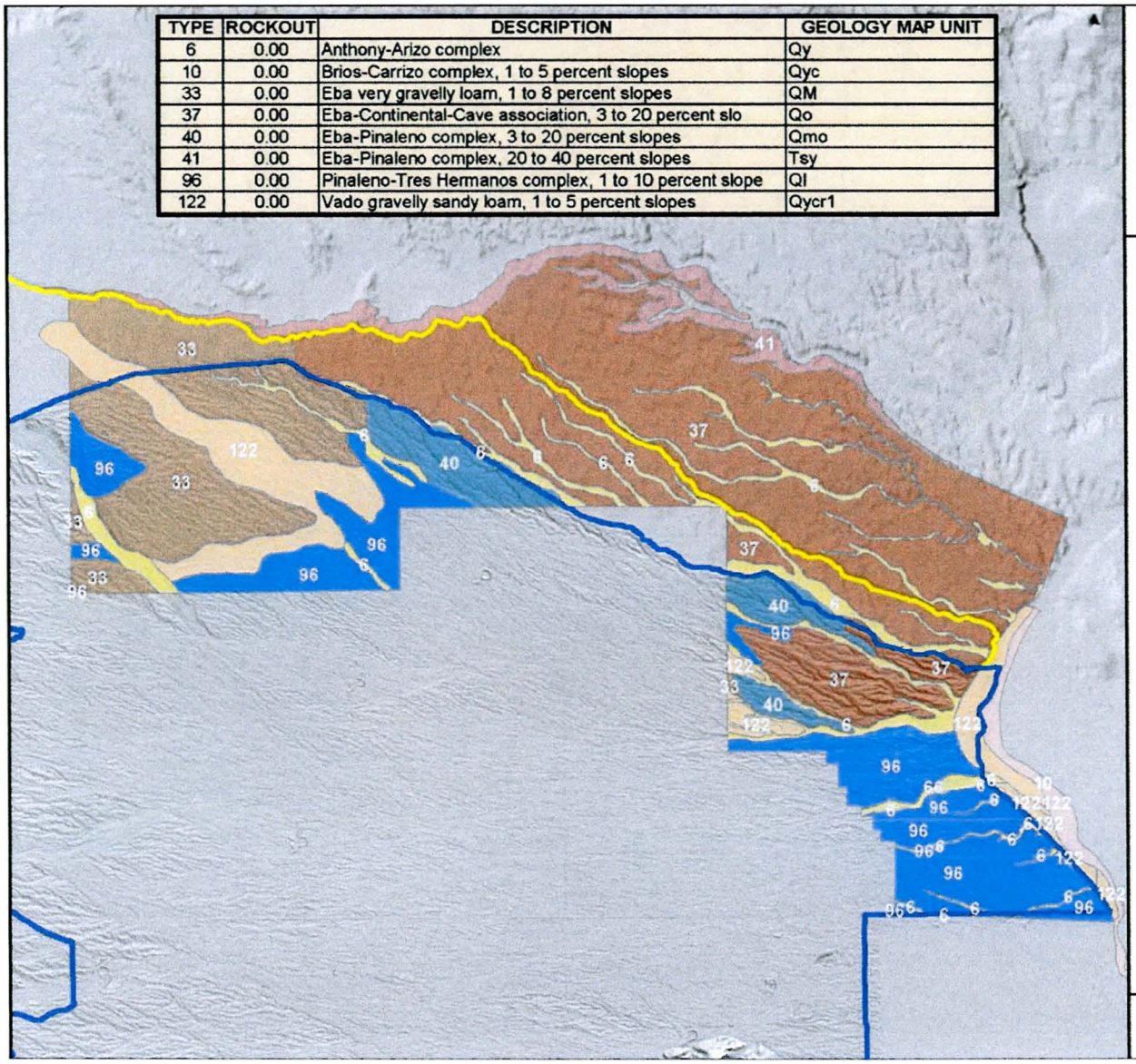

RIO VERDE ADMP
FCD PCN 681.01.20

Legend

2D Study Area
1D Study Area

TNT Soil Map Units

SMU
6
10
33
37
40
41
96
122

N
W E
S

0 1,500 3,000 Feet

FIGURE 4.13
Tonto National Forest Soil Map Units

Flood Control District of Maricopa County
Engineering Division

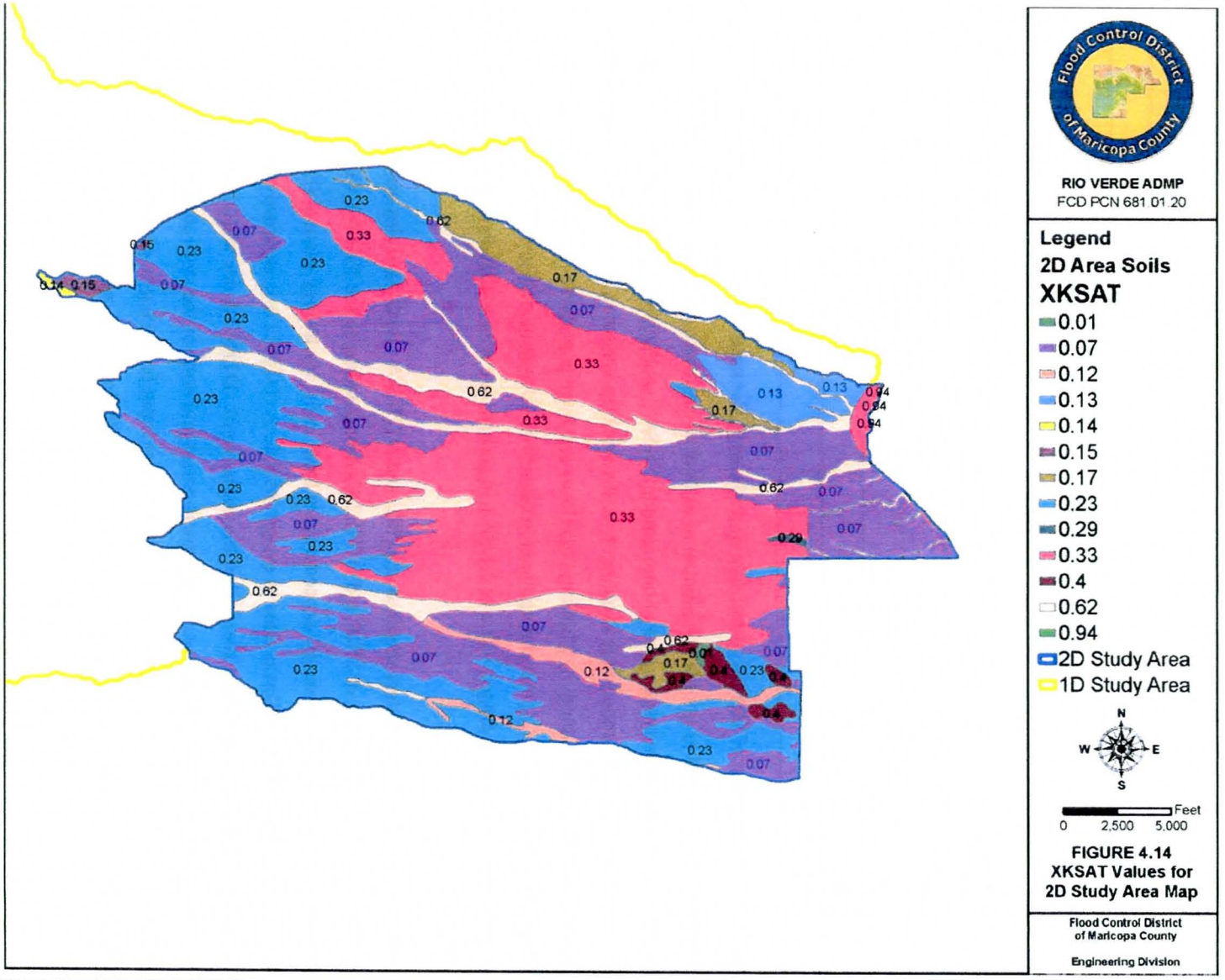

Figure 4.14 XKSAT Values for 2D Study Area

Table 4.1 Matrix of NRCS Soil Map Units within Geologic Map Units

SMU's	Geologic Map Units				
	Qm	Qi	Qmo	Qy	Qo
6				X	
33	X	X	X		
34	X				
37					X
40	X		X		
61	X				
93	X				
96	X	X			
122		X			

4.2.7.2 Estimation of Bare Ground Green and Ampt Parameters

The FLO-2D was used to implement estimation of rainfall infiltration using the G&A method. This was done by estimating an average value of bare ground XKSAT (not adjusted for the effects of vegetation canopy cover) for each modeling grid element. ESRI ArcMap was used to compute an average value of XKSAT for each grid element by clipping the GIS soils coverage prepared using the information described in Section 4.2.7.1, computing the area of each SMU within each grid element, and then computing an area log-averaged value of XKSAT in accordance with the Hydrology Manual (FCDMC, 1995).

The two other G&A parameters required are PSIF and DTHETA. Both variables are dependant on bare ground XKSAT. The values of PSIF and DTHETA corresponding to the XKSAT value for each grid element were assigned based on the procedures set forth in the Hydrology Manual (FCDMC, 1995). Figure 4.3 in FCDMC (1995) was used to assign the values. DTHETA is assigned based on the assumed antecedent moisture condition at the start of the storm event. DTHETA dry was used for this study because the watershed is a desert semi-arid environment and none of the study area is flood-irrigated farm land or pasture. The values of PSIF and DTHETA were input for each grid element using the *SOILS(N)* and *DTHETA(N)* fields on line 3 of the *INFIL.DAT* FLO-2D input file, respectively.

4.2.7.3 Effects of Vegetation Cover

In accordance with FCDMC (1995) guidelines, bare ground XKSAT should be adjusted to account for the effects of vegetation canopy cover. The adjustment is based on the documented increase in hydraulic conductivity due to various soil covers as described and referenced in Section 4.4.1.2 of FCDMC (1995). In order to appropriately adjust bare ground XKSAT for each grid element, an estimate of vegetation canopy cover is needed for determining an adjustment factor using Hydrology Manual (FCDMC, 1995) Figure 4.4. The Feature Analyst for ArcGIS extension (www.vls-inc.com) was used to prepare polygon coverages of four different vegetation classes as shown in Table 4.2. The assigned vegetation coverage density and the corresponding XKSAT adjustment factor for each class are also shown. The vegetation cover density assignment to each class was made based on a field reconnaissance conducted on April 17, 2003. 100-foot long vegetation transects were taken at several locations and the results averaged. The low density vegetation, Class 2, areas had vegetation densities typically less than 10 percent. A value of 10 was assigned, which results in no adjustment of XKSAT. Values of vegetation cover densities in the medium density vegetation, Class 1, areas ranged from 17 to 33 percent. An average value of 25 percent was assigned. The high density vegetation, Class 0, areas are typically large clusters of Mesquite, Palo Verde, Hackberry and/or catclaw. Vegetation density in these areas ranges from 50 to 100 percent. An average value of 70 percent was assigned.

Table 4.2 Vegetation Cover Classes

Class	Description	VCD (%)	XKSAT Adjustment Factor
3	Bare Ground	0	0
2	Low Density Vegetation	10	0
1	Medium Density Vegetation	25	1.17
0	High Density Vegetation	70	1.67

Figure 4.15 VCD Example - 17%	Figure 4.16 VCD Example – 24%

The high density areas are small in total area, so any error in assignment due to the wide range is not hydrologically significant for the study area. The medium density areas are more extensive, so more effort was spent in obtaining representative transects for this class. Photographic examples of the medium density vegetation class are shown in Figure 4.15 and Figure 4.16. Figure 4.15 is of an area where the density measured by a 100-foot transect was 17 percent. Vegetation along a wash in the background is high density vegetation. Figure 4.16 is another photographic example of medium density vegetation with an average density of 24 percent. This photograph is most typical of the medium vegetation density class. The vegetation classes for the study area are shown on Figure 4.17. The changes in density north of Rio Verde Drive and east from 160th Street are due to two fires that occurred in the early 1990's. Refer to the watershed work maps Appendix G.1 for large-scale versions of Figure 4.17.

ESRI ArcMap was used to compute an area-averaged value of vegetation canopy cover density for each grid element. Then an adjustment factor for each grid element was computed using the equation from Figure 4.4 of FCDMC (1995). The bare ground XKSAT value for each grid element was multiplied by the vegetation adjustment factor and then the product was input for each grid element using the *HYDC(N)* field in line 3 of the *INFIL.DAT* FLO-2D input file.

The entire study area is shown on Figure 4.18a. An example enlarged area is shown on Figure 4.18b where the VCD polygons can be compared with the aerial photographs used to create them using Feature Analyst.

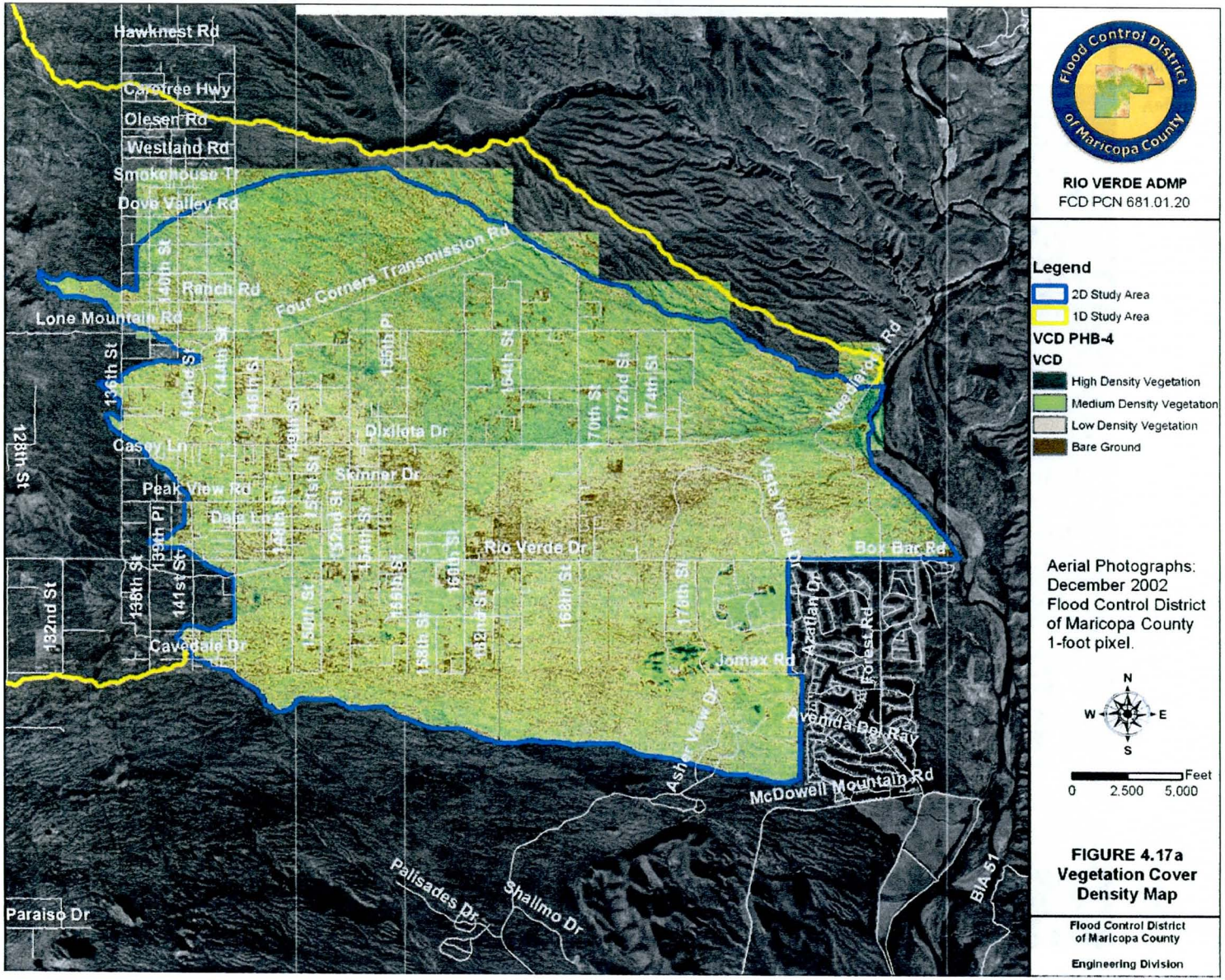

Figure 4.17 Vegetation Cover Map

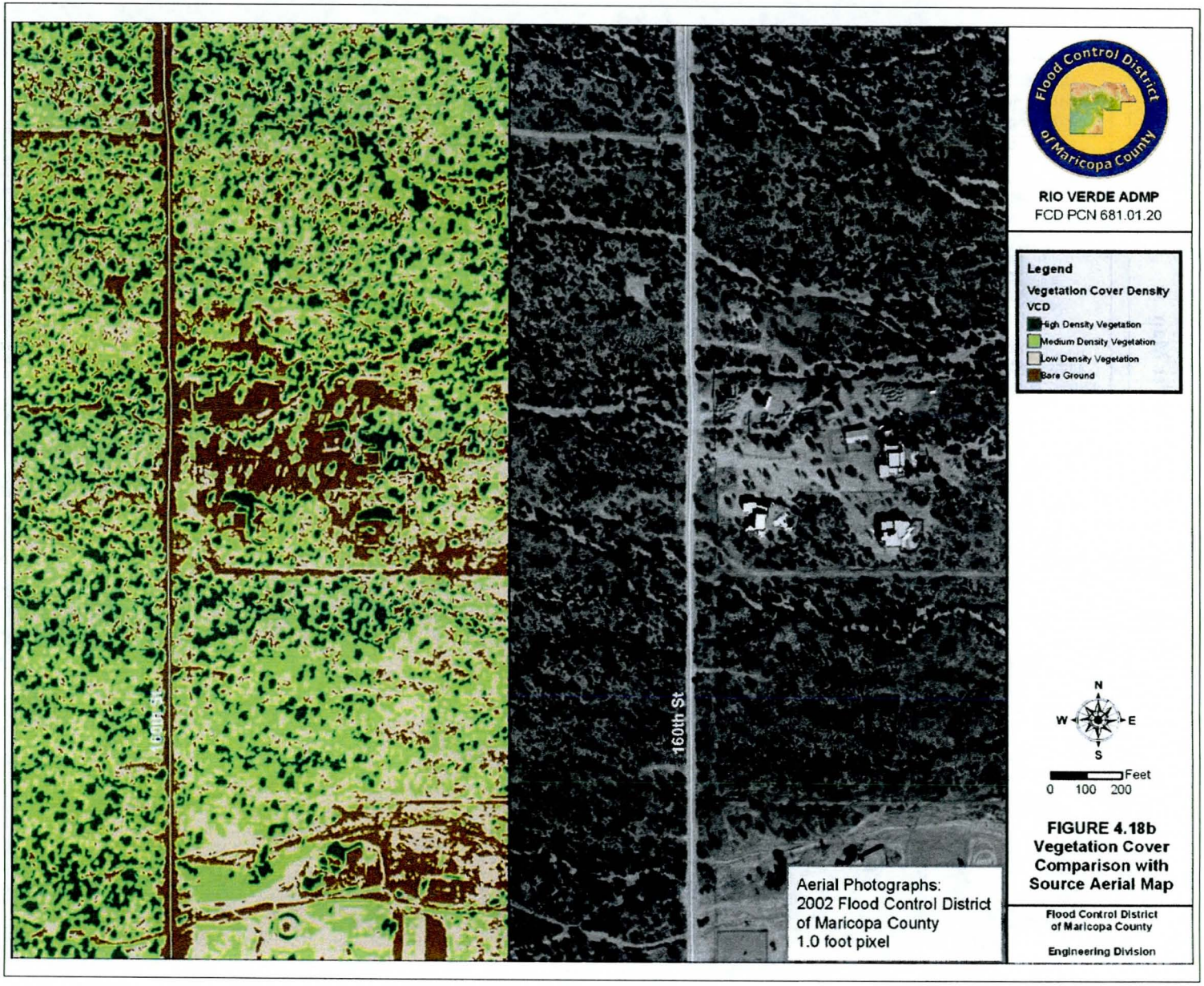

FIGURE 4.18b
Vegetation Cover Comparison with Source Aerial Map

4.2.7.4 Estimation of Initial Abstraction

Initial abstraction (IA), also referred to as surface retention loss, is the summation of all rainfall losses other than infiltration. IA is a function of physiography and land-use of the area. The 2D study area is primarily Sonoran Desert with a terrain classification of hillslopes (slopes are 2-3%). The area is developing, with a minimum parcel size of one acre and parcel sizes ranging from one acre to over 10 acres. Streets are predominantly gravel surfaced and extensive removal of native vegetation is strongly discouraged. Based on this characterization of the physiography and land-use, a value of 0.15 inches was assigned for all grid elements in the study area. Refer to Table 4.1 of FCDMC (1995). This value was input for each grid element, using the *ABSTRINF(N)* field in line 3 of the *INFIL.DAT* FLO-2D input file.

4.2.7.5 Natural Impervious Area Estimation

Natural impervious area ($RTIMP_{nat}$) is area within the watershed that is impervious to infiltration and is hydraulically connected to the watershed drainage system. The NRCS soils information (refer to Section 4.2.7.1) was used to estimate $RTIMP_{nat}$. $RTIMP_{nat}$ is zero for Phase A and very small for Phase B. The total area with $RTIMP_{nat}$ in Phase B is 11.9 acres and is located within SMU 63. That SMU lists the rock outcrop percentage as 25 percent. The $RTIMP_{nat}$ for Phase B is therefore less than 0.03 percent. The impervious area in Phase B is assumed to be hydraulically connected. This is a conservative assumption as most of the rock outcrop areas are isolated and not directly connected to the wash system. By site inspection and review of the assigned SMU's, there is no $RTIMP_{nat}$ within the TNF portion of the 2D model area. Refer to Figure 4.18 and to the watershed work maps in Appendix G.1.

4.2.7.6 Developed Impervious Area Estimation

Developed impervious area ($RTIMP_{dev}$) includes building roofs, patios, driveways, paved roads, etc. that are hydraulically connected to the watershed drainage system. All buildings, out-buildings, patios, paved driveways and roadways were digitized to a GIS coverage using available rectified geo-referenced aerial photographs and finalized building permit plans. The coverage prepared is current as of February 2005. The total $RTIMP_{dev}$ for the 2D study modeled is 0.333 square miles, or about 1.3 percent of the 2D study area. Refer to Figure 4.18 for a visual representation of the areas modeled as impervious area and to the watershed work maps in Appendix G.1.

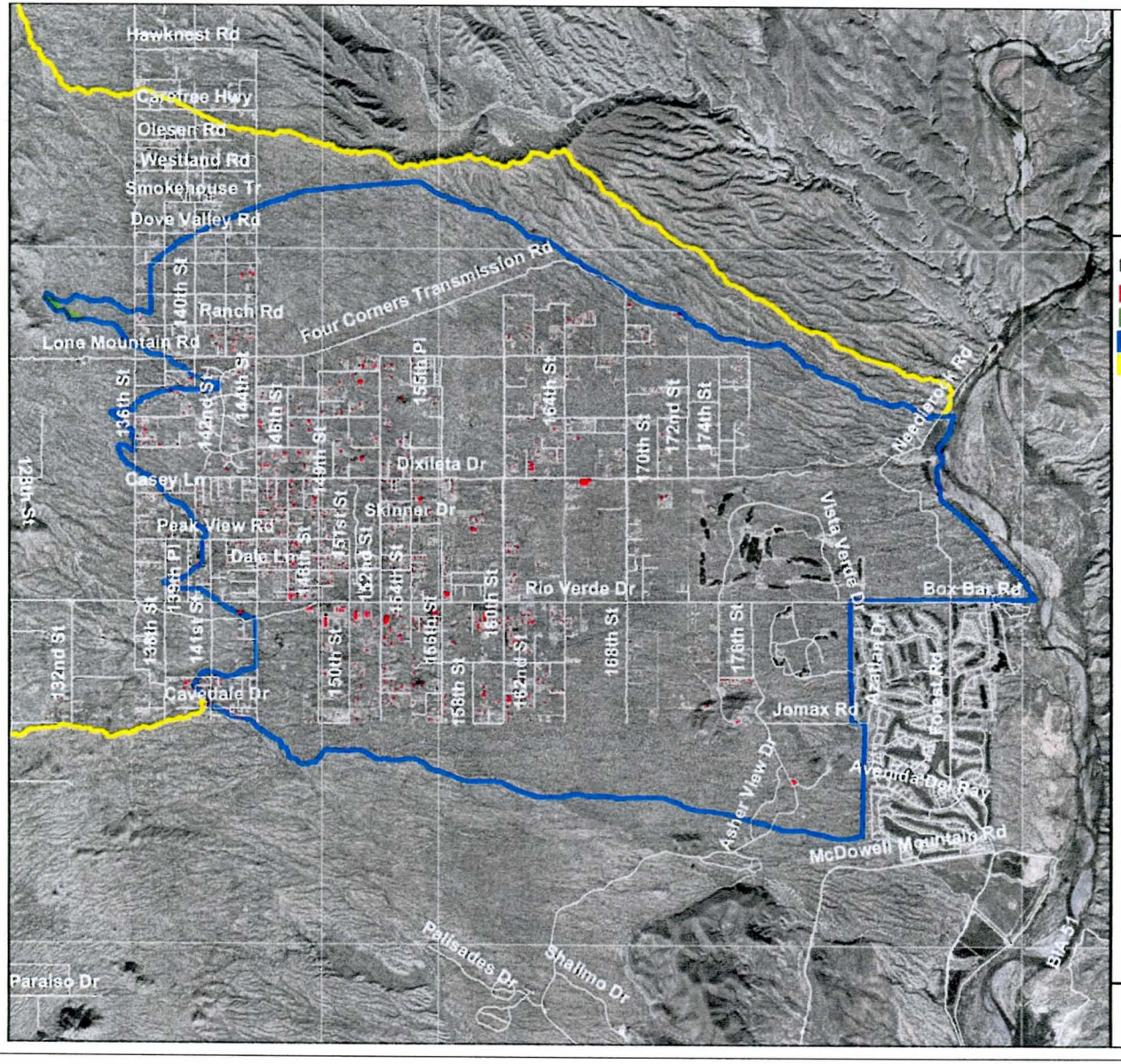

Figure 4.18 Impervious Area Map

The $RTIMP_{nat}$ and $RTIMP_{dev}$ GIS coverages were combined and an average RTIMP value computed for every grid element in a manner similar to that described for bare ground XKSAT in Section 4.2.7.2, except a linear averaging method was used. The computed value was input for each grid element using the *RTIMPF(N)* field in line 3 of the *INFIL.DAT* FLO-2D input file. The building and out-building polygons were also used as blockages/obstructions to flow. In order to accomplish this and still allow runoff to occur from the impervious areas, the Width Reduction Factor (WRF) FLO-2D option was used. Refer to Section 5.3.3 for a complete discussion of the method used to accomplish both objectives.

4.2.8 Hydrograph Routing

Hydrograph channel and storage routing operations are done dynamically within the FLO-2D model. No special data input requirements are necessary.

4.3 Problems Encountered During the Study

4.3.1 Special Problems and Solutions

4.3.1.1 Problem 1: Existing Cattle Stock Tanks and Diversion Dikes

One problem encountered is the handling of existing cattle stock tanks and diversion dikes in the watershed. Refer to Figure 4.19 for the locations of these structures. The location of the stock tanks in relation to the "with stock tanks" peak discharge results is shown on Figure 4.19a. The location of the stock tanks in relation to the "without stock tanks" peak discharge results is shown on Figure 4.19b. All consist of excavated ponds with earthen embankments and little or no erosion protection. Diversion dikes re-direct runoff away from and into the ponds, depending on the physical conditions at the site. The typical design allows sufficient low flow to enter and fill the pond area and directs high flow rates around the impoundment area. The embankments are privately owned, except for the Black Hills Tank, which is owned by the City of Scottsdale. There are no active maintenance programs in place, and there is no information available to aide in certifying these structures. These structures do have a significant enough effect on the floodplain in terms of flow redirection downstream, and backwater effects upstream, to warrant modeling of the structures both in place and as if they do not exist.

From a hydrology standpoint, the storage effects are not significant, but the effects on peak discharges at downstream locations are significant. By studying historical aerial photographs of the area, it appears these structures were built in the 1950's and 1960's. All of the structures are reflected in the project topography maps. Since the structures cannot be certified as levees, the decision was made to delineate the worst case floodplain widths with these structures in-place and with them removed. In order to model

the area with the structures removed, the digital terrain model (DTM) of the project mapping was modified by District personnel to simulate the ground topography as close to natural conditions prior to construction of the structures as possible. Both the Phase A and Phase B FLO-2D models were then run using the "with stock tanks" and "without stock tanks" topographic data sets. The results were compared grid element by grid element using ArcGIS and the maximum flow rates and water surface elevations tabulated in a new GIS database table. These maximum results from the two runs for each phase were then used to delineate the 100-year floodplain.

The exception to this approach is the Black Hills Tank. This structure is owned by the City of Scottsdale. The City of Scottsdale has stated to the District their intention to remove this structure in the future. The Black Hills Tank impoundment is within the 1D study area and does not cause a significant flow diversion. When the impoundment area is full, flow can pass around the impoundment via an emergency overflow area and then drain back to the downstream channel. The District elected to ignore the storage effects of this structure in the HEC-1 model and the downstream flood hydrograph read into the FLO-2D model is based on the tank not being in place.

The elevations of the grid elements covering the stock tank areas lower than adjacent ground were raised to the elevation where flow begins to spill around the tank embankment. This has the effect of removing the available below ground storage, which is a conservative assumption and helps reduce the FLO-2D model run time.

4.3.1.2 Problem 2: Model Overlap Between Phase A and Phase B

The boundary between the FLO-2D Phase A and Phase B study areas is not a distinct dividing ridge line. Runoff can and does drain from Phase A into Phase B and vice versa. There are two locations where the flow rates from Phase B into Phase A are significant enough to model. To address this problem, an outflow cross section was defined for both locations using the *FPXSEC.DAT* FLO-2D input data file. Each cross section consists of a series of grid element numbers. FLO-2D computes runoff hydrographs for each grid element defined and saves the results in the *CROSSQ.OUT* file using a defined time step; 0.10 hours in this case. FLO-2D also saves a combined hydrograph for each cross section in the *HYCROSS.OUT*. Each grid element for both Phase B cross sections was referenced to a corresponding Phase A grid element. The outflow hydrograph from each Phase B cross section grid element was listed as an inflow hydrograph to the referenced Phase A grid element and entered in the *INFLOW.DAT* file for Phase A. Therefore, both Phase B FLO-2D models ("with stock tanks" and "without stock tanks") must be run first, the outflow hydrographs extracted, and then entered into the Phase A *INFLOW.DAT* file before the Phase A models can be run. The Phase B outflow hydrographs read into Phase A are presented in Section 4.5.1.2.

Figure 4.19 Stock Tank and Diversion Dike Locations

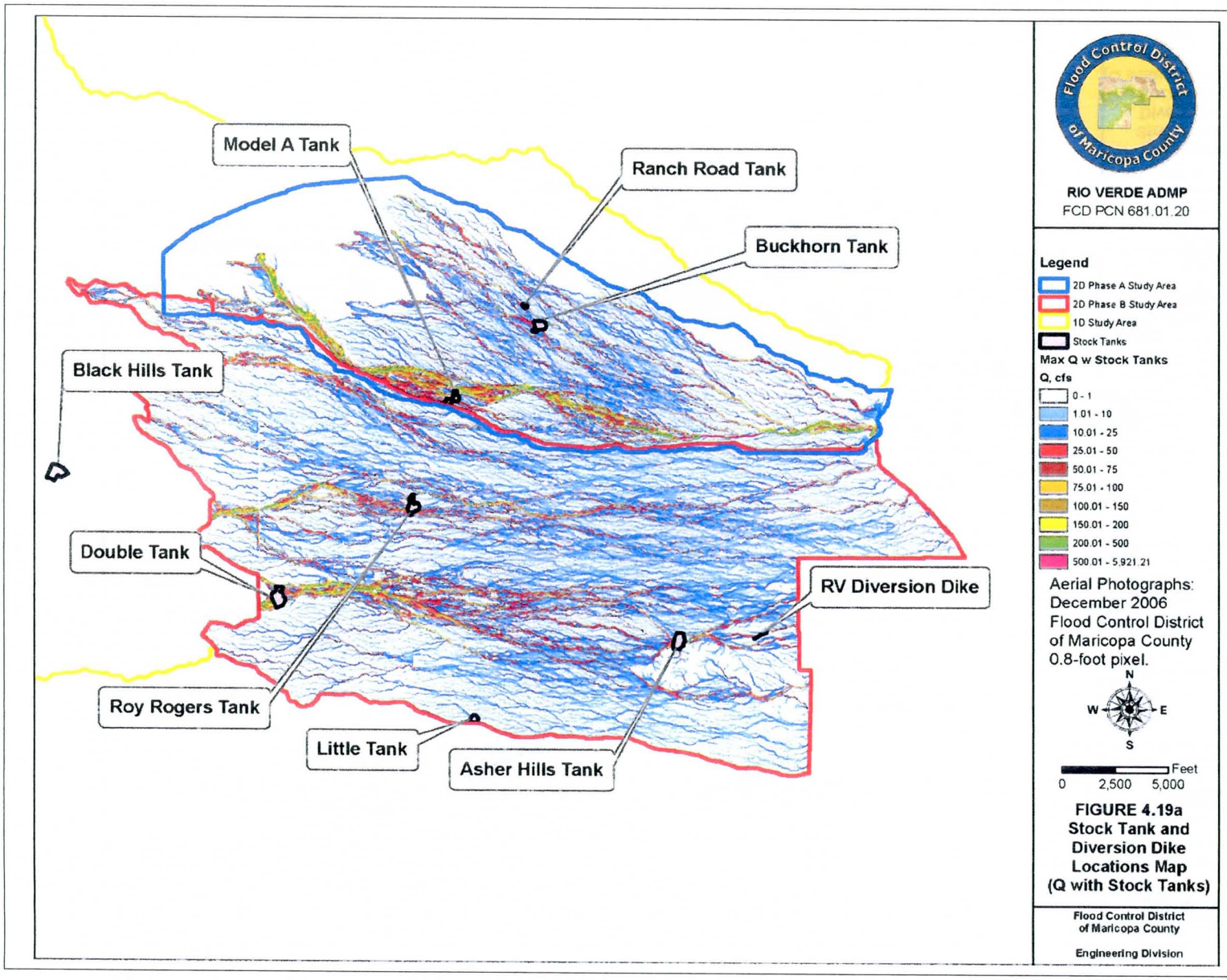

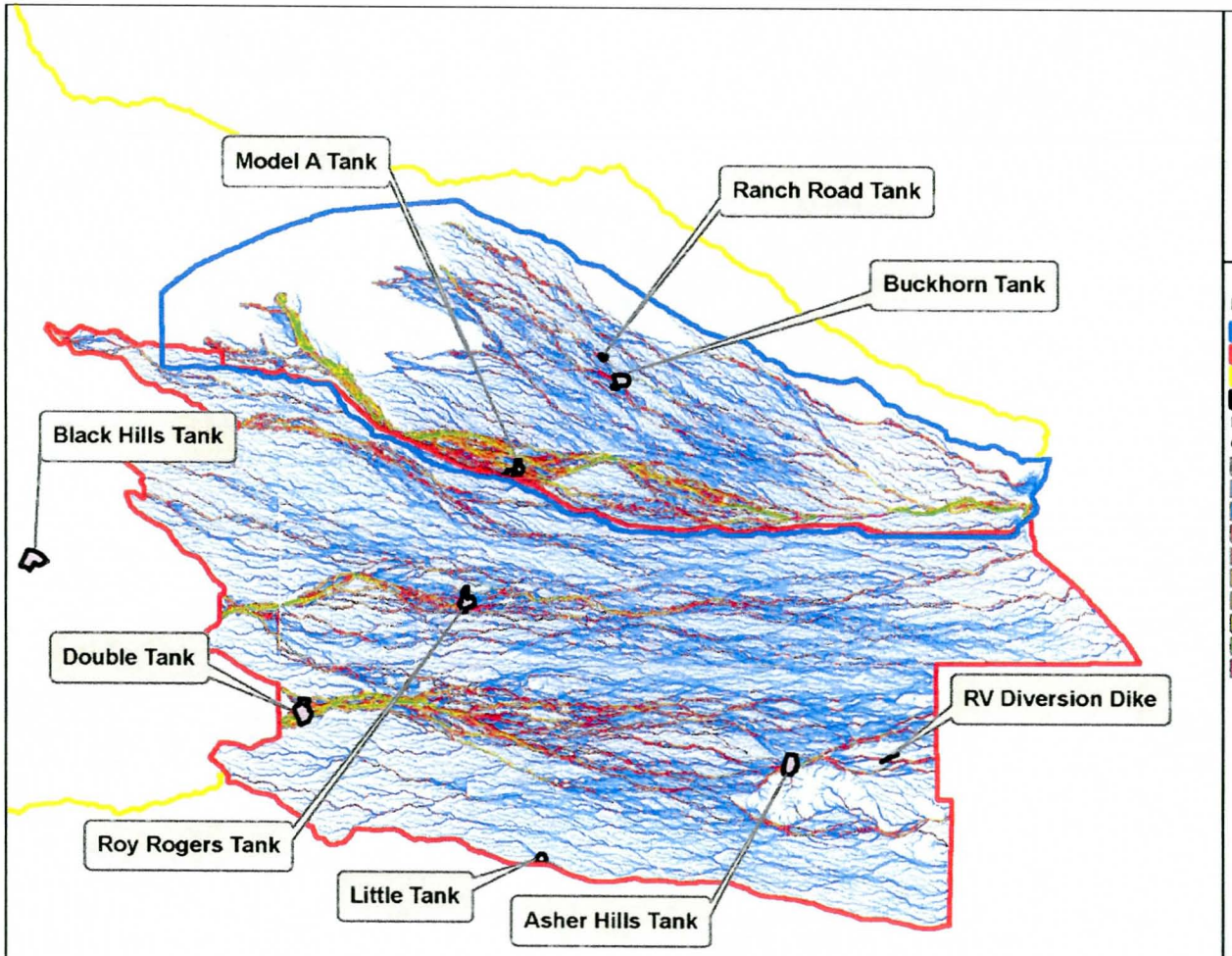

Flood Control District of Maricopa County

RIO VERDE ADMP
FCD PCN 681.01.20

Legend
- 2D Phase A Study Area
- 2D Phase B Study Area
- 1D Study Area
- Stock Tanks

Max Q wo Stock Tanks
Q, cfs
- 0 - 1
- 1.01 - 10
- 10.01 - 25
- 25.01 - 50
- 50.01 - 75
- 75.01 - 100
- 100.01 - 150
- 150.01 - 200
- 200.01 - 500
- 500.01 - 5,921.21

Aerial Photographs:
December 2006
Flood Control District
of Maricopa County
0.8-foot pixel.

N W E S

Feet
0 2,500 5,000

FIGURE 4.19b
Stock Tank and Diversion Dike Locations Map
(Q without Stock Tanks

Flood Control District
of Maricopa County

Engineering Division

4.3.1.3 Summary

There were no other special problems encountered during this study. However, the two-dimensional model approach to hydrology for this study is actually a solution to a special problem. Preparing an effective model of the hydrology of the area has been problematic due to the distributary nature of the watercourses in the area. Numerous methods were attempted to model the split flow hydraulics. The application of the FLO-2D model has provided the District with significant insights into the distribution of flow and runoff volume on this complex surface. The existing condition FLO-2D model provides a more realistic simulation of the flow split hydraulics and the attenuation of the flood hydrographs resulting from shallow sheet flow than can be obtained from a one-dimensional HEC-1 model. The 2D modeling for this study is a solution to the special problem the District has had in delineating realistic flood hazards in the Rio Verde watershed.

4.3.2 Modeling Warning and Error Messages

There are no warning or error messages produced by the FLO-2D software for the model runs documented in this Two-Dimensional Technical Data Notebook (2D-TDN) report.

4.4 Calibration

There are no flow gage records for this watershed or similar distributary flow watersheds that can be used for model calibration. Instead, the model hydrologic results were checked for reasonableness using indirect methods. Refer to Section 4.5.2.

4.5 Final Results

4.5.1 Hydrologic Analysis Results

The FLO-2D output for this study is quite voluminous given that results are produced for each of the over 1.1 million grid elements. The most efficient way to present the hydrologic results is two-fold. First, the results are shown graphically using a color scheme for the maximum peak discharge crossing the individual grid elements. The graphical results are created using ESRI GIS shape files, which are provided in digital format. This method is described in Section 4.5.1.1. The second method of presenting the hydrology results is to plot inflow and runoff hydrographs and tabulated results at selected locations within the study area. The second method is presented in Section 4.5.1.2 through Section 4.5.1.5 and the results discussed.

4.5.1.1 2D Modeling Peak Discharge Results

Refer to Figure 4.20 for a reduced view of the peak discharge results, and the watershed work maps in Appendix G.1 for a more detailed view. The peak discharge results shown on Figure 4.20 represent the maximum flow rates crossing each grid element. The results are color coded and each color represents a range of peak discharge crossing the grid element. The information shown on Figure 4.20 is a compilation of results from the Phase A and Phase B FLO-2D models. The compiled results are contained in ESRI GIS shape file and database format on DVD in Appendix **Error! Reference source not found.** There are two FLO-2D models for both the Phase A and Phase B modeling areas. Each phase has a "with stock tanks" model and a "without stock tanks" model. The "with stock tanks" models are based on the existing topography as of the date of the aerial mapping covering that area, including adding any as-built critical features constructed after the mapping dates. Refer to Section 3 for a description of the topographic mapping used, and the survey information used for updates.

These models include existing stock tanks, berms, and diversion dikes. The "without stock tanks" models are based on modified topography with the stock tanks, berms, and diversion dikes removed and the ground restored as close to the natural condition as possible. The FLO-2D output from all four models was used to compile the summary databases contained as a part of the hydrology results GIS shape files. Six GIS shape files were produced for each model phase. The GIS shape files included in Appendix E.6 are listed in Table 4.3. Database field names are enclosed in brackets. The database fields for the *flo2dgis.shp* and *PHA(B)25MaxResults.shp* files are presented in Table 4.4 and Table 4.5, respectively.

4.5.1.2 HEC-1 Inflow Hydrographs

Hydrographs from the 1D study area, generated using HEC-1, were used as inflow to the Phase A and Phase B FLO-2D models. The locations of those inflow points are shown on Figure 4.3. Plots of the inflow hydrographs for the Phase A models are shown on Figure 4.21. The hydrograph time base is 24 hours, but was shortened to hours 11 through 16 to more clearly show the peak discharges. Plots of the inflow hydrographs for the Phase B models are shown on Figure 4.22. The hydrograph names shown on Figure 4.21 and Figure 4.22 are the names of the HEC-1 hydrograph operation from which each is derived. Refer to the *INFLOW.DAT* FLO-2D input data files on DVD in Appendix E for complete tabulations of all the inflow hydrographs. The 100-year 24-hour peak discharges for each 1D inflow point and the corresponding 2D model grid element number and source HEC-1 input file name are listed in the table inset in Figure 4.3. A more detailed summary, including time-to-peak, runoff volume, and watershed area is contained in Table 4.6.

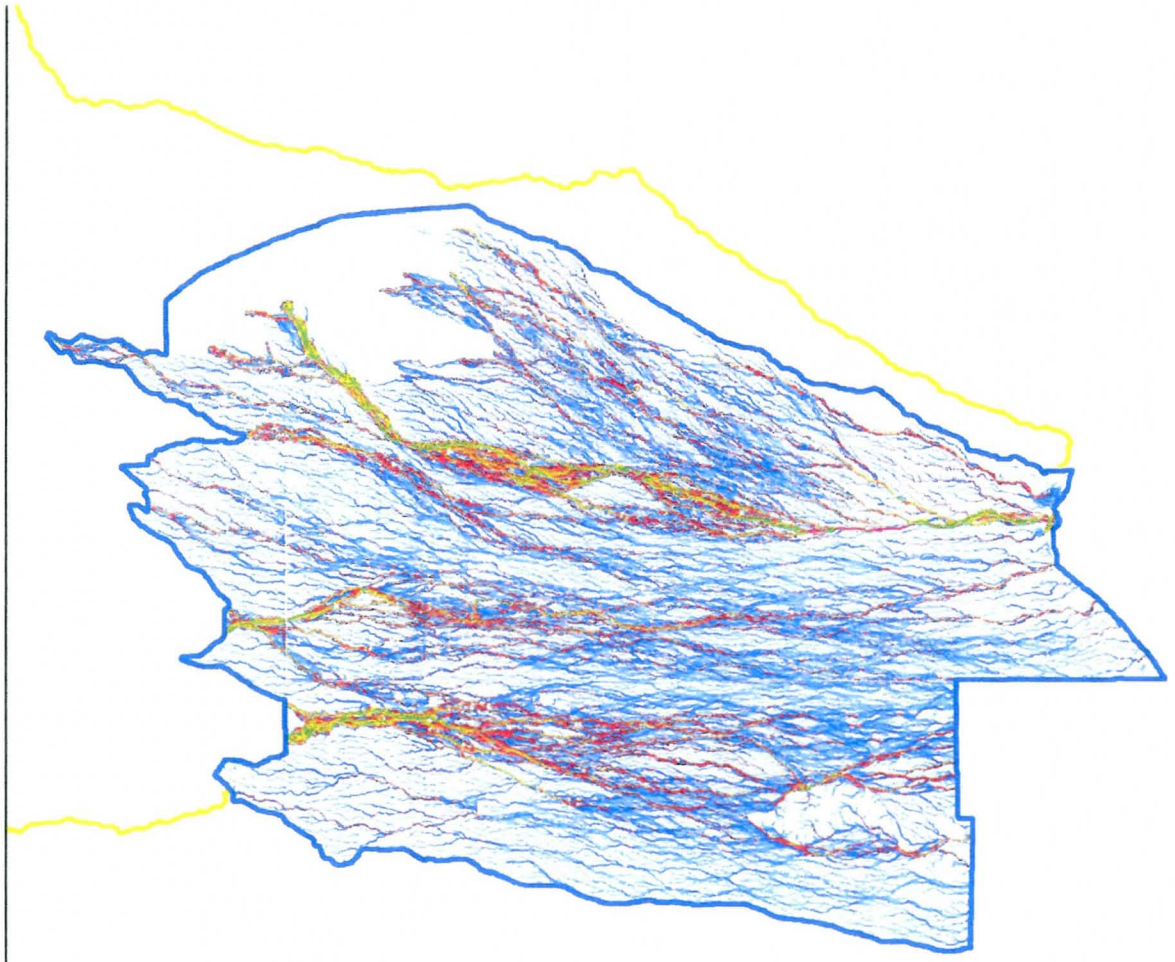

RIO VERDE ADMP
FCD PCN 681.01.20

Legend
- 1D Study Area
- 2D Study Area

Max Discharge
Discharge, cfs/grid
- 0 - 1
- 1.01 - 10
- 10.01 - 25
- 25.01 - 50
- 50.01 - 75
- 75.01 - 100
- 100.01 - 150
- 150.01 - 200
- 200.01 - 500
- 500.01 - 1000

N W E S

0 2,500 5,000 Feet

FIGURE 4.20
Peak Discharge Map
Maximum of with and without Stock Tanks)

Flood Control District of Maricopa County

Engineering Division

Figure 4.20 Peak Discharge Map

Table 4.3 List of GIS Shape Files Containing FLO-2D Results

GIS Shape File Name	Description
flo2dgis.shp	Polygon files created for both the "with stock tanks" and "without stock tanks" FLO-2D runs for both model phases A and B. The file contains a 25'x25' square polygon for each grid element and the database table contains the information listed in Table 4.4.
PHA(B)_PTS.shp	Point shape files created for both the "with stock tanks" and "without stock tanks" FLO-2D runs for both model phases A and B. The point is located at the center of each grid element. The database table contains two fields, [GRIDCODE]: the grid element number; and [DIR]: the direction of flow taken from the [MDirection] field in the *flo2dgis.shp* file.
PHA(B)25MaxResults.shp	Polygon files created for both model phases A and B. The file contains a 25'x25' square polygon for each grid element and the database table contains the maximum values of the "with stock tanks" and "without stock tanks" FLO-2D runs.
PHA(B)_MaxPTS.shp	Point shape files created for both model phases A and B. The point is located at the center of each grid element. The database table contains two fields, [GRIDCODE]: the grid element number; and [DIR]: the direction of flow taken from the [RQMaxDir] field in the *PHA(B)25MaxResults.shp* file.

Table 4.4 FLO-2D Outputs Used for the *flo2dgis.shp* Database Table

FLO-2D Input/Output File	Output File Column Heading	Flo2dgis.shp Field	Description
MAXQHYD.OUT	GRID ELEMENT	[GRIDCODE]	The FLO-2D unique identifier for every grid element.
FPLAIN.DAT	6th column	[n]	The Manning's n-value for each grid element.
FPLAIN.DAT	7th column	[Elevation]	The average ground elevation for each grid element.
MAXQHYD.OUT	TIME	[Time]	The time-to-peak corresponding to [MDischarge] and [RDischarge].

Table 4.4 FLO-2D Outputs Used for the *flo2dgis.shp* Database Table

FLO-2D Input/Output File	Output File Column Heading	Flo2dgis.shp Field	Description
MAXQHYD.OUT	MAXIMUM DISCHARGE	[MDischarge]	The maximum discharge leaving the grid element, crossing one of the eight diagonal sides.
MAXQHYD.OUT	DIRECTION	[MDirection]	The direction of [MDischarge] (1=N, 2=E, 3=S, 4=W, 5=NE, 6=SE, 7=SW, 8=NW).
MAXQHYD.OUT	WATER SURFACE	[WSEL]	The water surface elevation associated with [MDischarge].
MAXQHYD.OUT	DEPTH	[Depth]	The flow depth corresponding to [MDischarge] and [MDirection].
MAXQHYD.OUT	VELOCITY	[Velocity]	The flow velocity corresponding to [MDischarge] and [MDirection].
MAXQHYD.OUT	COMBINED MAXQ	[RDischarge]	The resolved peak discharge, which is the estimated maximum peak discharge crossing the grid element consisting of the flow over one of the 8 sides plus the vector component of both the two adjacent diagonal sides.
MAXQHYD.OUT	DIRECTION	[RDirection]	The direction of outflow from the grid element corresponding to [RDischarge]. It is the center direction of the 3 sides used to compute [RDischarge].
DEPTHDUR.OUT	4th field, unnamed	[DepthDur]	The duration of flow where the depth exceeds a prescribed minimum depth. For this study, the minimum depth setting is 6-inches.
DEPFP.OUT	VAR	[Dmax]	The maximum flow depth for the grid element. Can be different from [Depth] above in areas of backwater, etc., and can occur at a different time than [Time].
VELFP.OUT	VAR	[Vmax]	The maximum flow velocity for the grid element. Can be different from [Velocity] above and can occur at a different time than [Time].

Table 4.4 FLO-2D Outputs Used for the *flo2dgis.shp* Database Table

FLO-2D Input/Output File	Output File Column Heading	Flo2dgis.shp Field	Description
INTERGWS.OUT	VAR	[WSELmax]	The maximum water surface elevation corresponding with [Dmax].

Table 4.5 FLO-2D Outputs Used for the *PHA(B)MaxResults.shp* Database Table

FLO-2D Output File	Output File Column Heading	Flo2dgis.shp Field	Description
MAXQHYD.OUT	GRID ELEMENT	[GRIDCODE]	The FLO-2D unique identifier for every grid element.
n/a	n/a	[RQMax]	The maximum of [RQw] and [RQwo].
n/a	n/a	[RQMaxDir]	The value [RQwDir] or [RQwDir] corresponding to [RQMax].
n/a	n/a	[DMax]	The maximum of [Dw] and [Dwo].
n/a	n/a	[Vmax]	The maximum of [Vw] and [Vwo].
n/a	n/a	[WSELMax]	The maximum of [WSELw] and [WSELwo].
MAXQHYD.OUT	COMBINED MAXQ	[RQw]	The resolved peak discharge from the "with Stock Tanks" run. Same as [RDischarge] in Table 4.4.
MAXQHYD.OUT	DIRECTION	[RQwDir]	The direction of outflow from the grid element for the "with Stock Tanks" run. Same as [RDirection] in Table 4.4.
MAXQHYD.OUT	COMBINED MAXQ	[RQwo]	The resolved peak discharge from the "without Stock Tanks" run. Same as [RDischarge] in Table 4.4.
MAXQHYD.OUT	DIRECTION	[RQwoDir]	The direction of outflow from the grid element for the "without Stock Tanks" run. Same as [RDirection] in Table 4.4.

Table 4.5 FLO-2D Outputs Used for the *PHA(B)MaxResults.shp* Database Table

FLO-2D Output File	Output File Column Heading	Flo2dgis.shp Field	Description
DEPFP.OUT	VAR	[Dw]	The maximum flow depth for the grid element from the "with Stock Tanks" run. Same as [Dmax] in Table 4.4.
DEPFP.OUT	VAR	[Dwo]	The maximum flow depth for the grid element from the "without Stock Tanks" run. Same as [Dmax] in Table 4.4.
VELFP.OUT	VAR	[Vw]	The maximum flow velocity for the grid element from the "with Stock Tanks" run. Same as [Vmax] in Table 4.4.
VELFP.OUT	VAR	[Vwo]	The maximum flow velocity for the grid element from the "without Stock Tanks" run. Same as [Vmax] in Table 4.4.
INTERGWS.OUT	VAR	[WSELw]	The maximum water surface elevation from the "with Stock Tanks" run. Same as [WSELmax] in Table 4.4.
INTERGWS.OUT	VAR	[WSELwo]	The maximum water surface elevation from the "without Stock Tanks" run. Same as [WSELmax] in Table 4.4.

Figure 4.21 FLO-2D Phase A Model Inflow Hydrographs

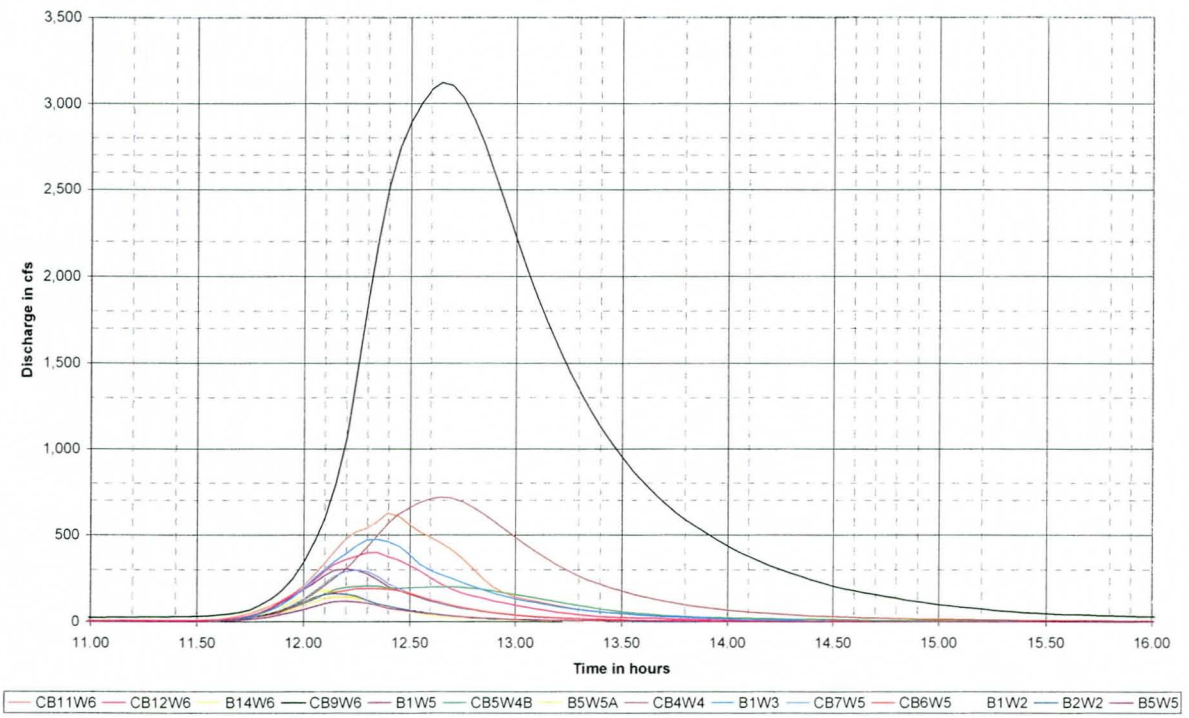

Figure 4.22 FLO-2D Phase B Model Inflow Hydrographs

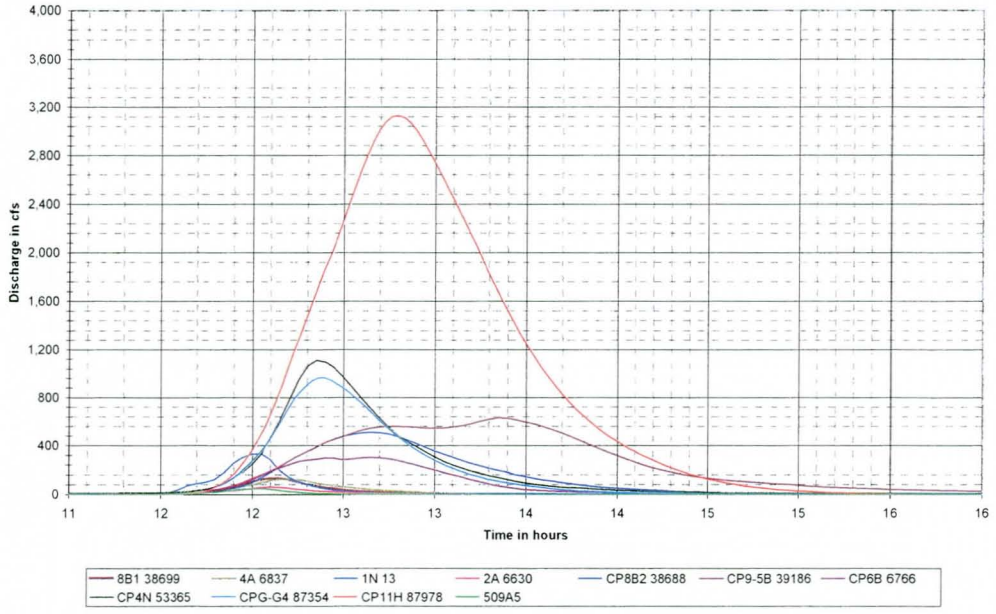

Table 4.6 Summary of 1D Model Inflow Parameters to 2D Study Area

ID	HEC-1 ID	Grid Number	Q, cfs	T_p, hours	Volume, ac-ft	Area, sm	Phase	Source
1	2	3	4	5	6	7	8	9
1	CP11H	87978	3,130	12.80	303.00	4.07	B	South HEC-1 Model
2	CP8B2A	38688	510	12.65	49.00	0.67	B	North-South HEC-1 Model
3	CP9BA	39186	630	13.35	102.00	1.35	B	North-South HEC-1 Model
4	CP6B	6766	301	12.65	31.00	0.20	B	North-South HEC-1 Model
5	2A	6630	58	12.10	3.00	0.30	B	North-South HEC-1 Model
6	4A	6837	125	12.20	7.00	0.08	B	North-South HEC-1 Model
7	CP4N	54943	1,111	12.35	81.00	0.81	B	North-South HEC-1 Model
8	1N	13	331	12.05	16.00	0.13	B	North-South HEC-1 Model
8	1N	13	331	12.05	16.00	0.13	B	North-South HEC-1 Model
9	CB9W6	32550	3,124	12.65	318.00	3.68	A	North North HEC-1 Model
10	CB12W6	19424	398	12.35	29.00	0.34	A	North North HEC-1 Model
11	CB7W5	118645	298	12.25	16.00	0.21	A	North North HEC-1 Model
12	B5W5A	84415	142	12.20	7.00	0.10	A	North North HEC-1 Model
13	B1W5	73407	304	12.20	17.00	0.21	A	North North HEC-1 Model
14	CB6W5	141132	192	12.30	13.00	0.18	A	North North HEC-1 Model
15	CB5W4B	86038	206	12.35	24.00	0.33	A	North North HEC-1 Model
16	CB4W4	113796	717	12.65	65.00	0.90	A	North North

Table 4.6 Summary of 1D Model Inflow Parameters to 2D Study Area

ID	HEC-1 ID	Grid Number	Q, cfs	T_p, hours	Volume, ac-ft	Area, sm	Phase	Source
1	2	3	4	5	6	7	8	9
								HEC-1 Model
17	B1W3	115925	474	12.35	33.00	0.45	A	North North HEC-1 Model
18	B1W2	266775	119	12.15	6.00	0.08	A	North North HEC-1 Model
19	B2W2	266777	164	12.15	8.00	0.10	A	North North HEC-1 Model
20	B4W2	346771	172	12.10	7.00	0.10	A	North North HEC-1 Model
21	B14W6	26152	178	12.10	8.00	0.11	A	North North HEC-1 Model
22	CB11W6	9499	627	12.40	48.00	0.49	A	North North HEC-1 Model
23	B5W5	80813	118	12.20	6.00	0.09	A	North North HEC-1 Model
24	8B1	38699	132	12.10	6.00	0.08	B	North-South HEC-1 Model
25	509A5	44291	46	12.03	2.00	0.02	B	South HEC-1 Model
26	CP3B2	39622	1,838	12.90	195.00	2.35	B	North-South HEC-1 Model
27	CPG-G4	88025	964	12.40	65.00	0.86	B	South HEC-1 Model

4.5.1.3 FLO-2D Generated Inflow Hydrographs

There are two locations where flow significant enough to model drains from Phase B into Phase A. These two areas are described in Section 4.3.1.2 , Problem 2 and their locations shown on Figure 4.23. The grid elements where the flow leaves Phase B and enters Phase A were used to define an outflow cross section. These are coded in the *FPXSEC.DAT* FLO-2D input file. The two cross sections are numbered 15 and 16. These numbers correspond with the cross section entry order in the *FPXSEC.DAT* file, and are the cross section labels shown on Figure 4.23. The resulting outflow hydrographs are stored by FLO-2D in the *HYCROSS.OUT* file. Individual hydrographs for every grid element defining the cross section are stored in the *CROSSQ.OUT* FLO-2D output file and a summary of the results stored in the

CROSSMAX.OUT FLO-2D output file. The cross section results are summarized in Table 4.7. The outflow hydrographs used as inflow to the Phase A model are shown on Figure 4.24. The results are displayed for both the "with" and "without stock tanks" conditions.

At the two locations, the "with stock tanks" results are virtually identical to the "without stock tanks" results. This is because there are no stock tanks or levees in the watershed upstream of either location. There are slight differences between the results because of dynamic n-value adjustment during the model runs. Refer to Section 5.3.1.

4.5.1.4 FLO-2D Generated Outflow Hydrographs

Phase A. In order to obtain runoff hydrographs from FLO-2D, the user must specify the locations where hydrographs are needed. As mentioned in Section 4.5.1.3, this is done using the *FPXSEC.DAT* FLO-2D input data file. The locations in Phase A where hydrographs were generated, and plots of those hydrographs, are shown on Figure 4.25 and Figure 4.26, respectively. The locations were selected where flow is concentrated in a confined channel and to best show the effects of with and without Stock Tanks conditions. Cross section 1 was used for other purposes and is not discussed. Cross sections 2, 3, and 5 are all on Rio Verde Wash K. This is the main wash in the Phase A study area. Notice that all three sets of hydrographs show influence by the Model A Tank. With the Model A Tank "removed", the peak discharges at all three locations are lower and the times to peak longer. Model A Tank concentrates flow and diverts it into the northeast braid of Rio Verde Wash K. The diversion results in higher velocities and less overbank sheet flow, thus less flow attenuation and faster travel times. With the Model A Tank "removed", flow is distributed more evenly between the northeast and southeast braids (refer to Figure 4.19). This in turn results in shallower flow depths, more sheet flow, lower velocities, and more flow attenuation.

Cross section 4 is on Rio Verde Wash L. This cross section was defined to show a representative hydrograph from a relatively small watershed area with little distributary flow characteristics. It was also define to provide a hydrograph for future design purposes at Forest Road.

The cross section hydrology results are summarized in Table 4.8. Note that peak discharges are increasing as flow proceeds downstream and more tributary washes join Rio Verde Wash K. Runoff volumes from the "without stock tanks" model are less than the "with stock tanks" model due to increased infiltration losses. The FLO-2D model simulates channel transmission losses for each grid element using the Green and Ampt equation. The "without stock tanks" model has a larger area of inundation, shallower flow depths, and relatively lower velocities, so total infiltration volumes are higher than for the "with stock tanks" model.

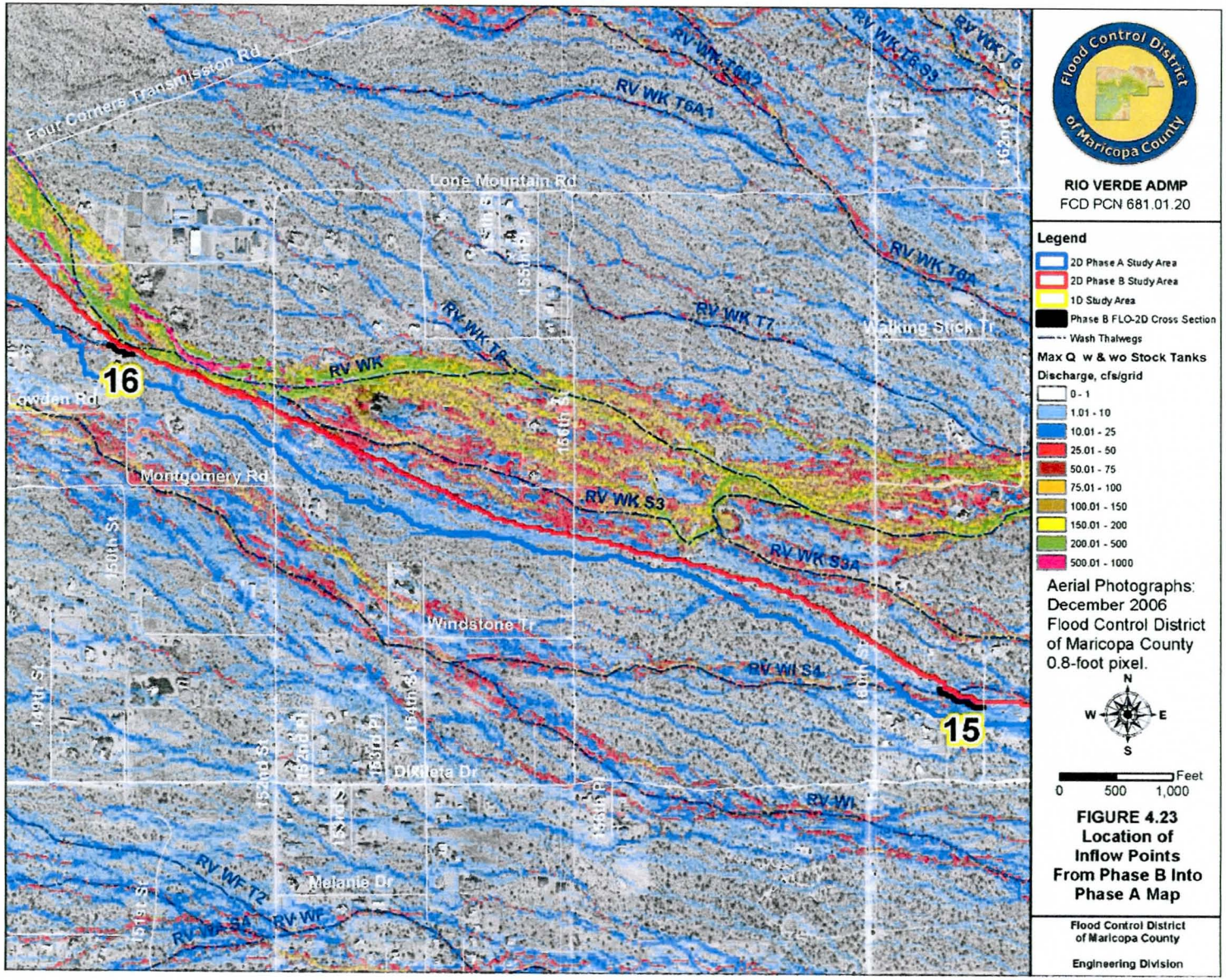

Figure 4.23 Location of Inflow Points from Phase B into Phase A

Figure 4.24 Phase B Outflow Hydrographs Used as Inflow to Phase A

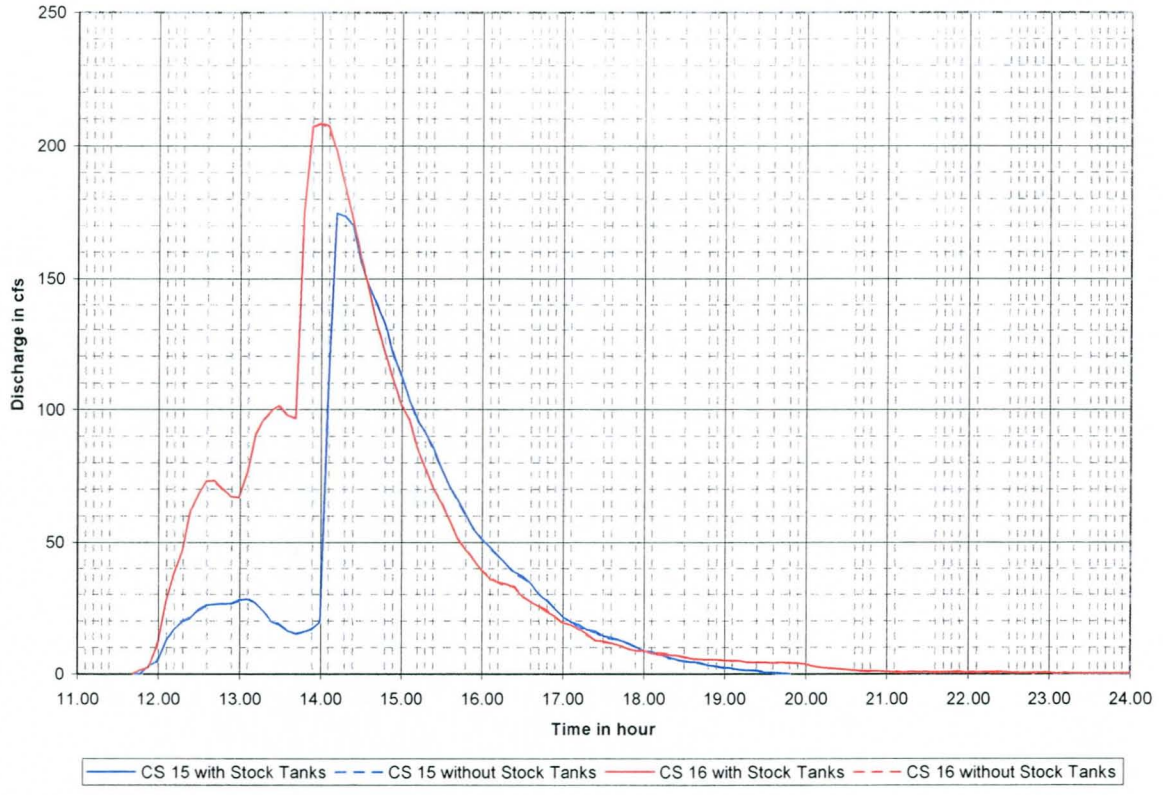

Table 4.7 Summary of Results of FLO-2D Generated Inflow Hydrographs

Cross Section	Peak Discharge in cfs	Time to Peak in hours	Total Runoff Volume in ac-ft
15 with	210	13.95	27.8
16 with	242	13.65	38.3
15 without	179	14.22	26.2
16 without	209	13.99	37.7

Figure 4.25 Location of Phase A FLO-2D Cross Sections

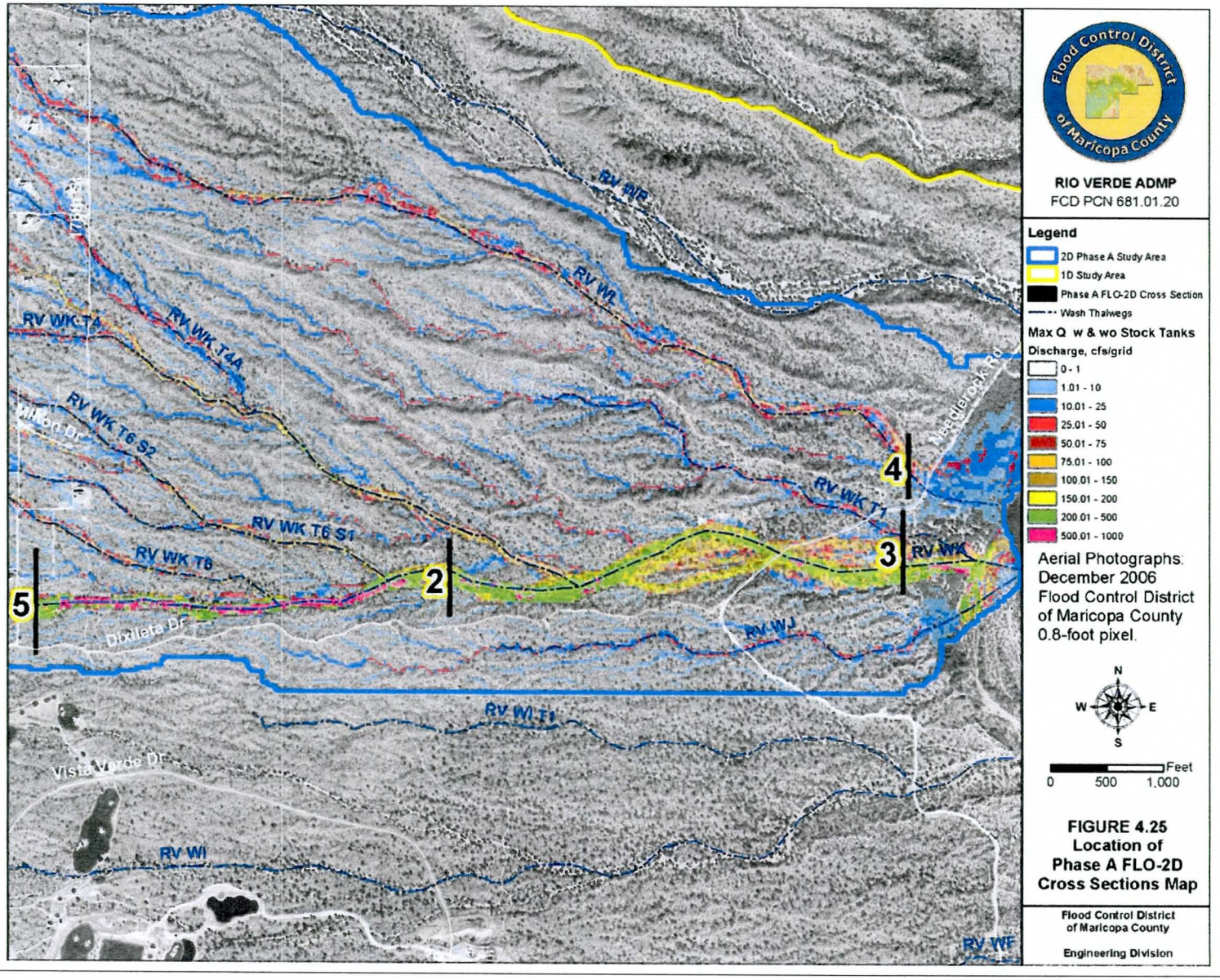

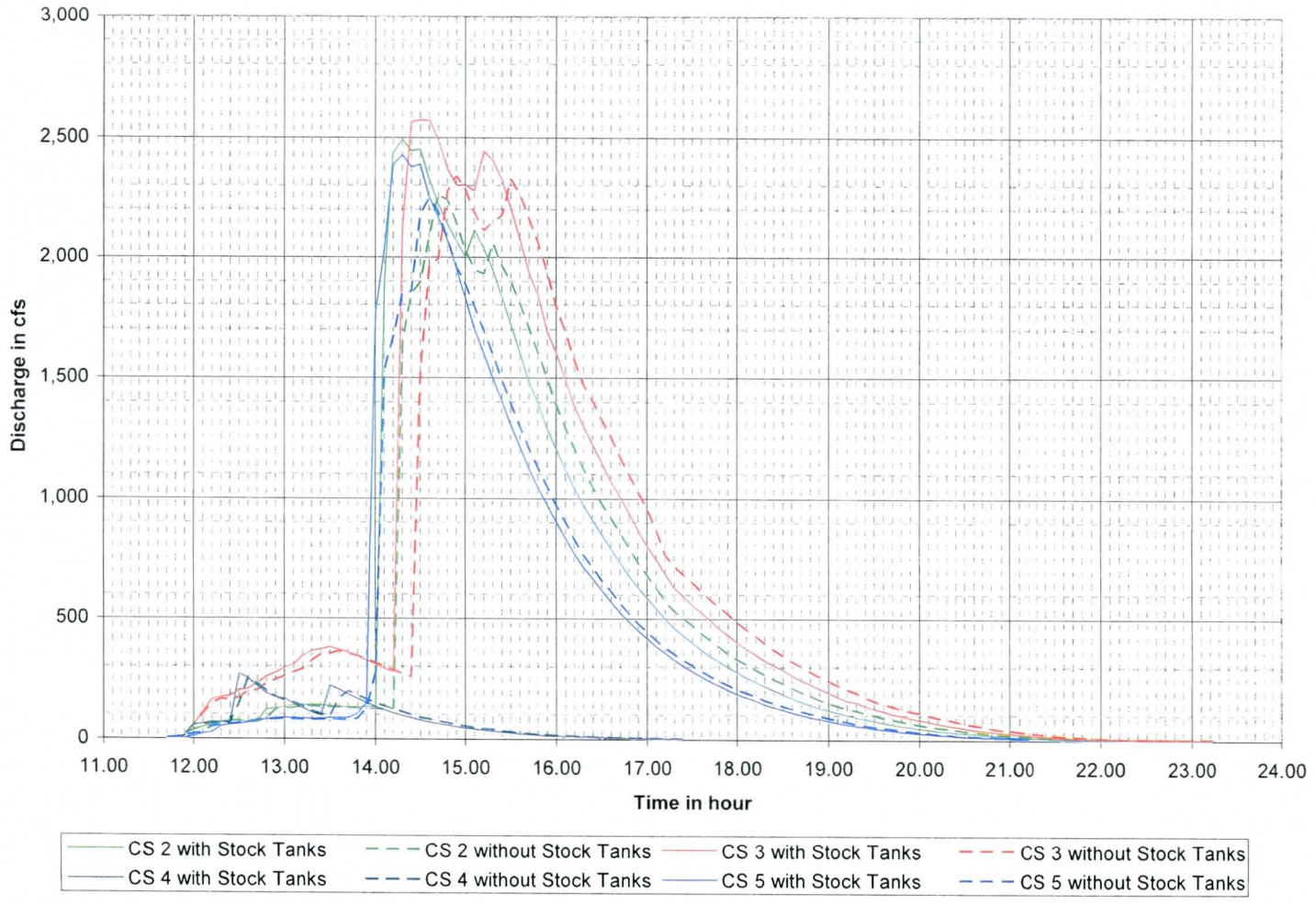

Figure 4.26 FLO-2D Phase A Hydrographs

Phase B. The locations in Phase B where hydrographs were generated are shown in Figure 4.27. Hydrographs for cross sections downstream of the Roy Rogers Tank (refer to Figure 4.19 for location) are shown on Figure 4.28. Note there is very little impact on downstream peak discharges as a result of "removing" the Roy Rogers Tank. This tank does result in some flow diversion, but not nearly as significant as that caused by the Model A Tank in Phase A. This can also be seen in the results for cross sections 1, 2, 10, 12, 14 and 26 in Table 4.8. The biggest change can be seen for cross section 26. Cross section 26 is much closer to the Roy Rogers Tank and is on the main wash (Rio Verde Wash F). With the Roy Rogers Tank removed, runoff is no longer diverted away from the main braid of Rio Verde Wash F, which is why the peak discharge increases slightly for the "without stock tanks" condition.

Hydrographs for cross sections downstream of the Double Tank are shown in Figure 4.28. Note that typically the peak discharges and runoff volumes increase for the "without stock tanks" model (refer to Table 4.8). The Double Tank does not cause a significant diversion or concentration of flow. It is very large, however, and even with the below ground storage removed for modeling purposes, measurable attenuation due to storage occurs.

The hydrograph at cross section 20 represents the total flow in Rio Verde Wash 10, Wash 10 Split 4, and Wash 10 Split 1. The hydrograph at cross section 18 represents the total flow in Rio Verde Wash 10 downstream of all Wash 10 splits. The hydrograph at cross section 19, immediately upstream of the Asher Hills Tank, represents the flow from Rio Verde Wash 10 Split 4 combined with a portion of the flow from Rio Verde Wash 11 Split 8. Note that the flow at cross section 20 is predominantly braided sheet flow spread out over 2,400 feet. That flow becomes concentrated at the north end of Asher Hills and splits into two discrete washes. Significant attenuation in peak discharge due to sheet flow occurs between cross section 20 and cross sections 18 and 19. The total flow at cross section 20 ranges from 1,017 to 1,069 cfs, and the combined flow from cross sections 18 and 19 ranges from 809 to 861 cfs. The divided flow is roughly a 50-50 split.

The hydrographs for cross sections downstream of the Asher Hills Tank are shown on Figure 4.30. Note that there are significant differences in peak discharge and runoff volume as a result of the Asher Hills Tank. Asher Hills Tanks has an extensive training dike extending northwest from the tank that diverts a large area of sheet flow into the tank. This dike is removed for the "without stock tanks" model, and as a result, peak discharges and runoff volumes at cross sections 6, 7, 21, 22 and 23 are significantly affected. In addition, peak discharges and runoff volumes at cross sections 7 and 22 are significantly affected by the RV Diversion Dike. Hydrographs for cross sections 3, 4, 9, 11, 13 and 25 are not presented herein due to the small peak discharges at those locations and because they are not significantly affected by stock tanks or levees. Peak discharge and runoff volume results for those locations are shown in Table 4.8.

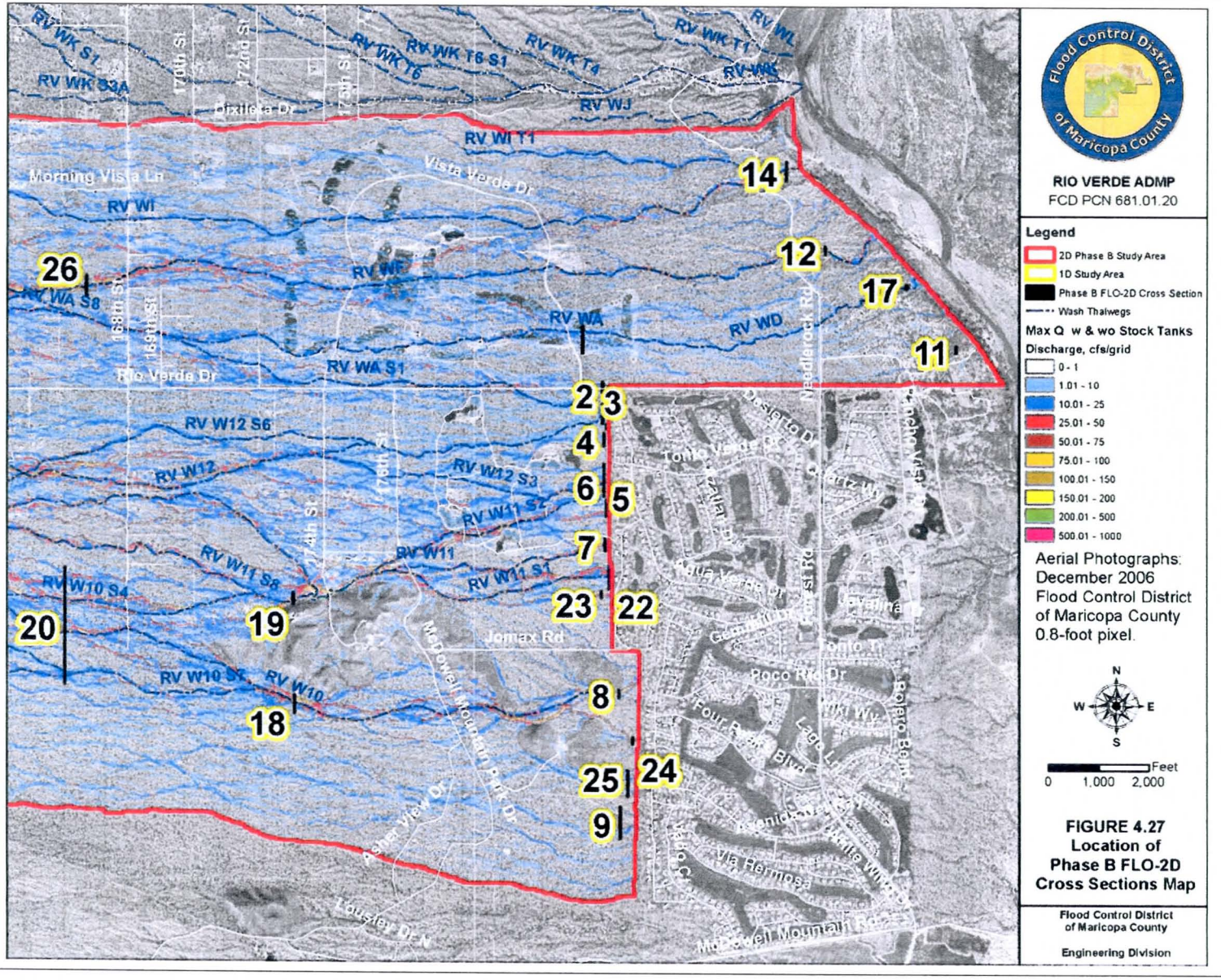

Figure 4.27 Location of Phase B FLO-2D Cross Sections

Table 4.8 Summary of FLO-2D Hydrology Results at Cross Section Locations

Phase	Cross Section	Peak Discharge, cfs		Time to Peak, hours		Volume, ac-ft	
		with	without	with	without	with	without
A	2	2,514	2,268	14.25	14.72	471.2	451.9
A	3	2,602	2,345	14.45	14.90	558.2	536.1
A	4	269	260	12.51	12.56	34.1	34.0
A	5	2,440	2,250	14.18	14.58	401.3	382.9
B	1	84	83	18.01	18.09	17.6	17.3
B	2	105	102	18.87	18.84	26.8	26.2
B	3	9	8	18.93	18.95	2.0	1.9
B	4	43	42	17.59	17.53	12.8	12.6
B	5	44	47	17.52	17.60	7.6	7.8
B	6	183	214	17.27	17.02	34.8	38.4
B	7	186	71	16.76	16.98	49.3	12.9
B	8	265	281	16.63	16.52	87.7	89.7
B	9	39	39	14.56	14.55	13.5	13.6
B	10	139	136	17.93	17.96	27.5	27.4
B	11	42	42	12.81	12.80	5.5	5.5
B	12	126	126	18.48	18.44	40.9	40.7
B	13	195	194	19.02	19.03	85.6	85.3
B	14	193	192	19.08	19.10	84.8	84.6
B	15	178	179	14.23	14.23	26.2	26.2
B	16	209	209	13.99	14.03	37.7	37.7
B	17	50	50	20.16	20.14	18.0	18.1
B	18	425	457	15.48	15.37	102.2	105.1
B	19	384	404	15.47	15.41	75.8	77.1
B	20	1,017	1069	14.58	14.51	181.7	186.2
B	21	135	166	17.13	17.00	36.0	39.4
B	22	125	249	16.62	16.52	32.1	62.2
B	23	124	107	16.51	16.53	24.3	20.5
B	24	118	126	16.68	16.58	40.9	41.9

Table 4.8 Summary of FLO-2D Hydrology Results at Cross Section Locations

Phase	Cross Section	Peak Discharge, cfs		Time to Peak, hours		Volume, ac-ft	
		with	without	with	without	with	without
B	25	67	67	12.60	12.60	25.5	25.8
B	26	572	589	15.27	15.22	117.1	116.6

Figure 4.28 FLO-2D Phase B Hydrographs Downstream of Roy Rogers Tank

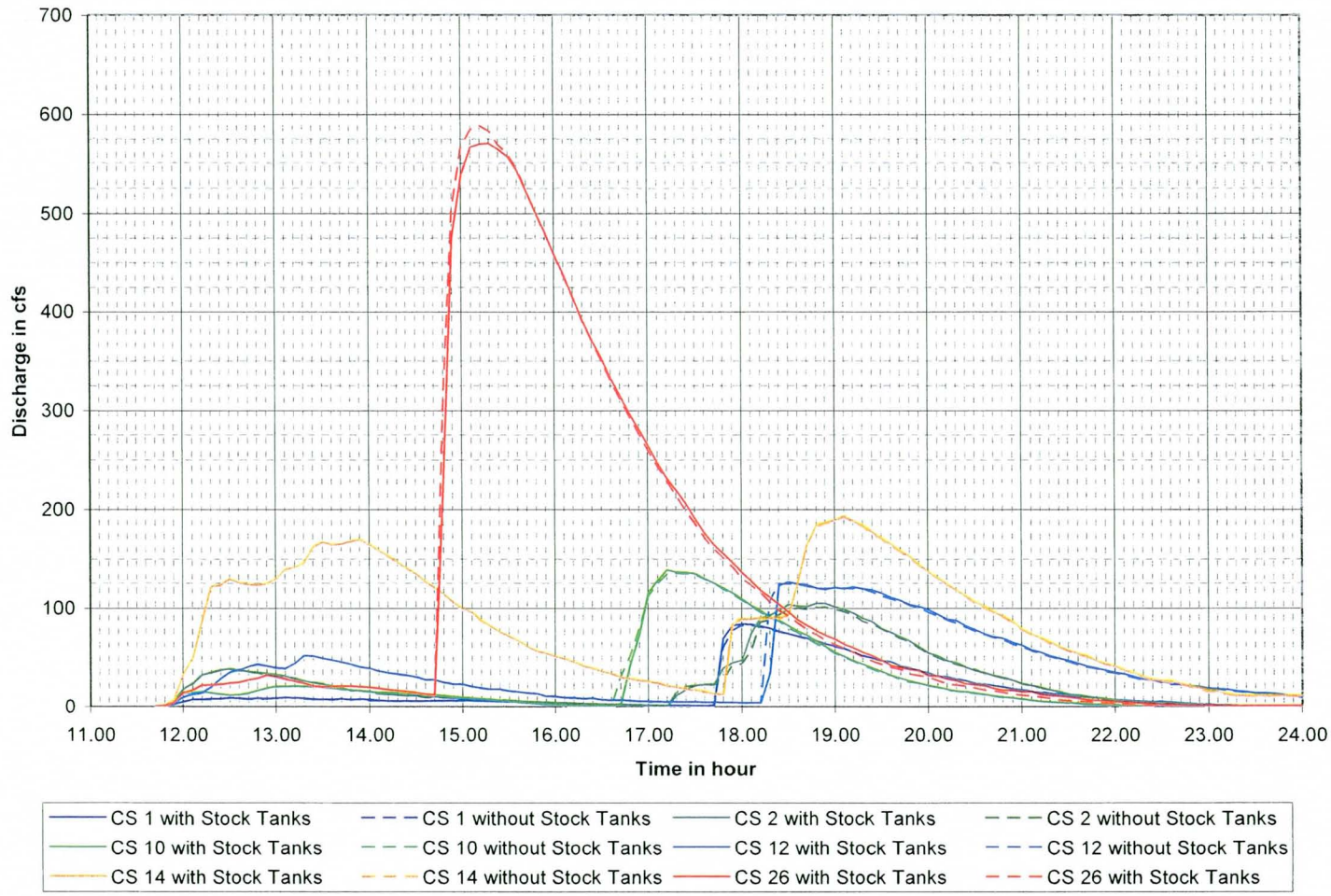

Figure 4.29 FLO-2D Phase B Hydrographs Downstream of Double Tank

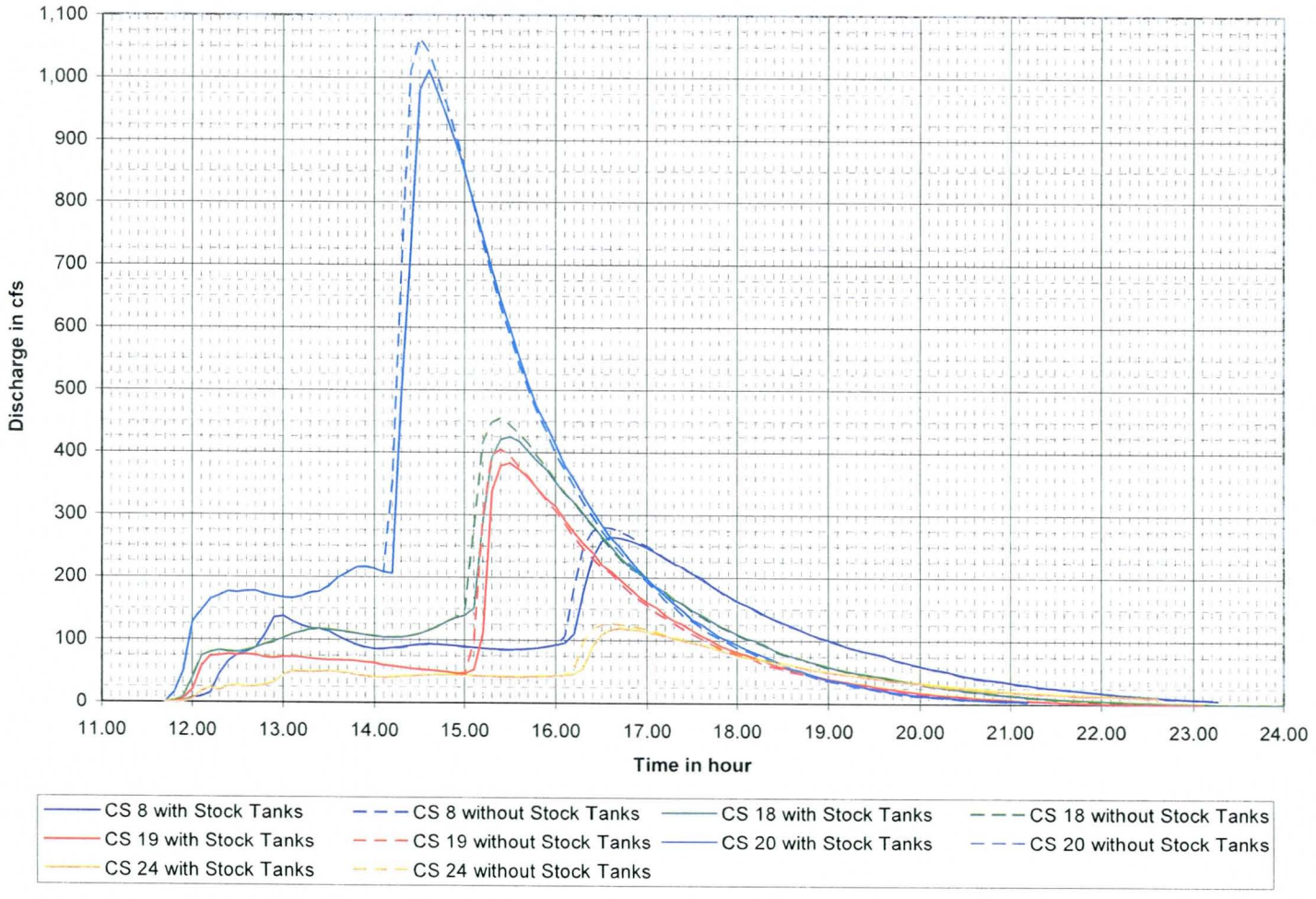

Figure 4.30 FLO-2D Phase B Hydrographs Downstream of Asher Hills Tank

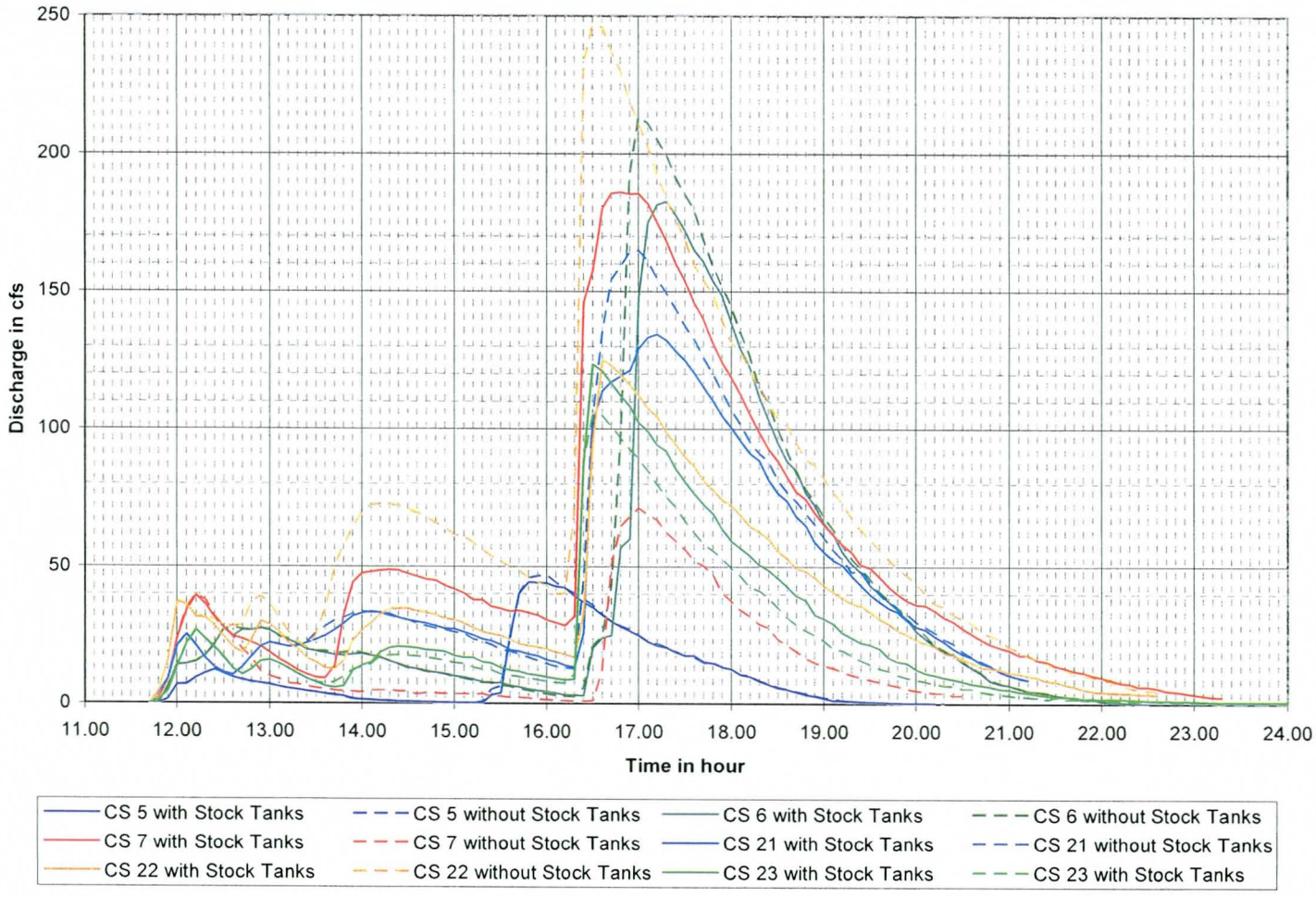

4.5.1.5 Comparison of FLO-2D Model Results with Previous Studies

There are three previous studies that were done for hydrology and floodplain delineation purposes. These are:

1. *Rio Verde-North Floodplain Delineation Study* by Burgess & Niple, Inc., FCD 93-06 (B&N, 1994).
2. *Rio Verde South Floodplain Delineation Study* by McLaughlin Kmetty Engineers, Ltd., FCD 93-07 (MKE, 1995).
3. *Rio Verde North Extension Floodplain Delineation Study* by David Evans and Associates, Inc. and Primatech Engineers and Consultants, FCD 98-21 (DEA, 2002 and PTech, 2002).
4. *Floodplain Delineation Study of Rio Verde South Extension* by JE Fuller Hydrology & Geomorphology, FCD 97-13 (Fuller, 1999).

The third study, DEA (2002) and PTech (2002), was never submitted to FEMA. That study consisted of two parts. The north half was done by Primatech and the limits are shown on Figure 4.31. The south half was done by David Evans and Associates and was a re-study of B&N (1994). Both studies 1 and 2, with limits as shown on Figure 4.31, were submitted and approved by FEMA. The results from DEA (2002) are not included in this comparison, even though it was a more detailed restudy, because B&N (1994) is still the effective study. The third study was not submitted to FEMA by the District because it had become apparent that one-dimensional modeling was not a valid approach for the eastern 75 percent of the Rio Verde Area. The fourth study, with limits as shown on Figure 4.31, was submitted and approved by FEMA. The hydrology for the fourth study was based on MKE (1995). For the purposes of this study, MKE (1995) results are used for hydrologic comparisons instead of Fuller (1999).

Comparison 1: Overall Precipitation and Runoff Volume. The first comparisons made are overall precipitation and runoff volumes. Table 4.9 contains a summary of volumes for the three previous studies examined and the current study. Column 1 lists the preparer, with "FCDMC" representing results of this study. Column 2 lists the associated model phase area for this project that each of the previous studies is related to. Column 3 is the watershed area. Columns 4 and 5 are the total storm precipitation used for each study in inches and acre-feet. The precipitation values are areally reduced. Both the B&N and MKE values in columns 4 and 5 are estimates, since the JD record option was used for both HEC-1 models. Column 6 is the total volume of inflow from the current study HEC-1 models into the 2D study area. Column 7 is the total of precipitation and inflow. Column 8 is the total estimated rainfall loss due to infiltration and storage. The MKE model simulates channel transmission losses, while the PTech, B&N,

and current study HEC-1 models do not. The FLO-2D models include estimation of transmission losses for the entire 2D study area on a grid element by grid element basis. The total estimated volume of outflow from each model is listed in column 9. The unit outflow in columns 10 and 11 are a measure of the relative runoff volume from each area. The values in column 10 are the individual unit outflows from the current study HEC-1 models ([9]/[3]). The values in column 11 for the FCDMC results are a measure of unit outflow for the entire model study phase area.

Figure 4.31 Boundaries of Previous Studies Map

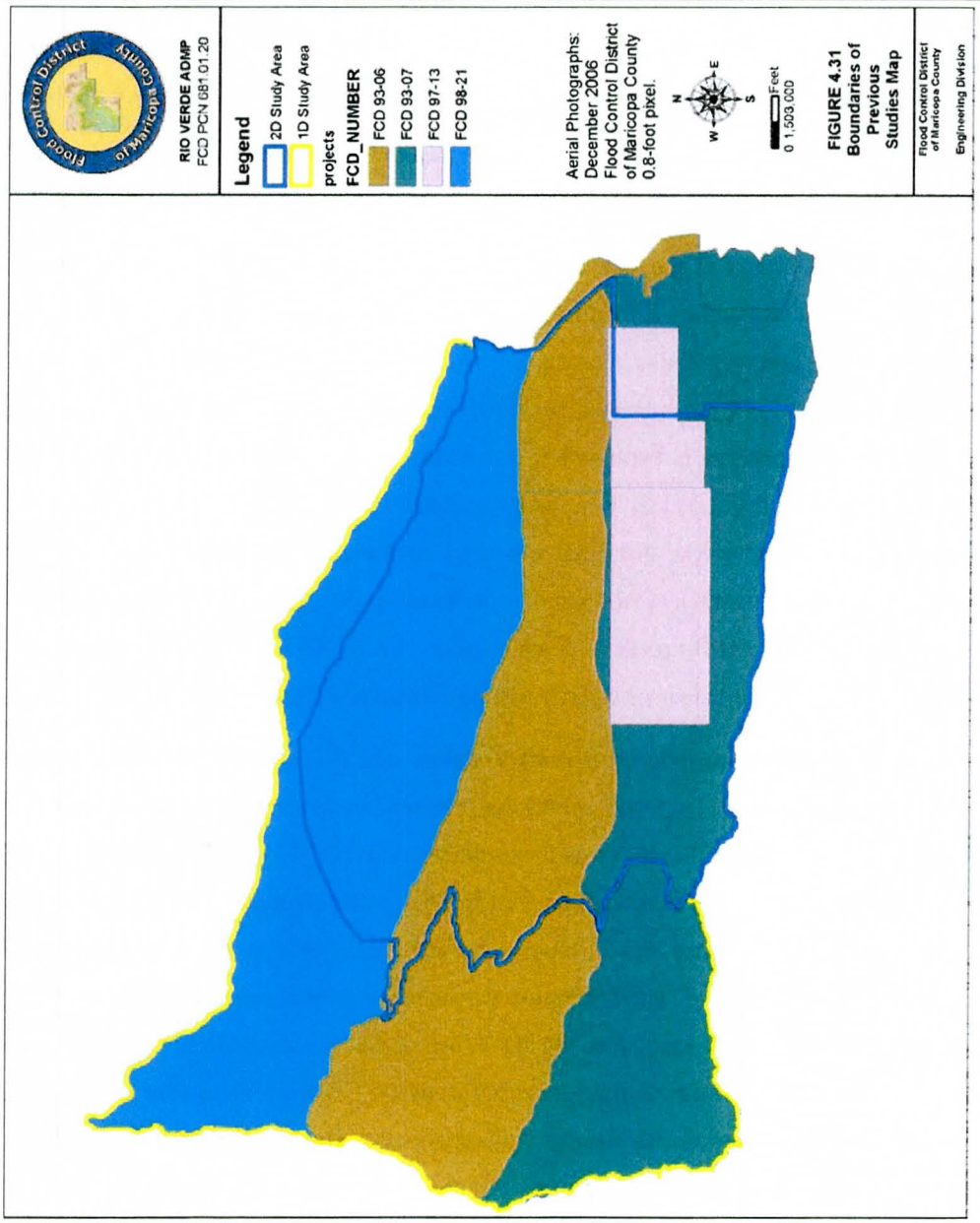

Table 4.9 Comparison of 2D Results with Previous Studies: Overall Volumes

Study		Area, sm	Precipitation		Inflow, ac-ft	Total Inflow, ac-ft	Infil. and Storage, ac-ft	Total Outflow, ac-ft	Unit Outflow, ac-ft/sm	
By	Phase		inches	ac-ft					Ind	Total
1	2	3	4	5	6	7	8	9	10	11
PTech HEC-1	PHA	15.53	4.08	3,379	---	3,379	2,296	1,083	---	70
FCDMC HEC-1	PHA	9.70	4.38	2,266	---	2,266	1,483	783	81	39
FCDMC FLO-2D		6.16	4.36	1,432	666	2,098	1,486	612	---	
B&N HEC-1	PHB	14.68	4.30	3,367	---	3,367	2,421	946	----	64
MKE HEC-1	PHB	17.16	4.13	3,780	---	3,780	2,285	1,495	---	87
FCDMC HEC-1	PHB	13.70	4.41	3,222	---	3,222	2,112	1,110	81	24
FCDMC FLO-2D		16.61	4.12	3,650	857	4,507	3,788	719	---	

Note that the areally reduced point precipitation depths in column 4 are reasonably close to each other. The values used in the current models are generally a little higher than those applied in the previous studies. Since the various studies cannot be directly compared due to different watershed boundaries, the results in column 11 are the focal point. The Phase A unit outflow volumes for the current study are 56 percent of the previous HEC-1 model, and the Phase B results are 32 percent of the average of the two previous models. The reasons for this are due to transmission infiltration losses over large areas of shallow sheet flow. The previous study HEC-1 models, with the exception of the MKE study, did not model channel infiltration losses at all. The hydrograph routing computations are limited to an eight point loss section and only major washes were modeled. The numerous other smaller channels and sheet flow areas were not included, and therefore the entire surface runoff volume was concentrated in the main channels. This resulted in narrower conveyance limits than reality, and thus less infiltration. It is expected that the runoff volumes from the 2D model areas should be significantly lower than the HEC-1 model results.

The Phase A unit outflow from this study is significantly higher than the Phase B value. Examination of Figure 4.23 and Figure 4.32 shows that Rio Verde Wash K, the dominant wash in Phase A, is braided

through the middle of the watershed, but returns to a single, narrower confined wash for the lower 25% of the watershed. There is therefore less braiding and less sheet flow in the Phase A area, resulting in less infiltration loss. Phase B, however, is very distributary through the entire 2D study area. This results in smaller channels and broader shallower areas of sheet flow as runoff moves down through the watershed, and therefore increased infiltration losses.

Comparison 2: Runoff Volumes and Peak Discharges at Specific Locations. The second comparison is runoff volumes and peak discharges at specific locations. The selected locations are shown on Figure 4.32 in comparison with the maximum FLO-2D peak discharge results. The HEC-1 concentration point names (HEC-1 ID) from the various HEC-1 models are shown on that figure. These same HEC-1 ID's are listed in column 2 of Table 4.10. The abbreviation of the company that prepared the HEC-1 model for each HEC-1 ID is listed in column 1 of Table 4.10. If a FLO-2D cross section was defined at that location, it is listed in column 3. The 100-year 24-hour peak discharge results for the previous study are listed in column 4, and the FLO-2D maximum peak discharge results in column 5. The corresponding time to peak and runoff volumes are listed in columns 6 through 9. The watershed areas from the HEC-1 models are listed in column 10. The HEC-ID locations are shown in relation to the existing FEMA floodplains on Figure 4.33.

Examine the results in Table 4.10 for HEC-1 ID's CB14W6, 10S, 135C, and C530. All four of these points are located at the upstream end of the 2D study area before the flow becomes distributary. Note that at all four locations the HEC-1 inflow peak discharge to the 2D study area is greater than the previous study by anywhere from 12 to 56 percent. This is at least partially due to higher point precipitation values and differing T_c estimates. Refer to the Dibble and Associates 1D TDN for more information. In the case of CB14W6, located in Phase A, the FLO-2D peak discharge is 4,380 cfs as compared to 3,560 cfs from the Primatech study. This location is on Rio Verde Wash K. Moving down to the outlet of Wash K at the Verde River, the FLO-2D peak discharge is 2,602 cfs as compared to 4,954 cfs for Primatech. Note also the difference in time to peak of 14.5 hours for FLO-2D as compared to 13.7 hours for Primatech. Wash K is much less distributary than the other major washes in the 2D study area. However, it is very braided through the middle one-half, particularly the lower portion of the middle one-half. The reduction in peak discharge for FLO-2D is attributed to attenuation from sheet flow and transmission losses. Refer to Figure 4.34.

Figure 4.32 Location of HEC-1 CP's from Previous Studies and FLO-2D Results

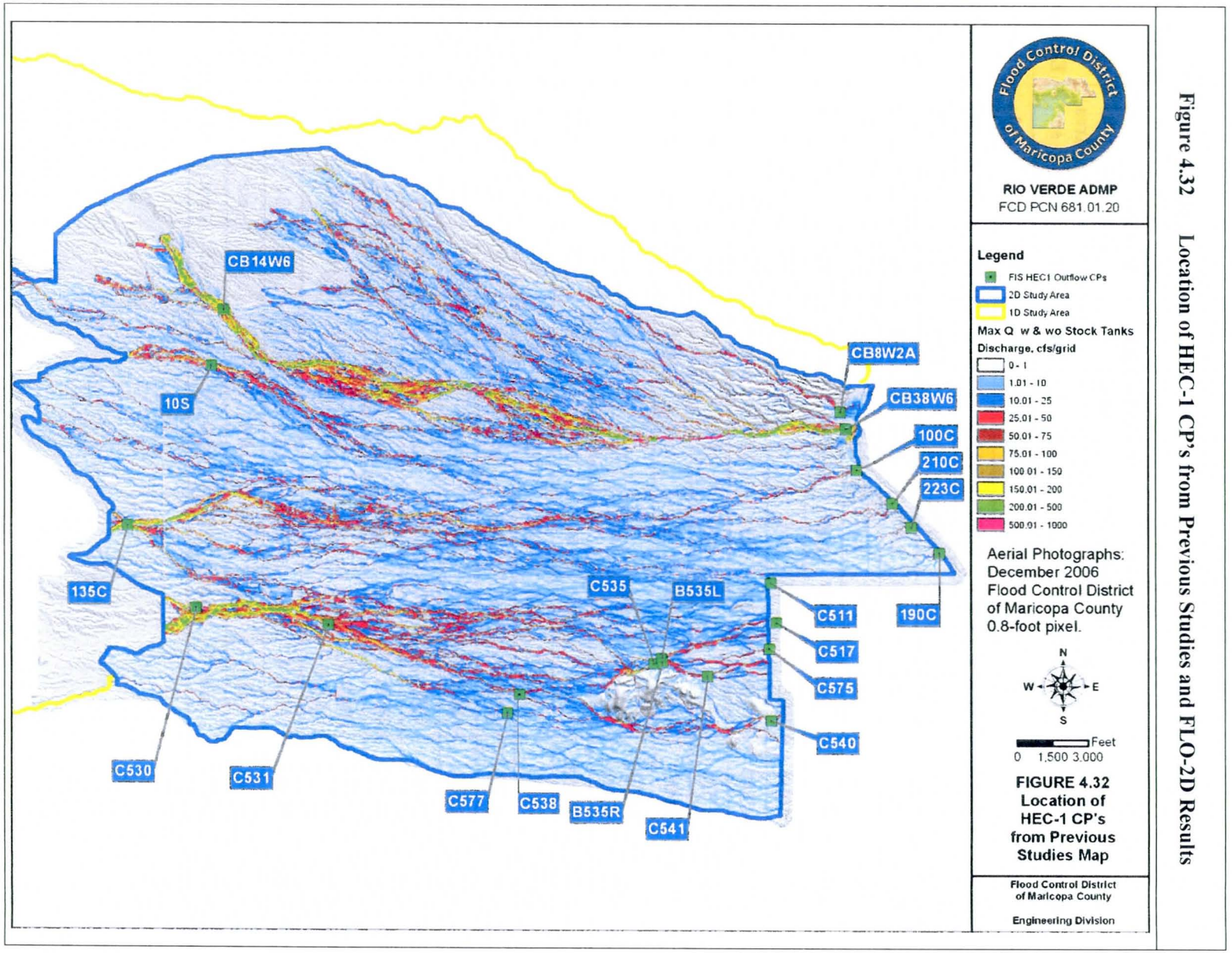

Table 4.10 Comparison of 2D Results with Previous Studies at Specific Locations

Study	HEC-1 ID	FLO2D CS	Peak Discharge, cfs		Time To Peak, hours		Volume, ac-ft		Area, sm	Elevation
			1D	2D	1D	2D	1D	2D		
1	2	3	4	5	6	7	8	9	10	11
PTech	CB38W6	PHA 3	4,954	2,602	13.7	14.5	884	558	12.62	1538
PTech	CB14W6	n/a	3,560	4,380	12.8	12.8	345	n/a	4.80	2363
B&N	135C	n/a	2,560	2,875	13.4	13.1	348	352	4.50	2406
MKE	C530	n/a	2,387	3,722	13.1	12.9	356	370	4.97	2314
MKE	C531	n/a	2,337	1,605	13.3	13.2	362	n/a	5.18	2193
B&N	100C	PHB 14	1,525	193	12.8	19.1	385	85	4.96	1537
MKE	C540	PHB 8	1,409	281	12.9	16.5	300	90	7.64	1666
MKE	C535	n/a	1,107	756	13.9	15.8	235	n/a	6.09	2404
B&N	190C	PHB 11	1,102	42	15.4	12.8	302	6	5.39	1511
MKE	C577, C538	PHB 20	1,034	1,069	13.7	14.5	246	186	7.70	1959
MKE	B535R	n/a	941	463	13.9	15.8	200	n/a	6.09	1797
B&N	10S	n/a	880	1,045	12.92	12.4	93	n/a	1.15	2354
MKE	C575	PHB 7	741	186	14.0	16.8	170	49	6.36	1683
MKE	C511	PHB 2	645	105	12.3	18.9	127	27	11.42	1685
B&N	210C	PHB 12	610	126	15.6	18.5	159	41	2.11	1526
B&N	223C	PHB 17	553	50	15.6	20.2	152	18	2.15	1524
MKE	C517	PHB 5, 6, 21	517	404	12.4	17.0	100	86	7.60	1684
PTech	CB8W2A	PHA 4	446	269	12.4	12.5	46	34	0.69	1560
MKE	C541	n/a	220	320	14.0	16.1	45	n/a	6.15	1744
MKE	B535L	n/a	166	293	13.9	15.8	35	n/a	6.09	1795

Figure 4.33 Location HEC-1 CP's from Previous Studies and FEMA Floodplains

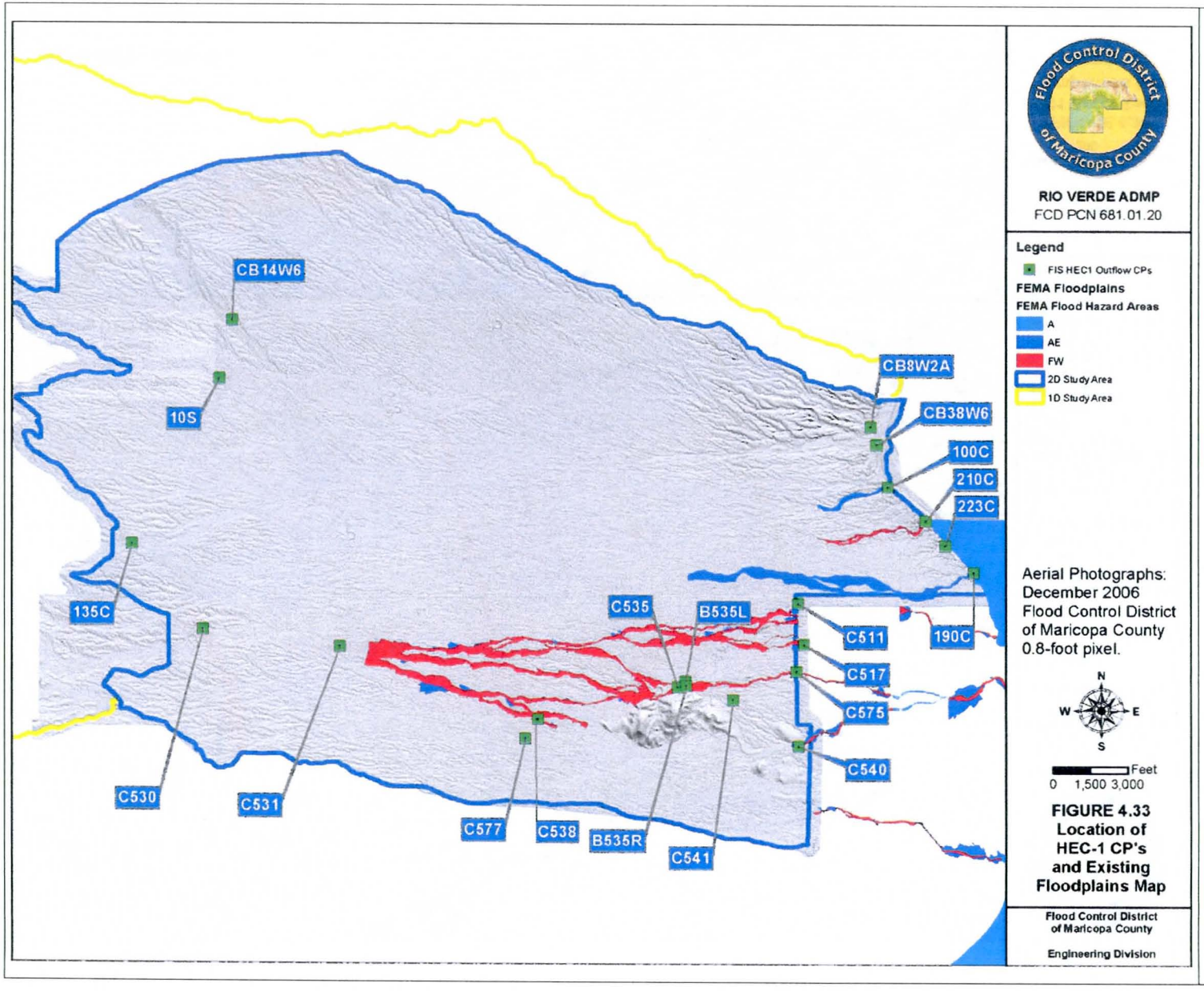

Figure 4.34 HEC-1 Cross Section Comparison Map

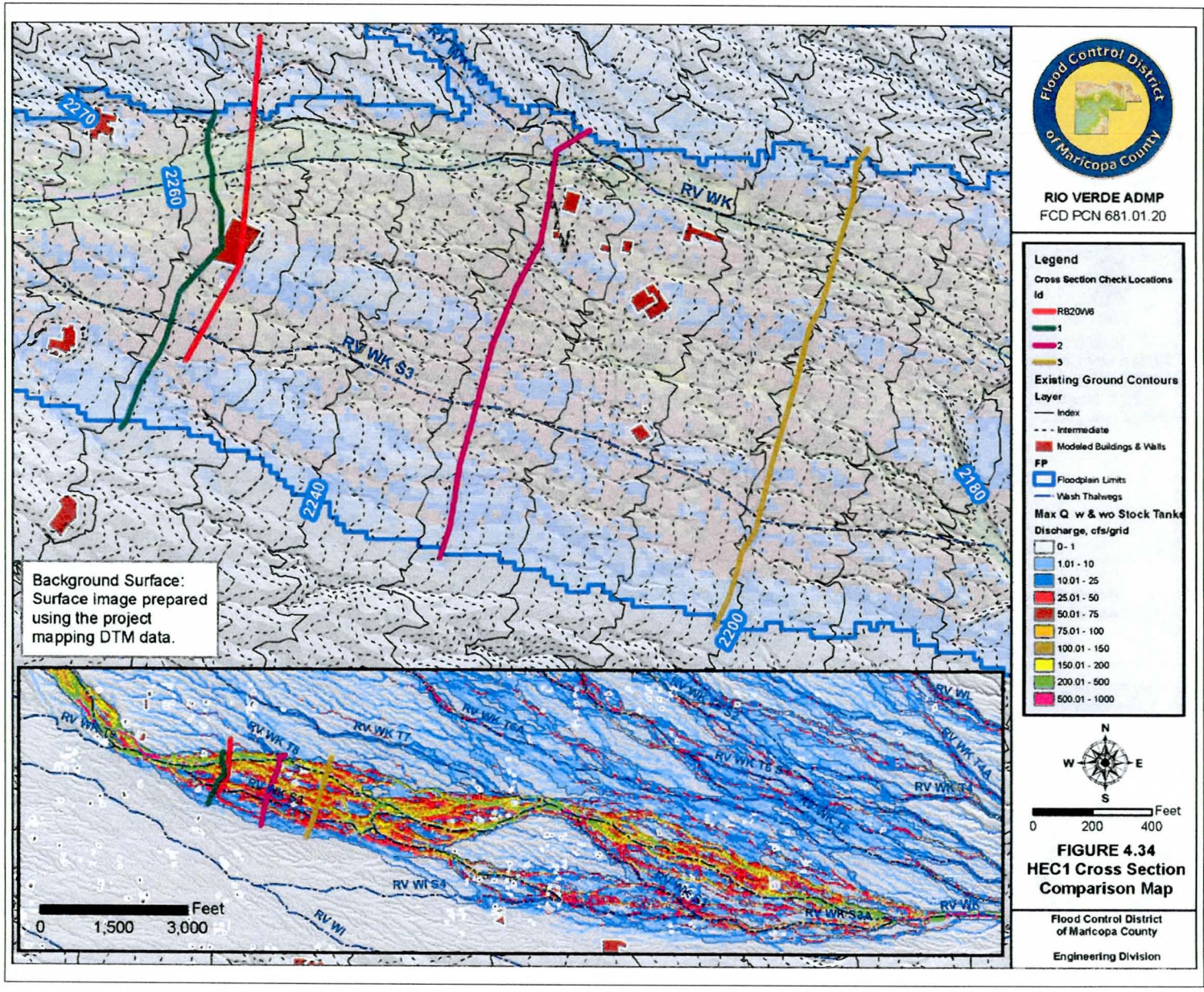

Figure 4.35 HEC-1 Cross Section Comparison Plots

PTech HEC-1 Routing Cross Section RB20W6

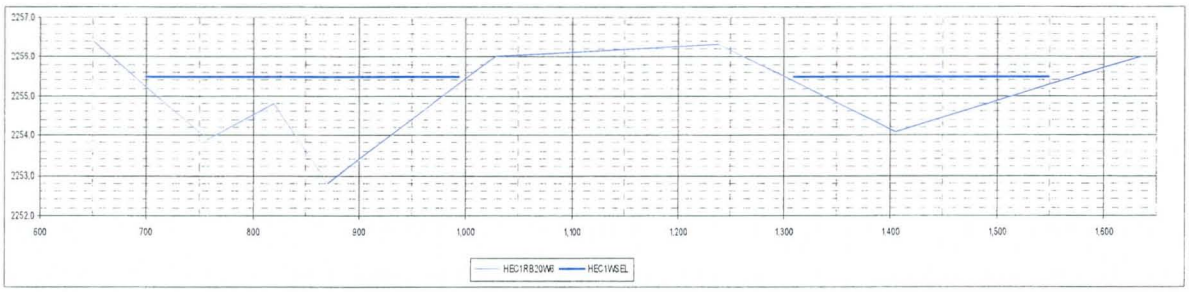

FLO-D2 CS 1

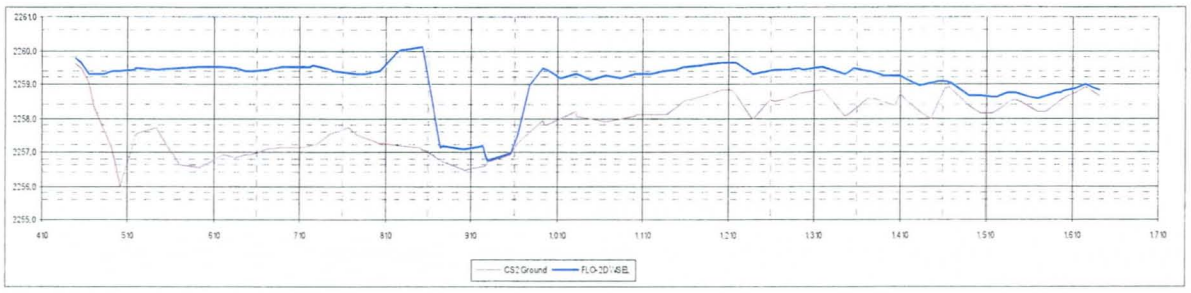

FLO-2 CS 2

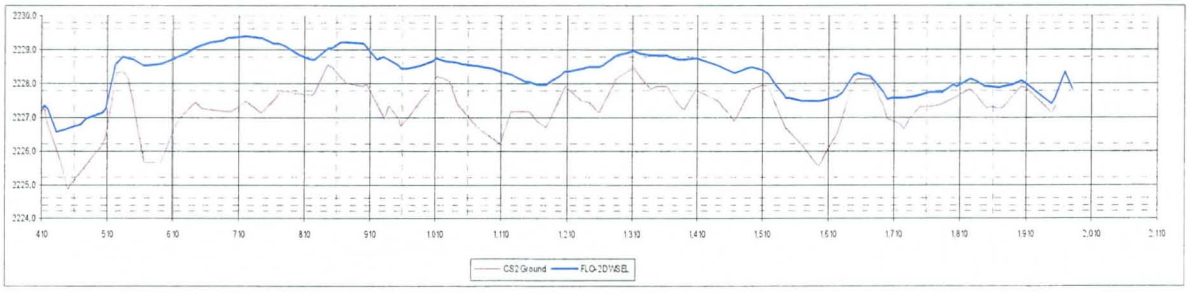

FLO-2 CS 3

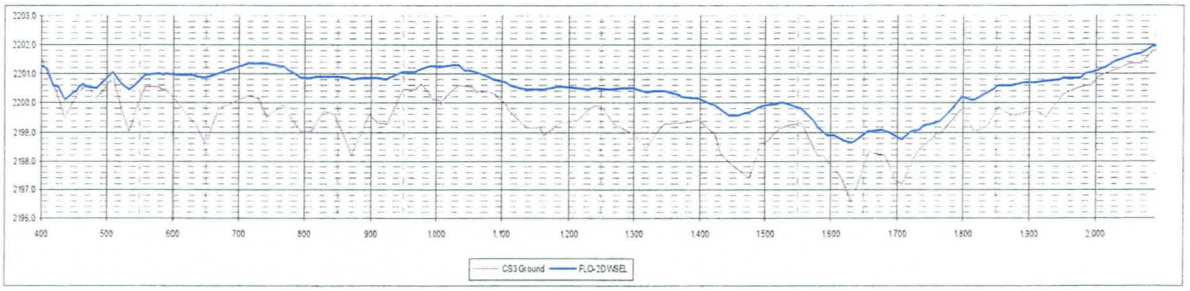

The location of a representative HEC-1 hydrograph routing cross section is shown on Figure 4.34, along with three cross section locations for plotting of FLO-2D results. All four cross sections are plotted on

Figure 4.35. The HEC-1 cross section is from the PTech model and represents reach RB20W6. That reach is 3,087 feet long. Note that the eight-point HEC-1 limitation for defining a cross section is insufficient to adequately portray the characteristics of the reach. The FLO-2D cross sections were derived by building a TIN surface for both existing ground and the 100-year maximum water surface using the grid element elevations and the FLO-2D results, which is why they appear smooth instead of blocky.

FLO-2D CS 1 has a large drop in the water surface elevation between about station 8+60 and 9+60. There is flow depth reported because the blocked grid elements still received rainfall. That occurs where an existing structure is modeled as an obstruction to flow (refer to Figure 4.34). FLO-2D CS 1 is located in an expansion reach where flow is transitioning from a top width of about 250 feet to a width of over 1,600 feet at FLO-2D CS 3. The water surface is fairly uniform at CS 1, but as the floodplain widens and becomes more distributary, the water surface becomes more uneven at CS 2 and CS 3. Flow is not only moving from west to east, it is migrating north and south between inset washes via shallow sheet flow. The way each cross section is laid out has some effect on the appearance because the cross section alignment may not always be exactly perpendicular to flow, but the effect is real. The FLO-2D water surface elevations are the maximum from both the "with" and "without stock tanks" runs. Stock tanks do not affect this reach, but note that the maximum water surface elevations include runoff from rainfall excess on every grid element so there are several locations on CS 2 and CS 3 where the water surface elevations shown are due to localized runoff.

The main point in making these comparisons is that the HEC-1 routing cross section does not adequately represent the complicated flow processes in the reach. The FLO-2D results show a much wider and shallower depth inundation area. This results in a significantly large area available for infiltration losses and greater available storage. The PTech HEC-1 model does not include infiltration losses so it can be expected that the FLO-2D model will produce lower peak discharges due to infiltration losses and attenuation due to storage than the HEC-1 model. For Wash K, the difference between the HEC-1 model peak discharge and the FLO-2D model is 2,350 cfs at HEC-1 concentration point CB38W6. The differences for the Phase B study area can be expected to be even larger due to the much greater dispersal of flow with divergent braiding continuing all the way to the Verde River. This results in shallower sheet flow and storage attenuation than the HEC-1 models can simulate accurately. The results in Table 4.10 support this expectation. Numerous field trips/investigations were made to check the reasonableness of the FLO-2D results. It was found that the existing wash capacity dramatically decreases as one travels down through the watershed, particularly in the Phase B model area. This also supports the expectation that peak flows will decrease as runoff moves through the distributary system.

Another key indicator is time to peak (T_p). Note from Table 4.10 that the T_p for most FLO-2D locations at the downstream end of the study are greater than the previous 1D model results. Flood wave velocities are expected to be lower for the 2D results than the 1D because the average flood depths are less and the floodplains broader. This is not always the case and HEC-1 ID 190C is an example. At this location the HEC-1 and FLO-2D peaks and T_p's are 1,120 cfs and 42 cfs, and 15.4 hours and 12.8 hours, respectively. In the HEC-1 model rating, runoff from a large area of 5.39 sm was expected to collect at this point. In the FLO-2D model, virtually no runoff from the main watershed drains to this point and the peak discharge results from a very small localized watershed; thus the large difference in T_p. The available topography supports the FLO-2D results.

Moving to the southern half of the Phase B model area, examine Figure 4.32 and Table 4.10 starting at C530 and working downstream. At C530, the HEC-1 and FLO-2D peak discharges are 2,387 cfs and 3,722 cfs, respectively. The T_p's and runoff volumes are comparable. About 5,500 feet downstream at C531, it is apparent from Figure 4.32 that braiding has begun. However, the HEC-1 peak discharge of 2,337 cfs is virtually unchanged, but the FLO-2D peak discharge had dropped to 1,605 cfs. The splits upstream were not included in the MKE model. This is just upstream of the location where the existing FEMA floodplain delineation begins as shown on Figure 4.33.

Moving down to C577 and C538, the results are combined in Table 4.10. Note that the HEC-1 and FLO-2D results are in close agreement in terms of peak discharge and runoff volume, but that the T_p's are about 0.8 hours different. This agreement in results appears to be coincidental. Moving downstream to C535, the upstream side of a bifurcation about 1,500 feet downstream from the Asher Hills Tank, the HEC-1 peak discharge is about 1,100 cfs as compared with 760 cfs for FLO-2D. The FLO-2D T_p is about 1.9 hours longer than the HEC-1 T_p due to shallow flow depths spread over a wide area of braided channels.

HEC-1 ID's B535L and B535R define the flow downstream of the C535 bifurcation. The left branch (B535L) has HEC-1 and FLO-2D peak discharges of 166 cfs and 293 cfs, respectively. In the right branch (B535R) has peak discharges of 941 cfs and 463 cfs, respectively. The hydraulics of the split are significantly different between HEC-1 and FLO-2D. Refer to Figure 4.36. It is obvious from a review of the topography depicted on Figure 4.36 that the right split has more hydraulic capacity than the left, which supports the FLO-2D simulation of the bifurcation hydraulics. On the other hand, the FLO-2D model estimates the peak flow in the left split to be almost double the HEC-1 estimate. The FLO-2D 100-year floodplain is much wider through this reach than the effective FEMA floodplain. The 2D model is able to model the hydraulics of the local splits and sheet flow. Average flow depths are less, but the area is still floodplain, subject to inundation, and therefore a much wider area is mapped.

Figure 4.36 C535 Bifurcation Area Map

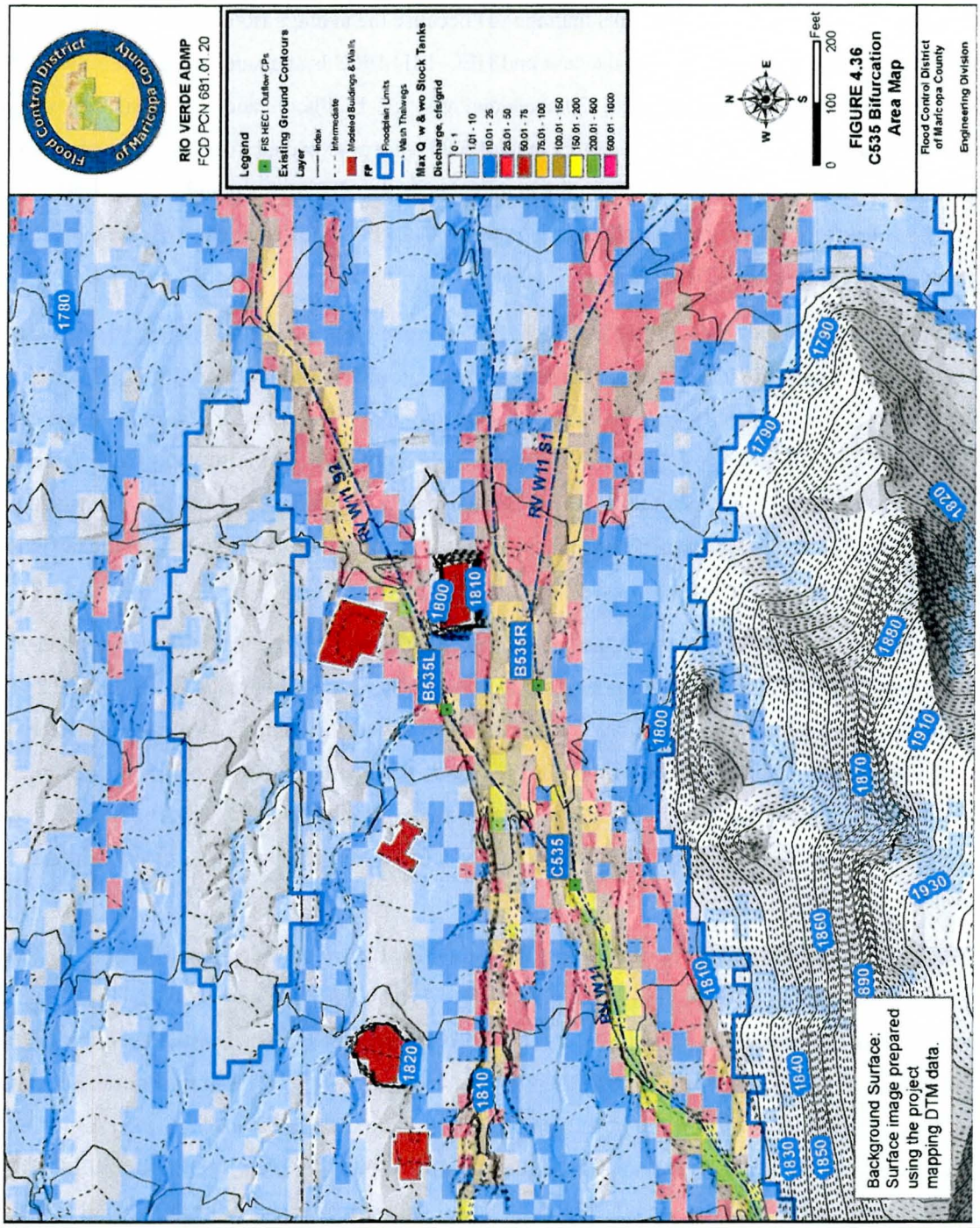

Moving downstream in Wash 11, examine Wash 11 Split 1 at C541 on Figure 4.37. The HEC-1 and FLO-2D peak discharges are 220 cfs and 320 cfs, respectively. The floodplain for this wash was not mapped previously, but is mapped as a part of this study. Note the existing levee labeled "RV Diversion

Dike". The existing FEMA delineation acknowledges this levee. However, it is not maintained and cannot meet FEMA levee criteria in its current condition. The delineation done under this study maps the floodplain with and without the dike and the 2D hydrology reflects both conditions. At HEC-1 ID C575, the HEC-1 and FLO-2D peak discharges are 741 cfs and 186 cfs, respectively. Note that the 100-year floodplain limits for the existing FEMA delineation are similar to those prepared for the current study. The FLO-2D limits are actually wider at C575 and many locations downstream of B535R. The amount of attenuation between B535R and C575 is similar for both the HEC-1 and FLO-2D peak discharges through that reach. This is expected because that particular reach is fairly well incised, accounting for the similar floodplain widths.

In summary, there are significant differences in the hydrology results between previous ID studies of the Rio Verde watershed and the current 2D hydrology. The rainfall loss estimation method used is the same for both the HEC-1 and FLO-2D models. This produces similar rainfall excess volumes, but the peak discharges at the bottom of the watershed are where significant differences occur. These differences are the result of a much better representation of the distribution of rainfall excess volume on the distributary flow area by FLO-2D than can be achieved with a 1D model such as HEC-1. Also, the simulation of infiltration in the channels and sheet flow areas as accumulated runoff moves downstream provides a better representation of the physical processes governing the movement of stormwater for this area.

4.5.2 Verification of Results

There is no available stream flow gage data for the Rio Verde watershed. Therefore, calibration and simulation of known storms of record for verification of the model cannot be accomplished. Instead, indirect methods are used for model verification. The indirect methods used for verification of the FLO-2D model hydrology results are:

1. Comparison with maximum unit peak discharge envelope curves (Hydrology Manual (FCDMC, 1995) Figure 8.1).
2. Comparison with plots of 100-year peak discharges versus drainage area for gaged watersheds in Arizona (Hydrology Manual (FCDMC, 1995) Figure 8.2).
3. Comparison with plots of the USGS 100-year regression equation for flood region 12 in Maricopa County and the support data for that equation (Hydrology Manual (FCDMC, 1995) Figures 8.7 and 8.8).

Figure 4.37 Rio Verde Wash 11 Near Downstream Study Limits

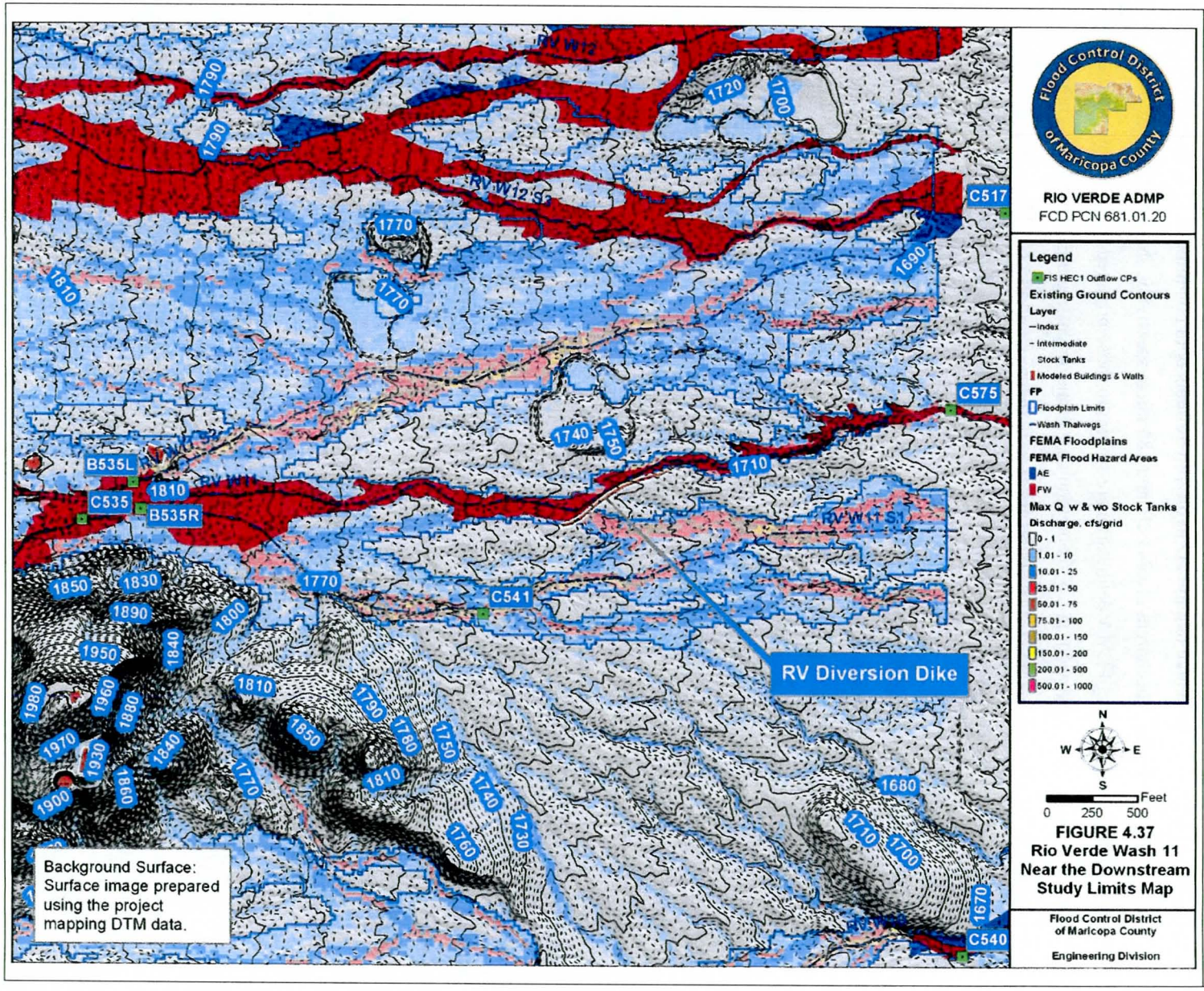

4.5.2.2 Comparison with Maximum Unit Peak Discharge Envelope Curves

The FLO-2D results shown in Table 4.10 are plotted on Figure 4.38 in comparison with maximum unit peak discharge envelope curves for Arizona. This comparison is problematic because accurate estimates of watershed area for the FLO-2D results locations along the east side of the study area cannot be defined due to the distributary flow system upstream. The areas from the previous 1D HEC-1 models in column 10 were used to compute unit discharges for the FLO-2D results. Note that all the plotted results fall below all of the maximum unit peak discharge envelope curves. None of the FLO-2D results are overly conservative, which is the point of this confidence check.

4.5.2.3 Comparison with 100-year Peak Discharge for Gaged Watersheds in Arizona

The FLO-2D results shown in Table 4.10 are plotted on Figure 4.39 in comparison with 100-year peak discharge log-Pearson III statistical analysis results of USGS gage data (USGS, 1989). All the peak flows at the upstream (inflow) end of the FLO-2D study area (CB14W6, C530, 135C, C531, and 10S) are between the 75 percent confidence limits. This is as expected. The USGS gage locations represented in Figure 4.39 are located in defined watercourses with tributary flow characteristics rather than distributary. All of the FLO-2D model inflow locations are at the bottom of steep hillslope/mountain watersheds with tributary characteristics. These results fit well with the known gage data and there is no reason to doubt the validity of these peak discharges based on this comparison. Also, locations CB8W2A and CB38W6 are either within the confidence limits or just outside the lower limit. Both locations are at the downstream end of the FLO-2D Phase A study area. Rio Verde Wash L at CB8W2A is primarily a tributary system, so it also is expected to correspond with the majority of the available gage data. Rio Verde Wash K at CB38W6 is tributary through about half its length in the 2D study area. At this location it is incised and tributary through the lower third of study area. It is also expected that this peak discharge should correlate well with the majority of the available gage data. The watershed areas for these locations are also valid values since the concentration points are at the true watershed collection points, without loss of runoff volume to distributary channels that drain into other systems.

The remaining concentration points evaluated fall below the lower 75 percent confidence limit. These locations are on distributary systems and therefore a "true" watershed area cannot be determined. All but 223C, C511, and 190C fall within the cloud of values of 100-year peak discharge estimates from flow gage data. The watershed area used for each location is from the prior HEC-1 model and represents the total area upstream even though a significant volume of runoff from that watershed may not be represented at the concentration point. Incorrect watershed area combined with the significant infiltration losses and storage attenuation discussed previously results in lower peak discharges per unit area than is expected from tributary watersheds. Since most of these locations are still within the cloud of values

from results based on known gage data, there is no compelling reason to doubt the validity of the FLO-2D results, at least within the assumptions the models are based on.

Figure 4.38 Comparison of FLO-2D Results with Unit Peak Discharge Envelope Curves

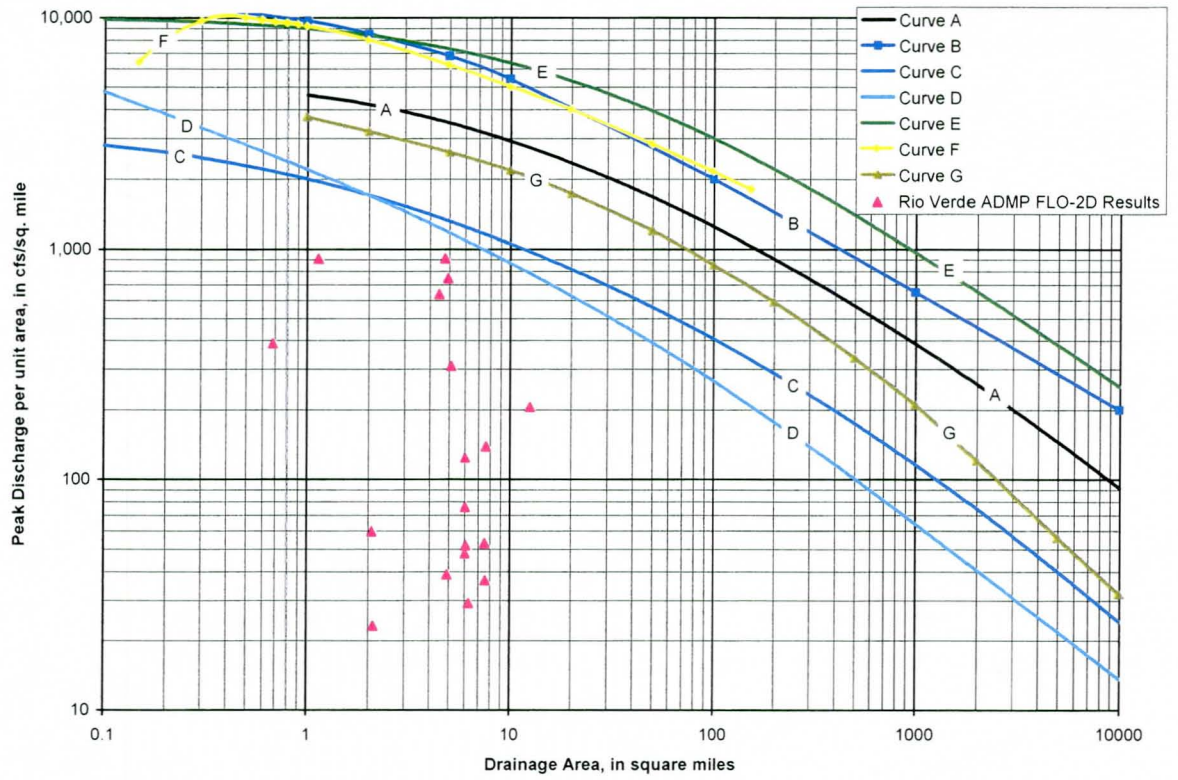

Concentration point 190C is the most remote point shown on Figure 4.39. That location had a 1D HEC-1 peak discharge estimate of 1,102 cfs. The FLO-2D model produces an estimate of only 42 cfs. The wash system upstream of 190C is relatively small and narrow and does not have the overbank hydraulic characteristics normally associated with a wash with an 1,100 cfs 100-year peak discharge. On the other hand, the upstream wash appears to be capable of much higher flow rates than 42 cfs. A primary source of natural runoff to 190C has been cut off and redirected to Rio Verde Drive and the Tonto Verde development located south and west of 190C. Additionally, the Phase B model does not cover the blockage area. The FLO-2D results at 190C should not be used because the FLO-2D models do not include a portion of the contributing watershed.

The washes at C511 and 223C are at the thinning end of the distributary wash system downstream of the 135C inflow point. The majority of the flow is conveyed by other portions of the system. The term

"thinning" refers to the continual branching out of washes, resulting in smaller and smaller wash sizes and flow rates. Since the watershed area represents the total contributing area, including all other distributary branches that do not drain to either C511 or 223C, both values plot unrealistically low on Figure 4.39.

In order to make a fairer comparison using this method, the flow rates at 100C, 210C, 223C, 190C, and C511 were totaled and are represented on Figure 4.39 by a red triangle as "Phase B North". The flow rates at C517, C575, and C540 were totaled and are represented on Figure 4.39 by a blue triangle as "Phase B South". These totals by no means reflect the total flow at the downstream end of their respective systems, but they provide a better understanding of how the total flow leaving the system compares with the gaged watersheds. Both points are solidly within the cloud of gaged values. If actual totals could be derived, they would both plot even higher, but probably still below the lower 75 percent confidence limit, as expected for a distributary flow area. There is no reason to discount the FLO-2D results based on this confidence check.

Figure 4.39 Comparison of FLO-2D results with LP3 analysis results from USGS 1989

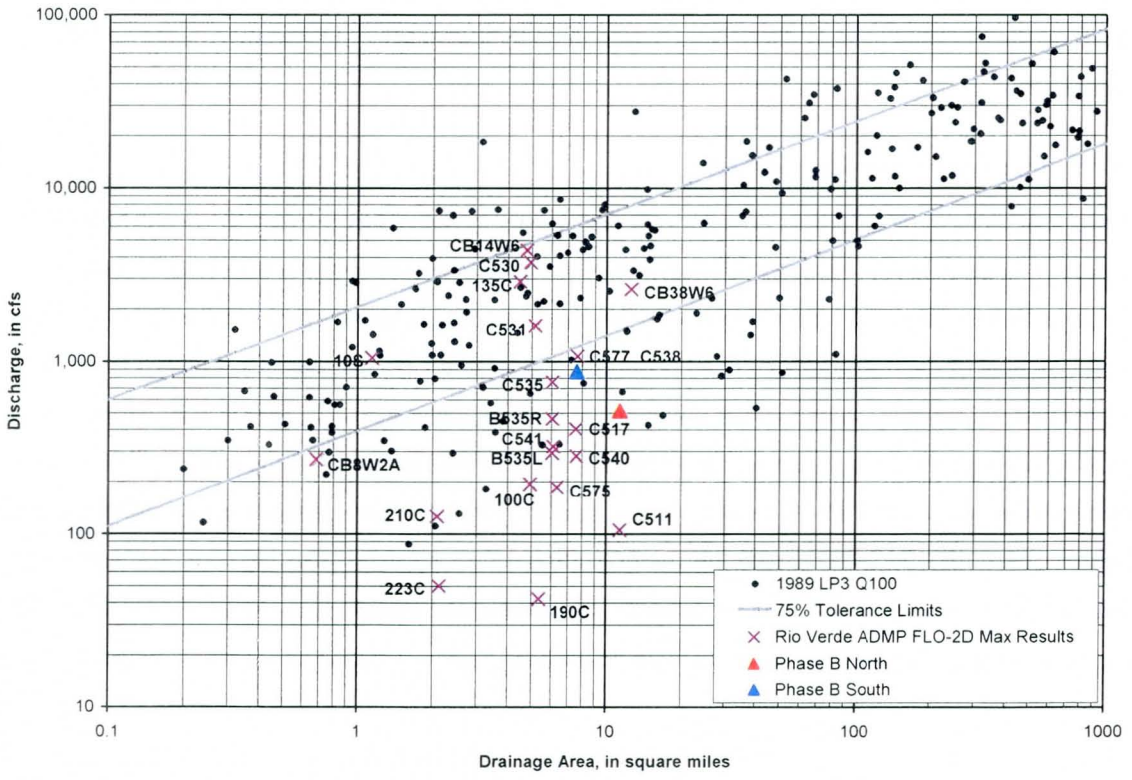

4.5.2.4 Comparison with USGS 100-year Regression Equation for Flood Region 12

The FLO-2D results shown in Table 4.10 are plotted on Figure 4.40 in comparison with the scatter diagram of independent variables for the USGS Flood Region 12 100-year regression equation (Hydrology Manual (FCDMC, 1995) Figure 8.7). The comparison is made to determine the validity of the Flood Region 12 regression equation for use with the Rio Verde watershed. All points except CB8W2A fit within the cloud of common values. The Rio Verde watershed point values are barely within the cloud due to their low elevations, but the equation should still be an appropriate check for reasonableness for tributary wash systems.

The FLO-2D results shown in Table 4.10 are plotted on Figure 4.41 in comparison with a plot of the USGS Flood Region 12 regression equation and the data points the equation is based on. Note that the results are similar to those shown on Figure 4.39. The values along the west (inflow) side of the study area, and the outflow from Washes K and L fit the regression equation and data. The other data points plot below the line and outside the cloud of values the regression equation is based on. This is expected because of the extreme disbursal (thinning) of flow resulting from the established distributary channel system. Based on the understanding of the physical processes involved and the key assumptions made in preparing the FLO-2D models, there is no reason to doubt the validity of the results based on this comparison.

4.5.2.5 Summary and Conclusions

The lack of any available stream flow data for distributary systems makes true verification of the FLO-2D model results impractical. The confidence checks, performed in combination with several field investigations to check the reasonableness of the results against observed results in the field, combine to provide a level of comfort that the model results are reasonable. The various distributary channels do in fact decrease in capacity as one moves downstream through the system. The aerial photographs and available topography support this fact and also that higher flows in excess of the capacity of the sandy bottom washes revert to shallow sheet over broad areas. The field investigations also support these flow characteristics. The FLO-2D models produce results and flow patterns matching what has been observed based on the field investigations and available photographic and topographic evidence. The FLO-2D results are deemed appropriate for flood plain delineation purposes, based on the above verifications.

Figure 4.40 Comparison with scatter diagram of independent variables for Flood Region 12

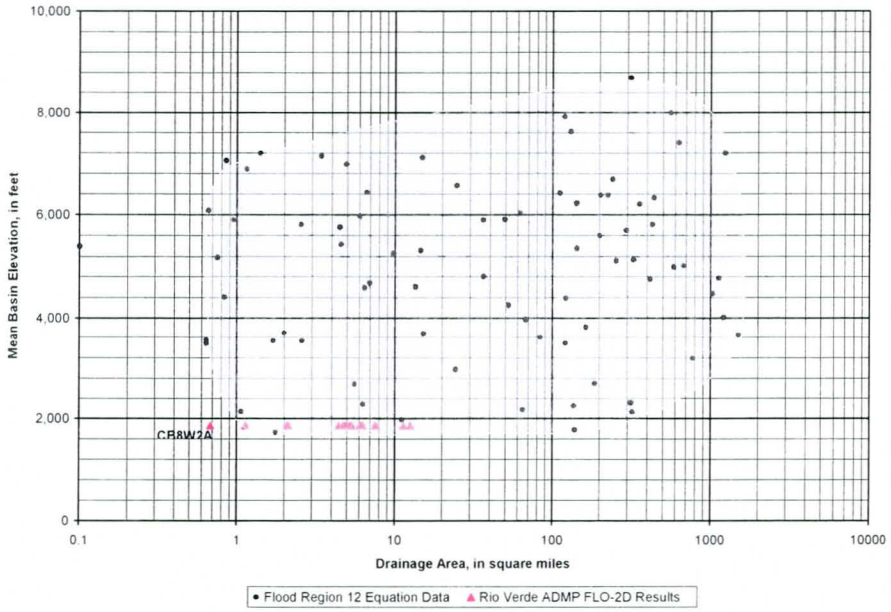

Figure 4.41 Comparison with 100-year peak discharge relation for Flood Region 12

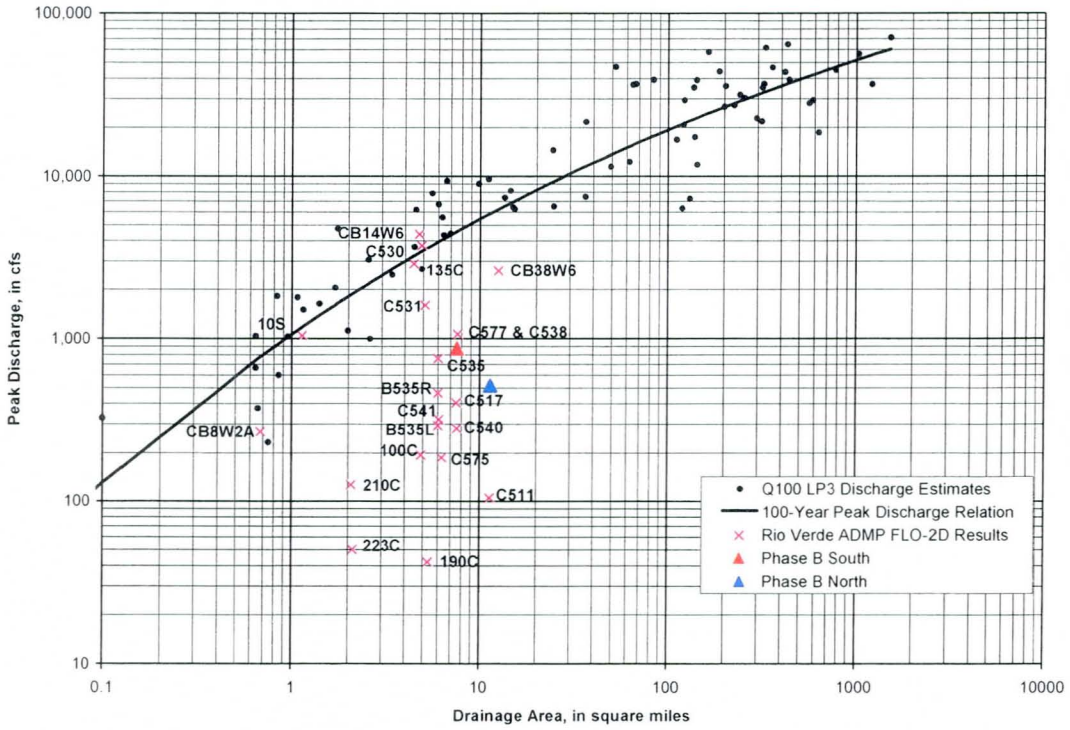

5 HYDRAULICS

5.1 Method Description

The hydraulics for the 2D study area (refer to Figure 4.1) was accomplished using the FLO-2D computer program by FLO-2D Software, Inc., version 2006.01. The hydraulics were not modeled using the traditional 1D HECRAS program because the following basic assumptions for application of HECRAS are not valid for this study area. Refer to the *HECRAS Hydraulic Reference Manual* (USACOE, 2002), chapter 2, Steady Flow Program Limitations.

1. *Flow is one dimensional.* Velocity components in directions other than the direction of flow are a significant characteristic of the study area.
2. *Total energy head is the same for all points in a cross section.* The study area exhibits distributary flow characteristics that violate this premise.
3. *Flow is contained and confined to defined channels and overbanks.* Unconfined overland flow and complex channel characteristics are typical of the study area.

The FLO-2D model, version 2006, has been accepted by FEMA as a numerical model meeting the minimum requirements of the NFIP, as listed on the FEMA web site at http://www.fema.gov/plan/prevent/fhm/en_hydra.shtm. The FLO-2D model is listed as approved for use for two-dimensional unsteady flow. The model was applied using the full dynamic wave version of the momentum equation. FLO-2D routes a flood hydrograph while conserving volume and predicting the area of inundation and flood wave attenuation

There are numerous culverts including pipes, box culverts, and openings in solid masonry walls present in the study area that are significant enough to model. These hydraulic structures were modeled using the USDOT HY8 hydraulic engineering software, version 6.1.

5.2 Work Study Maps

The Work Study Maps were prepared at a scale of 1 inch equals 200 feet. There are a cover sheet and 36 map sheets containing the following information:

1. Map Background. Ortho-rectified and scaled aerial photographs prepared for the District. The photographs have a 0.8 foot pixel and were taken in December 2006.

2. Existing ground contours at 2 foot intervals in the NAVD 1988 vertical datum. The contours were compiled from the District's GIS database of topography for the area. Refer to Volume 2, Survey and Mapping.

3. Elevation Reference Mark locations.

4. 100-year floodplain boundaries derived from the FLO-2D model results. Refer to Section 5.9.

5. Hydraulic base lines for key watercourses with station labels in river miles. These are the alignments used to prepare the flood profiles. Refer to Table 5.1 for a listing of the complete names for each watercourse. The hydraulic base lines are shown graphically on Figure 5.1. If a wash name ends in "Tributary", it is a wash branch that is a true tributary to either a main wash or a split from a main wash. If a wash name ends in "Split", it is a bifurcation from the main wash or a tributary. A split may completely diverge from the main wash and connect to another main wash or its split or tributary, or it may reconnect with the named main wash or one of the main wash's splits or tributaries.

6. 100-year water surface elevation contours at 1-foot intervals, generated using the FLO-2D results.

7. County and corporate boundaries and section, township and range lines.

8. Street centerline alignments and street names.

9. Labels of 100-year peak discharges entering and leaving each sheet for each named watercourse.

Traditional 1D cross section locations are not included, as cross sections are not used for the hydraulic modeling. Reaches for defining peak discharge and roughness coefficients are also not included because base roughness coefficients are established for every grid element and then dynamically optimized during the FLO-2D model runs.

The hydraulic work study maps are included in Appendix G.2 in reduced scale 8.5"x 11" format, and under separate cover in 11"x 17" reduced scale format in Volume 7. The hydraulic work study maps are included in Adobe Reader PDF digital format, sized for 24"x36" plots, on the DVD in Appendix E.6. A sheet index is included as the first sheet.

Table 5.1 List of Watercourse Abbreviations and Full Names

Abbreviated River Name	Full River Name
RV W10	Rio Verde Wash 10
RV W10 S4	Rio Verde Wash 10 Split 4

Table 5.1 List of Watercourse Abbreviations and Full Names

Abbreviated River Name	Full River Name
RV W10 S7	Rio Verde Wash 10 Split 7
RV W10 T1	Rio Verde Wash 10 Tributary1
RV W10 T2	Rio Verde Wash 10 Tributary2
RV W10 T3	Rio Verde Wash 10 Tributary3
RV W10 T2 S1	Rio Verde Wash 10 Tributary2 Split 1
RV W10 T4	Rio Verde Wash 10 Tributary4
RV W11	Rio Verde Wash 11
RV W11 S1	Rio Verde Wash 11 Split 1
RV W11 S2	Rio Verde Wash 11 Split 2
RV W11 S8	Rio Verde Wash 11 Split 8
RV W12	Rio Verde Wash 12
RV W12 S3	Rio Verde Wash 12 Split 3
RV W12 S6	Rio Verde Wash 12 Split 6
RV W7	Rio Verde Wash 7
RV WA	Rio Verde Wash A
RV WA S1	Rio Verde Wash A Split 1
RV WA S3	Rio Verde Wash A Split 3
RV WA S4	Rio Verde Wash A Split 4
RV WA S8	Rio Verde Wash A Split 8
RV WA S9	Rio Verde Wash A Split 9
RV WA T1	Rio Verde Wash A Tributary1
RV WA T2	Rio Verde Wash A Tributary2
RV WD	Rio Verde Wash D
RV WF	Rio Verde Wash F
RV WF S6	Rio Verde Wash F Split 6
RV WF T2	Rio Verde Wash F Tributary2
RV WI	Rio Verde Wash I
RV WI S4	Rio Verde Wash I Split 4
RV WI T1	Rio Verde Wash I Tributary1
RV WI T3	Rio Verde Wash I Tributary3

Table 5.1 List of Watercourse Abbreviations and Full Names

Abbreviated River Name	Full River Name
RV WJ	Rio Verde Wash J
RV WK	Rio Verde Wash K
RV WK S1	Rio Verde Wash K Split 1
RV WK S3	Rio Verde Wash K Split 3
RV WK S3A	Rio Verde Wash K Split 3A
RV WK S4	Rio Verde Wash K Split 4
RV WK T1	Rio Verde Wash K Tributary1
RV WK T10	Rio Verde Wash K Tributary10
RV WK T11	Rio Verde Wash K Tributary11
RV WK T11A	Rio Verde Wash K Tributary 11A
RV WK T11B	Rio Verde Wash K Tributary 11B
RV WK T12	Rio Verde Wash K Tributary 12
RV WK T13	Rio Verde Wash K Tributary 13
RV WK T4	Rio Verde Wash K Tributary 4
RV WK T4A	Rio Verde Wash K Tributary 4A
RV WK T6	Rio Verde Wash K Tributary 6
RV WK T6 S1	Rio Verde Wash K Tributary 6 Split1
RV WK T6 S2	Rio Verde Wash K Tributary 6 Split 2
RV WK T6 S3	Rio Verde Wash K Tributary 6 Split 3
RV WK T6A	Rio Verde Wash K Tributary 6A
RV WK T6A1	Rio Verde Wash K Tributary 6A1
RV WK T6A2	Rio Verde Wash K Tributary 6A2
RV WK T6B	Rio Verde Wash K Tributary 6B
RV WK T6C	Rio Verde Wash K Tributary 6C
RV WK T6D	Rio Verde Wash K Tributary 6D
RV WK T6D1	Rio Verde Wash K Tributary 6D1
RV WK T7	Rio Verde Wash K Tributary 7
RV WK T8	Rio Verde Wash K Tributary 8
RV WK T9	Rio Verde Wash K Tributary 9
RV WL	Rio Verde Wash L

Table 5.1 List of Watercourse Abbreviations and Full Names	
Abbreviated River Name	**Full River Name**
RV WP	Rio Verde Wash P
RV WP T1	Rio Verde Wash P Tributary 1
RV WP T2	Rio Verde Wash P Tributary 2
RV WA TS	Rio Verde Wash A Tank Spillway
RV W10 S7 T1	Rio Verde Wash 10 Split 7 Tributary 1

5.3 Parameter Estimation

The 2D study area was divided into two areas for application of FLO-2D. These were named Phase A and Phase B and the limits are shown on Figure 4.2. Refer to Section 4.2 for a discussion of why this was necessary, how the overlap between the two areas was handled, and for a summary of area sizes.

The key hydraulic parameters considered for the 2D modeling are 1) roughness coefficients, 2) expansion and contraction coefficients, 3) obstructions to flow, and 4) grid size selection.

5.3.1 Roughness Coefficients

The 2D study area is characterized by relatively steep (2-4 percent) slopes, shallow flow depths less than four feet in most areas, with depths as high as six to eight feet in some confined areas, and sand bed channel bottoms. The area has extensive vegetation cover in the form of grasses; brush, including catclaw, creosote, sage, and hackberry; trees, including, palo verde, mesquite and ironwood; and various forms of cacti, including saguaro. The overbank soils are predominately sandy loams. There is a high degree of irregularity in channel alignment and cross section. Most washes in the area are very shallow (one to two feet) and flow exceeding the channel capacity immediately becomes unconfined sheet flow in most areas. There are virtually no large gravel or cobbles present in the 2D study area. N-value selection considered simulation of shallow flow depths, spatial variability of roughness, the spatial effects of vegetation, and friction losses due to meandering. Also, the flow regime is expected to hover near critical for the majority of the area. Steep-slope sand bed channels can be expected to entrain more sediment to sustain subcritical flow. The field investigations and observations support this hypothesis. There is substantial evidence of significant sediment movement and most channels alternate between degrading and aggrading reaches.

Figure 5.1 Hydraulic Base Line Map

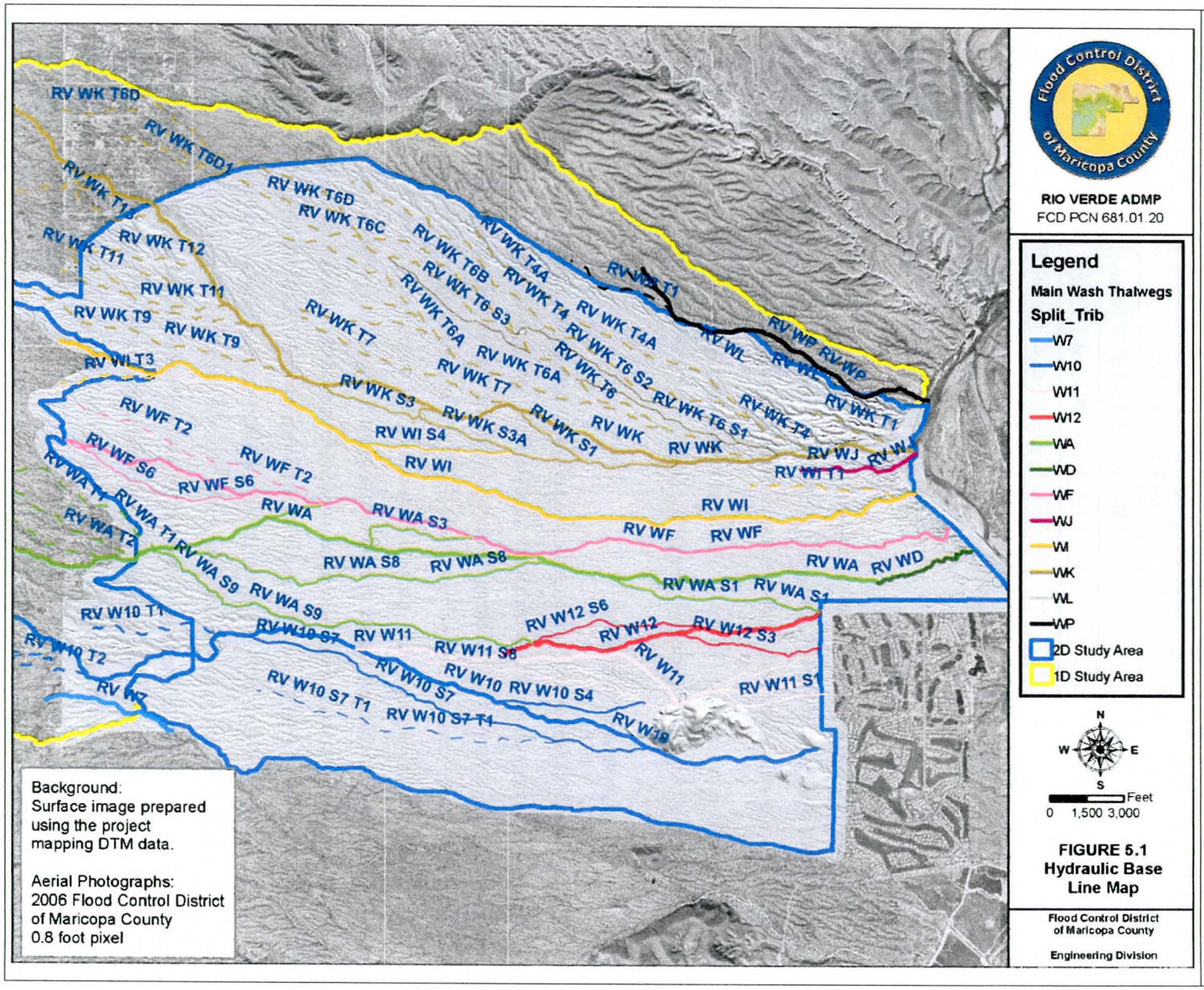

The strategy for n-value selection for the 2D model was as follows:

1. Use of the FLO-2D shallow flow n-value option to account for the large areas of shallow depth sheet flow.
2. Use of the depth-adjusted n-value option to account for spatial variation of n-values for flow depths up to three feet.
3. Spatial variation of n-values by assigning an individual base n-value to every grid element.
4. Use of the FLO-2D limiting Froude number option to force subcritical flow and for optimization of n-values. FLO-2D dynamically adjusts the n-value for each grid, calibrating the floodplain roughness to achieve a reasonable Froude number, which in this case is the selected limiting Froude number. This calibration offsets unreasonable or inappropriate flow area and slope relationships within the data set (O'Brien, 2006a).

Application of the n-value selection strategy was done as follows:

1. Flow Depth <0.2 ft. The SHALLOWN field in the FLO-2D *CONT.DAT* input data file was set to 0.20. This is the maximum recommended in O'Brien (2006a) and was selected after conferring with Dr. O'Brien, the author of FLO-2D, during a field reconnaissance of the 2D study area. Refer to Table 2 in O'Brien (2006a). The high degree of ground litter and debris justifies this selection.
2. 0.2 ft < Flow Depth <0.5 ft. Implementing the default depth variable roughness capability within FLO-2D, the n-value used is 0.10, or SHALLOWN/2.
3. 0.5 ft < Flow Depth <3.0 ft. Implementing the default depth variable roughness capability of FLO-2D, the n-value used is:

$$n = 1.5 n_b e^{-(0.4 depth/3.0)}$$ (source: O'Brien, 2006b, Section 1.5)

where: n = computed shallow flow n-value.

n_b = the base n-value assigned to each grid element in the *fplain.dat* FLO-2D input data file.

e = 2.71828 (constant)

$depth$ = the flow depth in feet.

4. Flow Depth >= 3.0 ft. The n-value assigned in the FLO-2D *fplain.dat* input data file, optimized dynamically during the FLO-2D run to achieve the limiting Froude number setting. The limiting Froude number was set to 0.95 for all models. This forces flow to be just under critical depth.

The base n-values were established using the following procedures.

1. A base n-value was assigned to each vegetation cover class described in Section 4.2.7.3.

Table 5.2 Base n-value Assignments to Vegetation Cover Classes

Class	Description	Base	Adjustments		Total Base n-value
			Vegetation	Other (total)	
1	2	3	4	5	6
3	Bare Ground	0.020	0.000	0.015	0.035
2	Low Density Vegetation	0.020	0.015	0.015	0.050
1	Medium Density Vegetation	0.020	0.030	0.015	0.065
0	High Density Vegetation	0.020	0.045	0.015	0.080

The base n-value selected was derived from Phillips and Tadayon (2006), which has been adopted for use in Maricopa County and will soon be the basis for a new chapter in the Hydraulics Manual. The bare ground n-value was set at 0.035, which is slightly higher than the range from Benson and Dalrymple in Table 2 of Phillips and Tadayon (2006). This value is lower than the range for open ground with no debris from Table 2 in O'Brien (2006a), and is the median between the two sources. The adjustments for vegetation effects are shown in column 4. Adjustments for channel irregularity, variation in cross section, and obstructions were each set at 0.005 and the total shown in column 5. Degree of meandering was set to 1.000 for the purposes of this model since the assignment is for a 25-foot long reach and this component can be considered negligible for such a short reach.

The base n-value for pavement and building rooftops was set at 0.015, but for most situations the shallow flow n-value of 0.20 controlled. By establishing a base n-value for each vegetation class, spatial variation in n-values was achieved using the vegetation cover GIS coverage.

2. A composite base n-value for each grid element was computed by using ESRI ArcMap. The vegetation cover GIS coverage, including the total base n-values as a field in the database table, was overlaid by the FLO-2D grid coverage and clipped to each grid element. A GIS dissolve operation was done based on the n-value field and the area of each n-value within each grid element computed. Then an area-averaged base n-value for each grid element was computed. These values were then placed in the FLO-2D *fplain.dat* input data file. The resulting grid element base n-values are shown graphically in Figure 5.2.

3. The model was run using the base n-values, the depth variable n-value settings, and the limiting Froude number setting. The values in the *rough.out* FLO-2D output file were examined for reasonableness and excessively high values noted. The *fplain.dat* FLO-2D input file was then overwritten with the *fplain.rgh* FLO-2D output file, which was then edited to address the excessively high n-value locations.

4. Step 3 was repeated until most of the grid elements listed in the *rough.out* FLO-2D output were eliminated. Final n-values are not presented herein as they change dynamically during a model run.

5.3.2 Expansion and Contraction Coefficients

There is no need to account for expansion and contraction for a floodplain grid-only FLO-2D model. There are no settings in the FLO-2D model to account for expansion and contraction losses, unless the inset channel option is used.

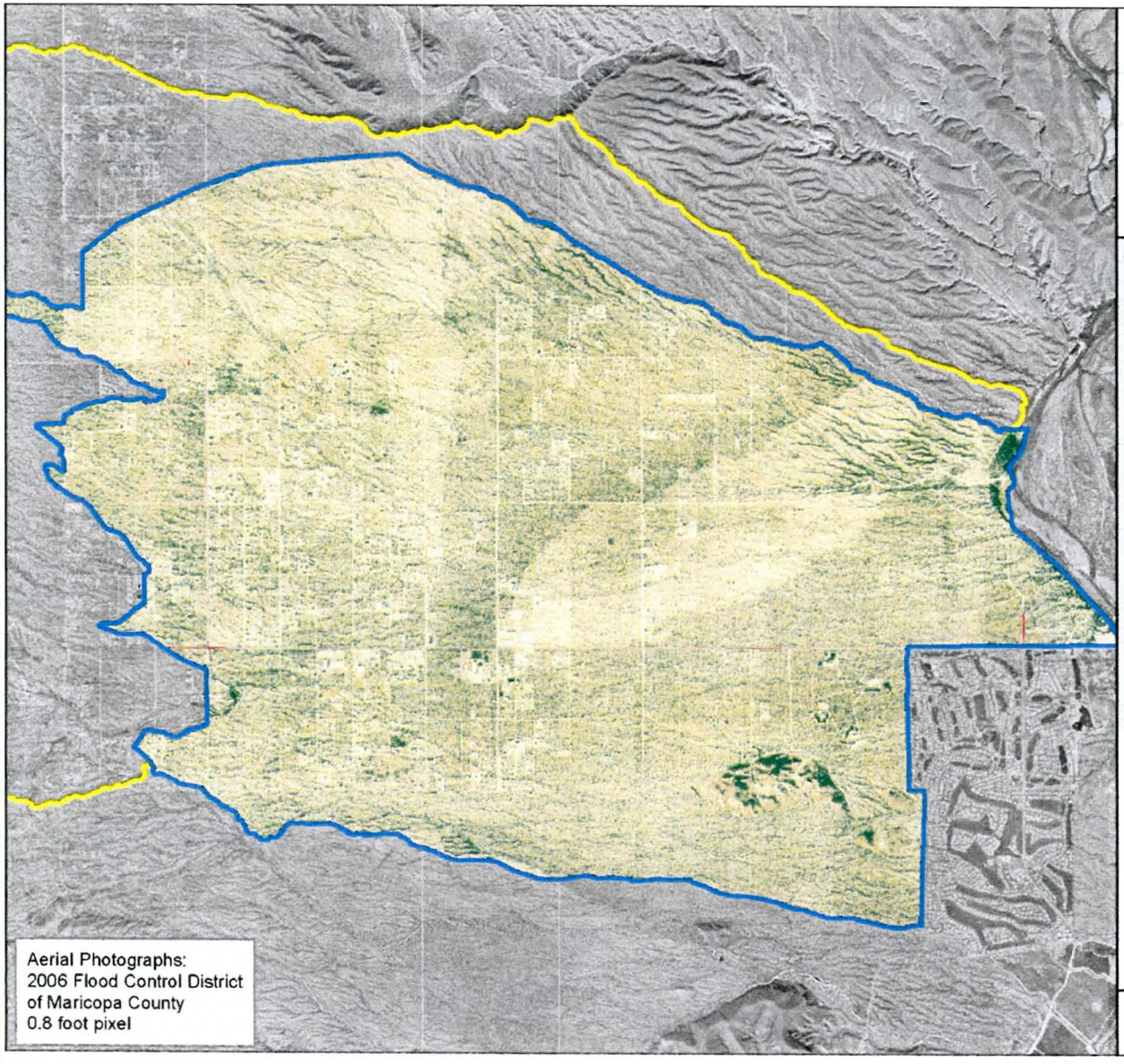

Flood Control District of Maricopa County

RIO VERDE ADMP
FCD PCN 681.01.20

Legend

- 2D Study Area
- 1D Study Area

Base n-values

n

- 0.015 - 0.015
- 0.016 - 0.020
- 0.021 - 0.030
- 0.031 - 0.040
- 0.041 - 0.050
- 0.051 - 0.060
- 0.061 - 0.070
- 0.071 - 0.080

N W E S

Feet
0 1,500 3,000

FIGURE 5.2a
Base n-value Map

Flood Control District
of Maricopa County

Engineering Division

Figure 5.2 Base n-value Map

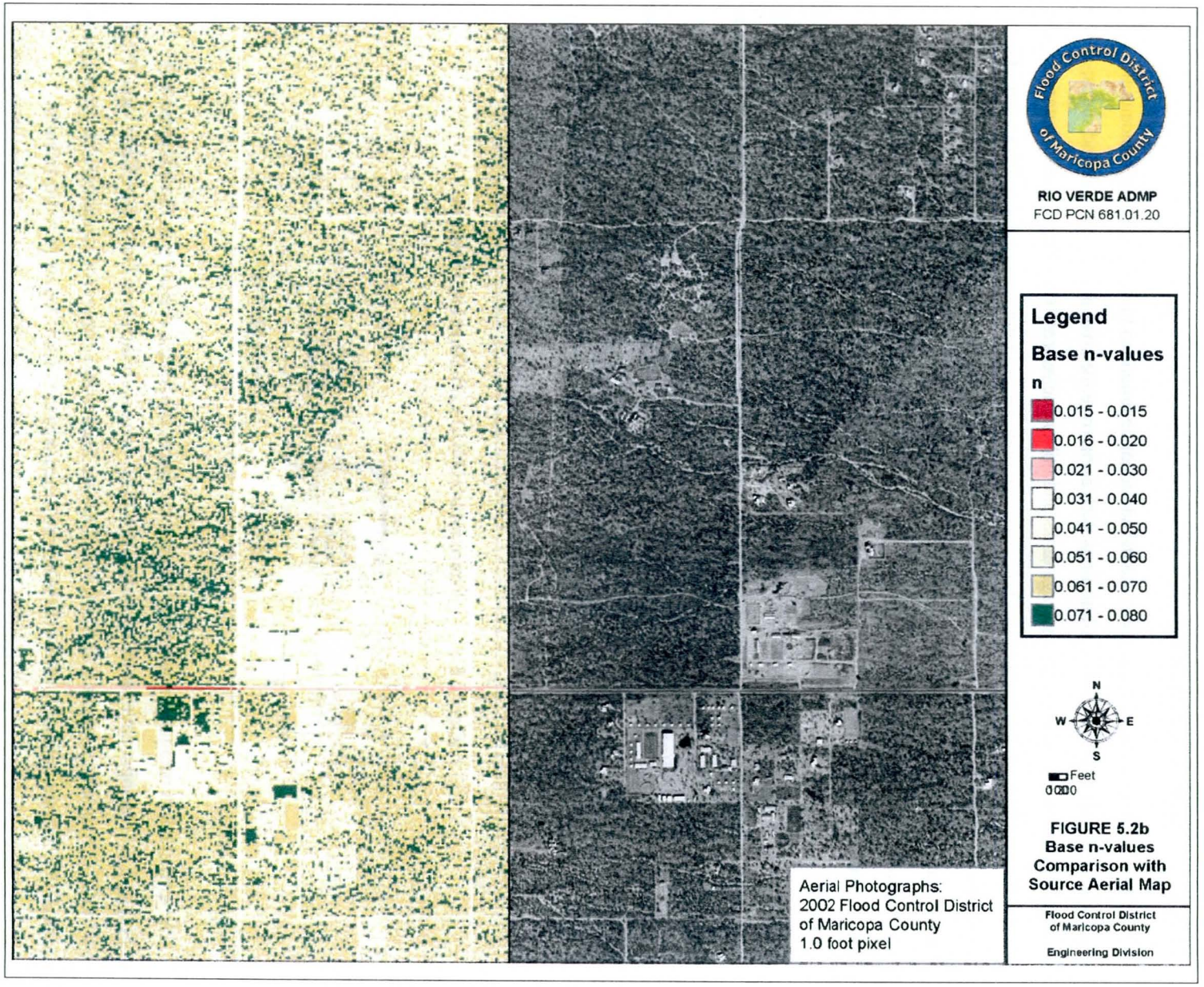

FIGURE 5.2b
Base n-values Comparison with Source Aerial Map

5.3.3 Obstructions to Flow

The 2D study area model includes over 2,600 individual obstructions to flow including residential structures; solid masonry walls; out-buildings such as barns, equestrian arenas, garages and shops; and miscellaneous items such as water storage tanks and utility enclosures. On a shallow distributary flow – sheet flow surface, obstructions of this type can have flood hazard implications due to backwater effects and flow diversions. In addition, the majority of these obstructions are also impervious surface, which is also accounted for in the 2D models. FLO-2D has modeling functionality to include the effects of these obstructions. A grid element can either be completely blocked to both flow and surface storage using the Area Reduction Factor (ARF) method, or individual sides of each grid element can be either fully or partially blocked to flow and the storage capacity of the grid element partially obstructed using the Width Reduction Factor (WRF) method. Both methods were applied in the 2D models for this study. The ARF method was used for modeling culvert weir flow areas (refer to Section 5.5.2), and the WRF method was used for blocking of obstructions.

The individual grid element WRF blockage scheme is depicted on Figure 5.3. FLO-2D treats each square grid element as an octagon, and computes flow in and out of the grid element in eight directions. The FLO-2D numbering scheme for the eight sides of a grid element are shown on the left diagram in Figure 5.3.

Figure 5.3 Fundamental Grid Cell Blocking Diagram

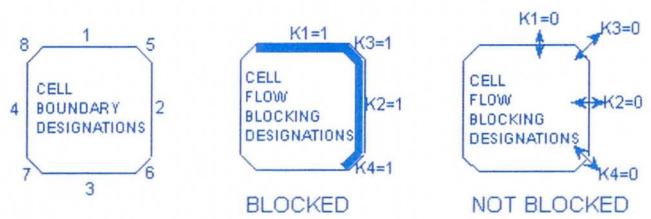

The grid element octagonal numbering scheme for output file results is shown on the left graphic in Figure 5.3. The input data variable numbers for WRF values are shown in the "BLOCKED" and "NOT BLOCKED" graphics, where K1, K2, K3, and K4 are the variable names for octagonal side blockages in the *ARF.DAT* input data file. Flows between grid elements are controlled by the adjustment of conveyance area between grid elements. Conveyance area is controlled using the WRF method, which can simulate the blockages present in the area being modeled. Only 4 sides of any given grid element are required for controlling all the flow through that grid element due to the complementary controls available on adjacent grid elements. The individual WRF factors available for each of these 4 sides can

range from 0 to 1 in value although only the extreme values of 0 or 1 were used in this study to simulate completely open or blocked adjacent grid elements in and around buildings or walls. A WRF value of 1 does not completely block the side. If a value of 1 is specified, FLO-2D defaults to a value of 0.95, or 95% blockage. The WRF numbering scheme is shown on the two diagrams on the right side of Figure 5.3. "K1" represents the WRF blocking factor for WRF column 1 in the FLO-2D *ARF.DAT* input data file. For a fully blocked side, K1 = 1. For a fully unobstructed side, K1 = 0.

An illustration of how using 4 sides of a grid element and its neighbors can control flows between adjacent grid elements in an array is shown in Figure 5.4. The hatching indicates potential grid element blockages that can be controlled for each grid element. In this case if each of the available blockages were implemented completely, effectively no flow would occur between any of the grid elements shown. The grid element in the middle is completely blocked from all of its neighbors.

Figure 5.4 Using the WRF Method to Block a Grid Element

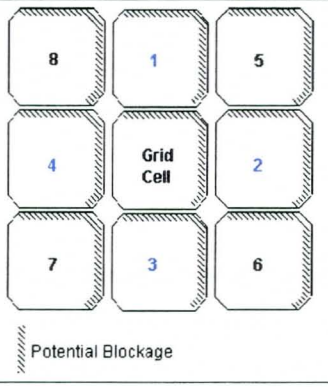

In addition, each grid element represents an area within which a volume of water can be stored above grade as a function of flow depth within the grid element. If, however, all or part of the grid element's interior can store no water volume, all or part of the grid element can be limited in its capacity to store water with an ARF in combination with WRF settings, which constrains the storage. The ARF is the percentage of a grid element's area that can store water.

An array of grid elements with a building outline superimposed upon it is shown in Figure 5.5. As can be seen, the building outline may be orientated randomly relative to the grid sides. This presents some challenges in modeling impenetrable objects like buildings or walls. The flow between grid elements is controlled by both the fundamental equations of fluid mechanics and the realities of the area being modeled as expressed by individual grid element boundary conditions. A solid masonry wall that traverses the grid element field will prohibit flow across the grid element field regardless of the difference in water surface elevation on alternate sides of the wall. To make use of the WRF and ARF methods, a

simulation boundary can be imagined around the building. This boundary will likely not match the actual geometry of the building but will be close enough to allow a reasonable simulation. In this case the hatched line represents grid element blockages that can be used to either completely or partially simulate the building occupying a portion of the array.

Figure 5.5 Blocking a Building Obstructions

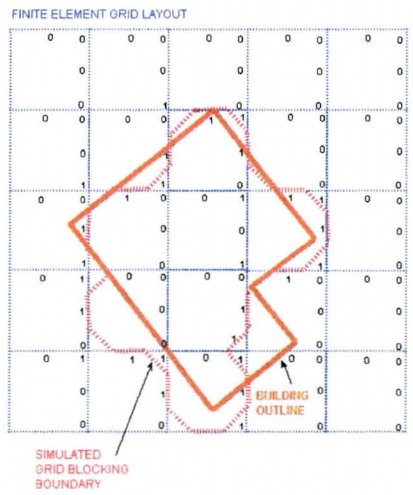

Figure 5.6 illustrates one possible scheme for establishing a hydraulic boundary. In this case a masonry wall will prohibit the passage of flows from one side of the wall to the other. In this GIS representation the blocking parameters are shown clustered near the center of the grid element and grid elements with any blocking at all are identified in red. Different schemes can be developed for creating the blocking effect but care must be taken to avoid leaks through adjoining grid element sides or corners. Figure 5.7 shows the GIS representation of a blocked building. Note that two of the interior grid elements have no blocking and several grid elements mostly within the perimeter of the building have open sides to other interior grid elements. This implies that any flows which enter the building envelope through an unblocked side or corner may flow to other grid elements within the building envelope. To allow runoff from the building impervious area to be routed downstream, a minimum of one blockage at the perimeter of the building is left open, generally on the downstream side of the structure.

In these examples the numbers in each grid element represent the width reduction factor which indicates what percentage of the grid element's side or corner is available for conveying of flows between grid elements. The four numbers represent the four width reduction factors for that grid element which control

sides 1, 5, 2 and 6. (The width reduction factors are, however, identified in the code as factors K1,K2,K3 and K4 but correspond to sides 1, 5, 2 and 6, respectively, as shown in Figure 5.3.)

Figure 5.6 Blocking a Wall Obstruction Example

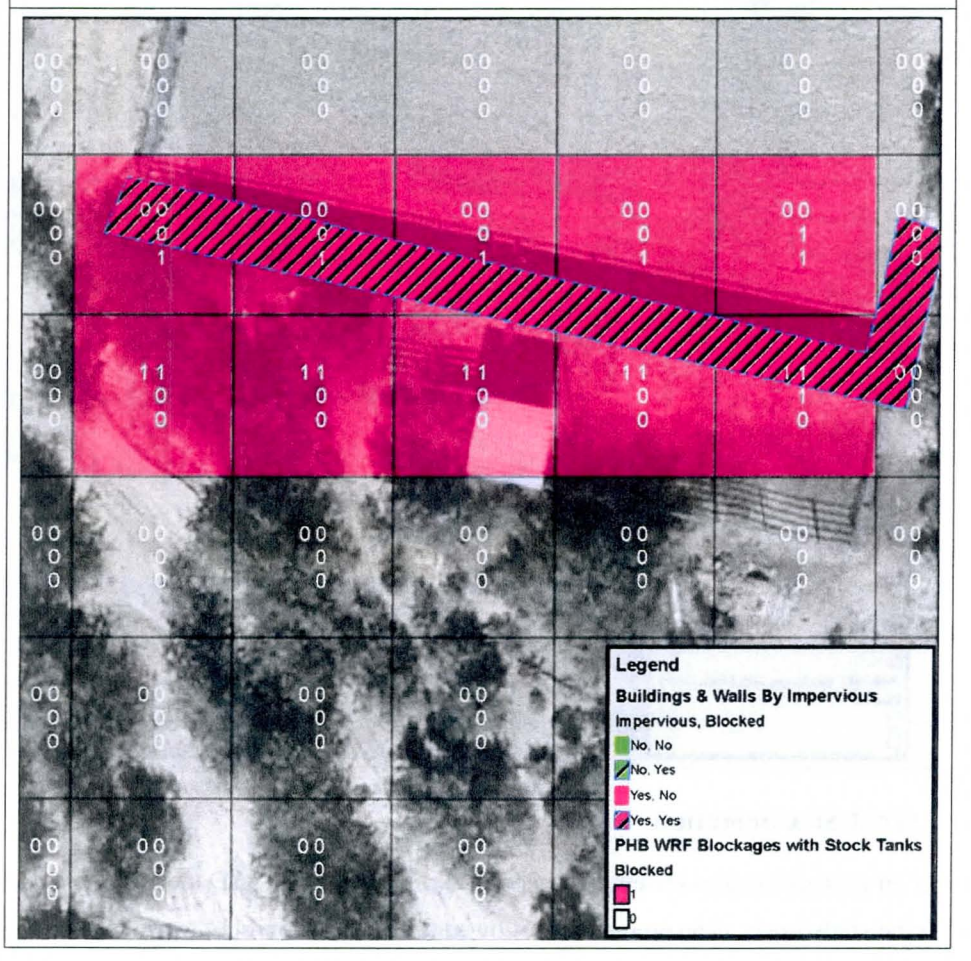

Figure 5.7 Blocking a Building and Allowing Rainfall Runoff Example

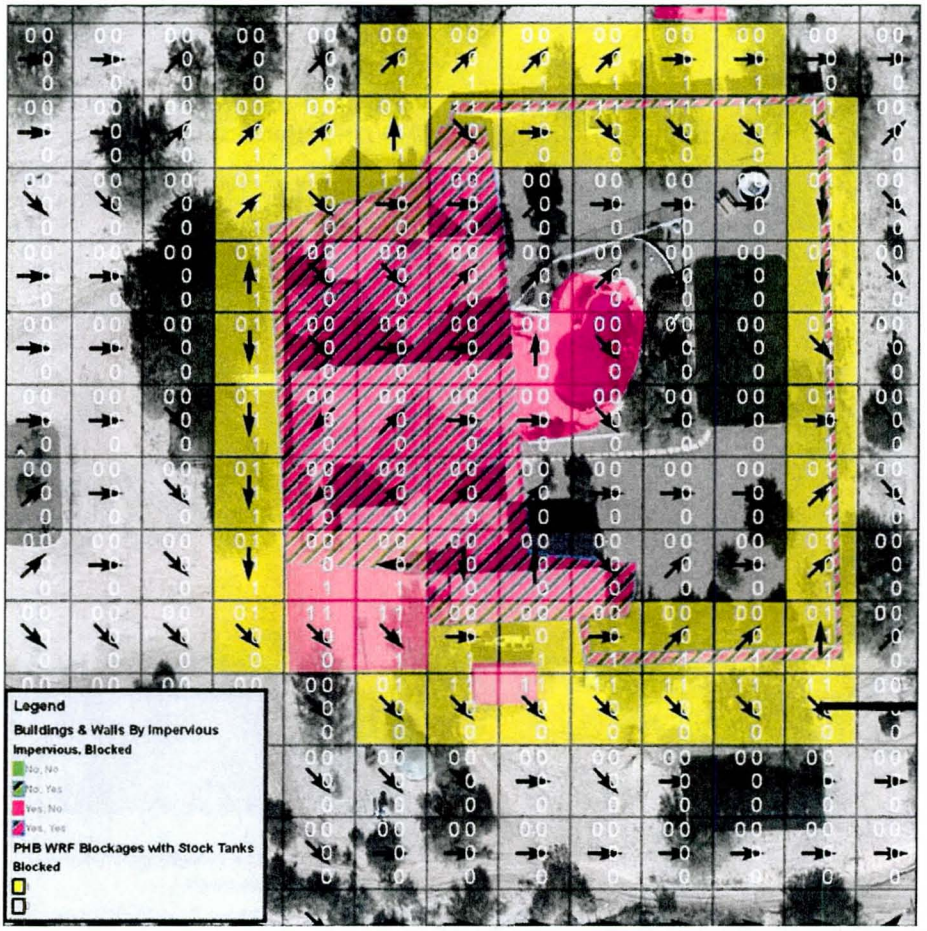

5.3.4 Grid Size Selection

Selection of an appropriate grid element size is critical for creation of a 2D model that can be used to accomplish the study goals. The procedures followed to select an appropriate grid element size for this study are as follows:

1. A test area was used to run FLO-2D models with selected grid element sizes for the purpose of determining an optional size.

2. The aerial mapping companies that prepared the topographic mapping used in this study were contracted to determine the recommended size for a digital elevation model created using the raw mapping point data.

3. An analysis was done to determine the number of grid elements with a specified difference in elevation between a triangular irregular network (TIN) and the grid element elevation for various grid sizes.
4. Grid size selection in relationship to ground slope and mapping accuracy.

The results of the grid size selection process are discussed more fully in the following sections.

5.3.4.1 Grid Size Selection Based on FLO-2D Test Models

The 0.4 square mile area selected as the test location is shown on Figure 5.9. This area was selected because the washes present in the area are relatively small in terms of width and depth. The assumption is that a grid size that produces reasonable results for this area should be small enough to provide reasonable results for the entire study area. The grid sizes tested were 10-, 25-, 50-, and 100-feet. The test run flow depth results are shown on Figure 5.9. The 50- and 100-foot models produce much too coarse results to meet the goals of this study. The 10-foot grid size produced slightly better results than the 25-foot, but computer run times were excessively long. It was determined that it would not be practical to use a 10-foot grid because the estimated model run times for over 1 million grid elements were measured potentially in months. For the 25-foot grid, run times at the start of the study were measured in weeks. By the end of the study, model times were measured in days due to many improvements to the FLO-2D software.

5.3.4.2 Grid Size Selection Based on Input from Mapping Companies

The aerial mapping companies that prepared the topographic mapping used in this study were informally contacted regarding the recommended size for a digital elevation model, based on the procedures and accuracy levels used to produce the mapping. The consensus was that a 30-foot grid size is appropriate.

5.3.4.3 Grid Size Selection Based on Surface Analysis

An analysis using GIS was done to estimate the number of grid elements with a difference in elevation of 1-foot or less when compared with a detailed TIN surface. A TIN was created using the complete mapping data set. This surface was then compared with a raster surface prepared by using the FLO-2D grid elevations. The elevation of the grid element was subtracted from the elevation of the TIN at the center of the grid element. The numbers of grids with an elevation difference of 1-foot or less were totaled for grid element size. This procedure was applied for grid sizes 10-, 25-, 50-, and 100-feet. The results are shown on Figure 5.10. Clearly, the 10- and 25-foot grid element models provide the best representation of the ground surface, based on this analysis. There is not a significant difference between the two grid sizes.

Figure 5.8 Grid Element Sizing Test Area Location Map

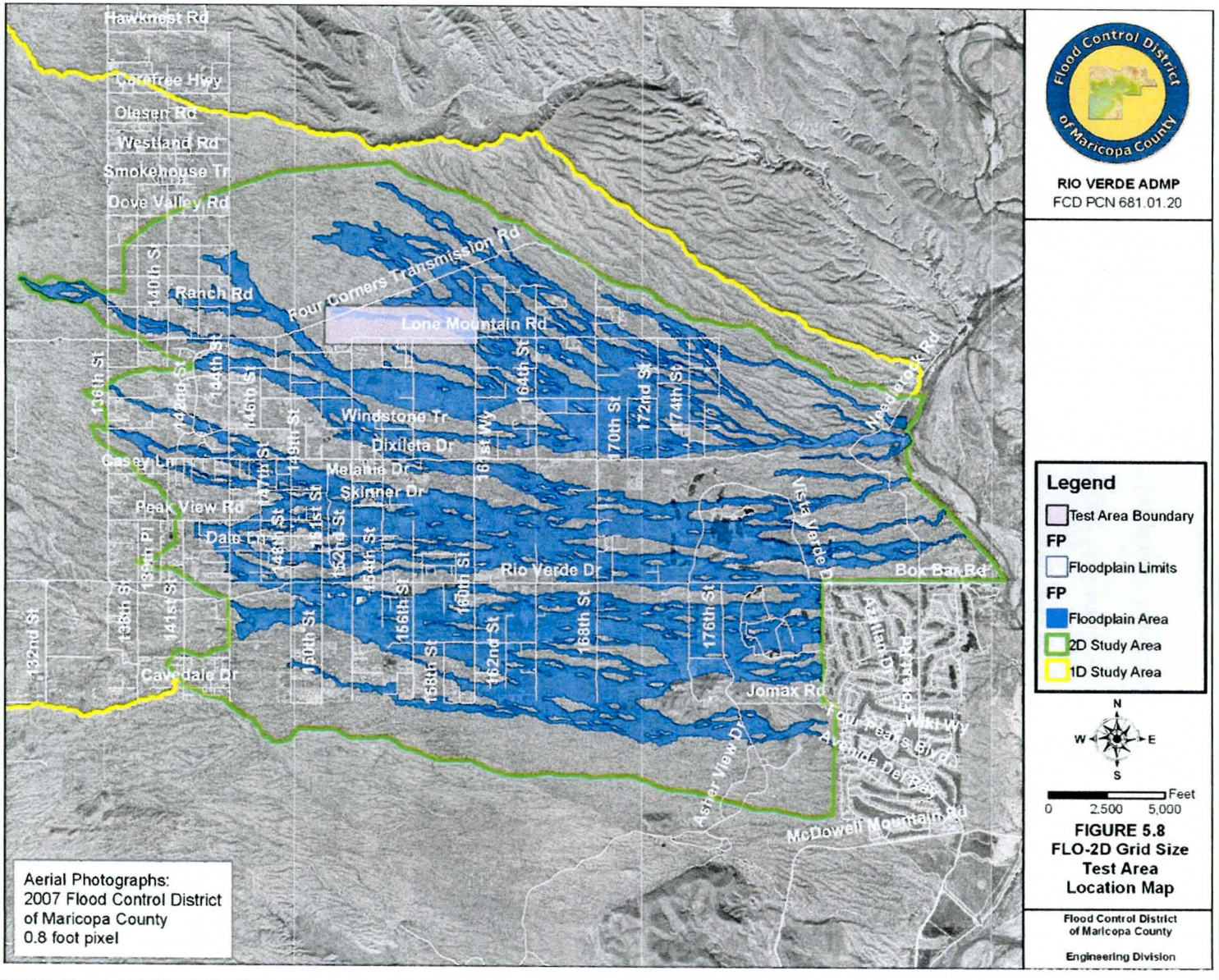

Figure 5.9 Flow Depth Results for Various Test Area Grid Element Sizes

100-foot Grid Size

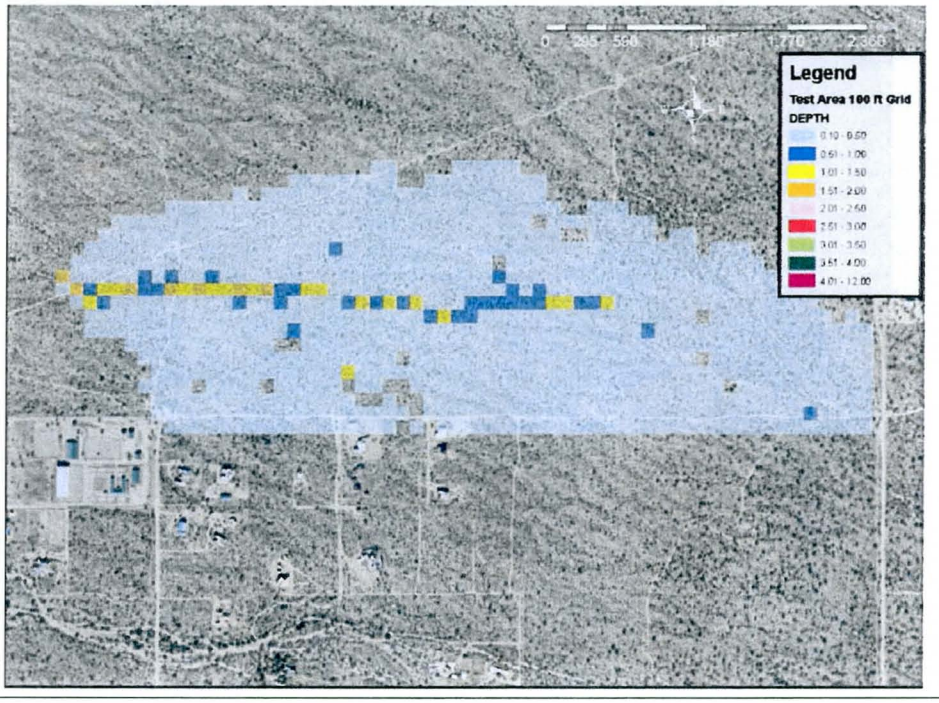

50-foot Grid Size

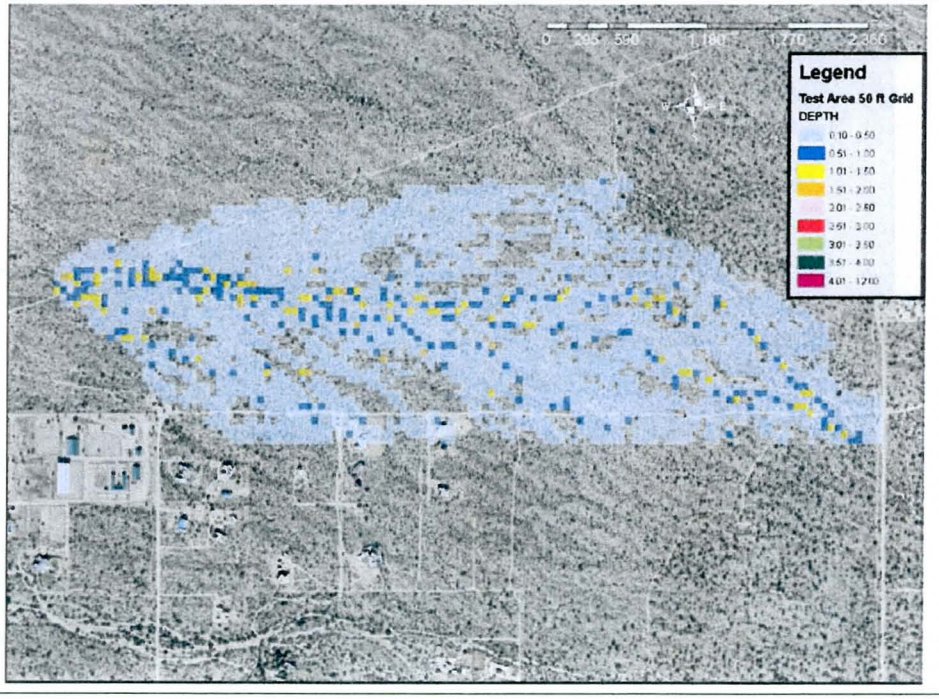

Figure 5.9 Flow Depth Results for Various Test Area Grid Element Sizes Continued

25-foot Grid Size

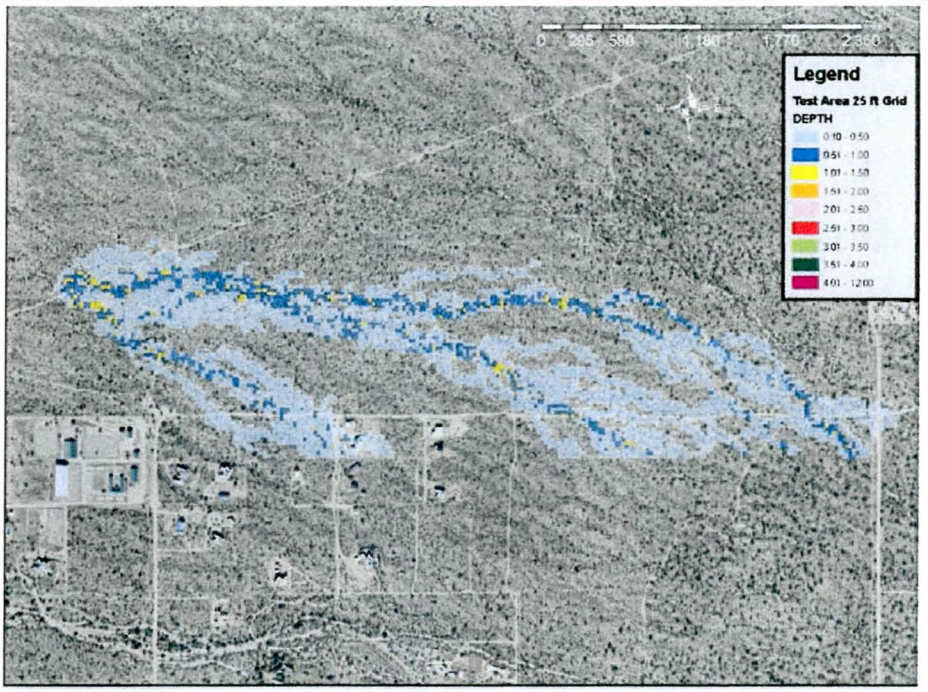

10-foot Grid Size

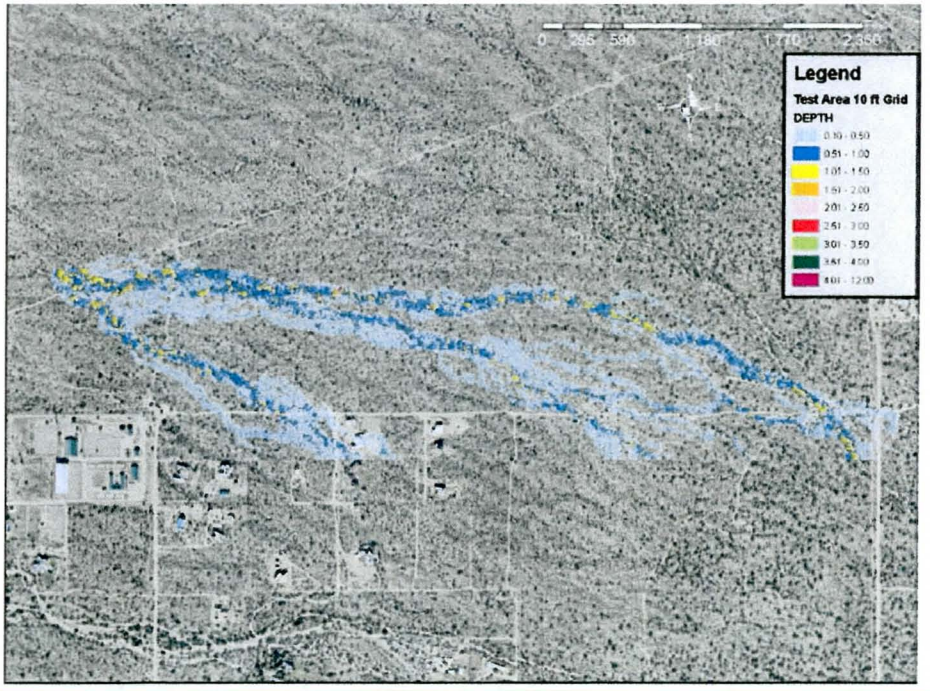

Figure 5.10 Comparison of TIN Surface to Grid Element Surfaces

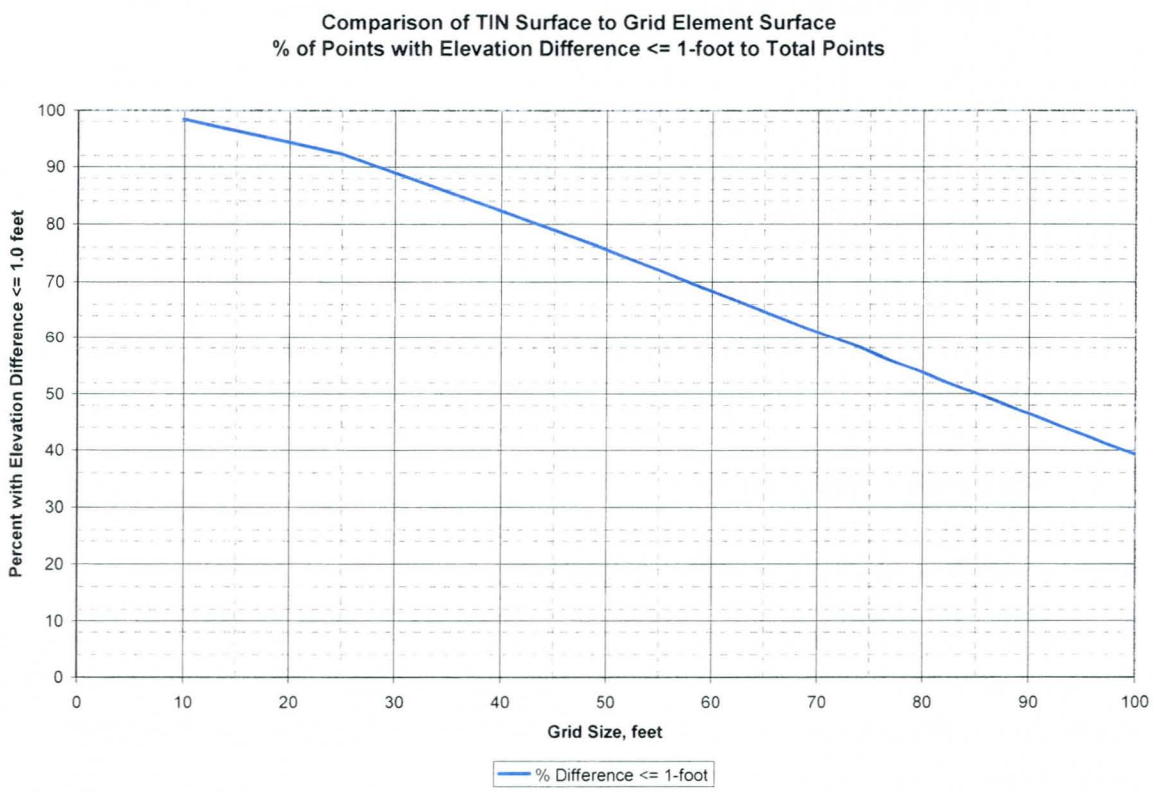

5.3.4.4 Grid Size Selection Based on Ground Slope and Mapping Accuracy

This check is based on a comparison of the average fall across a grid element with the mapping spot elevation accuracy tolerance. The mapping contour accuracy for the study mapping is ±1.0 feet. The average slope for the study area is three percent. The fall across each test grid element size is shown in Table 5.3. The fall across a 10-foot grid and a 25-foot grid is less than the mapping accuracy. The spot elevation accuracy is ±0.5 feet. A 10-foot grid could be preferable, but a 25-foot grid has an average fall across the grid element less than the mapping accuracy.

5.3.4.5 Summary of Grid Size Selection

A 25-foot grid size was selected for use for this study. It is the best compromise between accuracy and computer model run time. The evaluations described above support this assessment.

Table 5.3 Average Fall for Various Grid Sizes

Grid Element Size in feet	Average Fall in feet
10	0.3
25	0.75
50	1.5
100	3.0

5.4 Cross Section Description

Cross sections are not used for a floodplain grid-only FLO-2D model. There are no hydraulic cross sections to discuss.

5.5 Modeling Considerations

5.5.1 Hydraulic Jump and Drop Analysis

There are no locations of hydraulic jump or drop of concern in the study area. There are no channels or drop structures with fixed beds where supercritical flow can be sustained. Flow depths are generally shallow over sand bed channels that can be expected to entrain more sediment in order to sustain subcritical flow.

5.5.2 Bridge and Culverts

There are no bridges in the 2D study area. There are 74 culvert locations, 17 of which are openings in private masonry walls large enough to justify modeling. Many of the culverts and wall openings are small, and some are not within the proposed floodplain. These are included in the model because of the possible effects on the distributary channel system and volume distribution.

The culverts and wall openings were modeled using the Federal Highway Administration HY8 computer program, version 6.1. HY-8 was used to generate a hydraulic rating curve for each culvert. Each rating curve, in the form of inlet head versus discharge, was entered into the *HYSTRUCT.DAT* FLO-2D input data file. The dominant condition for the culverts is inlet control, so the rating curves are all inlet control curves. The locations of culverts by study name are shown on Figure 5.11. The study number matches the name in column 1 of Table 5.4 and column 2 of Table 5.5.

Every culvert is partially blocked by assuming 50 percent sediment and debris accumulation for pipes 36-inch in diameter or equivalent and smaller, and 25 percent for larger culverts. These percentages are

based upon observed accumulation in the field and upon engineering judgment and good engineering practice. The subdivision design reports indicate that the culverts were designed and intentionally over-sized using these same debris and clogging factors. It is therefore reasonable to include these factors for the floodplain delineation study. The majority of the flow, even if backed up by the culverts, continues in the main wash. The application of the clogging factors results in conservative ponding water surface elevations on the upstream side of the road.

Overtopping of roadways or walls at each location requires special consideration. If the overtopping flows return to the same watercourse, then the culvert rating curve includes the overtopping flow rate. In this case, grid cells are blocked perpendicular (generally) to the culvert alignment for the approximate overtopping length. The rating curves input to FLO-2D include the sum of flow in the culvert and weir flow. For the case where overtopping flows do not return directly to the same watercourse, the rating curve typically only includes the culvert flow component, but may also include the portion of weir flow that can return to the same wash. Grid cells are not blocked for the areas affected by non-returning flow. This allows FLO-2D to determine the flow path for overtopping flow.

To allow FLO-2D to properly model the culvert hydraulics, the incoming depth of flow and flow rate must reasonably match the corresponding inlet depth and flow rate at the culvert inlet. If the culvert rating curve does not have adequate definition for the range of flows coming to the inlet, FLO-2D can have trouble resolving the water surface elevations at the inlet. After a FLO-2D run, the culvert hydraulics reported by FLO-2D were carefully checked for computation issues. Where inconsistencies were found, HY-8 was rerun using a more appropriate design flow setting in order to provide better definition in the rating curve for the range of flows delivered to it. This procedure resolved instabilities in the culvert hydraulic modeling within FLO-2D.

The Manning's roughness coefficients assigned in HY-8 are as follows:

- For concrete pipe and box culverts: 0.016
- For corrugated metal pipes 0.025
- For sandy bottom washes upstream, downstream or inside culverts 0.035

The basic culvert descriptive information is summarized in Table 5.4. The culvert number in column 1 is the main identifier used in the culvert modeling documentation. Refer to Figure 5.11 for the location of each culvert by number. If the culvert lies along a main wash thalweg, the wash name is included in column 2 and the river mile station in column 3. If the culvert crosses under a named street, the street name is listed in column 4. The culvert size and type is listed in column 5. If the culvert is within a platted subdivision, the subdivision name is listed in column 6. The engineer responsible for as-built

plans or as-built survey information is listed in column 7. Whether or not the culvert lies within the 2D delineated floodplain is designated in column 8. Descriptive notes, such as locations of wall openings, are listed in column 9.

The results of the culvert hydraulic analyses are shown on Table 5.5. The numbers in column 1 are assigned by FLO-2D at run-time and match input order in the *HYSTRUCT.DAT* FLO-2D input data file. The numbers in column 2 are the names assigned to each culvert in the study and match the numbers shown on Figure 5.11. The FLO-2D grid element numbers for the culvert inlets and outlets are shown in columns 3 and 4 respectively. Column 5 contains the flow line elevation of each culvert inlet. Column 6 contains the total flow rate in cubic feet per second (cfs) draining to each culvert inlet. The maximum stage (water surface elevation) at each culvert inlet is listed in column 7. This is the maximum of the results from the "with stock tanks" and "without stock tanks" runs. Refer to Sections 4.3.1.1 and 4.5.1.1 for a description of these runs. The head in feet at each culvert inlet is listed in column 8 and is the difference between columns 5 and 7. The elevation of the lowest point where weir flow can begin to occur for roadway or wall overtopping is listed in column 9. The total peak discharge for each culvert (pipe plus weir flow) computed by FLO-2D is listed in column 10. The portion of the flow listed in column 10 that is weir flow is listed in column 11. In many cases, the total flow listed in column 6 is greater than the total culvert flow listed in column 10. In some cases, flow is diverted away from the main wash due to the culvert obstruction. In other cases, flow overtops the road upstream and/or downstream of the area blocked out for the culvert-controlled hydraulics. Where these cases occur, a brief description is included in column 12.

The HY-8 output information for each culvert, used to generate the culvert rating curves in the *HYSTRUCT.DAT* FLO-2D input data file, is included in Appendix E.4.

Figure 5.11 Culvert Location Map

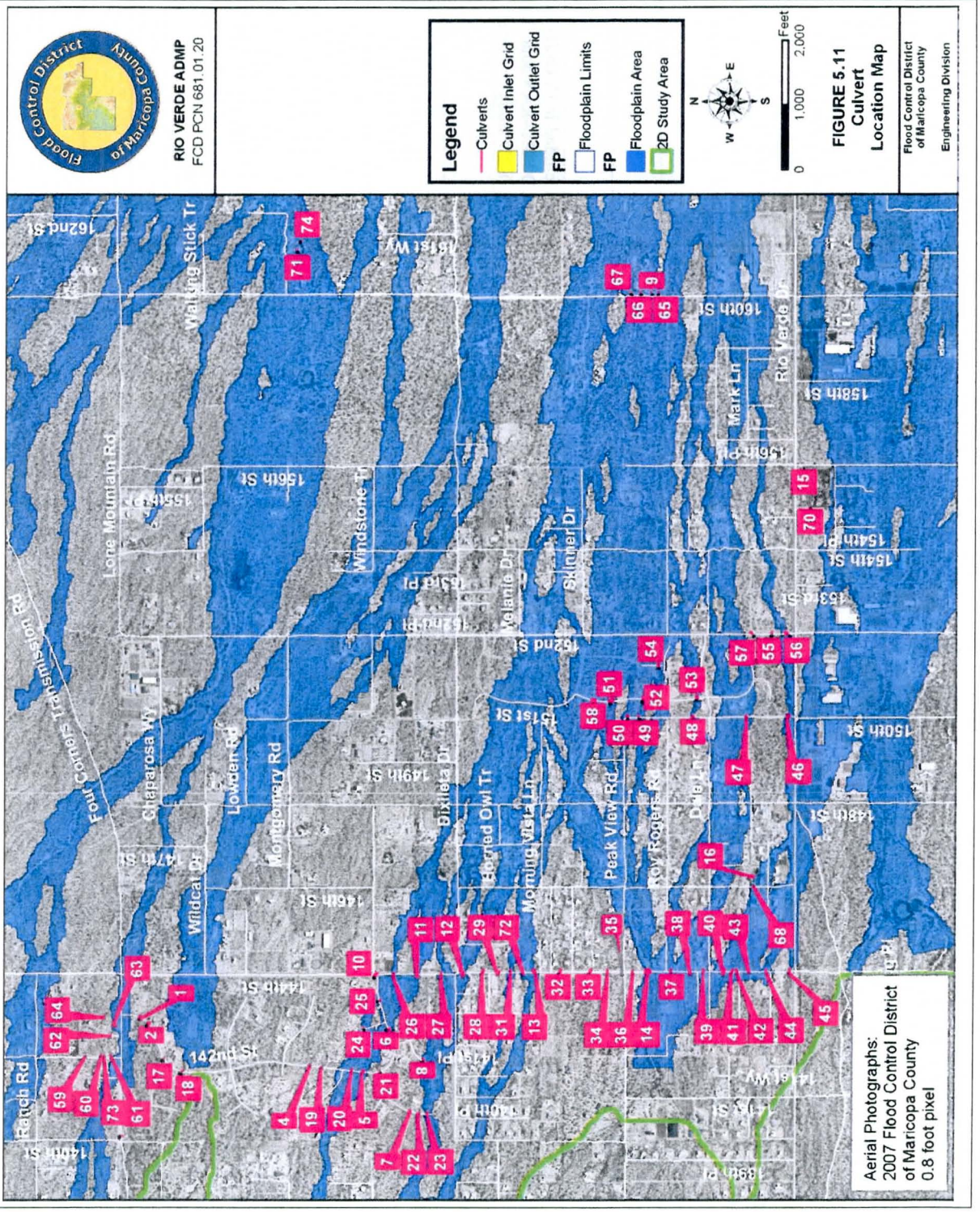

Table 5.4 Culvert Summary Data

Culvert Number	Flooding Source	River Station, mi.	Street Name	Size and Type	Subdivision	Engineer	In Floodplain	Notes
1	2	3	4	5	6	7	8	9
Culv1	RVWKT9		142nd St.	6-49"x33" CMPA	Granite Mountain Ranch Unit 2	Brooks Egr.	N	
Culv2	RVWKT9		142nd St.	6-49"x33" CMPA	Granite Mountain Ranch Unit 2	Brooks Egr.	N	
Culv3						Dibble & Assoc.		Not included in FLO-2D model. See 1D HEC-RAS data. Too close to FLO-2D study boundary
Culv4	RVWFT2		142nd St.	2-72" CMP	Granite Mountain Ranch Unit 2	Brooks Egr.	N	
Culv5	RVWFT2	1.485	142nd St.	6-49"x33" CMPA	Granite Mountain Ranch Unit 1	Brooks Egr.	Y	
Culv6	RVWFT2	1.33	Windstone Tr.	6-49"x33" CMPA	Granite Mountain Ranch Unit 1	Brooks Egr.	Y	
Culv7	RVWF		Miradar Ct.	4-49"x33" CMPA	Granite Mountain Ranch Unit 1	Brooks Egr.	N	
Culv8	RVWF	6.593	Barwick Ct.	2-8'x3' RCBC	Granite Mountain Ranch Unit 1	Brooks Egr.	Y	
Culv9	RVWA	4.573	N/A			FCDMC	Y	Wall obstruct, parcel 219-37-013U, 75' E of 160th St, 2266' N of Rio Verde Dr.
Culv10	RVWFT2	1.205	144th St.	2-10'x4' RCBC	Granite Mountain Ranch Unit 1	Brooks Egr.	N	
Culv11	RVWFT2	1.142	144th St.	6-49"x33" CMPA	Granite Mountain Ranch Unit 1	Brooks Egr.	Y	
Culv12	RVWF	6.296	144th St.	1-10'x3' RCBC		Dibble & Assoc.	Y	
Culv13	RVWFS6	0.453	144th St.	2-10'x4' RCBC		Dibble & Assoc.	Y	

Table 5.4 Culvert Summary Data

Culvert Number	Flooding Source	River Station, mi.	Street Name	Size and Type	Subdivision	Engineer	In Floodplain	Notes
1	2	3	4	5	6	7	8	9
Culv14	RVWA	6.767	144th St.	9-8'x6' RCBC		Dibble & Assoc.	Y	
Culv15	RVWAS9		N/A			FCDMC	N	Wall opening, parcel 219-37-086D, 44' W of 156th St, 134' S of Rio Verde Dr.
Culv16	RVWAS9		N/A			FCDMC	N	Wall opening between parcels 219-39-123A and 123B, 176' E of 146th Pl, 651' N of Rio Verde Dr.
Culv17	RVW1		142nd St.	1-30" CMP	Granite Mountain Ranch Unit 2	Brooks Egr.	N	
Culv18	RVW1		142nd St.	1-49"x33" CMPA	Granite Mountain Ranch Unit 2	Brooks Egr.	N	
Culv19	RVWFT2		142nd St.	1-36" CMP	Granite Mountain Ranch Unit 1	Brooks Egr.	N	
Culv20	RVWFT2	1.509	142nd St.	2-35"x24" CMPA	Granite Mountain Ranch Unit 1	Brooks Egr.	Y	
Culv21	RVWFT2		142nd St.	1-35"x24" CMPA	Granite Mountain Ranch Unit 1	Brooks Egr.	N	
Culv22	RVWF		Miradar Ct.	1-36" CMP	Granite Mountain Ranch Unit 1	Brooks Egr.	N	
Culv23	RVWF	6.756	Miradar Ct.	4-49"x33" CMPA	Granite Mountain Ranch Unit 1	Brooks Egr.	Y	
Culv24	RVWFT2	1.37	Cowboy Ct.	2-35"x24" CMPA	Granite Mountain Ranch Unit 1	Brooks Egr.	Y	
Culv25	RVWFT2	1.27	Windstone Tr.	2-35"x24" CMPA	Granite Mountain Ranch Unit 1	Brooks Egr.	Y	
Culv26	RVWFT2	1.147	144th St.	2-35"x24" CMPA	Granite Mountain Ranch Unit 1	Brooks Egr.	Y	
Culv27	RVWF	6.293	144th St.	1-35"x24" CMPA	Granite Mountain Ranch Unit 1	Brooks Egr.	Y	

Table 5.4 Culvert Summary Data

Culvert Number	Flooding Source	River Station, mi.	Street Name	Size and Type	Subdivision	Engineer	In Floodplain	Notes
1	2	3	4	5	6	7	8	9
Culv28	RVWF		144th St.	4-36" CMP		Dibble & Assoc.	N	
Culv29	RVWF		144th St.	1-36" CMP		Dibble & Assoc.	N	
Culv30	RVWKT9	1.301	Lone Mountain Rd.	2-24" CMP	Granite Mountain Ranch Unit 2	Brooks Egr.	Y	
Culv31	RVWFS6	0.425	144th St.	1-30" CMP		Dibble & Assoc.	Y	
Culv32	RVWFS6		144th St.	4-30" CMP		Dibble & Assoc.	N	
Culv33	RVWA		144th St.	4-30" CMP		Dibble & Assoc.	N	
Culv34	RVWA		144th St.	3-30" CMP		Dibble & Assoc.	N	
Culv35	RVWA		144th St.	4-30" CMP		Dibble & Assoc.	N	
Culv36	RVWA		144th St.	1-30" CMP		Dibble & Assoc.	N	
Culv37	RVWAS8	3.044	144th St.	3-24" CMP		Dibble & Assoc.	Y	
Culv38	RVWAS8	3.044	144th St.	5-24" CMP		Dibble & Assoc.	Y	
Culv39	RVWAS9	2.969	144th St.	4-24" CMP		Dibble & Assoc.	Y	
Culv40	RVWAS9	2.942	144th St.	6-36" CMP		Dibble & Assoc.	Y	
Culv41	RVWAS9	2.915	144th St.	1-30" CMP		Dibble & Assoc.	Y	
Culv42	RVWAS9	2.904	144th St.	1-30" CMP		Dibble & Assoc.	Y	

Table 5.4 Culvert Summary Data

Culvert Number	Flooding Source	River Station, mi.	Street Name	Size and Type	Subdivision	Engineer	In Floodplain	Notes
1	2	3	4	5	6	7	8	9
Culv43	RVWAS9	2.903	144th St.	1-30" CMP		Dibble & Assoc.	Y	
Culv44	RVWAS9	2.874	144th St.	3-36" CMP		Dibble & Assoc.	Y	
Culv45	RVWAS9	2.77	144th St.	3-35"x24" CMPA		Dibble & Assoc.	Y	
Culv46	RVWAS8	2.126	150th St	6-35"x24" CMPA	Rio Mountain Estates Unit 1	Brooks Egr.	Y	
Culv47	RVWAS8	2.176	150th St	2-10'x4' RCBC	Rio Mountain Estates Unit 1	Brooks Egr.	Y	
Culv48	RVWAS8	2.21	150th St	3-10'x4' RCBC	Rio Mountain Estates Unit 1	Brooks Egr.	Y	
Culv49	RVWA	5.905	150th St	2-24" CMP	Rio Mountain Estates Unit 1	Brooks Egr.	Y	
Culv50	RVWA	5.909	150th St	2-18" CMP	Rio Mountain Estates Unit 1	Brooks Egr.	Y	
Culv51	RVWA	5.886	151st St.	6-10'x3' RCBC	Rio Mountain Estates Unit 1	Brooks Egr.	Y	
Culv52	RVWA	5.852	151st St.	2-24" CMP	Rio Mountain Estates Unit 1	Brooks Egr.	Y	
Culv53	RVWAS8	2.113	151st St.	3-10'x4' RCBC	Rio Mountain Estates Unit 1	Brooks Egr.	Y	
Culv54	RVWA	5.696	Rio Mountain Ct.	2-10'x3' RCBC	Rio Mountain Estates Unit 1	Brooks Egr.	Y	
Culv55	RVWAS8		152nd St.	1-36" CMP	Rio Mountain Estates Unit 1	Brooks Egr.	N	
Culv56	RVWAS8		152nd St.	5-36" CMP	Rio Mountain Estates Unit 1	Brooks Egr.	N	
Culv57	RVWAS8		152nd St.	1-24" CMP	Rio Mountain Estates Unit 1	Brooks Egr.	N	

Table 5.4 Culvert Summary Data

Culvert Number	Flooding Source	River Station, mi.	Street Name	Size and Type	Subdivision	Engineer	In Floodplain	Notes
1	2	3	4	5	6	7	8	9
Culv58	RVWA	5.885	151st St.	6-10'x3.2' RCBC	Rio Mountain Estates Unit 1	Brooks Egr.	Y	
Culv59	RVWKT9		N/A		Sunrise Desert Vistas	FCDMC	N	Wall opening in parcel 219-40-049S, 43' E of 142nd St, 572' N of Lone Mountain Rd.
Culv60	RVWKT9		N/A		Sunrise Desert Vistas	FCDMC	N	Wall opening in parcel 219-40-049S, 40' E of 142nd St, 328' N of Lone Mountain Rd.
Culv61	RVWKT9		N/A		Sunrise Desert Vistas	FCDMC	N	Wall opening in parcel 219-40-049Q, 38' E of 142nd St, 165' N of Lone Mountain Rd.
Culv62	RVWKT9		N/A		Sunrise Desert Vistas	FCDMC	N	Wall opening between parcels 219-40-049Q and 049R, 170' N of Lone Mountain Rd, 343' E of 142nd St.
Culv63	RVWKT9	0.994	N/A		Sunrise Desert Vistas	FCDMC	Y	Wall opening in parcel 219-40-049R, 80' N of Lone Mountain Rd, 497' E of 142nd St.
Culv64	RVWKT9		N/A		Sunrise Desert Vistas	FCDMC	N	Wall opening between parcels 219-40-049R and 049P, 260' N of Lone Mountain Rd, 650' W of 144th St.
Culv65	RVWA	4.572	N/A			FCDMC	Y	Wall opening in parcel 219-37-013U, 80' E of 160th St, 2155' N of Rio Verde Dr.
Culv66	RVWAS3	0.135	N/A			FCDMC	Y	Wall opening in parcel 219-37-487, 69' E of 160th St, 2427' N of Rio Verde Dr.
Culv67	RVWAS3	0.133	N/A			FCDMC	Y	Wall opening in parcel 219-37-487, 64' E of 160th St, 2573' N of Rio Verde Dr.

Table 5.4 Culvert Summary Data

Culvert Number	Flooding Source	River Station, mi.	Street Name	Size and Type	Subdivision	Engineer	In Floodplain	Notes
1	2	3	4	5	6	7	8	9
Culv68	RVWAS9		N/A			FCDMC	N	Wall opening in parcel 219-39-123A, 15' E of 146th St, 652' N of Rio Verde Dr.
Culv69	RVW10S 7T1	2.184	N/A			FCDMC	Y	Wall opening in parcel 219-39-020C, 43' E of 150th St, 1126' N of Jomax Rd.
Culv70	RVWAS9		N/A			FCDMC	N	Wall opening between parcels 219-37-086C and 086D, 229' S of Rio Verde Dr, 656' W of 156th St.
Culv71	RVWK	3.645				FCDMC	Y	
Culv72	RVWFS6	0.43	144th St.			Dibble & Assoc.	Y	
Culv73	RVWKT9		N/A		Sunrise Desert Vistas	FCDMC	N	Wall opening in parcel 219-40-049Q, 41' E of 142nd St, 281' N of Lone Mountain Rd.
Culv74	RVWK	3.599				FCDMC	Y	

Table 5.5 Summary of Culvert and Wall Opening Modeling Results

Culvert Name		Grid Number		Inlet	Total Flow At	Max.	Inlet	Weir	Structure Discharge		
FLO2D	Study	Inlet	Outlet	I.E.	Inlet	Stage	Head	Crest	Total	Weir	Comments
1	2	3	4	5	6	7	8	9	10	11	12
1	Culv71	195163	195980	2107.80	88	2111.10	3.30	2112.50	71	0	Excess flow drains around culvert location to north.
2	Culv74	197602	198409	2103.10	48	2104.50	1.40	2107.70	21	0	Excess flow drains around culvert location to north
1	Culv1	71784	73464	2436.00	22	2436.71	0.71	2440.76	22	0	
2	Culv2	69552	70662	2437.20	19	2437.87	0.67	2441.30	19	0	
3	Culv4	55401	56459	2436.09	60	2438.11	2.02	2442.70	60	0	
4	Culv5	53265	54316	2437.00	79	2438.49	1.49	2440.71	79	0	
5	Culv6	67743	68845	2415.00	74	2416.14	1.14	2419.13	51	0	Excess flow breaks out to north of the culvert, overtops the road, and diverges from the main wash.
6	Culv7	40734	41669	2446.70	36	2447.86	1.16	2450.60	36	0	
7	Culv8	56919	58513	2422.95	154	2425.20	2.25	2427.30	123	0	Flow overtops road south of culvert and returns to the same wash.
8	Culv9	355484	357216	2094.26	80	2097.40	4.64	2097.35	66	11	Excess flow is diverted to south.
9	Culv10	86434	89001	2392.45	21	2393.37	0.92	2395.82	21	0	
10	Culv11	86407	88977	2388.80	54	2389.98	1.18	2392.01	54	0	
11	Culv12	86966	89623	2383.60	186	2388.26	4.66	2389.06	186	0	

Table 5.5 Summary of Culvert and Wall Opening Modeling Results

Culvert Name		Grid Number		Inlet	Total Flow At Inlet	Max. Stage	Inlet Head	Weir Crest	Structure Discharge		Comments
FLO2D	Study	Inlet	Outlet	I.E.					Total	Weir	
1	2	3	4	5	6	7	8	9	10	11	12
12	Culv13	87555	89579	2376.60	25	2377.25	0.65	2381.97	25	0	
13	Culv14A	87485	90183	2371.50	1,837	2376.53	5.03	2379.53	914	0	Total combined flow at Culv13 and Culv14 is 1,837 cfs.
14	Culv14B	87484	90182	2371.50		2376.72	5.22	2379.53	959	0	
15	Culv15	290695	291882	2169.40	9	2170.27	0.87	2172.70	9	0	
16	Culv16	129280	130703	2331.79	0	2332.98	1.19	2338.41	0	0	No runoff gets to culvert.
17	Culv17	57614	59207	2449.30	9	2451.40	2.10	2451.90	9	0	
18	Culv18	53379	54429	2451.92	11	2453.27	1.35	2455.90	11	0	
19	Culv19	54868	55921	2437.05	9	2439.01	1.96	2441.00	9	0	
20	Culv20	53798	54848	2437.05	44	2439.36	2.31	2439.70	44	0	
21	Culv21	53254	54832	2433.78	8	2435.54	1.76	2437.00	8	0	
22	Culv22	40255	41192	2446.00	16	2448.68	2.68	2450.55	16	0	
23	Culv23	39769	41187	2445.28	214	2450.33	4.53	2449.80	214	72	
24	Culv24	67757	68862	2418.39	56	2421.51	3.12	2421.30	32	1	Excess flow crosses road south of culvert and returns to main wash.
25	Culv25	77829	78393	2404.58	51	2406.95	2.37	2407.60	24	0	Excess flow crosses road north of culvert and returns to main wash.

Table 5.5 Summary of Culvert and Wall Opening Modeling Results

Culvert Name		Grid Number		Inlet	Total Flow At	Max.	Inlet	Weir	Structure Discharge		
FLO2D	Study	Inlet	Outlet	I.E.	Inlet	Stage	Head	Crest	Total	Weir	Comments
1	2	3	4	5	6	7	8	9	10	11	12
26	Culv26	87010	88991	2389.77	56	2393.99	4.22	2393.59	49	15	Excess flow drains south to Culv11.
27	Culv27	86392	88962	2385.58	67	2390.91	5.33	2390.39	67	48	
28	Culv28	87589	89610	2381.70	15	2382.79	1.09	2386.41	15	0	
29	Culv29	87579	89599	2378.77	4	2379.99	1.22	2382.40	4	0	
30	Culv30	34479	34863	2485.92	44	2489.33	3.41	2488.80	44	24	
31	Culv31	87571	89593	2375.76	45	2380.23	4.47	2379.87	45	23	
32	Culv32	87541	90237	2374.78	19	2376.29	1.51	2378.77	19	0	
33	Culv33	87522	90217	2369.42	18	2370.88	1.46	2373.33	18	0	
34	Culv34	87510	89532	2366.60	15	2368.11	1.51	2371.36	15	0	
35	Culv35	87501	89523	2368.21	16	2369.58	1.37	2372.65	16	0	
36	Culv36	87494	89516	2371.42	5	2372.96	1.54	2376.14	5	0	
37	Culv37	87470	89492	2373.68	321	2378.67	4.99	2377.69	321	276	
38	Culv38	87458	89480	2373.80	157	2377.87	4.07	2377.81	14	3	Excess flow drains south to Culv39.
39	Culv39	87450	90147	2372.30	187	2375.78	3.48	2375.73	39	1	Excess flow drains south to Culv40.
40	Culv40	87437	89458	2364.80	442	2370.50	5.70	2369.36	341	158	Excess flow drains south to Culv41.

Table 5.5 Summary of Culvert and Wall Opening Modeling Results

Culvert Name		Grid Number		Inlet	Total Flow At Inlet	Max. Stage	Inlet Head	Weir Crest	Structure Discharge		Comments
FLO2D	Study	Inlet	Outlet	I.E.					Total	Weir	
1	2	3	4	5	6	7	8	9	10	11	12
41	Culv41	87432	89452	2364.33	142	2369.42	5.09	2368.73	129	109	Excess flow drains south to Culv42.
42	Culv42	87428	89451	2363.95	13	2366.96	3.01	2368.40	13	0	
43	Culv43	88093	89443	2363.62	7	2364.95	1.33	2366.90	7	0	
44	Culv44	88082	89432	2357.65	15	2358.91	1.26	2361.34	15	0	
45	Culv45	88068	89417	2356.17	27	2358.02	1.85	2359.50	27	0	
46	Culv46A	196335	197584	2268.37	58	2272.24	3.87	2272.02	21	2	Excess flow crosses road south of culvert and returns to main wash.
47	Culv46B	196334	197585	2268.37		2272.24	3.87	2272.02	21	2	
48	Culv47	196360	198235	2266.36	80	2267.84	1.48	2270.48	80	0	
49	Culv48	196394	198269	2266.37	80	2267.52	1.15	2270.88	80	0	
50	Culv49	196428	197679	2270.13	34	2274.21	4.08	2273.85	29	6	Excess flow crosses road south of culvert and returns to main wash.
51	Culv50	196435	198310	2271.77	178	2276.43	4.66	2275.50	157	142	Excess flow crosses road north and south of culvert and returns to main wash.
52	Culv51A	202676	204533	2266.62	645	2269.10	2.48	2269.70	174	0	Excess flow overtops road between Culv51 and Culv58.
53	Culv51B	202675	204532	2266.62		2269.08	2.46	2269.70	172	0	
54	Culv51C	202674	204531	2266.62		2269.06	2.44	2269.70	171	0	

Table 5.5 Summary of Culvert and Wall Opening Modeling Results

Culvert Name		Grid Number		Inlet	Total Flow At Inlet	Max. Stage	Inlet Head	Weir Crest	Structure Discharge		Comments
FLO2D	Study	Inlet	Outlet	I.E.					Total	Weir	
1	2	3	4	5	6	7	8	9	10	11	12
55	Culv52	203275	205131	2264.39	34	2267.18	2.79	2266.85	25	8	Excess flow overtops road south of Culv52 and drains to a different wash.
56	Culv53	203860	205717	2259.36	80	2260.43	1.07	2263.67	80	0	
57	Culv54	216221	218072	2249.77	243	2252.95	3.18	2253.16	122	0	Excess flow overtops road north and south of Culv54 and returns to main wash.
58	Culv55	228522	230376	2234.60	7	2236.28	1.68	2238.79	7	0	
59	Culv56	228511	230368	2236.09	66	2238.44	2.35	2239.20	66	0	
60	Culv57	228533	229772	2234.57	5	2236.09	1.52	2237.46	5	0	
61	Culv58A	202686	204544	2267.88	473	2269.25	1.37	2271.25	230	0	Excess flow overtops road north of Culv58 and returns to main wash.
62	Culv58B	202685	204543	2267.88		2268.89	1.01	2271.25	147	0	
63	Culv59	58726	60325	2453.97	21	2454.82	0.85	2457.80	21	0	
64	Culv60	58716	60315	2452.89	4	2453.19	0.30	2455.60	4	0	
65	Culv61	58709	60309	2454.16	6	2454.51	0.35	2455.60	4	0	Excess flow drains south to a different wash.
66	Culv62	65719	66814	2442.65	14	2444.56	1.91	2445.37	14	0	
67	Culv63	69573	69570	2438.84	14	2440.56	1.72	2440.00	14	7	
68	Culv64	72366	74047	2436.17	17	2437.66	1.49	2438.00	17	0	

Table 5.5 Summary of Culvert and Wall Opening Modeling Results

Culvert Name		Grid Number		Inlet	Total Flow At Inlet	Max. Stage	Inlet Head	Weir Crest	Structure Discharge		Comments
FLO2D	Study	Inlet	Outlet	I.E.					Total	Weir	
1	2	3	4	5	6	7	8	9	10	11	12
69	Culv65	355480	357212	2094.10	33	2095.60	1.50	2497.58	33	0	
70	Culv66	355491	357223	2094.98	111	2099.32	4.34	2096.82	41	31	Excess flow overtops road north and south of Culv66. Some returns to main wash and some drains south to a different wash.
71	Culv67	355497	357229	2093.31	569	2098.35	5.04	2097.45	404	317	Two small wall openings with a long weir. Excess flow diverted north (majority) and south around ends of wall and returns to main wash.
72	Culv68	125024	126436	2334.41	63	2336.60	2.19	2340.54	42	0	Overtopping flows do not return to the same wash.
73	Culv69	196792	198665	2253.84	27	2256.52	2.68	2258.34	24	0	Excess flow drains around south end of wall and returns to main wash.
74	Culv70	275875	277642	2186.42	2	2187.22	0.80	2188.67	2	0	
75	Culv72	87563	89585	2377.09	13	2379.92	2.83	2380.60	13	0	Excess flow drains around south end of wall and reenters the main wash. A small portion of excess flow drains south to a different wash.
76	Culv73	58714	60313	2453.27	6	2453.68	0.41	2455.60	6	0	

5.5.3 Levees and Dikes

There are levees and dikes present in the 2D study area as shown on Figure 4.19. None of these structures meets FEMA levee criteria. Therefore, the FLO-2D models were run with these structures in place and removed as described in Section 4.3.1.1. The 100-year floodplain limits are based on the maximum water surface elevations resulting from the two model runs.

5.5.4 Islands and Flow Splits

The 2D study area is characterized by flow splits and islands in the floodplain. The hydraulics of the splits are automatically modeled by FLO-2D so no further discussion is warranted. Islands present a problem that must be addressed since there are several hundred islands throughout the 100-year floodplain within the 2D study area. The islands are due to the complex distributary flow network of small channels and large areas of shallow sheet flow. Many of the islands are too small to administer properly without assuming the area is floodplain and many would not be visible at the scale of a FIRM panel. The following criteria was used to determine whether each individual island was mapped as 100-year floodplain or left as an island.

1. Each island must have a minimum area of 0.5 acres and an average width of a minimum of 100 feet, or
2. Each island must have a minimum area of 1.0 acres and an average minimum width of 75 feet.

The reasons for each criterion are:

Criterion 1: Each island must have a minimum area of 0.5 acres and an average width of a minimum of 100 feet. The minimum zoning in the area, with the exception of a few subdivisions, is 1 acre. The 0.5 acre size allows a large enough area for a single family residence, a septic system and leach field, a well, and accessory buildings. The 100-foot minimum width allows a typical home and fill pad in the area to be constructed without either being in the floodplain.

Criterion 2: Each island must have a minimum area of 1.0 acres and an average minimum width of 75 feet. In examining the various islands using this criterion, there is typically an area or areas in the island where an adequate building site for a single family residence, a septic system and leach field, a well, and accessory buildings exists. This width is also still legible on a FEMA FIRM panel at scale.

To implement these criteria, each island was evaluated and as a result, many islands were divided into multiple adjacent islands. This was necessary because many islands had an area within the island meeting one or the other of the two criteria, but the average width was too small. This was usually due to a long

narrow pan handle or other narrow connection. By making these areas separate islands and eliminating pan handles, the separate areas then met the criteria to be outside the floodplain.

5.5.5 Ineffective Flow Areas

The two-dimensional hydraulic model accurately addresses ineffective flow areas. It is not necessary to block out ineffective flow areas with this model.

5.5.6 Supercritical Flow

The flow condition for the majority of the 2D study area is at or near critical depth, with flow fluctuating between subcritical and supercritical. The limiting Froude number option was used for all of the FLO-2D models prepared for this study. The limit was set to a value of 0.95 to force any areas of supercritical flow to be subcritical.

5.5.7 FLO-2D Control and Tolerance Settings

The FLO-2D program uses the Full Dynamic Wave form of the Saint-Venant equations for dynamic routing of flow. Three key input parameters are used to control the stability of numeric computations for solving these equations. All three are set in the *TOLER.DAT* input data file. The first parameter is "TOL". This parameter controls the minimum flow depth for which hydraulic routing computations are performed. A value of 0.05 feet was used for all models. A small value was used because rainfall-runoff computations are included. Many grid elements not part of the main conveyance areas have very shallow flow depths due only to rainfall excess in the immediate area. It is important that all rainfall excess be routed downstream. The value setting of 0.05 feet becomes a portion of initial abstraction, including the volume lost to surface depression storage, interception, and evaporation.

The second control parameter is "DEPTOL". This parameter is the tolerance value for the present change in flow depth for a given time step. When this value is exceeded for any grid element, the time step is reduced. DEPTOL was set to 0.2 feet for all models.

The third control parameter is "WAVEMAX". This parameter is the maximum value of the numerical stability coefficient for full dynamic wave flood routing. WAVEMAX was initially set to 1.0 and decreased until a stable model was achieved. The setting used for all models was 0.25. After a stable model was achieved, WAVEMAX was set to -0.25, which used an n-value adjustment routine for checking numerical stability rather than a current factor. This setting dramatically improves run time and produces virtually the same results as the use of 0.25.

5.6 Floodway Modeling

Extensive trial and error testing and evaluation of the FLO-2D models yielded the conclusion that defining traditional floodways for a distributary flow system is impractical. Allowing encroachment in the floodway fringe, and flow depths in the floodways to increase by 1-foot, results in extensive redistribution of flow into areas outside the natural floodplain. This has the effect of complete disruption of the natural distributary channel system by development in the floodway fringe areas. The District recommends that the existing FEMA floodways within the study area be removed for these reasons. A more stringent regulatory approach is needed in order to minimize adverse impacts and to provide public safety.

Flow depths through the area are less than 2 feet in most cases. The District believes that traditional floodways are not necessary and could actually be detrimental. Development is occurring using the parcel split approach rather than through formal subdivisions. This means that parcels of land are split through multiple land divisions, usually down to the minimum zoning overlay size of 1 acre. This is done without any system-wide drainage solution being planned and implemented as happens with the formal subdivision process. For this reason, the District has decided on a plan for floodplain and drainage regulation that can be implemented on a lot by lot basis as individual building permits are requested. The plan also has the effect of implementing a "zero rise" floodplain for the entire area. The plan is described in the following memorandum, authorized for use by the Chief Engineer and General Manager of the Flood Control District of Maricopa County. The primary components of these requirements are 1) proof of zero-rise in the 100-year water surface on the parcel, 2) lowest floor elevations set two (2) feet above the 100-year water surface elevation, and 3) no disturbance of the sandy bottom wash system without mitigation. These components combine to provide a zero-rise floodplain and an additional factor of safety. These regulatory requirements for the Rio Verde area apply within both the 1D and 2D study areas and are based on the results described in Section 5.7.1.1.

Figure 5.12 Rio Verde ADMP Floodplain Management Policy Directive

Flood Control District
of Maricopa County

INTEROFFICE MEMORANDUM

Date: March 12, 2007

To: Timothy S. Phillips, P.E., Chief Engineer and General Manager

From: Felicia Terry, P.E., CFM, PPM Division

Subject: Rio Verde Area Drainage Master Plan – Regulating the Floodplains (FCD Contract 2001C056)

The Recommended Alternative for the Rio Verde ADMP is to delineate floodplains using HEC-RAS and FLO-2D and manage the single lot development using "rules" specifically developed for floodplains in the Rio Verde area. Traditional floodway modeling cannot be reasonably applied due to the braided and distributary nature of most washes and areas where the floodplain is predominantly sheetflow. Because of this, delineation of floodways does not seem necessary, but stricter management of the floodplains will be implemented. We are recommending that when development is proposed within the floodplain that the following rules must apply:

1. Every effort must be made to avoid disturbance of existing sandy bottom wash areas. If it is not possible to site the residential structure and associated improvements within the lot setback requirements without disturbing the wash, then the wash shall be rerouted. Rerouting the wash shall not result in adverse impacts to surrounding and downstream properties. Adverse impacts are defined as any increase in the 100-year flood base water surface elevation, increases in flow depth and/or velocity to upstream, downstream, or adjacent properties, and any divergence of flow (change in flow path) from existing conditions where flow enters and exits the property. Erosion/scour protection shall be considered in the design of the rerouted wash.

2. All development shall submit a Drainage Report sealed by a Civil Engineer licensed to practice within the State of Arizona. Using discharges from the Rio Verde Area Drainage Master Plan, an engineer must show using the US Army Corps of Engineers HEC-RAS program (HEC-RAS) or District approved program that the proposed development will result in no increase (0.0 ft) in the existing condition (pre-development) water surface elevation, or any adverse impacts to adjacent, upstream, or downstream property. The proposed development site shall be modeled first for the existing condition, which will be used as a baseline, and then compared to the proposed development model. HEC-RAS shall be run in the mixed flow regime to show no increase in velocities and for use in design of erosion protection, and shall be run in subcritical regime to show no increase in water surface elevation.

2801 West Durango Street Phoenix, Arizona 85009 Phone: 602-506-1501 Fax: 602-506-4601

Figure 5.12 Rio Verde ADMP Floodplain Management Policy Directive

In addition, development within the FLO-2D study area shall be modeled using the total flow rate crossing the property. If the floodplain is wider than the parcel, the engineer shall end HEC-RAS cross sections at the property line, extended vertically. Development within the 1-dimensional (HEC-RAS) study area shall be modeled similarly. For these cases, the engineer shall meet with the District before beginning the drainage analysis to agree on a peak discharge estimate to use for the property in question.

3. The lowest floor elevation of the residential structure must be elevated a minimum of two (2) feet above the existing condition Base Flood Elevation or 18-inches above the highest point of natural ground within 10 feet of the structure, whichever is greater. Erosion protection for the pad must be engineered and sealed by a Civil Engineer licensed to practice within the State of Arizona.

4. It is recommended that new residences outside the 100-year floodplain and within the Rio Verde ADMP study area be elevated a minimum of eighteen (18) inches above highest adjacent ground within 10 feet of the structure.

When the Rio Verde ADMP is adopted by the Board of Directors, these "rules" will be used by the Floodplain Management Branch to manage the development within the Rio Verde floodplains. This memo when signed by the Chief Engineer and General Manager of the Flood Control District authorizes implementing these "rules" as the best available technical information until the Board adopts the ADMP.

2801 West Durango Street Phoenix, Arizona 85009 Phone: 602-506-1501 Fax: 602-506-4601

Figure 5.12 Rio Verde ADMP Floodplain Management Policy Directive

Please concur and authorize below the use of this new data.

Felicia Terry, P.E., CFM Project Manager Date: 2/2/07	Timothy S. Phillips, P.E. Date: 3/20/07 Chief Engineer and General Manager
Tim Murphy, P.E., CFM Flood Delineation Branch Manager Date:	Tom Loomis, P.E., RLS, CFM Special Projects Branch Manager Date:
Kathryn Gross, CFM Floodplain Delineation Reviewer Date: 2/7/07	Ed Raleigh, P.E. Engineering Division Manager Date: 3/6/07
Joe Tram, P.E., CFM Regulatory Division Manager Date:	
Russ Miracle, P.E. PPM Division Manager Date: 3.12.07	
File Copies: 1. _____ 2. _____	YES ☐ GIS Posted (Pending Floodplain Only) Date: ☐ No County Permits in this area Date:

2801 West Durango Street Phoenix, Arizona 85009 Phone: 602-506-1501 Fax: 602-506-4601

5.7 Problems Encountered During the Study

5.7.1 Special Problems and Solutions

5.7.1.1 Implementing an AE Zone Floodplain without a Traditional Floodway

Normally, floodways are defined in conjunction with AE zone floodplains. Use of the standard floodway approach has proved impractical for application in the Rio Verde ADMP study area (refer to Section 5.6). Testing of preliminary floodways defined using traditional techniques yielded results that show their application can be detrimental to public safety within the study area. The blocking and concentration of sheet flow resulted in dramatic increases in peak discharge if the floodway fringe was allowed to be completely blocked by development, forcing all flow into the floodway corridors. This in turn increased the flood risk for downstream properties and increased the threat of property damage resulting from sedimentation (scour, erosion and deposition). Due to the parcel split style of development (1-acre minimum parcels) in the area, rather than formal subdivisions, full encroachment to the floodway limits will only occur randomly, if at all. Another method of preserving flow conveyance corridors needed to be defined and implemented.

The District, through the ADMP process, decided that preservation of the existing distributary wash system and management of the AE zone floodplains using existing regulatory tools was the best approach. A key concern, however, was the future condition effects of development on the drainage system. Therefore, the District adopted more stringent development requirements for this area.

The District's public safety goals for the area can be achieved by:

1. Regulating using the District's floodplain regulation and the Maricopa County drainage regulation, which together provide a "no adverse impact" approach to floodplain management.
2. Requiring "zero-rise" in 100-year water surface elevation on a parcel by parcel basis.
3. Requiring the defined lowest floor elevation heights inside the floodplain to be a minimum of 2-feet above the base flood elevation, and 18-inches above highest adjacent grade or 12-inches above the 100-year water surface elevation, whichever is higher, outside the 100-year floodplain.
4. Requiring erosion protection for fill pads and channels.

5.7.2 Modeling Warning Messages

5.8 Calibration

There are no stream flow gages within the study area that can be used for model calibration. Calibration against known flow data was not possible.

5.9 Final Results

5.9.1 Hydraulic Analysis Results

5.9.1.1 Normal Stream Results

It is not practical to present detailed hydraulic results from the 2D model in a summary table format in this document due to the large number of grid elements. Instead, the hydraulic results per grid element are located in digital format in Appendix E.6. Refer to Section 4.5 for a description of the GIS shape file names and database table fields.

The results are presented in graphical format on Figure 5.13, Figure 5.14, and Figure 5.15. The maximum average flow depth in feet per grid element is displayed on Figure 5.13 in relation to the 100-year floodplain limits. The maximum average velocity in feet per second per grid element is shown on Figure 5.14. The maximum average peak discharge in cubic feet per second per grid element is shown on Figure 5.15. Note that while average flow depth and velocity are typically less than 2 feet and 3 feet per second, respectively, peak discharges are fairly high, although decreasing as flow moves downstream and continues to spread as shallow concentrated flow and sheet flow. Also note that actual depth and velocity can be significantly greater than shown. Separate hydraulic analyses are required when velocity is needed for design purposes.

The 100-year peak discharge, dominate direction of peak discharge, and water surface elevation can be found on the DVD in Appendix E.6 in ASCII and GIS shape file formats. This information can also be viewed on the District's web site. The link is http://www.fcd.maricopa.gov/GIS/maps.aspx . Click on the link "Rio Verde Area Drainage Master Plan 2-Dimensional Modeling Map." The 100-year floodplains for the area, both preliminary (this study) and effective are shown. The more one zooms in to the map (using the zoom tool in the upper left hand corner of the screen) the more detail is presented. The peak discharge per grid element becomes color-coded, and when zoomed in far enough, the peak discharge, direction, and water surface elevation labels become visible. There is a link in the text bar on the right side of the screen to a general description of the information shown and guidance on its use.

The results shown are the maximum of the two model runs for with and without stock tanks and levees. The actual FLO-2D input and output data files are included on DVD in Appendix E.6. The hydraulic results presented are for subcritical flow. The flow within the sandy bottom wash areas is normally close to critical. The overbank sheet flow areas are normally sub-critical.

5.9.1.2 Culvert Results

The culvert results were obtained using HY-8, as described in Section 5.5.2. The culvert hydraulic results are listed in Table 5.5 and are based on inlet control.

5.9.1.3 Floodplain Delineation

The 100-year floodplain delineation was done using the following guidelines:

1. All significant watercourses with continuous flow during the 100-year 24-hour event from the upstream end of the 2-D study to the Verde River were delineated. Breakout split flow that leaves the main floodplain and has a 100-year peak discharge of 100 cfs or less were typically not delineated, with the exception of some splits that immediately reconnect to a separate major wash floodplain.
2. Braided flow directly connected within and adjacent to the main watercourses were included within the floodplain area regardless of flow rate except some very small discharge braids that were excluded based on engineering judgment.
3. Islands meeting the criteria described in Section 5.5.4 were excluded from the floodplain. Islands not meeting the criteria were mapped inside the floodplain.
4. The floodplain boundary was delineated using the grid boundaries instead of interpolating between contours. For the Rio Verde area, which has very little topographic relief in the north-south direction, this provides as accurate a boundary as the hydraulic results allow. The floodplain limit was set where the grid flow rate is less than 1 cfs. Therefore, the floodplain at some locations includes side flow entering the main wash with water surface elevations higher than the main wash.

   Locations where flow splits away from the main floodplain and normally with totals less than 100 cfs, were excluded and the limit defined using engineering judgment.

The results of the 100-year floodplain delineation are shown in Figure 5.16. Refer to the work study maps in Appendix G.2 for detailed maps of the proposed floodplain areas. All floodplains delineated in the 2D study area are recommended to be zone AE.

Figure 5.13 Average Flow Depth Per Grid Element Results Map

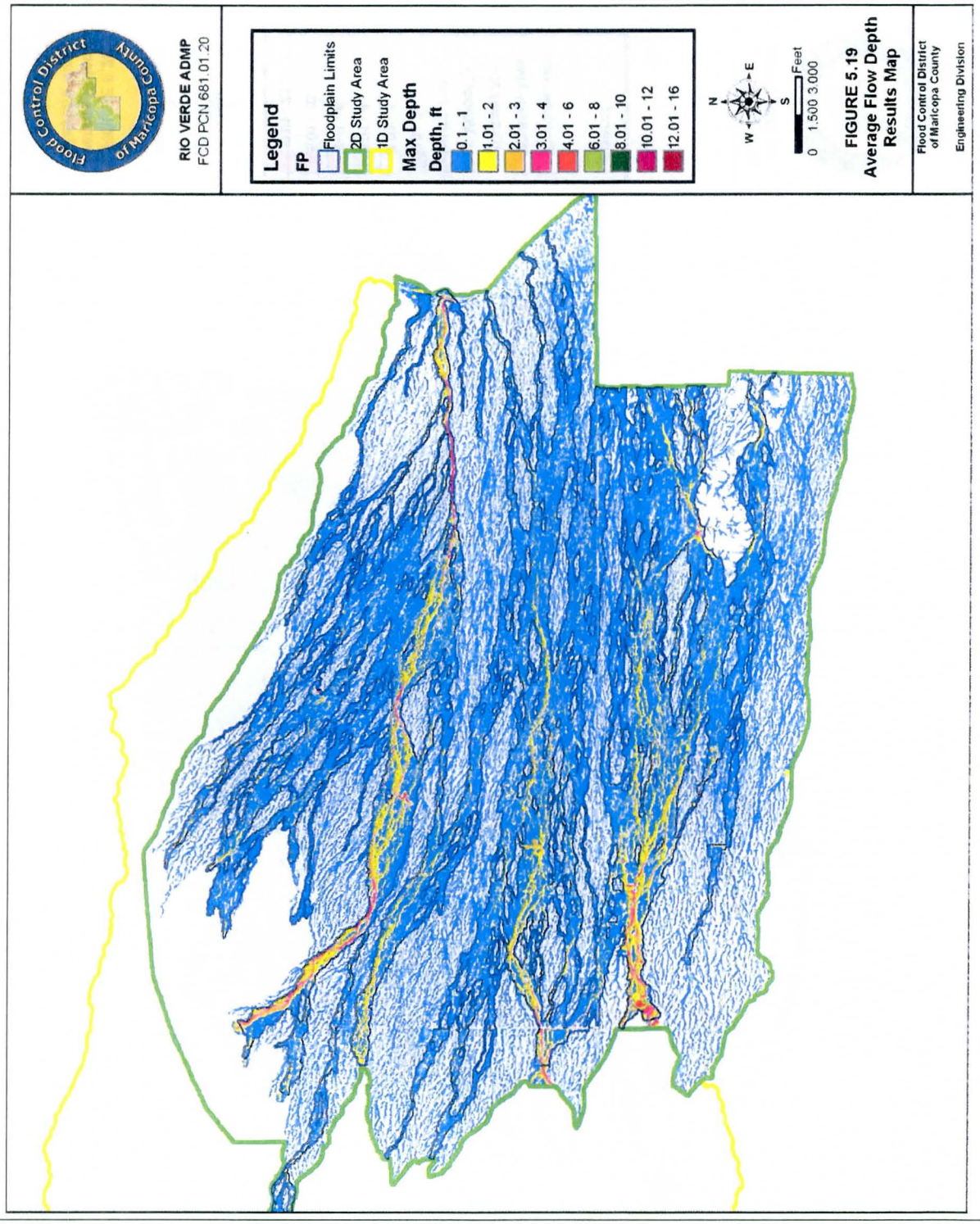

Figure 5.14 Average Velocity Per Grid Element Results Map

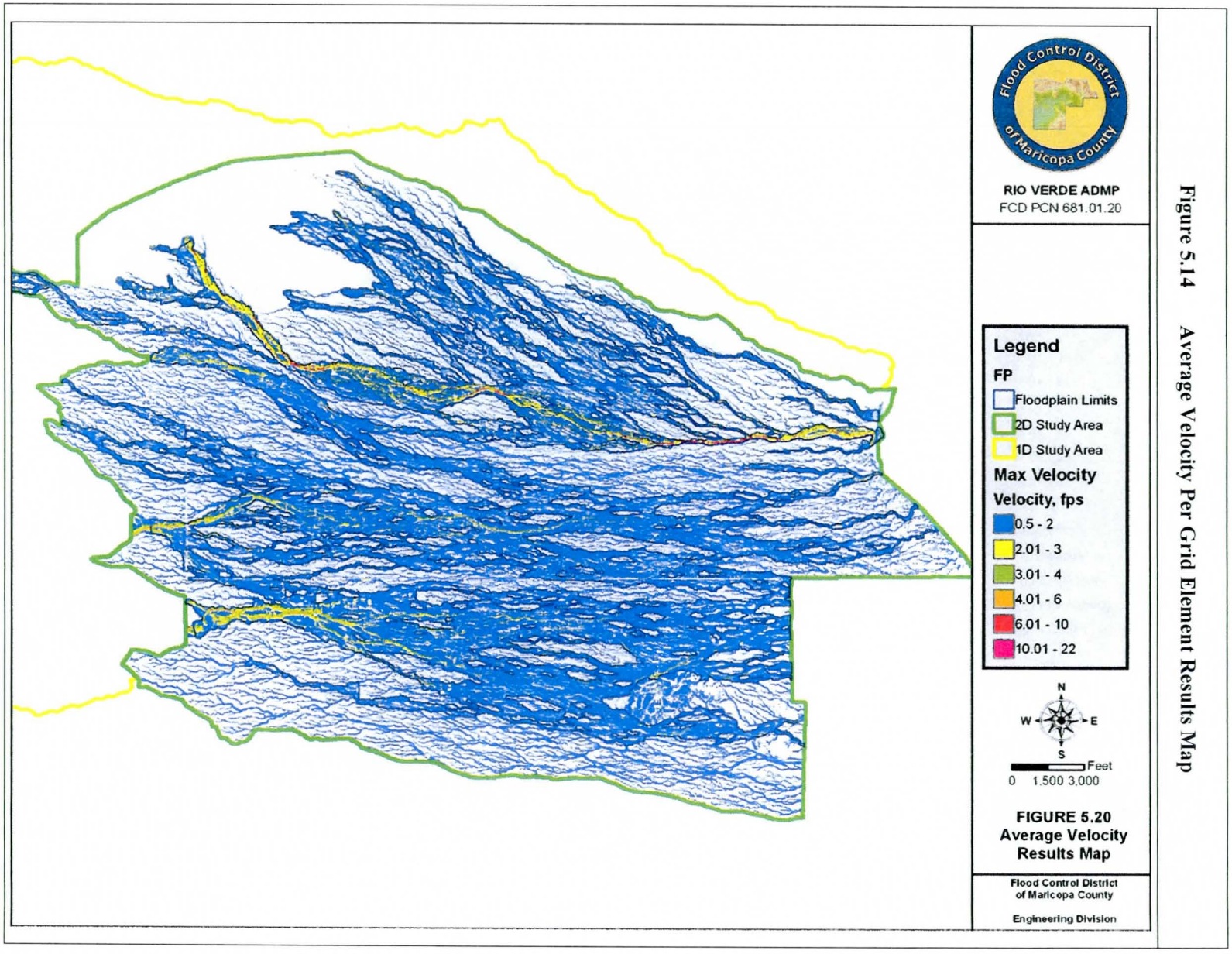

Figure 5.15 Average Peak Discharge Per Grid Element Results Map

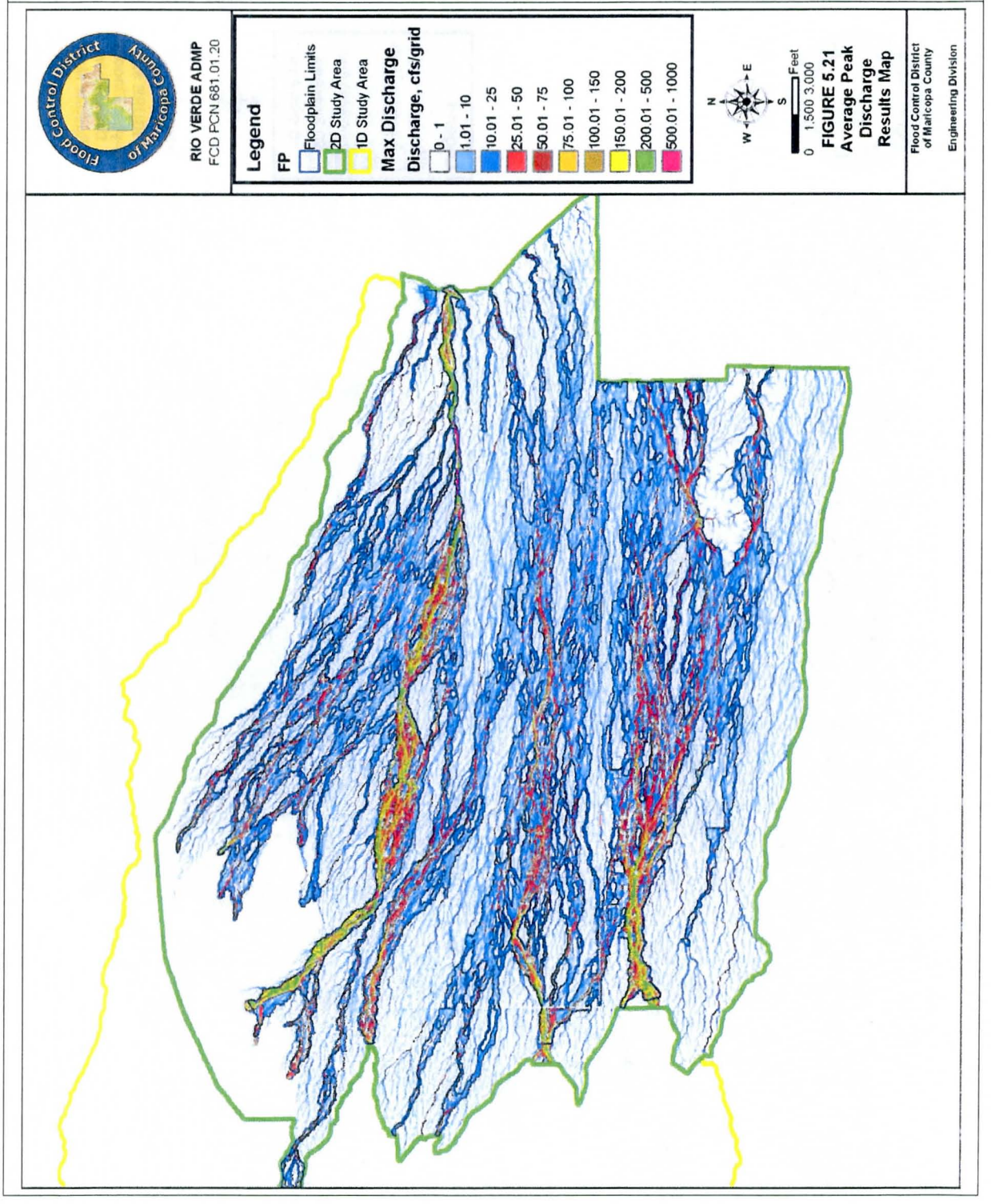

Figure 5.16 100-year Floodplain Delineation Results Map

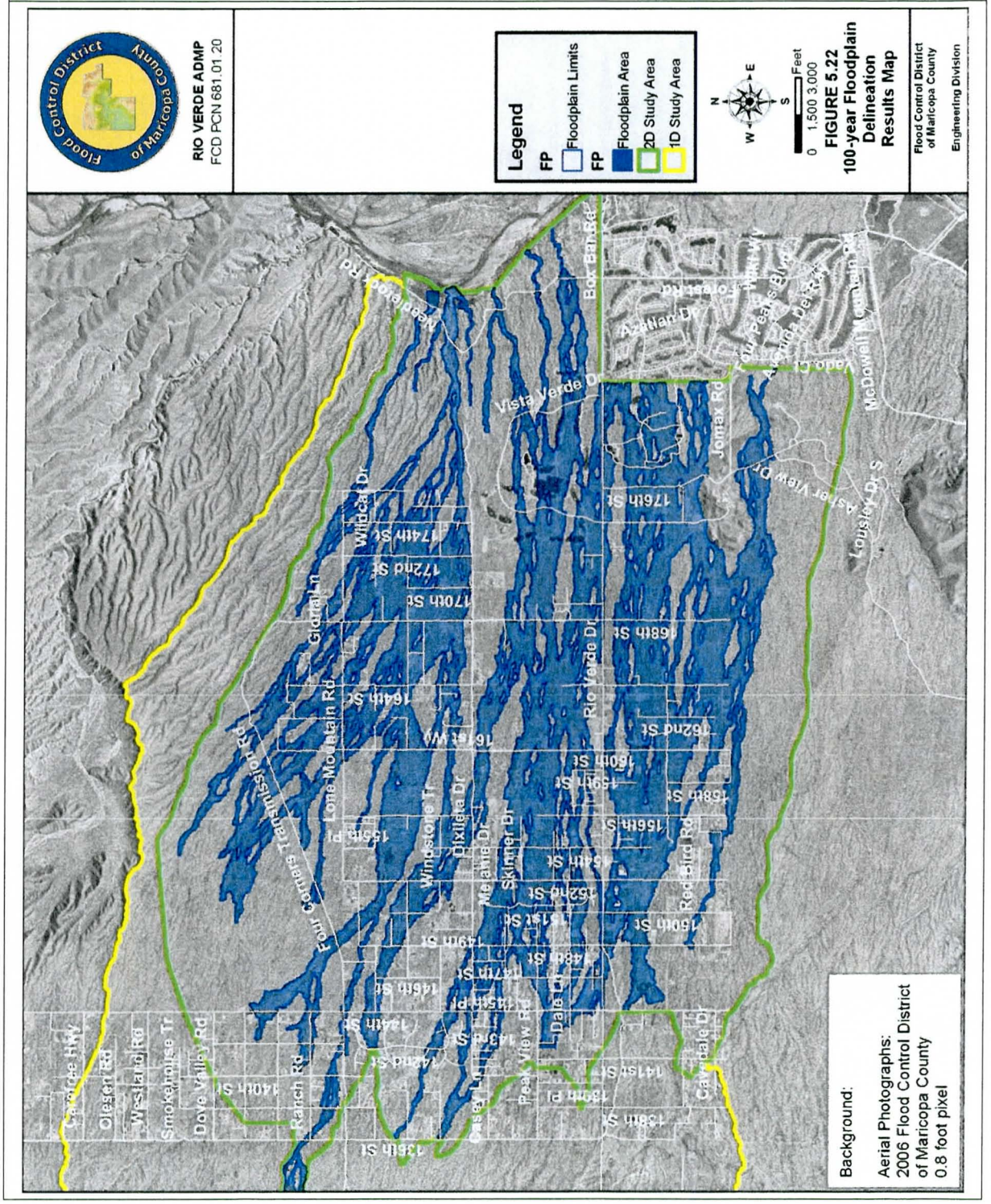

5.9.2 Verification of Results

5.9.2.1 Comparison with Geomorphology

A geomorphic analysis was done of the study area prior to beginning the 2D modeling (Fuller, 2002). The results of that analysis were used to define the 2D study area. Another product of that analysis was the definition of geomorphic conveyance corridors. Per Fuller (2002): "*In order to reduce the impact to the fluvial system by human activity and flood and erosion hazards to property in the area, significant flow corridors throughout the developable area within the study area were identified. These corridors were delineated based on interpretation of topographic and geologic data from maps, aerial photographs, and field observations. The corridors are intended to provide the fluvial system within the study area the necessary room to perform their natural function of sediment and water transport with minimal impact to their present and preferred natural form. Plate 10 shows the results. These corridors may be modified in the final ADMP based on the results of the two-dimensional hydraulic modeling.*"

Those corridors are shown on Figure 5.17. Note that the corridors cover most, but not all, of the 2D study area. The corridors in comparison with the FLO-2D peak discharge results are shown on Figure 5.18. The corridors are shown in transparent gray. Note that the higher flow rate areas match the geomorphic corridors very well. There are exceptions, especially where man-made obstructions result in flow diversions.

The corridors are shown in relation to the FLO-2D floodplain delineations on Figure 5.19. Again, there is a good correlation, but the floodplain corridors are wider than the geomorphic corridors. This is expected due to the basis for definition of the geomorphic corridors. The geomorphic corridors comparisons provide a good check on the reasonableness of the 2D floodplain delineations.

5.9.2.2 Post-Rainfall Event Field Checks

There have been three (3) significant rainfall events on the study area since September 2006. In terms of a twenty four duration event, the frequencies of these storms were all less than 2-year storms. However, there were areas where point precipitation exceeded the 100-year 1-hour storm, and large areas had point rainfall exceeding the 10-year 6-hour storm depths. These storms resulted in significant runoff in portions of the study area. Field trips were made as soon as possible after each event (events occurred on: 9/3/06, 7/23/07, and 8/1/07) to view the high runoff areas. The flooding limits from these storms correlated as expected with the 2D models results. Based on these checks, there is no reason to doubt the validity of the 2D hydraulic analyses.

Figure 5.17 Geomorphic Conveyance Corridors

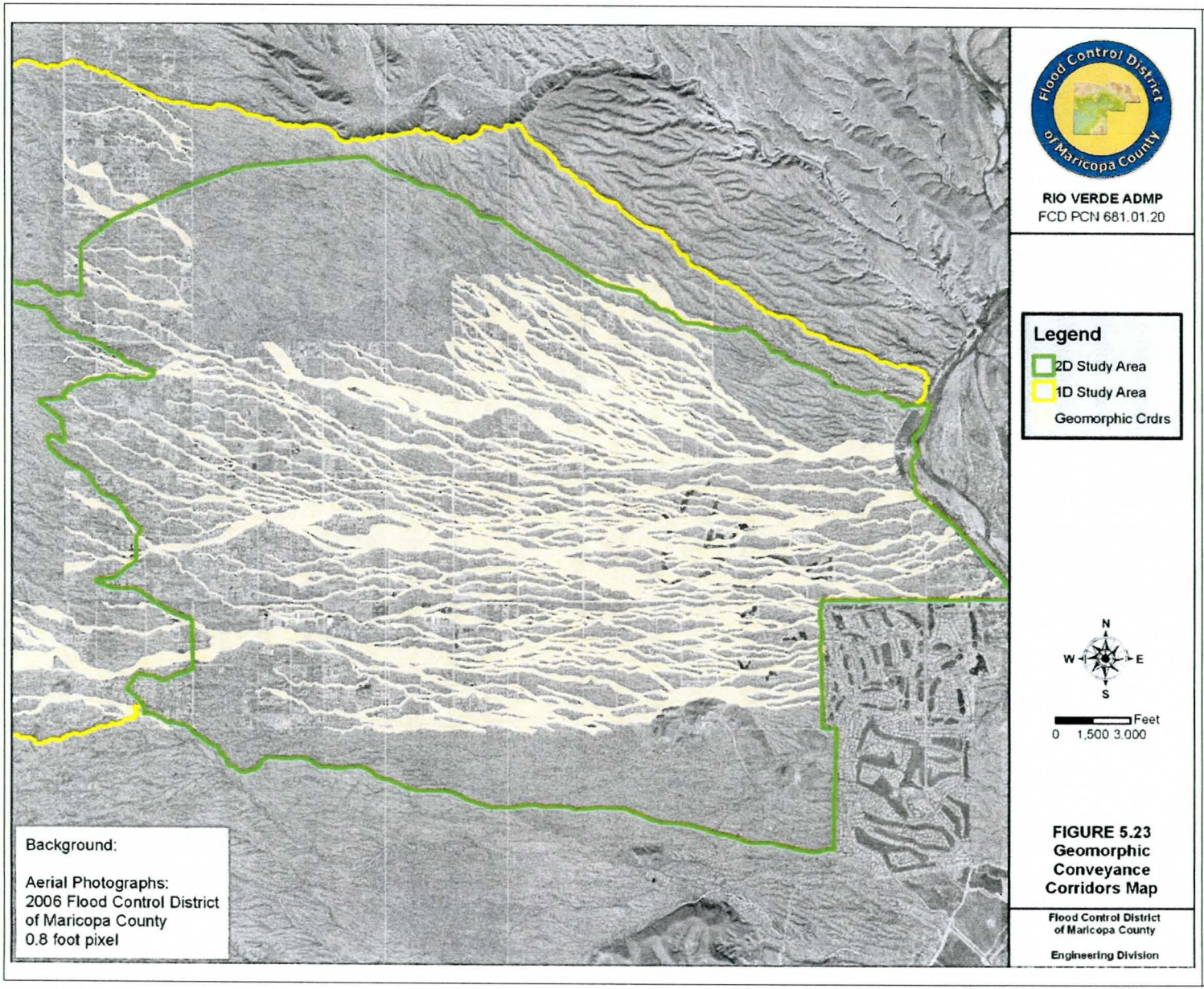

Figure 5.18 Comparison of Geomorphic Corridors with FLO-2D Peak Discharge Results

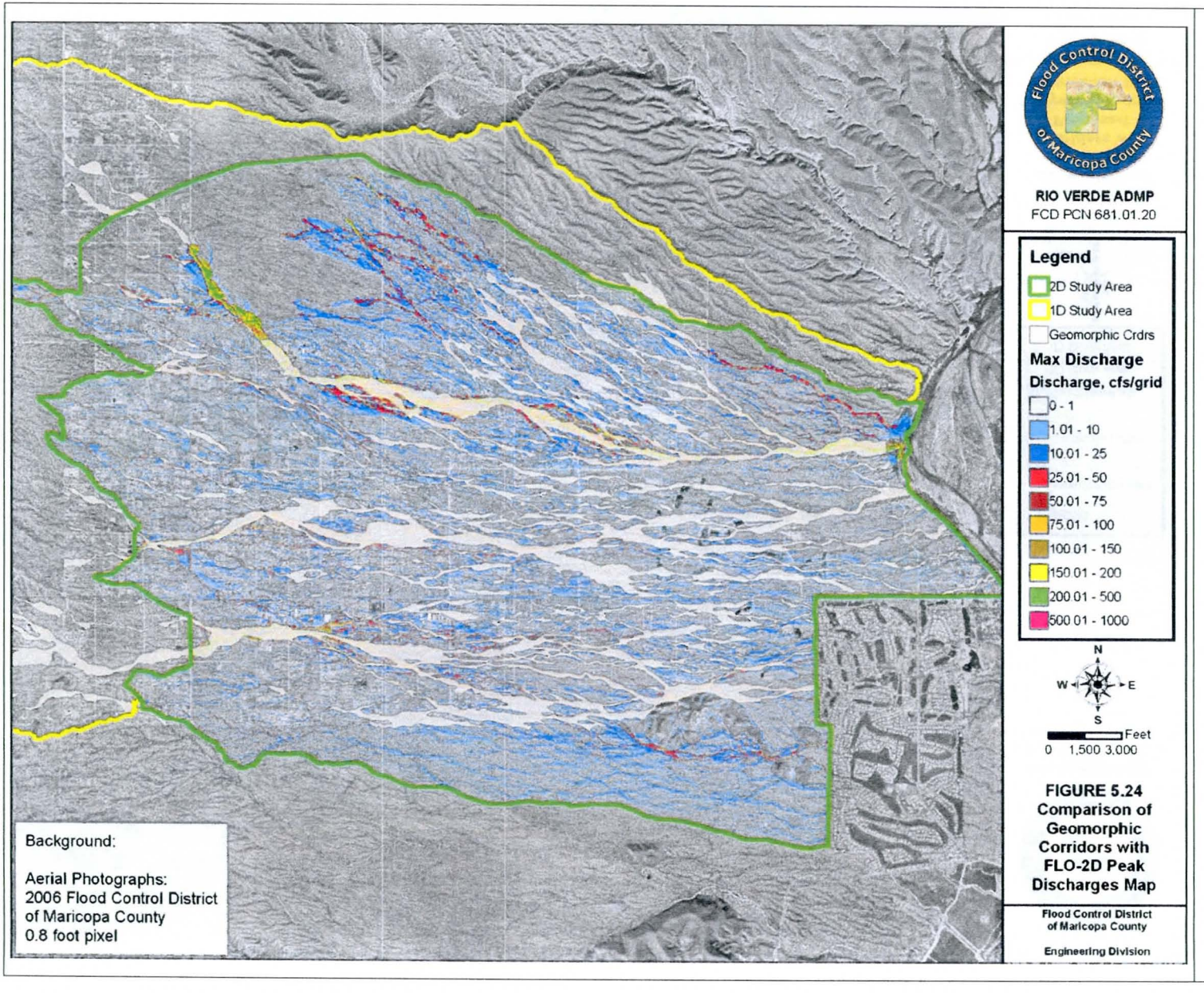

Figure 5.19 Comparison of Geomorphic Corridors with Proposed 100-year Floodplain

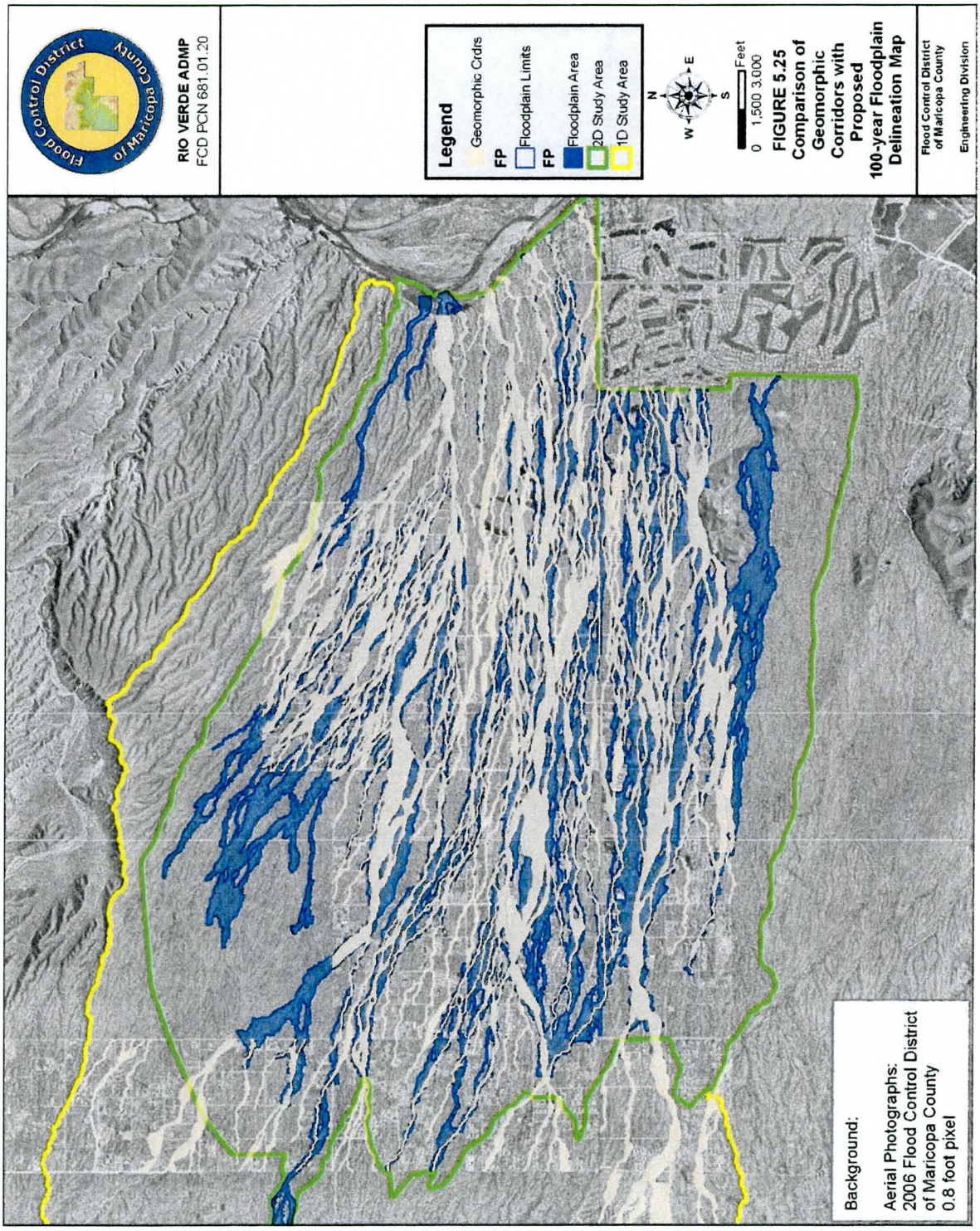

5.9.2.3 Comparison with Gage Results

There are no stream flow gages in the study area. Comparisons or calibration with gaged hydraulic data is not possible at this time.

5.9.2.4 Comparison with Existing FEMA Floodplains

The FLO-2D 100-year water surface elevations are compared with the effective FEMA water surface elevations in Table 5.6. Note that all the effective water surface elevations are converted to NAVD 1988 vertical datum if the effective study was done in NGVD 1929. The FEMA effective study is proposed to be replaced with the results from this study at all but two of the cross sections listed. Rows highlighted in yellow are the two locations where the floodplain from this study terminates and the effective FEMA floodplain continues downstream. The effective study downstream of these two connection points were based on a higher peak discharge than is currently estimated using FLO-2D. Since the downstream water surface elevations and the peak discharges are higher, the effective study in this area is conservative and is proposed to be left unchanged.

Table 5.6 Comparisons with Existing FEMA Floodplain Cross Sections

Wash Name	Station		FLO-2D WSEL		FEMA Effective WSEL		Comments
	Down Stream	Up Stream	Down Stream	Up Stream	Down Stream	Up Stream	
1	2	3	4	5	6	7	8
RV W 10	1.305	6.697	1666.4	2346.5	1667.5	n/a	Connection point to effective FEMA floodplain at Section 1.305 MKE (1995). Effective model used constricted cross section. Discharge: 1,420 cfs effective FEMA 290 cfs FLO-2D
RV W A	1.117	7.05	1630.9	2410.0	1630.0	n/a	Effective FEMA floodplain to be replaced with new results.
RV W I	0.000	6.423	1532.4	2456.0	1532.0	n/a	Effective FEMA floodplain to be replaced with new results.
RV W 10 S4	0.000	1.157	1864.4	2034.6	1864.5	2035.0	Effective FEMA floodplain to be replaced with new results.

Table 5.6 Comparisons with Existing FEMA Floodplain Cross Sections

Wash Name	Station		FLO-2D WSEL		FEMA Effective WSEL		Comments
	Down Stream	Up Stream	Down Stream	Up Stream	Down Stream	Up Stream	
1	2	3	4	5	6	7	8
RV W 11	2.109	6.065	1691.1	2203.1	1691.4	n/a	Connection point to effective FEMA floodplain at Section 2.109 MKE (1995). Discharge: 720 cfs effective FEMA 186 cfs FLO-2D
RV W 11 S1	0.000	0.876	1685.7	1795.2	n/a	1795.0	Effective FEMA floodplain to be replaced with new results.
RV W 11 S2	0.000	0.97	1688.3	1806.2	n/a	1805.0	Effective FEMA floodplain to be replaced with new results.
RV W 11 S8	0.000	2.403	1836.8	2165.9	1835.7	n/a	Effective FEMA floodplain to be replaced with new results.
RV W 12	1.731	4.352	1684.0	2037.3	1684.0	2036.5	Effective FEMA floodplain to be replaced with new results.
RV W 12 S3	0.000	1.207	1686.3	1841.1	1686.0	1841.0	Effective FEMA floodplain to be replaced with new results.
RV W 12 S6	0.000	1.389	1810.3	2003.3	1809.5	2003.0	Effective FEMA floodplain to be replaced with new results.
RV W A S1	0.000	1.752	1684.0	1927.3	1684.0	n/a	Effective FEMA floodplain to be replaced with new results.
RV W A S9	0.000.	3.384	2004.1	2409.5	2003.0	n/a	Effective FEMA floodplain to be replaced with new results.
RV W D	0.000	0.864	1525.2	1630.9	n/a	1630.0	Effective FEMA floodplain to be replaced with new results.
RV W F	0.124	7.408	1546.5	2538.0	1546.8	n/a	Effective FEMA floodplain to be replaced with new results. D/S section is FEMA C/S A.
RV WI T1	0.000	1.019	1574.8	1742.2	1576.0	n/a	Difference due to much wider floodplain for FLO-2D. Effective model used constricted cross section.

6 EROSION AND SEDIMENT TRANSPORT

No detailed erosion and sediment transport analyses are included in the Rio Verde Area Drainage Master Plan Floodplain Delineation. A detailed study of the desert piedmont that makes up the Rio Verde ADMP was performed to determine areas suitable for one-dimensional versus two-dimensional modeling. Additionally, a geomorphic analysis was conducted on the watershed to aid in floodplain delineation. These studies were performed by JE Fuller Hydrology and Geomorphology, Inc. and are presented in the separate reports *Rio Verde Area Drainage Master Plan Piedmont Assessment Report – Basis for Delineation of Areas with 1-D vs. 2-D Flow Characteristics* and *Rio Verde Area Drainage Master Plan Geomorphic Analysis Report* and are not included here.

7 DRAFT FIS REPORT DATA

7.1 Summary of Discharges

Table 7.1 Summary of Discharges

Flooding Source and Location	Drainage Area (square miles)	100-year Peak Flow (cfs)
1	2	3
RV Wash 10 at 144th Street	4.07	3,130
RV Wash 10 Tributary 1 at 144th Street	0.86	960
RV Wash 10 Split 7 Tributary 1 at 148th Street	0.26	100
RV Wash 10, 1,100 feet upstream of Avenida Del Ray	7.64	290
RV Wash 11 Split 1, 260 feet west of Palo Fiero Drive	n/a	265
RV Wash 11 Split 2, feet 560 west of Agua Verde Drive	n/a	215
RV Wash 11, 320 feet west of Palo Fiero Drive	n/a	180
RV Wash 12 Split 3, 600 feet west of Agua Verde Drive	n/a	230
RV Wash 12, 290 feet west of Agua Verde Drive extended	11.42 [a]	280
RV Wash A at 142nd Street	4.44	2,400
RV Wash A at Vista Verde Drive	n/a	230
RV Wash D at Verde River	2.15 [a]	50
RV Wash F at 136th Street	0.20	300
RV Wash F Tributary 2 at 136th Street	0.08	130
RV Wash F at Verde River	2.11 [a]	130
RV Wash I at 142nd Street	0.81	1,100
RV Wash I Tributary 1 at 180th Street alignment	0.08	60
RV Wash I at Verde River	4.96 [a]	220
RV Wash J at 181st Street alignment	0.03	50
RV Wash J at Verde River	0.11	80
RV Wash K at 144th Street	3.68	3,100
RV Wash K Tributary 1 at 182nd St alignment	0.07	60
RV Wash K Tributary 4 at 154th Street alignment	0.45	470
RV Wash K Tributary 4A at 162nd Street alignment	0.05	50

Table 7.1 Summary of Discharges

Flooding Source and Location	Drainage Area (square miles)	100-year Peak Flow (cfs)
RV Wash K Tributary 6 at 154th Street alignment	0.90	720
RV Wash K Tributary 6A at 149th Street alignment	0.21	300
RV Wash K Tributary 6A1 at 150th Street alignment	0.09	120
RV Wash K Tributary 6A2 at Four Corners Transmission Road	0.21	300
RV Wash K Tributary 6A3	0.10	140
RV Wash K Tributary 6C at 151st Street alignment	0.33	210
RV Wash K Tributary 7 at 155th Street	0.08	80
RV Wash K Tributary 8 at 154th Street	0.09	80
RV Wash K Tributary 9 at 130th Street alignment	0.13	330
RV Wash K Tributary 11 at 140th Street	0.49	630
RV Wash K Tributary 11A at 143rd Street alignment	0.11	180
RV Wash K Tributary 12 at 142nd Street	0.34	400
RV Wash K at Verde River	12.62 [a]	2,600
RV Wash L, 250 ft east of 166th St	0.18	280
RV Wash L at Verde River and Needlerock Road	0.69 [a] [1]	280

[a] Area is approximate. The contributing watershed has distributary flow characteristics; therefore, the complete watershed does not necessarily concentrate at this location.

The peak discharges provided in Table 7.1 are for the upstream and downstream boundaries of the two-dimensional study area. Peak discharges within the two-dimensional study are not provided due to the distributary channel system. Refer to the Technical Data Notebook, the Work Study Maps, and the DVD in Appendix E.6 for this information.

7.2 Floodway Data

Floodways are not proposed for this study. Refer to Section 5.6.

7.3 Annotated Flood Insurance Rate Maps

The annotated FIRM panels are located in map pockets in Appendix G.3.

7.4 Flood Profiles

The flood profiles are located under separate cover in Volume 7.

APPENDIX A: REFERENCES

Refer to Technical Data Notebook Master Volume 1.

APPENDIX B: GENERAL DOCUMENTATION AND CORRESPONDENCE

Refer to Volumes 4 and 5.

APPENDIX C: SURVEY FIELD NOTES

Refer to Volume 2, Survey and Mapping.

APPENDIX D: HYDROLOGIC ANALYSIS SUPPORTING DOCUMENTATION

D.1 Precipitation Data

All data is contained in Section 4.2.

D.2 Physical Parameter Calculations

All data is contained in Section 4.2.

D.3 Hydrograph Routing Data

None. Hydrograph routing accomplished as an integral part of 2D model. No special parameters are required.

D.4 Reservoir Routing Data

None.

D.5 Flow Splits and Diversion Data

No special parameters. Flow splits and diversions are handled dynamically in the 2D model.

D.6 Hydrologic Calculations

None.

D.7 Digital Data on DVD

See DVD's in pockets at back of report.

D.7.1 Soils (DVD 1)

PHA_Soils.shp: Soils polygon coverage of the Phase A study area used to compute Green and Ampt parameters for each grid element. Contains the NRCS soils data and the data derived from Arizona Geological Survey geologic maps in conjunction with the Tonto National Forest soil scientist.

PHB_Soils.shp: Same as above for the Phase B study area.

Tonto Soils_in_NRCS.shp: Contains the soils data derived from Arizona Geological Survey geologic maps in conjunction with the Tonto National Forest soil scientist for the 1D and 2D study areas.

D.7.2 RTIMP (DVD 1)

Developed

Buildings_&_Walls_All.shp: Polygon coverage of the building and wall blockage areas assumed to be obstructions to flow. Also includes a field to distinguish which polygons are impervious area.

Natural: Refer to the shape files in D.7.1 for natural RTIMP polygons.

See soils coverages in D.7.1 for natural RTIMP values for every soil map unit.

D.7.3 Precipitation (DVD 1)

Gages.shp: Location of precipitation gages in and near the study area.

Phase A

2D Phase A Study Area Centroid.shp: Location of point used to estimate the precipitation-duration-frequency curve from NOAA Atlas 2 for the Phase A study area.

No Rain.shp: The 2D grid elements in the Phase A study area where no rain is applied because the grid was included in the 1D study area hydrology computations.

Phase B

2D Phase B Study Area Centroid.shp: Location of point used to estimate the precipitation-duration-frequency curve from NOAA Atlas 2 for the Phase B study area.

No Rain.shp: The 2D grid elements in the Phase A study area where no rain is applied because the grid was included in the 1D study area hydrology computations.

D.7.4 FLO2D Grid Data (DVD 1)

PHA25GridOnly.shp: Polygon coverage of all the FLO-2D grid elements for the Phase A study area. The data table only includes the grid element number.

PHB25GridOnly.shp: Polygon coverage of all the FLO-2D grid elements for the Phase B study area. The data table only includes the grid element number.

D.7.5 Land Features (DVD's 3 and 4)

Stock Tanks.shp (DVD 3): Polygon coverage of the stock tanks and diversion dikes accounted for in the 2D model for both Phases A and B. Refer to Section 5.3.3.

Phase A (DVD 3): Polygon coverage of the vegetation classes for the Phase A study area discussed in Section 4.2.7.3 and in Section 5.3.1 used for adjustment of XKSAT and establishment of base n-values.

Lf_a1.shp and raster

Lf_a2.shp and raster

Lf_a3_1.shp and raster

Phase B (DVD 4): Polygon coverage of the vegetation classes for the Phase B study area discussed in Section 4.2.7.3 and in Section 5.3.1 used for adjustment of XKSAT and establishment of base n-values.

Lf_b1.shp and raster

Lf_b2.shp and raster

Lf_b3.shp and raster

Lf_b4.shp and raster

D.7.6 Hydrograph Locations (DVD 1)

FIS HEC1 Outflow CPs.shp: Point coverage containing the locations of HEC-1 outflow locations from previous studies used in the discussion in Section 4.5.1.5.

Hydrograph Inflow Locations.shp: Point coverage of locations where hydrographs are read into the FLO-2D models from the 1D study area, as discussed in Section 4.5.1.2.

PHA and PHB xsecs.shp: Polygon coverage of the grid elements used to define cross sections for hydrograph output from the FLO-2D models discussed in Section 4.5.1.4.

D.7.7 Miscellaneous Data (DVD 1)

1D_Study_Area.shp: Polygon coverage of the 1D study area.

2D Phase A Study Area.shp: Polygon coverage of the Phase A 2D study area.

2D Phase B Study Area.shp: Polygon coverage of the Phase B 2D study area.

2D_Study_Area.shp: Polygon coverage of the 2D study area.

Assessors Parcels 021307.shp: Polygon coverage of the Maricopa County Assessor's parcel used in the various report exhibits.

city.shp: Polygon coverage of the corporate boundaries of municipalities in Maricopa County.

Phase Overlap.shp: `Polygon coverage of the Phase A and Phase B study area overlap discussed in Section 4.3.1.2.

statelnd.shp: Polygon coverage of general land ownership for the Rio Verde ADMP study area.

street.shp: Polyline coverage of the streets in the Rio Verde ADMP study area.

APPENDIX E: HYDRAULIC ANALYSIS SUPPORTING DOCUMENTATION

E.1 Roughness Coefficient Estimation

See Section 5.3.1.

E.2 Cross Section Plots

None.

E.3 Expansion and Contraction Coefficients

None. Handled dynamically in the 2D model.

E.4 Analysis of Structures

E.4.1 Culvert and Wall Opening Hydraulic Analyses

DIBBLE & ASSOCIATES
CONSULTING ENGINEERS
Since 1962

CALC ETD DATE 28 Aug 2003 JOB 10-0203
CHKD _____ DATE _____ SHT 1 OF 1

TITLE
FLO-2D input calculations

Verification n-value method for Culvert Clogging Study

Reference: use RPS model in Culvert Clogging Sensitivity Analysis for Rio Verde North Extension Floodplain Delineation Study, December 2002, sealed on January 14 2003 by Teri S. George, P.E. #30013.

Wash F Reach = Wash F 15 Culvert #10 xsec 0.172 culvert @ 0.1625

Blocked observation at 2391 ft also used for culvert invert elev.
low point at xsec 0.172 = 2390.67
.75 ft

Culvert size is 2-10'x3' Open area 60 ft²
@ 25% blocked by sediment open area 45 ft² remaining

if blockage is by height, then 3 ft(0.25) = 0.75 ft blocked

n values are 0.050 for channel, with culvert top = 0.013
" bot = 0.013

remaining open area 2.25 ft(10)(2 bbls) = 45 ft² ok

Wash I North wash i north 1

Culvert #1 + #2 are each 6-48"x39" CMPA

Culvert clogging study used 50% clogging (I disagree with their value, should have used 25% since sum of all barrels is larger than a single 36" round pipe.

CONCLUSION: Revise n-values to reflect sandy bottom for culverts plugged by sediment:

A. For sandy bottom with some gravel / small rock
n = 0.035

B. for top and sides n = 0.016 if concrete
n = 0.025 for CMP (per clog study)

1

HY8 Input Data for Rio Verde ADMP 2D Culvert Modeling

Date: 4/22/2005
Initials: TRL
ID: 1

Flow (cfs):	Min	Design	Max
	0	50	80

Max. Stage: 2441.50

Downstream Cross Section

Distance Downstream of Outlet: 9.50 ft
Slope (ft/ft): 0.02088
Elev. Adj: 1 ft
Length: 78.80 ft

n-value:	Left	Main	Right
	0.050	0.045	0.060

Slope:	Top	Bottom	Length
	2434.95	2434.00	45.50

L/M/R:	L	L	L	M	M	R	R	
Sta:	0.00	17.50	26.80	46.00	57.30	67.10	78.80	
Elev:	2440.50	2439.40	2436.60	2435.20	2436.10	2438.60	2441.30	

L/M/R:								
Sta:								
Elev:								

Roadway Profile for Overtopping

Roadway Width: 24 ft
Surface Type: Asphalt
Elev. Adj: 0 ft
Length: 144.41 ft

			c/l					
Sta:	0.00	0.01	37.90	60.20	87.90	144.40	144.41	
Elev:	2442.00	2439.65	2440.76	2441.01	2441.12	2441.30	2442.00	

Sta:								
Elev:								

Culvert Data

Size: 49"x33"
Material: CMPA
Number: 6
Entrance: Headwall
Length: 45.00 ft

	IE1	IE2	IE3	IE4	IE5	IE6	IE7	IE8
Inlet:	2436.04	2435.80	2435.87	2436.08	2436.37	2436.27		
Outlet:	2435.13	2435.18	2435.22	2435.13	2435.20	2435.18		

2

HY8 Input Data for Rio Verde ADMP 2D Culvert Modeling

Date: 4/25/2005 3/20/2007
Initials: TRL ERF
ID: 2

Flow (cfs):	Min	Design	Max
	0	100	150

Max. Stage: 2443.00

Downstream Cross Section

Distance Downstream of Outlet: 0.00 ft
Elev. Adj: 4.7 ft
Slope (ft/ft): 0.04489
Length: 102.70 ft

n-value:	Left	Main	Right
	0.035	0.041	0.050

Slope:	Top	Bottom	Length
	2436.07	2434.62	32.30

L/M/R:	L	L	M	M	M	M	R	R
Sta:	0.00	26.00	33.00	38.60	43.60	48.90	57.90	64.80
Elev:	2446.20	2446.10	2436.00	2436.90	2436.70	2436.90	2444.40	2445.00

L/M/R:								
Sta:								
Elev:								

Roadway Profile for Overtopping

Roadway Width: 24 ft
Elev. Adj: 0 ft
Surface Type: Asphalt
Length: 193.10 ft

			c/l					
Sta:	0.00	55.00	83.00	110.00	193.00			
Elev:	2441.30	2441.80	2441.90	2442.00	2442.50			

Sta:								
Elev:								

Culvert Data

Size: 49"x33"
Length: 45.00 ft
Material: CMPA
Number: 6
Entrance: Headwall

	IE1	IE2	IE3	IE4	IE5	IE6	IE7	IE8
Inlet:	2437.50	2437.45	2437.65	2437.30	2437.03	2436.50		
Outlet:	2435.95	2436.07	2435.93	2436.01	2436.12	2436.16		

3

HY8 Input Data for Rio Verde ADMP 2D Culvert Modeling

Not Modeled w/HY8. See HEC RAS Data. Not included in FLO2D Model. Too close to boundary.

Date: 5/16/2005
Initials: TRL
ID: 3

Flow (cfs):	**Min**	**Design**	**Max**
	0		

Max. Stage: _____

Downstream Cross Section

Distance Downstream of Outlet: _____ ft
Slope (ft/ft): #DIV/0!

Elev. Adj: _____ ft
Length: _____ ft

n-value:	Left	Main	Right

Slope:	Top	Bottom	Length

L/M/R:								
Sta:								
Elev:								

L/M/R:								
Sta:								
Elev:								

Roadway Profile for Overtopping

Roadway Width: _____ ft
Surface Type: _____

Elev. Adj: _____ ft
Length: _____ ft

Sta:								
Elev:								

Sta:								
Elev:								

Culvert Data

Size: _____
Material: _____
Number: _____
Entrance: _____

Length: _____ ft

	IE1	IE2	IE3	IE4	IE5	IE6	IE7	IE8
Inlet:								
Outlet:								

4

HY8 Input Data for Rio Verde ADMP 2D Culvert Modeling

Date: 5/16/2005
Initials: TRL
ID: 4

Flow (cfs):	Min	Design	Max
	0	100	150

Max. Stage: 2444.00

Downstream Cross Section

Distance Downstream of Outlet: 3.00 ft
Elev. Adj: 0 ft
Slope (ft/ft): 0.01244
Length: 54.30 ft

n-value:	Left	Main	Right
	0.046	0.035	0.058

Slope:	Top	Bottom	Length
	2434.60	2434.10	40.20

L/M/R:	L	L	L	M	M	R	R	
Sta:	0.00	18.60	26.20	34.50	41.90	49.60	54.30	
Elev:	2442.80	2442.00	2439.50	2434.60	2434.70	2442.10	2442.50	

L/M/R:								
Sta:								
Elev:								

Roadway Profile for Overtopping

Roadway Width: 24 ft
Elev. Adj: 0 ft
Surface Type: Asphalt
Length: 123.50 ft

			c/l					
Sta:	0.00	44.50	66.70	91.30	123.50			
Elev:	2443.90	2443.59	2443.30	2443.06	2442.70			

Sta:								
Elev:								

Culvert Data

Size: 72"
Length: 45.00 ft
Material: CMP
Number: 2
Entrance: Headwall

	IE1	IE2	IE3	IE4	IE5	IE6	IE7	IE8
Inlet:	2436.09	2436.09						
Outlet:	2434.58	2434.93						

HY8 Input Data for Rio Verde ADMP 2D Culvert Modeling

Date: 5/16/2005
Initials: TRL
ID: 5

Flow (cfs):	Min	Design	Max
	0	80	100

Max. Stage: 2441.00

Downstream Cross Section

Distance Downstream of Outlet: 0.00 ft
Slope (ft/ft): 0.01675
Elev. Adj: 0.6 ft
Length: 66.60 ft

n-value:	Left	Main	Right
	0.055	0.045	0.060

Slope:	Top	Bottom	Length
	2435.50	2434.10	83.60

L/M/R:	L	L	M	M	M	M	M	R
Sta:	0.00	17.50	22.70	33.60	38.20	43.30	49.50	50.10
Elev:	2439.30	2437.60	2436.50	2436.00	2436.10	2436.00	2436.50	2436.70

L/M/R:	R	R	R					
Sta:	51.10	57.00	66.60					
Elev:	2437.30	2440.80	2440.90					

Roadway Profile for Overtopping

Roadway Width: 24 ft
Surface Type: Asphalt
Elev. Adj: 0 ft
Length: 125.40 ft

c/l 3rd pipe

Sta:	0.00	44.90	78.00	114.50	125.40			
Elev:	2441.00	2440.76	2440.95	2440.71	2441.00			

Sta:								
Elev:								

Culvert Data

Size: 49"x33"
Material: CMPA
Number: 6
Entrance: Headwall
Length: 56.00 ft

	IE1	IE2	IE3	IE4	IE5	IE6	IE7	IE8
Inlet:	2437.61	2437.40	2437.44	2436.65	2436.82	2436.54		
Outlet:	2435.93	2436.07	2436.00	2435.99	2435.94	2435.89		

HY8 Input Data for Rio Verde ADMP 2D Culvert Modeling

6

Date: 5/16/2005
Initials: TRL
ID: 6

Flow (cfs):	Min	Design	Max
	0	110	220

Max. Stage: 2415.00

Downstream Cross Section

Distance Downstream of Outlet: 1.30 ft
Elev. Adj: 0 ft
Slope (ft/ft): 0.02949
Length: 76.10 ft

n-value:	Left	Main	Right
	0.040	0.045	0.055

Slope:	Top	Bottom	Length
	2414.30	2413.20	37.30

L/M/R:	L	L	L	M	M	R	R	
Sta:	0.00	24.90	40.60	43.20	71.00	74.50	76.10	
Elev:	2417.50	2417.10	2415.20	2414.30	2415.10	2416.30	2418.60	

L/M/R:								
Sta:								
Elev:								

Roadway Profile for Overtopping

Roadway Width: 24 ft
Elev. Adj: 0 ft
Surface Type: Asphalt
Length: 106.80 ft

c/l 3rd pipe

Sta:	75.00	75.01	125.40	155.20	181.80	181.81		
Elev:	2421.00	2418.50	2419.13	2419.32	2419.56	2421.00		

Sta:								
Elev:								

Culvert Data

Size: 49"x33"
Length: 45.00 ft
Material: CMPA
Number: 6
Entrance: Headwall

	IE1	IE2	IE3	IE4	IE5	IE6	IE7	IE8
Inlet:	2414.85	2415.15	2415.12	2415.95	2415.04	2415.12		
Outlet:	2414.30	2414.19	2414.21	2414.25	2414.25	2414.50		

7

HY8 Input Data for Rio Verde ADMP 2D Culvert Modeling

Date: 5/17/2005 3/22/2007
Initials: TRL ERF
ID: 7

Flow (cfs):	**Min**	**Design**	**Max**
	0	50	100

Max. Stage: 2452.00

Downstream Cross Section

Distance Downstream of Outlet: 0.40 ft
Slope (ft/ft): 0.02432
Elev. Adj: 0 ft
Length: 34.10 ft

n-value:	Left	Main	Right
	0.041	0.043	0.043

Slope:	Top	Bottom	Length
	2445.00	2444.20	32.90

L/M/R:	L	L	L	L	M	M	R	R
Sta:	0.00	7.40	10.80	12.20	13.80	29.00	31.50	34.10
Elev:	2450.20	2447.90	2445.80	2445.70	2445.20	2445.20	2445.50	2449.50

L/M/R:								
Sta:								
Elev:								

Roadway Profile for Overtopping

Roadway Width: 24 ft
Surface Type: Asphalt
Elev. Adj: 0 ft
Length: 151.01 ft

Sta:	0.00	0.01	47.70	68.50	92.60	151.00	151.01	
Elev:	2452.00	2450.60	2451.12	2451.26	2451.22	2450.80	2452.00	

Sta:								
Elev:								

Culvert Data

Size: 49"x33"
Material: CMPA
Number: 4
Entrance: Headwall
Length: 49.00 ft

	IE1	IE2	IE3	IE4	IE5	IE6	IE7	IE8
Inlet:	2446.73	2446.78	2446.70	2446.46				
Outlet:	2445.21	2445.10	2445.03	2445.22				

8

HY8 Input Data for Rio Verde ADMP 2D Culvert Modeling

Date:	5/17/2005	2/21/2007	03/12/07
Initials:	TRL	ERF	ERF & TRL
ID:	8		

Flow (cfs):	**Min**	**Design**	**Max**
	0	200	300

Max. Stage: 2428.00

Downstream Cross Section

Distance Downstream of Outlet: 0.00 ft

Elev. Adj: 0 ft

Slope (ft/ft): 0.02048

Length: 67.50 ft

n-value:	Left	Main	Right
	0.036	0.039	0.052

Slope:	Top	Bottom	Length
	2423.20	2422.00	58.60

L/M/R:	L	L	L	L	L	M	R	R
Sta:	0.00	10.50	16.50	31.60	32.50	47.80	53.00	67.50
Elev:	2427.60	2427.10	2426.50	2423.20	2422.30	2423.40	2425.90	2426.80

L/M/R:								
Sta:								
Elev:								

Roadway Profile for Overtopping

Roadway Width: 24 ft

Elev. Adj: 0 ft

Surface Type: Asphalt

Length: 131.11 ft

2.1' left of c/l

Sta:				77.30	105.70	127.80	153.10	173.30
Elev:				2428.10	2428.10	2428.00	2427.89	2427.58

Sta:	208.40							
Elev:	2427.30							

Culvert Data

Size: 8'x3'

Length: 51.60 ft

Material: RCBC

Number: 2

Entrance: Headwall

	IE1	IE2	IE3	IE4	IE5	IE6	IE7	IE8
Inlet:	2422.88	2423.02						
Outlet:	2422.26	2422.29						

IE=2422.95 US IE=2422.28 DS

9

HY8 Input Data for Rio Verde ADMP 2D Culvert Modeling

Wall Obstruction 160PVB

Date: 5/17/2005 3/28/2007
Initials: TRL ERF
ID: 9

Flow (cfs):	**Min**	**Design**	**Max**
	0	50	500

Max. Stage: _____

Downstream Cross Section

Distance Downstream of Outlet: _____ ft
Slope (ft/ft): 0.26700

Elev. Adj: _____ ft
Length: _____ ft

n-value:	Left	Main	Right
		0.035	

Slope:	Top	Bottom	Length

Prismatic:	Trapezoidal							
Bottom Width:	9.00							
Side Slope:	10:1							
IE:	2094.25							

Roadway Profile for Overtopping

Roadway Width: _____ ft
Surface Type: _____

Elev. Adj: _____ ft
Length: 125.00 ft

Sta:								
Elev:	2097.35							
Sta:								
Elev:								

Culvert Data

Size: 8.5'x1.27'
Material: IRCP
Number: 1
Entrance: Headwall

Length: 1.00 ft

	IE1	IE2	IE3	IE4	IE5	IE6	IE7	IE8
Inlet:	2094.26							
Outlet:	2094.25							

POINT	NORTHING	EASTING	ELEV	DESC_	NORTHING DIFF	EASTING DIFF	DIST BETWEEN FT	STATION FT	INV ELEV
Culv 9									
Wall Opening 160PVB		Opening height is	1.450 ft						
WALL OPENING 160PVB OPEN WIDTH									
5162	999582.054	755319.427	2094.773	160PVB				0.0	2094.77
5163	999587.446	755320.598	2093.897	160PVBF+	-5.392	-1.171	5.518	5.5	2093.90
5164	999590.384	755320.329	2094.128	160PVB	-2.938	0.269	2.950	8.5	2094.13

Number of piers and width occupied by piers, and reduced width after pier width subtracted; There are no piers.

0 vertical piers at 0 inch each 0.000 ft pier-reduce 8.47 ft Open area before 25% clogging: 12.28 ft^2

Computation of debris clogging data

Since this is a culvert opening (with low chord), then the bottom would be silted in by 25% (since open area is greater than 7.07 square feet).

Height clogged by sediment and debris at : 0.36 ft on the avera(Debris-red 1.09 ft Open area after 25% clogging: 9.21 ft^2

Invert elevations after clogging (low chord minus average opening height)
(HY8 INPUT VALUES)

low chord- surveyed	Invert elev.-surveyed	low chord	Invert elev	Horiz. location
2095.53	2094.77	2095.53	2095.14	0.0
2095.53	2093.90	2095.53	2094.26	5.5
2095.53	2094.13	2095.53	2094.49	8.5

Downstream channel data: slope= 0.0267 ft/ft measured from Buildings and walls.mxd

shape is trapezoidal 10 :1 9 ft bottom n=0.035

Overtopping weir data:

2096.504 elevation at north end of wall
2095.475 elevation at south end of wall
2097.35 lowest elevation on wall

The flows overtopping this area will go around the wall south end or through opening 160PVA and not return to the wash.
Therefore input a 125 foot long overtopping weir at elevation 2097.35, but do not input overtopping flows into 2D.

FLO-2D note: Overtopping flows do not return to the same wash, therefore the output values entered in FLO-2D do not include the overtopping flow rates.

10

HY8 Input Data for Rio Verde ADMP 2D Culvert Modeling

Date: 5/17/2005 2/21/2007
Initials: TRL ERF
ID: 10

Flow (cfs):	**Min**	**Design**	**Max**
	0	80	110

Max. Stage: 2396.60

Downstream Cross Section

Distance Downstream of Outlet: 31.00 ft
Slope (ft/ft): 0.03291
Elev. Adj: 1 ft
Length: 48.40 ft

n-value:	Left	Main	Right
	0.057	0.055	0.057

Slope:	Top	Bottom	Length
	2391.70	2389.90	54.70

L/M/R:	L	L	M	M	R			
Sta:	0.00	10.50	13.70	31.40	48.40			
Elev:	2393.70	2392.60	2391.60	2393.90	2396.60			

L/M/R:								
Sta:								
Elev:								

Roadway Profile for Overtopping

Roadway Width: 24 ft
Surface Type: Asphalt
Elev. Adj: 0.24 ft
Length: 273.60 ft

Sta:	0.00	63.80	81.70	92.70	100.90	109.30	119.60	138.00
Elev:	2399.14	2398.99	2398.75	2398.37	2398.60	2398.43	2398.41	2398.15

Sta:	164.20	180.00	191.90	204.50	230.80	246.60	273.60	
Elev:	2397.59	2396.91	2397.27	2396.56	2396.67	2396.28	2395.82	

Culvert Data

Size: 10'x4'
Material: RCBC
Number: 2
Entrance: Headwall
Length: 88.50 ft

	IE1	IE2	IE3	IE4	IE5	IE6	IE7	IE8
Inlet:	2393.28	2392.45	2393.45	2393.38	2392.42	2393.58		
Outlet:	2391.70	2389.69	2391.66	2391.62	2389.77	2391.71		

11

HY8 Input Data for Rio Verde ADMP 2D Culvert Modeling

Date:	5/18/2005	2/21/2007	3/19/2007
Initials:	TRL	ERF	ERF
ID:	11		

Flow (cfs):	**Min**	**Design**	**Max**
	0	60	90

Max. Stage: 2393.00

Downstream Cross Section

Distance Downstream of Outlet: 53.00 ft

Elev. Adj: 1 ft

Slope (ft/ft): 0.05662

Length: 173.10 ft

n-value:	Left	Main	Right
	0.050	0.065	0.045

Slope:	Top	Bottom	Length
	2391.50	2385.90	98.90

L/M/R:	L	L	M	M	M	M	M	R
Sta:	0.00	79.20	85.70	88.30	91.20	103.40	116.40	124.30
Elev:	2391.00	2389.30	2387.60	2387.40	2387.60	2389.30	2387.40	2388.00

L/M/R:	R	R						
Sta:	130.40	173.10						
Elev:	2388.90	2391.00						
	6.1	42.6						

Roadway Profile for Overtopping

Roadway Width: 24 ft

Elev. Adj: 1 ft

Surface Type: Asphalt

Length: 180.50 ft

Sta:	0.00	27.70	70.70	87.30	110.50	114.30	138.00	163.10
Elev:	2393.13	2393.01	2392.46	2392.33	2392.75	2392.23	2392.63	2392.01

Sta:	165.40	180.50						
Elev:	2392.25	2392.28						

Culvert Data

Size: 49"x33"

Length: 63.50 ft

Material: CMPA

Number: 6

Entrance: Headwall

	IE1	IE2	IE3	IE4	IE5	IE6	IE7	IE8
Inlet:	2388.85	2388.82	2388.88	2388.88	2388.88	2388.86		
Outlet:	2387.50	2387.47	2387.44	2387.44	2387.42	2387.40		

HY8 Input Data for Rio Verde ADMP 2D Culvert Modeling

Date: 5/18/2005 2/21/2007
Initials: TRL ERF
ID: 12

Flow (cfs):	Min	Design	Max
	0	120	180

Max. Stage: 2390.50

Downstream Cross Section

Distance Downstream of Outlet: 20.00 ft
Slope (ft/ft): 0.02059
Elev. Adj: 0.6 ft
Length: 99.40 ft

n-value:	Left	Main	Right
	0.057	0.043	0.070

Slope:	Top	Bottom	Length
	2382.60	2380.70	92.30

L/M/R:	L	L	L	M	M	M	R	R
Sta:	0.00	18.70	23.10	30.90	46.00	54.60	70.10	81.00
Elev:	2386.40	2385.20	2384.30	2383.80	2383.00	2383.00	2385.10	2386.50

L/M/R:	R							
Sta:	99.40							
Elev:	2387.70							

Roadway Profile for Overtopping

Roadway Width: 24 ft
Surface Type: Asphalt
Elev. Adj: 0 ft
Length: 171.50 ft

Sta:	0.00	29.00	31.90	59.80	89.10	109.30	114.90	122.10
Elev:	2390.49	2390.21	2389.85	2389.63	2389.34	2389.25	2389.57	2389.06

Sta:	143.20	171.50						
Elev:	2389.32	2389.11						

Culvert Data

Size: 10'x3'
Material: RCBC
Number: 1
Entrance: Headwall
Length: 65.00 ft

	IE1	IE2	IE3	IE4	IE5	IE6	IE7	IE8
Inlet:	2383.63	2383.58	2383.54					
Outlet:	2382.90	2382.85	2382.84					

HY8 Input Data for Rio Verde ADMP 2D Culvert Modeling

13

Date: 5/18/2005 2/21/2007
Initials: TRL ERF
ID: 13

Flow (cfs):	**Min**	**Design**	**Max**
	0	100	130

Max. Stage: 2382.50

Downstream Cross Section

Distance Downstream of Outlet: 15.00 ft
Elev. Adj: 0 ft
Slope (ft/ft): 0.02232
Length: 127.90 ft

n-value:	Left	Main	Right
	0.057	0.045	0.060

Slope:	Top	Bottom	Length
	2375.90	2374.40	67.20

L/M/R:	L	L	L	M	M	M	R	
Sta:	0.00	20.20	58.90	70.70	81.20	100.20	127.90	
Elev:	2377.80	2377.50	2377.00	2376.00	2375.90	2376.30	2378.40	

L/M/R:								
Sta:								
Elev:								

Roadway Profile for Overtopping

Roadway Width: 24 ft
Elev. Adj: 0 ft
Surface Type: Asphalt
Length: 239.90 ft

Sta:	0.00	54.20	84.00	111.60	187.00	218.40	239.90	
Elev:	2381.97	2382.73	2382.92	2382.50	2382.24	2382.39	2382.28	

Sta:								
Elev:								

Culvert Data

Size: 10'x4'
Length: 74.50 ft
Material: RCBC
Number: 2
Entrance: Headwall

	IE1	IE2	IE3	IE4	IE5	IE6	IE7	IE8
Inlet:	2376.57	2376.61	2376.58	2376.55				
Outlet:	2376.00	2375.83	2375.88	2375.88				

HY8 Input Data for Rio Verde ADMP 2D Culvert Modeling

14

Date: 5/19/2005
Initials: TRL
ID: 14

Flow (cfs):	Min	Design	Max
	0	1000	1800

Max. Stage: 2381.00

Downstream Cross Section

Distance Downstream of Outlet: 13.00 ft
Elev. Adj: 0 ft
Slope (ft/ft): 0.00911
Length: 160.30 ft

n-value:	Left	Main	Right
	0.065	0.044	0.070

Slope:	Top	Bottom	Length
	2370.50	2369.60	98.80

L/M/R:	L	L	L	M	M	M	M	R
Sta:	0.00	22.70	29.00	42.80	70.50	91.20	110.70	130.40
Elev:	2377.40	2376.40	2371.90	2370.70	2370.90	2370.80	2370.90	2372.10

L/M/R:	R	R	R					
Sta:	141.40	144.90	160.30					
Elev:	2374.70	2374.70	2378.50					

Roadway Profile for Overtopping

Roadway Width: 24 ft
Elev. Adj: 0 ft
Surface Type: Asphalt
Length: ft

Sta:	0.00	29.37	36.50	59.00	82.80	88.70	100.40	118.50
Elev:	2379.68	2380.13	2379.67	2380.33	2380.04	2380.40	2380.00	2380.44

Sta:	179.40	199.00	208.80					
Elev:	2379.69	2379.53	2379.87					

Culvert Data

Size: 8'x6'
Length: 65.00 ft
Material: RCBC
Number: 9
Entrance: Headwall

	IE1	IE2	IE3	IE4	IE5	IE6	IE7	IE8
Inlet:	2371.52	2371.47	2371.49	2371.48	2371.45	2371.45	2371.30	2371.46
Outlet:	2370.71	2370.67	2370.70	2370.75	2370.77	2370.76	2370.73	2370.73

15

HY8 Input Data for Rio Verde ADMP 2D Culvert Modeling

See 156RVA

Date:	5/19/2005	3/28/2007	4/2/2007
Initials:	TRL	ERF	ERF
ID:	15		

Flow (cfs):	**Min**	**Design**	**Max**
	0	16	30

Max. Stage: _____

Downstream Cross Section

Distance Downstream of Outlet: _____ ft

Slope (ft/ft): 0.04300

Elev. Adj: _____ ft

Length: _____ ft

n-value:	Left	Main	Right
		0.035	

Slope:	Top	Bottom	Length

Prismatic:	Trapezoidal							
Bottom Width:	15.00							
Side Slope:	19:1							
IE:	2169.39							

Roadway Profile for Overtopping

Roadway Width: _____ ft

Surface Type: _____

Elev. Adj: _____ ft

Length: 326.60 ft

Sta:	0.00	106.90	107.00	207.00	255.20	255.30	290.00	309.60
Elev:	2178.00	2178.00	2175.55	2175.55	2175.55	2172.70	2172.89	2173.08
Sta:	326.60							
Elev:	2173.95							

Culvert Data

Size: 14'x0.88'

Material: IRCP

Number: 1

Entrance: Headwall

Length: 1.00 ft

	IE1	IE2	IE3	IE4	IE5	IE6	IE7	IE8
Inlet:	2169.40							
Outlet:	2169.39							

POINT	NORTHING	EASTING	ELEV	DESC_	NORTHING DIFF	EASTING DIFF	DIST BETWEEN FT	STATION FT	INV or NG ELEV repeated
Culv 15									
CULVERT 156RVA OVERTOPPING WEIR (HY8 INPUT VALUES)									
	Start 207 feet to south at driveway wall		2178.000	contour 2172 + 6 ft wall				0.0	2178.00
			2178.000	contour 2172 + 6 ft wall			106.9	106.9	2178.00
			2175.55	wall data from point 5219			0.1	107.0	2175.55
5219	997220.367	752577.571	2175.55	TOW			100.0	207.0	2175.55
5220	997220.467	752529.328	2175.55	TOW	-0.100	48.243	48.2	255.2	2175.55
5220	997220.467	752529.328	2172.697	NG	0.000	0.000	0.0	255.2	2172.70
5216	997220.283	752494.522	2172.894	NGGB	0.184	34.806	34.8	290.0	2172.89
5217	997220.169	752474.927	2173.075	NGGB	0.114	19.595	19.6	309.6	2173.08
5218	997220.219	752458.008	2173.945	NGGB	-0.050	16.919	16.9	326.6	2173.95

CULVERT 156RVA OPENING WIDTH

										Rise
5221	997181.613	752579.561	2168.569	156RVA_C	low chord & TW elevations do not match oth			0.0		0.80
5222	997176.632	752579.586	2169.003	156RVA_C	4.981	-0.025	4.981	5.0	2169.00	1.30
5223	997164.697	752579.737	2169.176	156RVA_C	11.935	-0.151	11.936	14.0	2169.18	1.10

^^ AFTER BAR WIDTH

Slope downstream of culvert 156RVA 2/46 feet = 0.043 ft/ft
channel side slope 2/38 = 19 :1

36 inch pipe area 7.065 ft^2

Per Culvert Clogging Sensitivity Analysis of Rio Verde North Extension
Openings larger than this are clogged 25%, openings smaller than this are clogged 50%

There are 35 bars at 1 inch wide

Average opening height before clogging	1.125	ft
35 bars occupy 1 inch for opening height o	3.281	ft^2
total open area before bar width removed	19.553	ft^2
total open area after bar width removed	16.272	ft^2
reduced area at 25% after bar width remov	12.204	ft^2
Average opening height after clogging	0.872	ft
Culvert span for HY8, open area	14.000	ft

Invert elevations after clogging (low chord minus average opening height)
(HY8 INPUT VALUES)

low chord	Invert elev	Horizontal location
2170.30	2169.43	0.0
2170.30	2169.43	5.0
2170.28	2169.40	14.0

FLO-2D note: Overtopping flows do return to the same wash, therefore the output values entered in FLO-2D do include the overtopping flow rates.

16

HY8 Input Data for Rio Verde ADMP 2D Culvert Modeling

146RVB

Date:	5/19/2005	3/28/2007	4/2/2007
Initials:	TRL	ERF	ERF
ID:	16		

Flow (cfs):	**Min**	**Design**	**Max**
	0	5	40

Max. Stage: _____

Downstream Cross Section

Distance Downstream of Outlet: _____ ft

Slope (ft/ft): 0.03400

Elev. Adj: _____ ft

Length: _____ ft

n-value:	Left	Main	Right
		0.030	

Slope:	Top	Bottom	Length

Prismatic:	Trapezoidal							
Bottom Width:	8.50							
Side Slope:	38:1							
IE:	2331.78							

Roadway Profile for Overtopping

Roadway Width: _____ ft

Surface Type: _____

Elev. Adj: _____ ft

Length: 187.00 ft

Sta:								
Elev:	2338.41							
Sta:								
Elev:								

Culvert Data

Size: 7.4'x1.13'

Material: IRCP

Number: 1

Entrance: Headwall

Length: 1.00 ft

	IE1	IE2	IE3	IE4	IE5	IE6	IE7	IE8
Inlet:	2331.79							
Outlet:	2331.78							

POINT	NORTHING	EASTING	ELEV	DESC_	NORTHING DIFF	EASTING DIFF	DIST BETWEEN FT	STATION FT	INV ELEV
Culv 16									
WALL OPENING 146RVB OVERTOPPING WEIR (HY8 INPUT VALUES)									
			2338.41	top of wall elevation					
				wall length = 188 ft					
Wall Opening 146RVB		Opening height is	1.450	ft on the average					
5262	997922.205	746201.567	2332.924	146RVB_C-1.5F5.57TW				0.0	2331.42
5263	997930.655	746201.584	2333.011	146RVB_C	-8.450	-0.017	8.450	8.5	2331.61

Number of bars and width occupied by bars, and reduced width after bar width subtracted:

17 vertical bars at 0.75 inch each 1.063 ft bar-reduce 7.39 ft Open area before 25% clogging: 10.7 ft^2

Computation of debris clogging data

Since this is a culvert opening (with low chord), then the bottom would be silted in by 25% (since open area is greater than 7.07 square feet).

Height clogged by sediment and debris at : 0.36 ft Debris-redı 1.09 ft Open area after 25% clogging: 8.0 ft^2

Invert elevations after clogging (low chord minus average opening height)
(HY8 INPUT VALUES)

low chord- surveyed	Invert elev.-surveyed	low chord	Invert elev	Horiz. locatior	Top of wall	
2332.924	2331.424	2332.92	2331.79	0.0	2338.494	wall length = 187 ft
2333.011	2331.611	2333.01	2331.97	7.4	2338.411	

Downstream channel data: 58 ft slope= 0.0345 ft/ft
shape is trapezoidal 38 :1 8.5 ft bottom width

FLO-2D note: Overtopping flows do return to the same wash, therefore the output values entered in FLO-2D do include the overtopping flow rates.

17

HY8 Input Data for Rio Verde ADMP 2D Culvert Modeling

Date:	5/19/2005	3/15/2007	3/19/2007
Initials:	TRL	ERF	ERF
ID:	17		

Flow (cfs):	**Min**	**Design**	**Max**
	0	20	35

Max. Stage: 2453.00

Downstream Cross Section

Distance Downstream of Outlet: 10.90 ft

Elev. Adj: 0 ft

Slope (ft/ft): 0.02675

Length: 126.30 ft

n-value:	Left	Main	Right
	0.039	0.060	0.060

Slope:	Top	Bottom	Length
	2448.00	2445.90	78.50

L/M/R:	L	L	M	M	M	R	R	R
Sta:	0.00	14.00	23.10	29.30	38.60	52.10	65.90	88.00
Elev:	2451.40	2449.60	2448.50	2448.10	2448.90	2450.70	2448.60	2450.00

L/M/R:	R							
Sta:	126.30							
Elev:	2451.50							

Roadway Profile for Overtopping

Roadway Width: 24' ft

Elev. Adj: 0.4 ft

Surface Type: Asphalt

Length: 233.90 ft

				c/l				
Sta:	0.00	25.30	48.90	61.80	74.50	116.50	173.00	233.90
Elev:	2451.90	2452.30	2452.84	2453.06	2453.30	2453.80	2454.30	2454.80

Sta:								
Elev:								

Culvert Data

Size: 30"

Length: 50.60 ft

Material: CMP

Number: 1

Entrance: Headwall

	IE1	IE2	IE3	IE4	IE5	IE6	IE7	IE8
Inlet:	2449.30							
Outlet:	2448.00							

18

HY8 Input Data for Rio Verde ADMP 2D Culvert Modeling

Date:	5/19/2005	2/21/2007	3/15/2007
Initials:	TRL	ERF	ERF
ID:	18		

Flow (cfs):	**Min**	**Design**	**Max**
	0	25	40

Max. Stage: 2457.00

Downstream Cross Section

Distance Downstream of Outlet: 2.00 ft

Elev. Adj: 0 ft

Slope (ft/ft): 0.01230

Length: 79.80 ft

n-value:	Left	Main	Right
	0.042	0.044	0.044

Slope:	Top	Bottom	Length
	2451.20	2450.90	24.40

L/M/R:	L	L	L	M	M	M	R	R
Sta:	0.00	28.00	43.30	59.30	62.60	65.90	69.90	71.50
Elev:	2453.50	2453.00	2451.30	2451.30	2451.20	2451.40	2452.90	2455.10

L/M/R:	R							
Sta:	79.80							
Elev:	2456.30							

Roadway Profile for Overtopping

Roadway Width: 24 ft

Elev. Adj: 0.4 ft

Surface Type: Asphalt c/l

Length: 124.40 ft

Sta:	0.00	30.50	60.90	79.70	102.90	124.40		
Elev:	2455.90	2456.20	2456.50	2456.90	2457.30	2457.70		

Sta:								
Elev:								

Culvert Data

Size: 49"x33"

Length: 52.50 ft

Material: CMPA

Number: 1

Entrance: Headwall

	IE1	IE2	IE3	IE4	IE5	IE6	IE7	IE8
Inlet:	2451.92							
Outlet:	2451.25							

19

HY8 Input Data for Rio Verde ADMP 2D Culvert Modeling

Date:	5/19/2005	2/21/2007
Initials:	TRL	ERF
ID:	19	

Flow (cfs):	**Min**	**Design**	**Max**
	0	15	25

Max. Stage: 2442.00

Downstream Cross Section

Distance Downstream of Outlet: 2.00 ft

Elev. Adj: 0 ft

Slope (ft/ft): 0.02400

Length: 55.90 ft

n-value:	Left	Main	Right
	0.035	0.045	0.045

Slope:	Top	Bottom	Length
	2436.00	2435.40	25.00

L/M/R:	L	L	L	M	M	M	R	R
Sta:	0.00	13.30	31.60	37.30	38.10	42.80	47.30	55.90
Elev:	2440.00	2440.30	2439.10	2438.20	2436.50	2436.00	2437.10	2440.60

L/M/R:								
Sta:								
Elev:								

Roadway Profile for Overtopping

Roadway Width: 24 ft

Elev. Adj: 0 ft

Surface Type: Asphalt

Length: 98.90 ft

Sta:	0.00	24.00	45.00	58.00	59.90	73.80	98.90	
Elev:	2442.10	2441.90	2441.70	2441.50	2441.00	2441.50	2441.70	

Sta:								
Elev:								

Culvert Data

Size: 36"

Length: 45.10 ft

Material: CMP

Number: 1

Entrance: Headwall

	IE1	IE2	IE3	IE4	IE5	IE6	IE7	IE8
Inlet:	2437.05							
Outlet:	2436.07							

HY8 Input Data for Rio Verde ADMP 2D Culvert Modeling

Date: 5/19/2005
Initials: TRL
ID: 20

Flow (cfs):	Min	Design	Max
	0	80	110

Max. Stage: 2441.40

Downstream Cross Section

Distance Downstream of Outlet: 2.00 ft
Elev. Adj: 0 ft
Slope (ft/ft): 0.03061
Length: 169.60 ft

n-value:	Left	Main	Right
	0.057	0.049	0.049

Slope:	Top	Bottom	Length
	2436.60	2435.70	29.40

L/M/R:	L	L	L	M	M	M	R	R
Sta:	0.00	129.10	145.30	153.20	159.40	164.90	166.30	169.60
Elev:	2442.00	2440.00	2439.40	2437.30	2436.50	2436.50	2438.10	2439.80

L/M/R:								
Sta:								
Elev:								

Roadway Profile for Overtopping

Roadway Width: 24 ft
Elev. Adj: 0 ft
Surface Type: Asphalt
Length: 201.50 ft

Sta:	0.00	50.00	80.70	101.50	118.80	168.80	201.50	
Elev:	2440.00	2439.70	2440.30	2440.77	2440.60	2441.10	2441.40	

Sta:								
Elev:								

Culvert Data

Size: 35"x24"
Length: 46.50 ft
Material: CMPA
Number: 2
Entrance: Headwall

	IE1	IE2	IE3	IE4	IE5	IE6	IE7	IE8
Inlet:	2436.99	2437.09						
Outlet:	2436.58	2436.59						

HY8 Input Data for Rio Verde ADMP 2D Culvert Modeling

21

Date: 5/19/2005
Initials: TRL
ID: 21

Flow (cfs):	Min	Design	Max
	0	20	35

Max. Stage: 2438.00

Downstream Cross Section

Distance Downstream of Outlet: 0.00 ft
Slope (ft/ft): 0.00902
Elev. Adj: 0 ft
Length: 81.80 ft

n-value:	Left	Main	Right
	0.069	0.060	0.060

Slope:	Top	Bottom	Length
	2432.90	2432.30	66.50

L/M/R:	L	L	L	L	M	M	M	M
Sta:	0.00	23.50	55.90	60.60	63.10	65.20	67.80	71.90
Elev:	2438.00	2437.10	2435.90	2434.60	2433.10	2432.60	2432.90	2435.80

L/M/R:	R							
Sta:	81.80							
Elev:	2438.90							

Roadway Profile for Overtopping

Roadway Width: 24 ft
Surface Type: Asphalt
Elev. Adj: 0 ft
Length: 100.10 ft

Sta:	0.00	23.80	42.00	58.20	70.70	100.10		
Elev:	2438.60	2438.30	2438.26	2437.96	2437.69	2437.00		

Sta:								
Elev:								

Culvert Data

Size: 35"x24"
Material: CMPA
Number: 1
Entrance: Headwall
Length: 45.50 ft

	IE1	IE2	IE3	IE4	IE5	IE6	IE7	IE8
Inlet:	2433.78							
Outlet:	2432.84							

22

HY8 Input Data for Rio Verde ADMP 2D Culvert Modeling

Date:	6/2/2005	2/21/2007	3/15/2007
Initials:	TRL	ERF	ERF
ID:	22		

Flow (cfs):	**Min**	**Design**	**Max**
	0	30	50

Max. Stage: 2452.00

Downstream Cross Section

Distance Downstream of Outlet: 15' ft

Elev. Adj: 0 ft

Slope (ft/ft): 0.02622

Length: 114.30 ft

n-value:	Left	Main	Right
	0.040	0.070	0.055

Slope:	Top	Bottom	Length
	2445.30	2443.80	57.20

L/M/R:	L	L	M	M	M	R	R	R
Sta:	0.00	39.20	58.90	68.10	72.60	79.20	91.70	114.30
Elev:	2450.00	2448.90	2448.00	2445.40	2445.00	2445.30	2448.40	2449.40

L/M/R:								
Sta:								
Elev:								

Roadway Profile for Overtopping

Roadway Width: 24 ft

Elev. Adj: 0.4 ft

Surface Type: Asphalt

Length: 72.80 ft

c/l pipe

Sta:	0.00	41.20	55.20	72.80				
Elev:	2450.80	2450.59	2450.58	2450.55				

Sta:								
Elev:								

Culvert Data

Size: 36"

Length: 45.00 ft

Material: CMP

Number: 1

Entrance: Headwall

	IE1	IE2	IE3	IE4	IE5	IE6	IE7	IE8
Inlet:	2446.00							
Outlet:	2445.27							

HY8 Input Data for Rio Verde ADMP 2D Culvert Modeling

23

Date:	5/19/2005	3/7/2007
Initials:	TRL	ERF
ID:	23	

Flow (cfs):	**Min**	**Design**	**Max**
	0	200	400

Max. Stage: 2450.50

Downstream Cross Section

Distance Downstream of Outlet: 16.80 ft

Elev. Adj: 0.5 ft

Slope (ft/ft): 0.02309

Length: 81.00 ft

n-value:	Left	Main	Right
	0.050	0.055	0.060

Slope:	Top	Bottom	Length
	2444.70	2442.40	99.60

L/M/R:	L	L	M	M	M	R	R	
Sta:	0.00	38.60	42.60	45.50	50.40	60.60	81.00	
Elev:	2448.40	2446.00	2444.70	2444.60	2445.00	2446.40	2447.50	

L/M/R:								
Sta:								
Elev:								

Roadway Profile for Overtopping

Roadway Width: 24 ft

Elev. Adj: 0 ft

Surface Type: Asphalt

Length: 161.50 ft

Sta:	0.00	26.50	41.20	62.10	75.80	100.20	127.70	161.50
Elev:	2450.30	2450.23	2450.20	2450.15	2450.10	2450.01	2449.90	2449.80

Sta:								
Elev:								

Culvert Data

Size: 49"x33"

Length: 45.00 ft

Material: CMPA

Number: 4

Entrance: Headwall

	IE1	IE2	IE3	IE4	IE5	IE6	IE7	IE8
Inlet:	2445.09	2445.21	2445.33	2445.49				
Outlet:	2444.34	2444.58	2444.91	2444.62				

HY8 Input Data for Rio Verde ADMP 2D Culvert Modeling

Date: 5/19/2005 3/19/2007
Initials: TRL ERF
ID: 24

Flow (cfs):	Min	Design	Max
	0	50	80

Max. Stage: 2419.00

Downstream Cross Section

Distance Downstream of Outlet: 31.00 ft
Slope (ft/ft): 0.01585
Elev. Adj: 0.6 ft
Length: 80.50 ft

n-value:	Left	Main	Right
	0.062	0.060	0.069

Slope:	Top	Bottom	Length
	2417.40	2416.50	56.80

L/M/R:	L	L	M	M	M	R	R	R
Sta:	0.00	26.90	34.50	37.00	39.00	44.10	61.20	80.50
Elev:	2420.90	2419.50	2417.80	2417.40	2417.60	2419.10	2419.70	2420.30

L/M/R:								
Sta:								
Elev:								

Roadway Profile for Overtopping

Roadway Width: 24 ft
Surface Type: Asphalt
Elev. Adj: 0 ft
Length: 115.41 ft

Sta:	0.00	47.90	89.40	103.60	115.40	115.41		
Elev:	2423.10	2422.50	2421.86	2421.59	2421.30	2423.10		

Sta:								
Elev:								

Culvert Data

Size: 35"x24"
Material: CMPA
Number: 2
Entrance: Headwall
Length: 44.50 ft

	IE1	IE2	IE3	IE4	IE5	IE6	IE7	IE8
Inlet:	2418.47	2418.31						
Outlet:	2417.55	2417.39						

HY8 Input Data for Rio Verde ADMP 2D Culvert Modeling

25

Date: 5/20/2005
Initials: TRL
ID: 25

Flow (cfs):	Min	Design	Max
	0	40	60

Max. Stage: 58.80

Downstream Cross Section

Distance Downstream of Outlet: 21.10 ft
Slope (ft/ft): 0.02506
Elev. Adj: 0.7 ft
Length: 58.80 ft

n-value:	Left	Main	Right
	0.060	0.045	0.065

Slope:	Top	Bottom	Length
	2403.50	2402.40	43.90

L/M/R:	L	L	M	M	R	R		
Sta:	0.00	18.80	32.80	36.00	54.40	58.80		
Elev:	2406.70	2406.20	2403.60	2404.10	2406.60	2406.70		

L/M/R:								
Sta:								
Elev:								

Roadway Profile for Overtopping

Roadway Width: 24 ft
Surface Type: Asphalt
Elev. Adj: 0 ft
Length: 68.70 ft

Sta:	0.00	6.30	11.60	24.20	68.70			
Elev:	2407.60	2407.76	2407.81	2407.92	2407.95			

Sta:								
Elev:								

Culvert Data

Size: 35"x24"
Material: CMPA
Number: 2
Entrance: Headwall
Length: 44.50 ft

	IE1	IE2	IE3	IE4	IE5	IE6	IE7	IE8
Inlet:	2404.65	2404.52						
Outlet:	2403.64	2403.55						

26

HY8 Input Data for Rio Verde ADMP 2D Culvert Modeling

Date: 5/20/2005
Initials: TRL
ID: 26

Flow (cfs):	Min	Design	Max
	0	90	120

Max. Stage: 2395.00

Downstream Cross Section

Distance Downstream of Outlet: 75.40 ft
Slope (ft/ft): 0.03058
Elev. Adj: 4 ft
Length: 108.70 ft

n-value:	Left	Main	Right
	0.037	0.055	0.050

Slope:	Top	Bottom	Length
	2388.10	2384.70	111.20

L/M/R:	L	L	L	M	M	M	R	
Sta:	0.00	52.70	63.40	74.80	81.90	92.40	108.70	
Elev:	2394.00	2392.60	2391.00	2389.60	2390.40	2392.00	2394.00	

L/M/R:								
Sta:								
Elev:								

Roadway Profile for Overtopping

Roadway Width: 24 ft
Surface Type: Aspahlt
Elev. Adj: 0 ft
Length: 159.50 ft

Sta:	0.00	27.70	63.00	83.40	117.80	138.90	159.50	
Elev:	2395.82	2395.42	2395.01	2394.80	2394.01	2393.64	2393.59	

Sta:								
Elev:								

Culvert Data

Size: 35"x24"
Material: CMPA
Number: 2
Entrance: Headwall
Length: 65.00 ft

	IE1	IE2	IE3	IE4	IE5	IE6	IE7	IE8
Inlet:	2389.79	2389.74						
Outlet:	2389.56	2389.60						

HY8 Input Data for Rio Verde ADMP 2D Culvert Modeling

27

Date: 5/20/2005
Initials: TRL
ID: 27

Flow (cfs):	Min	Design	Max
	0	75	150

Max. Stage: 2391.00

Downstream Cross Section

Distance Downstream of Outlet: 18.10 ft
Elev. Adj: 1.4 ft
Slope (ft/ft): 0.03013
Length: 175.80 ft

n-value:	Left	Main	Right
	0.058	0.055	0.045

Slope:	Top	Bottom	Length
	2384.80	2383.20	53.10

L/M/R:	L	L	L	L	M	M	M	M
Sta:	0.00	13.80	46.50	59.10	65.80	70.10	75.00	81.70
Elev:	2399.40	2388.20	2388.20	2386.30	2385.20	2384.80	2385.30	2387.50

L/M/R:	R							
Sta:	175.80							
Elev:	2399.40							

Roadway Profile for Overtopping

Roadway Width: 24 ft
Elev. Adj: 0.24 ft
Surface Type: Asphalt
Length: 114.50 ft

Sta:	0.00	24.30	28.50	50.70	71.30	84.20	114.50	
Elev:	2390.90	2390.49	2390.91	2390.39	2390.39	2390.91	2390.88	

Sta:								
Elev:								

Culvert Data

Size: 35"x24"
Length: 64.70 ft
Material: CMPA
Number: 1
Entrance: Headwall

	IE1	IE2	IE3	IE4	IE5	IE6	IE7	IE8
Inlet:	2385.58							
Outlet:	2384.78							

28

HY8 Input Data for Rio Verde ADMP 2D Culvert Modeling

Date: 5/20/2005 2/21/2007 03/12/07
Initials: TRL ERF ERF & TRL
ID: 28

Flow (cfs):	Min	Design	Max
	0	30	50

Max. Stage: 2387.00

Downstream Cross Section

Distance Downstream of Outlet: 16.50 ft
Elev. Adj: 0.5 ft
Slope (ft/ft): 0.03275
Length: 143.10 ft

n-value:	Left	Main	Right
	0.070	0.060	0.060

Slope:	Top	Bottom	Length
	2380.70	2379.20	45.80

L/M/R:	L	L	M	M	M	M	R	R
Sta:	0.00	37.90	47.20	57.00	61.10	73.60	87.70	106.90
Elev:	2384.90	2381.80	2380.60	2380.30	2380.80	2382.30	2382.00	2382.50

L/M/R:	R							
Sta:	143.10							
Elev:	2384.50							

Roadway Profile for Overtopping

Roadway Width: 24 ft
Elev. Adj: 0.24 ft
Surface Type: Asphalt
Length: 85.00 ft

Sta:	0.00	26.40	51.30	66.10	85.00			
Elev:	2387.63	2386.88	2386.51	2386.41	2386.46			

Sta:								
Elev:								

Culvert Data

Size: 36"
Length: 75.00 ft
Material: CMP
Number: 4
Entrance: Headwall

	IE1	IE2	IE3	IE4	IE5	IE6	IE7	IE8
Inlet:	2382.08	2382.18	2381.57	2380.95				
Outlet:	2380.62	2380.52	2380.32	2380.40				

29

HY8 Input Data for Rio Verde ADMP 2D Culvert Modeling

Date: 5/20/2005 2/21/2007
Initials: TRL ERF
ID: 29

Flow (cfs):	**Min**	**Design**	**Max**
	0	15	20

Max. Stage: 2383.50

Downstream Cross Section

Distance Downstream of Outlet: 34.00 ft
Elev. Adj: 0 ft
Slope (ft/ft): 0.01964
Length: 107.60 ft

n-value:	Left	Main	Right
	0.055	0.050	0.060

Slope:	Top	Bottom	Length
	2376.90	2375.50	71.30

L/M/R:	L	L	L	M	M	M	R	R
Sta:	0.00	9.50	35.30	54.00	60.80	76.30	92.10	107.60
Elev:	2382.00	2380.80	2378.80	2377.40	2376.70	2378.10	2379.30	2380.50

L/M/R:								
Sta:								
Elev:								

Roadway Profile for Overtopping

Roadway Width: 24 ft
Elev. Adj: 0 ft
Surface Type: Asphalt
Length: 63.20 ft

Sta:	0.00	22.50	38.70	54.70	63.20			
Elev:	2383.49	2383.00	2382.68	2382.40	2382.60			

Sta:								
Elev:								

Culvert Data

Size: 36"
Length: 75.80 ft
Material: CMP
Number: 1
Entrance: Headwall

	IE1	IE2	IE3	IE4	IE5	IE6	IE7	IE8
Inlet:	2378.77							
Outlet:	2376.92							

30

HY8 Input Data for Rio Verde ADMP 2D Culvert Modeling

Date: 4/22/2005 2/21/2007
Initials: TRL
ID: 30

Flow (cfs):	Min	Design	Max
	0	25	100

Max. Stage: 2491.50

Downstream Cross Section

Distance Downstream of Outlet: 4.00 ft
Elev. Adj: 0 ft
Slope (ft/ft): 0.01536
Length: 83.20 ft

n-value:	Left	Main	Right
	0.030	0.045	0.040

Slope:	Top	Bottom	Length
	2484.60	2483.80	52.10

L/M/R:	L	L	L	M	M	R	R	R
Sta:	0.00	24.80	46.10	48.10	50.80	61.90	62.60	83.20
Elev:	2489.00	2488.70	2485.20	2484.80	2485.20	2485.30	2485.60	2487.90

L/M/R:								
Sta:								
Elev:								

Roadway Profile for Overtopping

Roadway Width: 22 ft
Elev. Adj:
Surface Type: Asphalt
Length: 148.60 ft

Sta:	0.00	27.90	51.70	47.10	64.20	77.80	92.20	101.40
Elev:	2491.20	2489.00	2488.80	2489.20	2490.00	2490.10	2489.90	2490.20

Sta:	109.00	124.70	148.60					
Elev:	2490.40	2490.90	2491.50					

Culvert Data

Size: 24"
Length: 54.00 ft
Material: CMP
Number: 2
Entrance: Projecting

	IE1	IE2	IE3	IE4	IE5	IE6	IE7	IE8
Inlet:	2485.92	2485.95						
Outlet:	2484.33	2484.85						

HY8 Input Data for Rio Verde ADMP 2D Culvert Modeling

31

Date:	5/21/2005	2/21/2007	3/19/2007
Initials:	TRL	ERF	ERF
ID:	31		

Flow (cfs):	**Min**	**Design**	**Max**
	0	100	140

Max. Stage: 2381

Downstream Cross Section

Distance Downstream of Outlet: 19.50 ft

Elev. Adj: 0.7 ft

Slope (ft/ft): 0.02237

Length: 121.90 ft

n-value:	Left	Main	Right
	0.060	0.065	0.065

Slope:	Top	Bottom	Length
	2373.60	2372.60	44.70

L/M/R:	L	L	L	M	M	M	R	R
Sta:	0.00	29.40	61.40	66.50	68.80	71.20	98.40	121.90
Elev:	2379.50	2379.40	2375.40	2374.40	2373.90	2374.60	2376.80	2378.70

L/M/R:								
Sta:								
Elev:								

Roadway Profile for Overtopping

Roadway Width: 24 ft

Elev. Adj:

Surface Type: Asphalt

Length: 93.40 ft

Sta:	0.00	8.20	32.30	49.70	62.60	93.40		
Elev:	2380.50	2380.03	2379.91	2379.87	2380.29	2380.39		

Sta:								
Elev:								

Culvert Data

Size: 30"

Length: 66.00 ft

Material: CMP

Number: 1

Entrance: Headwall

	IE1	IE2	IE3	IE4	IE5	IE6	IE7	IE8
Inlet:	2375.76							
Outlet:	2373.89							

HY8 Input Data for Rio Verde ADMP 2D Culvert Modeling

32

Date:	5/21/2005	2/21/2007	3/19/2007
Initials:	TRL	ERF	ERF
ID:	32		

Flow (cfs):	**Min**	**Design**	**Max**
	0	60	100

Max. Stage: 2380

Downstream Cross Section

Distance Downstream of Outlet: 27.50 ft

Elev. Adj: 1.3 ft

Slope (ft/ft): 0.03043

Length: 95.50 ft

n-value:	Left	Main	Right
	0.060	0.070	0.070

Slope:	Top	Bottom	Length
	2373.80	2372.30	49.30

L/M/R:	L	L	L	M	M	M	R	R
Sta:	0.00	46.00	61.50	62.60	65.10	66.80	77.70	95.50
Elev:	2377.50	2375.20	2374.50	2374.10	2374.00	2374.10	2377.40	2379.30

L/M/R:								
Sta:								
Elev:								

Roadway Profile for Overtopping

Roadway Width: 24 ft

Elev. Adj:

Surface Type: Asphalt

Length: 103.90 ft

Sta:	0.00	22.30	37.70	48.00	69.80	103.90		
Elev:	2379.76	2379.50	2379.88	2379.39	2379.61	2378.77		

Sta:								
Elev:								

Culvert Data

Size: 30"

Length: 80.40 ft

Material: CMP

Number: 4

Entrance: Headwall

	IE1	IE2	IE3	IE4	IE5	IE6	IE7	IE8
Inlet:	2374.71	2374.91	2374.74	2374.76				
Outlet:	2374.05	2374.06	2374.04	2374.02				

HY8 Input Data for Rio Verde ADMP 2D Culvert Modeling

33

Date: 5/21/2005 2/21/2007
Initials: TRL ERF
ID: 33

Flow (cfs):	Min	Design	Max
	0	60	90

Max. Stage: 2375

Downstream Cross Section

Distance Downstream of Outlet: 20.00 ft
Elev. Adj: 0 ft
Slope (ft/ft): 0.03498
Length: 102.30 ft

n-value:	Left	Main	Right
	0.040	0.060	0.065

Slope:	Top	Bottom	Length
	2368.60	2366.40	62.90

L/M/R:	L	L	L	M	M	M	R	R
Sta:	0.00	16.10	37.30	53.30	61.60	81.10	91.80	102.30
Elev:	2372.00	2370.50	2368.50	2367.70	2368.50	2368.80	2368.80	2371.70

L/M/R:								
Sta:								
Elev:								

Roadway Profile for Overtopping

Roadway Width: 24 ft
Elev. Adj:
Surface Type: Asphalt
Length: 149.40 ft

Sta:	0.00	32.10	44.50	64.00	95.70	123.60	149.40	
Elev:	2375.38	2375.01	2374.43	2375.59	2374.19	2373.48	2373.33	

Sta:								
Elev:								

Culvert Data

Size: 30"
Length: 80.80 ft
Material: CMP
Number: 4
Entrance: Headwall

	IE1	IE2	IE3	IE4	IE5	IE6	IE7	IE8
Inlet:	2369.26	2370.06	2369.15	2369.22				
Outlet:	2368.40	2368.48	2368.60	2368.81				

Culvert 2 filled with rubble

HY8 Input Data for Rio Verde ADMP 2D Culvert Modeling

34

Date: 5/21/2005 2/22/2007
Initials: TRL ERF
ID: 34

Flow (cfs):	**Min**	**Design**	**Max**
	0	30	40

Max. Stage: 2373

Downstream Cross Section

Distance Downstream of Outlet: 17.90 ft
Elev. Adj: 0.9 ft
Slope (ft/ft): 0.01672
Length: 123.00 ft

n-value:	Left	Main	Right
	0.050	0.070	0.070

Slope:	Top	Bottom	Length
	2365.20	2363.60	95.70

L/M/R:	L	L	L	M	M	R	R	R
Sta:	0.00	9.20	33.60	38.40	43.90	63.90	91.90	123.00
Elev:	2370.90	2370.00	2367.30	2366.40	2365.80	2367.40	2368.40	2368.90

L/M/R:								
Sta:								
Elev:								

Roadway Profile for Overtopping

Roadway Width: 24 ft
Elev. Adj:
Surface Type: Asphalt
Length: 96.10 ft

Sta:	0.00	25.10	33.90	46.10	63.20	96.10		
Elev:	2371.47	2371.40	2371.88	2371.36	2371.82	2371.95		

Sta:								
Elev:								

Culvert Data

Size: 30"
Length: 65.80 ft
Material: CMP
Number: 3
Entrance: Headwall

	IE1	IE2	IE3	IE4	IE5	IE6	IE7	IE8
Inlet:	2366.75	2366.53	2366.51					
Outlet:	2365.97	2365.77	2365.81					

HY8 Input Data for Rio Verde ADMP 2D Culvert Modeling

35

Date:	5/21/2005	2/22/2007
Initials:	TRL	ERF
ID:	35	

Flow (cfs):	**Min**	**Design**	**Max**
	0	40	60

Max. Stage: 2373

Downstream Cross Section

Distance Downstream of Outlet: 17.00 ft

Elev. Adj: ____ ft

Slope (ft/ft): 0.02817

Length: 131.80 ft

n-value:	Left	Main	Right
	0.045	0.055	0.060

Slope:	Top	Bottom	Length
	2365.10	2363.10	71.00

L/M/R:	L	L	L	M	M	M	R	R
Sta:	0.00	36.70	62.20	74.00	81.20	107.80	115.70	131.80
Elev:	2372.00	2370.00	2365.30	2365.10	2368.00	2368.00	2370.00	2372.00

L/M/R:								
Sta:								
Elev:								

Roadway Profile for Overtopping

Roadway Width: 24 ft

Elev. Adj: ____

Surface Type: Asphalt

Length: 75.40 ft

Sta:	0.00	10.90	22.60	31.50	75.40			
Elev:	2372.98	2372.65	2372.83	2372.98	2373.84			

Sta:								
Elev:								

Culvert Data

Size: 30"

Length: 65.90 ft

Material: CMP

Number: 4

Entrance: Headwall

	IE1	IE2	IE3	IE4	IE5	IE6	IE7	IE8
Inlet:	2368.15	2368.20	2368.22	2368.26				
Outlet:	2367.51	2367.58	2367.60	2367.64				

HY8 Input Data for Rio Verde ADMP 2D Culvert Modeling

36

Date: 5/21/2005 2/22/2007
Initials: TRL ERF
ID: 36

Flow (cfs):	Min	Design	Max
	0	5	10

Max. Stage: 2378

Downstream Cross Section

Distance Downstream of Outlet: 16.30 ft
Slope (ft/ft): 0.03862
Elev. Adj: 0 ft
Length: 80.60 ft

n-value:	Left	Main	Right
	0.065	0.060	0.065

Slope:	Top	Bottom	Length
	2370.40	2368.50	49.20

L/M/R:	L	L	L	M	M	M	R	R
Sta:	0.00	8.70	31.80	34.30	35.90	46.80	53.60	80.60
Elev:	2374.00	2373.00	2370.40	2370.30	2370.30	2370.90	2372.00	2374.00

L/M/R:								
Sta:								
Elev:								

Roadway Profile for Overtopping

Roadway Width: 24 ft
Surface Type: Asphalt
Elev. Adj:
Length: 59.40 ft

Sta:	0.00	9.70	28.70	50.80	59.40			
Elev:	2376.48	2376.14	2376.97	2376.92	2377.13			

Sta:								
Elev:								

Culvert Data

Size: 30"
Material: CMP
Number: 1
Entrance: Headwall
Length: 66.00 ft

	IE1	IE2	IE3	IE4	IE5	IE6	IE7	IE8
Inlet:	2371.42							
Outlet:	2370.37							

HY8 Input Data for Rio Verde ADMP 2D Culvert Modeling

37

Date:	5/21/2005	2/22/2007	3/15/2007
Initials:	TRL	ERF	ERF
ID:	37		

Flow (cfs):	**Min**	**Design**	**Max**
	0	40	600

Max. Stage: 2378

Downstream Cross Section

Distance Downstream of Outlet: 52.00 ft

Elev. Adj: 1.9 ft

Slope (ft/ft): 0.02659

Length: 243.50 ft

n-value:	Left	Main	Right
	0.065	0.055	0.050

Slope:	Top	Bottom	Length
	2372.80	2370.50	86.50

L/M/R:	L	L	L	L	L	L	M	M
Sta:	0.00	39.70	61.10	93.90	110.70	118.60	130.50	171.90
Elev:	2377.90	2375.90	2375.60	2375.90	2375.40	2375.90	2373.00	2375.30

L/M/R:	R	R						
Sta:	203.20	243.50						
Elev:	2377.90	2377.91						

Roadway Profile for Overtopping

Roadway Width: 24 ft

Elev. Adj:

Surface Type: Asphalt

Length: 219.80 ft

Sta:	0.00	61.90	71.90	144.80	158.80	188.20	219.80	
Elev:	2379.30	2378.78	2378.30	2377.79	2377.69	2377.96	2377.95	

Sta:								
Elev:								

Culvert Data

Size: 24"

Length: 64.40 ft

Material: CMP

Number: 3

Entrance: Headwall

	IE1	IE2	IE3	IE4	IE5	IE6	IE7	IE8
Inlet:	2373.64	2373.72	2373.69					
Outlet:	2372.90	2373.02	2372.97					

HY8 Input Data for Rio Verde ADMP 2D Culvert Modeling

38

Date:	5/21/2005	2/22/2007	3/19/2007
Initials:	TRL	ERF	ERF
ID:	38		

Flow (cfs):	**Min**	**Design**	**Max**
	0	150	200

Max. Stage: 2379

Downstream Cross Section

Distance Downstream of Outlet: _____ ft

Slope (ft/ft): 0.03945

Elev. Adj: 0.65 ft

Length: 157.40 ft

n-value:	Left	Main	Right
	0.045	0.040	0.050

Slope:	Top	Bottom	Length
	2373.20	2371.20	50.70

L/M/R:	L	L	M	M	R	R		
Sta:	0.00	55.20	79.20	97.80	134.90	157.40		
Elev:	2375.15	2374.65	2373.35	2373.25	2374.35	2374.65		

L/M/R:								
Sta:								
Elev:								

Roadway Profile for Overtopping

Roadway Width: 24 ft

Surface Type: Asphalt

Elev. Adj: _____

Length: 94.00 ft

Sta:	0.00	31.40	36.80	47.20	57.60	82.50	94.00	
Elev:	2378.18	2378.26	2377.81	2377.85	2377.92	2377.94	2378.28	

Sta:								
Elev:								

Culvert Data

Size: 24"

Material: CMP

Number: 5

Entrance: Headwall

Length: 65.00 ft

	IE1	IE2	IE3	IE4	IE5	IE6	IE7	IE8
Inlet:	2373.82	2373.86	2373.85	2373.82	2373.64			
Outlet:	2373.28	2373.26	2373.24	2373.22	2373.75			

HY8 Input Data for Rio Verde ADMP 2D Culvert Modeling

39

Date:	5/21/2005	2/22/2007	3/19/2007
Initials:	TRL	ERF	ERF
ID:	39		

Flow (cfs):	**Min**	**Design**	**Max**
	0	50	250

Max. Stage: 2376.5

Downstream Cross Section

Distance Downstream of Outlet: 19.90 ft

Elev. Adj: 0.3 ft

Slope (ft/ft): 0.03204

Length: 141.20 ft

n-value:	Left	Main	Right
	0.055	0.065	0.050

Slope:	Top	Bottom	Length
	2371.50	2369.10	74.90

L/M/R:	L	L	L	L	M	M	R	R
Sta:	0.00	24.80	45.10	55.70	75.70	95.10	120.70	141.20
Elev:	2374.30	2372.90	2372.36	2371.70	2370.90	2371.80	2372.50	2374.30

L/M/R:								
Sta:								
Elev:								

Roadway Profile for Overtopping

Roadway Width: 24 ft

Elev. Adj:

Surface Type: Asphalt

Length: 148.60 ft

Sta:	0.00	19.80	51.70	69.30	88.30	110.10	116.10	148.60
Elev:	2377.53	2377.72	2377.33	2376.67	2376.41	2376.03	2376.31	2375.73

Sta:								
Elev:								

Culvert Data

Size: 24"

Length: 68.00 ft

Material: CMP

Number: 4

Entrance: Headwall

	IE1	IE2	IE3	IE4	IE5	IE6	IE7	IE8
Inlet:	2372.33	2372.41	2372.31	2372.15				
Outlet:	2371.83	2371.74	2371.77	2371.88				

HY8 Input Data for Rio Verde ADMP 2D Culvert Modeling

40

Date:	5/21/2005	2/22/2007	3/19/2007
Initials:	TRL	ERF	ERF
ID:	40		

Flow (cfs):	**Min**	**Design**	**Max**
	0	300	750

Max. Stage: 2371

Downstream Cross Section

Distance Downstream of Outlet: 14.00 ft

Elev. Adj: 0.3 ft

Slope (ft/ft): 0.01937

Length: 73.10 ft

n-value:	Left	Main	Right
	0.060	0.055	0.060

Slope:	Top	Bottom	Length
	2363.90	2361.50	123.90

L/M/R:	L	L	L	M	M	R	R	
Sta:	0.00	15.40	29.50	38.40	50.90	61.20	73.10	
Elev:	2368.30	2368.10	2367.80	2364.30	2363.80	2364.10	2369.20	

L/M/R:								
Sta:								
Elev:								

Roadway Profile for Overtopping

Roadway Width: 25 ft

Elev. Adj:

Surface Type: Asphalt

Length: 110.90 ft

Sta:	0.00	8.90	42.90	76.30	87.60	99.80	110.90	
Elev:	2370.95	2371.19	2370.11	2369.65	2369.50	2369.36	2369.65	

Sta:								
Elev:								

Culvert Data

Size: 36"

Length: 70.80 ft

Material: CMP

Number: 6

Entrance: Headwall

	IE1	IE2	IE3	IE4	IE5	IE6	IE7	IE8
Inlet:	2364.92	2364.70	2364.89	2364.77	2364.81	2364.70		
Outlet:	2364.40	2364.43	2364.30	2364.38	2364.20	2364.15		

HY8 Input Data for Rio Verde ADMP 2D Culvert Modeling

41

Date:	5/22/2005	2/22/2007	3/19/2007
Initials:	TRL	ERF	ERF
ID:	41		

Flow (cfs):	**Min**	**Design**	**Max**
	0	50	600

Max. Stage: 2370

Downstream Cross Section

Distance Downstream of Outlet: 45.00 ft

Elev. Adj: 2.8 ft

Slope (ft/ft): 0.06291

Length: 183.00 ft

n-value:	Left	Main	Right
	0.050	0.045	0.040

Slope:	Top	Bottom	Length
	2362.20	2360.30	30.20

L/M/R:	L	L	L	L	M	M	M	R
Sta:	0.00	39.80	75.80	114.10	119.50	122.00	126.60	138.10
Elev:	2370.20	2368.30	2367.80	2366.50	2363.60	2365.10	2366.50	2367.60

L/M/R:	R	R						
Sta:	163.30	183.00						
Elev:	2368.80	2370.50						

Roadway Profile for Overtopping

Roadway Width: 24 ft

Elev. Adj:

Surface Type: Asphalt

Length: 134.30 ft

Sta:	0.00	33.80	63.40	80.90	96.50	110.80	134.30	
Elev:	2369.65	2369.37	2368.94	2368.84	2368.76	2368.73	2369.04	

Sta:								
Elev:								

Culvert Data

Size: 30"

Length: ft

Material: CMP

Number: 1

Entrance: Headwall

	IE1	IE2	IE3	IE4	IE5	IE6	IE7	IE8
Inlet:	2364.33							
Outlet:	2363.58							

HY8 Input Data for Rio Verde ADMP 2D Culvert Modeling

42

Date: 5/22/2005 2/22/2007
Initials: TRL ERF
ID: 42

Flow (cfs):	**Min**	**Design**	**Max**
	0	50	300

Max. Stage: 2370

Downstream Cross Section

Distance Downstream of Outlet: 32.00 ft
Elev. Adj: 2.6 ft
Slope (ft/ft): 0.06291
Length: 183.00 ft

n-value:	Left	Main	Right
	0.050	0.045	0.040

Slope:	Top	Bottom	Length
	2362.20	2360.30	30.20

L/M/R:	L	L	L	L	M	M	M	R
Sta:	0.00	39.80	75.80	114.10	119.50	122.00	126.60	138.10
Elev:	2370.00	2368.10	2367.60	2366.30	2363.40	2364.90	2366.30	2367.40

L/M/R:	R	R						
Sta:	163.30	183.00						
Elev:	2368.60	2370.30						

Roadway Profile for Overtopping

Roadway Width: 24 ft
Elev. Adj:
Surface Type: Asphalt
Length: 99.70 ft

Sta:	0.00	12.00	25.20	33.30	38.60	50.50	99.70	
Elev:	2369.04	2368.66	2368.53	2369.08	2369.49	2369.45	2368.40	

Sta:								
Elev:								

Culvert Data

Size: 30"
Length: 69.10 ft
Material: CMP
Number: 1
Entrance: Headwall

	IE1	IE2	IE3	IE4	IE5	IE6	IE7	IE8
Inlet:	2363.95							
Outlet:	2363.44							

HY8 Input Data for Rio Verde ADMP 2D Culvert Modeling

43

Date:	5/22/2005	2/22/2007	3/19/2007
Initials:	TRL	ERF	ERF
ID:	43		

Flow (cfs):	**Min**	**Design**	**Max**
	0	50	300

Max. Stage: 2368

Downstream Cross Section

Distance Downstream of Outlet: 18.00 ft

Elev. Adj: 0.7 ft

Slope (ft/ft): 0.01992

Length: 116.60 ft

n-value:	Left	Main	Right
	0.040	0.055	0.050

Slope:	Top	Bottom	Length
	2361.90	2360.90	50.20

L/M/R:	L	L	L	M	M	M	R	R
Sta:	0.00	32.80	67.70	70.90	75.10	79.00	107.20	116.60
Elev:	2366.70	2364.70	2362.90	2362.20	2362.20	2362.80	2364.30	2366.20

L/M/R:								
Sta:								
Elev:								

Roadway Profile for Overtopping

Roadway Width: 24 ft

Elev. Adj:

Surface Type: Asphalt

Length: 172.20 ft

Sta:	0.00	36.20	69.30	87.70	102.90	122.30	138.40	172.20
Elev:	2368.40	2368.68	2368.54	2367.99	2368.21	2367.54	2367.79	2366.90

Sta:								
Elev:								

Culvert Data

Size: 30"

Length: 68.70 ft

Material: CMP

Number: 1

Entrance: Headwall

	IE1	IE2	IE3	IE4	IE5	IE6	IE7	IE8
Inlet:	2363.62							
Outlet:	2362.23							

HY8 Input Data for Rio Verde ADMP 2D Culvert Modeling

44

Date:	5/22/2005	2/22/2007	3/19/2007
Initials:	TRL	ERF	ERF
ID:	44		

Flow (cfs):	**Min**	**Design**	**Max**
	0	100	200

Max. Stage: 2363

Downstream Cross Section

Distance Downstream of Outlet: 42.00 ft

Elev. Adj: 1.2 ft

Slope (ft/ft): 0.01046

Length: 137.80 ft

n-value:	Left	Main	Right
	0.050	0.065	0.050

Slope:	Top	Bottom	Length
	2355.60	2354.90	66.90

L/M/R:	L	L	L	M	M	R	R	R
Sta:	0.00	13.70	32.10	58.40	68.80	80.70	105.40	137.80
Elev:	2362.50	2360.90	2358.20	2356.00	2356.90	2357.60	2358.10	2362.40

L/M/R:								
Sta:								
Elev:								

Roadway Profile for Overtopping

Roadway Width: 24 ft

Elev. Adj:

Surface Type: Asphalt

Length: 169.20 ft

Sta:	0.00	25.10	48.20	85.90	100.90	135.20	169.20	
Elev:	2362.92	2362.41	2362.04	2361.63	2361.79	2361.51	2361.34	

Sta:								
Elev:								

Culvert Data

Size: 36"

Length: 66.50 ft

Material: CMP

Number: 3

Entrance: Headwall

	IE1	IE2	IE3	IE4	IE5	IE6	IE7	IE8
Inlet:	2357.62	2357.68	2357.62					
Outlet:	2356.09	2355.97	2356.08					

HY8 Input Data for Rio Verde ADMP 2D Culvert Modeling

45

Date:	5/23/2005	2/23/2007
Initials:	TRL	ERF
ID:	45	

Flow (cfs):	**Min**	**Design**	**Max**
	0	80	120

Max. Stage: 2360.5

Downstream Cross Section

Distance Downstream of Outlet: 4.00 ft

Elev. Adj: 1.3 ft

Slope (ft/ft): 0.08159

Length: 48.50 ft

n-value:	Left	Main	Right
	0.040	0.055	0.045

Slope:	Top	Bottom	Length
	2353.60	2349.30	52.70

L/M/R:	L	L	L	L	M	M	M	R
Sta:	0.00	17.10	23.00	24.30	29.10	32.40	36.50	39.70
Elev:	2358.90	2358.40	2357.60	2356.70	2354.80	2354.90	2354.30	2355.30

L/M/R:	R	R						
Sta:	42.40	48.50						
Elev:	2356.60	2359.10						

Roadway Profile for Overtopping

Roadway Width: 24 ft

Elev. Adj:

Surface Type: Asphalt

Length: 127.50 ft

Sta:	0.00	41.70	78.60	87.40	98.50	127.50		
Elev:	2360.15	2359.98	2359.71	2360.07	2359.98	2359.50		

Sta:								
Elev:								

Culvert Data

Size: 35"x24"

Length: 72.60 ft

Material: CMPA

Number: 3

Entrance: Headwall

	IE1	IE2	IE3	IE4	IE5	IE6	IE7	IE8
Inlet:	2356.25	2356.13	2356.14					
Outlet:	2354.38	2354.29	2354.34					

HY8 Input Data for Rio Verde ADMP 2D Culvert Modeling

46

Date:	5/23/2005	2/23/2007	3/19/2007
Initials:	TRL	ERF	ERF
ID:	46		

Flow (cfs):	**Min**	**Design**	**Max**
	0	40	60

Max. Stage: 2273

Downstream Cross Section

Distance Downstream of Outlet: 33.00 ft

Elev. Adj: 0.5 ft

Slope (ft/ft): 0.02062

Length: 153.60 ft

n-value:	Left	Main	Right
	0.060	0.070	0.070

Slope:	Top	Bottom	Length
	2267.10	2266.10	48.50

L/M/R:	L	L	L	L	L	L	M	M
Sta:	0.00	49.90	69.40	84.30	105.40	128.80	129.60	132.10
Elev:	2271.80	2270.20	2270.10	2269.10	2267.70	2267.70	2266.80	2266.60

L/M/R:	R	R						
Sta:	137.20	153.60						
Elev:	2266.80	2269.90						

Roadway Profile for Overtopping

Roadway Width: 24 ft

Elev. Adj:

Surface Type: Asphalt

Length: 70.80 ft

Sta:	0.00	24.10	38.70	48.10	70.80			
Elev:	2272.02	2272.32	2272.36	2272.38	2272.09			

Sta:								
Elev:								

Culvert Data

Size: 35"x24"

Length: 56.90 ft

Material: CMPA

Number: 6

Entrance: Headwall

	IE1	IE2	IE3	IE4	IE5	IE6	IE7	IE8
Inlet:	2268.43	2268.35	2268.29	2268.27	2268.44	2268.41		
Outlet:	2266.58	2266.59	2266.59	2266.62	2266.94	2266.58		

HY8 Input Data for Rio Verde ADMP 2D Culvert Modeling

47

Date: 5/23/2005 2/23/2007
Initials: TRL ERF
ID: 47

Flow (cfs):	Min	Design	Max
	0	400	600

Max. Stage: 2272

Downstream Cross Section

Distance Downstream of Outlet: 16.00 ft
Slope (ft/ft): 0.01278
Elev. Adj: 1.8 ft
Length: 99.40 ft

n-value:	Left	Main	Right
	0.060	0.070	0.070

Slope:	Top	Bottom	Length
	2263.70	2262.60	86.10

L/M/R:	L	L	L	L	L	M	M	R
Sta:	0.00	34.40	44.10	51.30	60.90	71.90	77.00	84.40
Elev:	2269.60	2269.20	2269.10	2265.60	2265.20	2265.50	2265.60	2267.80

L/M/R:	R							
Sta:	99.40							
Elev:	2270.00							

Roadway Profile for Overtopping

Roadway Width: 24 ft
Surface Type: Asphalt
Elev. Adj:
Length: 173.70 ft

Sta:	0.00	39.50	46.30	63.90	75.00	87.80	95.70	112.00
Elev:	2270.48	2270.48	2270.55	2270.69	2270.91	2271.20	2271.26	2271.16

Sta:	132.30	161.00	173.70					
Elev:	2271.08	2271.20	2271.10					

Culvert Data

Size: 10'x4'
Material: RCBC
Number: 2
Entrance: Headwall
Length: 41.80 ft

	IE1	IE2	IE3	IE4	IE5	IE6	IE7	IE8
Inlet:	2266.36	2266.39	2266.35	2266.33				
Outlet:	2265.18	2265.18	2265.21	2265.19				

HY8 Input Data for Rio Verde ADMP 2D Culvert Modeling

48

Date:	5/23/2005	2/23/2007	3/19/2007
Initials:	TRL	ERF	ERF
ID:	48		

Flow (cfs):	**Min**	**Design**	**Max**
	0	150	200

Max. Stage: 2272

Downstream Cross Section

Distance Downstream of Outlet: 36.00 ft

Elev. Adj: 1.1 ft

Slope (ft/ft): 0.04525

Length: 143.60 ft

n-value:	Left	Main	Right
	0.055	0.070	0.055

Slope:	Top	Bottom	Length
	2265.50	2262.50	66.30

L/M/R:	L	L	L	M	M	R	R	R
Sta:	0.00	34.10	46.90	51.00	62.90	79.20	107.10	143.60
Elev:	2270.60	2265.50	2264.90	2265.30	2265.40	2268.60	2269.00	2271.10

L/M/R:								
Sta:								
Elev:								

Roadway Profile for Overtopping

Roadway Width: 24 ft

Elev. Adj:

Surface Type: Asphalt

Length: 219.70 ft

Sta:	0.00	64.70	97.60	134.10	157.90	219.70		
Elev:	2271.33	2270.98	2271.09	2270.88	2270.94	2271.30		

Sta:								
Elev:								

Culvert Data

Size: 10'x4'

Length: 41.40 ft

Material: RCBC

Number: 3

Entrance: Headwall

	IE1	IE2	IE3	IE4	IE5	IE6	IE7	IE8
Inlet:	2266.52	2266.33	2266.32	2266.31	2266.29	2266.43		
Outlet:	2265.62	2265.56	2265.41	2265.31	2265.47	2265.54		

HY8 Input Data for Rio Verde ADMP 2D Culvert Modeling

49

Date:	5/23/2005	2/23/2007	3/19/2007
Initials:	TRL	ERF	ERF
ID:	49		

Flow (cfs):	**Min**	**Design**	**Max**
	0	50	100

Max. Stage: 2275

Downstream Cross Section

Distance Downstream of Outlet: 34.00 ft

Elev. Adj: 1.1 ft

Slope (ft/ft): 0.01942

Length: 133.60 ft

n-value:	Left	Main	Right
	0.050	0.070	0.065

Slope:	Top	Bottom	Length
	2269.40	2268.00	72.10

L/M/R:	L	L	L	M	M	R	R	R
Sta:	0.00	36.50	78.80	86.40	91.40	96.40	120.60	133.60
Elev:	2275.10	2274.00	2271.10	2269.60	2270.10	2269.80	2271.70	2273.10

L/M/R:								
Sta:								
Elev:								

Roadway Profile for Overtopping

Roadway Width: 24 ft

Elev. Adj:

Surface Type: Asphalt

Length: 54.20 ft

Sta:	0.00	8.70	35.90	54.20				
Elev:	2274.76	2274.49	2274.15	2273.85				

Sta:								
Elev:								

Culvert Data

Size: 24"

Length: 50.60 ft

Material: CMP

Number: 2

Entrance: Headwall

	IE1	IE2	IE3	IE4	IE5	IE6	IE7	IE8
Inlet:	2270.07	2270.19						
Outlet:	2269.62	2269.59						

HY8 Input Data for Rio Verde ADMP 2D Culvert Modeling

50

Date:	5/23/2005	2/23/2007	3/19/2007
Initials:	TRL	ERF	ERF
ID:	50		

Flow (cfs):	**Min**	**Design**	**Max**
	0	200	300

Max. Stage: 2276

Downstream Cross Section

Distance Downstream of Outlet: 10.00 ft

Elev. Adj: 0.4 ft

Slope (ft/ft): 0.00844

Length: 97.10 ft

n-value:	Left	Main	Right
	0.060	0.065	0.065

Slope:	Top	Bottom	Length
	2269.50	2268.90	71.10

L/M/R:	L	L	L	M	M	M	M	R
Sta:	0.00	19.90	42.70	54.20	56.50	58.70	65.10	74.70
Elev:	2274.10	2273.00	2271.70	2269.90	2269.90	2269.60	2270.40	2271.10

L/M/R:	R							
Sta:	97.10							
Elev:	2275.50							

Roadway Profile for Overtopping

Roadway Width: 24 ft

Elev. Adj:

Surface Type: Asphalt

Length: 101.00 ft

Sta:	0.00	28.40	35.00	43.20	62.20	82.10	101.00	
Elev:	2276.00	2275.90	2275.90	2275.90	2275.80	2275.80	2275.50	

Sta:								
Elev:								

Culvert Data

Size: 18"

Length: 58.00 ft

Material: CMP

Number: 2

Entrance: Headwall

	IE1	IE2	IE3	IE4	IE5	IE6	IE7	IE8
Inlet:	2271.80	2271.74						
Outlet:	2269.72	2269.63						

HY8 Input Data for Rio Verde ADMP 2D Culvert Modeling

51

Date:	5/23/2005	2/23/2007	3/19/2007
Initials:	TRL	ERF	ERF
ID:	51		

Flow (cfs):	**Min**	**Design**	**Max**
	0	500	700

Max. Stage: 2271

Downstream Cross Section

Distance Downstream of Outlet: 66.20 ft

Elev. Adj: 2.3 ft

Slope (ft/ft): 0.02235

Length: 150.30 ft

n-value:	Left	Main	Right
	0.060	0.060	0.070

Slope:	Top	Bottom	Length
	2265.10	2262.00	138.70

L/M/R:	L	L	M	M	M	R	R	
Sta:	0.00	15.20	23.50	54.10	70.20	108.50	150.30	
Elev:	2269.41	2269.40	2266.40	2265.20	2268.20	2267.30	2269.30	

L/M/R:								
Sta:								
Elev:								

Roadway Profile for Overtopping

Roadway Width: 24 ft

Elev. Adj: 0.3 ft

Surface Type: Asphalt

Length: 199.80 ft

Sta:	0.00	31.80	70.30	103.90	148.00	172.40	199.80	
Elev:	2270.60	2270.30	2269.99	2269.70	2269.70	2269.70	2269.70	

Sta:								
Elev:								

c/l culverts

Culvert Data

Size: 10'x3'

Length: 59.00 ft

Material: RCBC

Number: 6

Entrance: Headwall

	IE1	IE2	IE3	IE4	IE5	IE6	IE7	IE8
Inlet:	2266.60	2266.58	2266.64	2266.69	2266.61	2266.61		
Outlet:	2265.18	2265.22	2265.14	2265.18	2265.18	2265.21		

HY8 Input Data for Rio Verde ADMP 2D Culvert Modeling

52

Date:	5/24/2005	2/23/2007	3/19/2007
Initials:	TRL	ERF	ERF
ID:	52		

Flow (cfs):	**Min**	**Design**	**Max**
	0	50	100

Max. Stage: 2268

Downstream Cross Section

Distance Downstream of Outlet: 28.00 ft

Elev. Adj: 1 ft

Slope (ft/ft): 0.03145

Length: 87.90 ft

n-value:	Left	Main	Right
	0.055	0.070	0.055

Slope:	Top	Bottom	Length
	2261.70	2258.20	111.30

L/M/R:	L	L	M	M	R	R		
Sta:	0.00	35.10	38.30	43.30	53.00	87.90		
Elev:	2266.00	2262.20	2261.70	2262.20	2264.20	2266.00		

L/M/R:								
Sta:								
Elev:								

Roadway Profile for Overtopping

Roadway Width: 24 ft

Elev. Adj: 0.2 ft

Surface Type: Asphalt c/l culv.

Length: 80.50 ft

Sta:	0.00	23.30	46.90	54.30	65.00	80.50		
Elev:	2267.50	2267.35	2267.24	2267.10	2266.98	2266.85		

Sta:								
Elev:								

Culvert Data

Size: 24"

Length: 72.00 ft

Material: CMP

Number: 2

Entrance: Projecting

	IE1	IE2	IE3	IE4	IE5	IE6	IE7	IE8
Inlet:	2264.78	2264.39						
Outlet:	2261.78	2261.68						

HY8 Input Data for Rio Verde ADMP 2D Culvert Modeling

53

Date:	5/24/2005	3/19/2007
Initials:	TRL	ERF
ID:	53	

Flow (cfs):	**Min**	**Design**	**Max**
	0	150	225

Max. Stage: 2264

Downstream Cross Section

Distance Downstream of Outlet: 37.50 ft

Elev. Adj: 1.6 ft

Slope (ft/ft): 0.03371

Length: 92.90 ft

n-value:	Left	Main	Right
	0.050	0.070	0.060

Slope:	Top	Bottom	Length
	2258.50	2254.90	106.80

L/M/R:	L	L	M	M	R	R		
Sta:	0.00	38.20	47.60	54.50	64.10	92.90		
Elev:	2263.20	2260.40	2259.50	2258.50	2259.70	2264.00		

L/M/R:								
Sta:								
Elev:								

Roadway Profile for Overtopping

Roadway Width: 24 ft

Elev. Adj: 0.45 ft

Surface Type: Asphalt

Length: 87.80 ft

c/l RCBC

Sta:	0.00	15.20	28.70	46.20	64.90	87.80		
Elev:	2264.03	2264.00	2264.07	2264.01	2263.83	2263.67		

Sta:								
Elev:								

Culvert Data

Size: 10'x4'

Length: 50.50 ft

Material: RCBC

Number: 3

Entrance: Headwall

	IE1	IE2	IE3	IE4	IE5	IE6	IE7	IE8
Inlet:	2259.36	2259.34	2259.38					
Outlet:	2258.45	2258.47	2258.42					

HY8 Input Data for Rio Verde ADMP 2D Culvert Modeling

54

Date:	5/24/2005	2/23/2007	3/19/2007
Initials:	TRL	ERF	ERF
ID:	54		

Flow (cfs):	**Min**	**Design**	**Max**
	0	90	150

Max. Stage: 2255

Downstream Cross Section

Distance Downstream of Outlet: 20.00 ft

Elev. Adj: 0.8 ft

Slope (ft/ft): 0.02075

Length: 81.80 ft

n-value:	Left	Main	Right
	0.070	0.075	0.060

Slope:	Top	Bottom	Length
	2248.80	2246.60	106.00

L/M/R:	L	L	L	M	M	R	R	
Sta:	0.00	23.20	28.50	38.40	59.70	71.70	81.80	
Elev:	2253.80	2252.00	2249.00	2250.70	2248.80	2249.90	2251.70	

L/M/R:								
Sta:								
Elev:								

Roadway Profile for Overtopping

Roadway Width: 24 ft

Elev. Adj: 0.2 ft

Surface Type: Asphalt

Length: 125.10 ft

c/l Box culv.

Sta:	0.00	16.80	59.60	63.50	72.40	87.90	105.50	125.10
Elev:	2253.95	2254.36	2254.12	2254.07	2254.02	2253.83	2253.60	2253.16

Sta:								
Elev:								

Culvert Data

Size: 10'x3'

Length: 54.60 ft

Material: RCBC

Number: 2

Entrance: Headwall

	IE1	IE2	IE3	IE4	IE5	IE6	IE7	IE8
Inlet:	2249.79	2249.75						
Outlet:	2248.76	2248.78						

HY8 Input Data for Rio Verde ADMP 2D Culvert Modeling

55

Date:	5/24/2005	2/23/2007
Initials:	TRL	ERF
ID:	55	

Flow (cfs):	**Min**	**Design**	**Max**
	0	20	30

Max. Stage: 2240

Downstream Cross Section

Distance Downstream of Outlet: 31.00 ft

Elev. Adj: 0.2 ft

Slope (ft/ft): 0.01657

Length: 103.90 ft

n-value:	Left	Main	Right
	0.065	0.065	0.070

Slope:	Top	Bottom	Length
	2232.70	2231.60	66.40

L/M/R:	L	L	M	M	M	R	R	R
Sta:	0.00	37.10	44.30	47.10	51.10	70.90	97.30	103.90
Elev:	2236.20	2234.20	2233.80	2233.10	2233.10	2234.50	2234.60	2237.30

L/M/R:								
Sta:								
Elev:								

Roadway Profile for Overtopping

Roadway Width: 24 ft

Elev. Adj:

Surface Type: Asphalt

Length: 247.00 ft

Sta:	0.00	26.20	51.60	75.20	100.80	147.20	196.20	247.00
Elev:	2238.79	2238.88	2239.12	2239.11	2239.11	2239.55	2239.60	2239.91

Sta:								
Elev:								

Culvert Data

Size: 36"

Length: 58.70 ft

Material: CMP

Number: 1

Entrance: Headwall (Metal End Section)

	IE1	IE2	IE3	IE4	IE5	IE6	IE7	IE8
Inlet:	2234.60							
Outlet:	2232.73							

HY8 Input Data for Rio Verde ADMP 2D Culvert Modeling

56

Date: 5/24/2005 02/232007
Initials: TRL ERF
ID: 56

Flow (cfs):	Min	Design	Max
	0	60	90

Max. Stage: 2241

Downstream Cross Section

Distance Downstream of Outlet: 65.00 ft
Slope (ft/ft): 0.02364
Elev. Adj: 1.1 ft
Length: 68.70 ft

n-value:	Left	Main	Right
	0.070	0.070	0.070

Slope:	Top	Bottom	Length
	2234.60	2232.30	97.30

L/M/R:	L	L	L	M	M	R	R	
Sta:	0.00	26.80	32.30	38.60	41.20	43.00	68.70	
Elev:	2236.60	2235.30	2234.40	2234.20	2234.20	2234.60	2236.80	

L/M/R:								
Sta:								
Elev:								

Roadway Profile for Overtopping

Roadway Width: 24 ft
Surface Type: Asphalt
Elev. Adj:
Length: 176.60 ft

Sta:	0.00	21.00	48.40	62.00	97.10	129.40	154.30	176.60
Elev:	2239.91	2239.83	2239.89	2240.05	2240.08	2239.45	2239.20	2239.56

Sta:								
Elev:								

Culvert Data

Size: 36"
Material: CMP
Number: 5
Entrance: Headwall
Length: 56.40 ft

	IE1	IE2	IE3	IE4	IE5	IE6	IE7	IE8
Inlet:	2236.14	2235.99	2236.13	2236.06	2236.15			
Outlet:	2234.15	2234.03	2234.02	2234.19	2234.10			

HY8 Input Data for Rio Verde ADMP 2D Culvert Modeling

57

Date: 5/24/2005 2/23/2007
Initials: TRL ERF
ID: 57

Flow (cfs):	Min	Design	Max
	0	10	20

Max. Stage: 2238

Downstream Cross Section

Distance Downstream of Outlet: 15.00 ft
Slope (ft/ft): 0.01445

Elev. Adj: 0.7 ft
Length: 130.20 ft

n-value:	Left	Main	Right
	0.055	0.060	0.065

Slope:	Top	Bottom	Length
	2232.20	2231.20	69.20

L/M/R:	L	L	L	M	R	R		
Sta:	0.00	32.10	50.30	74.20	107.40	130.20		
Elev:	2237.20	2235.50	2234.50	2232.20	2236.70	2237.40		

L/M/R:								
Sta:								
Elev:								

Roadway Profile for Overtopping

Roadway Width: 24 ft
Surface Type: Asphalt

Elev. Adj:
Length: 75.20 ft

Sta:	0.00	25.90	50.60	75.20				
Elev:	2237.46	2237.76	2237.81	2238.00				

Sta:								
Elev:								

Culvert Data

Size: 24"
Material: CMP
Number: 1
Entrance: Headwall (Metal End Section)

Length: 77.70 ft

	IE1	IE2	IE3	IE4	IE5	IE6	IE7	IE8
Inlet:	2234.57							
Outlet:	2232.18							

HY8 Input Data for Rio Verde ADMP 2D Culvert Modeling

58

Date:	5/24/2005	2/23/2007	3/19/2007
Initials:	TRL	ERF	ERF
ID:	58		

Flow (cfs):	**Min**	**Design**	**Max**
	0	300	400

Max. Stage: 2272

Downstream Cross Section

Distance Downstream of Outlet: 104.00 ft

Elev. Adj: 2.5 ft

Slope (ft/ft): 0.02234

Length: 136.40 ft

n-value:	Left	Main	Right
	0.060	0.038	0.055

Slope:	Top	Bottom	Length
	2266.30	2262.00	192.50

L/M/R:	L	M	M	R				
Sta:	0.00	56.40	88.80	136.40				
Elev:	2268.00	2266.80	2266.80	2270.30				

L/M/R:								
Sta:								
Elev:								

Roadway Profile for Overtopping

Roadway Width: 24 ft

Elev. Adj: 0.25 ft

Surface Type: Asphalt

Length: 143.60 ft

				c/l culv.				
Sta:	0.00	18.30	37.00	69.00	112.90	143.60		
Elev:	2272.40	2272.40	2272.26	2272.12	2271.81	2271.25		

Sta:								
Elev:								

Culvert Data

Size: 10'x3.2'

Length: 51.40 ft

Material: RCBC

Number: 6

Entrance: Headwall

	IE1	IE2	IE3	IE4	IE5	IE6	IE7	IE8
Inlet:	2267.90	2267.88	2267.94	2267.90	2267.84	2267.84		
Outlet:	2266.91	2266.90	2266.84	2266.87	2266.84	2266.81		

59

HY8 Input Data for Rio Verde ADMP 2D Culvert Modeling

142LMD

Date:	3/28/2007	4/2/2007
Initials:	ERF	ERF
ID:	59	

Flow (cfs):	**Min**	**Design**	**Max**
	0	15	30

Max. Stage: _____

Downstream Cross Section

Distance Downstream of Outlet: _____ ft

Slope (ft/ft): 0.02000

Elev. Adj: _____ ft

Length: _____ ft

n-value:	Left	Main	Right
		0.035	

Slope:	Top	Bottom	Length

Prismatic:	Trapezoidal							
Bottom Width:	10.00							
Side Slope:	6:1							
IE:	2453.81							

Roadway Profile for Overtopping

Roadway Width: _____ ft

Surface Type: _____

Elev. Adj: _____

Length: 197.00 ft

Sta:	0.00	1.00	6.00	34.00	35.00	55.00	57.00	104.00
Elev:	2461.50	2458.50	2457.80	2458.50	2458.30	2458.80	2459.50	2461.20

Sta:	131.00	142.00	167.00	197.00				
Elev:	2462.10	2462.40	2461.80	2461.40				

Culvert Data

Size: 10'x1.13'

Material: RCB

Number: 1

Entrance: Square edge

Length: 8.00 ft

	IE1	IE2	IE3	IE4	IE5	IE6	IE7	IE8
Inlet:	2453.97							
Outlet:	2453.81							

POINT	NORTHING	EASTING	ELEV	DESC_	NORTHING DIFF	EASTING DIFF	DIST BETWEEN FT	STATION FT	INV ELEV

Culv 59

Wall Opening 142LMD Opening height is 1.500 ft

10 ft by 1.5 ft by 8 ft CBC (span x max. rise x length)

5000	1008416.133	743388.836	2453.587	142LMD-upstream invert				10.0	2453.59
5016	1008415.602	743397.521	2453.432	142LMD-downstream invert					2453.43

Number of piers and width occupied by piers, and reduced width after pier width subtracted; There are no piers.

0 vertical piers at 0 inch each 0.000 ft pier-reduce 10.00 ft Open area before 25% clogging: 15.00 ft^2

Computation of debris clogging data

Since this is a culvert opening (with low chord), then the bottom would be silted in by 25% (since open area is greater than 7.07 square feet).

Height clogged by sediment and debris at 0.38 ft on the avera Debris-red 1.13 ft Open area after 25% clogging: 11.25 ft^2

Invert elevations after clogging (low chord minus average opening height)
(HY8 INPUT VALUES)

low chord- surveyed	Invert elev.-surveyed	low chord	Invert elev	Horiz. location
2455.09	2453.59	2455.09	2453.96	**simply input 10 ft by 1.13 ft culvert**

wetted perimeter weighted n value: 0.025

downstream invert: 2453.81

Downstream channel data: slope= 0.0200 ft/ft measured from Buildings and walls.mxd

shape is trapezoidal 6 :1 10.0 ft bott n=0.035

Overtopping weir data:

POINT	NORTHING	EASTING	ELEV	DESC_	NORTHING DIFF	EASTING DIFF	DIST BETWEEN FT	STATION FT	INV or NG ELEV repeated
CULVERT 142LMD OVERTOPPING WEIR									
INTERPOLATED	1008274.891	743391.560	2461.500	TOW				0.0	2461.50
5041	1008274.891	743391.060	2458.477	NG	0.000	0.500	0.500	0.5	2458.48
5042	1008275.464	743385.678	2457.819	NGGB	-0.573	5.382	5.412	5.9	2457.82
5043	1008278.326	743357.880	2458.515	NGGB	-2.862	27.798	27.945	33.9	2458.52
5044	1008278.488	743357.085	2458.278	NGGB	-0.162	0.795	0.811	34.7	2458.28
5045	1008280.703	743336.525	2458.785	NGGB	-2.215	20.560	20.679	55.3	2458.79
5046	1008280.918	743335.041	2459.544	NGGB	-0.215	1.484	1.499	56.8	2459.54
5047	1008285.838	743287.964	2461.174	NGGB	-4.920	47.077	47.333	104.2	2461.17
5048	1008288.680	743261.242	2462.114	NGGB	-2.842	26.722	26.873	131.1	2462.11
5049	1008289.560	743250.307	2462.444	NGGB	-0.880	10.935	10.970	142.0	2462.44
5050	1008292.725	743225.530	2461.791	NGGB	-3.165	24.777	24.978	167.0	2461.79
5051	1008295.635	743196.063	2461.437	NGGB	-2.910	29.467	29.610	196.6	2461.44

FLO-2D note: Overtopping flows do not return to the same wash, therefore the output values entered in FLO-2D do not include the overtopping flow rates. Review the FLO-2D results for accuracy: the overtopping flows from 142LMD travel to 142LMC.

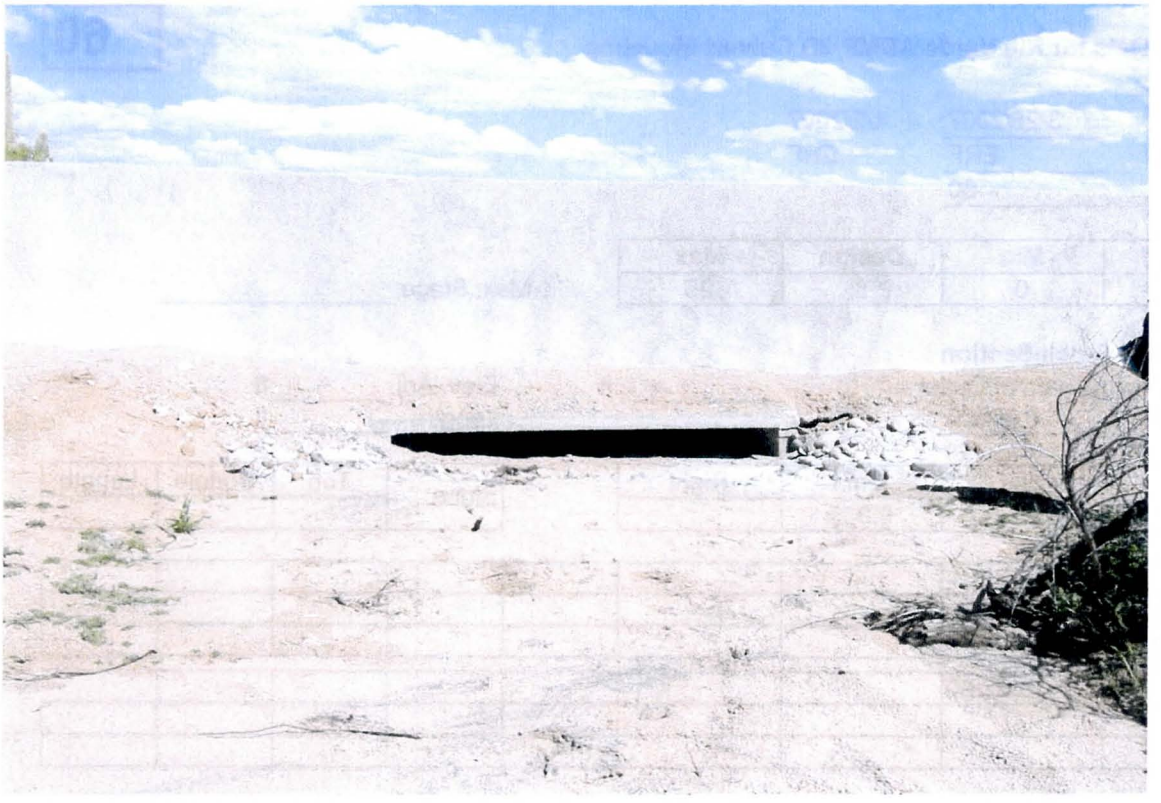

60

HY8 Input Data for Rio Verde ADMP 2D Culvert Modeling

142LMC

Date:	3/28/2007	4/2/2007
Initials:	ERF	ERF
ID:	60	

Flow (cfs):	**Min**	**Design**	**Max**
	0	5	25

Max. Stage: _____

Downstream Cross Section

Distance Downstream of Outlet: _____ ft

Slope (ft/ft): 0.03000

Elev. Adj: _____ ft

Length: _____ ft

n-value:	Left	Main	Right
		0.035	

Slope:	Top	Bottom	Length

Prismatic:	Trapezoidal							
Bottom Width:	10.00							
Side Slope:	6:1							
IE:	2452.60							

Roadway Profile for Overtopping

Roadway Width: _____ ft

Surface Type: _____

Elev. Adj: _____

Length: 257.00 ft

Sta:	0.00	1.00	27.00	30.00	50.00	54.00	69.00	75.00
Elev:	2461.60	2455.70	2456.40	2455.60	2456.00	2456.50	2457.10	2456.90

Sta:	115.00	168.00	214.00	227.00	257.00			
Elev:	2457.30	2459.70	2460.70	2461.40	2462.20			

Culvert Data

Size:	8'x1.5'	Length:	8.01 ft
Material:	RCB		
Number:	1		
Entrance:	Square edge		

	IE1	IE2	IE3	IE4	IE5	IE6	IE7	IE8
Inlet:	2452.89							
Outlet:	2452.60							

POINT	NORTHING	EASTING	ELEV	DESC_	NORTHING DIFF	EASTING DIFF	DIST BETWEEN FT	STATION FT	INV ELEV

Culv 60

Wall Opening 142LMC Opening height is 2.000 ft on the average

8 ft by 2 ft by 8 ft CBC (span x max. rise x length)

5003	1008171.805	743386.082	2452.386	142LMC upstream end				8.0	2452.39
5015	1008170.024	743395.036	2452.096	142LMC downstream end					2452.10

Number of piers and width occupied by piers, and reduced width after pier width subtracted; There are no piers.

0 vertical piers at 0 inch each 0.000 ft pier-reduce 8.00 ft Open area before 25% clogging: 16.00 ft^2

Computation of debris clogging data

Since this is a culvert opening (with low chord), then the bottom would be silted in by 25% (since open area is greater than 7.07 square feet).

Height clogged by sediment and debris at : 0.50 ft on the avera(Debris-redı 1.50 ft Open area after 25% clogging: 12.00 ft^2

Invert elevations after clogging (low chord minus average opening height)
(HY8 INPUT VALUES)

low chord- surveyed	Invert elev.-surveyed	low chord	Invert elev	Horiz. location
2454.39	2452.386	2454.39	2452.89	**simply input 8 ft by 1.5 ft culvert**

wetted perimeter weighted n value: 0.024

downstream invert: 2452.60

Downstream channel data: slope= 0.0300 ft/ft measured from Buildings and walls.mxd

shape is trapezoidal 6 :1 10.0 ft bott n=0.035

Overtopping weir data: **See 142LMA**

FLO-2D note: Overtopping flows do not return to the same wash, therefore the output values entered in FLO-2D do not include the overtopping flow rates.

61

HY8 Input Data for Rio Verde ADMP 2D Culvert Modeling

142LMA

Date:	3/28/2007	4/2/2007
Initials:	ERF	ERF
ID:	61	

Flow (cfs):	**Min**	**Design**	**Max**
	0	5	25

Max. Stage: _____

Downstream Cross Section

Distance Downstream of Outlet: _____ ft Elev. Adj: _____ ft

Slope (ft/ft): 0.03700 Length: _____ ft

n-value:	Left	Main	Right
		0.035	

Slope:	Top	Bottom	Length

Prismatic:	Trapezoidal							
Bottom Width:	10.00							
Side Slope:	6:1							
IE:	2454.14							

Roadway Profile for Overtopping

Roadway Width: _____ ft Elev. Adj: _____

Surface Type: _____ Length: _____ ft

Sta:	0.00	1.00	27.00	30.00	50.00	54.00	69.00	75.00
Elev:	2461.60	2455.70	2456.40	2455.60	2456.00	2456.50	2457.10	2456.90

Sta:	115.00	168.00	214.00	227.00	257.00			
Elev:	2457.30	2459.70	2460.70	2461.40	2462.20			

Culvert Data

Size: 8'x1.14' Length: 8.00 ft

Material: RCB

Number: 1

Entrance: Square edge

	IE1	IE2	IE3	IE4	IE5	IE6	IE7	IE8
Inlet:	2454.16							
Outlet:	2454.14							

POINT	NORTHING	EASTING	ELEV	DESC_	NORTHING DIFF	EASTING DIFF	DIST BETWEEN FT	STATION FT	INV ELEV	

Culv 61

Wall Opening 142LMA Opening height is 1.353 ft on the average

8 ft by 2 ft by 8 ft CBC (span x max. rise x length)

5009	1008004.855	743385.242	2454.302	142LMA				0.0	2454.30	
5007	1008009.314	743384.533	2453.284	142LMA	-4.459	0.709	4.515	4.5	2453.28	
5008	1008012.358	743384.946	2454.256	142LMA	-3.044	-0.413	3.072	8.0	2454.26	added 0.4' to get culvert span

Number of piers and width occupied by piers, and reduced width after pier width subtracted; There are no piers.

0 vertical piers at 0 inch each 0.000 ft pier-reduce 7.99 ft Open area before 25% clogging: 12.16 ft^2

Computation of debris clogging data

Since this is a culvert opening (with low chord), then the bottom would be silted in by 25% (since open area is greater than 7.07 square feet).

Height clogged by sediment and debris at 2 0.34 ft on the avera(Debris-redu 1.14 ft calc'd Open area after 25% clogging: 9.12 ft^2

Invert elevations after clogging (low chord minus average opening height)
(HY8 INPUT VALUES)

low chord- surveyed	Invert elev.-surveyed	low chord	Invert elev	Horiz. location	
2455.30	2453.28	2455.30	2454.16	0.0	**simply input 8 ft by 1.14 ft culvert with adjusted n value**
2455.30	2453.28	2455.30	2454.16	4.5	wetted perimeter weighted n value: 0.024
2455.30	2453.28	2455.30	2454.16	8.0	downstream invert: 2454.14

Downstream channel data: slope= 0.0370 ft/ft measured from Buildings and walls.mxd

shape is trapezoidal 6 :1 10.0 ft bott(n=0.035

Overtopping weir data:

POINT	NORTHING	EASTING	ELEV	DESC_	NORTHING DIFF	EASTING DIFF	DIST BETWEEN FT	STATION FT	INV ELEV

CULVERTs 142LMA, 142LMB AND 142LMC OVERTOPPING WEIR, all share the same data for the overtopping weir.

INTERPOLATED	1007964.065	743389.200	2461.611	TOW				0.0	2461.61
5052	1007964.065	743388.667	2455.666	NG	0.000	0.533	0.533	0.5	2455.67
5053	1007964.980	743361.950	2456.402	NGGB	-0.915	26.717	26.733	27.3	2456.40
5054	1007964.992	743359.673	2455.649	NGGB	-0.012	2.277	2.277	29.5	2455.65
5055	1007965.715	743338.784	2455.981	NGGB	-0.723	20.889	20.902	50.4	2455.98
5056	1007965.803	743335.625	2456.498	NGGB	-0.088	3.159	3.160	53.6	2456.50
5057	1007966.092	743320.530	2457.139	NGGB	-0.289	15.095	15.098	68.7	2457.14
5058	1007966.633	743314.090	2456.927	NGGB	-0.541	6.440	6.463	75.2	2456.93
5059	1007967.946	743274.199	2457.320	NGGB	-1.313	39.891	39.913	115.1	2457.32
5060	1007969.620	743220.821	2459.740	NGGB	-1.674	53.378	53.404	168.5	2459.74
5061	1007971.249	743175.272	2460.699	NGGB	-1.629	45.549	45.578	214.1	2460.70
5062	1007971.710	743162.811	2461.388	NGGB	-0.461	12.461	12.470	226.5	2461.39
5063	1007972.844	743131.885	2462.166	NGGB	-1.134	30.926	30.947	257.5	2462.17

FLO-2D note: Overtopping flows do not return to the same wash, therefore the output values entered in FLO-2D do not include the overtopping flow rates.

62

HY8 Input Data for Rio Verde ADMP 2D Culvert Modeling

LM143C

Date:	3/28/2007	4/2/2007
Initials:	ERF	ERF
ID:	62	

Flow (cfs):	**Min**	**Design**	**Max**
	0	10	50

Max. Stage: _____

Downstream Cross Section

Distance Downstream of Outlet: _____ ft Elev. Adj: _____ ft

Slope (ft/ft): 0.02600 Length: _____ ft

n-value:	Left	Main	Right
		0.075	

Slope:	Top	Bottom	Length

Prismatic:	Trapezoidal							
Bottom Width:	8.00							
Side Slope:	3:1							
IE:	2442.48							

Roadway Profile for Overtopping

Roadway Width: _____ ft Elev. Adj: _____

Surface Type: _____ Length: 162.00 ft

Sta:	0.00	56.00	86.00	93.90	148.00	162.00		
Elev:	2448.00	2446.00	2445.37	2445.37	2446.00	2446.80		
Sta:								
Elev:								

Culvert Data

Size: 3.14'x1.82' Length: 32.00 ft

Material: RCB

Number: 2

Entrance: Square edge

	IE1	IE2	IE3	IE4	IE5	IE6	IE7	IE8
Inlet:	2442.65							
Outlet:	2442.48							

POINT	NORTHING	EASTING	ELEV	DESC_	NORTHING DIFF	EASTING DIFF	DIST BETWEEN FT	STATION FT	INV ELEV

Culv 62

Wall Opening LM143C Opening height is 2.430 ft

2 - 3.14 ft by 2.43 ft by 32 ft CBC (span x max. rise x length)

5021	1008016.086	743673.226	2442.037	LM143C-upstream invert				6.3	2442.04
5023	1008011.178	743705.182	2441.865	LM143C-downstream invert					2441.87

Number of piers and width occupied by piers, and reduced width after pier width subtracted; There is one pier at 1.25 feet thick.

0 vertical piers at 0 inch each 0.000 ft pier-reduce 6.28 ft Open area before 25% clogging: 15.26 ft^2

Computation of debris clogging data

Since this is a culvert opening (with low chord), then the bottom would be silted in by 25% (since open area is greater than 7.07 square feet).

Height clogged by sediment and debris at 2 0.61 ft on the avera(Debris-redı 1.82 ft Open area after 25% clogging: 11.45 ft^2

Invert elevations after clogging (low chord minus average opening height)
(HY8 INPUT VALUES)

low chord- surveyed	Invert elev.-surveyed	low chord	Invert elev	Horiz. location
2444.47	2442.037	2444.47	2442.64	

simply input 2 - 3.14 ft by 1.82 ft

wetted perimeter weighted n value: 0.023

downstream invert: 2442.47

Downstream channel data: slope= 0.0260 ft/ft measured from Buildings and walls.mxd

shape is trapezoidal 3 :1 8.0 ft botto n=0.075 tree near outlet increases n value.

Overtopping weir data:

2445.37 lowest elevation on roadway above culvert, assuming 3 inches asphalt over CBC.
2446.80 highest elevation on driveway entrance

The flows overtopping this area will go over the roadway first (by 1.43 ft.), and then out the driveway entrance. Most of the flows continue down main wash, and some flows divert to the south. The entrance driveway is input as the overtopping weir. FLO-2D will detect the driveway elevation and compute the proper amount of flow split.

Overtopping weir=Driveway Entrance	Location	
2448.00	0.0	contour
2446.00	56.0	contour
2445.37	86.0	roadway low point
2445.37	93.9	roadway low point
2446.00	148.0	contour
2446.80	162.0	interpolated contour

FLO-2D note: The Overtopping flows do return to the same wash, therefore the output values entered in FLO-2D do include the overtopping flow rates.

DIBBLE & ASSOCIATES
CONSULTING ENGINEERS
Since 1952

CALC HL DATE 10 June 2003 red comm: 1 July 2003 JOB 10-0203
CHKD _____ DATE _____ SHT 1 OF 1

TITLE _____

CULVERT LM143C

The opening height was not field measured.

The distance from the top of headwall to the invert is

2445.118
2442.037
3.081 ft

The opening will be 3.081 − slab thickness.

The slab thickness can be derived from another culvert at this same property, such as LM143A:

headwall 2440.99
invert 2437.35
3.65
measured opening − 3.00
0.65 slab

Therefore the opening height for LM143C is

3.081
− 0.651
2.430 ft

The roadway is overtopped first, then when the flow depth reaches 1.43 feet, some overtopping flow may begin to leave perpendicular to the roadway and enter Lone Mountain Drive.

The overtopping weir is therefore the roadway over the culvert.

63

HY8 Input Data for Rio Verde ADMP 2D Culvert Modeling

LM143A

Date:	3/28/2007	4/2/2007
Initials:	ERF	ERF
ID:	63	

Flow (cfs):	**Min**	**Design**	**Max**
	0	15	50

Max. Stage: _____

Downstream Cross Section

Distance Downstream of Outlet: _____ ft

Slope (ft/ft): 0.02600

Elev. Adj: _____ ft

Length: _____ ft

n-value:	Left	Main	Right
		0.035	

Slope:	Top	Bottom	Length

Prismatic:	Trapezoidal							
Bottom Width:	24.00							
Side Slope:	3:1							
IE:	2437.72							

Roadway Profile for Overtopping

Roadway Width: _____ ft

Surface Type: _____

Elev. Adj: _____

Length: 215.10 ft

Sta:	0.00	50.00	108.00	215.00	215.10			
Elev:	2446.00	2444.00	2442.00	2440.00	2446.89			
Sta:								
Elev:								

Culvert Data

Size: 10'x2.06'

Material: RCB

Number: 2

Entrance: Square edge

Length: 8.00 ft

	IE1	IE2	IE3	IE4	IE5	IE6	IE7	IE8
Inlet:	2438.84							
Outlet:	2438.83							

POINT	NORTHING	EASTING	ELEV	DESC_	NORTHING DIFF	EASTING DIFF	DIST BETWEEN FT	STATION FT	INV ELEV	LOW CHORD	OPEN HEIGHT

Culv 63
Wall Opening LM143A Opening height is 3.000 ft
2 - 10 ft by 3.0 ft by 8 ft CBC (span x max. rise x length)

refer to sketch for culvert data

0.0	2437.87	2440.90	3.03
10.0	2437.72	2440.90	3.18
12.0	2437.92	2440.90	2.98
22.0	2439.09	2440.90	1.81

Number of piers and width occupied by piers, and reduced width after pier width subtracted; There is one pier at 2.0 feet thick.
1 vertical piers at 24 inch each 2.000 ft pier-reduce 20.00 ft Open area before 25% clogging: 55.00 ft^2

Computation of debris clogging data
Since this is a culvert opening (with low chord), then the bottom would be silted in by 25% (since open area is greater than 7.07 square feet).

Height clogged by sediment and debris at 0.75 ft on the avera Debris-red 2.06 ft calc'd Open area after 25% clogging: 41.25 ft^2

Invert elevations after clogging (low chord minus average opening height)
(HY8 INPUT VALUES)

low chord- surveyed	Invert elev.-surveyed	low chord	Invert elev	Horiz. location	
2440.90	2437.87	2440.90	2438.84	0.0	**simply input 2 - 10 ft by 2.06 ft culvert**
2440.90	2437.72	2440.90	2438.84	10.0	wetted perimeter weighted n value: 0.024
2440.90	2437.92	2440.90	2438.84	12.0	downstream invert: 2438.83
2440.90	2439.09	2440.90	2438.84	22.0	

Downstream channel data: slope= 0.0260 ft/ft measured from Buildings and walls.mxd
shape is trapezoidal 3 :1 24.0 ft bott n=0.035

Overtopping weir data:

The flows overtopping this area will go over the natural ridge and travel to full width opening LM143B3.
Top width 8 feet, c=2.5

Overtopping weir=ridge	Location	
2446.00	0.0	contour
2444.00	50.0	contour
2442.00	108.0	contour
2440.00	215.0	contour
2446.89	215.1	Top of Wall

Note that overtopping occurs before the water surface elevation reaches the low chord.

FLO-2D note: Overtopping flows do not return immediately to the same wash, therefore the output values entered in FLO-2D do not include the overtopping flow rates. Review the FLO-2D results for accuracy: the overtopping flows from LM143A travel to LM143B3.

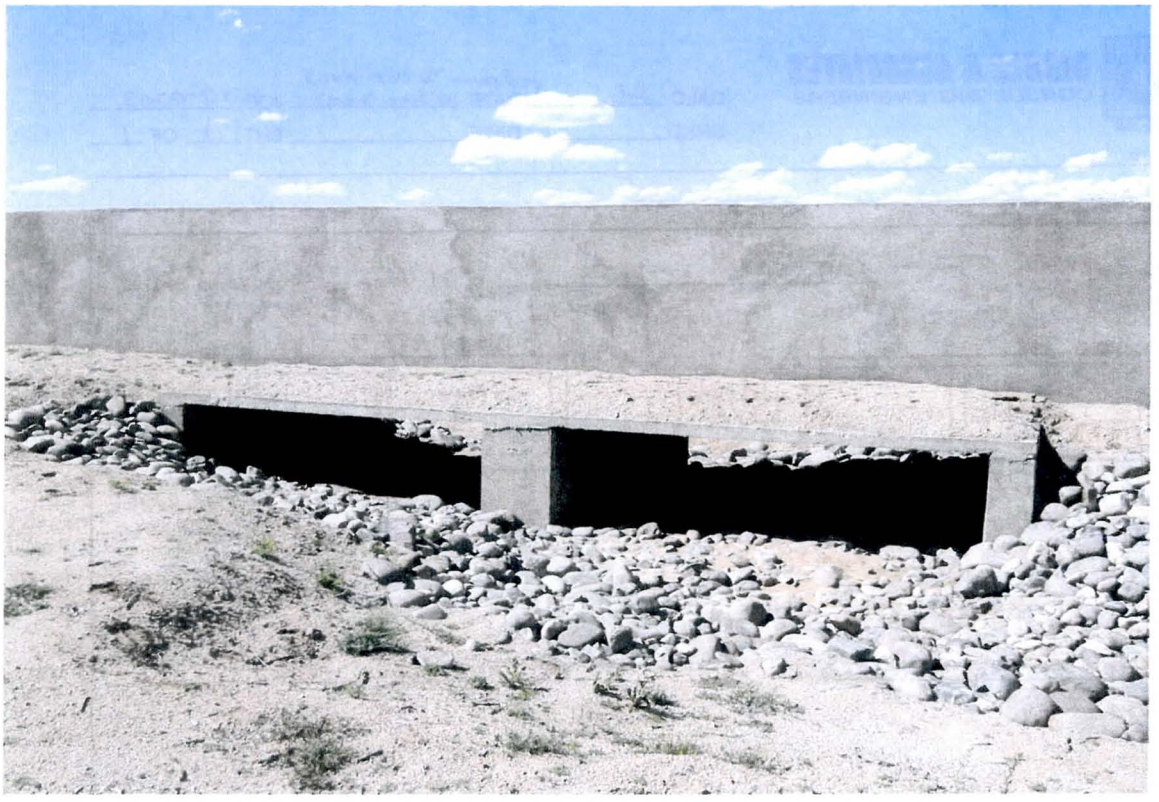

63

DIBBLE & ASSOCIATES
CONSULTING ENGINEERS
Since 1962

CALC JB DATE redrawn 2 Oct 2003 10 Jun 2003 JOB 10-0203
CHKD _____ DATE _____ SHT 1 OF 1

TITLE _____

CULVERT LM143A 2-10' x 3' x 8' long CBC

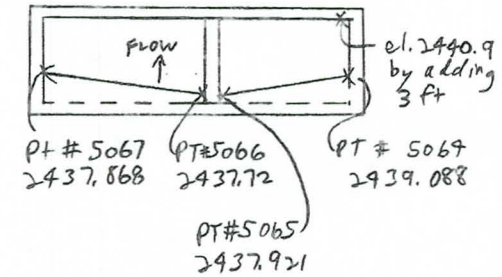

EAST ← Downstream face

NTS

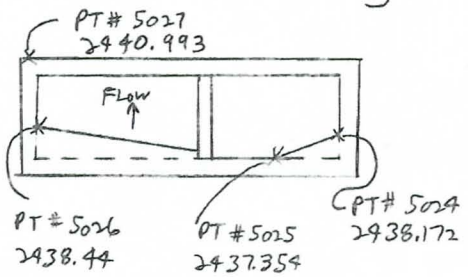

EAST ← Upstream face

NTS

64

HY8 Input Data for Rio Verde ADMP 2D Culvert Modeling

LM143B

Date:	3/28/2007	4/2/2007
Initials:	ERF	ERF
ID:	64	

Flow (cfs):	**Min**	**Design**	**Max**
	0	25	60

Max. Stage: _____

Downstream Cross Section

Distance Downstream of Outlet: _____ ft Elev. Adj: _____ ft

Slope (ft/ft): 0.03100 Length: _____ ft

n-value:	Left	Main	Right
		0.035	

Slope:	Top	Bottom	Length

Prismatic:	Trapezoidal							
Bottom Width:	50.00							
Side Slope:	40:1							
IE:	2436.29							

Roadway Profile for Overtopping

Roadway Width: _____ ft Elev. Adj: _____

Surface Type: _____ Length: 160.00 ft

Sta:	0.00	0.10	54.00	109.00	160.00			
Elev:	2442.47	2438.00	2440.00	2442.00	2444.00			
Sta:								
Elev:								

Culvert Data

	#1	#2		
Size:	7.7'x1.27'	9.2'x1.16'	Length:	1.00 ft
Material:	IRCP			
Number:	2			
Entrance:	Headwall			

	#1	#2						
	IE1	IE2	IE3	IE4	IE5	IE6	IE7	IE8
Inlet:	2436.30	2436.17						
Outlet:	2436.29	2436.16						

POINT	NORTHING	EASTING	ELEV	DESC_	NORTHING DIFF	EASTING DIFF	DIST BETWEEN FT	STATION FT	INV ELEV		
Culv 64	**see Wall Opening LM143B, one HY-8 model contains both LM 143B2 and LM143B openings.**										
Wall Opening LM143B2		Opening height is	1.333	ft on the average							
5032	1008096.087	744019.118	2435.833	LM143B2F+1.5BWF+6.6TW				0.0	2435.83		
5033	1008106.970	744019.069	2436.051	LM143B2	-10.883	0.049	10.883	10.9	2436.05		
	mid-point	mid-point	2436.333	LM143B2_1.0 foot open				5.4	2436.33		
	Number of piers and width occupied by piers, and reduced width after pier width subtracted										
5 vertical piers at 4 inch each		1.667	ft	pier-reduced open width:	9.22	ft	Open area before 25% clogging:			12.29	ft^2
	Computation of debris clogging data										
Since this is a culvert opening (with low chord), then the bottom would be silted in by 25% (since open area is greater than 7.07 square feet).											
Height clogged by sediment and debris at 2		0.33	ft	Debris-reduced height:	1.00	ft	Open area after 25% clogging:			9.22	ft^2
				Invert elevations after clogging (low chord minus average opening height)							
				(HY8 INPUT VALUES)							
	low chord- surveyed	Invert elev.-surveyed		low chord	Invert elev	Horiz. location					
	2437.333	2435.833		2437.33	2436.17	0.0					
	2437.333	2436.333		2437.33	2436.67	5.4					
	2437.333	2436.051		2437.33	2436.38	9.2					
Downstream channel data:		**see Wall Opening LM143B, one HY-8 model contains both openings.**									
Overtopping weir data:		**see Wall Opening LM143B, one HY-8 model contains both openings.**									
FLO-2D note:	The Overtopping flows do return to the same wash, therefore the output values entered in FLO-2D do include the overtopping flow rates.										

POINT	NORTHING	EASTING	ELEV	DESC_	NORTHING DIFF	EASTING DIFF	DIST BETWEEN FT	STATION FT	INV ELEV		
Culv 64											
Wall Opening LM143B		Opening height is	1.700	ft							
5030	1008070.248	744019.273	2436.095	LM143B				0.0	2436.10		
5031	1008079.247	744019.139	2435.870	LM143BF+1.7BWF+6.6TW	-8.999	0.134	9.000	9.0	2435.87		
	Number of piers and width occupied by piers, and reduced width after pier width subtracted										
4 vertical piers at 4 inch each		1.333	ft	pier-reduced open width:	7.67	ft	Open area before 25% clogging:			13.03	ft^2
	Computation of debris clogging data										
Since this is a culvert opening (with low chord), then the bottom would be silted in by 25% (since open area is greater than 7.07 square feet).											
Height clogged by sediment and debris at 2		0.43	ft	Debris-reduced height:	1.28	ft	Open area after 25% clogging:			9.77	ft^2
				Invert elevations after clogging (low chord minus average opening height)							

				(HY8 INPUT VALUES)									
	low chord- surveyed	Invert elev.-surveyed		low chord	Invert elev	Horiz. location							
	2437.57	2436.10		2437.57	2436.52	0.0							
	2437.57	2435.87		2437.57	2436.30	7.7							
Downstream channel data:			slope=	0.0307	ft/ft	measured from Buildings and walls.mxd							
	shape is trapezoidal	40	:1	50.0 ft bottom width	n=0.035								
Overtopping weir data:													
2438	lowest elevation on natural ridge												
2442.47	lowest elevation on wall												
The flows overtopping this area will go over the natural ridge and travel to full width opening LM143B3.													
Overtopping weir=Top of wall		Location											
	2442.47	0.0	Top of Wall										
	2438.00	0.1	ground at wall										
	2440.00	54.0	contour										
	2442.00	109.0	contour										
	2444.00	160.0	contour										
FLO-2D note:	The Overtopping flows do return to the same wash, therefore the output values entered in FLO-2D do include the overtopping flow rates.												
POINT	**NORTHING**	**EASTING**	**ELEV**	**DESC_**	**NORTHING DIFF**	**EASTING DIFF**	**DIST BETWEEN FT**	**STATION FT**	**INV or NG ELEV repeated**				
Culv 64													
WALL OPENING LM143B3 OPEN WIDTH		Opening height is	6.018	ft based on top of wall at:	2442.47								
This is a full-height opening.													
5029	1007972.992	744018.954	2436.452	NG at LM143B3				0.0	2436.45				
5028	1007984.948	744019.241	2436.442	NG at LM143B3	-11.956	-0.287	11.959	12.0	2436.44			0.373719	4.484625
	Number of bars and width occupied by bars, and reduced width after bar width subtracted (Estimated since gate not yet built, 4.5 inch spacing):												
32 vertical bars at 0.5 inch each + 4 at 6 inc		3.333	ft	bar-reduced open width:	8.63	ft	Width after 25% debris clogging:			6.47	ft		
							Open area after 25% clogging:			38.93	ft^2		
Note: any horizontal bars are ignored, since are accounted for with debris clogging factor.													
	Comparison of debris clogging factor												
If this were a culvert opening (with low chord), then the bottom would be silted in by 25% (since open area is greater than 7.07 square feet).													
Open area using bar-reduced width:		51.91	ft^2	Debris-reduced area:	38.9	ft^2	equivalent debris-reduced width for 6.02 he			6.47	ft		
Open height debris reduced by 25%:		1.50	ft	Debris-reduced height:	4.5	ft^2	Open width for debris-reduced height:			8.63	ft		
	CONCLUSION:												
In either case, the open area is the same. If it were a culvert opening, the bottom 25% would be clogged, and effective open area is 8.63 ft (width) x 4.5 ft (height) = 38.9 square feet.													
This will be modeled in FLO-2D by blocking the width, which means the sides will be blocked. The effective open area is 6.47 feet (width) x 6.02 ft (height) = 38.9 square feet.													

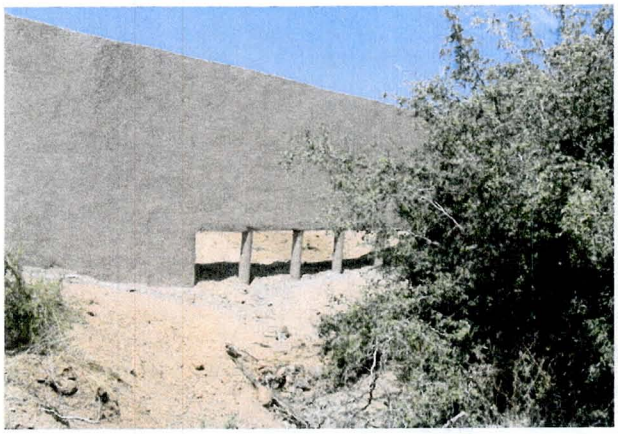

65

HY8 Input Data for Rio Verde ADMP 2D Culvert Modeling

160PVA

Date:	3/28/2007	4/2/2007
Initials:	ERF	ERF
ID:	65	

Flow (cfs):	**Min**	**Design**	**Max**
	0	40	80

Max. Stage: _____

Downstream Cross Section

Distance Downstream of Outlet: _____ ft Elev. Adj: _____ ft

Slope (ft/ft): 0.03000 Length: _____ ft

n-value:	Left	Main	Right
		0.035	

Slope:	Top	Bottom	Length

Prismatic:	Trapezoidal							
Bottom Width:	8.00							
Side Slope:	10:1							

IE:	2094.09							

Roadway Profile for Overtopping

Roadway Width: _____ ft Elev. Adj: _____

Surface Type: _____ Length: 200.00 ft

Sta:								
Elev:	2097.58							

Sta:								
Elev:								

Culvert Data

Size: 7.5'x1.43' Length: 1.00 ft

Material: IRCP

Number: 1

Entrance: Headwall

	IE1	IE2	IE3	IE4	IE5	IE6	IE7	IE8
Inlet:	2094.10							
Outlet:	2094.09							

POINT	NORTHING	EASTING	ELEV	DESC_	NORTHING DIFF	EASTING DIFF	DIST BETWEEN FT	STATION FT	INV ELEV
Culv 65									
Wall Opening 160PVA		Opening height is	1.900 ft						
WALL OPENING 160PVA OPEN WIDTH									
5159	999459.555	755320.956	2094.478	160PVA				0.0	2094.48
5160	999462.828	755323.088	2093.628	NGF+1.90I	-3.273	-2.132	3.906	3.9	2093.63
5161	999466.169	755324.274	2094.08	160PVA	-3.341	-1.186	3.545	7.5	2094.08

Number of piers and width occupied by piers, and reduced width after pier width subtracted; There are no piers.

0 vertical piers at 0 inch each 0.000 ft pier-reduce 7.45 ft Open area before 25% clogging: 14.16 ft^2

Computation of debris clogging data

Since this is a culvert opening (with low chord), then the bottom would be silted in by 25% (since open area is greater than 7.07 square feet).

Height clogged by sediment and debris at : 0.48 ft on the avera(Debris-redı 1.43 ft Open area after 25% clogging: 10.62 ft^2

Invert elevations after clogging (low chord minus average opening height)
(HY8 INPUT VALUES)

low chord- surveyed	Invert elev.-surveyed	low chord	Invert elev	Horiz. location
2095.53	2094.48	2095.53	2094.95	0.0
2095.53	2093.63	2095.53	2094.10	3.9
2095.53	2094.08	2095.53	2094.56	7.5

Downstream channel data: slope= 0.0300 ft/ft measured from Buildings and walls.mxd

shape is trapezoidal 10 :1 8 ft bottom n=0.035

Overtopping weir data:

2095.475 elevation at end of wall
2097.58 lowest elevation on wall

The flows overtopping this area will go around the wall end and not return to the wash.
Therefore input a 200 foot long overtopping weir at elevation 2097.58, but do not input overtopping flows into 2D.

FLO-2D note: Overtopping flows do not return to the same wash, therefore the output values entered in FLO-2D do not include the overtopping flow rates.

66

HY8 Input Data for Rio Verde ADMP 2D Culvert Modeling

160PVC

Date:	3/28/2007	4/3/2007	4/5/2007
Initials:	ERF	ERF	ERF
ID:	66		

Flow (cfs):	**Min**	**Design**	**Max**
	0	50	300

Max. Stage: _____

Downstream Cross Section

Distance Downstream of Outlet: _____ ft Elev. Adj: _____ ft

Slope (ft/ft): 0.02000 Length: _____ ft

n-value:	Left	Main	Right
		0.035	

Slope:	Top	Bottom	Length

Prismatic:	Trapezoidal							
Bottom Width:	15.00							
Side Slope:	10:1							
IE:	2094.97							

Roadway Profile for Overtopping

Roadway Width: _____ ft Elev. Adj: _____

Surface Type: _____ Length: 140.00 ft

Sta:								
Elev:	2096.82							
Sta:								
Elev:								

Culvert Data

	#1	#2		
Size:	5.8'x1.05'	7.7'x1.05'	Length:	1.00 ft
Material:	IRCP			
Number:	2			
Entrance:	Headwall			

	#1	#2						
	IE1	IE2	IE3	IE4	IE5	IE6	IE7	IE8
Inlet:	2095.04	2095.04						
Outlet:	2095.03	2095.03						

POINT	NORTHING	EASTING	ELEV	DESC_	NORTHING DIFF	EASTING DIFF	DIST BETWEEN FT	STATION FT	INV ELEV
Culv 66									
Wall Opening 160PVC		Opening height is	1.400 ft						
WALL OPENING 160PVC OPEN WIDTH			NOTE PIER WIDTH IS 1.3 FEET, which is one 16 inch long block.						
5167	999742.309	755315.749	2095.262	160PVC				0.0	2095.26
5168	999748.075	755315.295	2094.631	160PVC	-5.766	0.454	5.784	5.8	2094.63
5169	999749.318	755314.934	2094.686	160PVCF+	-1.243	0.361	1.294	7.1	2094.69
5170	999756.764	755312.876	2095.129	160PVC	-7.446	2.058	7.725	14.8	2095.13

Number of piers and width occupied by piers, and reduced width after pier width subtracted.

1 vertical piers at 16 inch each 1.333 ft pier-reduce 13.47 ft Open area before 25% clogging: 18.86 ft^2

Computation of debris clogging data

Since this is a culvert opening (with low chord), then the bottom would be silted in by 25% (since open area is greater than 7.07 square feet).

Height clogged by sediment and debris at : 0.35 ft on the avera(Debris-redı 1.05 ft Open area after 25% clogging: 14.14 ft^2

Invert elevations after clogging (low chord minus average opening height)
(HY8 INPUT VALUES)

low chord- surveyed	Invert elev.-surveyed	low chord	Invert elev	Horiz. location		
2096.09	2095.26	2096.09	2095.61	0.0	**culvert 1**	South
2096.09	2094.63	2096.09	2094.98	5.8		
2096.09	2094.69	2096.09	2095.04	7.1	**culvert 2**	North
2096.09	2095.13	2096.09	2095.48	14.8		
			Use: 2095.04			

Downstream channel data: slope= 0.0200 ft/ft measured from Buildings and walls.mxd

shape is trapezoidal 10 :1 15 ft bottor n=0.035

Overtopping weir data:

2096.820 elevation at south end of wall
2097.45 lowest elevation on wall

The flows overtopping this area will go around the wall south end and not return to the wash.
Therefore input a 140 foot long overtopping weir at elevation 2096.82, but do not input overtopping flows into 2D.

FLO-2D note: Overtopping flows do not return to the same wash, therefore the output values entered in FLO-2D do not include the overtopping flow rates.

67

HY8 Input Data for Rio Verde ADMP 2D Culvert Modeling

160PVD

Date: 3/28/2007
Initials: ERF
ID: 67

Flow (cfs):	**Min**	**Design**	**Max**
	0	50	500

Max. Stage: _____

Downstream Cross Section

Distance Downstream of Outlet: _____ ft
Slope (ft/ft): 0.02000

Elev. Adj: _____ ft
Length: _____ ft

n-value:	Left	Main	Right
		0.035	

Slope:	Top	Bottom	Length

Prismatic:	Trapezoidal							
Bottom Width:	17.00							
Side Slope:	10:1							
IE:	2093.31							

Roadway Profile for Overtopping

Roadway Width: _____ ft
Surface Type: _____

Elev. Adj: _____
Length: 100.00 ft

Sta:								
Elev:	2097.45							
Sta:								
Elev:								

Culvert Data

	#1	#2
Size:	7.4'x1.35'	7.5'x1.39'
Material:	IRCP	
Number:	2	
Entrance:	Headwall	

Length: 1.00 ft

	#1	#2						
	IE1	IE2	IE3	IE4	IE5	IE6	IE7	IE8
Inlet:	2093.35	2093.31						
Outlet:	2093.34	2093.30						

POINT	NORTHING	EASTING	ELEV	DESC_	NORTHING DIFF	EASTING DIFF	DIST BETWEEN FT	STATION FT	INV ELEV
Culv 67									
WALL OPENING 160PVD		Opening height is	1.800 ft						
WALL OPENING 160PVD OPEN WIDTH			NOTE PIER WIDTH IS 1.35 FEET, which is one 16 inch long block.						
5171	999897.816	755312.253	2093.478	160PVD				0.0	2093.48
5172	999905.210	755311.696	2092.898	160PVDF+	-7.394	0.557	7.415	7.4	2092.90
5173	999906.526	755311.387	2092.859	160PVD	-1.316	0.309	1.352	8.8	2092.86
5174	999914.082	755311.124	2093.26	160PVD	-7.556	0.263	7.561	16.3	2093.26

Number of piers and width occupied by piers, and reduced width after pier width subtracted.

1 vertical piers at 16 inch each 1.333 ft pier-reduce 14.99 ft Open area before 25% clogging: 26.99 ft^2

Computation of debris clogging data

Since this is a culvert opening (with low chord), then the bottom would be silted in by 25% (since open area is greater than 7.07 square feet).

Height clogged by sediment and debris at 2 0.45 ft on the avera Debris-redu 1.35 ft Open area after 25% clogging: 20.24 ft^2

Invert elevations after clogging (low chord minus average opening height)
(HY8 INPUT VALUES)

low chord- surveyed	Invert elev.-surveyed	low chord	Invert elev	Horiz. location		
2094.70	2093.48	2094.70	2093.93	0.0	**culvert 1**	South
2094.70	2092.90	2094.70	2093.35	7.4		
2094.70	2092.86	2094.70	2093.31	8.8	**culvert 2**	North
2094.70	2093.26	2094.70	2093.71	16.3		

Downstream channel data: slope= 0.0200 ft/ft measured from Buildings and walls.mxd

shape is trapezoidal 10 :1 17 ft botton n=0.035

Overtopping weir data:

2095.000 elevation at north end of wall
2097.45 lowest elevation on wall

The flows overtopping this area will go around the wall north end and return to the wash.
Therefore input a 100 foot long overtopping weir at elevation 2097.45

FLO-2D note: The Overtopping flows do return to the same wash, therefore the output values entered in FLO-2D do include the overtopping flow rates.

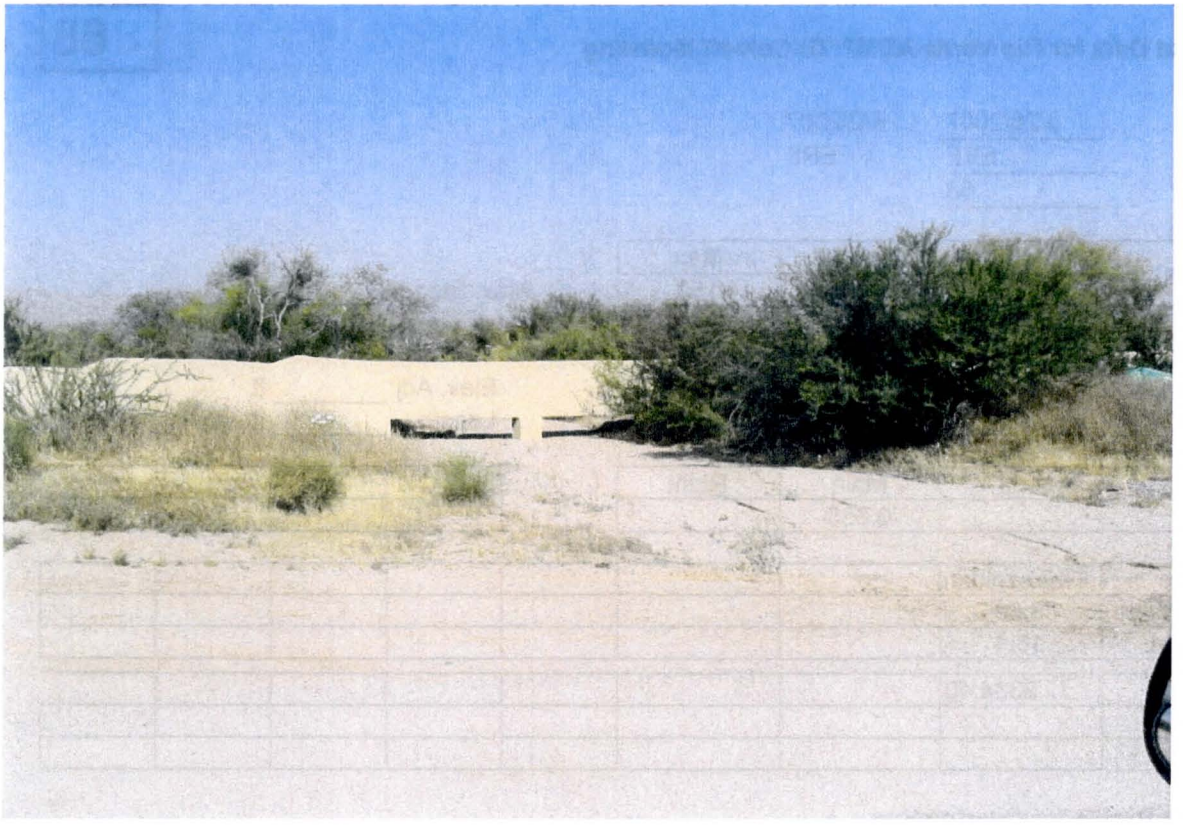

68

HY8 Input Data for Rio Verde ADMP 2D Culvert Modeling

146RVA

Date:	3/28/2007	4/2/2007
Initials:	ERF	ERF
ID:	68	

Flow (cfs):	**Min**	**Design**	**Max**
	0	50	150

Max. Stage: _____

Downstream Cross Section

Distance Downstream of Outlet: _____ ft

Slope (ft/ft): 0.01500

Elev. Adj: _____ ft

Length: _____ ft

n-value:	Left	Main	Right
		0.035	

Slope:	Top	Bottom	Length

Prismatic:	Trapezoidal							
Bottom Width:	8.50							
Side Slope:	15:1							
IE:	2334.40							

Roadway Profile for Overtopping

Roadway Width: _____ ft

Surface Type: _____

Elev. Adj: _____

Length: 150.00 ft

Sta:								
Elev:	2340.54							
Sta:								
Elev:								

Culvert Data

Size:	7.40'x0.93'	Length:	1.00 ft
Material:	IRCP		
Number:	1		
Entrance:	Headwall		

	IE1	IE2	IE3	IE4	IE5	IE6	IE7	IE8
Inlet:	2334.41							
Outlet:	2334.40							

POINT	NORTHING	EASTING	ELEV	DESC_	NORTHING DIFF	EASTING DIFF	DIST BETWEEN FT	STATION FT	INV ELEV
Culv 68									
Wall Opening 146RVA		Opening height is	1.180 ft on the average						
5260	997938.729	746040.459	2335.243	146RVA_C-1.13F+5.3TW				0.0	2334.11
5261	997930.311	746040.506	2335.264	146RVA_C	8.418	-0.047	8.418	8.4	2334.03

Number of bars and width occupied by bars, and reduced width after bar width subtracted:

17 vertical bars at 0.75 inch each 1.063 ft bar-reduce 7.36 ft Open area before 25% clogging: 8.7 ft^2

Computation of debris clogging data

Since this is a culvert opening (with low chord), then the bottom would be silted in by 25% (since open area is greater than 7.07 square feet).

Height clogged by sediment and debris: 0.30 ft Debris-redı 0.89 ft Open area after 25% clogging: 6.5 ft^2

Invert elevations after clogging (low chord minus average opening height)
(HY8 INPUT VALUES)

low chord- surveyed	Invert elev.-surveyed	low chord	Invert elev	Horiz. locatior	Top of wall	
2335.243	2334.113	2335.24	2334.41	0.0	2340.543	wall length = 162 ft
2335.264	2334.034	2335.26	2334.33	7.4	2340.564	

Downstream channel data: 172 ft channel length slope= 0.0152 ft/ft
shape is trapezoidal 15 :1 8.5 ft bottom width

FLO-2D note: Overtopping flows do not return to the same wash, therefore the output values entered in FLO-2D do not include the overtopping flow rates.
Overtopping weir elevation set at top of wall elevation 2340.54 only for HY-8 analysis. Wall length = 150 ft

69

HY8 Input Data for Rio Verde ADMP 2D Culvert Modeling

150RVA

Date:	3/28/2007	4/2/2007
Initials:	ERF	ERF
ID:	69	

Flow (cfs):	**Min**	**Design**	**Max**
	0	40	100

Max. Stage: _____

Downstream Cross Section

Distance Downstream of Outlet: _____ ft Elev. Adj: _____ ft

Slope (ft/ft): 0.01500 Length: _____ ft

n-value:	Left	Main	Right
		0.035	

Slope:	Top	Bottom	Length

Prismatic:	Trapezoidal							
Bottom Width:	12.00							
Side Slope:	20:1							
IE:	2253.83							

Roadway Profile for Overtopping

Roadway Width: _____ ft Elev. Adj: _____

Surface Type: _____ Length: 160.00 ft

Sta:	0.00	70.00	77.40	81.90	160.00			
Elev:	2262.00	2258.34	2258.34	2258.40	2263.15			
Sta:								
Elev:								

Culvert Data

Size: 11.9'x0.9' Length: 1.00 ft

Material: IRCP

Number: 1

Entrance: Headwall

	IE1	IE2	IE3	IE4	IE5	IE6	IE7	IE8
Inlet:	2253.84							
Outlet:	2253.83							

POINT	NORTHING	EASTING	ELEV	DESC_	NORTHING DIFF	EASTING DIFF	DIST BETWEEN FT	STATION FT	INV ELEV
Culv 69									
Wall Opening 150RVA		Opening height is	1.200 ft						
5250	993204.291	748713.776	2255.16	150RVA_END				0.0	2255.16
5251	993211.66	748714.145	2253.536	150RVA_C	-7.369	-0.369	7.378	7.4	2253.54
5252	993216.218	748714.296	2254.604	150RVA_E	-4.558	-0.151	4.561	11.9	2254.60

Number of bars and width occupied by bars, and reduced width after bar width subtracted (there are no bars):

0.0 vertical bars at 0.00 inch each 0.000 ft bar-reduce 11.94 ft Open area before 25% clogging: 14.3 ft^2

Computation of debris clogging data

Since this is a culvert opening (with low chord), then the bottom would be silted in by 25% (since open area is greater than 7.07 square feet).

Height clogged by sediment and debris at 2 0.30 ft Debris-redı 0.90 ft Open area after 25% clogging: 10.7 ft^2

Invert elevations after clogging (low chord minus average opening height)
(HY8 INPUT VALUES)

low chord- surveyed	Invert elev.-surveyed	low chord	Invert elev	Horiz. location
2254.74	2255.16	2254.74	2255.46	0.0
2254.74	2253.54	2254.74	2253.84	7.4
2254.74	2254.60	2254.74	2254.60	11.9

Downstream channel data: 68 ft slope= 0.0154 ft/ft
shape is trapezoidal 20 :1 12.0 ft bottom width

Overtopping weir data:

2258.542 lowest elevation on natural ridge
2258.34 lowest elevation on wall

The flows overtopping this area will go over the wall first (only by 0.2 ft.), and then the natural ridge. In essence this will be a fifty-fifty split, with some flows continuing down main wash, and some flows diverting to the parallel wash to the north. The wall is input as the overtopping weir. FLO-2D will detect the ridge elevation and compute the proper amount of flow split. The top of wall elevations are not directly input into the FLO-2D model.

Overtopping weir=Top of wall	Location	
2262.00	0.0	south end
2258.34	70.0	
2258.34	77.4	
2258.40	81.9	
2263.15	160.0	north end
wall length =	160 ft	

FLO-2D note: Most of the Overtopping flows do return to the same wash, therefore the output values entered in FLO-2D do include the overtopping flow rates.

70

HY8 Input Data for Rio Verde ADMP 2D Culvert Modeling

156RVC

Date:	3/28/2007	4/2/2007	4/5/2007
Initials:	ERF	ERF	ERF
ID:	70		

Flow (cfs):	**Min**	**Design**	**Max**
	0	2	20

Max. Stage: _____

Downstream Cross Section

Distance Downstream of Outlet: _____ ft

Slope (ft/ft): 0.03700

Elev. Adj: _____ ft

Length: _____ ft

n-value:	Left	Main	Right
		0.035	

Slope:	Top	Bottom	Length

Prismatic:	Trapezoidal							
Bottom Width:	18.00							
Side Slope:	14:1							
IE:	2186.87							

Roadway Profile for Overtopping

Roadway Width: _____ ft

Surface Type: _____

Elev. Adj: _____

Length: 8.21 ft

Sta:	0.00	0.01	8.20	8.21				
Elev:	2194.06	2188.67	2187.93	2194.06				
Sta:								
Elev:								

Culvert Data

	#1	#2		
Size:	6.64'x0.92'	6.64'x0.64'	Length:	1.00 ft
Material:	IRCP			
Number:	2			
Entrance:	Headwall			

	#1	#2						
	IE1	IE2	IE3	IE4	IE5	IE6	IE7	IE8
Inlet:	2186.88	2187.25						
Outlet:	2186.87	2187.24						

POINT	NORTHING	EASTING	ELEV	DESC_	NORTHING DIFF	EASTING DIFF	DIST BETWEEN FT	STATION FT	INV or NG ELEV repeated	
Culv 70										
CULVERT 156RVC OVERTOPPING WEIR (HY8 INPUT VALUES)										
Top of Wall	997128.012	751966.066	2194.06	TW				0.0	2194.06	
5225	997128.012	751966.066	2188.668	156RVBEI	0.000	0.000	0.000	0.0	2188.67	
5226	997116.989	751966.12	2187.313	156RVBEI	11.023	-0.054	11.023	8.2	2187.31	
Top of Wall	997116.989	751966.12	2194.06	TW	0.000	0.000	0.000	8.2	2194.06	
								^^ AFTER BAR WIDTH of 1 bar every 4 inches		
CULVERT 156RVC OPENING WIDTH										
2 openings, each with 16 bars at 1 inch wide. Middle pier is 1.33 ft wide										Rise
5227	997089.201	751965.48	2187.867	156RVCOPNC-1.45FL				0.0	2186.42	1.45
5228	997081.063	751965.53	2187.786	156RVCOI	8.138	-0.050	8.138	6.8	2186.79	1.00
5229	997079.922	751965.505	2187.862	156RVCOI	1.141	0.025	1.141	7.9	2186.96	0.90
5230	997071.934	751965.527	2187.915	156RVCOI	7.988	-0.022	7.988	14.6	2187.12	0.80
check total width of opening:								^^ AFTER BAR WIDTH, not an accurate value, use avg opening width below		
	997089.201	751965.48	2187.867							
	997071.934	751965.527	2187.915		17.267	-0.047	15.937	after 1.33 pier width		
							7.968	avg opening width		
							6.635	<< AFTER BAR WIDTH		

Slope downstream of culvert 156RVC 2/54 feet = 0.037 ft/ft
channel side slope 2/28 = 14 :1

36 inch pipe area 7.065 ft^2

Per Culvert Clogging Sensitivity Analysis
Openings larger than this are clogged 25%, openings smaller than this are clogged 50%

North Opening

16 bars at 1 inch wide for each opening

Average opening height before clogging	1.225	ft
16 bars occupy 1 inch for opening height o	1.633	ft^2
total open area before bar width removed	9.761	ft^2
total open area after bar width removed	8.128	ft^2
reduced area at 25% after bar width remov	6.096	ft^2
Average opening height after clogging	0.919	ft
Culvert span for HY8, open area	6.635	ft

Invert elevations after clogging (low chord minus average opening height)
(HY8 INPUT VALUES)

low chord	Invert elev	Horizontal location	
2187.87	2186.42	0.0	
2187.79	2186.79	6.6	
2187.80	2186.88		**USED**

South Opening

16 bars at 1 inch wide for each opening

Average opening height before clogging	0.850	ft
35 bars occupy 1 inch for opening height o	1.133	ft^2
total open area before bar width removed	6.773	ft^2
total open area after bar width removed	5.640	ft^2
reduced area at 25% after bar width remov	4.230	ft^2
Average opening height after clogging	0.638	ft
Culvert span for HY8, open area	6.635	ft

Invert elevations after clogging (low chord minus average opening height)
(HY8 INPUT VALUES)

low chord	Invert elev	Horizontal location	
2187.86	2186.96	8.0	
2187.92	2187.12	14.6	
2187.89	2187.25		**USED**

FLO-2D note: Overtopping flows do return to the same wash, therefore the output values entered in FLO-2D do include the overtopping flow rates.

HY8 Input Data for Rio Verde ADMP 2D Culvert Modeling

71

Date:	5/24/2005	2/23/2007	3/19/2007
Initials:	TRL	ERF	ERF
ID:	71		

Flow (cfs):	**Min**	**Design**	**Max**
	0	200	300

Max. Stage: 2115.5

Downstream Cross Section

Distance Downstream of Outlet: 1.00 ft

Elev. Adj: 0.3 ft

Slope (ft/ft): 0.03204

Length: 95.30 ft

n-value:	Left	Main	Right
	0.060	0.045	0.070

Slope:	Top	Bottom	Length
	2107.30	2103.10	131.10

L/M/R:	L	L	M	M	R			
Sta:	0.00	55.90	75.30	89.80	95.30			
Elev:	2108.30	2108.00	2107.00	2107.00	2110.50			

L/M/R:								
Sta:								
Elev:								

Roadway Profile for Overtopping

Roadway Width: 15 ft

Elev. Adj:

Surface Type: Gravel

Length: 16.31 ft

Sta:	0.00	0.01	16.30	16.31				
Elev:	2115.00	2113.60	2112.50	2115.00				

Sta:								
Elev:								

Culvert Data

Size: 77"x52"

Length: 15.00 ft

Material: CMPA

Number: 1

Entrance: Headwall

	IE1	IE2	IE3	IE4	IE5	IE6	IE7	IE8
Inlet:	2107.80							
Outlet:	2107.30							

HY8 Input Data for Rio Verde ADMP 2D Culvert Modeling

72

Date: 5/18/2005 2/23/2007
Initials: TRL ERF
ID: 72

Flow (cfs):	**Min**	**Design**	**Max**
	0	80	110

Max. Stage: 2382

Downstream Cross Section

Distance Downstream of Outlet: 41.00 ft
Elev. Adj: ____ ft
Slope (ft/ft): 0.02295
Length: 116.90 ft

n-value:	Left	Main	Right
	0.060	0.066	0.054

Slope:	Top	Bottom	Length
	2373.60	2372.90	30.50

L/M/R:	L	L	L	M	M	R	R	
Sta:	0.00	20.70	42.00	50.90	69.30	91.90	116.90	
Elev:	2378.50	2377.00	2376.30	2374.30	2373.90	2375.30	2376.30	

L/M/R:								
Sta:								
Elev:								

Roadway Profile for Overtopping

Roadway Width: 25 ft
Elev. Adj: ____
Surface Type: Asphalt
Length: 165.60 ft

Sta:	0.00	61.00	100.00	129.00	165.60			
Elev:	2380.60	2380.91	2381.29	2382.11	2381.97			

Sta:								
Elev:								

Culvert Data

Size: 30"
Length: 66.00 ft
Material: CMP
Number: 1
Entrance: Headwall

	IE1	IE2	IE3	IE4	IE5	IE6	IE7	IE8
Inlet:	2377.09							
Outlet:	2376.40							

73

HY8 Input Data for Rio Verde ADMP 2D Culvert Modeling

142LMB

Date:	3/28/2007	4/2/2007
Initials:	ERF	ERF
ID:	73	

Flow (cfs):	**Min**	**Design**	**Max**
	0	5	25

Max. Stage: _____

Downstream Cross Section

Distance Downstream of Outlet: _____ ft Elev. Adj: _____ ft

Slope (ft/ft): 0.03100 Length: _____ ft

n-value:	Left	Main	Right
		0.035	

Slope:	Top	Bottom	Length

Prismatic:	Trapezoidal							
Bottom Width:	6.00							
Side Slope:	6:1							
IE:	2452.98							

Roadway Profile for Overtopping

Roadway Width: _____ ft Elev. Adj: _____

Surface Type: _____ Length: 257.00 ft

Sta:	0.00	1.00	27.00	30.00	50.00	54.00	69.00	75.00
Elev:	2461.60	2455.70	2456.40	2455.60	2456.00	2456.50	2457.10	2456.90

Sta:	115.00	168.00	214.00	227.00	257.00
Elev:	2457.30	2459.70	2460.70	2461.40	2462.20

Culvert Data

Size: 8'x1.13' Length: 8.01 ft

Material: RCB

Number: 1

Entrance: Square edge

	IE1	IE2	IE3	IE4	IE5	IE6	IE7	IE8
Inlet:	2453.27							
Outlet:	2452.98							

POINT	NORTHING	EASTING	ELEV	DESC_	NORTHING DIFF	EASTING DIFF	DIST BETWEEN FT	STATION FT	INV ELEV

Culv 73

Wall Opening 142LMB Opening height is 1.500 ft on the average

4 ft by 1.5 ft by 8 ft CBC (span x max. rise x length)

5005	1008124.986	743385.426	2452.899	142LMB upstream end				8.0	######
5014	1008124.769	743394.462	2452.602	142LMB downstream end					######

Number of piers and width occupied by piers, and reduced width after pier width subtracted; There are no piers.

0 vertical piers at 0 inch each 0.000 ft pier-reduce 8.00 ft Open area before 25% clogging: 12.00 ft^2

Computation of debris clogging data

Since this is a culvert opening (with low chord), then the bottom would be silted in by 25% (since open area is greater than 7.07 square feet).

Height clogged by sediment and debris at : 0.38 ft on the avera Debris-red 1.13 ft Open area after 25% clogging: 9.00 ft^2

Invert elevations after clogging (low chord minus average opening height)
(HY8 INPUT VALUES)

low chord- surveyed	Invert elev.-surveyed	low chord	Invert elev	Horiz. location
2454.40	2452.899	2454.40	2453.27	**simply input 8 ft by 1.13 ft culvert**

wetted perimeter weighted n value: 0.024

downstream in 2452.98

Downstream channel data: slope= 0.0310 ft/ft measured from Buildings and walls.mxd

shape is trapezoidal 6 :1 6.0 ft botto n=0.035

Overtopping weir data: **See 142LMA**

FLO-2D note: Overtopping flows do not return to the same wash, therefore the output values entered in FLO-2D do not include the overtopping flow rates.

HY8 Input Data for Rio Verde ADMP 2D Culvert Modeling

74

Date:	5/24/2005	2/23/2007	3/20/2007
Initials:	TRL	ERF	ERF
ID:	74		

Flow (cfs):	**Min**	**Design**	**Max**
	0	200	300

Max. Stage: 2108

Downstream Cross Section

Distance Downstream of Outlet: 13.00 ft

Elev. Adj: 1.1 ft

Slope (ft/ft): 0.02290

Length: 64.20 ft

n-value:	Left	Main	Right
	0.060	0.050	0.060

Slope:	Top	Bottom	Length
	2102.70	2100.00	117.90

L/M/R:	L	L	M	M	M	M	R	R
Sta:	0.00	20.10	26.80	33.20	35.00	37.20	46.10	64.20
Elev:	2104.60	2104.50	2103.30	2103.10	2102.90	2103.10	2104.10	2105.10

L/M/R:								
Sta:								
Elev:								

Roadway Profile for Overtopping

Roadway Width: 15 ft

Elev. Adj:

Surface Type: Gravel

Length: 33.20 ft

Sta:	0.00	0.01	14.90	33.20				
Elev:	2107.70	2107.70	2107.70	2107.70				

Sta:								
Elev:								

Culvert Data

Size: 73"x55"

Length: 16.30 ft

Material: CMPA

Number: 1

Entrance: Headwall

	IE1	IE2	IE3	IE4	IE5	IE6	IE7	IE8
Inlet:	2103.10							
Outlet:	2102.68							

POINT	NORTHING	EASTING	ELEV	DESC_	NORTHING DIFF	EASTING DIFF	DIST BETWEEN FT	STATION FT	INV ELEV
Not Modeled									
Wall Opening 160PVE									
WALL OPENING 160PVE OPEN WIDTH - THIS IS THE DRIVEWAY, NO GATE. Located on a ridge, not at a wash, so no sediment blocking. Full width is open in FLO-2D.									
5165	999662.531	755310.183	2096.504	W.FACEWALLEND				0.0	2096.50
5166	999682.699	755309.726	2096.82	W.FACEW	-20.168	0.457	20.173	20.2	2096.82

POINT	NORTHING	EASTING	ELEV	DESC_	NORTHING DIFF	EASTING DIFF	DIST BETWEEN FT	STATION FT	INV ELEV
Not Modelled									
Wall Opening 152RVA		Opening height is	1.500 ft						
Culvert 152RVA, 3-18" CMP									
5192	995841.526	750083.902	2230.418	CLCMPFL-152RVA					
5193	995835.606	750079.930	2230.345	CLCMPFL-152RVA					
5194	995829.173	750077.800	2230.549	CLCMPFL-152RVA					

Number of piers and width occupied by piers, and reduced width after pier width subtracted; Each culvert modeled, piers not applicable

0 vertical piers at 0 inch each 0.000 ft pier-reduce 0.00 ft Open area before 50% clogging: 5.30 ft^2

Computation of debris clogging data

Since this is a culvert opening, then the bottom would be silted in by 50% (since open area is less than 7.07 square feet).

Height clogged by sediment and debris at 5 0.75 ft on the averag Debris-redu 0.75 ft Open area after 50% clogging: 2.65 ft^2

Available head before flow around: 2231.08-2230.345= 0.735

FLO-2D note: The Overtopping flows do return to the same wash, no output values entered in FLO-2D due to small capacity and 0.7 foot head before flows around. Therefore, not modeled in HY-8 or FLO-2D.

POINT	NORTHING	EASTING	ELEV	DESC_	NORTHING DIFF	EASTING DIFF	DIST BETWEEN FT	STATION FT	INV ELEV
Not Modelled									
Wall Opening 158RVA		Opening height is	1.500 ft						
Culvert 158RVA, 18" CMP									
5175	996253.157	753959.589	2132.082	CLCMPFL		Culvert 158RVA, 18" CMP			

Number of piers and width occupied by piers, and reduced width after pier width subtracted; piers not applicable

0 vertical piers at 0 inch each 0.000 ft pier-reduce n/a ft Open area before 50% clogging: 1.77 ft^2

Computation of debris clogging data

Since this is a culvert opening, then the bottom would be silted in by 50% (since open area is less than 7.07 square feet).

Height clogged by sediment and debris at 5 | 0.75 ft on the averag | Debris-redu | 0.75 ft | Open area after 50% clogging: | 0.88 ft^2

Available head before flow around: 2233.287-2232.082= 1.205

FLO-2D note: The Overtopping flows do return to the same wash, no output values entered in FLO-2D due to small capacity and 1.2 foot head before flows around. Therefore, not modeled in HY-8 or FLO-2D.

POINT	NORTHING	EASTING	ELEV	DESC_	NORTHING DIFF	EASTING DIFF	DIST BETWEEN FT	STATION FT	INV or NG ELEV repeated
Not Modelled									
WALL OPENING LM143D OPEN WIDTH	Opening height is		8.250	ft with top c	2445.44				
This is a full-height opening.									
5034	1008433.068	744018.059	2437.190	LM143DF+8.25TW				0.0	2437.19
5035	1008443.288	744018.199	2437.184	LM143D	-10.220	-0.140	10.221	10.2	2437.18

Number of bars and width occupied by bars, and reduced width after bar width subtracted (Estimated since gate not yet built, 4 inch spacing):

31 vertical bars at 0.5 inch each + 4 at 6 inc | 3.292 ft | bar-reduce | 6.93 ft | Width after 25% debris clogging: | 5.20 ft

Open area after 25% clogging: 42.87 ft^2

Note: any horizontal bars are ignored, since are accounted for with debris clogging factor.

Comparison of debris clogging factor

If this were a culvert opening (with low chord), then the bottom would be silted in by 25% (since open area is greater than 7.07 square feet).

Open area using bar-reduced width: 57.17 ft^2 | Debris-redu | 42.9 ft^2 | equivalent debris-reduced width for 8.25 heig | 5.20 ft

Open height debris reduced by 25%: 2.06 ft | Debris-redu | 6.2 ft^2 | Open width for debris-reduced height: | 6.93 ft

CONCLUSION:

In either case, the open area is the same. If it were a culvert opening, the bottom 25% would be clogged, and effective open area is 6.93 ft (width) x 6.2 ft (height) = 42.9 square feet. This will be modeled in FLO-2D by blocking the width, which means the sides will be blocked. The effective open area is 5.2 feet (width) x 8.25 ft (height) = 42.9 square feet.

POINT	NORTHING	EASTING	ELEV	DESC_	NORTHING DIFF	EASTING DIFF	DIST BETWEEN FT	STATION FT	INV or NG ELEV repeated
Not Modelled									
WALL OPENING LM143E OPEN WIDTH	Opening height is		8.250	ft with top c	2448.23				
This is a full-height opening.									
5036	1008531.620	743948.946	2439.981	LM143EF+8.25FL				0.0	2439.98
5038	1008531.771	743941.115	2440.467	LM143E	-0.151	7.831	7.832	7.8	2440.47

Number of bars and width occupied by bars, and reduced width after bar width subtracted (Estimated since gate not yet built, 4 inch spacing):

24 vertical bars at 0.5 inch each + 4 at 6 inc	3.000 ft	bar-reduce	4.83 ft	Width after 25% debris clogging:	3.62 ft
				Open area after 25% clogging:	29.90 ft^2

Note: any horizontal bars are ignored, since are accounted for with debris clogging factor.

Comparison of debris clogging factor

If this were a culvert opening (with low chord), then the bottom would be silted in by 25% (since open area is greater than 7.07 square feet).

Open area using bar-reduced width:	39.87 ft^2	Debris-redu	29.9 ft^2	equivalent debris-reduced width for 8.25 heig	3.62 ft
Open height debris reduced by 25%:	2.06 ft	Debris-redu	6.2 ft^2	Open width for debris-reduced height:	4.83 ft

CONCLUSION:

In either case, the open area is the same. If it were a culvert opening, the bottom 25% would be clogged, and effective open area is 4.83 ft (width) x 6.2 ft (height) = 29.9 : 4.21
This will be modeled in FLO-2D by blocking the width, which means the sides will be blocked. The effective open area is 3.6 feet (width) x 8.25 ft (height) = 29.9 square feet.

POINT	NORTHING	EASTING	ELEV	DESC_	NORTHING DIFF	EASTING DIFF	DIST BETWEEN FT	STATION FT	INV or NG ELEV repeated
Not Modelled									
WALL OPENING LM143F OPEN WIDTH		Opening height is	7.100	ft with top c	2451.87				
This is a full-height opening.									
5039	1008530.687	743729.247	2444.768	LM143FF+7.1TW				0.0	2444.77
5040	1008530.757	743718.632	2445.309	LM143F	-0.070	10.615	10.615	10.6	2445.31

Number of bars and width occupied by bars, and reduced width after bar width subtracted (Estimated since gate not yet built, 4 inch spacing):

33 vertical bars at 0.5 inch each + 4 at 6 inc	3.000 ft	bar-reduce	7.62 ft	Width after 25% debris clogging:	5.71 ft
				Open area after 25% clogging:	40.55 ft^2

Note: any horizontal bars are ignored, since are accounted for with debris clogging factor.

Comparison of debris clogging factor

If this were a culvert opening (with low chord), then the bottom would be silted in by 25% (since open area is greater than 7.07 square feet).

Open area using bar-reduced width:	54.07 ft^2	Debris-redu	40.6 ft^2	equivalent debris-reduced width for 8.25 heig	5.71 ft
Open height debris reduced by 25%:	1.77 ft	Debris-redu	5.3 ft^2	Open width for debris-reduced height:	7.62 ft

CONCLUSION:

In either case, the open area is the same. If it were a culvert opening, the bottom 25% would be clogged, and effective open area is 7.62 ft (width) x 5.3 ft (height) = 40.6 : 4.89
This will be modeled in FLO-2D by blocking the width, which means the sides will be blocked. The effective open area is 5.7 feet (width) x 8.25 ft (height) = 40.6 square feet.

POINT	NORTHING	EASTING	ELEV	DESC_	NORTHING DIFF	EASTING DIFF	DIST BETWEEN FT	STATION FT	INV or NG ELEV repeated
Not Modelled									
Wall Opening 147DVA		Opening height is	6.250 ft						

This is a full-height opening.

5270	997814.464	746672.317	2318.945	147DVA_F+6.25TW				0.0	2318.95
5271	997819.975	746672.069	2317.782	147DVA_F	-5.511	0.248	5.517	5.5	2317.78
5272	997824.931	746672.464	2318.571	147DVA_E	-4.956	-0.395	4.972	10.5	2318.57

Number of bars and width occupied by bars, and reduced width after bar width subtracted:

29 vertical bars at 0.5 inch each 1.208 ft bar-reduce 9.28 ft Width after 25% debris clogging: 6.96 ft
Open area after 25% clogging: 43.5 ft^2

Note: the horizontal bars are ignored, since are accounted for with debris clogging factor.
For reference, there are: 1 horizontal for full width at 1 inch wide, 2 horizontal (one top, one bottom) at 2 inches wide.

Comparison of debris clogging factor

If this were a culvert opening (with low chord), then the bottom would be silted in by 25% (since open area is greater than 7.07 square feet).

Open area using bar-reduced width:	58.00 ft^2	Debris-redı	43.5 ft^2	equivalent debris-reduced width for 6.25 heig	6.96 ft
Open height debris reduced by 25%:	1.56 ft	Debris-redı	4.7 ft^2	Open width for debris-reduced height:	9.28 ft

CONCLUSION:

In either case, the open area is the same. If it were a culvert opening, the bottom 25% would be clogged, and effective open area is 9.28 ft (width) x 4.69 ft (height) = 43.5 square feet.
This will be modeled in FLO-2D by blocking the width, which means the sides will be blocked. The effective open area is 6.96 feet (width) x 6.25 ft (height) = 43.5 square feet.

POINT	NORTHING	EASTING	ELEV	DESC_	NORTHING DIFF	EASTING DIFF	DIST BETWEEN FT	STATION FT	INV or NG ELEV repeated

Not Modelled

Wall Opening 147DVB Opening height is 5.800 ft

This is a full-height opening.

5267	997896.593	746522.004	2323.965	147DVB_ENDF+5.8TW				0.0	2323.97
5268	997901.999	746521.954	2322.909	147DVB_F	-5.406	0.050	5.406	5.4	2322.91
5269	997907.02	746521.84	2324.676	147DVB_E	-5.021	0.114	5.022	10.4	2324.68

Number of bars and width occupied by bars, and reduced width after bar width subtracted:

29 vertical bars at 0.5 inch each 1.208 ft bar-reduce 9.22 ft Width after 25% debris clogging: 6.92 ft
Open area after 25% clogging: 40.1 ft^2

Note: the horizontal bars are ignored, since are accounted for with debris clogging factor.
For reference, there are: 1 horizontal for full width at 1 inch wide, 2 horizontal (one top, one bottom) at 2 inches wide.

Comparison of debris clogging factor

If this were a culvert opening (with low chord), then the bottom would be silted in by 25% (since open area is greater than 7.07 square feet).

Open area using bar-reduced width:	53.48 ft^2	Debris-redı	40.1 ft^2	equivalent debris-reduced width for 5.8 heigh	6.92 ft
Open height debris reduced by 25%:	1.45 ft	Debris-redı	4.4 ft^2	Open width for debris-reduced height:	9.22 ft

CONCLUSION:

In either case, the open area is the same. If it were a culvert opening, the bottom 25% would be clogged, and effective open area is 9.22 ft (width) x 4.4 ft (height) = 40.1 square feet.

This will be modeled in FLO-2D by blocking the width, which means the sides will be blocked. The effective open area is 6.92 feet (width) x 5.8 ft (height) = 40.1 square feet.

POINT	NORTHING	EASTING	ELEV	DESC_	NORTHING DIFF	EASTING DIFF	DIST BETWEEN FT	STATION FT	INV or NG ELEV repeated
Not Modelled									
Wall Opening 147DVD		Opening height is	6.300 ft						
This is a full-height opening.									
5264	997873.376	746362.512	2327.203	147DVD_ENDWALLF+6.3TW				0.0	2327.20
5265	997864.58	746362.783	2325.927	147DVD_F	8.796	-0.271	8.800	8.8	2325.93
5266	997856.682	746362.784	2327.332	147DVD_E	7.898	-0.001	7.898	16.7	2327.33

Number of bars and width occupied by bars, and reduced width after bar width subtracted:

48 vert. bars @ 0.5 in. ea. + 1 @ 2 in. wide 2.167 ft bar-reduce 14.53 ft Width after 25% debris clogging: 10.90 ft

Open area after 25% clogging: 68.7 ft^2

Note: the horizontal bars are ignored, since are accounted for with debris clogging factor.
For reference, there are: 1 horizontal for full width at 1 inch wide, 2 horizontal (one top, one bottom) at 2 inches wide.

Comparison of debris clogging factor

If this were a culvert opening (with low chord), then the bottom would be silted in by 25% (since open area is greater than 7.07 square feet).

Open area using bar-reduced width: 91.55 ft^2 Debris-redı 68.7 ft^2 equivalent debris-reduced width for 6.3 heigh 10.90 ft

Open height debris reduced by 25%: 1.58 ft Debris-redı 4.7 ft^2 Open width for debris-reduced height: 14.53 ft

CONCLUSION:

In either case, the open area is the same. If it were a culvert opening, the bottom 25% would be clogged, and effective open area is 14.5 ft (width) x 4.7 ft (height) = 68.7 square feet.
This will be modeled in FLO-2D by blocking the width, which means the sides will be blocked. The effective open area is 10.9 feet (width) x 6.3 ft (height) = 68.7 square feet.

POINT	NORTHING	EASTING	ELEV	DESC_	NORTHING DIFF	EASTING DIFF	DIST BETWEEN FT	STATION FT	INV ELEV
Not modelled									
Wall Opening RV142A		Opening height is	0.667 ft on the average						
Not modeled in HY-8, this is a limited capacity opening.									
5286	997193.245	743779.867	2378.164	RV142A_F+0.5F+5.15TW				0.0	2378.16
5287	997194.031	743782.57	2377.917	RV142A_F	-0.786	-2.703	2.815	2.8	2377.92
5288	997194.685	743784.731	2377.98	RV142A_F	-0.654	-2.161	2.258	5.1	2377.98

Number of bars and width occupied by bars, and reduced width after bar width subtracted (there are no bars):

0.0 vertical bars at 0.00 inch each 0.000 ft bar-reduce 5.07 ft Open area before clogging: 3.4 ft^2

Computation of debris clogging data

Since this is a culvert opening (with low chord), then the bottom would be silted in by 50% (since open area is less than 7.07 square feet).

Height clogged by sediment and debris at 5 0.33 ft Debris-redı 0.33 ft Open area after 50% clogging: 1.7 ft^2

Using engineering judgment, this opening is too small to make a difference. To verify, compute capacity under inlet control conditions (orifice equation).

Equation: Q=CA(2gH)^0.5 c=0.6, A=0.5*5.07, H=1.88 ft to overtop Q= 11.16 cfs
Under outlet control situations, the 11.2 cfs would be even less. Therefore, this will be modeled as a wall with no openings.

The lowest top of wall elevation is 2383.27
the lowest natural ridge elevation is 2379.795
Therefore, the overtopping flows will overtop the natural ridge before the wall is overtopped.

FLO-2D note: Overtopping flows do return to the same wash, not modeled in HY-8, overflows run along the wall, and return once wall ends.

POINT	NORTHING	EASTING	ELEV	DESC_	NORTHING DIFF	EASTING DIFF	DIST BETWEEN FT	STATION FT	INV ELEV
Not modelled									

REVISE TO NO OPENINGS IN THIS WALL, DEBRIS BLOCKAGE IS SEVERE, DO NOT INPUT A RA

Wall Opening 152RVD True opening height is 1.330 ft on downstream side from Points 5232 and 5244
Opening height is 0.700 ft on the average with current debris blockage.

5232	993538.186	750032.395	2224.72	152RVD-OPNF+.50F+6.05TW				0.0	2224.72
5233	993532.35	750032.366	2224.258	152RVD-O	5.836	0.029	5.836	5.8	2224.26
5234	993525.895	750032.364	2224.94	152RVD-O	6.455	0.002	6.455	12.3	2224.94
5244	993530.938	750034.207	2223.887	FL on inside-not debris-blocked					

Number of bars and width occupied by bars, and reduced width after bar width subtracted (the chain link fence is included in debris factor):
24 vertical bars at 0.5 inch each 1.000 ft bar-reduce 11.29 ft Open area before 25% clogging: 15.0 ft^2

Computation of debris clogging data
Since this is a culvert opening (with low chord), then the bottom would be silted in by 25% (since open area is greater than 7.07 square feet).

Height clogged by sediment and debris at 2 0.33 ft Debris-redı 1.00 ft Open area after 25% clogging: 11.3 ft^2

Invert elevations after clogging (low chord minus average opening height]
(HY8 INPUT VALUES)

low chord- surveyed	Invert elev.-surveyed		low chord	Invert elev	Horiz. location
2225.22	2223.89	based on	2225.22	2224.22	0.0
2225.31	2223.89	downstream	2225.31	2224.22	5.8
2225.49	2223.89	elevation	2225.49	2223.89	11.3

POINT	NORTHING	EASTING	ELEV	DESC_	NORTHING DIFF	EASTING DIFF	DIST BETWEEN FT	STATION FT	INV ELEV

FLO-2D note: Place the downstream side of the 2D culvert opening at the downstream side of the 12 inch culvert (Point 5243).
Downstream channel data: slope= 0.0001 ft/ft
Shape is irregular based on driveway over 12 inch culvert (culvert is assumed plugged). The low point on driveway is about equal to low chord on wall opening.

measured from topographic map			2232.000	top of wall				0.0	2232.00
measured from topographic map			2227.000	ground at North end. Contour is 2226, n			0.1	0.1	2227.00
measured from topographic map			2227.000	ridge			59.9	60.0	2227.00
			2226.000	from contours			36	96.0	2226.00
5245	993568.89	750055.664	2225.264	NG-driveway profile			19	115.0	2225.26
5246	993549.203	750056.93	2224.872	NG-drivew:	19.687	-1.266	19.728	134.7	2224.87
5247	993531.741	750056.955	2225.203	NG-drivew:	17.462	-0.025	17.462	152.2	2225.20
5248	993491.451	750056.624	2227.834	NG-drivew:	40.290	0.331	40.291	192.5	2227.83
measured from topographic map			2228.000	from contours			42.000	234.5	2228.00
measured from topographic map			2228.000	ground at South end. Contour is 2226, r			42.000	276.5	2228.00
			2234.000	top of wall			0.100	276.6	2234.00
Overtopping weir data:									
			2234.379	top of wall				0.0	2234.38
5235	993644.663	750031.818	2228.379	NG-overtopping profile			0.1	0.1	2228.38
5236	993645.01	750003.28	2229.046	NG-overto	-0.347	28.538	28.540	28.6	2229.05
5237	993645.316	749987.643	2229.009	NG-overto	-0.306	15.637	15.640	44.3	2229.01
5238	993645.318	749985.187	2229.6	NG-overto	-0.002	2.456	2.456	46.7	2229.60
5239	993649.291	749960.197	2230.135	NG-overto	-3.973	24.990	25.304	72.0	2230.14
5240	993660.863	749947.896	2230.816	NG-overto	-11.572	12.301	16.889	88.9	2230.82
			2232.000	from contours			52.000	140.9	2232.00
			2234.000	from contours			83.000	223.9	2234.00
			2236.000	from contours			103.000	326.9	2236.00

FLO-2D note: **Overtopping flows do not return to the same wash, therefore the output values entered in FLO-2D do include the overtopping flow rates.**

REVISE TO NO OPENINGS IN THIS WALL, DEBRIS BLOCKAGE IS SEVERE, DO NOT INPUT A RATING CURVE.

Scratch pad calcs: this is for RAS revisions not yet implemented.

45	41.000	equivalent 42 inches	0.708	2.125	2.83	34.0

FLO-2D note: Overtopping flows do not return to the same wash, therefore the output values entered in FLO-2D do not include the overtopping flow rates.

FLO-2D note: Overtopping flows do return to the same wash, therefore the output values entered in FLO-2D do include the overtopping flow rates.

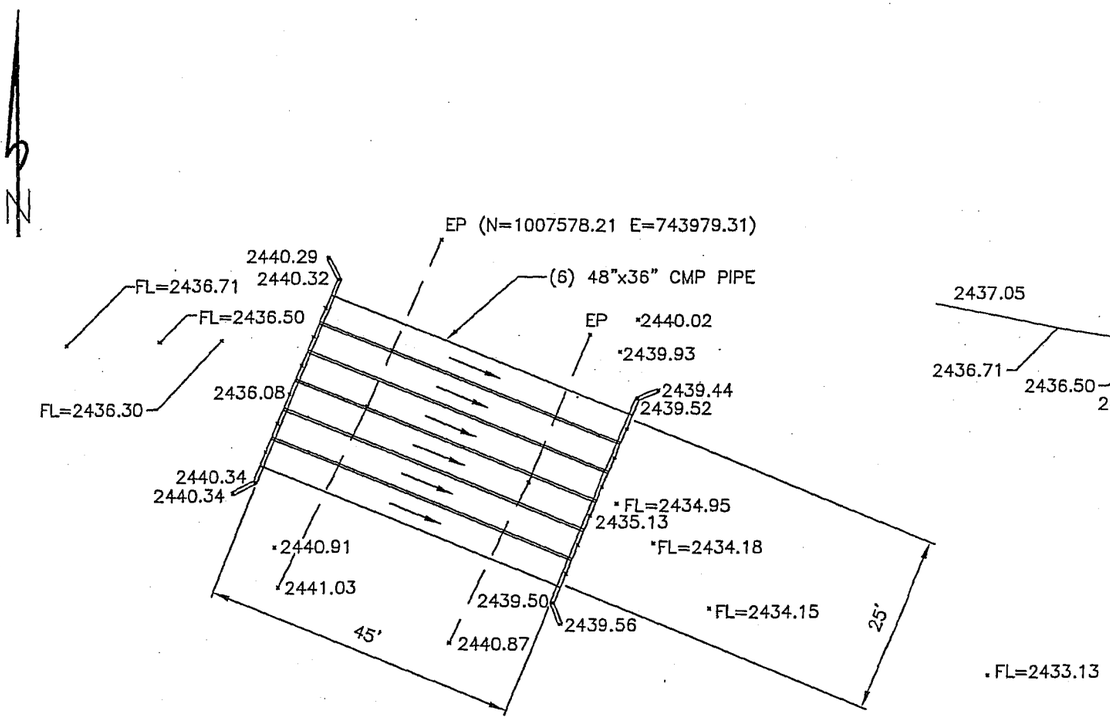

CULVERT PLAN
NUMBER 1

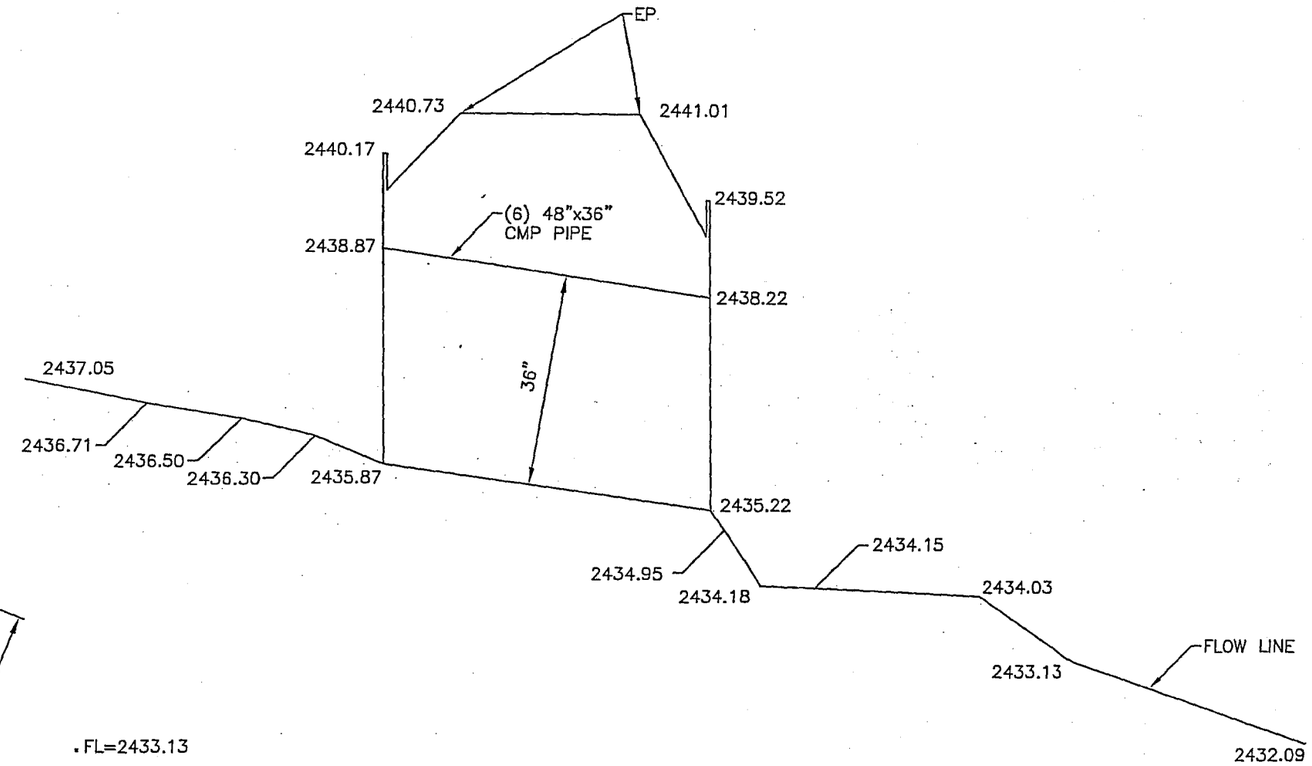

CULVERT PROFILE
NUMBER 1

10 0 10 20 40
SCALE: 1" = 20 FT.
SCALE HOR: 1"=20'

10 0 10 20 40
SCALE: 1" = 20 FT.
SCALE HOR: 1"=20'
SCALE VER: 1"=2'

LEGEND:

EP - EDGE OF PAVEMENT
N - NORTHING (FOR GENERAL LOCATION PURPOSES ONLY)
E - EASTING (FOR GENERAL LOCATION PURPOSES ONLY)

THIS RECORD DRAWING WAS PREPARED UNDER MY DIRECT SUPERVISION FOR THE SOLE PURPOSE OF HYDRAULIC MODELING. DATUM=NAVD88

REGISTERED LAND SURVEYOR
CERTIFICATE NO.
35980
ROLAND
MICHAUD
Date Signed 06/02/05
ARIZONA, U.S.A.

CEI Consultant Engineering, Inc.

CONSULTANT ENGINEERING, INC.
3404 W. CHERYL DRIVE
PHOENIX, ARIZONA
602-866-5090

RIO VERDE ADMP FLOOD PLAIN DELINEATION
RECORD DRAWING FOR STRUCTURE AT
CULVERT NUMBER 1

DATE	04-29-05
SCALE	SEE PLAN
DRAWN BY	NZ
APPROVED BY	RM
C.E.I. JOB #	5050-332
SHEET	

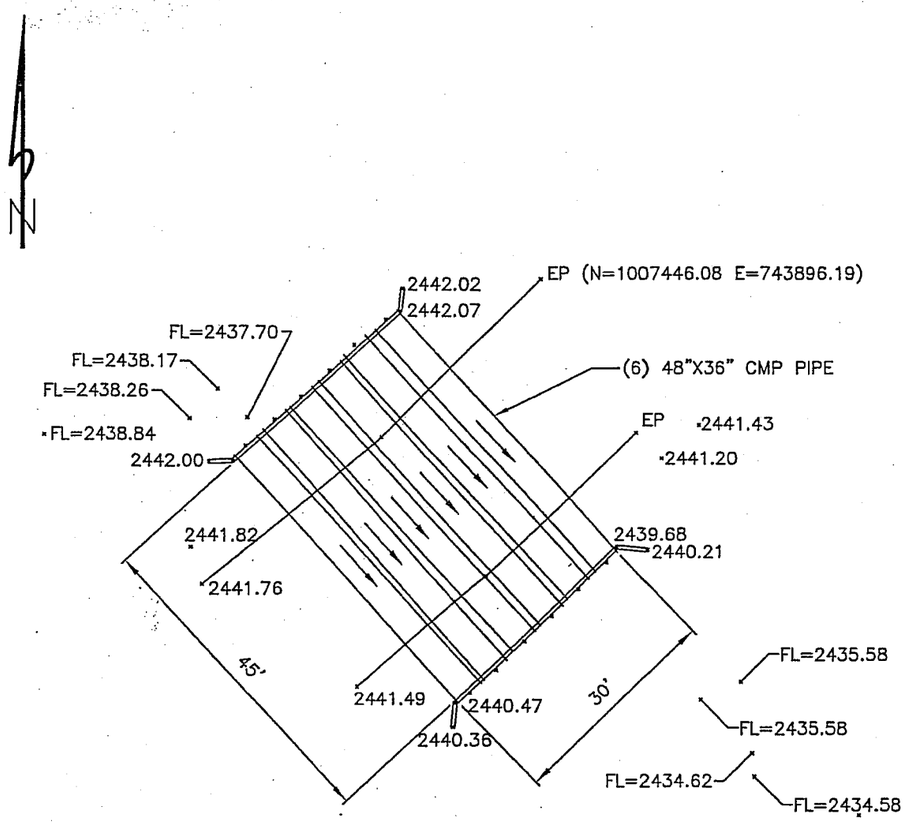

CULVERT PLAN
NUMBER 2

10 0 10 20 40
SCALE: 1" = 20 FT.
SCALE HOR: 1"=20'

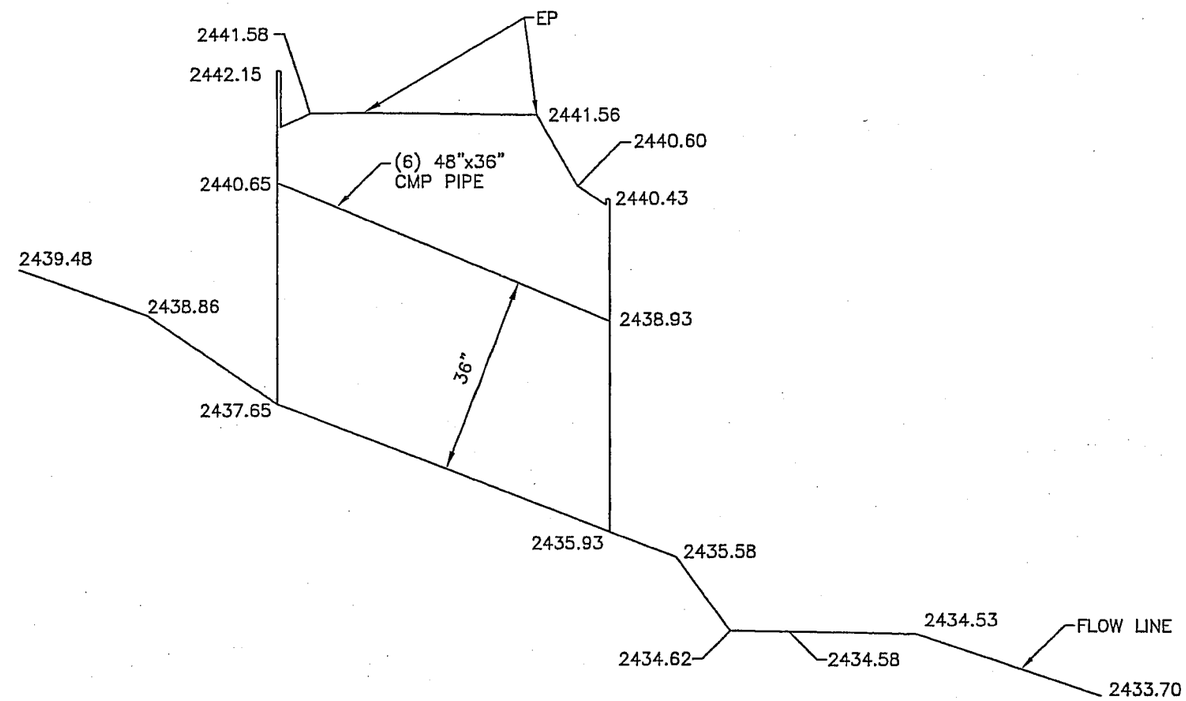

CULVERT PROFILE
NUMBER 2

10 0 10 20 40
SCALE: 1" = 20 FT.
SCALE HOR: 1"=20'
SCALE VER: 1"=2'

LEGEND:

EP - EDGE OF PAVEMENT
N - NORTHING (FOR GENERAL LOCATION PURPOSES ONLY)
E - EASTING (FOR GENERAL LOCATION PURPOSES ONLY)

THIS RECORD DRAWING WAS PREPARED UNDER MY DIRECT SUPERVISION FOR THE SOLE PURPOSE OF HYDRAULIC MODELING. DATUM=NAVD88

REGISTERED LAND SURVEYOR
CERTIFICATE NO.
35980
ROLAND
MICHAUD
Date Signed 06/02/05
ARIZONA, U.S.A.

Consultant Engineering, Inc.

CONSULTANT ENGINEERING, INC.
3404 W. CHERYL DRIVE
PHOENIX, ARIZONA
602-866-5090

RIO VERDE ADMP FLOOD PLAIN DELINEATION
RECORD DRAWING FOR STRUCTURE AT
CULVERT NUMBER 2

DATE	04-29-05
SCALE	SEE PLAN
DRAWN BY	NZ
APPROVED BY	RM
C.E.I. JOB #	5050-332
SHEET	

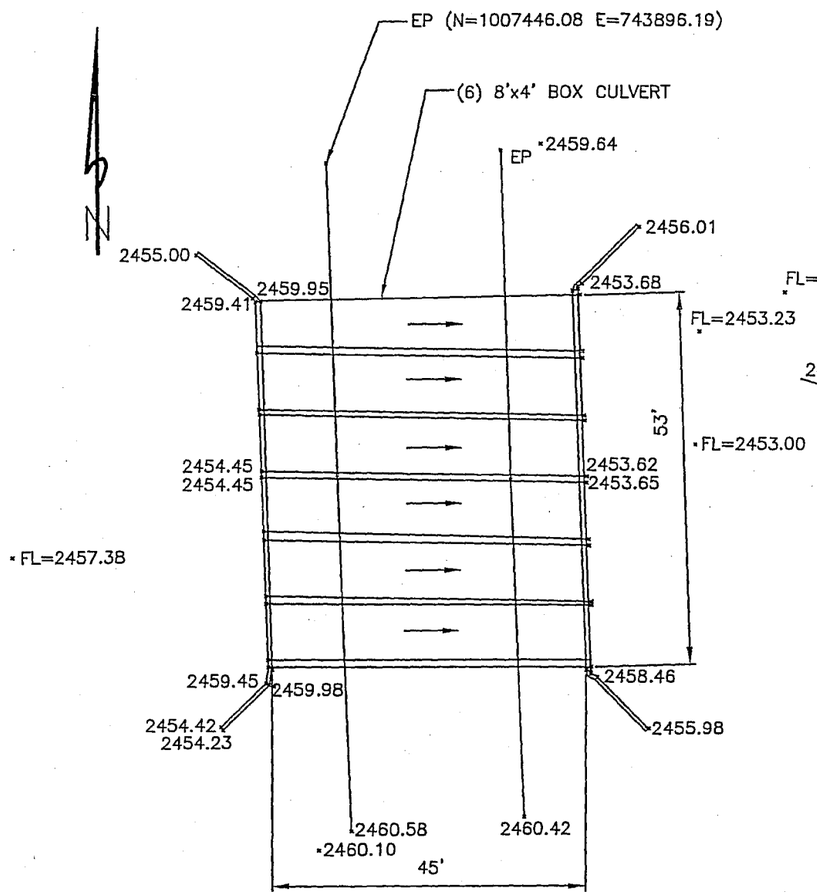

CULVERT PLAN
NUMBER 3

10 0 10 20 40
SCALE: 1" = 20 FT.
SCALE HOR: 1"=20'

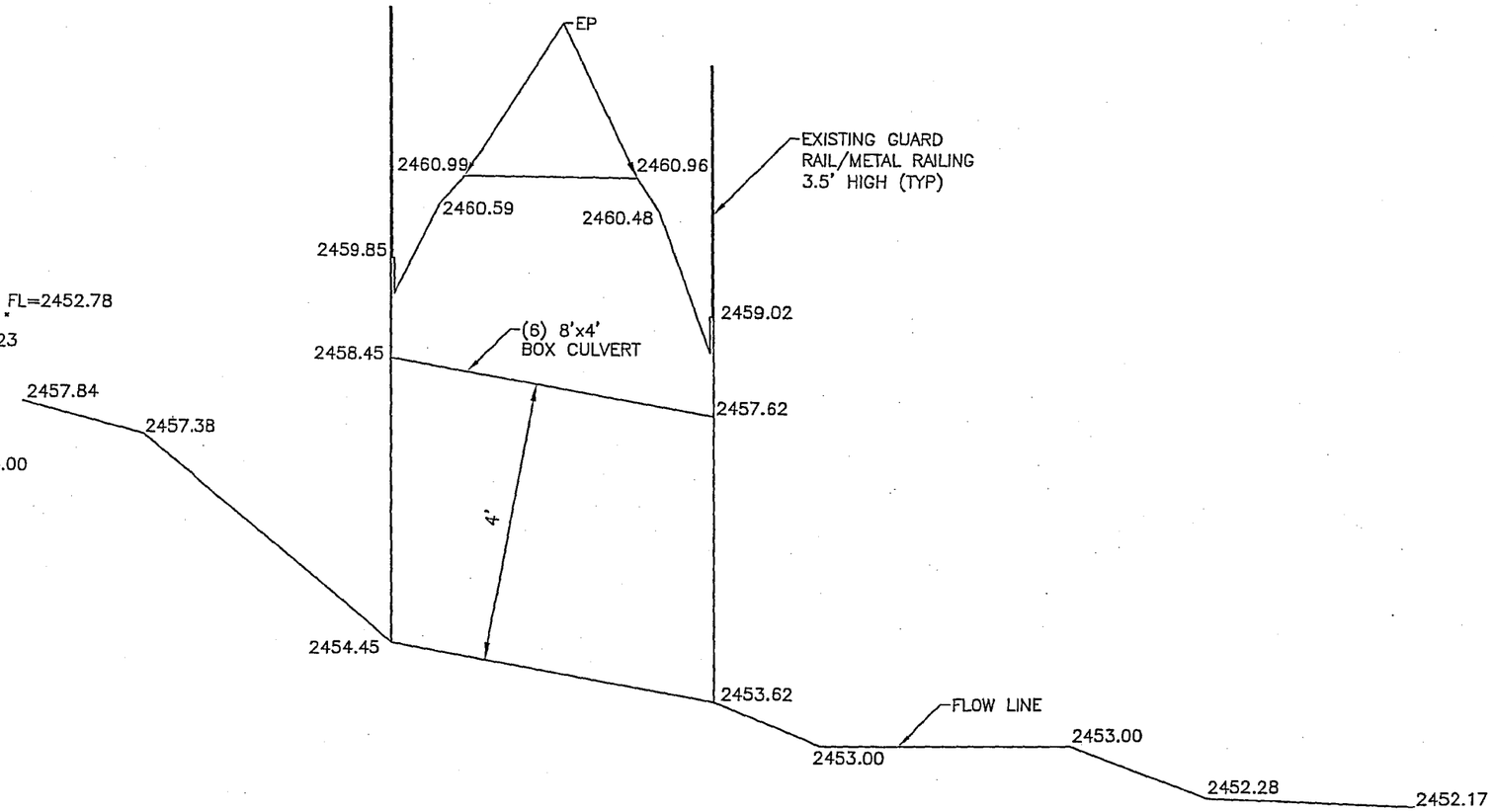

CULVERT PROFILE
NUMBER 3

10 0 10 20 40
SCALE: 1" = 20 FT.
SCALE HOR: 1"=20'
SCALE VER: 1"=2'

LEGEND:

EP - EDGE OF PAVEMENT
N - NORTHING (FOR GENERAL LOCATION PURPOSES ONLY)
E - EASTING (FOR GENERAL LOCATION PURPOSES ONLY)

THIS RECORD DRAWING WAS PREPARED UNDER MY DIRECT SUPERVISION FOR THE SOLE PURPOSE OF HYDRAULIC MODELING. DATUM=NAVD88

REGISTERED LAND SURVEYOR
CERTIFICATE NO.
35980
ROLAND
MICHAUD
Date Signed 04/02/05
ARIZONA U.S.A.

CEI Consultant Engineering, Inc.

CONSULTANT ENGINEERING, INC.
3404 W. CHERYL DRIVE
PHOENIX, ARIZONA
602-866-5090

RIO VERDE ADMP FLOOD PLAIN DELINEATION
RECORD DRAWING FOR STRUCTURE AT
CULVERT NUMBER 3

DATE	04-29-05
SCALE	SEE PLAN
DRAWN BY	NZ
APPROVED BY	RM
C.E.I. JOB #	5050-332
SHEET	

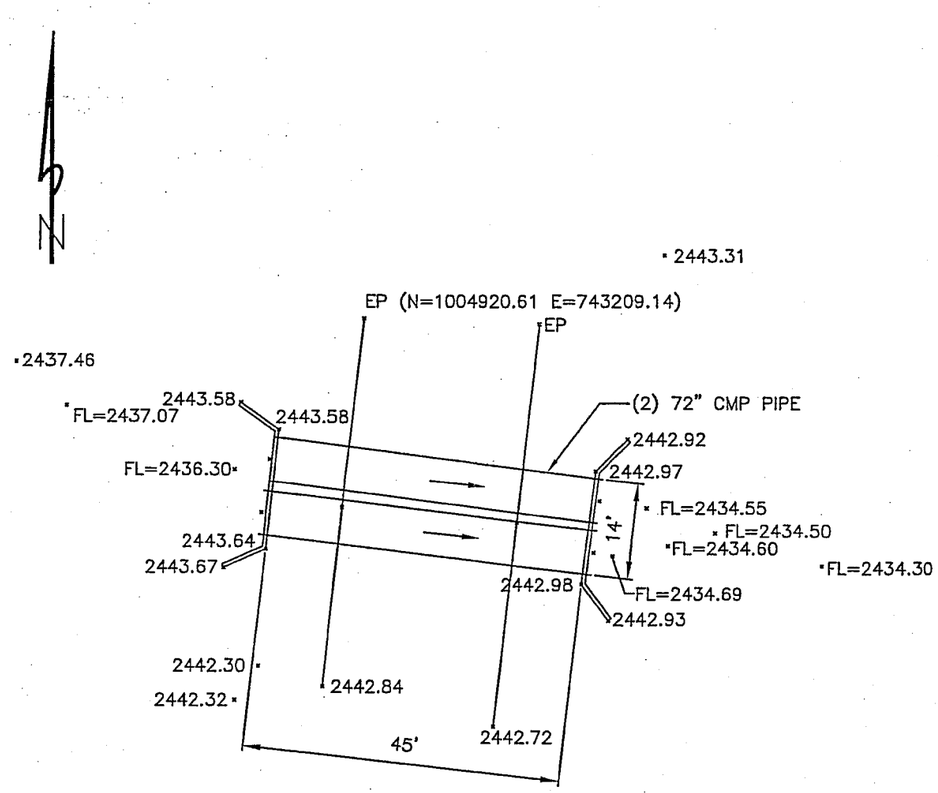

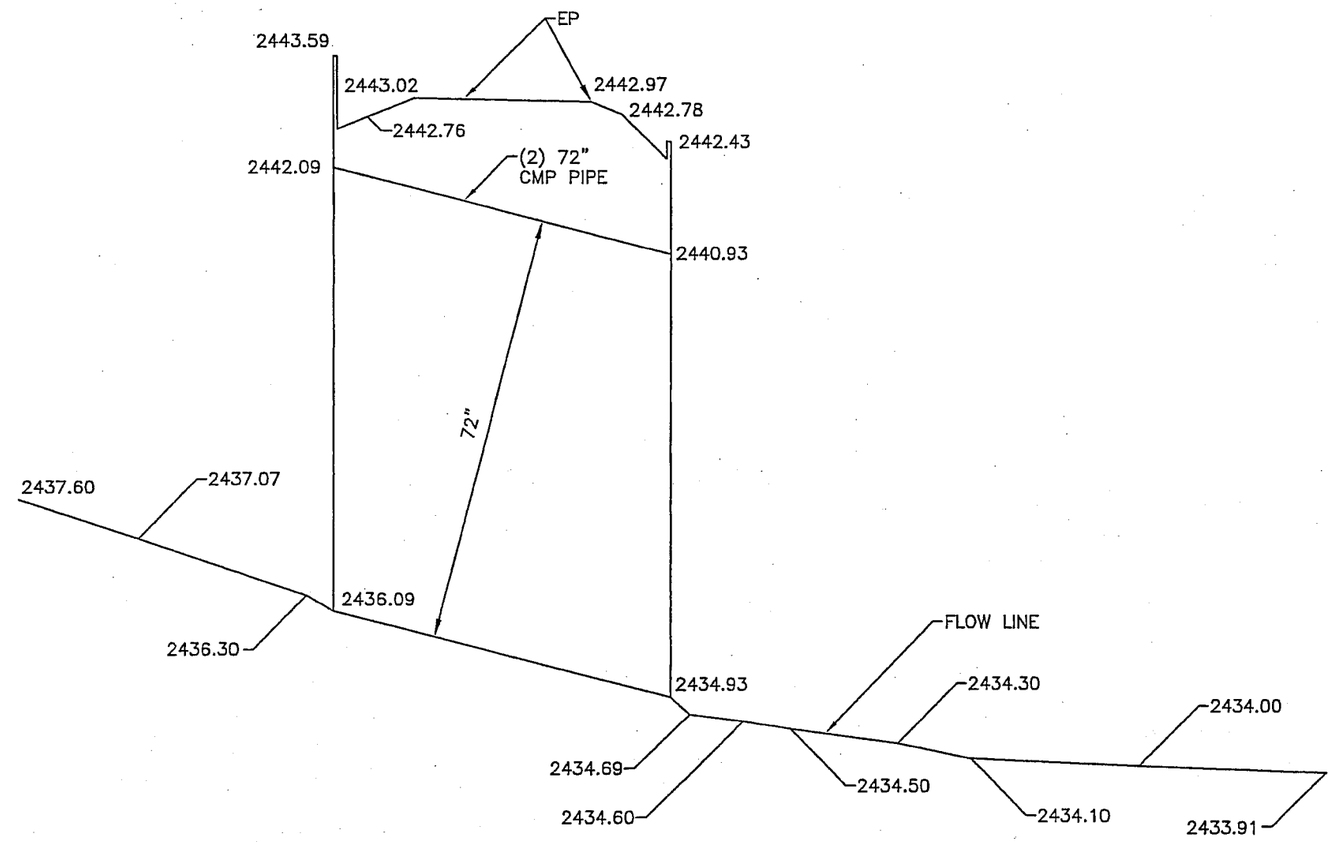

CULVERT PLAN
NUMBER 4

10 0 10 20 40
SCALE: 1" = 20 FT.
SCALE HOR: 1"=20'

CULVERT PROFILE
NUMBER 4

10 0 10 20 40
SCALE: 1" = 20 FT.
SCALE HOR: 1"=20'
SCALE VER: 1"=2'

LEGEND:

EP - EDGE OF PAVEMENT
N - NORTHING (FOR GENERAL LOCATION PURPOSES ONLY)
E - EASTING (FOR GENERAL LOCATION PURPOSES ONLY)

THIS RECORD DRAWING WAS PREPARED UNDER MY DIRECT SUPERVISION FOR THE SOLE PURPOSE OF HYDRAULIC MODELING. DATUM=NAVD88

REGISTERED LAND SURVEYOR
CERTIFICATE NO.
35980
ROLAND
MICHAUD
Date Signed 06/02/05
ARIZONA, U.S.A.

Consultant Engineering, Inc.

CONSULTANT ENGINEERING, INC.
3404 W. CHERYL DRIVE
PHOENIX, ARIZONA
602-866-5090

RIO VERDE ADMP FLOOD PLAIN DELINEATION
RECORD DRAWING FOR STRUCTURE AT
CULVERT NUMBER 4

DATE	04-29-05
SCALE	SEE PLAN
DRAWN BY	NZ
APPROVED BY	RM
C.E.I. JOB #	5050-332
SHEET	

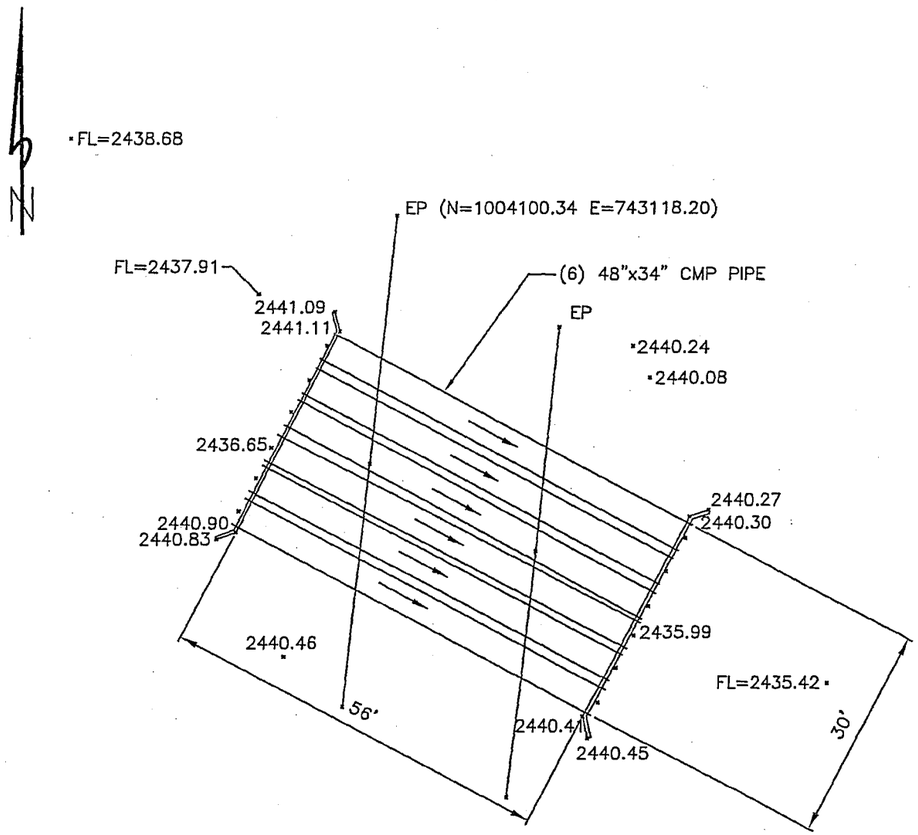

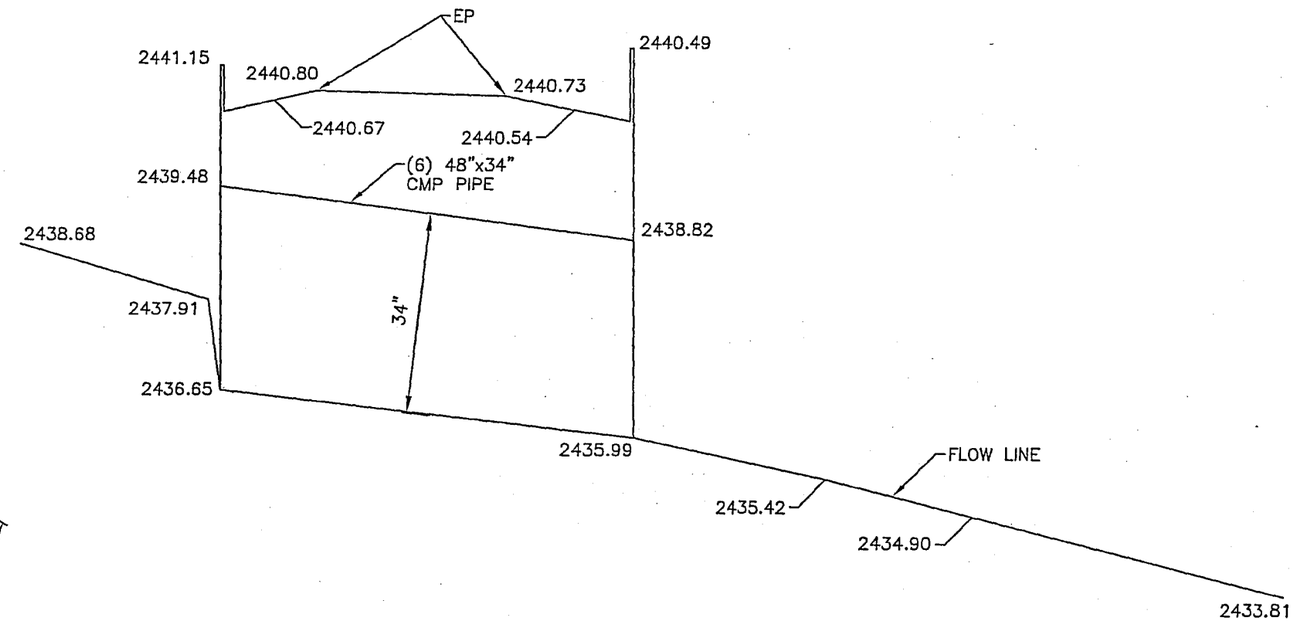

CULVERT PLAN
NUMBER 5

10 0 10 20 40
SCALE: 1" = 20 FT.
SCALE HOR: 1"=20'

CULVERT PROFILE
NUMBER 5

10 0 10 20 40
SCALE: 1" = 20 FT.
SCALE HOR: 1"=20'
SCALE VER: 1"=2'

LEGEND:

EP - EDGE OF PAVEMENT
N - NORTHING (FOR GENERAL LOCATION PURPOSES ONLY)
E - EASTING (FOR GENERAL LOCATION PURPOSES ONLY)

THIS RECORD DRAWING WAS PREPARED UNDER MY DIRECT SUPERVISION FOR THE SOLE PURPOSE OF HYDRAULIC MODELING. DATUM=NAVD88

REGISTERED LAND SURVEYOR
CERTIFICATE NO.
35980
ROLAND
MICHAUD
Date Signed 06-02-05
ARIZONA, U.S.A.

Consultant Engineering, Inc.

CONSULTANT ENGINEERING, INC.
3404 W. CHERYL DRIVE
PHOENIX, ARIZONA
602-866-5090

RIO VERDE ADMP FLOOD PLAIN DELINEATION
RECORD DRAWING FOR STRUCTURE AT
CULVERT NUMBER 5

DATE	04-29-05
SCALE	SEE PLAN
DRAWN BY	NZ
APPROVED BY	RM
C.E.I. JOB #	5050-332
SHEET	

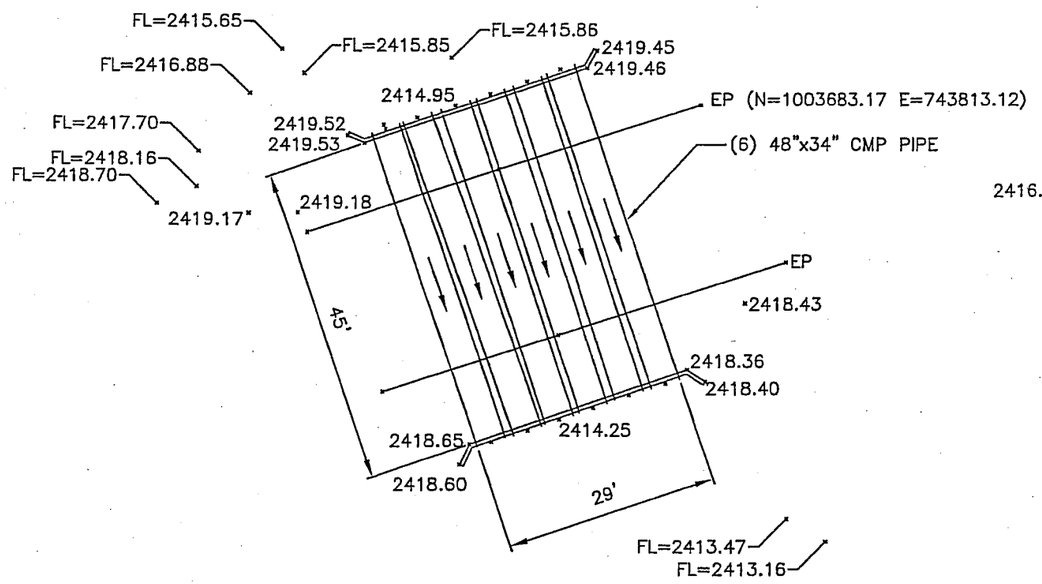

CULVERT PLAN
NUMBER 6

10 0 10 20 40
SCALE: 1" = 20 FT.
SCALE HOR: 1"=20'

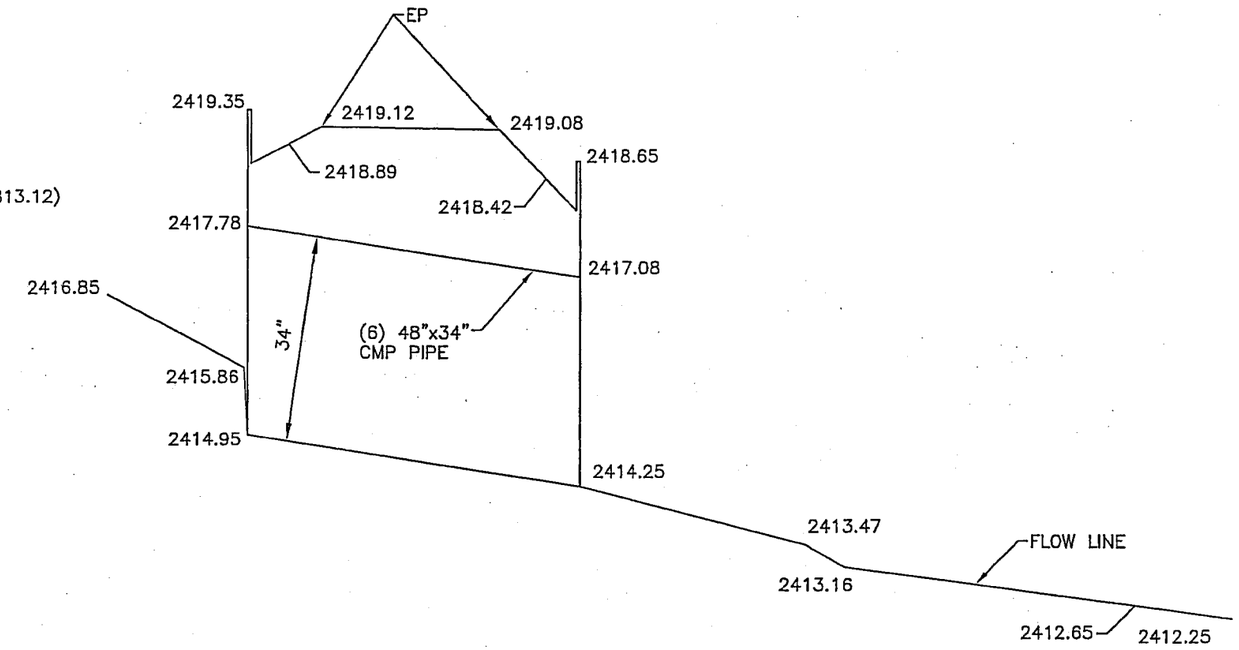

CULVERT PROFILE
NUMBER 6

10 0 10 20 40
SCALE: 1" = 20 FT.
SCALE HOR: 1"=20'
SCALE VER: 1"=2'

LEGEND:

EP - EDGE OF PAVEMENT
N - NORTHING (FOR GENERAL LOCATION PURPOSES ONLY)
E - EASTING (FOR GENERAL LOCATION PURPOSES ONLY)

THIS RECORD DRAWING WAS PREPARED UNDER MY DIRECT SUPERVISION FOR THE SOLE PURPOSE OF HYDRAULIC MODELING. DATUM=NAVD88

REGISTERED LAND SURVEYOR
CERTIFICATE NO.
35980
ROLAND
MICHAUD
Date Signed 06/02/05
ARIZONA, U.S.A.

CEI Consultant Engineering, Inc.

CONSULTANT ENGINEERING, INC.
3404 W. CHERYL DRIVE
PHOENIX, ARIZONA
602-866-5090

RIO VERDE ADMP FLOOD PLAIN DELINEATION
RECORD DRAWING FOR STRUCTURE AT
CULVERT NUMBER 6

DATE	04-29-05
SCALE	SEE PLAN
DRAWN BY	NZ
APPROVED BY	RM
C.E.I. JOB #	5050-332
SHEET	

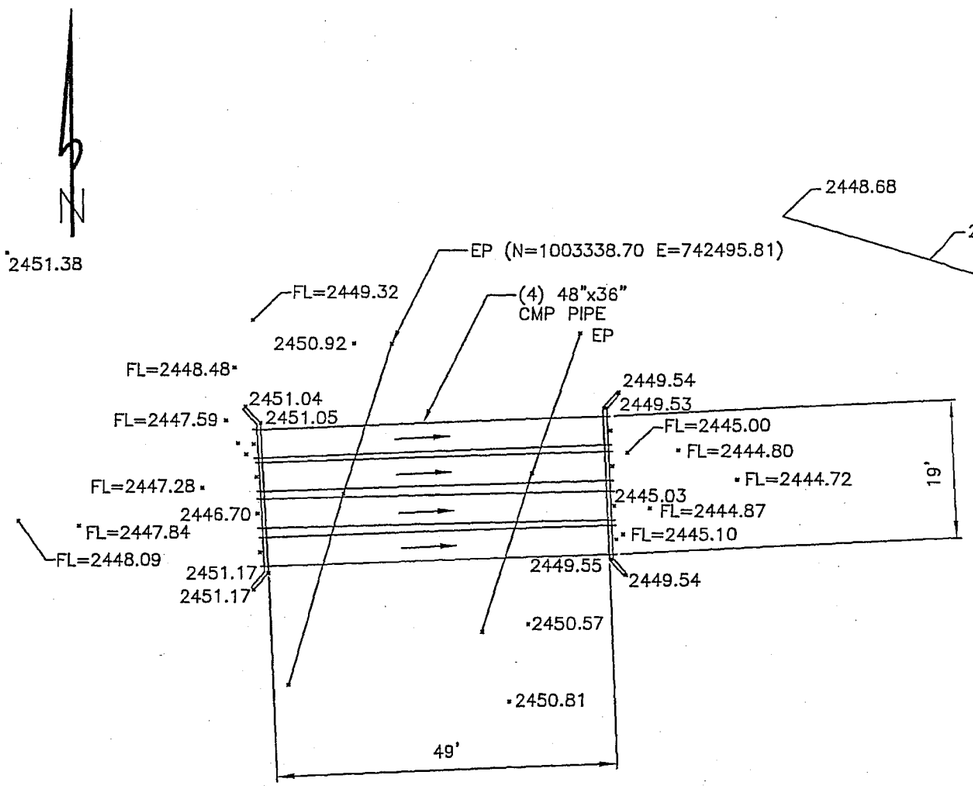

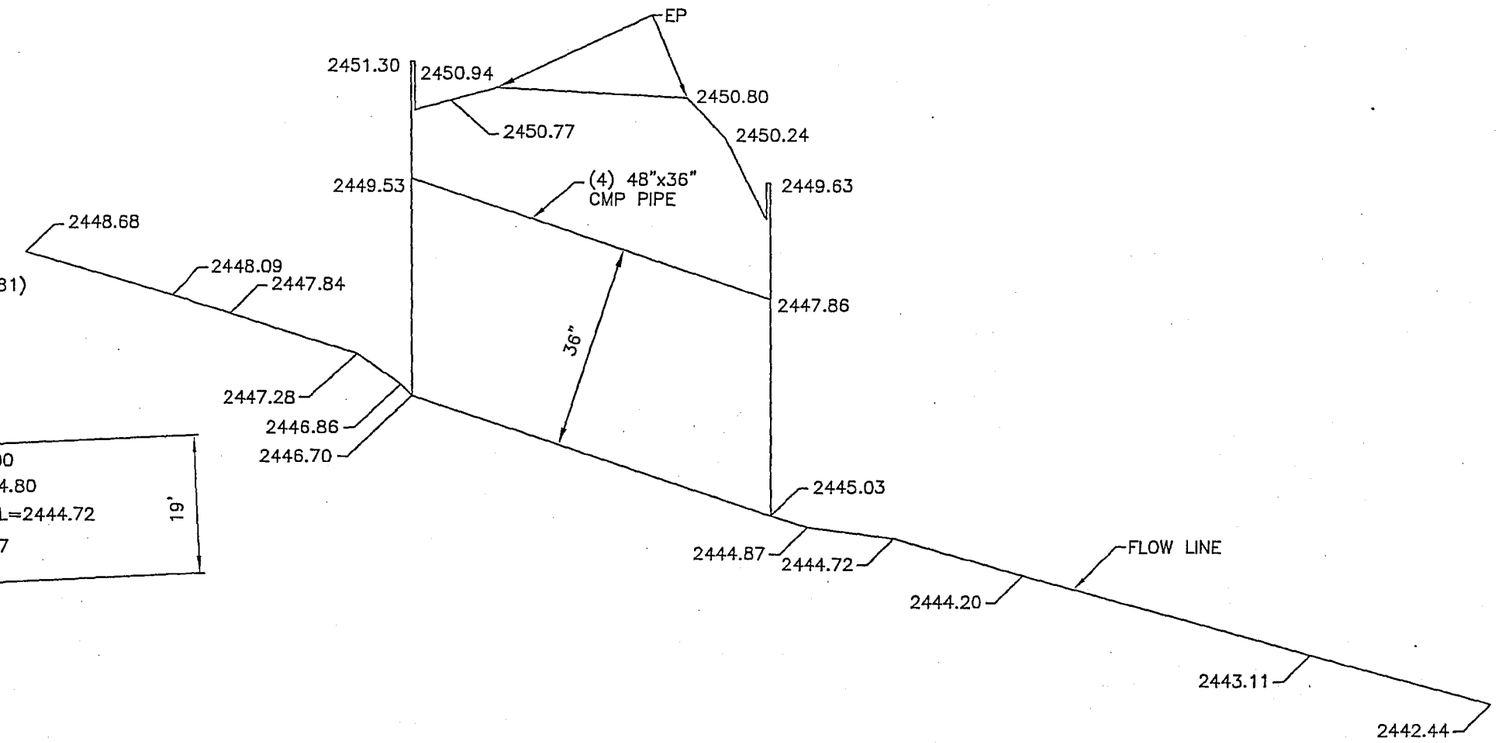

CULVERT PLAN
NUMBER 7

10 0 10 20 40
SCALE: 1" = 20 FT.
SCALE HOR: 1"=20'

CULVERT PROFILE
NUMBER 7

10 0 10 20 40
SCALE: 1" = 20 FT.
SCALE HOR: 1"=20'
SCALE VER: 1"=2'

LEGEND:

EP - EDGE OF PAVEMENT
N - NORTHING (FOR GENERAL LOCATION PURPOSES ONLY)
E - EASTING (FOR GENERAL LOCATION PURPOSES ONLY)

THIS RECORD DRAWING WAS PREPARED UNDER MY DIRECT SUPERVISION FOR THE SOLE PURPOSE OF HYDRAULIC MODELING. DATUM=NAVD88

REGISTERED LAND SURVEYOR
CERTIFICATE NO.
35980
ROLAND
MICHAUD
Date Signed 06/03/05
ARIZONA, U.S.A.

Consultant Engineering, Inc.

CONSULTANT ENGINEERING, INC.
3404 W. CHERYL DRIVE
PHOENIX, ARIZONA
602-866-5090

RIO VERDE ADMP FLOOD PLAIN DELINEATION
RECORD DRAWING FOR STRUCTURE AT
CULVERT NUMBER 7

DATE	04-29-05
SCALE	SEE PLAN
DRAWN BY	NZ
APPROVED BY	RM
C.E.I. JOB #	5050-332
SHEET	

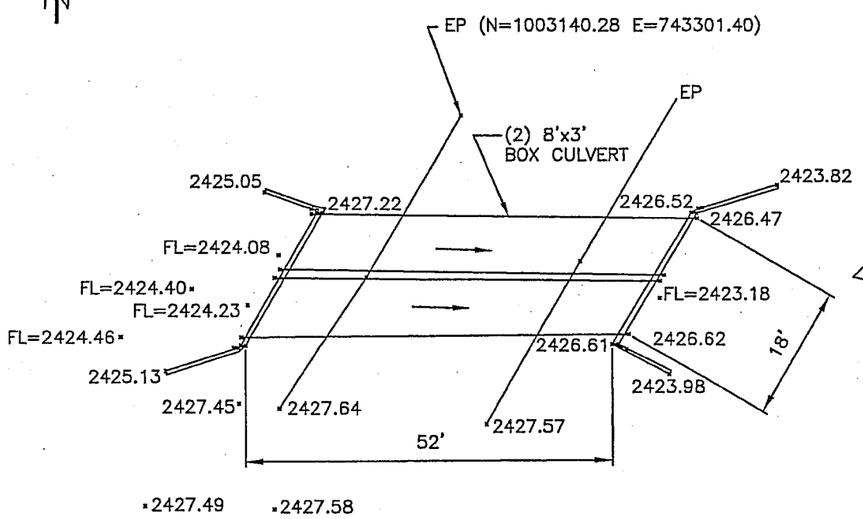

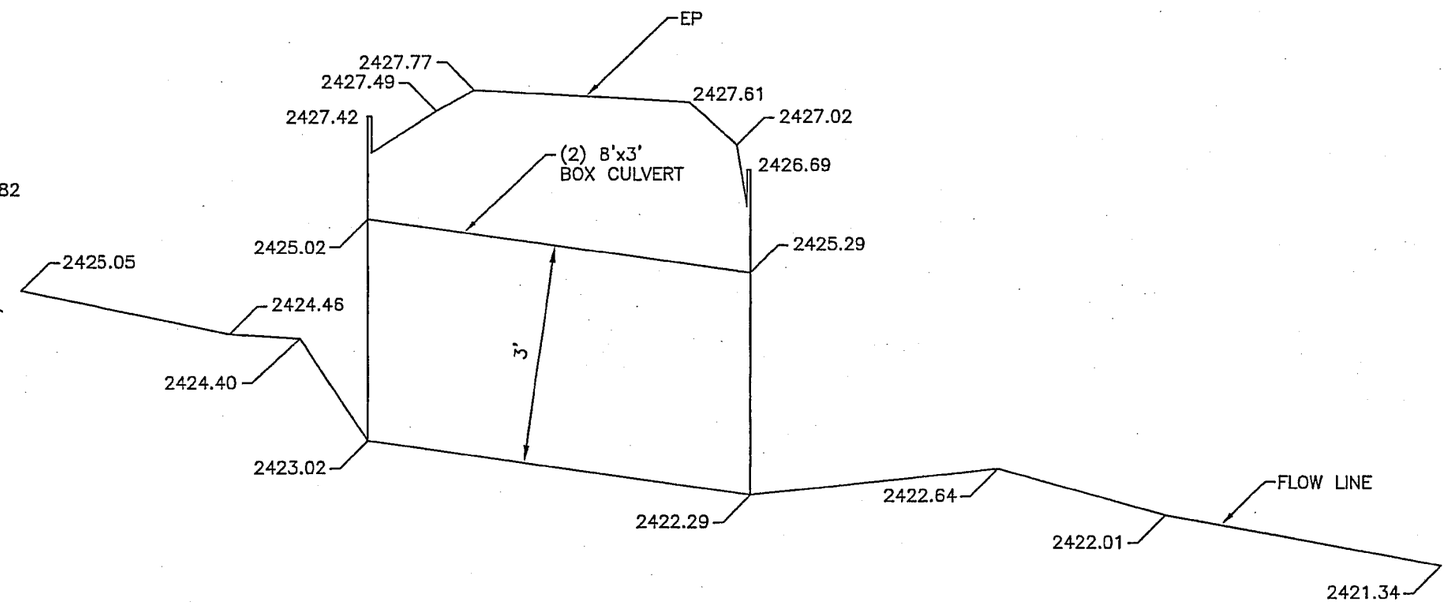

CULVERT PLAN
NUMBER 8

10 0 10 20 40
SCALE: 1" = 20 FT.
SCALE HOR: 1"=20'

CULVERT PROFILE
NUMBER 8

10 0 10 20 40
SCALE: 1" = 20 FT.
SCALE HOR: 1"=20'
SCALE VER: 1"=2'

LEGEND:

EP - EDGE OF PAVEMENT
N - NORTHING (FOR GENERAL LOCATION PURPOSES ONLY)
E - EASTING (FOR GENERAL LOCATION PURPOSES ONLY)

THIS RECORD DRAWING WAS PREPARED UNDER MY DIRECT SUPERVISION FOR THE SOLE PURPOSE OF HYDRAULIC MODELING. DATUM=NAVD88

REGISTERED LAND SURVEYOR
CERTIFICATE NO.
35980
ROLAND
MICHAUD
Date Signed 04/02/05
ARIZONA, U.S.A.

Consultant Engineering, Inc.

CONSULTANT ENGINEERING, INC.
3404 W. CHERYL DRIVE
PHOENIX, ARIZONA
602-866-5090

RIO VERDE ADMP FLOOD PLAIN DELINEATION
RECORD DRAWING FOR STRUCTURE AT
CULVERT NUMBER 8

DATE	04-29-05
SCALE	SEE PLAN
DRAWN BY	NZ
APPROVED BY	RM
C.E.I. JOB #	5050-332
SHEET	

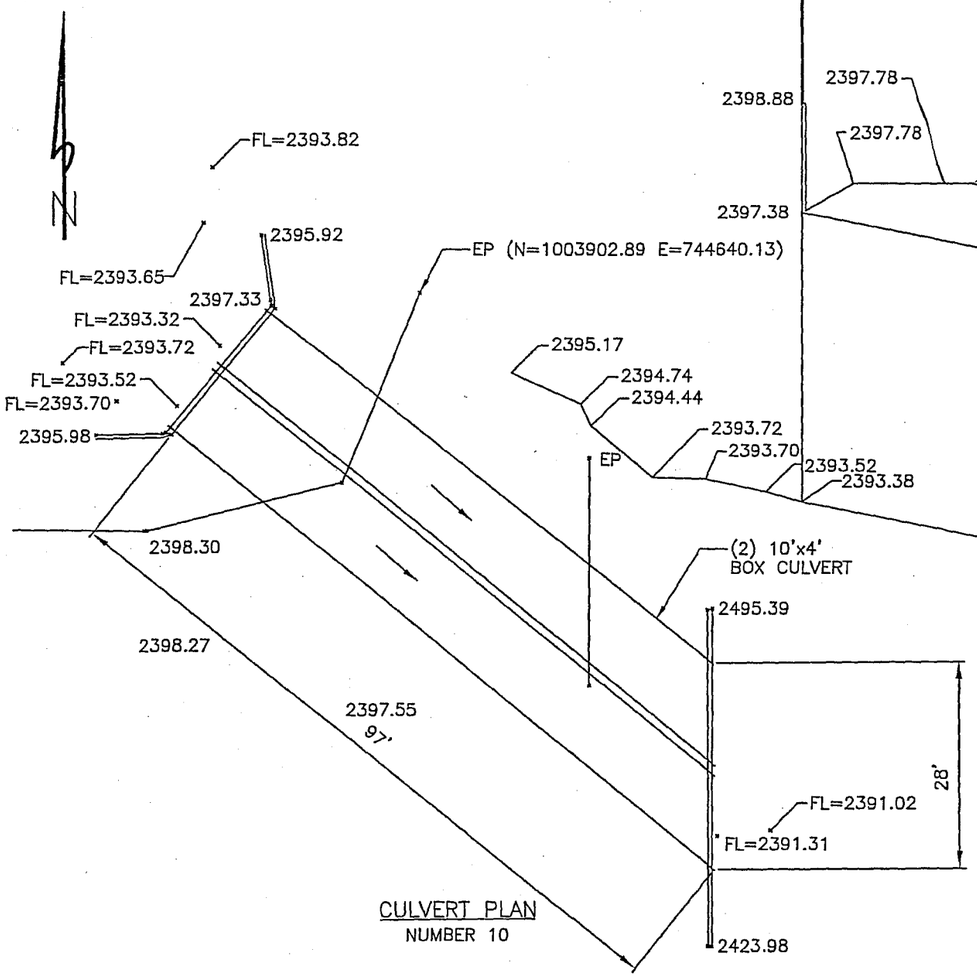

CULVERT PLAN
NUMBER 10

10 0 10 20 40
SCALE: 1" = 20 FT.
SCALE HOR: 1"=20'

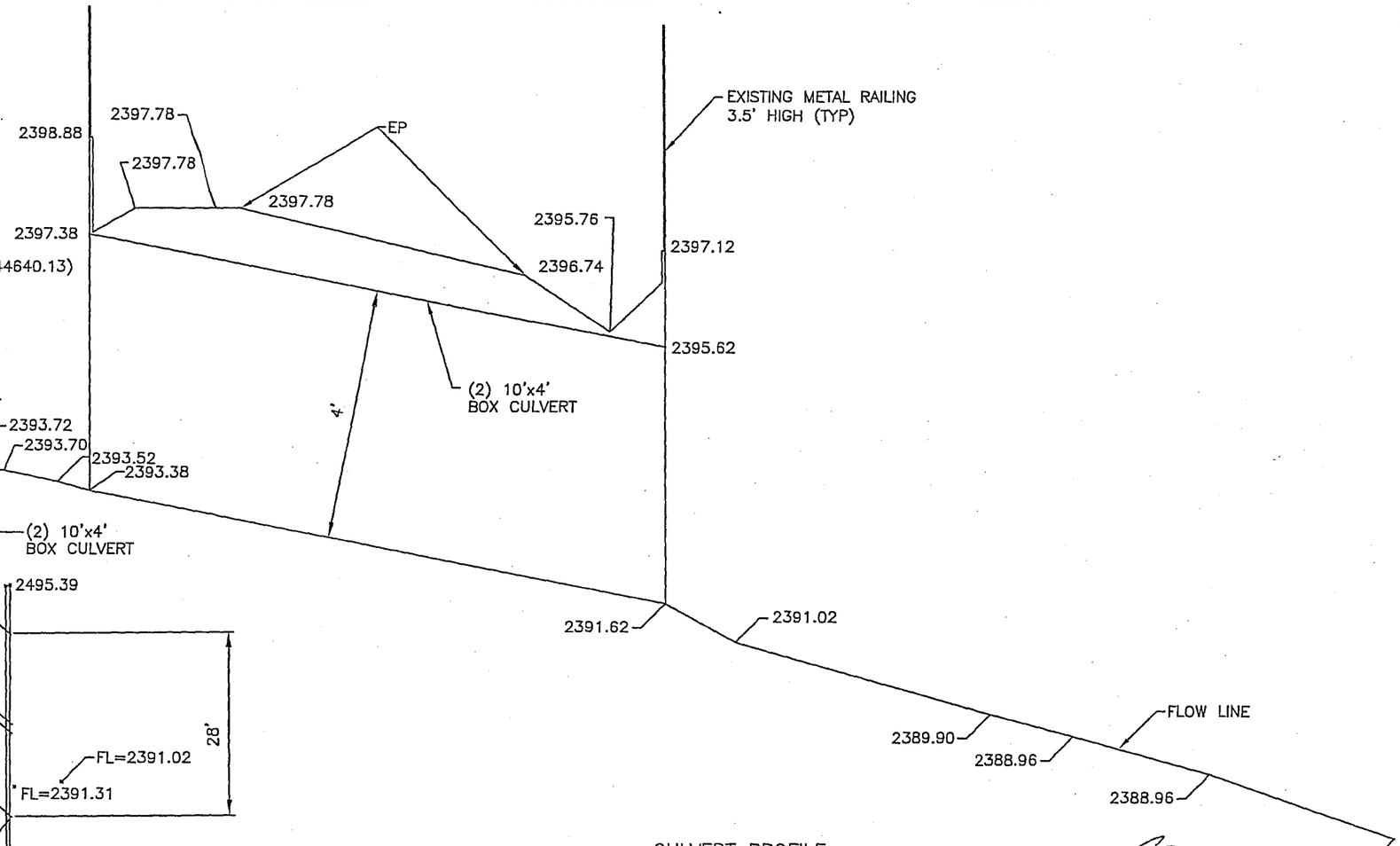

CULVERT PROFILE
NUMBER 10

10 0 10 20 40
SCALE: 1" = 20 FT.
SCALE HOR: 1"=20'
SCALE VER: 1"=2'

LEGEND:

EP - EDGE OF PAVEMENT
N - NORTHING (FOR GENERAL LOCATION PURPOSES ONLY)
E - EASTING (FOR GENERAL LOCATION PURPOSES ONLY)

THIS RECORD DRAWING WAS PREPARED UNDER MY DIRECT SUPERVISION FOR THE SOLE PURPOSE OF HYDRAULIC MODELING. DATUM=NAVD88

REGISTERED LAND SURVEYOR
CERTIFICATE NO.
35980
ROLAND
MICHAUD
Date Signed 06/02/05
ARIZONA, U.S.A.

Consultant Engineering, Inc.

CONSULTANT ENGINEERING, INC.
3404 W. CHERYL DRIVE
PHOENIX, ARIZONA
602-866-5090

RIO VERDE ADMP FLOOD PLAIN DELINEATION
RECORD DRAWING FOR STRUCTURE AT
CULVERT NUMBER 10

DATE	04-29-05
SCALE	SEE PLAN
DRAWN BY	NZ
APPROVED BY	RM
C.E.I. JOB #	5050-332
SHEET	

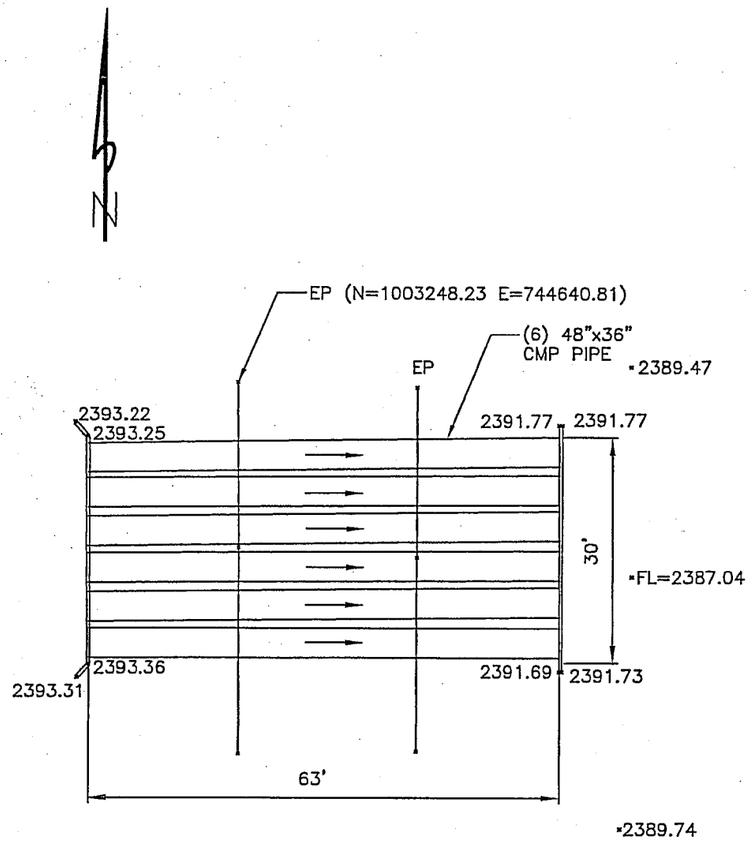

CULVERT PLAN
NUMBER 11

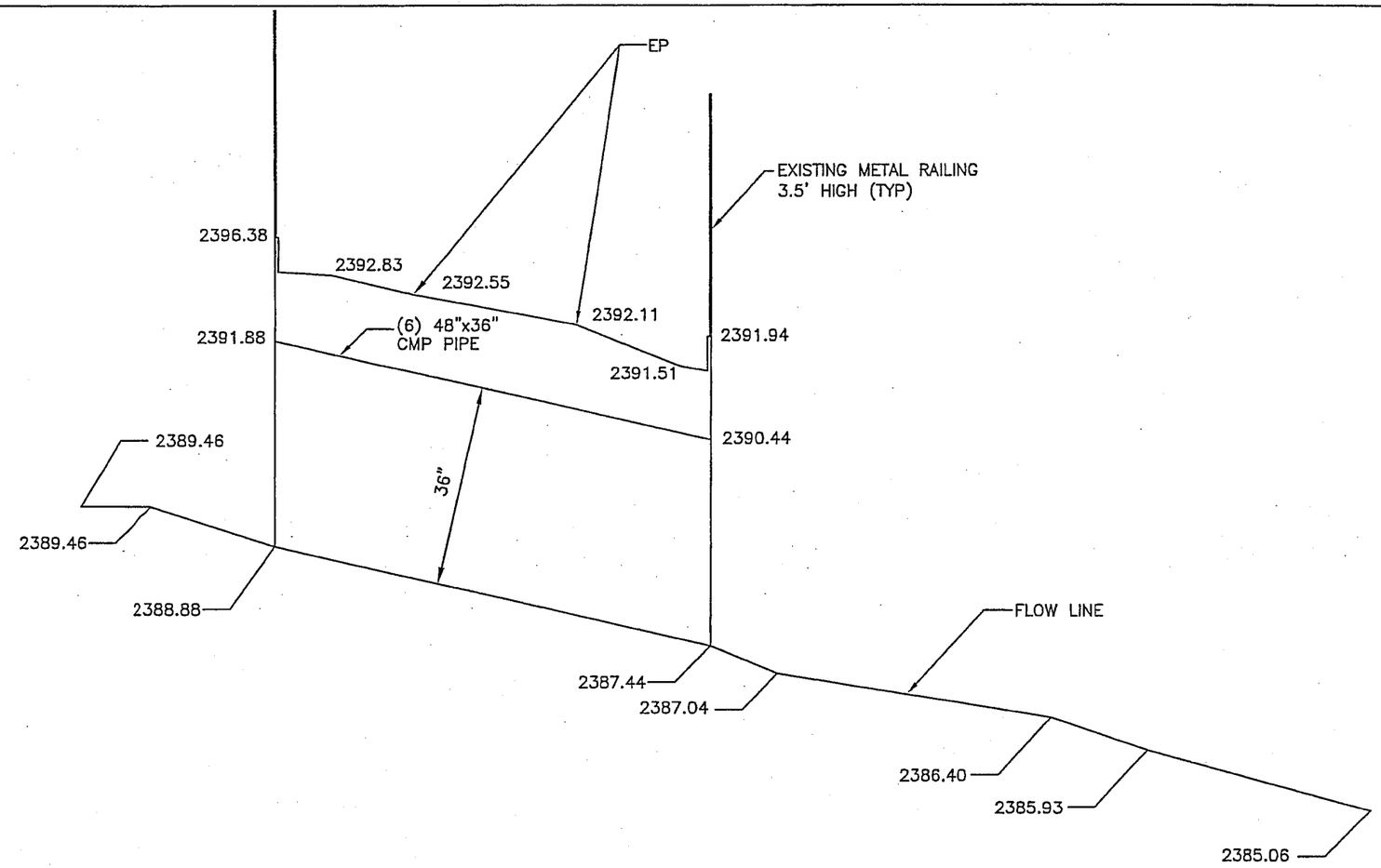

CULVERT PROFILE
NUMBER 11

10 0 10 20 40
SCALE: 1" = 20 FT.
SCALE HOR: 1"=20'

10 0 10 20 40
SCALE: 1" = 20 FT.
SCALE HOR: 1"=20'
SCALE VER: 1"=2'

LEGEND:

EP - EDGE OF PAVEMENT
N - NORTHING (FOR GENERAL LOCATION PURPOSES ONLY)
E - EASTING (FOR GENERAL LOCATION PURPOSES ONLY)

THIS RECORD DRAWING WAS PREPARED UNDER MY DIRECT SUPERVISION FOR THE SOLE PURPOSE OF HYDRAULIC MODELING. DATUM=NAVD88

REGISTERED LAND SURVEYOR
CERTIFICATE NO.
35980
ROLAND
MICHAUD
06/02/05
Date Signed
ARIZONA, U.S.A.

Consultant Engineering, Inc.

CONSULTANT ENGINEERING, INC.
3404 W. CHERYL DRIVE
PHOENIX, ARIZONA
602-866-5090

RIO VERDE ADMP FLOOD PLAIN DELINEATION
RECORD DRAWING FOR STRUCTURE AT
CULVERT NUMBER 11

DATE	04-29-05
SCALE	SEE PLAN
DRAWN BY	NZ
APPROVED BY	RM
C.E.I. JOB #	5050-332
SHEET	

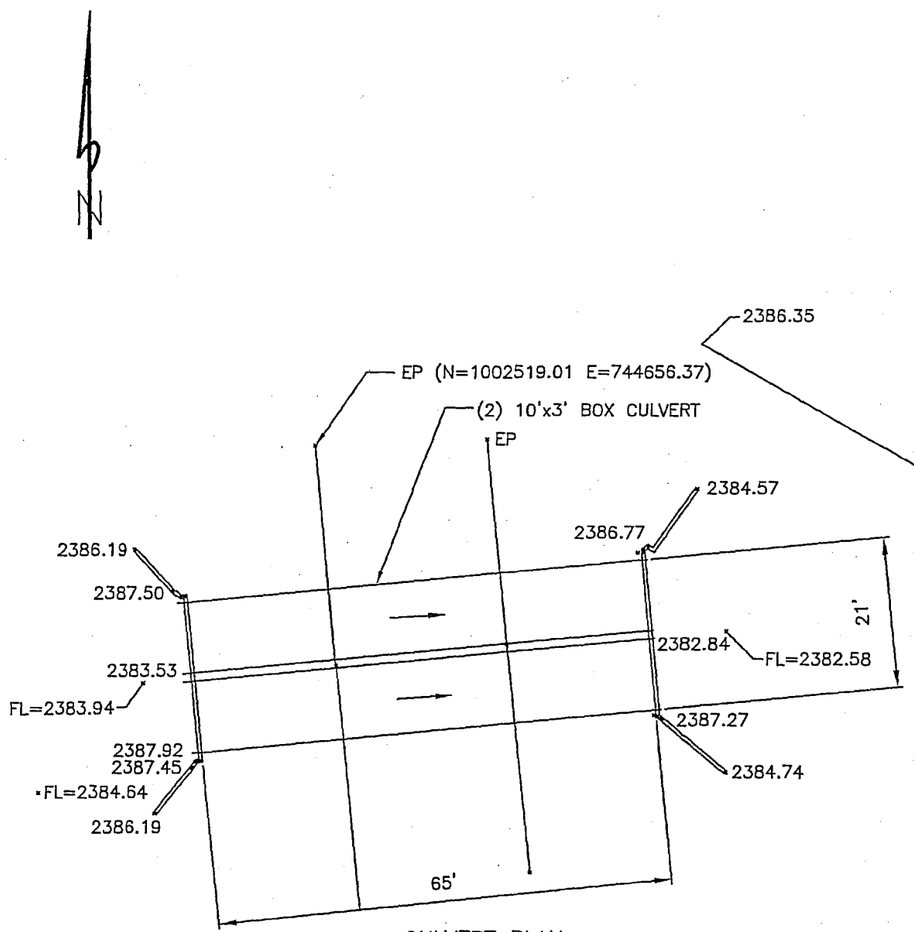

CULVERT PLAN
NUMBER 12

10 0 10 20 40
SCALE: 1" = 20 FT.
SCALE HOR: 1"=20'

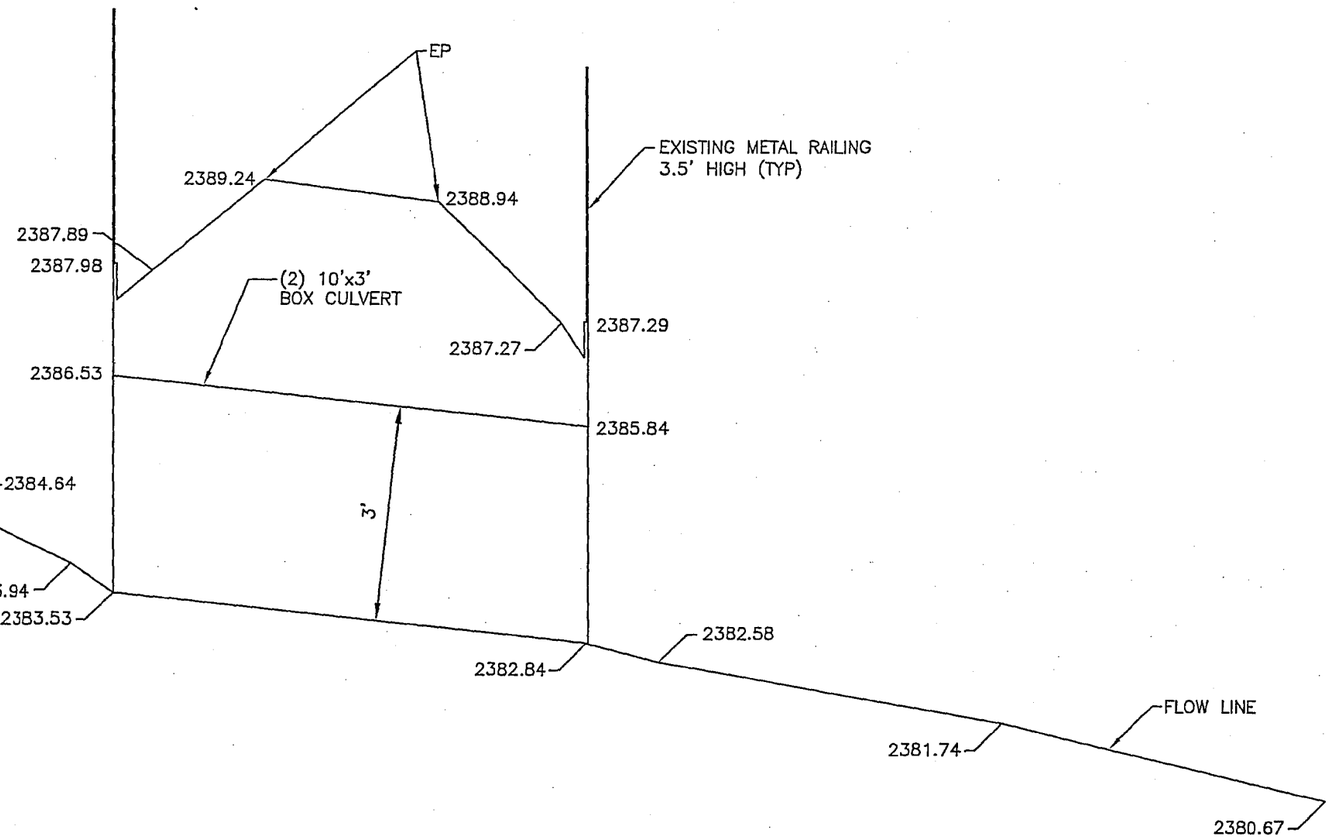

CULVERT PROFILE
NUMBER 12

10 0 10 20 40
SCALE: 1" = 20 FT.
SCALE HOR: 1"=20'
SCALE VER: 1"=2'

LEGEND:

EP - EDGE OF PAVEMENT
N - NORTHING (FOR GENERAL LOCATION PURPOSES ONLY)
E - EASTING (FOR GENERAL LOCATION PURPOSES ONLY)

THIS RECORD DRAWING WAS PREPARED UNDER MY DIRECT SUPERVISION FOR THE SOLE PURPOSE OF HYDRAULIC MODELING. DATUM=NAVD88

REGISTERED LAND SURVEYOR
CERTIFICATE NO.
35980
ROLAND
MICHAUD
Date Signed 06/02/05
ARIZONA, U.S.A.

Consultant Engineering, Inc.

CONSULTANT ENGINEERING, INC.
3404 W. CHERYL DRIVE
PHOENIX, ARIZONA
602-866-5090

RIO VERDE ADMP FLOOD PLAIN DELINEATION
RECORD DRAWING FOR STRUCTURE AT
CULVERT NUMBER 12

DATE	04-29-05
SCALE	SEE PLAN
DRAWN BY	NZ
APPROVED BY	RM
C.E.I. JOB #	5050-332
SHEET	

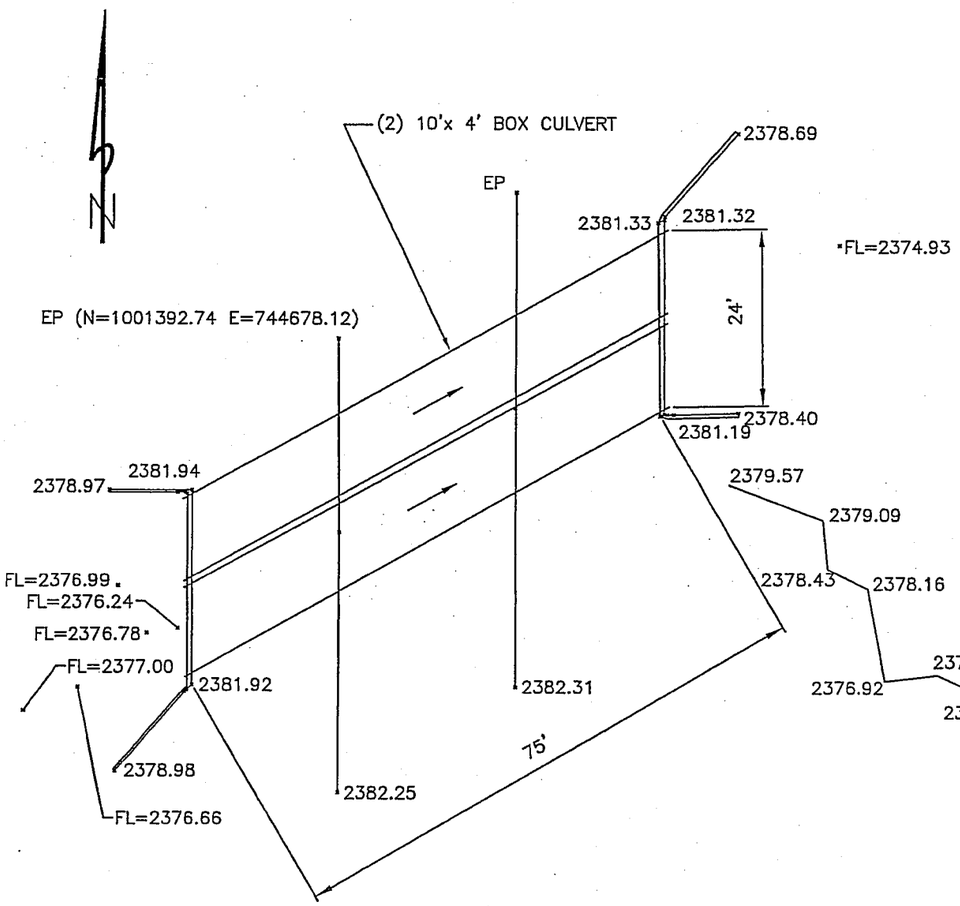

CULVERT PLAN
NUMBER 13

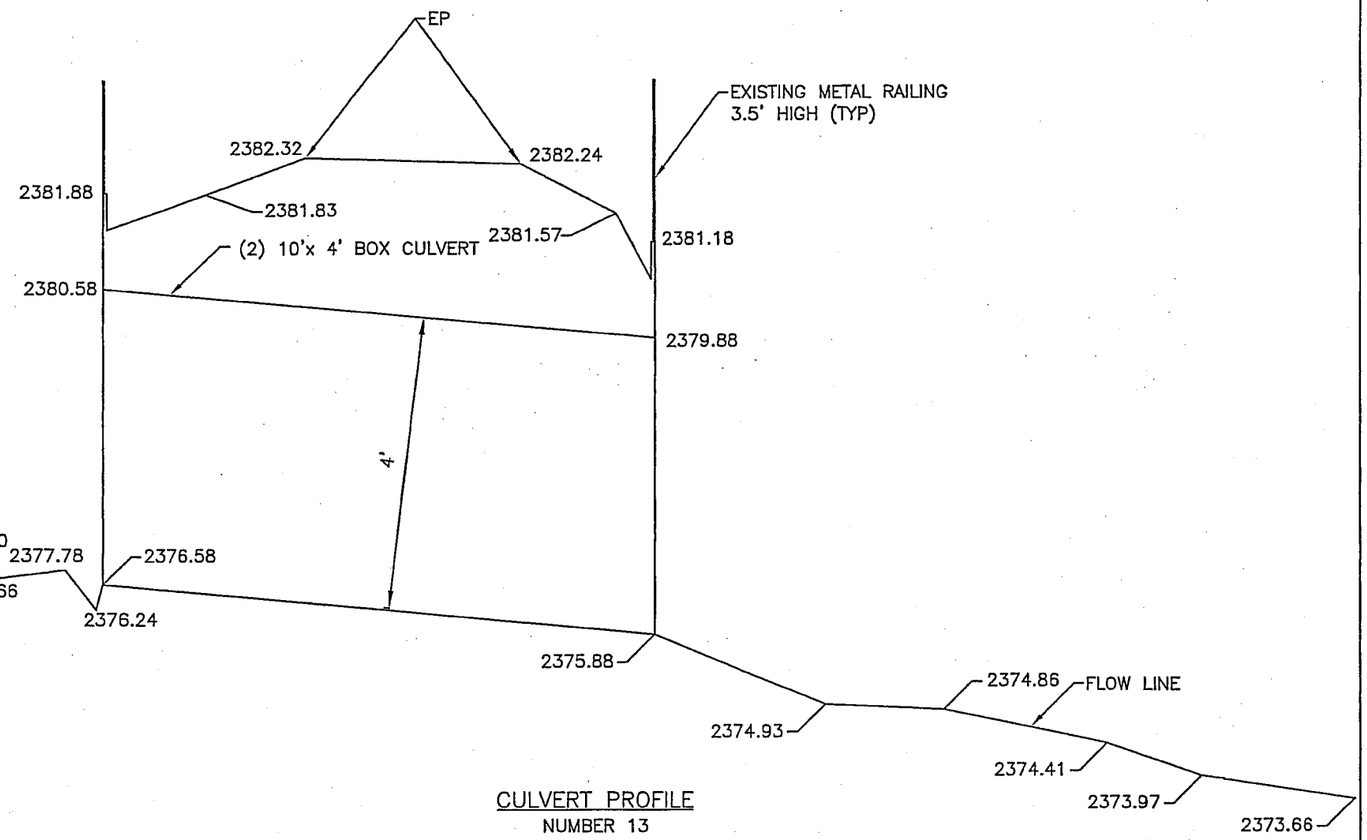

CULVERT PROFILE
NUMBER 13

10 0 10 20 40
SCALE: 1" = 20 FT.
SCALE HOR: 1"=20'

10 0 10 20 40
SCALE: 1" = 20 FT.
SCALE HOR: 1"=20'
SCALE VER: 1"=2'

LEGEND:

EP - EDGE OF PAVEMENT
N - NORTHING (FOR GENERAL LOCATION PURPOSES ONLY)
E - EASTING (FOR GENERAL LOCATION PURPOSES ONLY)

THIS RECORD DRAWING WAS PREPARED UNDER MY DIRECT SUPERVISION FOR THE SOLE PURPOSE OF HYDRAULIC MODELING. DATUM=NAVD88

REGISTERED LAND SURVEYOR
CERTIFICATE NO.
35980
ROLAND
MICHAUD
Date Signed 06/02/05
ARIZONA, U.S.A.

Consultant Engineering, Inc.

CONSULTANT ENGINEERING, INC.
3404 W. CHERYL DRIVE
PHOENIX, ARIZONA
602-866-5090

RIO VERDE ADMP FLOOD PLAIN DELINEATION
RECORD DRAWING FOR STRUCTURE AT
CULVERT NUMBER 13

DATE	04-29-05
SCALE	SEE PLAN
DRAWN BY	NZ
APPROVED BY	RM
C.E.I. JOB #	5050-332
SHEET	

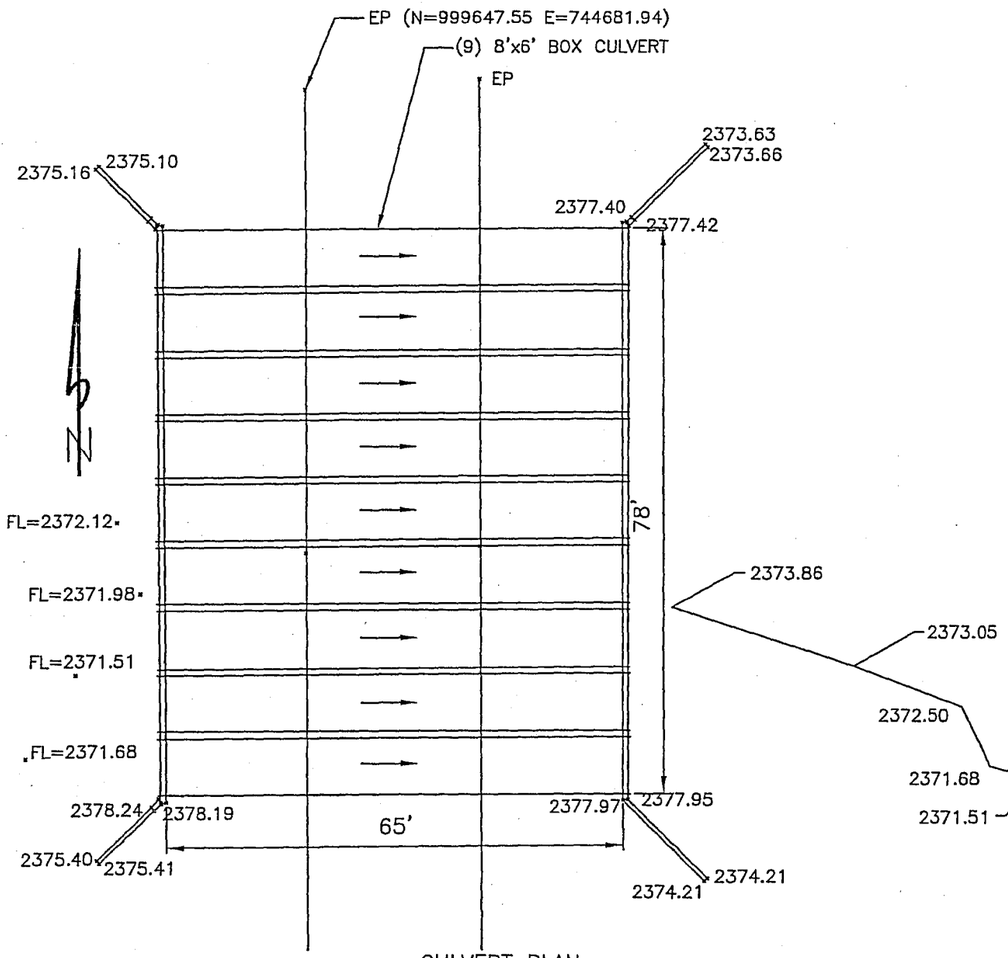

CULVERT PLAN
NUMBER 14

10 0 10 20 40
SCALE: 1" = 20 FT.
SCALE HOR: 1"=20'

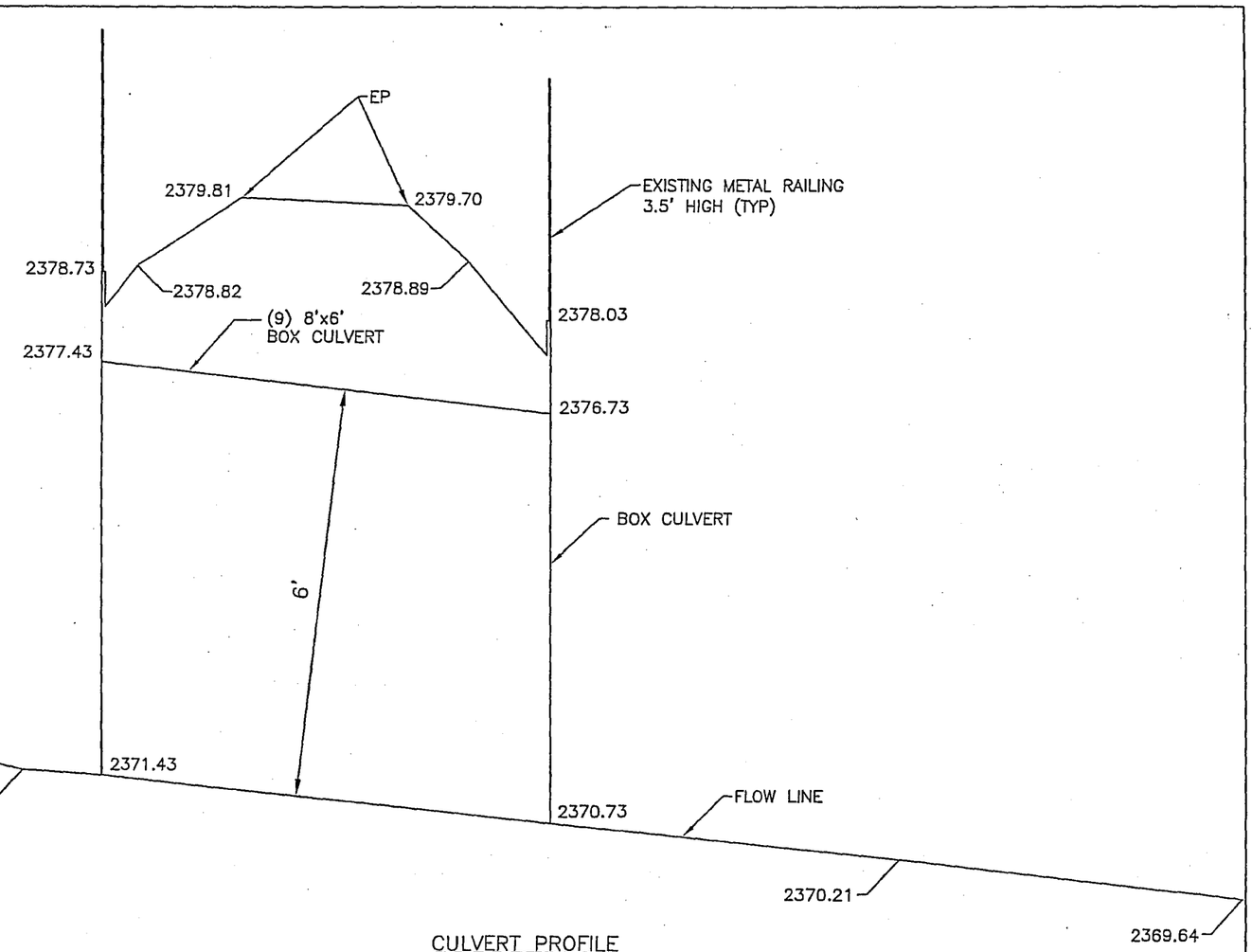

CULVERT PROFILE
NUMBER 14

10 0 10 20 40
SCALE: 1" = 20 FT.
SCALE HOR: 1"=20'
SCALE VER: 1"=2'

LEGEND:

EP - EDGE OF PAVEMENT
N - NORTHING (FOR GENERAL LOCATION PURPOSES ONLY)
E - EASTING (FOR GENERAL LOCATION PURPOSES ONLY)

THIS RECORD DRAWING WAS PREPARED UNDER MY DIRECT SUPERVISION FOR THE SOLE PURPOSE OF HYDRAULIC MODELING. DATUM=NAVD88

REGISTERED LAND SURVEYOR
CERTIFICATE NO.
35980
ROLAND
MICHAUD
Date Signed 06/02/05
ARIZONA, U.S.A.

Consultant Engineering, Inc.

CONSULTANT ENGINEERING, INC.
3404 W. CHERYL DRIVE
PHOENIX, ARIZONA
602-866-5090

RIO VERDE ADMP FLOOD PLAIN DELINEATION
RECORD DRAWING FOR STRUCTURE AT
CULVERT NUMBER 14

DATE	04-29-05
SCALE	SEE PLAN
DRAWN BY	NZ
APPROVED BY	RM
C.E.I. JOB #	5050-332
SHEET	

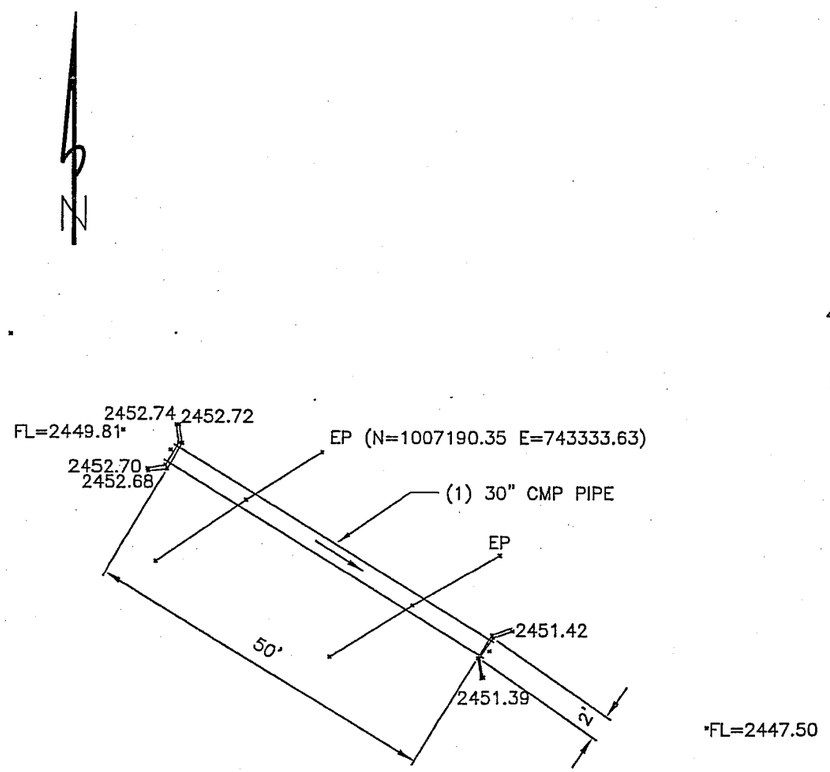

CULVERT PLAN
NUMBER 17

10 0 10 20 40
SCALE: 1" = 20 FT.
SCALE HOR: 1"=20'

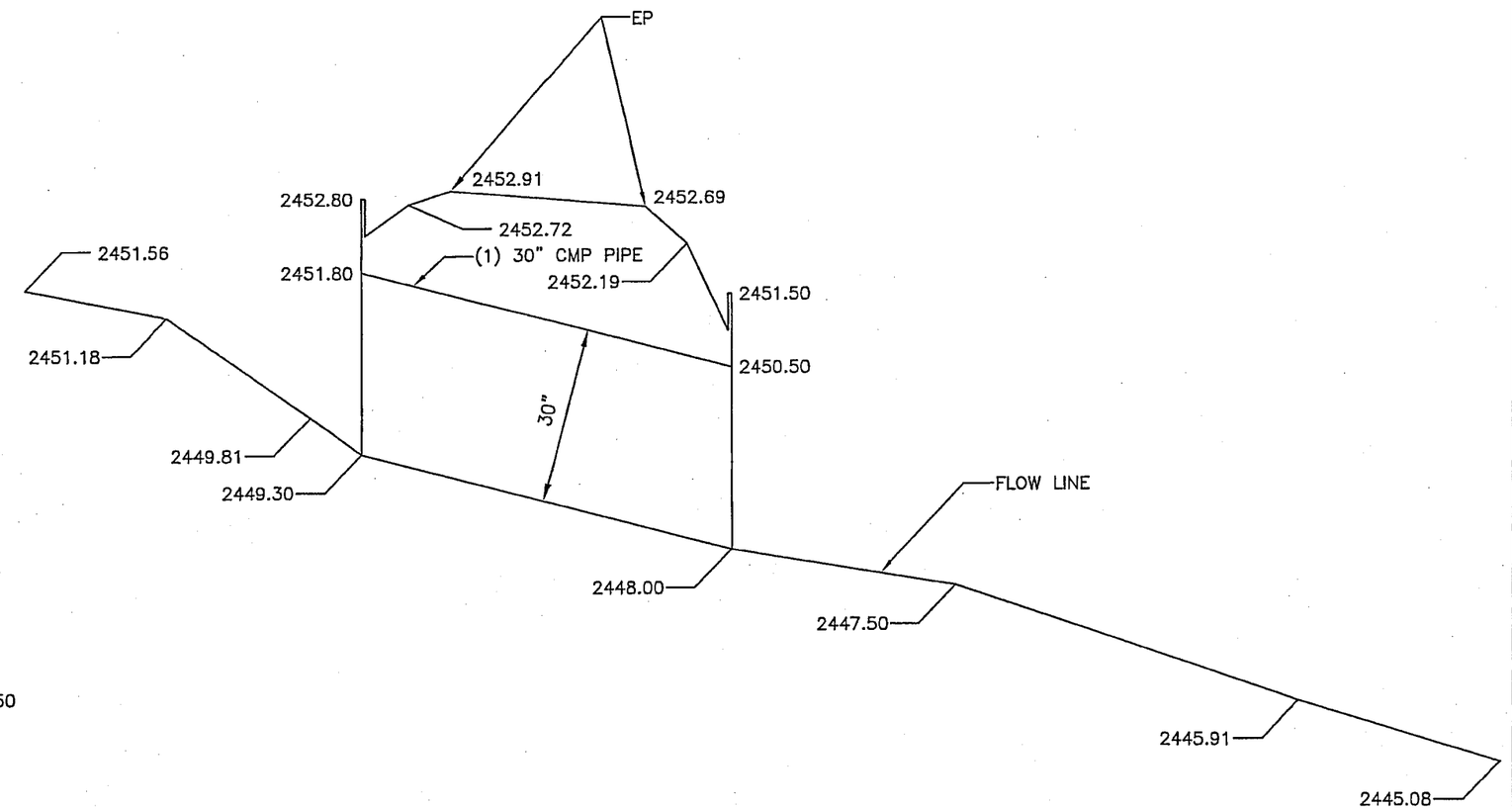

CULVERT PROFILE
NUMBER 17

10 0 10 20 40
SCALE: 1" = 20 FT.
SCALE HOR: 1"=20'
SCALE VER: 1"=2'

LEGEND:

EP - EDGE OF PAVEMENT
N - NORTHING (FOR GENERAL LOCATION PURPOSES ONLY)
E - EASTING (FOR GENERAL LOCATION PURPOSES ONLY)

THIS RECORD DRAWING WAS PREPARED UNDER MY DIRECT SUPERVISION FOR THE SOLE PURPOSE OF HYDRAULIC MODELING. DATUM=NAVD88

REGISTERED LAND SURVEYOR
CERTIFICATE NO.
35980
ROLAND
MICHAUD
Date Signed 06/02/05
ARIZONA, U.S.A.

CEI Consultant Engineering, Inc.

CONSULTANT ENGINEERING, INC.
3404 W. CHERYL DRIVE
PHOENIX, ARIZONA
602-866-5090

RIO VERDE ADMP FLOOD PLAIN DELINEATION
RECORD DRAWING FOR STRUCTURE AT
CULVERT NUMBER 17

DATE	04-29-05
SCALE	SEE PLAN
DRAWN BY	NZ
APPROVED BY	RM
C.E.I. JOB #	5050-332
SHEET	

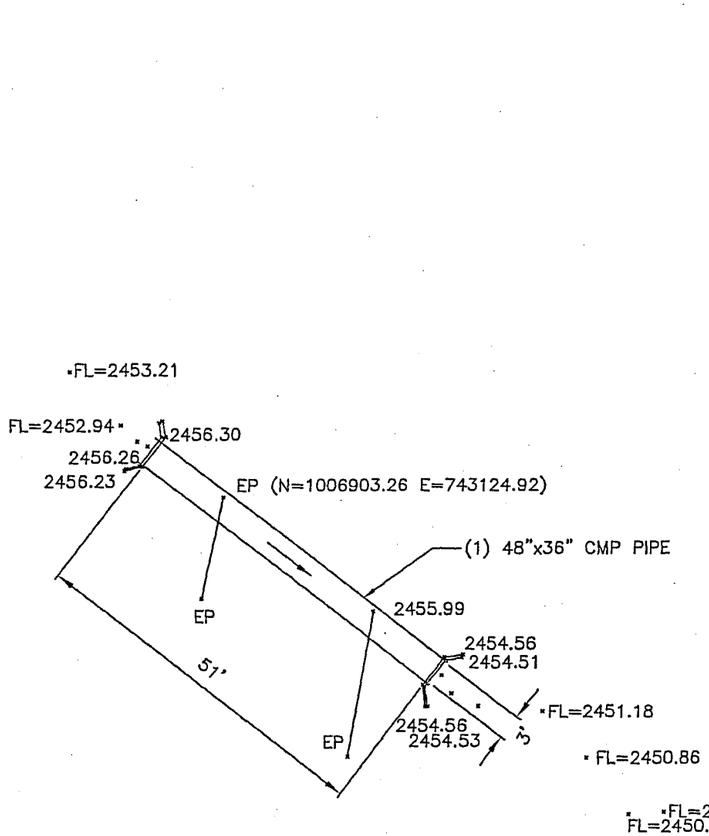

CULVERT PLAN
NUMBER 18

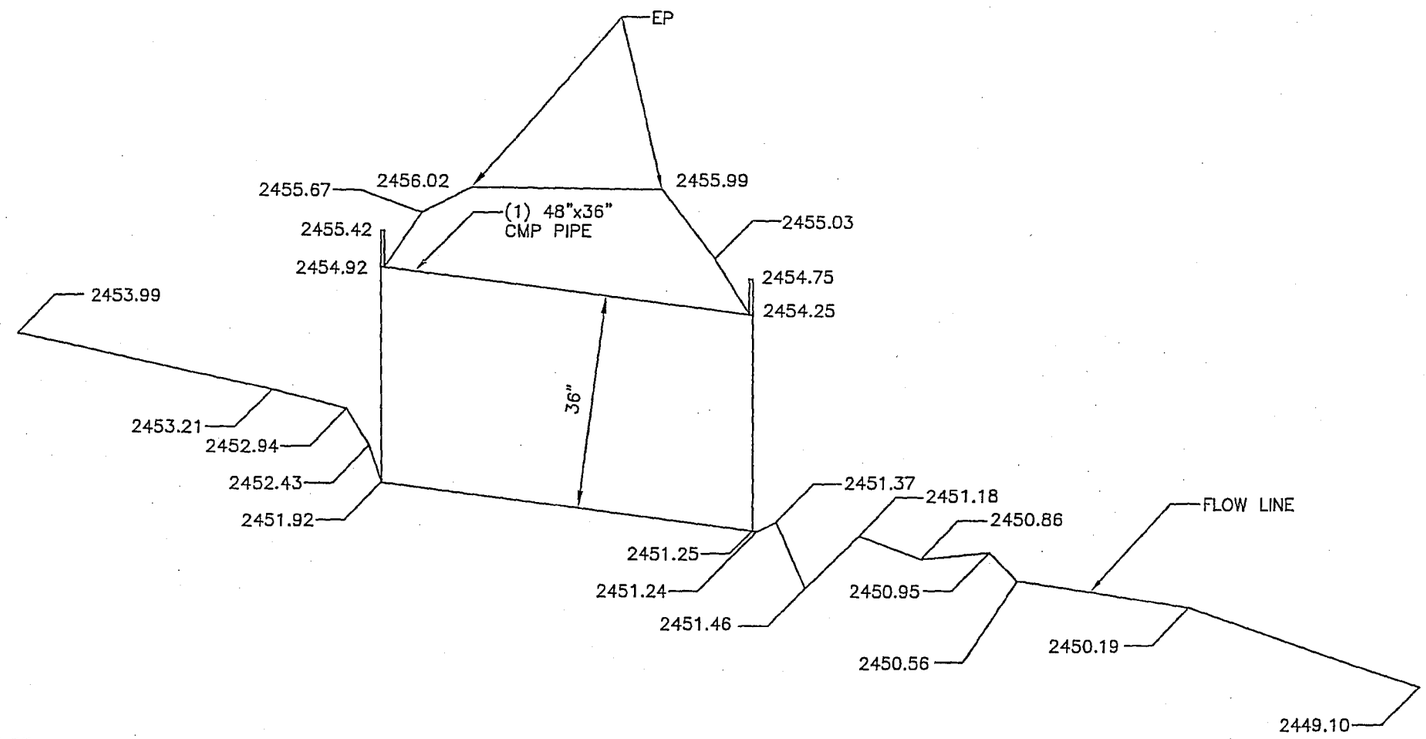

CULVERT PROFILE
NUMBER 18

10 0 10 20 40
SCALE: 1" = 20 FT.
SCALE HOR: 1"=20'

10 0 10 20 40
SCALE: 1" = 20 FT.
SCALE HOR: 1"=20'
SCALE VER: 1"=2'

LEGEND:

EP - EDGE OF PAVEMENT
N - NORTHING (FOR GENERAL LOCATION PURPOSES ONLY)
E - EASTING (FOR GENERAL LOCATION PURPOSES ONLY)

THIS RECORD DRAWING WAS PREPARED UNDER MY DIRECT SUPERVISION FOR THE SOLE PURPOSE OF HYDRAULIC MODELING. DATUM=NAVD88

REGISTERED LAND SURVEYOR
CERTIFICATE NO.
35980
ROLAND
MICHAUD
Date Signed 06/02/05
ARIZONA, U.S.A.

CEI Consultant Engineering, Inc.

CONSULTANT ENGINEERING, INC.
3404 W. CHERYL DRIVE
PHOENIX, ARIZONA
602-866-5090

RIO VERDE ADMP FLOOD PLAIN DELINEATION
RECORD DRAWING FOR STRUCTURE AT
CULVERT NUMBER 18

DATE	04-29-05
SCALE	SEE PLAN
DRAWN BY	NZ
APPROVED BY	RM
C.E.I. JOB #	5050-332
SHEET	

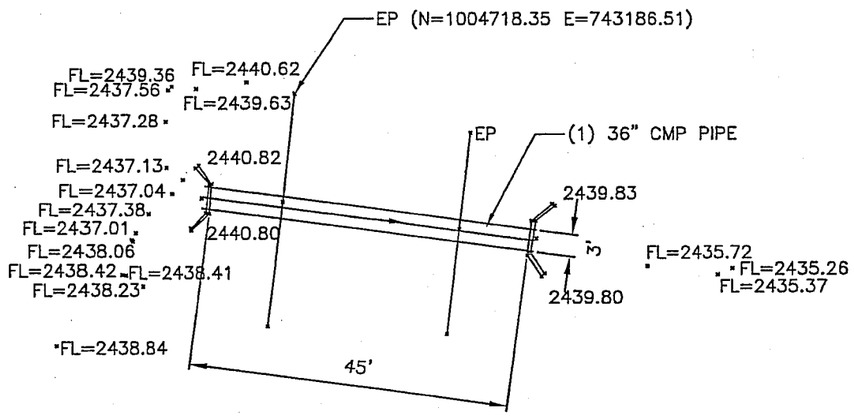

CULVERT PLAN
NUMBER 19

10 0 10 20 40
SCALE: 1" = 20 FT.
SCALE HOR: 1"=20'

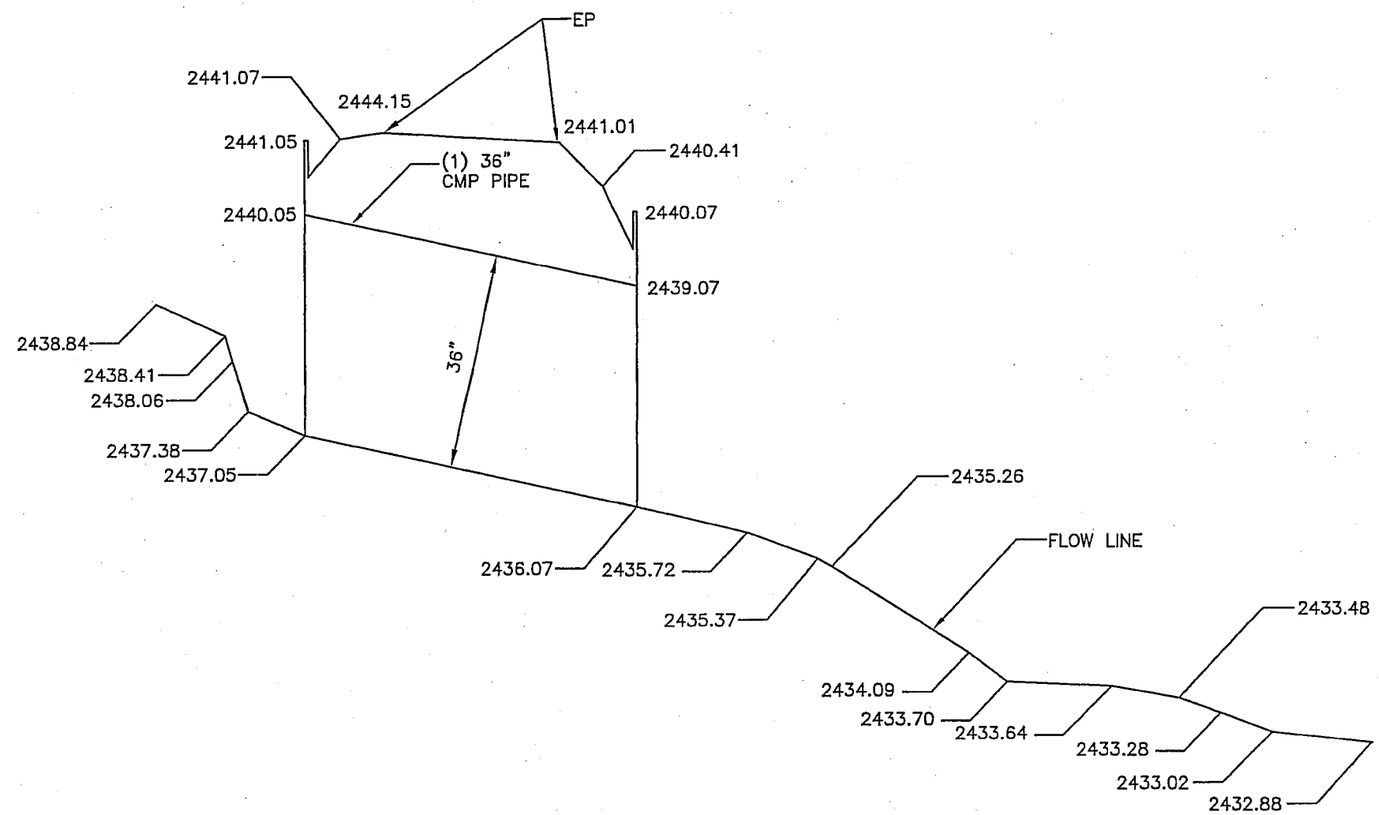

CULVERT PROFILE
NUMBER 19

10 0 10 20 40
SCALE: 1" = 20 FT.
SCALE HOR: 1"=20'
SCALE VER: 1"=2'

REGISTERED LAND SURVEYOR
CERTIFICATE NO.
35980
ROLAND
MICHAUD
Date Signed 06/02/05
ARIZONA, U.S.A.

LEGEND:

EP - EDGE OF PAVEMENT
N - NORTHING (FOR GENERAL LOCATION PURPOSES ONLY)
E - EASTING (FOR GENERAL LOCATION PURPOSES ONLY)

THIS RECORD DRAWING WAS PREPARED UNDER MY DIRECT SUPERVISION FOR THE SOLE PURPOSE OF HYDRAULIC MODELING. DATUM=NAVD88

CEI Consultant Engineering, Inc.

CONSULTANT ENGINEERING, INC.
3404 W. CHERYL DRIVE
PHOENIX, ARIZONA
602-866-5090

RIO VERDE ADMP FLOOD PLAIN DELINEATION
RECORD DRAWING FOR STRUCTURE AT
CULVERT NUMBER 19

DATE	04-29-05
SCALE	SEE PLAN
DRAWN BY	NZ
APPROVED BY	RM
C.E.I. JOB #	5050-332
SHEET	

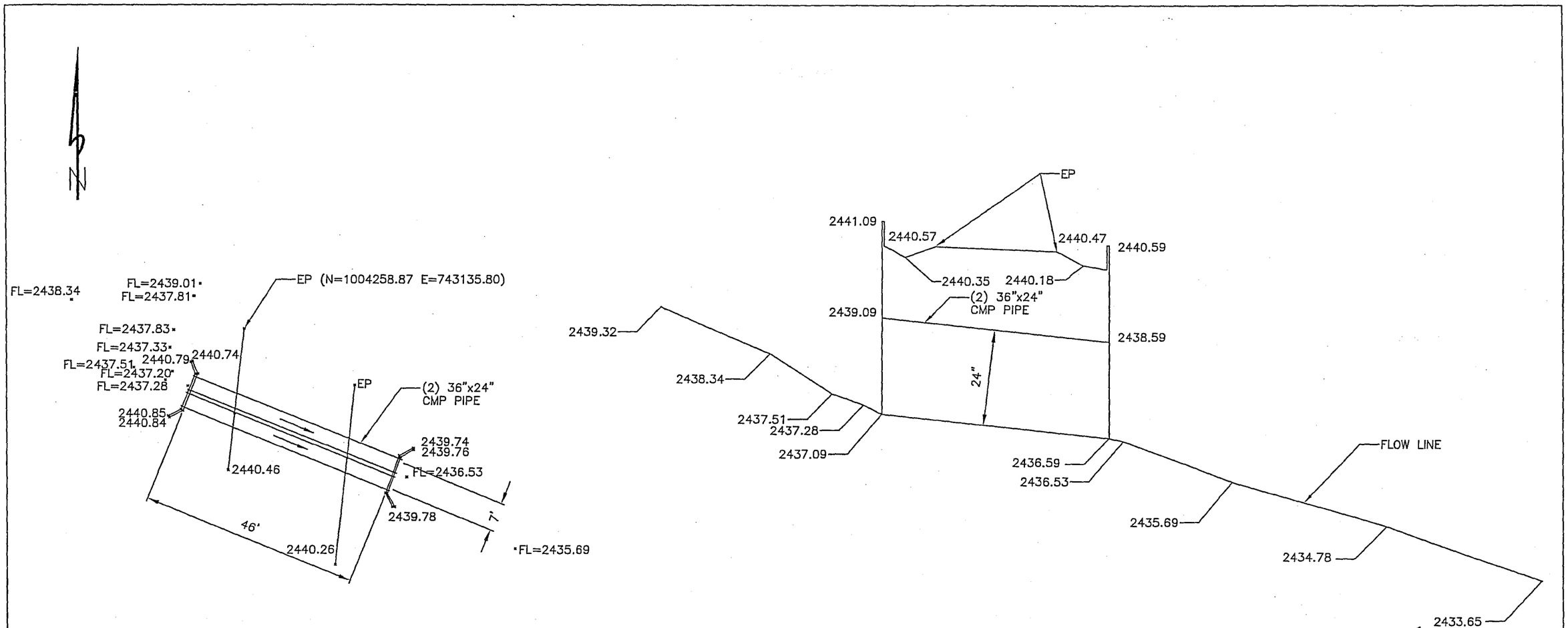

CULVERT PLAN
NUMBER 20

10 0 10 20 40
SCALE: 1" = 20 FT.
SCALE HOR: 1"=20'

NOTE:

CMP APPEARS TO BE LINED WITH CMPRETE

LEGEND:

EP - EDGE OF PAVEMENT
N - NORTHING (FOR GENERAL LOCATION PURPOSES ONLY)
E - EASTING (FOR GENERAL LOCATION PURPOSES ONLY)

CULVERT PROFILE
NUMBER 20

10 0 10 20 40
SCALE: 1" = 20 FT.
SCALE HOR: 1"=20'
SCALE VER: 1"=2'

THIS RECORD DRAWING WAS PREPARED UNDER MY DIRECT SUPERVISION FOR THE SOLE PURPOSE OF HYDRAULIC MODELING. DATUM=NAVD88

REGISTERED LAND SURVEYOR
CERTIFICATE NO.
35980
ROLAND
MICHAUD
Date Signed 06/02/05
ARIZONA, U.S.A.

Consultant Engineering, Inc.

CONSULTANT ENGINEERING, INC.
3404 W. CHERYL DRIVE
PHOENIX, ARIZONA
602-866-5090

RIO VERDE ADMP FLOOD PLAIN DELINEATION
RECORD DRAWING FOR STRUCTURE AT
CULVERT NUMBER 20

DATE	04-29-05
SCALE	SEE PLAN
DRAWN BY	NZ
APPROVED BY	RM
C.E.I. JOB #	5050-332
SHEET	

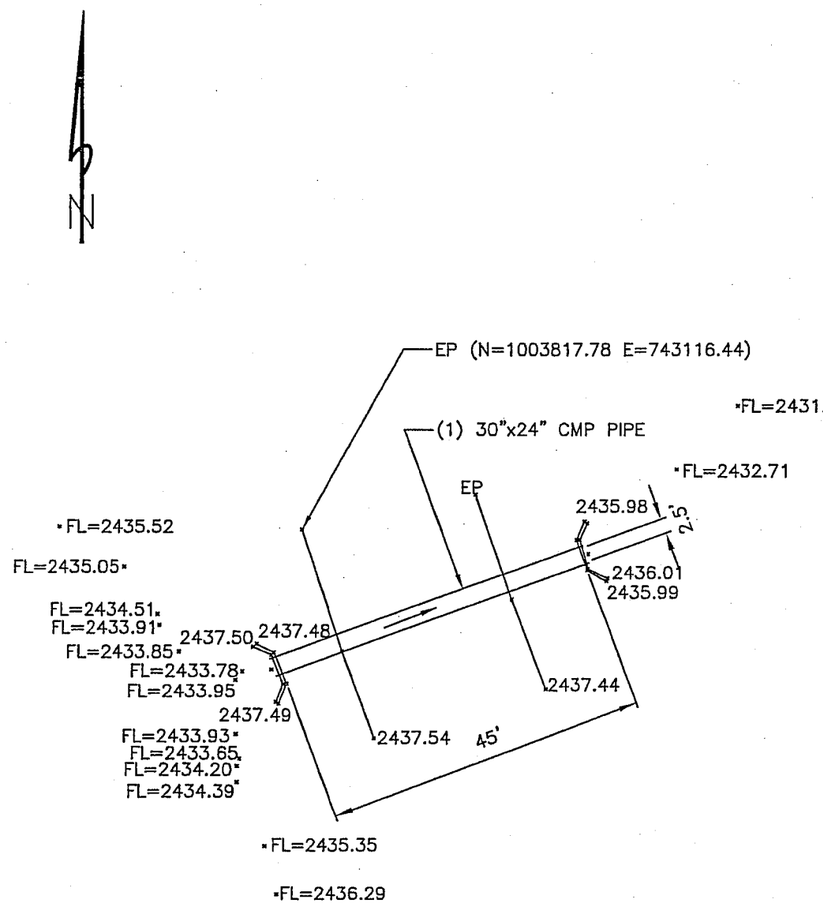

CULVERT PLAN
NUMBER 21

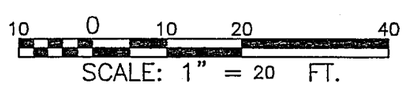

SCALE HOR: 1"=20'

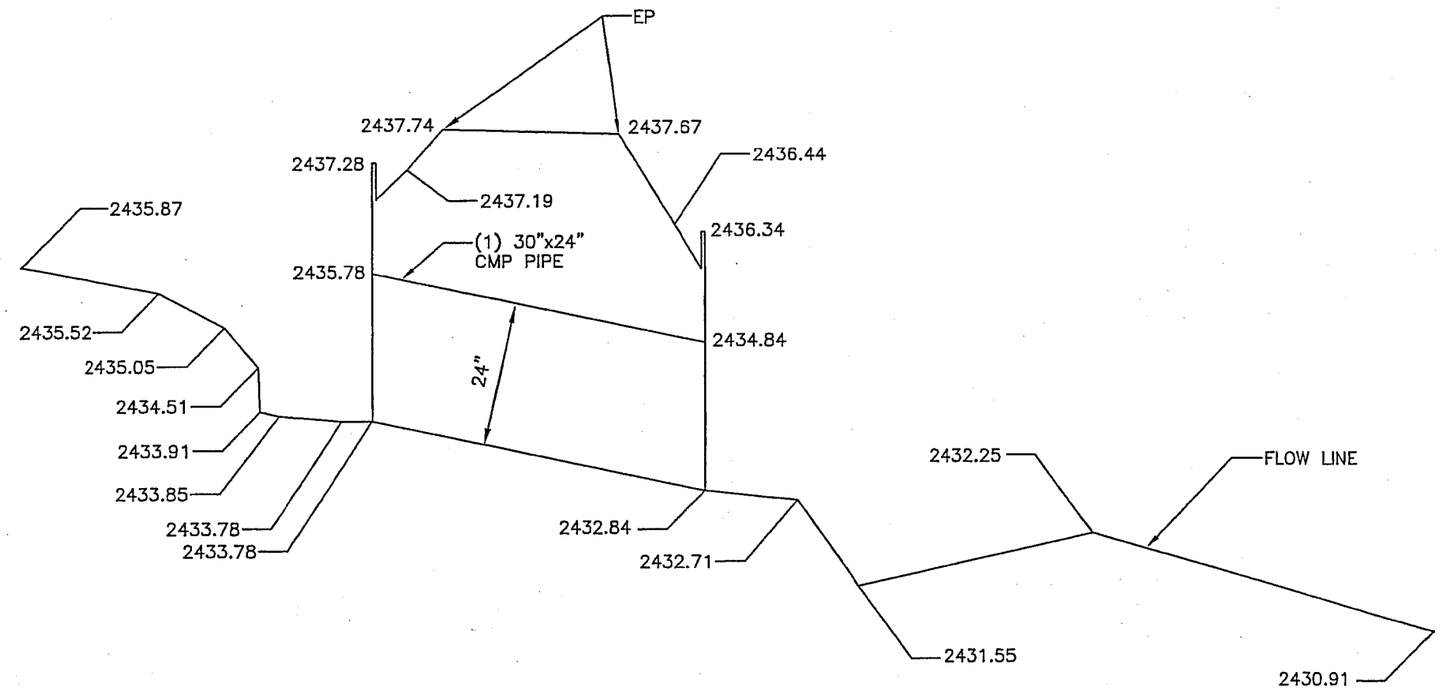

CULVERT PROFILE
NUMBER 21

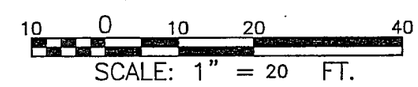

SCALE HOR: 1"=20'
SCALE VER: 1"=2'

LEGEND:

EP - EDGE OF PAVEMENT
N - NORTHING (FOR GENERAL LOCATION PURPOSES ONLY)
E - EASTING (FOR GENERAL LOCATION PURPOSES ONLY)

THIS RECORD DRAWING WAS PREPARED UNDER MY DIRECT SUPERVISION FOR THE SOLE PURPOSE OF HYDRAULIC MODELING. DATUM=NAVD88

REGISTERED LAND SURVEYOR
CERTIFICATE NO.
35980
ROLAND
MICHAUD
Date Signed 06/02/05
ARIZONA, U.S.A.

CEI Consultant Engineering, Inc.

CONSULTANT ENGINEERING, INC.
3404 W. CHERYL DRIVE
PHOENIX, ARIZONA
602-866-5090

RIO VERDE ADMP FLOOD PLAIN DELINEATION
RECORD DRAWING FOR STRUCTURE AT
CULVERT NUMBER 21

DATE	04-29-05
SCALE	SEE PLAN
DRAWN BY	NZ
APPROVED BY	RM
C.E.I. JOB #	5050-332
SHEET	

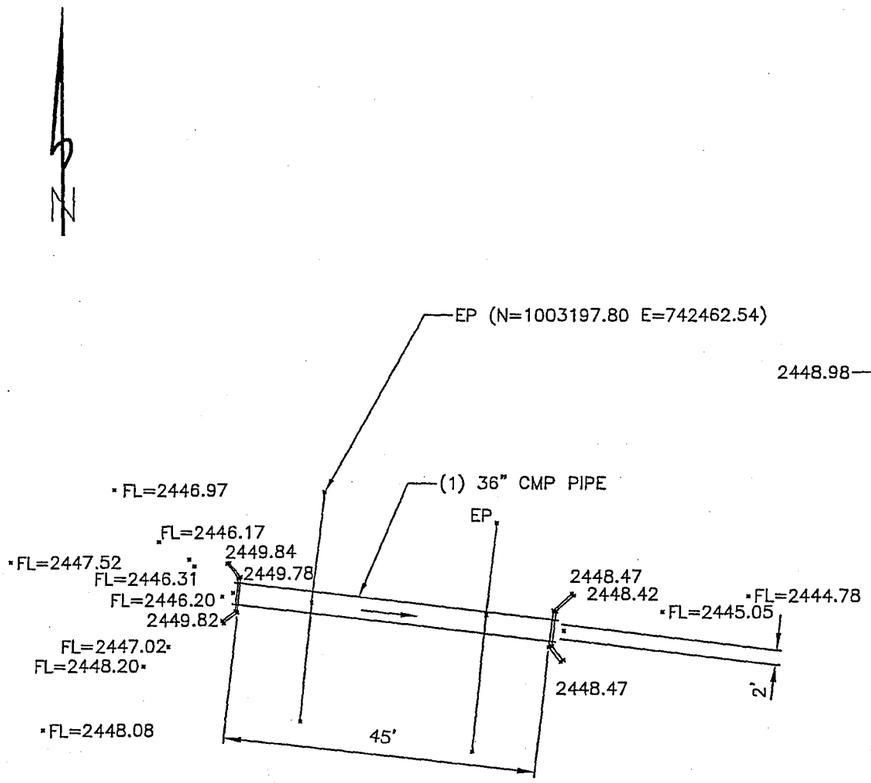

CULVERT PLAN
NUMBER 22

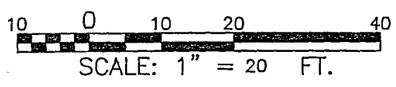

SCALE HOR: 1"=20'

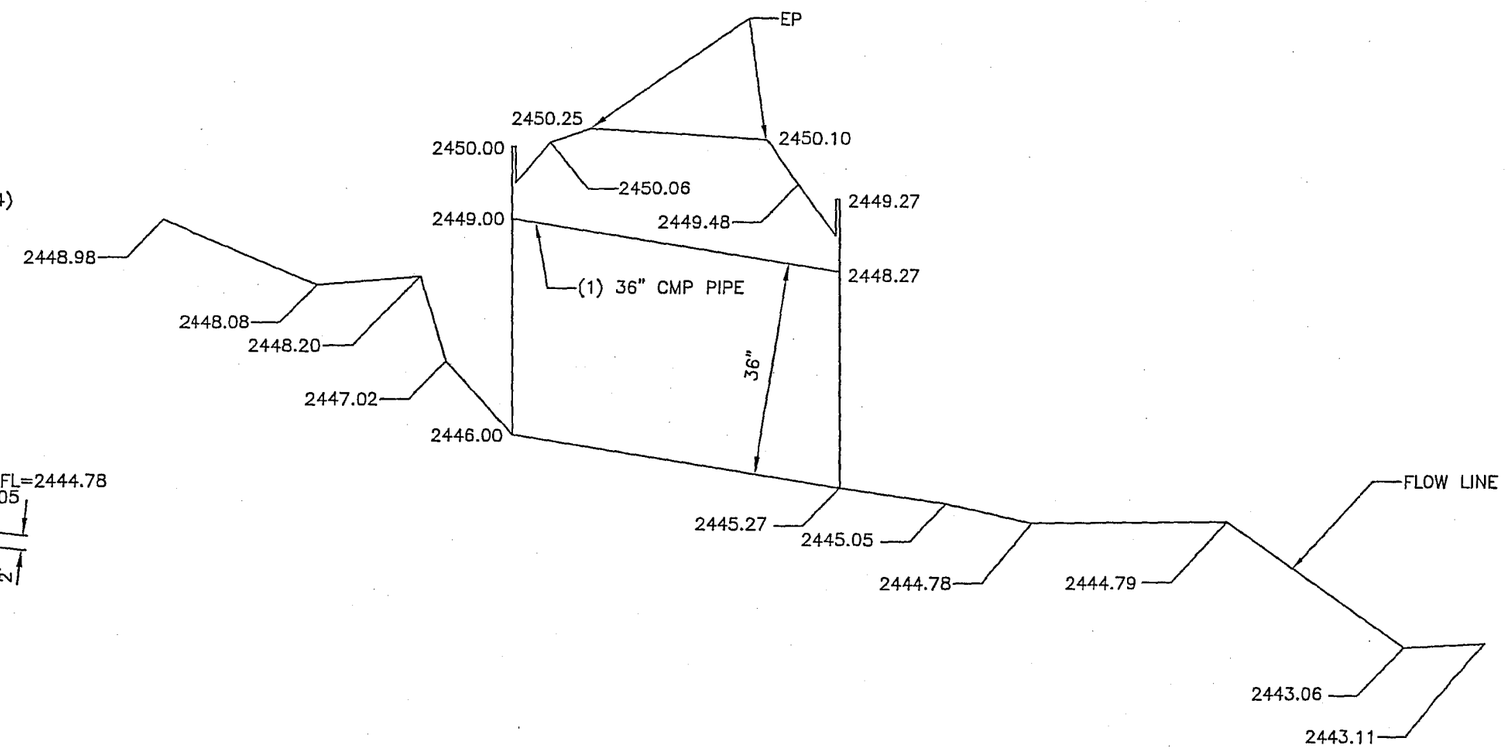

CULVERT PROFILE
NUMBER 22

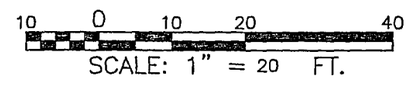

SCALE HOR: 1"=20'
SCALE VER: 1"=2'

LEGEND:

EP - EDGE OF PAVEMENT
N - NORTHING (FOR GENERAL LOCATION PURPOSES ONLY)
E - EASTING (FOR GENERAL LOCATION PURPOSES ONLY)

THIS RECORD DRAWING WAS PREPARED UNDER MY DIRECT SUPERVISION FOR THE SOLE PURPOSE OF HYDRAULIC MODELING. DATUM=NAVD88

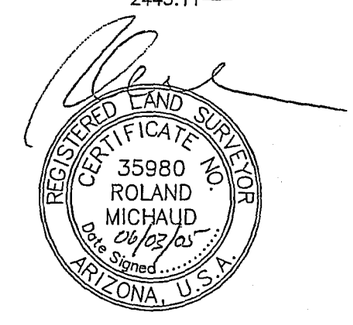

Consultant Engineering, Inc.

CONSULTANT ENGINEERING, INC.
3404 W. CHERYL DRIVE
PHOENIX, ARIZONA
602-866-5090

RIO VERDE ADMP FLOOD PLAIN DELINEATION
RECORD DRAWING FOR STRUCTURE AT
CULVERT NUMBER 22

DATE	04-29-05
SCALE	SEE PLAN
DRAWN BY	NZ
APPROVED BY	RM
C.E.I. JOB #	5050-332
SHEET	

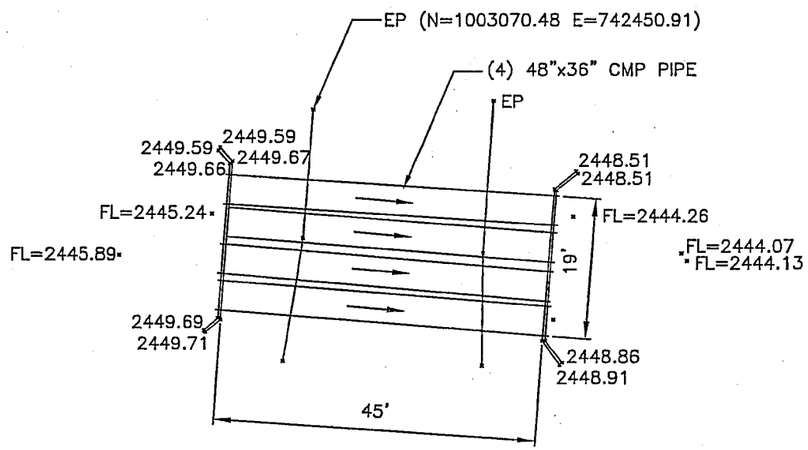

CULVERT PLAN
NUMBER 23

10 0 10 20 40
SCALE: 1" = 20 FT.
SCALE HOR: 1"=20'

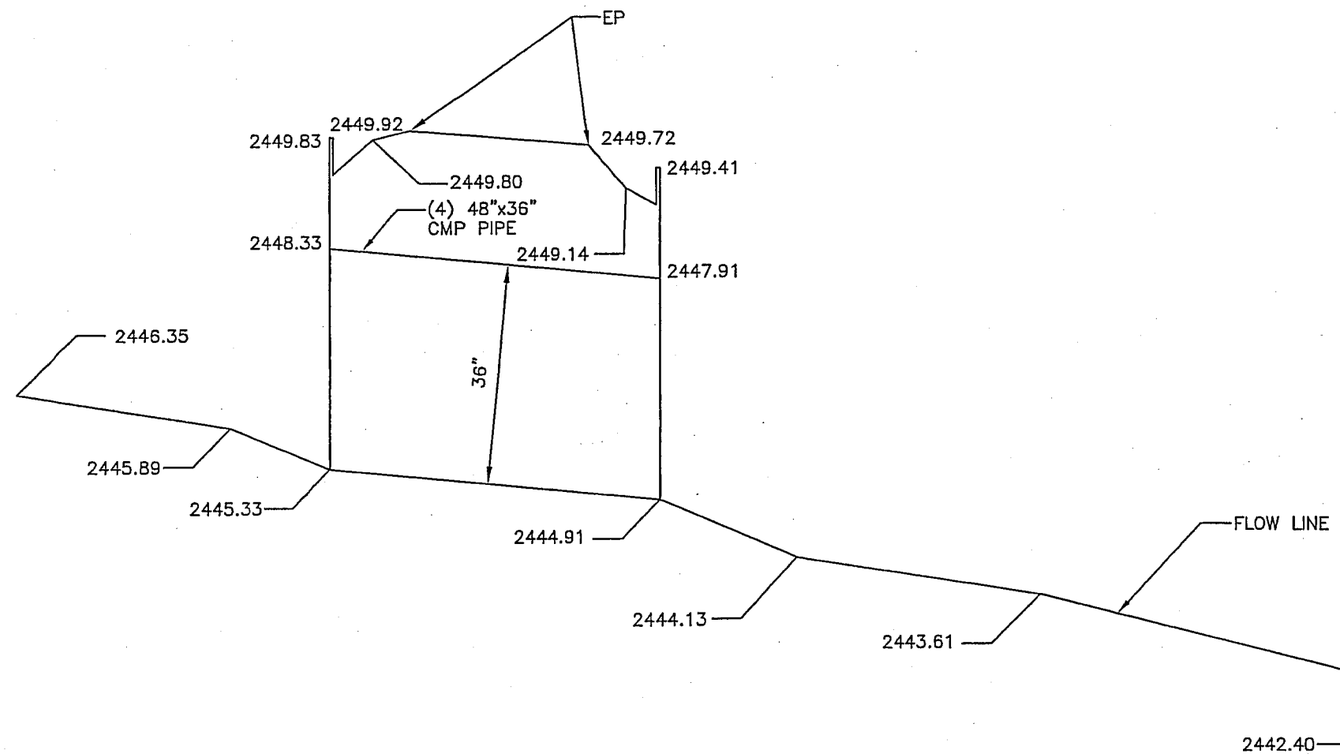

CULVERT PROFILE
NUMBER 23

10 0 10 20 40
SCALE: 1" = 20 FT.
SCALE HOR: 1"=20'
SCALE VER: 1"=2'

LEGEND:

EP - EDGE OF PAVEMENT
N - NORTHING (FOR GENERAL LOCATION PURPOSES ONLY)
E - EASTING (FOR GENERAL LOCATION PURPOSES ONLY)

THIS RECORD DRAWING WAS PREPARED UNDER MY DIRECT SUPERVISION FOR THE SOLE PURPOSE OF HYDRAULIC MODELING. DATUM=NAVD88

REGISTERED LAND SURVEYOR
CERTIFICATE NO.
35980
ROLAND
MICHAUD
Date Signed 06/02/05
ARIZONA, U.S.A.

Consultant Engineering, Inc.

CONSULTANT ENGINEERING, INC.
3404 W. CHERYL DRIVE
PHOENIX, ARIZONA
602-866-5090

RIO VERDE ADMP FLOOD PLAIN DELINEATION
RECORD DRAWING FOR STRUCTURE AT
CULVERT NUMBER 23

DATE	04-29-05
SCALE	SEE PLAN
DRAWN BY	NZ
APPROVED BY	RM
C.E.I. JOB #	5050-332
SHEET	

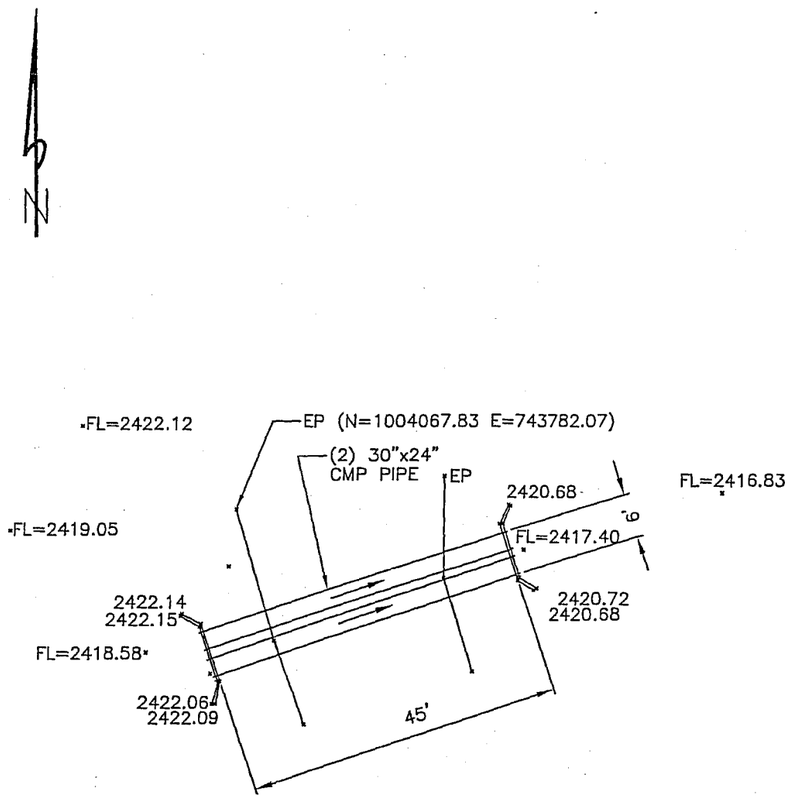

CULVERT PLAN
NUMBER 24

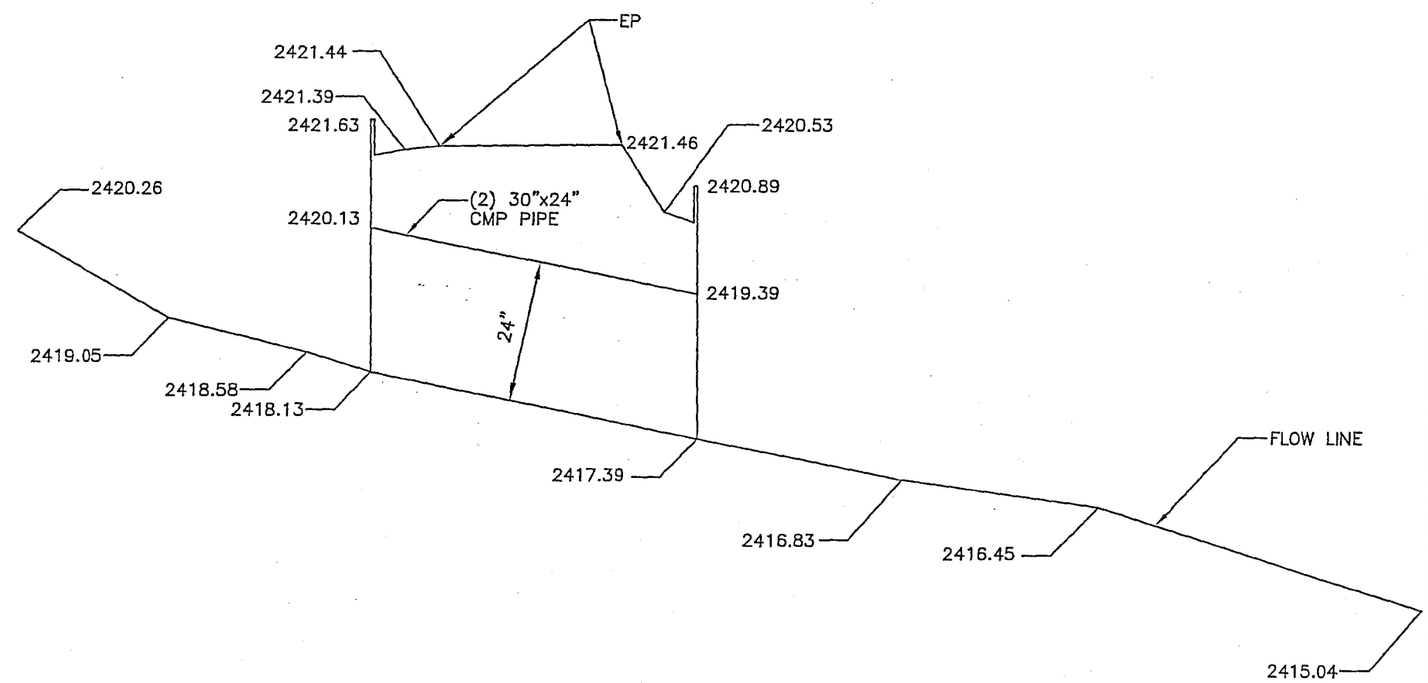

CULVERT PROFILE
NUMBER 24

10 0 10 20 40
SCALE: 1" = 20 FT.
SCALE HOR: 1"=20'

10 0 10 20 40
SCALE: 1" = 20 FT.
SCALE HOR: 1"=20'
SCALE VER: 1"=2'

LEGEND:

EP - EDGE OF PAVEMENT
N - NORTHING (FOR GENERAL LOCATION PURPOSES ONLY)
E - EASTING (FOR GENERAL LOCATION PURPOSES ONLY)

THIS RECORD DRAWING WAS PREPARED UNDER MY DIRECT SUPERVISION FOR THE SOLE PURPOSE OF HYDRAULIC MODELING. DATUM=NAVD88

REGISTERED LAND SURVEYOR
CERTIFICATE NO.
35980
ROLAND
MICHAUD
Date Signed 06/02/05
ARIZONA, U.S.A.

CEI Consultant Engineering, Inc.

CONSULTANT ENGINEERING, INC.
3404 W. CHERYL DRIVE
PHOENIX, ARIZONA
602-866-5090

RIO VERDE ADMP FLOOD PLAIN DELINEATION
RECORD DRAWING FOR STRUCTURE AT
CULVERT NUMBER 24

DATE	04-29-05
SCALE	SEE PLAN
DRAWN BY	NZ
APPROVED BY	RM
C.E.I. JOB #	5050-332
SHEET	

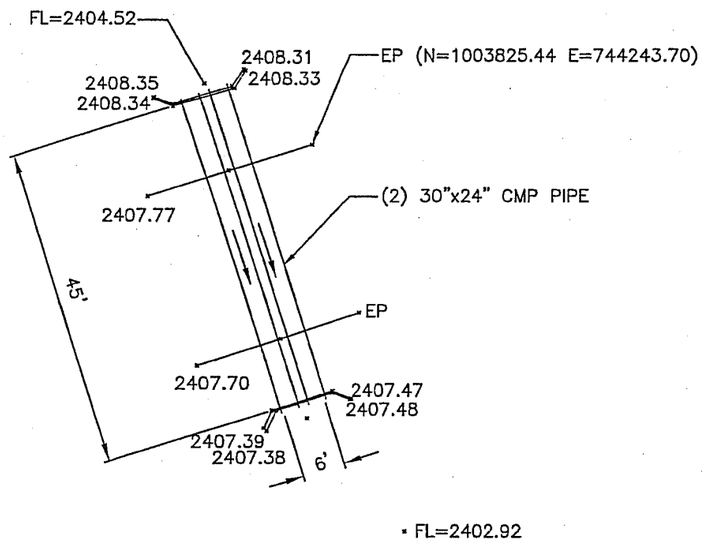

CULVERT PLAN
NUMBER 25

10 0 10 20 40
SCALE: 1" = 20 FT.
SCALE HOR: 1"=20'

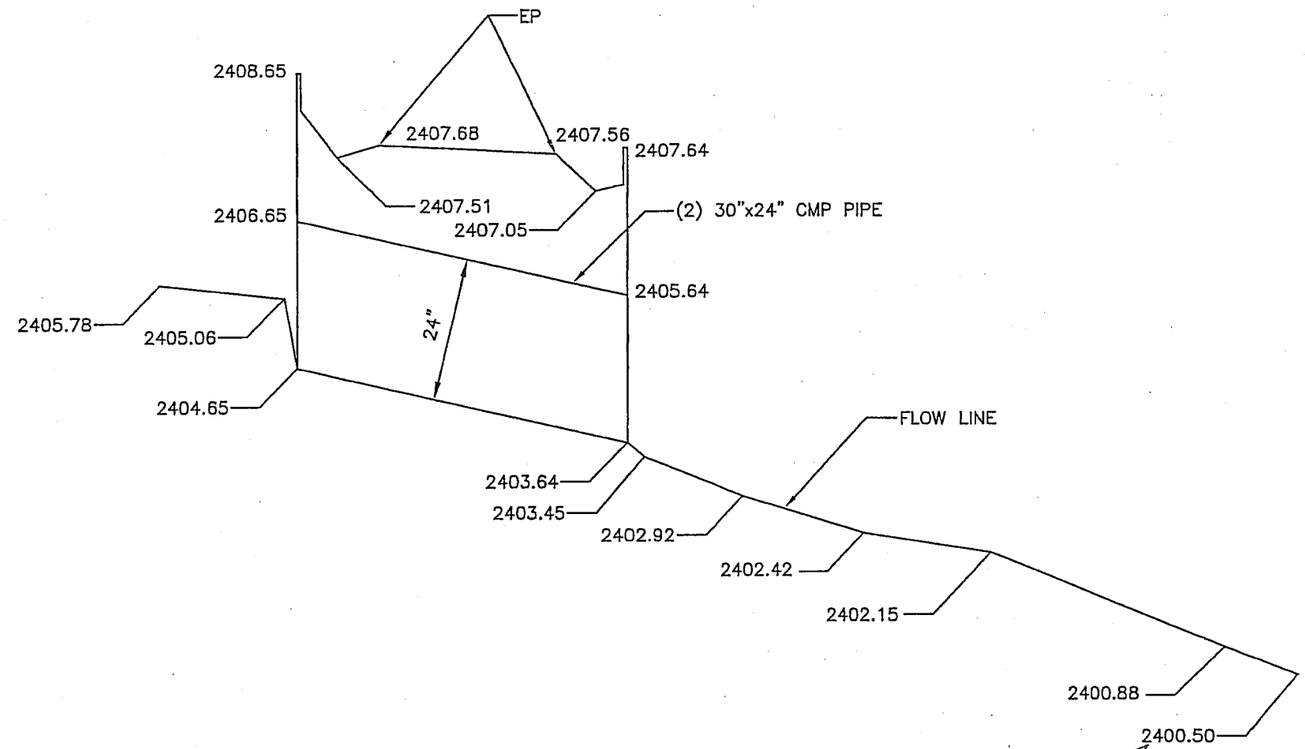

CULVERT PROFILE
NUMBER 25

10 0 10 20 40
SCALE: 1" = 20 FT.
SCALE HOR: 1"=20'
SCALE VER: 1"=2'

LEGEND:

EP - EDGE OF PAVEMENT
N - NORTHING (FOR GENERAL LOCATION PURPOSES ONLY)
E - EASTING (FOR GENERAL LOCATION PURPOSES ONLY)

THIS RECORD DRAWING WAS PREPARED UNDER MY DIRECT SUPERVISION FOR THE SOLE PURPOSE OF HYDRAULIC MODELING. DATUM=NAVD88

REGISTERED LAND SURVEYOR
CERTIFICATE NO.
35980
ROLAND
MICHAUD
Date Signed 06/02/05
ARIZONA, U.S.A.

CEI Consultant Engineering, Inc.

CONSULTANT ENGINEERING, INC.
3404 W. CHERYL DRIVE
PHOENIX, ARIZONA
602-866-5090

RIO VERDE ADMP FLOOD PLAIN DELINEATION
RECORD DRAWING FOR STRUCTURE AT
CULVERT NUMBER 25

DATE	04-29-05
SCALE	SEE PLAN
DRAWN BY	NZ
APPROVED BY	RM
C.E.I. JOB #	5050-332
SHEET	

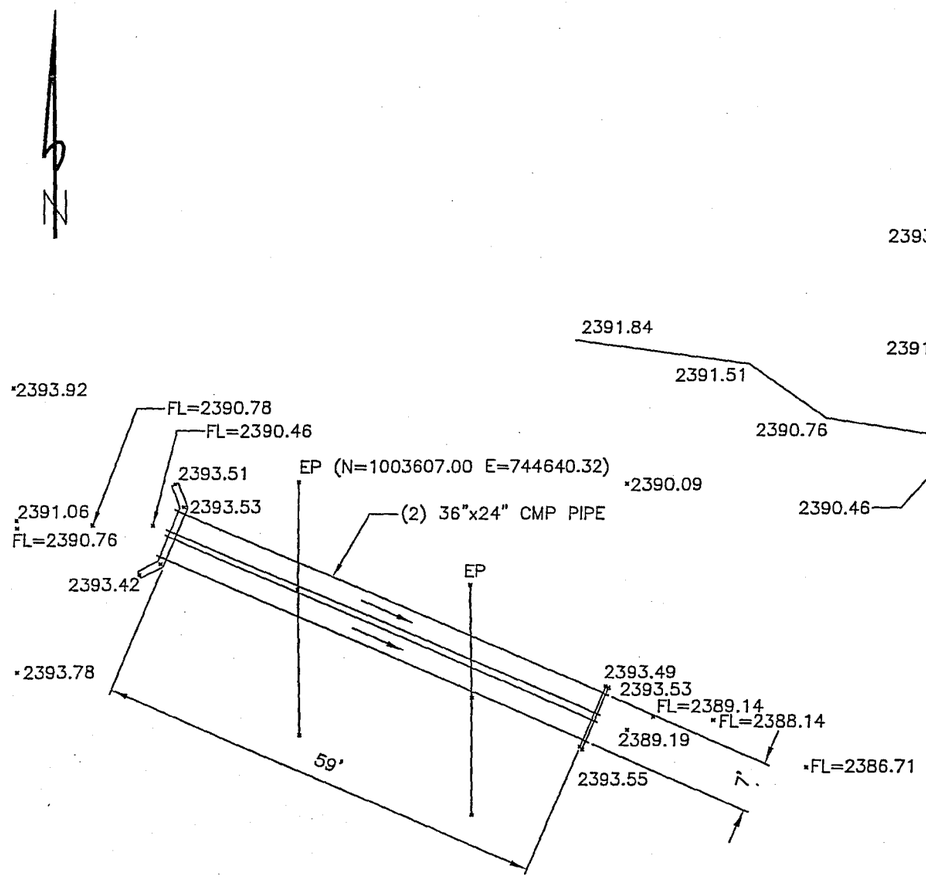

CULVERT PLAN
NUMBER 26

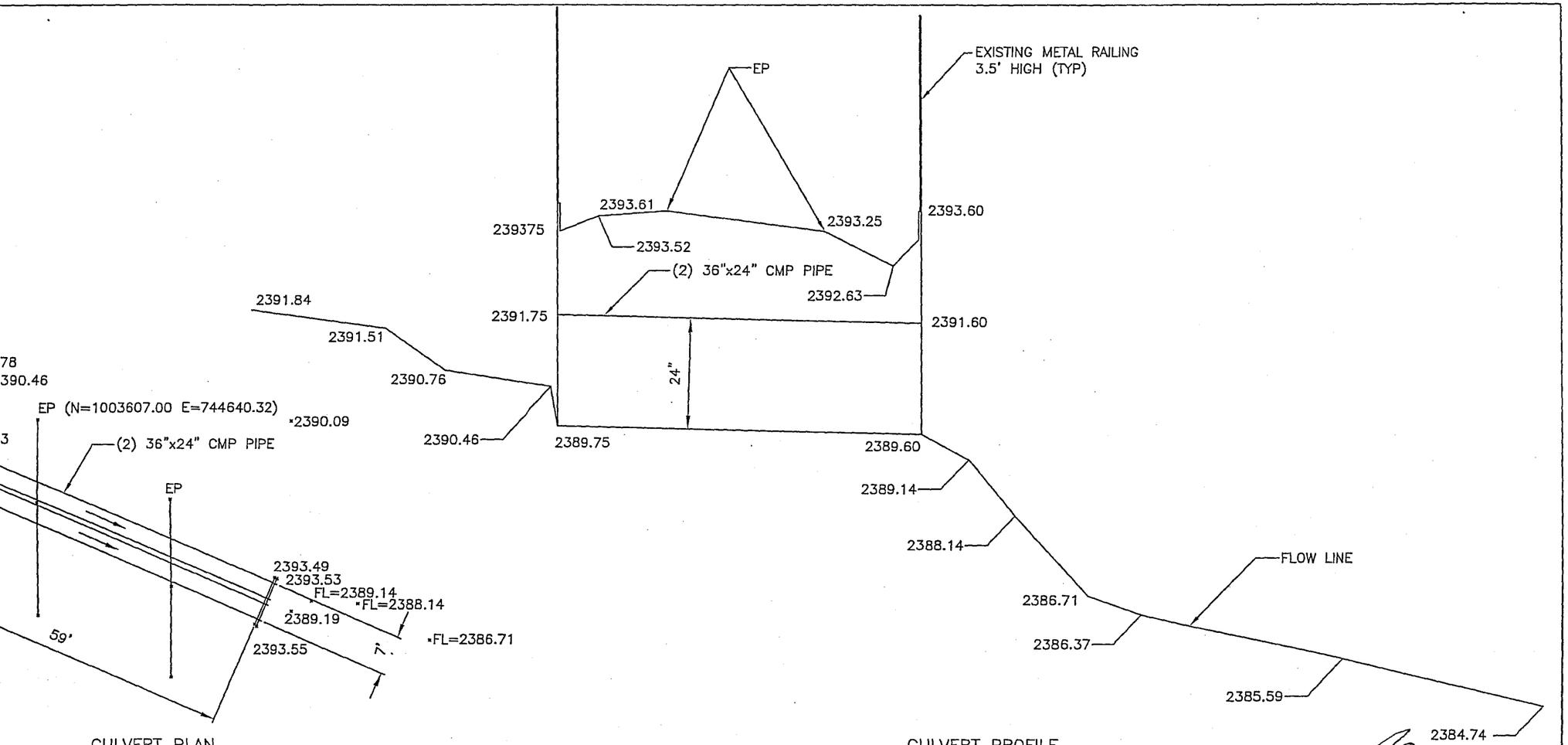

CULVERT PROFILE
NUMBER 26

10 0 10 20 40
SCALE: 1" = 20 FT.
SCALE HOR: 1"=20'

10 0 10 20 40
SCALE: 1" = 20 FT.
SCALE HOR: 1"=20'
SCALE VER: 1"=2'

LEGEND:

EP - EDGE OF PAVEMENT
N - NORTHING (FOR GENERAL LOCATION PURPOSES ONLY)
E - EASTING (FOR GENERAL LOCATION PURPOSES ONLY)

THIS RECORD DRAWING WAS PREPARED UNDER MY DIRECT SUPERVISION FOR THE SOLE PURPOSE OF HYDRAULIC MODELING. DATUM=NAVD88

REGISTERED LAND SURVEYOR
CERTIFICATE NO.
35980
ROLAND
MICHAUD
Date Signed 06/02/05
ARIZONA, U.S.A.

Consultant Engineering, Inc.

CONSULTANT ENGINEERING, INC.
3404 W. CHERYL DRIVE
PHOENIX, ARIZONA
602-866-5090

RIO VERDE ADMP FLOOD PLAIN DELINEATION
RECORD DRAWING FOR STRUCTURE AT
CULVERT NUMBER 26

DATE	04-29-05
SCALE	SEE PLAN
DRAWN BY	NZ
APPROVED BY	RM
C.E.I. JOB #	5050-332
SHEET	

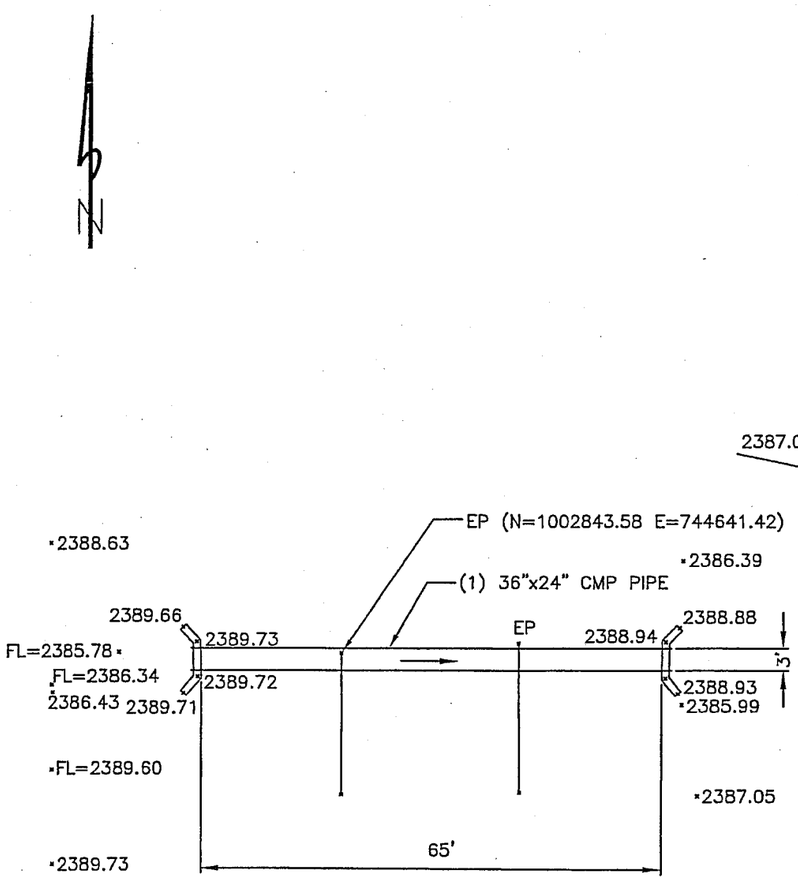

CULVERT PLAN
NUMBER 27

SCALE HOR: 1"=20'

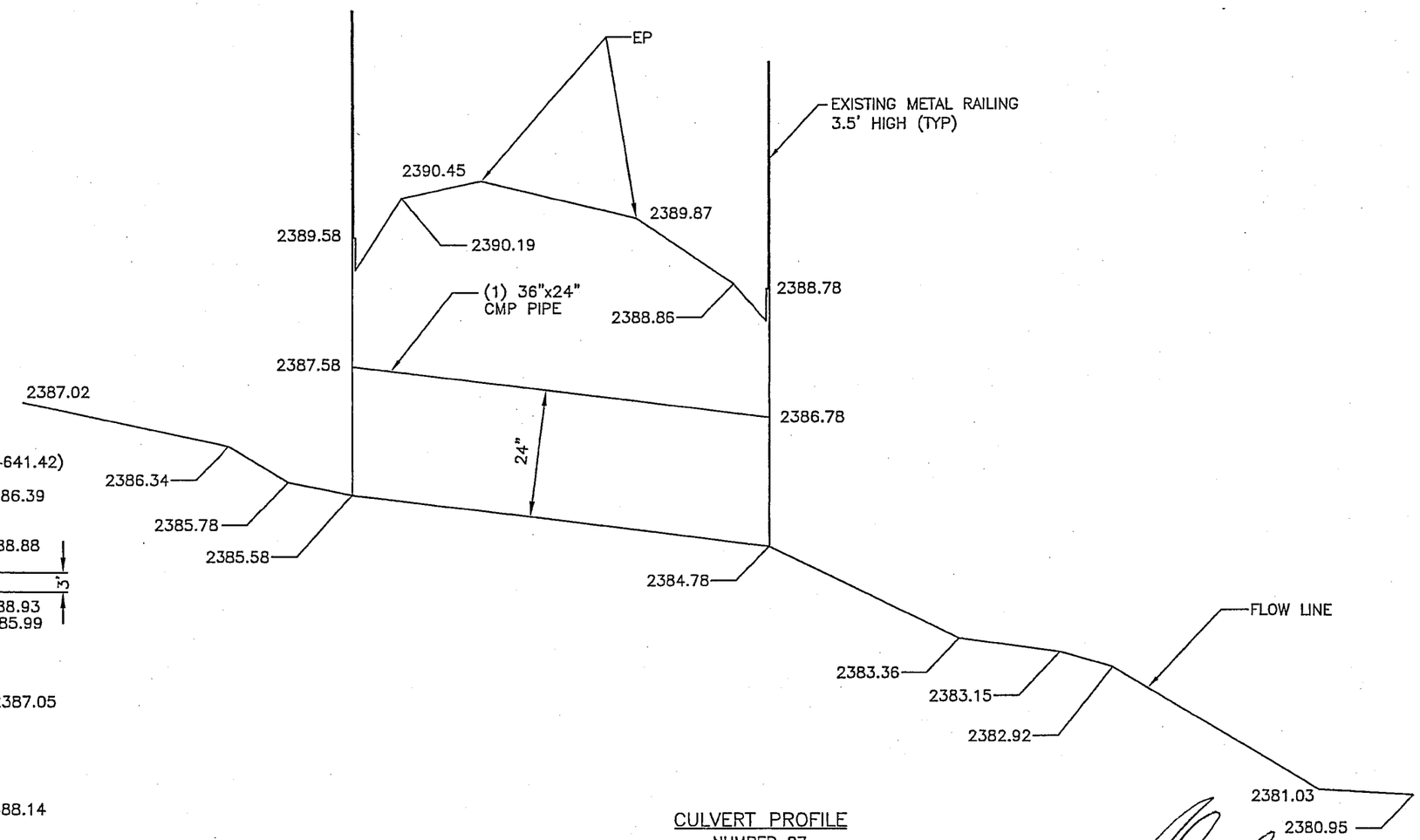

CULVERT PROFILE
NUMBER 27

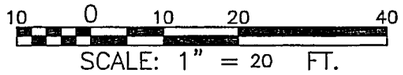

SCALE HOR: 1"=20'
SCALE VER: 1"=2'

LEGEND:

EP - EDGE OF PAVEMENT
N - NORTHING (FOR GENERAL LOCATION PURPOSES ONLY)
E - EASTING (FOR GENERAL LOCATION PURPOSES ONLY)

THIS RECORD DRAWING WAS PREPARED UNDER MY DIRECT SUPERVISION FOR THE SOLE PURPOSE OF HYDRAULIC MODELING. DATUM=NAVD88

REGISTERED LAND SURVEYOR
CERTIFICATE NO.
35980
ROLAND
MICHAUD
06/02/05
Date Signed
ARIZONA, U.S.A.

CEI Consultant Engineering, Inc.

CONSULTANT ENGINEERING, INC.
3404 W. CHERYL DRIVE
PHOENIX, ARIZONA
602-866-5090

RIO VERDE ADMP FLOOD PLAIN DELINEATION
RECORD DRAWING FOR STRUCTURE AT
CULVERT NUMBER 27

DATE	04-29-05
SCALE	SEE PLAN
DRAWN BY	NZ
APPROVED BY	RM
C.E.I. JOB #	5050-332
SHEET	

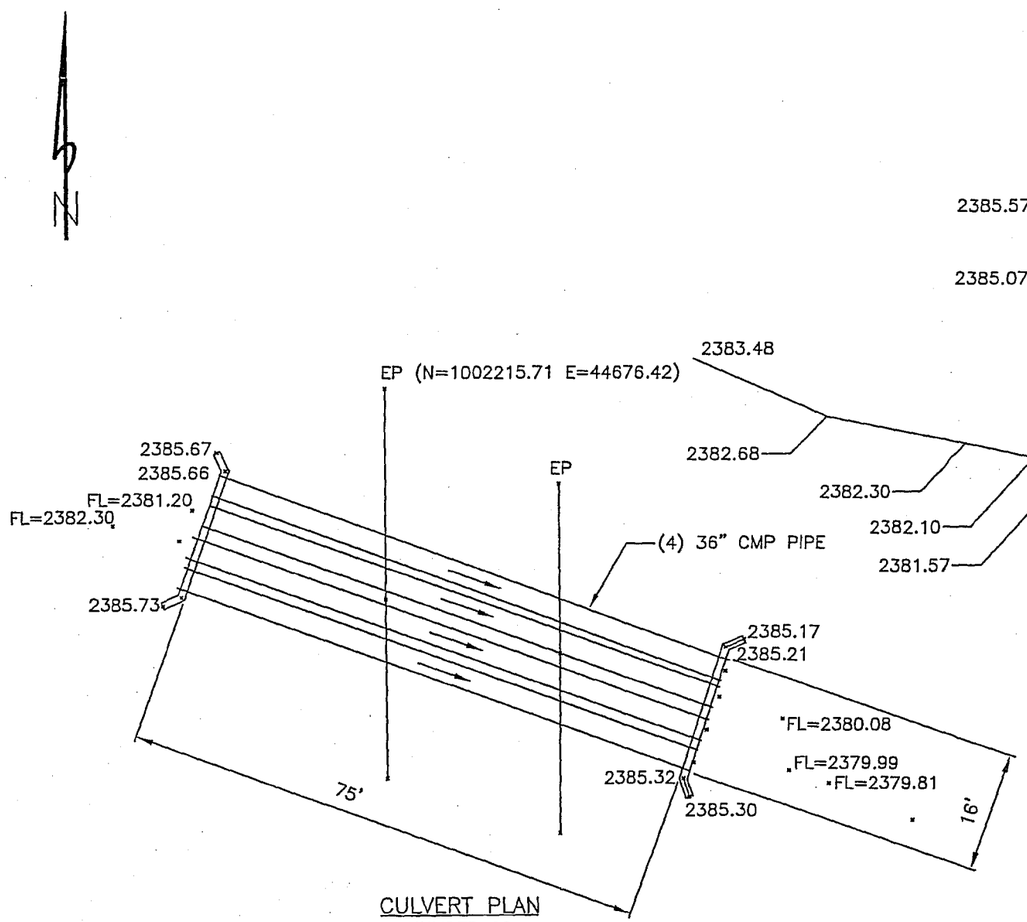

CULVERT PLAN
NUMBER 28

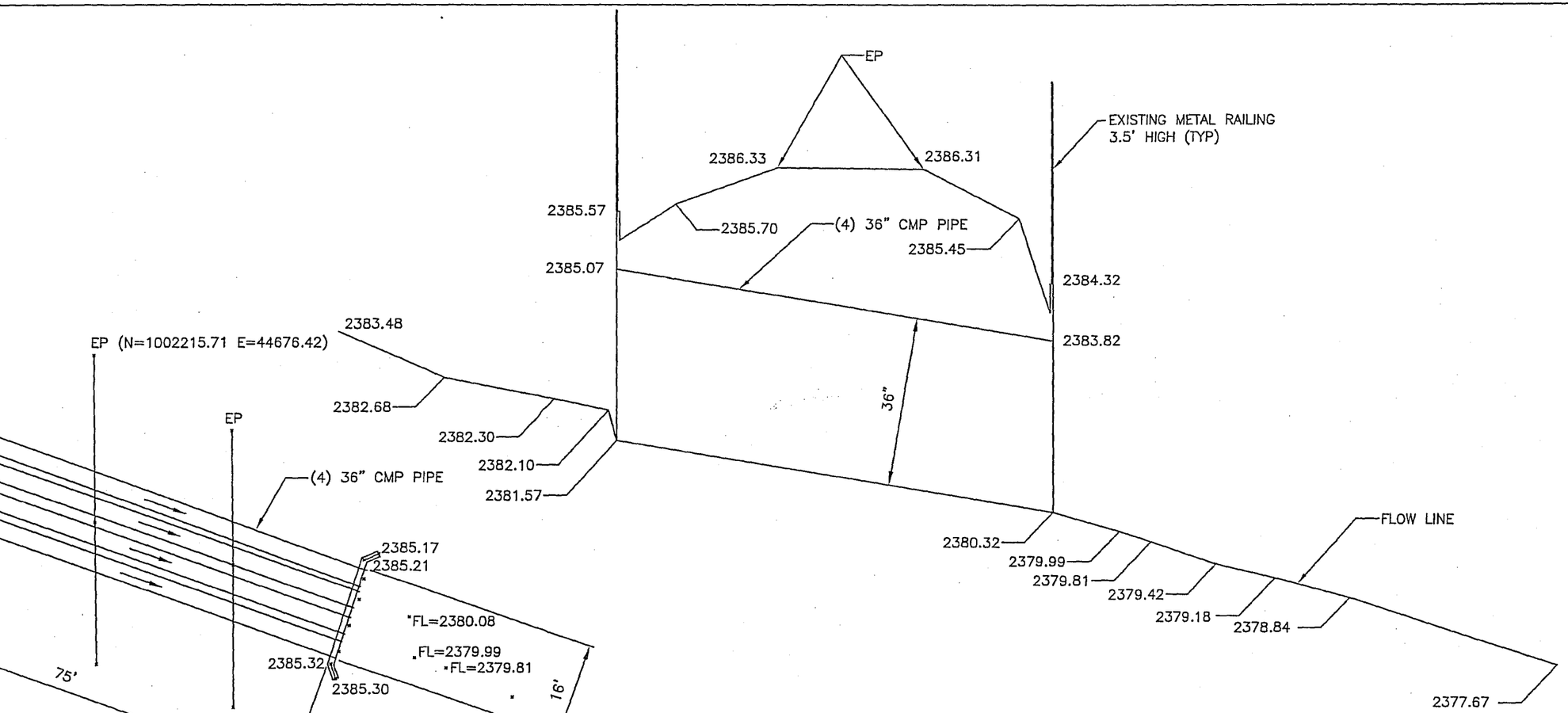

CULVERT PROFILE
NUMBER 28

10 0 10 20 40
SCALE: 1" = 20 FT.
SCALE HOR: 1"=20'

10 0 10 20 40
SCALE: 1" = 20 FT.
SCALE HOR: 1"=20'
SCALE VER: 1"=2'

LEGEND:

EP - EDGE OF PAVEMENT
N - NORTHING (FOR GENERAL LOCATION PURPOSES ONLY)
E - EASTING (FOR GENERAL LOCATION PURPOSES ONLY)

THIS RECORD DRAWING WAS PREPARED UNDER MY DIRECT SUPERVISION FOR THE SOLE PURPOSE OF HYDRAULIC MODELING. DATUM=NAVD88

REGISTERED LAND SURVEYOR
CERTIFICATE NO.
35980
ROLAND
MICHAUD
Date Signed 06/02/05
ARIZONA, U.S.A.

Consultant Engineering, Inc.

CONSULTANT ENGINEERING, INC.
3404 W. CHERYL DRIVE
PHOENIX, ARIZONA
602-866-5090

RIO VERDE ADMP FLOOD PLAIN DELINEATION
RECORD DRAWING FOR STRUCTURE AT
CULVERT NUMBER 28

DATE	04-29-05
SCALE	SEE PLAN
DRAWN BY	NZ
APPROVED BY	RM
C.E.I. JOB #	5050-332
SHEET	

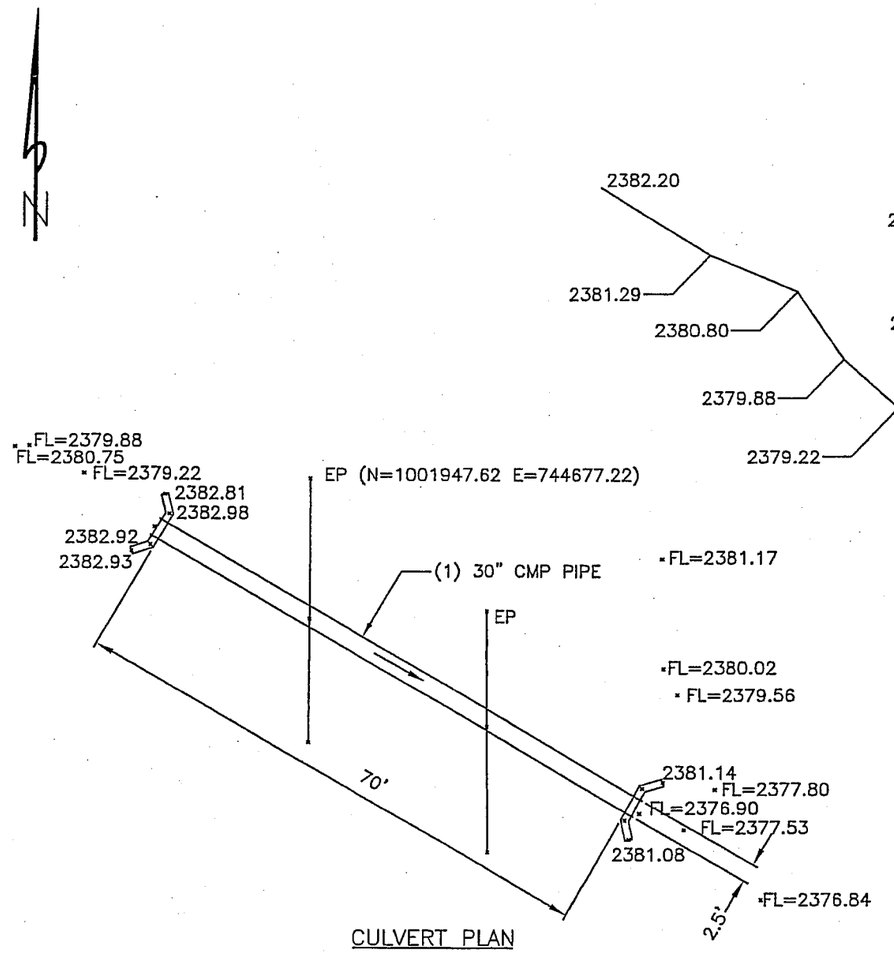

CULVERT PLAN
NUMBER 29

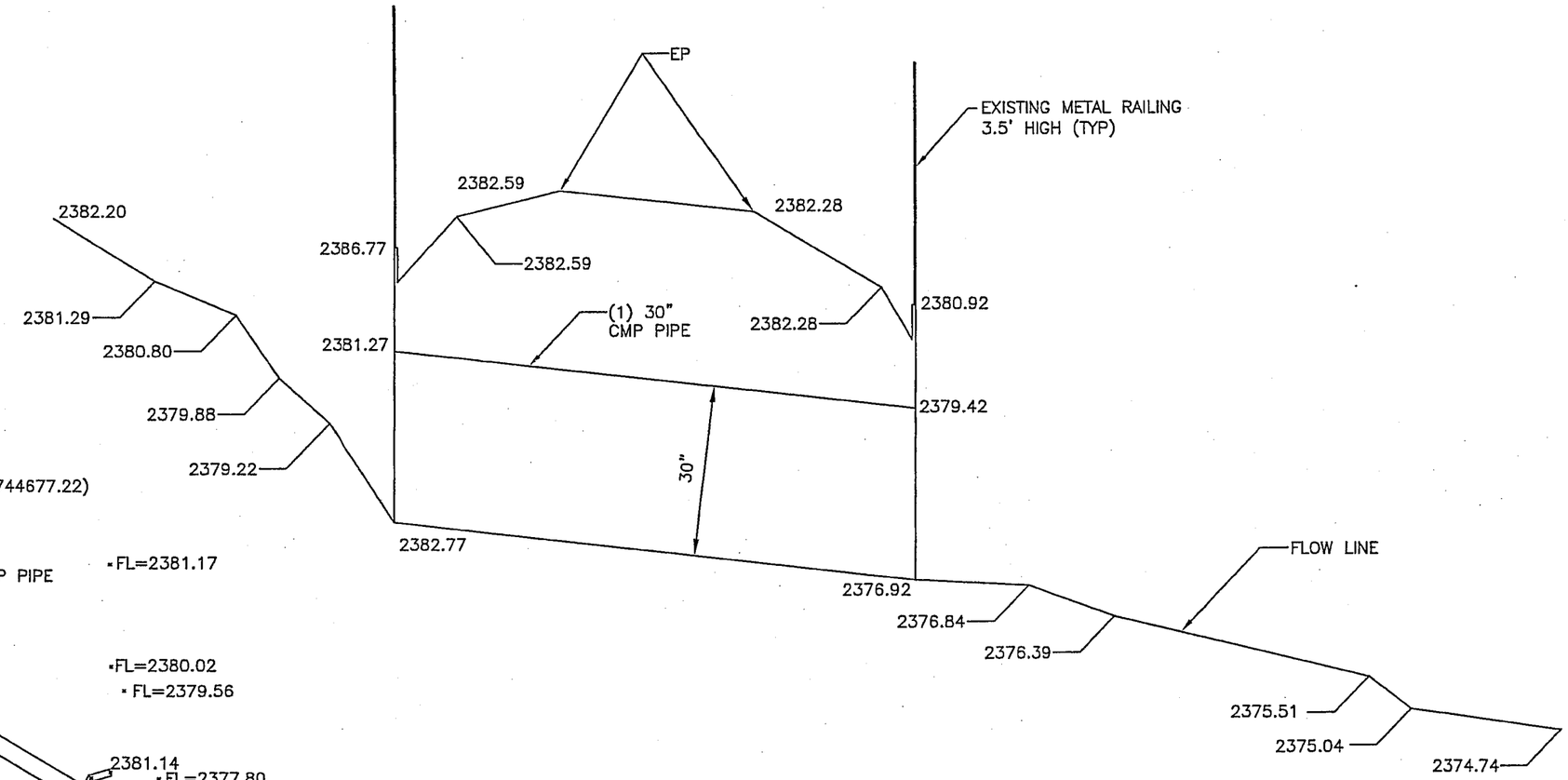

CULVERT PROFILE
NUMBER 29

10 0 10 20 40
SCALE: 1" = 20 FT.
SCALE HOR: 1"=20'

10 0 10 20 40
SCALE: 1" = 20 FT.
SCALE HOR: 1"=20'
SCALE VER: 1"=2'

LEGEND:

EP - EDGE OF PAVEMENT
N - NORTHING (FOR GENERAL LOCATION PURPOSES ONLY)
E - EASTING (FOR GENERAL LOCATION PURPOSES ONLY)

THIS RECORD DRAWING WAS PREPARED UNDER MY DIRECT SUPERVISION FOR THE SOLE PURPOSE OF HYDRAULIC MODELING. DATUM=NAVD88

REGISTERED LAND SURVEYOR
CERTIFICATE NO.
35980
ROLAND
MICHAUD
Date Signed 06/02/05
ARIZONA, U.S.A.

CEI Consultant Engineering, Inc.

CONSULTANT ENGINEERING, INC.
3404 W. CHERYL DRIVE
PHOENIX, ARIZONA
602-866-5090

RIO VERDE ADMP FLOOD PLAIN DELINEATION
RECORD DRAWING FOR STRUCTURE AT
CULVERT NUMBER 29

DATE	04-29-05
SCALE	SEE PLAN
DRAWN BY	NZ
APPROVED BY	RM
C.E.I. JOB #	5050-332
SHEET	

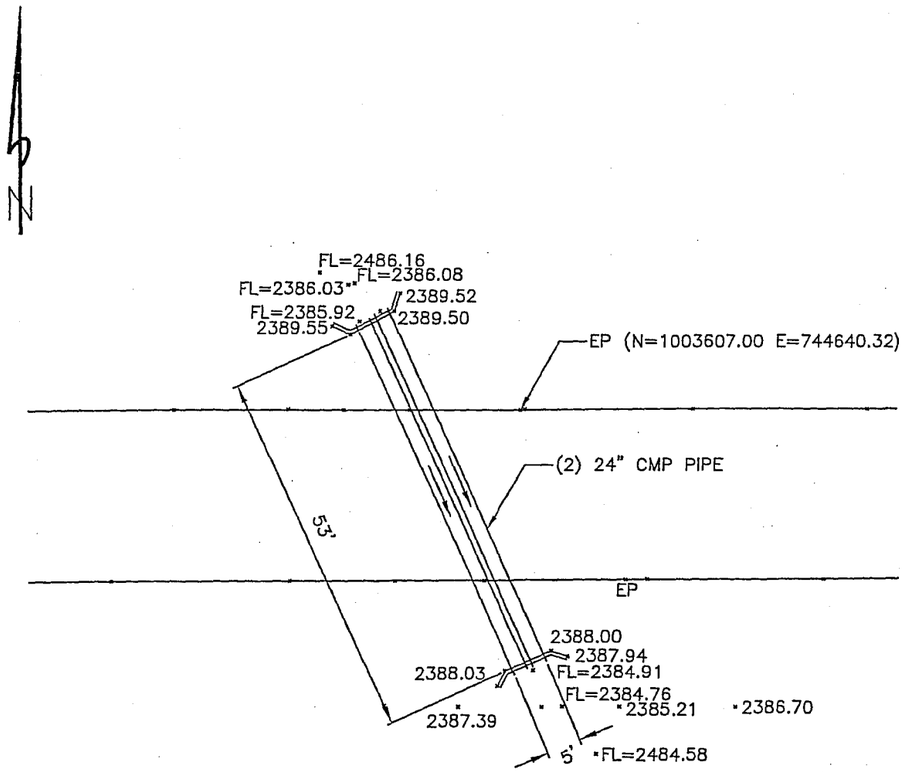

CULVERT PLAN
NUMBER 30

10 0 10 20 40
SCALE: 1" = 20 FT.
SCALE HOR: 1"=20'

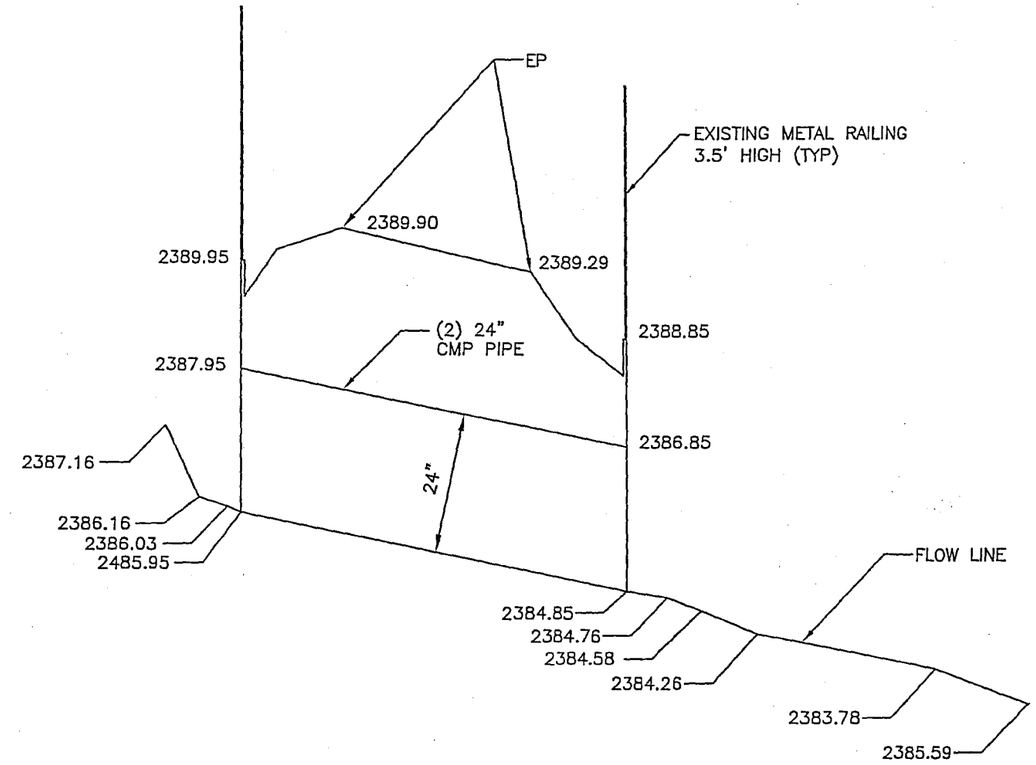

CULVERT PROFILE
NUMBER 30

10 0 10 20 40
SCALE: 1" = 20 FT.
SCALE HOR: 1"=20'
SCALE VER: 1"=2'

LEGEND:

EP - EDGE OF PAVEMENT
N - NORTHING (FOR GENERAL LOCATION PURPOSES ONLY)
E - EASTING (FOR GENERAL LOCATION PURPOSES ONLY)

THIS RECORD DRAWING WAS PREPARED UNDER MY DIRECT SUPERVISION FOR THE SOLE PURPOSE OF HYDRAULIC MODELING. DATUM=NAVD88

REGISTERED LAND SURVEYOR
CERTIFICATE NO.
35980
ROLAND
MICHAUD
Date Signed 06/02/05
ARIZONA, U.S.A.

CEI Consultant Engineering, Inc.

CONSULTANT ENGINEERING, INC.
3404 W. CHERYL DRIVE
PHOENIX, ARIZONA
602-866-5090

RIO VERDE ADMP FLOOD PLAIN DELINEATION
RECORD DRAWING FOR STRUCTURE AT
CULVERT NUMBER 30

DATE	04-29-05
SCALE	SEE PLAN
DRAWN BY	NZ
APPROVED BY	RM
C.E.I. JOB #	5050-332
SHEET	

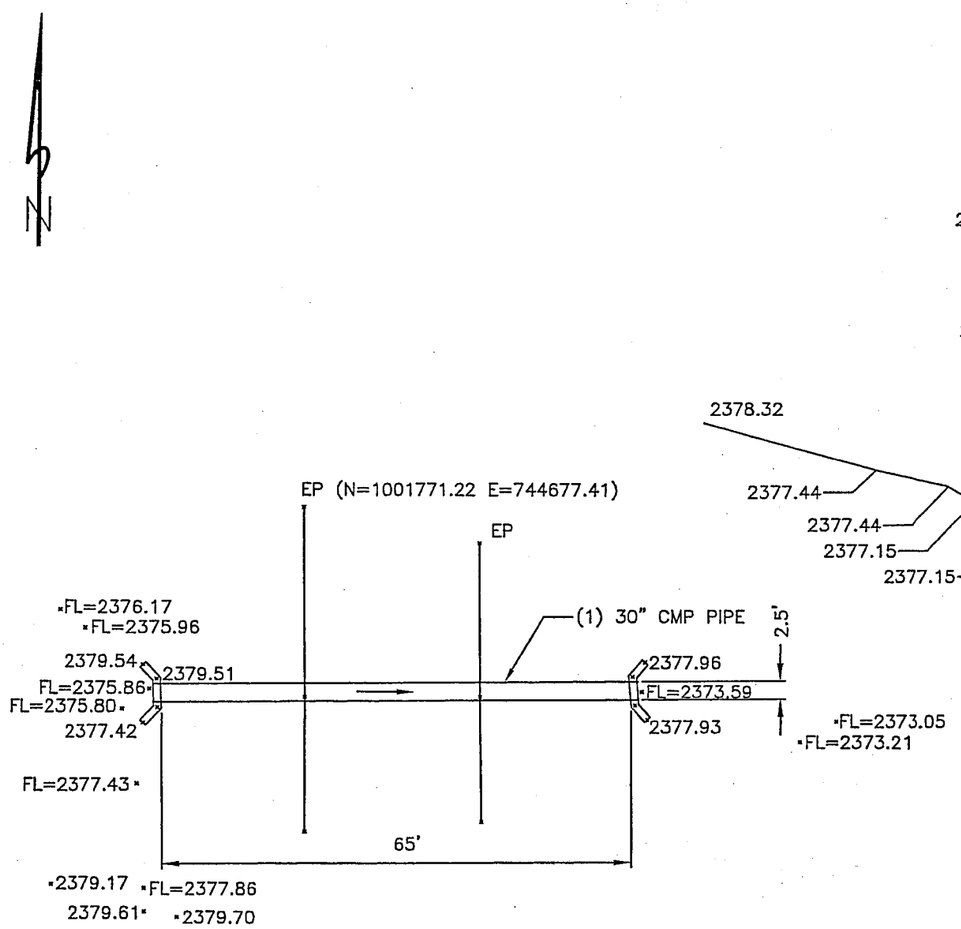

CULVERT PLAN
NUMBER 31

10 0 10 20 40
SCALE: 1" = 20 FT.
SCALE HOR: 1"=20'

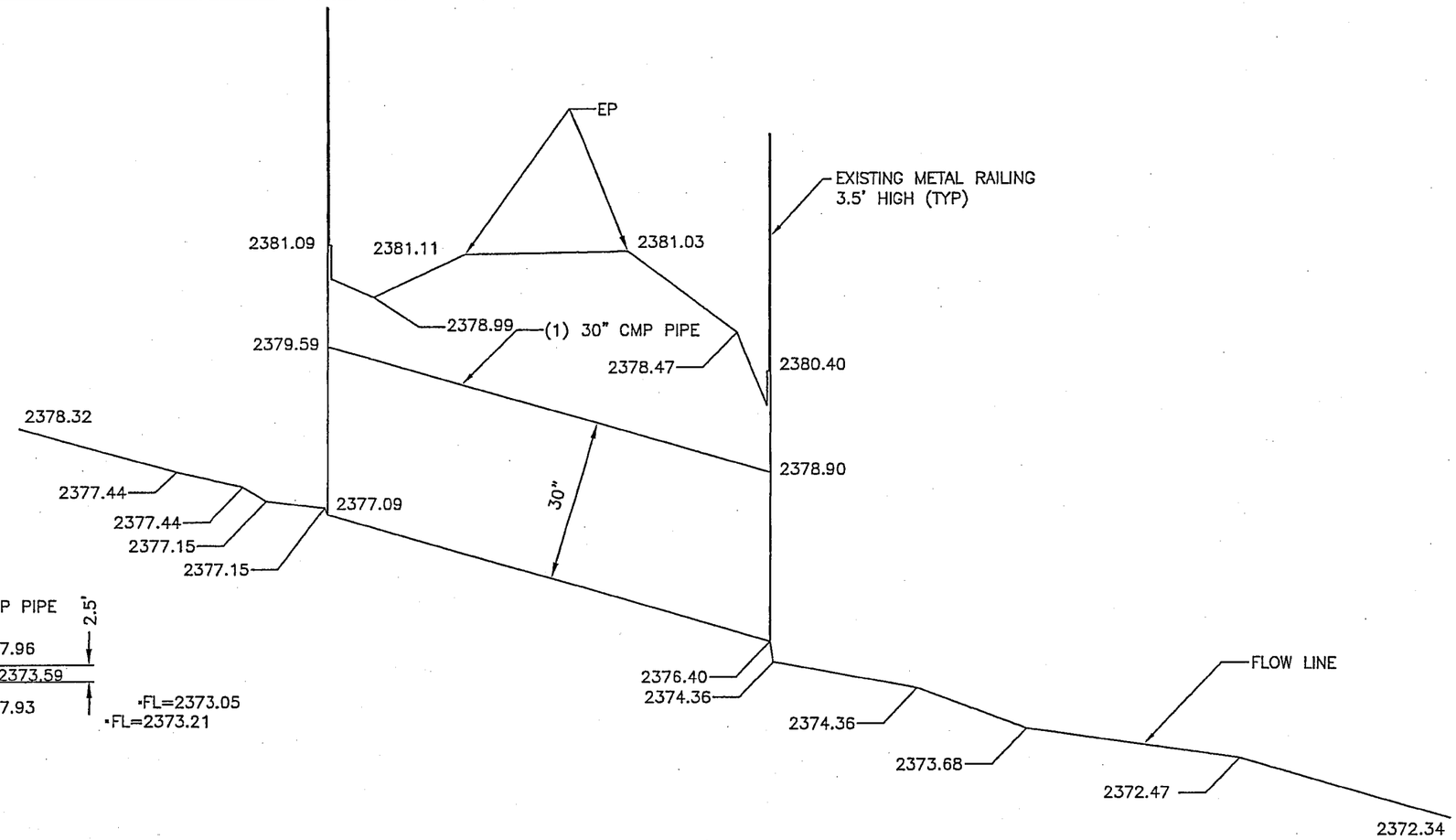

CULVERT PROFILE
NUMBER 31

10 0 10 20 40
SCALE: 1" = 20 FT.
SCALE HOR: 1"=20'
SCALE VER: 1"=2'

LEGEND:

EP - EDGE OF PAVEMENT
N - NORTHING (FOR GENERAL LOCATION PURPOSES ONLY)
E - EASTING (FOR GENERAL LOCATION PURPOSES ONLY)

THIS RECORD DRAWING WAS PREPARED UNDER MY DIRECT SUPERVISION FOR THE SOLE PURPOSE OF HYDRAULIC MODELING. DATUM=NAVD88

REGISTERED LAND SURVEYOR
CERTIFICATE NO.
35980
ROLAND
MICHAUD
Date Signed 06/02/05
ARIZONA, U.S.A.

Consultant Engineering, Inc.

CONSULTANT ENGINEERING, INC.
3404 W. CHERYL DRIVE
PHOENIX, ARIZONA
602-866-5090

RIO VERDE ADMP FLOOD PLAIN DELINEATION
RECORD DRAWING FOR STRUCTURE AT
CULVERT NUMBER 31

DATE	04-29-05
SCALE	SEE PLAN
DRAWN BY	NZ
APPROVED BY	RM
C.E.I. JOB #	5050-332
SHEET	

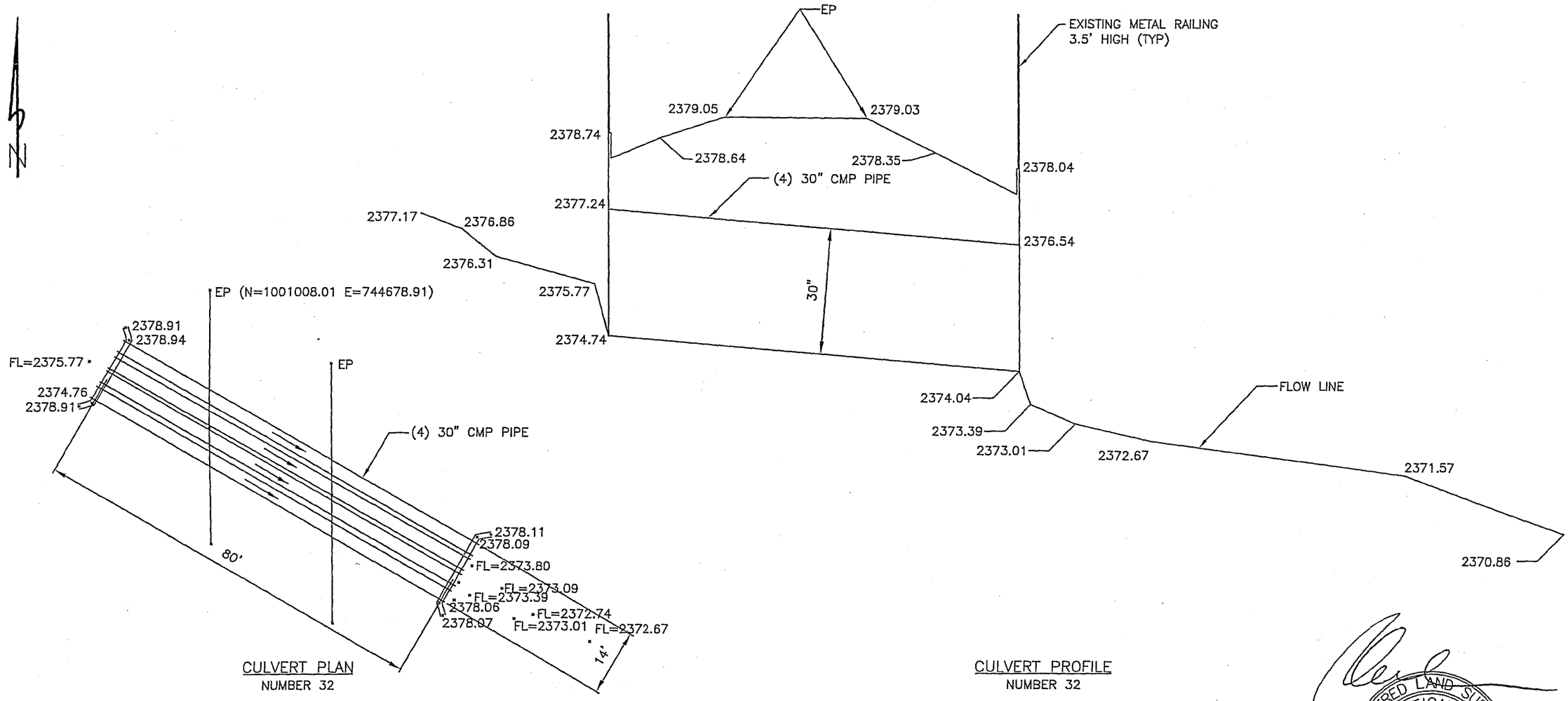

CULVERT PLAN
NUMBER 32

10 0 10 20 40
SCALE: 1" = 20 FT.
SCALE HOR: 1"=20'

CULVERT PROFILE
NUMBER 32

10 0 10 20 40
SCALE: 1" = 20 FT.
SCALE HOR: 1"=20'
SCALE VER: 1"=2'

LEGEND:

EP - EDGE OF PAVEMENT
N - NORTHING (FOR GENERAL LOCATION PURPOSES ONLY)
E - EASTING (FOR GENERAL LOCATION PURPOSES ONLY)

THIS RECORD DRAWING WAS PREPARED UNDER MY DIRECT SUPERVISION FOR THE SOLE PURPOSE OF HYDRAULIC MODELING. DATUM=NAVD88

REGISTERED LAND SURVEYOR
CERTIFICATE NO.
35980
ROLAND
MICHAUD
Date Signed 06/02/05
ARIZONA, U.S.A.

Consultant Engineering, Inc.

CONSULTANT ENGINEERING, INC.
3404 W. CHERYL DRIVE
PHOENIX, ARIZONA
602-866-5090

RIO VERDE ADMP FLOOD PLAIN DELINEATION
RECORD DRAWING FOR STRUCTURE AT
CULVERT NUMBER 32

DATE	04-29-05
SCALE	SEE PLAN
DRAWN BY	NZ
APPROVED BY	RM
C.E.I. JOB #	5050-332
SHEET	

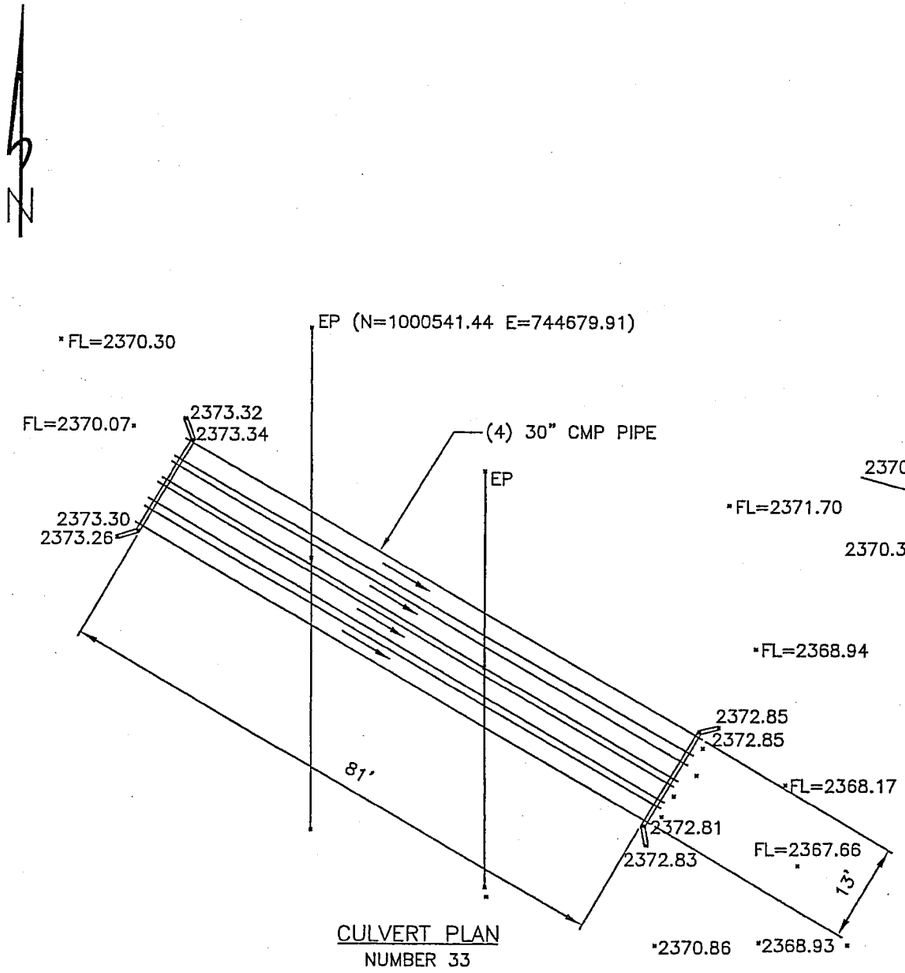

CULVERT PLAN
NUMBER 33

10 0 10 20 40
SCALE: 1" = 20 FT.
SCALE HOR: 1"=20'

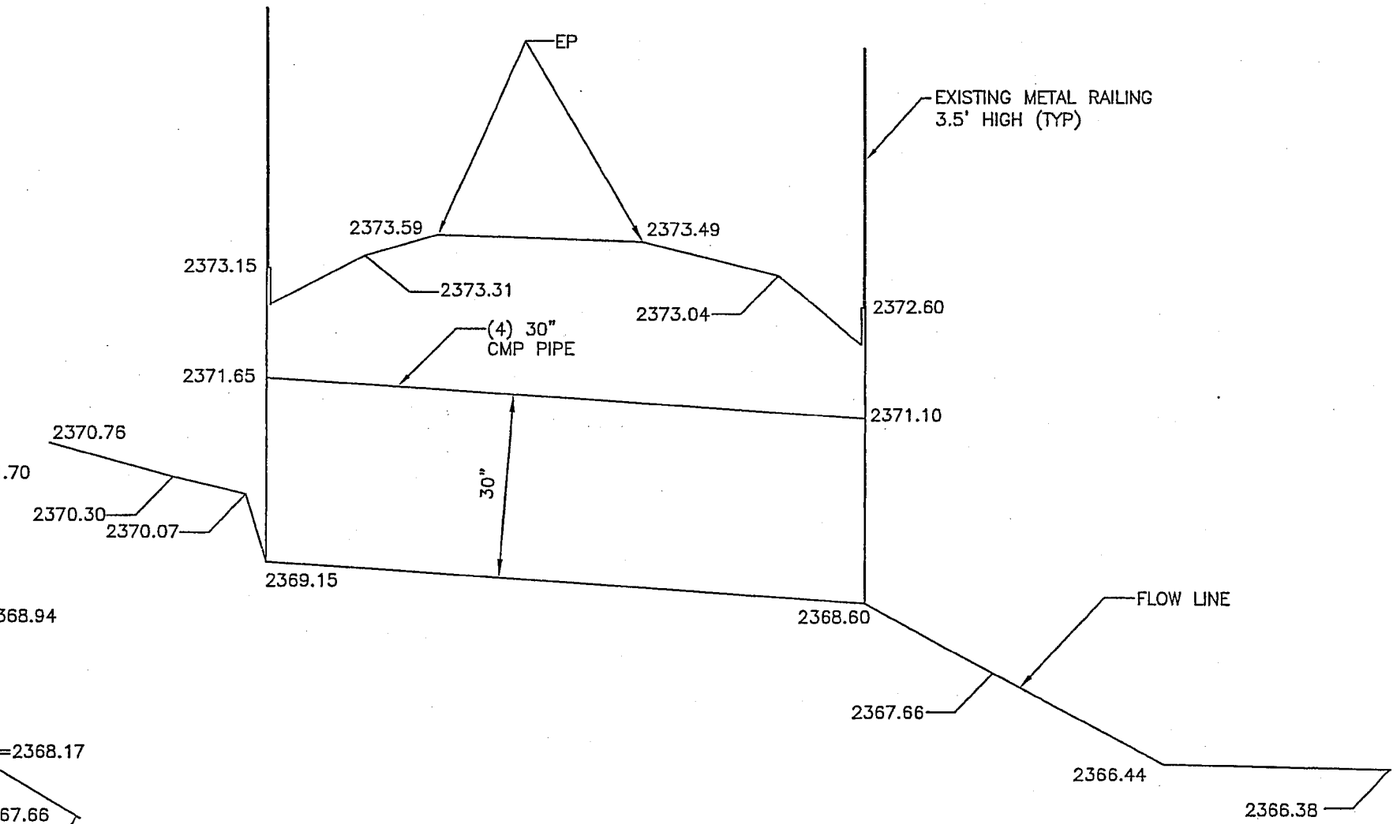

CULVERT PROFILE
NUMBER 33

10 0 10 20 40
SCALE: 1" = 20 FT.
SCALE HOR: 1"=20'
SCALE VER: 1"=2'

LEGEND:

EP - EDGE OF PAVEMENT
N - NORTHING (FOR GENERAL LOCATION PURPOSES ONLY)
E - EASTING (FOR GENERAL LOCATION PURPOSES ONLY)

THIS RECORD DRAWING WAS PREPARED UNDER MY DIRECT SUPERVISION FOR THE SOLE PURPOSE OF HYDRAULIC MODELING. DATUM=NAVD88

REGISTERED LAND SURVEYOR
CERTIFICATE NO.
35980
ROLAND
MICHAUD
Date Signed 06/02/05
ARIZONA, U.S.A.

Consultant Engineering, Inc.

CONSULTANT ENGINEERING, INC.
3404 W. CHERYL DRIVE
PHOENIX, ARIZONA
602-866-5090

RIO VERDE ADMP FLOOD PLAIN DELINEATION
RECORD DRAWING FOR STRUCTURE AT
CULVERT NUMBER 33

DATE	04-29-05
SCALE	SEE PLAN
DRAWN BY	NZ
APPROVED BY	RM
C.E.I. JOB #	5050-332
SHEET	

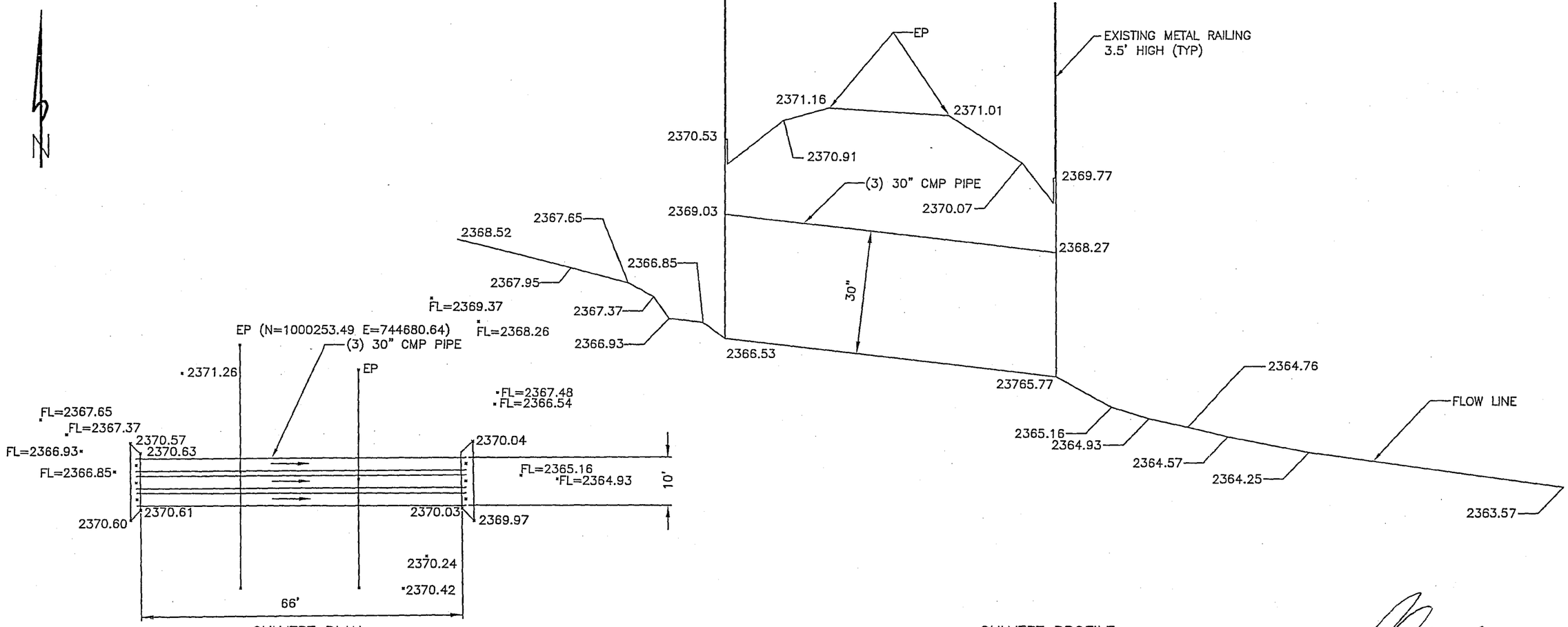

LEGEND:

EP - EDGE OF PAVEMENT
N - NORTHING (FOR GENERAL LOCATION PURPOSES ONLY)
E - EASTING (FOR GENERAL LOCATION PURPOSES ONLY)

THIS RECORD DRAWING WAS PREPARED UNDER MY DIRECT SUPERVISION FOR THE SOLE PURPOSE OF HYDRAULIC MODELING. DATUM=NAVD88

REGISTERED LAND SURVEYOR
CERTIFICATE NO.
35980
ROLAND
MICHAUD
Date Signed 06/02/05
ARIZONA, U.S.A.

CEI Consultant Engineering, Inc.

CONSULTANT ENGINEERING, INC.
3404 W. CHERYL DRIVE
PHOENIX, ARIZONA
602-866-5090

RIO VERDE ADMP FLOOD PLAIN DELINEATION
RECORD DRAWING FOR STRUCTURE AT
CULVERT NUMBER 34

DATE	04-29-05
SCALE	SEE PLAN
DRAWN BY	NZ
APPROVED BY	RM
C.E.I. JOB #	5050-332
SHEET	

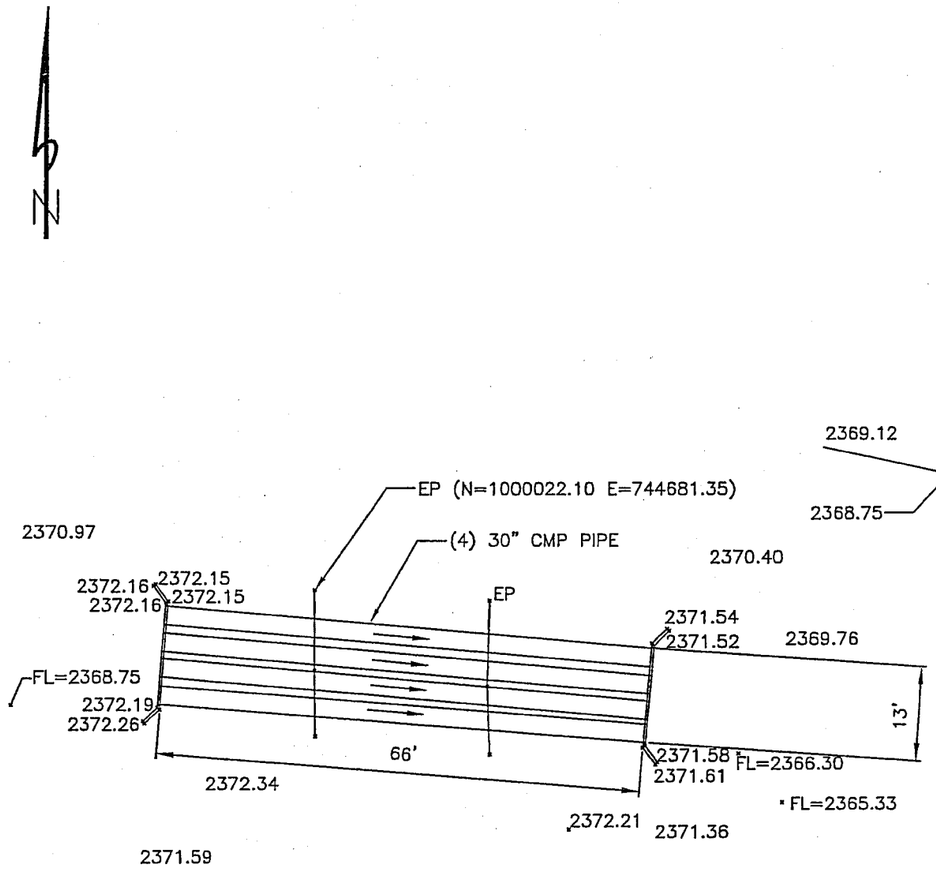

CULVERT PLAN
NUMBER 35

10 0 10 20 40
SCALE: 1" = 20 FT.
SCALE HOR: 1"=20'

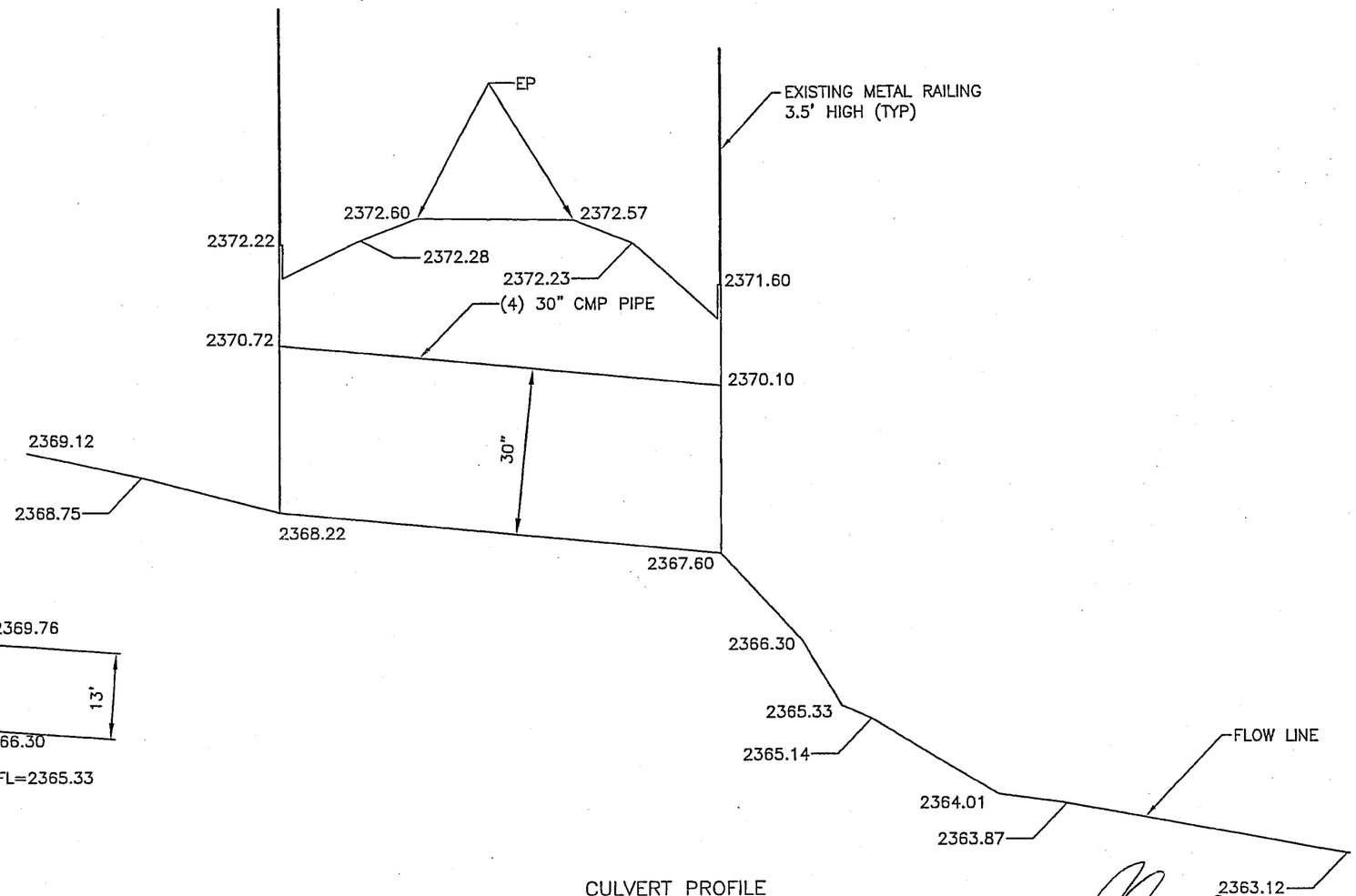

CULVERT PROFILE
NUMBER 35

10 0 10 20 40
SCALE: 1" = 20 FT.
SCALE HOR: 1"=20'
SCALE VER: 1"=2'

LEGEND:

EP - EDGE OF PAVEMENT
N - NORTHING (FOR GENERAL LOCATION PURPOSES ONLY)
E - EASTING (FOR GENERAL LOCATION PURPOSES ONLY)

THIS RECORD DRAWING WAS PREPARED UNDER MY DIRECT SUPERVISION FOR THE SOLE PURPOSE OF HYDRAULIC MODELING. DATUM=NAVD88

REGISTERED LAND SURVEYOR
CERTIFICATE NO.
35980
ROLAND
MICHAUD
Date Signed 06/02/05
ARIZONA, U.S.A.

Consultant Engineering, Inc.

CONSULTANT ENGINEERING, INC.
3404 W. CHERYL DRIVE
PHOENIX, ARIZONA
602-866-5090

RIO VERDE ADMP FLOOD PLAIN DELINEATION
RECORD DRAWING FOR STRUCTURE AT
CULVERT NUMBER 35

DATE	04-29-05
SCALE	SEE PLAN
DRAWN BY	NZ
APPROVED BY	RM
C.E.I. JOB #	5050-332
SHEET	

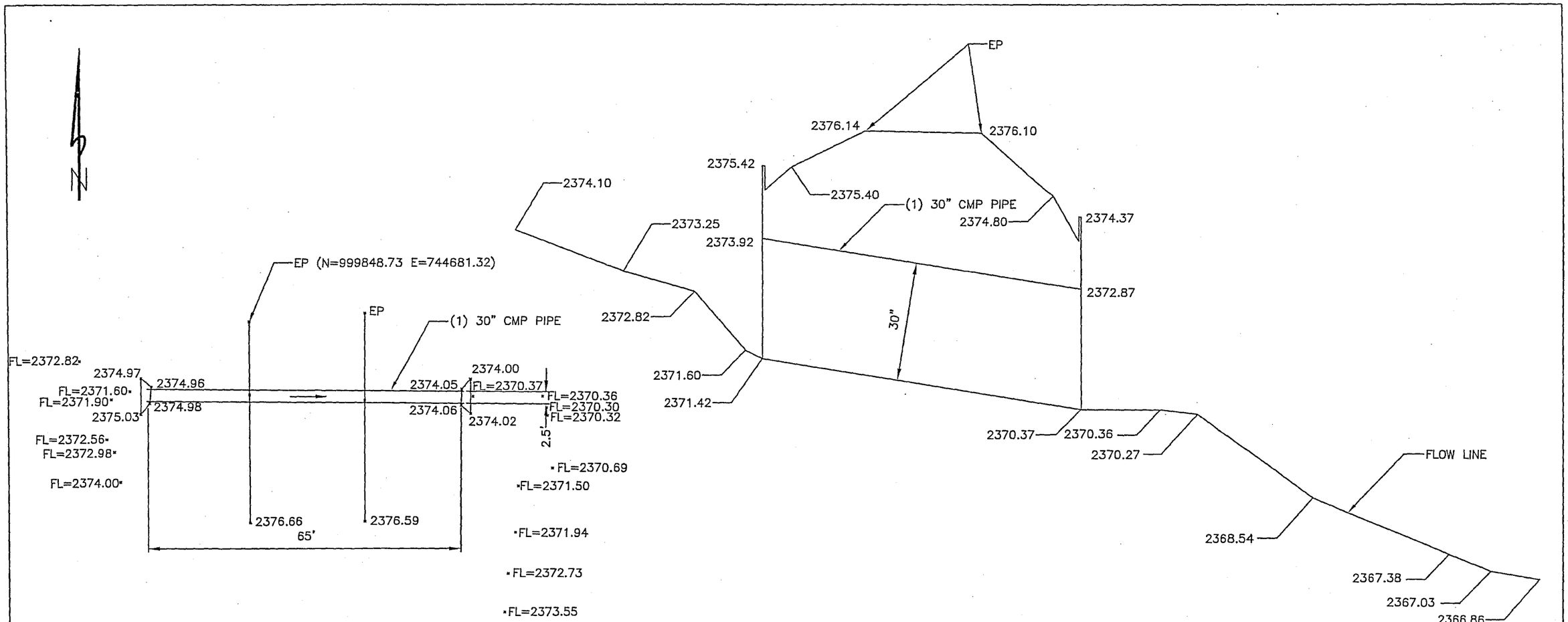

CULVERT PLAN
NUMBER 36

10 0 10 20 40
SCALE: 1" = 20 FT.
SCALE HOR: 1"=20'

CULVERT PROFILE
NUMBER 36

10 0 10 20 40
SCALE: 1" = 20 FT.
SCALE HOR: 1"=20'
SCALE VER: 1"=2'

LEGEND:

EP - EDGE OF PAVEMENT
N - NORTHING (FOR GENERAL LOCATION PURPOSES ONLY)
E - EASTING (FOR GENERAL LOCATION PURPOSES ONLY)

THIS RECORD DRAWING WAS PREPARED UNDER MY DIRECT SUPERVISION FOR THE SOLE PURPOSE OF HYDRAULIC MODELING. DATUM=NAVD88

REGISTERED LAND SURVEYOR
CERTIFICATE NO.
35980
ROLAND
MICHAUD
Date Signed 06/02/05
ARIZONA, U.S.A.

Consultant Engineering, Inc.

CONSULTANT ENGINEERING, INC.
3404 W. CHERYL DRIVE
PHOENIX, ARIZONA
602-866-5090

RIO VERDE ADMP FLOOD PLAIN DELINEATION
RECORD DRAWING FOR STRUCTURE AT
CULVERT NUMBER 36

DATE	04-29-05
SCALE	SEE PLAN
DRAWN BY	NZ
APPROVED BY	RM
C.E.I. JOB #	5050-332
SHEET	

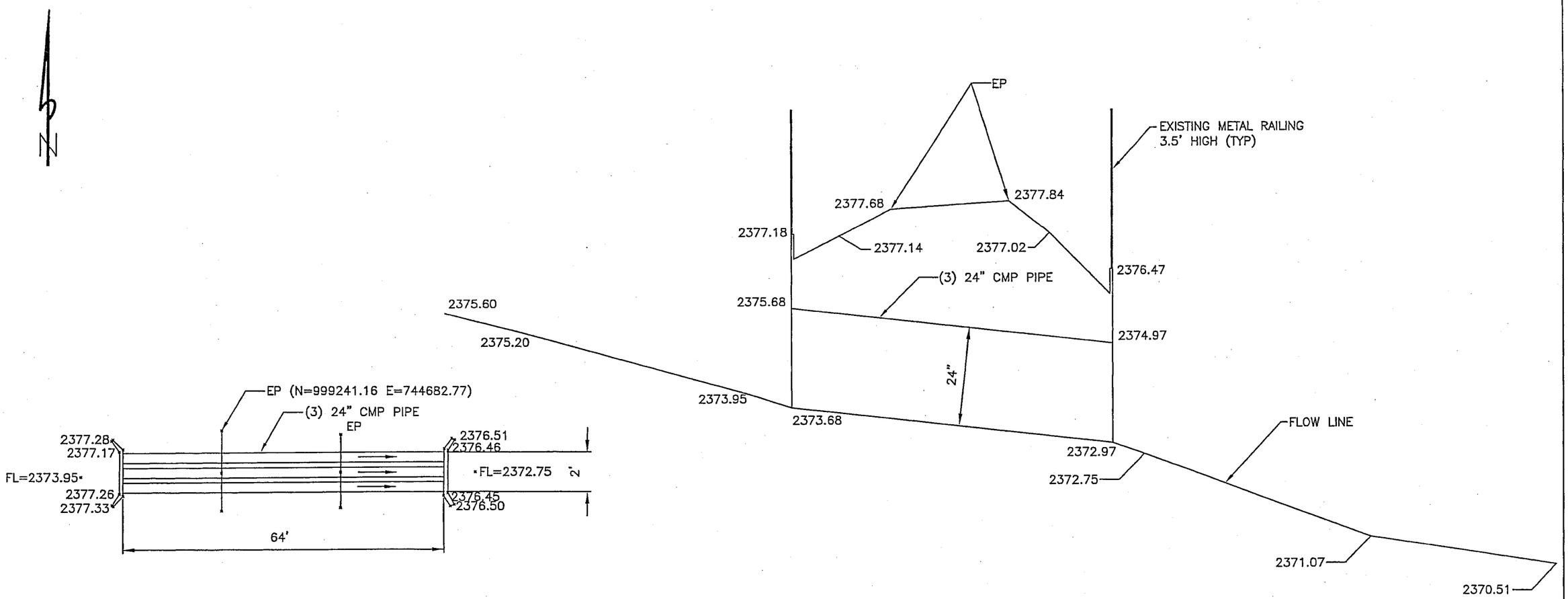

CULVERT PLAN
NUMBER 37

10 0 10 20 40
SCALE: 1" = 20 FT.
SCALE HOR: 1"=20'

CULVERT PROFILE
NUMBER 37

10 0 10 20 40
SCALE: 1" = 20 FT.
SCALE HOR: 1"=20'
SCALE VER: 1"=2'

LEGEND:

EP - EDGE OF PAVEMENT
N - NORTHING (FOR GENERAL LOCATION PURPOSES ONLY)
E - EASTING (FOR GENERAL LOCATION PURPOSES ONLY)

THIS RECORD DRAWING WAS PREPARED UNDER MY DIRECT SUPERVISION FOR THE SOLE PURPOSE OF HYDRAULIC MODELING. DATUM=NAVD88

REGISTERED LAND SURVEYOR
CERTIFICATE NO.
35980
ROLAND
MICHAUD
06/02/05
Date Signed
ARIZONA, U.S.A.

CEI Consultant Engineering, Inc.

CONSULTANT ENGINEERING, INC.
3404 W. CHERYL DRIVE
PHOENIX, ARIZONA
602-866-5090

RIO VERDE ADMP FLOOD PLAIN DELINEATION
RECORD DRAWING FOR STRUCTURE AT
CULVERT NUMBER 37

DATE	04-29-05
SCALE	SEE PLAN
DRAWN BY	NZ
APPROVED BY	RM
C.E.I. JOB #	5050-332
SHEET	

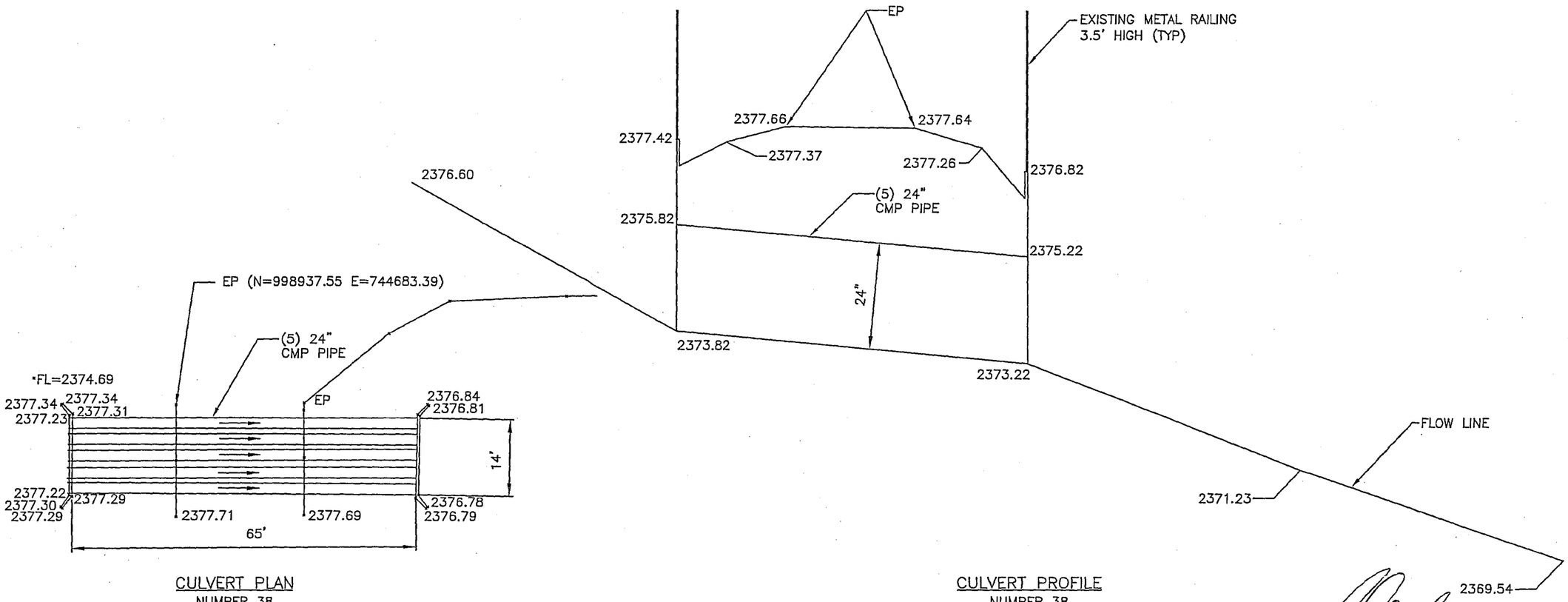

CULVERT PLAN
NUMBER 38

10 0 10 20 40
SCALE: 1" = 20 FT.
SCALE HOR: 1"=20'

CULVERT PROFILE
NUMBER 38

10 0 10 20 40
SCALE: 1" = 20 FT.
SCALE HOR: 1"=20'
SCALE VER: 1"=2'

REGISTERED LAND SURVEYOR
CERTIFICATE NO.
35980
ROLAND
MICHAUD
Date Signed 06/02/05
ARIZONA, U.S.A.

LEGEND:

EP - EDGE OF PAVEMENT
N - NORTHING (FOR GENERAL LOCATION PURPOSES ONLY)
E - EASTING (FOR GENERAL LOCATION PURPOSES ONLY)

THIS RECORD DRAWING WAS PREPARED UNDER MY DIRECT SUPERVISION FOR THE SOLE PURPOSE OF HYDRAULIC MODELING. DATUM=NAVD88

Consultant Engineering, Inc.

CONSULTANT ENGINEERING, INC.
3404 W. CHERYL DRIVE
PHOENIX, ARIZONA
602-866-5090

RIO VERDE ADMP FLOOD PLAIN DELINEATION
RECORD DRAWING FOR STRUCTURE AT
CULVERT NUMBER 38

DATE	04-29-05
SCALE	SEE PLAN
DRAWN BY	NZ
APPROVED BY	RM
C.E.I. JOB #	5050-332
SHEET	

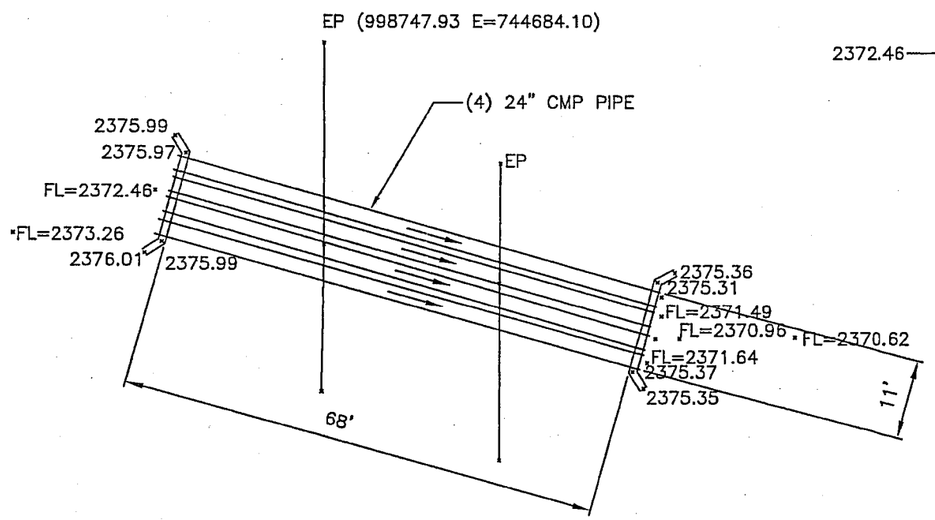

CULVERT PLAN
NUMBER 39

10 0 10 20 40
SCALE: 1" = 20 FT.
SCALE HOR: 1"=20'

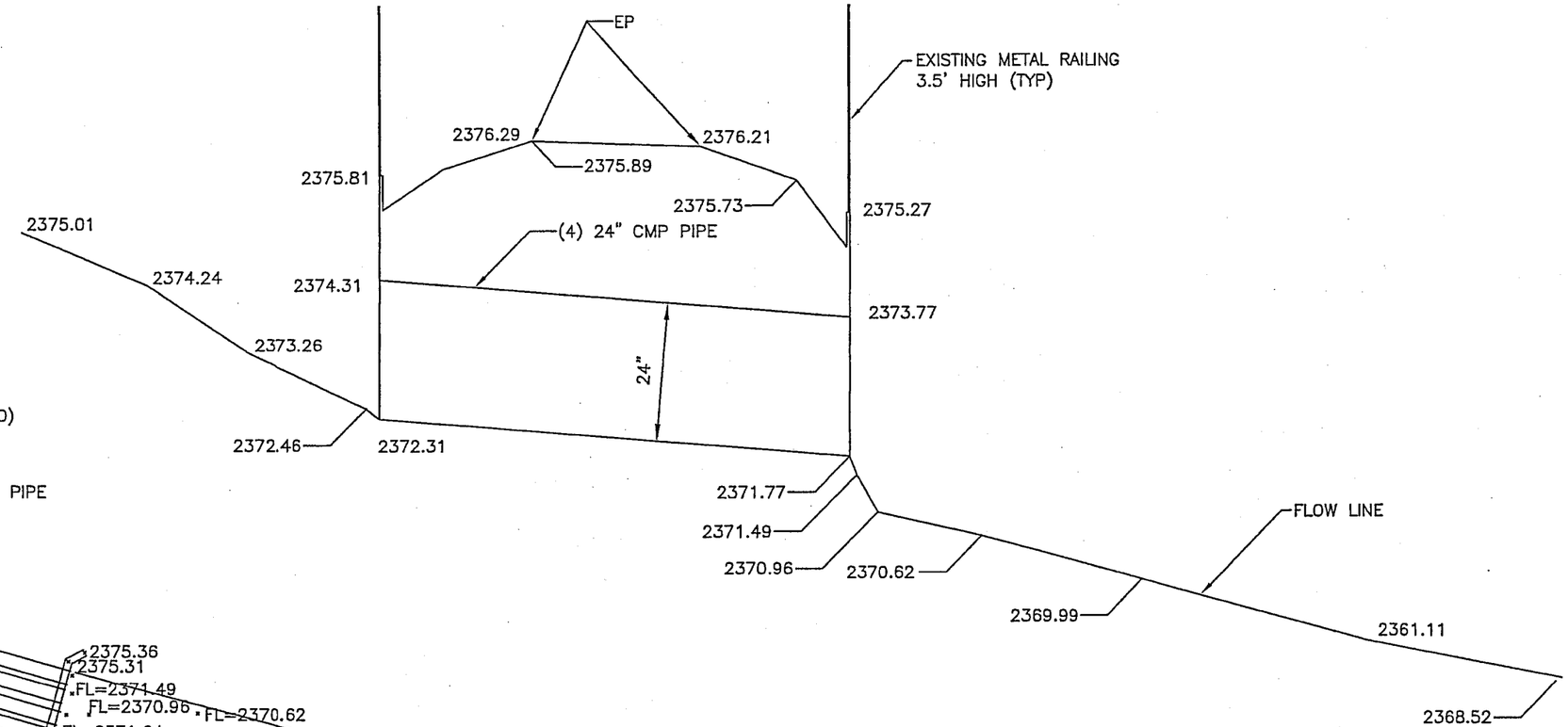

CULVERT PROFILE
NUMBER 39

10 0 10 20 40
SCALE: 1" = 20 FT.
SCALE HOR: 1"=20'
SCALE VER: 1"=2'

LEGEND:

EP - EDGE OF PAVEMENT
N - NORTHING (FOR GENERAL LOCATION PURPOSES ONLY)
E - EASTING (FOR GENERAL LOCATION PURPOSES ONLY)

THIS RECORD DRAWING WAS PREPARED UNDER MY DIRECT SUPERVISION FOR THE SOLE PURPOSE OF HYDRAULIC MODELING. DATUM=NAVD88

REGISTERED LAND SURVEYOR
CERTIFICATE NO.
35980
ROLAND
MICHAUD
Date Signed 06/02/05
ARIZONA, U.S.A.

Consultant Engineering, Inc.

CONSULTANT ENGINEERING, INC.
3404 W. CHERYL DRIVE
PHOENIX, ARIZONA
602-866-5090

RIO VERDE ADMP FLOOD PLAIN DELINEATION
RECORD DRAWING FOR STRUCTURE AT
CULVERT NUMBER 39

DATE	04-29-05
SCALE	SEE PLAN
DRAWN BY	NZ
APPROVED BY	RM
C.E.I. JOB #	5050-332
SHEET	

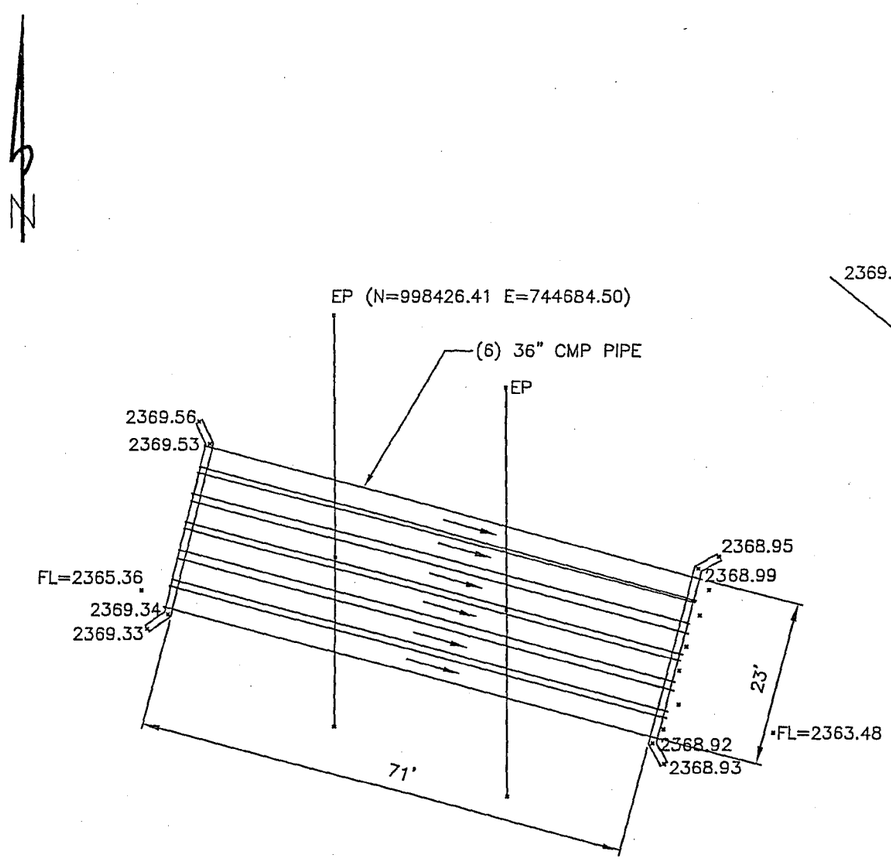

CULVERT PLAN
NUMBER 40

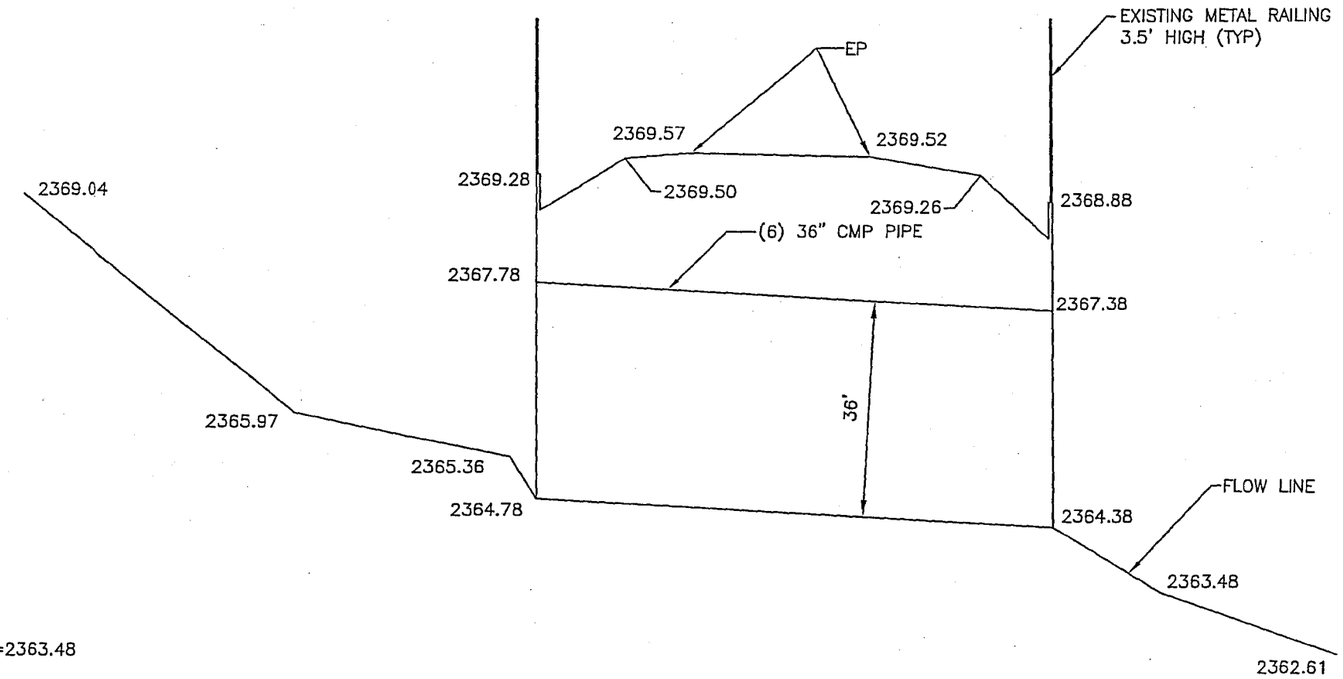

CULVERT PROFILE
NUMBER 40

10 0 10 20 40
SCALE: 1" = 20 FT.
SCALE HOR: 1"=20'

10 0 10 20 40
SCALE: 1" = 20 FT.
SCALE HOR: 1"=20'
SCALE VER: 1"=2'

LEGEND:

EP - EDGE OF PAVEMENT
N - NORTHING (FOR GENERAL LOCATION PURPOSES ONLY)
E - EASTING (FOR GENERAL LOCATION PURPOSES ONLY)

THIS RECORD DRAWING WAS PREPARED UNDER MY DIRECT SUPERVISION FOR THE SOLE PURPOSE OF HYDRAULIC MODELING. DATUM=NAVD88

REGISTERED LAND SURVEYOR
CERTIFICATE NO.
35980
ROLAND
MICHAUD
Date Signed 06/02/05
ARIZONA, U.S.A.

Consultant Engineering, Inc.

CONSULTANT ENGINEERING, INC.
3404 W. CHERYL DRIVE
PHOENIX, ARIZONA
602-866-5090

RIO VERDE ADMP FLOOD PLAIN DELINEATION
RECORD DRAWING FOR STRUCTURE AT
CULVERT NUMBER 40

DATE	04-29-05
SCALE	SEE PLAN
DRAWN BY	NZ
APPROVED BY	RM
C.E.I. JOB #	5050-332
SHEET	

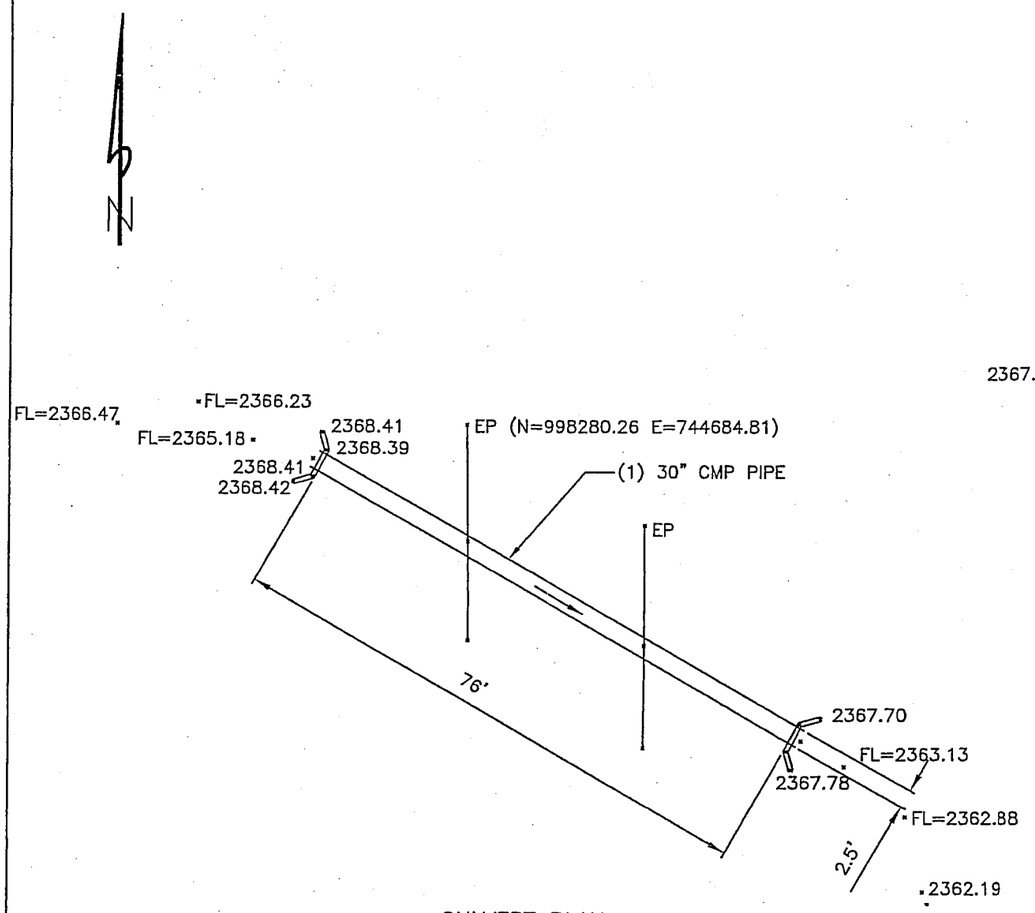

CULVERT PLAN
NUMBER 41

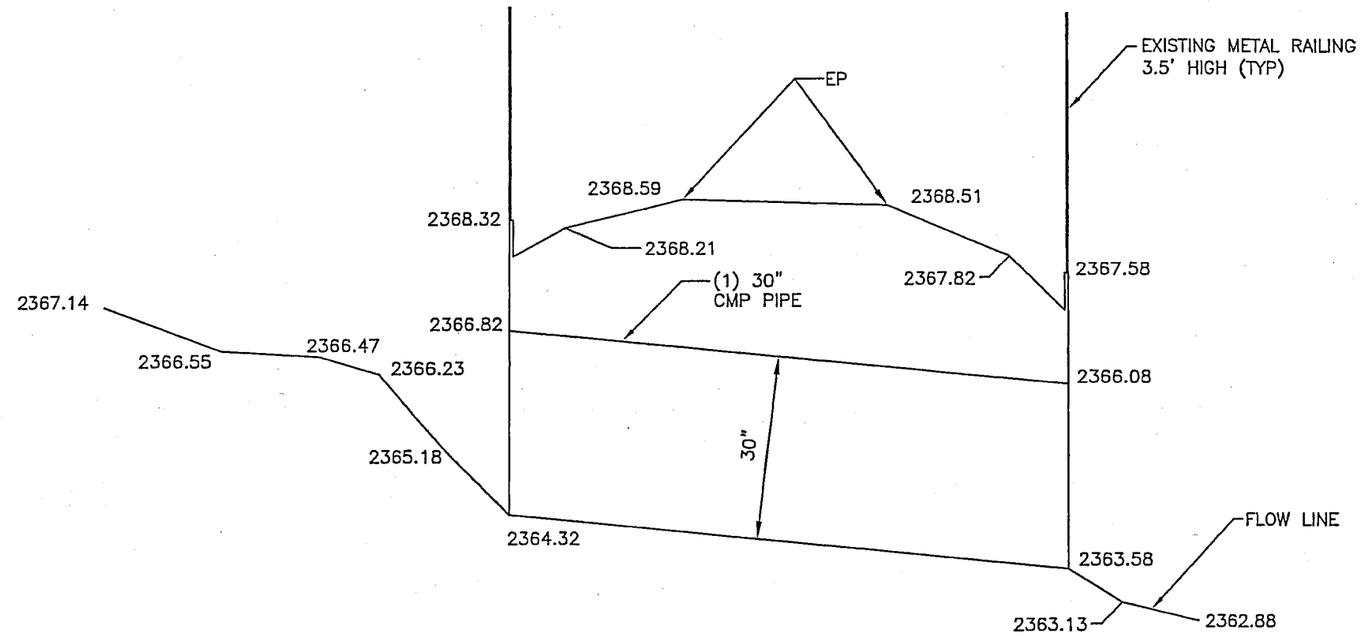

CULVERT PROFILE
NUMBER 41

10 0 10 20 40
SCALE: 1" = 20 FT.
SCALE HOR: 1"=20'

10 0 10 20 40
SCALE: 1" = 20 FT.
SCALE HOR: 1"=20'
SCALE VER: 1"=2'

LEGEND:

EP - EDGE OF PAVEMENT
N - NORTHING (FOR GENERAL LOCATION PURPOSES ONLY)
E - EASTING (FOR GENERAL LOCATION PURPOSES ONLY)

THIS RECORD DRAWING WAS PREPARED UNDER MY DIRECT SUPERVISION FOR THE SOLE PURPOSE OF HYDRAULIC MODELING. DATUM=NAVD88

REGISTERED LAND SURVEYOR
CERTIFICATE NO.
35980
ROLAND
MICHAUD
Date Signed 06/02/05
ARIZONA, U.S.A.

Consultant Engineering, Inc.

CONSULTANT ENGINEERING, INC.
3404 W. CHERYL DRIVE
PHOENIX, ARIZONA
602-866-5090

RIO VERDE ADMP FLOOD PLAIN DELINEATION
RECORD DRAWING FOR STRUCTURE AT
CULVERT NUMBER 41

DATE	04-29-05
SCALE	SEE PLAN
DRAWN BY	NZ
APPROVED BY	RM
C.E.I. JOB #	5050-332
SHEET	

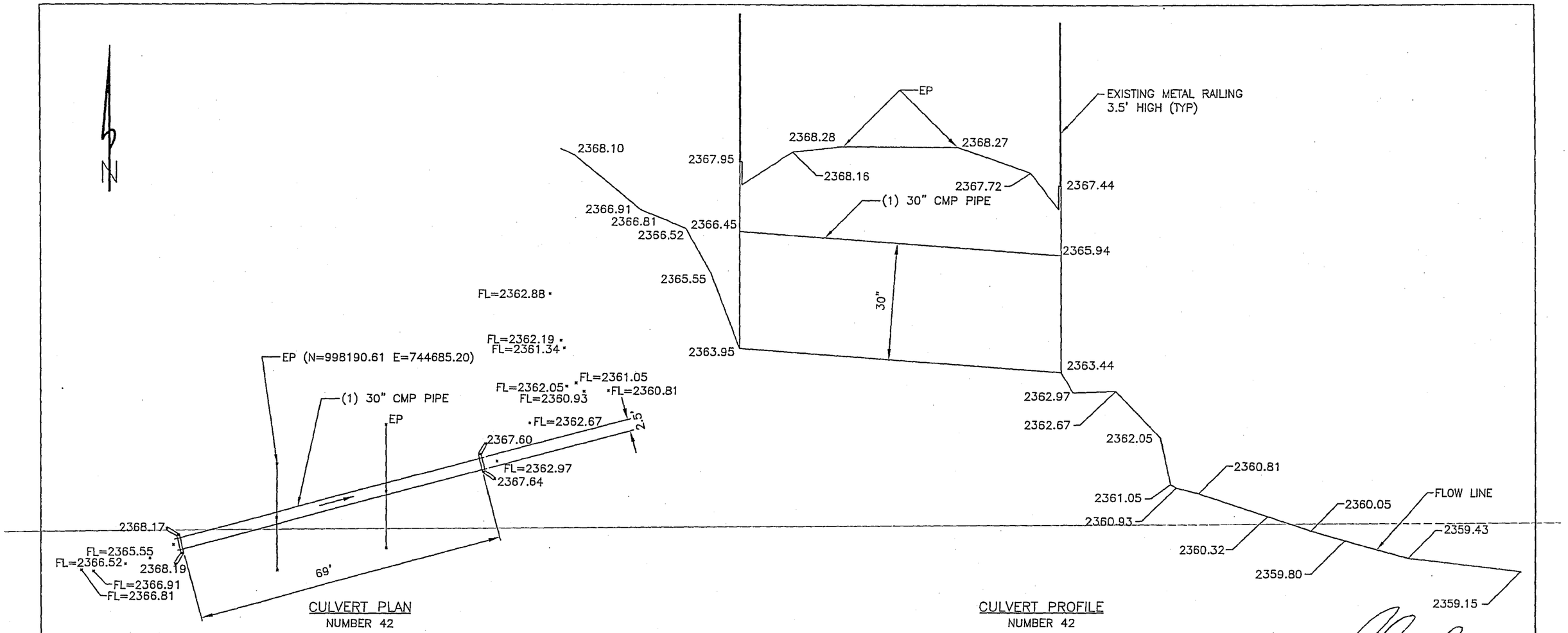

10 0 10 20 40
SCALE: 1" = 20 FT.
SCALE HOR: 1"=20'

10 0 10 20 40
SCALE: 1" = 20 FT.
SCALE HOR: 1"=20'
SCALE VER: 1"=2'

LEGEND:

EP - EDGE OF PAVEMENT
N - NORTHING (FOR GENERAL LOCATION PURPOSES ONLY)
E - EASTING (FOR GENERAL LOCATION PURPOSES ONLY)

THIS RECORD DRAWING WAS PREPARED UNDER MY DIRECT SUPERVISION FOR THE SOLE PURPOSE OF HYDRAULIC MODELING. DATUM=NAVD88

REGISTERED LAND SURVEYOR
CERTIFICATE NO.
35980
ROLAND
MICHAUD
Date Signed 06/02/05
ARIZONA, U.S.A.

Consultant Engineering, Inc.

CONSULTANT ENGINEERING, INC.
3404 W. CHERYL DRIVE
PHOENIX, ARIZONA
602-866-5090

RIO VERDE ADMP FLOOD PLAIN DELINEATION
RECORD DRAWING FOR STRUCTURE AT
CULVERT NUMBER 42

DATE	04-29-05
SCALE	SEE PLAN
DRAWN BY	NZ
APPROVED BY	RM
C.E.I. JOB #	5050-332
SHEET	

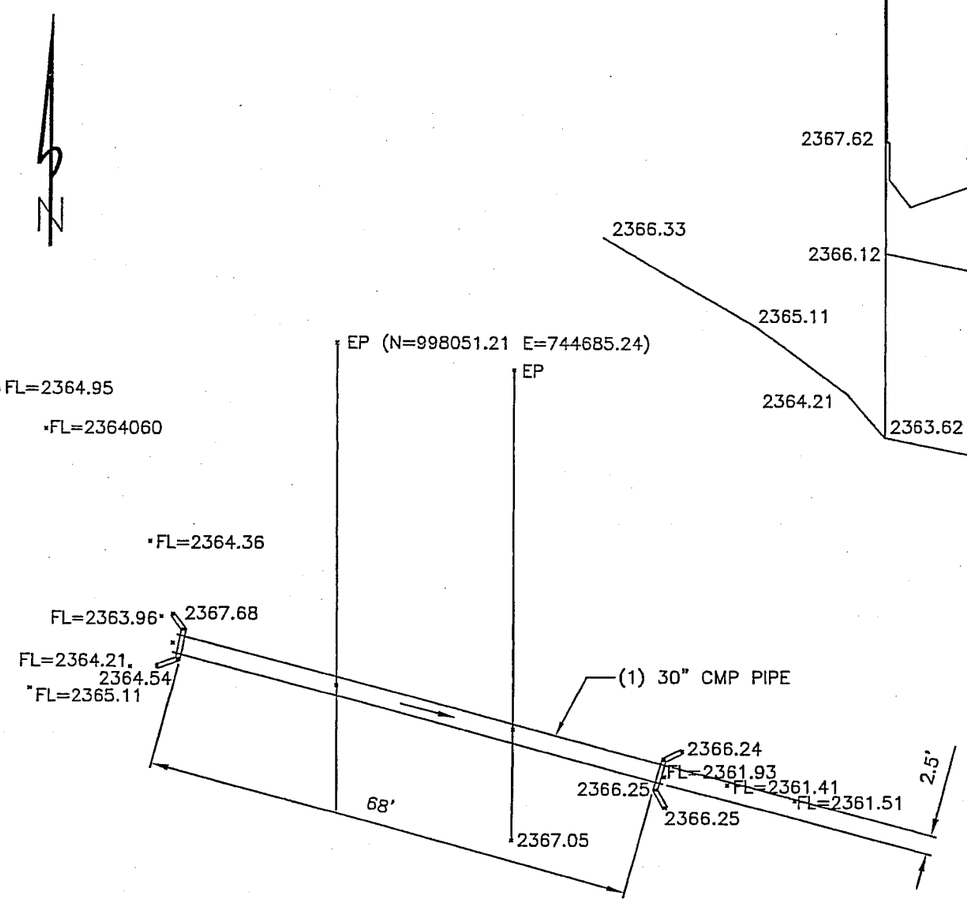

CULVERT PLAN
NUMBER 43

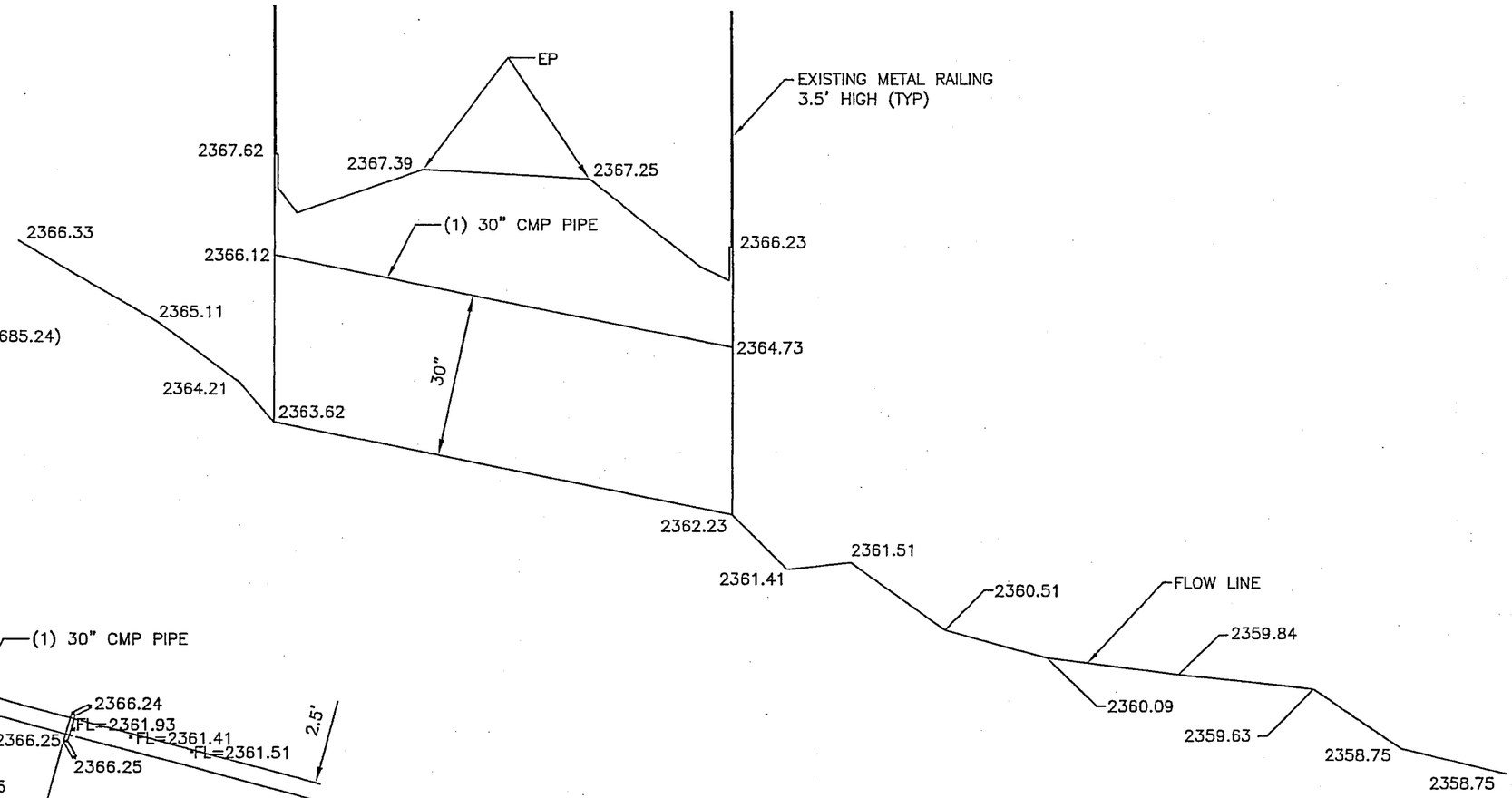

CULVERT PROFILE
NUMBER 43

10 0 10 20 40
SCALE: 1" = 20 FT.
SCALE HOR: 1"=20'

LEGEND:

EP - EDGE OF PAVEMENT
N - NORTHING (FOR GENERAL LOCATION PURPOSES ONLY)
E - EASTING (FOR GENERAL LOCATION PURPOSES ONLY)

10 0 10 20 40
SCALE: 1" = 20 FT.
SCALE HOR: 1"=20'
SCALE VER: 1"=2'

THIS RECORD DRAWING WAS PREPARED UNDER MY DIRECT SUPERVISION FOR THE SOLE PURPOSE OF HYDRAULIC MODELING. DATUM=NAVD88

REGISTERED LAND SURVEYOR
CERTIFICATE NO.
35980
ROLAND
MICHAUD
Date Signed 06/02/05
ARIZONA, U.S.A.

Consultant Engineering, Inc.

CONSULTANT ENGINEERING, INC.
3404 W. CHERYL DRIVE
PHOENIX, ARIZONA
602-866-5090

RIO VERDE ADMP FLOOD PLAIN DELINEATION
RECORD DRAWING FOR STRUCTURE AT
CULVERT NUMBER 43

DATE	04-29-05
SCALE	SEE PLAN
DRAWN BY	NZ
APPROVED BY	RM
C.E.I. JOB #	5050-332
SHEET	

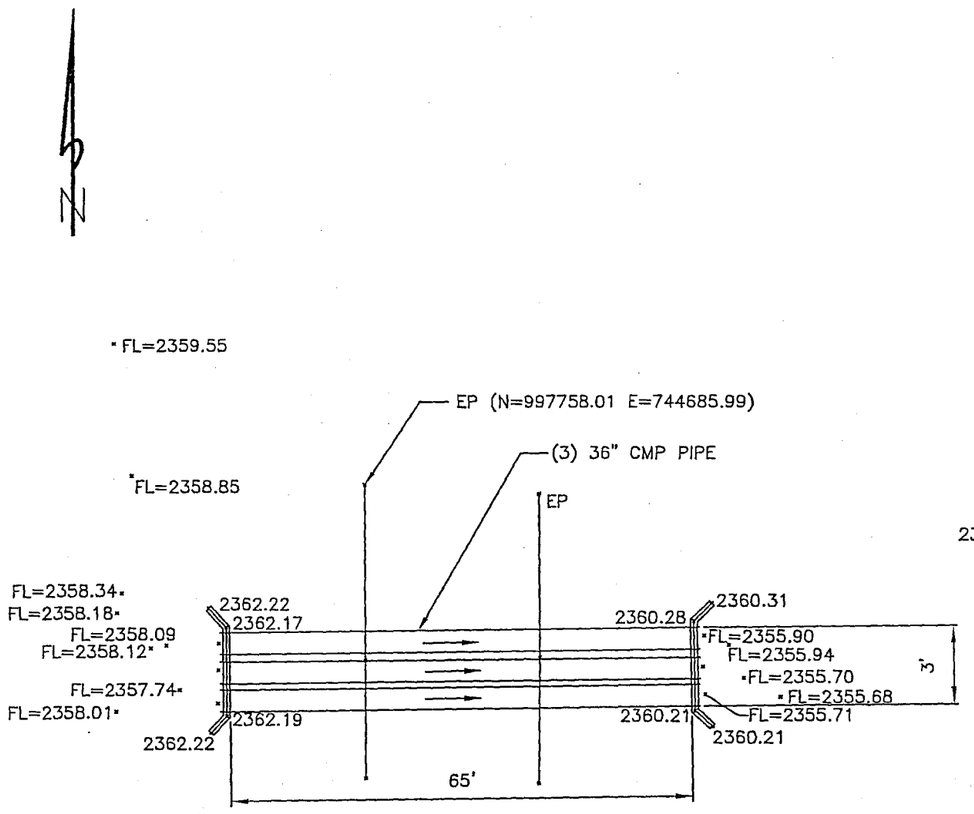

CULVERT PLAN
NUMBER 44

10 0 10 20 40
SCALE: 1" = 20 FT.
SCALE HOR: 1"=20'

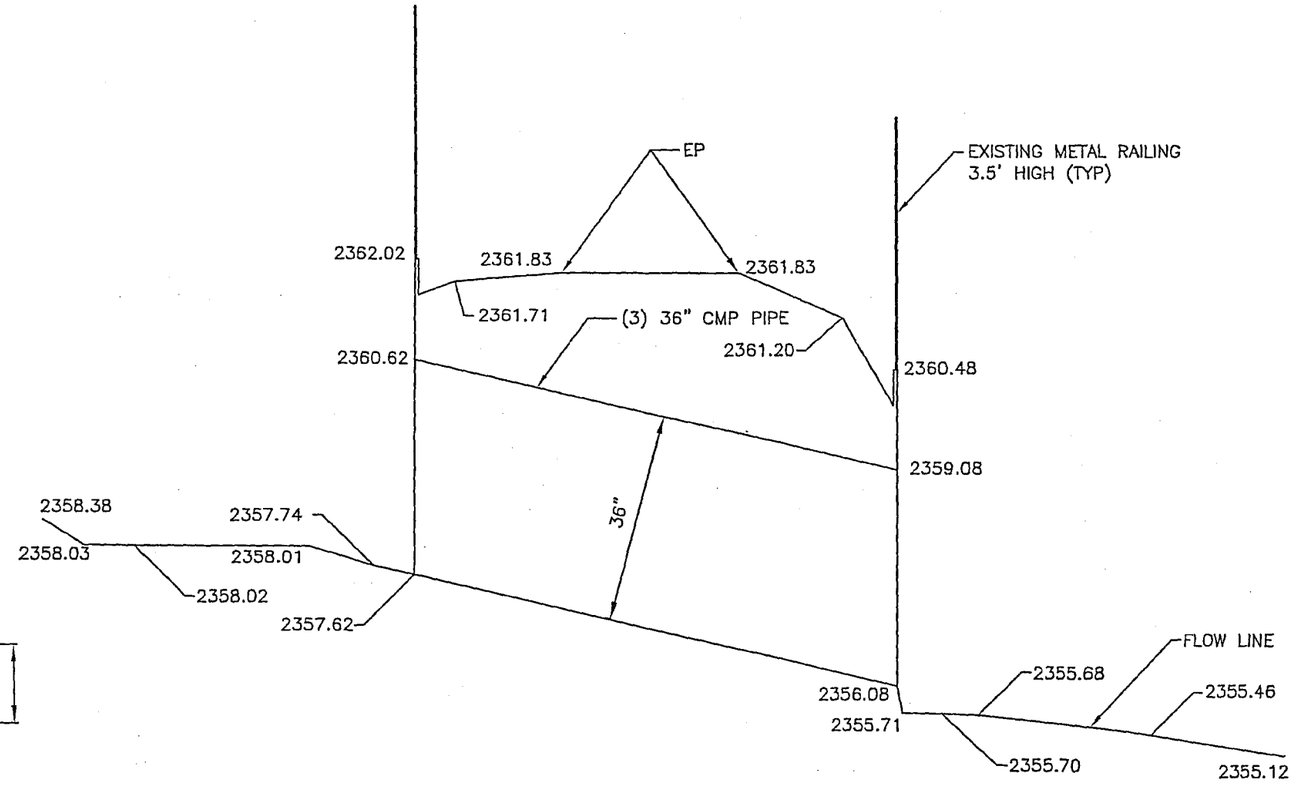

CULVERT PROFILE
NUMBER 44

10 0 10 20 40
SCALE: 1" = 20 FT.
SCALE HOR: 1"=20'
SCALE VER: 1"=2'

LEGEND:

EP - EDGE OF PAVEMENT
N - NORTHING (FOR GENERAL LOCATION PURPOSES ONLY)
E - EASTING (FOR GENERAL LOCATION PURPOSES ONLY)

THIS RECORD DRAWING WAS PREPARED UNDER MY DIRECT SUPERVISION FOR THE SOLE PURPOSE OF HYDRAULIC MODELING. DATUM=NAVD88

REGISTERED LAND SURVEYOR
CERTIFICATE NO.
35980
ROLAND
MICHAUD
Date Signed 5/02/05
ARIZONA, U.S.A.

CEI Consultant Engineering, Inc.

CONSULTANT ENGINEERING, INC.
3404 W. CHERYL DRIVE
PHOENIX, ARIZONA
602-866-5090

RIO VERDE ADMP FLOOD PLAIN DELINEATION
RECORD DRAWING FOR STRUCTURE AT
CULVERT NUMBER 44

DATE	04-29-05
SCALE	SEE PLAN
DRAWN BY	NZ
APPROVED BY	RM
C.E.I. JOB #	5050-332
SHEET	

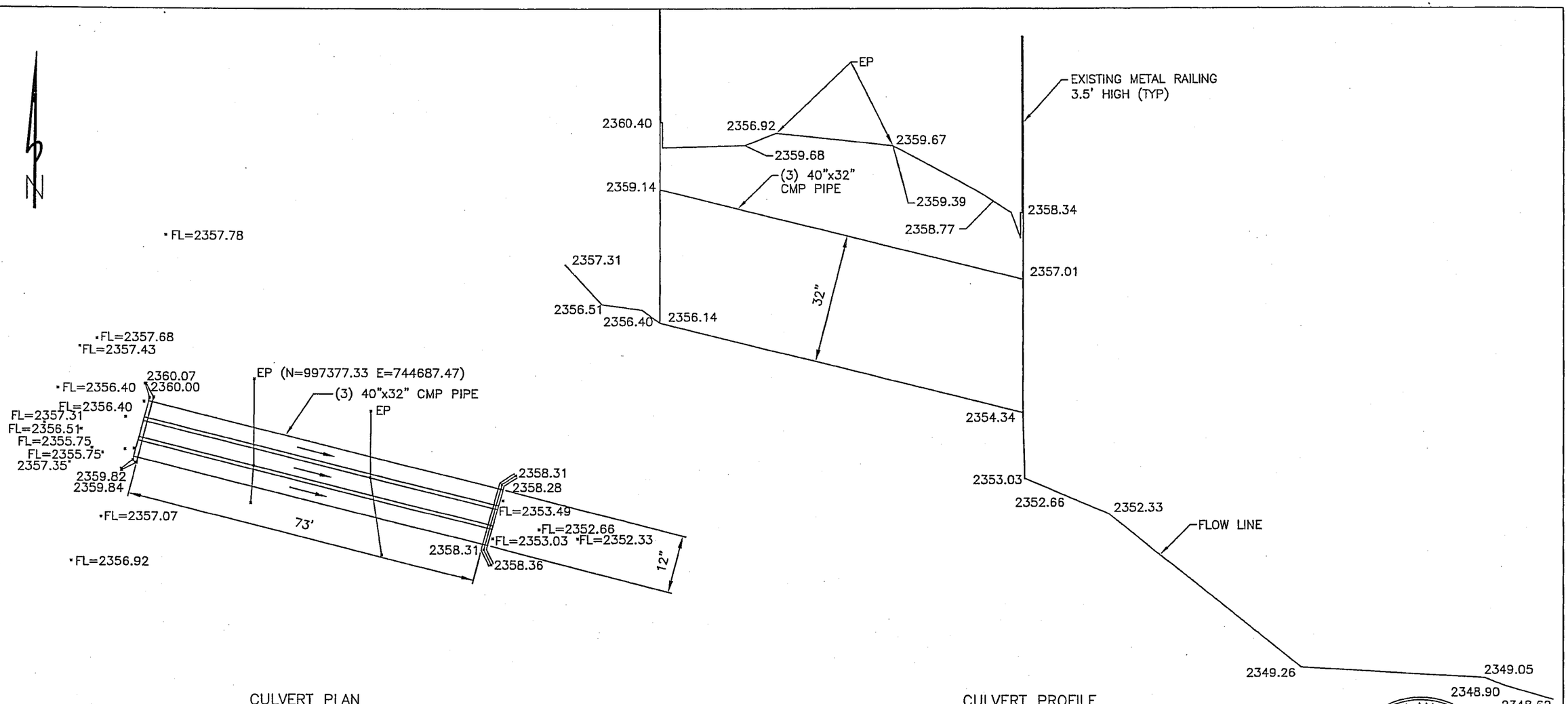

CULVERT PLAN
NUMBER 45

10 0 10 20 40
SCALE: 1" = 20 FT.
SCALE HOR: 1"=20'

CULVERT PROFILE
NUMBER 45

10 0 10 20 40
SCALE: 1" = 20 FT.
SCALE HOR: 1"=20'
SCALE VER: 1"=2'

LEGEND:

EP - EDGE OF PAVEMENT
N - NORTHING (FOR GENERAL LOCATION PURPOSES ONLY)
E - EASTING (FOR GENERAL LOCATION PURPOSES ONLY)

THIS RECORD DRAWING WAS PREPARED UNDER MY DIRECT SUPERVISION FOR THE SOLE PURPOSE OF HYDRAULIC MODELING. DATUM=NAVD88

REGISTERED LAND SURVEYOR
CERTIFICATE NO.
35980
ROLAND
MICHAUD
Date Signed 06/02/05
ARIZONA, U.S.A.

CEI Consultant Engineering, Inc.

CONSULTANT ENGINEERING, INC.
3404 W. CHERYL DRIVE
PHOENIX, ARIZONA
602-866-5090

RIO VERDE ADMP FLOOD PLAIN DELINEATION
RECORD DRAWING FOR STRUCTURE AT
CULVERT NUMBER 45

DATE	04-29-05
SCALE	SEE PLAN
DRAWN BY	NZ
APPROVED BY	RM
C.E.I. JOB #	5050-332
SHEET	

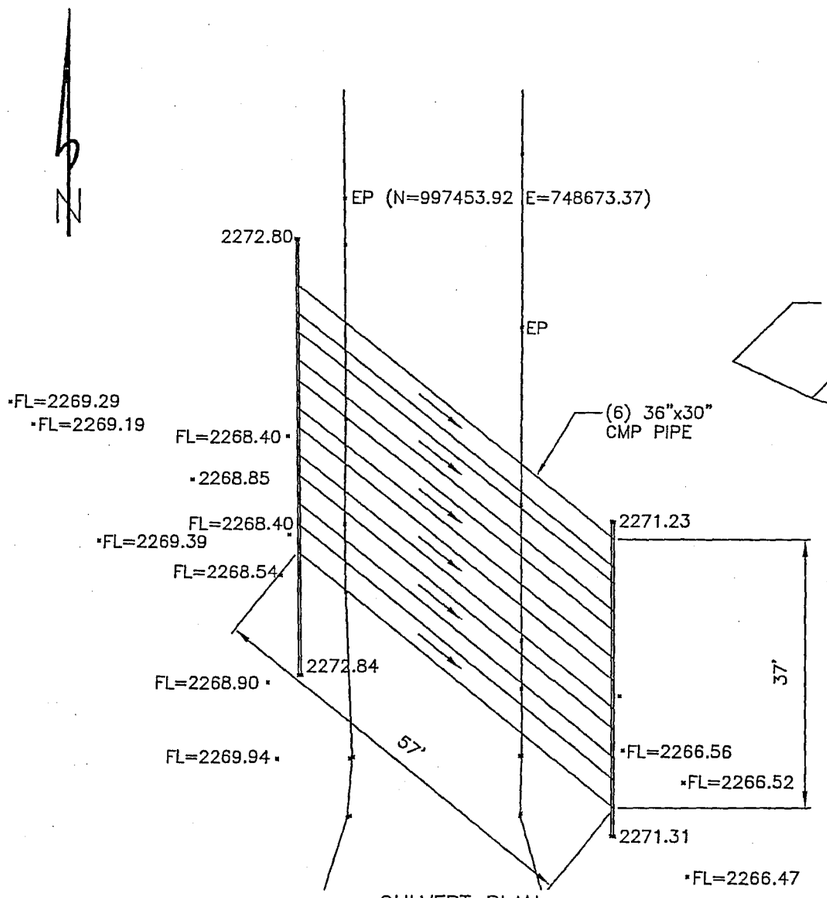

CULVERT PLAN
NUMBER 46

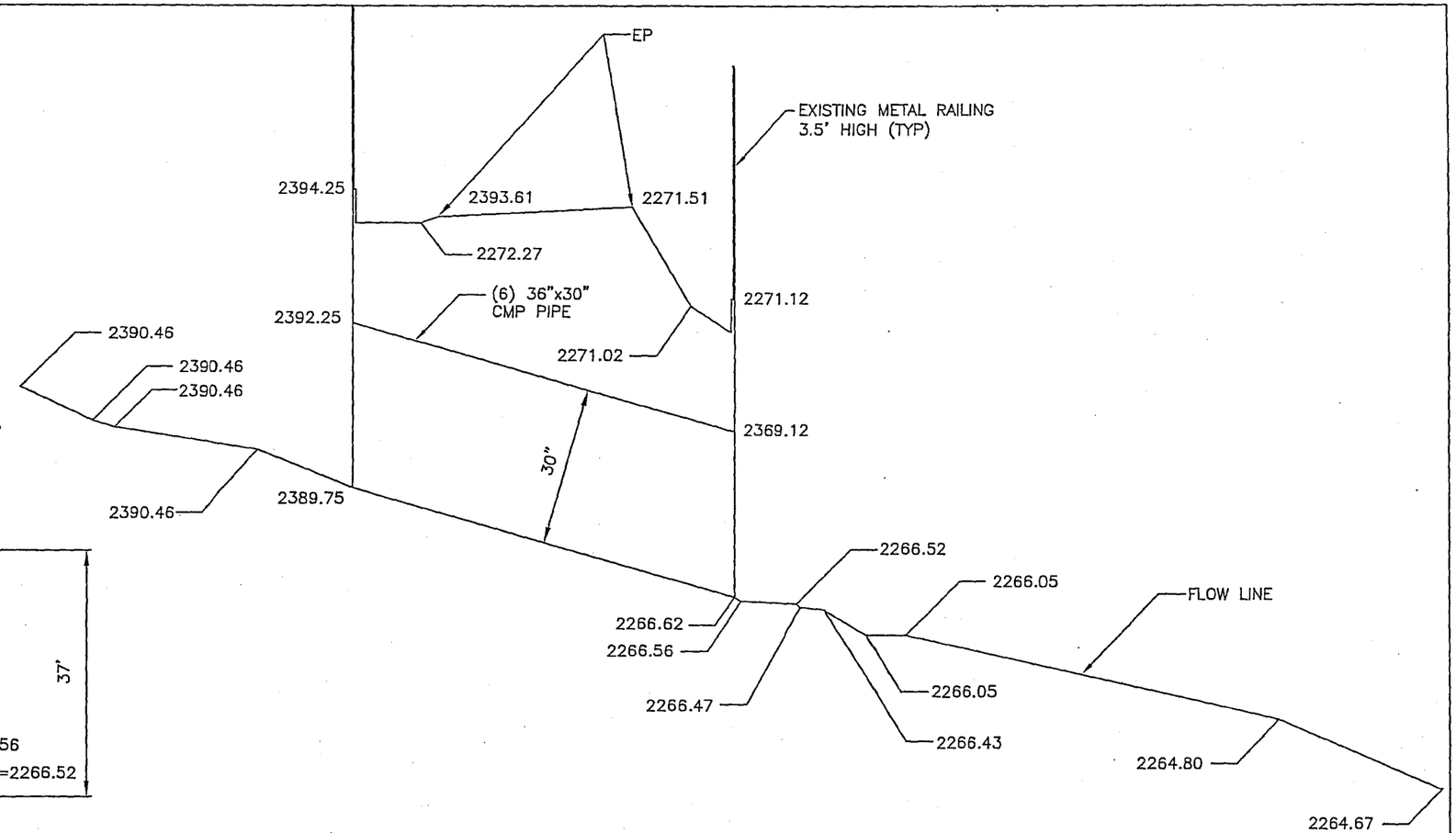

CULVERT PROFILE
NUMBER 46

10 0 10 20 40
SCALE: 1" = 20 FT.
SCALE HOR: 1"=20'

NOTE:

CMP APPEARS TO BE LINED WITH CONCRETE

LEGEND:

EP - EDGE OF PAVEMENT
N - NORTHING (FOR GENERAL LOCATION PURPOSES ONLY)
E - EASTING (FOR GENERAL LOCATION PURPOSES ONLY)

10 0 10 20 40
SCALE: 1" = 20 FT.
SCALE HOR: 1"=20'
SCALE VER: 1"=2'

THIS RECORD DRAWING WAS PREPARED UNDER MY DIRECT SUPERVISION FOR THE SOLE PURPOSE OF HYDRAULIC MODELING. DATUM=NAVD88

REGISTERED LAND SURVEYOR
CERTIFICATE NO.
35980
ROLAND
MICHAUD
Date Signed 06/02/05
ARIZONA, U.S.A.

Consultant Engineering, Inc.

CONSULTANT ENGINEERING, INC.
3404 W. CHERYL DRIVE
PHOENIX, ARIZONA
602-866-5090

RIO VERDE ADMP FLOOD PLAIN DELINEATION
RECORD DRAWING FOR STRUCTURE AT
CULVERT NUMBER 46

DATE	04-29-05
SCALE	SEE PLAN
DRAWN BY	NZ
APPROVED BY	RM
C.E.I. JOB #	5050-332
SHEET	

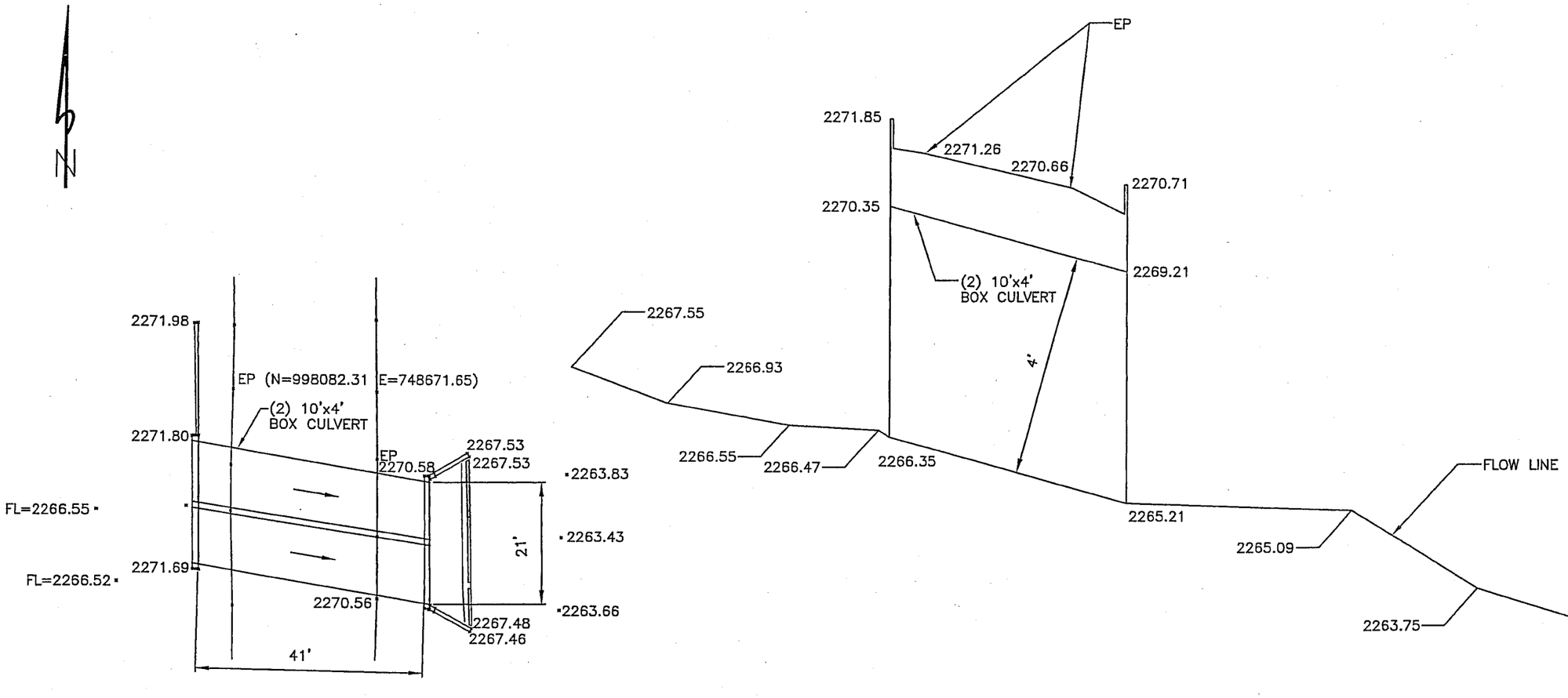

CULVERT PLAN
NUMBER 47

10 0 10 20 40
SCALE: 1" = 20 FT.
SCALE HOR: 1"=20'

CULVERT PROFILE
NUMBER 47

10 0 10 20 40
SCALE: 1" = 20 FT.
SCALE HOR: 1"=20'
SCALE VER: 1"=2'

LEGEND:

EP - EDGE OF PAVEMENT
N - NORTHING (FOR GENERAL LOCATION PURPOSES ONLY)
E - EASTING (FOR GENERAL LOCATION PURPOSES ONLY)

THIS RECORD DRAWING WAS PREPARED UNDER MY DIRECT SUPERVISION FOR THE SOLE PURPOSE OF HYDRAULIC MODELING. DATUM=NAVD88

REGISTERED LAND SURVEYOR
CERTIFICATE NO.
35980
ROLAND
MICHAUD
Date Signed 06/02/05
ARIZONA, U.S.A.

Consultant Engineering, Inc.

CONSULTANT ENGINEERING, INC.
3404 W. CHERYL DRIVE
PHOENIX, ARIZONA
602-866-5090

RIO VERDE ADMP FLOOD PLAIN DELINEATION
RECORD DRAWING FOR STRUCTURE AT
CULVERT NUMBER 47

DATE	04-29-05
SCALE	SEE PLAN
DRAWN BY	NZ
APPROVED BY	RM
C.E.I. JOB #	5050-332
SHEET	

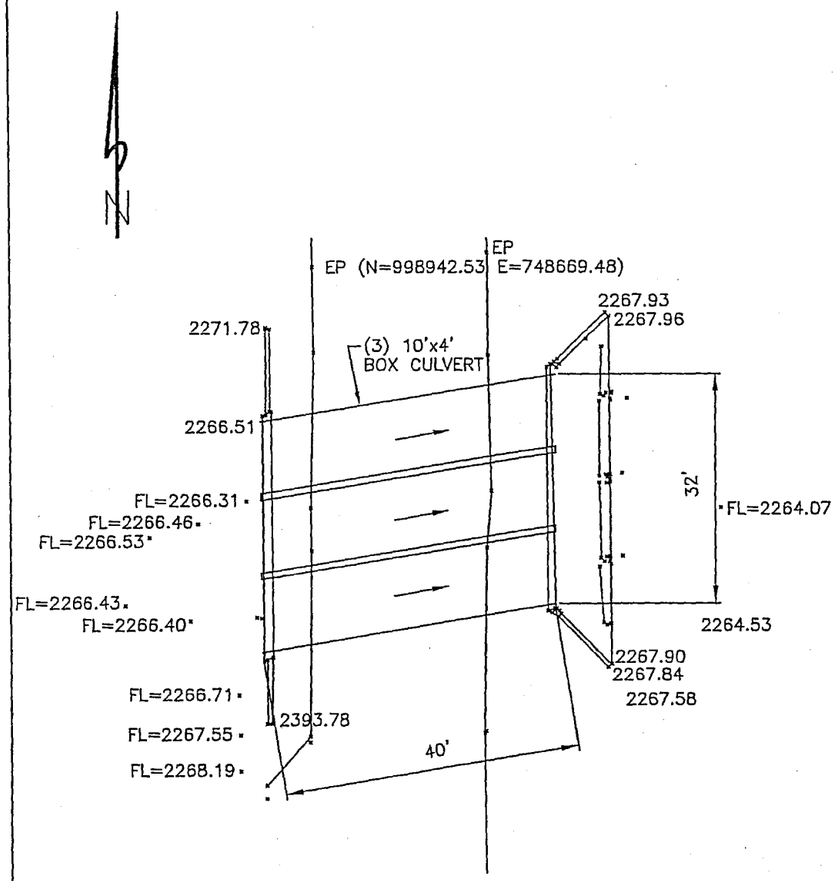

CULVERT PLAN
NUMBER 48

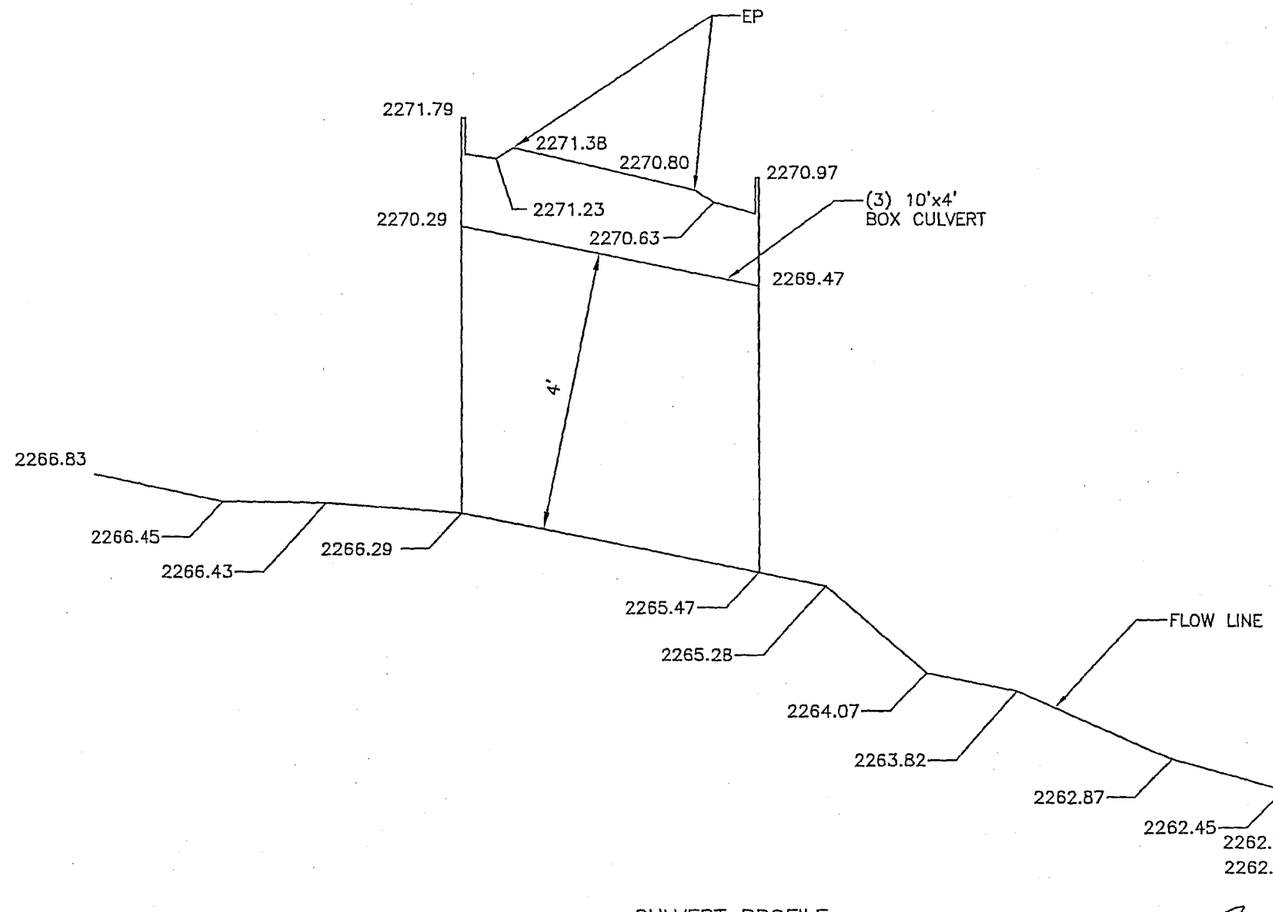

CULVERT PROFILE
NUMBER 48

10 0 10 20 40
SCALE: 1" = 20 FT.
SCALE HOR: 1"=20'

10 0 10 20 40
SCALE: 1" = 20 FT.
SCALE HOR: 1"=20'
SCALE VER: 1"=2'

LEGEND:

EP - EDGE OF PAVEMENT
N - NORTHING (FOR GENERAL LOCATION PURPOSES ONLY)
E - EASTING (FOR GENERAL LOCATION PURPOSES ONLY)

THIS RECORD DRAWING WAS PREPARED UNDER MY DIRECT SUPERVISION FOR THE SOLE PURPOSE OF HYDRAULIC MODELING. DATUM=NAVD88

REGISTERED LAND SURVEYOR
CERTIFICATE NO.
35980
ROLAND
MICHAUD
Date Signed 06/02/05
ARIZONA, U.S.A.

Consultant Engineering, Inc.

CONSULTANT ENGINEERING, INC.
3404 W. CHERYL DRIVE
PHOENIX, ARIZONA
602-866-5090

RIO VERDE ADMP FLOOD PLAIN DELINEATION
RECORD DRAWING FOR STRUCTURE AT
CULVERT NUMBER 48

DATE	04-29-05
SCALE	SEE PLAN
DRAWN BY	NZ
APPROVED BY	RM
C.E.I. JOB #	5050-332
SHEET	

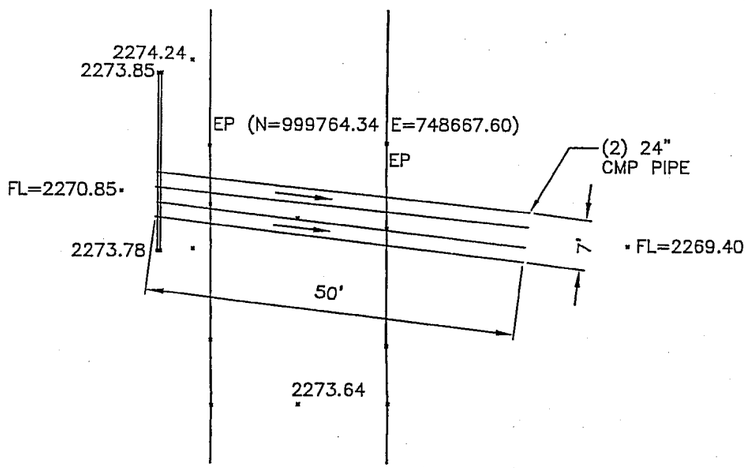

CULVERT PLAN
NUMBER 49

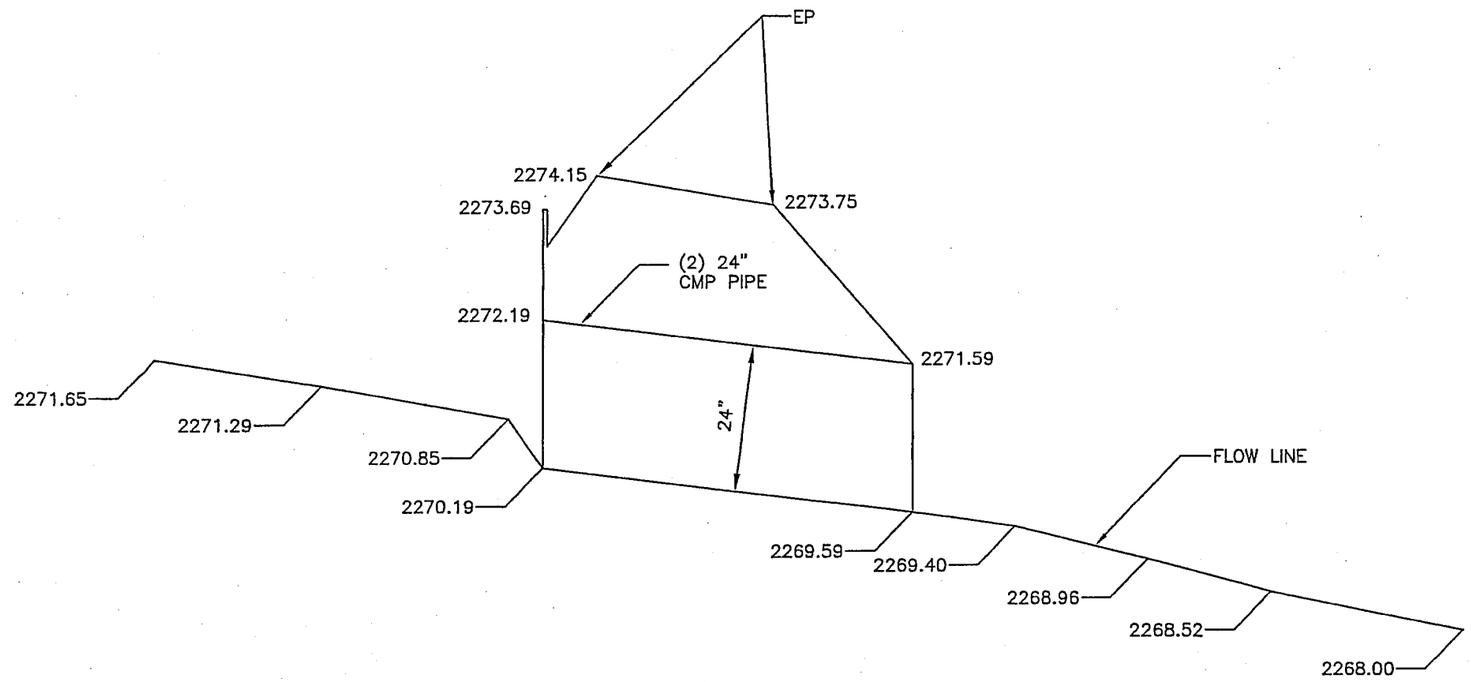

CULVERT PROFILE
NUMBER 49

10 0 10 20 40
SCALE: 1" = 20 FT.
SCALE HOR: 1"=20'

10 0 10 20 40
SCALE: 1" = 20 FT.
SCALE HOR: 1"=20'
SCALE VER: 1"=2'

LEGEND:

EP - EDGE OF PAVEMENT
N - NORTHING (FOR GENERAL LOCATION PURPOSES ONLY)
E - EASTING (FOR GENERAL LOCATION PURPOSES ONLY)

THIS RECORD DRAWING WAS PREPARED UNDER MY DIRECT SUPERVISION FOR THE SOLE PURPOSE OF HYDRAULIC MODELING. DATUM=NAVD88

REGISTERED LAND SURVEYOR
CERTIFICATE NO.
35980
ROLAND
MICHAUD
Date Signed 06/02/05
ARIZONA, U.S.A.

Consultant Engineering, Inc.

CONSULTANT ENGINEERING, INC.
3404 W. CHERYL DRIVE
PHOENIX, ARIZONA
602-866-5090

RIO VERDE ADMP FLOOD PLAIN DELINEATION
RECORD DRAWING FOR STRUCTURE AT
CULVERT NUMBER 49

DATE	04-29-05
SCALE	SEE PLAN
DRAWN BY	NZ
APPROVED BY	RM
C.E.I. JOB #	5050-332
SHEET	

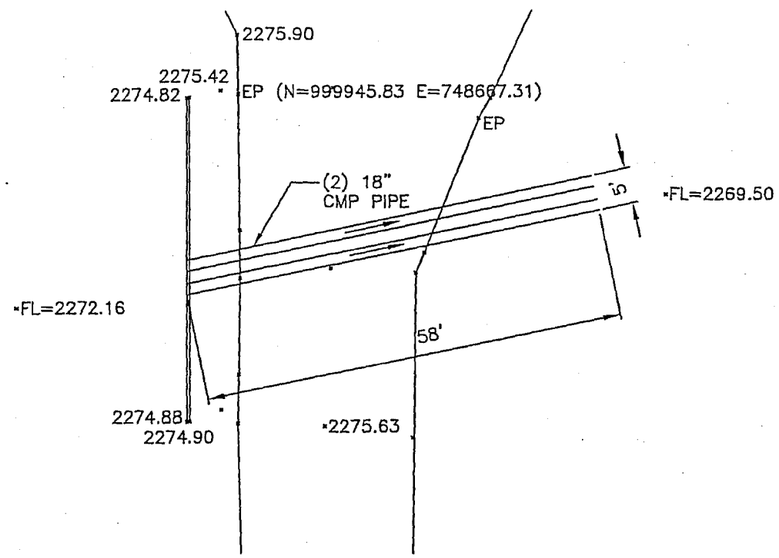

CULVERT PLAN
NUMBER 50

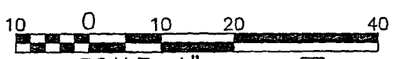

SCALE: 1" = 20 FT.

SCALE HOR: 1"=20'

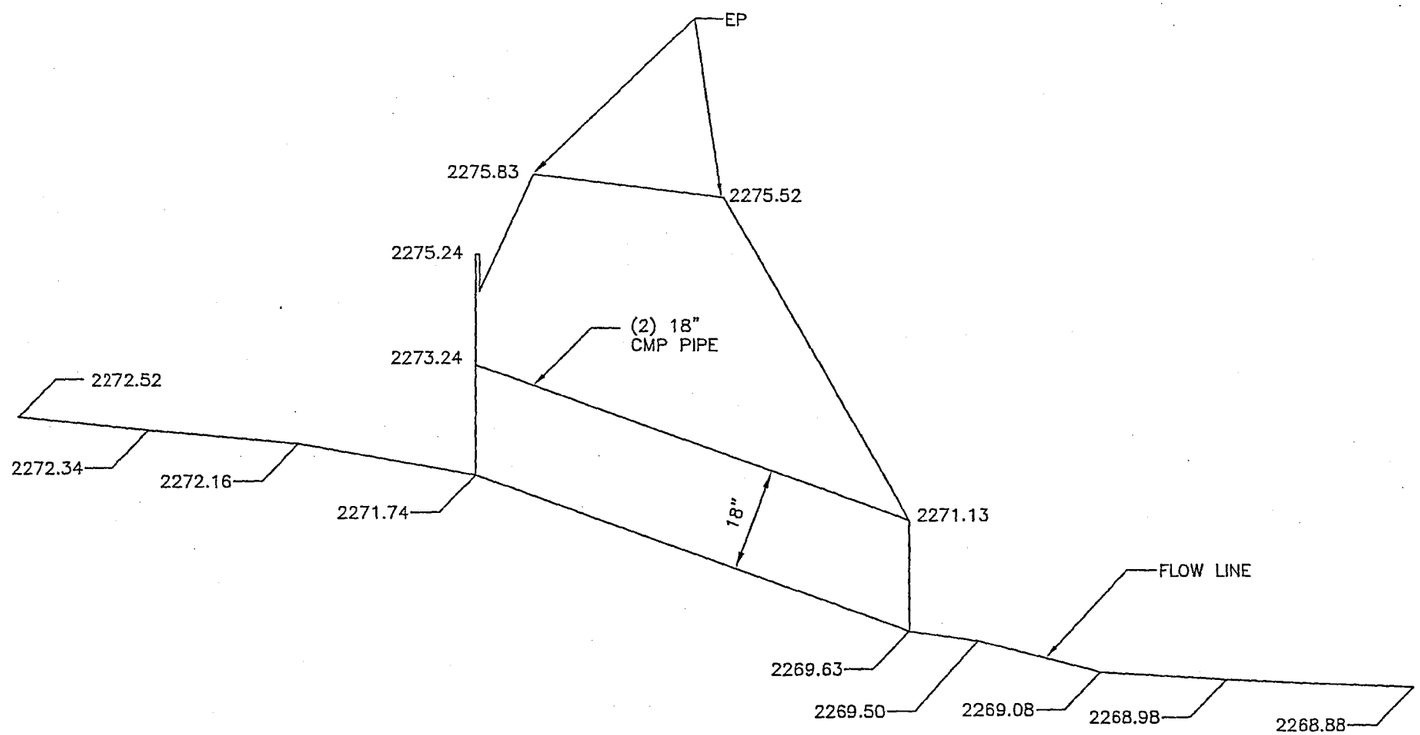

CULVERT PROFILE
NUMBER 50

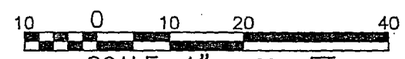

SCALE: 1" = 20 FT.

SCALE HOR: 1"=20'
SCALE VER: 1"=2'

LEGEND:

EP - EDGE OF PAVEMENT
N - NORTHING (FOR GENERAL LOCATION PURPOSES ONLY)
E - EASTING (FOR GENERAL LOCATION PURPOSES ONLY)

THIS RECORD DRAWING WAS PREPARED UNDER MY DIRECT SUPERVISION FOR THE SOLE PURPOSE OF HYDRAULIC MODELING. DATUM=NAVD88

REGISTERED LAND SURVEYOR
CERTIFICATE NO.
35980
ROLAND
MICHAUD
Date Signed 06/02/05
ARIZONA, U.S.A.

Consultant Engineering, Inc.

CONSULTANT ENGINEERING, INC.
3404 W. CHERYL DRIVE
PHOENIX, ARIZONA
602-866-5090

RIO VERDE ADMP FLOOD PLAIN DELINEATION
RECORD DRAWING FOR STRUCTURE AT
CULVERT NUMBER 50

DATE	04-29-05
SCALE	SEE PLAN
DRAWN BY	NZ
APPROVED BY	RM
C.E.I. JOB #	5050-332
SHEET	

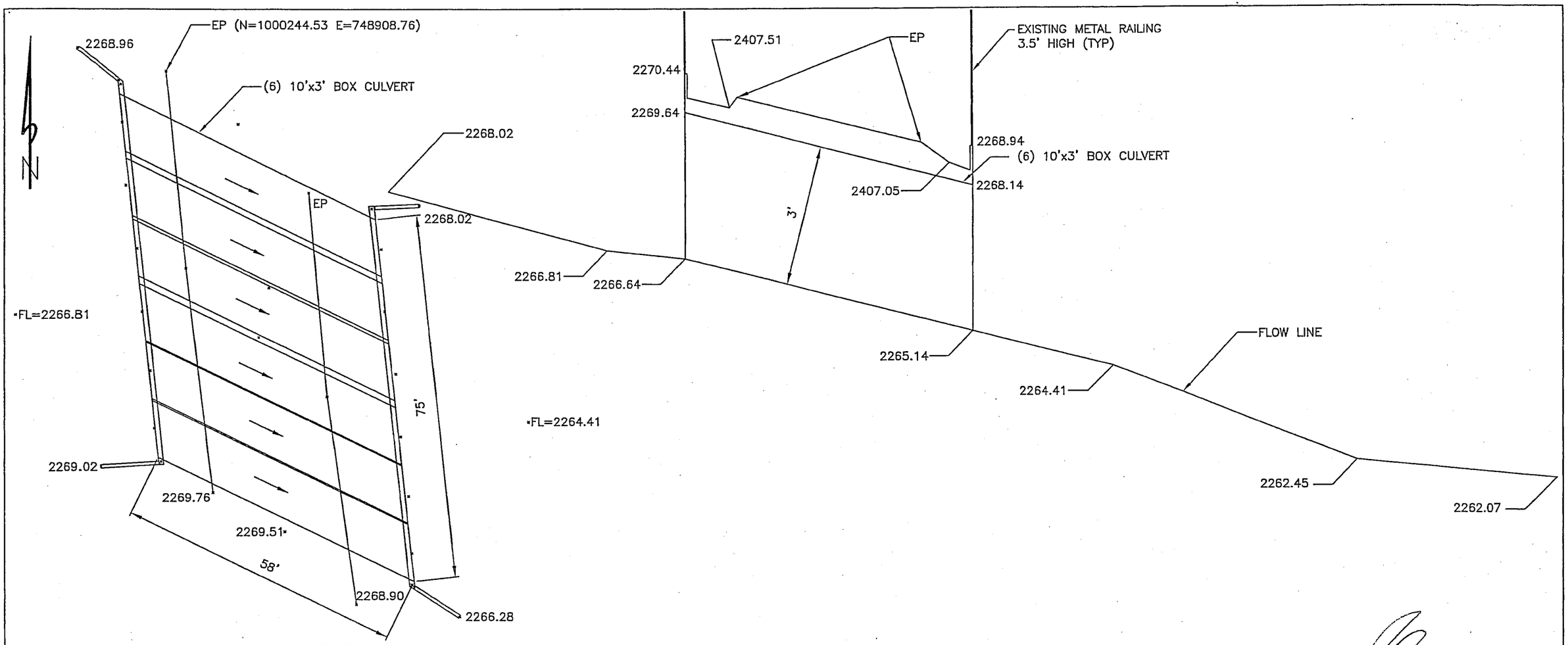

CULVERT PLAN
NUMBER 51

10 0 10 20 40
SCALE: 1" = 20 FT.
SCALE HOR: 1"=20'

CULVERT PROFILE
NUMBER 51

10 0 10 20 40
SCALE: 1" = 20 FT.
SCALE HOR: 1"=20'
SCALE VER: 1"=2'

REGISTERED LAND SURVEYOR
CERTIFICATE NO.
35980
ROLAND
MICHAUD
Date Signed 06/03/05
ARIZONA, U.S.A.

LEGEND:

EP - EDGE OF PAVEMENT
N - NORTHING (FOR GENERAL LOCATION PURPOSES ONLY)
E - EASTING (FOR GENERAL LOCATION PURPOSES ONLY)

THIS RECORD DRAWING WAS PREPARED UNDER MY DIRECT SUPERVISION FOR THE SOLE PURPOSE OF HYDRAULIC MODELING. DATUM=NAVD88

CEI Consultant Engineering, Inc.

CONSULTANT ENGINEERING, INC.
3404 W. CHERYL DRIVE
PHOENIX, ARIZONA
602-866-5090

RIO VERDE ADMP FLOOD PLAIN DELINEATION
RECORD DRAWING FOR STRUCTURE AT
CULVERT NUMBER 51

DATE	04-29-05
SCALE	SEE PLAN
DRAWN BY	NZ
APPROVED BY	RM
C.E.I. JOB #	5050-332
SHEET	

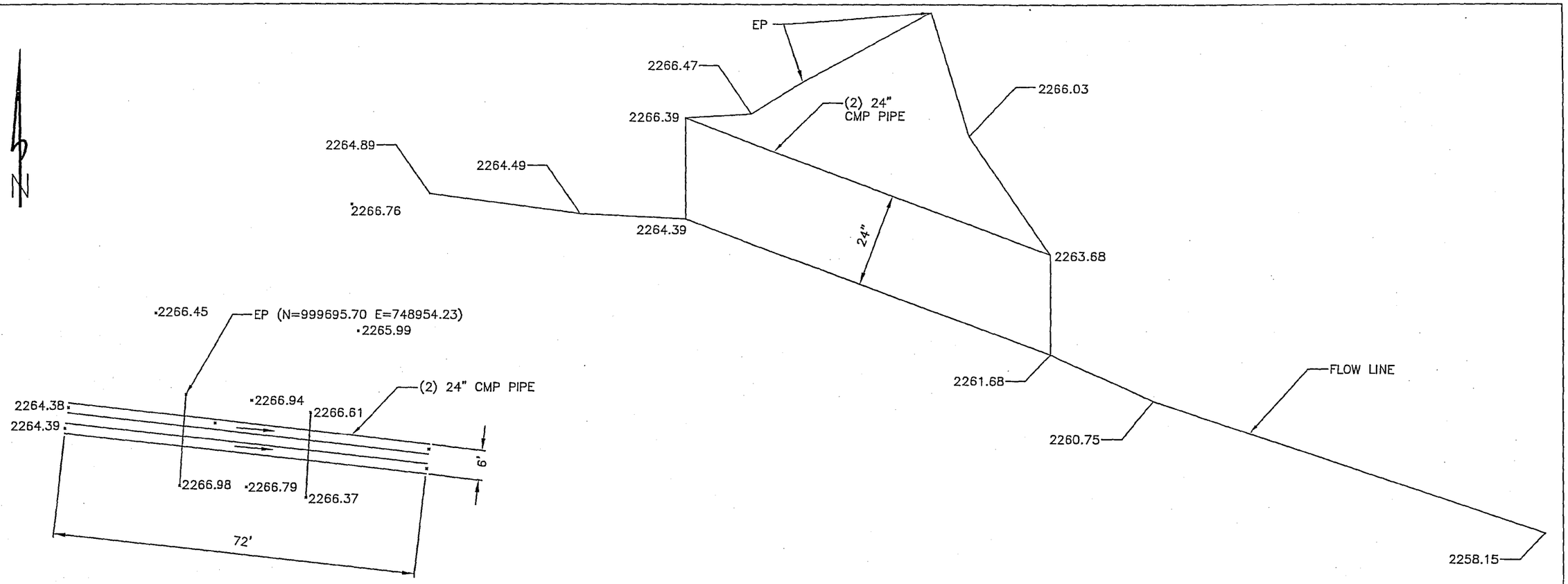

CULVERT PLAN
NUMBER 52

10 0 10 20 40
SCALE: 1" = 20 FT.
SCALE HOR: 1"=20'

CULVERT PROFILE
NUMBER 52

10 0 10 20 40
SCALE: 1" = 20 FT.
SCALE HOR: 1"=20'
SCALE VER: 1"=2'

LEGEND:

EP - EDGE OF PAVEMENT
N - NORTHING (FOR GENERAL LOCATION PURPOSES ONLY)
E - EASTING (FOR GENERAL LOCATION PURPOSES ONLY)

THIS RECORD DRAWING WAS PREPARED UNDER MY DIRECT SUPERVISION FOR THE SOLE PURPOSE OF HYDRAULIC MODELING. DATUM=NAVD88

REGISTERED LAND SURVEYOR
CERTIFICATE NO.
35980
ROLAND
MICHAUD
Date Signed 06/02/05
ARIZONA, U.S.A.

CEI Consultant Engineering, Inc.

CONSULTANT ENGINEERING, INC.
3404 W. CHERYL DRIVE
PHOENIX, ARIZONA
602-866-5090

RIO VERDE ADMP FLOOD PLAIN DELINEATION
RECORD DRAWING FOR STRUCTURE AT
CULVERT NUMBER 52

DATE	04-29-05
SCALE	SEE PLAN
DRAWN BY	NZ
APPROVED BY	RM
C.E.I. JOB #	5050-332
SHEET	

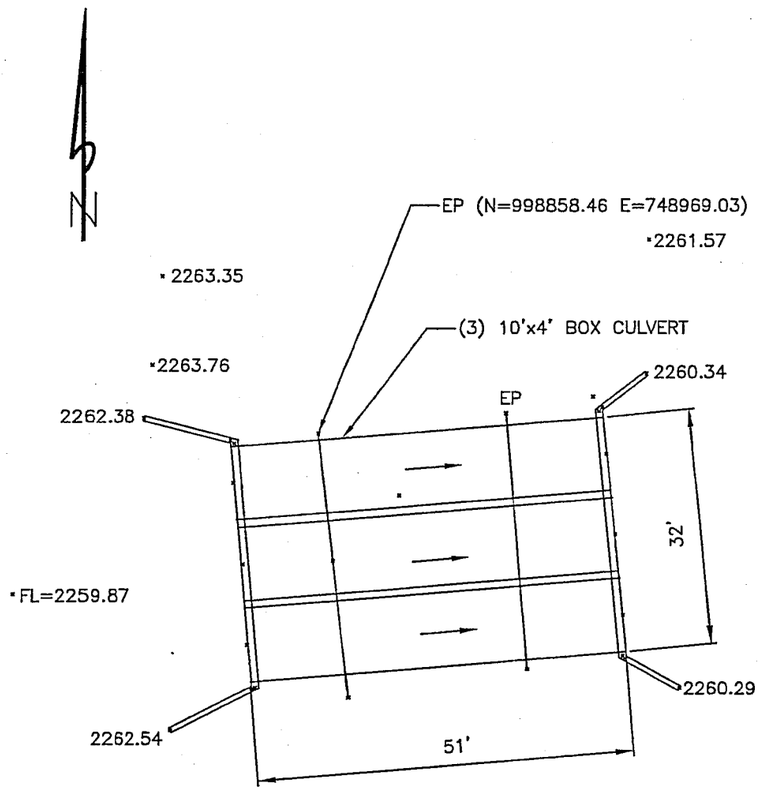

CULVERT PLAN
NUMBER 53

10 0 10 20 40
SCALE: 1" = 20 FT.
SCALE HOR: 1"=20'

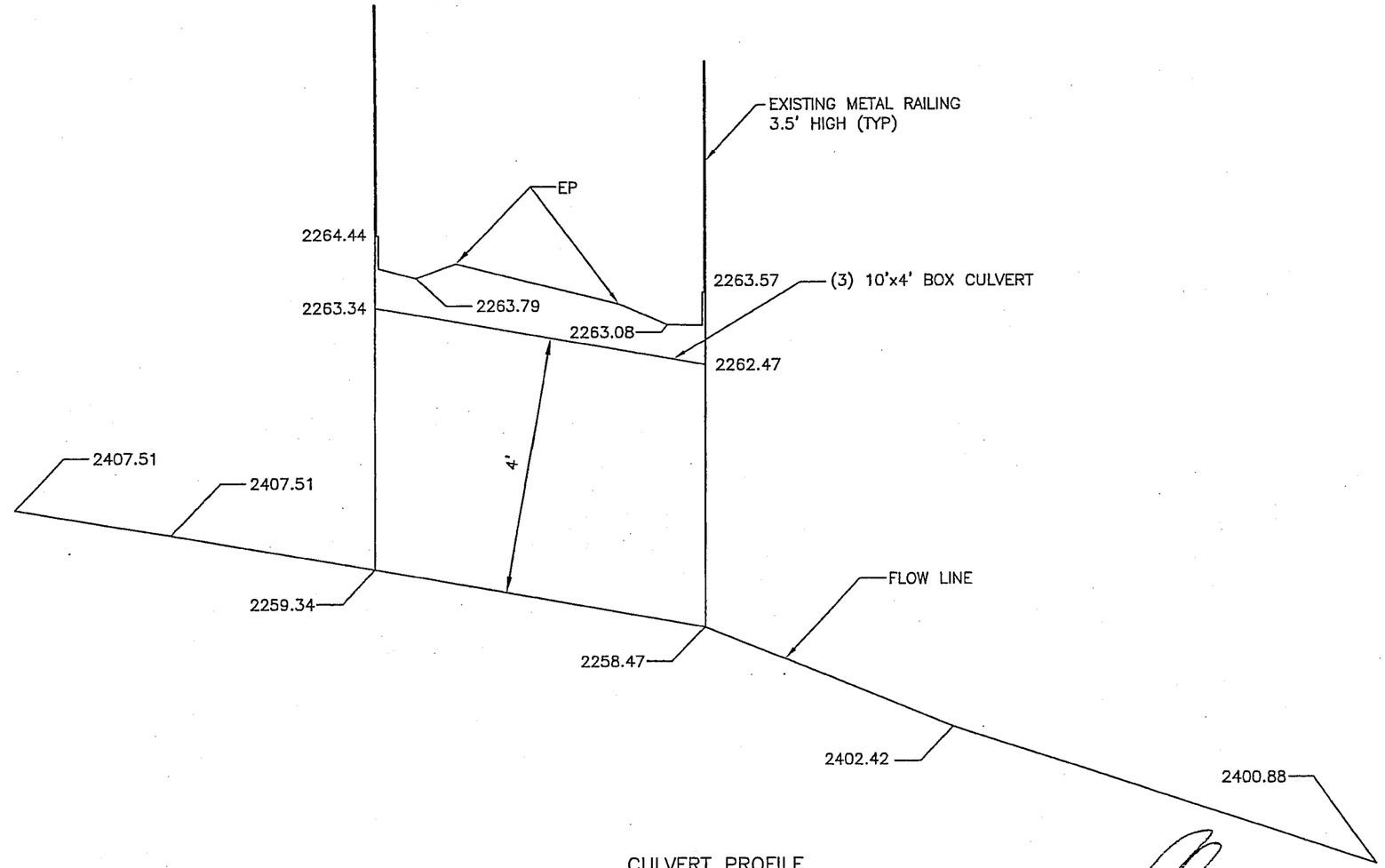

CULVERT PROFILE
NUMBER 53

10 0 10 20 40
SCALE: 1" = 20 FT.
SCALE HOR: 1"=20'
SCALE VER: 1"=2'

LEGEND:

EP - EDGE OF PAVEMENT
N - NORTHING (FOR GENERAL LOCATION PURPOSES ONLY)
E - EASTING (FOR GENERAL LOCATION PURPOSES ONLY)

THIS RECORD DRAWING WAS PREPARED UNDER MY DIRECT SUPERVISION FOR THE SOLE PURPOSE OF HYDRAULIC MODELING. DATUM=NAVD88

REGISTERED LAND SURVEYOR
CERTIFICATE NO.
35980
ROLAND
MICHAUD
Date Signed 06/06/05
ARIZONA, U.S.A.

Consultant Engineering, Inc.

CONSULTANT ENGINEERING, INC.
3404 W. CHERYL DRIVE
PHOENIX, ARIZONA
602-866-5090

RIO VERDE ADMP FLOOD PLAIN DELINEATION
RECORD DRAWING FOR STRUCTURE AT
CULVERT NUMBER 53

DATE	04-29-05
SCALE	SEE PLAN
DRAWN BY	NZ
APPROVED BY	RM
C.E.I. JOB #	5050-332
SHEET	

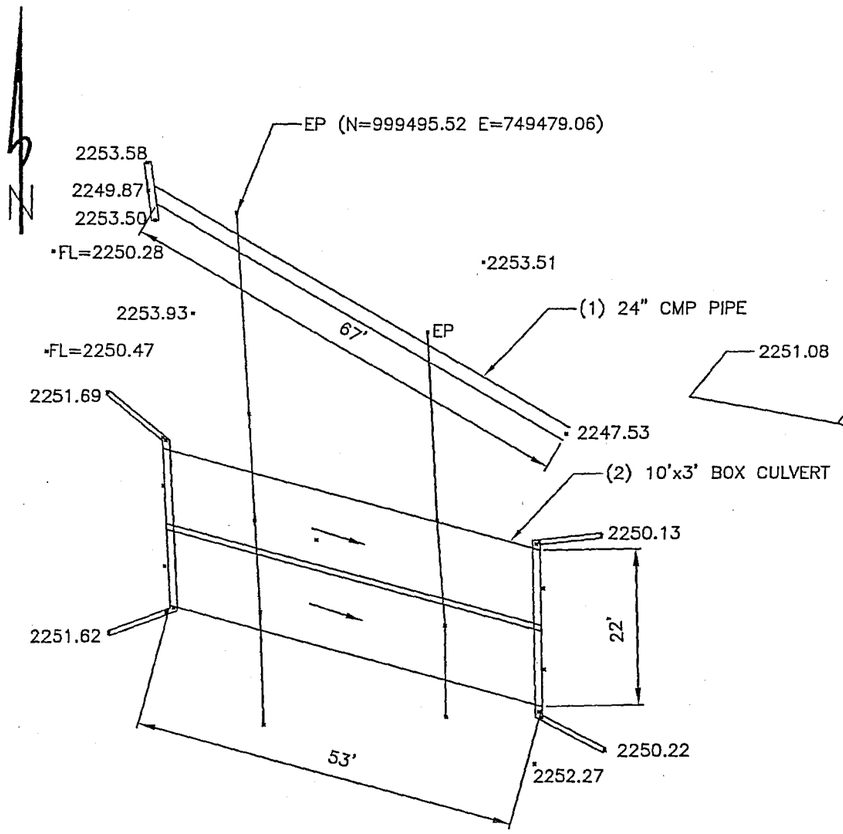

CULVERT PLAN
NUMBER 54

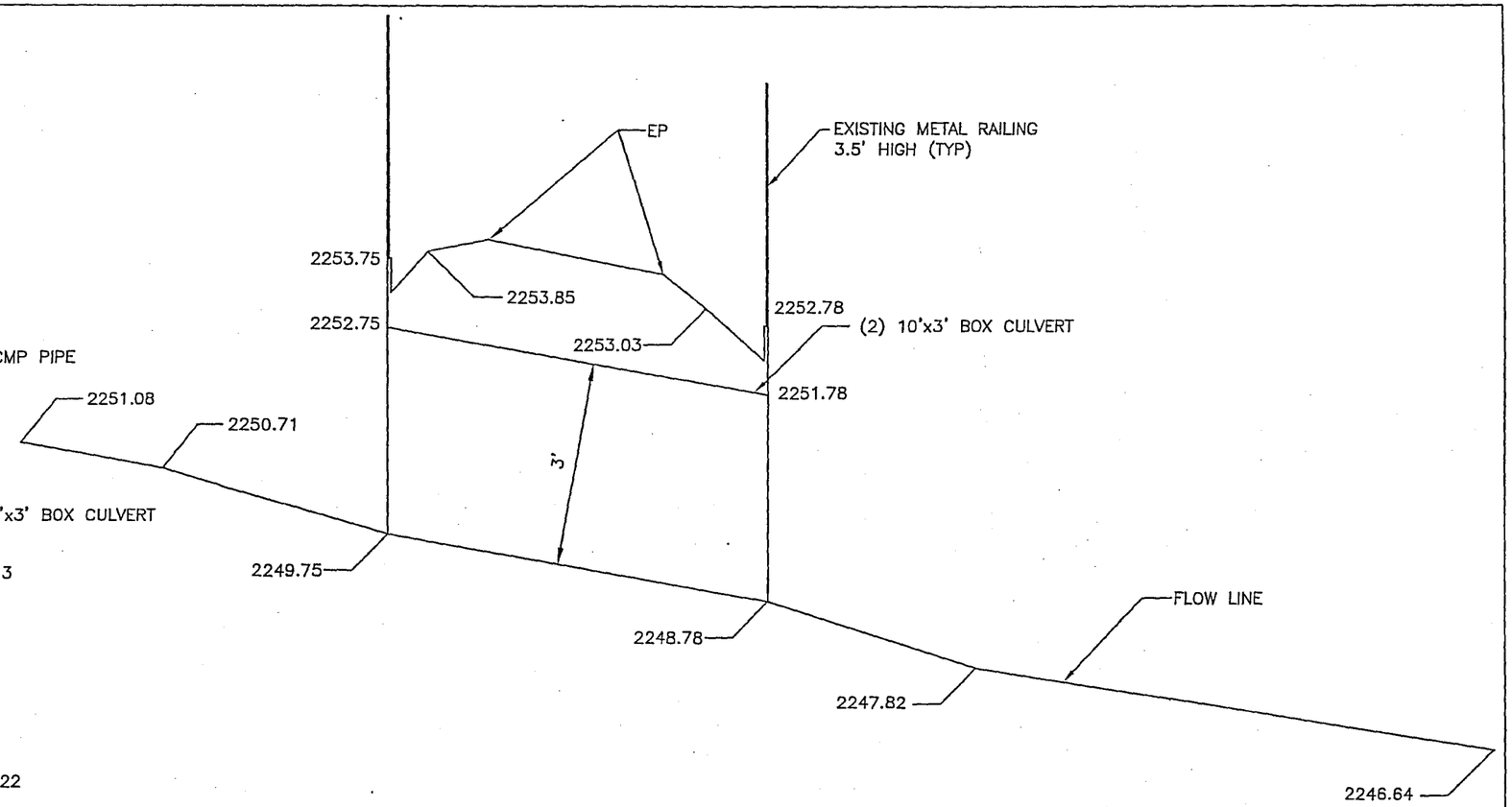

CULVERT PROFILE
NUMBER 54

10 0 10 20 40
SCALE: 1" = 20 FT.
SCALE HOR: 1"=20'

10 0 10 20 40
SCALE: 1" = 20 FT.
SCALE HOR: 1"=20'
SCALE VER: 1"=2'

LEGEND:

EP - EDGE OF PAVEMENT
N - NORTHING (FOR GENERAL LOCATION PURPOSES ONLY)
E - EASTING (FOR GENERAL LOCATION PURPOSES ONLY)

THIS RECORD DRAWING WAS PREPARED UNDER MY DIRECT SUPERVISION FOR THE SOLE PURPOSE OF HYDRAULIC MODELING. DATUM=NAVD88

REGISTERED LAND SURVEYOR
CERTIFICATE NO.
35980
ROLAND
MICHAUD
Date Signed 06/03/05
ARIZONA, U.S.A.

Consultant Engineering, Inc.

CONSULTANT ENGINEERING, INC.
3404 W. CHERYL DRIVE
PHOENIX, ARIZONA
602-866-5090

RIO VERDE ADMP FLOOD PLAIN DELINEATION
RECORD DRAWING FOR STRUCTURE AT
CULVERT NUMBER 54

DATE	04-29-05
SCALE	SEE PLAN
DRAWN BY	NZ
APPROVED BY	RM
C.E.I. JOB #	5050-332
SHEET	

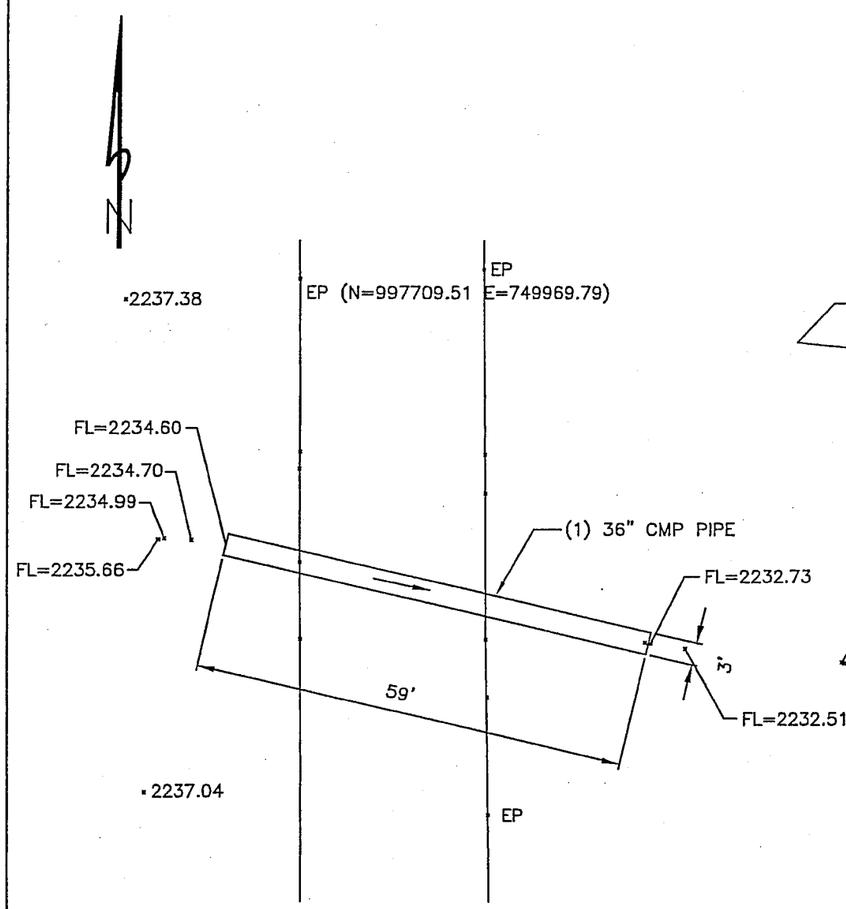

CULVERT PLAN
NUMBER 55

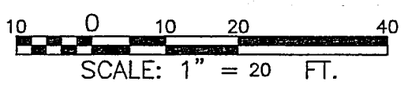

SCALE HOR: 1"=20'

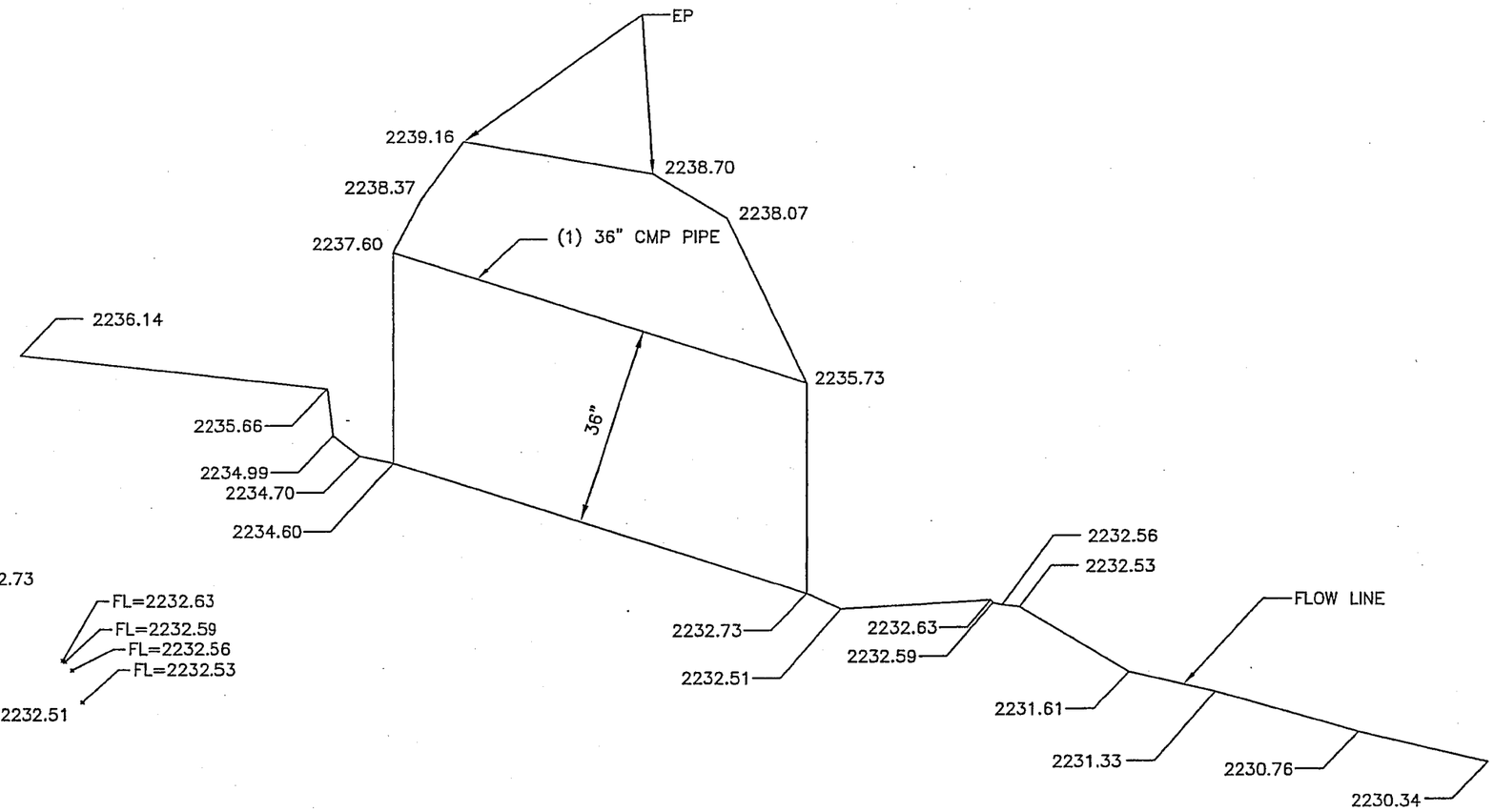

CULVERT PROFILE
NUMBER 55

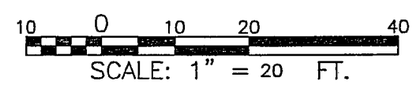

SCALE HOR: 1"=20'
SCALE VER: 1"=2'

LEGEND:

EP - EDGE OF PAVEMENT
N - NORTHING (FOR GENERAL LOCATION PURPOSES ONLY)
E - EASTING (FOR GENERAL LOCATION PURPOSES ONLY)

THIS RECORD DRAWING WAS PREPARED UNDER MY DIRECT SUPERVISION FOR THE SOLE PURPOSE OF HYDRAULIC MODELING. DATUM=NAVD88

REGISTERED LAND SURVEYOR
CERTIFICATE NO.
35980
ROLAND
MICHAUD
Date Signed 06/06/05
ARIZONA, U.S.A.

CEI Consultant Engineering, Inc.

CONSULTANT ENGINEERING, INC.
3404 W. CHERYL DRIVE
PHOENIX, ARIZONA
602-866-5090

RIO VERDE ADMP FLOOD PLAIN DELINEATION
RECORD DRAWING FOR STRUCTURE AT
CULVERT NUMBER 55

DATE	04-29-05
SCALE	SEE PLAN
DRAWN BY	NZ
APPROVED BY	RM
C.E.I. JOB #	5050-332
SHEET	

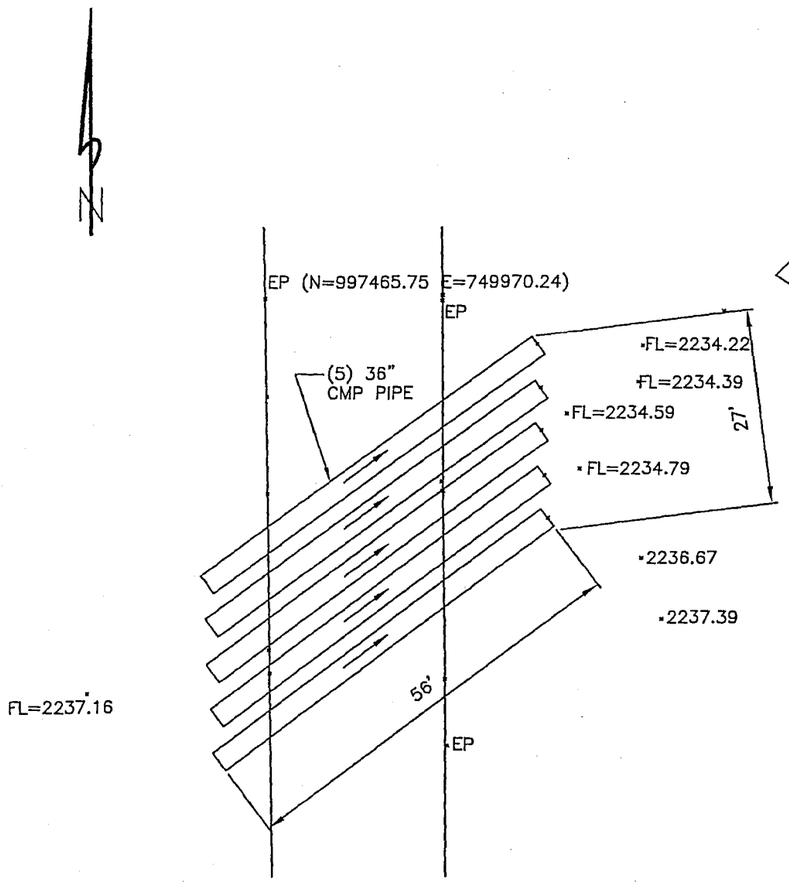

CULVERT PLAN
NUMBER 56

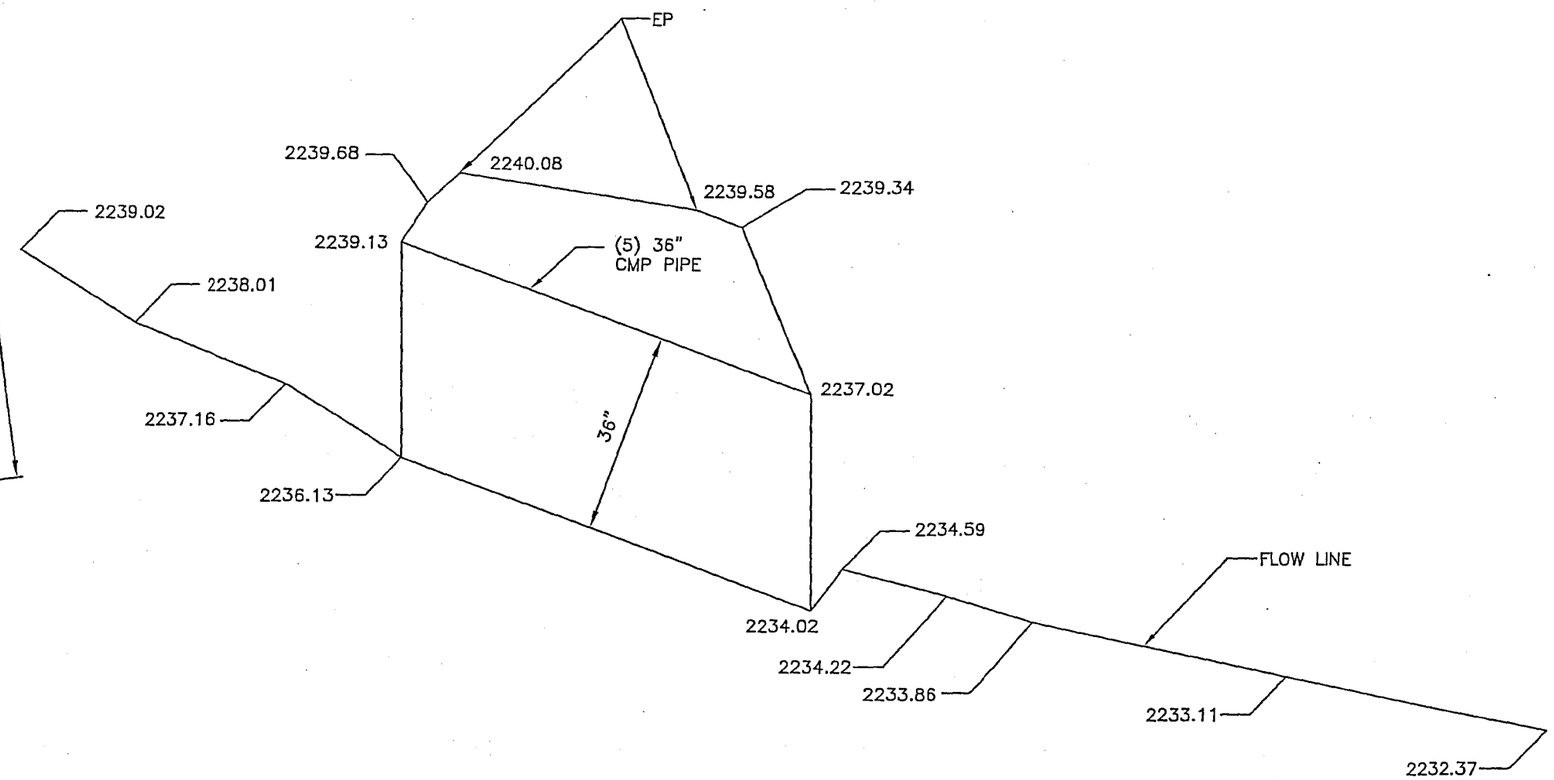

CULVERT PROFILE
NUMBER 56

10 0 10 20 40
SCALE: 1" = 20 FT.
SCALE HOR: 1"=20'

10 0 10 20 40
SCALE: 1" = 20 FT.
SCALE HOR: 1"=20'
SCALE VER: 1"=2'

LEGEND:

EP - EDGE OF PAVEMENT
N - NORTHING (FOR GENERAL LOCATION PURPOSES ONLY)
E - EASTING (FOR GENERAL LOCATION PURPOSES ONLY)

THIS RECORD DRAWING WAS PREPARED UNDER MY DIRECT SUPERVISION FOR THE SOLE PURPOSE OF HYDRAULIC MODELING. DATUM=NAVD88

REGISTERED LAND SURVEYOR
CERTIFICATE NO. 35980
ROLAND MICHAUD
Date Signed 06/06/05
ARIZONA, U.S.A.

CEI Consultant Engineering, Inc.

CONSULTANT ENGINEERING, INC.
3404 W. CHERYL DRIVE
PHOENIX, ARIZONA
602-866-5090

RIO VERDE ADMP FLOOD PLAIN DELINEATION
RECORD DRAWING FOR STRUCTURE AT
CULVERT NUMBER 56

DATE	04-29-05
SCALE	SEE PLAN
DRAWN BY	NZ
APPROVED BY	RM
C.E.I. JOB #	5050-332
SHEET	

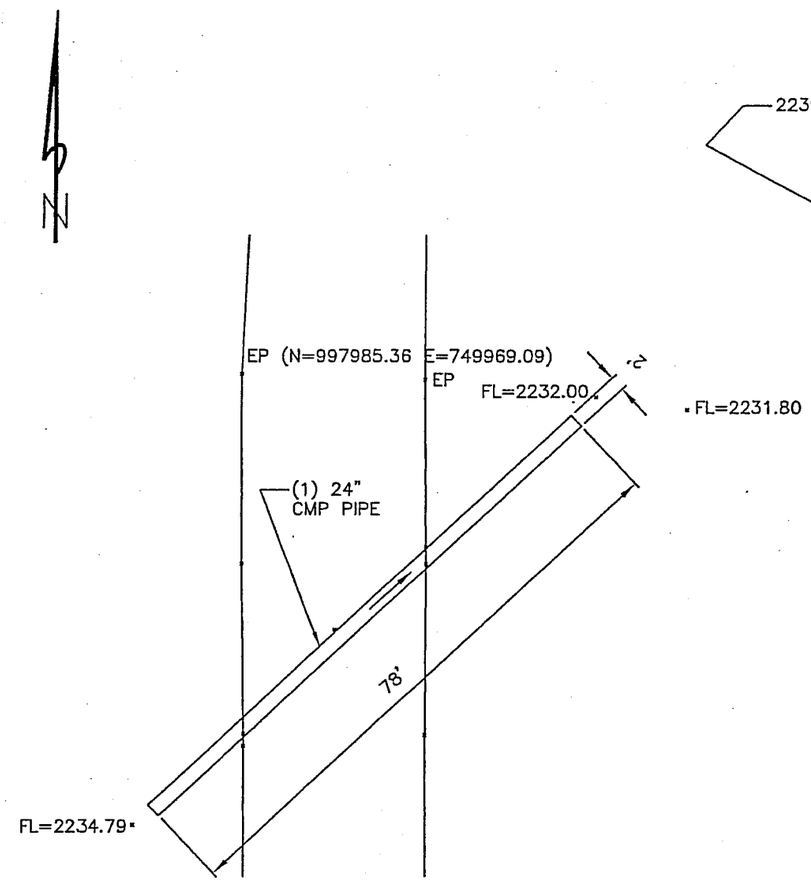

CULVERT PLAN
NUMBER 57

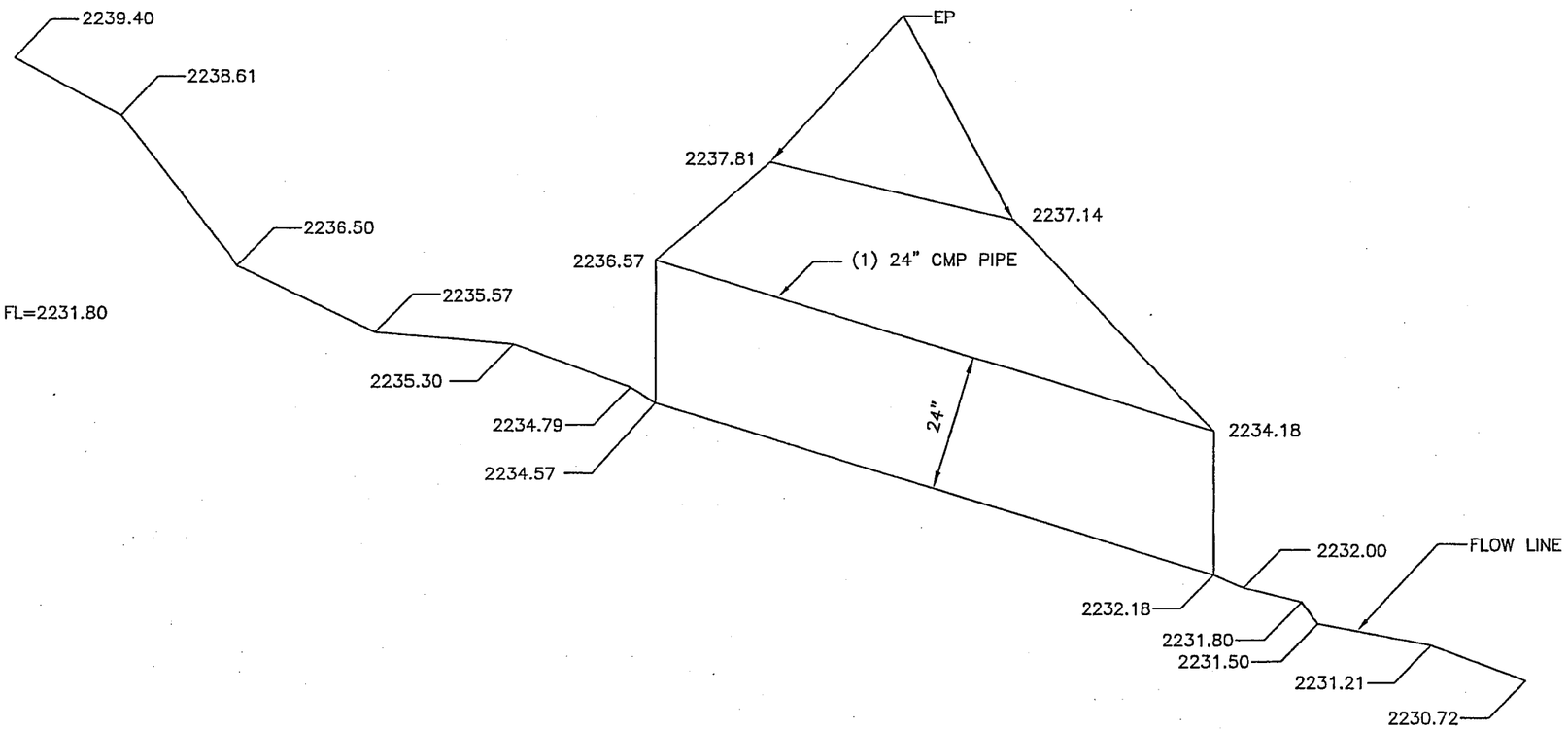

CULVERT PROFILE
NUMBER 57

10 0 10 20 40
SCALE: 1" = 20 FT.
SCALE HOR: 1"=20'

10 0 10 20 40
SCALE: 1" = 20 FT.
SCALE HOR: 1"=20'
SCALE VER: 1"=2'

LEGEND:

EP - EDGE OF PAVEMENT
N - NORTHING (FOR GENERAL LOCATION PURPOSES ONLY)
E - EASTING (FOR GENERAL LOCATION PURPOSES ONLY)

THIS RECORD DRAWING WAS PREPARED UNDER MY DIRECT SUPERVISION FOR THE SOLE PURPOSE OF HYDRAULIC MODELING. DATUM=NAVD88

REGISTERED LAND SURVEYOR
CERTIFICATE NO.
35980
ROLAND
MICHAUD
Date Signed 06/06/05
ARIZONA, U.S.A.

CEI Consultant Engineering, Inc.

CONSULTANT ENGINEERING, INC.
3404 W. CHERYL DRIVE
PHOENIX, ARIZONA
602-866-5090

RIO VERDE ADMP FLOOD PLAIN DELINEATION
RECORD DRAWING FOR STRUCTURE AT
CULVERT NUMBER 57

DATE	04-29-05
SCALE	SEE PLAN
DRAWN BY	NZ
APPROVED BY	RM
C.E.I. JOB #	5050-332
SHEET	

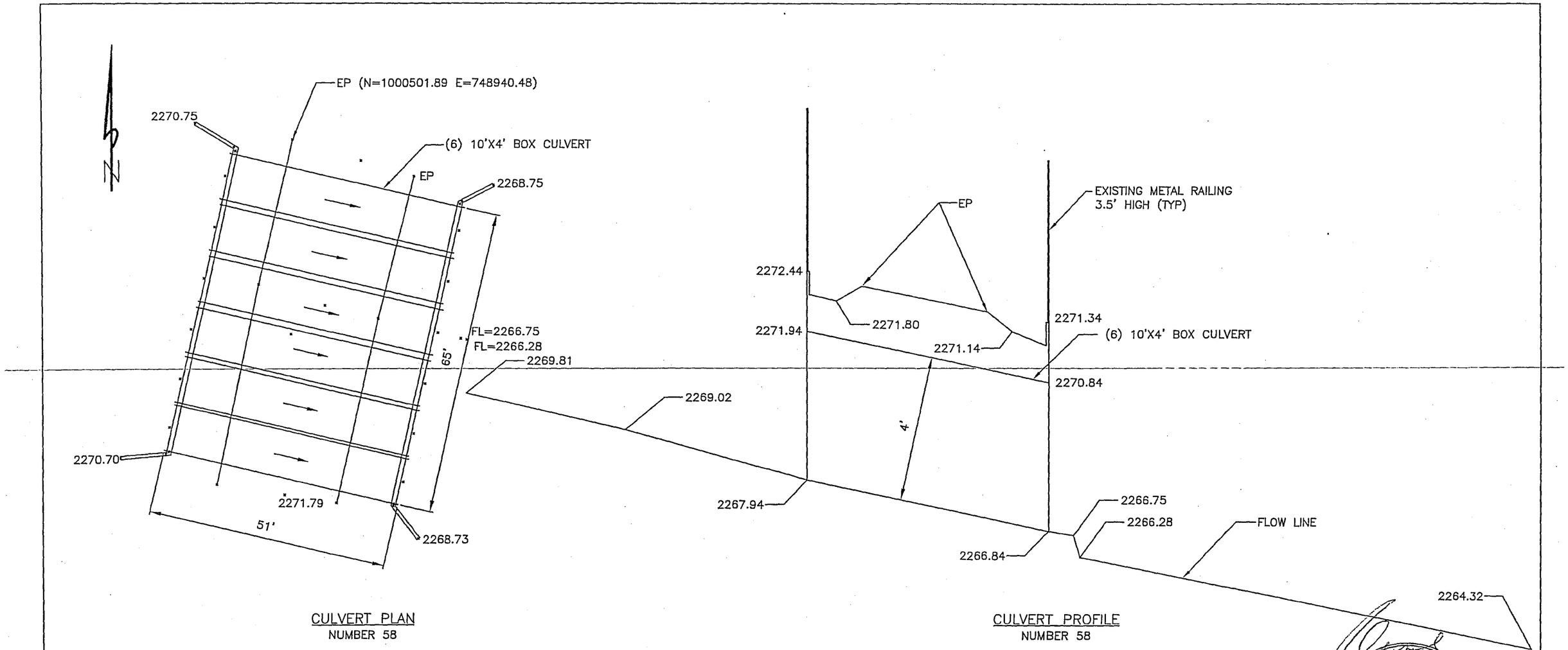

CULVERT PLAN
NUMBER 58

10 0 10 20 40
SCALE: 1" = 20 FT.
SCALE HOR: 1"=20'

CULVERT PROFILE
NUMBER 58

10 0 10 20 40
SCALE: 1" = 20 FT.
SCALE HOR: 1"=20'
SCALE VER: 1"=2'

REGISTERED LAND SURVEYOR
CERTIFICATE NO.
35980
ROLAND
MICHAUD
Date Signed 06/06/05
ARIZONA, U.S.A.

LEGEND:

EP - EDGE OF PAVEMENT
N - NORTHING (FOR GENERAL LOCATION PURPOSES ONLY)
E - EASTING (FOR GENERAL LOCATION PURPOSES ONLY)

THIS RECORD DRAWING WAS PREPARED UNDER MY DIRECT SUPERVISION FOR THE SOLE PURPOSE OF HYDRAULIC MODELING. DATUM=NAVD88

Consultant Engineering, Inc.

CONSULTANT ENGINEERING, INC.
3404 W. CHERYL DRIVE
PHOENIX, ARIZONA
602-866-5090

RIO VERDE ADMP FLOOD PLAIN DELINEATION
RECORD DRAWING FOR STRUCTURE AT
CULVERT NUMBER 58

DATE	04-29-05
SCALE	SEE PLAN
DRAWN BY	NZ
APPROVED BY	RM
C.E.I. JOB #	5050-332
SHEET	

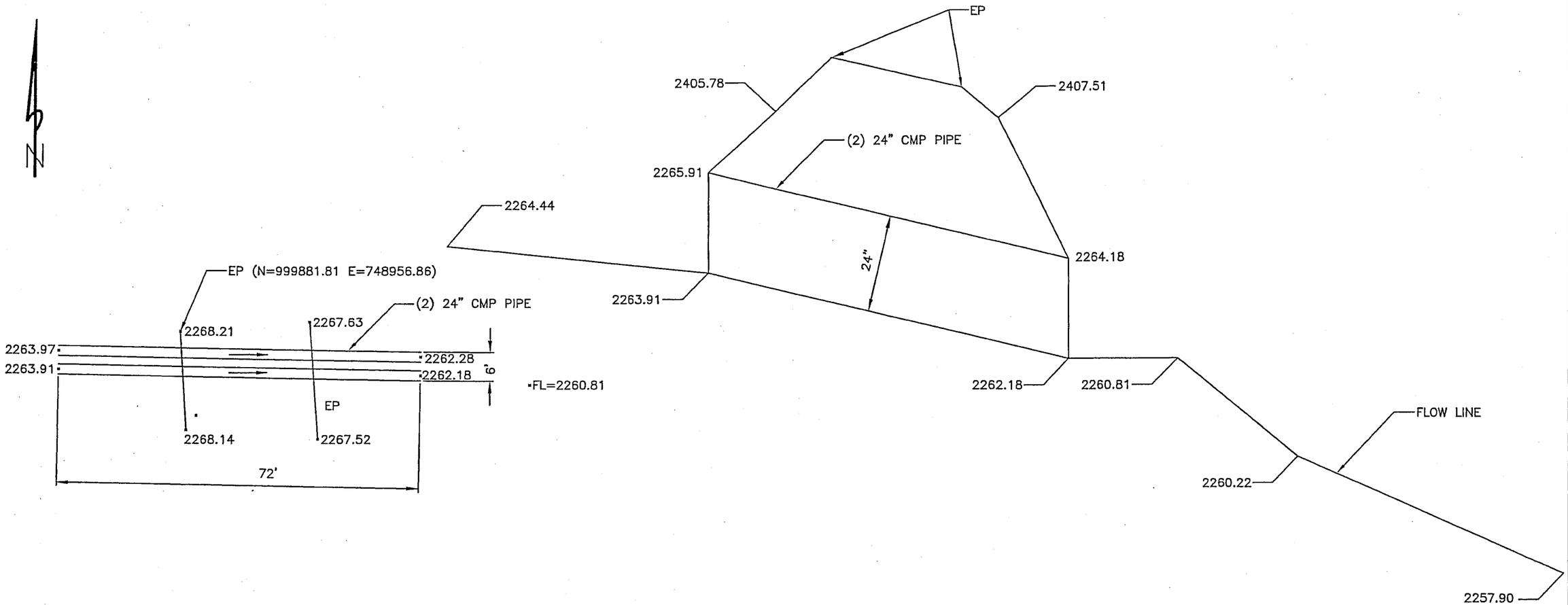

CULVERT PLAN
NUMBER 71

10 0 10 20 40
SCALE: 1" = 20 FT.
SCALE HOR: 1"=20'

CULVERT PROFILE
NUMBER 71

10 0 10 20 40
SCALE: 1" = 20 FT.
SCALE HOR: 1"=20'
SCALE VER: 1"=2'

LEGEND:

EP - EDGE OF PAVEMENT
N - NORTHING (FOR GENERAL LOCATION PURPOSES ONLY)
E - EASTING (FOR GENERAL LOCATION PURPOSES ONLY)

THIS RECORD DRAWING WAS PREPARED UNDER MY DIRECT SUPERVISION FOR THE SOLE PURPOSE OF HYDRAULIC MODELING. DATUM=NAVD88

REGISTERED LAND SURVEYOR
CERTIFICATE NO.
35980
ROLAND
MICHAUD
Date Signed 06/02/05
ARIZONA, U.S.A.

Consultant Engineering, Inc.

CONSULTANT ENGINEERING, INC.
3404 W. CHERYL DRIVE
PHOENIX, ARIZONA
602-866-5090

RIO VERDE ADMP FLOOD PLAIN DELINEATION
RECORD DRAWING FOR STRUCTURE AT
CULVERT NUMBER 71

DATE	04-29-05
SCALE	SEE PLAN
DRAWN BY	NZ
APPROVED BY	RM
C.E.I. JOB #	5050-332
SHEET	

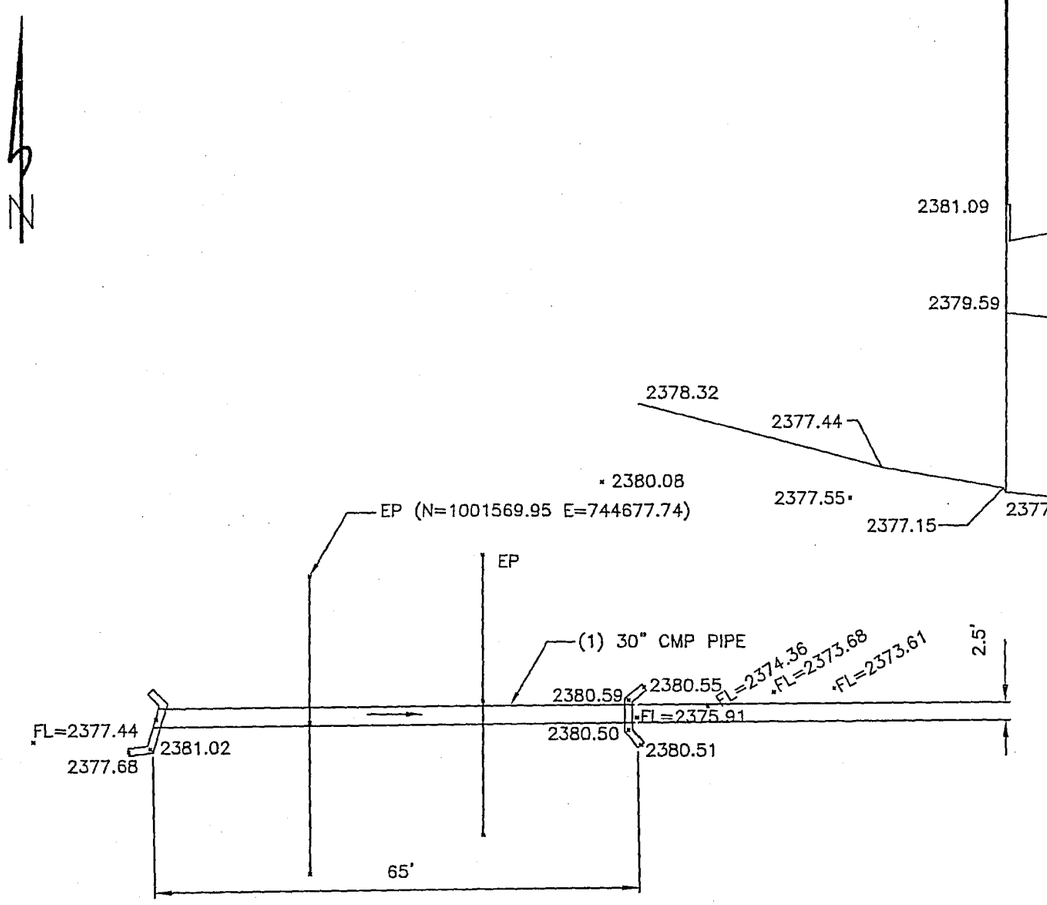

CULVERT PLAN
NUMBER 72

CULVERT PROFILE
NUMBER 72

10 0 10 20 40
SCALE: 1" = 20 FT.
SCALE HOR: 1"=20'

10 0 10 20 40
SCALE: 1" = 20 FT.
SCALE HOR: 1"=20'
SCALE VER: 1"=2'

LEGEND:

EP - EDGE OF PAVEMENT
N - NORTHING (FOR GENERAL LOCATION PURPOSES ONLY)
E - EASTING (FOR GENERAL LOCATION PURPOSES ONLY)

THIS RECORD DRAWING WAS PREPARED UNDER MY DIRECT SUPERVISION FOR THE SOLE PURPOSE OF HYDRAULIC MODELING. DATUM=NAVD88

REGISTERED LAND SURVEYOR
CERTIFICATE NO.
35980
ROLAND
MICHAUD
Date Signed 06/02/05
ARIZONA, U.S.A.

Consultant Engineering, Inc.

CONSULTANT ENGINEERING, INC.
3404 W. CHERYL DRIVE
PHOENIX, ARIZONA
602-866-5090

RIO VERDE ADMP FLOOD PLAIN DELINEATION
RECORD DRAWING FOR STRUCTURE AT
CULVERT NUMBER 72

DATE	04-29-05
SCALE	SEE PLAN
DRAWN BY	NZ
APPROVED BY	RM
C.E.I. JOB #	5050-332
SHEET	

CURRENT DATE: 03-20-2007 FILE DATE: 03/20/2007
CURRENT TIME: 15:50:58 FILE NAME: Culv1

FHWA CULVERT ANALYSIS
HY-8, VERSION 6.1

CULV NO.	SITE DATA: INLET ELEV. (ft)	OUTLET ELEV. (ft)	CULVERT LENGTH (ft)	BARRELS / SHAPE / MATERIAL	SPAN (ft)	RISE (ft)	MANNING n	INLET TYPE
1	2436.00	2435.16	45.01	6 CMPA	4.08	2.75	.024	CONVENTIONAL
2								
3								
4								
5								
6								

SUMMARY OF CULVERT FLOWS (cfs) FILE: Culv1 DATE: 03/20/2007

ELEV (ft)	TOTAL	1	2	3	4	5	6	ROADWAY	ITR
2436.00	0.0	0.0	0.0	0.0	0.0	0.0	0.0	0.00	1
2436.31	8.0	8.0	0.0	0.0	0.0	0.0	0.0	0.00	1
2436.51	16.0	16.0	0.0	0.0	0.0	0.0	0.0	0.00	1
2436.63	24.0	24.0	0.0	0.0	0.0	0.0	0.0	0.00	1
2436.74	32.0	32.0	0.0	0.0	0.0	0.0	0.0	0.00	1
2436.85	40.0	40.0	0.0	0.0	0.0	0.0	0.0	0.00	1
2436.94	48.0	48.0	0.0	0.0	0.0	0.0	0.0	0.00	1
2436.96	50.0	50.0	0.0	0.0	0.0	0.0	0.0	0.00	1
2437.11	64.0	64.0	0.0	0.0	0.0	0.0	0.0	0.00	1
2437.19	72.0	72.0	0.0	0.0	0.0	0.0	0.0	0.00	1
2437.26	80.0	80.0	0.0	0.0	0.0	0.0	0.0	0.00	1
2439.65	305.0	305.0	0.0	0.0	0.0	0.0	0.0	OVERTOPPING	

SUMMARY OF ITERATIVE SOLUTION ERRORS FILE: Culv1 DATE: 03/20/2007

HEAD ELEV (ft)	HEAD ERROR (ft)	TOTAL FLOW (cfs)	FLOW ERROR (cfs)	% FLOW ERROR
2436.00	0.000	0.00	0.00	0.00
2436.31	0.000	8.00	0.00	0.00
2436.51	0.000	16.00	0.00	0.00
2436.63	0.000	24.00	0.00	0.00
2436.74	0.000	32.00	0.00	0.00
2436.85	0.000	40.00	0.00	0.00
2436.94	0.000	48.00	0.00	0.00
2436.96	0.000	50.00	0.00	0.00
2437.11	0.000	64.00	0.00	0.00
2437.19	0.000	72.00	0.00	0.00
2437.26	0.000	80.00	0.00	0.00

<1> TOLERANCE (ft) = 0.010 <2> TOLERANCE (%) = 1.000

CURRENT DATE: 03-20-2007 FILE DATE: 03/20/2007
CURRENT TIME: 15:50:58 FILE NAME: Culv1

PERFORMANCE CURVE FOR CULVERT 1 - 6(4.08 (ft) BY 2.75 (ft)) CMPA

DIS-CHARGE FLOW (cfs)	HEAD-WATER ELEV. (ft)	INLET CONTROL DEPTH (ft)	OUTLET CONTROL DEPTH (ft)	FLOW TYPE <F4>	NORMAL DEPTH (ft)	CRIT. DEPTH (ft)	OUTLET DEPTH (ft)	TW DEPTH (ft)	OUTLET VEL. (fps)	TW VEL. (fps)
0.00	2436.00	0.00	0.00	0-NF	0.00	0.00	0.00	0.04	0.00	0.00
8.00	2436.31	0.31	0.31	1-S2n	0.19	0.22	0.12	0.60	2.97	1.94
16.00	2436.51	0.51	0.51	1-S2n	0.31	0.34	0.24	0.77	4.11	2.30
24.00	2436.63	0.63	0.63	1-S2n	0.38	0.42	0.32	0.89	6.17	2.55
32.00	2436.74	0.74	0.74	1-S2n	0.44	0.50	0.40	0.98	4.81	2.76
40.00	2436.85	0.85	0.85	1-S2n	0.50	0.57	0.37	1.06	6.63	2.95
48.00	2436.94	0.94	0.94	1-S2n	0.56	0.62	0.42	1.15	6.64	3.15
50.00	2436.96	0.96	0.96	1-S2n	0.57	0.64	0.44	1.19	6.64	3.26
64.00	2437.11	1.11	1.11	1-S2n	0.65	0.73	0.53	1.25	6.66	3.39
72.00	2437.19	1.19	1.19	1-S2n	0.69	0.79	0.59	1.31	6.66	3.51
80.00	2437.26	1.26	1.26	1-S2n	0.73	0.84	0.64	1.36	6.61	3.62

El. inlet face invert 2436.00 ft El. outlet invert 2435.16 ft
El. inlet throat invert 0.00 ft El. inlet crest 2436.00 ft

***** SITE DATA ***** CULVERT INVERT **********

INLET STATION	0.00 ft
INLET ELEVATION	2436.00 ft
OUTLET STATION	45.00 ft
OUTLET ELEVATION	2435.16 ft
NUMBER OF BARRELS	6
SLOPE (V/H)	0.0187
CULVERT LENGTH ALONG SLOPE	45.01 ft

***** CULVERT DATA SUMMARY **********

BARREL SHAPE	PIPE ARCH
BARREL SPAN	4.08 ft
BARREL RISE	2.75 ft
BARREL MATERIAL	STEEL OR ALUMINUM
BARREL MANNING'S n	0.024
INLET TYPE	CONVENTIONAL
INLET EDGE AND WALL	HEADWALL
INLET DEPRESSION	NONE

CURRENT DATE: 03-20-2007 FILE DATE: 03/20/2007
CURRENT TIME: 15:50:58 FILE NAME: Culv1

ÄÄ
ÄÄÄÄÄÄÄÄÄÄÄÄÄÄÄÄÄÄÄÄÄÄÄÄÄÄ TAILWATER ÄÄÄÄÄÄÄÄÄÄÄÄÄÄÄÄÄÄÄÄÄÄÄÄÄÄ
ÄÄ

***** USER DEFINED CHANNEL CROSS-SECTION FILE NAME: Culv1
MAIN CHANNEL AND LT & RT OVER BANKS FILE DATE: 5/26/2005
LEFT CHANNEL BOUNDARY 3
RIGHT CHANNEL BOUNDARY 6
MANNING n LEFT OVER BANK 0.050
MANNING n MAIN CHANNEL 0.045
MANNING n RIGHT OVER BANK 0.060
SLOPE OF CHANNEL 0.0209 ft/ft

CROSS-SECTION COORD. NO.	X (ft)	Y (ft)
1	0.00	2440.50
2	17.50	2439.40
3	26.80	2436.60
4	46.00	2435.20
5	57.30	2436.10
6	67.10	2438.60
7	78.80	2441.30

******* UNIFORM FLOW RATING CURVE FOR DOWNSTREAM CHANNEL

FLOW (cfs)	W.S.E. (ft)	FROUDE NUMBER	DEPTH (ft)	VEL. (f/s)	SHEAR (psf)
0.00	2435.20	0.000	0.04	0.00	0.00
8.00	2435.76	0.647	0.60	1.94	0.37
16.00	2435.93	0.675	0.77	2.30	0.47
24.00	2436.05	0.692	0.89	2.55	0.55
32.00	2436.14	0.708	0.98	2.76	0.62
40.00	2436.22	0.723	1.06	2.95	0.69
48.00	2436.30	0.738	1.15	3.15	0.76
50.00	2436.35	0.745	1.19	3.26	0.80
64.00	2436.41	0.754	1.25	3.39	0.84
72.00	2436.47	0.762	1.31	3.51	0.89
80.00	2436.52	0.769	1.36	3.62	0.93

Note: Shear stress was calculated using R.

ÄÄ
ÄÄÄÄÄÄÄÄÄÄÄÄÄÄÄÄÄÄÄÄÄÄÄÄÄÄ ROADWAY OVERTOPPING DATA ÄÄÄÄÄÄÄÄÄÄÄÄÄÄÄÄÄÄÄÄÄÄÄÄÄÄ
ÄÄ

ROADWAY SURFACE PAVED
EMBANKMENT TOP WIDTH 24.00 ft
***** USER DEFINED ROADWAY PROFILE

CROSS-SECTION COORD. NO.	X ft	Y ft
1	0.00	2442.00
2	0.01	2439.65
3	37.90	2440.76
4	60.20	2441.01
5	87.90	2441.12
6	144.40	2441.30
7	144.41	2442.00

ÄÄ

CURRENT DATE: 03-20-2007 FILE DATE: 03/20/2007
CURRENT TIME: 16:00:34 FILE NAME: Culv2

FHWA CULVERT ANALYSIS
HY-8, VERSION 6.1

CULV NO.	SITE DATA: INLET ELEV. (ft)	OUTLET ELEV. (ft)	CULVERT LENGTH (ft)	CULVERT SHAPE, MATERIAL, INLET: BARRELS / SHAPE / MATERIAL	SPAN (ft)	RISE (ft)	MANNING n	INLET TYPE
1	2437.20	2436.00	45.02	6 CMPA	4.08	2.75	.024	CONVENTIONAL
2								
3								
4								
5								
6								

SUMMARY OF CULVERT FLOWS (cfs) FILE: Culv2 DATE: 03/20/2007

ELEV (ft)	TOTAL	1	2	3	4	5	6	ROADWAY	ITR
2437.20	0.0	0.0	0.0	0.0	0.0	0.0	0.0	0.00	1
2437.80	15.0	15.0	0.0	0.0	0.0	0.0	0.0	0.00	1
2437.91	30.0	30.0	0.0	0.0	0.0	0.0	0.0	0.00	1
2438.10	45.0	45.0	0.0	0.0	0.0	0.0	0.0	0.00	1
2438.26	60.0	60.0	0.0	0.0	0.0	0.0	0.0	0.00	1
2438.41	75.0	75.0	0.0	0.0	0.0	0.0	0.0	0.00	1
2438.54	90.0	90.0	0.0	0.0	0.0	0.0	0.0	0.00	1
2438.64	100.0	100.0	0.0	0.0	0.0	0.0	0.0	0.00	1
2438.81	120.0	120.0	0.0	0.0	0.0	0.0	0.0	0.00	1
2438.94	135.0	135.0	0.0	0.0	0.0	0.0	0.0	0.00	1
2439.06	150.0	150.0	0.0	0.0	0.0	0.0	0.0	0.00	1
2441.30	409.7	409.7	0.0	0.0	0.0	0.0	0.0	OVERTOPPING	

SUMMARY OF ITERATIVE SOLUTION ERRORS FILE: Culv2 DATE: 03/20/2007

HEAD ELEV (ft)	HEAD ERROR (ft)	TOTAL FLOW (cfs)	FLOW ERROR (cfs)	% FLOW ERROR
2437.20	0.000	0.00	0.00	0.00
2437.80	0.000	15.00	0.00	0.00
2437.91	0.000	30.00	0.00	0.00
2438.10	0.000	45.00	0.00	0.00
2438.26	0.000	60.00	0.00	0.00
2438.41	0.000	75.00	0.00	0.00
2438.54	0.000	90.00	0.00	0.00
2438.64	0.000	100.00	0.00	0.00
2438.81	0.000	120.00	0.00	0.00
2438.94	0.000	135.00	0.00	0.00
2439.06	0.000	150.00	0.00	0.00

<1> TOLERANCE (ft) = 0.010 <2> TOLERANCE (%) = 1.000

CURRENT DATE: 03-20-2007 FILE DATE: 03/20/2007
CURRENT TIME: 16:00:34 FILE NAME: Culv2

PERFORMANCE CURVE FOR CULVERT 1 - 6(4.08 (ft) BY 2.75 (ft)) CMPA

DIS-CHARGE FLOW (cfs)	HEAD-WATER ELEV. (ft)	INLET CONTROL DEPTH (ft)	OUTLET CONTROL DEPTH (ft)	FLOW TYPE <F4>	NORMAL DEPTH (ft)	CRIT. DEPTH (ft)	OUTLET DEPTH (ft)	TW DEPTH (ft)	OUTLET VEL. (fps)	TW VEL. (fps)
0.00	2437.20	0.00	0.00	0-NF	0.00	0.00	0.00	0.00	0.00	0.00
15.00	2437.81	0.61	0.61	1-S2n	0.28	0.32	0.22	0.95	3.90	3.24
30.00	2437.91	0.71	0.71	1-S2n	0.38	0.48	0.28	1.10	7.54	4.23
45.00	2438.10	0.90	0.90	1-S2n	0.48	0.60	0.40	1.21	6.64	4.95
60.00	2438.26	1.06	1.06	1-S2n	0.57	0.71	0.51	1.32	6.65	5.52
75.00	2438.41	1.21	1.21	1-S2n	0.64	0.81	0.64	1.41	6.20	6.01
90.00	2438.54	1.34	1.34	1-S2n	0.71	0.89	0.59	1.49	8.25	6.44
100.00	2438.64	1.44	1.44	1-S2n	0.75	0.95	0.65	1.55	8.14	6.70
120.00	2438.81	1.61	1.61	1-S2n	0.84	1.05	0.75	1.65	8.09	7.17
135.00	2438.94	1.74	1.74	1-S2n	0.89	1.13	0.83	1.72	8.12	7.49
150.00	2439.06	1.86	1.86	1-S2n	0.95	1.19	0.89	1.79	8.22	7.79

El. inlet face invert 2437.20 ft El. outlet invert 2436.00 ft
El. inlet throat invert 0.00 ft El. inlet crest 2437.20 ft

***** SITE DATA ***** CULVERT INVERT **********

INLET STATION	0.00 ft
INLET ELEVATION	2437.20 ft
OUTLET STATION	45.00 ft
OUTLET ELEVATION	2436.00 ft
NUMBER OF BARRELS	6
SLOPE (V/H)	0.0267
CULVERT LENGTH ALONG SLOPE	45.02 ft

***** CULVERT DATA SUMMARY **********

BARREL SHAPE	PIPE ARCH
BARREL SPAN	4.08 ft
BARREL RISE	2.75 ft
BARREL MATERIAL	STEEL OR ALUMINUM
BARREL MANNING'S n	0.024
INLET TYPE	CONVENTIONAL
INLET EDGE AND WALL	HEADWALL
INLET DEPRESSION	NONE

CURRENT DATE: 03-20-2007 FILE DATE: 03/20/2007
CURRENT TIME: 16:00:34 FILE NAME: Culv2

ÄÄ
ÄÄÄÄÄÄÄÄÄÄÄÄÄÄÄÄÄÄÄÄÄÄÄÄÄÄ TAILWATER ÄÄÄÄÄÄÄÄÄÄÄÄÄÄÄÄÄÄÄÄÄÄÄÄÄÄ
ÄÄ

***** USER DEFINED CHANNEL CROSS-SECTION FILE NAME: Culv2
MAIN CHANNEL AND LT & RT OVER BANKS FILE DATE: 5/27/2005

LEFT CHANNEL BOUNDARY	2
RIGHT CHANNEL BOUNDARY	7
MANNING n LEFT OVER BANK	0.035
MANNING n MAIN CHANNEL	0.041
MANNING n RIGHT OVER BANK	0.050
SLOPE OF CHANNEL	0.0449 ft/ft

CROSS-SECTION COORD. NO.	X (ft)	Y (ft)
1	0.00	2446.20
2	26.00	2446.10
3	33.00	2436.00
4	38.60	2436.90
5	43.60	2436.70
6	48.90	2436.90
7	57.90	2444.40
8	64.80	2445.00

******* UNIFORM FLOW RATING CURVE FOR DOWNSTREAM CHANNEL

FLOW (cfs)	W.S.E. (ft)	FROUDE NUMBER	DEPTH (ft)	VEL. (f/s)	SHEAR (psf)
0.00	2436.00	0.000	0.00	0.00	0.00
15.00	2436.95	1.084	0.95	3.24	0.78
30.00	2437.10	1.151	1.10	4.23	1.18
45.00	2437.21	1.196	1.21	4.95	1.49
60.00	2437.32	1.230	1.32	5.52	1.76
75.00	2437.41	1.257	1.41	6.01	2.00
90.00	2437.49	1.279	1.49	6.44	2.22
100.00	2437.55	1.292	1.55	6.70	2.36
120.00	2437.65	1.314	1.65	7.17	2.61
135.00	2437.72	1.329	1.72	7.49	2.79
150.00	2437.79	1.342	1.79	7.79	2.96

Note: Shear stress was calculated using R.

ÄÄ
ÄÄÄÄÄÄÄÄÄÄÄÄÄÄÄÄÄÄÄÄÄÄÄÄÄÄ ROADWAY OVERTOPPING DATA ÄÄÄÄÄÄÄÄÄÄÄÄÄÄÄÄÄÄÄÄÄÄÄÄÄÄ
ÄÄ

ROADWAY SURFACE	PAVED
EMBANKMENT TOP WIDTH	24.00 ft

***** USER DEFINED ROADWAY PROFILE

CROSS-SECTION COORD. NO.	X ft	Y ft
1	0.00	2441.30
2	55.00	2441.80
3	83.00	2441.90
4	110.00	2442.00
5	193.00	2442.50

ÄÄ

CURRENT DATE: 06-08-2005 FILE DATE: 6/8/2005 E
CURRENT TIME: 10:20:21 FILE NAME: Culv4

FHWA CULVERT ANALYSIS
HY-8, VERSION 6.1

CULV NO.	SITE DATA: INLET ELEV. (ft)	OUTLET ELEV. (ft)	CULVERT LENGTH (ft)	CULVERT SHAPE, MATERIAL, INLET: BARRELS / SHAPE / MATERIAL	SPAN (ft)	RISE (ft)	MANNING n	INLET TYPE
1	2436.09	2434.75	45.02	2 CSP	6.00	6.00	.024	CONVENTIONAL
2								
3								
4								
5								
6								

SUMMARY OF CULVERT FLOWS (cfs) FILE: Culv4 DATE: 6/8/2005

ELEV (ft)	TOTAL	1	2	3	4	5	6	ROADWAY	ITR
2436.09	0.0	0.0	0.0	0.0	0.0	0.0	0.0	0.00	1
2436.76	15.0	15.0	0.0	0.0	0.0	0.0	0.0	0.00	1
2437.11	30.0	30.0	0.0	0.0	0.0	0.0	0.0	0.00	1
2437.44	45.0	45.0	0.0	0.0	0.0	0.0	0.0	0.00	1
2437.75	60.0	60.0	0.0	0.0	0.0	0.0	0.0	0.00	1
2438.03	75.0	75.0	0.0	0.0	0.0	0.0	0.0	0.00	1
2438.30	90.0	90.0	0.0	0.0	0.0	0.0	0.0	0.00	1
2438.47	100.0	100.0	0.0	0.0	0.0	0.0	0.0	0.00	1
2438.78	120.0	120.0	0.0	0.0	0.0	0.0	0.0	0.00	1
2439.01	135.0	135.0	0.0	0.0	0.0	0.0	0.0	0.00	1
2439.21	150.0	150.0	0.0	0.0	0.0	0.0	0.0	0.00	1
2442.70	490.1	490.1	0.0	0.0	0.0	0.0	0.0	OVERTOPPING	

SUMMARY OF ITERATIVE SOLUTION ERRORS FILE: Culv4 DATE: 6/8/2005

HEAD ELEV (ft)	HEAD ERROR (ft)	TOTAL FLOW (cfs)	FLOW ERROR (cfs)	% FLOW ERROR
2436.09	0.000	0.00	0.00	0.00
2436.76	0.000	15.00	0.00	0.00
2437.11	0.000	30.00	0.00	0.00
2437.44	0.000	45.00	0.00	0.00
2437.75	0.000	60.00	0.00	0.00
2438.03	0.000	75.00	0.00	0.00
2438.30	0.000	90.00	0.00	0.00
2438.47	0.000	100.00	0.00	0.00
2438.78	0.000	120.00	0.00	0.00
2439.01	0.000	135.00	0.00	0.00
2439.21	0.000	150.00	0.00	0.00

<1> TOLERANCE (ft) = 0.010 <2> TOLERANCE (%) = 1.000

CURRENT DATE: 06-08-2005 FILE DATE: 6/8/2005 E
CURRENT TIME: 10:20:21 FILE NAME: Culv4

PERFORMANCE CURVE FOR CULVERT 1 - 2(6.00 (ft) BY 6.00 (ft)) CSP

DIS-CHARGE FLOW (cfs)	HEAD-WATER ELEV. (ft)	INLET CONTROL DEPTH (ft)	OUTLET CONTROL DEPTH (ft)	FLOW TYPE <F4>	NORMAL DEPTH (ft)	CRIT. DEPTH (ft)	OUTLET DEPTH (ft)	TW DEPTH (ft)	OUTLET VEL. (fps)	TW VEL. (fps)
0.00	2436.09	0.00	0.00	0-NF	0.00	0.00	0.00	-0.15	0.00	0.00
15.00	2436.76	0.67	0.67	1-S2n	0.54	0.68	0.38	0.49	5.86	3.07
30.00	2437.11	1.02	1.02	1-S2n	0.75	0.97	0.67	0.79	8.44	3.89
45.00	2437.44	1.35	1.35	1-S2n	0.92	1.24	0.84	1.03	9.06	4.44
60.00	2437.75	1.66	1.66	1-S2n	1.09	1.42	1.02	1.23	9.25	4.86
75.00	2438.03	1.94	1.94	1-S2n	1.24	1.59	1.25	1.42	8.70	5.21
90.00	2438.30	2.21	2.21	1-S2n	1.34	1.77	1.27	1.58	10.21	5.50
100.00	2438.47	2.38	2.38	1-S2n	1.41	1.87	1.37	1.69	10.21	5.67
120.00	2438.79	2.70	2.70	1-S2n	1.55	2.04	1.60	1.88	9.83	5.98
135.00	2439.01	2.92	2.92	1-S2n	1.66	2.18	1.71	2.02	10.16	6.18
150.00	2439.21	3.12	3.12	1-S2n	1.76	2.31	1.81	2.14	10.46	6.37

El. inlet face invert 2436.09 ft El. outlet invert 2434.75 ft
El. inlet throat invert 0.00 ft El. inlet crest 2436.09 ft

***** SITE DATA ***** CULVERT INVERT **********

INLET STATION	0.00 ft
INLET ELEVATION	2436.09 ft
OUTLET STATION	45.00 ft
OUTLET ELEVATION	2434.75 ft
NUMBER OF BARRELS	2
SLOPE (V/H)	0.0298
CULVERT LENGTH ALONG SLOPE	45.02 ft

***** CULVERT DATA SUMMARY **********

BARREL SHAPE	CIRCULAR
BARREL DIAMETER	6.00 ft
BARREL MATERIAL	CORRUGATED STEEL
BARREL MANNING'S n	0.024
INLET TYPE	CONVENTIONAL
INLET EDGE AND WALL	BEVELED EDGE (1:1)
INLET DEPRESSION	NONE

CURRENT DATE: 06-08-2005 FILE DATE: 6/8/2005 E
CURRENT TIME: 10:20:21 FILE NAME: Culv4

ÄÄ
ÄÄÄÄÄÄÄÄÄÄÄÄÄÄÄÄÄÄÄÄÄÄÄÄÄÄ TAILWATER ÄÄÄÄÄÄÄÄÄÄÄÄÄÄÄÄÄÄÄÄÄÄÄÄÄÄ
ÄÄ

***** USER DEFINED CHANNEL CROSS-SECTION FILE NAME: Culv4
MAIN CHANNEL AND LT & RT OVER BANKS FILE DATE: 6/8/2005

LEFT CHANNEL BOUNDARY	3
RIGHT CHANNEL BOUNDARY	6
MANNING n LEFT OVER BANK	0.046
MANNING n MAIN CHANNEL	0.035
MANNING n RIGHT OVER BANK	0.058
SLOPE OF CHANNEL	0.0124 ft/ft

CROSS-SECTION COORD. NO.	X (ft)	Y (ft)
1	0.00	2442.80
2	18.60	2442.00
3	26.20	2439.50
4	34.50	2434.60
5	41.90	2434.70
6	49.60	2442.10
7	54.30	2442.50

******* UNIFORM FLOW RATING CURVE FOR DOWNSTREAM CHANNEL

FLOW (cfs)	W.S.E. (ft)	FROUDE NUMBER	DEPTH (ft)	VEL. (f/s)	SHEAR (psf)
0.00	2434.60	0.000	-0.15	0.00	0.00
15.00	2435.24	0.755	0.49	3.07	0.42
30.00	2435.54	0.802	0.79	3.89	0.60
45.00	2435.78	0.829	1.03	4.44	0.75
60.00	2435.98	0.848	1.23	4.86	0.86
75.00	2436.17	0.862	1.42	5.21	0.96
90.00	2436.33	0.873	1.58	5.50	1.05
100.00	2436.44	0.879	1.69	5.67	1.11
120.00	2436.63	0.889	1.88	5.98	1.21
135.00	2436.77	0.895	2.02	6.18	1.28
150.00	2436.89	0.901	2.14	6.37	1.34

Note: Shear stress was calculated using R.

ÄÄ
ÄÄÄÄÄÄÄÄÄÄÄÄÄÄÄÄÄÄÄÄÄÄÄÄÄÄ ROADWAY OVERTOPPING DATA ÄÄÄÄÄÄÄÄÄÄÄÄÄÄÄÄÄÄÄÄÄÄÄÄÄÄ
ÄÄ

ROADWAY SURFACE	PAVED
EMBANKMENT TOP WIDTH	24.00 ft

***** USER DEFINED ROADWAY PROFILE

CROSS-SECTION COORD. NO.	X ft	Y ft
1	0.00	2443.90
2	44.50	2443.59
3	66.70	2443.30
4	91.30	2443.06
5	123.50	2442.70

ÄÄ

CURRENT DATE: 03-22-2007 FILE DATE: 03/22/2007
CURRENT TIME: 08:35:25 FILE NAME: Culv5

FHWA CULVERT ANALYSIS
HY-8, VERSION 6.1

C U L V NO.	SITE DATA INLET ELEV. (ft)	OUTLET ELEV. (ft)	CULVERT LENGTH (ft)	CULVERT SHAPE, MATERIAL, INLET BARRELS SHAPE MATERIAL	SPAN (ft)	RISE (ft)	MANNING n	INLET TYPE
1	2437.00	2436.00	56.01	6 CMPA	4.08	2.75	.024	CONVENTIONAL
2								
3								
4								
5								
6								

SUMMARY OF CULVERT FLOWS (cfs) FILE: Culv5 DATE: 03/22/2007

ELEV (ft)	TOTAL	1	2	3	4	5	6	ROADWAY	ITR
2437.00	0.0	0.0	0.0	0.0	0.0	0.0	0.0	0.00	1
2437.40	10.0	10.0	0.0	0.0	0.0	0.0	0.0	0.00	1
2437.57	20.0	20.0	0.0	0.0	0.0	0.0	0.0	0.00	1
2437.72	30.0	30.0	0.0	0.0	0.0	0.0	0.0	0.00	1
2437.85	40.0	40.0	0.0	0.0	0.0	0.0	0.0	0.00	1
2437.96	50.0	50.0	0.0	0.0	0.0	0.0	0.0	0.00	1
2438.07	60.0	60.0	0.0	0.0	0.0	0.0	0.0	0.00	1
2438.17	70.0	70.0	0.0	0.0	0.0	0.0	0.0	0.00	1
2438.26	80.0	80.0	0.0	0.0	0.0	0.0	0.0	0.00	1
2438.35	90.0	90.0	0.0	0.0	0.0	0.0	0.0	0.00	1
2438.45	100.0	100.0	0.0	0.0	0.0	0.0	0.0	0.00	1
2440.71	372.8	372.8	0.0	0.0	0.0	0.0	0.0	OVERTOPPING	

SUMMARY OF ITERATIVE SOLUTION ERRORS FILE: Culv5 DATE: 03/22/2007

HEAD ELEV (ft)	HEAD ERROR (ft)	TOTAL FLOW (cfs)	FLOW ERROR (cfs)	% FLOW ERROR
2437.00	0.000	0.00	0.00	0.00
2437.40	0.000	10.00	0.00	0.00
2437.57	0.000	20.00	0.00	0.00
2437.72	0.000	30.00	0.00	0.00
2437.85	0.000	40.00	0.00	0.00
2437.96	0.000	50.00	0.00	0.00
2438.07	0.000	60.00	0.00	0.00
2438.17	0.000	70.00	0.00	0.00
2438.26	0.000	80.00	0.00	0.00
2438.35	0.000	90.00	0.00	0.00
2438.45	0.000	100.00	0.00	0.00

<1> TOLERANCE (ft) = 0.010 <2> TOLERANCE (%) = 1.000

CURRENT DATE: 03-22-2007 FILE DATE: 03/22/2007
CURRENT TIME: 08:35:25 FILE NAME: Culv5

PERFORMANCE CURVE FOR CULVERT 1 - 6(4.08 (ft) BY 2.75 (ft)) CMPA

DIS-CHARGE FLOW (cfs)	HEAD-WATER ELEV. (ft)	INLET CONTROL DEPTH (ft)	OUTLET CONTROL DEPTH (ft)	FLOW TYPE <F4>	NORMAL DEPTH (ft)	CRIT. DEPTH (ft)	OUTLET DEPTH (ft)	TW DEPTH (ft)	OUTLET VEL. (fps)	TW VEL. (fps)
0.00	2437.00	0.00	0.00	0-NF	0.00	0.00	0.00	0.00	0.00	0.00
10.00	2437.40	0.40	0.40	1-S2n	0.25	0.27	0.17	0.39	2.91	1.71
20.00	2437.57	0.57	0.57	1-S2n	0.35	0.38	0.28	0.53	5.02	2.12
30.00	2437.72	0.72	0.72	1-S2n	0.43	0.48	0.38	0.63	4.83	2.48
40.00	2437.85	0.85	0.85	1-S2n	0.51	0.57	0.37	0.71	6.63	2.76
50.00	2437.96	0.96	0.96	1-S2n	0.58	0.64	0.44	0.79	6.64	3.00
60.00	2438.07	1.07	1.07	1-S2n	0.63	0.71	0.51	0.86	6.65	3.21
70.00	2438.17	1.17	1.17	1-S2n	0.69	0.77	0.57	0.92	6.66	3.40
80.00	2438.26	1.26	1.26	1-S2n	0.74	0.84	0.64	0.98	6.61	3.56
90.00	2438.36	1.36	1.36	1-S2n	0.79	0.89	0.69	1.04	6.72	3.72
100.00	2438.45	1.45	1.45	1-S2n	0.84	0.95	0.75	1.10	6.82	3.86

El. inlet face invert 2437.00 ft El. outlet invert 2436.00 ft
El. inlet throat invert 0.00 ft El. inlet crest 2437.00 ft

***** SITE DATA ***** CULVERT INVERT **********

INLET STATION	0.00 ft
INLET ELEVATION	2437.00 ft
OUTLET STATION	56.00 ft
OUTLET ELEVATION	2436.00 ft
NUMBER OF BARRELS	6
SLOPE (V/H)	0.0179
CULVERT LENGTH ALONG SLOPE	56.01 ft

***** CULVERT DATA SUMMARY **********

BARREL SHAPE	PIPE ARCH
BARREL SPAN	4.08 ft
BARREL RISE	2.75 ft
BARREL MATERIAL	STEEL OR ALUMINUM
BARREL MANNING'S n	0.024
INLET TYPE	CONVENTIONAL
INLET EDGE AND WALL	HEADWALL
INLET DEPRESSION	NONE

CURRENT DATE: 03-22-2007
CURRENT TIME: 08:35:25

FILE DATE: 03/22/2007
FILE NAME: Culv5

ÄÄ
ÄÄÄÄÄÄÄÄÄÄÄÄÄÄÄÄÄÄÄÄÄÄÄÄÄÄ TAILWATER ÄÄÄÄÄÄÄÄÄÄÄÄÄÄÄÄÄÄÄÄÄÄÄÄÄÄ
ÄÄ

***** USER DEFINED CHANNEL CROSS-SECTION — FILE NAME: Culv5
MAIN CHANNEL AND LT & RT OVER BANKS — FILE DATE: 03/22/2007

LEFT CHANNEL BOUNDARY	2
RIGHT CHANNEL BOUNDARY	8
MANNING n LEFT OVER BANK	0.055
MANNING n MAIN CHANNEL	0.045
MANNING n RIGHT OVER BANK	0.060
SLOPE OF CHANNEL	0.0167 ft/ft

CROSS-SECTION COORD. NO.	X (ft)	Y (ft)
1	0.00	2439.30
2	17.50	2437.60
3	22.70	2436.50
4	33.60	2436.00
5	38.20	2436.10
6	43.30	2436.00
7	49.50	2436.50
8	50.10	2436.70
9	51.10	2437.30
10	57.00	2440.80
11	66.60	2440.90

******* UNIFORM FLOW RATING CURVE FOR DOWNSTREAM CHANNEL

FLOW (cfs)	W.S.E. (ft)	FROUDE NUMBER	DEPTH (ft)	VEL. (f/s)	SHEAR (psf)
0.00	2436.00	0.000	0.00	0.00	0.00
10.00	2436.39	0.598	0.39	1.71	0.27
20.00	2436.53	0.632	0.53	2.12	0.36
30.00	2436.63	0.662	0.63	2.48	0.45
40.00	2436.71	0.683	0.71	2.76	0.53
50.00	2436.79	0.700	0.79	3.00	0.60
60.00	2436.86	0.714	0.86	3.21	0.66
70.00	2436.92	0.726	0.92	3.40	0.72
80.00	2436.98	0.737	0.98	3.56	0.78
90.00	2437.04	0.746	1.04	3.72	0.83
100.00	2437.10	0.754	1.10	3.86	0.87

Note: Shear stress was calculated using R.

ÄÄ
ÄÄÄÄÄÄÄÄÄÄÄÄÄÄÄÄÄÄÄÄÄÄÄÄÄÄ ROADWAY OVERTOPPING DATA ÄÄÄÄÄÄÄÄÄÄÄÄÄÄÄÄÄÄÄÄÄÄÄÄÄÄ
ÄÄ

ROADWAY SURFACE	PAVED
EMBANKMENT TOP WIDTH	24.00 ft

***** USER DEFINED ROADWAY PROFILE

CROSS-SECTION COORD. NO.	X ft	Y ft
1	0.00	2441.00
2	44.90	2440.76
3	78.00	2440.95
4	114.50	2440.71
5	125.40	2441.00

ÄÄ

CURRENT DATE: 03-22-2007 FILE DATE: 03/22/2007
CURRENT TIME: 08:20:15 FILE NAME: Culv6

FHWA CULVERT ANALYSIS
HY-8, VERSION 6.1

C U L V NO.	SITE DATA INLET ELEV. (ft)	OUTLET ELEV. (ft)	CULVERT LENGTH (ft)	CULVERT SHAPE, MATERIAL, INLET BARRELS SHAPE MATERIAL	SPAN (ft)	RISE (ft)	MANNING n	INLET TYPE
1	2415.00	2414.25	45.01	6 CMPA	4.08	2.75	.024	CONVENTIONAL
2								
3								
4								
5								
6								

SUMMARY OF CULVERT FLOWS (cfs) FILE: Culv6 DATE: 03/22/2007

ELEV (ft)	TOTAL	1	2	3	4	5	6	ROADWAY	ITR
2415.00	0.0	0.0	0.0	0.0	0.0	0.0	0.0	0.00	1
2415.61	22.0	22.0	0.0	0.0	0.0	0.0	0.0	0.00	1
2415.90	44.0	44.0	0.0	0.0	0.0	0.0	0.0	0.00	1
2416.13	66.0	66.0	0.0	0.0	0.0	0.0	0.0	0.00	1
2416.34	88.0	88.0	0.0	0.0	0.0	0.0	0.0	0.00	1
2416.54	110.0	110.0	0.0	0.0	0.0	0.0	0.0	0.00	1
2416.73	132.0	132.0	0.0	0.0	0.0	0.0	0.0	0.00	1
2416.90	154.0	154.0	0.0	0.0	0.0	0.0	0.0	0.00	1
2417.07	176.0	176.0	0.0	0.0	0.0	0.0	0.0	0.00	1
2417.24	198.0	198.0	0.0	0.0	0.0	0.0	0.0	0.00	1
2417.40	220.0	220.0	0.0	0.0	0.0	0.0	0.0	0.00	1
2418.00	295.4	295.4	0.0	0.0	0.0	0.0	0.0	OVERTOPPING	

SUMMARY OF ITERATIVE SOLUTION ERRORS FILE: Culv6 DATE: 03/22/2007

HEAD ELEV (ft)	HEAD ERROR (ft)	TOTAL FLOW (cfs)	FLOW ERROR (cfs)	% FLOW ERROR
2415.00	0.000	0.00	0.00	0.00
2415.61	0.000	22.00	0.00	0.00
2415.90	0.000	44.00	0.00	0.00
2416.13	0.000	66.00	0.00	0.00
2416.34	0.000	88.00	0.00	0.00
2416.54	0.000	110.00	0.00	0.00
2416.73	0.000	132.00	0.00	0.00
2416.90	0.000	154.00	0.00	0.00
2417.07	0.000	176.00	0.00	0.00
2417.24	0.000	198.00	0.00	0.00
2417.40	0.000	220.00	0.00	0.00

<1> TOLERANCE (ft) = 0.010 <2> TOLERANCE (%) = 1.000

CURRENT DATE: 03-22-2007 FILE DATE: 03/22/2007
CURRENT TIME: 08:20:15 FILE NAME: Culv6

PERFORMANCE CURVE FOR CULVERT 1 - 6(4.08 (ft) BY 2.75 (ft)) CMPA

DIS-CHARGE FLOW (cfs)	HEAD-WATER ELEV. (ft)	INLET CONTROL DEPTH (ft)	OUTLET CONTROL DEPTH (ft)	FLOW TYPE <F4>	NORMAL DEPTH (ft)	CRIT. DEPTH (ft)	OUTLET DEPTH (ft)	TW DEPTH (ft)	OUTLET VEL. (fps)	TW VEL. (fps)
0.00	2415.00	0.00	0.00	0-NF	0.00	0.00	0.00	0.05	0.00	0.00
22.00	2415.61	0.61	0.61	1-S2n	0.37	0.40	0.30	0.71	5.56	2.71
44.00	2415.90	0.90	0.90	1-S2n	0.55	0.60	0.50	0.89	4.99	3.30
66.00	2416.13	1.13	1.13	1-S2n	0.68	0.75	0.55	1.02	6.66	3.83
88.00	2416.34	1.34	1.34	1-S2n	0.80	0.88	0.68	1.13	6.70	4.24
110.00	2416.54	1.54	1.54	1-S2n	0.91	1.00	0.80	1.23	6.90	4.59
132.00	2416.73	1.73	1.73	1-S2n	1.01	1.11	0.91	1.31	7.04	4.90
154.00	2416.90	1.90	1.90	1-S2n	1.11	1.21	1.01	1.39	7.29	5.16
176.00	2417.07	2.07	2.07	1-S2n	1.21	1.31	1.11	1.47	7.49	5.40
198.00	2417.24	2.24	2.24	1-S2n	1.30	1.40	1.20	1.54	7.70	5.62
220.00	2417.40	2.40	2.40	1-S2n	1.40	1.49	1.29	1.61	7.93	5.83

El. inlet face invert 2415.00 ft El. outlet invert 2414.25 ft
El. inlet throat invert 0.00 ft El. inlet crest 2415.00 ft

***** SITE DATA ***** CULVERT INVERT **********

INLET STATION	0.00 ft
INLET ELEVATION	2415.00 ft
OUTLET STATION	45.00 ft
OUTLET ELEVATION	2414.25 ft
NUMBER OF BARRELS	6
SLOPE (V/H)	0.0167
CULVERT LENGTH ALONG SLOPE	45.01 ft

***** CULVERT DATA SUMMARY **********

BARREL SHAPE	PIPE ARCH
BARREL SPAN	4.08 ft
BARREL RISE	2.75 ft
BARREL MATERIAL	STEEL OR ALUMINUM
BARREL MANNING'S n	0.024
INLET TYPE	CONVENTIONAL
INLET EDGE AND WALL	HEADWALL
INLET DEPRESSION	NONE

CURRENT DATE: 03-22-2007 FILE DATE: 03/22/2007
CURRENT TIME: 08:20:15 FILE NAME: Culv6

ÄÄÄ
ÄÄÄÄÄÄÄÄÄÄÄÄÄÄÄÄÄÄÄÄÄÄÄÄÄÄ TAILWATER ÄÄÄÄÄÄÄÄÄÄÄÄÄÄÄÄÄÄÄÄÄÄÄÄÄÄ
ÄÄÄ

***** USER DEFINED CHANNEL CROSS-SECTION FILE NAME: Culv6
MAIN CHANNEL AND LT & RT OVER BANKS FILE DATE: 5/27/2005

LEFT CHANNEL BOUNDARY	3
RIGHT CHANNEL BOUNDARY	6
MANNING n LEFT OVER BANK	0.040
MANNING n MAIN CHANNEL	0.045
MANNING n RIGHT OVER BANK	0.055
SLOPE OF CHANNEL	0.0295 ft/ft

CROSS-SECTION COORD. NO.	X (ft)	Y (ft)
1	0.00	2417.50
2	24.90	2417.10
3	40.60	2415.20
4	43.20	2414.30
5	71.00	2415.10
6	74.50	2416.30
7	76.10	2418.60

******* UNIFORM FLOW RATING CURVE FOR DOWNSTREAM CHANNEL

FLOW (cfs)	W.S.E. (ft)	FROUDE NUMBER	DEPTH (ft)	VEL. (f/s)	SHEAR (psf)
0.00	2414.30	0.000	0.05	0.00	0.00
22.00	2414.96	0.836	0.71	2.71	0.60
44.00	2415.14	0.877	0.89	3.30	0.81
66.00	2415.27	0.912	1.02	3.83	1.01
88.00	2415.38	0.942	1.13	4.24	1.17
110.00	2415.48	0.966	1.23	4.59	1.31
132.00	2415.56	0.987	1.31	4.90	1.43
154.00	2415.64	1.004	1.39	5.16	1.54
176.00	2415.72	1.019	1.47	5.40	1.64
198.00	2415.79	1.032	1.54	5.62	1.74
220.00	2415.86	1.044	1.61	5.83	1.83

Note: Shear stress was calculated using R.

ÄÄÄ
ÄÄÄÄÄÄÄÄÄÄÄÄÄÄÄÄÄÄÄÄÄÄÄÄÄÄ ROADWAY OVERTOPPING DATA ÄÄÄÄÄÄÄÄÄÄÄÄÄÄÄÄÄÄÄÄÄÄÄÄÄÄ
ÄÄÄ

ROADWAY SURFACE	PAVED
EMBANKMENT TOP WIDTH	24.00 ft

***** USER DEFINED ROADWAY PROFILE

CROSS-SECTION COORD. NO.	X ft	Y ft
1	75.00	2421.00
2	75.01	2418.00
3	125.40	2419.13
4	155.20	2419.32
5	181.80	2419.56
6	181.81	2421.00

ÄÄÄ

CURRENT DATE: 03-22-2007 FILE DATE: 03/22/2007
CURRENT TIME: 08:31:47 FILE NAME: Culv7

FHWA CULVERT ANALYSIS
HY-8, VERSION 6.1

CULVERT NO.	SITE DATA: INLET ELEV. (ft)	OUTLET ELEV. (ft)	CULVERT LENGTH (ft)	CULVERT SHAPE, MATERIAL, INLET: BARRELS / SHAPE / MATERIAL	SPAN (ft)	RISE (ft)	MANNING n	INLET TYPE
1	2446.70	2445.15	49.02	4 CMPA	4.08	2.75	.024	CONVENTIONAL
2								
3								
4								
5								
6								

SUMMARY OF CULVERT FLOWS (cfs) FILE: Culv7 DATE: 03/22/2007

ELEV (ft)	TOTAL	1	2	3	4	5	6	ROADWAY	ITR
2446.70	0.0	0.0	0.0	0.0	0.0	0.0	0.0	0.00	1
2447.30	10.0	10.0	0.0	0.0	0.0	0.0	0.0	0.00	1
2447.41	20.0	20.0	0.0	0.0	0.0	0.0	0.0	0.00	1
2447.59	30.0	30.0	0.0	0.0	0.0	0.0	0.0	0.00	1
2447.75	40.0	40.0	0.0	0.0	0.0	0.0	0.0	0.00	1
2447.90	50.0	50.0	0.0	0.0	0.0	0.0	0.0	0.00	1
2448.04	60.0	60.0	0.0	0.0	0.0	0.0	0.0	0.00	1
2448.17	70.0	70.0	0.0	0.0	0.0	0.0	0.0	0.00	1
2448.30	80.0	80.0	0.0	0.0	0.0	0.0	0.0	0.00	1
2448.43	90.0	90.0	0.0	0.0	0.0	0.0	0.0	0.00	1
2448.55	100.0	100.0	0.0	0.0	0.0	0.0	0.0	0.00	1
2450.60	261.8	261.8	0.0	0.0	0.0	0.0	0.0	OVERTOPPING	

SUMMARY OF ITERATIVE SOLUTION ERRORS FILE: Culv7 DATE: 03/22/2007

HEAD ELEV (ft)	HEAD ERROR (ft)	TOTAL FLOW (cfs)	FLOW ERROR (cfs)	% FLOW ERROR
2446.70	0.000	0.00	0.00	0.00
2447.30	0.000	10.00	0.00	0.00
2447.41	0.000	20.00	0.00	0.00
2447.59	0.000	30.00	0.00	0.00
2447.75	0.000	40.00	0.00	0.00
2447.90	0.000	50.00	0.00	0.00
2448.04	0.000	60.00	0.00	0.00
2448.17	0.000	70.00	0.00	0.00
2448.30	0.000	80.00	0.00	0.00
2448.43	0.000	90.00	0.00	0.00
2448.55	0.000	100.00	0.00	0.00

<1> TOLERANCE (ft) = 0.010 <2> TOLERANCE (%) = 1.000

CURRENT DATE: 03-22-2007 FILE DATE: 03/22/2007
CURRENT TIME: 08:31:47 FILE NAME: Culv7

PERFORMANCE CURVE FOR CULVERT 1 - 4(4.08 (ft) BY 2.75 (ft)) CMPA

DIS-CHARGE FLOW (cfs)	HEAD-WATER ELEV. (ft)	INLET CONTROL DEPTH (ft)	OUTLET CONTROL DEPTH (ft)	FLOW TYPE <F4>	NORMAL DEPTH (ft)	CRIT. DEPTH (ft)	OUTLET DEPTH (ft)	TW DEPTH (ft)	OUTLET VEL. (fps)	TW VEL. (fps)
0.00	2446.70	0.00	0.00	0-NF	0.00	0.00	0.00	0.05	0.00	0.00
10.00	2447.30	0.60	0.60	1-S2n	0.28	0.32	0.22	0.33	3.90	2.16
20.00	2447.41	0.71	0.71	1-S2n	0.37	0.48	0.28	0.46	7.54	2.81
30.00	2447.59	0.89	0.89	1-S2n	0.46	0.60	0.40	0.56	6.64	3.27
40.00	2447.75	1.05	1.05	1-S2n	0.55	0.71	0.55	0.66	6.06	3.62
50.00	2447.90	1.20	1.20	1-S2n	0.61	0.81	0.51	0.74	8.27	3.93
60.00	2448.04	1.34	1.34	1-S2n	0.67	0.89	0.59	0.81	8.25	4.20
70.00	2448.17	1.47	1.47	1-S2n	0.74	0.97	0.67	0.88	8.13	4.44
80.00	2448.31	1.61	1.61	1-S2n	0.80	1.05	0.79	0.94	7.60	4.67
90.00	2448.43	1.73	1.73	1-S2n	0.85	1.13	0.85	1.01	7.89	4.87
100.00	2448.55	1.85	1.85	1-S2n	0.90	1.19	0.79	1.06	9.48	5.06

El. inlet face invert 2446.70 ft El. outlet invert 2445.15 ft
El. inlet throat invert 0.00 ft El. inlet crest 2446.70 ft

***** SITE DATA ***** CULVERT INVERT **********

INLET STATION	0.00 ft
INLET ELEVATION	2446.70 ft
OUTLET STATION	49.00 ft
OUTLET ELEVATION	2445.15 ft
NUMBER OF BARRELS	4
SLOPE (V/H)	0.0316
CULVERT LENGTH ALONG SLOPE	49.02 ft

***** CULVERT DATA SUMMARY **********

BARREL SHAPE	PIPE ARCH
BARREL SPAN	4.08 ft
BARREL RISE	2.75 ft
BARREL MATERIAL	STEEL OR ALUMINUM
BARREL MANNING'S n	0.024
INLET TYPE	CONVENTIONAL
INLET EDGE AND WALL	HEADWALL
INLET DEPRESSION	NONE

CURRENT DATE: 03-22-2007 FILE DATE: 03/22/2007
CURRENT TIME: 08:31:47 FILE NAME: Culv7

ÄÄ
ÄÄÄÄÄÄÄÄÄÄÄÄÄÄÄÄÄÄÄÄÄÄÄÄÄÄ TAILWATER ÄÄÄÄÄÄÄÄÄÄÄÄÄÄÄÄÄÄÄÄÄÄÄÄÄÄ
ÄÄ

***** USER DEFINED CHANNEL CROSS-SECTION FILE NAME: Culv7
MAIN CHANNEL AND LT & RT OVER BANKS FILE DATE: 03/22/2007

LEFT CHANNEL BOUNDARY	4
RIGHT CHANNEL BOUNDARY	7
MANNING n LEFT OVER BANK	0.041
MANNING n MAIN CHANNEL	0.043
MANNING n RIGHT OVER BANK	0.043
SLOPE OF CHANNEL	0.0243 ft/ft

CROSS-SECTION COORD. NO.	X (ft)	Y (ft)
1	0.00	2450.20
2	7.40	2447.90
3	10.80	2445.80
4	12.20	2445.70
5	13.80	2445.20
6	29.00	2445.20
7	31.50	2445.50
8	34.10	2449.50

******* UNIFORM FLOW RATING CURVE FOR DOWNSTREAM CHANNEL

FLOW (cfs)	W.S.E. (ft)	FROUDE NUMBER	DEPTH (ft)	VEL. (f/s)	SHEAR (psf)
0.00	2445.20	0.000	0.05	0.00	0.00
10.00	2445.48	0.762	0.33	2.16	0.38
20.00	2445.61	0.815	0.46	2.81	0.57
30.00	2445.71	0.852	0.56	3.27	0.71
40.00	2445.81	0.892	0.66	3.62	0.80
50.00	2445.89	0.905	0.74	3.93	0.91
60.00	2445.96	0.916	0.81	4.20	1.02
70.00	2446.03	0.926	0.88	4.44	1.12
80.00	2446.09	0.934	0.94	4.67	1.21
90.00	2446.16	0.942	1.01	4.87	1.29
100.00	2446.21	0.950	1.06	5.06	1.37

Note: Shear stress was calculated using R.

ÄÄ
ÄÄÄÄÄÄÄÄÄÄÄÄÄÄÄÄÄÄÄÄÄÄÄÄÄÄ ROADWAY OVERTOPPING DATA ÄÄÄÄÄÄÄÄÄÄÄÄÄÄÄÄÄÄÄÄÄÄÄÄÄÄ
ÄÄ

ROADWAY SURFACE	PAVED
EMBANKMENT TOP WIDTH	24.00 ft

***** USER DEFINED ROADWAY PROFILE

CROSS-SECTION COORD. NO.	X ft	Y ft
1	0.00	2452.00
2	0.01	2450.60
3	47.70	2451.12
4	65.80	2451.26
5	92.60	2451.22
6	151.00	2450.80
7	151.01	2452.00

ÄÄ

CURRENT DATE: 03-22-2007 FILE DATE: 03/22/2007
CURRENT TIME: 08:38:06 FILE NAME: Culv8

FHWA CULVERT ANALYSIS
HY-8, VERSION 6.1

C U L V NO.	SITE DATA INLET ELEV. (ft)	OUTLET ELEV. (ft)	CULVERT LENGTH (ft)	CULVERT SHAPE, MATERIAL, INLET BARRELS SHAPE MATERIAL	SPAN (ft)	RISE (ft)	MANNING n	INLET TYPE
1	2422.95	2422.28	51.60	2 RCB	8.00	3.00	.012	CONVENTIONAL
2								
3								
4								
5								
6								

SUMMARY OF CULVERT FLOWS (cfs) FILE: Culv8 DATE: 03/22/2007

ELEV (ft)	TOTAL	1	2	3	4	5	6	ROADWAY	ITR
2422.95	0.0	0.0	0.0	0.0	0.0	0.0	0.0	0.00	1
2423.66	30.0	30.0	0.0	0.0	0.0	0.0	0.0	0.00	1
2424.07	60.0	60.0	0.0	0.0	0.0	0.0	0.0	0.00	1
2424.42	90.0	90.0	0.0	0.0	0.0	0.0	0.0	0.00	1
2424.75	120.0	120.0	0.0	0.0	0.0	0.0	0.0	0.00	1
2425.06	150.0	150.0	0.0	0.0	0.0	0.0	0.0	0.00	1
2425.36	180.0	180.0	0.0	0.0	0.0	0.0	0.0	0.00	1
2425.55	200.0	200.0	0.0	0.0	0.0	0.0	0.0	0.00	1
2425.93	240.0	240.0	0.0	0.0	0.0	0.0	0.0	0.00	1
2426.22	270.0	270.0	0.0	0.0	0.0	0.0	0.0	0.00	1
2426.51	300.0	300.0	0.0	0.0	0.0	0.0	0.0	0.00	1
2427.30	375.4	375.4	0.0	0.0	0.0	0.0	0.0	OVERTOPPING	

SUMMARY OF ITERATIVE SOLUTION ERRORS FILE: Culv8 DATE: 03/22/2007

HEAD ELEV (ft)	HEAD ERROR (ft)	TOTAL FLOW (cfs)	FLOW ERROR (cfs)	% FLOW ERROR
2422.95	0.000	0.00	0.00	0.00
2423.66	0.000	30.00	0.00	0.00
2424.07	0.000	60.00	0.00	0.00
2424.42	0.000	90.00	0.00	0.00
2424.75	0.000	120.00	0.00	0.00
2425.06	0.000	150.00	0.00	0.00
2425.36	0.000	180.00	0.00	0.00
2425.55	0.000	200.00	0.00	0.00
2425.93	0.000	240.00	0.00	0.00
2426.22	0.000	270.00	0.00	0.00
2426.51	0.000	300.00	0.00	0.00

<1> TOLERANCE (ft) = 0.010 <2> TOLERANCE (%) = 1.000

CURRENT DATE: 03-22-2007 FILE DATE: 03/22/2007
CURRENT TIME: 08:38:06 FILE NAME: Culv8

PERFORMANCE CURVE FOR CULVERT 1 - 2(8.00 (ft) BY 3.00 (ft)) RCB

DIS-CHARGE FLOW (cfs)	HEAD-WATER ELEV. (ft)	INLET CONTROL DEPTH (ft)	OUTLET CONTROL DEPTH (ft)	FLOW TYPE <F4>	NORMAL DEPTH (ft)	CRIT. DEPTH (ft)	OUTLET DEPTH (ft)	TW DEPTH (ft)	OUTLET VEL. (fps)	TW VEL. (fps)
0.00	2422.95	0.00	0.00	0-NF	0.00	0.00	0.00	0.02	0.00	0.00
30.00	2423.66	0.71	0.71	1-S2n	0.31	0.48	0.31	1.06	6.03	3.69
60.00	2424.07	1.12	1.12	1-S2n	0.46	0.76	0.50	1.34	7.53	4.63
90.00	2424.42	1.47	1.47	1-S2n	0.61	1.00	0.66	1.55	8.47	5.30
120.00	2424.75	1.80	1.80	1-S2n	0.72	1.21	0.82	1.72	9.18	5.82
150.00	2425.06	2.11	2.11	1-S2n	0.84	1.40	0.96	1.88	9.76	6.24
180.00	2425.36	2.41	2.41	1-S2n	0.95	1.58	1.10	2.02	10.21	6.60
200.00	2425.55	2.60	2.60	1-S2n	1.01	1.70	1.20	2.11	10.45	6.82
240.00	2425.93	2.98	2.98	1-S2n	1.14	1.92	1.37	2.28	10.98	7.20
270.00	2426.22	3.27	3.27	5-S2n	1.24	2.07	1.49	2.39	11.31	7.46
300.00	2426.51	3.56	3.56	5-S2n	1.32	2.22	1.62	2.50	11.55	7.69

El. inlet face invert 2422.95 ft El. outlet invert 2422.28 ft
El. inlet throat invert 0.00 ft El. inlet crest 2422.95 ft

***** SITE DATA ***** CULVERT INVERT **********

INLET STATION	0.00 ft
INLET ELEVATION	2422.95 ft
OUTLET STATION	51.60 ft
OUTLET ELEVATION	2422.28 ft
NUMBER OF BARRELS	2
SLOPE (V/H)	0.0130
CULVERT LENGTH ALONG SLOPE	51.60 ft

***** CULVERT DATA SUMMARY **********

BARREL SHAPE	BOX
BARREL SPAN	8.00 ft
BARREL RISE	3.00 ft
BARREL MATERIAL	CONCRETE
BARREL MANNING'S n	0.012
INLET TYPE	CONVENTIONAL
INLET EDGE AND WALL	1:1 BEVEL (45 DEG. FLARE)
INLET DEPRESSION	NONE

CURRENT DATE: 03-22-2007 FILE DATE: 03/22/2007
CURRENT TIME: 08:38:06 FILE NAME: Culv8

ÄÄ
ÄÄÄÄÄÄÄÄÄÄÄÄÄÄÄÄÄÄÄÄÄÄÄÄÄÄ TAILWATER ÄÄÄÄÄÄÄÄÄÄÄÄÄÄÄÄÄÄÄÄÄÄÄÄÄÄ
ÄÄ

***** USER DEFINED CHANNEL CROSS-SECTION FILE NAME: Culv8
MAIN CHANNEL AND LT & RT OVER BANKS FILE DATE: 5/27/2005

LEFT CHANNEL BOUNDARY	5
RIGHT CHANNEL BOUNDARY	7
MANNING n LEFT OVER BANK	0.036
MANNING n MAIN CHANNEL	0.039
MANNING n RIGHT OVER BANK	0.052
SLOPE OF CHANNEL	0.0205 ft/ft

CROSS-SECTION COORD. NO.	X (ft)	Y (ft)
1	0.00	2427.60
2	10.50	2427.10
3	16.50	2426.50
4	31.60	2423.20
5	32.50	2422.30
6	47.80	2423.40
7	53.00	2425.90
8	67.50	2426.80

******* UNIFORM FLOW RATING CURVE FOR DOWNSTREAM CHANNEL

FLOW (cfs)	W.S.E. (ft)	FROUDE NUMBER	DEPTH (ft)	VEL. (f/s)	SHEAR (psf)
0.00	2422.30	0.000	0.02	0.00	0.00
30.00	2423.34	0.914	1.06	3.69	0.65
60.00	2423.62	0.978	1.34	4.63	0.89
90.00	2423.83	1.018	1.55	5.30	1.09
120.00	2424.00	1.046	1.72	5.82	1.25
150.00	2424.16	1.068	1.88	6.24	1.39
180.00	2424.30	1.085	2.02	6.60	1.51
200.00	2424.39	1.094	2.11	6.82	1.58
240.00	2424.56	1.111	2.28	7.20	1.72
270.00	2424.67	1.121	2.39	7.46	1.81
300.00	2424.78	1.130	2.50	7.69	1.90

Note: Shear stress was calculated using R.

ÄÄ
ÄÄÄÄÄÄÄÄÄÄÄÄÄÄÄÄÄÄÄÄÄÄÄÄÄÄ ROADWAY OVERTOPPING DATA ÄÄÄÄÄÄÄÄÄÄÄÄÄÄÄÄÄÄÄÄÄÄÄÄÄÄ
ÄÄ

ROADWAY SURFACE	PAVED
EMBANKMENT TOP WIDTH	24.00 ft

***** USER DEFINED ROADWAY PROFILE

CROSS-SECTION COORD. NO.	X ft	Y ft
1	77.30	2428.10
2	105.70	2428.10
3	127.80	2428.00
4	153.10	2427.89
5	173.30	2427.58
6	208.40	2427.30

ÄÄ

CURRENT DATE: 04-02-2007 FILE DATE: 04/02/2007
CURRENT TIME: 11:53:45 FILE NAME: Culv9

FHWA CULVERT ANALYSIS
HY-8, VERSION 6.1

C U L V NO.	SITE DATA INLET ELEV. (ft)	OUTLET ELEV. (ft)	CULVERT LENGTH (ft)	CULVERT SHAPE, MATERIAL, INLET BARRELS SHAPE MATERIAL	SPAN (ft)	RISE (ft)	MANNING n	INLET TYPE
1	2094.26	2094.25	1.00	1 IRCP	8.50	1.04	.016	CONVENTIONAL
2								
3								
4								
5								
6								

SUMMARY OF CULVERT FLOWS (cfs) FILE: Culv9 DATE: 04/02/2007

ELEV (ft)	TOTAL	1	2	3	4	5	6	ROADWAY	ITR
2094.26	0.0	0.0	0.0	0.0	0.0	0.0	0.0	0.00	1
2097.01	50.0	50.0	0.0	0.0	0.0	0.0	0.0	0.00	1
2097.62	100.0	56.6	0.0	0.0	0.0	0.0	0.0	42.90	6
2097.79	150.0	58.3	0.0	0.0	0.0	0.0	0.0	90.43	4
2097.93	200.0	59.7	0.0	0.0	0.0	0.0	0.0	139.55	4
2098.06	250.0	60.9	0.0	0.0	0.0	0.0	0.0	186.65	3
2098.18	300.0	62.0	0.0	0.0	0.0	0.0	0.0	235.71	3
2098.29	350.0	63.0	0.0	0.0	0.0	0.0	0.0	285.11	3
2098.40	400.0	64.0	0.0	0.0	0.0	0.0	0.0	334.49	3
2098.50	450.0	64.9	0.0	0.0	0.0	0.0	0.0	383.74	3
2098.59	500.0	65.7	0.0	0.0	0.0	0.0	0.0	433.28	3
2097.35	53.8	53.8	0.0	0.0	0.0	0.0	0.0	OVERTOPPING	

SUMMARY OF ITERATIVE SOLUTION ERRORS FILE: Culv9 DATE: 04/02/2007

HEAD ELEV (ft)	HEAD ERROR (ft)	TOTAL FLOW (cfs)	FLOW ERROR (cfs)	% FLOW ERROR
2094.26	0.000	0.00	0.00	0.00
2097.01	0.000	50.00	0.00	0.00
2097.62	-0.007	100.00	0.47	0.47
2097.79	-0.003	150.00	1.25	0.83
2097.93	-0.007	200.00	0.72	0.36
2098.06	-0.005	250.00	2.45	0.98
2098.18	-0.004	300.00	2.29	0.76
2098.29	-0.003	350.00	1.87	0.53
2098.40	-0.003	400.00	1.56	0.39
2098.50	-0.002	450.00	1.39	0.31
2098.59	-0.002	500.00	1.07	0.21

<1> TOLERANCE (ft) = 0.010 <2> TOLERANCE (%) = 1.000

CURRENT DATE: 04-02-2007 FILE DATE: 04/02/2007
CURRENT TIME: 11:53:45 FILE NAME: Culv9

PERFORMANCE CURVE FOR CULVERT 1 - 1(8.50 (ft) BY 1.04 (ft)) IRCP

DIS-CHARGE FLOW (cfs)	HEAD-WATER ELEV. (ft)	INLET CONTROL DEPTH (ft)	OUTLET CONTROL DEPTH (ft)	FLOW TYPE <F4>	NORMAL DEPTH (ft)	CRIT. DEPTH (ft)	OUTLET DEPTH (ft)	TW DEPTH (ft)	OUTLET VEL. (fps)	TW VEL. (fps)
0.00	2094.26	0.00	0.00	0-NF	0.00	0.00	0.00	0.00	0.00	0.00
50.00	2097.01	2.75	2.33	6-S2n	1.04	1.04	0.94	0.71	8.47	4.33
56.63	2097.61	3.35	2.70	6-S2n	1.04	1.04	0.94	1.00	9.59	5.23
58.32	2097.78	3.52	2.98	4-S2n	1.04	1.04	0.94	1.22	9.88	5.83
59.73	2097.93	3.67	3.24	4-S2n	1.04	1.04	0.94	1.39	10.11	6.28
60.90	2098.05	3.79	3.46	4-S2n	1.04	1.04	0.94	1.54	10.31	6.66
62.00	2098.17	3.91	3.66	4-S2n	1.04	1.04	0.94	1.67	10.50	6.98
63.02	2098.29	4.03	3.85	4-S2n	1.04	1.04	0.94	1.79	10.67	7.26
63.95	2098.39	4.13	4.02	4-S2n	1.04	1.04	0.94	1.90	10.83	7.52
64.87	2098.49	4.23	4.18	4-S2n	1.04	1.04	0.94	2.00	10.98	7.75
65.65	2098.59	4.32	4.33	4-FFt	1.04	1.04	1.04	2.10	9.72	7.96

El. inlet face invert 2094.26 ft El. outlet invert 2094.25 ft
El. inlet throat invert 0.00 ft El. inlet crest 2094.26 ft

```
***** SITE DATA ***** CULVERT INVERT **************
      INLET STATION                          0.00 ft
      INLET ELEVATION                     2094.26 ft
      OUTLET STATION                         1.00 ft
      OUTLET ELEVATION                    2094.25 ft
      NUMBER OF BARRELS                      1
      SLOPE (V/H)                            0.0100
      CULVERT LENGTH ALONG SLOPE             1.00 ft

***** CULVERT DATA SUMMARY ************************
      BARREL SHAPE          USER DEFINED
      BARREL SPAN             8.50 ft
      BARREL RISE             1.04 ft
      BARREL MATERIAL       CONCRETE
      BARREL MANNING'S n    0.016 FOR SIDES AND TOP
                            0.035 FOR BOTTOM
      INLET TYPE             CONVENTIONAL
      INLET EDGE AND WALL    HEADWALL
      INLET DEPRESSION       NONE

***** USER DEFINED CULVERT CROSS-SECTION - CULVERT # 1
```

COORDINATE NUMBER	X (ft)	Y-TOP (ft)	Y-BOTTOM (ft)
1	0.00	2095.53	2095.14
2	5.50	2095.53	2094.56
3	8.50	2095.53	2094.49

CURRENT DATE: 04-02-2007 FILE DATE: 04/02/2007
CURRENT TIME: 11:53:45 FILE NAME: Culv9

ÄÄÄ
ÄÄÄÄÄÄÄÄÄÄÄÄÄÄÄÄÄÄÄÄÄÄÄÄÄÄ TAILWATER ÄÄÄÄÄÄÄÄÄÄÄÄÄÄÄÄÄÄÄÄÄÄÄÄÄÄ
ÄÄÄ

******* REGULAR CHANNEL CROSS SECTION ****************

BOTTOM WIDTH	9.00 ft
SIDE SLOPE H/V (X:1)	%10.0
CHANNEL SLOPE V/H (ft/ft)	0.027
MANNING'S n (.01-0.1)	0.035
CHANNEL INVERT ELEVATION	2094.25 ft
CULVERT NO.1 OUTLET INVERT ELEVATION	2094.25 ft

******* UNIFORM FLOW RATING CURVE FOR DOWNSTREAM CHANNEL

FLOW (cfs)	W.S.E. (ft)	FROUDE NUMBER	DEPTH (ft)	VEL. (f/s)	SHEAR (psf)
0.00	2094.25	0.000	0.00	0.00	0.00
50.00	2094.96	1.085	0.71	4.33	1.19
100.00	2095.25	1.137	1.00	5.23	1.67
150.00	2095.47	1.168	1.22	5.83	2.03
200.00	2095.64	1.190	1.39	6.28	2.32
250.00	2095.79	1.208	1.54	6.66	2.56
300.00	2095.92	1.222	1.67	6.98	2.78
350.00	2096.04	1.234	1.79	7.26	2.98
400.00	2096.15	1.245	1.90	7.52	3.17
450.00	2096.25	1.254	2.00	7.75	3.34
500.00	2096.35	1.263	2.10	7.96	3.49

ÄÄÄ
ÄÄÄÄÄÄÄÄÄÄÄÄÄÄÄÄÄÄÄÄÄÄÄÄÄÄ ROADWAY OVERTOPPING DATA ÄÄÄÄÄÄÄÄÄÄÄÄÄÄÄÄÄÄÄÄÄÄÄÄÄÄ
ÄÄÄ

WEIR COEFFICIENT	2.50
EMBANKMENT TOP WIDTH	1.00 ft
CREST LENGTH	125.00 ft
OVERTOPPING CREST ELEVATION	2097.35 ft

ÄÄÄ

CURRENT DATE: 03-20-2007 FILE DATE: 03/20/2007
CURRENT TIME: 16:04:03 FILE NAME: Culv10

FHWA CULVERT ANALYSIS
HY-8, VERSION 6.1

CULV NO.	SITE DATA: INLET ELEV. (ft)	OUTLET ELEV. (ft)	CULVERT LENGTH (ft)	CULVERT SHAPE, MATERIAL, INLET: BARRELS / SHAPE / MATERIAL	SPAN (ft)	RISE (ft)	MANNING n	INLET TYPE
1	2392.45	2391.70	88.50	1 RCB	10.00	2.00	.012	CONVENTIONAL
2								
3								
4								
5								
6								

SUMMARY OF CULVERT FLOWS (cfs) FILE: Culv10 DATE: 03/20/2007

ELEV (ft)	TOTAL	1	2	3	4	5	6	ROADWAY	ITR
2392.45	0.0	0.0	0.0	0.0	0.0	0.0	0.0	0.00	1
2392.95	11.0	11.0	0.0	0.0	0.0	0.0	0.0	0.00	1
2393.24	22.0	22.0	0.0	0.0	0.0	0.0	0.0	0.00	1
2393.49	33.0	33.0	0.0	0.0	0.0	0.0	0.0	0.00	1
2393.72	44.0	44.0	0.0	0.0	0.0	0.0	0.0	0.00	1
2393.94	55.0	55.0	0.0	0.0	0.0	0.0	0.0	0.00	1
2394.15	66.0	66.0	0.0	0.0	0.0	0.0	0.0	0.00	1
2394.36	77.0	77.0	0.0	0.0	0.0	0.0	0.0	0.00	1
2394.41	80.0	80.0	0.0	0.0	0.0	0.0	0.0	0.00	1
2394.77	99.0	99.0	0.0	0.0	0.0	0.0	0.0	0.00	1
2394.99	110.0	110.0	0.0	0.0	0.0	0.0	0.0	0.00	1
2395.82	148.1	148.1	0.0	0.0	0.0	0.0	0.0	OVERTOPPING	

SUMMARY OF ITERATIVE SOLUTION ERRORS FILE: Culv10 DATE: 03/20/2007

HEAD ELEV (ft)	HEAD ERROR (ft)	TOTAL FLOW (cfs)	FLOW ERROR (cfs)	% FLOW ERROR
2392.45	0.000	0.00	0.00	0.00
2392.95	0.000	11.00	0.00	0.00
2393.24	0.000	22.00	0.00	0.00
2393.49	0.000	33.00	0.00	0.00
2393.72	0.000	44.00	0.00	0.00
2393.94	0.000	55.00	0.00	0.00
2394.15	0.000	66.00	0.00	0.00
2394.36	0.000	77.00	0.00	0.00
2394.41	0.000	80.00	0.00	0.00
2394.77	0.000	99.00	0.00	0.00
2394.99	0.000	110.00	0.00	0.00

<1> TOLERANCE (ft) = 0.010 <2> TOLERANCE (%) = 1.000

CURRENT DATE: 03-20-2007 FILE DATE: 03/20/2007
CURRENT TIME: 16:04:03 FILE NAME: Culv10

PERFORMANCE CURVE FOR CULVERT 1 - 1(10.00 (ft) BY 2.00 (ft)) RCB

DIS-CHARGE FLOW (cfs)	HEAD-WATER ELEV. (ft)	INLET CONTROL DEPTH (ft)	OUTLET CONTROL DEPTH (ft)	FLOW TYPE <F4>	NORMAL DEPTH (ft)	CRIT. DEPTH (ft)	OUTLET DEPTH (ft)	TW DEPTH (ft)	OUTLET VEL. (fps)	TW VEL. (fps)
0.00	2392.45	0.00	0.00	0-NF	0.00	0.00	0.00	-0.10	0.00	0.00
11.00	2392.95	0.50	0.50	1-S2n	0.24	0.34	0.14	0.76	8.11	2.73
22.00	2393.24	0.79	0.79	1-S2n	0.38	0.53	0.38	1.03	5.75	3.17
33.00	2393.49	1.04	1.04	1-S2n	0.49	0.70	0.40	1.21	8.29	3.43
44.00	2393.72	1.27	1.27	1-S2n	0.59	0.85	0.60	1.35	7.32	3.64
55.00	2393.94	1.49	1.49	1-S2n	0.67	0.98	0.70	1.47	7.86	3.82
66.00	2394.15	1.70	1.70	1-S2n	0.76	1.11	0.79	1.57	8.37	3.98
77.00	2394.36	1.91	1.91	1-S2n	0.84	1.23	0.88	1.68	8.77	4.16
80.00	2394.41	1.96	1.96	1-S2n	0.86	1.26	0.90	1.74	8.89	4.25
99.00	2394.77	2.32	2.32	5-S2n	0.98	1.45	1.04	1.82	9.50	4.36
110.00	2394.99	2.54	2.54	5-S2n	1.05	1.56	1.13	1.89	9.75	4.47

El. inlet face invert 2392.45 ft El. outlet invert 2391.70 ft
El. inlet throat invert 0.00 ft El. inlet crest 2392.45 ft

***** SITE DATA ***** CULVERT INVERT **********

INLET STATION	0.00 ft
INLET ELEVATION	2392.45 ft
OUTLET STATION	88.50 ft
OUTLET ELEVATION	2391.70 ft
NUMBER OF BARRELS	1
SLOPE (V/H)	0.0085
CULVERT LENGTH ALONG SLOPE	88.50 ft

***** CULVERT DATA SUMMARY **********

BARREL SHAPE	BOX
BARREL SPAN	10.00 ft
BARREL RISE	2.00 ft
BARREL MATERIAL	CONCRETE
BARREL MANNING'S n	0.012
INLET TYPE	CONVENTIONAL
INLET EDGE AND WALL	1:1 BEVEL (45 DEG. FLARE)
INLET DEPRESSION	NONE

CURRENT DATE: 03-20-2007 FILE DATE: 03/20/2007
CURRENT TIME: 16:04:03 FILE NAME: Culv10

ÄÄ
ÄÄÄÄÄÄÄÄÄÄÄÄÄÄÄÄÄÄÄÄÄÄÄÄÄÄ TAILWATER ÄÄÄÄÄÄÄÄÄÄÄÄÄÄÄÄÄÄÄÄÄÄÄÄÄÄ
ÄÄ

***** USER DEFINED CHANNEL CROSS-SECTION FILE NAME: Culv10
MAIN CHANNEL AND LT & RT OVER BANKS FILE DATE: 03/20/2007
LEFT CHANNEL BOUNDARY 2
RIGHT CHANNEL BOUNDARY 5
MANNING n LEFT OVER BANK 0.057
MANNING n MAIN CHANNEL 0.055
MANNING n RIGHT OVER BANK 0.057
SLOPE OF CHANNEL 0.0329 ft/ft

CROSS-SECTION COORD. NO.	X (ft)	Y (ft)
1	0.00	2393.70
2	10.50	2392.60
3	13.70	2391.60
4	31.40	2393.90
5	48.40	2396.60

******* UNIFORM FLOW RATING CURVE FOR DOWNSTREAM CHANNEL

FLOW (cfs)	W.S.E. (ft)	FROUDE NUMBER	DEPTH (ft)	VEL. (f/s)	SHEAR (psf)
0.00	2391.60	0.000	-0.10	0.00	0.00
11.00	2392.46	0.734	0.76	2.73	0.88
22.00	2392.73	0.771	1.03	3.17	1.09
33.00	2392.91	0.797	1.21	3.43	1.22
44.00	2393.05	0.812	1.35	3.64	1.33
55.00	2393.17	0.823	1.47	3.82	1.43
66.00	2393.27	0.831	1.57	3.98	1.52
77.00	2393.38	0.840	1.68	4.16	1.62
80.00	2393.44	0.844	1.74	4.25	1.67
99.00	2393.52	0.849	1.82	4.36	1.74
110.00	2393.59	0.853	1.89	4.47	1.81

Note: Shear stress was calculated using R.

ÄÄ
ÄÄÄÄÄÄÄÄÄÄÄÄÄÄÄÄÄÄÄÄÄÄÄÄÄÄ ROADWAY OVERTOPPING DATA ÄÄÄÄÄÄÄÄÄÄÄÄÄÄÄÄÄÄÄÄÄÄÄÄÄÄ
ÄÄ

ROADWAY SURFACE PAVED
EMBANKMENT TOP WIDTH 24.00 ft
***** USER DEFINED ROADWAY PROFILE

CROSS-SECTION COORD. NO.	X ft	Y ft
1	0.00	2399.14
2	63.80	2398.99
3	81.70	2398.75
4	92.70	2398.37
5	100.90	2398.60
6	109.30	2398.43
7	119.60	2398.41
8	138.00	2398.15
9	164.20	2397.59
10	180.00	2396.91
11	191.90	2397.27
12	204.50	2396.56
13	230.80	2396.67
14	246.60	2396.28
15	273.60	2395.82

ÄÄ

CURRENT DATE: 03-20-2007 FILE DATE: 03/20/2007
CURRENT TIME: 16:05:28 FILE NAME: Culv11

FHWA CULVERT ANALYSIS
HY-8, VERSION 6.1

C U L V NO.	SITE DATA INLET ELEV. (ft)	OUTLET ELEV. (ft)	CULVERT LENGTH (ft)	CULVERT SHAPE, MATERIAL, INLET BARRELS SHAPE MATERIAL	SPAN (ft)	RISE (ft)	MANNING n	INLET TYPE
1	2388.80	2387.40	63.52	6 CMPA	4.08	2.75	.024	CONVENTIONAL
2								
3								
4								
5								
6								

SUMMARY OF CULVERT FLOWS (cfs) FILE: Culv11 DATE: 03/20/2007

ELEV (ft)	TOTAL	1	2	3	4	5	6	ROADWAY	ITR
2388.80	0.0	0.0	0.0	0.0	0.0	0.0	0.0	0.00	1
2389.15	9.0	9.0	0.0	0.0	0.0	0.0	0.0	0.00	1
2389.34	18.0	18.0	0.0	0.0	0.0	0.0	0.0	0.00	1
2389.47	27.0	27.0	0.0	0.0	0.0	0.0	0.0	0.00	1
2389.59	36.0	36.0	0.0	0.0	0.0	0.0	0.0	0.00	1
2389.70	45.0	45.0	0.0	0.0	0.0	0.0	0.0	0.00	1
2389.80	54.0	54.0	0.0	0.0	0.0	0.0	0.0	0.00	1
2389.86	60.0	60.0	0.0	0.0	0.0	0.0	0.0	0.00	1
2389.98	72.0	72.0	0.0	0.0	0.0	0.0	0.0	0.00	1
2390.07	81.0	81.0	0.0	0.0	0.0	0.0	0.0	0.00	1
2390.15	90.0	90.0	0.0	0.0	0.0	0.0	0.0	0.00	1
2392.01	320.9	320.9	0.0	0.0	0.0	0.0	0.0	OVERTOPPING	

SUMMARY OF ITERATIVE SOLUTION ERRORS FILE: Culv11 DATE: 03/20/2007

HEAD ELEV (ft)	HEAD ERROR (ft)	TOTAL FLOW (cfs)	FLOW ERROR (cfs)	% FLOW ERROR
2388.80	0.000	0.00	0.00	0.00
2389.15	0.000	9.00	0.00	0.00
2389.34	0.000	18.00	0.00	0.00
2389.47	0.000	27.00	0.00	0.00
2389.59	0.000	36.00	0.00	0.00
2389.70	0.000	45.00	0.00	0.00
2389.80	0.000	54.00	0.00	0.00
2389.86	0.000	60.00	0.00	0.00
2389.98	0.000	72.00	0.00	0.00
2390.07	0.000	81.00	0.00	0.00
2390.15	0.000	90.00	0.00	0.00

<1> TOLERANCE (ft) = 0.010 <2> TOLERANCE (%) = 1.000

CURRENT DATE: 03-20-2007 FILE DATE: 03/20/2007
CURRENT TIME: 16:05:28 FILE NAME: Culv11

PERFORMANCE CURVE FOR CULVERT 1 - 6(4.08 (ft) BY 2.75 (ft)) CMPA

DIS-CHARGE FLOW (cfs)	HEAD-WATER ELEV. (ft)	INLET CONTROL DEPTH (ft)	OUTLET CONTROL DEPTH (ft)	FLOW TYPE <F4>	NORMAL DEPTH (ft)	CRIT. DEPTH (ft)	OUTLET DEPTH (ft)	TW DEPTH (ft)	OUTLET VEL. (fps)	TW VEL. (fps)
0.00	2388.80	0.00	0.00	0-NF	0.00	0.00	0.00	0.00	0.00	0.00
9.00	2389.15	0.35	0.35	1-S2n	0.20	0.25	0.05	0.44	7.36	2.15
18.00	2389.34	0.54	0.54	1-S2n	0.32	0.36	0.26	0.59	4.54	2.59
27.00	2389.47	0.67	0.67	1-S2n	0.38	0.45	0.40	0.69	4.02	2.91
36.00	2389.59	0.79	0.79	1-S2n	0.45	0.54	0.34	0.77	6.74	3.16
45.00	2389.70	0.90	0.90	1-S2n	0.51	0.60	0.40	0.85	6.64	3.37
54.00	2389.80	1.00	1.00	1-S2n	0.57	0.66	0.46	0.91	6.65	3.55
60.00	2389.86	1.06	1.06	1-S2n	0.60	0.71	0.51	0.95	6.65	3.65
72.00	2389.98	1.18	1.18	1-S2n	0.66	0.79	0.59	1.02	6.66	3.84
81.00	2390.07	1.27	1.27	1-S2n	0.70	0.84	0.64	1.08	6.62	3.97
90.00	2390.15	1.35	1.35	1-S2n	0.75	0.89	0.69	1.12	6.72	4.08

El. inlet face invert 2388.80 ft El. outlet invert 2387.40 ft
El. inlet throat invert 0.00 ft El. inlet crest 2388.80 ft

***** SITE DATA ***** CULVERT INVERT **********

INLET STATION	0.00 ft
INLET ELEVATION	2388.80 ft
OUTLET STATION	63.50 ft
OUTLET ELEVATION	2387.40 ft
NUMBER OF BARRELS	6
SLOPE (V/H)	0.0220
CULVERT LENGTH ALONG SLOPE	63.52 ft

***** CULVERT DATA SUMMARY **********

BARREL SHAPE	PIPE ARCH
BARREL SPAN	4.08 ft
BARREL RISE	2.75 ft
BARREL MATERIAL	STEEL OR ALUMINUM
BARREL MANNING'S n	0.024
INLET TYPE	CONVENTIONAL
INLET EDGE AND WALL	HEADWALL
INLET DEPRESSION	NONE

CURRENT DATE: 03-20-2007 FILE DATE: 03/20/2007
CURRENT TIME: 16:05:28 FILE NAME: Culv11

ÄÄ
ÄÄÄÄÄÄÄÄÄÄÄÄÄÄÄÄÄÄÄÄÄÄÄÄÄÄ TAILWATER ÄÄÄÄÄÄÄÄÄÄÄÄÄÄÄÄÄÄÄÄÄÄÄÄÄÄ
ÄÄ

***** USER DEFINED CHANNEL CROSS-SECTION FILE NAME: Culv11
MAIN CHANNEL AND LT & RT OVER BANKS FILE DATE: 03/15/2007

LEFT CHANNEL BOUNDARY	2
RIGHT CHANNEL BOUNDARY	8
MANNING n LEFT OVER BANK	0.050
MANNING n MAIN CHANNEL	0.065
MANNING n RIGHT OVER BANK	0.045
SLOPE OF CHANNEL	0.0566 ft/ft

CROSS-SECTION COORD. NO.	X (ft)	Y (ft)
1	0.00	2391.00
2	79.20	2389.30
3	85.70	2387.60
4	88.30	2387.40
5	91.20	2387.60
6	103.40	2389.30
7	116.40	2387.40
8	124.30	2388.00
9	130.40	2388.90
10	173.10	2391.00

******* UNIFORM FLOW RATING CURVE FOR DOWNSTREAM CHANNEL

FLOW (cfs)	W.S.E. (ft)	FROUDE NUMBER	DEPTH (ft)	VEL. (f/s)	SHEAR (psf)
0.00	2387.40	0.000	0.00	0.00	0.00
9.00	2387.84	0.767	0.44	2.15	0.87
18.00	2387.99	0.804	0.59	2.59	1.14
27.00	2388.09	0.828	0.69	2.91	1.36
36.00	2388.17	0.846	0.77	3.16	1.54
45.00	2388.25	0.860	0.85	3.37	1.69
54.00	2388.31	0.871	0.91	3.55	1.82
60.00	2388.35	0.878	0.95	3.65	1.90
72.00	2388.42	0.889	1.02	3.84	2.05
81.00	2388.48	0.896	1.08	3.97	2.15
90.00	2388.52	0.903	1.12	4.08	2.24

Note: Shear stress was calculated using R.
ÄÄ

CURRENT DATE: 03-20-2007 FILE DATE: 03/20/2007
CURRENT TIME: 16:05:28 FILE NAME: Culv11

ÄÄÄ
ÄÄÄÄÄÄÄÄÄÄÄÄÄÄÄÄÄÄÄÄÄÄÄÄÄÄÄ ROADWAY OVERTOPPING DATA ÄÄÄÄÄÄÄÄÄÄÄÄÄÄÄÄÄÄÄÄÄÄÄÄÄÄÄ
ÄÄÄ

ROADWAY SURFACE PAVED
EMBANKMENT TOP WIDTH 24.00 ft
***** USER DEFINED ROADWAY PROFILE

CROSS-SECTION COORD. NO.	X ft	Y ft
1	0.00	2393.13
2	27.70	2393.01
3	70.70	2392.46
4	87.30	2392.33
5	110.50	2392.75
6	114.30	2392.23
7	138.00	2392.63
8	163.10	2392.01
9	165.40	2392.25
10	180.50	2392.28

ÄÄÄ

CURRENT DATE: 03-20-2007 FILE DATE: 03/20/2007
CURRENT TIME: 16:08:17 FILE NAME: Culv12

FHWA CULVERT ANALYSIS
HY-8, VERSION 6.1

C U L V NO.	SITE DATA INLET ELEV. (ft)	OUTLET ELEV. (ft)	CULVERT LENGTH (ft)	CULVERT SHAPE, MATERIAL, INLET BARRELS SHAPE MATERIAL	SPAN (ft)	RISE (ft)	MANNING n	INLET TYPE
1	2383.60	2382.85	65.00	1 RCB	10.00	3.00	.012	CONVENTIONAL
2								
3								
4								
5								
6								

SUMMARY OF CULVERT FLOWS (cfs) FILE: Culv12 DATE: 03/20/2007

ELEV (ft)	TOTAL	1	2	3	4	5	6	ROADWAY	ITR
2383.60	0.0	0.0	0.0	0.0	0.0	0.0	0.0	0.00	1
2384.29	18.0	18.0	0.0	0.0	0.0	0.0	0.0	0.00	1
2384.69	36.0	36.0	0.0	0.0	0.0	0.0	0.0	0.00	1
2385.03	54.0	54.0	0.0	0.0	0.0	0.0	0.0	0.00	1
2385.35	72.0	72.0	0.0	0.0	0.0	0.0	0.0	0.00	1
2385.65	90.0	90.0	0.0	0.0	0.0	0.0	0.0	0.00	1
2385.94	108.0	108.0	0.0	0.0	0.0	0.0	0.0	0.00	1
2386.13	120.0	120.0	0.0	0.0	0.0	0.0	0.0	0.00	1
2386.49	144.0	144.0	0.0	0.0	0.0	0.0	0.0	0.00	1
2386.77	162.0	162.0	0.0	0.0	0.0	0.0	0.0	0.00	1
2387.05	180.0	180.0	0.0	0.0	0.0	0.0	0.0	0.00	1
2389.06	292.3	292.3	0.0	0.0	0.0	0.0	0.0	OVERTOPPING	

SUMMARY OF ITERATIVE SOLUTION ERRORS FILE: Culv12 DATE: 03/20/2007

HEAD ELEV (ft)	HEAD ERROR (ft)	TOTAL FLOW (cfs)	FLOW ERROR (cfs)	% FLOW ERROR
2383.60	0.000	0.00	0.00	0.00
2384.29	0.000	18.00	0.00	0.00
2384.69	0.000	36.00	0.00	0.00
2385.03	0.000	54.00	0.00	0.00
2385.35	0.000	72.00	0.00	0.00
2385.65	0.000	90.00	0.00	0.00
2385.94	0.000	108.00	0.00	0.00
2386.13	0.000	120.00	0.00	0.00
2386.49	0.000	144.00	0.00	0.00
2386.77	0.000	162.00	0.00	0.00
2387.05	0.000	180.00	0.00	0.00

<1> TOLERANCE (ft) = 0.010 <2> TOLERANCE (%) = 1.000

CURRENT DATE: 03-20-2007 FILE DATE: 03/20/2007
CURRENT TIME: 16:08:17 FILE NAME: Culv12

PERFORMANCE CURVE FOR CULVERT 1 - 1(10.00 (ft) BY 3.00 (ft)) RCB

DIS-CHARGE FLOW (cfs)	HEAD-WATER ELEV. (ft)	INLET CONTROL DEPTH (ft)	OUTLET CONTROL DEPTH (ft)	FLOW TYPE <F4>	NORMAL DEPTH (ft)	CRIT. DEPTH (ft)	OUTLET DEPTH (ft)	TW DEPTH (ft)	OUTLET VEL. (fps)	TW VEL. (fps)
0.00	2383.60	0.00	0.00	0-NF	0.00	0.00	0.00	0.15	0.00	0.00
18.00	2384.29	0.69	0.69	1-S2n	0.31	0.47	0.31	0.64	5.79	2.43
36.00	2384.69	1.09	1.09	1-S2n	0.46	0.74	0.49	0.84	7.35	2.94
54.00	2385.03	1.43	1.43	1-S2n	0.61	0.97	0.65	0.98	8.35	3.31
72.00	2385.35	1.75	1.75	1-S2n	0.72	1.17	0.79	1.09	9.06	3.65
90.00	2385.65	2.05	2.05	1-S2n	0.84	1.36	0.93	1.19	9.65	3.91
108.00	2385.94	2.34	2.34	1-S2n	0.94	1.54	1.07	1.28	10.10	4.13
120.00	2386.13	2.53	2.53	1-S2n	1.01	1.65	1.15	1.33	10.43	4.26
144.00	2386.49	2.89	2.89	1-S2n	1.13	1.86	1.31	1.43	10.96	4.48
162.00	2386.77	3.17	3.17	5-S2n	1.23	2.02	1.44	1.50	11.28	4.63
180.00	2387.05	3.45	3.45	5-S2n	1.31	2.16	1.55	1.56	11.59	4.77

El. inlet face invert 2383.60 ft El. outlet invert 2382.85 ft
El. inlet throat invert 0.00 ft El. inlet crest 2383.60 ft

```
***** SITE DATA ***** CULVERT INVERT **************
      INLET STATION                          0.00 ft
      INLET ELEVATION                     2383.60 ft
      OUTLET STATION                        65.00 ft
      OUTLET ELEVATION                    2382.85 ft
      NUMBER OF BARRELS                      1
      SLOPE (V/H)                            0.0115
      CULVERT LENGTH ALONG SLOPE            65.00 ft

***** CULVERT DATA SUMMARY ************************
      BARREL SHAPE          BOX
      BARREL SPAN            10.00 ft
      BARREL RISE             3.00 ft
      BARREL MATERIAL       CONCRETE
      BARREL MANNING'S n    0.012
      INLET TYPE            CONVENTIONAL
      INLET EDGE AND WALL   1:1 BEVEL (45 DEG. FLARE)
      INLET DEPRESSION      NONE
```

CURRENT DATE: 03-20-2007 FILE DATE: 03/20/2007
CURRENT TIME: 16:08:17 FILE NAME: Culv12

ÄÄ
ÄÄÄÄÄÄÄÄÄÄÄÄÄÄÄÄÄÄÄÄÄÄÄÄÄÄ TAILWATER ÄÄÄÄÄÄÄÄÄÄÄÄÄÄÄÄÄÄÄÄÄÄÄÄÄÄ
ÄÄ

***** USER DEFINED CHANNEL CROSS-SECTION FILE NAME: Culv12
MAIN CHANNEL AND LT & RT OVER BANKS FILE DATE: 5/27/2005

LEFT CHANNEL BOUNDARY	3
RIGHT CHANNEL BOUNDARY	7
MANNING n LEFT OVER BANK	0.057
MANNING n MAIN CHANNEL	0.043
MANNING n RIGHT OVER BANK	0.070
SLOPE OF CHANNEL	0.0206 ft/ft

CROSS-SECTION COORD. NO.	X (ft)	Y (ft)
1	0.00	2386.40
2	18.70	2385.20
3	23.10	2384.30
4	30.90	2383.80
5	46.00	2383.00
6	54.60	2383.00
7	70.10	2385.10
8	81.00	2386.50
9	99.40	2387.70

******* UNIFORM FLOW RATING CURVE FOR DOWNSTREAM CHANNEL

FLOW (cfs)	W.S.E. (ft)	FROUDE NUMBER	DEPTH (ft)	VEL. (f/s)	SHEAR (psf)
0.00	2383.00	0.000	0.15	0.00	0.00
18.00	2383.49	0.731	0.64	2.43	0.44
36.00	2383.69	0.766	0.84	2.94	0.59
54.00	2383.83	0.796	0.98	3.31	0.69
72.00	2383.94	0.835	1.09	3.65	0.77
90.00	2384.04	0.863	1.19	3.91	0.84
108.00	2384.13	0.885	1.28	4.13	0.91
120.00	2384.18	0.897	1.33	4.26	0.94
144.00	2384.28	0.917	1.43	4.48	1.02
162.00	2384.35	0.923	1.50	4.63	1.08
180.00	2384.41	0.927	1.56	4.77	1.14

Note: Shear stress was calculated using R.
ÄÄ

CURRENT DATE: 03-20-2007 FILE DATE: 03/20/2007
CURRENT TIME: 16:08:17 FILE NAME: Culv12

ÄÄ
ÄÄÄÄÄÄÄÄÄÄÄÄÄÄÄÄÄÄÄÄÄÄÄÄÄÄ ROADWAY OVERTOPPING DATA ÄÄÄÄÄÄÄÄÄÄÄÄÄÄÄÄÄÄÄÄÄÄÄÄÄÄ
ÄÄ

ROADWAY SURFACE PAVED
EMBANKMENT TOP WIDTH 24.00 ft
***** USER DEFINED ROADWAY PROFILE

CROSS-SECTION COORD. NO.	X ft	Y ft
1	0.00	2390.49
2	29.00	2390.21
3	31.90	2389.85
4	59.80	2389.63
5	89.10	2389.34
6	109.30	2389.25
7	114.90	2389.57
8	122.10	2389.06
9	143.20	2389.32
10	171.50	2389.11

ÄÄ

CURRENT DATE: 03-20-2007 FILE DATE: 03/20/2007
CURRENT TIME: 16:22:03 FILE NAME: Culv13

FHWA CULVERT ANALYSIS
HY-8, VERSION 6.1

C U L V NO.	SITE DATA INLET ELEV. (ft)	OUTLET ELEV. (ft)	CULVERT LENGTH (ft)	CULVERT SHAPE, MATERIAL, INLET BARRELS SHAPE MATERIAL	SPAN (ft)	RISE (ft)	MANNING n	INLET TYPE
1	2376.60	2375.90	74.50	2 RCB	10.00	4.00	.012	CONVENTIONAL
2								
3								
4								
5								
6								

SUMMARY OF CULVERT FLOWS (cfs) FILE: Culv13 DATE: 03/20/2007

ELEV (ft)	TOTAL	1	2	3	4	5	6	ROADWAY	ITR
2376.60	0.0	0.0	0.0	0.0	0.0	0.0	0.0	0.00	1
2376.97	13.0	13.0	0.0	0.0	0.0	0.0	0.0	0.00	1
2377.16	26.0	26.0	0.0	0.0	0.0	0.0	0.0	0.00	1
2377.33	39.0	39.0	0.0	0.0	0.0	0.0	0.0	0.00	1
2377.48	52.0	52.0	0.0	0.0	0.0	0.0	0.0	0.00	1
2377.62	65.0	65.0	0.0	0.0	0.0	0.0	0.0	0.00	1
2377.75	78.0	78.0	0.0	0.0	0.0	0.0	0.0	0.00	1
2377.88	91.0	91.0	0.0	0.0	0.0	0.0	0.0	0.00	1
2377.96	100.0	100.0	0.0	0.0	0.0	0.0	0.0	0.00	1
2378.11	117.0	117.0	0.0	0.0	0.0	0.0	0.0	0.00	1
2378.22	130.0	130.0	0.0	0.0	0.0	0.0	0.0	0.00	1
2381.97	663.8	663.8	0.0	0.0	0.0	0.0	0.0	OVERTOPPING	

SUMMARY OF ITERATIVE SOLUTION ERRORS FILE: Culv13 DATE: 03/20/2007

HEAD ELEV (ft)	HEAD ERROR (ft)	TOTAL FLOW (cfs)	FLOW ERROR (cfs)	% FLOW ERROR
2376.60	0.000	0.00	0.00	0.00
2376.97	0.000	13.00	0.00	0.00
2377.16	0.000	26.00	0.00	0.00
2377.33	0.000	39.00	0.00	0.00
2377.48	0.000	52.00	0.00	0.00
2377.62	0.000	65.00	0.00	0.00
2377.75	0.000	78.00	0.00	0.00
2377.88	0.000	91.00	0.00	0.00
2377.96	0.000	100.00	0.00	0.00
2378.11	0.000	117.00	0.00	0.00
2378.22	0.000	130.00	0.00	0.00

<1> TOLERANCE (ft) = 0.010 <2> TOLERANCE (%) = 1.000

CURRENT DATE: 03-20-2007 FILE DATE: 03/20/2007
CURRENT TIME: 16:22:03 FILE NAME: Culv13

PERFORMANCE CURVE FOR CULVERT 1 - 2(10.00 (ft) BY 4.00 (ft)) RCB

DIS-CHARGE FLOW (cfs)	HEAD-WATER ELEV. (ft)	INLET CONTROL DEPTH (ft)	OUTLET CONTROL DEPTH (ft)	FLOW TYPE <F4>	NORMAL DEPTH (ft)	CRIT. DEPTH (ft)	OUTLET DEPTH (ft)	TW DEPTH (ft)	OUTLET VEL. (fps)	TW VEL. (fps)
0.00	2376.60	0.00	0.00	0-NF	0.00	0.00	0.00	0.00	0.00	0.00
13.00	2376.97	0.37	0.37	1-S2n	0.10	0.24	0.04	0.37	17.87	1.83
26.00	2377.16	0.55	0.55	1-S2n	0.21	0.38	0.18	0.50	7.42	2.30
39.00	2377.33	0.73	0.73	1-S2n	0.31	0.49	0.35	0.59	5.63	2.64
52.00	2377.48	0.88	0.88	1-S2n	0.41	0.60	0.30	0.67	8.80	2.89
65.00	2377.62	1.02	1.02	1-S2n	0.46	0.69	0.39	0.75	8.31	3.11
78.00	2377.75	1.15	1.15	1-S2n	0.51	0.78	0.54	0.81	7.19	3.29
91.00	2377.88	1.28	1.28	1-S2n	0.56	0.86	0.60	0.87	7.55	3.45
100.00	2377.96	1.36	1.36	1-S2n	0.60	0.92	0.64	0.91	7.80	3.55
117.00	2378.11	1.51	1.51	1-S2n	0.67	1.02	0.62	0.98	9.39	3.72
130.00	2378.22	1.62	1.62	1-S2n	0.72	1.10	0.77	1.03	8.47	3.84

El. inlet face invert 2376.60 ft El. outlet invert 2375.90 ft
El. inlet throat invert 0.00 ft El. inlet crest 2376.60 ft

***** SITE DATA ***** CULVERT INVERT **********

INLET STATION	0.00 ft
INLET ELEVATION	2376.60 ft
OUTLET STATION	74.50 ft
OUTLET ELEVATION	2375.90 ft
NUMBER OF BARRELS	2
SLOPE (V/H)	0.0094
CULVERT LENGTH ALONG SLOPE	74.50 ft

***** CULVERT DATA SUMMARY **********

BARREL SHAPE	BOX
BARREL SPAN	10.00 ft
BARREL RISE	4.00 ft
BARREL MATERIAL	CONCRETE
BARREL MANNING'S n	0.012
INLET TYPE	CONVENTIONAL
INLET EDGE AND WALL	1:1 BEVEL (45 DEG. FLARE)
INLET DEPRESSION	NONE

CURRENT DATE: 03-20-2007 FILE DATE: 03/20/2007
CURRENT TIME: 16:22:03 FILE NAME: Culv13

ÄÄÄ
ÄÄÄÄÄÄÄÄÄÄÄÄÄÄÄÄÄÄÄÄÄÄÄÄÄÄ TAILWATER ÄÄÄÄÄÄÄÄÄÄÄÄÄÄÄÄÄÄÄÄÄÄÄÄÄÄ
ÄÄÄ

***** USER DEFINED CHANNEL CROSS-SECTION FILE NAME: Culv13
MAIN CHANNEL AND LT & RT OVER BANKS FILE DATE: 5/28/2005

LEFT CHANNEL BOUNDARY	3
RIGHT CHANNEL BOUNDARY	7
MANNING n LEFT OVER BANK	0.057
MANNING n MAIN CHANNEL	0.045
MANNING n RIGHT OVER BANK	0.060
SLOPE OF CHANNEL	0.0223 ft/ft

CROSS-SECTION COORD. NO.	X (ft)	Y (ft)
1	0.00	2377.80
2	20.20	2377.50
3	58.90	2377.00
4	70.70	2376.00
5	81.20	2375.90
6	100.20	2376.30
7	127.90	2378.40

******* UNIFORM FLOW RATING CURVE FOR DOWNSTREAM CHANNEL

FLOW (cfs)	W.S.E. (ft)	FROUDE NUMBER	DEPTH (ft)	VEL. (f/s)	SHEAR (psf)
0.00	2375.90	0.000	0.00	0.00	0.00
13.00	2376.27	0.690	0.37	1.83	0.31
26.00	2376.40	0.733	0.50	2.30	0.44
39.00	2376.49	0.761	0.59	2.64	0.54
52.00	2376.57	0.780	0.67	2.89	0.63
65.00	2376.65	0.795	0.75	3.11	0.70
78.00	2376.71	0.808	0.81	3.29	0.76
91.00	2376.77	0.818	0.87	3.45	0.82
100.00	2376.81	0.824	0.91	3.55	0.86
117.00	2376.88	0.834	0.98	3.72	0.92
130.00	2376.93	0.841	1.03	3.84	0.97

Note: Shear stress was calculated using R.

ÄÄÄ
ÄÄÄÄÄÄÄÄÄÄÄÄÄÄÄÄÄÄÄÄÄÄÄÄÄÄ ROADWAY OVERTOPPING DATA ÄÄÄÄÄÄÄÄÄÄÄÄÄÄÄÄÄÄÄÄÄÄÄÄÄÄ
ÄÄÄ

ROADWAY SURFACE	PAVED
EMBANKMENT TOP WIDTH	24.00 ft

***** USER DEFINED ROADWAY PROFILE

CROSS-SECTION COORD. NO.	X ft	Y ft
1	0.00	2381.97
2	54.20	2382.73
3	84.00	2382.92
4	111.60	2382.50
5	187.00	2382.24
6	218.40	2382.39
7	239.90	2382.28

ÄÄÄ

CURRENT DATE: 03-21-2007 FILE DATE: 03/21/2007
CURRENT TIME: 07:40:34 FILE NAME: Culv14

FHWA CULVERT ANALYSIS
HY-8, VERSION 6.1

C U L V NO.	SITE DATA INLET ELEV. (ft)	OUTLET ELEV. (ft)	CULVERT LENGTH (ft)	CULVERT SHAPE, MATERIAL, INLET BARRELS SHAPE MATERIAL	SPAN (ft)	RISE (ft)	MANNING n	INLET TYPE
1	2371.50	2370.75	65.00	9 RCB	8.00	6.00	.012	CONVENTIONAL
2								
3								
4								
5								
6								

SUMMARY OF CULVERT FLOWS (cfs) FILE: Culv14 DATE: 03/21/2007

ELEV (ft)	TOTAL	1	2	3	4	5	6	ROADWAY	ITR
2371.50	0.0	0.0	0.0	0.0	0.0	0.0	0.0	0.00	1
2372.36	180.0	180.0	0.0	0.0	0.0	0.0	0.0	0.00	1
2372.86	360.0	360.0	0.0	0.0	0.0	0.0	0.0	0.00	1
2373.28	540.0	540.0	0.0	0.0	0.0	0.0	0.0	0.00	1
2373.66	720.0	720.0	0.0	0.0	0.0	0.0	0.0	0.00	1
2374.00	900.0	900.0	0.0	0.0	0.0	0.0	0.0	0.00	1
2374.19	1000.0	1000.0	0.0	0.0	0.0	0.0	0.0	0.00	1
2374.64	1260.0	1260.0	0.0	0.0	0.0	0.0	0.0	0.00	1
2374.96	1440.0	1440.0	0.0	0.0	0.0	0.0	0.0	0.00	1
2375.26	1620.0	1620.0	0.0	0.0	0.0	0.0	0.0	0.00	1
2375.55	1800.0	1800.0	0.0	0.0	0.0	0.0	0.0	0.00	1
2379.53	4379.7	4379.7	0.0	0.0	0.0	0.0	0.0	OVERTOPPING	

SUMMARY OF ITERATIVE SOLUTION ERRORS FILE: Culv14 DATE: 03/21/2007

HEAD ELEV (ft)	HEAD ERROR (ft)	TOTAL FLOW (cfs)	FLOW ERROR (cfs)	% FLOW ERROR
2371.50	0.000	0.00	0.00	0.00
2372.36	0.000	180.00	0.00	0.00
2372.86	0.000	360.00	0.00	0.00
2373.28	0.000	540.00	0.00	0.00
2373.66	0.000	720.00	0.00	0.00
2374.00	0.000	900.00	0.00	0.00
2374.19	0.000	1000.00	0.00	0.00
2374.64	0.000	1260.00	0.00	0.00
2374.96	0.000	1440.00	0.00	0.00
2375.26	0.000	1620.00	0.00	0.00
2375.55	0.000	1800.00	0.00	0.00

<1> TOLERANCE (ft) = 0.010 <2> TOLERANCE (%) = 1.000

CURRENT DATE: 03-21-2007 FILE DATE: 03/21/2007
CURRENT TIME: 07:40:34 FILE NAME: Culv14

PERFORMANCE CURVE FOR CULVERT 1 - 9(8.00 (ft) BY 6.00 (ft)) RCB

DIS-CHARGE FLOW (cfs)	HEAD-WATER ELEV. (ft)	INLET CONTROL DEPTH (ft)	OUTLET CONTROL DEPTH (ft)	FLOW TYPE <F4>	NORMAL DEPTH (ft)	CRIT. DEPTH (ft)	OUTLET DEPTH (ft)	TW DEPTH (ft)	OUTLET VEL. (fps)	TW VEL. (fps)
0.00	2371.50	0.00	0.00	0-NF	0.00	0.00	0.00	-0.66	0.00	0.00
180.00	2372.36	0.86	0.86	1-S2n	0.29	0.58	0.28	0.68	8.92	2.74
360.00	2372.86	1.36	1.36	1-S2n	0.58	0.92	0.52	1.12	9.60	3.41
540.00	2373.28	1.78	1.78	1-S2n	0.74	1.21	0.83	1.44	9.07	3.90
720.00	2373.66	2.16	2.16	1-S2n	0.89	1.46	1.01	1.71	9.88	4.33
900.00	2374.00	2.50	2.50	1-S2n	1.04	1.70	1.20	1.96	10.45	4.70
1000.00	2374.19	2.69	2.69	1-S2n	1.12	1.82	1.29	2.08	10.77	4.88
1260.00	2374.64	3.14	3.14	1-S2n	1.31	2.12	1.54	2.39	11.34	5.31
1440.00	2374.96	3.46	3.46	1-S2n	1.43	2.32	1.70	2.58	11.76	5.57
1620.00	2375.26	3.76	3.76	1-S2n	1.55	2.51	1.86	2.77	12.09	5.81
1800.00	2375.55	4.05	4.05	1-S2n	1.67	2.69	1.99	2.95	12.54	6.04

El. inlet face invert 2371.50 ft El. outlet invert 2370.75 ft
El. inlet throat invert 0.00 ft El. inlet crest 2371.50 ft

***** SITE DATA ***** CULVERT INVERT **********

INLET STATION	0.00 ft
INLET ELEVATION	2371.50 ft
OUTLET STATION	65.00 ft
OUTLET ELEVATION	2370.75 ft
NUMBER OF BARRELS	9
SLOPE (V/H)	0.0115
CULVERT LENGTH ALONG SLOPE	65.00 ft

***** CULVERT DATA SUMMARY **********

BARREL SHAPE	BOX
BARREL SPAN	8.00 ft
BARREL RISE	6.00 ft
BARREL MATERIAL	CONCRETE
BARREL MANNING'S n	0.012
INLET TYPE	CONVENTIONAL
INLET EDGE AND WALL	1:1 BEVEL (45 DEG. FLARE)
INLET DEPRESSION	NONE

CURRENT DATE: 03-21-2007 FILE DATE: 03/21/2007
CURRENT TIME: 07:40:34 FILE NAME: Culv14

ÄÄ
ÄÄÄÄÄÄÄÄÄÄÄÄÄÄÄÄÄÄÄÄÄÄÄÄÄÄ TAILWATER ÄÄÄÄÄÄÄÄÄÄÄÄÄÄÄÄÄÄÄÄÄÄÄÄÄÄ
ÄÄ

***** USER DEFINED CHANNEL CROSS-SECTION FILE NAME: Culv14
MAIN CHANNEL AND LT & RT OVER BANKS FILE DATE: 5/28/2005

LEFT CHANNEL BOUNDARY	3
RIGHT CHANNEL BOUNDARY	8
MANNING n LEFT OVER BANK	0.065
MANNING n MAIN CHANNEL	0.044
MANNING n RIGHT OVER BANK	0.070
SLOPE OF CHANNEL	0.0091 ft/ft

CROSS-SECTION COORD. NO.	X (ft)	Y (ft)
1	0.00	2377.40
2	22.70	2376.40
3	29.00	2371.90
4	42.80	2370.70
5	70.50	2370.09
6	91.20	2370.80
7	110.70	2370.90
8	130.40	2372.10
9	141.40	2374.70
10	144.90	2374.70
11	160.30	2378.50

******* UNIFORM FLOW RATING CURVE FOR DOWNSTREAM CHANNEL

FLOW (cfs)	W.S.E. (ft)	FROUDE NUMBER	DEPTH (ft)	VEL. (f/s)	SHEAR (psf)
0.00	2370.09	0.000	-0.66	0.00	0.00
180.00	2371.43	0.560	0.68	2.74	0.44
360.00	2371.87	0.595	1.12	3.41	0.62
540.00	2372.19	0.609	1.44	3.90	0.77
720.00	2372.46	0.621	1.71	4.33	0.91
900.00	2372.71	0.632	1.96	4.70	1.03
1000.00	2372.83	0.637	2.08	4.88	1.10
1260.00	2373.14	0.649	2.39	5.31	1.25
1440.00	2373.33	0.655	2.58	5.57	1.35
1620.00	2373.52	0.661	2.77	5.81	1.44
1800.00	2373.70	0.667	2.95	6.04	1.53

Note: Shear stress was calculated using R.
ÄÄ

CURRENT DATE: 03-21-2007
CURRENT TIME: 07:40:34

FILE DATE: 03/21/2007
FILE NAME: Culv14

ÄÄ
ÄÄÄÄÄÄÄÄÄÄÄÄÄÄÄÄÄÄÄÄÄÄÄÄÄÄ ROADWAY OVERTOPPING DATA ÄÄÄÄÄÄÄÄÄÄÄÄÄÄÄÄÄÄÄÄÄÄÄÄÄÄ
ÄÄ

ROADWAY SURFACE PAVED
EMBANKMENT TOP WIDTH 24.00 ft
***** USER DEFINED ROADWAY PROFILE

CROSS-SECTION COORD. NO.	X ft	Y ft
1	0.00	2379.68
2	29.37	2380.13
3	36.50	2379.67
4	59.00	2380.33
5	82.80	2380.04
6	88.70	2380.40
7	100.40	2380.00
8	118.50	2380.44
9	179.40	2379.69
10	199.00	2379.53
11	208.80	2379.87

ÄÄ

CURRENT DATE: 04-02-2007 FILE DATE: 04/02/2007
CURRENT TIME: 11:59:11 FILE NAME: Culv15

FHWA CULVERT ANALYSIS
HY-8, VERSION 6.1

CULV NO.	SITE DATA: INLET ELEV. (ft)	OUTLET ELEV. (ft)	CULVERT LENGTH (ft)	CULVERT SHAPE, MATERIAL, INLET: BARRELS / SHAPE / MATERIAL	SPAN (ft)	RISE (ft)	MANNING n	INLET TYPE
1	2169.40	2169.39	1.00	1 IRCP	14.00	0.90	.016	CONVENTIONAL
2								
3								
4								
5								
6								

SUMMARY OF CULVERT FLOWS (cfs) FILE: Culv15 DATE: 04/02/2007

ELEV (ft)	TOTAL	1	2	3	4	5	6	ROADWAY	ITR
2169.40	0.0	0.0	0.0	0.0	0.0	0.0	0.0	0.00	1
2169.70	3.0	3.0	0.0	0.0	0.0	0.0	0.0	0.00	1
2169.67	6.0	6.0	0.0	0.0	0.0	0.0	0.0	0.00	1
2169.74	9.0	9.0	0.0	0.0	0.0	0.0	0.0	0.00	1
2169.81	12.0	12.0	0.0	0.0	0.0	0.0	0.0	0.00	1
2169.88	15.0	15.0	0.0	0.0	0.0	0.0	0.0	0.00	1
2169.90	16.0	16.0	0.0	0.0	0.0	0.0	0.0	0.00	1
2170.00	21.0	21.0	0.0	0.0	0.0	0.0	0.0	0.00	1
2170.06	24.0	24.0	0.0	0.0	0.0	0.0	0.0	0.00	1
2170.12	27.0	27.0	0.0	0.0	0.0	0.0	0.0	0.00	1
2170.17	30.0	30.0	0.0	0.0	0.0	0.0	0.0	0.00	1
2172.70	102.8	102.8	0.0	0.0	0.0	0.0	0.0	OVERTOPPING	

SUMMARY OF ITERATIVE SOLUTION ERRORS FILE: Culv15 DATE: 04/02/2007

HEAD ELEV (ft)	HEAD ERROR (ft)	TOTAL FLOW (cfs)	FLOW ERROR (cfs)	% FLOW ERROR
2169.40	0.000	0.00	0.00	0.00
2169.70	0.000	3.00	0.00	0.00
2169.67	0.000	6.00	0.00	0.00
2169.74	0.000	9.00	0.00	0.00
2169.81	0.000	12.00	0.00	0.00
2169.88	0.000	15.00	0.00	0.00
2169.90	0.000	16.00	0.00	0.00
2170.00	0.000	21.00	0.00	0.00
2170.06	0.000	24.00	0.00	0.00
2170.12	0.000	27.00	0.00	0.00
2170.17	0.000	30.00	0.00	0.00

<1> TOLERANCE (ft) = 0.010 <2> TOLERANCE (%) = 1.000

CURRENT DATE: 04-02-2007 FILE DATE: 04/02/2007
CURRENT TIME: 11:59:11 FILE NAME: Culv15

PERFORMANCE CURVE FOR CULVERT 1 - 1(14.00 (ft) BY 0.90 (ft)) IRCP

DIS-CHARGE FLOW (cfs)	HEAD-WATER ELEV. (ft)	INLET CONTROL DEPTH (ft)	OUTLET CONTROL DEPTH (ft)	FLOW TYPE <F4>	NORMAL DEPTH (ft)	CRIT. DEPTH (ft)	OUTLET DEPTH (ft)	TW DEPTH (ft)	OUTLET VEL. (fps)	TW VEL. (fps)
0.00	2169.40	0.00	0.00	0-NF	0.00	0.00	0.00	0.00	0.00	0.00
3.00	2169.70	0.30	0.30	1-S2n	0.12	0.13	0.03	0.10	5.78	1.77
6.00	2169.67	0.27	0.27	1-S2n	0.18	0.20	0.10	0.15	6.19	2.25
9.00	2169.74	0.34	0.34	1-S2n	0.22	0.25	0.15	0.19	4.84	2.57
12.00	2169.81	0.41	0.41	1-S2n	0.26	0.30	0.28	0.22	3.27	2.82
15.00	2169.88	0.48	0.48	1-S2n	0.30	0.35	0.32	0.26	3.52	3.09
16.00	2169.90	0.50	0.50	1-S2n	0.31	0.36	0.34	0.28	3.59	3.21
21.00	2170.00	0.60	0.60	1-S2n	0.36	0.43	0.40	0.30	3.93	3.36
24.00	2170.06	0.66	0.66	1-S2n	0.39	0.47	0.44	0.32	4.10	3.50
27.00	2170.12	0.72	0.72	1-S2n	0.42	0.51	0.47	0.35	4.25	3.63
30.00	2170.17	0.77	0.77	1-S2n	0.44	0.54	0.51	0.37	4.40	3.74

El. inlet face invert 2169.40 ft El. outlet invert 2169.39 ft
El. inlet throat invert 0.00 ft El. inlet crest 2169.40 ft

***** SITE DATA ***** CULVERT INVERT **********

INLET STATION	0.00 ft
INLET ELEVATION	2169.40 ft
OUTLET STATION	1.00 ft
OUTLET ELEVATION	2169.39 ft
NUMBER OF BARRELS	1
SLOPE (V/H)	0.0100
CULVERT LENGTH ALONG SLOPE	1.00 ft

***** CULVERT DATA SUMMARY **********

BARREL SHAPE	USER DEFINED
BARREL SPAN	14.00 ft
BARREL RISE	0.90 ft
BARREL MATERIAL	CONCRETE
BARREL MANNING'S n	0.016 FOR SIDES AND TOP
	0.035 FOR BOTTOM
INLET TYPE	CONVENTIONAL
INLET EDGE AND WALL	HEADWALL
INLET DEPRESSION	NONE

***** USER DEFINED CULVERT CROSS-SECTION - CULVERT # 1

COORDINATE NUMBER	X (ft)	Y-TOP (ft)	Y-BOTTOM (ft)
1	0.00	2170.30	2169.43
2	5.00	2170.30	2169.43
3	14.00	2170.28	2169.40

CURRENT DATE: 04-02-2007 FILE DATE: 04/02/2007
CURRENT TIME: 11:59:11 FILE NAME: Culv15

ÄÄ
ÄÄÄÄÄÄÄÄÄÄÄÄÄÄÄÄÄÄÄÄÄÄÄÄÄÄ TAILWATER ÄÄÄÄÄÄÄÄÄÄÄÄÄÄÄÄÄÄÄÄÄÄÄÄÄÄ
ÄÄ

******* REGULAR CHANNEL CROSS SECTION ****************

BOTTOM WIDTH	15.00 ft
SIDE SLOPE H/V (X:1)	%19.0
CHANNEL SLOPE V/H (ft/ft)	0.043
MANNING'S n (.01-0.1)	0.035
CHANNEL INVERT ELEVATION	2169.39 ft
CULVERT NO.1 OUTLET INVERT ELEVATION	2169.39 ft

******* UNIFORM FLOW RATING CURVE FOR DOWNSTREAM CHANNEL

FLOW (cfs)	W.S.E. (ft)	FROUDE NUMBER	DEPTH (ft)	VEL. (f/s)	SHEAR (psf)
0.00	2169.39	0.000	0.00	0.00	0.00
3.00	2169.49	1.038	0.10	1.77	0.27
6.00	2169.54	1.102	0.15	2.25	0.40
9.00	2169.58	1.140	0.19	2.57	0.51
12.00	2169.61	1.167	0.22	2.82	0.59
15.00	2169.65	1.194	0.26	3.09	0.70
16.00	2169.67	1.205	0.28	3.21	0.74
21.00	2169.69	1.219	0.30	3.36	0.81
24.00	2169.71	1.232	0.32	3.50	0.87
27.00	2169.74	1.243	0.35	3.63	0.93
30.00	2169.76	1.252	0.37	3.74	0.98

ÄÄ
ÄÄÄÄÄÄÄÄÄÄÄÄÄÄÄÄÄÄÄÄÄÄÄÄÄÄ ROADWAY OVERTOPPING DATA ÄÄÄÄÄÄÄÄÄÄÄÄÄÄÄÄÄÄÄÄÄÄÄÄÄÄ
ÄÄ

WEIR COEFFICIENT	2.50
EMBANKMENT TOP WIDTH	1.00 ft

***** USER DEFINED ROADWAY PROFILE

CROSS-SECTION COORD. NO.	X ft	Y ft
1	0.00	2178.00
2	106.90	2178.00
3	107.00	2175.55
4	207.00	2175.55
5	255.20	2175.55
6	255.30	2172.70
7	290.00	2172.89
8	309.60	2173.08
9	326.60	2173.95

ÄÄ

CURRENT DATE: 04-02-2007 FILE DATE: 04/02/2007
CURRENT TIME: 12:52:35 FILE NAME: Culv16

FHWA CULVERT ANALYSIS
HY-8, VERSION 6.1

CULV NO.	SITE DATA: INLET ELEV. (ft)	OUTLET ELEV. (ft)	CULVERT LENGTH (ft)	CULVERT SHAPE, MATERIAL, INLET: BARRELS / SHAPE / MATERIAL	SPAN (ft)	RISE (ft)	MANNING n	INLET TYPE
1	2331.79	2331.78	1.00	1 IRCP	7.40	1.22	.016	CONVENTIONAL
2								
3								
4								
5								
6								

SUMMARY OF CULVERT FLOWS (cfs) FILE: Culv16 DATE: 04/02/2007

ELEV (ft)	TOTAL	1	2	3	4	5	6	ROADWAY	ITR
2331.79	0.0	0.0	0.0	0.0	0.0	0.0	0.0	0.00	1
2332.15	4.0	4.0	0.0	0.0	0.0	0.0	0.0	0.00	1
2332.20	5.0	5.0	0.0	0.0	0.0	0.0	0.0	0.00	1
2332.46	12.0	12.0	0.0	0.0	0.0	0.0	0.0	0.00	1
2332.60	16.0	16.0	0.0	0.0	0.0	0.0	0.0	0.00	1
2332.74	20.0	20.0	0.0	0.0	0.0	0.0	0.0	0.00	1
2332.87	24.0	24.0	0.0	0.0	0.0	0.0	0.0	0.00	1
2333.01	28.0	28.0	0.0	0.0	0.0	0.0	0.0	0.00	1
2333.17	32.0	32.0	0.0	0.0	0.0	0.0	0.0	0.00	1
2333.34	36.0	36.0	0.0	0.0	0.0	0.0	0.0	0.00	1
2333.52	40.0	40.0	0.0	0.0	0.0	0.0	0.0	0.00	1
2338.41	98.1	98.1	0.0	0.0	0.0	0.0	0.0	OVERTOPPING	

SUMMARY OF ITERATIVE SOLUTION ERRORS FILE: Culv16 DATE: 04/02/2007

HEAD ELEV (ft)	HEAD ERROR (ft)	TOTAL FLOW (cfs)	FLOW ERROR (cfs)	% FLOW ERROR
2331.79	0.000	0.00	0.00	0.00
2332.15	0.000	4.00	0.00	0.00
2332.20	0.000	5.00	0.00	0.00
2332.46	0.000	12.00	0.00	0.00
2332.60	0.000	16.00	0.00	0.00
2332.74	0.000	20.00	0.00	0.00
2332.87	0.000	24.00	0.00	0.00
2333.01	0.000	28.00	0.00	0.00
2333.17	0.000	32.00	0.00	0.00
2333.34	0.000	36.00	0.00	0.00
2333.52	0.000	40.00	0.00	0.00

<1> TOLERANCE (ft) = 0.010 <2> TOLERANCE (%) = 1.000

CURRENT DATE: 04-02-2007 FILE DATE: 04/02/2007
CURRENT TIME: 12:52:35 FILE NAME: Culv16

PERFORMANCE CURVE FOR CULVERT 1 - 1(7.40 (ft) BY 1.22 (ft)) IRCP

DIS-CHARGE FLOW (cfs)	HEAD-WATER ELEV. (ft)	INLET CONTROL DEPTH (ft)	OUTLET CONTROL DEPTH (ft)	FLOW TYPE <F4>	NORMAL DEPTH (ft)	CRIT. DEPTH (ft)	OUTLET DEPTH (ft)	TW DEPTH (ft)	OUTLET VEL. (fps)	TW VEL. (fps)
0.00	2331.79	0.00	0.00	0-NF	0.00	0.00	0.00	0.00	0.00	0.00
4.00	2332.15	0.36	0.36	1-S2n	0.27	0.29	0.19	0.16	5.00	2.14
5.00	2332.20	0.41	0.41	1-S2n	0.30	0.33	0.23	0.20	4.84	2.43
12.00	2332.46	0.67	0.67	1-S2n	0.45	0.52	0.49	0.25	4.01	2.71
16.00	2332.60	0.81	0.81	1-S2n	0.52	0.62	0.58	0.28	4.39	2.93
20.00	2332.74	0.95	0.95	1-S2n	0.59	0.70	0.66	0.31	4.72	3.11
24.00	2332.87	1.08	1.08	1-S2n	0.65	0.78	0.74	0.34	5.01	3.26
28.00	2333.01	1.22	1.22	1-S2n	0.71	0.85	0.81	0.37	5.25	3.39
32.00	2333.17	1.38	1.38	5-S2n	0.76	0.92	0.88	0.39	5.48	3.51
36.00	2333.34	1.55	1.55	5-S2n	0.82	0.99	0.94	0.41	5.69	3.62
40.00	2333.52	1.73	1.73	5-S2n	0.87	1.06	1.01	0.43	5.89	3.72

El. inlet face invert 2331.79 ft El. outlet invert 2331.78 ft
El. inlet throat invert 0.00 ft El. inlet crest 2331.79 ft

***** SITE DATA ***** CULVERT INVERT **********

INLET STATION	0.00 ft
INLET ELEVATION	2331.79 ft
OUTLET STATION	1.00 ft
OUTLET ELEVATION	2331.78 ft
NUMBER OF BARRELS	1
SLOPE (V/H)	0.0100
CULVERT LENGTH ALONG SLOPE	1.00 ft

***** CULVERT DATA SUMMARY **********

BARREL SHAPE	USER DEFINED
BARREL SPAN	7.40 ft
BARREL RISE	1.22 ft
BARREL MATERIAL	CONCRETE
BARREL MANNING'S n	0.016 FOR SIDES AND TOP
	0.035 FOR BOTTOM
INLET TYPE	CONVENTIONAL
INLET EDGE AND WALL	HEADWALL
INLET DEPRESSION	NONE

***** USER DEFINED CULVERT CROSS-SECTION - CULVERT # 1

COORDINATE NUMBER	X (ft)	Y-TOP (ft)	Y-BOTTOM (ft)
1	0.00	2332.92	2331.79
2	7.40	2333.01	2331.97

CURRENT DATE: 04-02-2007 FILE DATE: 04/02/2007
CURRENT TIME: 12:52:35 FILE NAME: Culv16

ÄÄÄ
ÄÄÄÄÄÄÄÄÄÄÄÄÄÄÄÄÄÄÄÄÄÄÄÄÄÄÄ TAILWATER ÄÄÄÄÄÄÄÄÄÄÄÄÄÄÄÄÄÄÄÄÄÄÄÄÄÄÄ
ÄÄÄ

******* REGULAR CHANNEL CROSS SECTION ****************

BOTTOM WIDTH	8.50 ft
SIDE SLOPE H/V (X:1)	%38.0
CHANNEL SLOPE V/H (ft/ft)	0.034
MANNING'S n (.01-0.1)	0.030
CHANNEL INVERT ELEVATION	2331.78 ft
CULVERT NO.1 OUTLET INVERT ELEVATION	2331.78 ft

******* UNIFORM FLOW RATING CURVE FOR DOWNSTREAM CHANNEL

FLOW (cfs)	W.S.E. (ft)	FROUDE NUMBER	DEPTH (ft)	VEL. (f/s)	SHEAR (psf)
0.00	2331.78	0.000	0.00	0.00	0.00
4.00	2331.94	1.119	0.16	2.14	0.34
5.00	2331.98	1.156	0.20	2.43	0.43
12.00	2332.03	1.188	0.25	2.71	0.52
16.00	2332.06	1.211	0.28	2.93	0.60
20.00	2332.09	1.229	0.31	3.11	0.67
24.00	2332.12	1.244	0.34	3.26	0.73
28.00	2332.15	1.256	0.37	3.39	0.78
32.00	2332.17	1.267	0.39	3.51	0.83
36.00	2332.19	1.277	0.41	3.62	0.87
40.00	2332.21	1.286	0.43	3.72	0.92

ÄÄÄ
ÄÄÄÄÄÄÄÄÄÄÄÄÄÄÄÄÄÄÄÄÄÄÄÄÄÄÄ ROADWAY OVERTOPPING DATA ÄÄÄÄÄÄÄÄÄÄÄÄÄÄÄÄÄÄÄÄÄÄÄÄÄÄÄ
ÄÄÄ

WEIR COEFFICIENT	2.50
EMBANKMENT TOP WIDTH	1.00 ft
CREST LENGTH	187.00 ft
OVERTOPPING CREST ELEVATION	2338.41 ft

ÄÄÄ

CURRENT DATE: 03-22-2007 FILE DATE: 03/22/2007
CURRENT TIME: 08:54:14 FILE NAME: Culv17

FHWA CULVERT ANALYSIS
HY-8, VERSION 6.1

C U L V NO.	SITE DATA INLET ELEV. (ft)	OUTLET ELEV. (ft)	CULVERT LENGTH (ft)	CULVERT SHAPE, MATERIAL, INLET BARRELS SHAPE MATERIAL	SPAN (ft)	RISE (ft)	MANNING n	INLET TYPE
1	2449.30	2448.00	50.62	1 CSP	2.50	2.50	.024	CONVENTIONAL
2								
3								
4								
5								
6								

SUMMARY OF CULVERT FLOWS (cfs) FILE: Culv17 DATE: 03/22/2007

ELEV (ft)	TOTAL	1	2	3	4	5	6	ROADWAY	ITR
2449.30	0.0	0.0	0.0	0.0	0.0	0.0	0.0	0.00	1
2450.01	3.5	3.5	0.0	0.0	0.0	0.0	0.0	0.00	1
2450.46	7.0	7.0	0.0	0.0	0.0	0.0	0.0	0.00	1
2450.80	10.5	10.5	0.0	0.0	0.0	0.0	0.0	0.00	1
2451.08	14.0	14.0	0.0	0.0	0.0	0.0	0.0	0.00	1
2451.33	17.5	17.5	0.0	0.0	0.0	0.0	0.0	0.00	1
2451.51	20.0	20.0	0.0	0.0	0.0	0.0	0.0	0.00	1
2451.83	24.5	24.5	0.0	0.0	0.0	0.0	0.0	0.00	1
2452.04	28.0	27.3	0.0	0.0	0.0	0.0	0.0	0.52	10
2452.17	31.5	28.8	0.0	0.0	0.0	0.0	0.0	2.51	9
2452.25	35.0	29.7	0.0	0.0	0.0	0.0	0.0	4.93	7
2451.90	25.4	25.4	0.0	0.0	0.0	0.0	0.0	OVERTOPPING	

SUMMARY OF ITERATIVE SOLUTION ERRORS FILE: Culv17 DATE: 03/22/2007

HEAD ELEV (ft)	HEAD ERROR (ft)	TOTAL FLOW (cfs)	FLOW ERROR (cfs)	% FLOW ERROR
2449.30	0.000	0.00	0.00	0.00
2450.01	0.000	3.50	0.00	0.00
2450.46	0.000	7.00	0.00	0.00
2450.80	0.000	10.50	0.00	0.00
2451.08	0.000	14.00	0.00	0.00
2451.33	0.000	17.50	0.00	0.00
2451.51	0.000	20.00	0.00	0.00
2451.83	0.000	24.50	0.00	0.00
2452.04	-0.005	28.00	0.21	0.75
2452.17	-0.003	31.50	0.21	0.67
2452.25	-0.004	35.00	0.33	0.94

<1> TOLERANCE (ft) = 0.010 <2> TOLERANCE (%) = 1.000

CURRENT DATE: 03-22-2007 FILE DATE: 03/22/2007
CURRENT TIME: 08:54:14 FILE NAME: Culv17

PERFORMANCE CURVE FOR CULVERT 1 - 1(2.50 (ft) BY 2.50 (ft)) CSP

DIS-CHARGE FLOW (cfs)	HEAD-WATER ELEV. (ft)	INLET CONTROL DEPTH (ft)	OUTLET CONTROL DEPTH (ft)	FLOW TYPE <F4>	NORMAL DEPTH (ft)	CRIT. DEPTH (ft)	OUTLET DEPTH (ft)	TW DEPTH (ft)	OUTLET VEL. (fps)	TW VEL. (fps)
0.00	2449.30	0.00	0.00	0-NF	0.00	0.00	0.00	0.10	0.00	0.00
3.50	2450.02	0.72	0.72	1-S2n	0.52	0.60	0.40	0.52	6.66	1.46
7.00	2450.46	1.16	1.16	1-S2n	0.75	0.87	0.67	0.64	6.57	1.79
10.50	2450.80	1.50	1.50	1-S2n	0.92	1.08	0.92	0.73	6.41	1.95
14.00	2451.09	1.79	1.79	1-S2n	1.08	1.26	0.96	0.80	8.07	2.07
17.50	2451.33	2.03	2.03	1-S2n	1.24	1.41	1.11	0.86	8.30	2.16
20.00	2451.51	2.21	2.21	1-S2n	1.34	1.52	1.22	0.90	8.44	2.23
24.50	2451.83	2.53	2.53	5-S2n	1.52	1.68	1.51	0.95	7.89	2.34
27.26	2452.04	2.74	2.74	5-S2n	1.64	1.78	1.58	0.99	8.37	2.41
28.78	2452.17	2.87	2.87	5-S2n	1.70	1.82	1.62	1.03	8.55	2.48
29.74	2452.25	2.95	2.95	5-S2n	1.74	1.85	1.65	1.06	8.65	2.54

El. inlet face invert 2449.30 ft El. outlet invert 2448.00 ft
El. inlet throat invert 0.00 ft El. inlet crest 2449.30 ft

***** SITE DATA ***** CULVERT INVERT **********

INLET STATION	0.00 ft
INLET ELEVATION	2449.30 ft
OUTLET STATION	50.60 ft
OUTLET ELEVATION	2448.00 ft
NUMBER OF BARRELS	1
SLOPE (V/H)	0.0257
CULVERT LENGTH ALONG SLOPE	50.62 ft

***** CULVERT DATA SUMMARY **********

BARREL SHAPE	CIRCULAR
BARREL DIAMETER	2.50 ft
BARREL MATERIAL	CORRUGATED STEEL
BARREL MANNING'S n	0.024
INLET TYPE	CONVENTIONAL
INLET EDGE AND WALL	BEVELED EDGE (1:1)
INLET DEPRESSION	NONE

CURRENT DATE: 03-22-2007 FILE DATE: 03/22/2007
CURRENT TIME: 08:54:14 FILE NAME: Culv17

ÄÄ
ÄÄÄÄÄÄÄÄÄÄÄÄÄÄÄÄÄÄÄÄÄÄÄÄÄÄ TAILWATER ÄÄÄÄÄÄÄÄÄÄÄÄÄÄÄÄÄÄÄÄÄÄÄÄÄÄ
ÄÄ

***** USER DEFINED CHANNEL CROSS-SECTION FILE NAME: Culv17
MAIN CHANNEL AND LT & RT OVER BANKS FILE DATE: 5/28/2005
LEFT CHANNEL BOUNDARY 2
RIGHT CHANNEL BOUNDARY 6
MANNING n LEFT OVER BANK 0.039
MANNING n MAIN CHANNEL 0.060
MANNING n RIGHT OVER BANK 0.060
SLOPE OF CHANNEL 0.0267 ft/ft

CROSS-SECTION COORD. NO.	X (ft)	Y (ft)
1	0.00	2451.40
2	14.00	2449.60
3	23.10	2448.50
4	29.30	2448.10
5	38.60	2448.90
6	52.10	2450.70
7	65.90	2448.60
8	88.00	2450.00
9	126.30	2451.50

******* UNIFORM FLOW RATING CURVE FOR DOWNSTREAM CHANNEL

FLOW (cfs)	W.S.E. (ft)	FROUDE NUMBER	DEPTH (ft)	VEL. (f/s)	SHEAR (psf)
0.00	2448.10	0.000	0.10	0.00	0.00
3.50	2448.52	0.556	0.52	1.46	0.36
7.00	2448.64	0.612	0.64	1.79	0.45
10.50	2448.73	0.645	0.73	1.95	0.49
14.00	2448.80	0.661	0.80	2.07	0.53
17.50	2448.86	0.671	0.86	2.16	0.57
20.00	2448.90	0.676	0.90	2.23	0.59
24.50	2448.95	0.685	0.95	2.34	0.64
28.00	2448.99	0.691	0.99	2.41	0.67
31.50	2449.03	0.696	1.03	2.48	0.70
35.00	2449.06	0.701	1.06	2.54	0.72

Note: Shear stress was calculated using R.

ÄÄ
ÄÄÄÄÄÄÄÄÄÄÄÄÄÄÄÄÄÄÄÄÄÄÄÄÄÄ ROADWAY OVERTOPPING DATA ÄÄÄÄÄÄÄÄÄÄÄÄÄÄÄÄÄÄÄÄÄÄÄÄÄÄ
ÄÄ

ROADWAY SURFACE PAVED
EMBANKMENT TOP WIDTH 24.00 ft
***** USER DEFINED ROADWAY PROFILE

CROSS-SECTION COORD. NO.	X ft	Y ft
1	0.00	2451.90
2	25.30	2452.30
3	48.90	2452.84
4	61.80	2453.06
5	74.50	2453.30
6	116.50	2453.80
7	173.00	2454.30
8	233.90	2454.80

ÄÄ

CURRENT DATE: 03-22-2007 FILE DATE: 03/22/2007
CURRENT TIME: 09:15:31 FILE NAME: Culv18

FHWA CULVERT ANALYSIS
HY-8, VERSION 6.1

CULV NO.	SITE DATA: INLET ELEV. (ft)	OUTLET ELEV. (ft)	CULVERT LENGTH (ft)	CULVERT SHAPE, MATERIAL, INLET: BARRELS / SHAPE / MATERIAL	SPAN (ft)	RISE (ft)	MANNING n	INLET TYPE
1	2451.92	2451.25	52.50	1 CMPA	4.08	2.75	.024	CONVENTIONAL
2								
3								
4								
5								
6								

SUMMARY OF CULVERT FLOWS (cfs) FILE: Culv18 DATE: 03/22/2007

ELEV (ft)	TOTAL	1	2	3	4	5	6	ROADWAY	ITR
2451.92	0.0	0.0	0.0	0.0	0.0	0.0	0.0	0.00	1
2452.56	4.0	4.0	0.0	0.0	0.0	0.0	0.0	0.00	1
2452.86	8.0	8.0	0.0	0.0	0.0	0.0	0.0	0.00	1
2453.11	12.0	12.0	0.0	0.0	0.0	0.0	0.0	0.00	1
2453.34	16.0	16.0	0.0	0.0	0.0	0.0	0.0	0.00	1
2453.55	20.0	20.0	0.0	0.0	0.0	0.0	0.0	0.00	1
2453.75	24.0	24.0	0.0	0.0	0.0	0.0	0.0	0.00	1
2453.80	25.0	25.0	0.0	0.0	0.0	0.0	0.0	0.00	1
2454.25	32.0	32.0	0.0	0.0	0.0	0.0	0.0	0.00	1
2454.42	36.0	36.0	0.0	0.0	0.0	0.0	0.0	0.00	1
2454.59	40.0	40.0	0.0	0.0	0.0	0.0	0.0	0.00	1
2455.90	66.3	66.3	0.0	0.0	0.0	0.0	0.0	OVERTOPPING	

SUMMARY OF ITERATIVE SOLUTION ERRORS FILE: Culv18 DATE: 03/22/2007

HEAD ELEV (ft)	HEAD ERROR (ft)	TOTAL FLOW (cfs)	FLOW ERROR (cfs)	% FLOW ERROR
2451.92	0.000	0.00	0.00	0.00
2452.56	0.000	4.00	0.00	0.00
2452.86	0.000	8.00	0.00	0.00
2453.11	0.000	12.00	0.00	0.00
2453.34	0.000	16.00	0.00	0.00
2453.55	0.000	20.00	0.00	0.00
2453.75	0.000	24.00	0.00	0.00
2453.80	0.000	25.00	0.00	0.00
2454.25	0.000	32.00	0.00	0.00
2454.42	0.000	36.00	0.00	0.00
2454.59	0.000	40.00	0.00	0.00

<1> TOLERANCE (ft) = 0.010 <2> TOLERANCE (%) = 1.000

CURRENT DATE: 03-22-2007 FILE DATE: 03/22/2007
CURRENT TIME: 09:15:31 FILE NAME: Culv18

PERFORMANCE CURVE FOR CULVERT 1 - 1(4.08 (ft) BY 2.75 (ft)) CMPA

DIS-CHARGE FLOW (cfs)	HEAD-WATER ELEV. (ft)	INLET CONTROL DEPTH (ft)	OUTLET CONTROL DEPTH (ft)	FLOW TYPE <F4>	NORMAL DEPTH (ft)	CRIT. DEPTH (ft)	OUTLET DEPTH (ft)	TW DEPTH (ft)	OUTLET VEL. (fps)	TW VEL. (fps)
0.00	2451.92	0.00	0.00	0-NF	0.00	0.00	0.00	-0.05	0.00	0.00
4.00	2452.56	0.64	0.64	1-S2n	0.42	0.42	0.32	0.20	6.17	1.10
8.00	2452.86	0.94	0.94	1-S2n	0.61	0.62	0.52	0.28	5.10	1.43
12.00	2453.11	1.19	1.19	1-S2n	0.77	0.79	0.69	0.34	5.42	1.66
16.00	2453.34	1.42	1.42	1-S2n	0.91	0.92	0.82	0.40	5.80	1.84
20.00	2453.55	1.63	1.63	1-S2n	1.03	1.05	0.95	0.45	6.10	2.00
24.00	2453.75	1.83	1.83	1-S2n	1.16	1.17	1.07	0.51	6.41	2.16
25.00	2453.80	1.88	1.88	1-S2n	1.19	1.19	1.09	0.54	6.49	2.25
32.00	2454.25	2.20	2.33	2-M2c	1.40	1.38	1.38	0.58	6.40	2.36
36.00	2454.42	2.38	2.50	2-M2c	1.52	1.47	1.47	0.62	6.73	2.46
40.00	2454.59	2.56	2.67	2-M2c	1.64	1.56	1.56	0.65	7.02	2.55

El. inlet face invert 2451.92 ft El. outlet invert 2451.25 ft
El. inlet throat invert 0.00 ft El. inlet crest 2451.92 ft

***** SITE DATA ***** CULVERT INVERT **********

INLET STATION	0.00 ft
INLET ELEVATION	2451.92 ft
OUTLET STATION	52.50 ft
OUTLET ELEVATION	2451.25 ft
NUMBER OF BARRELS	1
SLOPE (V/H)	0.0128
CULVERT LENGTH ALONG SLOPE	52.50 ft

***** CULVERT DATA SUMMARY **********

BARREL SHAPE	PIPE ARCH
BARREL SPAN	4.08 ft
BARREL RISE	2.75 ft
BARREL MATERIAL	STEEL OR ALUMINUM
BARREL MANNING'S n	0.024
INLET TYPE	CONVENTIONAL
INLET EDGE AND WALL	HEADWALL
INLET DEPRESSION	NONE

```
CURRENT DATE: 03-22-2007                                  FILE DATE: 03/22/2007
CURRENT TIME: 09:15:31                                    FILE NAME: Culv18

ÄÄÄÄÄÄÄÄÄÄÄÄÄÄÄÄÄÄÄÄÄÄÄÄÄÄÄÄÄÄÄÄÄÄÄÄÄÄÄÄÄÄÄÄÄÄÄÄÄÄÄÄÄÄÄÄÄÄÄÄÄÄÄÄÄÄÄÄÄÄÄÄÄÄÄÄÄÄÄÄ
ÄÄÄÄÄÄÄÄÄÄÄÄÄÄÄÄÄÄÄÄÄÄÄÄÄÄ          TAILWATER         ÄÄÄÄÄÄÄÄÄÄÄÄÄÄÄÄÄÄÄÄÄÄÄÄÄÄ
ÄÄÄÄÄÄÄÄÄÄÄÄÄÄÄÄÄÄÄÄÄÄÄÄÄÄÄÄÄÄÄÄÄÄÄÄÄÄÄÄÄÄÄÄÄÄÄÄÄÄÄÄÄÄÄÄÄÄÄÄÄÄÄÄÄÄÄÄÄÄÄÄÄÄÄÄÄÄÄÄ

***** USER DEFINED CHANNEL CROSS-SECTION                  FILE NAME: Culv18
      MAIN CHANNEL AND LT & RT OVER BANKS                 FILE DATE: 03/22/2007
      LEFT CHANNEL BOUNDARY          3
      RIGHT CHANNEL BOUNDARY         8
      MANNING n LEFT OVER BANK       0.042
      MANNING n MAIN CHANNEL         0.044
      MANNING n RIGHT OVER BANK       0.044
      SLOPE OF CHANNEL               0.0123 ft/ft

      CROSS-SECTION    X         Y
        COORD. NO.    (ft)      (ft)
            1          0.00   2453.50
            2         28.00   2453.00
            3         43.30   2451.30
            4         59.30   2451.30
            5         59.30   2451.30
            6         62.60   2451.20
            7         65.90   2451.40
            8         69.90   2452.90
            9         71.50   2455.10
           10         79.80   2456.30

******* UNIFORM FLOW RATING CURVE FOR DOWNSTREAM CHANNEL

        FLOW     W.S.E.   FROUDE   DEPTH    VEL.    SHEAR
        (cfs)     (ft)    NUMBER    (ft)    (f/s)   (psf)
         0.00   2451.20   0.000    -0.05    0.00    0.00
         4.00   2451.45   0.499     0.20    1.10    0.12
         8.00   2451.53   0.532     0.28    1.43    0.17
        12.00   2451.59   0.552     0.34    1.66    0.22
        16.00   2451.65   0.566     0.40    1.84    0.25
        20.00   2451.70   0.577     0.45    2.00    0.28
        24.00   2451.76   0.589     0.51    2.16    0.32
        25.00   2451.79   0.595     0.54    2.25    0.34
        32.00   2451.83   0.602     0.58    2.36    0.37
        36.00   2451.87   0.608     0.62    2.46    0.39
        40.00   2451.90   0.613     0.65    2.55    0.41
Note: Shear stress was calculated using R.

ÄÄÄÄÄÄÄÄÄÄÄÄÄÄÄÄÄÄÄÄÄÄÄÄÄÄÄÄÄÄÄÄÄÄÄÄÄÄÄÄÄÄÄÄÄÄÄÄÄÄÄÄÄÄÄÄÄÄÄÄÄÄÄÄÄÄÄÄÄÄÄÄÄÄÄÄÄÄÄÄ
ÄÄÄÄÄÄÄÄÄÄÄÄÄÄÄÄÄÄÄÄÄÄÄÄÄÄ  ROADWAY OVERTOPPING DATA  ÄÄÄÄÄÄÄÄÄÄÄÄÄÄÄÄÄÄÄÄÄÄÄÄÄÄ
ÄÄÄÄÄÄÄÄÄÄÄÄÄÄÄÄÄÄÄÄÄÄÄÄÄÄÄÄÄÄÄÄÄÄÄÄÄÄÄÄÄÄÄÄÄÄÄÄÄÄÄÄÄÄÄÄÄÄÄÄÄÄÄÄÄÄÄÄÄÄÄÄÄÄÄÄÄÄÄÄ

      ROADWAY SURFACE                             PAVED
      EMBANKMENT TOP WIDTH                        24.00 ft
***** USER DEFINED ROADWAY PROFILE
      CROSS-SECTION       X         Y
      COORD. NO.          ft        ft
           1             0.00    2455.90
           2            30.50    2456.20
           3            60.90    2456.50
           4            79.70    2456.90
           5           102.90    2457.30
           6           124.40    2457.70
ÄÄÄÄÄÄÄÄÄÄÄÄÄÄÄÄÄÄÄÄÄÄÄÄÄÄÄÄÄÄÄÄÄÄÄÄÄÄÄÄÄÄÄÄÄÄÄÄÄÄÄÄÄÄÄÄÄÄÄÄÄÄÄÄÄÄÄÄÄÄÄÄÄÄÄÄÄÄÄÄ
```

CURRENT DATE: 03-26-2007 FILE DATE: 3/26/2007
CURRENT TIME: 13:28:29 FILE NAME: Culv19

FHWA CULVERT ANALYSIS
HY-8, VERSION 6.1

CULV NO.	INLET ELEV. (ft)	OUTLET ELEV. (ft)	CULVERT LENGTH (ft)	BARRELS SHAPE MATERIAL	SPAN (ft)	RISE (ft)	MANNING n	INLET TYPE
1	2437.05	2436.07	45.11	1 CSP	3.00	3.00	.024	CONVENTIONAL
2								
3								
4								
5								
6								

SUMMARY OF CULVERT FLOWS (cfs) FILE: Culv19 DATE: 3/26/2007

ELEV (ft)	TOTAL	1	2	3	4	5	6	ROADWAY	ITR
2437.05	0.0	0.0	0.0	0.0	0.0	0.0	0.0	0.00	1
2437.55	2.5	2.5	0.0	0.0	0.0	0.0	0.0	0.00	1
2437.86	5.0	5.0	0.0	0.0	0.0	0.0	0.0	0.00	1
2438.12	7.5	7.5	0.0	0.0	0.0	0.0	0.0	0.00	1
2438.36	10.0	10.0	0.0	0.0	0.0	0.0	0.0	0.00	1
2438.56	12.5	12.5	0.0	0.0	0.0	0.0	0.0	0.00	1
2438.75	15.0	15.0	0.0	0.0	0.0	0.0	0.0	0.00	1
2438.92	17.5	17.5	0.0	0.0	0.0	0.0	0.0	0.00	1
2439.08	20.0	20.0	0.0	0.0	0.0	0.0	0.0	0.00	1
2439.22	22.5	22.5	0.0	0.0	0.0	0.0	0.0	0.00	1
2439.36	25.0	25.0	0.0	0.0	0.0	0.0	0.0	0.00	1
2441.00	52.6	52.6	0.0	0.0	0.0	0.0	0.0	OVERTOPPING	

SUMMARY OF ITERATIVE SOLUTION ERRORS FILE: Culv19 DATE: 3/26/2007

HEAD ELEV (ft)	HEAD ERROR (ft)	TOTAL FLOW (cfs)	FLOW ERROR (cfs)	% FLOW ERROR
2437.05	0.000	0.00	0.00	0.00
2437.55	0.000	2.50	0.00	0.00
2437.86	0.000	5.00	0.00	0.00
2438.12	0.000	7.50	0.00	0.00
2438.36	0.000	10.00	0.00	0.00
2438.56	0.000	12.50	0.00	0.00
2438.75	0.000	15.00	0.00	0.00
2438.92	0.000	17.50	0.00	0.00
2439.08	0.000	20.00	0.00	0.00
2439.22	0.000	22.50	0.00	0.00
2439.36	0.000	25.00	0.00	0.00

<1> TOLERANCE (ft) = 0.010 <2> TOLERANCE (%) = 1.000

CURRENT DATE: 03-26-2007 FILE DATE: 3/26/2007
CURRENT TIME: 13:28:29 FILE NAME: Culv19

PERFORMANCE CURVE FOR CULVERT 1 - 1(3.00 (ft) BY 3.00 (ft)) CSP

DIS-CHARGE FLOW (cfs)	HEAD-WATER ELEV. (ft)	INLET CONTROL DEPTH (ft)	OUTLET CONTROL DEPTH (ft)	FLOW TYPE <F4>	NORMAL DEPTH (ft)	CRIT. DEPTH (ft)	OUTLET DEPTH (ft)	TW DEPTH (ft)	OUTLET VEL. (fps)	TW VEL. (fps)
0.00	2437.05	0.00	0.00	0-NF	0.00	0.00	0.00	-0.07	0.00	0.00
2.50	2437.55	0.50	0.50	1-S2n	0.42	0.47	0.37	0.38	4.85	1.86
5.00	2437.86	0.81	0.81	1-S2n	0.62	0.69	0.49	0.50	6.52	2.30
7.50	2438.12	1.07	1.07	1-S2n	0.75	0.86	0.66	0.59	6.51	2.64
10.00	2438.36	1.31	1.31	1-S2n	0.88	0.99	0.79	0.67	6.65	2.89
12.50	2438.57	1.52	1.52	1-S2n	0.98	1.12	0.92	0.74	6.85	3.11
15.00	2438.75	1.70	1.70	1-S2n	1.08	1.23	1.03	0.81	6.95	3.29
17.50	2438.92	1.87	1.87	1-S2n	1.18	1.33	1.13	0.87	7.16	3.45
20.00	2439.08	2.03	2.03	1-S2n	1.27	1.43	1.27	0.92	7.02	3.59
22.50	2439.22	2.17	2.17	1-S2n	1.36	1.52	1.35	0.98	7.26	3.72
25.00	2439.36	2.31	2.31	1-S2n	1.44	1.61	1.44	1.02	7.47	3.84

El. inlet face invert 2437.05 ft El. outlet invert 2436.07 ft
El. inlet throat invert 0.00 ft El. inlet crest 2437.05 ft

***** SITE DATA ***** CULVERT INVERT **********

INLET STATION	0.00 ft
INLET ELEVATION	2437.05 ft
OUTLET STATION	45.10 ft
OUTLET ELEVATION	2436.07 ft
NUMBER OF BARRELS	1
SLOPE (V/H)	0.0217
CULVERT LENGTH ALONG SLOPE	45.11 ft

***** CULVERT DATA SUMMARY **********

BARREL SHAPE	CIRCULAR
BARREL DIAMETER	3.00 ft
BARREL MATERIAL	CORRUGATED STEEL
BARREL MANNING'S n	0.024
INLET TYPE	CONVENTIONAL
INLET EDGE AND WALL	BEVELED EDGE (1:1)
INLET DEPRESSION	NONE

CURRENT DATE: 03-26-2007 FILE DATE: 3/26/2007
CURRENT TIME: 13:28:29 FILE NAME: Culv19

ÄÄ
ÄÄÄÄÄÄÄÄÄÄÄÄÄÄÄÄÄÄÄÄÄÄÄÄÄÄ TAILWATER ÄÄÄÄÄÄÄÄÄÄÄÄÄÄÄÄÄÄÄÄÄÄÄÄÄÄ
ÄÄ

***** USER DEFINED CHANNEL CROSS-SECTION FILE NAME: Culv19
MAIN CHANNEL AND LT & RT OVER BANKS FILE DATE: 3/26/2007

LEFT CHANNEL BOUNDARY	3
RIGHT CHANNEL BOUNDARY	7
MANNING n LEFT OVER BANK	0.035
MANNING n MAIN CHANNEL	0.045
MANNING n RIGHT OVER BANK	0.045
SLOPE OF CHANNEL	0.0240 ft/ft

CROSS-SECTION COORD. NO.	X (ft)	Y (ft)
1	0.00	2440.00
2	13.30	2440.30
3	31.60	2439.10
4	37.30	2438.20
5	38.10	2436.50
6	42.80	2436.00
7	47.30	2437.10
8	55.90	2440.60

******* UNIFORM FLOW RATING CURVE FOR DOWNSTREAM CHANNEL

FLOW (cfs)	W.S.E. (ft)	FROUDE NUMBER	DEPTH (ft)	VEL. (f/s)	SHEAR (psf)
0.00	2436.00	0.000	-0.07	0.00	0.00
2.50	2436.45	0.696	0.38	1.86	0.33
5.00	2436.57	0.731	0.50	2.30	0.46
7.50	2436.66	0.753	0.59	2.64	0.57
10.00	2436.74	0.769	0.67	2.89	0.66
12.50	2436.81	0.781	0.74	3.11	0.74
15.00	2436.88	0.790	0.81	3.29	0.81
17.50	2436.94	0.798	0.87	3.45	0.87
20.00	2436.99	0.805	0.92	3.59	0.93
22.50	2437.05	0.811	0.98	3.72	0.98
25.00	2437.09	0.817	1.02	3.84	1.03

Note: Shear stress was calculated using R.

ÄÄ
ÄÄÄÄÄÄÄÄÄÄÄÄÄÄÄÄÄÄÄÄÄÄÄÄÄÄ ROADWAY OVERTOPPING DATA ÄÄÄÄÄÄÄÄÄÄÄÄÄÄÄÄÄÄÄÄÄÄÄÄÄÄ
ÄÄ

ROADWAY SURFACE	PAVED
EMBANKMENT TOP WIDTH	24.00 ft

***** USER DEFINED ROADWAY PROFILE

CROSS-SECTION COORD. NO.	X ft	Y ft
1	0.00	2442.10
2	24.00	2441.90
3	45.00	2441.70
4	58.00	2441.50
5	59.90	2441.00
6	73.80	2441.50
7	98.90	2441.70

ÄÄ

CURRENT DATE: 03-22-2007 FILE DATE: 03/22/2007
CURRENT TIME: 07:42:31 FILE NAME: Culv20

FHWA CULVERT ANALYSIS
HY-8, VERSION 6.1

C U L V NO.	SITE DATA INLET ELEV. (ft)	OUTLET ELEV. (ft)	CULVERT LENGTH (ft)	CULVERT SHAPE, MATERIAL, INLET BARRELS SHAPE MATERIAL	SPAN (ft)	RISE (ft)	MANNING n	INLET TYPE
1	2437.05	2436.59	46.50	2 CMPA	2.92	2.00	.025	CONVENTIONAL
2								
3								
4								
5								
6								

SUMMARY OF CULVERT FLOWS (cfs) FILE: Culv20 DATE: 03/22/2007

ELEV (ft)	TOTAL	1	2	3	4	5	6	ROADWAY	ITR
2437.05	0.0	0.0	0.0	0.0	0.0	0.0	0.0	0.00	1
2437.98	11.0	11.0	0.0	0.0	0.0	0.0	0.0	0.00	1
2438.47	22.0	22.0	0.0	0.0	0.0	0.0	0.0	0.00	1
2438.91	33.0	33.0	0.0	0.0	0.0	0.0	0.0	0.00	1
2439.36	44.0	44.0	0.0	0.0	0.0	0.0	0.0	0.00	1
2439.79	55.0	54.0	0.0	0.0	0.0	0.0	0.0	0.50	14
2439.98	66.0	55.8	0.0	0.0	0.0	0.0	0.0	9.67	10
2440.07	77.0	56.8	0.0	0.0	0.0	0.0	0.0	19.77	7
2440.09	80.0	57.0	0.0	0.0	0.0	0.0	0.0	22.29	4
2440.20	99.0	58.3	0.0	0.0	0.0	0.0	0.0	40.02	6
2440.26	110.0	57.8	0.0	0.0	0.0	0.0	0.0	51.29	5
2439.70	50.8	50.8	0.0	0.0	0.0	0.0	0.0	OVERTOPPING	

SUMMARY OF ITERATIVE SOLUTION ERRORS FILE: Culv20 DATE: 03/22/2007

HEAD ELEV (ft)	HEAD ERROR (ft)	TOTAL FLOW (cfs)	FLOW ERROR (cfs)	% FLOW ERROR
2437.05	0.000	0.00	0.00	0.00
2437.98	0.000	11.00	0.00	0.00
2438.47	0.000	22.00	0.00	0.00
2438.91	0.000	33.00	0.00	0.00
2439.36	0.000	44.00	0.00	0.00
2439.79	-0.004	55.00	0.50	0.91
2439.98	-0.003	66.00	0.49	0.74
2440.07	-0.002	77.00	0.43	0.56
2440.09	-0.003	80.00	0.71	0.89
2440.20	-0.004	99.00	0.65	0.66
2440.26	-0.005	110.00	0.96	0.87

<1> TOLERANCE (ft) = 0.010 <2> TOLERANCE (%) = 1.000

CURRENT DATE: 03-22-2007 FILE DATE: 03/22/2007
CURRENT TIME: 07:42:31 FILE NAME: Culv20

PERFORMANCE CURVE FOR CULVERT 1 - 2(2.92 (ft) BY 2.00 (ft)) CMPA

DIS-CHARGE FLOW (cfs)	HEAD-WATER ELEV. (ft)	INLET CONTROL DEPTH (ft)	OUTLET CONTROL DEPTH (ft)	FLOW TYPE <F4>	NORMAL DEPTH (ft)	CRIT. DEPTH (ft)	OUTLET DEPTH (ft)	TW DEPTH (ft)	OUTLET VEL. (fps)	TW VEL. (fps)
0.00	2437.05	0.00	0.00	0-NF	0.00	0.00	0.00	-0.09	0.00	0.00
11.00	2437.98	0.89	0.93	2-M2c	0.65	0.58	0.58	0.42	3.95	2.81
22.00	2438.47	1.36	1.42	2-M2c	0.99	0.86	0.86	0.65	4.99	3.44
33.00	2438.91	1.77	1.86	2-M2c	1.35	1.09	1.09	0.80	5.81	3.95
44.00	2439.36	2.20	2.31	2-M2c	2.00	1.28	1.28	0.93	6.56	4.38
53.99	2439.78	2.65	2.73	2-M2c	2.00	1.44	1.44	1.05	7.21	4.73
55.84	2439.98	2.75	2.93	2-M2c	2.00	1.46	1.46	1.15	7.37	5.03
56.80	2440.06	2.79	3.01	2-M2c	2.00	1.48	1.48	1.28	7.44	5.36
57.01	2440.08	2.81	3.03	2-M2c	2.00	1.48	1.48	1.34	7.45	5.52
58.33	2440.19	2.87	3.14	2-M2c	2.00	1.50	1.50	1.43	7.55	5.73
57.75	2440.26	2.84	3.21	3-M2t	2.00	1.49	1.51	1.51	7.41	5.92

El. inlet face invert 2437.05 ft El. outlet invert 2436.59 ft
El. inlet throat invert 0.00 ft El. inlet crest 2437.05 ft

***** SITE DATA ***** CULVERT INVERT **********

INLET STATION	0.00 ft
INLET ELEVATION	2437.05 ft
OUTLET STATION	46.50 ft
OUTLET ELEVATION	2436.59 ft
NUMBER OF BARRELS	2
SLOPE (V/H)	0.0099
CULVERT LENGTH ALONG SLOPE	46.50 ft

***** CULVERT DATA SUMMARY **********

BARREL SHAPE	PIPE ARCH
BARREL SPAN	2.92 ft
BARREL RISE	2.00 ft
BARREL MATERIAL	STEEL OR ALUMINUM
BARREL MANNING'S n	0.025
INLET TYPE	CONVENTIONAL
INLET EDGE AND WALL	HEADWALL
INLET DEPRESSION	NONE

CURRENT DATE: 03-22-2007 FILE DATE: 03/22/2007
CURRENT TIME: 07:42:31 FILE NAME: Culv20

ÄÄ
ÄÄÄÄÄÄÄÄÄÄÄÄÄÄÄÄÄÄÄÄÄÄÄÄÄÄ TAILWATER ÄÄÄÄÄÄÄÄÄÄÄÄÄÄÄÄÄÄÄÄÄÄÄÄÄÄ
ÄÄ

***** USER DEFINED CHANNEL CROSS-SECTION FILE NAME: Culv20
MAIN CHANNEL AND LT & RT OVER BANKS FILE DATE: 03/22/2007

LEFT CHANNEL BOUNDARY	3
RIGHT CHANNEL BOUNDARY	7
MANNING n LEFT OVER BANK	0.057
MANNING n MAIN CHANNEL	0.049
MANNING n RIGHT OVER BANK	0.049
SLOPE OF CHANNEL	0.0306 ft/ft

CROSS-SECTION COORD. NO.	X (ft)	Y (ft)
1	0.00	2442.00
2	129.10	2440.00
3	145.30	2439.40
4	153.20	2437.30
5	159.40	2436.50
6	164.90	2436.50
7	166.30	2438.10
8	169.60	2439.80

******* UNIFORM FLOW RATING CURVE FOR DOWNSTREAM CHANNEL

FLOW (cfs)	W.S.E. (ft)	FROUDE NUMBER	DEPTH (ft)	VEL. (f/s)	SHEAR (psf)
0.00	2436.50	0.000	-0.09	0.00	0.00
11.00	2437.01	0.787	0.42	2.81	0.76
22.00	2437.24	0.826	0.65	3.44	1.03
33.00	2437.39	0.864	0.80	3.95	1.24
44.00	2437.52	0.899	0.93	4.38	1.43
55.00	2437.64	0.925	1.05	4.73	1.59
66.00	2437.74	0.945	1.15	5.03	1.73
77.00	2437.87	0.966	1.28	5.36	1.90
80.00	2437.93	0.977	1.34	5.52	1.98
99.00	2438.02	0.989	1.43	5.73	2.10
110.00	2438.10	1.000	1.51	5.92	2.20

Note: Shear stress was calculated using R.

ÄÄ
ÄÄÄÄÄÄÄÄÄÄÄÄÄÄÄÄÄÄÄÄÄÄÄÄÄÄ ROADWAY OVERTOPPING DATA ÄÄÄÄÄÄÄÄÄÄÄÄÄÄÄÄÄÄÄÄÄÄÄÄÄÄ
ÄÄ

ROADWAY SURFACE	PAVED
EMBANKMENT TOP WIDTH	24.00 ft

***** USER DEFINED ROADWAY PROFILE

CROSS-SECTION COORD. NO.	X ft	Y ft
1	0.00	2440.00
2	50.00	2439.70
3	80.70	2440.30
4	101.50	2440.77
5	118.80	2440.60
6	168.80	2441.10
7	201.50	2441.40

ÄÄ

CURRENT DATE: 03-22-2007 FILE DATE: 03/22/2007
CURRENT TIME: 07:49:20 FILE NAME: Culv21

FHWA CULVERT ANALYSIS
HY-8, VERSION 6.1

CULV NO.	SITE DATA: INLET ELEV. (ft)	OUTLET ELEV. (ft)	CULVERT LENGTH (ft)	CULVERT SHAPE, MATERIAL, INLET: BARRELS / SHAPE / MATERIAL	SPAN (ft)	RISE (ft)	MANNING n	INLET TYPE
1	2433.78	2432.84	45.51	1 CMPA	2.92	2.00	.025	CONVENTIONAL
2								
3								
4								
5								
6								

SUMMARY OF CULVERT FLOWS (cfs) FILE: Culv21 DATE: 03/22/2007

ELEV (ft)	TOTAL	1	2	3	4	5	6	ROADWAY	ITR
2433.78	0.0	0.0	0.0	0.0	0.0	0.0	0.0	0.00	1
2434.46	3.5	3.5	0.0	0.0	0.0	0.0	0.0	0.00	1
2434.79	7.0	7.0	0.0	0.0	0.0	0.0	0.0	0.00	1
2435.09	10.5	10.5	0.0	0.0	0.0	0.0	0.0	0.00	1
2435.36	14.0	14.0	0.0	0.0	0.0	0.0	0.0	0.00	1
2435.62	17.5	17.5	0.0	0.0	0.0	0.0	0.0	0.00	1
2435.81	20.0	20.0	0.0	0.0	0.0	0.0	0.0	0.00	1
2436.24	24.5	24.5	0.0	0.0	0.0	0.0	0.0	0.00	1
2436.52	28.0	28.0	0.0	0.0	0.0	0.0	0.0	0.00	1
2436.90	31.5	31.5	0.0	0.0	0.0	0.0	0.0	0.00	1
2437.23	35.0	33.5	0.0	0.0	0.0	0.0	0.0	1.16	11
2437.00	32.3	32.3	0.0	0.0	0.0	0.0	0.0	OVERTOPPING	

SUMMARY OF ITERATIVE SOLUTION ERRORS FILE: Culv21 DATE: 03/22/2007

HEAD ELEV (ft)	HEAD ERROR (ft)	TOTAL FLOW (cfs)	FLOW ERROR (cfs)	% FLOW ERROR
2433.78	0.000	0.00	0.00	0.00
2434.46	0.000	3.50	0.00	0.00
2434.79	0.000	7.00	0.00	0.00
2435.09	0.000	10.50	0.00	0.00
2435.36	0.000	14.00	0.00	0.00
2435.62	0.000	17.50	0.00	0.00
2435.81	0.000	20.00	0.00	0.00
2436.24	0.000	24.50	0.00	0.00
2436.52	0.000	28.00	0.00	0.00
2436.90	0.000	31.50	0.00	0.00
2437.23	-0.007	35.00	0.30	0.86

<1> TOLERANCE (ft) = 0.010 <2> TOLERANCE (%) = 1.000

CURRENT DATE: 03-22-2007 FILE DATE: 03/22/2007
CURRENT TIME: 07:49:20 FILE NAME: Culv21

PERFORMANCE CURVE FOR CULVERT 1 - 1(2.92 (ft) BY 2.00 (ft)) CMPA

DIS-CHARGE FLOW (cfs)	HEAD-WATER ELEV. (ft)	INLET CONTROL DEPTH (ft)	OUTLET CONTROL DEPTH (ft)	FLOW TYPE <F4>	NORMAL DEPTH (ft)	CRIT. DEPTH (ft)	OUTLET DEPTH (ft)	TW DEPTH (ft)	OUTLET VEL. (fps)	TW VEL. (fps)
0.00	2433.78	0.00	0.00	0-NF	0.00	0.00	0.00	-0.24	0.00	0.00
3.50	2434.46	0.68	0.68	1-S2n	0.41	0.45	0.35	0.46	4.75	1.38
7.00	2434.80	1.02	1.02	1-S2n	0.60	0.67	0.47	0.72	6.62	1.73
10.50	2435.09	1.31	1.31	1-S2n	0.76	0.84	0.64	0.91	6.73	1.95
14.00	2435.36	1.58	1.58	1-S2n	0.91	0.99	0.79	1.08	6.99	2.12
17.50	2435.62	1.84	1.84	1-S2n	1.06	1.13	0.93	1.23	7.34	2.26
20.00	2435.81	2.03	2.03	5-S2n	1.17	1.22	1.12	1.33	6.85	2.34
24.50	2436.24	2.41	2.46	3-M1t	1.38	1.36	1.49	1.49	6.38	2.48
28.00	2436.52	2.74	2.69	3-M1t	1.59	1.47	1.60	1.60	6.84	2.56
31.50	2436.90	3.12	2.48	3-M2t	2.00	1.56	1.71	1.71	7.35	2.64
33.53	2437.24	3.36	3.46	3-M2t	2.00	1.61	1.81	1.81	7.51	2.71

El. inlet face invert 2433.78 ft El. outlet invert 2432.84 ft
El. inlet throat invert 0.00 ft El. inlet crest 2433.78 ft

***** SITE DATA ***** CULVERT INVERT **********

INLET STATION	0.00 ft
INLET ELEVATION	2433.78 ft
OUTLET STATION	45.50 ft
OUTLET ELEVATION	2432.84 ft
NUMBER OF BARRELS	1
SLOPE (V/H)	0.0207
CULVERT LENGTH ALONG SLOPE	45.51 ft

***** CULVERT DATA SUMMARY **********

BARREL SHAPE	PIPE ARCH
BARREL SPAN	2.92 ft
BARREL RISE	2.00 ft
BARREL MATERIAL	STEEL OR ALUMINUM
BARREL MANNING'S n	0.025
INLET TYPE	CONVENTIONAL
INLET EDGE AND WALL	HEADWALL
INLET DEPRESSION	NONE

CURRENT DATE: 03-22-2007 FILE DATE: 03/22/2007
CURRENT TIME: 07:49:20 FILE NAME: Culv21

ÄÄ
ÄÄÄÄÄÄÄÄÄÄÄÄÄÄÄÄÄÄÄÄÄÄÄÄÄÄ TAILWATER ÄÄÄÄÄÄÄÄÄÄÄÄÄÄÄÄÄÄÄÄÄÄÄÄÄÄ
ÄÄ

***** USER DEFINED CHANNEL CROSS-SECTION FILE NAME: Culv21
MAIN CHANNEL AND LT & RT OVER BANKS FILE DATE: 03/22/2007

LEFT CHANNEL BOUNDARY	4
RIGHT CHANNEL BOUNDARY	9
MANNING n LEFT OVER BANK	0.069
MANNING n MAIN CHANNEL	0.060
MANNING n RIGHT OVER BANK	0.060
SLOPE OF CHANNEL	0.0090 ft/ft

CROSS-SECTION COORD. NO.	X (ft)	Y (ft)
1	0.00	2438.00
2	23.50	2437.10
3	55.90	2435.90
4	60.60	2434.60
5	63.10	2433.10
6	65.20	2432.60
7	67.80	2432.90
8	71.90	2435.80
9	81.80	2438.90

******* UNIFORM FLOW RATING CURVE FOR DOWNSTREAM CHANNEL

FLOW (cfs)	W.S.E. (ft)	FROUDE NUMBER	DEPTH (ft)	VEL. (f/s)	SHEAR (psf)
0.00	2432.60	0.000	-0.24	0.00	0.00
3.50	2433.30	0.365	0.46	1.38	0.25
7.00	2433.56	0.390	0.72	1.73	0.36
10.50	2433.75	0.403	0.91	1.95	0.43
14.00	2433.92	0.412	1.08	2.12	0.49
17.50	2434.07	0.418	1.23	2.26	0.55
20.00	2434.17	0.422	1.33	2.34	0.58
24.50	2434.33	0.427	1.49	2.48	0.63
28.00	2434.44	0.430	1.60	2.56	0.67
31.50	2434.55	0.433	1.71	2.64	0.71
35.00	2434.65	0.437	1.81	2.71	0.73

Note: Shear stress was calculated using R.

ÄÄ
ÄÄÄÄÄÄÄÄÄÄÄÄÄÄÄÄÄÄÄÄÄÄÄÄÄÄ ROADWAY OVERTOPPING DATA ÄÄÄÄÄÄÄÄÄÄÄÄÄÄÄÄÄÄÄÄÄÄÄÄÄÄ
ÄÄ

ROADWAY SURFACE	PAVED
EMBANKMENT TOP WIDTH	24.00 ft

***** USER DEFINED ROADWAY PROFILE

CROSS-SECTION COORD. NO.	X ft	Y ft
1	0.00	2438.60
2	23.80	2438.30
3	42.00	2438.26
4	58.20	2437.96
5	70.70	2437.69
6	100.10	2437.00

ÄÄ

CURRENT DATE: 03-21-2007 FILE DATE: 03/21/2007
CURRENT TIME: 08:01:06 FILE NAME: Culv22

FHWA CULVERT ANALYSIS
HY-8, VERSION 6.1

C U L V NO.	SITE DATA INLET ELEV. (ft)	OUTLET ELEV. (ft)	CULVERT LENGTH (ft)	CULVERT SHAPE, MATERIAL, INLET BARRELS SHAPE MATERIAL	SPAN (ft)	RISE (ft)	MANNING n	INLET TYPE
1	2446.00	2445.27	45.01	1 CSP	3.00	3.00	.024	CONVENTIONAL
2								
3								
4								
5								
6								

SUMMARY OF CULVERT FLOWS (cfs) FILE: Culv22 DATE: 03/21/2007

ELEV (ft)	TOTAL	1	2	3	4	5	6	ROADWAY	ITR
2446.00	0.0	0.0	0.0	0.0	0.0	0.0	0.0	0.00	1
2446.81	5.0	5.0	0.0	0.0	0.0	0.0	0.0	0.00	1
2447.31	10.0	10.0	0.0	0.0	0.0	0.0	0.0	0.00	1
2447.71	15.0	15.0	0.0	0.0	0.0	0.0	0.0	0.00	1
2448.03	20.0	20.0	0.0	0.0	0.0	0.0	0.0	0.00	1
2448.32	25.0	25.0	0.0	0.0	0.0	0.0	0.0	0.00	1
2448.58	30.0	30.0	0.0	0.0	0.0	0.0	0.0	0.00	1
2448.92	35.0	35.0	0.0	0.0	0.0	0.0	0.0	0.00	1
2449.17	40.0	40.0	0.0	0.0	0.0	0.0	0.0	0.00	1
2449.43	45.0	45.0	0.0	0.0	0.0	0.0	0.0	0.00	1
2449.76	50.0	50.0	0.0	0.0	0.0	0.0	0.0	0.00	1
2450.55	60.0	60.0	0.0	0.0	0.0	0.0	0.0	OVERTOPPING	

SUMMARY OF ITERATIVE SOLUTION ERRORS FILE: Culv22 DATE: 03/21/2007

HEAD ELEV (ft)	HEAD ERROR (ft)	TOTAL FLOW (cfs)	FLOW ERROR (cfs)	% FLOW ERROR
2446.00	0.000	0.00	0.00	0.00
2446.81	0.000	5.00	0.00	0.00
2447.31	0.000	10.00	0.00	0.00
2447.71	0.000	15.00	0.00	0.00
2448.03	0.000	20.00	0.00	0.00
2448.32	0.000	25.00	0.00	0.00
2448.58	0.000	30.00	0.00	0.00
2448.92	0.000	35.00	0.00	0.00
2449.17	0.000	40.00	0.00	0.00
2449.43	0.000	45.00	0.00	0.00
2449.76	0.000	50.00	0.00	0.00

<1> TOLERANCE (ft) = 0.010 <2> TOLERANCE (%) = 1.000

CURRENT DATE: 03-21-2007 FILE DATE: 03/21/2007
CURRENT TIME: 08:01:06 FILE NAME: Culv22

PERFORMANCE CURVE FOR CULVERT 1 - 1(3.00 (ft) BY 3.00 (ft)) CSP

DIS-CHARGE FLOW (cfs)	HEAD-WATER ELEV. (ft)	INLET CONTROL DEPTH (ft)	OUTLET CONTROL DEPTH (ft)	FLOW TYPE <F4>	NORMAL DEPTH (ft)	CRIT. DEPTH (ft)	OUTLET DEPTH (ft)	TW DEPTH (ft)	OUTLET VEL. (fps)	TW VEL. (fps)
0.00	2446.00	0.00	0.00	0-NF	0.00	0.00	0.00	-0.27	0.00	0.00
5.00	2446.81	0.81	0.81	1-S2n	0.66	0.69	0.59	0.20	5.10	1.47
10.00	2447.32	1.32	1.32	1-S2n	0.95	0.99	0.89	0.35	5.68	1.87
15.00	2447.71	1.71	1.71	1-S2n	1.18	1.23	1.17	0.48	5.86	2.14
20.00	2448.03	2.03	2.03	1-S2n	1.38	1.43	1.33	0.58	6.61	2.35
25.00	2448.32	2.32	2.32	1-S2n	1.57	1.61	1.51	0.67	7.03	2.52
30.00	2448.58	2.58	2.58	1-S2n	1.76	1.77	1.67	0.76	7.41	2.67
35.00	2448.92	2.85	2.92	2-M2c	1.96	1.92	1.92	0.83	7.35	2.80
40.00	2449.17	3.13	3.17	2-M2c	2.17	2.06	2.06	0.90	7.75	2.91
45.00	2449.43	3.43	3.42	2-M2c	2.40	2.18	2.18	0.97	8.20	3.02
50.00	2449.77	3.77	3.72	2-M2c	3.00	2.29	2.29	1.03	8.64	3.11

El. inlet face invert 2446.00 ft El. outlet invert 2445.27 ft
El. inlet throat invert 0.00 ft El. inlet crest 2446.00 ft

***** SITE DATA ***** CULVERT INVERT **********

INLET STATION	0.00 ft
INLET ELEVATION	2446.00 ft
OUTLET STATION	45.00 ft
OUTLET ELEVATION	2445.27 ft
NUMBER OF BARRELS	1
SLOPE (V/H)	0.0162
CULVERT LENGTH ALONG SLOPE	45.01 ft

***** CULVERT DATA SUMMARY **********

BARREL SHAPE	CIRCULAR
BARREL DIAMETER	3.00 ft
BARREL MATERIAL	CORRUGATED STEEL
BARREL MANNING'S n	0.024
INLET TYPE	CONVENTIONAL
INLET EDGE AND WALL	BEVELED EDGE (1:1)
INLET DEPRESSION	NONE

CURRENT DATE: 03-21-2007 FILE DATE: 03/21/2007
CURRENT TIME: 08:01:06 FILE NAME: Culv22

ÄÄ
ÄÄÄÄÄÄÄÄÄÄÄÄÄÄÄÄÄÄÄÄÄÄÄÄÄÄ TAILWATER ÄÄÄÄÄÄÄÄÄÄÄÄÄÄÄÄÄÄÄÄÄÄÄÄÄÄ
ÄÄ

***** USER DEFINED CHANNEL CROSS-SECTION FILE NAME: Culv22
MAIN CHANNEL AND LT & RT OVER BANKS FILE DATE: 6/7/2005

LEFT CHANNEL BOUNDARY	2
RIGHT CHANNEL BOUNDARY	6
MANNING n LEFT OVER BANK	0.040
MANNING n MAIN CHANNEL	0.070
MANNING n RIGHT OVER BANK	0.055
SLOPE OF CHANNEL	0.0262 ft/ft

CROSS-SECTION COORD. NO.	X (ft)	Y (ft)
1	0.00	2450.00
2	39.20	2448.90
3	58.90	2448.00
4	68.10	2445.40
5	72.60	2445.00
6	79.20	2445.30
7	91.70	2448.40
8	114.30	2449.40

******* UNIFORM FLOW RATING CURVE FOR DOWNSTREAM CHANNEL

FLOW (cfs)	W.S.E. (ft)	FROUDE NUMBER	DEPTH (ft)	VEL. (f/s)	SHEAR (psf)
0.00	2445.00	0.000	-0.27	0.00	0.00
5.00	2445.47	0.489	0.20	1.47	0.46
10.00	2445.62	0.518	0.35	1.87	0.66
15.00	2445.75	0.536	0.48	2.14	0.81
20.00	2445.85	0.548	0.58	2.35	0.93
25.00	2445.94	0.557	0.67	2.52	1.04
30.00	2446.03	0.565	0.76	2.67	1.13
35.00	2446.10	0.572	0.83	2.80	1.22
40.00	2446.17	0.577	0.90	2.91	1.29
45.00	2446.24	0.582	0.97	3.02	1.36
50.00	2446.30	0.586	1.03	3.11	1.43

Note: Shear stress was calculated using R.

ÄÄ
ÄÄÄÄÄÄÄÄÄÄÄÄÄÄÄÄÄÄÄÄÄÄÄÄÄÄ ROADWAY OVERTOPPING DATA ÄÄÄÄÄÄÄÄÄÄÄÄÄÄÄÄÄÄÄÄÄÄÄÄÄÄ
ÄÄ

ROADWAY SURFACE	PAVED
EMBANKMENT TOP WIDTH	24.00 ft

***** USER DEFINED ROADWAY PROFILE

CROSS-SECTION COORD. NO.	X ft	Y ft
1	0.00	2450.80
2	41.20	2450.59
3	55.20	2450.58
4	72.80	2450.55

ÄÄ

CURRENT DATE: 03-21-2007 FILE DATE: 03/21/2007
CURRENT TIME: 08:02:59 FILE NAME: Culv23

FHWA CULVERT ANALYSIS
HY-8, VERSION 6.1

C U L V NO.	SITE DATA INLET ELEV. (ft)	OUTLET ELEV. (ft)	CULVERT LENGTH (ft)	CULVERT SHAPE, MATERIAL, INLET BARRELS SHAPE MATERIAL	SPAN (ft)	RISE (ft)	MANNING n	INLET TYPE
1	2445.28	2444.61	45.01	4 CMPA	4.08	2.75	.024	CONVENTIONAL
2								
3								
4								
5								
6								

SUMMARY OF CULVERT FLOWS (cfs) FILE: Culv23 DATE: 03/21/2007

ELEV (ft)	TOTAL	1	2	3	4	5	6	ROADWAY	ITR
2445.28	0.0	0.0	0.0	0.0	0.0	0.0	0.0	0.00	1
2446.35	40.0	40.0	0.0	0.0	0.0	0.0	0.0	0.00	1
2446.91	80.0	80.0	0.0	0.0	0.0	0.0	0.0	0.00	1
2447.39	120.0	120.0	0.0	0.0	0.0	0.0	0.0	0.00	1
2447.84	160.0	160.0	0.0	0.0	0.0	0.0	0.0	0.00	1
2448.40	200.0	200.0	0.0	0.0	0.0	0.0	0.0	0.00	1
2448.89	240.0	240.0	0.0	0.0	0.0	0.0	0.0	0.00	1
2449.50	280.0	280.0	0.0	0.0	0.0	0.0	0.0	0.00	1
2450.03	320.0	308.8	0.0	0.0	0.0	0.0	0.0	9.05	8
2450.22	360.0	318.3	0.0	0.0	0.0	0.0	0.0	39.49	6
2450.33	400.0	323.8	0.0	0.0	0.0	0.0	0.0	72.88	4
2449.80	283.1	283.1	0.0	0.0	0.0	0.0	0.0	OVERTOPPING	

SUMMARY OF ITERATIVE SOLUTION ERRORS FILE: Culv23 DATE: 03/21/2007

HEAD ELEV (ft)	HEAD ERROR (ft)	TOTAL FLOW (cfs)	FLOW ERROR (cfs)	% FLOW ERROR
2445.28	0.000	0.00	0.00	0.00
2446.35	0.000	40.00	0.00	0.00
2446.91	0.000	80.00	0.00	0.00
2447.39	0.000	120.00	0.00	0.00
2447.84	0.000	160.00	0.00	0.00
2448.40	0.000	200.00	0.00	0.00
2448.89	0.000	240.00	0.00	0.00
2449.50	0.000	280.00	0.00	0.00
2450.03	-0.006	320.00	2.19	0.68
2450.22	-0.008	360.00	2.22	0.62
2450.33	-0.005	400.00	3.35	0.84

<1> TOLERANCE (ft) = 0.010 <2> TOLERANCE (%) = 1.000

2

CURRENT DATE: 03-21-2007 FILE DATE: 03/21/2007
CURRENT TIME: 08:02:59 FILE NAME: Culv23

PERFORMANCE CURVE FOR CULVERT 1 - 4(4.08 (ft) BY 2.75 (ft)) CMPA

DIS-CHARGE FLOW (cfs)	HEAD-WATER ELEV. (ft)	INLET CONTROL DEPTH (ft)	OUTLET CONTROL DEPTH (ft)	FLOW TYPE <F4>	NORMAL DEPTH (ft)	CRIT. DEPTH (ft)	OUTLET DEPTH (ft)	TW DEPTH (ft)	OUTLET VEL. (fps)	TW VEL. (fps)
0.00	2445.28	0.00	0.00	0-NF	0.00	0.00	0.00	-0.01	0.00	0.00
40.00	2446.35	1.07	1.07	1-S2n	0.66	0.71	0.61	1.16	5.30	3.33
80.00	2446.91	1.63	1.63	1-S2n	0.99	1.05	0.85	1.60	6.96	3.88
120.00	2447.39	2.10	2.10	1-S2n	1.27	1.33	1.27	1.92	6.60	4.05
160.00	2447.84	2.56	2.56	1-S2n	1.55	1.56	1.46	2.17	7.52	4.13
200.00	2448.40	3.04	3.12	3-M1t	1.85	1.77	2.35	2.35	6.07	4.25
240.00	2448.88	3.59	3.60	3-M1t	2.25	1.96	2.51	2.51	6.96	4.38
280.00	2449.50	4.22	4.21	3-M2t	2.75	2.13	2.64	2.64	7.98	4.50
308.76	2450.03	4.75	4.49	3-M1f	2.75	2.23	2.75	2.76	8.65	4.61
318.29	2450.21	4.93	4.60	3-M1f	2.75	2.26	2.75	2.87	8.92	4.72
323.77	2450.32	5.04	4.67	3-M1f	2.75	2.28	2.75	2.95	9.07	4.87

El. inlet face invert 2445.28 ft El. outlet invert 2444.61 ft
El. inlet throat invert 0.00 ft El. inlet crest 2445.28 ft

***** SITE DATA ***** CULVERT INVERT **********

INLET STATION	0.00 ft
INLET ELEVATION	2445.28 ft
OUTLET STATION	45.00 ft
OUTLET ELEVATION	2444.61 ft
NUMBER OF BARRELS	4
SLOPE (V/H)	0.0149
CULVERT LENGTH ALONG SLOPE	45.01 ft

***** CULVERT DATA SUMMARY **********

BARREL SHAPE	PIPE ARCH
BARREL SPAN	4.08 ft
BARREL RISE	2.75 ft
BARREL MATERIAL	STEEL OR ALUMINUM
BARREL MANNING'S n	0.024
INLET TYPE	CONVENTIONAL
INLET EDGE AND WALL	HEADWALL
INLET DEPRESSION	NONE

CURRENT DATE: 03-21-2007 FILE DATE: 03/21/2007
CURRENT TIME: 08:02:59 FILE NAME: Culv23

ÄÄ
ÄÄÄÄÄÄÄÄÄÄÄÄÄÄÄÄÄÄÄÄÄÄÄÄÄÄ TAILWATER ÄÄÄÄÄÄÄÄÄÄÄÄÄÄÄÄÄÄÄÄÄÄÄÄÄÄ
ÄÄ

***** USER DEFINED CHANNEL CROSS-SECTION FILE NAME: Culv23
MAIN CHANNEL AND LT & RT OVER BANKS FILE DATE: 5/26/2005

LEFT CHANNEL BOUNDARY	2
RIGHT CHANNEL BOUNDARY	6
MANNING n LEFT OVER BANK	0.050
MANNING n MAIN CHANNEL	0.055
MANNING n RIGHT OVER BANK	0.060
SLOPE OF CHANNEL	0.0231 ft/ft

CROSS-SECTION COORD. NO.	X (ft)	Y (ft)
1	0.00	2448.40
2	38.60	2446.00
3	42.60	2444.70
4	45.50	2444.60
5	50.40	2445.00
6	60.60	2446.40
7	81.00	2447.50

******* UNIFORM FLOW RATING CURVE FOR DOWNSTREAM CHANNEL

FLOW (cfs)	W.S.E. (ft)	FROUDE NUMBER	DEPTH (ft)	VEL. (f/s)	SHEAR (psf)
0.00	2444.60	0.000	-0.01	0.00	0.00
40.00	2445.77	0.697	1.16	3.33	1.03
80.00	2446.21	0.755	1.60	3.88	1.24
120.00	2446.53	0.775	1.92	4.05	1.29
160.00	2446.78	0.769	2.17	4.13	1.35
200.00	2446.96	0.767	2.35	4.25	1.41
240.00	2447.12	0.769	2.51	4.38	1.48
280.00	2447.25	0.771	2.64	4.50	1.55
320.00	2447.37	0.774	2.76	4.61	1.61
360.00	2447.48	0.777	2.87	4.72	1.67
400.00	2447.56	0.784	2.95	4.87	1.75

Note: Shear stress was calculated using R.

ÄÄ
ÄÄÄÄÄÄÄÄÄÄÄÄÄÄÄÄÄÄÄÄÄÄÄÄÄÄ ROADWAY OVERTOPPING DATA ÄÄÄÄÄÄÄÄÄÄÄÄÄÄÄÄÄÄÄÄÄÄÄÄÄÄ
ÄÄ

ROADWAY SURFACE	PAVED
EMBANKMENT TOP WIDTH	24.00 ft

***** USER DEFINED ROADWAY PROFILE

CROSS-SECTION COORD. NO.	X ft	Y ft
1	0.00	2450.30
2	26.50	2450.23
3	41.20	2450.20
4	62.10	2450.15
5	75.80	2450.10
6	100.20	2450.01
7	127.70	2449.90
8	161.50	2449.80

ÄÄ

CURRENT DATE: 03-26-2007 FILE DATE: 3/26/2007
CURRENT TIME: 10:40:00 FILE NAME: Culv24

FHWA CULVERT ANALYSIS
HY-8, VERSION 6.1

C U L V NO.	SITE DATA INLET ELEV. (ft)	OUTLET ELEV. (ft)	CULVERT LENGTH (ft)	CULVERT SHAPE, MATERIAL, INLET BARRELS SHAPE MATERIAL	SPAN (ft)	RISE (ft)	MANNING n	INLET TYPE
1	2418.39	2417.48	44.51	2 CMPA	2.92	2.00	.025	CONVENTIONAL
2								
3								
4								
5								
6								

SUMMARY OF CULVERT FLOWS (cfs) FILE: Culv24 DATE: 3/26/2007

ELEV (ft)	TOTAL	1	2	3	4	5	6	ROADWAY	ITR
2418.39	0.0	0.0	0.0	0.0	0.0	0.0	0.0	0.00	1
2419.12	8.0	8.0	0.0	0.0	0.0	0.0	0.0	0.00	1
2419.50	16.0	16.0	0.0	0.0	0.0	0.0	0.0	0.00	1
2419.82	24.0	24.0	0.0	0.0	0.0	0.0	0.0	0.00	1
2420.11	32.0	32.0	0.0	0.0	0.0	0.0	0.0	0.00	1
2420.42	40.0	40.0	0.0	0.0	0.0	0.0	0.0	0.00	1
2420.81	48.0	48.0	0.0	0.0	0.0	0.0	0.0	0.00	1
2420.86	50.0	50.0	0.0	0.0	0.0	0.0	0.0	0.00	1
2421.51	64.0	62.9	0.0	0.0	0.0	0.0	0.0	0.91	6
2421.71	72.0	66.3	0.0	0.0	0.0	0.0	0.0	5.15	7
2421.85	80.0	68.4	0.0	0.0	0.0	0.0	0.0	10.93	6
2421.30	58.4	58.4	0.0	0.0	0.0	0.0	0.0	OVERTOPPING	

SUMMARY OF ITERATIVE SOLUTION ERRORS FILE: Culv24 DATE: 3/26/2007

HEAD ELEV (ft)	HEAD ERROR (ft)	TOTAL FLOW (cfs)	FLOW ERROR (cfs)	% FLOW ERROR
2418.39	0.000	0.00	0.00	0.00
2419.12	0.000	8.00	0.00	0.00
2419.50	0.000	16.00	0.00	0.00
2419.82	0.000	24.00	0.00	0.00
2420.11	0.000	32.00	0.00	0.00
2420.42	0.000	40.00	0.00	0.00
2420.81	0.000	48.00	0.00	0.00
2420.86	0.000	50.00	0.00	0.00
2421.51	-0.004	64.00	0.17	0.27
2421.71	-0.008	72.00	0.57	0.79
2421.85	-0.007	80.00	0.63	0.79

<1> TOLERANCE (ft) = 0.010 <2> TOLERANCE (%) = 1.000

CURRENT DATE: 03-26-2007 FILE DATE: 3/26/2007
CURRENT TIME: 10:40:00 FILE NAME: Culv24

PERFORMANCE CURVE FOR CULVERT 1 - 2(2.92 (ft) BY 2.00 (ft)) CMPA

DIS-CHARGE FLOW (cfs)	HEAD-WATER ELEV. (ft)	INLET CONTROL DEPTH (ft)	OUTLET CONTROL DEPTH (ft)	FLOW TYPE <F4>	NORMAL DEPTH (ft)	CRIT. DEPTH (ft)	OUTLET DEPTH (ft)	TW DEPTH (ft)	OUTLET VEL. (fps)	TW VEL. (fps)
0.00	2418.39	0.00	0.00	0-NF	0.00	0.00	0.00	-0.08	0.00	0.00
8.00	2419.12	0.73	0.73	1-S2n	0.44	0.48	0.38	0.74	4.85	1.97
16.00	2419.49	1.11	1.11	1-S2n	0.65	0.72	0.52	1.03	6.62	2.36
24.00	2419.82	1.43	1.43	1-S2n	0.83	0.91	0.71	1.24	6.86	2.61
32.00	2420.12	1.73	1.73	1-S2n	1.00	1.07	0.87	1.41	7.20	2.80
40.00	2420.42	2.03	2.03	5-S2n	1.18	1.22	1.12	1.55	6.85	2.95
48.00	2420.81	2.36	2.42	3-M1t	1.37	1.35	1.83	1.83	5.33	2.70
50.00	2420.86	2.45	2.47	3-M1t	1.42	1.38	1.93	1.93	5.45	2.66
62.92	2421.51	3.12	3.07	3-M1f	2.00	1.56	2.00	2.05	6.77	2.65
66.28	2421.71	3.32	3.18	3-M1f	2.00	1.60	2.00	2.15	7.13	2.61
68.44	2421.84	3.45	3.26	3-M1f	2.00	1.62	2.00	2.23	7.36	2.63

El. inlet face invert 2418.39 ft El. outlet invert 2417.48 ft
El. inlet throat invert 0.00 ft El. inlet crest 2418.39 ft

```
***** SITE DATA ***** CULVERT INVERT **************
      INLET STATION                          0.00 ft
      INLET ELEVATION                     2418.39 ft
      OUTLET STATION                        44.50 ft
      OUTLET ELEVATION                    2417.48 ft
      NUMBER OF BARRELS                     2
      SLOPE (V/H)                           0.0204
      CULVERT LENGTH ALONG SLOPE           44.51 ft

***** CULVERT DATA SUMMARY ************************
      BARREL SHAPE          PIPE ARCH
      BARREL SPAN             2.92 ft
      BARREL RISE             2.00 ft
      BARREL MATERIAL       STEEL OR ALUMINUM
      BARREL MANNING'S n    0.025
      INLET TYPE            CONVENTIONAL
      INLET EDGE AND WALL   HEADWALL
      INLET DEPRESSION      NONE
```

CURRENT DATE: 03-26-2007 FILE DATE: 3/26/2007
CURRENT TIME: 10:40:00 FILE NAME: Culv24

ÄÄÄ
ÄÄÄÄÄÄÄÄÄÄÄÄÄÄÄÄÄÄÄÄÄÄÄÄÄÄ TAILWATER ÄÄÄÄÄÄÄÄÄÄÄÄÄÄÄÄÄÄÄÄÄÄÄÄÄÄ
ÄÄÄ

***** USER DEFINED CHANNEL CROSS-SECTION FILE NAME: Culv24
MAIN CHANNEL AND LT & RT OVER BANKS FILE DATE: 3/26/2007

LEFT CHANNEL BOUNDARY	2
RIGHT CHANNEL BOUNDARY	6
MANNING n LEFT OVER BANK	0.062
MANNING n MAIN CHANNEL	0.060
MANNING n RIGHT OVER BANK	0.069
SLOPE OF CHANNEL	0.0158 ft/ft

CROSS-SECTION COORD. NO.	X (ft)	Y (ft)
1	0.00	2420.90
2	26.90	2419.50
3	34.50	2417.80
4	37.00	2417.40
5	39.00	2417.60
6	44.10	2419.10
7	61.20	2419.70
8	80.50	2420.30

******* UNIFORM FLOW RATING CURVE FOR DOWNSTREAM CHANNEL

FLOW (cfs)	W.S.E. (ft)	FROUDE NUMBER	DEPTH (ft)	VEL. (f/s)	SHEAR (psf)
0.00	2417.40	0.000	-0.08	0.00	0.00
8.00	2418.22	0.518	0.74	1.97	0.47
16.00	2418.51	0.541	1.03	2.36	0.62
24.00	2418.72	0.552	1.24	2.61	0.73
32.00	2418.89	0.559	1.41	2.80	0.82
40.00	2419.03	0.565	1.55	2.95	0.90
48.00	2419.31	0.524	1.83	2.70	0.82
50.00	2419.41	0.520	1.93	2.66	0.80
64.00	2419.53	0.520	2.05	2.65	0.80
72.00	2419.63	0.520	2.15	2.61	0.78
80.00	2419.71	0.524	2.23	2.63	0.78

Note: Shear stress was calculated using R.

ÄÄÄ
ÄÄÄÄÄÄÄÄÄÄÄÄÄÄÄÄÄÄÄÄÄÄÄÄÄÄ ROADWAY OVERTOPPING DATA ÄÄÄÄÄÄÄÄÄÄÄÄÄÄÄÄÄÄÄÄÄÄÄÄÄÄ
ÄÄÄ

ROADWAY SURFACE	PAVED
EMBANKMENT TOP WIDTH	24.00 ft

***** USER DEFINED ROADWAY PROFILE

CROSS-SECTION COORD. NO.	X ft	Y ft
1	0.00	2423.10
2	47.90	2422.50
3	89.40	2421.86
4	103.60	2421.59
5	115.40	2421.30
6	115.41	2423.10

ÄÄÄ

CURRENT DATE: 03-21-2007 FILE DATE: 03/21/2007
CURRENT TIME: 09:00:57 FILE NAME: Culv25

FHWA CULVERT ANALYSIS
HY-8, VERSION 6.1

C U L V NO.	SITE DATA: INLET ELEV. (ft)	OUTLET ELEV. (ft)	CULVERT LENGTH (ft)	CULVERT SHAPE, MATERIAL, INLET: BARRELS SHAPE MATERIAL	SPAN (ft)	RISE (ft)	MANNING n	INLET TYPE
1	2404.58	2403.59	44.51	2 CMPA	2.92	2.00	.025	CONVENTIONAL
2								
3								
4								
5								
6								

SUMMARY OF CULVERT FLOWS (cfs) FILE: Culv25 DATE: 03/21/2007

ELEV (ft)	TOTAL	1	2	3	4	5	6	ROADWAY	ITR
2404.58	0.0	0.0	0.0	0.0	0.0	0.0	0.0	0.00	1
2405.20	6.0	6.0	0.0	0.0	0.0	0.0	0.0	0.00	1
2405.50	12.0	12.0	0.0	0.0	0.0	0.0	0.0	0.00	1
2405.77	18.0	18.0	0.0	0.0	0.0	0.0	0.0	0.00	1
2406.01	24.0	24.0	0.0	0.0	0.0	0.0	0.0	0.00	1
2406.23	30.0	30.0	0.0	0.0	0.0	0.0	0.0	0.00	1
2406.45	36.0	36.0	0.0	0.0	0.0	0.0	0.0	0.00	1
2406.61	40.0	40.0	0.0	0.0	0.0	0.0	0.0	0.00	1
2406.94	48.0	48.0	0.0	0.0	0.0	0.0	0.0	0.00	1
2407.22	54.0	54.0	0.0	0.0	0.0	0.0	0.0	0.00	1
2407.53	60.0	60.0	0.0	0.0	0.0	0.0	0.0	0.00	1
2407.60	61.2	61.2	0.0	0.0	0.0	0.0	0.0	OVERTOPPING	

SUMMARY OF ITERATIVE SOLUTION ERRORS FILE: Culv25 DATE: 03/21/2007

HEAD ELEV (ft)	HEAD ERROR (ft)	TOTAL FLOW (cfs)	FLOW ERROR (cfs)	% FLOW ERROR
2404.58	0.000	0.00	0.00	0.00
2405.20	0.000	6.00	0.00	0.00
2405.50	0.000	12.00	0.00	0.00
2405.77	0.000	18.00	0.00	0.00
2406.01	0.000	24.00	0.00	0.00
2406.23	0.000	30.00	0.00	0.00
2406.45	0.000	36.00	0.00	0.00
2406.61	0.000	40.00	0.00	0.00
2406.94	0.000	48.00	0.00	0.00
2407.22	0.000	54.00	0.00	0.00
2407.53	0.000	60.00	0.00	0.00

<1> TOLERANCE (ft) = 0.010 <2> TOLERANCE (%) = 1.000

CURRENT DATE: 03-21-2007 FILE DATE: 03/21/2007
CURRENT TIME: 09:00:57 FILE NAME: Culv25

PERFORMANCE CURVE FOR CULVERT 1 - 2(2.92 (ft) BY 2.00 (ft)) CMPA

DIS-CHARGE FLOW (cfs)	HEAD-WATER ELEV. (ft)	INLET CONTROL DEPTH (ft)	OUTLET CONTROL DEPTH (ft)	FLOW TYPE <F4>	NORMAL DEPTH (ft)	CRIT. DEPTH (ft)	OUTLET DEPTH (ft)	TW DEPTH (ft)	OUTLET VEL. (fps)	TW VEL. (fps)
0.00	2404.58	0.00	0.00	0-NF	0.00	0.00	0.00	0.01	0.00	0.00
6.00	2405.20	0.62	0.62	1-S2n	0.37	0.42	0.32	0.69	4.62	2.21
12.00	2405.50	0.92	0.92	1-S2n	0.54	0.61	0.41	0.89	6.64	2.62
18.00	2405.77	1.19	1.19	1-S2n	0.68	0.77	0.57	1.03	6.62	2.89
24.00	2406.01	1.43	1.43	1-S2n	0.81	0.91	0.71	1.14	6.86	3.11
30.00	2406.23	1.65	1.65	1-S2n	0.93	1.03	0.83	1.24	7.09	3.28
36.00	2406.45	1.87	1.87	1-S2n	1.06	1.15	0.95	1.32	7.38	3.44
40.00	2406.61	2.03	2.03	5-S2n	1.14	1.22	1.02	1.37	7.55	3.53
48.00	2406.94	2.36	2.36	5-S2n	1.32	1.35	1.25	1.47	7.33	3.69
54.00	2407.22	2.64	2.64	3-M1t	1.48	1.44	1.53	1.53	6.84	3.80
60.00	2407.53	2.95	2.85	3-M2t	1.69	1.52	1.59	1.59	7.35	3.90

El. inlet face invert 2404.58 ft El. outlet invert 2403.59 ft
El. inlet throat invert 0.00 ft El. inlet crest 2404.58 ft

```
***** SITE DATA ***** CULVERT INVERT **************
      INLET STATION                          0.00 ft
      INLET ELEVATION                     2404.58 ft
      OUTLET STATION                        44.50 ft
      OUTLET ELEVATION                    2403.59 ft
      NUMBER OF BARRELS                      2
      SLOPE (V/H)                            0.0222
      CULVERT LENGTH ALONG SLOPE            44.51 ft

***** CULVERT DATA SUMMARY ************************
      BARREL SHAPE          PIPE ARCH
      BARREL SPAN             2.92 ft
      BARREL RISE             2.00 ft
      BARREL MATERIAL       STEEL OR ALUMINUM
      BARREL MANNING'S n    0.025
      INLET TYPE            CONVENTIONAL
      INLET EDGE AND WALL   HEADWALL
      INLET DEPRESSION      NONE
```

CURRENT DATE: 03-21-2007 FILE DATE: 03/21/2007
CURRENT TIME: 09:00:57 FILE NAME: Culv25

ÄÄ
ÄÄÄÄÄÄÄÄÄÄÄÄÄÄÄÄÄÄÄÄÄÄÄÄÄÄ TAILWATER ÄÄÄÄÄÄÄÄÄÄÄÄÄÄÄÄÄÄÄÄÄÄÄÄÄÄ
ÄÄ

***** USER DEFINED CHANNEL CROSS-SECTION FILE NAME: Culv25
MAIN CHANNEL AND LT & RT OVER BANKS FILE DATE: 5/26/2005
LEFT CHANNEL BOUNDARY 2
RIGHT CHANNEL BOUNDARY 5
MANNING n LEFT OVER BANK 0.060
MANNING n MAIN CHANNEL 0.045
MANNING n RIGHT OVER BANK 0.065
SLOPE OF CHANNEL 0.0251 ft/ft

CROSS-SECTION COORD. NO.	X (ft)	Y (ft)
1	0.00	2406.70
2	18.80	2406.20
3	32.80	2403.60
4	36.00	2404.10
5	54.40	2406.60
6	58.80	2406.70

******* UNIFORM FLOW RATING CURVE FOR DOWNSTREAM CHANNEL

FLOW (cfs)	W.S.E. (ft)	FROUDE NUMBER	DEPTH (ft)	VEL. (f/s)	SHEAR (psf)
0.00	2403.60	0.000	0.01	0.00	0.00
6.00	2404.28	0.691	0.69	2.21	0.52
12.00	2404.48	0.721	0.89	2.62	0.67
18.00	2404.62	0.740	1.03	2.89	0.78
24.00	2404.73	0.754	1.14	3.11	0.87
30.00	2404.83	0.765	1.24	3.28	0.94
36.00	2404.91	0.774	1.32	3.44	1.01
40.00	2404.96	0.779	1.37	3.53	1.05
48.00	2405.06	0.788	1.47	3.69	1.12
54.00	2405.12	0.794	1.53	3.80	1.17
60.00	2405.18	0.799	1.59	3.90	1.22

Note: Shear stress was calculated using R.

ÄÄ
ÄÄÄÄÄÄÄÄÄÄÄÄÄÄÄÄÄÄÄÄÄÄÄÄÄÄ ROADWAY OVERTOPPING DATA ÄÄÄÄÄÄÄÄÄÄÄÄÄÄÄÄÄÄÄÄÄÄÄÄÄÄ
ÄÄ

ROADWAY SURFACE PAVED
EMBANKMENT TOP WIDTH 24.00 ft
***** USER DEFINED ROADWAY PROFILE

CROSS-SECTION COORD. NO.	X ft	Y ft
1	0.00	2407.60
2	6.30	2407.76
3	11.30	2407.81
4	24.20	2407.92
5	68.70	2407.95

ÄÄ

CURRENT DATE: 03-21-2007 FILE DATE: 03/21/2007
CURRENT TIME: 09:03:35 FILE NAME: Culv26

FHWA CULVERT ANALYSIS
HY-8, VERSION 6.1

C U L V NO.	SITE DATA: INLET ELEV. (ft)	OUTLET ELEV. (ft)	CULVERT LENGTH (ft)	CULVERT SHAPE, MATERIAL, INLET: BARRELS SHAPE MATERIAL	SPAN (ft)	RISE (ft)	MANNING n	INLET TYPE
1	2389.77	2389.58	65.00	2 CMPA	2.92	2.00	.025	CONVENTIONAL
2								
3								
4								
5								
6								

SUMMARY OF CULVERT FLOWS (cfs) FILE: Culv26 DATE: 03/21/2007

ELEV (ft)	TOTAL	1	2	3	4	5	6	ROADWAY	ITR
2389.77	0.0	0.0	0.0	0.0	0.0	0.0	0.0	0.00	1
2390.84	12.0	12.0	0.0	0.0	0.0	0.0	0.0	0.00	1
2391.41	24.0	24.0	0.0	0.0	0.0	0.0	0.0	0.00	1
2391.91	36.0	36.0	0.0	0.0	0.0	0.0	0.0	0.00	1
2392.87	48.0	48.0	0.0	0.0	0.0	0.0	0.0	0.00	1
2393.73	60.0	57.3	0.0	0.0	0.0	0.0	0.0	2.51	5
2393.92	72.0	58.5	0.0	0.0	0.0	0.0	0.0	12.83	7
2394.04	84.0	59.8	0.0	0.0	0.0	0.0	0.0	23.36	5
2394.09	90.0	60.6	0.0	0.0	0.0	0.0	0.0	28.65	4
2394.22	108.0	61.5	0.0	0.0	0.0	0.0	0.0	45.74	5
2394.29	120.0	62.5	0.0	0.0	0.0	0.0	0.0	56.45	4
2393.59	55.6	55.6	0.0	0.0	0.0	0.0	0.0	OVERTOPPING	

SUMMARY OF ITERATIVE SOLUTION ERRORS FILE: Culv26 DATE: 03/21/2007

HEAD ELEV (ft)	HEAD ERROR (ft)	TOTAL FLOW (cfs)	FLOW ERROR (cfs)	% FLOW ERROR
2389.77	0.000	0.00	0.00	0.00
2390.84	0.000	12.00	0.00	0.00
2391.41	0.000	24.00	0.00	0.00
2391.91	0.000	36.00	0.00	0.00
2392.87	0.000	48.00	0.00	0.00
2393.73	-0.004	60.00	0.23	0.38
2393.92	-0.006	72.00	0.63	0.88
2394.04	-0.008	84.00	0.81	0.96
2394.09	-0.007	90.00	0.78	0.87
2394.22	-0.006	108.00	0.71	0.66
2394.29	-0.008	120.00	1.03	0.86

<1> TOLERANCE (ft) = 0.010 <2> TOLERANCE (%) = 1.000

CURRENT DATE: 03-21-2007 FILE DATE: 03/21/2007
CURRENT TIME: 09:03:35 FILE NAME: Culv26

PERFORMANCE CURVE FOR CULVERT 1 - 2(2.92 (ft) BY 2.00 (ft)) CMPA

DIS-CHARGE FLOW (cfs)	HEAD-WATER ELEV. (ft)	INLET CONTROL DEPTH (ft)	OUTLET CONTROL DEPTH (ft)	FLOW TYPE <F4>	NORMAL DEPTH (ft)	CRIT. DEPTH (ft)	OUTLET DEPTH (ft)	TW DEPTH (ft)	OUTLET VEL. (fps)	TW VEL. (fps)
0.00	2389.77	0.00	0.00	0-NF	0.00	0.00	0.00	0.02	0.00	0.00
12.00	2390.84	0.94	1.07	3-M2t	1.00	0.61	0.72	0.72	3.35	2.88
24.00	2391.41	1.45	1.64	3-M2t	2.00	0.91	0.93	0.93	5.04	3.45
36.00	2391.91	1.89	2.14	2-M2c	2.00	1.15	1.15	1.07	6.01	3.84
48.00	2392.87	2.38	3.10	2-M2c	2.00	1.35	1.35	1.19	6.82	4.15
57.26	2393.73	2.83	3.96	2-M2c	2.00	1.48	1.48	1.30	7.47	4.40
58.54	2393.93	2.89	4.16	2-M2c	2.00	1.50	1.50	1.39	7.56	4.61
59.84	2394.04	2.96	4.27	2-M2c	2.00	1.52	1.52	1.51	7.65	4.91
60.58	2394.08	3.00	4.31	3-M2t	2.00	1.53	1.55	1.55	7.62	4.99
61.55	2394.22	3.06	4.45	3-M2t	2.00	1.54	1.62	1.62	7.45	5.16
62.53	2394.29	3.11	4.52	3-M2t	2.00	1.55	1.68	1.68	7.38	5.31

El. inlet face invert 2389.77 ft El. outlet invert 2389.58 ft
El. inlet throat invert 0.00 ft El. inlet crest 2389.77 ft

***** SITE DATA ***** CULVERT INVERT **********

INLET STATION	0.00 ft
INLET ELEVATION	2389.77 ft
OUTLET STATION	65.00 ft
OUTLET ELEVATION	2389.58 ft
NUMBER OF BARRELS	2
SLOPE (V/H)	0.0029
CULVERT LENGTH ALONG SLOPE	65.00 ft

***** CULVERT DATA SUMMARY **********

BARREL SHAPE	PIPE ARCH
BARREL SPAN	2.92 ft
BARREL RISE	2.00 ft
BARREL MATERIAL	STEEL OR ALUMINUM
BARREL MANNING'S n	0.025
INLET TYPE	CONVENTIONAL
INLET EDGE AND WALL	HEADWALL
INLET DEPRESSION	NONE

CURRENT DATE: 03-21-2007 FILE DATE: 03/21/2007
CURRENT TIME: 09:03:35 FILE NAME: Culv26

ÄÄÄ
ÄÄÄÄÄÄÄÄÄÄÄÄÄÄÄÄÄÄÄÄÄÄÄÄÄÄ TAILWATER ÄÄÄÄÄÄÄÄÄÄÄÄÄÄÄÄÄÄÄÄÄÄÄÄÄÄ
ÄÄ

***** USER DEFINED CHANNEL CROSS-SECTION FILE NAME: Culv26
MAIN CHANNEL AND LT & RT OVER BANKS FILE DATE: 05/26/05

LEFT CHANNEL BOUNDARY	3
RIGHT CHANNEL BOUNDARY	7
MANNING n LEFT OVER BANK	0.037
MANNING n MAIN CHANNEL	0.055
MANNING n RIGHT OVER BANK	0.050
SLOPE OF CHANNEL	0.0306 ft/ft

CROSS-SECTION COORD. NO.	X (ft)	Y (ft)
1	0.00	2394.00
2	52.70	2392.60
3	63.40	2391.00
4	74.80	2389.60
5	81.90	2390.40
6	92.40	2392.00
7	108.70	2394.00

******* UNIFORM FLOW RATING CURVE FOR DOWNSTREAM CHANNEL

FLOW (cfs)	W.S.E. (ft)	FROUDE NUMBER	DEPTH (ft)	VEL. (f/s)	SHEAR (psf)
0.00	2389.60	0.000	0.02	0.00	0.00
12.00	2390.30	0.907	0.72	2.88	0.67
24.00	2390.51	0.943	0.93	3.45	0.88
36.00	2390.65	0.965	1.07	3.84	1.03
48.00	2390.77	0.982	1.19	4.15	1.16
60.00	2390.88	0.997	1.30	4.40	1.26
72.00	2390.97	1.008	1.39	4.61	1.35
84.00	2391.09	1.026	1.51	4.91	1.48
90.00	2391.13	1.032	1.55	4.99	1.52
108.00	2391.20	1.041	1.62	5.16	1.60
120.00	2391.26	1.050	1.68	5.31	1.67

Note: Shear stress was calculated using R.

ÄÄÄ
ÄÄÄÄÄÄÄÄÄÄÄÄÄÄÄÄÄÄÄÄÄÄÄÄÄÄ ROADWAY OVERTOPPING DATA ÄÄÄÄÄÄÄÄÄÄÄÄÄÄÄÄÄÄÄÄÄÄÄÄÄÄ
ÄÄÄ

ROADWAY SURFACE	PAVED
EMBANKMENT TOP WIDTH	24.00 ft

***** USER DEFINED ROADWAY PROFILE

CROSS-SECTION COORD. NO.	X ft	Y ft
1	0.00	2395.82
2	27.70	2395.42
3	63.00	2395.01
4	83.40	2394.80
5	117.80	2394.01
6	138.90	2393.64
7	159.50	2393.59

ÄÄÄ

CURRENT DATE: 03-21-2007 FILE DATE: 03/21/2007
CURRENT TIME: 09:04:29 FILE NAME: Culv27

FHWA CULVERT ANALYSIS
HY-8, VERSION 6.1

C U L V NO.	SITE DATA INLET ELEV. (ft)	OUTLET ELEV. (ft)	CULVERT LENGTH (ft)	CULVERT SHAPE, MATERIAL, INLET BARRELS SHAPE MATERIAL	SPAN (ft)	RISE (ft)	MANNING n	INLET TYPE
1	2385.58	2384.78	64.70	1 CMPA	2.92	2.00	.025	CONVENTIONAL
2								
3								
4								
5								
6								

SUMMARY OF CULVERT FLOWS (cfs) FILE: Culv27 DATE: 03/21/2007

ELEV (ft)	TOTAL	1	2	3	4	5	6	ROADWAY	ITR
2385.58	0.0	0.0	0.0	0.0	0.0	0.0	0.0	0.00	1
2387.31	15.0	15.0	0.0	0.0	0.0	0.0	0.0	0.00	1
2389.03	30.0	30.0	0.0	0.0	0.0	0.0	0.0	0.00	1
2390.61	45.0	36.7	0.0	0.0	0.0	0.0	0.0	8.02	13
2390.76	60.0	37.4	0.0	0.0	0.0	0.0	0.0	22.22	10
2390.86	75.0	37.8	0.0	0.0	0.0	0.0	0.0	36.74	8
2390.93	90.0	38.2	0.0	0.0	0.0	0.0	0.0	51.48	6
2390.99	105.0	38.2	0.0	0.0	0.0	0.0	0.0	65.78	4
2391.04	120.0	38.2	0.0	0.0	0.0	0.0	0.0	80.96	4
2391.09	135.0	38.0	0.0	0.0	0.0	0.0	0.0	96.33	4
2391.12	150.0	45.0	0.0	0.0	0.0	0.0	0.0	106.43	2
2390.39	35.8	35.8	0.0	0.0	0.0	0.0	0.0	OVERTOPPING	

SUMMARY OF ITERATIVE SOLUTION ERRORS FILE: Culv27 DATE: 03/21/2007

HEAD ELEV (ft)	HEAD ERROR (ft)	TOTAL FLOW (cfs)	FLOW ERROR (cfs)	% FLOW ERROR
2385.58	0.000	0.00	0.00	0.00
2387.31	0.000	15.00	0.00	0.00
2389.03	0.000	30.00	0.00	0.00
2390.61	-0.003	45.00	0.29	0.64
2390.76	-0.002	60.00	0.39	0.65
2390.86	-0.002	75.00	0.43	0.57
2390.93	-0.002	90.00	0.36	0.40
2390.99	-0.006	105.00	1.02	0.97
2391.04	-0.005	120.00	0.84	0.70
2391.09	-0.004	135.00	0.64	0.47
2391.12	0.003	150.00	-1.43	-0.95

<1> TOLERANCE (ft) = 0.010 <2> TOLERANCE (%) = 1.000

CURRENT DATE: 03-21-2007 FILE DATE: 03/21/2007
CURRENT TIME: 09:04:29 FILE NAME: Culv27

PERFORMANCE CURVE FOR CULVERT 1 - 1(2.92 (ft) BY 2.00 (ft)) CMPA

DIS-CHARGE FLOW (cfs)	HEAD-WATER ELEV. (ft)	INLET CONTROL DEPTH (ft)	OUTLET CONTROL DEPTH (ft)	FLOW TYPE <F4>	NORMAL DEPTH (ft)	CRIT. DEPTH (ft)	OUTLET DEPTH (ft)	TW DEPTH (ft)	OUTLET VEL. (fps)	TW VEL. (fps)
0.00	2385.58	0.00	0.00	0-NF	0.00	0.00	0.00	0.02	0.00	0.00
15.00	2387.31	1.66	1.73	2-M2c	1.15	1.03	1.03	0.77	5.58	2.81
30.00	2389.03	2.96	3.45	2-M2c	2.00	1.52	1.52	1.03	7.66	3.46
36.69	2390.60	3.78	5.02	2-M2c	2.00	1.67	1.67	1.22	8.70	3.88
37.39	2390.76	3.88	5.18	2-M2c	2.00	1.68	1.68	1.38	8.82	4.20
37.83	2390.86	3.94	5.28	2-M2c	2.00	1.69	1.69	1.52	8.89	4.46
38.15	2390.93	3.98	5.35	2-M2c	2.00	1.70	1.70	1.64	8.94	4.67
38.21	2390.98	3.99	5.40	3-M2t	2.00	1.70	1.75	1.75	8.75	4.86
38.20	2391.04	3.99	5.46	3-M2t	2.00	1.70	1.86	1.86	8.48	5.03
38.03	2391.09	3.97	5.51	3-M2t	2.00	1.70	1.96	1.96	8.26	5.18
45.00	2390.62	5.04	4.18	3-M1f	2.00	1.83	2.00	2.05	9.68	5.31

El. inlet face invert 2385.58 ft El. outlet invert 2384.78 ft
El. inlet throat invert 0.00 ft El. inlet crest 2385.58 ft

***** SITE DATA ***** CULVERT INVERT **********

INLET STATION	0.00 ft
INLET ELEVATION	2385.58 ft
OUTLET STATION	64.70 ft
OUTLET ELEVATION	2384.78 ft
NUMBER OF BARRELS	1
SLOPE (V/H)	0.0124
CULVERT LENGTH ALONG SLOPE	64.70 ft

***** CULVERT DATA SUMMARY **********

BARREL SHAPE	PIPE ARCH
BARREL SPAN	2.92 ft
BARREL RISE	2.00 ft
BARREL MATERIAL	STEEL OR ALUMINUM
BARREL MANNING'S n	0.025
INLET TYPE	CONVENTIONAL
INLET EDGE AND WALL	HEADWALL
INLET DEPRESSION	NONE

CURRENT DATE: 03-21-2007 FILE DATE: 03/21/2007
CURRENT TIME: 09:04:29 FILE NAME: Culv27

ÄÄ
ÄÄÄÄÄÄÄÄÄÄÄÄÄÄÄÄÄÄÄÄÄÄÄÄÄÄ TAILWATER ÄÄÄÄÄÄÄÄÄÄÄÄÄÄÄÄÄÄÄÄÄÄÄÄÄÄ
ÄÄ

***** USER DEFINED CHANNEL CROSS-SECTION FILE NAME: Culv27
MAIN CHANNEL AND LT & RT OVER BANKS FILE DATE: 3/1/2007

LEFT CHANNEL BOUNDARY	4
RIGHT CHANNEL BOUNDARY	9
MANNING n LEFT OVER BANK	0.058
MANNING n MAIN CHANNEL	0.055
MANNING n RIGHT OVER BANK	0.045
SLOPE OF CHANNEL	0.0301 ft/ft

CROSS-SECTION COORD. NO.	X (ft)	Y (ft)
1	0.00	2399.40
2	13.80	2388.20
3	46.50	2388.20
4	59.10	2386.30
5	65.80	2385.20
6	70.10	2384.80
7	75.00	2385.30
8	81.70	2387.50
9	175.80	2399.40

******* UNIFORM FLOW RATING CURVE FOR DOWNSTREAM CHANNEL

FLOW (cfs)	W.S.E. (ft)	FROUDE NUMBER	DEPTH (ft)	VEL. (f/s)	SHEAR (psf)
0.00	2384.80	0.000	0.02	0.00	0.00
15.00	2385.55	0.766	0.77	2.81	0.83
30.00	2385.81	0.814	1.03	3.46	1.13
45.00	2386.00	0.839	1.22	3.88	1.35
60.00	2386.16	0.856	1.38	4.20	1.52
75.00	2386.30	0.868	1.52	4.46	1.67
90.00	2386.42	0.878	1.64	4.67	1.80
105.00	2386.53	0.886	1.75	4.86	1.91
120.00	2386.64	0.893	1.86	5.03	2.02
135.00	2386.74	0.899	1.96	5.18	2.12
150.00	2386.83	0.904	2.05	5.31	2.21

Note: Shear stress was calculated using R.

ÄÄ
ÄÄÄÄÄÄÄÄÄÄÄÄÄÄÄÄÄÄÄÄÄÄÄÄÄÄ ROADWAY OVERTOPPING DATA ÄÄÄÄÄÄÄÄÄÄÄÄÄÄÄÄÄÄÄÄÄÄÄÄÄÄ
ÄÄ

ROADWAY SURFACE	PAVED
EMBANKMENT TOP WIDTH	24.00 ft

***** USER DEFINED ROADWAY PROFILE

CROSS-SECTION COORD. NO.	X ft	Y ft
1	0.00	2390.90
2	24.30	2390.49
3	28.50	2390.91
4	50.70	2390.39
5	71.30	2390.39
6	84.20	2390.91
7	114.50	2390.88

ÄÄ

CURRENT DATE: 03-21-2007 FILE DATE: 3/21/2007
CURRENT TIME: 09:46:26 FILE NAME: Culv28

FHWA CULVERT ANALYSIS
HY-8, VERSION 6.1

C U L V NO.	SITE DATA INLET ELEV. (ft)	OUTLET ELEV. (ft)	CULVERT LENGTH (ft)	CULVERT SHAPE, MATERIAL, INLET BARRELS SHAPE MATERIAL	SPAN (ft)	RISE (ft)	MANNING n	INLET TYPE
1	2381.70	2380.47	75.01	4 CSP	3.00	3.00	.024	CONVENTIONAL
2								
3								
4								
5								
6								

SUMMARY OF CULVERT FLOWS (cfs) FILE: Culv28 DATE: 3/21/2007

ELEV (ft)	TOTAL	1	2	3	4	5	6	ROADWAY	ITR
2381.70	0.0	0.0	0.0	0.0	0.0	0.0	0.0	0.00	1
2382.04	5.0	5.0	0.0	0.0	0.0	0.0	0.0	0.00	1
2382.21	10.0	10.0	0.0	0.0	0.0	0.0	0.0	0.00	1
2382.37	15.0	15.0	0.0	0.0	0.0	0.0	0.0	0.00	1
2382.51	20.0	20.0	0.0	0.0	0.0	0.0	0.0	0.00	1
2382.65	25.0	25.0	0.0	0.0	0.0	0.0	0.0	0.00	1
2382.78	30.0	30.0	0.0	0.0	0.0	0.0	0.0	0.00	1
2382.90	35.0	35.0	0.0	0.0	0.0	0.0	0.0	0.00	1
2383.01	40.0	40.0	0.0	0.0	0.0	0.0	0.0	0.00	1
2383.12	45.0	45.0	0.0	0.0	0.0	0.0	0.0	0.00	1
2383.22	50.0	50.0	0.0	0.0	0.0	0.0	0.0	0.00	1
2386.46	243.0	243.0	0.0	0.0	0.0	0.0	0.0	OVERTOPPING	

SUMMARY OF ITERATIVE SOLUTION ERRORS FILE: Culv28 DATE: 3/21/2007

HEAD ELEV (ft)	HEAD ERROR (ft)	TOTAL FLOW (cfs)	FLOW ERROR (cfs)	% FLOW ERROR
2381.70	0.000	0.00	0.00	0.00
2382.04	0.000	5.00	0.00	0.00
2382.21	0.000	10.00	0.00	0.00
2382.37	0.000	15.00	0.00	0.00
2382.51	0.000	20.00	0.00	0.00
2382.65	0.000	25.00	0.00	0.00
2382.78	0.000	30.00	0.00	0.00
2382.90	0.000	35.00	0.00	0.00
2383.01	0.000	40.00	0.00	0.00
2383.12	0.000	45.00	0.00	0.00
2383.22	0.000	50.00	0.00	0.00

<1> TOLERANCE (ft) = 0.010 <2> TOLERANCE (%) = 1.000

CURRENT DATE: 03-21-2007 FILE DATE: 3/21/2007
CURRENT TIME: 09:46:26 FILE NAME: Culv28

PERFORMANCE CURVE FOR CULVERT 1 - 4(3.00 (ft) BY 3.00 (ft)) CSP

DIS-CHARGE FLOW (cfs)	HEAD-WATER ELEV. (ft)	INLET CONTROL DEPTH (ft)	OUTLET CONTROL DEPTH (ft)	FLOW TYPE <F4>	NORMAL DEPTH (ft)	CRIT. DEPTH (ft)	OUTLET DEPTH (ft)	TW DEPTH (ft)	OUTLET VEL. (fps)	TW VEL. (fps)
0.00	2381.70	0.00	0.00	0-NF	0.00	0.00	0.00	-0.17	0.00	0.00
5.00	2382.04	0.34	0.34	1-S2n	0.33	0.33	0.23	0.22	3.57	1.66
10.00	2382.21	0.51	0.51	1-S2n	0.45	0.47	0.37	0.34	4.85	2.09
15.00	2382.37	0.67	0.67	1-S2n	0.57	0.60	0.50	0.44	4.68	2.37
20.00	2382.51	0.81	0.81	1-S2n	0.66	0.69	0.59	0.52	5.10	2.58
25.00	2382.65	0.95	0.95	1-S2n	0.73	0.77	0.67	0.59	5.24	2.75
30.00	2382.78	1.08	1.08	1-S2n	0.81	0.86	0.76	0.65	5.32	2.90
35.00	2382.90	1.20	1.20	1-S2n	0.88	0.93	0.83	0.71	5.46	3.03
40.00	2383.01	1.31	1.31	1-S2n	0.94	0.99	0.89	0.76	5.68	3.14
45.00	2383.12	1.42	1.42	1-S2n	1.00	1.05	0.95	0.81	5.81	3.24
50.00	2383.22	1.52	1.52	1-S2n	1.06	1.12	1.06	0.86	5.61	3.33

El. inlet face invert 2381.70 ft El. outlet invert 2380.47 ft
El. inlet throat invert 0.00 ft El. inlet crest 2381.70 ft

***** SITE DATA ***** CULVERT INVERT **********

INLET STATION	0.00 ft
INLET ELEVATION	2381.70 ft
OUTLET STATION	75.00 ft
OUTLET ELEVATION	2380.47 ft
NUMBER OF BARRELS	4
SLOPE (V/H)	0.0164
CULVERT LENGTH ALONG SLOPE	75.01 ft

***** CULVERT DATA SUMMARY **********

BARREL SHAPE	CIRCULAR
BARREL DIAMETER	3.00 ft
BARREL MATERIAL	CORRUGATED STEEL
BARREL MANNING'S n	0.024
INLET TYPE	CONVENTIONAL
INLET EDGE AND WALL	BEVELED EDGE (1:1)
INLET DEPRESSION	NONE

CURRENT DATE: 03-21-2007 FILE DATE: 3/21/2007
CURRENT TIME: 09:46:26 FILE NAME: Culv28

ÄÄ
ÄÄÄÄÄÄÄÄÄÄÄÄÄÄÄÄÄÄÄÄÄÄÄÄÄÄ TAILWATER ÄÄÄÄÄÄÄÄÄÄÄÄÄÄÄÄÄÄÄÄÄÄÄÄÄÄ
ÄÄ

***** USER DEFINED CHANNEL CROSS-SECTION FILE NAME: Culv28
MAIN CHANNEL AND LT & RT OVER BANKS FILE DATE: 05/26/05

LEFT CHANNEL BOUNDARY	2
RIGHT CHANNEL BOUNDARY	7
MANNING n LEFT OVER BANK	0.070
MANNING n MAIN CHANNEL	0.060
MANNING n RIGHT OVER BANK	0.060
SLOPE OF CHANNEL	0.0328 ft/ft

CROSS-SECTION COORD. NO.	X (ft)	Y (ft)
1	0.00	2384.90
2	37.90	2381.80
3	47.20	2380.60
4	57.00	2380.30
5	61.10	2380.80
6	73.60	2382.30
7	87.70	2382.00
8	106.90	2382.50
9	143.10	2384.50

******* UNIFORM FLOW RATING CURVE FOR DOWNSTREAM CHANNEL

FLOW (cfs)	W.S.E. (ft)	FROUDE NUMBER	DEPTH (ft)	VEL. (f/s)	SHEAR (psf)
0.00	2380.30	0.000	-0.17	0.00	0.00
5.00	2380.69	0.629	0.22	1.66	0.45
10.00	2380.81	0.676	0.34	2.09	0.63
15.00	2380.91	0.702	0.44	2.37	0.76
20.00	2380.99	0.719	0.52	2.58	0.86
25.00	2381.06	0.732	0.59	2.75	0.95
30.00	2381.12	0.742	0.65	2.90	1.03
35.00	2381.18	0.751	0.71	3.03	1.10
40.00	2381.23	0.757	0.76	3.14	1.17
45.00	2381.28	0.763	0.81	3.24	1.23
50.00	2381.33	0.769	0.86	3.33	1.28

Note: Shear stress was calculated using R.

ÄÄÄ
ÄÄÄÄÄÄÄÄÄÄÄÄÄÄÄÄÄÄÄÄÄÄÄÄÄÄ ROADWAY OVERTOPPING DATA ÄÄÄÄÄÄÄÄÄÄÄÄÄÄÄÄÄÄÄÄÄÄÄÄÄÄ
ÄÄÄ

ROADWAY SURFACE	PAVED
EMBANKMENT TOP WIDTH	24.00 ft

***** USER DEFINED ROADWAY PROFILE

CROSS-SECTION COORD. NO.	X ft	Y ft
1	0.00	2387.63
2	26.40	2386.88
3	51.30	2386.51
4	66.10	2686.41
5	85.00	2386.46

ÄÄ

CURRENT DATE: 03-21-2007 FILE DATE: 3/21/2007
CURRENT TIME: 09:47:57 FILE NAME: Culv29

FHWA CULVERT ANALYSIS
HY-8, VERSION 6.1

CULV NO.	SITE DATA: INLET ELEV. (ft)	OUTLET ELEV. (ft)	CULVERT LENGTH (ft)	CULVERT SHAPE, MATERIAL, INLET: BARRELS / SHAPE / MATERIAL	SPAN (ft)	RISE (ft)	MANNING n	INLET TYPE
1	2378.77	2376.92	75.82	1 CSP	3.00	3.00	.024	CONVENTIONAL
2								
3								
4								
5								
6								

SUMMARY OF CULVERT FLOWS (cfs) FILE: Culv29 DATE: 3/21/2007

ELEV (ft)	TOTAL	1	2	3	4	5	6	ROADWAY	ITR
2378.77	0.0	0.0	0.0	0.0	0.0	0.0	0.0	0.00	1
2379.44	2.0	2.0	0.0	0.0	0.0	0.0	0.0	0.00	1
2379.62	4.0	4.0	0.0	0.0	0.0	0.0	0.0	0.00	1
2379.80	6.0	6.0	0.0	0.0	0.0	0.0	0.0	0.00	1
2379.96	8.0	8.0	0.0	0.0	0.0	0.0	0.0	0.00	1
2380.12	10.0	10.0	0.0	0.0	0.0	0.0	0.0	0.00	1
2380.26	12.0	12.0	0.0	0.0	0.0	0.0	0.0	0.00	1
2380.40	14.0	14.0	0.0	0.0	0.0	0.0	0.0	0.00	1
2380.47	15.0	15.0	0.0	0.0	0.0	0.0	0.0	0.00	1
2380.67	18.0	18.0	0.0	0.0	0.0	0.0	0.0	0.00	1
2380.79	20.0	20.0	0.0	0.0	0.0	0.0	0.0	0.00	1
2382.40	45.7	45.7	0.0	0.0	0.0	0.0	0.0	OVERTOPPING	

SUMMARY OF ITERATIVE SOLUTION ERRORS FILE: Culv29 DATE: 3/21/2007

HEAD ELEV (ft)	HEAD ERROR (ft)	TOTAL FLOW (cfs)	FLOW ERROR (cfs)	% FLOW ERROR
2378.77	0.000	0.00	0.00	0.00
2379.44	0.000	2.00	0.00	0.00
2379.62	0.000	4.00	0.00	0.00
2379.80	0.000	6.00	0.00	0.00
2379.96	0.000	8.00	0.00	0.00
2380.12	0.000	10.00	0.00	0.00
2380.26	0.000	12.00	0.00	0.00
2380.40	0.000	14.00	0.00	0.00
2380.47	0.000	15.00	0.00	0.00
2380.67	0.000	18.00	0.00	0.00
2380.79	0.000	20.00	0.00	0.00

<1> TOLERANCE (ft) = 0.010 <2> TOLERANCE (%) = 1.000

CURRENT DATE: 03-21-2007 FILE DATE: 3/21/2007
CURRENT TIME: 09:47:57 FILE NAME: Culv29

PERFORMANCE CURVE FOR CULVERT 1 - 1(3.00 (ft) BY 3.00 (ft)) CSP

DIS-CHARGE FLOW (cfs)	HEAD-WATER ELEV. (ft)	INLET CONTROL DEPTH (ft)	OUTLET CONTROL DEPTH (ft)	FLOW TYPE <F4>	NORMAL DEPTH (ft)	CRIT. DEPTH (ft)	OUTLET DEPTH (ft)	TW DEPTH (ft)	OUTLET VEL. (fps)	TW VEL. (fps)
0.00	2378.77	0.00	0.00	0-NF	0.00	0.00	0.00	-0.22	0.00	0.00
2.00	2379.44	0.67	0.67	1-S2n	0.37	0.42	0.32	0.16	5.45	1.36
4.00	2379.62	0.85	0.85	1-S2n	0.52	0.62	0.42	0.27	6.41	1.62
6.00	2379.80	1.03	1.03	1-S2n	0.65	0.76	0.56	0.35	6.59	1.79
8.00	2379.96	1.19	1.19	1-S2n	0.75	0.89	0.69	0.41	6.46	1.93
10.00	2380.12	1.35	1.35	1-S2n	0.85	0.99	0.79	0.47	6.65	2.04
12.00	2380.26	1.49	1.49	1-S2n	0.93	1.09	0.93	0.51	6.44	2.15
14.00	2380.40	1.63	1.63	1-S2n	1.01	1.19	0.89	0.57	7.96	2.30
15.00	2380.47	1.70	1.70	1-S2n	1.05	1.23	0.93	0.59	8.04	2.34
18.00	2380.67	1.90	1.90	1-S2n	1.16	1.35	1.05	0.63	8.13	2.41
20.00	2380.79	2.02	2.02	1-S2n	1.23	1.43	1.13	0.66	8.20	2.48

El. inlet face invert 2378.77 ft El. outlet invert 2376.92 ft
El. inlet throat invert 0.00 ft El. inlet crest 2378.77 ft

***** SITE DATA ***** CULVERT INVERT **********

INLET STATION	0.00 ft
INLET ELEVATION	2378.77 ft
OUTLET STATION	75.80 ft
OUTLET ELEVATION	2376.92 ft
NUMBER OF BARRELS	1
SLOPE (V/H)	0.0244
CULVERT LENGTH ALONG SLOPE	75.82 ft

***** CULVERT DATA SUMMARY **********

BARREL SHAPE	CIRCULAR
BARREL DIAMETER	3.00 ft
BARREL MATERIAL	CORRUGATED STEEL
BARREL MANNING'S n	0.024
INLET TYPE	CONVENTIONAL
INLET EDGE AND WALL	SQUARE EDGE WITH HEADWALL
INLET DEPRESSION	NONE

CURRENT DATE: 03-21-2007 FILE DATE: 3/21/2007
CURRENT TIME: 09:47:57 FILE NAME: Culv29

ÄÄÄ
ÄÄÄÄÄÄÄÄÄÄÄÄÄÄÄÄÄÄÄÄÄÄÄÄÄÄ TAILWATER ÄÄÄÄÄÄÄÄÄÄÄÄÄÄÄÄÄÄÄÄÄÄÄÄÄÄ
ÄÄÄ

***** USER DEFINED CHANNEL CROSS-SECTION FILE NAME: Culv29
MAIN CHANNEL AND LT & RT OVER BANKS FILE DATE: 5/28/2005

LEFT CHANNEL BOUNDARY	3
RIGHT CHANNEL BOUNDARY	7
MANNING n LEFT OVER BANK	0.055
MANNING n MAIN CHANNEL	0.050
MANNING n RIGHT OVER BANK	0.060
SLOPE OF CHANNEL	0.0196 ft/ft

CROSS-SECTION COORD. NO.	X (ft)	Y (ft)
1	0.00	2382.00
2	9.50	2380.80
3	35.30	2378.80
4	54.00	2377.40
5	60.80	2376.70
6	76.30	2378.10
7	92.10	2379.30
8	107.60	2380.50

******* UNIFORM FLOW RATING CURVE FOR DOWNSTREAM CHANNEL

FLOW (cfs)	W.S.E. (ft)	FROUDE NUMBER	DEPTH (ft)	VEL. (f/s)	SHEAR (psf)
0.00	2376.70	0.000	-0.22	0.00	0.00
2.00	2377.08	0.553	0.16	1.36	0.23
4.00	2377.19	0.578	0.27	1.62	0.30
6.00	2377.27	0.593	0.35	1.79	0.35
8.00	2377.33	0.603	0.41	1.93	0.39
10.00	2377.39	0.612	0.47	2.04	0.42
12.00	2377.43	0.629	0.51	2.15	0.44
14.00	2377.49	0.653	0.57	2.30	0.48
15.00	2377.51	0.659	0.59	2.34	0.49
18.00	2377.54	0.670	0.63	2.41	0.50
20.00	2377.58	0.679	0.66	2.48	0.52

Note: Shear stress was calculated using R.

ÄÄÄ
ÄÄÄÄÄÄÄÄÄÄÄÄÄÄÄÄÄÄÄÄÄÄÄÄÄÄ ROADWAY OVERTOPPING DATA ÄÄÄÄÄÄÄÄÄÄÄÄÄÄÄÄÄÄÄÄÄÄÄÄÄÄ
ÄÄÄ

ROADWAY SURFACE	PAVED
EMBANKMENT TOP WIDTH	24.00 ft

***** USER DEFINED ROADWAY PROFILE

CROSS-SECTION COORD. NO.	X ft	Y ft
1	0.00	2383.49
2	22.50	2383.00
3	38.70	2382.68
4	54.70	2382.40
5	63.20	2382.60

ÄÄÄ

CURRENT DATE: 03-21-2007 FILE DATE: 3/21/2007
CURRENT TIME: 10:15:04 FILE NAME: Culv30

FHWA CULVERT ANALYSIS
HY-8, VERSION 6.1

C U L V NO.	SITE DATA INLET ELEV. (ft)	OUTLET ELEV. (ft)	CULVERT LENGTH (ft)	CULVERT SHAPE, MATERIAL, INLET BARRELS SHAPE MATERIAL	SPAN (ft)	RISE (ft)	MANNING n	INLET TYPE
1	2485.92	2484.33	54.02	2 CSP	2.00	2.00	.024	CONVENTIONAL
2	2485.95	2484.85	54.01	1 CSP	2.00	2.00	.024	CONVENTIONAL
3								
4								
5								
6								

SUMMARY OF CULVERT FLOWS (cfs) FILE: Culv30 DATE: 3/21/2007

ELEV (ft)	TOTAL	1	2	3	4	5	6	ROADWAY	ITR
2485.92	0.0	0.0	0.0	0.0	0.0	0.0	0.0	0.00	0
2486.85	10.0	6.9	3.2	0.0	0.0	0.0	0.0	0.00	3
2487.31	20.0	13.5	6.5	0.0	0.0	0.0	0.0	0.00	3
2487.54	25.0	16.9	8.3	0.0	0.0	0.0	0.0	0.00	2
2488.20	40.0	27.0	13.2	0.0	0.0	0.0	0.0	0.00	3
2488.70	50.0	33.3	16.5	0.0	0.0	0.0	0.0	0.00	6
2489.04	60.0	37.0	18.3	0.0	0.0	0.0	0.0	4.13	7
2489.18	70.0	38.4	19.0	0.0	0.0	0.0	0.0	11.87	5
2489.29	80.0	39.5	19.6	0.0	0.0	0.0	0.0	20.39	5
2489.39	90.0	40.0	20.0	0.0	0.0	0.0	0.0	29.32	5
2489.47	100.0	40.0	20.4	0.0	0.0	0.0	0.0	38.84	5
2488.80	51.3	34.4	17.0	0.0	0.0	0.0	0.0	OVERTOPPING	

SUMMARY OF ITERATIVE SOLUTION ERRORS FILE: Culv30 DATE: 3/21/2007

HEAD ELEV (ft)	HEAD ERROR (ft)	TOTAL FLOW (cfs)	FLOW ERROR (cfs)	% FLOW ERROR
2485.92	0.000	0.00	0.00	0.00
2486.85	0.002	10.00	-0.05	-0.50
2487.31	0.000	20.00	0.00	0.00
2487.54	0.010	25.00	-0.22	-0.88
2488.20	0.008	40.00	-0.18	-0.45
2488.70	-0.006	50.00	0.26	0.52
2489.04	-0.005	60.00	0.56	0.93
2489.18	-0.009	70.00	0.68	0.97
2489.29	-0.007	80.00	0.56	0.70
2489.39	-0.006	90.00	0.66	0.73
2489.47	-0.006	100.00	0.75	0.75

<1> TOLERANCE (ft) = 0.010 <2> TOLERANCE (%) = 1.000

CURRENT DATE: 03-21-2007 FILE DATE: 3/21/2007
CURRENT TIME: 10:15:04 FILE NAME: Culv30

PERFORMANCE CURVE FOR CULVERT 1 - 2(2.00 (ft) BY 2.00 (ft)) CSP

DIS-CHARGE FLOW (cfs)	HEAD-WATER ELEV. (ft)	INLET CONTROL DEPTH (ft)	OUTLET CONTROL DEPTH (ft)	FLOW TYPE <F4>	NORMAL DEPTH (ft)	CRIT. DEPTH (ft)	OUTLET DEPTH (ft)	TW DEPTH (ft)	OUTLET VEL. (fps)	TW VEL. (fps)
0.00	2485.92	0.00	0.00	0-NF	0.00	0.00	0.00	0.47	0.00	0.00
6.87	2486.86	0.94	0.94	1-S2n	0.54	0.64	0.44	1.15	6.75	1.98
13.53	2487.31	1.39	1.39	1-S2n	0.78	0.92	0.72	1.37	6.66	2.72
16.94	2487.53	1.61	1.61	1-S2n	0.88	1.03	0.87	1.42	6.41	2.89
26.96	2488.19	2.27	2.27	5-S2n	1.16	1.32	1.16	1.52	7.16	3.18
33.29	2488.70	2.78	2.78	5-S2n	1.34	1.47	1.27	1.61	7.95	3.42
37.01	2489.04	3.12	3.12	5-S2n	1.46	1.54	1.34	1.69	8.25	3.62
38.43	2489.18	3.26	3.26	5-S2n	1.51	1.57	1.37	1.76	8.36	3.80
39.48	2489.29	3.37	3.37	5-S2n	1.54	1.60	1.54	1.83	7.64	3.96
40.00	2489.34	3.42	3.42	5-S2n	1.56	1.60	1.50	1.89	7.91	4.10
40.00	2489.34	3.42	3.42	5-S2n	1.56	1.60	1.50	1.95	7.91	4.23

El. inlet face invert 2485.92 ft El. outlet invert 2484.33 ft
El. inlet throat invert 0.00 ft El. inlet crest 2485.92 ft

***** SITE DATA ***** CULVERT INVERT **********

INLET STATION	0.00 ft
INLET ELEVATION	2485.92 ft
OUTLET STATION	54.00 ft
OUTLET ELEVATION	2484.33 ft
NUMBER OF BARRELS	2
SLOPE (V/H)	0.0294
CULVERT LENGTH ALONG SLOPE	54.02 ft

***** CULVERT DATA SUMMARY **********

BARREL SHAPE	CIRCULAR
BARREL DIAMETER	2.00 ft
BARREL MATERIAL	CORRUGATED STEEL
BARREL MANNING'S n	0.024
INLET TYPE	CONVENTIONAL
INLET EDGE AND WALL	THIN EDGE PROJECTING
INLET DEPRESSION	NONE

CURRENT DATE: 03-21-2007 FILE DATE: 3/21/2007
CURRENT TIME: 10:15:04 FILE NAME: Culv30

PERFORMANCE CURVE FOR CULVERT 2 - 1(2.00 (ft) BY 2.00 (ft)) CSP

DIS-CHARGE FLOW (cfs)	HEAD-WATER ELEV. (ft)	INLET CONTROL DEPTH (ft)	OUTLET CONTROL DEPTH (ft)	FLOW TYPE <F4>	NORMAL DEPTH (ft)	CRIT. DEPTH (ft)	OUTLET DEPTH (ft)	TW DEPTH (ft)	OUTLET VEL. (fps)	TW VEL. (fps)
0.00	2485.95	0.00	0.00	0-NF	0.00	0.00	0.00	-0.05	0.00	0.00
3.19	2486.86	0.91	0.91	1-S2n	0.57	0.62	0.52	0.63	4.86	1.98
6.47	2487.32	1.37	1.37	1-S2n	0.84	0.90	0.70	0.85	6.63	2.72
8.27	2487.54	1.59	1.59	1-S2n	0.97	1.02	0.82	0.90	6.80	2.89
13.22	2488.20	2.25	2.25	5-S2n	1.30	1.30	1.20	1.00	6.69	3.18
16.45	2488.70	2.75	2.72	2-M2c	1.54	1.46	1.46	1.09	6.72	3.42
18.30	2489.04	3.09	2.92	2-M2c	1.75	1.54	1.54	1.17	7.09	3.62
19.02	2489.18	3.23	3.01	2-M2c	2.00	1.57	1.57	1.24	7.22	3.80
19.57	2489.29	3.34	3.10	2-M2c	2.00	1.59	1.59	1.31	7.32	3.96
20.02	2489.39	3.44	2.80	2-M2c	2.00	1.61	1.61	1.37	7.40	4.10
20.40	2489.47	3.52	3.00	2-M2c	2.00	1.62	1.62	1.43	7.49	4.23

El. inlet face invert 2485.95 ft El. outlet invert 2484.85 ft
El. inlet throat invert 0.00 ft El. inlet crest 2485.95 ft

***** SITE DATA ***** CULVERT INVERT **********

INLET STATION	0.00 ft
INLET ELEVATION	2485.95 ft
OUTLET STATION	54.00 ft
OUTLET ELEVATION	2484.85 ft
NUMBER OF BARRELS	1
SLOPE (V/H)	0.0204
CULVERT LENGTH ALONG SLOPE	54.01 ft

***** CULVERT DATA SUMMARY **********

BARREL SHAPE	CIRCULAR
BARREL DIAMETER	2.00 ft
BARREL MATERIAL	CORRUGATED STEEL
BARREL MANNING'S n	0.024
INLET TYPE	CONVENTIONAL
INLET EDGE AND WALL	THIN EDGE PROJECTING
INLET DEPRESSION	NONE

CURRENT DATE: 03-21-2007 FILE DATE: 3/21/2007
CURRENT TIME: 10:15:04 FILE NAME: Culv30

ÄÄ
ÄÄÄÄÄÄÄÄÄÄÄÄÄÄÄÄÄÄÄÄÄÄÄÄÄÄ TAILWATER ÄÄÄÄÄÄÄÄÄÄÄÄÄÄÄÄÄÄÄÄÄÄÄÄÄÄ
ÄÄ

***** USER DEFINED CHANNEL CROSS-SECTION FILE NAME: Culv30
MAIN CHANNEL AND LT & RT OVER BANKS FILE DATE: 4/22/2005
LEFT CHANNEL BOUNDARY 3
RIGHT CHANNEL BOUNDARY 6
MANNING n LEFT OVER BANK 0.030
MANNING n MAIN CHANNEL 0.045
MANNING n RIGHT OVER BANK 0.040
SLOPE OF CHANNEL 0.0154 ft/ft

CROSS-SECTION COORD. NO.	X (ft)	Y (ft)
1	0.00	2489.00
2	24.80	2488.70
3	46.10	2485.20
4	48.10	2484.80
5	50.80	2485.20
6	61.90	2485.30
7	62.60	2485.60
8	83.20	2487.90

******* UNIFORM FLOW RATING CURVE FOR DOWNSTREAM CHANNEL

FLOW (cfs)	W.S.E. (ft)	FROUDE NUMBER	DEPTH (ft)	VEL. (f/s)	SHEAR (psf)
0.00	2484.80	0.000	0.47	0.00	0.00
10.00	2485.48	0.721	1.15	1.98	0.27
20.00	2485.70	0.740	1.37	2.72	0.43
25.00	2485.75	0.754	1.42	2.89	0.47
40.00	2485.85	0.777	1.52	3.18	0.53
50.00	2485.94	0.796	1.61	3.42	0.58
60.00	2486.02	0.811	1.69	3.62	0.63
70.00	2486.09	0.825	1.76	3.80	0.67
80.00	2486.16	0.837	1.83	3.96	0.71
90.00	2486.22	0.847	1.89	4.10	0.75
100.00	2486.28	0.856	1.95	4.23	0.78

Note: Shear stress was calculated using R.

ÄÄ
ÄÄÄÄÄÄÄÄÄÄÄÄÄÄÄÄÄÄÄÄÄÄÄÄÄÄ ROADWAY OVERTOPPING DATA ÄÄÄÄÄÄÄÄÄÄÄÄÄÄÄÄÄÄÄÄÄÄÄÄÄÄ
ÄÄ

ROADWAY SURFACE PAVED
EMBANKMENT TOP WIDTH 22.00 ft
***** USER DEFINED ROADWAY PROFILE

CROSS-SECTION COORD. NO.	X ft	Y ft
1	0.00	2491.20
2	27.90	2489.00
3	51.70	2488.80
4	47.10	2489.20
5	64.20	2490.00
6	77.80	2490.10
7	92.20	2489.90
8	101.40	2490.20
9	109.00	2490.40
10	124.70	2490.90
11	148.60	2491.50

ÄÄ

CURRENT DATE: 03-21-2007 FILE DATE: 3/21/2007
CURRENT TIME: 10:16:07 FILE NAME: Culv31

FHWA CULVERT ANALYSIS
HY-8, VERSION 6.1

CULV NO.	SITE DATA: INLET ELEV. (ft)	OUTLET ELEV. (ft)	CULVERT LENGTH (ft)	CULVERT SHAPE, MATERIAL, INLET: BARRELS SHAPE MATERIAL	SPAN (ft)	RISE (ft)	MANNING n	INLET TYPE
1	2375.76	2373.89	66.03	1 CSP	2.50	2.50	.024	CONVENTIONAL
2								
3								
4								
5								
6								

SUMMARY OF CULVERT FLOWS (cfs) FILE: Culv31 DATE: 3/21/2007

ELEV (ft)	TOTAL	1	2	3	4	5	6	ROADWAY	ITR
2375.76	0.0	0.0	0.0	0.0	0.0	0.0	0.0	0.00	1
2377.54	14.0	14.0	0.0	0.0	0.0	0.0	0.0	0.00	1
2378.56	28.0	28.0	0.0	0.0	0.0	0.0	0.0	0.00	1
2379.92	42.0	41.3	0.0	0.0	0.0	0.0	0.0	0.26	27
2380.14	56.0	43.1	0.0	0.0	0.0	0.0	0.0	12.47	9
2380.25	70.0	43.9	0.0	0.0	0.0	0.0	0.0	25.54	7
2380.34	84.0	44.7	0.0	0.0	0.0	0.0	0.0	38.85	6
2380.41	98.0	45.2	0.0	0.0	0.0	0.0	0.0	52.37	5
2380.42	100.0	45.2	0.0	0.0	0.0	0.0	0.0	54.27	3
2380.53	126.0	45.2	0.0	0.0	0.0	0.0	0.0	79.74	4
2380.58	140.0	44.6	0.0	0.0	0.0	0.0	0.0	94.86	4
2379.87	40.9	40.9	0.0	0.0	0.0	0.0	0.0	OVERTOPPING	

SUMMARY OF ITERATIVE SOLUTION ERRORS FILE: Culv31 DATE: 3/21/2007

HEAD ELEV (ft)	HEAD ERROR (ft)	TOTAL FLOW (cfs)	FLOW ERROR (cfs)	% FLOW ERROR
2375.76	0.000	0.00	0.00	0.00
2377.54	0.000	14.00	0.00	0.00
2378.56	0.000	28.00	0.00	0.00
2379.92	-0.003	42.00	0.40	0.95
2380.14	-0.003	56.00	0.47	0.84
2380.25	-0.003	70.00	0.52	0.74
2380.34	-0.003	84.00	0.50	0.60
2380.41	-0.003	98.00	0.46	0.47
2380.42	-0.003	100.00	0.49	0.49
2380.53	-0.009	126.00	1.10	0.87
2380.58	-0.005	140.00	0.53	0.38

<1> TOLERANCE (ft) = 0.010 <2> TOLERANCE (%) = 1.000

CURRENT DATE: 03-21-2007 FILE DATE: 3/21/2007
CURRENT TIME: 10:16:07 FILE NAME: Culv31

PERFORMANCE CURVE FOR CULVERT 1 - 1(2.50 (ft) BY 2.50 (ft)) CSP

DIS-CHARGE FLOW (cfs)	HEAD-WATER ELEV. (ft)	INLET CONTROL DEPTH (ft)	OUTLET CONTROL DEPTH (ft)	FLOW TYPE <F4>	NORMAL DEPTH (ft)	CRIT. DEPTH (ft)	OUTLET DEPTH (ft)	TW DEPTH (ft)	OUTLET VEL. (fps)	TW VEL. (fps)
0.00	2375.76	0.00	0.00	0-NF	0.00	0.00	0.00	0.01	0.00	0.00
14.00	2377.54	1.78	1.78	1-S2n	1.06	1.26	0.96	1.18	8.07	2.11
28.00	2378.56	2.80	2.80	5-S2n	1.61	1.80	1.50	1.47	9.11	2.46
41.34	2379.92	4.16	3.29	2-M2c	2.50	2.14	2.14	1.67	9.27	2.69
43.06	2380.13	4.37	3.94	2-M2c	2.50	2.18	2.18	1.83	9.52	2.86
43.93	2380.24	4.48	4.18	2-M2c	2.50	2.20	2.20	1.97	9.64	3.01
44.65	2380.34	4.58	4.55	2-M2c	2.50	2.21	2.21	2.08	9.74	3.14
45.17	2380.41	4.65	4.65	2-M2c	2.50	2.22	2.22	2.20	9.81	3.27
45.24	2380.42	4.66	4.54	3-M2t	2.50	2.22	2.28	2.28	9.61	3.36
45.15	2380.52	4.64	4.76	3-M2t	2.50	2.22	2.37	2.37	9.46	3.45
44.61	2380.58	4.57	4.82	3-M2t	2.50	2.21	2.45	2.45	9.19	3.54

El. inlet face invert 2375.76 ft El. outlet invert 2373.89 ft
El. inlet throat invert 0.00 ft El. inlet crest 2375.76 ft

***** SITE DATA ***** CULVERT INVERT **********

INLET STATION	0.00 ft
INLET ELEVATION	2375.76 ft
OUTLET STATION	66.00 ft
OUTLET ELEVATION	2373.89 ft
NUMBER OF BARRELS	1
SLOPE (V/H)	0.0283
CULVERT LENGTH ALONG SLOPE	66.03 ft

***** CULVERT DATA SUMMARY **********

BARREL SHAPE	CIRCULAR
BARREL DIAMETER	2.50 ft
BARREL MATERIAL	CORRUGATED STEEL
BARREL MANNING'S n	0.024
INLET TYPE	CONVENTIONAL
INLET EDGE AND WALL	BEVELED EDGE (1:1)
INLET DEPRESSION	NONE

CURRENT DATE: 03-21-2007 FILE DATE: 3/21/2007
CURRENT TIME: 10:16:07 FILE NAME: Culv31

ÄÄ
ÄÄÄÄÄÄÄÄÄÄÄÄÄÄÄÄÄÄÄÄÄÄÄÄÄÄ TAILWATER ÄÄÄÄÄÄÄÄÄÄÄÄÄÄÄÄÄÄÄÄÄÄÄÄÄÄ
ÄÄ

***** USER DEFINED CHANNEL CROSS-SECTION FILE NAME: Culv31
MAIN CHANNEL AND LT & RT OVER BANKS FILE DATE: 5/28/2005

LEFT CHANNEL BOUNDARY	3
RIGHT CHANNEL BOUNDARY	7
MANNING n LEFT OVER BANK	0.060
MANNING n MAIN CHANNEL	0.065
MANNING n RIGHT OVER BANK	0.065
SLOPE OF CHANNEL	0.0224 ft/ft

CROSS-SECTION COORD. NO.	X (ft)	Y (ft)
1	0.00	2379.50
2	29.40	2379.40
3	61.40	2375.40
4	66.50	2374.40
5	68.80	2373.90
6	71.20	2374.60
7	98.40	2376.80
8	121.90	2378.70

******* UNIFORM FLOW RATING CURVE FOR DOWNSTREAM CHANNEL

FLOW (cfs)	W.S.E. (ft)	FROUDE NUMBER	DEPTH (ft)	VEL. (f/s)	SHEAR (psf)
0.00	2373.90	0.000	0.01	0.00	0.00
14.00	2375.07	0.545	1.18	2.11	0.66
28.00	2375.36	0.562	1.47	2.46	0.84
42.00	2375.56	0.576	1.67	2.69	0.95
56.00	2375.72	0.586	1.83	2.86	1.04
70.00	2375.86	0.594	1.97	3.01	1.12
84.00	2375.97	0.600	2.08	3.14	1.19
98.00	2376.09	0.607	2.20	3.27	1.27
100.00	2376.17	0.611	2.28	3.36	1.32
126.00	2376.26	0.615	2.37	3.45	1.37
140.00	2376.34	0.619	2.45	3.54	1.43

Note: Shear stress was calculated using R.

ÄÄ
ÄÄÄÄÄÄÄÄÄÄÄÄÄÄÄÄÄÄÄÄÄÄÄÄÄÄ ROADWAY OVERTOPPING DATA ÄÄÄÄÄÄÄÄÄÄÄÄÄÄÄÄÄÄÄÄÄÄÄÄÄÄ
ÄÄ

ROADWAY SURFACE	PAVED
EMBANKMENT TOP WIDTH	24.00 ft

***** USER DEFINED ROADWAY PROFILE

CROSS-SECTION COORD. NO.	X ft	Y ft
1	0.00	2380.50
2	8.20	2380.03
3	32.30	2379.91
4	49.70	2379.87
5	62.60	2380.29
6	93.40	2380.39

ÄÄ

CURRENT DATE: 03-21-2007 FILE DATE: 3/21/2007
CURRENT TIME: 10:17:02 FILE NAME: Culv32

FHWA CULVERT ANALYSIS
HY-8, VERSION 6.1

C U L V NO.	SITE DATA INLET ELEV. (ft)	OUTLET ELEV. (ft)	CULVERT LENGTH (ft)	CULVERT SHAPE, MATERIAL, INLET BARRELS SHAPE MATERIAL	SPAN (ft)	RISE (ft)	MANNING n	INLET TYPE
1	2374.78	2374.04	80.40	4 CSP	2.50	2.50	.024	CONVENTIONAL
2								
3								
4								
5								
6								

SUMMARY OF CULVERT FLOWS (cfs) FILE: Culv32 DATE: 3/21/2007

ELEV (ft)	TOTAL	1	2	3	4	5	6	ROADWAY	ITR
2374.78	0.0	0.0	0.0	0.0	0.0	0.0	0.0	0.00	1
2375.52	10.0	10.0	0.0	0.0	0.0	0.0	0.0	0.00	1
2375.84	20.0	20.0	0.0	0.0	0.0	0.0	0.0	0.00	1
2376.09	30.0	30.0	0.0	0.0	0.0	0.0	0.0	0.00	1
2376.32	40.0	40.0	0.0	0.0	0.0	0.0	0.0	0.00	1
2376.54	50.0	50.0	0.0	0.0	0.0	0.0	0.0	0.00	1
2376.72	60.0	60.0	0.0	0.0	0.0	0.0	0.0	0.00	1
2376.94	70.0	70.0	0.0	0.0	0.0	0.0	0.0	0.00	1
2377.14	80.0	80.0	0.0	0.0	0.0	0.0	0.0	0.00	1
2377.34	90.0	90.0	0.0	0.0	0.0	0.0	0.0	0.00	1
2377.58	100.0	100.0	0.0	0.0	0.0	0.0	0.0	0.00	1
2378.77	132.6	132.6	0.0	0.0	0.0	0.0	0.0	OVERTOPPING	

SUMMARY OF ITERATIVE SOLUTION ERRORS FILE: Culv32 DATE: 3/21/2007

HEAD ELEV (ft)	HEAD ERROR (ft)	TOTAL FLOW (cfs)	FLOW ERROR (cfs)	% FLOW ERROR
2374.78	0.000	0.00	0.00	0.00
2375.52	0.000	10.00	0.00	0.00
2375.84	0.000	20.00	0.00	0.00
2376.09	0.000	30.00	0.00	0.00
2376.32	0.000	40.00	0.00	0.00
2376.54	0.000	50.00	0.00	0.00
2376.72	0.000	60.00	0.00	0.00
2376.94	0.000	70.00	0.00	0.00
2377.14	0.000	80.00	0.00	0.00
2377.34	0.000	90.00	0.00	0.00
2377.58	0.000	100.00	0.00	0.00

<1> TOLERANCE (ft) = 0.010 <2> TOLERANCE (%) = 1.000

CURRENT DATE: 03-21-2007 FILE DATE: 3/21/2007
CURRENT TIME: 10:17:02 FILE NAME: Culv32

PERFORMANCE CURVE FOR CULVERT 1 - 4(2.50 (ft) BY 2.50 (ft)) CSP

DIS-CHARGE FLOW (cfs)	HEAD-WATER ELEV. (ft)	INLET CONTROL DEPTH (ft)	OUTLET CONTROL DEPTH (ft)	FLOW TYPE <F4>	NORMAL DEPTH (ft)	CRIT. DEPTH (ft)	OUTLET DEPTH (ft)	TW DEPTH (ft)	OUTLET VEL. (fps)	TW VEL. (fps)
0.00	2374.78	0.00	0.00	0-NF	0.00	0.00	0.00	%-1096.64	0.00	0.00
10.00	2375.52	0.58	0.74	2-M2c	0.57	0.51	0.51	%-1070.64	3.46	1.13
20.00	2375.84	0.94	1.06	2-M2c	0.82	0.74	0.74	%-1062.92	4.14	1.35
30.00	2376.09	1.23	1.31	2-M2c	1.02	0.90	0.90	%-1057.38	4.69	1.49
40.00	2376.32	1.48	1.54	2-M2c	1.20	1.05	1.05	%-1052.91	5.09	1.60
50.00	2376.54	1.69	1.76	2-M2c	1.37	1.18	1.18	%-1049.09	5.47	1.70
60.00	2376.72	1.88	1.94	2-M2c	1.55	1.30	1.30	%-1045.73	5.81	1.77
70.00	2376.94	2.06	2.16	2-M2c	1.72	1.41	1.41	%-1042.70	6.13	1.84
80.00	2377.14	2.23	2.36	2-M2c	1.93	1.52	1.52	%-1039.93	6.42	1.91
90.00	2377.35	2.40	2.57	2-M2c	2.22	1.61	1.61	%-1037.37	6.75	1.96
100.00	2377.58	2.59	2.80	2-M2c	2.50	1.70	1.70	%-1034.97	7.04	2.02

El. inlet face invert 2374.78 ft El. outlet invert 2374.04 ft
El. inlet throat invert 0.00 ft El. inlet crest 2374.78 ft

***** SITE DATA ***** CULVERT INVERT **********

INLET STATION	0.00 ft
INLET ELEVATION	2374.78 ft
OUTLET STATION	80.40 ft
OUTLET ELEVATION	2374.04 ft
NUMBER OF BARRELS	4
SLOPE (V/H)	0.0092
CULVERT LENGTH ALONG SLOPE	80.40 ft

***** CULVERT DATA SUMMARY **********

BARREL SHAPE	CIRCULAR
BARREL DIAMETER	2.50 ft
BARREL MATERIAL	CORRUGATED STEEL
BARREL MANNING'S n	0.024
INLET TYPE	CONVENTIONAL
INLET EDGE AND WALL	BEVELED EDGE (1:1)
INLET DEPRESSION	NONE

CURRENT DATE: 03-21-2007 FILE DATE: 3/21/2007
CURRENT TIME: 10:17:02 FILE NAME: Culv32

ÄÄ
ÄÄÄÄÄÄÄÄÄÄÄÄÄÄÄÄÄÄÄÄÄÄÄÄÄÄ TAILWATER ÄÄÄÄÄÄÄÄÄÄÄÄÄÄÄÄÄÄÄÄÄÄÄÄÄÄ
ÄÄ

***** USER DEFINED CHANNEL CROSS-SECTION FILE NAME: Culv32
MAIN CHANNEL AND LT & RT OVER BANKS FILE DATE: 5/31/2005
LEFT CHANNEL BOUNDARY 3
RIGHT CHANNEL BOUNDARY 7
MANNING n LEFT OVER BANK 0.060
MANNING n MAIN CHANNEL 0.070
MANNING n RIGHT OVER BANK 0.070
SLOPE OF CHANNEL 0.0304 ft/ft

CROSS-SECTION COORD. NO.	X (ft)	Y (ft)
1	0.00	2377.50
2	46.00	2375.20
3	61.50	2374.50
4	62.60	2374.10
5	65.10	2374.00
6	66.80	2374.10
7	77.70	1277.40
8	95.50	2379.30

******* UNIFORM FLOW RATING CURVE FOR DOWNSTREAM CHANNEL

FLOW (cfs)	W.S.E. (ft)	FROUDE NUMBER	DEPTH (ft)	VEL. (f/s)	SHEAR (psf)
0.00	1277.40	0.000	%-1096.64	0.00	0.00
10.00	1303.40	0.055	%-1070.64	1.13	24.67
20.00	1311.12	0.058	%-1062.92	1.35	31.98
30.00	1316.66	0.059	%-1057.38	1.49	37.23
40.00	1321.13	0.060	%-1052.91	1.60	41.48
50.00	1324.95	0.061	%-1049.09	1.70	45.10
60.00	1328.31	0.062	%-1045.73	1.77	48.28
70.00	1331.34	0.063	%-1042.70	1.84	51.16
80.00	1334.11	0.063	%-1039.93	1.91	53.78
90.00	1336.67	0.064	%-1037.37	1.96	56.21
100.00	1339.07	0.064	%-1034.97	2.02	58.49

Note: Shear stress was calculated using R.

ÄÄ
ÄÄÄÄÄÄÄÄÄÄÄÄÄÄÄÄÄÄÄÄÄÄÄÄÄÄ ROADWAY OVERTOPPING DATA ÄÄÄÄÄÄÄÄÄÄÄÄÄÄÄÄÄÄÄÄÄÄÄÄÄÄ
ÄÄ

ROADWAY SURFACE PAVED
EMBANKMENT TOP WIDTH 24.00 ft
***** USER DEFINED ROADWAY PROFILE

CROSS-SECTION COORD. NO.	X ft	Y ft
1	0.00	2379.76
2	22.30	2379.50
3	37.70	2379.88
4	48.00	2379.39
5	69.80	2379.61
6	103.90	2378.77

ÄÄ

CURRENT DATE: 03-21-2007 FILE DATE: 3/21/2007
CURRENT TIME: 10:18:32 FILE NAME: Culv33

FHWA CULVERT ANALYSIS
HY-8, VERSION 6.1

CULVERT NO.	SITE DATA: INLET ELEV. (ft)	OUTLET ELEV. (ft)	CULVERT LENGTH (ft)	CULVERT SHAPE, MATERIAL, INLET: BARRELS / SHAPE / MATERIAL	SPAN (ft)	RISE (ft)	MANNING n	INLET TYPE
1	2369.42	2368.57	80.80	4 CSP	2.50	2.50	.024	CONVENTIONAL
2								
3								
4								
5								
6								

SUMMARY OF CULVERT FLOWS (cfs) FILE: Culv33 DATE: 3/21/2007

ELEV (ft)	TOTAL	1	2	3	4	5	6	ROADWAY	ITR
2369.42	0.0	0.0	0.0	0.0	0.0	0.0	0.0	0.00	1
2370.11	9.0	9.0	0.0	0.0	0.0	0.0	0.0	0.00	1
2370.43	18.0	18.0	0.0	0.0	0.0	0.0	0.0	0.00	1
2370.66	27.0	27.0	0.0	0.0	0.0	0.0	0.0	0.00	1
2370.87	36.0	36.0	0.0	0.0	0.0	0.0	0.0	0.00	1
2371.06	45.0	45.0	0.0	0.0	0.0	0.0	0.0	0.00	1
2371.24	54.0	54.0	0.0	0.0	0.0	0.0	0.0	0.00	1
2371.36	60.0	60.0	0.0	0.0	0.0	0.0	0.0	0.00	1
2371.58	72.0	72.0	0.0	0.0	0.0	0.0	0.0	0.00	1
2371.77	81.0	81.0	0.0	0.0	0.0	0.0	0.0	0.00	1
2371.94	90.0	90.0	0.0	0.0	0.0	0.0	0.0	0.00	1
2373.33	134.3	134.3	0.0	0.0	0.0	0.0	0.0	OVERTOPPING	

SUMMARY OF ITERATIVE SOLUTION ERRORS FILE: Culv33 DATE: 3/21/2007

HEAD ELEV (ft)	HEAD ERROR (ft)	TOTAL FLOW (cfs)	FLOW ERROR (cfs)	% FLOW ERROR
2369.42	0.000	0.00	0.00	0.00
2370.11	0.000	9.00	0.00	0.00
2370.43	0.000	18.00	0.00	0.00
2370.66	0.000	27.00	0.00	0.00
2370.87	0.000	36.00	0.00	0.00
2371.06	0.000	45.00	0.00	0.00
2371.24	0.000	54.00	0.00	0.00
2371.36	0.000	60.00	0.00	0.00
2371.58	0.000	72.00	0.00	0.00
2371.77	0.000	81.00	0.00	0.00
2371.94	0.000	90.00	0.00	0.00

<1> TOLERANCE (ft) = 0.010 <2> TOLERANCE (%) = 1.000

CURRENT DATE: 03-21-2007 FILE DATE: 3/21/2007
CURRENT TIME: 10:18:32 FILE NAME: Culv33

PERFORMANCE CURVE FOR CULVERT 1 - 4(2.50 (ft) BY 2.50 (ft)) CSP

DIS-CHARGE FLOW (cfs)	HEAD-WATER ELEV. (ft)	INLET CONTROL DEPTH (ft)	OUTLET CONTROL DEPTH (ft)	FLOW TYPE <F4>	NORMAL DEPTH (ft)	CRIT. DEPTH (ft)	OUTLET DEPTH (ft)	TW DEPTH (ft)	OUTLET VEL. (fps)	TW VEL. (fps)
0.00	2369.42	0.00	0.00	0-NF	0.00	0.00	0.00	-0.87	0.00	0.00
9.00	2370.11	0.54	0.69	2-M2c	0.53	0.49	0.49	-0.38	3.33	2.42
18.00	2370.43	0.87	1.01	2-M2c	0.75	0.69	0.69	-0.23	4.05	2.88
27.00	2370.66	1.15	1.24	2-M2c	0.93	0.85	0.85	-0.12	4.55	3.19
36.00	2370.87	1.38	1.45	2-M2c	1.09	1.00	1.00	-0.03	4.91	3.36
45.00	2371.06	1.59	1.64	2-M2c	1.24	1.12	1.12	0.04	5.30	3.47
54.00	2371.24	1.77	1.82	2-M2c	1.38	1.23	1.23	0.10	5.59	3.57
60.00	2371.36	1.88	1.94	2-M2c	1.48	1.30	1.30	0.14	5.81	3.63
72.00	2371.58	2.09	2.16	2-M2c	1.68	1.43	1.43	0.21	6.19	3.73
81.00	2371.77	2.24	2.35	2-M2c	1.84	1.53	1.53	0.26	6.45	3.65
90.00	2371.94	2.40	2.52	2-M2c	2.03	1.61	1.61	0.29	6.75	3.73

El. inlet face invert 2369.42 ft El. outlet invert 2368.57 ft
El. inlet throat invert 0.00 ft El. inlet crest 2369.42 ft

***** SITE DATA ***** CULVERT INVERT **********

INLET STATION	0.00 ft
INLET ELEVATION	2369.42 ft
OUTLET STATION	80.80 ft
OUTLET ELEVATION	2368.57 ft
NUMBER OF BARRELS	4
SLOPE (V/H)	0.0105
CULVERT LENGTH ALONG SLOPE	80.80 ft

***** CULVERT DATA SUMMARY **********

BARREL SHAPE	CIRCULAR
BARREL DIAMETER	2.50 ft
BARREL MATERIAL	CORRUGATED STEEL
BARREL MANNING'S n	0.024
INLET TYPE	CONVENTIONAL
INLET EDGE AND WALL	BEVELED EDGE (1:1)
INLET DEPRESSION	NONE

CURRENT DATE: 03-21-2007 FILE DATE: 3/21/2007
CURRENT TIME: 10:18:32 FILE NAME: Culv33

ÄÄÄ
ÄÄÄÄÄÄÄÄÄÄÄÄÄÄÄÄÄÄÄÄÄÄÄÄÄÄ TAILWATER ÄÄÄÄÄÄÄÄÄÄÄÄÄÄÄÄÄÄÄÄÄÄÄÄÄÄ
ÄÄ

***** USER DEFINED CHANNEL CROSS-SECTION FILE NAME: Culv33
MAIN CHANNEL AND LT & RT OVER BANKS FILE DATE: 5/31/2005

LEFT CHANNEL BOUNDARY	3
RIGHT CHANNEL BOUNDARY	7
MANNING n LEFT OVER BANK	0.040
MANNING n MAIN CHANNEL	0.060
MANNING n RIGHT OVER BANK	0.065
SLOPE OF CHANNEL	0.0350 ft/ft

CROSS-SECTION COORD. NO.	X (ft)	Y (ft)
1	0.00	2372.00
2	16.10	2370.50
3	37.30	2368.50
4	53.30	2367.70
5	61.60	2368.50
6	81.10	2368.80
7	91.80	2368.80
8	102.30	2371.70

******* UNIFORM FLOW RATING CURVE FOR DOWNSTREAM CHANNEL

FLOW (cfs)	W.S.E. (ft)	FROUDE NUMBER	DEPTH (ft)	VEL. (f/s)	SHEAR (psf)
0.00	2367.70	0.000	-0.87	0.00	0.00
9.00	2368.19	0.897	-0.38	2.42	0.54
18.00	2368.34	0.937	-0.23	2.88	0.70
27.00	2368.45	0.961	-0.12	3.19	0.82
36.00	2368.54	1.018	-0.03	3.36	0.86
45.00	2368.61	1.094	0.04	3.47	0.86
54.00	2368.67	1.139	0.10	3.57	0.88
60.00	2368.71	1.159	0.14	3.63	0.90
72.00	2368.78	1.186	0.21	3.73	0.93
81.00	2368.83	1.302	0.26	3.65	0.83
90.00	2368.86	1.270	0.29	3.73	0.90

Note: Shear stress was calculated using R.

ÄÄÄ
ÄÄÄÄÄÄÄÄÄÄÄÄÄÄÄÄÄÄÄÄÄÄÄÄÄÄ ROADWAY OVERTOPPING DATA ÄÄÄÄÄÄÄÄÄÄÄÄÄÄÄÄÄÄÄÄÄÄÄÄÄÄ
ÄÄ

ROADWAY SURFACE	PAVED
EMBANKMENT TOP WIDTH	24.00 ft

***** USER DEFINED ROADWAY PROFILE

CROSS-SECTION COORD. NO.	X ft	Y ft
1	0.00	2375.38
2	32.10	2375.01
3	44.50	2374.43
4	64.00	2375.59
5	95.70	2374.19
6	123.60	2373.48
7	149.40	2373.33

ÄÄÄ

CURRENT DATE: 03-21-2007 FILE DATE: 3/21/2007
CURRENT TIME: 10:19:51 FILE NAME: Culv34

FHWA CULVERT ANALYSIS
HY-8, VERSION 6.1

C U L V NO.	SITE DATA INLET ELEV. (ft)	OUTLET ELEV. (ft)	CULVERT LENGTH (ft)	CULVERT SHAPE, MATERIAL, INLET BARRELS SHAPE MATERIAL	SPAN (ft)	RISE (ft)	MANNING n	INLET TYPE
1	2366.60	2365.85	65.80	3 CSP	2.50	2.50	.024	CONVENTIONAL
2								
3								
4								
5								
6								

SUMMARY OF CULVERT FLOWS (cfs) FILE: Culv34 DATE: 3/21/2007

ELEV (ft)	TOTAL	1	2	3	4	5	6	ROADWAY	ITR
2366.60	0.0	0.0	0.0	0.0	0.0	0.0	0.0	0.00	1
2367.12	4.0	4.0	0.0	0.0	0.0	0.0	0.0	0.00	1
2367.35	8.0	8.0	0.0	0.0	0.0	0.0	0.0	0.00	1
2367.53	12.0	12.0	0.0	0.0	0.0	0.0	0.0	0.00	1
2367.69	16.0	16.0	0.0	0.0	0.0	0.0	0.0	0.00	1
2367.83	20.0	20.0	0.0	0.0	0.0	0.0	0.0	0.00	1
2367.96	24.0	24.0	0.0	0.0	0.0	0.0	0.0	0.00	1
2368.08	28.0	28.0	0.0	0.0	0.0	0.0	0.0	0.00	1
2368.14	30.0	30.0	0.0	0.0	0.0	0.0	0.0	0.00	1
2368.29	36.0	36.0	0.0	0.0	0.0	0.0	0.0	0.00	1
2368.41	40.0	40.0	0.0	0.0	0.0	0.0	0.0	0.00	1
2371.36	117.2	117.2	0.0	0.0	0.0	0.0	0.0	OVERTOPPING	

SUMMARY OF ITERATIVE SOLUTION ERRORS FILE: Culv34 DATE: 3/21/2007

HEAD ELEV (ft)	HEAD ERROR (ft)	TOTAL FLOW (cfs)	FLOW ERROR (cfs)	% FLOW ERROR
2366.60	0.000	0.00	0.00	0.00
2367.12	0.000	4.00	0.00	0.00
2367.35	0.000	8.00	0.00	0.00
2367.53	0.000	12.00	0.00	0.00
2367.69	0.000	16.00	0.00	0.00
2367.83	0.000	20.00	0.00	0.00
2367.96	0.000	24.00	0.00	0.00
2368.08	0.000	28.00	0.00	0.00
2368.14	0.000	30.00	0.00	0.00
2368.29	0.000	36.00	0.00	0.00
2368.41	0.000	40.00	0.00	0.00

<1> TOLERANCE (ft) = 0.010 <2> TOLERANCE (%) = 1.000

CURRENT DATE: 03-21-2007 FILE DATE: 3/21/2007
CURRENT TIME: 10:19:51 FILE NAME: Culv34

PERFORMANCE CURVE FOR CULVERT 1 - 3(2.50 (ft) BY 2.50 (ft)) CSP

DIS-CHARGE FLOW (cfs)	HEAD-WATER ELEV. (ft)	INLET CONTROL DEPTH (ft)	OUTLET CONTROL DEPTH (ft)	FLOW TYPE <F4>	NORMAL DEPTH (ft)	CRIT. DEPTH (ft)	OUTLET DEPTH (ft)	TW DEPTH (ft)	OUTLET VEL. (fps)	TW VEL. (fps)
0.00	2366.60	0.00	0.00	0-NF	0.00	0.00	0.00	-0.05	0.00	0.00
4.00	2367.12	0.39	0.52	3-M1t	0.38	0.36	0.51	0.51	1.85	1.17
8.00	2367.35	0.61	0.75	3-M1t	0.56	0.53	0.67	0.67	2.51	1.43
12.00	2367.53	0.80	0.93	3-M1t	0.69	0.65	0.78	0.78	3.04	1.61
16.00	2367.69	0.98	1.09	3-M1t	0.80	0.76	0.88	0.88	3.44	1.75
20.00	2367.83	1.14	1.23	3-M1t	0.90	0.85	0.96	0.96	3.82	1.86
24.00	2367.96	1.28	1.36	3-M1t	1.00	0.93	1.04	1.04	4.17	1.95
28.00	2368.08	1.41	1.48	3-M1t	1.09	1.02	1.13	1.13	4.32	2.07
30.00	2368.13	1.48	1.53	3-M1t	1.13	1.05	1.16	1.16	4.47	2.11
36.00	2368.29	1.65	1.69	3-M2t	1.26	1.16	1.22	1.22	5.05	2.17
40.00	2368.41	1.75	1.81	3-M2t	1.34	1.23	1.27	1.27	5.32	2.23

El. inlet face invert 2366.60 ft El. outlet invert 2365.85 ft
El. inlet throat invert 0.00 ft El. inlet crest 2366.60 ft

***** SITE DATA ***** CULVERT INVERT **********

INLET STATION	0.00 ft
INLET ELEVATION	2366.60 ft
OUTLET STATION	65.80 ft
OUTLET ELEVATION	2365.85 ft
NUMBER OF BARRELS	3
SLOPE (V/H)	0.0114
CULVERT LENGTH ALONG SLOPE	65.80 ft

***** CULVERT DATA SUMMARY **********

BARREL SHAPE	CIRCULAR
BARREL DIAMETER	2.50 ft
BARREL MATERIAL	CORRUGATED STEEL
BARREL MANNING'S n	0.024
INLET TYPE	CONVENTIONAL
INLET EDGE AND WALL	BEVELED EDGE (1:1)
INLET DEPRESSION	NONE

CURRENT DATE: 03-21-2007 FILE DATE: 3/21/2007
CURRENT TIME: 10:19:51 FILE NAME: Culv34

ÄÄÄ
ÄÄÄÄÄÄÄÄÄÄÄÄÄÄÄÄÄÄÄÄÄÄÄÄÄÄ TAILWATER ÄÄÄÄÄÄÄÄÄÄÄÄÄÄÄÄÄÄÄÄÄÄÄÄÄÄ
ÄÄ

***** USER DEFINED CHANNEL CROSS-SECTION FILE NAME: Culv34
MAIN CHANNEL AND LT & RT OVER BANKS FILE DATE: 5/31/2005

LEFT CHANNEL BOUNDARY	3
RIGHT CHANNEL BOUNDARY	6
MANNING n LEFT OVER BANK	0.050
MANNING n MAIN CHANNEL	0.070
MANNING n RIGHT OVER BANK	0.070
SLOPE OF CHANNEL	0.0167 ft/ft

CROSS-SECTION COORD. NO.	X (ft)	Y (ft)
1	0.00	2370.90
2	9.20	2370.00
3	33.60	2367.30
4	38.40	2366.40
5	43.90	2365.80
6	63.90	2367.40
7	91.90	2368.40
8	123.00	2368.90

******* UNIFORM FLOW RATING CURVE FOR DOWNSTREAM CHANNEL

FLOW (cfs)	W.S.E. (ft)	FROUDE NUMBER	DEPTH (ft)	VEL. (f/s)	SHEAR (psf)
0.00	2365.80	0.000	-0.05	0.00	0.00
4.00	2366.36	0.390	0.51	1.17	0.29
8.00	2366.52	0.418	0.67	1.43	0.38
12.00	2366.64	0.434	0.78	1.61	0.45
16.00	2366.73	0.444	0.88	1.75	0.51
20.00	2366.81	0.451	0.96	1.86	0.55
24.00	2366.89	0.457	1.04	1.95	0.59
28.00	2366.98	0.465	1.13	2.07	0.65
30.00	2367.01	0.467	1.16	2.11	0.66
36.00	2367.07	0.471	1.22	2.17	0.69
40.00	2367.12	0.474	1.27	2.23	0.72

Note: Shear stress was calculated using R.

ÄÄÄ
ÄÄÄÄÄÄÄÄÄÄÄÄÄÄÄÄÄÄÄÄÄÄÄÄÄÄ ROADWAY OVERTOPPING DATA ÄÄÄÄÄÄÄÄÄÄÄÄÄÄÄÄÄÄÄÄÄÄÄÄÄÄ
ÄÄÄ

ROADWAY SURFACE PAVED
EMBANKMENT TOP WIDTH 24.00 ft

***** USER DEFINED ROADWAY PROFILE

CROSS-SECTION COORD. NO.	X ft	Y ft
1	0.00	2371.47
2	25.10	2371.40
3	33.90	2371.88
4	46.10	2371.36
5	63.20	2371.82
6	96.10	2371.95

ÄÄÄ

CURRENT DATE: 03-21-2007 FILE DATE: 3/21/2007
CURRENT TIME: 10:21:01 FILE NAME: Culv35

FHWA CULVERT ANALYSIS
HY-8, VERSION 6.1

C U L V NO.	SITE DATA INLET ELEV. (ft)	OUTLET ELEV. (ft)	CULVERT LENGTH (ft)	CULVERT SHAPE, MATERIAL, INLET BARRELS SHAPE MATERIAL	SPAN (ft)	RISE (ft)	MANNING n	INLET TYPE
1	2368.21	2367.58	65.90	4 CSP	2.50	2.50	.024	CONVENTIONAL
2								
3								
4								
5								
6								

SUMMARY OF CULVERT FLOWS (cfs) FILE: Culv35 DATE: 3/21/2007

ELEV (ft)	TOTAL	1	2	3	4	5	6	ROADWAY	ITR
2368.21	0.0	0.0	0.0	0.0	0.0	0.0	0.0	0.00	1
2368.77	6.0	6.0	0.0	0.0	0.0	0.0	0.0	0.00	1
2369.02	12.0	12.0	0.0	0.0	0.0	0.0	0.0	0.00	1
2369.22	18.0	18.0	0.0	0.0	0.0	0.0	0.0	0.00	1
2369.38	24.0	24.0	0.0	0.0	0.0	0.0	0.0	0.00	1
2369.52	30.0	30.0	0.0	0.0	0.0	0.0	0.0	0.00	1
2369.66	36.0	36.0	0.0	0.0	0.0	0.0	0.0	0.00	1
2369.74	40.0	40.0	0.0	0.0	0.0	0.0	0.0	0.00	1
2369.92	48.0	48.0	0.0	0.0	0.0	0.0	0.0	0.00	1
2370.04	54.0	54.0	0.0	0.0	0.0	0.0	0.0	0.00	1
2370.15	60.0	60.0	0.0	0.0	0.0	0.0	0.0	0.00	1
2372.65	147.3	147.3	0.0	0.0	0.0	0.0	0.0	OVERTOPPING	

SUMMARY OF ITERATIVE SOLUTION ERRORS FILE: Culv35 DATE: 3/21/2007

HEAD ELEV (ft)	HEAD ERROR (ft)	TOTAL FLOW (cfs)	FLOW ERROR (cfs)	% FLOW ERROR
2368.21	0.000	0.00	0.00	0.00
2368.77	0.000	6.00	0.00	0.00
2369.02	0.000	12.00	0.00	0.00
2369.22	0.000	18.00	0.00	0.00
2369.38	0.000	24.00	0.00	0.00
2369.52	0.000	30.00	0.00	0.00
2369.66	0.000	36.00	0.00	0.00
2369.74	0.000	40.00	0.00	0.00
2369.92	0.000	48.00	0.00	0.00
2370.04	0.000	54.00	0.00	0.00
2370.15	0.000	60.00	0.00	0.00

<1> TOLERANCE (ft) = 0.010 <2> TOLERANCE (%) = 1.000

CURRENT DATE: 03-21-2007 FILE DATE: 3/21/2007
CURRENT TIME: 10:21:01 FILE NAME: Culv35

PERFORMANCE CURVE FOR CULVERT 1 - 4(2.50 (ft) BY 2.50 (ft)) CSP

DIS-CHARGE FLOW (cfs)	HEAD-WATER ELEV. (ft)	INLET CONTROL DEPTH (ft)	OUTLET CONTROL DEPTH (ft)	FLOW TYPE <F4>	NORMAL DEPTH (ft)	CRIT. DEPTH (ft)	OUTLET DEPTH (ft)	TW DEPTH (ft)	OUTLET VEL. (fps)	TW VEL. (fps)
0.00	2368.21	0.00	0.00	0-NF	0.00	0.00	0.00	-2.48	0.00	0.00
6.00	2368.77	0.42	0.56	2-M2c	0.43	0.38	0.38	-2.14	3.10	2.02
12.00	2369.02	0.66	0.81	2-M2c	0.62	0.56	0.56	-2.02	3.64	2.59
18.00	2369.22	0.87	1.01	2-M2c	0.77	0.69	0.69	-1.93	4.05	2.99
24.00	2369.37	1.06	1.16	2-M2c	0.89	0.80	0.80	-1.85	4.39	3.30
30.00	2369.52	1.23	1.31	2-M2c	1.01	0.90	0.90	-1.78	4.69	3.55
36.00	2369.66	1.39	1.45	2-M2c	1.12	1.00	1.00	-1.71	4.91	3.77
40.00	2369.74	1.48	1.53	2-M2c	1.19	1.05	1.05	-1.67	5.09	3.90
48.00	2369.92	1.65	1.71	2-M2c	1.32	1.16	1.16	-1.59	5.40	4.14
54.00	2370.04	1.77	1.83	2-M2c	1.42	1.23	1.23	-1.54	5.59	4.30
60.00	2370.15	1.88	1.94	2-M2c	1.52	1.30	1.30	-1.48	5.81	4.44

El. inlet face invert 2368.21 ft El. outlet invert 2367.58 ft
El. inlet throat invert 0.00 ft El. inlet crest 2368.21 ft

***** SITE DATA ***** CULVERT INVERT **********

INLET STATION	0.00 ft
INLET ELEVATION	2368.21 ft
OUTLET STATION	65.90 ft
OUTLET ELEVATION	2367.58 ft
NUMBER OF BARRELS	4
SLOPE (V/H)	0.0096
CULVERT LENGTH ALONG SLOPE	65.90 ft

***** CULVERT DATA SUMMARY **********

BARREL SHAPE	CIRCULAR
BARREL DIAMETER	2.50 ft
BARREL MATERIAL	CORRUGATED STEEL
BARREL MANNING'S n	0.024
INLET TYPE	CONVENTIONAL
INLET EDGE AND WALL	BEVELED EDGE (1:1)
INLET DEPRESSION	NONE

CURRENT DATE: 03-21-2007 FILE DATE: 3/21/2007
CURRENT TIME: 10:21:01 FILE NAME: Culv35

ÄÄ
ÄÄÄÄÄÄÄÄÄÄÄÄÄÄÄÄÄÄÄÄÄÄÄÄÄÄÄ TAILWATER ÄÄÄÄÄÄÄÄÄÄÄÄÄÄÄÄÄÄÄÄÄÄÄÄÄÄÄ
ÄÄ

***** USER DEFINED CHANNEL CROSS-SECTION FILE NAME: Culv35
MAIN CHANNEL AND LT & RT OVER BANKS FILE DATE: 5/31/2005

LEFT CHANNEL BOUNDARY	3
RIGHT CHANNEL BOUNDARY	7
MANNING n LEFT OVER BANK	0.045
MANNING n MAIN CHANNEL	0.055
MANNING n RIGHT OVER BANK	0.060
SLOPE OF CHANNEL	0.0282 ft/ft

CROSS-SECTION COORD. NO.	X (ft)	Y (ft)
1	0.00	2372.00
2	36.70	2370.00
3	62.20	2365.30
4	74.00	2365.10
5	81.20	2368.00
6	107.80	2368.00
7	115.70	2370.00
8	131.80	2372.00

******* UNIFORM FLOW RATING CURVE FOR DOWNSTREAM CHANNEL

FLOW (cfs)	W.S.E. (ft)	FROUDE NUMBER	DEPTH (ft)	VEL. (f/s)	SHEAR (psf)
0.00	2365.10	0.000	-2.48	0.00	0.00
6.00	2365.44	0.761	-2.14	2.02	0.39
12.00	2365.56	0.813	-2.02	2.59	0.57
18.00	2365.65	0.844	-1.93	2.99	0.70
24.00	2365.73	0.866	-1.85	3.30	0.82
30.00	2365.80	0.883	-1.78	3.55	0.91
36.00	2365.87	0.897	-1.71	3.77	1.00
40.00	2365.91	0.905	-1.67	3.90	1.05
48.00	2365.99	0.919	-1.59	4.14	1.15
54.00	2366.04	0.928	-1.54	4.30	1.22
60.00	2366.10	0.936	-1.48	4.44	1.28

Note: Shear stress was calculated using R.

ÄÄ
ÄÄÄÄÄÄÄÄÄÄÄÄÄÄÄÄÄÄÄÄÄÄÄÄÄÄÄ ROADWAY OVERTOPPING DATA ÄÄÄÄÄÄÄÄÄÄÄÄÄÄÄÄÄÄÄÄÄÄÄÄÄÄÄ
ÄÄ

ROADWAY SURFACE	PAVED
EMBANKMENT TOP WIDTH	24.00 ft

***** USER DEFINED ROADWAY PROFILE

CROSS-SECTION COORD. NO.	X ft	Y ft
1	0.00	2372.98
2	10.90	2372.65
3	22.60	2372.83
4	31.50	2372.98
5	75.40	2373.84

ÄÄ

CURRENT DATE: 03-26-2007 FILE DATE: 3/26/2007
CURRENT TIME: 11:41:47 FILE NAME: Culv36

FHWA CULVERT ANALYSIS
HY-8, VERSION 6.1

C U L V NO.	SITE DATA INLET ELEV. (ft)	OUTLET ELEV. (ft)	CULVERT LENGTH (ft)	CULVERT SHAPE, MATERIAL, INLET BARRELS SHAPE MATERIAL	SPAN (ft)	RISE (ft)	MANNING n	INLET TYPE
1	2371.42	2370.37	66.01	1 CSP	2.50	2.50	.024	CONVENTIONAL
2								
3								
4								
5								
6								

SUMMARY OF CULVERT FLOWS (cfs) FILE: Culv36 DATE: 3/26/2007

ELEV (ft)	TOTAL	1	2	3	4	5	6	ROADWAY	ITR
2371.42	0.0	0.0	0.0	0.0	0.0	0.0	0.0	0.00	1
2371.74	1.0	1.0	0.0	0.0	0.0	0.0	0.0	0.00	1
2371.92	2.0	2.0	0.0	0.0	0.0	0.0	0.0	0.00	1
2372.07	3.0	3.0	0.0	0.0	0.0	0.0	0.0	0.00	1
2372.22	4.0	4.0	0.0	0.0	0.0	0.0	0.0	0.00	1
2372.35	5.0	5.0	0.0	0.0	0.0	0.0	0.0	0.00	1
2372.48	6.0	6.0	0.0	0.0	0.0	0.0	0.0	0.00	1
2372.59	7.0	7.0	0.0	0.0	0.0	0.0	0.0	0.00	1
2372.70	8.0	8.0	0.0	0.0	0.0	0.0	0.0	0.00	1
2372.80	9.0	9.0	0.0	0.0	0.0	0.0	0.0	0.00	1
2372.89	10.0	10.0	0.0	0.0	0.0	0.0	0.0	0.00	1
2376.14	40.7	40.7	0.0	0.0	0.0	0.0	0.0	OVERTOPPING	

SUMMARY OF ITERATIVE SOLUTION ERRORS FILE: Culv36 DATE: 3/26/2007

HEAD ELEV (ft)	HEAD ERROR (ft)	TOTAL FLOW (cfs)	FLOW ERROR (cfs)	% FLOW ERROR
2371.42	0.000	0.00	0.00	0.00
2371.74	0.000	1.00	0.00	0.00
2371.92	0.000	2.00	0.00	0.00
2372.07	0.000	3.00	0.00	0.00
2372.22	0.000	4.00	0.00	0.00
2372.35	0.000	5.00	0.00	0.00
2372.48	0.000	6.00	0.00	0.00
2372.59	0.000	7.00	0.00	0.00
2372.70	0.000	8.00	0.00	0.00
2372.80	0.000	9.00	0.00	0.00
2372.89	0.000	10.00	0.00	0.00

<1> TOLERANCE (ft) = 0.010 <2> TOLERANCE (%) = 1.000

CURRENT DATE: 03-26-2007 FILE DATE: 3/26/2007
CURRENT TIME: 11:41:47 FILE NAME: Culv36

PERFORMANCE CURVE FOR CULVERT 1 - 1(2.50 (ft) BY 2.50 (ft)) CSP

DIS-CHARGE FLOW (cfs)	HEAD-WATER ELEV. (ft)	INLET CONTROL DEPTH (ft)	OUTLET CONTROL DEPTH (ft)	FLOW TYPE <F4>	NORMAL DEPTH (ft)	CRIT. DEPTH (ft)	OUTLET DEPTH (ft)	TW DEPTH (ft)	OUTLET VEL. (fps)	TW VEL. (fps)
0.00	2371.42	0.00	0.00	0-NF	0.00	0.00	0.00	-0.07	0.00	0.00
1.00	2371.74	0.32	0.32	1-S2n	0.31	0.31	0.21	0.11	4.03	1.11
2.00	2371.92	0.50	0.50	1-S2n	0.44	0.45	0.35	0.17	4.61	1.35
3.00	2372.07	0.65	0.65	1-S2n	0.54	0.56	0.46	0.22	4.80	1.50
4.00	2372.22	0.80	0.80	1-S2n	0.63	0.65	0.55	0.26	5.12	1.63
5.00	2372.35	0.93	0.93	1-S2n	0.71	0.74	0.64	0.30	5.05	1.73
6.00	2372.48	1.06	1.06	1-S2n	0.78	0.80	0.70	0.33	5.26	1.81
7.00	2372.59	1.17	1.17	1-S2n	0.84	0.87	0.77	0.35	5.47	1.89
8.00	2372.70	1.28	1.28	1-S2n	0.91	0.93	0.83	0.38	5.56	1.95
9.00	2372.80	1.38	1.38	1-S2n	0.97	1.00	0.90	0.40	5.64	2.01
10.00	2372.89	1.47	1.47	1-S2n	1.03	1.05	0.95	0.43	5.82	2.07

El. inlet face invert 2371.42 ft El. outlet invert 2370.37 ft
El. inlet throat invert 0.00 ft El. inlet crest 2371.42 ft

***** SITE DATA ***** CULVERT INVERT **********

INLET STATION	0.00 ft
INLET ELEVATION	2371.42 ft
OUTLET STATION	66.00 ft
OUTLET ELEVATION	2370.37 ft
NUMBER OF BARRELS	1
SLOPE (V/H)	0.0159
CULVERT LENGTH ALONG SLOPE	66.01 ft

***** CULVERT DATA SUMMARY **********

BARREL SHAPE	CIRCULAR
BARREL DIAMETER	2.50 ft
BARREL MATERIAL	CORRUGATED STEEL
BARREL MANNING'S n	0.024
INLET TYPE	CONVENTIONAL
INLET EDGE AND WALL	BEVELED EDGE (1:1)
INLET DEPRESSION	NONE

CURRENT DATE: 03-26-2007 FILE DATE: 3/26/2007
CURRENT TIME: 11:41:47 FILE NAME: Culv36

ÄÄÄ
ÄÄÄÄÄÄÄÄÄÄÄÄÄÄÄÄÄÄÄÄÄÄÄÄÄÄ TAILWATER ÄÄÄÄÄÄÄÄÄÄÄÄÄÄÄÄÄÄÄÄÄÄÄÄÄÄ
ÄÄÄ

***** USER DEFINED CHANNEL CROSS-SECTION FILE NAME: Culv36
MAIN CHANNEL AND LT & RT OVER BANKS FILE DATE: 3/26/2007

LEFT CHANNEL BOUNDARY	3
RIGHT CHANNEL BOUNDARY	7
MANNING n LEFT OVER BANK	0.065
MANNING n MAIN CHANNEL	0.060
MANNING n RIGHT OVER BANK	0.065
SLOPE OF CHANNEL	0.0386 ft/ft

CROSS-SECTION COORD. NO.	X (ft)	Y (ft)
1	0.00	2374.00
2	8.70	2373.00
3	31.80	2370.40
4	34.30	2370.30
5	35.90	2370.30
6	46.80	2370.90
7	53.60	2372.00
8	80.60	2374.00

******* UNIFORM FLOW RATING CURVE FOR DOWNSTREAM CHANNEL

FLOW (cfs)	W.S.E. (ft)	FROUDE NUMBER	DEPTH (ft)	VEL. (f/s)	SHEAR (psf)
0.00	2370.30	0.000	-0.07	0.00	0.00
1.00	2370.48	0.584	0.11	1.11	0.27
2.00	2370.54	0.609	0.17	1.35	0.37
3.00	2370.59	0.626	0.22	1.50	0.43
4.00	2370.63	0.638	0.26	1.63	0.49
5.00	2370.67	0.647	0.30	1.73	0.53
6.00	2370.70	0.655	0.33	1.81	0.57
7.00	2370.72	0.661	0.35	1.89	0.61
8.00	2370.75	0.667	0.38	1.95	0.64
9.00	2370.77	0.673	0.40	2.01	0.67
10.00	2370.80	0.677	0.43	2.07	0.70

Note: Shear stress was calculated using R.

ÄÄÄ
ÄÄÄÄÄÄÄÄÄÄÄÄÄÄÄÄÄÄÄÄÄÄÄÄÄÄ ROADWAY OVERTOPPING DATA ÄÄÄÄÄÄÄÄÄÄÄÄÄÄÄÄÄÄÄÄÄÄÄÄÄÄ
ÄÄÄ

ROADWAY SURFACE	PAVED
EMBANKMENT TOP WIDTH	24.00 ft

***** USER DEFINED ROADWAY PROFILE

CROSS-SECTION COORD. NO.	X ft	Y ft
1	0.00	2376.48
2	9.70	2376.14
3	28.70	2376.97
4	50.80	2376.92
5	59.40	2377.13

ÄÄÄ

CURRENT DATE: 03-21-2007 FILE DATE: 3/21/2007
CURRENT TIME: 10:24:14 FILE NAME: Culv37

FHWA CULVERT ANALYSIS
HY-8, VERSION 6.1

C U L V NO.	SITE DATA INLET ELEV. (ft)	OUTLET ELEV. (ft)	CULVERT LENGTH (ft)	CULVERT SHAPE, MATERIAL, INLET BARRELS SHAPE MATERIAL	SPAN (ft)	RISE (ft)	MANNING n	INLET TYPE
1	2373.68	2372.96	64.40	3 CSP	2.00	2.00	.024	CONVENTIONAL
2								
3								
4								
5								
6								

SUMMARY OF CULVERT FLOWS (cfs) FILE: Culv37 DATE: 3/21/2007

ELEV (ft)	TOTAL	1	2	3	4	5	6	ROADWAY	ITR
2373.68	0.0	0.0	0.0	0.0	0.0	0.0	0.0	0.00	1
2375.75	40.0	40.0	0.0	0.0	0.0	0.0	0.0	0.00	1
2378.16	120.0	69.6	0.0	0.0	0.0	0.0	0.0	49.93	10
2378.28	180.0	90.6	0.0	0.0	0.0	0.0	0.0	87.79	4
2378.42	240.0	92.5	0.0	0.0	0.0	0.0	0.0	145.18	4
2378.54	300.0	94.2	0.0	0.0	0.0	0.0	0.0	203.88	4
2378.65	360.0	95.7	0.0	0.0	0.0	0.0	0.0	262.53	4
2378.79	420.0	66.6	0.0	0.0	0.0	0.0	0.0	349.32	4
2378.89	480.0	66.3	0.0	0.0	0.0	0.0	0.0	411.77	4
2378.97	540.0	66.3	0.0	0.0	0.0	0.0	0.0	472.22	4
2379.04	600.0	66.2	0.0	0.0	0.0	0.0	0.0	529.02	3
2377.69	65.3	65.3	0.0	0.0	0.0	0.0	0.0	OVERTOPPING	

SUMMARY OF ITERATIVE SOLUTION ERRORS FILE: Culv37 DATE: 3/21/2007

HEAD ELEV (ft)	HEAD ERROR (ft)	TOTAL FLOW (cfs)	FLOW ERROR (cfs)	% FLOW ERROR
2373.68	0.000	0.00	0.00	0.00
2375.75	0.000	40.00	0.00	0.00
2378.16	-0.003	120.00	0.50	0.42
2378.28	-0.007	180.00	1.62	0.90
2378.42	-0.003	240.00	2.29	0.95
2378.54	-0.009	300.00	1.92	0.64
2378.65	-0.007	360.00	1.75	0.49
2378.79	-0.005	420.00	4.09	0.97
2378.89	-0.007	480.00	1.91	0.40
2378.97	-0.005	540.00	1.53	0.28
2379.04	-0.004	600.00	4.79	0.80

<1> TOLERANCE (ft) = 0.010 <2> TOLERANCE (%) = 1.000

CURRENT DATE: 03-21-2007 FILE DATE: 3/21/2007
CURRENT TIME: 10:24:14 FILE NAME: Culv37

PERFORMANCE CURVE FOR CULVERT 1 - 3(2.00 (ft) BY 2.00 (ft)) CSP

DIS-CHARGE FLOW (cfs)	HEAD-WATER ELEV. (ft)	INLET CONTROL DEPTH (ft)	OUTLET CONTROL DEPTH (ft)	FLOW TYPE <F4>	NORMAL DEPTH (ft)	CRIT. DEPTH (ft)	OUTLET DEPTH (ft)	TW DEPTH (ft)	OUTLET VEL. (fps)	TW VEL. (fps)
0.00	2373.68	0.00	0.00	0-NF	0.00	0.00	0.00	0.04	0.00	0.00
40.00	2375.76	1.97	2.08	2-M2c	1.71	1.31	1.31	1.16	6.12	2.89
69.57	2378.15	3.26	4.47	3-M2t	2.00	1.70	1.73	1.73	8.06	3.81
90.59	2378.27	4.59	3.72	3-M1f	2.00	1.91	2.00	2.01	9.61	4.22
92.53	2378.41	4.73	3.80	3-M1f	2.00	1.92	2.00	2.23	9.82	4.53
94.20	2378.53	4.85	3.86	3-M1f	2.00	1.94	2.00	2.42	9.99	4.81
95.72	2378.64	4.96	3.92	3-M1f	2.00	1.96	2.00	2.61	10.16	4.88
66.59	2378.78	3.10	5.10	4-FFt	2.00	1.67	2.00	2.79	7.07	4.75
66.31	2378.88	3.09	5.20	4-FFt	2.00	1.67	2.00	2.91	7.04	4.68
66.25	2378.96	3.08	5.28	4-FFt	2.00	1.67	2.00	3.00	7.03	4.68
66.19	2379.04	3.08	5.36	4-FFt	2.00	1.67	2.00	3.09	7.02	4.73

El. inlet face invert 2373.68 ft El. outlet invert 2372.96 ft
El. inlet throat invert 0.00 ft El. inlet crest 2373.68 ft

***** SITE DATA ***** CULVERT INVERT **********

INLET STATION	0.00 ft
INLET ELEVATION	2373.68 ft
OUTLET STATION	64.40 ft
OUTLET ELEVATION	2372.96 ft
NUMBER OF BARRELS	3
SLOPE (V/H)	0.0112
CULVERT LENGTH ALONG SLOPE	64.40 ft

***** CULVERT DATA SUMMARY **********

BARREL SHAPE	CIRCULAR
BARREL DIAMETER	2.00 ft
BARREL MATERIAL	CORRUGATED STEEL
BARREL MANNING'S n	0.024
INLET TYPE	CONVENTIONAL
INLET EDGE AND WALL	BEVELED EDGE (1:1)
INLET DEPRESSION	NONE

CURRENT DATE: 03-21-2007 FILE DATE: 3/21/2007
CURRENT TIME: 10:24:14 FILE NAME: Culv37

ÄÄ
ÄÄÄÄÄÄÄÄÄÄÄÄÄÄÄÄÄÄÄÄÄÄÄÄÄÄ TAILWATER ÄÄÄÄÄÄÄÄÄÄÄÄÄÄÄÄÄÄÄÄÄÄÄÄÄÄ
ÄÄ

***** USER DEFINED CHANNEL CROSS-SECTION FILE NAME: Culv37
MAIN CHANNEL AND LT & RT OVER BANKS FILE DATE: 3/5/2007

LEFT CHANNEL BOUNDARY	6
RIGHT CHANNEL BOUNDARY	9
MANNING n LEFT OVER BANK	0.065
MANNING n MAIN CHANNEL	0.055
MANNING n RIGHT OVER BANK	0.050
SLOPE OF CHANNEL	0.0266 ft/ft

CROSS-SECTION COORD. NO.	X (ft)	Y (ft)
1	0.00	2377.90
2	39.70	2375.90
3	61.10	2375.60
4	93.90	2375.90
5	110.70	2375.40
6	118.60	2375.90
7	130.50	2373.00
8	171.90	2375.30
9	203.20	2377.90
10	243.50	2377.91

******* UNIFORM FLOW RATING CURVE FOR DOWNSTREAM CHANNEL

FLOW (cfs)	W.S.E. (ft)	FROUDE NUMBER	DEPTH (ft)	VEL. (f/s)	SHEAR (psf)
0.00	2373.00	0.000	0.04	0.00	0.00
40.00	2374.12	0.687	1.16	2.89	0.93
120.00	2374.69	0.735	1.73	3.81	1.40
180.00	2374.97	0.754	2.01	4.22	1.63
240.00	2375.19	0.768	2.23	4.53	1.82
300.00	2375.38	0.780	2.42	4.81	1.99
360.00	2375.57	0.836	2.61	4.88	1.92
420.00	2375.75	1.026	2.79	4.75	1.42
480.00	2375.87	1.106	2.91	4.68	1.28
540.00	2375.96	1.088	3.00	4.68	1.35
600.00	2376.05	1.055	3.09	4.73	1.46

Note: Shear stress was calculated using R.

ÄÄ
ÄÄÄÄÄÄÄÄÄÄÄÄÄÄÄÄÄÄÄÄÄÄÄÄÄÄ ROADWAY OVERTOPPING DATA ÄÄÄÄÄÄÄÄÄÄÄÄÄÄÄÄÄÄÄÄÄÄÄÄÄÄ
ÄÄ

ROADWAY SURFACE	PAVED
EMBANKMENT TOP WIDTH	24.00 ft

***** USER DEFINED ROADWAY PROFILE

CROSS-SECTION COORD. NO.	X ft	Y ft
1	0.00	2379.30
2	61.90	2378.78
3	71.90	2378.30
4	144.80	2377.79
5	158.80	2377.69
6	188.20	2377.96
7	219.80	2377.95

ÄÄ

CURRENT DATE: 03-21-2007 FILE DATE: 3/21/2007
CURRENT TIME: 10:34:22 FILE NAME: Culv38

FHWA CULVERT ANALYSIS
HY-8, VERSION 6.1

C U L V NO.	SITE DATA INLET ELEV. (ft)	OUTLET ELEV. (ft)	CULVERT LENGTH (ft)	CULVERT SHAPE, MATERIAL, INLET BARRELS SHAPE MATERIAL	SPAN (ft)	RISE (ft)	MANNING n	INLET TYPE
1	2373.80	2373.25	65.00	1 CSP	2.00	2.00	.024	CONVENTIONAL
2								
3								
4								
5								
6								

SUMMARY OF CULVERT FLOWS (cfs) FILE: Culv38 DATE: 3/21/2007

ELEV (ft)	TOTAL	1	2	3	4	5	6	ROADWAY	ITR
2373.80	0.0	0.0	0.0	0.0	0.0	0.0	0.0	0.00	1
2377.54	20.0	20.0	0.0	0.0	0.0	0.0	0.0	0.00	1
2378.14	40.0	22.2	0.0	0.0	0.0	0.0	0.0	17.66	10
2378.27	60.0	22.6	0.0	0.0	0.0	0.0	0.0	37.09	7
2378.36	80.0	23.0	0.0	0.0	0.0	0.0	0.0	56.67	5
2378.44	100.0	23.2	0.0	0.0	0.0	0.0	0.0	76.01	4
2378.51	120.0	23.2	0.0	0.0	0.0	0.0	0.0	96.12	4
2378.58	140.0	23.4	0.0	0.0	0.0	0.0	0.0	116.12	4
2378.61	150.0	23.5	0.0	0.0	0.0	0.0	0.0	125.62	3
2378.70	180.0	23.9	0.0	0.0	0.0	0.0	0.0	155.69	4
2378.75	200.0	24.0	0.0	0.0	0.0	0.0	0.0	174.90	3
2377.81	21.0	21.0	0.0	0.0	0.0	0.0	0.0	OVERTOPPING	

SUMMARY OF ITERATIVE SOLUTION ERRORS FILE: Culv38 DATE: 3/21/2007

HEAD ELEV (ft)	HEAD ERROR (ft)	TOTAL FLOW (cfs)	FLOW ERROR (cfs)	% FLOW ERROR
2373.80	0.000	0.00	0.00	0.00
2377.54	0.000	20.00	0.00	0.00
2378.14	-0.002	40.00	0.17	0.43
2378.27	-0.002	60.00	0.27	0.45
2378.36	-0.003	80.00	0.38	0.47
2378.44	-0.006	100.00	0.77	0.77
2378.51	-0.005	120.00	0.65	0.54
2378.58	-0.004	140.00	0.44	0.31
2378.61	-0.007	150.00	0.84	0.56
2378.70	-0.004	180.00	0.45	0.25
2378.75	-0.002	200.00	1.05	0.52

<1> TOLERANCE (ft) = 0.010 <2> TOLERANCE (%) = 1.000

CURRENT DATE: 03-21-2007 FILE DATE: 3/21/2007
CURRENT TIME: 10:34:22 FILE NAME: Culv38

PERFORMANCE CURVE FOR CULVERT 1 - 1(2.00 (ft) BY 2.00 (ft)) CSP

DIS-CHARGE FLOW (cfs)	HEAD-WATER ELEV. (ft)	INLET CONTROL DEPTH (ft)	OUTLET CONTROL DEPTH (ft)	FLOW TYPE <F4>	NORMAL DEPTH (ft)	CRIT. DEPTH (ft)	OUTLET DEPTH (ft)	TW DEPTH (ft)	OUTLET VEL. (fps)	TW VEL. (fps)
0.00	2373.80	0.00	0.00	0-NF	0.00	0.00	0.00	0.00	0.00	0.00
20.00	2377.54	2.77	3.74	2-M2c	2.00	1.60	1.60	0.33	7.40	2.71
22.17	2378.13	3.10	4.33	2-M2c	2.00	1.67	1.67	0.45	7.94	3.33
22.64	2378.27	3.18	4.47	2-M2c	2.00	1.68	1.68	0.55	8.05	3.73
22.96	2378.36	3.23	4.56	2-M2c	2.00	1.69	1.69	0.62	8.13	4.04
23.22	2378.44	3.27	4.64	2-M2c	2.00	1.70	1.70	0.69	8.19	4.29
23.23	2378.51	3.27	4.71	2-M2c	2.00	1.70	1.70	0.75	8.19	4.50
23.44	2378.57	3.31	4.77	2-M2c	2.00	1.71	1.71	0.84	8.24	4.77
23.54	2378.60	3.33	4.80	2-M2c	2.00	1.71	1.71	0.86	8.26	4.85
23.87	2378.70	3.38	4.90	2-M2c	2.00	1.72	1.72	0.91	8.34	5.00
24.05	2378.75	3.41	4.95	2-M2c	2.00	1.72	1.72	0.95	8.38	5.14

El. inlet face invert 2373.80 ft El. outlet invert 2373.25 ft
El. inlet throat invert 0.00 ft El. inlet crest 2373.80 ft

```
***** SITE DATA ***** CULVERT INVERT **************
      INLET STATION                          0.00 ft
      INLET ELEVATION                     2373.80 ft
      OUTLET STATION                        65.00 ft
      OUTLET ELEVATION                    2373.25 ft
      NUMBER OF BARRELS                      1
      SLOPE (V/H)                            0.0085
      CULVERT LENGTH ALONG SLOPE            65.00 ft

***** CULVERT DATA SUMMARY ************************
      BARREL SHAPE          CIRCULAR
      BARREL DIAMETER         2.00 ft
      BARREL MATERIAL       CORRUGATED STEEL
      BARREL MANNING'S n    0.024
      INLET TYPE            CONVENTIONAL
      INLET EDGE AND WALL   BEVELED EDGE (1:1)
      INLET DEPRESSION      NONE
```

CURRENT DATE: 03-21-2007 FILE DATE: 3/21/2007
CURRENT TIME: 10:34:22 FILE NAME: Culv38

ÄÄÄ
ÄÄÄÄÄÄÄÄÄÄÄÄÄÄÄÄÄÄÄÄÄÄÄÄÄÄ TAILWATER ÄÄÄÄÄÄÄÄÄÄÄÄÄÄÄÄÄÄÄÄÄÄÄÄÄÄ
ÄÄ

***** USER DEFINED CHANNEL CROSS-SECTION FILE NAME: Culv38
MAIN CHANNEL AND LT & RT OVER BANKS FILE DATE: 6/1/2005

LEFT CHANNEL BOUNDARY	2
RIGHT CHANNEL BOUNDARY	5
MANNING n LEFT OVER BANK	0.045
MANNING n MAIN CHANNEL	0.040
MANNING n RIGHT OVER BANK	0.050
SLOPE OF CHANNEL	0.0394 ft/ft

CROSS-SECTION COORD. NO.	X (ft)	Y (ft)
1	0.00	2375.15
2	55.20	2374.65
3	79.20	2373.35
4	97.80	2373.25
5	134.90	2374.35
6	157.40	2374.65

******* UNIFORM FLOW RATING CURVE FOR DOWNSTREAM CHANNEL

FLOW (cfs)	W.S.E. (ft)	FROUDE NUMBER	DEPTH (ft)	VEL. (f/s)	SHEAR (psf)
0.00	2373.25	0.000	0.00	0.00	0.00
20.00	2373.58	1.040	0.33	2.71	0.54
40.00	2373.70	1.096	0.45	3.33	0.73
60.00	2373.80	1.127	0.55	3.73	0.87
80.00	2373.87	1.148	0.62	4.04	0.99
100.00	2373.94	1.163	0.69	4.29	1.08
120.00	2374.00	1.176	0.75	4.50	1.17
140.00	2374.09	1.191	0.84	4.77	1.28
150.00	2374.11	1.196	0.86	4.85	1.31
180.00	2374.16	1.204	0.91	5.00	1.38
200.00	2374.20	1.211	0.95	5.14	1.44

Note: Shear stress was calculated using R.

ÄÄÄ
ÄÄÄÄÄÄÄÄÄÄÄÄÄÄÄÄÄÄÄÄÄÄÄÄÄÄ ROADWAY OVERTOPPING DATA ÄÄÄÄÄÄÄÄÄÄÄÄÄÄÄÄÄÄÄÄÄÄÄÄÄÄ
ÄÄÄ

ROADWAY SURFACE	PAVED
EMBANKMENT TOP WIDTH	24.00 ft

***** USER DEFINED ROADWAY PROFILE

CROSS-SECTION COORD. NO.	X ft	Y ft
1	0.00	2378.18
2	31.40	2378.26
3	36.80	2377.81
4	47.20	2377.85
5	57.60	2377.92
6	82.50	2377.94
7	94.00	2378.28

ÄÄÄ

CURRENT DATE: 03-21-2007 FILE DATE: 3/21/2007
CURRENT TIME: 10:36:19 FILE NAME: Culv39

FHWA CULVERT ANALYSIS
HY-8, VERSION 6.1

CULV NO.	SITE DATA: INLET ELEV. (ft)	OUTLET ELEV. (ft)	CULVERT LENGTH (ft)	CULVERT SHAPE, MATERIAL, INLET: BARRELS / SHAPE / MATERIAL	SPAN (ft)	RISE (ft)	MANNING n	INLET TYPE
1	2372.30	2371.81	68.00	4 CSP	2.00	2.00	.024	CONVENTIONAL
2								
3								
4								
5								
6								

SUMMARY OF CULVERT FLOWS (cfs) FILE: Culv39 DATE: 3/21/2007

ELEV (ft)	TOTAL	1	2	3	4	5	6	ROADWAY	ITR
2372.30	0.0	0.0	0.0	0.0	0.0	0.0	0.0	0.00	1
2373.62	25.0	25.0	0.0	0.0	0.0	0.0	0.0	0.00	1
2374.41	50.0	50.0	0.0	0.0	0.0	0.0	0.0	0.00	1
2375.75	75.0	74.5	0.0	0.0	0.0	0.0	0.0	0.00	9
2376.30	100.0	81.6	0.0	0.0	0.0	0.0	0.0	17.87	8
2376.47	125.0	84.1	0.0	0.0	0.0	0.0	0.0	39.89	5
2376.59	150.0	85.9	0.0	0.0	0.0	0.0	0.0	63.44	5
2376.70	175.0	87.2	0.0	0.0	0.0	0.0	0.0	86.69	4
2376.79	200.0	88.4	0.0	0.0	0.0	0.0	0.0	110.62	4
2376.87	225.0	89.6	0.0	0.0	0.0	0.0	0.0	134.56	4
2376.95	250.0	90.7	0.0	0.0	0.0	0.0	0.0	158.54	4
2375.73	74.1	74.1	0.0	0.0	0.0	0.0	0.0	OVERTOPPING	

SUMMARY OF ITERATIVE SOLUTION ERRORS FILE: Culv39 DATE: 3/21/2007

HEAD ELEV (ft)	HEAD ERROR (ft)	TOTAL FLOW (cfs)	FLOW ERROR (cfs)	% FLOW ERROR
2372.30	0.000	0.00	0.00	0.00
2373.62	0.000	25.00	0.00	0.00
2374.41	0.000	50.00	0.00	0.00
2375.75	-0.008	75.00	0.50	0.67
2376.30	-0.006	100.00	0.50	0.50
2376.47	-0.008	125.00	1.05	0.84
2376.59	-0.005	150.00	0.64	0.43
2376.70	-0.009	175.00	1.16	0.66
2376.79	-0.007	200.00	0.95	0.47
2376.87	-0.006	225.00	0.85	0.38
2376.95	-0.006	250.00	0.81	0.32

<1> TOLERANCE (ft) = 0.010 <2> TOLERANCE (%) = 1.000

CURRENT DATE: 03-21-2007 FILE DATE: 3/21/2007
CURRENT TIME: 10:36:19 FILE NAME: Culv39

PERFORMANCE CURVE FOR CULVERT 1 - 4(2.00 (ft) BY 2.00 (ft)) CSP

DIS-CHARGE FLOW (cfs)	HEAD-WATER ELEV. (ft)	INLET CONTROL DEPTH (ft)	OUTLET CONTROL DEPTH (ft)	FLOW TYPE <F4>	NORMAL DEPTH (ft)	CRIT. DEPTH (ft)	OUTLET DEPTH (ft)	TW DEPTH (ft)	OUTLET VEL. (fps)	TW VEL. (fps)
0.00	2372.30	0.00	0.00	0-NF	0.00	0.00	0.00	-0.91	0.00	0.00
25.00	2373.62	1.25	1.32	2-M2c	1.12	0.88	0.88	-0.19	4.69	2.28
50.00	2374.41	1.89	2.11	2-M2c	2.00	1.27	1.27	0.02	5.96	2.73
74.50	2375.75	2.58	3.45	2-M2c	2.00	1.55	1.55	0.18	7.15	2.97
81.62	2376.30	2.83	4.00	2-M2c	2.00	1.62	1.62	0.30	7.49	3.16
84.06	2376.46	2.92	4.16	2-M2c	2.00	1.63	1.63	0.40	7.63	3.32
85.92	2376.58	2.99	4.28	2-M2c	2.00	1.65	1.65	0.49	7.73	3.45
87.15	2376.69	3.04	4.39	2-M2c	2.00	1.66	1.66	0.58	7.85	3.55
88.43	2376.78	3.09	4.48	2-M2c	2.00	1.67	1.67	0.66	7.93	3.60
89.59	2376.87	3.14	4.57	2-M2c	2.00	1.68	1.68	0.73	8.00	3.69
90.65	2376.95	3.18	4.64	2-M2c	2.00	1.68	1.68	0.79	8.06	3.78

El. inlet face invert 2372.30 ft El. outlet invert 2371.81 ft
El. inlet throat invert 0.00 ft El. inlet crest 2372.30 ft

***** SITE DATA ***** CULVERT INVERT **********

INLET STATION	0.00 ft
INLET ELEVATION	2372.30 ft
OUTLET STATION	68.00 ft
OUTLET ELEVATION	2371.81 ft
NUMBER OF BARRELS	4
SLOPE (V/H)	0.0072
CULVERT LENGTH ALONG SLOPE	68.00 ft

***** CULVERT DATA SUMMARY **********

BARREL SHAPE	CIRCULAR
BARREL DIAMETER	2.00 ft
BARREL MATERIAL	CORRUGATED STEEL
BARREL MANNING'S n	0.024
INLET TYPE	CONVENTIONAL
INLET EDGE AND WALL	BEVELED EDGE (1:1)
INLET DEPRESSION	NONE

CURRENT DATE: 03-21-2007 FILE DATE: 3/21/2007
CURRENT TIME: 10:36:19 FILE NAME: Culv39

ÄÄ
ÄÄÄÄÄÄÄÄÄÄÄÄÄÄÄÄÄÄÄÄÄÄÄÄÄÄ TAILWATER ÄÄÄÄÄÄÄÄÄÄÄÄÄÄÄÄÄÄÄÄÄÄÄÄÄÄ
ÄÄ

***** USER DEFINED CHANNEL CROSS-SECTION FILE NAME: Culv39
MAIN CHANNEL AND LT & RT OVER BANKS FILE DATE: 3/5/2007

LEFT CHANNEL BOUNDARY	4
RIGHT CHANNEL BOUNDARY	7
MANNING n LEFT OVER BANK	0.055
MANNING n MAIN CHANNEL	0.065
MANNING n RIGHT OVER BANK	0.050
SLOPE OF CHANNEL	0.0320 ft/ft

CROSS-SECTION COORD. NO.	X (ft)	Y (ft)
1	0.00	2374.30
2	24.80	2372.90
3	45.10	2372.36
4	55.70	2371.70
5	75.70	2370.90
6	91.50	2371.80
7	120.70	2372.50
8	141.20	2374.30

******* UNIFORM FLOW RATING CURVE FOR DOWNSTREAM CHANNEL

FLOW (cfs)	W.S.E. (ft)	FROUDE NUMBER	DEPTH (ft)	VEL. (f/s)	SHEAR (psf)
0.00	2370.90	0.000	-0.91	0.00	0.00
25.00	2371.62	0.678	-0.19	2.28	0.72
50.00	2371.83	0.716	0.02	2.73	0.93
75.00	2371.99	0.751	0.18	2.97	1.04
100.00	2372.11	0.771	0.30	3.16	1.14
125.00	2372.21	0.784	0.40	3.32	1.23
150.00	2372.30	0.794	0.49	3.45	1.30
175.00	2372.39	0.795	0.58	3.55	1.36
200.00	2372.47	0.789	0.66	3.60	1.41
225.00	2372.54	0.783	0.73	3.69	1.47
250.00	2372.60	0.779	0.79	3.78	1.54

Note: Shear stress was calculated using R.

ÄÄ
ÄÄÄÄÄÄÄÄÄÄÄÄÄÄÄÄÄÄÄÄÄÄÄÄÄÄ ROADWAY OVERTOPPING DATA ÄÄÄÄÄÄÄÄÄÄÄÄÄÄÄÄÄÄÄÄÄÄÄÄÄÄ
ÄÄ

ROADWAY SURFACE	PAVED
EMBANKMENT TOP WIDTH	24.00 ft

***** USER DEFINED ROADWAY PROFILE

CROSS-SECTION COORD. NO.	X ft	Y ft
1	0.00	2377.53
2	19.80	2377.72
3	51.70	2377.33
4	69.30	2376.67
5	88.30	2376.41
6	110.10	2376.03
7	116.10	2376.31
8	148.60	2375.73

ÄÄ

CURRENT DATE: 03-21-2007 FILE DATE: 3/21/2007
CURRENT TIME: 10:37:19 FILE NAME: Culv40

FHWA CULVERT ANALYSIS
HY-8, VERSION 6.1

C U L V NO.	SITE DATA INLET ELEV. (ft)	OUTLET ELEV. (ft)	CULVERT LENGTH (ft)	CULVERT SHAPE, MATERIAL, INLET BARRELS SHAPE MATERIAL	SPAN (ft)	RISE (ft)	MANNING n	INLET TYPE
1	2364.80	2364.31	70.80	6 CSP	3.00	3.00	.024	CONVENTIONAL
2								
3								
4								
5								
6								

SUMMARY OF CULVERT FLOWS (cfs) FILE: Culv40 DATE: 3/21/2007

ELEV (ft)	TOTAL	1	2	3	4	5	6	ROADWAY	ITR
2364.80	0.0	0.0	0.0	0.0	0.0	0.0	0.0	0.00	1
2366.44	75.0	75.0	0.0	0.0	0.0	0.0	0.0	0.00	1
2367.27	150.0	150.0	0.0	0.0	0.0	0.0	0.0	0.00	1
2368.01	225.0	225.0	0.0	0.0	0.0	0.0	0.0	0.00	1
2369.04	300.0	300.0	0.0	0.0	0.0	0.0	0.0	0.00	1
2369.93	375.0	340.7	0.0	0.0	0.0	0.0	0.0	32.96	3
2370.25	450.0	356.6	0.0	0.0	0.0	0.0	0.0	92.04	4
2370.50	525.0	365.6	0.0	0.0	0.0	0.0	0.0	157.31	4
2370.70	600.0	375.0	0.0	0.0	0.0	0.0	0.0	220.87	3
2370.90	675.0	376.7	0.0	0.0	0.0	0.0	0.0	296.58	4
2371.03	750.0	375.0	0.0	0.0	0.0	0.0	0.0	350.57	11
2369.36	313.3	313.3	0.0	0.0	0.0	0.0	0.0	OVERTOPPING	

SUMMARY OF ITERATIVE SOLUTION ERRORS FILE: Culv40 DATE: 3/21/2007

HEAD ELEV (ft)	HEAD ERROR (ft)	TOTAL FLOW (cfs)	FLOW ERROR (cfs)	% FLOW ERROR
2364.80	0.000	0.00	0.00	0.00
2366.44	0.000	75.00	0.00	0.00
2367.27	0.000	150.00	0.00	0.00
2368.01	0.000	225.00	0.00	0.00
2369.04	0.000	300.00	0.00	0.00
2369.93	-0.007	375.00	1.33	0.35
2370.25	-0.004	450.00	1.39	0.31
2370.50	-0.005	525.00	2.08	0.40
2370.70	-0.008	600.00	4.13	0.69
2370.90	-0.003	675.00	1.72	0.25
2371.03	0.000	750.00	24.43	3.26

<1> TOLERANCE (ft) = 0.010 <2> TOLERANCE (%) = 1.000

CURRENT DATE: 03-21-2007 FILE DATE: 3/21/2007
CURRENT TIME: 10:37:19 FILE NAME: Culv40

PERFORMANCE CURVE FOR CULVERT 1 - 6(3.00 (ft) BY 3.00 (ft)) CSP

DIS-CHARGE FLOW (cfs)	HEAD-WATER ELEV. (ft)	INLET CONTROL DEPTH (ft)	OUTLET CONTROL DEPTH (ft)	FLOW TYPE <F4>	NORMAL DEPTH (ft)	CRIT. DEPTH (ft)	OUTLET DEPTH (ft)	TW DEPTH (ft)	OUTLET VEL. (fps)	TW VEL. (fps)
0.00	2364.80	0.00	0.00	0-NF	0.00	0.00	0.00	-0.51	0.00	0.00
75.00	2366.44	1.54	1.64	2-M2c	1.34	1.12	1.12	0.61	5.21	3.39
150.00	2367.27	2.33	2.47	2-M2c	2.09	1.61	1.61	1.07	6.49	4.33
225.00	2368.01	3.00	3.21	2-M2c	3.00	1.99	1.99	1.43	7.56	4.97
300.00	2369.04	3.78	4.24	2-M2c	3.00	2.29	2.29	1.74	8.64	5.46
340.70	2369.94	4.29	5.14	2-M2c	3.00	2.43	2.43	2.02	9.23	5.87
356.57	2370.25	4.51	5.45	2-M2c	3.00	2.48	2.48	2.27	9.55	6.22
365.61	2370.50	4.64	5.70	2-M2c	3.00	2.50	2.50	2.50	9.71	6.52
375.00	2370.71	4.78	5.91	3-M2t	3.00	2.53	2.71	2.71	9.29	6.80
376.70	2370.91	4.80	6.11	3-M2t	3.00	2.53	2.92	2.92	9.01	7.05
375.00	2369.58	4.78	4.46	3-M1f	3.00	2.53	3.00	3.11	8.84	7.27

El. inlet face invert 2364.80 ft El. outlet invert 2364.31 ft
El. inlet throat invert 0.00 ft El. inlet crest 2364.80 ft

***** SITE DATA ***** CULVERT INVERT **********

INLET STATION	0.00 ft
INLET ELEVATION	2364.80 ft
OUTLET STATION	70.80 ft
OUTLET ELEVATION	2364.31 ft
NUMBER OF BARRELS	6
SLOPE (V/H)	0.0069
CULVERT LENGTH ALONG SLOPE	70.80 ft

***** CULVERT DATA SUMMARY **********

BARREL SHAPE	CIRCULAR
BARREL DIAMETER	3.00 ft
BARREL MATERIAL	CORRUGATED STEEL
BARREL MANNING'S n	0.024
INLET TYPE	CONVENTIONAL
INLET EDGE AND WALL	BEVELED EDGE (1:1)
INLET DEPRESSION	NONE

CURRENT DATE: 03-21-2007 FILE DATE: 3/21/2007
CURRENT TIME: 10:37:19 FILE NAME: Culv40

ÄÄ
ÄÄÄÄÄÄÄÄÄÄÄÄÄÄÄÄÄÄÄÄÄÄÄÄÄÄ TAILWATER ÄÄÄÄÄÄÄÄÄÄÄÄÄÄÄÄÄÄÄÄÄÄÄÄÄÄ
ÄÄ

***** USER DEFINED CHANNEL CROSS-SECTION FILE NAME: Culv40
MAIN CHANNEL AND LT & RT OVER BANKS FILE DATE: 3/6/2007
LEFT CHANNEL BOUNDARY 3
RIGHT CHANNEL BOUNDARY 6
MANNING n LEFT OVER BANK 0.060
MANNING n MAIN CHANNEL 0.055
MANNING n RIGHT OVER BANK 0.060
SLOPE OF CHANNEL 0.0194 ft/ft

CROSS-SECTION COORD. NO.	X (ft)	Y (ft)
1	0.00	2368.30
2	15.40	2368.10
3	29.50	2367.80
4	38.40	2364.30
5	50.90	2363.80
6	61.20	2364.10
7	73.10	2369.20

******* UNIFORM FLOW RATING CURVE FOR DOWNSTREAM CHANNEL

FLOW (cfs)	W.S.E. (ft)	FROUDE NUMBER	DEPTH (ft)	VEL. (f/s)	SHEAR (psf)
0.00	2363.80	0.000	-0.51	0.00	0.00
75.00	2364.92	0.656	0.61	3.39	1.02
150.00	2365.38	0.701	1.07	4.33	1.47
225.00	2365.74	0.728	1.43	4.97	1.81
300.00	2366.05	0.747	1.74	5.46	2.09
375.00	2366.33	0.761	2.02	5.87	2.33
450.00	2366.58	0.773	2.27	6.22	2.55
525.00	2366.81	0.782	2.50	6.52	2.74
600.00	2367.02	0.791	2.71	6.80	2.92
675.00	2367.23	0.798	2.92	7.05	3.09
750.00	2367.42	0.804	3.11	7.27	3.24

Note: Shear stress was calculated using R.

ÄÄ
ÄÄÄÄÄÄÄÄÄÄÄÄÄÄÄÄÄÄÄÄÄÄÄÄÄÄ ROADWAY OVERTOPPING DATA ÄÄÄÄÄÄÄÄÄÄÄÄÄÄÄÄÄÄÄÄÄÄÄÄÄÄ
ÄÄ

ROADWAY SURFACE PAVED
EMBANKMENT TOP WIDTH 25.00 ft
***** USER DEFINED ROADWAY PROFILE

CROSS-SECTION COORD. NO.	X ft	Y ft
1	0.00	2370.95
2	8.90	2371.19
3	42.90	2370.11
4	76.30	2369.65
5	87.60	2369.50
6	99.80	2369.36
7	110.90	2369.65

ÄÄ

CURRENT DATE: 03-21-2007 FILE DATE: 3/21/2007
CURRENT TIME: 10:38:20 FILE NAME: Culv41

FHWA CULVERT ANALYSIS
HY-8, VERSION 6.1

C U L V NO.	SITE DATA INLET ELEV. (ft)	OUTLET ELEV. (ft)	CULVERT LENGTH (ft)	CULVERT SHAPE, MATERIAL, INLET BARRELS SHAPE MATERIAL	SPAN (ft)	RISE (ft)	MANNING n	INLET TYPE
1	2364.33	2363.58	74.60	1 CSP	2.50	2.50	.024	CONVENTIONAL
2								
3								
4								
5								
6								

SUMMARY OF CULVERT FLOWS (cfs) FILE: Culv41 DATE: 3/21/2007

ELEV (ft)	TOTAL	1	2	3	4	5	6	ROADWAY	ITR
2364.33	0.0	0.0	0.0	0.0	0.0	0.0	0.0	0.00	1
2368.98	50.0	37.3	0.0	0.0	0.0	0.0	0.0	12.43	13
2369.30	120.0	47.3	0.0	0.0	0.0	0.0	0.0	71.97	6
2369.53	180.0	33.8	0.0	0.0	0.0	0.0	0.0	144.89	5
2369.68	240.0	33.2	0.0	0.0	0.0	0.0	0.0	205.37	4
2369.80	300.0	32.9	0.0	0.0	0.0	0.0	0.0	266.33	4
2369.91	360.0	32.7	0.0	0.0	0.0	0.0	0.0	324.62	3
2370.02	420.0	32.5	0.0	0.0	0.0	0.0	0.0	384.80	3
2370.12	480.0	32.4	0.0	0.0	0.0	0.0	0.0	445.34	3
2370.22	540.0	32.2	0.0	0.0	0.0	0.0	0.0	505.85	3
2370.31	600.0	32.1	0.0	0.0	0.0	0.0	0.0	566.24	3
2368.73	36.0	36.0	0.0	0.0	0.0	0.0	0.0	OVERTOPPING	

SUMMARY OF ITERATIVE SOLUTION ERRORS FILE: Culv41 DATE: 3/21/2007

HEAD ELEV (ft)	HEAD ERROR (ft)	TOTAL FLOW (cfs)	FLOW ERROR (cfs)	% FLOW ERROR
2364.33	0.000	0.00	0.00	0.00
2368.98	-0.003	50.00	0.25	0.50
2369.30	-0.005	120.00	0.73	0.61
2369.53	-0.008	180.00	1.28	0.71
2369.68	-0.009	240.00	1.42	0.59
2369.80	-0.006	300.00	0.78	0.26
2369.91	-0.004	360.00	2.71	0.75
2370.02	-0.004	420.00	2.66	0.63
2370.12	-0.003	480.00	2.27	0.47
2370.22	-0.002	540.00	1.92	0.36
2370.31	-0.002	600.00	1.68	0.28

<1> TOLERANCE (ft) = 0.010 <2> TOLERANCE (%) = 1.000

CURRENT DATE: 03-21-2007 FILE DATE: 3/21/2007
CURRENT TIME: 10:38:20 FILE NAME: Culv41

PERFORMANCE CURVE FOR CULVERT 1 - 1(2.50 (ft) BY 2.50 (ft)) CSP

DIS-CHARGE FLOW (cfs)	HEAD-WATER ELEV. (ft)	INLET CONTROL DEPTH (ft)	OUTLET CONTROL DEPTH (ft)	FLOW TYPE <F4>	NORMAL DEPTH (ft)	CRIT. DEPTH (ft)	OUTLET DEPTH (ft)	TW DEPTH (ft)	OUTLET VEL. (fps)	TW VEL. (fps)
0.00	2364.33	0.00	0.00	0-NF	0.00	0.00	0.00	0.02	0.00	0.00
37.31	2368.99	3.71	4.66	2-M2c	2.50	2.06	2.06	2.02	8.66	6.88
47.30	2369.29	4.96	4.23	3-M1f	2.50	2.27	2.50	2.74	9.64	8.44
33.83	2369.53	3.35	5.20	4-FFt	2.50	1.98	2.50	3.34	6.89	7.11
33.22	2369.67	3.29	5.34	4-FFt	2.50	1.96	2.50	3.59	6.77	7.15
32.89	2369.80	3.26	5.47	4-FFt	2.50	1.95	2.50	3.76	6.70	7.31
32.67	2369.91	3.24	5.58	4-FFt	2.50	1.94	2.50	3.90	6.65	7.49
32.54	2370.02	3.22	5.69	4-FFt	2.50	1.94	2.50	4.03	6.63	7.67
32.39	2370.12	3.21	5.79	4-FFt	2.50	1.93	2.50	4.15	6.60	7.72
32.23	2370.21	3.20	5.88	4-FFt	2.50	1.93	2.50	4.27	6.57	7.71
32.09	2370.30	3.18	5.97	4-FFt	2.50	1.92	2.50	4.38	6.54	7.63

El. inlet face invert 2364.33 ft El. outlet invert 2363.58 ft
El. inlet throat invert 0.00 ft El. inlet crest 2364.33 ft

```
***** SITE DATA ***** CULVERT INVERT **************
      INLET STATION                          0.00 ft
      INLET ELEVATION                     2364.33 ft
      OUTLET STATION                        74.60 ft
      OUTLET ELEVATION                    2363.58 ft
      NUMBER OF BARRELS                      1
      SLOPE (V/H)                            0.0101
      CULVERT LENGTH ALONG SLOPE            74.60 ft

***** CULVERT DATA SUMMARY ************************
      BARREL SHAPE          CIRCULAR
      BARREL DIAMETER         2.50 ft
      BARREL MATERIAL       CORRUGATED STEEL
      BARREL MANNING'S n    0.024
      INLET TYPE            CONVENTIONAL
      INLET EDGE AND WALL   BEVELED EDGE (1:1)
      INLET DEPRESSION      NONE
```

```
CURRENT DATE: 03-21-2007                                  FILE DATE: 3/21/2007
CURRENT TIME: 10:38:20                                    FILE NAME: Culv41

ÄÄÄÄÄÄÄÄÄÄÄÄÄÄÄÄÄÄÄÄÄÄÄÄÄÄÄÄÄÄÄÄÄÄÄÄÄÄÄÄÄÄÄÄÄÄÄÄÄÄÄÄÄÄÄÄÄÄÄÄÄÄÄÄÄÄÄÄÄÄÄÄÄÄÄÄÄÄÄÄÄÄ
ÄÄÄÄÄÄÄÄÄÄÄÄÄÄÄÄÄÄÄÄÄÄÄÄÄÄ          TAILWATER          ÄÄÄÄÄÄÄÄÄÄÄÄÄÄÄÄÄÄÄÄÄÄÄÄÄÄ
ÄÄÄÄÄÄÄÄÄÄÄÄÄÄÄÄÄÄÄÄÄÄÄÄÄÄÄÄÄÄÄÄÄÄÄÄÄÄÄÄÄÄÄÄÄÄÄÄÄÄÄÄÄÄÄÄÄÄÄÄÄÄÄÄÄÄÄÄÄÄÄÄÄÄÄÄÄÄÄÄÄÄ

***** USER DEFINED CHANNEL CROSS-SECTION                  FILE NAME: Culv41
      MAIN CHANNEL AND LT & RT OVER BANKS                 FILE DATE: 5/31/2005
      LEFT CHANNEL BOUNDARY          4
      RIGHT CHANNEL BOUNDARY         8
      MANNING n LEFT OVER BANK       0.050
      MANNING n MAIN CHANNEL         0.045
      MANNING n RIGHT OVER BANK       0.040
      SLOPE OF CHANNEL               0.0629 ft/ft

      CROSS-SECTION    X          Y
        COORD. NO.    (ft)       (ft)
            1          0.00    2370.20
            2         39.80    2368.30
            3         75.80    2367.80
            4        114.10    2366.50
            5        119.50    2363.60
            6        122.00    2365.10
            7        126.60    2366.50
            8        138.10    2367.60
            9        163.30    2368.80
           10        183.00    2370.50

******* UNIFORM FLOW RATING CURVE FOR DOWNSTREAM CHANNEL

        FLOW     W.S.E.   FROUDE   DEPTH    VEL.    SHEAR
        (cfs)     (ft)    NUMBER    (ft)   (f/s)    (psf)
         0.00   2363.60   0.000     0.02    0.00     0.00
        50.00   2365.60   1.263     2.02    6.88     3.62
       120.00   2366.32   1.341     2.74    8.44     4.83
       180.00   2366.92   1.420     3.34    7.11     3.38
       240.00   2367.17   1.433     3.59    7.15     3.37
       300.00   2367.34   1.436     3.76    7.31     3.50
       360.00   2367.48   1.438     3.90    7.49     3.64
       420.00   2367.61   1.437     4.03    7.67     3.78
       480.00   2367.73   1.415     4.15    7.72     3.87
       540.00   2367.85   1.411     4.27    7.71     3.87
       600.00   2367.96   1.417     4.38    7.63     3.78
Note: Shear stress was calculated using R.

ÄÄÄÄÄÄÄÄÄÄÄÄÄÄÄÄÄÄÄÄÄÄÄÄÄÄÄÄÄÄÄÄÄÄÄÄÄÄÄÄÄÄÄÄÄÄÄÄÄÄÄÄÄÄÄÄÄÄÄÄÄÄÄÄÄÄÄÄÄÄÄÄÄÄÄÄÄÄÄÄÄÄ
ÄÄÄÄÄÄÄÄÄÄÄÄÄÄÄÄÄÄÄÄÄÄÄÄÄÄ  ROADWAY OVERTOPPING DATA  ÄÄÄÄÄÄÄÄÄÄÄÄÄÄÄÄÄÄÄÄÄÄÄÄÄÄ
ÄÄÄÄÄÄÄÄÄÄÄÄÄÄÄÄÄÄÄÄÄÄÄÄÄÄÄÄÄÄÄÄÄÄÄÄÄÄÄÄÄÄÄÄÄÄÄÄÄÄÄÄÄÄÄÄÄÄÄÄÄÄÄÄÄÄÄÄÄÄÄÄÄÄÄÄÄÄÄÄÄÄ

      ROADWAY SURFACE                             PAVED
      EMBANKMENT TOP WIDTH                        24.00 ft
***** USER DEFINED ROADWAY PROFILE
      CROSS-SECTION      X           Y
      COORD. NO.         ft          ft
           1           0.00     2369.65
           2          33.80     2369.37
           3          63.40     2368.94
           4          80.90     2368.84
           5          96.50     2368.76
           6         110.80     2368.73
           7         134.30     2369.04
ÄÄÄÄÄÄÄÄÄÄÄÄÄÄÄÄÄÄÄÄÄÄÄÄÄÄÄÄÄÄÄÄÄÄÄÄÄÄÄÄÄÄÄÄÄÄÄÄÄÄÄÄÄÄÄÄÄÄÄÄÄÄÄÄÄÄÄÄÄÄÄÄÄÄÄÄÄÄÄÄÄÄ
```

CURRENT DATE: 03-21-2007 FILE DATE: 3/21/2007
CURRENT TIME: 10:39:57 FILE NAME: Culv42

FHWA CULVERT ANALYSIS
HY-8, VERSION 6.1

C U L V NO.	SITE DATA INLET ELEV. (ft)	OUTLET ELEV. (ft)	CULVERT LENGTH (ft)	CULVERT SHAPE, MATERIAL, INLET BARRELS SHAPE MATERIAL	SPAN (ft)	RISE (ft)	MANNING n	INLET TYPE
1	2363.95	2363.44	69.10	1 CSP	2.50	2.50	.024	CONVENTIONAL
2								
3								
4								
5								
6								

SUMMARY OF CULVERT FLOWS (cfs) FILE: Culv42 DATE: 3/21/2007

ELEV (ft)	TOTAL	1	2	3	4	5	6	ROADWAY	ITR
2363.95	0.0	0.0	0.0	0.0	0.0	0.0	0.0	0.00	1
2367.38	30.0	30.0	0.0	0.0	0.0	0.0	0.0	0.00	1
2368.83	50.0	37.9	0.0	0.0	0.0	0.0	0.0	11.72	10
2369.15	90.0	38.5	0.0	0.0	0.0	0.0	0.0	51.17	7
2369.25	120.0	49.3	0.0	0.0	0.0	0.0	0.0	70.01	4
2369.42	150.0	36.6	0.0	0.0	0.0	0.0	0.0	112.10	5
2369.53	180.0	35.9	0.0	0.0	0.0	0.0	0.0	143.21	4
2369.61	210.0	35.6	0.0	0.0	0.0	0.0	0.0	173.86	4
2369.69	240.0	35.5	0.0	0.0	0.0	0.0	0.0	202.84	3
2369.77	270.0	35.3	0.0	0.0	0.0	0.0	0.0	232.94	3
2369.84	300.0	35.3	0.0	0.0	0.0	0.0	0.0	263.25	3
2368.40	35.3	35.3	0.0	0.0	0.0	0.0	0.0	OVERTOPPING	

SUMMARY OF ITERATIVE SOLUTION ERRORS FILE: Culv42 DATE: 3/21/2007

HEAD ELEV (ft)	HEAD ERROR (ft)	TOTAL FLOW (cfs)	FLOW ERROR (cfs)	% FLOW ERROR
2363.95	0.000	0.00	0.00	0.00
2367.38	0.000	30.00	0.00	0.00
2368.83	-0.005	50.00	0.38	0.76
2369.15	-0.003	90.00	0.37	0.41
2369.25	-0.005	120.00	0.71	0.59
2369.42	-0.009	150.00	1.32	0.88
2369.53	-0.007	180.00	0.87	0.48
2369.61	-0.005	210.00	0.50	0.24
2369.69	-0.003	240.00	1.72	0.72
2369.77	-0.003	270.00	1.72	0.64
2369.84	-0.003	300.00	1.47	0.49

<1> TOLERANCE (ft) = 0.010 <2> TOLERANCE (%) = 1.000

CURRENT DATE: 03-21-2007 FILE DATE: 3/21/2007
CURRENT TIME: 10:39:57 FILE NAME: Culv42

PERFORMANCE CURVE FOR CULVERT 1 - 1(2.50 (ft) BY 2.50 (ft)) CSP

DIS-CHARGE FLOW (cfs)	HEAD-WATER ELEV. (ft)	INLET CONTROL DEPTH (ft)	OUTLET CONTROL DEPTH (ft)	FLOW TYPE <F4>	NORMAL DEPTH (ft)	CRIT. DEPTH (ft)	OUTLET DEPTH (ft)	TW DEPTH (ft)	OUTLET VEL. (fps)	TW VEL. (fps)
0.00	2363.95	0.00	0.00	0-NF	0.00	0.00	0.00	-0.04	0.00	0.00
30.00	2367.38	3.00	3.43	2-M2c	2.50	1.86	1.86	1.62	7.68	6.18
37.90	2368.83	3.78	4.88	2-M2c	2.50	2.07	2.07	1.96	8.75	6.88
38.46	2369.14	3.85	5.19	3-M2t	2.50	2.08	2.42	2.42	7.97	7.88
49.28	2369.19	5.24	4.38	3-M1f	2.50	2.31	2.50	2.68	10.04	8.44
36.58	2369.42	3.64	5.47	4-FFt	2.50	2.04	2.50	3.09	7.45	7.40
35.92	2369.52	3.57	5.57	4-FFt	2.50	2.03	2.50	3.28	7.32	7.11
35.64	2369.61	3.54	5.66	4-FFt	2.50	2.02	2.50	3.42	7.26	7.10
35.45	2369.68	3.52	5.73	4-FFt	2.50	2.02	2.50	3.53	7.22	7.15
35.34	2369.76	3.51	5.81	4-FFt	2.50	2.01	2.50	3.62	7.20	7.22
35.28	2369.83	3.50	5.88	4-FFt	2.50	2.01	2.50	3.70	7.19	7.31

El. inlet face invert 2363.95 ft El. outlet invert 2363.44 ft
El. inlet throat invert 0.00 ft El. inlet crest 2363.95 ft

***** SITE DATA ***** CULVERT INVERT **********

INLET STATION	0.00 ft
INLET ELEVATION	2363.95 ft
OUTLET STATION	69.10 ft
OUTLET ELEVATION	2363.44 ft
NUMBER OF BARRELS	1
SLOPE (V/H)	0.0074
CULVERT LENGTH ALONG SLOPE	69.10 ft

***** CULVERT DATA SUMMARY **********

BARREL SHAPE	CIRCULAR
BARREL DIAMETER	2.50 ft
BARREL MATERIAL	CORRUGATED STEEL
BARREL MANNING'S n	0.024
INLET TYPE	CONVENTIONAL
INLET EDGE AND WALL	BEVELED EDGE (1:1)
INLET DEPRESSION	NONE

CURRENT DATE: 03-21-2007 FILE DATE: 3/21/2007
CURRENT TIME: 10:39:57 FILE NAME: Culv42

ÄÄ
ÄÄÄÄÄÄÄÄÄÄÄÄÄÄÄÄÄÄÄÄÄÄÄÄÄÄ TAILWATER ÄÄÄÄÄÄÄÄÄÄÄÄÄÄÄÄÄÄÄÄÄÄÄÄÄÄ
ÄÄ

***** USER DEFINED CHANNEL CROSS-SECTION FILE NAME: Culv42
MAIN CHANNEL AND LT & RT OVER BANKS FILE DATE: 3/6/2007

LEFT CHANNEL BOUNDARY	4
RIGHT CHANNEL BOUNDARY	8
MANNING n LEFT OVER BANK	0.050
MANNING n MAIN CHANNEL	0.045
MANNING n RIGHT OVER BANK	0.040
SLOPE OF CHANNEL	0.0629 ft/ft

CROSS-SECTION COORD. NO.	X (ft)	Y (ft)
1	0.00	2370.00
2	39.80	2368.10
3	75.80	2367.60
4	114.10	2366.30
5	119.50	2363.40
6	122.00	2364.90
7	126.60	2366.30
8	138.10	2367.40
9	163.30	2368.60
10	183.00	2370.30

******* UNIFORM FLOW RATING CURVE FOR DOWNSTREAM CHANNEL

FLOW (cfs)	W.S.E. (ft)	FROUDE NUMBER	DEPTH (ft)	VEL. (f/s)	SHEAR (psf)
0.00	2363.40	0.000	-0.04	0.00	0.00
30.00	2365.06	1.220	1.62	6.18	3.13
50.00	2365.40	1.263	1.96	6.88	3.62
90.00	2365.86	1.315	2.42	7.88	4.38
120.00	2366.12	1.341	2.68	8.44	4.83
150.00	2366.53	1.389	3.09	7.40	3.70
180.00	2366.72	1.420	3.28	7.11	3.38
210.00	2366.86	1.429	3.42	7.10	3.34
240.00	2366.97	1.433	3.53	7.15	3.37
270.00	2367.06	1.435	3.62	7.22	3.43
300.00	2367.14	1.436	3.70	7.31	3.50

Note: Shear stress was calculated using R.

ÄÄ
ÄÄÄÄÄÄÄÄÄÄÄÄÄÄÄÄÄÄÄÄÄÄÄÄÄÄ ROADWAY OVERTOPPING DATA ÄÄÄÄÄÄÄÄÄÄÄÄÄÄÄÄÄÄÄÄÄÄÄÄÄÄ
ÄÄ

ROADWAY SURFACE	PAVED
EMBANKMENT TOP WIDTH	24.00 ft

***** USER DEFINED ROADWAY PROFILE

CROSS-SECTION COORD. NO.	X ft	Y ft
1	0.00	2369.04
2	12.00	2368.66
3	25.20	2368.53
4	33.30	2369.08
5	38.60	2369.49
6	50.50	2369.45
7	99.70	2368.40

ÄÄ

CURRENT DATE: 03-21-2007 FILE DATE: 3/21/2007
CURRENT TIME: 10:40:51 FILE NAME: Culv43

FHWA CULVERT ANALYSIS
HY-8, VERSION 6.1

C U L V NO.	SITE DATA INLET ELEV. (ft)	OUTLET ELEV. (ft)	CULVERT LENGTH (ft)	CULVERT SHAPE, MATERIAL, INLET BARRELS SHAPE MATERIAL	SPAN (ft)	RISE (ft)	MANNING n	INLET TYPE
1	2363.62	2362.23	68.71	1 CSP	2.50	2.50	.024	CONVENTIONAL
2								
3								
4								
5								
6								

SUMMARY OF CULVERT FLOWS (cfs) FILE: Culv43 DATE: 3/21/2007

ELEV (ft)	TOTAL	1	2	3	4	5	6	ROADWAY	ITR
2363.62	0.0	0.0	0.0	0.0	0.0	0.0	0.0	0.00	1
2366.60	30.0	30.0	0.0	0.0	0.0	0.0	0.0	0.00	1
2367.50	50.0	38.8	0.0	0.0	0.0	0.0	0.0	11.12	4
2367.89	90.0	40.1	0.0	0.0	0.0	0.0	0.0	49.06	6
2368.05	120.0	40.9	0.0	0.0	0.0	0.0	0.0	78.05	6
2368.18	150.0	41.6	0.0	0.0	0.0	0.0	0.0	107.52	6
2368.28	180.0	42.0	0.0	0.0	0.0	0.0	0.0	136.58	5
2368.37	210.0	42.5	0.0	0.0	0.0	0.0	0.0	166.19	5
2368.46	240.0	42.9	0.0	0.0	0.0	0.0	0.0	195.87	5
2368.53	270.0	43.3	0.0	0.0	0.0	0.0	0.0	224.19	4
2368.60	300.0	43.7	0.0	0.0	0.0	0.0	0.0	254.17	4
2366.90	33.2	33.2	0.0	0.0	0.0	0.0	0.0	OVERTOPPING	

SUMMARY OF ITERATIVE SOLUTION ERRORS FILE: Culv43 DATE: 3/21/2007

HEAD ELEV (ft)	HEAD ERROR (ft)	TOTAL FLOW (cfs)	FLOW ERROR (cfs)	% FLOW ERROR
2363.62	0.000	0.00	0.00	0.00
2366.60	0.000	30.00	0.00	0.00
2367.50	-0.001	50.00	0.05	0.10
2367.89	-0.008	90.00	0.84	0.93
2368.05	-0.005	120.00	1.02	0.85
2368.18	-0.004	150.00	0.91	0.61
2368.28	-0.005	180.00	1.38	0.77
2368.37	-0.005	210.00	1.30	0.62
2368.46	-0.004	240.00	1.19	0.50
2368.53	-0.009	270.00	2.50	0.93
2368.60	-0.008	300.00	2.14	0.71

<1> TOLERANCE (ft) = 0.010 <2> TOLERANCE (%) = 1.000

CURRENT DATE: 03-21-2007 FILE DATE: 3/21/2007
CURRENT TIME: 10:40:51 FILE NAME: Culv43

PERFORMANCE CURVE FOR CULVERT 1 - 1(2.50 (ft) BY 2.50 (ft)) CSP

DIS-CHARGE FLOW (cfs)	HEAD-WATER ELEV. (ft)	INLET CONTROL DEPTH (ft)	OUTLET CONTROL DEPTH (ft)	FLOW TYPE <F4>	NORMAL DEPTH (ft)	CRIT. DEPTH (ft)	OUTLET DEPTH (ft)	TW DEPTH (ft)	OUTLET VEL. (fps)	TW VEL. (fps)
0.00	2363.62	0.00	0.00	0-NF	0.00	0.00	0.00	-0.03	0.00	0.00
30.00	2366.60	2.98	2.95	2-M2c	1.95	1.86	1.86	0.99	7.68	2.53
38.83	2367.49	3.87	3.79	2-M2c	2.50	2.09	2.09	1.19	8.89	2.81
40.10	2367.89	4.02	4.27	2-M2c	2.50	2.11	2.11	1.46	9.09	3.21
40.93	2368.06	4.12	4.44	2-M2c	2.50	2.13	2.13	1.61	9.21	3.44
41.57	2368.18	4.20	4.56	2-M2c	2.50	2.15	2.15	1.73	9.30	3.63
42.04	2368.28	4.26	4.66	2-M2c	2.50	2.16	2.16	1.84	9.37	3.79
42.51	2368.37	4.31	4.75	2-M2c	2.50	2.17	2.17	1.94	9.44	3.94
42.94	2368.45	4.37	4.83	2-M2c	2.50	2.17	2.17	2.03	9.50	4.07
43.31	2368.52	4.41	4.90	2-M2c	2.50	2.18	2.18	2.11	9.55	4.21
43.69	2368.60	4.46	4.98	2-M2c	2.50	2.19	2.19	2.18	9.61	4.35

El. inlet face invert 2363.62 ft El. outlet invert 2362.23 ft
El. inlet throat invert 0.00 ft El. inlet crest 2363.62 ft

```
***** SITE DATA ***** CULVERT INVERT **************
      INLET STATION                          0.00 ft
      INLET ELEVATION                     2363.62 ft
      OUTLET STATION                        68.70 ft
      OUTLET ELEVATION                    2362.23 ft
      NUMBER OF BARRELS                      1
      SLOPE (V/H)                            0.0202
      CULVERT LENGTH ALONG SLOPE            68.71 ft

***** CULVERT DATA SUMMARY ************************
      BARREL SHAPE          CIRCULAR
      BARREL DIAMETER         2.50 ft
      BARREL MATERIAL       CORRUGATED STEEL
      BARREL MANNING'S n    0.024
      INLET TYPE            CONVENTIONAL
      INLET EDGE AND WALL   BEVELED EDGE (1:1)
      INLET DEPRESSION      NONE
```

CURRENT DATE: 03-21-2007 FILE DATE: 3/21/2007
CURRENT TIME: 10:40:51 FILE NAME: Culv43

ÄÄ
ÄÄÄÄÄÄÄÄÄÄÄÄÄÄÄÄÄÄÄÄÄÄÄÄÄÄ TAILWATER ÄÄÄÄÄÄÄÄÄÄÄÄÄÄÄÄÄÄÄÄÄÄÄÄÄÄ
ÄÄ

***** USER DEFINED CHANNEL CROSS-SECTION FILE NAME: Culv43
MAIN CHANNEL AND LT & RT OVER BANKS FILE DATE: 5/31/2005

LEFT CHANNEL BOUNDARY	3
RIGHT CHANNEL BOUNDARY	7
MANNING n LEFT OVER BANK	0.040
MANNING n MAIN CHANNEL	0.055
MANNING n RIGHT OVER BANK	0.050
SLOPE OF CHANNEL	0.0199 ft/ft

CROSS-SECTION COORD. NO.	X (ft)	Y (ft)
1	0.00	2366.70
2	32.80	2364.70
3	67.70	2362.90
4	70.90	2362.20
5	75.10	2362.20
6	79.00	2362.80
7	107.20	2364.30
8	116.60	2366.20

******* UNIFORM FLOW RATING CURVE FOR DOWNSTREAM CHANNEL

FLOW (cfs)	W.S.E. (ft)	FROUDE NUMBER	DEPTH (ft)	VEL. (f/s)	SHEAR (psf)
0.00	2362.20	0.000	-0.03	0.00	0.00
30.00	2363.22	0.652	0.99	2.53	0.58
50.00	2363.42	0.675	1.19	2.81	0.67
90.00	2363.69	0.705	1.46	3.21	0.80
120.00	2363.84	0.720	1.61	3.44	0.88
150.00	2363.96	0.733	1.73	3.63	0.95
180.00	2364.07	0.744	1.84	3.79	1.02
210.00	2364.17	0.753	1.94	3.94	1.07
240.00	2364.26	0.761	2.03	4.07	1.12
270.00	2364.34	0.768	2.11	4.21	1.18
300.00	2364.41	0.775	2.18	4.35	1.24

Note: Shear stress was calculated using R.

ÄÄ
ÄÄÄÄÄÄÄÄÄÄÄÄÄÄÄÄÄÄÄÄÄÄÄÄÄÄ ROADWAY OVERTOPPING DATA ÄÄÄÄÄÄÄÄÄÄÄÄÄÄÄÄÄÄÄÄÄÄÄÄÄÄ
ÄÄ

ROADWAY SURFACE	PAVED
EMBANKMENT TOP WIDTH	24.00 ft

***** USER DEFINED ROADWAY PROFILE

CROSS-SECTION COORD. NO.	X ft	Y ft
1	0.00	2368.40
2	36.20	2368.68
3	69.30	2368.54
4	87.70	2367.99
5	102.90	2368.21
6	122.30	2367.54
7	138.40	2367.79
8	172.20	2366.90

ÄÄ

CURRENT DATE: 03-26-2007 FILE DATE: 3/26/2007
CURRENT TIME: 11:40:22 FILE NAME: Culv44

FHWA CULVERT ANALYSIS
HY-8, VERSION 6.1

CULV NO.	SITE DATA: INLET ELEV. (ft)	OUTLET ELEV. (ft)	CULVERT LENGTH (ft)	CULVERT SHAPE, MATERIAL, INLET: BARRELS SHAPE MATERIAL	SPAN (ft)	RISE (ft)	MANNING n	INLET TYPE
1	2357.65	2356.05	66.52	3 CSP	3.00	3.00	.024	CONVENTIONAL
2								
3								
4								
5								
6								

SUMMARY OF CULVERT FLOWS (cfs) FILE: Culv44 DATE: 3/26/2007

ELEV (ft)	TOTAL	1	2	3	4	5	6	ROADWAY	ITR
2357.65	0.0	0.0	0.0	0.0	0.0	0.0	0.0	0.00	1
2358.63	20.0	20.0	0.0	0.0	0.0	0.0	0.0	0.00	1
2359.23	40.0	40.0	0.0	0.0	0.0	0.0	0.0	0.00	1
2359.67	60.0	60.0	0.0	0.0	0.0	0.0	0.0	0.00	1
2360.04	80.0	80.0	0.0	0.0	0.0	0.0	0.0	0.00	1
2360.40	100.0	100.0	0.0	0.0	0.0	0.0	0.0	0.00	1
2360.76	120.0	120.0	0.0	0.0	0.0	0.0	0.0	0.00	1
2361.18	140.0	140.0	0.0	0.0	0.0	0.0	0.0	0.00	1
2361.53	160.0	155.1	0.0	0.0	0.0	0.0	0.0	3.46	9
2361.70	180.0	161.8	0.0	0.0	0.0	0.0	0.0	16.40	7
2361.81	200.0	165.9	0.0	0.0	0.0	0.0	0.0	32.85	6
2361.34	147.0	147.0	0.0	0.0	0.0	0.0	0.0	OVERTOPPING	

SUMMARY OF ITERATIVE SOLUTION ERRORS FILE: Culv44 DATE: 3/26/2007

HEAD ELEV (ft)	HEAD ERROR (ft)	TOTAL FLOW (cfs)	FLOW ERROR (cfs)	% FLOW ERROR
2357.65	0.000	0.00	0.00	0.00
2358.63	0.000	20.00	0.00	0.00
2359.23	0.000	40.00	0.00	0.00
2359.67	0.000	60.00	0.00	0.00
2360.04	0.000	80.00	0.00	0.00
2360.40	0.000	100.00	0.00	0.00
2360.76	0.000	120.00	0.00	0.00
2361.18	0.000	140.00	0.00	0.00
2361.53	-0.009	160.00	1.45	0.91
2361.70	-0.007	180.00	1.76	0.98
2361.81	-0.005	200.00	1.20	0.60

<1> TOLERANCE (ft) = 0.010 <2> TOLERANCE (%) = 1.000

CURRENT DATE: 03-26-2007 FILE DATE: 3/26/2007
CURRENT TIME: 11:40:22 FILE NAME: Culv44

PERFORMANCE CURVE FOR CULVERT 1 - 3(3.00 (ft) BY 3.00 (ft)) CSP

DIS-CHARGE FLOW (cfs)	HEAD-WATER ELEV. (ft)	INLET CONTROL DEPTH (ft)	OUTLET CONTROL DEPTH (ft)	FLOW TYPE <F4>	NORMAL DEPTH (ft)	CRIT. DEPTH (ft)	OUTLET DEPTH (ft)	TW DEPTH (ft)	OUTLET VEL. (fps)	TW VEL. (fps)
0.00	2357.65	0.00	0.00	0-NF	0.00	0.00	0.00	-0.05	0.00	0.00
20.00	2358.63	0.98	0.98	1-S2n	0.69	0.80	0.60	0.95	6.62	1.68
40.00	2359.23	1.58	1.58	1-S2n	0.99	1.16	0.86	1.25	7.97	1.97
60.00	2359.67	2.02	2.02	1-S2n	1.23	1.43	1.13	1.46	8.20	2.16
80.00	2360.04	2.39	2.39	1-S2n	1.45	1.66	1.36	1.64	8.54	2.25
100.00	2360.40	2.75	2.75	1-S2n	1.66	1.87	1.57	1.80	8.91	2.30
120.00	2360.76	3.11	3.11	5-S2n	1.87	2.06	1.76	1.92	9.31	2.36
140.00	2361.18	3.53	3.53	5-S2n	2.09	2.22	2.02	2.02	9.25	2.41
155.09	2361.53	3.88	3.88	5-S2n	2.28	2.33	2.27	2.11	9.02	2.50
161.84	2361.69	4.04	4.04	5-S2n	2.36	2.38	2.28	2.18	9.37	2.60
165.95	2361.80	4.15	3.95	2-M2c	2.42	2.41	2.41	2.25	9.08	2.69

El. inlet face invert 2357.65 ft El. outlet invert 2356.05 ft
El. inlet throat invert 0.00 ft El. inlet crest 2357.65 ft

***** SITE DATA ***** CULVERT INVERT **********

INLET STATION	0.00 ft
INLET ELEVATION	2357.65 ft
OUTLET STATION	66.50 ft
OUTLET ELEVATION	2356.05 ft
NUMBER OF BARRELS	3
SLOPE (V/H)	0.0241
CULVERT LENGTH ALONG SLOPE	66.52 ft

***** CULVERT DATA SUMMARY **********

BARREL SHAPE	CIRCULAR
BARREL DIAMETER	3.00 ft
BARREL MATERIAL	CORRUGATED STEEL
BARREL MANNING'S n	0.024
INLET TYPE	CONVENTIONAL
INLET EDGE AND WALL	BEVELED EDGE (1:1)
INLET DEPRESSION	NONE

CURRENT DATE: 03-26-2007 FILE DATE: 3/26/2007
CURRENT TIME: 11:40:22 FILE NAME: Culv44

ÄÄ
ÄÄÄÄÄÄÄÄÄÄÄÄÄÄÄÄÄÄÄÄÄÄÄÄÄÄ TAILWATER ÄÄÄÄÄÄÄÄÄÄÄÄÄÄÄÄÄÄÄÄÄÄÄÄÄÄ
ÄÄ

***** USER DEFINED CHANNEL CROSS-SECTION FILE NAME: Culv44
MAIN CHANNEL AND LT & RT OVER BANKS FILE DATE: 3/26/2007

LEFT CHANNEL BOUNDARY	3
RIGHT CHANNEL BOUNDARY	6
MANNING n LEFT OVER BANK	0.050
MANNING n MAIN CHANNEL	0.065
MANNING n RIGHT OVER BANK	0.050
SLOPE OF CHANNEL	0.0105 ft/ft

CROSS-SECTION COORD. NO.	X (ft)	Y (ft)
1	0.00	2362.50
2	13.70	2360.90
3	32.10	2358.20
4	58.40	2356.00
5	68.80	2356.90
6	80.70	2357.60
7	105.40	2358.10
8	137.80	2362.40

******* UNIFORM FLOW RATING CURVE FOR DOWNSTREAM CHANNEL

FLOW (cfs)	W.S.E. (ft)	FROUDE NUMBER	DEPTH (ft)	VEL. (f/s)	SHEAR (psf)
0.00	2356.00	0.000	-0.05	0.00	0.00
20.00	2357.00	0.435	0.95	1.68	0.32
40.00	2357.30	0.456	1.25	1.97	0.41
60.00	2357.51	0.467	1.46	2.16	0.47
80.00	2357.69	0.484	1.64	2.25	0.49
100.00	2357.85	0.500	1.80	2.30	0.50
120.00	2357.97	0.509	1.92	2.36	0.52
140.00	2358.07	0.515	2.02	2.41	0.54
160.00	2358.16	0.512	2.11	2.50	0.57
180.00	2358.23	0.511	2.18	2.60	0.61
200.00	2358.30	0.511	2.25	2.69	0.65

Note: Shear stress was calculated using R.

ÄÄ
ÄÄÄÄÄÄÄÄÄÄÄÄÄÄÄÄÄÄÄÄÄÄÄÄÄÄ ROADWAY OVERTOPPING DATA ÄÄÄÄÄÄÄÄÄÄÄÄÄÄÄÄÄÄÄÄÄÄÄÄÄÄ
ÄÄ

ROADWAY SURFACE	PAVED
EMBANKMENT TOP WIDTH	24.00 ft

***** USER DEFINED ROADWAY PROFILE

CROSS-SECTION COORD. NO.	X ft	Y ft
1	0.00	2362.92
2	25.10	2362.41
3	48.20	2362.04
4	85.90	2361.63
5	100.90	2361.79
6	135.20	2361.51
7	169.20	2361.34

ÄÄ

CURRENT DATE: 03-22-2007 FILE DATE: 03/22/2007
CURRENT TIME: 09:30:48 FILE NAME: Culv45

FHWA CULVERT ANALYSIS
HY-8, VERSION 6.1

CULV NO.	SITE DATA: INLET ELEV. (ft)	OUTLET ELEV. (ft)	CULVERT LENGTH (ft)	CULVERT SHAPE, MATERIAL, INLET: BARRELS	SHAPE MATERIAL	SPAN (ft)	RISE (ft)	MANNING n	INLET TYPE
1	2356.17	2354.34	72.62	3	CMPA	2.92	2.00	.025	CONVENTIONAL
2									
3									
4									
5									
6									

SUMMARY OF CULVERT FLOWS (cfs) FILE: Culv45 DATE: 03/22/2007

ELEV (ft)	TOTAL	1	2	3	4	5	6	ROADWAY	ITR
2356.17	0.0	0.0	0.0	0.0	0.0	0.0	0.0	0.00	1
2356.90	12.0	12.0	0.0	0.0	0.0	0.0	0.0	0.00	1
2357.27	24.0	24.0	0.0	0.0	0.0	0.0	0.0	0.00	1
2357.59	36.0	36.0	0.0	0.0	0.0	0.0	0.0	0.00	1
2357.89	48.0	48.0	0.0	0.0	0.0	0.0	0.0	0.00	1
2358.19	60.0	60.0	0.0	0.0	0.0	0.0	0.0	0.00	1
2358.53	72.0	72.0	0.0	0.0	0.0	0.0	0.0	0.00	1
2358.77	80.0	80.0	0.0	0.0	0.0	0.0	0.0	0.00	1
2359.34	96.0	96.0	0.0	0.0	0.0	0.0	0.0	0.00	1
2359.74	108.0	105.3	0.0	0.0	0.0	0.0	0.0	1.74	13
2359.92	120.0	108.3	0.0	0.0	0.0	0.0	0.0	10.64	11
2359.50	99.8	99.8	0.0	0.0	0.0	0.0	0.0	OVERTOPPING	

SUMMARY OF ITERATIVE SOLUTION ERRORS FILE: Culv45 DATE: 03/22/2007

HEAD ELEV (ft)	HEAD ERROR (ft)	TOTAL FLOW (cfs)	FLOW ERROR (cfs)	% FLOW ERROR
2356.17	0.000	0.00	0.00	0.00
2356.90	0.000	12.00	0.00	0.00
2357.27	0.000	24.00	0.00	0.00
2357.59	0.000	36.00	0.00	0.00
2357.89	0.000	48.00	0.00	0.00
2358.19	0.000	60.00	0.00	0.00
2358.53	0.000	72.00	0.00	0.00
2358.77	0.000	80.00	0.00	0.00
2359.34	0.000	96.00	0.00	0.00
2359.74	-0.006	108.00	0.94	0.87
2359.92	-0.004	120.00	1.09	0.91

<1> TOLERANCE (ft) = 0.010 <2> TOLERANCE (%) = 1.000

CURRENT DATE: 03-22-2007 FILE DATE: 03/22/2007
CURRENT TIME: 09:30:48 FILE NAME: Culv45

PERFORMANCE CURVE FOR CULVERT 1 - 3(2.92 (ft) BY 2.00 (ft)) CMPA

DIS-CHARGE FLOW (cfs)	HEAD-WATER ELEV. (ft)	INLET CONTROL DEPTH (ft)	OUTLET CONTROL DEPTH (ft)	FLOW TYPE <F4>	NORMAL DEPTH (ft)	CRIT. DEPTH (ft)	OUTLET DEPTH (ft)	TW DEPTH (ft)	OUTLET VEL. (fps)	TW VEL. (fps)
0.00	2356.17	0.00	0.00	0-NF	0.00	0.00	0.00	-0.04	0.00	0.00
12.00	2356.90	0.73	0.73	1-S2n	0.42	0.48	0.28	0.69	7.11	3.63
24.00	2357.27	1.10	1.10	1-S2n	0.61	0.72	0.52	0.86	6.62	4.64
36.00	2357.59	1.42	1.42	1-S2n	0.78	0.91	0.71	1.00	6.86	5.34
48.00	2357.89	1.72	1.72	1-S2n	0.94	1.07	0.87	1.11	7.20	5.90
60.00	2358.19	2.02	2.02	5-S2n	1.09	1.22	1.02	1.21	7.55	6.37
72.00	2358.53	2.36	2.36	5-S2n	1.25	1.35	1.15	1.30	7.99	6.77
80.00	2358.78	2.61	2.61	5-S2n	1.37	1.43	1.23	1.36	8.27	7.01
96.00	2359.35	3.18	3.01	2-M2c	1.69	1.57	1.57	1.47	7.93	7.45
105.32	2359.73	3.56	3.15	2-M2c	2.00	1.64	1.64	1.54	8.40	7.74
108.27	2359.92	3.69	3.75	2-M2c	2.00	1.66	1.66	1.61	8.60	8.01

El. inlet face invert 2356.17 ft El. outlet invert 2354.34 ft
El. inlet throat invert 0.00 ft El. inlet crest 2356.17 ft

```
***** SITE DATA ***** CULVERT INVERT **************
      INLET STATION                          0.00 ft
      INLET ELEVATION                     2356.17 ft
      OUTLET STATION                        72.60 ft
      OUTLET ELEVATION                    2354.34 ft
      NUMBER OF BARRELS                      3
      SLOPE (V/H)                            0.0252
      CULVERT LENGTH ALONG SLOPE            72.62 ft

***** CULVERT DATA SUMMARY ************************
      BARREL SHAPE          PIPE ARCH
      BARREL SPAN             2.92 ft
      BARREL RISE             2.00 ft
      BARREL MATERIAL       STEEL OR ALUMINUM
      BARREL MANNING'S n    0.025
      INLET TYPE            CONVENTIONAL
      INLET EDGE AND WALL   HEADWALL
      INLET DEPRESSION      NONE
```

CURRENT DATE: 03-22-2007 FILE DATE: 03/22/2007
CURRENT TIME: 09:30:48 FILE NAME: Culv45

ÄÄ
ÄÄÄÄÄÄÄÄÄÄÄÄÄÄÄÄÄÄÄÄÄÄÄÄÄÄ TAILWATER ÄÄÄÄÄÄÄÄÄÄÄÄÄÄÄÄÄÄÄÄÄÄÄÄÄÄ
ÄÄ

***** USER DEFINED CHANNEL CROSS-SECTION FILE NAME: Culv45
MAIN CHANNEL AND LT & RT OVER BANKS FILE DATE: 5/31/2005
LEFT CHANNEL BOUNDARY 4
RIGHT CHANNEL BOUNDARY 8
MANNING n LEFT OVER BANK 0.040
MANNING n MAIN CHANNEL 0.055
MANNING n RIGHT OVER BANK 0.045
SLOPE OF CHANNEL 0.0816 ft/ft

CROSS-SECTION COORD. NO.	X (ft)	Y (ft)
1	0.00	2358.90
2	17.10	2358.40
3	23.00	2357.60
4	24.30	2356.70
5	29.10	2354.80
6	32.40	2354.90
7	36.50	2354.30
8	39.70	2355.30
9	42.40	2356.60
10	48.50	2359.10

******* UNIFORM FLOW RATING CURVE FOR DOWNSTREAM CHANNEL

FLOW (cfs)	W.S.E. (ft)	FROUDE NUMBER	DEPTH (ft)	VEL. (f/s)	SHEAR (psf)
0.00	2354.30	0.000	-0.04	0.00	0.00
12.00	2355.03	1.137	0.69	3.63	1.63
24.00	2355.21	1.214	0.86	4.64	2.33
36.00	2355.34	1.262	1.00	5.34	2.85
48.00	2355.45	1.296	1.11	5.90	3.30
60.00	2355.55	1.324	1.21	6.37	3.68
72.00	2355.65	1.346	1.30	6.77	4.03
80.00	2355.70	1.359	1.36	7.01	4.24
96.00	2355.81	1.382	1.47	7.45	4.62
108.00	2355.88	1.396	1.54	7.74	4.89
120.00	2355.95	1.409	1.61	8.01	5.13

Note: Shear stress was calculated using R.

ÄÄ
ÄÄÄÄÄÄÄÄÄÄÄÄÄÄÄÄÄÄÄÄÄÄÄÄÄÄ ROADWAY OVERTOPPING DATA ÄÄÄÄÄÄÄÄÄÄÄÄÄÄÄÄÄÄÄÄÄÄÄÄÄÄ
ÄÄ

ROADWAY SURFACE PAVED
EMBANKMENT TOP WIDTH 24.00 ft
***** USER DEFINED ROADWAY PROFILE

CROSS-SECTION COORD. NO.	X ft	Y ft
1	0.00	2360.15
2	41.70	2359.98
3	78.60	2359.71
4	87.40	2360.07
5	98.50	2359.98
6	127.50	2359.50

ÄÄ

CURRENT DATE: 03-21-2007 FILE DATE: 3/21/2007
CURRENT TIME: 10:42:48 FILE NAME: Culv46

FHWA CULVERT ANALYSIS
HY-8, VERSION 6.1

C U L V NO.	SITE DATA INLET ELEV. (ft)	OUTLET ELEV. (ft)	CULVERT LENGTH (ft)	CULVERT SHAPE, MATERIAL, INLET BARRELS SHAPE MATERIAL	SPAN (ft)	RISE (ft)	MANNING n	INLET TYPE
1	2268.37	2266.65	56.93	1 CMPA	2.92	2.00	.025	CONVENTIONAL
2								
3								
4								
5								
6								

SUMMARY OF CULVERT FLOWS (cfs) FILE: Culv46 DATE: 3/21/2007

ELEV (ft)	TOTAL	1	2	3	4	5	6	ROADWAY	ITR
2268.37	0.0	0.0	0.0	0.0	0.0	0.0	0.0	0.00	1
2269.29	6.0	6.0	0.0	0.0	0.0	0.0	0.0	0.00	1
2269.79	12.0	12.0	0.0	0.0	0.0	0.0	0.0	0.00	1
2270.24	18.0	18.0	0.0	0.0	0.0	0.0	0.0	0.00	1
2270.72	24.0	24.0	0.0	0.0	0.0	0.0	0.0	0.00	1
2271.31	30.0	30.0	0.0	0.0	0.0	0.0	0.0	0.00	1
2272.01	36.0	35.8	0.0	0.0	0.0	0.0	0.0	0.00	7
2272.23	40.0	37.4	0.0	0.0	0.0	0.0	0.0	2.26	17
2272.36	48.0	38.3	0.0	0.0	0.0	0.0	0.0	9.35	9
2272.41	54.0	38.7	0.0	0.0	0.0	0.0	0.0	14.87	5
2272.46	60.0	39.0	0.0	0.0	0.0	0.0	0.0	20.74	5
2272.02	35.8	35.8	0.0	0.0	0.0	0.0	0.0	OVERTOPPING	

SUMMARY OF ITERATIVE SOLUTION ERRORS FILE: Culv46 DATE: 3/21/2007

HEAD ELEV (ft)	HEAD ERROR (ft)	TOTAL FLOW (cfs)	FLOW ERROR (cfs)	% FLOW ERROR
2268.37	0.000	0.00	0.00	0.00
2269.29	0.000	6.00	0.00	0.00
2269.79	0.000	12.00	0.00	0.00
2270.24	0.000	18.00	0.00	0.00
2270.72	0.000	24.00	0.00	0.00
2271.31	0.000	30.00	0.00	0.00
2272.01	-0.009	36.00	0.25	0.69
2272.23	-0.003	40.00	0.37	0.93
2272.36	-0.003	48.00	0.37	0.77
2272.41	-0.004	54.00	0.46	0.85
2272.46	-0.002	60.00	0.30	0.50

<1> TOLERANCE (ft) = 0.010 <2> TOLERANCE (%) = 1.000

CURRENT DATE: 03-21-2007 FILE DATE: 3/21/2007
CURRENT TIME: 10:42:48 FILE NAME: Culv46

PERFORMANCE CURVE FOR CULVERT 1 - 1(2.92 (ft) BY 2.00 (ft)) CMPA

DIS-CHARGE FLOW (cfs)	HEAD-WATER ELEV. (ft)	INLET CONTROL DEPTH (ft)	OUTLET CONTROL DEPTH (ft)	FLOW TYPE <F4>	NORMAL DEPTH (ft)	CRIT. DEPTH (ft)	OUTLET DEPTH (ft)	TW DEPTH (ft)	OUTLET VEL. (fps)	TW VEL. (fps)
0.00	2268.37	0.00	0.00	0-NF	0.00	0.00	0.00	-0.05	0.00	0.00
6.00	2269.29	0.92	0.92	1-S2n	0.49	0.61	0.41	0.49	6.64	1.61
12.00	2269.79	1.42	1.42	1-S2n	0.74	0.91	0.61	0.71	8.22	2.02
18.00	2270.24	1.87	1.87	1-S2n	0.95	1.15	0.85	0.87	8.36	2.29
24.00	2270.72	2.35	2.35	5-S2n	1.17	1.35	1.05	1.01	8.77	2.50
30.00	2271.31	2.94	2.94	5-S2n	1.40	1.52	1.32	1.12	8.71	2.35
35.75	2272.01	3.64	3.31	2-M2c	1.76	1.65	1.65	1.19	8.54	2.33
37.37	2272.23	3.86	3.07	2-M2c	2.00	1.68	1.68	1.23	8.81	2.34
38.28	2272.35	3.98	3.87	2-M2c	2.00	1.70	1.70	1.30	8.96	2.40
38.67	2272.41	4.04	3.99	2-M2c	2.00	1.71	1.71	1.35	9.03	2.45
38.96	2272.45	4.08	4.08	2-M2c	2.00	1.71	1.71	1.40	9.07	2.50

El. inlet face invert 2268.37 ft El. outlet invert 2266.65 ft
El. inlet throat invert 0.00 ft El. inlet crest 2268.37 ft

```
***** SITE DATA ***** CULVERT INVERT **************
      INLET STATION                          0.00 ft
      INLET ELEVATION                     2268.37 ft
      OUTLET STATION                        56.90 ft
      OUTLET ELEVATION                    2266.65 ft
      NUMBER OF BARRELS                      1
      SLOPE (V/H)                            0.0302
      CULVERT LENGTH ALONG SLOPE            56.93 ft

***** CULVERT DATA SUMMARY ************************
      BARREL SHAPE          PIPE ARCH
      BARREL SPAN             2.92 ft
      BARREL RISE             2.00 ft
      BARREL MATERIAL       STEEL OR ALUMINUM
      BARREL MANNING'S n    0.025
      INLET TYPE            CONVENTIONAL
      INLET EDGE AND WALL   HEADWALL
      INLET DEPRESSION      NONE
```

CURRENT DATE: 03-21-2007 FILE DATE: 3/21/2007
CURRENT TIME: 10:42:48 FILE NAME: Culv46

ÄÄ
ÄÄÄÄÄÄÄÄÄÄÄÄÄÄÄÄÄÄÄÄÄÄÄÄÄÄ TAILWATER ÄÄÄÄÄÄÄÄÄÄÄÄÄÄÄÄÄÄÄÄÄÄÄÄÄÄ
ÄÄ

```
***** USER DEFINED CHANNEL CROSS-SECTION          FILE NAME: Culv46
      MAIN CHANNEL AND LT & RT OVER BANKS         FILE DATE: 5/31/2005
      LEFT CHANNEL BOUNDARY           6
      RIGHT CHANNEL BOUNDARY          9
      MANNING n LEFT OVER BANK        0.060
      MANNING n MAIN CHANNEL          0.070
      MANNING n RIGHT OVER BANK        0.070
      SLOPE OF CHANNEL                0.0206 ft/ft
```

CROSS-SECTION COORD. NO.	X (ft)	Y (ft)
1	0.00	2271.80
2	49.90	2270.20
3	69.40	2270.10
4	84.30	2269.10
5	105.40	2267.70
6	128.80	2267.70
7	129.60	2266.80
8	132.10	2266.60
9	137.20	2266.80
10	153.60	2269.90

******* UNIFORM FLOW RATING CURVE FOR DOWNSTREAM CHANNEL

FLOW (cfs)	W.S.E. (ft)	FROUDE NUMBER	DEPTH (ft)	VEL. (f/s)	SHEAR (psf)
0.00	2266.60	0.000	-0.05	0.00	0.00
6.00	2267.14	0.460	0.49	1.61	0.49
12.00	2267.36	0.487	0.71	2.02	0.69
18.00	2267.52	0.503	0.87	2.29	0.84
24.00	2267.66	0.514	1.01	2.50	0.96
30.00	2267.77	0.799	1.12	2.35	0.43
36.00	2267.84	0.745	1.19	2.33	0.50
40.00	2267.88	0.720	1.23	2.34	0.55
48.00	2267.95	0.685	1.30	2.40	0.62
54.00	2268.00	0.666	1.35	2.45	0.66
60.00	2268.05	0.653	1.40	2.50	0.71

Note: Shear stress was calculated using R.

ÄÄÄ
ÄÄÄÄÄÄÄÄÄÄÄÄÄÄÄÄÄÄÄÄÄÄÄÄÄÄ ROADWAY OVERTOPPING DATA ÄÄÄÄÄÄÄÄÄÄÄÄÄÄÄÄÄÄÄÄÄÄÄÄÄÄ
ÄÄÄ

```
      ROADWAY SURFACE                          PAVED
      EMBANKMENT TOP WIDTH                     24.00 ft
***** USER DEFINED ROADWAY PROFILE
```

CROSS-SECTION COORD. NO.	X ft	Y ft
1	0.00	2272.02
2	24.10	2272.32
3	38.70	2272.36
4	48.10	2272.38
5	70.80	2272.09

ÄÄ

CURRENT DATE: 03-22-2007 FILE DATE: 03/22/2007
CURRENT TIME: 09:32:08 FILE NAME: Culv47

FHWA CULVERT ANALYSIS
HY-8, VERSION 6.1

C U L V NO.	SITE DATA INLET ELEV. (ft)	OUTLET ELEV. (ft)	CULVERT LENGTH (ft)	CULVERT SHAPE, MATERIAL, INLET BARRELS SHAPE MATERIAL	SPAN (ft)	RISE (ft)	MANNING n	INLET TYPE
1	2266.36	2265.19	41.82	2 RCB	10.00	4.00	.012	CONVENTIONAL
2								
3								
4								
5								
6								

SUMMARY OF CULVERT FLOWS (cfs) FILE: Culv47 DATE: 03/22/2007

ELEV (ft)	TOTAL	1	2	3	4	5	6	ROADWAY	ITR
2266.36	0.0	0.0	0.0	0.0	0.0	0.0	0.0	0.00	1
2267.38	60.0	60.0	0.0	0.0	0.0	0.0	0.0	0.00	1
2267.97	120.0	120.0	0.0	0.0	0.0	0.0	0.0	0.00	1
2268.46	180.0	180.0	0.0	0.0	0.0	0.0	0.0	0.00	1
2268.89	240.0	240.0	0.0	0.0	0.0	0.0	0.0	0.00	1
2269.29	300.0	300.0	0.0	0.0	0.0	0.0	0.0	0.00	1
2269.67	360.0	360.0	0.0	0.0	0.0	0.0	0.0	0.00	1
2269.92	400.0	400.0	0.0	0.0	0.0	0.0	0.0	0.00	1
2270.43	480.0	480.0	0.0	0.0	0.0	0.0	0.0	0.00	1
2270.70	540.0	522.9	0.0	0.0	0.0	0.0	0.0	15.05	5
2270.95	600.0	540.0	0.0	0.0	0.0	0.0	0.0	55.87	7
2270.48	488.2	488.2	0.0	0.0	0.0	0.0	0.0	OVERTOPPING	

SUMMARY OF ITERATIVE SOLUTION ERRORS FILE: Culv47 DATE: 03/22/2007

HEAD ELEV (ft)	HEAD ERROR (ft)	TOTAL FLOW (cfs)	FLOW ERROR (cfs)	% FLOW ERROR
2266.36	0.000	0.00	0.00	0.00
2267.38	0.000	60.00	0.00	0.00
2267.97	0.000	120.00	0.00	0.00
2268.46	0.000	180.00	0.00	0.00
2268.89	0.000	240.00	0.00	0.00
2269.29	0.000	300.00	0.00	0.00
2269.67	0.000	360.00	0.00	0.00
2269.92	0.000	400.00	0.00	0.00
2270.43	0.000	480.00	0.00	0.00
2270.70	-0.005	540.00	2.01	0.37
2270.95	-0.010	600.00	4.13	0.69

<1> TOLERANCE (ft) = 0.010 <2> TOLERANCE (%) = 1.000

CURRENT DATE: 03-22-2007 FILE DATE: 03/22/2007
CURRENT TIME: 09:32:08 FILE NAME: Culv47

PERFORMANCE CURVE FOR CULVERT 1 - 2(10.00 (ft) BY 4.00 (ft)) RCB

DIS-CHARGE FLOW (cfs)	HEAD-WATER ELEV. (ft)	INLET CONTROL DEPTH (ft)	OUTLET CONTROL DEPTH (ft)	FLOW TYPE <F4>	NORMAL DEPTH (ft)	CRIT. DEPTH (ft)	OUTLET DEPTH (ft)	TW DEPTH (ft)	OUTLET VEL. (fps)	TW VEL. (fps)
0.00	2266.36	0.00	0.00	0-NF	0.00	0.00	0.00	0.01	0.00	0.00
60.00	2267.38	1.02	1.02	1-S2n	0.28	0.66	0.26	1.12	11.75	2.44
120.00	2267.97	1.61	1.61	1-S2n	0.48	1.04	0.58	1.58	10.34	3.10
180.00	2268.46	2.10	2.10	1-S2n	0.62	1.36	0.79	1.94	11.35	3.55
240.00	2268.89	2.53	2.53	1-S2n	0.76	1.65	0.99	2.25	12.11	3.90
300.00	2269.29	2.93	2.93	1-S2n	0.87	1.92	1.18	2.53	12.76	4.19
360.00	2269.67	3.31	3.31	1-S2n	0.98	2.16	1.36	2.79	13.20	4.42
400.00	2269.92	3.56	3.56	1-S2n	1.05	2.32	1.48	2.95	13.50	4.55
480.00	2270.43	4.07	4.07	5-S2n	1.19	2.62	1.70	3.25	14.11	4.78
522.94	2270.70	4.34	4.34	5-S2n	1.25	2.77	1.82	3.45	14.33	4.94
540.00	2270.81	4.45	4.45	5-S2n	1.28	2.84	1.87	3.64	14.48	5.07

El. inlet face invert 2266.36 ft El. outlet invert 2265.19 ft
El. inlet throat invert 0.00 ft El. inlet crest 2266.36 ft

```
***** SITE DATA ***** CULVERT INVERT **************
      INLET STATION                          0.00 ft
      INLET ELEVATION                     2266.36 ft
      OUTLET STATION                        41.80 ft
      OUTLET ELEVATION                    2265.19 ft
      NUMBER OF BARRELS                      2
      SLOPE (V/H)                            0.0280
      CULVERT LENGTH ALONG SLOPE            41.82 ft

***** CULVERT DATA SUMMARY ************************
      BARREL SHAPE          BOX
      BARREL SPAN            10.00 ft
      BARREL RISE             4.00 ft
      BARREL MATERIAL       CONCRETE
      BARREL MANNING'S n    0.012
      INLET TYPE            CONVENTIONAL
      INLET EDGE AND WALL   1:1 BEVEL
      INLET DEPRESSION      NONE
```

CURRENT DATE: 03-22-2007 FILE DATE: 03/22/2007
CURRENT TIME: 09:32:08 FILE NAME: Culv47

ÄÄ
ÄÄÄÄÄÄÄÄÄÄÄÄÄÄÄÄÄÄÄÄÄÄÄÄÄÄ TAILWATER ÄÄÄÄÄÄÄÄÄÄÄÄÄÄÄÄÄÄÄÄÄÄÄÄÄÄ
ÄÄ

***** USER DEFINED CHANNEL CROSS-SECTION FILE NAME: Culv47
MAIN CHANNEL AND LT & RT OVER BANKS FILE DATE: 5/31/2005

LEFT CHANNEL BOUNDARY	5
RIGHT CHANNEL BOUNDARY	8
MANNING n LEFT OVER BANK	0.060
MANNING n MAIN CHANNEL	0.070
MANNING n RIGHT OVER BANK	0.070
SLOPE OF CHANNEL	0.0128 ft/ft

CROSS-SECTION COORD. NO.	X (ft)	Y (ft)
1	0.00	2269.60
2	34.40	2269.20
3	44.10	2269.10
4	51.30	2265.60
5	60.90	2265.20
6	71.90	2265.50
7	77.00	2265.60
8	84.40	2267.80
9	99.40	2270.00

******* UNIFORM FLOW RATING CURVE FOR DOWNSTREAM CHANNEL

FLOW (cfs)	W.S.E. (ft)	FROUDE NUMBER	DEPTH (ft)	VEL. (f/s)	SHEAR (psf)
0.00	2265.20	0.000	0.01	0.00	0.00
60.00	2266.31	0.483	1.12	2.44	0.67
120.00	2266.77	0.511	1.58	3.10	0.96
180.00	2267.13	0.528	1.94	3.55	1.19
240.00	2267.44	0.540	2.25	3.90	1.38
300.00	2267.72	0.549	2.53	4.19	1.54
360.00	2267.98	0.561	2.79	4.42	1.66
400.00	2268.14	0.568	2.95	4.55	1.73
480.00	2268.44	0.580	3.25	4.78	1.85
540.00	2268.64	0.587	3.45	4.94	1.94
600.00	2268.83	0.593	3.64	5.07	2.02

Note: Shear stress was calculated using R.
ÄÄ

CURRENT DATE: 03-22-2007
CURRENT TIME: 09:32:08

FILE DATE: 03/22/2007
FILE NAME: Culv47

ÄÄÄ
ÄÄÄÄÄÄÄÄÄÄÄÄÄÄÄÄÄÄÄÄÄÄÄÄÄÄÄ ROADWAY OVERTOPPING DATA ÄÄÄÄÄÄÄÄÄÄÄÄÄÄÄÄÄÄÄÄÄÄÄÄÄÄÄ
ÄÄÄ

ROADWAY SURFACE PAVED
EMBANKMENT TOP WIDTH 24.00 ft
***** USER DEFINED ROADWAY PROFILE

CROSS-SECTION COORD. NO.	X ft	Y ft
1	0.00	2270.48
2	39.50	2270.48
3	46.30	2270.55
4	63.90	2270.69
5	75.00	2270.91
6	87.80	2271.20
7	95.70	2271.26
8	112.00	2271.16
9	132.30	2271.08
10	161.00	2271.20
11	173.70	2271.10

ÄÄÄ

CURRENT DATE: 03-21-2007 FILE DATE: 3/21/2007
CURRENT TIME: 10:43:51 FILE NAME: Culv48

FHWA CULVERT ANALYSIS
HY-8, VERSION 6.1

C U L V NO.	SITE DATA: INLET ELEV. (ft)	OUTLET ELEV. (ft)	CULVERT LENGTH (ft)	CULVERT SHAPE, MATERIAL, INLET: BARRELS SHAPE MATERIAL	SPAN (ft)	RISE (ft)	MANNING n	INLET TYPE
1	2266.37	2265.49	41.41	3 RCB	10.00	4.00	.012	CONVENTIONAL
2								
3								
4								
5								
6								

SUMMARY OF CULVERT FLOWS (cfs) FILE: Culv48 DATE: 3/21/2007

ELEV (ft)	TOTAL	1	2	3	4	5	6	ROADWAY	ITR
2266.37	0.0	0.0	0.0	0.0	0.0	0.0	0.0	0.00	1
2266.78	20.0	20.0	0.0	0.0	0.0	0.0	0.0	0.00	1
2266.97	40.0	40.0	0.0	0.0	0.0	0.0	0.0	0.00	1
2267.15	60.0	60.0	0.0	0.0	0.0	0.0	0.0	0.00	1
2267.32	80.0	80.0	0.0	0.0	0.0	0.0	0.0	0.00	1
2267.47	100.0	100.0	0.0	0.0	0.0	0.0	0.0	0.00	1
2267.61	120.0	120.0	0.0	0.0	0.0	0.0	0.0	0.00	1
2267.74	140.0	140.0	0.0	0.0	0.0	0.0	0.0	0.00	1
2267.81	150.0	150.0	0.0	0.0	0.0	0.0	0.0	0.00	1
2267.99	180.0	180.0	0.0	0.0	0.0	0.0	0.0	0.00	1
2268.11	200.0	200.0	0.0	0.0	0.0	0.0	0.0	0.00	1
2270.88	819.4	819.4	0.0	0.0	0.0	0.0	0.0	OVERTOPPING	

SUMMARY OF ITERATIVE SOLUTION ERRORS FILE: Culv48 DATE: 3/21/2007

HEAD ELEV (ft)	HEAD ERROR (ft)	TOTAL FLOW (cfs)	FLOW ERROR (cfs)	% FLOW ERROR
2266.37	0.000	0.00	0.00	0.00
2266.78	0.000	20.00	0.00	0.00
2266.97	0.000	40.00	0.00	0.00
2267.15	0.000	60.00	0.00	0.00
2267.32	0.000	80.00	0.00	0.00
2267.47	0.000	100.00	0.00	0.00
2267.61	0.000	120.00	0.00	0.00
2267.74	0.000	140.00	0.00	0.00
2267.81	0.000	150.00	0.00	0.00
2267.99	0.000	180.00	0.00	0.00
2268.11	0.000	200.00	0.00	0.00

<1> TOLERANCE (ft) = 0.010 <2> TOLERANCE (%) = 1.000

CURRENT DATE: 03-21-2007 FILE DATE: 3/21/2007
CURRENT TIME: 10:43:51 FILE NAME: Culv48

PERFORMANCE CURVE FOR CULVERT 1 - 3(10.00 (ft) BY 4.00 (ft)) RCB

DIS-CHARGE FLOW (cfs)	HEAD-WATER ELEV. (ft)	INLET CONTROL DEPTH (ft)	OUTLET CONTROL DEPTH (ft)	FLOW TYPE <F4>	NORMAL DEPTH (ft)	CRIT. DEPTH (ft)	OUTLET DEPTH (ft)	TW DEPTH (ft)	OUTLET VEL. (fps)	TW VEL. (fps)
0.00	2266.37	0.00	0.00	0-NF	0.00	0.00	0.00	-0.59	0.00	0.00
20.00	2266.78	0.41	0.41	1-S2n	0.07	0.24	0.04	0.04	16.51	2.46
40.00	2266.97	0.60	0.60	1-S2n	0.14	0.38	0.22	0.20	6.18	3.07
60.00	2267.15	0.78	0.78	1-S2n	0.21	0.50	0.20	0.33	10.00	3.50
80.00	2267.32	0.95	0.95	1-S2n	0.29	0.61	0.35	0.43	7.71	3.85
100.00	2267.47	1.10	1.10	1-S2n	0.36	0.70	0.30	0.53	11.00	4.14
120.00	2267.61	1.24	1.24	1-S2n	0.41	0.79	0.46	0.62	8.66	4.39
140.00	2267.74	1.37	1.37	1-S2n	0.45	0.88	0.52	0.74	9.00	4.72
150.00	2267.81	1.44	1.44	1-S2n	0.47	0.92	0.54	0.78	9.24	4.82
180.00	2267.99	1.62	1.62	1-S2n	0.52	1.04	0.62	0.85	9.68	5.00
200.00	2268.11	1.74	1.74	1-S2n	0.55	1.12	0.68	0.92	9.86	5.17

El. inlet face invert 2266.37 ft El. outlet invert 2265.49 ft
El. inlet throat invert 0.00 ft El. inlet crest 2266.37 ft

***** SITE DATA ***** CULVERT INVERT **********

INLET STATION	0.00 ft
INLET ELEVATION	2266.37 ft
OUTLET STATION	41.40 ft
OUTLET ELEVATION	2265.49 ft
NUMBER OF BARRELS	3
SLOPE (V/H)	0.0213
CULVERT LENGTH ALONG SLOPE	41.41 ft

***** CULVERT DATA SUMMARY **********

BARREL SHAPE	BOX
BARREL SPAN	10.00 ft
BARREL RISE	4.00 ft
BARREL MATERIAL	CONCRETE
BARREL MANNING'S n	0.012
INLET TYPE	CONVENTIONAL
INLET EDGE AND WALL	1:1 BEVEL
INLET DEPRESSION	NONE

CURRENT DATE: 03-21-2007 FILE DATE: 3/21/2007
CURRENT TIME: 10:43:51 FILE NAME: Culv48

ÄÄ
ÄÄÄÄÄÄÄÄÄÄÄÄÄÄÄÄÄÄÄÄÄÄÄÄÄÄ TAILWATER ÄÄÄÄÄÄÄÄÄÄÄÄÄÄÄÄÄÄÄÄÄÄÄÄÄÄ
ÄÄ

***** USER DEFINED CHANNEL CROSS-SECTION FILE NAME: Culv48
MAIN CHANNEL AND LT & RT OVER BANKS FILE DATE: 5/31/2005

LEFT CHANNEL BOUNDARY	3
RIGHT CHANNEL BOUNDARY	6
MANNING n LEFT OVER BANK	0.055
MANNING n MAIN CHANNEL	0.070
MANNING n RIGHT OVER BANK	0.055
SLOPE OF CHANNEL	0.0452 ft/ft

CROSS-SECTION COORD. NO.	X (ft)	Y (ft)
1	0.00	2270.60
2	34.10	2265.50
3	46.90	2264.90
4	51.00	2265.30
5	62.90	2265.40
6	79.20	2268.60
7	107.10	2269.00
8	143.60	2271.10

******* UNIFORM FLOW RATING CURVE FOR DOWNSTREAM CHANNEL

FLOW (cfs)	W.S.E. (ft)	FROUDE NUMBER	DEPTH (ft)	VEL. (f/s)	SHEAR (psf)
0.00	2264.90	0.000	-0.59	0.00	0.00
20.00	2265.53	0.900	0.04	2.46	0.77
40.00	2265.69	0.896	0.20	3.07	1.17
60.00	2265.82	0.905	0.33	3.50	1.46
80.00	2265.92	0.915	0.43	3.85	1.71
100.00	2266.02	0.924	0.53	4.14	1.92
120.00	2266.11	0.933	0.62	4.39	2.11
140.00	2266.23	0.944	0.74	4.72	2.37
150.00	2266.27	0.947	0.78	4.82	2.44
180.00	2266.34	0.954	0.85	5.00	2.59
200.00	2266.41	0.960	0.92	5.17	2.73

Note: Shear stress was calculated using R.

ÄÄ
ÄÄÄÄÄÄÄÄÄÄÄÄÄÄÄÄÄÄÄÄÄÄÄÄÄÄ ROADWAY OVERTOPPING DATA ÄÄÄÄÄÄÄÄÄÄÄÄÄÄÄÄÄÄÄÄÄÄÄÄÄÄ
ÄÄ

ROADWAY SURFACE	PAVED
EMBANKMENT TOP WIDTH	24.00 ft

***** USER DEFINED ROADWAY PROFILE

CROSS-SECTION COORD. NO.	X ft	Y ft
1	0.00	2271.33
2	64.70	2270.98
3	97.60	2271.09
4	134.10	2270.88
5	157.90	2270.94
6	219.70	2271.30

ÄÄ

CURRENT DATE: 03-21-2007 FILE DATE: 3/21/2007
CURRENT TIME: 10:44:58 FILE NAME: Culv49

FHWA CULVERT ANALYSIS
HY-8, VERSION 6.1

C U L V NO.	SITE DATA INLET ELEV. (ft)	OUTLET ELEV. (ft)	CULVERT LENGTH (ft)	CULVERT SHAPE, MATERIAL, INLET BARRELS SHAPE MATERIAL	SPAN (ft)	RISE (ft)	MANNING n	INLET TYPE
1	2270.13	2269.61	50.60	2 CSP	2.00	2.00	.024	CONVENTIONAL
2								
3								
4								
5								
6								

SUMMARY OF CULVERT FLOWS (cfs) FILE: Culv49 DATE: 3/21/2007

ELEV (ft)	TOTAL	1	2	3	4	5	6	ROADWAY	ITR
2270.13	0.0	0.0	0.0	0.0	0.0	0.0	0.0	0.00	1
2271.27	10.0	10.0	0.0	0.0	0.0	0.0	0.0	0.00	1
2271.84	20.0	20.0	0.0	0.0	0.0	0.0	0.0	0.00	1
2272.43	30.0	30.0	0.0	0.0	0.0	0.0	0.0	0.00	1
2273.50	40.0	40.0	0.0	0.0	0.0	0.0	0.0	0.00	1
2274.18	50.0	45.6	0.0	0.0	0.0	0.0	0.0	3.97	7
2274.35	60.0	46.5	0.0	0.0	0.0	0.0	0.0	12.88	7
2274.47	70.0	47.5	0.0	0.0	0.0	0.0	0.0	22.18	6
2274.55	80.0	48.1	0.0	0.0	0.0	0.0	0.0	31.12	4
2274.62	90.0	48.7	0.0	0.0	0.0	0.0	0.0	40.74	4
2274.69	100.0	49.2	0.0	0.0	0.0	0.0	0.0	50.40	4
2273.85	43.1	43.1	0.0	0.0	0.0	0.0	0.0	OVERTOPPING	

SUMMARY OF ITERATIVE SOLUTION ERRORS FILE: Culv49 DATE: 3/21/2007

HEAD ELEV (ft)	HEAD ERROR (ft)	TOTAL FLOW (cfs)	FLOW ERROR (cfs)	% FLOW ERROR
2270.13	0.000	0.00	0.00	0.00
2271.27	0.000	10.00	0.00	0.00
2271.84	0.000	20.00	0.00	0.00
2272.43	0.000	30.00	0.00	0.00
2273.50	0.000	40.00	0.00	0.00
2274.18	-0.006	50.00	0.41	0.82
2274.35	-0.007	60.00	0.60	1.00
2274.47	-0.004	70.00	0.35	0.50
2274.55	-0.010	80.00	0.78	0.97
2274.62	-0.008	90.00	0.59	0.66
2274.69	-0.006	100.00	0.42	0.42

<1> TOLERANCE (ft) = 0.010 <2> TOLERANCE (%) = 1.000

CURRENT DATE: 03-21-2007 FILE DATE: 3/21/2007
CURRENT TIME: 10:44:58 FILE NAME: Culv49

PERFORMANCE CURVE FOR CULVERT 1 - 2(2.00 (ft) BY 2.00 (ft)) CSP

DIS-CHARGE FLOW (cfs)	HEAD-WATER ELEV. (ft)	INLET CONTROL DEPTH (ft)	OUTLET CONTROL DEPTH (ft)	FLOW TYPE <F4>	NORMAL DEPTH (ft)	CRIT. DEPTH (ft)	OUTLET DEPTH (ft)	TW DEPTH (ft)	OUTLET VEL. (fps)	TW VEL. (fps)
0.00	2270.13	0.00	0.00	0-NF	0.00	0.00	0.00	-0.01	0.00	0.00
10.00	2271.27	1.09	1.14	2-M2c	0.88	0.79	0.79	0.68	4.36	1.52
20.00	2271.84	1.64	1.71	2-M2c	1.36	1.13	1.13	0.87	5.48	1.88
30.00	2272.43	2.14	2.30	2-M2c	2.00	1.40	1.40	1.01	6.41	2.12
40.00	2273.50	2.77	3.37	2-M2c	2.00	1.60	1.60	1.13	7.40	2.31
45.62	2274.17	3.20	4.04	2-M2c	2.00	1.69	1.69	1.24	8.09	2.46
46.53	2274.36	3.28	4.23	2-M2c	2.00	1.70	1.70	1.33	8.20	2.59
47.47	2274.47	3.36	4.34	2-M2c	2.00	1.71	1.71	1.41	8.31	2.70
48.10	2274.55	3.41	4.42	2-M2c	2.00	1.72	1.72	1.49	8.38	2.81
48.67	2274.62	3.46	4.49	2-M2c	2.00	1.73	1.73	1.57	8.44	2.87
49.18	2274.69	3.51	4.56	2-M2c	2.00	1.74	1.74	1.64	8.50	2.94

El. inlet face invert 2270.13 ft El. outlet invert 2269.61 ft
El. inlet throat invert 0.00 ft El. inlet crest 2270.13 ft

***** SITE DATA ***** CULVERT INVERT **********

INLET STATION	0.00 ft
INLET ELEVATION	2270.13 ft
OUTLET STATION	50.60 ft
OUTLET ELEVATION	2269.61 ft
NUMBER OF BARRELS	2
SLOPE (V/H)	0.0103
CULVERT LENGTH ALONG SLOPE	50.60 ft

***** CULVERT DATA SUMMARY **********

BARREL SHAPE	CIRCULAR
BARREL DIAMETER	2.00 ft
BARREL MATERIAL	CORRUGATED STEEL
BARREL MANNING'S n	0.024
INLET TYPE	CONVENTIONAL
INLET EDGE AND WALL	BEVELED EDGE (1:1)
INLET DEPRESSION	NONE

CURRENT DATE: 03-21-2007 FILE DATE: 3/21/2007
CURRENT TIME: 10:44:58 FILE NAME: Culv49

ÄÄÄ
ÄÄÄÄÄÄÄÄÄÄÄÄÄÄÄÄÄÄÄÄÄÄÄÄÄÄ TAILWATER ÄÄÄÄÄÄÄÄÄÄÄÄÄÄÄÄÄÄÄÄÄÄÄÄÄÄ
ÄÄÄ

***** USER DEFINED CHANNEL CROSS-SECTION FILE NAME: Culv49
MAIN CHANNEL AND LT & RT OVER BANKS FILE DATE: 3/6/2007

LEFT CHANNEL BOUNDARY	3
RIGHT CHANNEL BOUNDARY	6
MANNING n LEFT OVER BANK	0.050
MANNING n MAIN CHANNEL	0.070
MANNING n RIGHT OVER BANK	0.065
SLOPE OF CHANNEL	0.0194 ft/ft

CROSS-SECTION COORD. NO.	X (ft)	Y (ft)
1	0.00	2275.10
2	36.50	2274.00
3	78.80	2271.10
4	86.40	2269.60
5	91.40	2270.10
6	96.40	2269.80
7	120.60	2271.70
8	133.60	2273.10

******* UNIFORM FLOW RATING CURVE FOR DOWNSTREAM CHANNEL

FLOW (cfs)	W.S.E. (ft)	FROUDE NUMBER	DEPTH (ft)	VEL. (f/s)	SHEAR (psf)
0.00	2269.60	0.000	-0.01	0.00	0.00
10.00	2270.29	0.481	0.68	1.52	0.40
20.00	2270.48	0.500	0.87	1.88	0.56
30.00	2270.62	0.513	1.01	2.12	0.67
40.00	2270.74	0.524	1.13	2.31	0.76
50.00	2270.85	0.532	1.24	2.46	0.83
60.00	2270.94	0.539	1.33	2.59	0.90
70.00	2271.02	0.545	1.41	2.70	0.96
80.00	2271.10	0.550	1.49	2.81	1.01
90.00	2271.18	0.550	1.57	2.87	1.04
100.00	2271.25	0.552	1.64	2.94	1.07

Note: Shear stress was calculated using R.

ÄÄÄ
ÄÄÄÄÄÄÄÄÄÄÄÄÄÄÄÄÄÄÄÄÄÄÄÄÄÄ ROADWAY OVERTOPPING DATA ÄÄÄÄÄÄÄÄÄÄÄÄÄÄÄÄÄÄÄÄÄÄÄÄÄÄ
ÄÄÄ

ROADWAY SURFACE	PAVED
EMBANKMENT TOP WIDTH	24.00 ft

***** USER DEFINED ROADWAY PROFILE

CROSS-SECTION COORD. NO.	X ft	Y ft
1	0.00	2274.76
2	8.70	2274.49
3	35.90	2274.15
4	54.20	2273.85

ÄÄÄ

CURRENT DATE: 03-21-2007 FILE DATE: 3/21/2007
CURRENT TIME: 10:45:53 FILE NAME: Culv50

FHWA CULVERT ANALYSIS
HY-8, VERSION 6.1

C U L V NO.	SITE DATA INLET ELEV. (ft)	OUTLET ELEV. (ft)	CULVERT LENGTH (ft)	CULVERT SHAPE, MATERIAL, INLET BARRELS SHAPE MATERIAL	SPAN (ft)	RISE (ft)	MANNING n	INLET TYPE
1	2271.77	2269.68	58.04	2 CSP	1.50	1.50	.024	CONVENTIONAL
2								
3								
4								
5								
6								

SUMMARY OF CULVERT FLOWS (cfs) FILE: Culv50 DATE: 3/21/2007

ELEV (ft)	TOTAL	1	2	3	4	5	6	ROADWAY	ITR
2271.77	0.0	0.0	0.0	0.0	0.0	0.0	0.0	0.00	1
2275.74	30.0	28.1	0.0	0.0	0.0	0.0	0.0	1.77	6
2276.04	60.0	30.0	0.0	0.0	0.0	0.0	0.0	29.71	8
2276.17	90.0	30.0	0.0	0.0	0.0	0.0	0.0	59.47	5
2276.27	120.0	30.0	0.0	0.0	0.0	0.0	0.0	89.11	4
2276.37	150.0	30.0	0.0	0.0	0.0	0.0	0.0	119.38	4
2276.45	180.0	30.0	0.0	0.0	0.0	0.0	0.0	149.49	4
2276.51	200.0	30.0	0.0	0.0	0.0	0.0	0.0	168.80	3
2276.61	240.0	30.0	0.0	0.0	0.0	0.0	0.0	208.03	3
2276.68	270.0	30.0	0.0	0.0	0.0	0.0	0.0	238.48	3
2276.75	300.0	30.0	0.0	0.0	0.0	0.0	0.0	268.71	3
2275.50	27.4	27.4	0.0	0.0	0.0	0.0	0.0	OVERTOPPING	

SUMMARY OF ITERATIVE SOLUTION ERRORS FILE: Culv50 DATE: 3/21/2007

HEAD ELEV (ft)	HEAD ERROR (ft)	TOTAL FLOW (cfs)	FLOW ERROR (cfs)	% FLOW ERROR
2271.77	0.000	0.00	0.00	0.00
2275.74	-0.004	30.00	0.09	0.30
2276.04	-0.002	60.00	0.29	0.48
2276.17	-0.004	90.00	0.53	0.59
2276.27	-0.007	120.00	0.89	0.74
2276.37	-0.006	150.00	0.62	0.41
2276.45	-0.004	180.00	0.51	0.28
2276.51	-0.002	200.00	1.20	0.60
2276.61	-0.004	240.00	1.97	0.82
2276.68	-0.003	270.00	1.52	0.56
2276.75	-0.002	300.00	1.29	0.43

<1> TOLERANCE (ft) = 0.010 <2> TOLERANCE (%) = 1.000

CURRENT DATE: 03-21-2007 FILE DATE: 3/21/2007
CURRENT TIME: 10:45:53 FILE NAME: Culv50

PERFORMANCE CURVE FOR CULVERT 1 - 2(1.50 (ft) BY 1.50 (ft)) CSP

DIS-CHARGE FLOW (cfs)	HEAD-WATER ELEV. (ft)	INLET CONTROL DEPTH (ft)	OUTLET CONTROL DEPTH (ft)	FLOW TYPE <F4>	NORMAL DEPTH (ft)	CRIT. DEPTH (ft)	OUTLET DEPTH (ft)	TW DEPTH (ft)	OUTLET VEL. (fps)	TW VEL. (fps)
0.00	2271.77	0.00	0.00	0-NF	0.00	0.00	0.00	-0.08	0.00	0.00
28.14	2275.72	3.22	3.95	2-M2c	1.50	1.40	1.40	1.32	8.14	1.67
30.00	2275.29	3.52	2.84	3-M1f	1.50	1.44	1.50	1.71	8.49	2.04
30.00	2275.29	3.52	2.84	3-M1f	1.50	1.44	1.50	2.00	8.49	2.31
30.00	2275.29	3.52	2.84	3-M1f	1.50	1.44	1.50	2.26	8.49	2.47
30.00	2275.29	3.52	2.84	3-M1f	1.50	1.44	1.50	2.47	8.49	2.60
30.00	2275.29	3.52	2.84	3-M1f	1.50	1.44	1.50	2.66	8.49	2.71
30.00	2275.29	3.52	2.84	3-M1f	1.50	1.44	1.50	2.77	8.49	2.77
30.00	2275.29	3.52	2.84	3-M1f	1.50	1.44	1.50	2.97	8.49	2.89
30.00	2275.29	3.52	2.84	3-M1f	1.50	1.44	1.50	3.10	8.49	2.97
30.00	2275.29	3.52	2.84	3-M1f	1.50	1.44	1.50	3.23	8.49	3.04

El. inlet face invert 2271.77 ft El. outlet invert 2269.68 ft
El. inlet throat invert 0.00 ft El. inlet crest 2271.77 ft

***** SITE DATA ***** CULVERT INVERT **********

INLET STATION	0.00 ft
INLET ELEVATION	2271.77 ft
OUTLET STATION	58.00 ft
OUTLET ELEVATION	2269.68 ft
NUMBER OF BARRELS	2
SLOPE (V/H)	0.0360
CULVERT LENGTH ALONG SLOPE	58.04 ft

***** CULVERT DATA SUMMARY **********

BARREL SHAPE	CIRCULAR
BARREL DIAMETER	1.50 ft
BARREL MATERIAL	CORRUGATED STEEL
BARREL MANNING'S n	0.024
INLET TYPE	CONVENTIONAL
INLET EDGE AND WALL	BEVELED EDGE (1:1)
INLET DEPRESSION	NONE

CURRENT DATE: 03-21-2007 FILE DATE: 3/21/2007
CURRENT TIME: 10:45:53 FILE NAME: Culv50

ÄÄ
ÄÄÄÄÄÄÄÄÄÄÄÄÄÄÄÄÄÄÄÄÄÄÄÄÄÄ TAILWATER ÄÄÄÄÄÄÄÄÄÄÄÄÄÄÄÄÄÄÄÄÄÄÄÄÄÄ
ÄÄ

***** USER DEFINED CHANNEL CROSS-SECTION FILE NAME: Culv50
MAIN CHANNEL AND LT & RT OVER BANKS FILE DATE: 3/6/2007

LEFT CHANNEL BOUNDARY	3
RIGHT CHANNEL BOUNDARY	8
MANNING n LEFT OVER BANK	0.060
MANNING n MAIN CHANNEL	0.065
MANNING n RIGHT OVER BANK	0.065
SLOPE OF CHANNEL	0.0084 ft/ft

CROSS-SECTION COORD. NO.	X (ft)	Y (ft)
1	0.00	2274.10
2	19.90	2273.00
3	42.70	2271.70
4	54.20	2269.90
5	56.50	2269.90
6	58.70	2269.60
7	65.10	2270.40
8	74.70	2271.10
9	97.10	2275.50

******* UNIFORM FLOW RATING CURVE FOR DOWNSTREAM CHANNEL

FLOW (cfs)	W.S.E. (ft)	FROUDE NUMBER	DEPTH (ft)	VEL. (f/s)	SHEAR (psf)
0.00	2269.60	0.000	-0.08	0.00	0.00
30.00	2271.00	0.355	1.32	1.67	0.36
60.00	2271.39	0.375	1.71	2.04	0.49
90.00	2271.68	0.387	2.00	2.31	0.59
120.00	2271.94	0.403	2.26	2.47	0.63
150.00	2272.15	0.414	2.47	2.60	0.67
180.00	2272.34	0.422	2.66	2.71	0.71
200.00	2272.45	0.426	2.77	2.77	0.73
240.00	2272.65	0.433	2.97	2.89	0.77
270.00	2272.78	0.436	3.10	2.97	0.80
300.00	2272.91	0.439	3.23	3.04	0.83

Note: Shear stress was calculated using R.

ÄÄ
ÄÄÄÄÄÄÄÄÄÄÄÄÄÄÄÄÄÄÄÄÄÄÄÄÄÄ ROADWAY OVERTOPPING DATA ÄÄÄÄÄÄÄÄÄÄÄÄÄÄÄÄÄÄÄÄÄÄÄÄÄÄ
ÄÄ

ROADWAY SURFACE	PAVED
EMBANKMENT TOP WIDTH	24.00 ft

***** USER DEFINED ROADWAY PROFILE

CROSS-SECTION COORD. NO.	X ft	Y ft
1	0.00	2276.00
2	28.40	2275.90
3	35.00	2275.90
4	43.20	2275.90
5	62.20	2275.80
6	82.10	2275.80
7	101.00	2275.50

ÄÄ

CURRENT DATE: 03-21-2007 FILE DATE: 3/21/2007
CURRENT TIME: 10:46:48 FILE NAME: Culv51

FHWA CULVERT ANALYSIS
HY-8, VERSION 6.1

C U L V NO.	SITE DATA INLET ELEV. (ft)	OUTLET ELEV. (ft)	CULVERT LENGTH (ft)	CULVERT SHAPE, MATERIAL, INLET BARRELS SHAPE MATERIAL	SPAN (ft)	RISE (ft)	MANNING n	INLET TYPE
1	2266.62	2265.18	59.02	6 RCB	10.00	3.00	.012	CONVENTIONAL
2								
3								
4								
5								
6								

SUMMARY OF CULVERT FLOWS (cfs) FILE: Culv51 DATE: 3/21/2007

ELEV (ft)	TOTAL	1	2	3	4	5	6	ROADWAY	ITR
2266.62	0.0	0.0	0.0	0.0	0.0	0.0	0.0	0.00	1
2267.16	70.0	70.0	0.0	0.0	0.0	0.0	0.0	0.00	1
2267.48	140.0	140.0	0.0	0.0	0.0	0.0	0.0	0.00	1
2267.75	210.0	210.0	0.0	0.0	0.0	0.0	0.0	0.00	1
2267.99	280.0	280.0	0.0	0.0	0.0	0.0	0.0	0.00	1
2268.20	350.0	350.0	0.0	0.0	0.0	0.0	0.0	0.00	1
2268.39	420.0	420.0	0.0	0.0	0.0	0.0	0.0	0.00	1
2268.58	490.0	490.0	0.0	0.0	0.0	0.0	0.0	0.00	1
2268.60	500.0	500.0	0.0	0.0	0.0	0.0	0.0	0.00	1
2268.93	630.0	630.0	0.0	0.0	0.0	0.0	0.0	0.00	1
2269.11	700.0	700.0	0.0	0.0	0.0	0.0	0.0	0.00	1
2269.70	944.0	944.0	0.0	0.0	0.0	0.0	0.0	OVERTOPPING	

SUMMARY OF ITERATIVE SOLUTION ERRORS FILE: Culv51 DATE: 3/21/2007

HEAD ELEV (ft)	HEAD ERROR (ft)	TOTAL FLOW (cfs)	FLOW ERROR (cfs)	% FLOW ERROR
2266.62	0.000	0.00	0.00	0.00
2267.16	0.000	70.00	0.00	0.00
2267.48	0.000	140.00	0.00	0.00
2267.75	0.000	210.00	0.00	0.00
2267.99	0.000	280.00	0.00	0.00
2268.20	0.000	350.00	0.00	0.00
2268.39	0.000	420.00	0.00	0.00
2268.58	0.000	490.00	0.00	0.00
2268.60	0.000	500.00	0.00	0.00
2268.93	0.000	630.00	0.00	0.00
2269.11	0.000	700.00	0.00	0.00

<1> TOLERANCE (ft) = 0.010 <2> TOLERANCE (%) = 1.000

CURRENT DATE: 03-21-2007 FILE DATE: 3/21/2007
CURRENT TIME: 10:46:48 FILE NAME: Culv51

PERFORMANCE CURVE FOR CULVERT 1 - 6(10.00 (ft) BY 3.00 (ft)) RCB

DIS-CHARGE FLOW (cfs)	HEAD-WATER ELEV. (ft)	INLET CONTROL DEPTH (ft)	OUTLET CONTROL DEPTH (ft)	FLOW TYPE <F4>	NORMAL DEPTH (ft)	CRIT. DEPTH (ft)	OUTLET DEPTH (ft)	TW DEPTH (ft)	OUTLET VEL. (fps)	TW VEL. (fps)
0.00	2266.62	0.00	0.00	0-NF	0.00	0.00	0.00	0.02	0.00	0.00
70.00	2267.16	0.54	0.54	1-S2n	0.14	0.35	0.18	1.29	6.51	2.81
140.00	2267.48	0.86	0.86	1-S2n	0.28	0.55	0.29	1.64	7.96	3.62
210.00	2267.75	1.13	1.13	1-S2n	0.36	0.73	0.39	1.92	9.06	4.18
280.00	2267.99	1.37	1.37	1-S2n	0.43	0.88	0.38	2.27	12.29	4.22
350.00	2268.20	1.58	1.58	1-S2n	0.49	1.02	0.56	2.59	10.42	4.01
420.00	2268.39	1.77	1.77	1-S2n	0.56	1.15	0.63	2.79	11.06	4.03
490.00	2268.58	1.96	1.96	1-S2n	0.62	1.28	0.72	2.97	11.38	4.09
500.00	2268.60	1.98	1.98	1-S1f	0.63	1.29	1.40	3.07	5.95	4.20
630.00	2268.93	2.31	2.31	1-S1f	0.72	1.51	1.70	3.17	6.18	4.37
700.00	2269.11	2.49	2.49	1-S1f	0.77	1.62	1.80	3.26	6.48	4.52

El. inlet face invert 2266.62 ft El. outlet invert 2265.18 ft
El. inlet throat invert 0.00 ft El. inlet crest 2266.62 ft

***** SITE DATA ***** CULVERT INVERT **********

INLET STATION	0.00 ft
INLET ELEVATION	2266.62 ft
OUTLET STATION	59.00 ft
OUTLET ELEVATION	2265.18 ft
NUMBER OF BARRELS	6
SLOPE (V/H)	0.0244
CULVERT LENGTH ALONG SLOPE	59.02 ft

***** CULVERT DATA SUMMARY **********

BARREL SHAPE	BOX
BARREL SPAN	10.00 ft
BARREL RISE	3.00 ft
BARREL MATERIAL	CONCRETE
BARREL MANNING'S n	0.012
INLET TYPE	CONVENTIONAL
INLET EDGE AND WALL	1:1 BEVEL
INLET DEPRESSION	NONE

CURRENT DATE: 03-21-2007 FILE DATE: 3/21/2007
CURRENT TIME: 10:46:48 FILE NAME: Culv51

ÄÄÄ
ÄÄÄÄÄÄÄÄÄÄÄÄÄÄÄÄÄÄÄÄÄÄÄÄÄÄ TAILWATER ÄÄÄÄÄÄÄÄÄÄÄÄÄÄÄÄÄÄÄÄÄÄÄÄÄÄ
ÄÄÄ

***** USER DEFINED CHANNEL CROSS-SECTION FILE NAME: Culv51
MAIN CHANNEL AND LT & RT OVER BANKS FILE DATE: 3/6/2007

LEFT CHANNEL BOUNDARY	2
RIGHT CHANNEL BOUNDARY	6
MANNING n LEFT OVER BANK	0.060
MANNING n MAIN CHANNEL	0.060
MANNING n RIGHT OVER BANK	0.070
SLOPE OF CHANNEL	0.0224 ft/ft

CROSS-SECTION COORD. NO.	X (ft)	Y (ft)
1	0.00	2269.41
2	15.20	2269.40
3	23.50	2266.40
4	54.10	2265.20
5	70.20	2268.20
6	108.50	2267.30
7	150.30	2269.30

******* UNIFORM FLOW RATING CURVE FOR DOWNSTREAM CHANNEL

FLOW (cfs)	W.S.E. (ft)	FROUDE NUMBER	DEPTH (ft)	VEL. (f/s)	SHEAR (psf)
0.00	2265.20	0.000	0.02	0.00	0.00
70.00	2266.47	0.610	1.29	2.81	0.92
140.00	2266.82	0.656	1.64	3.62	1.33
210.00	2267.10	0.682	1.92	4.18	1.64
280.00	2267.45	0.683	2.27	4.22	1.68
350.00	2267.77	0.669	2.59	4.01	1.57
420.00	2267.97	0.669	2.79	4.03	1.58
490.00	2268.15	0.670	2.97	4.09	1.63
500.00	2268.25	0.675	3.07	4.20	1.69
630.00	2268.35	0.681	3.17	4.37	1.79
700.00	2268.44	0.687	3.26	4.52	1.89

Note: Shear stress was calculated using R.

ÄÄÄ
ÄÄÄÄÄÄÄÄÄÄÄÄÄÄÄÄÄÄÄÄÄÄÄÄÄÄ ROADWAY OVERTOPPING DATA ÄÄÄÄÄÄÄÄÄÄÄÄÄÄÄÄÄÄÄÄÄÄÄÄÄÄ
ÄÄÄ

ROADWAY SURFACE	PAVED
EMBANKMENT TOP WIDTH	24.00 ft

***** USER DEFINED ROADWAY PROFILE

CROSS-SECTION COORD. NO.	X ft	Y ft
1	0.00	2370.60
2	31.80	2270.30
3	70.30	2269.99
4	103.90	2269.70
5	148.00	2269.70
6	172.40	2269.70
7	199.80	2269.70

ÄÄÄ

CURRENT DATE: 03-21-2007 FILE DATE: 3/21/2007
CURRENT TIME: 10:47:52 FILE NAME: Culv52

FHWA CULVERT ANALYSIS
HY-8, VERSION 6.1

C U L V NO.	SITE DATA: INLET ELEV. (ft)	OUTLET ELEV. (ft)	CULVERT LENGTH (ft)	CULVERT SHAPE, MATERIAL, INLET: BARRELS SHAPE MATERIAL	SPAN (ft)	RISE (ft)	MANNING n	INLET TYPE
1	2264.39	2261.73	72.05	2 CSP	2.00	2.00	.024	CONVENTIONAL
2								
3								
4								
5								
6								

SUMMARY OF CULVERT FLOWS (cfs) FILE: Culv52 DATE: 3/21/2007

ELEV (ft)	TOTAL	1	2	3	4	5	6	ROADWAY	ITR
2264.39	0.0	0.0	0.0	0.0	0.0	0.0	0.0	0.00	1
2265.54	10.0	10.0	0.0	0.0	0.0	0.0	0.0	0.00	1
2266.19	20.0	20.0	0.0	0.0	0.0	0.0	0.0	0.00	1
2266.87	30.0	29.8	0.0	0.0	0.0	0.0	0.0	0.01	7
2267.15	40.0	33.2	0.0	0.0	0.0	0.0	0.0	6.54	12
2267.28	50.0	34.6	0.0	0.0	0.0	0.0	0.0	15.01	9
2267.37	60.0	35.6	0.0	0.0	0.0	0.0	0.0	24.02	7
2267.44	70.0	36.3	0.0	0.0	0.0	0.0	0.0	33.03	5
2267.50	80.0	37.0	0.0	0.0	0.0	0.0	0.0	42.68	5
2267.55	90.0	37.5	0.0	0.0	0.0	0.0	0.0	51.99	4
2267.59	100.0	37.9	0.0	0.0	0.0	0.0	0.0	61.61	4
2266.85	29.5	29.5	0.0	0.0	0.0	0.0	0.0	OVERTOPPING	

SUMMARY OF ITERATIVE SOLUTION ERRORS FILE: Culv52 DATE: 3/21/2007

HEAD ELEV (ft)	HEAD ERROR (ft)	TOTAL FLOW (cfs)	FLOW ERROR (cfs)	% FLOW ERROR
2264.39	0.000	0.00	0.00	0.00
2265.54	0.000	10.00	0.00	0.00
2266.19	0.000	20.00	0.00	0.00
2266.87	-0.006	30.00	0.24	0.80
2267.15	-0.002	40.00	0.29	0.72
2267.28	-0.002	50.00	0.36	0.72
2267.37	-0.002	60.00	0.36	0.60
2267.44	-0.004	70.00	0.63	0.90
2267.50	-0.003	80.00	0.37	0.46
2267.55	-0.005	90.00	0.56	0.62
2267.59	-0.004	100.00	0.47	0.47

<1> TOLERANCE (ft) = 0.010 <2> TOLERANCE (%) = 1.000

CURRENT DATE: 03-21-2007 FILE DATE: 3/21/2007
CURRENT TIME: 10:47:52 FILE NAME: Culv52

PERFORMANCE CURVE FOR CULVERT 1 - 2(2.00 (ft) BY 2.00 (ft)) CSP

DIS-CHARGE FLOW (cfs)	HEAD-WATER ELEV. (ft)	INLET CONTROL DEPTH (ft)	OUTLET CONTROL DEPTH (ft)	FLOW TYPE <F4>	NORMAL DEPTH (ft)	CRIT. DEPTH (ft)	OUTLET DEPTH (ft)	TW DEPTH (ft)	OUTLET VEL. (fps)	TW VEL. (fps)
0.00	2264.39	0.00	0.00	0-NF	0.00	0.00	0.00	-0.03	0.00	0.00
10.00	2265.54	1.15	1.15	1-S2n	0.62	0.79	0.49	0.72	8.39	2.21
20.00	2266.19	1.80	1.80	1-S2n	0.91	1.13	0.83	0.94	8.16	2.66
29.75	2266.87	2.48	2.48	5-S2n	1.15	1.39	1.09	1.11	8.51	2.96
33.17	2267.15	2.76	2.76	5-S2n	1.24	1.46	1.16	1.24	8.75	3.19
34.63	2267.28	2.89	2.89	5-S2n	1.28	1.49	1.19	1.35	8.85	3.38
35.62	2267.37	2.98	2.98	5-S2n	1.30	1.51	1.21	1.45	8.92	3.55
36.33	2267.44	3.05	3.05	5-S2n	1.32	1.53	1.23	1.54	8.96	3.69
36.95	2267.50	3.11	3.11	5-S2n	1.33	1.54	1.24	1.63	9.00	3.83
37.45	2267.54	3.15	3.15	5-S2n	1.35	1.55	1.25	1.70	9.05	3.94
37.91	2267.59	3.20	3.20	5-S2n	1.36	1.56	1.26	1.77	9.08	4.05

El. inlet face invert 2264.39 ft El. outlet invert 2261.73 ft
El. inlet throat invert 0.00 ft El. inlet crest 2264.39 ft

***** SITE DATA ***** CULVERT INVERT **********

INLET STATION	0.00 ft
INLET ELEVATION	2264.39 ft
OUTLET STATION	72.00 ft
OUTLET ELEVATION	2261.73 ft
NUMBER OF BARRELS	2
SLOPE (V/H)	0.0369
CULVERT LENGTH ALONG SLOPE	72.05 ft

***** CULVERT DATA SUMMARY **********

BARREL SHAPE	CIRCULAR
BARREL DIAMETER	2.00 ft
BARREL MATERIAL	CORRUGATED STEEL
BARREL MANNING'S n	0.024
INLET TYPE	CONVENTIONAL
INLET EDGE AND WALL	THIN EDGE PROJECTING
INLET DEPRESSION	NONE

CURRENT DATE: 03-21-2007 FILE DATE: 3/21/2007
CURRENT TIME: 10:47:52 FILE NAME: Culv52

ÄÄ
ÄÄÄÄÄÄÄÄÄÄÄÄÄÄÄÄÄÄÄÄÄÄÄÄÄÄ TAILWATER ÄÄÄÄÄÄÄÄÄÄÄÄÄÄÄÄÄÄÄÄÄÄÄÄÄÄ
ÄÄ

***** USER DEFINED CHANNEL CROSS-SECTION FILE NAME: Culv52
MAIN CHANNEL AND LT & RT OVER BANKS FILE DATE: 03/19/2007
LEFT CHANNEL BOUNDARY 2
RIGHT CHANNEL BOUNDARY 5
MANNING n LEFT OVER BANK 0.055
MANNING n MAIN CHANNEL 0.070
MANNING n RIGHT OVER BANK 0.055
SLOPE OF CHANNEL 0.0314 ft/ft

CROSS-SECTION COORD. NO.	X (ft)	Y (ft)
1	0.00	2266.00
2	35.10	2262.20
3	38.30	2261.70
4	43.30	2262.20
5	53.00	2264.20
6	87.90	2266.00

******* UNIFORM FLOW RATING CURVE FOR DOWNSTREAM CHANNEL

FLOW (cfs)	W.S.E. (ft)	FROUDE NUMBER	DEPTH (ft)	VEL. (f/s)	SHEAR (psf)
0.00	2261.70	0.000	-0.03	0.00	0.00
10.00	2262.45	0.627	0.72	2.21	0.76
20.00	2262.67	0.660	0.94	2.66	0.99
30.00	2262.84	0.680	1.11	2.96	1.16
40.00	2262.97	0.695	1.24	3.19	1.29
50.00	2263.08	0.707	1.35	3.38	1.40
60.00	2263.18	0.716	1.45	3.55	1.50
70.00	2263.27	0.724	1.54	3.69	1.59
80.00	2263.35	0.732	1.63	3.83	1.67
90.00	2263.43	0.738	1.70	3.94	1.75
100.00	2263.50	0.744	1.77	4.05	1.82

Note: Shear stress was calculated using R.

ÄÄ
ÄÄÄÄÄÄÄÄÄÄÄÄÄÄÄÄÄÄÄÄÄÄÄÄÄÄ ROADWAY OVERTOPPING DATA ÄÄÄÄÄÄÄÄÄÄÄÄÄÄÄÄÄÄÄÄÄÄÄÄÄÄ
ÄÄ

ROADWAY SURFACE PAVED
EMBANKMENT TOP WIDTH 24.00 ft
***** USER DEFINED ROADWAY PROFILE

CROSS-SECTION COORD. NO.	X ft	Y ft
1	0.00	2267.50
2	23.30	2267.35
3	46.90	2267.24
4	54.30	2267.10
5	65.00	2266.98
6	80.50	2266.85

ÄÄ

CURRENT DATE: 03-21-2007 FILE DATE: 3/21/2007
CURRENT TIME: 10:48:33 FILE NAME: Culv53

FHWA CULVERT ANALYSIS
HY-8, VERSION 6.1

C U L V NO.	SITE DATA INLET ELEV. (ft)	OUTLET ELEV. (ft)	CULVERT LENGTH (ft)	CULVERT SHAPE, MATERIAL, INLET BARRELS SHAPE MATERIAL	SPAN (ft)	RISE (ft)	MANNING n	INLET TYPE
1	2259.36	2258.45	50.51	3 RCB	10.00	4.00	.012	CONVENTIONAL
2								
3								
4								
5								
6								

SUMMARY OF CULVERT FLOWS (cfs) FILE: Culv53 DATE: 3/21/2007

ELEV (ft)	TOTAL	1	2	3	4	5	6	ROADWAY	ITR
2259.36	0.0	0.0	0.0	0.0	0.0	0.0	0.0	0.00	1
2259.76	22.5	22.5	0.0	0.0	0.0	0.0	0.0	0.00	1
2259.97	45.0	45.0	0.0	0.0	0.0	0.0	0.0	0.00	1
2260.15	67.5	67.5	0.0	0.0	0.0	0.0	0.0	0.00	1
2260.32	90.0	90.0	0.0	0.0	0.0	0.0	0.0	0.00	1
2260.48	112.5	112.5	0.0	0.0	0.0	0.0	0.0	0.00	1
2260.62	135.0	135.0	0.0	0.0	0.0	0.0	0.0	0.00	1
2260.71	150.0	150.0	0.0	0.0	0.0	0.0	0.0	0.00	1
2260.89	180.0	180.0	0.0	0.0	0.0	0.0	0.0	0.00	1
2261.01	202.5	202.5	0.0	0.0	0.0	0.0	0.0	0.00	1
2261.13	225.0	225.0	0.0	0.0	0.0	0.0	0.0	0.00	1
2263.67	768.3	768.3	0.0	0.0	0.0	0.0	0.0	OVERTOPPING	

SUMMARY OF ITERATIVE SOLUTION ERRORS FILE: Culv53 DATE: 3/21/2007

HEAD ELEV (ft)	HEAD ERROR (ft)	TOTAL FLOW (cfs)	FLOW ERROR (cfs)	% FLOW ERROR
2259.36	0.000	0.00	0.00	0.00
2259.76	0.000	22.50	0.00	0.00
2259.97	0.000	45.00	0.00	0.00
2260.15	0.000	67.50	0.00	0.00
2260.32	0.000	90.00	0.00	0.00
2260.48	0.000	112.50	0.00	0.00
2260.62	0.000	135.00	0.00	0.00
2260.71	0.000	150.00	0.00	0.00
2260.89	0.000	180.00	0.00	0.00
2261.01	0.000	202.50	0.00	0.00
2261.13	0.000	225.00	0.00	0.00

<1> TOLERANCE (ft) = 0.010 <2> TOLERANCE (%) = 1.000

CURRENT DATE: 03-21-2007 FILE DATE: 3/21/2007
CURRENT TIME: 10:48:33 FILE NAME: Culv53

PERFORMANCE CURVE FOR CULVERT 1 - 3(10.00 (ft) BY 4.00 (ft)) RCB

DIS-CHARGE FLOW (cfs)	HEAD-WATER ELEV. (ft)	INLET CONTROL DEPTH (ft)	OUTLET CONTROL DEPTH (ft)	FLOW TYPE <F4>	NORMAL DEPTH (ft)	CRIT. DEPTH (ft)	OUTLET DEPTH (ft)	TW DEPTH (ft)	OUTLET VEL. (fps)	TW VEL. (fps)
0.00	2259.36	0.00	0.00	0-NF	0.00	0.00	0.00	0.05	0.00	0.00
22.50	2259.76	0.40	0.40	1-S2n	0.09	0.26	0.06	1.13	12.49	2.61
45.00	2259.97	0.61	0.61	1-S2n	0.17	0.41	0.24	1.42	6.18	3.17
67.50	2260.15	0.79	0.79	1-S2n	0.26	0.54	0.24	1.63	9.34	3.53
90.00	2260.32	0.96	0.96	1-S2n	0.35	0.66	0.39	1.80	7.79	3.80
112.50	2260.47	1.11	1.11	1-S2n	0.42	0.76	0.36	1.95	10.41	4.03
135.00	2260.62	1.26	1.26	1-S2n	0.46	0.86	0.52	2.08	8.73	4.21
150.00	2260.71	1.35	1.35	1-S2n	0.49	0.92	0.56	2.15	8.98	4.32
180.00	2260.89	1.53	1.53	1-S2n	0.55	1.04	0.63	2.30	9.52	4.52
202.50	2261.01	1.65	1.65	1-S2n	0.59	1.13	0.70	2.39	9.71	4.66
225.00	2261.13	1.77	1.77	1-S2n	0.63	1.21	0.75	2.48	10.04	4.78

El. inlet face invert 2259.36 ft El. outlet invert 2258.45 ft
El. inlet throat invert 0.00 ft El. inlet crest 2259.36 ft

```
***** SITE DATA ***** CULVERT INVERT **************
      INLET STATION                          0.00 ft
      INLET ELEVATION                     2259.36 ft
      OUTLET STATION                        50.50 ft
      OUTLET ELEVATION                    2258.45 ft
      NUMBER OF BARRELS                      3
      SLOPE (V/H)                            0.0180
      CULVERT LENGTH ALONG SLOPE            50.51 ft

***** CULVERT DATA SUMMARY ************************
      BARREL SHAPE          BOX
      BARREL SPAN            10.00 ft
      BARREL RISE             4.00 ft
      BARREL MATERIAL       CONCRETE
      BARREL MANNING'S n    0.012
      INLET TYPE            CONVENTIONAL
      INLET EDGE AND WALL   1:1 BEVEL (45 DEG. FLARE)
      INLET DEPRESSION      NONE
```

CURRENT DATE: 03-21-2007 FILE DATE: 3/21/2007
CURRENT TIME: 10:48:33 FILE NAME: Culv53

ÄÄ
ÄÄÄÄÄÄÄÄÄÄÄÄÄÄÄÄÄÄÄÄÄÄÄÄÄÄ TAILWATER ÄÄÄÄÄÄÄÄÄÄÄÄÄÄÄÄÄÄÄÄÄÄÄÄÄÄ
ÄÄ

***** USER DEFINED CHANNEL CROSS-SECTION FILE NAME: Culv53
MAIN CHANNEL AND LT & RT OVER BANKS FILE DATE: 6/1/2005

LEFT CHANNEL BOUNDARY	2
RIGHT CHANNEL BOUNDARY	5
MANNING n LEFT OVER BANK	0.050
MANNING n MAIN CHANNEL	0.070
MANNING n RIGHT OVER BANK	0.060
SLOPE OF CHANNEL	0.0337 ft/ft

CROSS-SECTION COORD. NO.	X (ft)	Y (ft)
1	0.00	2263.20
2	38.20	2260.40
3	47.60	2259.50
4	54.50	2258.50
5	64.10	2259.70
6	92.90	2264.00

******* UNIFORM FLOW RATING CURVE FOR DOWNSTREAM CHANNEL

FLOW (cfs)	W.S.E. (ft)	FROUDE NUMBER	DEPTH (ft)	VEL. (f/s)	SHEAR (psf)
0.00	2258.50	0.000	0.05	0.00	0.00
22.50	2259.58	0.633	1.13	2.61	1.11
45.00	2259.87	0.696	1.42	3.17	1.39
67.50	2260.08	0.722	1.63	3.53	1.60
90.00	2260.25	0.739	1.80	3.80	1.77
112.50	2260.40	0.751	1.95	4.03	1.92
135.00	2260.53	0.763	2.08	4.21	2.03
150.00	2260.60	0.771	2.15	4.32	2.10
180.00	2260.75	0.782	2.30	4.52	2.22
202.50	2260.84	0.789	2.39	4.66	2.31
225.00	2260.93	0.795	2.48	4.78	2.39

Note: Shear stress was calculated using R.

ÄÄ
ÄÄÄÄÄÄÄÄÄÄÄÄÄÄÄÄÄÄÄÄÄÄÄÄÄÄ ROADWAY OVERTOPPING DATA ÄÄÄÄÄÄÄÄÄÄÄÄÄÄÄÄÄÄÄÄÄÄÄÄÄÄ
ÄÄ

ROADWAY SURFACE	PAVED
EMBANKMENT TOP WIDTH	24.00 ft

***** USER DEFINED ROADWAY PROFILE

CROSS-SECTION COORD. NO.	X ft	Y ft
1	0.00	2264.03
2	15.20	2264.00
3	28.70	2264.07
4	46.20	2264.01
5	64.90	2263.83
6	87.80	2263.67

ÄÄ

CURRENT DATE: 03-21-2007 FILE DATE: 3/21/2007
CURRENT TIME: 10:49:37 FILE NAME: Culv54

FHWA CULVERT ANALYSIS
HY-8, VERSION 6.1

CULV NO.	INLET ELEV. (ft)	OUTLET ELEV. (ft)	CULVERT LENGTH (ft)	BARRELS SHAPE MATERIAL	SPAN (ft)	RISE (ft)	MANNING n	INLET TYPE
1	2249.77	2248.77	54.61	1 RCB	10.00	3.00	.012	CONVENTIONAL
2								
3								
4								
5								
6								

SUMMARY OF CULVERT FLOWS (cfs) FILE: Culv54 DATE: 3/21/2007

ELEV (ft)	TOTAL	1	2	3	4	5	6	ROADWAY	ITR
2249.77	0.0	0.0	0.0	0.0	0.0	0.0	0.0	0.00	1
2250.38	15.0	15.0	0.0	0.0	0.0	0.0	0.0	0.00	1
2250.73	30.0	30.0	0.0	0.0	0.0	0.0	0.0	0.00	1
2251.03	45.0	45.0	0.0	0.0	0.0	0.0	0.0	0.00	1
2251.30	60.0	60.0	0.0	0.0	0.0	0.0	0.0	0.00	1
2251.56	75.0	75.0	0.0	0.0	0.0	0.0	0.0	0.00	1
2251.81	90.0	90.0	0.0	0.0	0.0	0.0	0.0	0.00	1
2252.05	105.0	105.0	0.0	0.0	0.0	0.0	0.0	0.00	1
2252.29	120.0	120.0	0.0	0.0	0.0	0.0	0.0	0.00	1
2252.52	135.0	135.0	0.0	0.0	0.0	0.0	0.0	0.00	1
2252.75	150.0	150.0	0.0	0.0	0.0	0.0	0.0	0.00	1
2253.16	176.9	176.9	0.0	0.0	0.0	0.0	0.0	OVERTOPPING	

SUMMARY OF ITERATIVE SOLUTION ERRORS FILE: Culv54 DATE: 3/21/2007

HEAD ELEV (ft)	HEAD ERROR (ft)	TOTAL FLOW (cfs)	FLOW ERROR (cfs)	% FLOW ERROR
2249.77	0.000	0.00	0.00	0.00
2250.38	0.000	15.00	0.00	0.00
2250.73	0.000	30.00	0.00	0.00
2251.03	0.000	45.00	0.00	0.00
2251.30	0.000	60.00	0.00	0.00
2251.56	0.000	75.00	0.00	0.00
2251.81	0.000	90.00	0.00	0.00
2252.05	0.000	105.00	0.00	0.00
2252.29	0.000	120.00	0.00	0.00
2252.52	0.000	135.00	0.00	0.00
2252.75	0.000	150.00	0.00	0.00

<1> TOLERANCE (ft) = 0.010 <2> TOLERANCE (%) = 1.000

CURRENT DATE: 03-21-2007 FILE DATE: 3/21/2007
CURRENT TIME: 10:49:37 FILE NAME: Culv54

PERFORMANCE CURVE FOR CULVERT 1 - 1(10.00 (ft) BY 3.00 (ft)) RCB

DIS-CHARGE FLOW (cfs)	HEAD-WATER ELEV. (ft)	INLET CONTROL DEPTH (ft)	OUTLET CONTROL DEPTH (ft)	FLOW TYPE <F4>	NORMAL DEPTH (ft)	CRIT. DEPTH (ft)	OUTLET DEPTH (ft)	TW DEPTH (ft)	OUTLET VEL. (fps)	TW VEL. (fps)
0.00	2249.77	0.00	0.00	0-NF	0.00	0.00	0.00	0.03	0.00	0.00
15.00	2250.38	0.60	0.60	1-S2n	0.21	0.41	0.21	0.88	7.05	1.57
30.00	2250.73	0.96	0.96	1-S2n	0.36	0.66	0.38	1.12	7.85	1.87
45.00	2251.03	1.26	1.26	1-S2n	0.46	0.86	0.51	1.28	8.85	2.09
60.00	2251.30	1.53	1.53	1-S2n	0.56	1.04	0.62	1.42	9.68	2.26
75.00	2251.56	1.79	1.79	1-S2n	0.64	1.21	0.74	1.54	10.18	2.40
90.00	2251.81	2.04	2.04	1-S2n	0.72	1.36	0.84	1.64	10.68	2.52
105.00	2252.05	2.28	2.28	1-S2n	0.79	1.51	0.95	1.74	11.05	2.62
120.00	2252.29	2.52	2.52	1-S2n	0.87	1.65	1.05	1.83	11.42	2.72
135.00	2252.52	2.75	2.75	1-S2n	0.94	1.79	1.16	1.91	11.68	2.80
150.00	2252.75	2.98	2.98	1-S2n	1.00	1.92	1.25	1.98	12.04	2.90

El. inlet face invert 2249.77 ft El. outlet invert 2248.77 ft
El. inlet throat invert 0.00 ft El. inlet crest 2249.77 ft

```
***** SITE DATA ***** CULVERT INVERT **************
      INLET STATION                          0.00 ft
      INLET ELEVATION                     2249.77 ft
      OUTLET STATION                        54.60 ft
      OUTLET ELEVATION                    2248.77 ft
      NUMBER OF BARRELS                      1
      SLOPE (V/H)                            0.0183
      CULVERT LENGTH ALONG SLOPE            54.61 ft

***** CULVERT DATA SUMMARY ************************
      BARREL SHAPE          BOX
      BARREL SPAN            10.00 ft
      BARREL RISE             3.00 ft
      BARREL MATERIAL       CONCRETE
      BARREL MANNING'S n    0.012
      INLET TYPE            CONVENTIONAL
      INLET EDGE AND WALL   1:1 BEVEL (45 DEG. FLARE)
      INLET DEPRESSION      NONE
```

CURRENT DATE: 03-21-2007 FILE DATE: 3/21/2007
CURRENT TIME: 10:49:37 FILE NAME: Culv54

ÄÄ
ÄÄÄÄÄÄÄÄÄÄÄÄÄÄÄÄÄÄÄÄÄÄÄÄÄÄ TAILWATER ÄÄÄÄÄÄÄÄÄÄÄÄÄÄÄÄÄÄÄÄÄÄÄÄÄÄ
ÄÄ

***** USER DEFINED CHANNEL CROSS-SECTION FILE NAME: Culv54
MAIN CHANNEL AND LT & RT OVER BANKS FILE DATE: 6/1/2005

LEFT CHANNEL BOUNDARY	3
RIGHT CHANNEL BOUNDARY	6
MANNING n LEFT OVER BANK	0.070
MANNING n MAIN CHANNEL	0.075
MANNING n RIGHT OVER BANK	0.060
SLOPE OF CHANNEL	0.0208 ft/ft

CROSS-SECTION COORD. NO.	X (ft)	Y (ft)
1	0.00	2253.80
2	23.20	2252.00
3	28.50	2249.00
4	38.40	2250.70
5	59.70	2248.80
6	71.70	2249.90
7	81.80	2251.70

******* UNIFORM FLOW RATING CURVE FOR DOWNSTREAM CHANNEL

FLOW (cfs)	W.S.E. (ft)	FROUDE NUMBER	DEPTH (ft)	VEL. (f/s)	SHEAR (psf)
0.00	2248.80	0.000	0.03	0.00	0.00
15.00	2249.65	0.438	0.88	1.57	0.52
30.00	2249.89	0.456	1.12	1.87	0.68
45.00	2250.05	0.469	1.28	2.09	0.80
60.00	2250.19	0.479	1.42	2.26	0.90
75.00	2250.31	0.486	1.54	2.40	0.99
90.00	2250.41	0.492	1.64	2.52	1.06
105.00	2250.51	0.497	1.74	2.62	1.13
120.00	2250.60	0.501	1.83	2.72	1.19
135.00	2250.68	0.505	1.91	2.80	1.25
150.00	2250.75	0.509	1.98	2.90	1.31

Note: Shear stress was calculated using R.

ÄÄ
ÄÄÄÄÄÄÄÄÄÄÄÄÄÄÄÄÄÄÄÄÄÄÄÄÄÄ ROADWAY OVERTOPPING DATA ÄÄÄÄÄÄÄÄÄÄÄÄÄÄÄÄÄÄÄÄÄÄÄÄÄÄ
ÄÄ

ROADWAY SURFACE	PAVED
EMBANKMENT TOP WIDTH	24.00 ft

***** USER DEFINED ROADWAY PROFILE

CROSS-SECTION COORD. NO.	X ft	Y ft
1	0.00	2253.95
2	16.80	2254.36
3	59.60	2254.12
4	63.50	2254.07
5	72.40	2254.02
6	87.90	2253.83
7	105.50	2253.60
8	125.10	2253.16

ÄÄ

CURRENT DATE: 03-21-2007 FILE DATE: 3/21/2007
CURRENT TIME: 10:50:34 FILE NAME: Culv55

FHWA CULVERT ANALYSIS
HY-8, VERSION 6.1

CULV NO.	SITE DATA: INLET ELEV. (ft)	OUTLET ELEV. (ft)	CULVERT LENGTH (ft)	CULVERT SHAPE, MATERIAL, INLET: BARRELS SHAPE MATERIAL	SPAN (ft)	RISE (ft)	MANNING n	INLET TYPE
1	2234.60	2232.73	58.73	1 CSP	3.00	3.00	.024	CONVENTIONAL
2								
3								
4								
5								
6								

SUMMARY OF CULVERT FLOWS (cfs) FILE: Culv55 DATE: 3/21/2007

ELEV (ft)	TOTAL	1	2	3	4	5	6	ROADWAY	ITR
2234.60	0.0	0.0	0.0	0.0	0.0	0.0	0.0	0.00	1
2235.15	3.0	3.0	0.0	0.0	0.0	0.0	0.0	0.00	1
2235.50	6.0	6.0	0.0	0.0	0.0	0.0	0.0	0.00	1
2235.80	9.0	9.0	0.0	0.0	0.0	0.0	0.0	0.00	1
2236.06	12.0	12.0	0.0	0.0	0.0	0.0	0.0	0.00	1
2236.29	15.0	15.0	0.0	0.0	0.0	0.0	0.0	0.00	1
2236.49	18.0	18.0	0.0	0.0	0.0	0.0	0.0	0.00	1
2236.61	20.0	20.0	0.0	0.0	0.0	0.0	0.0	0.00	1
2236.84	24.0	24.0	0.0	0.0	0.0	0.0	0.0	0.00	1
2237.00	27.0	27.0	0.0	0.0	0.0	0.0	0.0	0.00	1
2237.16	30.0	30.0	0.0	0.0	0.0	0.0	0.0	0.00	1
2238.79	55.9	55.9	0.0	0.0	0.0	0.0	0.0	OVERTOPPING	

SUMMARY OF ITERATIVE SOLUTION ERRORS FILE: Culv55 DATE: 3/21/2007

HEAD ELEV (ft)	HEAD ERROR (ft)	TOTAL FLOW (cfs)	FLOW ERROR (cfs)	% FLOW ERROR
2234.60	0.000	0.00	0.00	0.00
2235.15	0.000	3.00	0.00	0.00
2235.50	0.000	6.00	0.00	0.00
2235.80	0.000	9.00	0.00	0.00
2236.06	0.000	12.00	0.00	0.00
2236.29	0.000	15.00	0.00	0.00
2236.49	0.000	18.00	0.00	0.00
2236.61	0.000	20.00	0.00	0.00
2236.84	0.000	24.00	0.00	0.00
2237.00	0.000	27.00	0.00	0.00
2237.16	0.000	30.00	0.00	0.00

<1> TOLERANCE (ft) = 0.010 <2> TOLERANCE (%) = 1.000

CURRENT DATE: 03-21-2007 FILE DATE: 3/21/2007
CURRENT TIME: 10:50:34 FILE NAME: Culv55

PERFORMANCE CURVE FOR CULVERT 1 - 1(3.00 (ft) BY 3.00 (ft)) CSP

DIS-CHARGE FLOW (cfs)	HEAD-WATER ELEV. (ft)	INLET CONTROL DEPTH (ft)	OUTLET CONTROL DEPTH (ft)	FLOW TYPE <F4>	NORMAL DEPTH (ft)	CRIT. DEPTH (ft)	OUTLET DEPTH (ft)	TW DEPTH (ft)	OUTLET VEL. (fps)	TW VEL. (fps)
0.00	2234.60	0.00	0.00	0-NF	0.00	0.00	0.00	0.37	0.00	0.00
3.00	2235.15	0.55	0.55	1-S2n	0.41	0.52	0.32	0.73	8.21	1.16
6.00	2235.50	0.90	0.90	1-S2n	0.61	0.76	0.56	0.87	6.59	1.39
9.00	2235.80	1.20	1.20	1-S2n	0.74	0.94	0.64	0.98	8.21	1.55
12.00	2236.06	1.46	1.46	1-S2n	0.87	1.09	0.79	1.07	8.00	1.67
15.00	2236.29	1.69	1.69	1-S2n	0.98	1.23	0.98	1.14	7.44	1.78
18.00	2236.49	1.89	1.89	1-S2n	1.08	1.35	1.08	1.20	7.79	1.86
20.00	2236.61	2.01	2.01	1-S2n	1.14	1.43	1.03	1.24	9.28	1.91
24.00	2236.84	2.24	2.24	1-S2n	1.26	1.57	1.17	1.31	9.36	1.98
27.00	2237.00	2.40	2.40	1-S2n	1.35	1.67	1.27	1.35	9.45	2.03
30.00	2237.16	2.56	2.56	1-S2n	1.43	1.77	1.37	1.40	9.51	2.08

El. inlet face invert 2234.60 ft El. outlet invert 2232.73 ft
El. inlet throat invert 0.00 ft El. inlet crest 2234.60 ft

***** SITE DATA ***** CULVERT INVERT **********

INLET STATION	0.00 ft
INLET ELEVATION	2234.60 ft
OUTLET STATION	58.70 ft
OUTLET ELEVATION	2232.73 ft
NUMBER OF BARRELS	1
SLOPE (V/H)	0.0319
CULVERT LENGTH ALONG SLOPE	58.73 ft

***** CULVERT DATA SUMMARY **********

BARREL SHAPE	CIRCULAR
BARREL DIAMETER	3.00 ft
BARREL MATERIAL	CORRUGATED STEEL
BARREL MANNING'S n	0.024
INLET TYPE	CONVENTIONAL
INLET EDGE AND WALL	BEVELED EDGE (1:1)
INLET DEPRESSION	NONE

CURRENT DATE: 03-21-2007 FILE DATE: 3/21/2007
CURRENT TIME: 10:50:34 FILE NAME: Culv55

ÄÄ
ÄÄÄÄÄÄÄÄÄÄÄÄÄÄÄÄÄÄÄÄÄÄÄÄÄÄ TAILWATER ÄÄÄÄÄÄÄÄÄÄÄÄÄÄÄÄÄÄÄÄÄÄÄÄÄÄ
ÄÄ

***** USER DEFINED CHANNEL CROSS-SECTION FILE NAME: Culv55
MAIN CHANNEL AND LT & RT OVER BANKS FILE DATE: 6/1/2005

LEFT CHANNEL BOUNDARY	2
RIGHT CHANNEL BOUNDARY	6
MANNING n LEFT OVER BANK	0.065
MANNING n MAIN CHANNEL	0.065
MANNING n RIGHT OVER BANK	0.070
SLOPE OF CHANNEL	0.0166 ft/ft

CROSS-SECTION COORD. NO.	X (ft)	Y (ft)
1	0.00	2236.20
2	37.10	2234.20
3	44.30	2233.80
4	47.10	2233.10
5	51.10	2233.10
6	70.90	2234.50
7	97.30	2234.60
8	103.90	2237.30

******* UNIFORM FLOW RATING CURVE FOR DOWNSTREAM CHANNEL

FLOW (cfs)	W.S.E. (ft)	FROUDE NUMBER	DEPTH (ft)	VEL. (f/s)	SHEAR (psf)
0.00	2233.10	0.000	0.37	0.00	0.00
3.00	2233.46	0.410	0.73	1.16	0.26
6.00	2233.60	0.429	0.87	1.39	0.34
9.00	2233.71	0.441	0.98	1.55	0.40
12.00	2233.80	0.449	1.07	1.67	0.45
15.00	2233.87	0.471	1.14	1.78	0.46
18.00	2233.93	0.486	1.20	1.86	0.48
20.00	2233.97	0.494	1.24	1.91	0.49
24.00	2234.04	0.505	1.31	1.98	0.52
27.00	2234.08	0.512	1.35	2.03	0.53
30.00	2234.13	0.517	1.40	2.08	0.55

Note: Shear stress was calculated using R.

ÄÄ
ÄÄÄÄÄÄÄÄÄÄÄÄÄÄÄÄÄÄÄÄÄÄÄÄÄÄ ROADWAY OVERTOPPING DATA ÄÄÄÄÄÄÄÄÄÄÄÄÄÄÄÄÄÄÄÄÄÄÄÄÄÄ
ÄÄ

ROADWAY SURFACE	PAVED
EMBANKMENT TOP WIDTH	24.00 ft

***** USER DEFINED ROADWAY PROFILE

CROSS-SECTION COORD. NO.	X ft	Y ft
1	0.00	2238.79
2	26.20	2238.88
3	51.60	2239.12
4	75.20	2239.11
5	100.80	2239.11
6	147.20	2239.55
7	196.20	2239.60
8	247.00	2239.91

ÄÄ

CURRENT DATE: 03-22-2007 FILE DATE: 03/22/2007
CURRENT TIME: 08:13:20 FILE NAME: Culv56

FHWA CULVERT ANALYSIS
HY-8, VERSION 6.1

CULV NO.	SITE DATA: INLET ELEV. (ft)	OUTLET ELEV. (ft)	CULVERT LENGTH (ft)	CULVERT SHAPE, MATERIAL, INLET: BARRELS / SHAPE / MATERIAL	SPAN (ft)	RISE (ft)	MANNING n	INLET TYPE
1	2236.09	2234.10	56.44	5 CSP	3.00	3.00	.024	CONVENTIONAL
2								
3								
4								
5								
6								

SUMMARY OF CULVERT FLOWS (cfs) FILE: Culv56 DATE: 03/22/2007

ELEV (ft)	TOTAL	1	2	3	4	5	6	ROADWAY	ITR
2236.09	0.0	0.0	0.0	0.0	0.0	0.0	0.0	0.00	1
2236.48	9.0	9.0	0.0	0.0	0.0	0.0	0.0	0.00	1
2236.71	18.0	18.0	0.0	0.0	0.0	0.0	0.0	0.00	1
2236.92	27.0	27.0	0.0	0.0	0.0	0.0	0.0	0.00	1
2237.11	36.0	36.0	0.0	0.0	0.0	0.0	0.0	0.00	1
2237.29	45.0	45.0	0.0	0.0	0.0	0.0	0.0	0.00	1
2237.45	54.0	54.0	0.0	0.0	0.0	0.0	0.0	0.00	1
2237.54	60.0	60.0	0.0	0.0	0.0	0.0	0.0	0.00	1
2237.73	72.0	72.0	0.0	0.0	0.0	0.0	0.0	0.00	1
2237.85	81.0	81.0	0.0	0.0	0.0	0.0	0.0	0.00	1
2237.97	90.0	90.0	0.0	0.0	0.0	0.0	0.0	0.00	1
2239.20	200.3	200.3	0.0	0.0	0.0	0.0	0.0	OVERTOPPING	

SUMMARY OF ITERATIVE SOLUTION ERRORS FILE: Culv56 DATE: 03/22/2007

HEAD ELEV (ft)	HEAD ERROR (ft)	TOTAL FLOW (cfs)	FLOW ERROR (cfs)	% FLOW ERROR
2236.09	0.000	0.00	0.00	0.00
2236.48	0.000	9.00	0.00	0.00
2236.71	0.000	18.00	0.00	0.00
2236.92	0.000	27.00	0.00	0.00
2237.11	0.000	36.00	0.00	0.00
2237.29	0.000	45.00	0.00	0.00
2237.45	0.000	54.00	0.00	0.00
2237.54	0.000	60.00	0.00	0.00
2237.73	0.000	72.00	0.00	0.00
2237.85	0.000	81.00	0.00	0.00
2237.97	0.000	90.00	0.00	0.00

<1> TOLERANCE (ft) = 0.010 <2> TOLERANCE (%) = 1.000

CURRENT DATE: 03-22-2007 FILE DATE: 03/22/2007
CURRENT TIME: 08:13:20 FILE NAME: Culv56

PERFORMANCE CURVE FOR CULVERT 1 - 5(3.00 (ft) BY 3.00 (ft)) CSP

DIS-CHARGE FLOW (cfs)	HEAD-WATER ELEV. (ft)	INLET CONTROL DEPTH (ft)	OUTLET CONTROL DEPTH (ft)	FLOW TYPE <F4>	NORMAL DEPTH (ft)	CRIT. DEPTH (ft)	OUTLET DEPTH (ft)	TW DEPTH (ft)	OUTLET VEL. (fps)	TW VEL. (fps)
0.00	2236.09	0.00	0.00	0-NF	0.00	0.00	0.00	0.10	0.00	0.00
9.00	2236.48	0.39	0.39	1-S2n	0.33	0.39	0.19	0.65	5.60	1.67
18.00	2236.71	0.62	0.62	1-S2n	0.44	0.59	0.39	0.86	6.45	2.02
27.00	2236.92	0.83	0.83	1-S2n	0.56	0.71	0.56	1.02	5.80	2.24
36.00	2237.11	1.02	1.02	1-S2n	0.65	0.84	0.54	1.15	8.28	2.42
45.00	2237.29	1.20	1.20	1-S2n	0.72	0.94	0.64	1.27	8.21	2.50
54.00	2237.45	1.36	1.36	1-S2n	0.80	1.03	0.73	1.38	8.02	2.56
60.00	2237.55	1.46	1.46	1-S2n	0.85	1.09	0.79	1.45	8.00	2.60
72.00	2237.73	1.64	1.64	1-S2n	0.93	1.21	0.91	1.56	7.98	2.68
81.00	2237.85	1.76	1.76	1-S2n	0.99	1.28	0.88	1.63	9.36	2.74
90.00	2237.97	1.88	1.88	1-S2n	1.05	1.35	0.95	1.70	9.34	2.80

El. inlet face invert 2236.09 ft El. outlet invert 2234.10 ft
El. inlet throat invert 0.00 ft El. inlet crest 2236.09 ft

```
***** SITE DATA ***** CULVERT INVERT **************
      INLET STATION                          0.00 ft
      INLET ELEVATION                     2236.09 ft
      OUTLET STATION                        56.40 ft
      OUTLET ELEVATION                    2234.10 ft
      NUMBER OF BARRELS                      5
      SLOPE (V/H)                            0.0353
      CULVERT LENGTH ALONG SLOPE            56.44 ft

***** CULVERT DATA SUMMARY ************************
      BARREL SHAPE          CIRCULAR
      BARREL DIAMETER         3.00 ft
      BARREL MATERIAL       CORRUGATED STEEL
      BARREL MANNING'S n    0.024
      INLET TYPE            CONVENTIONAL
      INLET EDGE AND WALL   BEVELED EDGE (1:1)
      INLET DEPRESSION      NONE
```

CURRENT DATE: 03-22-2007 FILE DATE: 03/22/2007
CURRENT TIME: 08:13:20 FILE NAME: Culv56

ÄÄ
ÄÄÄÄÄÄÄÄÄÄÄÄÄÄÄÄÄÄÄÄÄÄÄÄÄÄ TAILWATER ÄÄÄÄÄÄÄÄÄÄÄÄÄÄÄÄÄÄÄÄÄÄÄÄÄÄ
ÄÄ

***** USER DEFINED CHANNEL CROSS-SECTION FILE NAME: Culv56
MAIN CHANNEL AND LT & RT OVER BANKS FILE DATE: 6/1/2005

LEFT CHANNEL BOUNDARY	3
RIGHT CHANNEL BOUNDARY	6
MANNING n LEFT OVER BANK	0.070
MANNING n MAIN CHANNEL	0.070
MANNING n RIGHT OVER BANK	0.070
SLOPE OF CHANNEL	0.0236 ft/ft

CROSS-SECTION COORD. NO.	X (ft)	Y (ft)
1	0.00	2236.60
2	26.80	2235.30
3	32.30	2234.40
4	38.60	2234.20
5	41.20	2234.20
6	43.00	2234.60
7	68.70	2236.80

******* UNIFORM FLOW RATING CURVE FOR DOWNSTREAM CHANNEL

FLOW (cfs)	W.S.E. (ft)	FROUDE NUMBER	DEPTH (ft)	VEL. (f/s)	SHEAR (psf)
0.00	2234.20	0.000	0.10	0.00	0.00
9.00	2234.75	0.486	0.65	1.67	0.54
18.00	2234.96	0.513	0.86	2.02	0.71
27.00	2235.12	0.529	1.02	2.24	0.84
36.00	2235.25	0.540	1.15	2.42	0.93
45.00	2235.37	0.540	1.27	2.50	0.99
54.00	2235.48	0.540	1.38	2.56	1.03
60.00	2235.55	0.542	1.45	2.60	1.05
72.00	2235.66	0.546	1.56	2.68	1.10
81.00	2235.73	0.549	1.63	2.74	1.14
90.00	2235.80	0.552	1.70	2.80	1.17

Note: Shear stress was calculated using R.

ÄÄ
ÄÄÄÄÄÄÄÄÄÄÄÄÄÄÄÄÄÄÄÄÄÄÄÄÄÄ ROADWAY OVERTOPPING DATA ÄÄÄÄÄÄÄÄÄÄÄÄÄÄÄÄÄÄÄÄÄÄÄÄÄÄ
ÄÄ

ROADWAY SURFACE	PAVED
EMBANKMENT TOP WIDTH	24.00 ft

***** USER DEFINED ROADWAY PROFILE

CROSS-SECTION COORD. NO.	X ft	Y ft
1	0.00	2239.91
2	21.00	2239.83
3	48.40	2239.89
4	62.00	2240.05
5	97.10	2240.08
6	129.40	2239.45
7	154.30	2239.20
8	176.60	2239.56

ÄÄ

CURRENT DATE: 03-21-2007 FILE DATE: 3/21/2007
CURRENT TIME: 10:51:42 FILE NAME: Culv57

FHWA CULVERT ANALYSIS
HY-8, VERSION 6.1

CULV NO.	SITE DATA: INLET ELEV. (ft)	OUTLET ELEV. (ft)	CULVERT LENGTH (ft)	CULVERT SHAPE, MATERIAL, INLET: BARRELS / SHAPE / MATERIAL	SPAN (ft)	RISE (ft)	MANNING n	INLET TYPE
1	2234.57	2232.18	77.74	1 CSP	2.00	2.00	.024	CONVENTIONAL
2								
3								
4								
5								
6								

SUMMARY OF CULVERT FLOWS (cfs) FILE: Culv57 DATE: 3/21/2007

ELEV (ft)	TOTAL	1	2	3	4	5	6	ROADWAY	ITR
2234.57	0.0	0.0	0.0	0.0	0.0	0.0	0.0	0.00	1
2235.14	2.0	2.0	0.0	0.0	0.0	0.0	0.0	0.00	1
2235.49	4.0	4.0	0.0	0.0	0.0	0.0	0.0	0.00	1
2235.77	6.0	6.0	0.0	0.0	0.0	0.0	0.0	0.00	1
2235.99	8.0	8.0	0.0	0.0	0.0	0.0	0.0	0.00	1
2236.19	10.0	10.0	0.0	0.0	0.0	0.0	0.0	0.00	1
2236.38	12.0	12.0	0.0	0.0	0.0	0.0	0.0	0.00	1
2236.58	14.0	14.0	0.0	0.0	0.0	0.0	0.0	0.00	1
2236.80	16.0	16.0	0.0	0.0	0.0	0.0	0.0	0.00	1
2237.05	18.0	18.0	0.0	0.0	0.0	0.0	0.0	0.00	1
2237.32	20.0	20.0	0.0	0.0	0.0	0.0	0.0	0.00	1
2237.46	21.0	21.0	0.0	0.0	0.0	0.0	0.0	OVERTOPPING	

SUMMARY OF ITERATIVE SOLUTION ERRORS FILE: Culv57 DATE: 3/21/2007

HEAD ELEV (ft)	HEAD ERROR (ft)	TOTAL FLOW (cfs)	FLOW ERROR (cfs)	% FLOW ERROR
2234.57	0.000	0.00	0.00	0.00
2235.14	0.000	2.00	0.00	0.00
2235.49	0.000	4.00	0.00	0.00
2235.77	0.000	6.00	0.00	0.00
2235.99	0.000	8.00	0.00	0.00
2236.19	0.000	10.00	0.00	0.00
2236.38	0.000	12.00	0.00	0.00
2236.58	0.000	14.00	0.00	0.00
2236.80	0.000	16.00	0.00	0.00
2237.05	0.000	18.00	0.00	0.00
2237.32	0.000	20.00	0.00	0.00

<1> TOLERANCE (ft) = 0.010 <2> TOLERANCE (%) = 1.000

CURRENT DATE: 03-21-2007 FILE DATE: 3/21/2007
CURRENT TIME: 10:51:42 FILE NAME: Culv57

PERFORMANCE CURVE FOR CULVERT 1 - 1(2.00 (ft) BY 2.00 (ft)) CSP

DIS-CHARGE FLOW (cfs)	HEAD-WATER ELEV. (ft)	INLET CONTROL DEPTH (ft)	OUTLET CONTROL DEPTH (ft)	FLOW TYPE <F4>	NORMAL DEPTH (ft)	CRIT. DEPTH (ft)	OUTLET DEPTH (ft)	TW DEPTH (ft)	OUTLET VEL. (fps)	TW VEL. (fps)
0.00	2234.57	0.00	0.00	0-NF	0.00	0.00	0.00	0.02	0.00	0.00
2.00	2235.14	0.57	0.57	1-S2n	0.41	0.48	0.28	0.46	7.17	1.15
4.00	2235.49	0.92	0.92	1-S2n	0.58	0.69	0.49	0.59	6.54	1.36
6.00	2235.77	1.20	1.20	1-S2n	0.72	0.86	0.66	0.69	6.59	1.51
8.00	2235.99	1.42	1.42	1-S2n	0.84	1.01	0.71	0.77	8.04	1.62
10.00	2236.19	1.62	1.62	1-S2n	0.96	1.13	0.83	0.83	8.16	1.71
12.00	2236.38	1.81	1.81	1-S2n	1.07	1.24	0.94	0.89	8.25	1.79
14.00	2236.58	2.01	2.01	5-S2n	1.17	1.34	1.04	0.94	8.44	1.86
16.00	2236.80	2.23	2.23	5-S2n	1.29	1.44	1.28	0.99	7.56	1.93
18.00	2237.05	2.48	2.48	5-S2n	1.40	1.52	1.32	1.03	8.18	1.98
20.00	2237.32	2.75	2.75	5-S2n	1.53	1.60	1.40	1.07	8.48	2.04

El. inlet face invert 2234.57 ft El. outlet invert 2232.18 ft
El. inlet throat invert 0.00 ft El. inlet crest 2234.57 ft

***** SITE DATA ***** CULVERT INVERT **********

INLET STATION	0.00 ft
INLET ELEVATION	2234.57 ft
OUTLET STATION	77.70 ft
OUTLET ELEVATION	2232.18 ft
NUMBER OF BARRELS	1
SLOPE (V/H)	0.0308
CULVERT LENGTH ALONG SLOPE	77.74 ft

***** CULVERT DATA SUMMARY **********

BARREL SHAPE	CIRCULAR
BARREL DIAMETER	2.00 ft
BARREL MATERIAL	CORRUGATED STEEL
BARREL MANNING'S n	0.024
INLET TYPE	CONVENTIONAL
INLET EDGE AND WALL	BEVELED EDGE (1:1)
INLET DEPRESSION	NONE

CURRENT DATE: 03-21-2007 FILE DATE: 3/21/2007
CURRENT TIME: 10:51:42 FILE NAME: Culv57

ÄÄÄ
ÄÄÄÄÄÄÄÄÄÄÄÄÄÄÄÄÄÄÄÄÄÄÄÄÄÄ TAILWATER ÄÄÄÄÄÄÄÄÄÄÄÄÄÄÄÄÄÄÄÄÄÄÄÄÄÄ
ÄÄÄ

***** USER DEFINED CHANNEL CROSS-SECTION FILE NAME: Culv57
MAIN CHANNEL AND LT & RT OVER BANKS FILE DATE: 6/1/2005

LEFT CHANNEL BOUNDARY	3
RIGHT CHANNEL BOUNDARY	5
MANNING n LEFT OVER BANK	0.055
MANNING n MAIN CHANNEL	0.060
MANNING n RIGHT OVER BANK	0.065
SLOPE OF CHANNEL	0.0145 ft/ft

CROSS-SECTION COORD. NO.	X (ft)	Y (ft)
1	0.00	2237.20
2	32.10	2235.50
3	50.30	2234.50
4	74.20	2232.20
5	107.40	2236.70
6	130.20	2237.40

******* UNIFORM FLOW RATING CURVE FOR DOWNSTREAM CHANNEL

FLOW (cfs)	W.S.E. (ft)	FROUDE NUMBER	DEPTH (ft)	VEL. (f/s)	SHEAR (psf)
0.00	2232.20	0.000	0.02	0.00	0.00
2.00	2232.64	0.430	0.46	1.15	0.20
4.00	2232.77	0.449	0.59	1.36	0.26
6.00	2232.87	0.461	0.69	1.51	0.30
8.00	2232.95	0.469	0.77	1.62	0.34
10.00	2233.01	0.475	0.83	1.71	0.37
12.00	2233.07	0.481	0.89	1.79	0.39
14.00	2233.12	0.486	0.94	1.86	0.42
16.00	2233.17	0.490	0.99	1.93	0.44
18.00	2233.21	0.493	1.03	1.98	0.46
20.00	2233.25	0.497	1.07	2.04	0.48

Note: Shear stress was calculated using R.

ÄÄÄ
ÄÄÄÄÄÄÄÄÄÄÄÄÄÄÄÄÄÄÄÄÄÄÄÄÄÄ ROADWAY OVERTOPPING DATA ÄÄÄÄÄÄÄÄÄÄÄÄÄÄÄÄÄÄÄÄÄÄÄÄÄÄ
ÄÄÄ

ROADWAY SURFACE	PAVED
EMBANKMENT TOP WIDTH	24.00 ft

***** USER DEFINED ROADWAY PROFILE

CROSS-SECTION COORD. NO.	X ft	Y ft
1	0.00	2237.46
2	25.90	2237.76
3	50.60	2237.81
4	75.20	2238.00

ÄÄÄ

CURRENT DATE: 03-22-2007 FILE DATE: 03/22/2007
CURRENT TIME: 09:36:18 FILE NAME: Culv58

FHWA CULVERT ANALYSIS
HY-8, VERSION 6.1

CULV NO.	SITE DATA: INLET ELEV. (ft)	OUTLET ELEV. (ft)	CULVERT LENGTH (ft)	CULVERT SHAPE, MATERIAL, INLET: BARRELS / SHAPE / MATERIAL	SPAN (ft)	RISE (ft)	MANNING n	INLET TYPE
1	2267.88	2266.86	51.41	6 RCB	10.00	3.20	.012	CONVENTIONAL
2								
3								
4								
5								
6								

SUMMARY OF CULVERT FLOWS (cfs) FILE: Culv58 DATE: 03/22/2007

ELEV (ft)	TOTAL	1	2	3	4	5	6	ROADWAY	ITR
2267.88	0.0	0.0	0.0	0.0	0.0	0.0	0.0	0.00	1
2268.24	40.0	40.0	0.0	0.0	0.0	0.0	0.0	0.00	1
2268.44	80.0	80.0	0.0	0.0	0.0	0.0	0.0	0.00	1
2268.61	120.0	120.0	0.0	0.0	0.0	0.0	0.0	0.00	1
2268.77	160.0	160.0	0.0	0.0	0.0	0.0	0.0	0.00	1
2268.91	200.0	200.0	0.0	0.0	0.0	0.0	0.0	0.00	1
2269.04	240.0	240.0	0.0	0.0	0.0	0.0	0.0	0.00	1
2269.17	280.0	280.0	0.0	0.0	0.0	0.0	0.0	0.00	1
2269.23	300.0	300.0	0.0	0.0	0.0	0.0	0.0	0.00	1
2269.40	360.0	360.0	0.0	0.0	0.0	0.0	0.0	0.00	1
2269.52	400.0	400.0	0.0	0.0	0.0	0.0	0.0	0.00	1
2271.25	1070.8	1070.8	0.0	0.0	0.0	0.0	0.0	OVERTOPPING	

SUMMARY OF ITERATIVE SOLUTION ERRORS FILE: Culv58 DATE: 03/22/2007

HEAD ELEV (ft)	HEAD ERROR (ft)	TOTAL FLOW (cfs)	FLOW ERROR (cfs)	% FLOW ERROR
2267.88	0.000	0.00	0.00	0.00
2268.24	0.000	40.00	0.00	0.00
2268.44	0.000	80.00	0.00	0.00
2268.61	0.000	120.00	0.00	0.00
2268.77	0.000	160.00	0.00	0.00
2268.91	0.000	200.00	0.00	0.00
2269.04	0.000	240.00	0.00	0.00
2269.17	0.000	280.00	0.00	0.00
2269.23	0.000	300.00	0.00	0.00
2269.40	0.000	360.00	0.00	0.00
2269.52	0.000	400.00	0.00	0.00

<1> TOLERANCE (ft) = 0.010 <2> TOLERANCE (%) = 1.000

CURRENT DATE: 03-22-2007 FILE DATE: 03/22/2007
CURRENT TIME: 09:36:18 FILE NAME: Culv58

PERFORMANCE CURVE FOR CULVERT 1 - 6(10.00 (ft) BY 3.20 (ft)) RCB

DIS-CHARGE FLOW (cfs)	HEAD-WATER ELEV. (ft)	INLET CONTROL DEPTH (ft)	OUTLET CONTROL DEPTH (ft)	FLOW TYPE <F4>	NORMAL DEPTH (ft)	CRIT. DEPTH (ft)	OUTLET DEPTH (ft)	TW DEPTH (ft)	OUTLET VEL. (fps)	TW VEL. (fps)
0.00	2267.88	0.00	0.00	0-NF	0.00	0.00	0.00	-0.06	0.00	0.00
40.00	2268.24	0.36	0.36	1-S2n	0.09	0.24	0.04	0.30	16.51	2.52
80.00	2268.44	0.56	0.56	1-S2n	0.17	0.38	0.21	0.48	6.30	3.07
120.00	2268.61	0.73	0.73	1-S2n	0.26	0.50	0.20	0.61	10.00	3.42
160.00	2268.77	0.89	0.89	1-S2n	0.33	0.61	0.35	0.72	7.71	3.69
200.00	2268.91	1.03	1.03	1-S2n	0.37	0.70	0.30	0.81	11.00	3.90
240.00	2269.04	1.16	1.16	1-S2n	0.41	0.79	0.46	0.90	8.72	4.07
280.00	2269.17	1.29	1.29	1-S2n	0.45	0.88	0.51	1.01	9.16	4.30
300.00	2269.23	1.35	1.35	1-S2n	0.47	0.92	0.54	1.05	9.24	4.36
360.00	2269.40	1.52	1.52	1-S2n	0.54	1.04	0.62	1.12	9.71	4.48
400.00	2269.52	1.64	1.64	1-S2n	0.58	1.12	0.67	1.18	10.01	4.61

El. inlet face invert 2267.88 ft El. outlet invert 2266.86 ft
El. inlet throat invert 0.00 ft El. inlet crest 2267.88 ft

***** SITE DATA ***** CULVERT INVERT **********

INLET STATION	0.00 ft
INLET ELEVATION	2267.88 ft
OUTLET STATION	51.40 ft
OUTLET ELEVATION	2266.86 ft
NUMBER OF BARRELS	6
SLOPE (V/H)	0.0198
CULVERT LENGTH ALONG SLOPE	51.41 ft

***** CULVERT DATA SUMMARY **********

BARREL SHAPE	BOX
BARREL SPAN	10.00 ft
BARREL RISE	3.20 ft
BARREL MATERIAL	CONCRETE
BARREL MANNING'S n	0.012
INLET TYPE	CONVENTIONAL
INLET EDGE AND WALL	1:1 BEVEL (45 DEG. FLARE)
INLET DEPRESSION	NONE

CURRENT DATE: 03-22-2007 FILE DATE: 03/22/2007
CURRENT TIME: 09:36:18 FILE NAME: Culv58

ÄÄ
ÄÄÄÄÄÄÄÄÄÄÄÄÄÄÄÄÄÄÄÄÄÄÄÄÄÄ TAILWATER ÄÄÄÄÄÄÄÄÄÄÄÄÄÄÄÄÄÄÄÄÄÄÄÄÄÄ
ÄÄ

***** USER DEFINED CHANNEL CROSS-SECTION FILE NAME: Culv58
MAIN CHANNEL AND LT & RT OVER BANKS FILE DATE: 03/19/2007

LEFT CHANNEL BOUNDARY	1
RIGHT CHANNEL BOUNDARY	4
MANNING n LEFT OVER BANK	0.060
MANNING n MAIN CHANNEL	0.038
MANNING n RIGHT OVER BANK	0.055
SLOPE OF CHANNEL	0.0223 ft/ft

CROSS-SECTION COORD. NO.	X (ft)	Y (ft)
1	0.00	2268.00
2	56.40	2266.80
3	88.80	2266.80
4	136.40	2270.30

******* UNIFORM FLOW RATING CURVE FOR DOWNSTREAM CHANNEL

FLOW (cfs)	W.S.E. (ft)	FROUDE NUMBER	DEPTH (ft)	VEL. (f/s)	SHEAR (psf)
0.00	2266.80	0.000	-0.06	0.00	0.00
40.00	2267.17	0.894	0.30	2.52	0.41
80.00	2267.34	0.949	0.48	3.07	0.56
120.00	2267.47	0.979	0.61	3.42	0.67
160.00	2267.58	0.998	0.72	3.69	0.76
200.00	2267.67	1.012	0.81	3.90	0.84
240.00	2267.76	1.022	0.90	4.07	0.91
280.00	2267.88	1.034	1.01	4.30	1.00
300.00	2267.91	1.037	1.05	4.36	1.02
360.00	2267.98	1.042	1.12	4.48	1.08
400.00	2268.04	1.037	1.18	4.61	1.14

Note: Shear stress was calculated using R.

ÄÄ
ÄÄÄÄÄÄÄÄÄÄÄÄÄÄÄÄÄÄÄÄÄÄÄÄÄÄ ROADWAY OVERTOPPING DATA ÄÄÄÄÄÄÄÄÄÄÄÄÄÄÄÄÄÄÄÄÄÄÄÄÄÄ
ÄÄ

ROADWAY SURFACE	PAVED
EMBANKMENT TOP WIDTH	24.00 ft

***** USER DEFINED ROADWAY PROFILE

CROSS-SECTION COORD. NO.	X ft	Y ft
1	0.00	2272.40
2	18.30	2272.40
3	37.00	2272.26
4	69.00	2272.12
5	112.90	2271.81
6	143.60	2271.25

ÄÄ

CURRENT DATE: 04-02-2007 FILE DATE: 04/02/2007
CURRENT TIME: 12:55:11 FILE NAME: Culv59

FHWA CULVERT ANALYSIS
HY-8, VERSION 6.1

CULV NO.	SITE DATA INLET ELEV. (ft)	OUTLET ELEV. (ft)	CULVERT LENGTH (ft)	CULVERT SHAPE, MATERIAL, INLET BARRELS SHAPE MATERIAL	SPAN (ft)	RISE (ft)	MANNING n	INLET TYPE
1	2453.97	2453.81	8.00	1 RCB	10.00	1.13	.025	CONVENTIONAL
2								
3								
4								
5								
6								

SUMMARY OF CULVERT FLOWS (cfs) FILE: Culv59 DATE: 04/02/2007

ELEV (ft)	TOTAL	1	2	3	4	5	6	ROADWAY	ITR
2453.97	0.0	0.0	0.0	0.0	0.0	0.0	0.0	0.00	1
2454.21	3.0	3.0	0.0	0.0	0.0	0.0	0.0	0.00	1
2454.35	6.0	6.0	0.0	0.0	0.0	0.0	0.0	0.00	1
2454.46	9.0	9.0	0.0	0.0	0.0	0.0	0.0	0.00	1
2454.57	12.0	12.0	0.0	0.0	0.0	0.0	0.0	0.00	1
2454.66	15.0	15.0	0.0	0.0	0.0	0.0	0.0	0.00	1
2454.75	18.0	18.0	0.0	0.0	0.0	0.0	0.0	0.00	1
2454.83	21.0	21.0	0.0	0.0	0.0	0.0	0.0	0.00	1
2454.91	24.0	24.0	0.0	0.0	0.0	0.0	0.0	0.00	1
2454.99	27.0	27.0	0.0	0.0	0.0	0.0	0.0	0.00	1
2455.07	30.0	30.0	0.0	0.0	0.0	0.0	0.0	0.00	1
2457.80	95.7	95.7	0.0	0.0	0.0	0.0	0.0	OVERTOPPING	

SUMMARY OF ITERATIVE SOLUTION ERRORS FILE: Culv59 DATE: 04/02/2007

HEAD ELEV (ft)	HEAD ERROR (ft)	TOTAL FLOW (cfs)	FLOW ERROR (cfs)	% FLOW ERROR
2453.97	0.000	0.00	0.00	0.00
2454.21	0.000	3.00	0.00	0.00
2454.35	0.000	6.00	0.00	0.00
2454.46	0.000	9.00	0.00	0.00
2454.57	0.000	12.00	0.00	0.00
2454.66	0.000	15.00	0.00	0.00
2454.75	0.000	18.00	0.00	0.00
2454.83	0.000	21.00	0.00	0.00
2454.91	0.000	24.00	0.00	0.00
2454.99	0.000	27.00	0.00	0.00
2455.07	0.000	30.00	0.00	0.00

<1> TOLERANCE (ft) = 0.010 <2> TOLERANCE (%) = 1.000

CURRENT DATE: 04-02-2007 FILE DATE: 04/02/2007
CURRENT TIME: 12:55:11 FILE NAME: Culv59

PERFORMANCE CURVE FOR CULVERT 1 - 1(10.00 (ft) BY 1.13 (ft)) RCB

DIS-CHARGE FLOW (cfs)	HEAD-WATER ELEV. (ft)	INLET CONTROL DEPTH (ft)	OUTLET CONTROL DEPTH (ft)	FLOW TYPE <F4>	NORMAL DEPTH (ft)	CRIT. DEPTH (ft)	OUTLET DEPTH (ft)	TW DEPTH (ft)	OUTLET VEL. (fps)	TW VEL. (fps)
0.00	2453.97	0.00	0.00	0-NF	0.00	0.00	0.00	0.00	0.00	0.00
3.00	2454.21	0.24	0.24	1-S2n	0.13	0.14	0.04	0.16	7.29	1.68
6.00	2454.35	0.38	0.38	1-S2n	0.21	0.22	0.12	0.24	4.84	2.15
9.00	2454.46	0.49	0.49	1-S2n	0.26	0.29	0.19	0.31	4.65	2.48
12.00	2454.57	0.60	0.60	1-S2n	0.32	0.36	0.26	0.36	4.69	2.73
15.00	2454.66	0.69	0.69	1-S2n	0.36	0.41	0.37	0.41	4.10	2.93
18.00	2454.75	0.78	0.78	1-S2n	0.41	0.47	0.41	0.45	4.38	3.11
21.00	2454.83	0.86	0.86	1-S2n	0.45	0.52	0.45	0.50	4.64	3.27
24.00	2454.91	0.94	0.94	1-S2n	0.49	0.56	0.49	0.53	4.87	3.41
27.00	2454.99	1.02	1.02	1-S2n	0.52	0.61	0.41	0.57	6.57	3.53
30.00	2455.07	1.10	1.10	1-S2n	0.56	0.66	0.46	0.60	6.59	3.65

El. inlet face invert 2453.97 ft El. outlet invert 2453.81 ft
El. inlet throat invert 0.00 ft El. inlet crest 2453.97 ft

```
***** SITE DATA ***** CULVERT INVERT **************
      INLET STATION                          0.00 ft
      INLET ELEVATION                     2453.97 ft
      OUTLET STATION                         8.00 ft
      OUTLET ELEVATION                    2453.81 ft
      NUMBER OF BARRELS                      1
      SLOPE (V/H)                            0.0200
      CULVERT LENGTH ALONG SLOPE             8.00 ft

***** CULVERT DATA SUMMARY ************************
      BARREL SHAPE          BOX
      BARREL SPAN            10.00 ft
      BARREL RISE             1.13 ft
      BARREL MATERIAL       CONCRETE
      BARREL MANNING'S n    0.025
      INLET TYPE            CONVENTIONAL
      INLET EDGE AND WALL   SQUARE EDGE  (90-45 DEG.)
      INLET DEPRESSION      NONE
```

CURRENT DATE: 04-02-2007 FILE DATE: 04/02/2007
CURRENT TIME: 12:55:11 FILE NAME: Culv59

ÄÄ
ÄÄÄÄÄÄÄÄÄÄÄÄÄÄÄÄÄÄÄÄÄÄÄÄÄÄ TAILWATER ÄÄÄÄÄÄÄÄÄÄÄÄÄÄÄÄÄÄÄÄÄÄÄÄÄÄ
ÄÄ

******* REGULAR CHANNEL CROSS SECTION ****************

BOTTOM WIDTH	10.00 ft
SIDE SLOPE H/V (X:1)	6.0
CHANNEL SLOPE V/H (ft/ft)	0.020
MANNING'S n (.01-0.1)	0.035
CHANNEL INVERT ELEVATION	2453.81 ft
CULVERT NO.1 OUTLET INVERT ELEVATION	2453.81 ft

******* UNIFORM FLOW RATING CURVE FOR DOWNSTREAM CHANNEL

FLOW (cfs)	W.S.E. (ft)	FROUDE NUMBER	DEPTH (ft)	VEL. (f/s)	SHEAR (psf)
0.00	2453.81	0.000	0.00	0.00	0.00
3.00	2453.97	0.769	0.16	1.68	0.20
6.00	2454.05	0.818	0.24	2.15	0.30
9.00	2454.12	0.846	0.31	2.48	0.38
12.00	2454.17	0.867	0.36	2.73	0.45
15.00	2454.22	0.882	0.41	2.93	0.51
18.00	2454.26	0.895	0.45	3.11	0.57
21.00	2454.31	0.906	0.50	3.27	0.62
24.00	2454.34	0.916	0.53	3.41	0.67
27.00	2454.38	0.924	0.57	3.53	0.71
30.00	2454.41	0.932	0.60	3.65	0.75

ÄÄ
ÄÄÄÄÄÄÄÄÄÄÄÄÄÄÄÄÄÄÄÄÄÄÄÄÄÄ ROADWAY OVERTOPPING DATA ÄÄÄÄÄÄÄÄÄÄÄÄÄÄÄÄÄÄÄÄÄÄÄÄÄÄ
ÄÄ

WEIR COEFFICIENT	2.50
EMBANKMENT TOP WIDTH	1.00 ft

***** USER DEFINED ROADWAY PROFILE

CROSS-SECTION COORD. NO.	X ft	Y ft
1	0.00	2461.50
2	1.00	2458.50
3	6.00	2457.80
4	34.00	2458.50
5	35.00	2458.30
6	55.00	2458.80
7	57.00	2459.50
8	104.00	2461.20
9	131.00	2462.10
10	142.00	2462.40
11	167.00	2461.80
12	197.00	2461.40

ÄÄ

CURRENT DATE: 04-02-2007 FILE DATE: 04/02/2007
CURRENT TIME: 12:57:35 FILE NAME: Culv60

FHWA CULVERT ANALYSIS
HY-8, VERSION 6.1

CULVERT NO.	INLET ELEV. (ft)	OUTLET ELEV. (ft)	CULVERT LENGTH (ft)	BARRELS SHAPE MATERIAL	SPAN (ft)	RISE (ft)	MANNING n	INLET TYPE
1	2452.89	2452.60	8.01	1 RCB	8.00	1.50	.024	CONVENTIONAL
2								
3								
4								
5								
6								

SUMMARY OF CULVERT FLOWS (cfs) FILE: Culv60 DATE: 04/02/2007

ELEV (ft)	TOTAL	1	2	3	4	5	6	ROADWAY	ITR
2452.89	0.0	0.0	0.0	0.0	0.0	0.0	0.0	0.00	1
2453.13	2.5	2.5	0.0	0.0	0.0	0.0	0.0	0.00	1
2453.27	5.0	5.0	0.0	0.0	0.0	0.0	0.0	0.00	1
2453.39	7.5	7.5	0.0	0.0	0.0	0.0	0.0	0.00	1
2453.50	10.0	10.0	0.0	0.0	0.0	0.0	0.0	0.00	1
2453.59	12.5	12.5	0.0	0.0	0.0	0.0	0.0	0.00	1
2453.68	15.0	15.0	0.0	0.0	0.0	0.0	0.0	0.00	1
2453.77	17.5	17.5	0.0	0.0	0.0	0.0	0.0	0.00	1
2453.85	20.0	20.0	0.0	0.0	0.0	0.0	0.0	0.00	1
2453.93	22.5	22.5	0.0	0.0	0.0	0.0	0.0	0.00	1
2454.00	25.0	25.0	0.0	0.0	0.0	0.0	0.0	0.00	1
2455.60	74.8	74.8	0.0	0.0	0.0	0.0	0.0	OVERTOPPING	

SUMMARY OF ITERATIVE SOLUTION ERRORS FILE: Culv60 DATE: 04/02/2007

HEAD ELEV (ft)	HEAD ERROR (ft)	TOTAL FLOW (cfs)	FLOW ERROR (cfs)	% FLOW ERROR
2452.89	0.000	0.00	0.00	0.00
2453.13	0.000	2.50	0.00	0.00
2453.27	0.000	5.00	0.00	0.00
2453.39	0.000	7.50	0.00	0.00
2453.50	0.000	10.00	0.00	0.00
2453.59	0.000	12.50	0.00	0.00
2453.68	0.000	15.00	0.00	0.00
2453.77	0.000	17.50	0.00	0.00
2453.85	0.000	20.00	0.00	0.00
2453.93	0.000	22.50	0.00	0.00
2454.00	0.000	25.00	0.00	0.00

<1> TOLERANCE (ft) = 0.010 <2> TOLERANCE (%) = 1.000

CURRENT DATE: 04-02-2007 FILE DATE: 04/02/2007
CURRENT TIME: 12:57:35 FILE NAME: Culv60

PERFORMANCE CURVE FOR CULVERT 1 - 1(8.00 (ft) BY 1.50 (ft)) RCB

DIS-CHARGE FLOW (cfs)	HEAD-WATER ELEV. (ft)	INLET CONTROL DEPTH (ft)	OUTLET CONTROL DEPTH (ft)	FLOW TYPE <F4>	NORMAL DEPTH (ft)	CRIT. DEPTH (ft)	OUTLET DEPTH (ft)	TW DEPTH (ft)	OUTLET VEL. (fps)	TW VEL. (fps)
0.00	2452.89	0.00	0.00	0-NF	0.00	0.00	0.00	0.00	0.00	0.00
2.50	2453.13	0.24	0.24	1-S2n	0.10	0.15	0.11	0.13	2.97	1.79
5.00	2453.27	0.38	0.38	1-S2n	0.17	0.23	0.17	0.19	3.57	2.30
7.50	2453.39	0.50	0.50	1-S2n	0.22	0.30	0.10	0.25	9.22	2.66
10.00	2453.50	0.61	0.61	1-S2n	0.26	0.37	0.17	0.29	7.55	2.93
12.50	2453.59	0.70	0.70	1-S2n	0.31	0.42	0.22	0.33	6.97	3.16
15.00	2453.68	0.79	0.79	1-S2n	0.34	0.48	0.28	0.37	6.72	3.36
17.50	2453.77	0.88	0.88	1-S2n	0.37	0.53	0.39	0.40	5.60	3.53
20.00	2453.85	0.96	0.96	1-S2n	0.41	0.58	0.43	0.43	5.82	3.69
22.50	2453.93	1.04	1.04	1-S2n	0.44	0.63	0.47	0.46	6.03	3.83
25.00	2454.00	1.11	1.11	1-S2n	0.47	0.67	0.50	0.49	6.22	3.96

El. inlet face invert 2452.89 ft El. outlet invert 2452.60 ft
El. inlet throat invert 0.00 ft El. inlet crest 2452.89 ft

***** SITE DATA ***** CULVERT INVERT **********

INLET STATION	0.00 ft
INLET ELEVATION	2452.89 ft
OUTLET STATION	8.00 ft
OUTLET ELEVATION	2452.60 ft
NUMBER OF BARRELS	1
SLOPE (V/H)	0.0362
CULVERT LENGTH ALONG SLOPE	8.01 ft

***** CULVERT DATA SUMMARY **********

BARREL SHAPE	BOX
BARREL SPAN	8.00 ft
BARREL RISE	1.50 ft
BARREL MATERIAL	CONCRETE
BARREL MANNING'S n	0.024
INLET TYPE	CONVENTIONAL
INLET EDGE AND WALL	SQUARE EDGE (90-45 DEG.)
INLET DEPRESSION	NONE

CURRENT DATE: 04-02-2007 FILE DATE: 04/02/2007
CURRENT TIME: 12:57:35 FILE NAME: Culv60

ÄÄ
ÄÄÄÄÄÄÄÄÄÄÄÄÄÄÄÄÄÄÄÄÄÄÄÄÄÄ TAILWATER ÄÄÄÄÄÄÄÄÄÄÄÄÄÄÄÄÄÄÄÄÄÄÄÄÄÄ
ÄÄ

******* REGULAR CHANNEL CROSS SECTION ****************

BOTTOM WIDTH	10.00 ft
SIDE SLOPE H/V (X:1)	6.0
CHANNEL SLOPE V/H (ft/ft)	0.030
MANNING'S n (.01-0.1)	0.035
CHANNEL INVERT ELEVATION	2452.60 ft
CULVERT NO.1 OUTLET INVERT ELEVATION	2452.60 ft

******* UNIFORM FLOW RATING CURVE FOR DOWNSTREAM CHANNEL

FLOW (cfs)	W.S.E. (ft)	FROUDE NUMBER	DEPTH (ft)	VEL. (f/s)	SHEAR (psf)
0.00	2452.60	0.000	0.00	0.00	0.00
2.50	2452.73	0.910	0.13	1.79	0.24
5.00	2452.79	0.968	0.19	2.30	0.36
7.50	2452.85	1.003	0.25	2.66	0.46
10.00	2452.89	1.028	0.29	2.93	0.54
12.50	2452.93	1.047	0.33	3.16	0.62
15.00	2452.97	1.063	0.37	3.36	0.69
17.50	2453.00	1.077	0.40	3.53	0.75
20.00	2453.03	1.088	0.43	3.69	0.81
22.50	2453.06	1.098	0.46	3.83	0.86
25.00	2453.09	1.108	0.49	3.96	0.91

ÄÄ
ÄÄÄÄÄÄÄÄÄÄÄÄÄÄÄÄÄÄÄÄÄÄÄÄÄÄ ROADWAY OVERTOPPING DATA ÄÄÄÄÄÄÄÄÄÄÄÄÄÄÄÄÄÄÄÄÄÄÄÄÄÄ
ÄÄ

WEIR COEFFICIENT	2.50
EMBANKMENT TOP WIDTH	8.00 ft

***** USER DEFINED ROADWAY PROFILE

CROSS-SECTION COORD. NO.	X ft	Y ft
1	0.00	2461.60
2	1.00	2455.70
3	27.00	2456.40
4	30.00	2455.60
5	50.00	2456.00
6	54.00	2456.50
7	69.00	2457.10
8	75.00	2456.90
9	115.00	2457.30
10	168.00	2459.70
11	214.00	2460.70
12	227.00	2461.40
13	257.00	2462.20

ÄÄ

CURRENT DATE: 04-02-2007 FILE DATE: 04/02/2007
CURRENT TIME: 13:01:07 FILE NAME: Culv61

FHWA CULVERT ANALYSIS
HY-8, VERSION 6.1

CULV NO.	SITE DATA: INLET ELEV. (ft)	OUTLET ELEV. (ft)	CULVERT LENGTH (ft)	CULVERT SHAPE, MATERIAL, INLET: BARRELS	SHAPE MATERIAL	SPAN (ft)	RISE (ft)	MANNING n	INLET TYPE
1	2454.16	2454.14	8.00	1	RCB	8.00	1.14	.024	CONVENTIONAL
2									
3									
4									
5									
6									

SUMMARY OF CULVERT FLOWS (cfs) FILE: Culv61 DATE: 04/02/2007

ELEV (ft)	TOTAL	1	2	3	4	5	6	ROADWAY	ITR
2454.16	0.0	0.0	0.0	0.0	0.0	0.0	0.0	0.00	1
2454.42	2.5	2.5	0.0	0.0	0.0	0.0	0.0	0.00	1
2454.56	5.0	5.0	0.0	0.0	0.0	0.0	0.0	0.00	1
2454.69	7.5	7.5	0.0	0.0	0.0	0.0	0.0	0.00	1
2454.80	10.0	10.0	0.0	0.0	0.0	0.0	0.0	0.00	1
2454.90	12.5	12.5	0.0	0.0	0.0	0.0	0.0	0.00	1
2454.99	15.0	15.0	0.0	0.0	0.0	0.0	0.0	0.00	1
2455.08	17.5	17.5	0.0	0.0	0.0	0.0	0.0	0.00	1
2455.16	20.0	20.0	0.0	0.0	0.0	0.0	0.0	0.00	1
2455.24	22.5	22.5	0.0	0.0	0.0	0.0	0.0	0.00	1
2455.32	25.0	25.0	0.0	0.0	0.0	0.0	0.0	0.00	1
2455.60	34.0	34.0	0.0	0.0	0.0	0.0	0.0	OVERTOPPING	

SUMMARY OF ITERATIVE SOLUTION ERRORS FILE: Culv61 DATE: 04/02/2007

HEAD ELEV (ft)	HEAD ERROR (ft)	TOTAL FLOW (cfs)	FLOW ERROR (cfs)	% FLOW ERROR
2454.16	0.000	0.00	0.00	0.00
2454.42	0.000	2.50	0.00	0.00
2454.56	0.000	5.00	0.00	0.00
2454.69	0.000	7.50	0.00	0.00
2454.80	0.000	10.00	0.00	0.00
2454.90	0.000	12.50	0.00	0.00
2454.99	0.000	15.00	0.00	0.00
2455.08	0.000	17.50	0.00	0.00
2455.16	0.000	20.00	0.00	0.00
2455.24	0.000	22.50	0.00	0.00
2455.32	0.000	25.00	0.00	0.00

<1> TOLERANCE (ft) = 0.010 <2> TOLERANCE (%) = 1.000

CURRENT DATE: 04-02-2007 FILE DATE: 04/02/2007
CURRENT TIME: 13:01:07 FILE NAME: Culv61

PERFORMANCE CURVE FOR CULVERT 1 - 1(8.00 (ft) BY 1.14 (ft)) RCB

DIS-CHARGE FLOW (cfs)	HEAD-WATER ELEV. (ft)	INLET CONTROL DEPTH (ft)	OUTLET CONTROL DEPTH (ft)	FLOW TYPE <F4>	NORMAL DEPTH (ft)	CRIT. DEPTH (ft)	OUTLET DEPTH (ft)	TW DEPTH (ft)	OUTLET VEL. (fps)	TW VEL. (fps)
0.00	2454.16	0.00	0.00	0-NF	0.00	0.00	0.00	0.00	0.00	0.00
2.50	2454.42	0.25	0.26	2-M2c	0.26	0.15	0.15	0.12	2.15	1.92
5.00	2454.56	0.39	0.40	2-M2c	0.39	0.23	0.23	0.18	2.71	2.47
7.50	2454.69	0.52	0.53	2-M2c	0.51	0.30	0.30	0.23	3.11	2.85
10.00	2454.80	0.62	0.64	2-M2c	0.61	0.37	0.37	0.27	3.42	3.14
12.50	2454.90	0.72	0.74	2-M2c	0.71	0.42	0.42	0.31	3.68	3.39
15.00	2454.99	0.81	0.83	2-M2c	0.79	0.48	0.48	0.34	3.91	3.60
17.50	2455.08	0.90	0.92	2-M2c	0.88	0.53	0.53	0.38	4.12	3.79
20.00	2455.16	0.98	1.00	2-M2c	0.96	0.58	0.58	0.41	4.31	3.96
22.50	2455.24	1.06	1.08	2-M2c	1.14	0.63	0.63	0.43	4.48	4.12
25.00	2455.32	1.14	1.16	2-M2c	1.14	0.67	0.67	0.46	4.64	4.26

El. inlet face invert 2454.16 ft El. outlet invert 2454.14 ft
El. inlet throat invert 0.00 ft El. inlet crest 2454.16 ft

***** SITE DATA ***** CULVERT INVERT **********

INLET STATION	0.00 ft
INLET ELEVATION	2454.16 ft
OUTLET STATION	8.00 ft
OUTLET ELEVATION	2454.14 ft
NUMBER OF BARRELS	1
SLOPE (V/H)	0.0025
CULVERT LENGTH ALONG SLOPE	8.00 ft

***** CULVERT DATA SUMMARY **********

BARREL SHAPE	BOX
BARREL SPAN	8.00 ft
BARREL RISE	1.14 ft
BARREL MATERIAL	CONCRETE
BARREL MANNING'S n	0.024
INLET TYPE	CONVENTIONAL
INLET EDGE AND WALL	SQUARE EDGE (90-45 DEG.)
INLET DEPRESSION	NONE

CURRENT DATE: 04-02-2007 FILE DATE: 04/02/2007
CURRENT TIME: 13:01:07 FILE NAME: Culv61

ÄÄ
ÄÄÄÄÄÄÄÄÄÄÄÄÄÄÄÄÄÄÄÄÄÄÄÄÄÄ TAILWATER ÄÄÄÄÄÄÄÄÄÄÄÄÄÄÄÄÄÄÄÄÄÄÄÄÄÄ
ÄÄ

******* REGULAR CHANNEL CROSS SECTION ****************

BOTTOM WIDTH	10.00 ft
SIDE SLOPE H/V (X:1)	6.0
CHANNEL SLOPE V/H (ft/ft)	0.037
MANNING'S n (.01-0.1)	0.035
CHANNEL INVERT ELEVATION	2454.14 ft
CULVERT NO.1 OUTLET INVERT ELEVATION	2454.14 ft

******* UNIFORM FLOW RATING CURVE FOR DOWNSTREAM CHANNEL

FLOW (cfs)	W.S.E. (ft)	FROUDE NUMBER	DEPTH (ft)	VEL. (f/s)	SHEAR (psf)
0.00	2454.14	0.000	0.00	0.00	0.00
2.50	2454.26	1.000	0.12	1.92	0.28
5.00	2454.32	1.065	0.18	2.47	0.42
7.50	2454.37	1.104	0.23	2.85	0.53
10.00	2454.41	1.132	0.27	3.14	0.63
12.50	2454.45	1.153	0.31	3.39	0.72
15.00	2454.48	1.171	0.34	3.60	0.80
17.50	2454.52	1.186	0.38	3.79	0.87
20.00	2454.55	1.198	0.41	3.96	0.94
22.50	2454.57	1.210	0.43	4.12	1.00
25.00	2454.60	1.220	0.46	4.26	1.06

ÄÄ
ÄÄÄÄÄÄÄÄÄÄÄÄÄÄÄÄÄÄÄÄÄÄÄÄÄÄ ROADWAY OVERTOPPING DATA ÄÄÄÄÄÄÄÄÄÄÄÄÄÄÄÄÄÄÄÄÄÄÄÄÄÄ
ÄÄ

WEIR COEFFICIENT	2.50
EMBANKMENT TOP WIDTH	8.00 ft

***** USER DEFINED ROADWAY PROFILE

CROSS-SECTION COORD. NO.	X ft	Y ft
1	0.00	2461.60
2	1.00	2455.70
3	27.00	2456.40
4	30.00	2455.60
5	50.00	2456.00
6	54.00	2456.50
7	69.00	2457.10
8	75.00	2456.90
9	115.00	2457.30
10	168.00	2459.70
11	214.00	2460.70
12	227.00	2461.40
13	257.00	2462.20

ÄÄ

CURRENT DATE: 04-02-2007 FILE DATE: 04/02/2007
CURRENT TIME: 13:03:43 FILE NAME: Culv62

FHWA CULVERT ANALYSIS
HY-8, VERSION 6.1

C U L V NO.	SITE DATA: INLET ELEV. (ft)	OUTLET ELEV. (ft)	CULVERT LENGTH (ft)	CULVERT SHAPE, MATERIAL, INLET: BARRELS SHAPE MATERIAL	SPAN (ft)	RISE (ft)	MANNING n	INLET TYPE
1	2442.65	2442.48	32.00	2 RCB	3.14	1.82	.023	CONVENTIONAL
2								
3								
4								
5								
6								

SUMMARY OF CULVERT FLOWS (cfs) FILE: Culv62 DATE: 04/02/2007

ELEV (ft)	TOTAL	1	2	3	4	5	6	ROADWAY	ITR
2442.65	0.0	0.0	0.0	0.0	0.0	0.0	0.0	0.00	1
2443.13	5.0	5.0	0.0	0.0	0.0	0.0	0.0	0.00	1
2443.39	10.0	10.0	0.0	0.0	0.0	0.0	0.0	0.00	1
2443.64	15.0	15.0	0.0	0.0	0.0	0.0	0.0	0.00	1
2443.84	20.0	20.0	0.0	0.0	0.0	0.0	0.0	0.00	1
2444.03	25.0	25.0	0.0	0.0	0.0	0.0	0.0	0.00	1
2444.21	30.0	30.0	0.0	0.0	0.0	0.0	0.0	0.00	1
2444.38	35.0	35.0	0.0	0.0	0.0	0.0	0.0	0.00	1
2444.53	40.0	40.0	0.0	0.0	0.0	0.0	0.0	0.00	1
2444.69	45.0	45.0	0.0	0.0	0.0	0.0	0.0	0.00	1
2444.84	50.0	50.0	0.0	0.0	0.0	0.0	0.0	0.00	1
2445.37	65.1	65.1	0.0	0.0	0.0	0.0	0.0	OVERTOPPING	

SUMMARY OF ITERATIVE SOLUTION ERRORS FILE: Culv62 DATE: 04/02/2007

HEAD ELEV (ft)	HEAD ERROR (ft)	TOTAL FLOW (cfs)	FLOW ERROR (cfs)	% FLOW ERROR
2442.65	0.000	0.00	0.00	0.00
2443.13	0.000	5.00	0.00	0.00
2443.39	0.000	10.00	0.00	0.00
2443.64	0.000	15.00	0.00	0.00
2443.84	0.000	20.00	0.00	0.00
2444.03	0.000	25.00	0.00	0.00
2444.21	0.000	30.00	0.00	0.00
2444.38	0.000	35.00	0.00	0.00
2444.53	0.000	40.00	0.00	0.00
2444.69	0.000	45.00	0.00	0.00
2444.84	0.000	50.00	0.00	0.00

<1> TOLERANCE (ft) = 0.010 <2> TOLERANCE (%) = 1.000

CURRENT DATE: 04-02-2007 FILE DATE: 04/02/2007
CURRENT TIME: 13:03:43 FILE NAME: Culv62

PERFORMANCE CURVE FOR CULVERT 1 - 2(3.14 (ft) BY 1.82 (ft)) RCB

DIS-CHARGE FLOW (cfs)	HEAD-WATER ELEV. (ft)	INLET CONTROL DEPTH (ft)	OUTLET CONTROL DEPTH (ft)	FLOW TYPE <F4>	NORMAL DEPTH (ft)	CRIT. DEPTH (ft)	OUTLET DEPTH (ft)	TW DEPTH (ft)	OUTLET VEL. (fps)	TW VEL. (fps)
0.00	2442.65	0.00	0.00	0-NF	0.00	0.00	0.00	0.00	0.00	0.00
5.00	2443.13	0.47	0.48	3-M2t	0.37	0.27	0.37	0.37	2.18	1.50
10.00	2443.39	0.73	0.74	3-M2t	0.59	0.43	0.55	0.55	2.92	1.90
15.00	2443.64	0.96	0.99	3-M2t	0.78	0.56	0.69	0.69	3.48	2.17
20.00	2443.84	1.15	1.19	3-M2t	0.96	0.68	0.81	0.81	3.94	2.38
25.00	2444.03	1.33	1.38	3-M2t	1.12	0.79	0.91	0.91	4.36	2.55
30.00	2444.21	1.50	1.56	3-M2t	1.28	0.89	1.01	1.01	4.73	2.69
35.00	2444.38	1.67	1.73	3-M2t	1.43	0.99	1.10	1.10	5.07	2.82
40.00	2444.54	1.83	1.89	3-M2t	1.58	1.08	1.18	1.18	5.40	2.94
45.00	2444.69	1.99	2.04	3-M2t	1.82	1.17	1.26	1.26	5.70	3.04
50.00	2444.84	2.16	2.19	3-M2t	1.82	1.26	1.33	1.33	5.98	3.13

El. inlet face invert 2442.65 ft El. outlet invert 2442.48 ft
El. inlet throat invert 0.00 ft El. inlet crest 2442.65 ft

```
***** SITE DATA ***** CULVERT INVERT **************
      INLET STATION                          0.00 ft
      INLET ELEVATION                     2442.65 ft
      OUTLET STATION                        32.00 ft
      OUTLET ELEVATION                    2442.48 ft
      NUMBER OF BARRELS                      2
      SLOPE (V/H)                            0.0053
      CULVERT LENGTH ALONG SLOPE            32.00 ft

***** CULVERT DATA SUMMARY ************************
      BARREL SHAPE          BOX
      BARREL SPAN             3.14 ft
      BARREL RISE             1.82 ft
      BARREL MATERIAL       CONCRETE
      BARREL MANNING'S n    0.023
      INLET TYPE            CONVENTIONAL
      INLET EDGE AND WALL   SQUARE EDGE  (90-45 DEG.)
      INLET DEPRESSION      NONE
```

CURRENT DATE: 04-02-2007 FILE DATE: 04/02/2007
CURRENT TIME: 13:03:43 FILE NAME: Culv62

ÄÄ
ÄÄÄÄÄÄÄÄÄÄÄÄÄÄÄÄÄÄÄÄÄÄÄÄÄÄ TAILWATER ÄÄÄÄÄÄÄÄÄÄÄÄÄÄÄÄÄÄÄÄÄÄÄÄÄÄ
ÄÄ

******* REGULAR CHANNEL CROSS SECTION ****************

BOTTOM WIDTH	8.00 ft
SIDE SLOPE H/V (X:1)	3.0
CHANNEL SLOPE V/H (ft/ft)	0.026
MANNING'S n (.01-0.1)	0.075
CHANNEL INVERT ELEVATION	2442.48 ft
CULVERT NO.1 OUTLET INVERT ELEVATION	2442.48 ft

******* UNIFORM FLOW RATING CURVE FOR DOWNSTREAM CHANNEL

FLOW (cfs)	W.S.E. (ft)	FROUDE NUMBER	DEPTH (ft)	VEL. (f/s)	SHEAR (psf)
0.00	2442.48	0.000	0.00	0.00	0.00
5.00	2442.85	0.463	0.37	1.50	0.59
10.00	2443.03	0.491	0.55	1.90	0.89
15.00	2443.17	0.507	0.69	2.17	1.11
20.00	2443.29	0.518	0.81	2.38	1.31
25.00	2443.39	0.526	0.91	2.55	1.48
30.00	2443.49	0.533	1.01	2.69	1.64
35.00	2443.58	0.539	1.10	2.82	1.78
40.00	2443.66	0.544	1.18	2.94	1.92
45.00	2443.74	0.549	1.26	3.04	2.04
50.00	2443.81	0.553	1.33	3.13	2.16

ÄÄ
ÄÄÄÄÄÄÄÄÄÄÄÄÄÄÄÄÄÄÄÄÄÄÄÄÄÄ ROADWAY OVERTOPPING DATA ÄÄÄÄÄÄÄÄÄÄÄÄÄÄÄÄÄÄÄÄÄÄÄÄÄÄ
ÄÄ

WEIR COEFFICIENT	2.50
EMBANKMENT TOP WIDTH	8.00 ft

***** USER DEFINED ROADWAY PROFILE

CROSS-SECTION COORD. NO.	X ft	Y ft
1	0.00	2448.00
2	56.00	2446.00
3	86.00	2445.37
4	93.90	2445.37
5	148.00	2446.00
6	162.00	2446.80

ÄÄ

CURRENT DATE: 04-05-2007 FILE DATE: 04/05/2007
CURRENT TIME: 08:25:05 FILE NAME: Culv63

FHWA CULVERT ANALYSIS
HY-8, VERSION 6.1

C U L V NO.	SITE DATA INLET ELEV. (ft)	OUTLET ELEV. (ft)	CULVERT LENGTH (ft)	CULVERT SHAPE, MATERIAL, INLET BARRELS SHAPE MATERIAL	SPAN (ft)	RISE (ft)	MANNING n	INLET TYPE
1	2438.84	2438.83	8.00	2 RCB	10.00	2.06	.024	CONVENTIONAL
2								
3								
4								
5								
6								

SUMMARY OF CULVERT FLOWS (cfs) FILE: Culv63 DATE: 04/05/2007

ELEV (ft)	TOTAL	1	2	3	4	5	6	ROADWAY	ITR
2438.84	0.0	0.0	0.0	0.0	0.0	0.0	0.0	0.00	1
2439.08	5.0	5.0	0.0	0.0	0.0	0.0	0.0	0.00	1
2439.20	10.0	10.0	0.0	0.0	0.0	0.0	0.0	0.00	1
2439.30	15.0	15.0	0.0	0.0	0.0	0.0	0.0	0.00	1
2439.40	20.0	20.0	0.0	0.0	0.0	0.0	0.0	0.00	1
2439.48	25.0	25.0	0.0	0.0	0.0	0.0	0.0	0.00	1
2439.56	30.0	30.0	0.0	0.0	0.0	0.0	0.0	0.00	1
2439.63	35.0	35.0	0.0	0.0	0.0	0.0	0.0	0.00	1
2439.71	40.0	40.0	0.0	0.0	0.0	0.0	0.0	0.00	1
2439.77	45.0	45.0	0.0	0.0	0.0	0.0	0.0	0.00	1
2439.84	50.0	50.0	0.0	0.0	0.0	0.0	0.0	0.00	1
2440.00	62.5	62.5	0.0	0.0	0.0	0.0	0.0	OVERTOPPING	

SUMMARY OF ITERATIVE SOLUTION ERRORS FILE: Culv63 DATE: 04/05/2007

HEAD ELEV (ft)	HEAD ERROR (ft)	TOTAL FLOW (cfs)	FLOW ERROR (cfs)	% FLOW ERROR
2438.84	0.000	0.00	0.00	0.00
2439.08	0.000	5.00	0.00	0.00
2439.20	0.000	10.00	0.00	0.00
2439.30	0.000	15.00	0.00	0.00
2439.40	0.000	20.00	0.00	0.00
2439.48	0.000	25.00	0.00	0.00
2439.56	0.000	30.00	0.00	0.00
2439.63	0.000	35.00	0.00	0.00
2439.71	0.000	40.00	0.00	0.00
2439.77	0.000	45.00	0.00	0.00
2439.84	0.000	50.00	0.00	0.00

<1> TOLERANCE (ft) = 0.010 <2> TOLERANCE (%) = 1.000

CURRENT DATE: 04-05-2007 FILE DATE: 04/05/2007
CURRENT TIME: 08:25:05 FILE NAME: Culv63

PERFORMANCE CURVE FOR CULVERT 1 - 2(10.00 (ft) BY 2.06 (ft)) RCB

DIS-CHARGE FLOW (cfs)	HEAD-WATER ELEV. (ft)	INLET CONTROL DEPTH (ft)	OUTLET CONTROL DEPTH (ft)	FLOW TYPE <F4>	NORMAL DEPTH (ft)	CRIT. DEPTH (ft)	OUTLET DEPTH (ft)	TW DEPTH (ft)	OUTLET VEL. (fps)	TW VEL. (fps)
0.00	2438.84	0.00	0.00	0-NF	0.00	0.00	0.00	-1.11	0.00	0.00
5.00	2439.08	0.24	0.23	2-M2c	0.26	0.13	0.13	-0.99	2.00	1.67
10.00	2439.20	0.34	0.36	2-M2c	0.42	0.20	0.20	-0.92	2.52	2.19
15.00	2439.30	0.45	0.46	2-M2c	0.54	0.26	0.26	-0.87	2.88	2.57
20.00	2439.40	0.54	0.56	2-M2c	0.65	0.31	0.31	-0.83	3.17	2.87
25.00	2439.48	0.63	0.64	2-M2c	0.74	0.37	0.37	-0.79	3.42	3.12
30.00	2439.56	0.71	0.72	2-M2c	0.84	0.41	0.41	-0.75	3.63	3.34
35.00	2439.63	0.78	0.79	2-M2c	0.92	0.46	0.46	-0.72	3.83	3.55
40.00	2439.71	0.86	0.87	2-M2c	1.01	0.50	0.50	-0.69	4.00	3.73
45.00	2439.78	0.93	0.94	2-M2c	1.08	0.54	0.54	-0.65	4.16	3.90
50.00	2439.84	1.00	1.00	2-M2c	1.16	0.58	0.58	-0.63	4.31	4.05

El. inlet face invert 2438.84 ft El. outlet invert 2438.83 ft
El. inlet throat invert 0.00 ft El. inlet crest 2438.84 ft

***** SITE DATA ***** CULVERT INVERT **********

INLET STATION	0.00 ft
INLET ELEVATION	2438.84 ft
OUTLET STATION	8.00 ft
OUTLET ELEVATION	2438.83 ft
NUMBER OF BARRELS	2
SLOPE (V/H)	0.0013
CULVERT LENGTH ALONG SLOPE	8.00 ft

***** CULVERT DATA SUMMARY **********

BARREL SHAPE	BOX
BARREL SPAN	10.00 ft
BARREL RISE	2.06 ft
BARREL MATERIAL	CONCRETE
BARREL MANNING'S n	0.024
INLET TYPE	CONVENTIONAL
INLET EDGE AND WALL	SQUARE EDGE (90-45 DEG.)
INLET DEPRESSION	NONE

CURRENT DATE: 04-05-2007 FILE DATE: 04/05/2007
CURRENT TIME: 08:25:05 FILE NAME: Culv63

ÄÄ
ÄÄÄÄÄÄÄÄÄÄÄÄÄÄÄÄÄÄÄÄÄÄÄÄÄÄ TAILWATER ÄÄÄÄÄÄÄÄÄÄÄÄÄÄÄÄÄÄÄÄÄÄÄÄÄÄ
ÄÄ

******* REGULAR CHANNEL CROSS SECTION ****************

BOTTOM WIDTH	24.00 ft
SIDE SLOPE H/V (X:1)	3.0
CHANNEL SLOPE V/H (ft/ft)	0.026
MANNING'S n (.01-0.1)	0.035
CHANNEL INVERT ELEVATION	2437.72 ft
CULVERT NO.1 OUTLET INVERT ELEVATION	2438.83 ft

******* UNIFORM FLOW RATING CURVE FOR DOWNSTREAM CHANNEL

FLOW (cfs)	W.S.E. (ft)	FROUDE NUMBER	DEPTH (ft)	VEL. (f/s)	SHEAR (psf)
0.00	2437.72	0.000	0.00	0.00	0.00
5.00	2437.84	0.847	0.12	1.67	0.20
10.00	2437.91	0.906	0.19	2.19	0.30
15.00	2437.96	0.942	0.24	2.57	0.38
20.00	2438.00	0.969	0.28	2.87	0.46
25.00	2438.04	0.989	0.32	3.12	0.52
30.00	2438.08	1.006	0.36	3.34	0.58
35.00	2438.11	1.021	0.39	3.55	0.64
40.00	2438.14	1.034	0.42	3.73	0.69
45.00	2438.18	1.045	0.46	3.90	0.74
50.00	2438.20	1.055	0.48	4.05	0.79

ÄÄ
ÄÄÄÄÄÄÄÄÄÄÄÄÄÄÄÄÄÄÄÄÄÄÄÄÄÄ ROADWAY OVERTOPPING DATA ÄÄÄÄÄÄÄÄÄÄÄÄÄÄÄÄÄÄÄÄÄÄÄÄÄÄ
ÄÄ

WEIR COEFFICIENT	2.50
EMBANKMENT TOP WIDTH	8.00 ft

***** USER DEFINED ROADWAY PROFILE

CROSS-SECTION COORD. NO.	X ft	Y ft
1	0.00	2446.00
2	50.00	2444.00
3	108.00	2442.00
4	215.00	2440.00
5	215.10	2446.89

ÄÄ

CURRENT DATE: 04-02-2007 FILE DATE: 04/02/2007
CURRENT TIME: 14:20:32 FILE NAME: Culv64

FHWA CULVERT ANALYSIS
HY-8, VERSION 6.1

CULV NO.	SITE DATA: INLET ELEV. (ft)	OUTLET ELEV. (ft)	CULVERT LENGTH (ft)	CULVERT SHAPE, MATERIAL, INLET: BARRELS	SHAPE MATERIAL	SPAN (ft)	RISE (ft)	MANNING n	INLET TYPE
1	2436.30	2436.29	1.00	1	IRCP	7.70	1.27	.016	CONVENTIONAL
2	2436.17	2436.16	1.00	1	IRCP	9.20	1.16	.016	CONVENTIONAL
3									
4									
5									
6									

SUMMARY OF CULVERT FLOWS (cfs) FILE: Culv64 DATE: 04/02/2007

ELEV (ft)	TOTAL	1	2	3	4	5	6	ROADWAY	ITR
2436.30	0.0	0.0	0.0	0.0	0.0	0.0	0.0	0.00	0
2436.58	6.0	2.4	3.6	0.0	0.0	0.0	0.0	0.00	7
2436.69	12.0	4.8	7.2	0.0	0.0	0.0	0.0	0.00	3
2436.78	18.0	7.1	10.9	0.0	0.0	0.0	0.0	0.00	4
2436.88	24.0	10.3	13.9	0.0	0.0	0.0	0.0	0.00	2
2436.90	25.0	10.9	14.4	0.0	0.0	0.0	0.0	0.00	2
2437.08	36.0	16.3	19.7	0.0	0.0	0.0	0.0	0.00	3
2437.18	42.0	19.2	22.8	0.0	0.0	0.0	0.0	0.00	3
2437.28	48.0	22.4	25.7	0.0	0.0	0.0	0.0	0.00	3
2437.38	54.0	25.8	28.3	0.0	0.0	0.0	0.0	0.00	3
2437.48	60.0	29.3	30.8	0.0	0.0	0.0	0.0	0.00	3
2438.00	85.7	43.0	42.8	0.0	0.0	0.0	0.0	OVERTOPPING	

SUMMARY OF ITERATIVE SOLUTION ERRORS FILE: Culv64 DATE: 04/02/2007

HEAD ELEV (ft)	HEAD ERROR (ft)	TOTAL FLOW (cfs)	FLOW ERROR (cfs)	% FLOW ERROR
2436.30	0.000	0.00	0.00	0.00
2436.58	-0.002	6.00	0.04	0.67
2436.69	-0.005	12.00	0.00	0.00
2436.78	0.001	18.00	-0.04	-0.22
2436.88	0.003	24.00	-0.18	-0.75
2436.90	0.003	25.00	-0.23	-0.92
2437.08	0.000	36.00	0.02	0.06
2437.18	0.000	42.00	0.03	0.07
2437.28	0.001	48.00	-0.07	-0.15
2437.38	0.001	54.00	-0.05	-0.09
2437.48	0.000	60.00	-0.03	-0.05

<1> TOLERANCE (ft) = 0.010 <2> TOLERANCE (%) = 1.000

CURRENT DATE: 04-02-2007 FILE DATE: 04/02/2007
CURRENT TIME: 14:20:32 FILE NAME: Culv64

PERFORMANCE CURVE FOR CULVERT 1 - 1(7.70 (ft) BY 1.27 (ft)) IRCP

DIS-CHARGE FLOW (cfs)	HEAD-WATER ELEV. (ft)	INLET CONTROL DEPTH (ft)	OUTLET CONTROL DEPTH (ft)	FLOW TYPE <F4>	NORMAL DEPTH (ft)	CRIT. DEPTH (ft)	OUTLET DEPTH (ft)	TW DEPTH (ft)	OUTLET VEL. (fps)	TW VEL. (fps)
0.00	2436.30	0.00	0.00	0-NF	0.00	0.00	0.00	0.00	0.00	0.00
2.39	2436.59	0.29	0.29	1-S2n	0.23	0.25	0.15	0.08	8.88	1.36
4.82	2436.70	0.40	0.40	1-S2n	0.31	0.34	0.24	0.12	4.87	1.76
7.10	2436.78	0.48	0.48	1-S2n	0.36	0.41	0.39	0.16	3.34	2.03
10.32	2436.89	0.59	0.59	1-S2n	0.43	0.49	0.46	0.19	3.78	2.28
10.87	2436.90	0.60	0.60	1-S2n	0.44	0.51	0.48	0.21	3.83	2.43
16.29	2437.08	0.78	0.78	1-S2n	0.54	0.63	0.59	0.23	4.37	2.58
19.20	2437.18	0.88	0.88	1-S2n	0.58	0.69	0.65	0.26	4.61	2.72
22.38	2437.28	0.98	0.98	1-S2n	0.63	0.75	0.71	0.28	4.83	2.84
25.76	2437.38	1.08	1.08	1-S2n	0.68	0.81	0.77	0.30	5.06	2.95
29.25	2437.48	1.18	1.18	1-S2n	0.73	0.87	0.83	0.31	5.26	3.06

El. inlet face invert 2436.30 ft El. outlet invert 2436.29 ft
El. inlet throat invert 0.00 ft El. inlet crest 2436.30 ft

***** SITE DATA ***** CULVERT INVERT **********

INLET STATION	0.00 ft
INLET ELEVATION	2436.30 ft
OUTLET STATION	1.00 ft
OUTLET ELEVATION	2436.29 ft
NUMBER OF BARRELS	1
SLOPE (V/H)	0.0100
CULVERT LENGTH ALONG SLOPE	1.00 ft

***** CULVERT DATA SUMMARY **********

BARREL SHAPE	USER DEFINED
BARREL SPAN	7.70 ft
BARREL RISE	1.27 ft
BARREL MATERIAL	CONCRETE
BARREL MANNING'S n	0.016 FOR SIDES AND TOP
	0.035 FOR BOTTOM
INLET TYPE	CONVENTIONAL
INLET EDGE AND WALL	HEADWALL
INLET DEPRESSION	NONE

***** USER DEFINED CULVERT CROSS-SECTION - CULVERT # 1

COORDINATE NUMBER	X (ft)	Y-TOP (ft)	Y-BOTTOM (ft)
1	0.00	2437.57	2436.52
2	7.70	2437.57	2436.30

CURRENT DATE: 04-02-2007 FILE DATE: 04/02/2007
CURRENT TIME: 14:20:32 FILE NAME: Culv64

PERFORMANCE CURVE FOR CULVERT 2 - 1(9.20 (ft) BY 1.16 (ft)) IRCP

DIS-CHARGE FLOW (cfs)	HEAD-WATER ELEV. (ft)	INLET CONTROL DEPTH (ft)	OUTLET CONTROL DEPTH (ft)	FLOW TYPE <F4>	NORMAL DEPTH (ft)	CRIT. DEPTH (ft)	OUTLET DEPTH (ft)	TW DEPTH (ft)	OUTLET VEL. (fps)	TW VEL. (fps)
0.00	2436.29	0.00	0.12	0-NF	0.00	0.00	0.00	0.13	0.00	0.00
3.57	2436.59	0.42	0.42	1-S2n	0.42	0.45	0.35	0.21	4.64	1.36
7.18	2436.69	0.52	0.52	1-S2n	0.52	0.56	0.46	0.25	4.68	1.76
10.94	2436.78	0.61	0.61	1-S2n	0.60	0.64	0.62	0.29	3.60	2.03
13.86	2436.88	0.71	0.71	1-S2n	0.64	0.71	0.68	0.32	3.91	2.28
14.36	2436.90	0.73	0.73	1-S2n	0.65	0.72	0.69	0.34	3.95	2.43
19.70	2437.08	0.91	0.91	1-S2n	0.73	0.82	0.78	0.36	4.38	2.58
22.77	2437.18	1.01	1.01	1-S2n	0.77	0.87	0.83	0.39	4.59	2.72
25.70	2437.27	1.10	1.10	1-S2n	0.81	0.92	0.88	0.41	4.77	2.84
28.29	2437.37	1.20	1.20	5-S2n	0.84	0.96	0.92	0.43	4.91	2.95
30.78	2437.48	1.31	1.31	5-S2n	0.87	1.00	0.96	0.44	5.05	3.06

El. inlet face invert 2436.17 ft El. outlet invert 2436.16 ft
El. inlet throat invert 0.00 ft El. inlet crest 2436.17 ft

***** SITE DATA ***** CULVERT INVERT **********

INLET STATION	0.00 ft
INLET ELEVATION	2436.17 ft
OUTLET STATION	1.00 ft
OUTLET ELEVATION	2436.16 ft
NUMBER OF BARRELS	1
SLOPE (V/H)	0.0100
CULVERT LENGTH ALONG SLOPE	1.00 ft

***** CULVERT DATA SUMMARY **********

BARREL SHAPE	USER DEFINED
BARREL SPAN	9.20 ft
BARREL RISE	1.16 ft
BARREL MATERIAL	CONCRETE
BARREL MANNING'S n	0.016 FOR SIDES AND TOP
	0.024 FOR BOTTOM
INLET TYPE	CONVENTIONAL
INLET EDGE AND WALL	HEADWALL
INLET DEPRESSION	NONE

***** USER DEFINED CULVERT CROSS-SECTION - CULVERT # 2

COORDINATE NUMBER	X (ft)	Y-TOP (ft)	Y-BOTTOM (ft)
1	0.00	2437.33	2436.17
2	5.40	2437.33	2436.67
3	9.20	2437.33	2436.38

CURRENT DATE: 04-02-2007 FILE DATE: 04/02/2007
CURRENT TIME: 14:20:32 FILE NAME: Culv64

ÄÄ
ÄÄÄÄÄÄÄÄÄÄÄÄÄÄÄÄÄÄÄÄÄÄÄÄÄÄÄ TAILWATER ÄÄÄÄÄÄÄÄÄÄÄÄÄÄÄÄÄÄÄÄÄÄÄÄÄÄÄ
ÄÄ

******* REGULAR CHANNEL CROSS SECTION ****************

BOTTOM WIDTH	50.00 ft
SIDE SLOPE H/V (X:1)	%40.0
CHANNEL SLOPE V/H (ft/ft)	0.031
MANNING'S n (.01-0.1)	0.035
CHANNEL INVERT ELEVATION	2436.29 ft
CULVERT NO.1 OUTLET INVERT ELEVATION	2436.29 ft

******* UNIFORM FLOW RATING CURVE FOR DOWNSTREAM CHANNEL

FLOW (cfs)	W.S.E. (ft)	FROUDE NUMBER	DEPTH (ft)	VEL. (f/s)	SHEAR (psf)
0.00	2436.29	0.000	0.00	0.00	0.00
6.00	2436.37	0.861	0.08	1.36	0.16
12.00	2436.41	0.917	0.12	1.76	0.24
18.00	2436.45	0.951	0.16	2.03	0.30
24.00	2436.48	0.979	0.19	2.28	0.37
25.00	2436.50	0.994	0.21	2.43	0.41
36.00	2436.52	1.010	0.23	2.58	0.45
42.00	2436.55	1.023	0.26	2.72	0.50
48.00	2436.57	1.034	0.28	2.84	0.54
54.00	2436.59	1.044	0.30	2.95	0.57
60.00	2436.60	1.053	0.31	3.06	0.61

ÄÄ
ÄÄÄÄÄÄÄÄÄÄÄÄÄÄÄÄÄÄÄÄÄÄÄÄÄÄÄ ROADWAY OVERTOPPING DATA ÄÄÄÄÄÄÄÄÄÄÄÄÄÄÄÄÄÄÄÄÄÄÄÄÄÄÄ
ÄÄ

WEIR COEFFICIENT	2.50
EMBANKMENT TOP WIDTH	1.00 ft

***** USER DEFINED ROADWAY PROFILE

CROSS-SECTION COORD. NO.	X ft	Y ft
1	0.00	2442.47
2	0.10	2438.00
3	54.00	2440.00
4	109.00	2442.00
5	160.00	2444.00

ÄÄ

CURRENT DATE: 04-02-2007 FILE DATE: 04/02/2007
CURRENT TIME: 13:12:57 FILE NAME: Culv65

FHWA CULVERT ANALYSIS
HY-8, VERSION 6.1

CULV NO.	SITE DATA: INLET ELEV. (ft)	OUTLET ELEV. (ft)	CULVERT LENGTH (ft)	CULVERT SHAPE, MATERIAL, INLET: BARRELS / SHAPE / MATERIAL	SPAN (ft)	RISE (ft)	MANNING n	INLET TYPE
1	2094.10	2094.09	1.00	1 IRCP	7.50	1.43	.016	CONVENTIONAL
2								
3								
4								
5								
6								

SUMMARY OF CULVERT FLOWS (cfs) FILE: Culv65 DATE: 04/02/2007

ELEV (ft)	TOTAL	1	2	3	4	5	6	ROADWAY	ITR
2094.10	0.0	0.0	0.0	0.0	0.0	0.0	0.0	0.00	1
2094.71	8.0	8.0	0.0	0.0	0.0	0.0	0.0	0.00	1
2094.98	16.0	16.0	0.0	0.0	0.0	0.0	0.0	0.00	1
2095.27	24.0	24.0	0.0	0.0	0.0	0.0	0.0	0.00	1
2095.56	32.0	32.0	0.0	0.0	0.0	0.0	0.0	0.00	1
2095.92	40.0	40.0	0.0	0.0	0.0	0.0	0.0	0.00	1
2096.30	48.0	48.0	0.0	0.0	0.0	0.0	0.0	0.00	1
2096.77	56.0	56.0	0.0	0.0	0.0	0.0	0.0	0.00	1
2097.31	64.0	64.0	0.0	0.0	0.0	0.0	0.0	0.00	1
2097.61	72.0	68.1	0.0	0.0	0.0	0.0	0.0	3.33	24
2097.66	80.0	68.7	0.0	0.0	0.0	0.0	0.0	10.77	7
2097.58	67.6	67.6	0.0	0.0	0.0	0.0	0.0	OVERTOPPING	

SUMMARY OF ITERATIVE SOLUTION ERRORS FILE: Culv65 DATE: 04/02/2007

HEAD ELEV (ft)	HEAD ERROR (ft)	TOTAL FLOW (cfs)	FLOW ERROR (cfs)	% FLOW ERROR
2094.10	0.000	0.00	0.00	0.00
2094.71	0.000	8.00	0.00	0.00
2094.98	0.000	16.00	0.00	0.00
2095.27	0.000	24.00	0.00	0.00
2095.56	0.000	32.00	0.00	0.00
2095.92	0.000	40.00	0.00	0.00
2096.30	0.000	48.00	0.00	0.00
2096.77	0.000	56.00	0.00	0.00
2097.31	0.000	64.00	0.00	0.00
2097.61	-0.002	72.00	0.54	0.75
2097.66	-0.001	80.00	0.53	0.66

<1> TOLERANCE (ft) = 0.010 <2> TOLERANCE (%) = 1.000

CURRENT DATE: 04-02-2007 FILE DATE: 04/02/2007
CURRENT TIME: 13:12:57 FILE NAME: Culv65

PERFORMANCE CURVE FOR CULVERT 1 - 1(7.50 (ft) BY 1.43 (ft)) IRCP

DIS-CHARGE FLOW (cfs)	HEAD-WATER ELEV. (ft)	INLET CONTROL DEPTH (ft)	OUTLET CONTROL DEPTH (ft)	FLOW TYPE <F4>	NORMAL DEPTH (ft)	CRIT. DEPTH (ft)	OUTLET DEPTH (ft)	TW DEPTH (ft)	OUTLET VEL. (fps)	TW VEL. (fps)
0.00	2094.10	0.00	0.00	0-NF	0.00	0.00	0.00	0.00	0.00	0.00
8.00	2094.71	0.61	0.61	1-S2n	0.56	0.63	0.62	0.28	3.52	2.68
16.00	2094.98	0.88	0.88	1-S2n	0.74	0.85	0.81	0.40	4.45	3.30
24.00	2095.27	1.17	1.17	1-S2n	0.87	1.01	0.97	0.50	5.00	3.71
32.00	2095.56	1.46	1.46	5-S2n	0.98	1.16	1.11	0.58	5.47	4.03
40.00	2095.92	1.82	1.82	5-S2n	1.08	1.29	1.24	0.65	5.88	4.29
48.00	2096.30	2.20	2.20	5-S2n	1.18	1.42	1.38	0.71	6.09	4.51
56.00	2096.77	2.67	2.51	6-S2n	1.27	1.43	1.33	0.76	7.48	4.70
64.00	2097.31	3.21	2.84	6-S2n	1.43	1.43	1.33	0.81	8.54	4.87
68.13	2097.61	3.51	3.03	6-S2n	1.43	1.43	1.33	0.86	9.09	5.03
68.70	2097.66	3.56	3.06	6-S2n	1.43	1.43	1.33	0.91	9.17	5.17

El. inlet face invert 2094.10 ft El. outlet invert 2094.09 ft
El. inlet throat invert 0.00 ft El. inlet crest 2094.10 ft

***** SITE DATA ***** CULVERT INVERT **********

INLET STATION	0.00 ft
INLET ELEVATION	2094.10 ft
OUTLET STATION	1.00 ft
OUTLET ELEVATION	2094.09 ft
NUMBER OF BARRELS	1
SLOPE (V/H)	0.0100
CULVERT LENGTH ALONG SLOPE	1.00 ft

***** CULVERT DATA SUMMARY **********

BARREL SHAPE	USER DEFINED
BARREL SPAN	7.50 ft
BARREL RISE	1.43 ft
BARREL MATERIAL	CONCRETE
BARREL MANNING'S n	0.016 FOR SIDES AND TOP
	0.035 FOR BOTTOM
INLET TYPE	CONVENTIONAL
INLET EDGE AND WALL	HEADWALL
INLET DEPRESSION	NONE

***** USER DEFINED CULVERT CROSS-SECTION - CULVERT # 1

COORDINATE NUMBER	X (ft)	Y-TOP (ft)	Y-BOTTOM (ft)
1	0.00	2095.53	2094.95
2	3.90	2095.53	2094.10
3	7.50	2095.53	2094.56

CURRENT DATE: 04-02-2007 FILE DATE: 04/02/2007
CURRENT TIME: 13:12:57 FILE NAME: Culv65

ÄÄÄ
ÄÄÄÄÄÄÄÄÄÄÄÄÄÄÄÄÄÄÄÄÄÄÄÄÄÄ TAILWATER ÄÄÄÄÄÄÄÄÄÄÄÄÄÄÄÄÄÄÄÄÄÄÄÄÄÄ
ÄÄÄ

******* REGULAR CHANNEL CROSS SECTION ****************

BOTTOM WIDTH	8.00 ft
SIDE SLOPE H/V (X:1)	%10.0
CHANNEL SLOPE V/H (ft/ft)	0.030
MANNING'S n (.01-0.1)	0.035
CHANNEL INVERT ELEVATION	2094.09 ft
CULVERT NO.1 OUTLET INVERT ELEVATION	2094.09 ft

******* UNIFORM FLOW RATING CURVE FOR DOWNSTREAM CHANNEL

FLOW (cfs)	W.S.E. (ft)	FROUDE NUMBER	DEPTH (ft)	VEL. (f/s)	SHEAR (psf)
0.00	2094.09	0.000	0.00	0.00	0.00
8.00	2094.37	1.006	0.28	2.68	0.52
16.00	2094.49	1.060	0.40	3.30	0.75
24.00	2094.59	1.091	0.50	3.71	0.93
32.00	2094.67	1.113	0.58	4.03	1.08
40.00	2094.74	1.130	0.65	4.29	1.21
48.00	2094.80	1.145	0.71	4.51	1.32
56.00	2094.85	1.157	0.76	4.70	1.43
64.00	2094.90	1.167	0.81	4.87	1.52
72.00	2094.95	1.176	0.86	5.03	1.61
80.00	2095.00	1.185	0.91	5.17	1.70

ÄÄÄ
ÄÄÄÄÄÄÄÄÄÄÄÄÄÄÄÄÄÄÄÄÄÄÄÄÄÄ ROADWAY OVERTOPPING DATA ÄÄÄÄÄÄÄÄÄÄÄÄÄÄÄÄÄÄÄÄÄÄÄÄÄÄ
ÄÄÄ

WEIR COEFFICIENT	2.50
EMBANKMENT TOP WIDTH	1.00 ft
CREST LENGTH	200.00 ft
OVERTOPPING CREST ELEVATION	2097.58 ft

ÄÄÄ

CURRENT DATE: 04-05-2007 FILE DATE: 04/05/2007
CURRENT TIME: 08:18:17 FILE NAME: Culv66

FHWA CULVERT ANALYSIS
HY-8, VERSION 6.1

C U L V NO.	SITE DATA INLET ELEV. (ft)	OUTLET ELEV. (ft)	CULVERT LENGTH (ft)	CULVERT SHAPE, MATERIAL, INLET BARRELS SHAPE MATERIAL	SPAN (ft)	RISE (ft)	MANNING n	INLET TYPE
1	2094.98	2094.97	1.00	1 IRCP	5.80	1.05	.016	CONVENTIONAL
2	2095.04	2095.03	1.00	1 IRCP	7.70	1.05	.016	CONVENTIONAL
3								
4								
5								
6								

SUMMARY OF CULVERT FLOWS (cfs) FILE: Culv66 DATE: 04/05/2007

ELEV (ft)	TOTAL	1	2	3	4	5	6	ROADWAY	ITR
2094.98	0.0	0.0	0.0	0.0	0.0	0.0	0.0	0.00	0
2095.84	30.0	15.4	14.6	0.0	0.0	0.0	0.0	0.00	3
2096.30	50.0	25.1	25.1	0.0	0.0	0.0	0.0	0.00	3
2096.96	90.0	35.7	36.5	0.0	0.0	0.0	0.0	17.55	8
2097.07	120.0	37.3	38.2	0.0	0.0	0.0	0.0	43.88	5
2097.17	150.0	38.4	39.6	0.0	0.0	0.0	0.0	70.84	4
2097.25	180.0	39.4	40.6	0.0	0.0	0.0	0.0	99.17	4
2097.33	210.0	40.1	41.7	0.0	0.0	0.0	0.0	127.66	4
2097.40	240.0	40.1	41.7	0.0	0.0	0.0	0.0	156.10	3
2097.48	270.0	39.8	41.7	0.0	0.0	0.0	0.0	186.17	3
2097.55	300.0	39.7	41.6	0.0	0.0	0.0	0.0	216.76	3
2096.82	68.0	33.6	34.4	0.0	0.0	0.0	0.0	OVERTOPPING	

SUMMARY OF ITERATIVE SOLUTION ERRORS FILE: Culv66 DATE: 04/05/2007

HEAD ELEV (ft)	HEAD ERROR (ft)	TOTAL FLOW (cfs)	FLOW ERROR (cfs)	% FLOW ERROR
2094.98	0.000	0.00	0.00	0.00
2095.84	-0.001	30.00	0.07	0.23
2096.30	0.004	50.00	-0.18	-0.36
2096.96	-0.003	90.00	0.26	0.29
2097.07	-0.004	120.00	0.64	0.53
2097.17	-0.007	150.00	1.12	0.75
2097.25	-0.006	180.00	0.82	0.46
2097.33	-0.004	210.00	0.60	0.29
2097.40	-0.004	240.00	2.12	0.88
2097.48	-0.004	270.00	2.28	0.84
2097.55	-0.003	300.00	2.00	0.67

<1> TOLERANCE (ft) = 0.010 <2> TOLERANCE (%) = 1.000

CURRENT DATE: 04-05-2007 FILE DATE: 04/05/2007
CURRENT TIME: 08:18:17 FILE NAME: Culv66

PERFORMANCE CURVE FOR CULVERT 1 - 1(5.80 (ft) BY 1.05 (ft)) IRCP

DIS-CHARGE FLOW (cfs)	HEAD-WATER ELEV. (ft)	INLET CONTROL DEPTH (ft)	OUTLET CONTROL DEPTH (ft)	FLOW TYPE <F4>	NORMAL DEPTH (ft)	CRIT. DEPTH (ft)	OUTLET DEPTH (ft)	TW DEPTH (ft)	OUTLET VEL. (fps)	TW VEL. (fps)
0.00	2094.98	0.00	0.00	0-NF	0.00	0.00	0.00	0.00	0.00	0.00
15.37	2095.85	0.87	0.87	1-S2n	0.50	0.60	0.57	0.48	4.68	3.17
25.08	2096.30	1.32	1.32	5-S2n	0.69	0.83	0.79	0.63	5.47	3.71
35.65	2096.95	1.97	1.85	6-S2n	0.86	1.05	1.04	0.86	5.91	4.41
37.26	2097.07	2.09	1.92	6-S2n	0.89	1.05	0.95	1.00	6.76	4.79
38.44	2097.16	2.18	2.05	4-S2n	0.91	1.05	0.95	1.12	6.98	5.10
39.39	2097.24	2.26	2.21	4-S2n	0.92	1.05	0.95	1.23	7.15	5.37
40.08	2097.32	2.32	2.34	4-FFt	0.94	1.05	1.05	1.33	6.58	5.60
40.10	2097.41	2.32	2.43	4-FFt	0.94	1.05	1.05	1.42	6.58	5.81
39.83	2097.48	2.30	2.50	4-FFt	0.93	1.05	1.05	1.50	6.54	5.99
39.67	2097.55	2.29	2.57	4-FFt	0.93	1.05	1.05	1.58	6.51	6.17

El. inlet face invert 2094.98 ft El. outlet invert 2094.97 ft
El. inlet throat invert 0.00 ft El. inlet crest 2094.98 ft

***** SITE DATA ***** CULVERT INVERT **********

INLET STATION	0.00 ft
INLET ELEVATION	2094.98 ft
OUTLET STATION	1.00 ft
OUTLET ELEVATION	2094.97 ft
NUMBER OF BARRELS	1
SLOPE (V/H)	0.0100
CULVERT LENGTH ALONG SLOPE	1.00 ft

***** CULVERT DATA SUMMARY **********

BARREL SHAPE	USER DEFINED
BARREL SPAN	5.80 ft
BARREL RISE	1.05 ft
BARREL MATERIAL	CONCRETE
BARREL MANNING'S n	0.016 FOR SIDES AND TOP
	0.035 FOR BOTTOM
INLET TYPE	CONVENTIONAL
INLET EDGE AND WALL	HEADWALL
INLET DEPRESSION	NONE

***** USER DEFINED CULVERT CROSS-SECTION - CULVERT # 1

COORDINATE NUMBER	X (ft)	Y-TOP (ft)	Y-BOTTOM (ft)
1	0.00	2096.09	2095.04
2	5.80	2096.09	2095.04

CURRENT DATE: 04-05-2007 FILE DATE: 04/05/2007
CURRENT TIME: 08:18:17 FILE NAME: Culv66

PERFORMANCE CURVE FOR CULVERT 2 - 1(7.70 (ft) BY 1.05 (ft)) IRCP

DIS-CHARGE FLOW (cfs)	HEAD-WATER ELEV. (ft)	INLET CONTROL DEPTH (ft)	OUTLET CONTROL DEPTH (ft)	FLOW TYPE <F4>	NORMAL DEPTH (ft)	CRIT. DEPTH (ft)	OUTLET DEPTH (ft)	TW DEPTH (ft)	OUTLET VEL. (fps)	TW VEL. (fps)
0.00	2095.04	0.00	0.00	0-NF	0.00	0.00	0.00	-0.06	0.00	0.00
14.56	2095.85	0.81	0.81	1-S2n	0.62	0.70	0.67	0.42	4.21	3.17
25.10	2096.30	1.26	1.26	5-S2n	0.78	0.91	0.87	0.57	5.01	3.71
36.53	2096.95	1.91	1.81	6-S2n	0.93	1.05	0.95	0.80	6.50	4.41
38.22	2097.07	2.03	1.89	6-S2n	1.05	1.05	0.95	0.94	6.80	4.79
39.59	2097.16	2.12	1.96	4-S2n	1.05	1.05	0.95	1.06	7.04	5.10
40.62	2097.25	2.21	2.12	4-S2n	1.05	1.05	0.95	1.17	7.23	5.37
41.66	2097.33	2.29	2.26	4-S2n	1.05	1.05	0.95	1.27	7.41	5.60
41.68	2097.40	2.29	2.36	4-FFt	1.05	1.05	1.05	1.36	6.52	5.81
41.72	2097.48	2.29	2.44	4-FFt	1.05	1.05	1.05	1.44	6.53	5.99
41.57	2097.55	2.28	2.51	4-FFt	1.05	1.05	1.05	1.52	6.50	6.17

El. inlet face invert 2095.04 ft El. outlet invert 2095.03 ft
El. inlet throat invert 0.00 ft El. inlet crest 2095.04 ft

***** SITE DATA ***** CULVERT INVERT **********

INLET STATION	0.00 ft
INLET ELEVATION	2095.04 ft
OUTLET STATION	1.00 ft
OUTLET ELEVATION	2095.03 ft
NUMBER OF BARRELS	1
SLOPE (V/H)	0.0100
CULVERT LENGTH ALONG SLOPE	1.00 ft

***** CULVERT DATA SUMMARY **********

BARREL SHAPE	USER DEFINED
BARREL SPAN	7.70 ft
BARREL RISE	1.05 ft
BARREL MATERIAL	CONCRETE
BARREL MANNING'S n	0.016 FOR SIDES AND TOP
	0.035 FOR BOTTOM
INLET TYPE	CONVENTIONAL
INLET EDGE AND WALL	HEADWALL
INLET DEPRESSION	NONE

***** USER DEFINED CULVERT CROSS-SECTION - CULVERT # 2

COORDINATE NUMBER	X (ft)	Y-TOP (ft)	Y-BOTTOM (ft)
1	7.10	2096.09	2095.04
2	14.80	2096.09	2095.48

CURRENT DATE: 04-05-2007
CURRENT TIME: 08:18:17

FILE DATE: 04/05/2007
FILE NAME: Culv66

ÄÄÄ
ÄÄÄÄÄÄÄÄÄÄÄÄÄÄÄÄÄÄÄÄÄÄÄÄÄÄ TAILWATER ÄÄÄÄÄÄÄÄÄÄÄÄÄÄÄÄÄÄÄÄÄÄÄÄÄÄ
ÄÄÄ

******* REGULAR CHANNEL CROSS SECTION ****************

BOTTOM WIDTH	15.00 ft
SIDE SLOPE H/V (X:1)	%10.0
CHANNEL SLOPE V/H (ft/ft)	0.020
MANNING'S n (.01-0.1)	0.035
CHANNEL INVERT ELEVATION	2094.97 ft
CULVERT NO.1 OUTLET INVERT ELEVATION	2094.97 ft

******* UNIFORM FLOW RATING CURVE FOR DOWNSTREAM CHANNEL

FLOW (cfs)	W.S.E. (ft)	FROUDE NUMBER	DEPTH (ft)	VEL. (f/s)	SHEAR (psf)
0.00	2094.97	0.000	0.00	0.00	0.00
30.00	2095.45	0.901	0.48	3.17	0.60
50.00	2095.60	0.937	0.63	3.71	0.79
90.00	2095.83	0.979	0.86	4.41	1.08
120.00	2095.97	0.999	1.00	4.79	1.25
150.00	2096.09	1.014	1.12	5.10	1.40
180.00	2096.20	1.027	1.23	5.37	1.53
210.00	2096.30	1.038	1.33	5.60	1.66
240.00	2096.39	1.048	1.42	5.81	1.77
270.00	2096.47	1.056	1.50	5.99	1.87
300.00	2096.55	1.063	1.58	6.17	1.97

ÄÄÄ
ÄÄÄÄÄÄÄÄÄÄÄÄÄÄÄÄÄÄÄÄÄÄÄÄÄÄ ROADWAY OVERTOPPING DATA ÄÄÄÄÄÄÄÄÄÄÄÄÄÄÄÄÄÄÄÄÄÄÄÄÄÄ
ÄÄ

WEIR COEFFICIENT	2.50
EMBANKMENT TOP WIDTH	1.00 ft
CREST LENGTH	140.00 ft
OVERTOPPING CREST ELEVATION	2096.82 ft

ÄÄÄ

CURRENT DATE: 04-02-2007 FILE DATE: 04/02/2007
CURRENT TIME: 15:10:36 FILE NAME: Culv67

FHWA CULVERT ANALYSIS
HY-8, VERSION 6.1

C U L V NO.	SITE DATA INLET ELEV. (ft)	OUTLET ELEV. (ft)	CULVERT LENGTH (ft)	CULVERT SHAPE, MATERIAL, INLET BARRELS SHAPE MATERIAL	SPAN (ft)	RISE (ft)	MANNING n	INLET TYPE
1	2093.35	2093.34	1.00	1 IRCP	7.40	1.35	.016	CONVENTIONAL
2	2093.31	2093.30	1.00	1 IRCP	7.50	1.39	.016	CONVENTIONAL
3								
4								
5								
6								

SUMMARY OF CULVERT FLOWS (cfs) FILE: Culv67 DATE: 04/02/2007

ELEV (ft)	TOTAL	1	2	3	4	5	6	ROADWAY	ITR
2093.35	0.0	0.0	0.0	0.0	0.0	0.0	0.0	0.00	0
2094.49	50.0	23.2	26.9	0.0	0.0	0.0	0.0	0.00	4
2095.55	100.0	46.7	53.4	0.0	0.0	0.0	0.0	0.00	4
2097.25	150.0	69.9	79.7	0.0	0.0	0.0	0.0	0.00	6
2097.73	200.0	75.3	85.8	0.0	0.0	0.0	0.0	37.78	5
2097.93	250.0	77.2	88.1	0.0	0.0	0.0	0.0	83.77	4
2098.09	300.0	78.8	89.9	0.0	0.0	0.0	0.0	128.77	3
2098.24	350.0	80.2	91.5	0.0	0.0	0.0	0.0	176.04	3
2098.38	400.0	81.5	92.9	0.0	0.0	0.0	0.0	223.84	3
2098.51	450.0	82.7	94.3	0.0	0.0	0.0	0.0	271.54	3
2098.63	500.0	83.8	95.6	0.0	0.0	0.0	0.0	319.43	3
2097.45	154.7	72.3	82.4	0.0	0.0	0.0	0.0	OVERTOPPING	

SUMMARY OF ITERATIVE SOLUTION ERRORS FILE: Culv67 DATE: 04/02/2007

HEAD ELEV (ft)	HEAD ERROR (ft)	TOTAL FLOW (cfs)	FLOW ERROR (cfs)	% FLOW ERROR
2093.35	0.000	0.00	0.00	0.00
2094.49	0.001	50.00	-0.06	-0.12
2095.55	0.002	100.00	-0.06	-0.06
2097.25	-0.008	150.00	0.42	0.28
2097.73	-0.004	200.00	1.12	0.56
2097.93	-0.002	250.00	0.92	0.37
2098.09	-0.006	300.00	2.55	0.85
2098.24	-0.005	350.00	2.21	0.63
2098.38	-0.004	400.00	1.72	0.43
2098.51	-0.003	450.00	1.45	0.32
2098.63	-0.002	500.00	1.16	0.23

<1> TOLERANCE (ft) = 0.010 <2> TOLERANCE (%) = 1.000

CURRENT DATE: 04-02-2007 FILE DATE: 04/02/2007
CURRENT TIME: 15:10:36 FILE NAME: Culv67

PERFORMANCE CURVE FOR CULVERT 1 - 1(7.40 (ft) BY 1.35 (ft)) IRCP

DIS-CHARGE FLOW (cfs)	HEAD-WATER ELEV. (ft)	INLET CONTROL DEPTH (ft)	OUTLET CONTROL DEPTH (ft)	FLOW TYPE <F4>	NORMAL DEPTH (ft)	CRIT. DEPTH (ft)	OUTLET DEPTH (ft)	TW DEPTH (ft)	OUTLET VEL. (fps)	TW VEL. (fps)
0.00	2093.35	0.00	0.00	0-NF	0.00	0.00	0.00	-0.03	0.00	0.00
23.16	2094.49	1.14	1.14	1-S2n	0.84	0.96	0.92	0.57	4.95	3.64
46.70	2095.55	2.20	2.18	6-S2n	1.15	1.35	1.34	0.84	6.01	4.49
69.91	2097.24	3.89	3.22	6-S2n	1.35	1.35	1.25	1.04	9.84	5.05
75.28	2097.73	4.38	3.52	6-S2n	1.35	1.35	1.25	1.21	10.59	5.47
77.21	2097.92	4.57	3.64	4-S2n	1.35	1.35	1.25	1.36	10.87	5.82
78.79	2098.09	4.74	3.86	4-S2n	1.35	1.35	1.25	1.49	11.09	6.12
80.23	2098.24	4.89	4.07	4-S2n	1.35	1.35	1.25	1.61	11.29	6.39
81.54	2098.37	5.02	4.26	4-S2n	1.35	1.35	1.25	1.72	11.48	6.62
82.73	2098.50	5.15	4.44	4-S2n	1.35	1.35	1.25	1.82	11.64	6.83
83.85	2098.62	5.27	4.61	4-S2n	1.35	1.35	1.25	1.92	11.80	7.03

El. inlet face invert 2093.35 ft El. outlet invert 2093.34 ft
El. inlet throat invert 0.00 ft El. inlet crest 2093.35 ft

```
***** SITE DATA ***** CULVERT INVERT **************
      INLET STATION                          0.00 ft
      INLET ELEVATION                     2093.35 ft
      OUTLET STATION                         1.00 ft
      OUTLET ELEVATION                    2093.34 ft
      NUMBER OF BARRELS                      1
      SLOPE (V/H)                            0.0100
      CULVERT LENGTH ALONG SLOPE             1.00 ft

***** CULVERT DATA SUMMARY ************************
      BARREL SHAPE          USER DEFINED
      BARREL SPAN             7.40 ft
      BARREL RISE             1.35 ft
      BARREL MATERIAL       CONCRETE
      BARREL MANNING'S n    0.016 FOR SIDES AND TOP
                            0.035 FOR BOTTOM
      INLET TYPE             CONVENTIONAL
      INLET EDGE AND WALL    HEADWALL
      INLET DEPRESSION       NONE

***** USER DEFINED CULVERT CROSS-SECTION - CULVERT # 1
```

COORDINATE NUMBER	X (ft)	Y-TOP (ft)	Y-BOTTOM (ft)
1	0.00	2094.70	2093.93
2	7.40	2094.70	2093.35

CURRENT DATE: 04-02-2007 FILE DATE: 04/02/2007
CURRENT TIME: 15:10:36 FILE NAME: Culv67

PERFORMANCE CURVE FOR CULVERT 2 - 1(7.50 (ft) BY 1.39 (ft)) IRCP

DIS-CHARGE FLOW (cfs)	HEAD-WATER ELEV. (ft)	INLET CONTROL DEPTH (ft)	OUTLET CONTROL DEPTH (ft)	FLOW TYPE <F4>	NORMAL DEPTH (ft)	CRIT. DEPTH (ft)	OUTLET DEPTH (ft)	TW DEPTH (ft)	OUTLET VEL. (fps)	TW VEL. (fps)
0.00	2093.31	0.00	0.00	0-NF	0.00	0.00	0.00	0.01	0.00	0.00
26.89	2094.49	1.18	1.18	1-S2n	0.80	0.94	0.89	0.61	5.17	3.64
53.36	2095.55	2.24	2.24	5-S2n	1.13	1.37	1.33	0.88	6.30	4.49
79.68	2097.24	3.93	3.26	6-S2n	1.39	1.39	1.29	1.08	9.75	5.05
85.83	2097.73	4.42	3.56	6-S2n	1.39	1.39	1.29	1.25	10.50	5.47
88.10	2097.93	4.62	3.69	4-S2n	1.39	1.39	1.29	1.40	10.78	5.82
89.89	2098.09	4.78	3.91	4-S2n	1.39	1.39	1.29	1.53	11.00	6.12
91.52	2098.24	4.93	4.12	4-S2n	1.39	1.39	1.29	1.65	11.19	6.39
92.91	2098.37	5.06	4.31	4-S2n	1.39	1.39	1.29	1.76	11.36	6.62
94.28	2098.50	5.19	4.48	4-S2n	1.39	1.39	1.29	1.86	11.53	6.83
95.56	2098.62	5.31	4.65	4-S2n	1.39	1.39	1.29	1.96	11.69	7.03

El. inlet face invert 2093.31 ft El. outlet invert 2093.30 ft
El. inlet throat invert 0.00 ft El. inlet crest 2093.31 ft

***** SITE DATA ***** CULVERT INVERT **********

INLET STATION	0.00 ft
INLET ELEVATION	2093.31 ft
OUTLET STATION	1.00 ft
OUTLET ELEVATION	2093.30 ft
NUMBER OF BARRELS	1
SLOPE (V/H)	0.0100
CULVERT LENGTH ALONG SLOPE	1.00 ft

***** CULVERT DATA SUMMARY **********

BARREL SHAPE	USER DEFINED
BARREL SPAN	7.50 ft
BARREL RISE	1.39 ft
BARREL MATERIAL	CONCRETE
BARREL MANNING'S n	0.016 FOR SIDES AND TOP 0.035 FOR BOTTOM
INLET TYPE	CONVENTIONAL
INLET EDGE AND WALL	HEADWALL
INLET DEPRESSION	NONE

***** USER DEFINED CULVERT CROSS-SECTION - CULVERT # 2

COORDINATE NUMBER	X (ft)	Y-TOP (ft)	Y-BOTTOM (ft)
1	8.80	2094.70	2093.31
2	16.30	2094.70	2093.71

CURRENT DATE: 04-02-2007 FILE DATE: 04/02/2007
CURRENT TIME: 15:10:36 FILE NAME: Culv67

ÄÄ
ÄÄÄÄÄÄÄÄÄÄÄÄÄÄÄÄÄÄÄÄÄÄÄÄÄÄ TAILWATER ÄÄÄÄÄÄÄÄÄÄÄÄÄÄÄÄÄÄÄÄÄÄÄÄÄÄ
ÄÄ

******* REGULAR CHANNEL CROSS SECTION ****************

BOTTOM WIDTH	17.00 ft
SIDE SLOPE H/V (X:1)	%10.0
CHANNEL SLOPE V/H (ft/ft)	0.020
MANNING'S n (.01-0.1)	0.035
CHANNEL INVERT ELEVATION	2093.31 ft
CULVERT NO.1 OUTLET INVERT ELEVATION	2093.34 ft

******* UNIFORM FLOW RATING CURVE FOR DOWNSTREAM CHANNEL

FLOW (cfs)	W.S.E. (ft)	FROUDE NUMBER	DEPTH (ft)	VEL. (f/s)	SHEAR (psf)
0.00	2093.31	0.000	0.00	0.00	0.00
50.00	2093.91	0.933	0.60	3.64	0.75
100.00	2094.18	0.983	0.87	4.49	1.08
150.00	2094.38	1.012	1.07	5.05	1.34
200.00	2094.55	1.032	1.24	5.47	1.55
250.00	2094.70	1.048	1.39	5.82	1.73
300.00	2094.83	1.062	1.52	6.12	1.90
350.00	2094.95	1.073	1.64	6.39	2.05
400.00	2095.06	1.082	1.75	6.62	2.19
450.00	2095.16	1.091	1.85	6.83	2.31
500.00	2095.26	1.099	1.95	7.03	2.43

ÄÄ
ÄÄÄÄÄÄÄÄÄÄÄÄÄÄÄÄÄÄÄÄÄÄÄÄÄÄ ROADWAY OVERTOPPING DATA ÄÄÄÄÄÄÄÄÄÄÄÄÄÄÄÄÄÄÄÄÄÄÄÄÄÄ
ÄÄ

WEIR COEFFICIENT	2.50
EMBANKMENT TOP WIDTH	1.00 ft
CREST LENGTH	100.00 ft
OVERTOPPING CREST ELEVATION	2097.45 ft

ÄÄ

CURRENT DATE: 04-02-2007 FILE DATE: 04/02/2007
CURRENT TIME: 13:25:00 FILE NAME: Culv68

FHWA CULVERT ANALYSIS
HY-8, VERSION 6.1

CULV NO.	SITE DATA: INLET ELEV. (ft)	OUTLET ELEV. (ft)	CULVERT LENGTH (ft)	CULVERT SHAPE, MATERIAL, INLET: BARRELS / SHAPE / MATERIAL	SPAN (ft)	RISE (ft)	MANNING n	INLET TYPE
1	2334.41	2334.40	1.00	1 IRCP	7.40	0.93	.016	CONVENTIONAL
2								
3								
4								
5								
6								

SUMMARY OF CULVERT FLOWS (cfs) FILE: Culv68 DATE: 04/02/2007

ELEV (ft)	TOTAL	1	2	3	4	5	6	ROADWAY	ITR
2334.41	0.0	0.0	0.0	0.0	0.0	0.0	0.0	0.00	1
2335.16	15.0	15.0	0.0	0.0	0.0	0.0	0.0	0.00	1
2335.81	30.0	30.0	0.0	0.0	0.0	0.0	0.0	0.00	1
2336.82	45.0	45.0	0.0	0.0	0.0	0.0	0.0	0.00	1
2337.25	50.0	50.0	0.0	0.0	0.0	0.0	0.0	0.00	1
2340.22	75.0	75.0	0.0	0.0	0.0	0.0	0.0	0.00	1
2340.64	90.0	77.9	0.0	0.0	0.0	0.0	0.0	11.53	12
2340.71	105.0	78.4	0.0	0.0	0.0	0.0	0.0	25.70	5
2340.77	120.0	78.8	0.0	0.0	0.0	0.0	0.0	40.64	5
2340.82	135.0	79.1	0.0	0.0	0.0	0.0	0.0	54.92	4
2340.87	150.0	79.4	0.0	0.0	0.0	0.0	0.0	69.78	4
2340.54	77.2	77.2	0.0	0.0	0.0	0.0	0.0	OVERTOPPING	

SUMMARY OF ITERATIVE SOLUTION ERRORS FILE: Culv68 DATE: 04/02/2007

HEAD ELEV (ft)	HEAD ERROR (ft)	TOTAL FLOW (cfs)	FLOW ERROR (cfs)	% FLOW ERROR
2334.41	0.000	0.00	0.00	0.00
2335.16	0.000	15.00	0.00	0.00
2335.81	0.000	30.00	0.00	0.00
2336.82	0.000	45.00	0.00	0.00
2337.25	0.000	50.00	0.00	0.00
2340.22	0.000	75.00	0.00	0.00
2340.64	-0.003	90.00	0.58	0.64
2340.71	-0.005	105.00	0.94	0.90
2340.77	-0.003	120.00	0.61	0.51
2340.82	-0.005	135.00	0.99	0.73
2340.87	-0.005	150.00	0.81	0.54

<1> TOLERANCE (ft) = 0.010 <2> TOLERANCE (%) = 1.000

CURRENT DATE: 04-02-2007 FILE DATE: 04/02/2007
CURRENT TIME: 13:25:00 FILE NAME: Culv68

PERFORMANCE CURVE FOR CULVERT 1 - 1(7.40 (ft) BY 0.93 (ft)) IRCP

DIS-CHARGE FLOW (cfs)	HEAD-WATER ELEV. (ft)	INLET CONTROL DEPTH (ft)	OUTLET CONTROL DEPTH (ft)	FLOW TYPE <F4>	NORMAL DEPTH (ft)	CRIT. DEPTH (ft)	OUTLET DEPTH (ft)	TW DEPTH (ft)	OUTLET VEL. (fps)	TW VEL. (fps)
0.00	2334.41	0.00	0.00	0-NF	0.00	0.00	0.00	0.00	0.00	0.00
15.00	2335.16	0.75	0.75	1-S2n	0.46	0.54	0.51	0.43	4.31	2.33
30.00	2335.81	1.40	1.40	5-S2n	0.69	0.84	0.80	0.61	5.37	2.82
45.00	2336.82	2.41	2.05	6-S2n	0.93	0.93	0.83	0.77	7.70	3.23
50.00	2337.25	2.84	2.32	6-S2n	0.93	0.93	0.83	0.84	8.55	3.38
75.00	2340.22	5.81	4.06	4-S2n	0.93	0.93	0.83	0.93	12.83	3.59
77.89	2340.64	6.23	4.39	4-S2n	0.93	0.93	0.83	1.01	13.32	3.76
78.36	2340.71	6.30	4.50	4-S2n	0.93	0.93	0.83	1.08	13.40	3.91
78.76	2340.76	6.35	4.61	4-S2n	0.93	0.93	0.83	1.15	13.47	4.05
79.09	2340.82	6.41	4.70	4-S2n	0.93	0.93	0.83	1.21	13.53	4.18
79.41	2340.86	6.45	4.78	4-S2n	0.93	0.93	0.83	1.27	13.58	4.29

El. inlet face invert 2334.41 ft El. outlet invert 2334.40 ft
El. inlet throat invert 0.00 ft El. inlet crest 2334.41 ft

```
***** SITE DATA ***** CULVERT INVERT **************
      INLET STATION                          0.00 ft
      INLET ELEVATION                     2334.41 ft
      OUTLET STATION                         1.00 ft
      OUTLET ELEVATION                    2334.40 ft
      NUMBER OF BARRELS                      1
      SLOPE (V/H)                            0.0100
      CULVERT LENGTH ALONG SLOPE             1.00 ft

***** CULVERT DATA SUMMARY ************************
      BARREL SHAPE          USER DEFINED
      BARREL SPAN             7.40 ft
      BARREL RISE             0.93 ft
      BARREL MATERIAL       CONCRETE
      BARREL MANNING'S n    0.016 FOR SIDES AND TOP
                            0.035 FOR BOTTOM
      INLET TYPE             CONVENTIONAL
      INLET EDGE AND WALL    HEADWALL
      INLET DEPRESSION       NONE

***** USER DEFINED CULVERT CROSS-SECTION - CULVERT # 1
```

COORDINATE NUMBER	X (ft)	Y-TOP (ft)	Y-BOTTOM (ft)
1	0.00	2335.24	2334.41
2	7.40	2335.26	2334.33

CURRENT DATE: 04-02-2007 FILE DATE: 04/02/2007
CURRENT TIME: 13:25:00 FILE NAME: Culv68

ÄÄ
ÄÄÄÄÄÄÄÄÄÄÄÄÄÄÄÄÄÄÄÄÄÄÄÄÄÄ TAILWATER ÄÄÄÄÄÄÄÄÄÄÄÄÄÄÄÄÄÄÄÄÄÄÄÄÄÄ
ÄÄ

******* REGULAR CHANNEL CROSS SECTION ****************

BOTTOM WIDTH	8.50 ft
SIDE SLOPE H/V (X:1)	%15.0
CHANNEL SLOPE V/H (ft/ft)	0.015
MANNING'S n (.01-0.1)	0.035
CHANNEL INVERT ELEVATION	2334.40 ft
CULVERT NO.1 OUTLET INVERT ELEVATION	2334.40 ft

******* UNIFORM FLOW RATING CURVE FOR DOWNSTREAM CHANNEL

FLOW (cfs)	W.S.E. (ft)	FROUDE NUMBER	DEPTH (ft)	VEL. (f/s)	SHEAR (psf)
0.00	2334.40	0.000	0.00	0.00	0.00
15.00	2334.83	0.749	0.43	2.33	0.40
30.00	2335.01	0.785	0.61	2.82	0.57
45.00	2335.17	0.813	0.77	3.23	0.72
50.00	2335.24	0.822	0.84	3.38	0.79
75.00	2335.33	0.834	0.93	3.59	0.87
90.00	2335.41	0.844	1.01	3.76	0.95
105.00	2335.48	0.853	1.08	3.91	1.01
120.00	2335.55	0.860	1.15	4.05	1.08
135.00	2335.61	0.867	1.21	4.18	1.13
150.00	2335.67	0.873	1.27	4.29	1.19

ÄÄ
ÄÄÄÄÄÄÄÄÄÄÄÄÄÄÄÄÄÄÄÄÄÄÄÄÄÄ ROADWAY OVERTOPPING DATA ÄÄÄÄÄÄÄÄÄÄÄÄÄÄÄÄÄÄÄÄÄÄÄÄÄÄ
ÄÄ

WEIR COEFFICIENT	2.50
EMBANKMENT TOP WIDTH	1.00 ft
CREST LENGTH	150.00 ft
OVERTOPPING CREST ELEVATION	2340.54 ft

ÄÄÄ

CURRENT DATE: 04-02-2007 FILE DATE: 04/02/2007
CURRENT TIME: 13:39:54 FILE NAME: Culv69

FHWA CULVERT ANALYSIS
HY-8, VERSION 6.1

C U L V NO.	SITE DATA INLET ELEV. (ft)	OUTLET ELEV. (ft)	CULVERT LENGTH (ft)	CULVERT SHAPE, MATERIAL, INLET BARRELS SHAPE MATERIAL	SPAN (ft)	RISE (ft)	MANNING n	INLET TYPE
1	2253.84	2253.83	1.00	1 IRCP	11.90	0.90	.016	CONVENTIONAL
2								
3								
4								
5								
6								

SUMMARY OF CULVERT FLOWS (cfs) FILE: Culv69 DATE: 04/02/2007

ELEV (ft)	TOTAL	1	2	3	4	5	6	ROADWAY	ITR
2253.84	0.0	0.0	0.0	0.0	0.0	0.0	0.0	0.00	1
2254.83	10.0	10.0	0.0	0.0	0.0	0.0	0.0	0.00	1
2256.10	20.0	20.0	0.0	0.0	0.0	0.0	0.0	0.00	1
2257.25	30.0	30.0	0.0	0.0	0.0	0.0	0.0	0.00	1
2258.57	40.0	36.1	0.0	0.0	0.0	0.0	0.0	3.70	9
2258.80	50.0	37.0	0.0	0.0	0.0	0.0	0.0	12.68	6
2258.95	60.0	37.6	0.0	0.0	0.0	0.0	0.0	21.91	5
2259.07	70.0	38.1	0.0	0.0	0.0	0.0	0.0	31.52	5
2259.18	80.0	38.5	0.0	0.0	0.0	0.0	0.0	40.75	4
2259.27	90.0	38.9	0.0	0.0	0.0	0.0	0.0	50.42	4
2259.35	100.0	39.2	0.0	0.0	0.0	0.0	0.0	60.20	4
2258.34	35.1	35.1	0.0	0.0	0.0	0.0	0.0	OVERTOPPING	

SUMMARY OF ITERATIVE SOLUTION ERRORS FILE: Culv69 DATE: 04/02/2007

HEAD ELEV (ft)	HEAD ERROR (ft)	TOTAL FLOW (cfs)	FLOW ERROR (cfs)	% FLOW ERROR
2253.84	0.000	0.00	0.00	0.00
2254.83	0.000	10.00	0.00	0.00
2256.10	0.000	20.00	0.00	0.00
2257.25	0.000	30.00	0.00	0.00
2258.57	-0.006	40.00	0.24	0.60
2258.80	-0.007	50.00	0.32	0.64
2258.95	-0.008	60.00	0.46	0.77
2259.07	-0.006	70.00	0.35	0.50
2259.18	-0.004	80.00	0.72	0.90
2259.27	-0.010	90.00	0.68	0.76
2259.35	-0.008	100.00	0.56	0.56

<1> TOLERANCE (ft) = 0.010 <2> TOLERANCE (%) = 1.000

CURRENT DATE: 04-02-2007 FILE DATE: 04/02/2007
CURRENT TIME: 13:39:54 FILE NAME: Culv69

PERFORMANCE CURVE FOR CULVERT 1 - 1(11.90 (ft) BY 0.90 (ft)) IRCP

DIS-CHARGE FLOW (cfs)	HEAD-WATER ELEV. (ft)	INLET CONTROL DEPTH (ft)	OUTLET CONTROL DEPTH (ft)	FLOW TYPE <F4>	NORMAL DEPTH (ft)	CRIT. DEPTH (ft)	OUTLET DEPTH (ft)	TW DEPTH (ft)	OUTLET VEL. (fps)	TW VEL. (fps)
0.00	2253.84	0.00	0.00	0-NF	0.00	0.00	0.00	0.00	0.00	0.00
10.00	2254.83	0.99	0.99	5-S2n	0.66	0.74	0.70	0.29	3.85	1.90
20.00	2256.10	2.26	2.00	6-S2n	0.90	0.90	0.80	0.42	5.96	2.32
30.00	2257.25	3.41	3.39	6-S2n	0.90	0.90	0.80	0.52	8.94	2.60
36.06	2258.57	4.73	4.50	6-S2n	0.90	0.90	0.80	0.60	10.75	2.81
37.00	2258.79	4.95	4.69	6-S2n	0.90	0.90	0.80	0.66	11.03	2.98
37.63	2258.95	5.11	4.82	6-S2n	0.90	0.90	0.80	0.72	11.22	3.13
38.13	2259.07	5.23	4.93	6-S2n	0.90	0.90	0.80	0.78	11.37	3.26
38.54	2259.17	5.33	5.01	6-S2n	0.90	0.90	0.80	0.83	11.49	3.38
38.90	2259.27	5.43	5.09	6-S2n	0.90	0.90	0.80	0.88	11.60	3.49
39.23	2259.35	5.51	5.18	4-S2n	0.90	0.90	0.80	0.92	11.70	3.58

El. inlet face invert 2253.84 ft El. outlet invert 2253.83 ft
El. inlet throat invert 0.00 ft El. inlet crest 2253.84 ft

***** SITE DATA ***** CULVERT INVERT **********

INLET STATION	0.00 ft
INLET ELEVATION	2253.84 ft
OUTLET STATION	1.00 ft
OUTLET ELEVATION	2253.83 ft
NUMBER OF BARRELS	1
SLOPE (V/H)	0.0100
CULVERT LENGTH ALONG SLOPE	1.00 ft

***** CULVERT DATA SUMMARY **********

BARREL SHAPE	USER DEFINED
BARREL SPAN	11.90 ft
BARREL RISE	0.90 ft
BARREL MATERIAL	CONCRETE
BARREL MANNING'S n	0.016 FOR SIDES AND TOP
	0.035 FOR BOTTOM
INLET TYPE	CONVENTIONAL
INLET EDGE AND WALL	HEADWALL
INLET DEPRESSION	NONE

***** USER DEFINED CULVERT CROSS-SECTION - CULVERT # 1

COORDINATE NUMBER	X (ft)	Y-TOP (ft)	Y-BOTTOM (ft)
1	0.00	2254.74	2255.46
2	7.40	2254.74	2253.84
3	11.90	2254.74	2254.60

CURRENT DATE: 04-02-2007 FILE DATE: 04/02/2007
CURRENT TIME: 13:39:54 FILE NAME: Culv69

ÄÄÄ
ÄÄÄÄÄÄÄÄÄÄÄÄÄÄÄÄÄÄÄÄÄÄÄÄÄÄÄ TAILWATER ÄÄÄÄÄÄÄÄÄÄÄÄÄÄÄÄÄÄÄÄÄÄÄÄÄÄÄ
ÄÄÄ

******* REGULAR CHANNEL CROSS SECTION ****************

BOTTOM WIDTH	12.00 ft
SIDE SLOPE H/V (X:1)	%20.0
CHANNEL SLOPE V/H (ft/ft)	0.015
MANNING'S n (.01-0.1)	0.035
CHANNEL INVERT ELEVATION	2253.83 ft
CULVERT NO.1 OUTLET INVERT ELEVATION	2253.83 ft

******* UNIFORM FLOW RATING CURVE FOR DOWNSTREAM CHANNEL

FLOW (cfs)	W.S.E. (ft)	FROUDE NUMBER	DEPTH (ft)	VEL. (f/s)	SHEAR (psf)
0.00	2253.83	0.000	0.00	0.00	0.00
10.00	2254.12	0.712	0.29	1.90	0.28
20.00	2254.25	0.749	0.42	2.32	0.39
30.00	2254.35	0.770	0.52	2.60	0.48
40.00	2254.43	0.785	0.60	2.81	0.56
50.00	2254.49	0.797	0.66	2.98	0.62
60.00	2254.55	0.807	0.72	3.13	0.68
70.00	2254.61	0.815	0.78	3.26	0.73
80.00	2254.66	0.822	0.83	3.38	0.78
90.00	2254.71	0.829	0.88	3.49	0.82
100.00	2254.75	0.834	0.92	3.58	0.86

ÄÄÄ
ÄÄÄÄÄÄÄÄÄÄÄÄÄÄÄÄÄÄÄÄÄÄÄÄÄÄÄ ROADWAY OVERTOPPING DATA ÄÄÄÄÄÄÄÄÄÄÄÄÄÄÄÄÄÄÄÄÄÄÄÄÄÄÄ
ÄÄÄ

WEIR COEFFICIENT	2.50
EMBANKMENT TOP WIDTH	1.00 ft

***** USER DEFINED ROADWAY PROFILE

CROSS-SECTION COORD. NO.	X ft	Y ft
1	0.00	2262.00
2	70.00	2258.34
3	77.40	2258.34
4	81.90	2258.40
5	160.00	2263.15

ÄÄÄ

CURRENT DATE: 04-05-2007 FILE DATE: 04/05/2007
CURRENT TIME: 09:06:33 FILE NAME: Culv70

FHWA CULVERT ANALYSIS
HY-8, VERSION 6.1

CULV NO.	SITE DATA: INLET ELEV. (ft)	OUTLET ELEV. (ft)	CULVERT LENGTH (ft)	BARRELS	SHAPE MATERIAL	SPAN (ft)	RISE (ft)	MANNING n	INLET TYPE
1	2186.88	2186.87	2.00	1	IRCP	6.64	0.92	.016	CONVENTIONAL
2	2187.25	2187.24	2.00	1	IRCP	6.64	0.64	.016	CONVENTIONAL
3									
4									
5									
6									

SUMMARY OF CULVERT FLOWS (cfs) FILE: Culv70 DATE: 04/05/2007

ELEV (ft)	TOTAL	1	2	3	4	5	6	ROADWAY	ITR
2186.88	0.0	0.0	0.0	0.0	0.0	0.0	0.0	0.00	0
2187.28	2.0	1.8	0.2	0.0	0.0	0.0	0.0	0.00	27
2187.45	4.0	2.0	1.5	0.0	0.0	0.0	0.0	0.00	23
2187.45	6.0	2.0	1.5	0.0	0.0	0.0	0.0	0.00	9
2187.45	8.0	7.1	1.5	0.0	0.0	0.0	0.0	0.00	15
2187.50	10.0	8.0	2.0	0.0	0.0	0.0	0.0	0.00	2
2187.56	12.0	9.1	2.8	0.0	0.0	0.0	0.0	0.00	3
2187.62	14.0	10.3	3.7	0.0	0.0	0.0	0.0	0.00	3
2187.67	16.0	11.5	4.5	0.0	0.0	0.0	0.0	0.00	3
2187.73	18.0	12.6	5.3	0.0	0.0	0.0	0.0	0.00	2
2187.78	20.0	13.8	6.2	0.0	0.0	0.0	0.0	0.00	2
2187.93	26.6	17.5	9.1	0.0	0.0	0.0	0.0	OVERTOPPING	

SUMMARY OF ITERATIVE SOLUTION ERRORS FILE: Culv70 DATE: 04/05/2007

HEAD ELEV (ft)	HEAD ERROR (ft)	TOTAL FLOW (cfs)	FLOW ERROR (cfs)	% FLOW ERROR
2186.88	0.000	0.00	0.00	0.00
2187.28	-0.001	2.00	0.02	1.00
2187.45	0.000	4.00	0.47	11.75
2187.45	0.000	6.00	2.47	41.17
2187.45	0.000	8.00	-0.60	-7.50
2187.50	0.000	10.00	0.00	0.00
2187.56	-0.008	12.00	0.06	0.50
2187.62	-0.009	14.00	0.04	0.29
2187.67	-0.004	16.00	0.00	0.00
2187.73	0.000	18.00	0.00	0.00
2187.78	0.002	20.00	-0.07	-0.35

<1> TOLERANCE (ft) = 0.010 <2> TOLERANCE (%) = 1.000

CURRENT DATE: 04-05-2007 FILE DATE: 04/05/2007
CURRENT TIME: 09:06:33 FILE NAME: Culv70

PERFORMANCE CURVE FOR CULVERT 1 - 1(6.64 (ft) BY 0.92 (ft)) IRCP

DIS-CHARGE FLOW (cfs)	HEAD-WATER ELEV. (ft)	INLET CONTROL DEPTH (ft)	OUTLET CONTROL DEPTH (ft)	FLOW TYPE <F4>	NORMAL DEPTH (ft)	CRIT. DEPTH (ft)	OUTLET DEPTH (ft)	TW DEPTH (ft)	OUTLET VEL. (fps)	TW VEL. (fps)
0.00	2186.88	0.00	0.00	0-NF	0.00	0.00	0.00	0.00	0.00	0.00
1.79	2187.28	0.28	0.40	2-M2c	0.15	0.13	0.13	0.07	3.43	1.40
2.00	2187.45	0.38	0.57	2-M2c	0.16	0.14	0.14	0.11	4.32	1.81
2.00	2187.26	0.38	0.25	3-M2t	0.16	0.14	0.14	0.14	2.10	2.10
7.07	2187.45	0.47	0.57	2-M2c	0.35	0.33	0.33	0.17	3.26	2.32
7.96	2187.50	0.50	0.62	2-M2c	0.38	0.35	0.35	0.19	3.39	2.51
9.11	2187.56	0.55	0.68	2-M2c	0.41	0.39	0.39	0.21	3.54	2.67
10.31	2187.62	0.60	0.74	2-M2c	0.44	0.42	0.42	0.23	3.69	2.82
11.50	2187.67	0.65	0.79	2-M2c	0.47	0.45	0.45	0.25	3.82	2.94
12.64	2187.73	0.70	0.85	2-M2c	0.50	0.48	0.48	0.27	3.95	3.06
13.83	2187.78	0.74	0.90	2-M2c	0.53	0.51	0.51	0.29	4.07	3.17

El. inlet face invert 2186.88 ft El. outlet invert 2186.87 ft
El. inlet throat invert 0.00 ft El. inlet crest 2186.88 ft

***** SITE DATA ***** CULVERT INVERT **********

INLET STATION	0.00 ft
INLET ELEVATION	2186.88 ft
OUTLET STATION	2.00 ft
OUTLET ELEVATION	2186.87 ft
NUMBER OF BARRELS	1
SLOPE (V/H)	0.0050
CULVERT LENGTH ALONG SLOPE	2.00 ft

***** CULVERT DATA SUMMARY **********

BARREL SHAPE	USER DEFINED
BARREL SPAN	6.64 ft
BARREL RISE	0.92 ft
BARREL MATERIAL	CONCRETE
BARREL MANNING'S n	0.016 FOR SIDES AND TOP
	0.035 FOR BOTTOM
INLET TYPE	CONVENTIONAL
INLET EDGE AND WALL	HEADWALL
INLET DEPRESSION	NONE

***** USER DEFINED CULVERT CROSS-SECTION - CULVERT # 1

COORDINATE NUMBER	X (ft)	Y-TOP (ft)	Y-BOTTOM (ft)
1	0.00	2187.80	2186.88
2	6.64	2187.80	2186.88

CURRENT DATE: 04-05-2007 FILE DATE: 04/05/2007
CURRENT TIME: 09:06:33 FILE NAME: Culv70

PERFORMANCE CURVE FOR CULVERT 2 - 1(6.64 (ft) BY 0.64 (ft)) IRCP

DIS-CHARGE FLOW (cfs)	HEAD-WATER ELEV. (ft)	INLET CONTROL DEPTH (ft)	OUTLET CONTROL DEPTH (ft)	FLOW TYPE <F4>	NORMAL DEPTH (ft)	CRIT. DEPTH (ft)	OUTLET DEPTH (ft)	TW DEPTH (ft)	OUTLET VEL. (fps)	TW VEL. (fps)
0.00	2187.25	0.00	0.00	0-NF	0.00	0.00	0.00	-0.37	0.00	0.00
0.19	2187.29	0.03	0.04	2-M2c	0.03	0.02	0.02	-0.29	0.85	1.40
1.53	2187.46	0.17	0.21	2-M2c	0.13	0.12	0.12	-0.26	1.97	1.81
1.53	2187.46	0.17	0.21	2-M2c	0.13	0.12	0.12	-0.23	1.97	2.10
1.53	2187.46	0.17	0.21	2-M2c	0.14	0.12	0.12	-0.20	1.97	2.32
2.04	2187.50	0.20	0.25	2-M2c	0.16	0.14	0.14	-0.18	2.17	2.51
2.84	2187.56	0.25	0.31	2-M2c	0.20	0.18	0.18	-0.16	2.41	2.67
3.65	2187.62	0.30	0.37	2-M2c	0.23	0.21	0.21	-0.14	2.62	2.82
4.50	2187.67	0.34	0.42	2-M2c	0.26	0.24	0.24	-0.12	2.80	2.94
5.35	2187.73	0.39	0.48	2-M2c	0.29	0.27	0.27	-0.10	2.97	3.06
6.24	2187.78	0.43	0.53	2-M2c	0.32	0.30	0.30	-0.08	3.12	3.17

El. inlet face invert 2187.25 ft El. outlet invert 2187.24 ft
El. inlet throat invert 0.00 ft El. inlet crest 2187.25 ft

***** SITE DATA ***** CULVERT INVERT **********

INLET STATION	0.00 ft
INLET ELEVATION	2187.25 ft
OUTLET STATION	2.00 ft
OUTLET ELEVATION	2187.24 ft
NUMBER OF BARRELS	1
SLOPE (V/H)	0.0050
CULVERT LENGTH ALONG SLOPE	2.00 ft

***** CULVERT DATA SUMMARY **********

BARREL SHAPE	USER DEFINED
BARREL SPAN	6.64 ft
BARREL RISE	0.64 ft
BARREL MATERIAL	CONCRETE
BARREL MANNING'S n	0.016 FOR SIDES AND TOP
	0.035 FOR BOTTOM
INLET TYPE	CONVENTIONAL
INLET EDGE AND WALL	HEADWALL
INLET DEPRESSION	NONE

***** USER DEFINED CULVERT CROSS-SECTION - CULVERT # 2

COORDINATE NUMBER	X (ft)	Y-TOP (ft)	Y-BOTTOM (ft)
1	8.00	2187.89	2187.25
2	14.64	2187.89	2187.25

CURRENT DATE: 04-05-2007 FILE DATE: 04/05/2007
CURRENT TIME: 09:06:33 FILE NAME: Culv70

ÄÄ
ÄÄÄÄÄÄÄÄÄÄÄÄÄÄÄÄÄÄÄÄÄÄÄÄÄÄÄ TAILWATER ÄÄÄÄÄÄÄÄÄÄÄÄÄÄÄÄÄÄÄÄÄÄÄÄÄÄÄ
ÄÄ

******* REGULAR CHANNEL CROSS SECTION ****************

BOTTOM WIDTH	18.00 ft
SIDE SLOPE H/V (X:1)	%14.0
CHANNEL SLOPE V/H (ft/ft)	0.037
MANNING'S n (.01-0.1)	0.035
CHANNEL INVERT ELEVATION	2186.87 ft
CULVERT NO.1 OUTLET INVERT ELEVATION	2186.87 ft

******* UNIFORM FLOW RATING CURVE FOR DOWNSTREAM CHANNEL

FLOW (cfs)	W.S.E. (ft)	FROUDE NUMBER	DEPTH (ft)	VEL. (f/s)	SHEAR (psf)
0.00	2186.87	0.000	0.00	0.00	0.00
2.00	2186.95	0.926	0.07	1.40	0.17
4.00	2186.98	0.987	0.11	1.81	0.26
6.00	2187.01	1.024	0.14	2.10	0.33
8.00	2187.04	1.051	0.17	2.32	0.39
10.00	2187.06	1.071	0.19	2.51	0.44
12.00	2187.08	1.088	0.21	2.67	0.49
14.00	2187.10	1.102	0.23	2.82	0.54
16.00	2187.12	1.115	0.25	2.94	0.58
18.00	2187.14	1.126	0.27	3.06	0.62
20.00	2187.16	1.136	0.29	3.17	0.66

ÄÄ
ÄÄÄÄÄÄÄÄÄÄÄÄÄÄÄÄÄÄÄÄÄÄÄÄÄÄÄ ROADWAY OVERTOPPING DATA ÄÄÄÄÄÄÄÄÄÄÄÄÄÄÄÄÄÄÄÄÄÄÄÄÄÄÄ
ÄÄ

WEIR COEFFICIENT	2.50
EMBANKMENT TOP WIDTH	1.00 ft

***** USER DEFINED ROADWAY PROFILE

CROSS-SECTION COORD. NO.	X ft	Y ft
1	0.00	2194.06
2	0.01	2188.67
3	8.20	2187.93
4	8.21	2194.06

ÄÄ

CURRENT DATE: 03-21-2007 FILE DATE: 3/21/2007
CURRENT TIME: 10:53:17 FILE NAME: Culv71

FHWA CULVERT ANALYSIS
HY-8, VERSION 6.1

C U L V NO.	SITE DATA INLET ELEV. (ft)	OUTLET ELEV. (ft)	CULVERT LENGTH (ft)	CULVERT SHAPE, MATERIAL, INLET BARRELS SHAPE MATERIAL	SPAN (ft)	RISE (ft)	MANNING n	INLET TYPE
1	2107.80	2107.30	16.31	1 CMPA	6.42	4.33	.024	CONVENTIONAL
2								
3								
4								
5								
6								

SUMMARY OF CULVERT FLOWS (cfs) FILE: Culv71 DATE: 3/21/2007

ELEV (ft)	TOTAL	1	2	3	4	5	6	ROADWAY	ITR
2107.80	0.0	0.0	0.0	0.0	0.0	0.0	0.0	0.00	1
2109.43	30.0	30.0	0.0	0.0	0.0	0.0	0.0	0.00	1
2110.27	60.0	60.0	0.0	0.0	0.0	0.0	0.0	0.00	1
2111.01	90.0	90.0	0.0	0.0	0.0	0.0	0.0	0.00	1
2111.69	120.0	120.0	0.0	0.0	0.0	0.0	0.0	0.00	1
2112.41	150.0	150.0	0.0	0.0	0.0	0.0	0.0	0.00	1
2113.11	180.0	175.9	0.0	0.0	0.0	0.0	0.0	4.06	4
2113.45	200.0	187.3	0.0	0.0	0.0	0.0	0.0	12.28	4
2113.92	240.0	202.4	0.0	0.0	0.0	0.0	0.0	36.88	3
2114.21	270.0	211.5	0.0	0.0	0.0	0.0	0.0	58.17	3
2114.48	300.0	219.2	0.0	0.0	0.0	0.0	0.0	80.59	3
2112.50	153.2	153.2	0.0	0.0	0.0	0.0	0.0	OVERTOPPING	

SUMMARY OF ITERATIVE SOLUTION ERRORS FILE: Culv71 DATE: 3/21/2007

HEAD ELEV (ft)	HEAD ERROR (ft)	TOTAL FLOW (cfs)	FLOW ERROR (cfs)	% FLOW ERROR
2107.80	0.000	0.00	0.00	0.00
2109.43	0.000	30.00	0.00	0.00
2110.27	0.000	60.00	0.00	0.00
2111.01	0.000	90.00	0.00	0.00
2111.69	0.000	120.00	0.00	0.00
2112.41	0.000	150.00	0.00	0.00
2113.11	-0.001	180.00	0.04	0.02
2113.45	-0.004	200.00	0.38	0.19
2113.92	-0.006	240.00	0.68	0.28
2114.21	-0.003	270.00	0.37	0.14
2114.48	-0.002	300.00	0.25	0.08

<1> TOLERANCE (ft) = 0.010 <2> TOLERANCE (%) = 1.000

CURRENT DATE: 03-21-2007 FILE DATE: 3/21/2007
CURRENT TIME: 10:53:17 FILE NAME: Culv71

PERFORMANCE CURVE FOR CULVERT 1 - 1(6.42 (ft) BY 4.33 (ft)) CMPA

DIS-CHARGE FLOW (cfs)	HEAD-WATER ELEV. (ft)	INLET CONTROL DEPTH (ft)	OUTLET CONTROL DEPTH (ft)	FLOW TYPE <F4>	NORMAL DEPTH (ft)	CRIT. DEPTH (ft)	OUTLET DEPTH (ft)	TW DEPTH (ft)	OUTLET VEL. (fps)	TW VEL. (fps)
0.00	2107.80	0.00	0.00	0-NF	0.00	0.00	0.00	-0.30	0.00	0.00
30.00	2109.43	1.63	1.63	1-S2n	0.82	1.09	0.86	0.19	7.36	3.13
60.00	2110.28	2.48	2.48	1-S2n	1.18	1.62	1.28	0.41	8.91	3.83
90.00	2111.01	3.21	3.21	1-S2n	1.50	2.05	1.65	0.59	9.95	4.27
120.00	2111.69	3.89	3.89	1-S2n	1.78	2.41	1.98	0.76	10.74	4.40
150.00	2112.41	4.61	4.61	5-S2n	2.06	2.74	2.29	0.89	11.47	4.25
175.90	2113.11	5.31	5.31	5-S2n	2.29	3.00	2.54	0.99	12.06	4.17
187.34	2113.44	5.64	5.64	5-S2n	2.40	3.10	2.65	1.04	12.30	4.21
202.44	2113.91	6.11	6.11	5-S2n	2.54	3.23	2.80	1.12	12.62	4.35
211.46	2114.21	6.41	6.41	5-S2n	2.62	3.31	2.89	1.18	12.80	4.46
219.16	2114.48	6.68	6.68	5-S2n	2.70	3.37	2.95	1.23	12.99	4.58

El. inlet face invert 2107.80 ft El. outlet invert 2107.30 ft
El. inlet throat invert 0.00 ft El. inlet crest 2107.80 ft

***** SITE DATA ***** CULVERT INVERT **********

INLET STATION	0.00 ft
INLET ELEVATION	2107.80 ft
OUTLET STATION	16.30 ft
OUTLET ELEVATION	2107.30 ft
NUMBER OF BARRELS	1
SLOPE (V/H)	0.0307
CULVERT LENGTH ALONG SLOPE	16.31 ft

***** CULVERT DATA SUMMARY **********

BARREL SHAPE	PIPE ARCH
BARREL SPAN	6.42 ft
BARREL RISE	4.33 ft
BARREL MATERIAL	STEEL OR ALUMINUM
BARREL MANNING'S n	0.024
INLET TYPE	CONVENTIONAL
INLET EDGE AND WALL	HEADWALL
INLET DEPRESSION	NONE

CURRENT DATE: 03-21-2007 FILE DATE: 3/21/2007
CURRENT TIME: 10:53:17 FILE NAME: Culv71

ÄÄ
ÄÄÄÄÄÄÄÄÄÄÄÄÄÄÄÄÄÄÄÄÄÄÄÄÄÄ TAILWATER ÄÄÄÄÄÄÄÄÄÄÄÄÄÄÄÄÄÄÄÄÄÄÄÄÄÄ
ÄÄ

***** USER DEFINED CHANNEL CROSS-SECTION FILE NAME: Culv71
MAIN CHANNEL AND LT & RT OVER BANKS FILE DATE: 03/15/2007
LEFT CHANNEL BOUNDARY 2
RIGHT CHANNEL BOUNDARY 5
MANNING n LEFT OVER BANK 0.060
MANNING n MAIN CHANNEL 0.045
MANNING n RIGHT OVER BANK 0.070
SLOPE OF CHANNEL 0.0320 ft/ft

CROSS-SECTION COORD. NO.	X (ft)	Y (ft)
1	0.00	2108.30
2	55.90	2108.00
3	75.30	2107.00
4	89.80	2107.00
5	95.30	2110.50

******* UNIFORM FLOW RATING CURVE FOR DOWNSTREAM CHANNEL

FLOW (cfs)	W.S.E. (ft)	FROUDE NUMBER	DEPTH (ft)	VEL. (f/s)	SHEAR (psf)
0.00	2107.00	0.000	-0.30	0.00	0.00
30.00	2107.49	0.960	0.19	3.13	0.77
60.00	2107.71	1.022	0.41	3.83	1.06
90.00	2107.89	1.056	0.59	4.27	1.27
120.00	2108.06	1.213	0.76	4.40	1.18
150.00	2108.19	1.412	0.89	4.25	0.98
180.00	2108.29	1.467	0.99	4.17	0.96
200.00	2108.34	1.420	1.04	4.21	1.03
240.00	2108.42	1.331	1.12	4.35	1.20
270.00	2108.48	1.283	1.18	4.46	1.31
300.00	2108.53	1.245	1.23	4.58	1.42

Note: Shear stress was calculated using R.

ÄÄ
ÄÄÄÄÄÄÄÄÄÄÄÄÄÄÄÄÄÄÄÄÄÄÄÄÄÄ ROADWAY OVERTOPPING DATA ÄÄÄÄÄÄÄÄÄÄÄÄÄÄÄÄÄÄÄÄÄÄÄÄÄÄ
ÄÄ

ROADWAY SURFACE GRAVEL
EMBANKMENT TOP WIDTH 15.00 ft

***** USER DEFINED ROADWAY PROFILE

CROSS-SECTION COORD. NO.	X ft	Y ft
1	0.00	2115.00
2	0.01	2113.60
3	16.30	2112.50
4	16.31	2115.00

ÄÄ

CURRENT DATE: 03-22-2007 FILE DATE: 3/22/2007
CURRENT TIME: 13:43:23 FILE NAME: Culv72

FHWA CULVERT ANALYSIS
HY-8, VERSION 6.1

CULV NO.	SITE DATA: INLET ELEV. (ft)	OUTLET ELEV. (ft)	CULVERT LENGTH (ft)	CULVERT SHAPE, MATERIAL, INLET: BARRELS SHAPE MATERIAL	SPAN (ft)	RISE (ft)	MANNING n	INLET TYPE
1	2377.09	2376.40	66.00	1 CSP	2.50	2.50	.024	CONVENTIONAL
2								
3								
4								
5								
6								

SUMMARY OF CULVERT FLOWS (cfs) FILE: Culv72 DATE: 3/22/2007

ELEV (ft)	TOTAL	1	2	3	4	5	6	ROADWAY	ITR
2377.09	0.0	0.0	0.0	0.0	0.0	0.0	0.0	0.00	1
2378.71	11.0	11.0	0.0	0.0	0.0	0.0	0.0	0.00	1
2379.57	22.0	22.0	0.0	0.0	0.0	0.0	0.0	0.00	1
2380.66	33.0	32.5	0.0	0.0	0.0	0.0	0.0	0.14	27
2380.89	44.0	34.0	0.0	0.0	0.0	0.0	0.0	9.65	13
2380.98	55.0	34.7	0.0	0.0	0.0	0.0	0.0	19.81	7
2381.06	66.0	34.7	0.0	0.0	0.0	0.0	0.0	30.96	7
2381.12	77.0	34.7	0.0	0.0	0.0	0.0	0.0	41.88	6
2381.13	80.0	34.8	0.0	0.0	0.0	0.0	0.0	44.75	4
2381.21	99.0	35.3	0.0	0.0	0.0	0.0	0.0	62.86	5
2381.26	110.0	35.6	0.0	0.0	0.0	0.0	0.0	73.30	4
2380.60	32.2	32.2	0.0	0.0	0.0	0.0	0.0	OVERTOPPING	

SUMMARY OF ITERATIVE SOLUTION ERRORS FILE: Culv72 DATE: 3/22/2007

HEAD ELEV (ft)	HEAD ERROR (ft)	TOTAL FLOW (cfs)	FLOW ERROR (cfs)	% FLOW ERROR
2377.09	0.000	0.00	0.00	0.00
2378.71	0.000	11.00	0.00	0.00
2379.57	0.000	22.00	0.00	0.00
2380.66	-0.002	33.00	0.31	0.94
2380.89	-0.002	44.00	0.30	0.68
2380.98	-0.003	55.00	0.54	0.98
2381.06	-0.002	66.00	0.38	0.58
2381.12	-0.002	77.00	0.42	0.55
2381.13	-0.002	80.00	0.46	0.57
2381.21	-0.004	99.00	0.83	0.84
2381.26	-0.006	110.00	1.09	0.99

<1> TOLERANCE (ft) = 0.010 <2> TOLERANCE (%) = 1.000

CURRENT DATE: 03-22-2007 FILE DATE: 3/22/2007
CURRENT TIME: 13:43:23 FILE NAME: Culv72

PERFORMANCE CURVE FOR CULVERT 1 - 1(2.50 (ft) BY 2.50 (ft)) CSP

DIS-CHARGE FLOW (cfs)	HEAD-WATER ELEV. (ft)	INLET CONTROL DEPTH (ft)	OUTLET CONTROL DEPTH (ft)	FLOW TYPE <F4>	NORMAL DEPTH (ft)	CRIT. DEPTH (ft)	OUTLET DEPTH (ft)	TW DEPTH (ft)	OUTLET VEL. (fps)	TW VEL. (fps)
0.00	2377.09	0.00	0.00	0-NF	0.00	0.00	0.00	-2.50	0.00	0.00
11.00	2378.71	1.57	1.62	2-M2c	1.22	1.10	1.10	-2.00	5.26	1.47
22.00	2379.57	2.37	2.48	2-M2c	1.98	1.59	1.59	-1.85	6.69	1.86
32.54	2380.65	3.22	3.56	2-M2c	2.50	1.94	1.94	-1.73	7.99	2.12
34.05	2380.89	3.37	3.80	2-M2c	2.50	1.98	1.98	-1.63	8.16	2.32
34.66	2380.98	3.43	3.89	2-M2c	2.50	2.00	2.00	-1.54	8.23	2.48
34.66	2380.98	3.43	3.89	2-M2c	2.50	2.00	2.00	-1.46	8.23	2.63
34.70	2381.12	3.44	4.03	2-M2c	2.50	2.00	2.00	-1.37	8.24	2.78
34.79	2381.14	3.45	4.05	2-M2c	2.50	2.00	2.00	-1.32	8.25	2.86
35.30	2381.22	3.50	4.13	2-M2c	2.50	2.01	2.01	-1.25	8.33	2.96
35.61	2381.27	3.53	4.18	2-M2c	2.50	2.02	2.02	-1.19	8.37	3.05

El. inlet face invert 2377.09 ft El. outlet invert 2376.40 ft
El. inlet throat invert 0.00 ft El. inlet crest 2377.09 ft

***** SITE DATA ***** CULVERT INVERT **********

INLET STATION	0.00 ft
INLET ELEVATION	2377.09 ft
OUTLET STATION	66.00 ft
OUTLET ELEVATION	2376.40 ft
NUMBER OF BARRELS	1
SLOPE (V/H)	0.0105
CULVERT LENGTH ALONG SLOPE	66.00 ft

***** CULVERT DATA SUMMARY **********

BARREL SHAPE	CIRCULAR
BARREL DIAMETER	2.50 ft
BARREL MATERIAL	CORRUGATED STEEL
BARREL MANNING'S n	0.024
INLET TYPE	CONVENTIONAL
INLET EDGE AND WALL	BEVELED EDGE (1:1)
INLET DEPRESSION	NONE

CURRENT DATE: 03-22-2007 FILE DATE: 3/22/2007
CURRENT TIME: 13:43:23 FILE NAME: Culv72

ÄÄÄ
ÄÄÄÄÄÄÄÄÄÄÄÄÄÄÄÄÄÄÄÄÄÄÄÄÄÄ TAILWATER ÄÄÄÄÄÄÄÄÄÄÄÄÄÄÄÄÄÄÄÄÄÄÄÄÄÄ
ÄÄ

***** USER DEFINED CHANNEL CROSS-SECTION FILE NAME: Culv72
MAIN CHANNEL AND LT & RT OVER BANKS FILE DATE: 3/21/2007
LEFT CHANNEL BOUNDARY 3
RIGHT CHANNEL BOUNDARY 6
MANNING n LEFT OVER BANK 0.060
MANNING n MAIN CHANNEL 0.066
MANNING n RIGHT OVER BANK 0.054
SLOPE OF CHANNEL 0.0230 ft/ft

CROSS-SECTION COORD. NO.	X (ft)	Y (ft)
1	0.00	2378.50
2	20.70	2377.00
3	42.00	2376.30
4	50.90	2374.30
5	69.30	2373.90
6	91.90	2375.30
7	116.90	2376.30

******* UNIFORM FLOW RATING CURVE FOR DOWNSTREAM CHANNEL

FLOW (cfs)	W.S.E. (ft)	FROUDE NUMBER	DEPTH (ft)	VEL. (f/s)	SHEAR (psf)
0.00	2373.90	0.000	-2.50	0.00	0.00
11.00	2374.40	0.490	-2.00	1.47	0.40
22.00	2374.55	0.523	-1.85	1.86	0.57
33.00	2374.67	0.542	-1.73	2.12	0.69
44.00	2374.77	0.555	-1.63	2.32	0.79
55.00	2374.86	0.565	-1.54	2.48	0.87
66.00	2374.94	0.573	-1.46	2.63	0.95
77.00	2375.03	0.581	-1.37	2.78	1.03
80.00	2375.08	0.585	-1.32	2.86	1.08
99.00	2375.15	0.590	-1.25	2.96	1.13
110.00	2375.21	0.595	-1.19	3.05	1.19

Note: Shear stress was calculated using R.

ÄÄÄ
ÄÄÄÄÄÄÄÄÄÄÄÄÄÄÄÄÄÄÄÄÄÄÄÄÄÄ ROADWAY OVERTOPPING DATA ÄÄÄÄÄÄÄÄÄÄÄÄÄÄÄÄÄÄÄÄÄÄÄÄÄÄ
ÄÄÄ

ROADWAY SURFACE PAVED
EMBANKMENT TOP WIDTH 25.00 ft
***** USER DEFINED ROADWAY PROFILE

CROSS-SECTION COORD. NO.	X ft	Y ft
1	0.00	2380.60
2	61.00	2380.91
3	100.00	2381.29
4	129.00	2382.11
5	165.60	2381.97

ÄÄÄ

CURRENT DATE: 04-02-2007 FILE DATE: 04/02/2007
CURRENT TIME: 13:55:05 FILE NAME: Culv73

FHWA CULVERT ANALYSIS
HY-8, VERSION 6.1

C U L V NO.	SITE DATA: INLET ELEV. (ft)	OUTLET ELEV. (ft)	CULVERT LENGTH (ft)	CULVERT SHAPE, MATERIAL, INLET: BARRELS SHAPE MATERIAL	SPAN (ft)	RISE (ft)	MANNING n	INLET TYPE
1	2453.27	2452.98	8.01	1 RCB	8.00	1.13	.024	CONVENTIONAL
2								
3								
4								
5								
6								

SUMMARY OF CULVERT FLOWS (cfs) FILE: Culv73 DATE: 04/02/2007

ELEV (ft)	TOTAL	1	2	3	4	5	6	ROADWAY	ITR
2453.27	0.0	0.0	0.0	0.0	0.0	0.0	0.0	0.00	1
2453.51	2.5	2.5	0.0	0.0	0.0	0.0	0.0	0.00	1
2453.65	5.0	5.0	0.0	0.0	0.0	0.0	0.0	0.00	1
2453.77	7.5	7.5	0.0	0.0	0.0	0.0	0.0	0.00	1
2453.87	10.0	10.0	0.0	0.0	0.0	0.0	0.0	0.00	1
2453.97	12.5	12.5	0.0	0.0	0.0	0.0	0.0	0.00	1
2454.06	15.0	15.0	0.0	0.0	0.0	0.0	0.0	0.00	1
2454.15	17.5	17.5	0.0	0.0	0.0	0.0	0.0	0.00	1
2454.23	20.0	20.0	0.0	0.0	0.0	0.0	0.0	0.00	1
2454.31	22.5	22.5	0.0	0.0	0.0	0.0	0.0	0.00	1
2454.39	25.0	25.0	0.0	0.0	0.0	0.0	0.0	0.00	1
2455.60	54.5	54.5	0.0	0.0	0.0	0.0	0.0	OVERTOPPING	

SUMMARY OF ITERATIVE SOLUTION ERRORS FILE: Culv73 DATE: 04/02/2007

HEAD ELEV (ft)	HEAD ERROR (ft)	TOTAL FLOW (cfs)	FLOW ERROR (cfs)	% FLOW ERROR
2453.27	0.000	0.00	0.00	0.00
2453.51	0.000	2.50	0.00	0.00
2453.65	0.000	5.00	0.00	0.00
2453.77	0.000	7.50	0.00	0.00
2453.87	0.000	10.00	0.00	0.00
2453.97	0.000	12.50	0.00	0.00
2454.06	0.000	15.00	0.00	0.00
2454.15	0.000	17.50	0.00	0.00
2454.23	0.000	20.00	0.00	0.00
2454.31	0.000	22.50	0.00	0.00
2454.39	0.000	25.00	0.00	0.00

<1> TOLERANCE (ft) = 0.010 <2> TOLERANCE (%) = 1.000

CURRENT DATE: 04-02-2007 FILE DATE: 04/02/2007
CURRENT TIME: 13:55:05 FILE NAME: Culv73

PERFORMANCE CURVE FOR CULVERT 1 - 1(8.00 (ft) BY 1.13 (ft)) RCB

DIS-CHARGE FLOW (cfs)	HEAD-WATER ELEV. (ft)	INLET CONTROL DEPTH (ft)	OUTLET CONTROL DEPTH (ft)	FLOW TYPE <F4>	NORMAL DEPTH (ft)	CRIT. DEPTH (ft)	OUTLET DEPTH (ft)	TW DEPTH (ft)	OUTLET VEL. (fps)	TW VEL. (fps)
0.00	2453.27	0.00	0.00	0-NF	0.00	0.00	0.00	0.00	0.00	0.00
2.50	2453.51	0.24	0.24	1-S2n	0.11	0.15	0.11	0.17	2.97	2.09
5.00	2453.65	0.38	0.38	1-S2n	0.17	0.23	0.17	0.25	3.57	2.63
7.50	2453.77	0.50	0.50	1-S2n	0.22	0.30	0.10	0.32	9.22	3.00
10.00	2453.87	0.60	0.60	1-S2n	0.26	0.37	0.17	0.37	7.55	3.28
12.50	2453.97	0.70	0.70	1-S2n	0.30	0.42	0.22	0.42	6.97	3.51
15.00	2454.06	0.79	0.79	1-S2n	0.34	0.48	0.28	0.46	6.72	3.70
17.50	2454.15	0.88	0.88	1-S2n	0.37	0.53	0.39	0.50	5.60	3.88
20.00	2454.23	0.96	0.96	1-S2n	0.41	0.58	0.43	0.54	5.82	4.03
22.50	2454.31	1.04	1.04	1-S2n	0.44	0.63	0.47	0.57	6.03	4.17
25.00	2454.39	1.12	1.12	1-S2n	0.47	0.67	0.50	0.60	6.22	4.30

El. inlet face invert 2453.27 ft El. outlet invert 2452.98 ft
El. inlet throat invert 0.00 ft El. inlet crest 2453.27 ft

***** SITE DATA ***** CULVERT INVERT **********

INLET STATION	0.00 ft
INLET ELEVATION	2453.27 ft
OUTLET STATION	8.00 ft
OUTLET ELEVATION	2452.98 ft
NUMBER OF BARRELS	1
SLOPE (V/H)	0.0362
CULVERT LENGTH ALONG SLOPE	8.01 ft

***** CULVERT DATA SUMMARY **********

BARREL SHAPE	BOX
BARREL SPAN	8.00 ft
BARREL RISE	1.13 ft
BARREL MATERIAL	CONCRETE
BARREL MANNING'S n	0.024
INLET TYPE	CONVENTIONAL
INLET EDGE AND WALL	SQUARE EDGE (90-45 DEG.)
INLET DEPRESSION	NONE

CURRENT DATE: 04-02-2007 FILE DATE: 04/02/2007
CURRENT TIME: 13:55:05 FILE NAME: Culv73

ÄÄ
ÄÄÄÄÄÄÄÄÄÄÄÄÄÄÄÄÄÄÄÄÄÄÄÄÄÄ TAILWATER ÄÄÄÄÄÄÄÄÄÄÄÄÄÄÄÄÄÄÄÄÄÄÄÄÄÄ
ÄÄ

******* REGULAR CHANNEL CROSS SECTION ****************

BOTTOM WIDTH	6.00 ft
SIDE SLOPE H/V (X:1)	6.0
CHANNEL SLOPE V/H (ft/ft)	0.031
MANNING'S n (.01-0.1)	0.035
CHANNEL INVERT ELEVATION	2452.98 ft
CULVERT NO.1 OUTLET INVERT ELEVATION	2452.98 ft

******* UNIFORM FLOW RATING CURVE FOR DOWNSTREAM CHANNEL

FLOW (cfs)	W.S.E. (ft)	FROUDE NUMBER	DEPTH (ft)	VEL. (f/s)	SHEAR (psf)
0.00	2452.98	0.000	0.00	0.00	0.00
2.50	2453.15	0.956	0.17	2.09	0.33
5.00	2453.23	1.013	0.25	2.63	0.49
7.50	2453.30	1.045	0.32	3.00	0.61
10.00	2453.35	1.069	0.37	3.28	0.72
12.50	2453.40	1.087	0.42	3.51	0.81
15.00	2453.44	1.102	0.46	3.70	0.89
17.50	2453.48	1.114	0.50	3.88	0.97
20.00	2453.52	1.125	0.54	4.03	1.04
22.50	2453.55	1.134	0.57	4.17	1.11
25.00	2453.58	1.143	0.60	4.30	1.17

ÄÄ
ÄÄÄÄÄÄÄÄÄÄÄÄÄÄÄÄÄÄÄÄÄÄÄÄÄÄ ROADWAY OVERTOPPING DATA ÄÄÄÄÄÄÄÄÄÄÄÄÄÄÄÄÄÄÄÄÄÄÄÄÄÄ
ÄÄ

WEIR COEFFICIENT	2.50
EMBANKMENT TOP WIDTH	8.00 ft

***** USER DEFINED ROADWAY PROFILE

CROSS-SECTION COORD. NO.	X ft	Y ft
1	0.00	2461.60
2	1.00	2455.70
3	27.00	2456.40
4	30.00	2455.60
5	50.00	2456.00
6	54.00	2456.50
7	69.00	2457.10
8	75.00	2456.90
9	115.00	2457.30
10	168.00	2459.70
11	214.00	2460.70
12	227.00	2461.40
13	257.00	2462.20

ÄÄ

CURRENT DATE: 03-20-2007 FILE DATE: 03/20/2007
CURRENT TIME: 08:22:58 FILE NAME: Culv74

FHWA CULVERT ANALYSIS
HY-8, VERSION 6.1

C U L V NO.	SITE DATA INLET ELEV. (ft)	OUTLET ELEV. (ft)	CULVERT LENGTH (ft)	CULVERT SHAPE, MATERIAL, INLET BARRELS SHAPE MATERIAL	SPAN (ft)	RISE (ft)	MANNING n	INLET TYPE
1	2103.10	2102.68	16.31	1 CMPA	6.08	4.58	.028	CONVENTIONAL
2								
3								
4								
5								
6								

SUMMARY OF CULVERT FLOWS (cfs) FILE: Culv74 DATE: 03/20/2007

ELEV (ft)	TOTAL	1	2	3	4	5	6	ROADWAY	ITR
2103.10	0.0	0.0	0.0	0.0	0.0	0.0	0.0	0.00	1
2104.82	30.0	30.0	0.0	0.0	0.0	0.0	0.0	0.00	1
2105.68	60.0	60.0	0.0	0.0	0.0	0.0	0.0	0.00	1
2106.44	90.0	90.0	0.0	0.0	0.0	0.0	0.0	0.00	1
2107.14	120.0	120.0	0.0	0.0	0.0	0.0	0.0	0.00	1
2107.80	150.0	147.0	0.0	0.0	0.0	0.0	0.0	2.57	5
2108.09	180.0	158.4	0.0	0.0	0.0	0.0	0.0	21.37	4
2108.23	200.0	163.9	0.0	0.0	0.0	0.0	0.0	35.05	3
2108.50	240.0	173.1	0.0	0.0	0.0	0.0	0.0	65.36	3
2108.67	270.0	179.6	0.0	0.0	0.0	0.0	0.0	89.56	3
2108.84	300.0	185.0	0.0	0.0	0.0	0.0	0.0	114.24	3
2107.70	143.0	143.0	0.0	0.0	0.0	0.0	0.0	OVERTOPPING	

SUMMARY OF ITERATIVE SOLUTION ERRORS FILE: Culv74 DATE: 03/20/2007

HEAD ELEV (ft)	HEAD ERROR (ft)	TOTAL FLOW (cfs)	FLOW ERROR (cfs)	% FLOW ERROR
2103.10	0.000	0.00	0.00	0.00
2104.82	0.000	30.00	0.00	0.00
2105.68	0.000	60.00	0.00	0.00
2106.44	0.000	90.00	0.00	0.00
2107.14	0.000	120.00	0.00	0.00
2107.80	-0.004	150.00	0.44	0.29
2108.09	-0.001	180.00	0.22	0.12
2108.23	-0.006	200.00	1.06	0.53
2108.50	-0.008	240.00	1.54	0.64
2108.67	-0.004	270.00	0.82	0.30
2108.84	-0.003	300.00	0.72	0.24

<1> TOLERANCE (ft) = 0.010 <2> TOLERANCE (%) = 1.000

CURRENT DATE: 03-20-2007 FILE DATE: 03/20/2007
CURRENT TIME: 08:22:58 FILE NAME: Culv74

PERFORMANCE CURVE FOR CULVERT 1 - 1(6.08 (ft) BY 4.58 (ft)) CMPA

DIS-CHARGE FLOW (cfs)	HEAD-WATER ELEV. (ft)	INLET CONTROL DEPTH (ft)	OUTLET CONTROL DEPTH (ft)	FLOW TYPE <F4>	NORMAL DEPTH (ft)	CRIT. DEPTH (ft)	OUTLET DEPTH (ft)	TW DEPTH (ft)	OUTLET VEL. (fps)	TW VEL. (fps)
0.00	2103.10	0.00	0.00	0-NF	0.00	0.00	0.00	0.22	0.00	0.00
30.00	2104.83	1.73	1.73	1-S2n	1.06	1.24	1.08	1.13	6.71	2.95
60.00	2105.68	2.58	2.58	1-S2n	1.54	1.83	1.58	1.44	8.20	3.56
90.00	2106.44	3.34	3.34	1-S2n	1.93	2.27	2.00	1.69	9.18	3.80
120.00	2107.14	4.04	4.04	1-S2n	2.30	2.66	2.37	1.91	9.96	3.78
146.99	2107.79	4.69	4.69	5-S2n	2.62	2.95	2.69	2.04	10.58	3.84
158.41	2108.09	4.99	4.99	5-S2n	2.76	3.07	2.82	2.15	10.83	3.95
163.90	2108.23	5.13	5.13	5-S2n	2.83	3.12	2.89	2.22	10.90	4.04
173.10	2108.49	5.39	5.39	5-S2n	2.95	3.22	3.01	2.34	11.06	4.21
179.62	2108.67	5.57	5.57	5-S2n	3.04	3.28	3.09	2.42	11.17	4.34
185.04	2108.83	5.73	5.73	5-S2n	3.11	3.32	3.15	2.49	11.26	4.51

El. inlet face invert 2103.10 ft El. outlet invert 2102.68 ft
El. inlet throat invert 0.00 ft El. inlet crest 2103.10 ft

```
***** SITE DATA ***** CULVERT INVERT **************
      INLET STATION                          0.00 ft
      INLET ELEVATION                     2103.10 ft
      OUTLET STATION                        16.30 ft
      OUTLET ELEVATION                    2102.68 ft
      NUMBER OF BARRELS                      1
      SLOPE (V/H)                            0.0258
      CULVERT LENGTH ALONG SLOPE            16.31 ft

***** CULVERT DATA SUMMARY ************************
      BARREL SHAPE          PIPE ARCH
      BARREL SPAN             6.08 ft
      BARREL RISE             4.58 ft
      BARREL MATERIAL       STEEL OR ALUMINUM
      BARREL MANNING'S n    0.028
      INLET TYPE            CONVENTIONAL
      INLET EDGE AND WALL   HEADWALL
      INLET DEPRESSION      NONE
```

CURRENT DATE: 03-20-2007 FILE DATE: 03/20/2007
CURRENT TIME: 08:22:58 FILE NAME: Culv74

ÄÄ
ÄÄÄÄÄÄÄÄÄÄÄÄÄÄÄÄÄÄÄÄÄÄÄÄÄÄ TAILWATER ÄÄÄÄÄÄÄÄÄÄÄÄÄÄÄÄÄÄÄÄÄÄÄÄÄÄ
ÄÄ

***** USER DEFINED CHANNEL CROSS-SECTION FILE NAME: Culv74
MAIN CHANNEL AND LT & RT OVER BANKS FILE DATE: 03/20/2007

LEFT CHANNEL BOUNDARY	2
RIGHT CHANNEL BOUNDARY	7
MANNING n LEFT OVER BANK	0.060
MANNING n MAIN CHANNEL	0.050
MANNING n RIGHT OVER BANK	0.060
SLOPE OF CHANNEL	0.0229 ft/ft

CROSS-SECTION COORD. NO.	X (ft)	Y (ft)
1	0.00	2104.60
2	20.10	2104.50
3	26.80	2103.30
4	33.20	2103.10
5	35.00	2102.90
6	37.20	2103.10
7	46.10	2104.10
8	64.20	2105.10

******* UNIFORM FLOW RATING CURVE FOR DOWNSTREAM CHANNEL

FLOW (cfs)	W.S.E. (ft)	FROUDE NUMBER	DEPTH (ft)	VEL. (f/s)	SHEAR (psf)
0.00	2102.90	0.000	0.22	0.00	0.00
30.00	2103.81	0.738	1.13	2.95	0.74
60.00	2104.12	0.773	1.44	3.56	0.99
90.00	2104.37	0.777	1.69	3.80	1.12
120.00	2104.59	0.950	1.91	3.78	0.85
150.00	2104.72	0.905	2.04	3.84	0.97
180.00	2104.83	0.869	2.15	3.95	1.10
200.00	2104.90	0.853	2.22	4.04	1.17
240.00	2105.02	0.831	2.34	4.21	1.30
270.00	2105.10	0.821	2.42	4.34	1.39
300.00	2105.17	0.824	2.49	4.51	1.48

Note: Shear stress was calculated using R.

ÄÄ
ÄÄÄÄÄÄÄÄÄÄÄÄÄÄÄÄÄÄÄÄÄÄÄÄÄÄ ROADWAY OVERTOPPING DATA ÄÄÄÄÄÄÄÄÄÄÄÄÄÄÄÄÄÄÄÄÄÄÄÄÄÄ
ÄÄ

ROADWAY SURFACE	GRAVEL
EMBANKMENT TOP WIDTH	15.00 ft

***** USER DEFINED ROADWAY PROFILE

CROSS-SECTION COORD. NO.	X ft	Y ft
1	0.00	2107.70
2	0.01	2107.70
3	14.90	2107.70
4	33.20	2107.70

ÄÄ

E.5 Hydraulic Calculations

Hydraulic calculations were done using FLO-2D. Refer to the input and output data files.

A working copy of FLO-2D is supplied with this report. The copy is licensed for this project only, and will only execute the input data files supplied on DVD in Appendices E.6.3 and E.6.4 (DVD 1), and Appendices E.6.6 and E.6.7 (DVD 2). The FLO-2D software is included on CD at the back of this report. The FLO-2D software license information is on the following pages and is included in PDF format on DVD's 1 and 2.

Two Dimensional Flood Routing Model

April 12, 2007

Ms. Felicia Terry, P.E.
Rio Verde ADMP Project Manager
Flood Control District of Maricopa County
2801 W. Durango Street
Phoenix, AZ 85009

Re: Transmittal of the Rio Verde ADMP FLO-2D Model

Dear Felicia:

As per your request, please find enclosed a FLO-2D Model licensed to the Rio Verde ADMP FEMA FIS Study. This model CD along with the project CD containing data and output files, mapping and reports should be submitted to FEMA's technical representatives. It is suggested that you check the enclosed FEMA FIS Submittal document to make sure that you are including all the information you need with your submittal. A purchase receipt and ESRI Map Objects License are enclosed. Include the ESRI Map Objects License with your submittal.

With this submittal to FEMA a permanent model record is created and archived for future review and revision. FIS contractors can request the data and output files from FEMA along with the FLO-2D model licensed to the FIS project and run the simulation as you prepared it. The data files can then be updated for proposed or future conditions and resubmitted with a current or updated FLO-2D model. In this manner, the project mapping can be reviewed, revised and updated to be consistent with existing conditions in the field.

The FLO-2D license on the CD states that the reviewer can load FLO-2D on any computers in the department office, but the model cannot be transferred to any computers outside the department office. In additional, this FEMA FIS study license does not permit application of the model to any other projects other than the Rio Verde ADMP Study. If you have any questions, please contact me.

Sincerely,

Jim O'Brien, Ph.D., P.E.
President, FLO-2D Software Inc.

FLO-2D Software, Inc.
P.O. Box 66 • 102 County Road 2315 • Nutrioso, Arizona 85932
www.flo-2d.com • email: jim@flo-2d.com • Ph: (928) 339-1935

Flood Insurance Study (FIS) Map Submittals to FEMA

FLO-2D is on the Federal Emergency Management Agency (FEMA) list of approved hydraulic models. Through an agreement with FEMA, a procedure has been implemented to support Flood Insurance Rate Map (FIRM) and Letter of Map Revision (LOMR) submittals that include review and evaluation of the FLO-2D model. When a consultant or agency revises a FIRM or submits a LOMR to FEMA or its technical representatives, it should include the following:

1. Report
2. Prepared maps with computed base flood elevations (BFEs)
3. FLO-2D model data input and output files.
4. Current FLO-2D model licensed to the FIS study project
5. FLO-2D documentation

By submitting the current FLO-2D model to FEMA along with the project data files, a permanent model record is created and archived for future review and revision. A study contractor or consultant can request the data and output files from FEMA along with the FLO-2D model licensed to the FIS project and run the simulation as it was prepared by the original investigator. The data files can then be updated for proposed or future conditions and resubmitted with a current or updated FLO-2D model. In this manner, the project mapping can be reviewed, revised and updated to be consistent with existing conditions in the field. To create an archival FLO-2D model, data and output files for a FIS project, a FLO-2D model license will be assigned to the project. Contact FLO-2D Software, Inc. (www.flo2d.com) to obtain a FIS project model license. A FLO-2D modeling system CD with an executable version of the model, processor programs, and manuals that will be licensed to the FIS project will be provided upon request for $99.00. This model CD along with the project CD containing data and output files, mapping and reports will be submitted to FEMA's technical representatives.

FLO-2D SOFTWARE LICENSE AGREEMENT
For FEMA FIS SUBMITTALS

PLEASE READ CAREFULLY

This end user license agreement ("Agreement") is a legal contract between you (either an individual or a single business entity) ("Licensee") and FLO-2D Software, Inc. By clicking the "I Agree" button or by installing or otherwise using the software application, you agree to be bound by the terms and conditions of this Agreement. If you do not agree to the terms and conditions of the agreement, do not install or use the FLO-2D Software. The following FLO-2D Software license terms are binding upon any purchaser or Licensee who uses this software.

GRANT OF RIGHTS

FLO-2D Software Inc. grants to Licensee, and Licensee hereby accepts, a non-exclusive, non-transferable, royalty-free license, for use by Licensee only, of the FLO-2D Software package that includes the FLO-2D computer model and processor programs commonly known and referred to as FLO-2D for the prescribed ***Rio Verde Area Drainage Master Plan, Rio Verde, Arizona, Unincorporated Maricopa County*** only. The Licensee, in this case only, constitutes the contractor or individual that qualifies to receive the FLO-2D project model as stipulated by the agreement between Federal Emergency Management Agency (FEMA) or its subsequent designated name as Homeland Security Department (HSD) and FLO-2D Software, Inc. This license agreement also applies to FEMA's Technical Representatives acting on the behalf of FEMA. The license includes the right to copy the FLO-2D Licensed Software only as it is necessary for use on the review, re-evaluation or re-submittal of this ***Project.*** **The FLO-2D Software package for the FEMA FIS Study cannot be used on any other project or flood simulation.** The license permits the use of the software by Licensee or its regular employees on any and all computers owned by Licensee within or located at the home or office of the FEMA designated Licensee as the Licensee's address appears in documents submitted to FLO-2D. The license granted above does not include the right to copy or distribute the FLO-2D Licensed Software outside the home or office of purchase or to any other person. The license does not permit the use of the FLO-2D Licensed Software on a laptop or portable computer outside of the designated home or office.

The license granted above does not provide for any free updates of the Licensed Software even though updates may, from time to time, be made available. Should such updates be provided to Licensee, this license agreement shall apply to the updated version of the software, unless superseded or supplemented by other license terms provided with the updated version.

The parties agree that all rights, including, but not limited to, rights under the federal copyright laws in and to modifications, if any, to the FLO-2D Licensed Software shall remain the sole and exclusive property of FLO-2D. The parties further agree that all rights, including but not limited to rights under the federal copyright laws in and to the Licensed Software shall remain the sole and exclusive property of FLO-2D Software, Inc. No rights or licenses to the Licensed Software, other than those granted herein are granted, whether expressly, by implication, estoppels or otherwise. The term of this license shall be perpetual. No modification of this License shall be binding on the parties hereto unless such modification is in writing and duly signed by both parties.

Any attempted assignment of this License or any rights or obligations hereunder, without the prior written consent of FLO-2D, shall be null and void and of no effect and a material breach and default of this license agreement.

RESTRICTIONS

The FLO-2D model and its accompanying software and processor programs may not be sold, resold, leased, lent, rented or distributed to any other individual or organization outside the designated home or office. The FLO-2D model and accompanying software and processor programs can not be copied outside the home or office of purchase or to any other person, decompiled, disassembled, reverse engineered, recreated as a derivative program or otherwise used except as stated in this agreement.

DISCLAIMER OF WARRANTIES AND LIMITATIONS OF LIABILITY

FLO-2D Software, Inc. does not make any warranty, either express or implied with respect to the licensed software, its quality, merchantability, or fitness for a particular purpose. All the FLO-2D Licensed Software provided hereunder is licensed "AS IS" and does not warrant that the licensed software is free from claims of infringement or patents, copyrights, trade secrets, or other proprietary rights of others. There are no warranties, either express or implied, and any and all such warranties are hereby disclaimed and negated. FLO-2D Software and its employees do not warrant the performance or results that you may obtain by using the FLO-2D Software or any results generated by the software. The user assumes the entire risk of using the FLO-2D Software. No oral or written information or advice given by FLO-2D Software Inc. or its employees shall create a warranty or make any modification, extension or addition to this warranty. In no event whatsoever, shall FLO-2D Software, Inc. or its employees be liable to the Licensee or to any third parties for any damages caused, in whole or in part, by the use of the licensed software or for any lost revenues, damages to computers or other computer software, lost profits, lost savings or other direct or

indirect, incidental, special, or consequential damages incurred by any person, even if advised of the possibility of such damages or claims, arising out the use or application of the FLO-2D Software or the inability to use the software.

DEFAULT

Without prejudice to any other rights, FLO-2D Software, Inc shall have the right to terminate this Agreement and the license granted herein if the Licensee, FEMA or its representatives fail to comply with or commits a material breach of the terms and conditions of this Agreement or commits an act of or is subject to a Default. A "Default" means any one or more of the following events: The distribution, exchange, or offer or promise to distribute or exchange one or more copies of the FLO-2D Software by the Licensee, whether by sale, license, lease or otherwise, and whether or not any consideration is received for any such transfer or offer or promise. Upon the occurrence of a Default, FLO-2D shall provide written notice to the Licensee and the Licensee shall have fifteen (15) days from the Licensee's receipt of said notice of Default to cure the same. If the Licensee does not affect such a cure within the prescribed time, then this Agreement and the FLO-2D license shall be terminated. Within fifteen (15) calendar days after the Licensee's receipt of notice as provided for above, LICENSEE shall deliver to FLO-2D Software, Inc. all copies, including but not limited to, all archival and backup copies for the FLO-2D Software and all documentation related thereto.

GOVERNING LAW

This License shall be deemed made and accepted in and governed by the laws of the State of Arizona. The state and federal courts located in Arizona shall have non-exclusive jurisdiction and venue to hear all disputes arising out of or related to this License.

COPYRIGHT

© Copyright 1989, 1993. FLO-2D is copyrighted by J. S. O'Brien. All rights reserved. The FLO-2D software and manual are protected by U.S. Copyright Law (Title 17 US Code). Unauthorized reproduction and/or sales may result in imprisonment and/or fines (17 USC 506). Copyright infringers may also be subject to civil liability.

E.6 Digital Data on DVD

See DVD's in pockets at back of report.

E.6.1 Hydraulic Structures (DVD 1)

ArcGIS Files

Culvert_Inlet.shp: Polygon coverage of the 2D grid elements defined as culvert inlets as discussed in Section 5.5.2.

Culver_Inlet_Grid_Pts.shp: Point coverage of the 2D grid elements defined as culvert inlets as discussed in Section 5.5.2.

Culvert_Outlet.shp: Polygon coverage of the 2D grid elements defined as culvert outlets as discussed in Section 5.5.2.

Culverts.shp: Polyline coverage of the centerline of culverts modeled in FLO-2D. Refer to Section 5.5.2.

CulvertsBlocked.shp: Polygon coverage of the grid elements blocked from 2D flow because weir flow is simulated using the culvert rating curves developed through HY-8. Refer to Section 5.5.2.

DSSlope.shp: Polyline coverage of the flowline used to establish the slope of the outflow channels for HY-8 computations. Refer to Section 5.5.2.

HY8DownstreamCS.shp: Polyline coverage of the location of the cross sections used to define tailwater rating curves for HY-8 computations. Refer to Section 5.5.2.

StOverflowCS.shp: Polyline coverage of the cross sections used to define broadcrested weirs for the weir flow hydraulic computations in HY-8. Refer to Section 5.5.2.

As-built Drawings

Culvert_1-24.pdf: Culvert as-built drawings prepared by the Dibble Engineering subconsultant, Consultant Engineering, Inc.

Culvert_25-49.pdf: Culvert as-built drawings prepared by the Dibble Engineering subconsultant, Consultant Engineering, Inc.

Culvert_50-72.pdf: Culvert as-built drawings prepared by the Dibble Engineering subconsultant, Consultant Engineering, Inc.

Rio Mountain Estates- Unit 1.pdf: As-built drawings of the subdivision improvements for Rio Mountain Estates. This information was used to supplement the field survey information used for culvert modeling.

Granite Mountain Ranch Unit II.pdf: As-built drawings of the subdivision improvements for Granite Mountain Estates. This information was used to supplement the field survey information used for culvert modeling.

HY8

HY-8 Input and Output: Input and output files for each culvert modeled using HY-8. Refer to Section 5.5.2.

HY8 Input Data Work Sheets

HY8 Input Data Work Sheets.pdf: Work sheets used to summarize the field survey data and prepare the HY-8 input data files. Refer to Section 5.5.2.

HY8 to FLO2D.xls: Excel spreadsheet used to prepare FLO-2D hydraulic structure input data files (HYSTRUCT.DAT) from the HY-8 output files. Refer to Section 5.5.2.

HY-8 Output PDF File

HY8 Output Files.pdf: A PDF containing all the HY-8 output files, bookmarked by culvert number. Refer to Section 5.5.2.

E.6.2 Floodplain Delineation (DVD 1)

ArcGIS Floodplains

RVADMPFP.shp: Polygon shape file of the 2D floodplain delineation.

ArcGIS Thalwegs

rev5_rvfpbln.shp: Polyline coverage of the floodplain wash thalwegs.

ArcGIS WSEL

fpsrffcd.shp: Polyline coverage of the 1-foot contour lines of the 100-year water surface elevations used in preparation of the Hydraulic Work Study Maps.

FEMA Annotated FIRM Panels PDFs

Flood Profiles PDFs

Work Study Maps PDFs

E.6.3 Phase A FLO-2D Input and Output Data Files with Stock Tanks in Place (DVD 1)

Too many to list. Refer to the FLO-2D Input Manual and Section 4.5.1.1.

E.6.4 Phase A FLO-2D Input and Output Data Files without Stock Tanks (DVD 1)

Too many to list. Refer to the FLO-2D Input Manual and Section 4.5.1.1.

E.6.5 Phase A FLO2D ArcGIS Output Data (DVD 1)

Refer to Section 4.5.1.1.

PHA25MaxResults.shp: Polygon coverage of the 2D model results for Phase A. Includes the maximum values from the "with" and "without" stock tanks models. Refer to Table 4.3.

PHA_MaxPTS.shp. Point coverage of the 2D model results for Phase A. Includes the direction of maximum peak flow. Refer to Table 4.3.

maxd_raster: Raster of the maximum average depth of flow for each grid element. Maximum of the depth results from the "with" and "without" stock tanks models.

maxrq_raster: Raster of the maximum average peak discharge crossing each grid element. Maximum of the peak discharge results from the "with" and "without" stock tanks models.

maxv_raster: Raster of the maximum average velocity of flow for each grid element. Maximum of the velocity results from the "with" and "without" stock tanks models.

w Stock Tanks

depth_raster: Maximum average depth raster for each FLO-2D grid element.

elevation_raster: Existing average ground elevation for each FLO-2D grid element.

rq_raster: Maximum peak discharge raster for each FLO-2D grid element.

velocity_raster: Maximum average velocity raster for each FLO-2D grid element.

wsel_raster: `Maximum average water surface elevation raster for each FLO-2D grid element.

flo2dgis.shp: Polygon coverage of FLO-2D results for each grid element. Refer to Table 4.4.

PHA_PTS.shp: Point coverage of FLO-2D results for each grid element. Contains the direction of maximum peak discharge crossing each grid element. Used to depict flow direction arrows on report figures.

wo Stock Tanks

depth_raster: Maximum average depth raster for each FLO-2D grid element.

elevation_raster: Existing average ground elevation for each FLO-2D grid element.

rq_raster: Maximum peak discharge raster for each FLO-2D grid element.

velocity_raster: Maximum average velocity raster for each FLO-2D grid element.

wsel_raster: `Maximum average water surface elevation raster for each FLO-2D grid element.

flo2dgis.shp: Polygon coverage of FLO-2D results for each grid element. Refer to Table 4.4.

PHA_PTS.shp: Point coverage of FLO-2D results for each grid element. Contains the direction of maximum peak discharge crossing each grid element. Used to depict flow direction arrows on report figures.

E.6.6 Phase B FLO-2D Input and Output Data Files with Stock Tanks in Place (DVD 2)

Too many to list. Refer to the FLO-2D Input Manual and Section 4.5.1.1.

E.6.7 Phase B FLO-2D Input and Output Data Files without Stock Tanks (DVD 2)

Too many to list. Refer to the FLO-2D Input Manual and Section 4.5.1.1.

E.6.8 Phase B FLO-2D Model ArcGIS Shape Files of Model Output Data (DVD 2)

Refer to Section 4.5.1.1.

PHB25MaxResults.shp: Polygon coverage of the 2D model results for Phase B. Includes the maximum values from the "with" and "without" stock tanks models. Refer to Table 4.3.

PHB_MaxPTS.shp. Point coverage of the 2D model results for Phase B. Includes the direction of maximum peak flow. Refer to Table 4.3.

maxd_raster: Raster of the maximum average depth of flow for each grid element. Maximum of the depth results from the "with" and "without" stock tanks models.

maxrq_raster: Raster of the maximum average peak discharge crossing each grid element. Maximum of the peak discharge results from the "with" and "without" stock tanks models.

maxv_raster: Raster of the maximum average velocity of flow for each grid element. Maximum of the velocity results from the "with" and "without" stock tanks models.

w Stock Tanks

depth_raster: Maximum average depth raster for each FLO-2D grid element.

elevation_raster: Existing average ground elevation for each FLO-2D grid element.

rq_raster: Maximum peak discharge raster for each FLO-2D grid element.

velocity_raster: Maximum average velocity raster for each FLO-2D grid element.

wsel_raster: `Maximum average water surface elevation raster for each FLO-2D grid element.

flo2dgis.shp: Polygon coverage of FLO-2D results for each grid element. Refer to Table 4.4.

PHB_PTS.shp: Point coverage of FLO-2D results for each grid element. Contains the direction of maximum peak discharge crossing each grid element. Used to depict flow direction arrows on report figures.

wo Stock Tanks

depth_raster: Maximum average depth raster for each FLO-2D grid element.

elevation_raster: Existing average ground elevation for each FLO-2D grid element.

rq_raster: Maximum peak discharge raster for each FLO-2D grid element.

velocity_raster: Maximum average velocity raster for each FLO-2D grid element.

wsel_raster: `Maximum average water surface elevation raster for each FLO-2D grid element.

flo2dgis.shp: Polygon coverage of FLO-2D results for each grid element. Refer to Table 4.4.

PHB_PTS.shp: Point coverage of FLO-2D results for each grid element. Contains the direction of maximum peak discharge crossing each grid element. Used to depict flow direction arrows on report figures.

APPENDIX F: EROSION AND SEDIMENT TRANSPORT ANALYSIS SUPPORTING DOCUMENTATION

No data. Erosion and sediment transport analyses were not done as a part of this study.

APPENDIX G: EXHIBIT MAPS

G.1 Watershed Work Maps

SOURCE:

1 NRCS Soil Survey AZ645
Aguila-Carefree Area
Parts of Maricopa and Pinal Couinties, AZ

2. Arizona State Geological Survey, surficial geology maps

Map Unit	BARE GROUND XKSAT	ROCK OUTCROP (%)	DESCRIPTION
6	0.62	0	Anthony-Arizo complex
10	0.94	0	Brios-Carrizo complex, 1 to 5 percent slopes
12	0.01	0	Carefree cobbly clay loam, 1 to 8 percent slopes
33	0.23	0	Eba very gravelly loam, 1 to 8 percent slopes
37	0.13	0	Eba-Continental-Cave association, 3 to 20 percent slopes
40	0.17	0	Eba-Pinaleno complex, 3 to 20 percent slopes
41	0.17	0	Eba-Pinaleno complex, 20 to 40 percent slopes
54	0.29	0	Gila fine sandy loams
61	0.15	0	Gran-Wickenburg complex, 1 to 10 percent slopes
63	0.14	25	Gran-Wickenburg-Rock outcrop complex, 1 to 7 percent slopes
96	0.07	0	Pinaleno-Tres Hermanos complex, 1 to 10 percent slopes
111	0.40	0	Torriorthents, 15 to 40 percent slopes
121	0.12	0	Tres Hermanos-Anthony complex, 1 to 5 percent slopes
122	0.33	0	Vado gravelly sandy loam, 1 to 5 percent slopes
W	0.00	0	Lakes, ponds, reservoirs - perennial

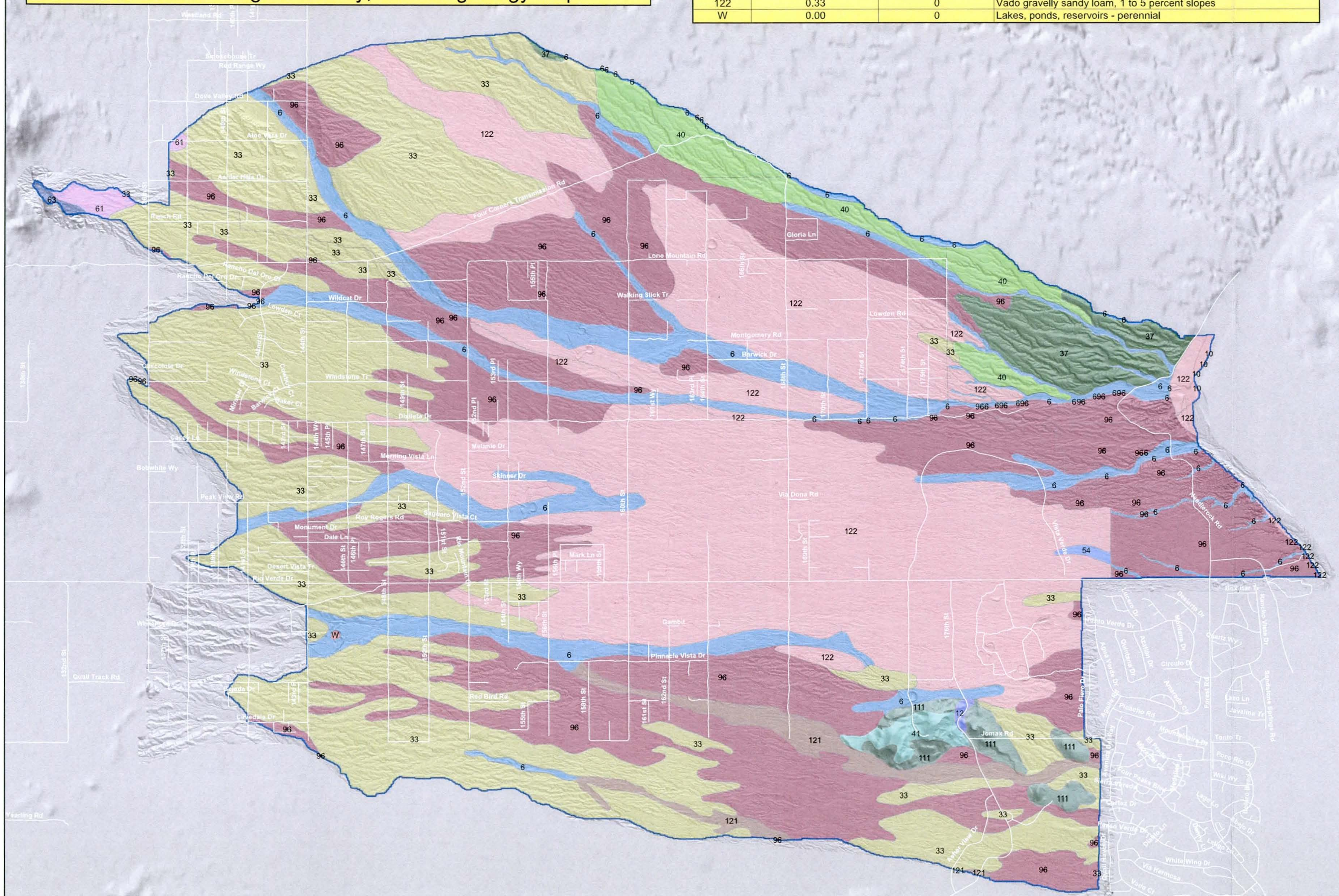

Legend

PHA_PHB_Soils

TYPE

10
111
12
121
122
33
37
40
41
54
6
61
63
96
W

DIGITAL ELEVATION MAP (DEM) BACKGROUND:

ALRIS USGS DEM
DEM Created Using 2D Study Area Mapping

N W E S

0 1,500 3,000 6,000 Feet

NO.	REVISION	BY	DATE
2			
1			

FLOOD CONTROL DISTRICT OF MARICOPA COUNTY

RIO VERDE ADMP
APPENDIX G.1
WATERSHED WORK MAPS

G.1.1 SOILS MAP

	BY	DATE
DESIGN	FCD	11-2007
DESIGN CHK.	FCD	11-2007
PLANS	FCD	11-2007
PLANS CHK.	FCD	11-2007

SHEET 1 OF 1

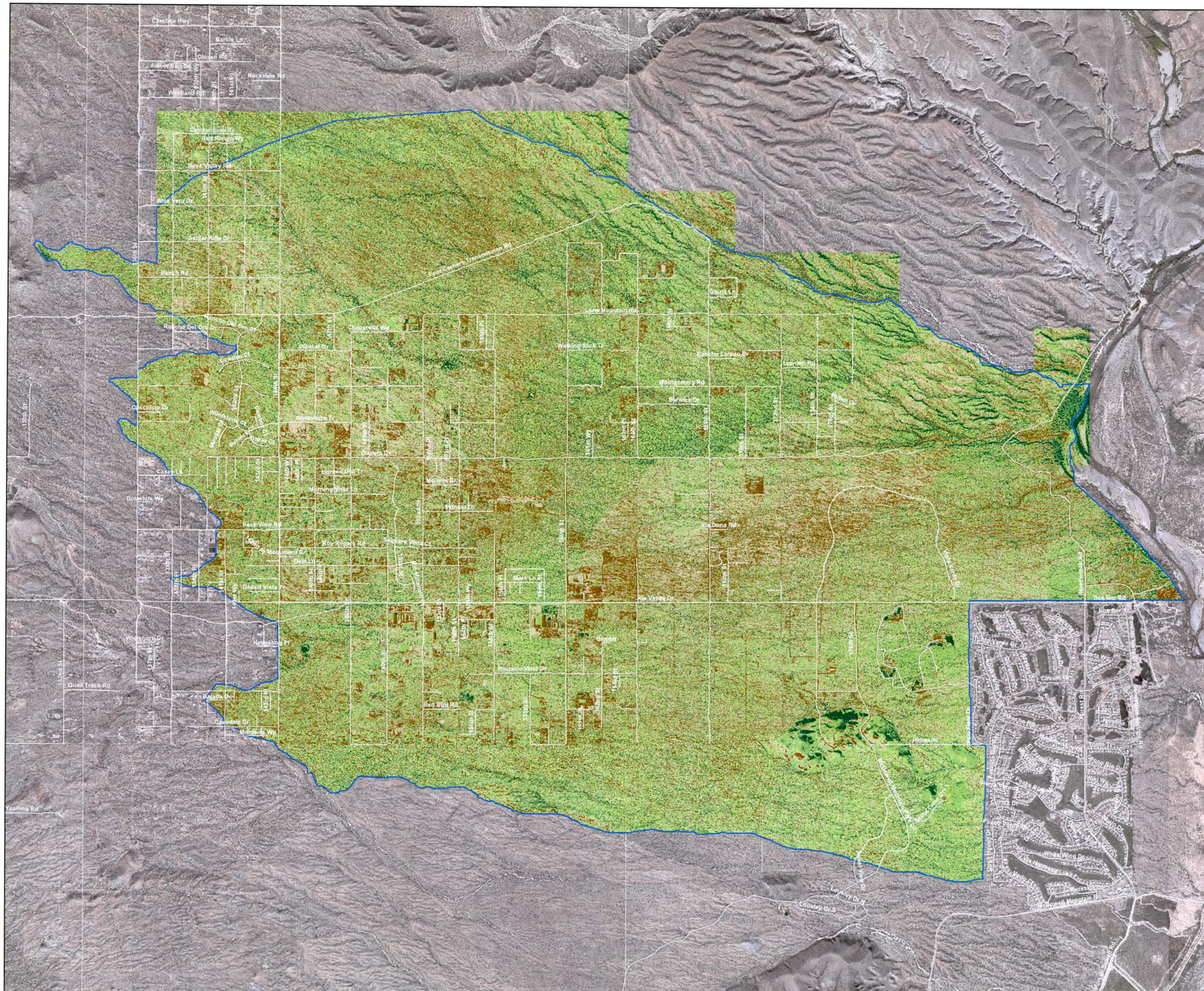
Legend
2D Study Area
Vegetation Cover Density
VCD
High Density Vegetation
Medium Density Vegetation
Low Density Vegetation
Bare Ground
Vegetation Cover Density:
Derived using Feature Analyst for ArcMap. Applied using the Flood Control District of Maricopa County county-wide black and white aerial photographs data December 2002.
Aerial Photograph Background:
Flood Control District of Maricopa County county-wide aerial photographs dated December 2006. 0.8-foot pixel.
N
W
E
S
Feet
0 1,500 3,000 6,000
NO. REVISION BY DATE
FLOOD CONTROL DISTRICT OF MARICOPA COUNTY
RIO VERDE ADMP
APPENDIX G.1
WATERSHED WORK MAPS
G.1.2 Vegetation Density
BY DATE
DESIGN FCD 11-2007
DESIGN CHK. FCD 11-2007
PLANS FCD 11-2007
PLANS CHK. FCD 11-2007
SHEET 1 OF 1

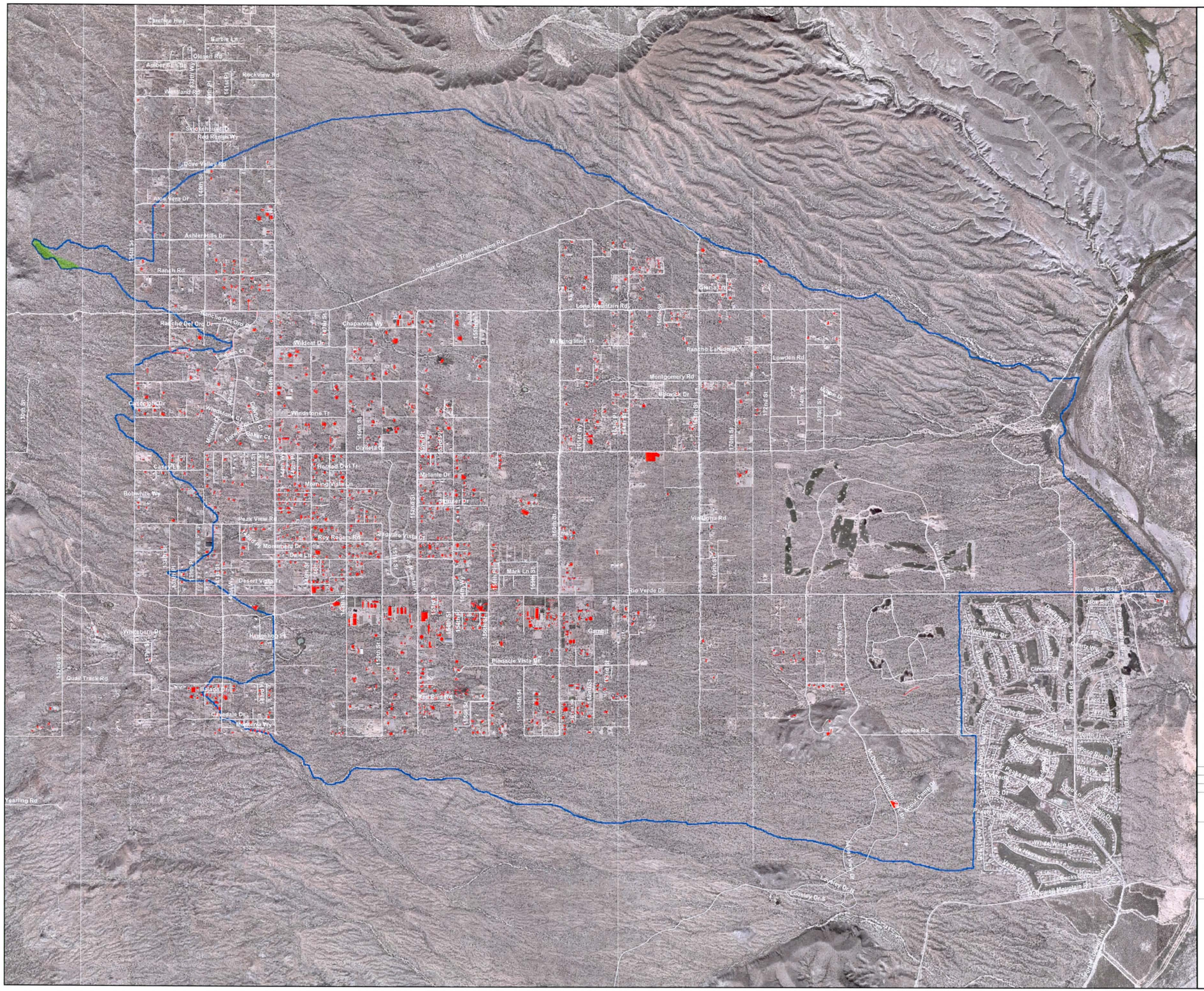

Impervious Area:

Natural impervious area was derived from the NRCS Soil Survey for the study area. Developed impervious area reflects actual impervious surfaces present in the study area as of February 2005. Developed impervious area was derived from current aerial photographs, finalied building permits, and field surveys.

Aerial Photograph Background:

Flood Control District of Maricopa County county-wide aerial photographs dated December 2006. 0.8-foot pixel.

NO.	REVISION	BY	DATE
2			
1			

FLOOD CONTROL DISTRICT OF MARICOPA COUNTY

RIO VERDE ADMP
APPENDIX G.1
WATERSHED WORK MAPS

G.1.3 Impervious Area

	BY	DATE
DESIGN	FCD	11-2007
DESIGN CHK.	FCD	11-2007
PLANS	FCD	11-2007
PLANS CHK.	FCD	11-2007

SHEET 1 OF 1

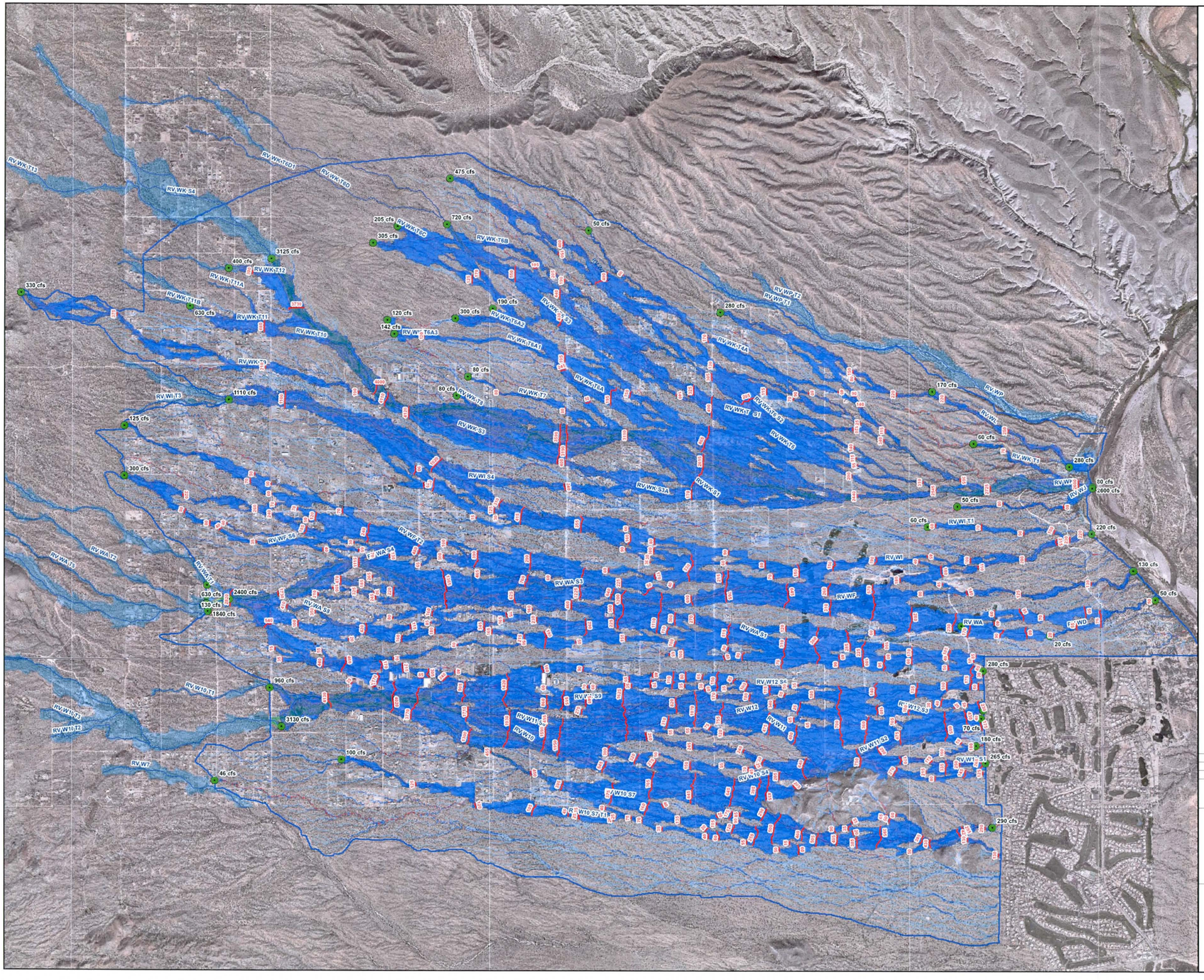

Legend

- Inflow/Outflow Peak Discharges
- 100-year Peak Discharge (cfs)
- Wash Thalwegs
- 2D Study Area

RVADMP Floodplains

- Draft 2D Floodplain
- Draft 1D Floodplain

Maximum Discharge w & wo Stock Tanks

- 0 - 1
- 1.01 - 10
- 10.01 - 25
- 25.01 - 50
- 50.01 - 75
- 75.01 - 100
- 100.01 - 150
- 150.01 - 200
- 200.01 - 500
- 500.01 - 5,921.21

Peak Discharge:

Colors represent the range of peak discharge crossing each 25-ft x 25-ft grid element. The peak discharges are the maximum from the "with Stock Tanks" or "without Stock Tanks" FLO-2D model runs, in cfs

Aerial Photograph Background:

Flood Control District of Maricopa County county-wide aerial photographs dated December 2006. 0.8-foot pixel.

N
W E
S

0 1,500 3,000 6,000 Feet

NO.	REVISION	BY	DATE
2			
1			

FLOOD CONTROL DISTRICT OF MARICOPA COUNTY

RIO VERDE ADMP
APPENDIX G.1
WATERSHED WORK MAPS

G.1.4 Peak Discharge

	BY	DATE
DESIGN	FCD	11-2007
DESIGN CHK.	FCD	11-2007
PLANS	FCD	11-2007
PLANS CHK.	FCD	11-2007

SHEET 1 OF 1

G.2 Hydraulic Work Maps

Refer to Volume 7 Two-Dimensional Flood Profiles and Work Study Maps.

G.3 Flood Profiles

Refer to Volume 7 Two-Dimensional Flood Profiles and Work Study Maps.

G.4 Annotated Flood Insurance Rate Maps

NOTES TO USERS

This map is for use in administering the National Flood Insurance Program. It does not necessarily identify all areas subject to flooding, particularly from local drainage sources of small size. The **community map repository** should be consulted for possible updated or additional flood hazard information.

To obtain more detailed information in areas where **Base Flood Elevations** (BFEs) and/or **floodways** have been determined, users are encouraged to consult the Flood Profiles, Floodway Data and/or Summary of Stillwater Elevations tables contained within the Flood Insurance Study (FIS) report that accompanies this FIRM. Users should be aware that BFEs shown on the FIRM represent rounded whole-foot elevations. These BFEs are intended for flood insurance rating purposes only and should not be used as the sole source of flood elevation information. Accordingly, flood elevation data presented in the FIS report should be utilized in conjunction with the FIRM for purposes of construction and/or floodplain management.

Coastal Base Flood Elevations shown on this map apply only landward of 0.0' National Geodetic Vertical Datum of 1929 (NGVD 29). Users of this FIRM should be aware that coastal flood elevations are also provided in the Summary of Stillwater Elevations table in the Flood Insurance Study report for this jurisdiction. Elevations shown in the Summary of Stillwater Elevations table should be used for construction and/or floodplain management purposes when they are higher than the elevations shown on this FIRM.

Boundaries of the **floodways** were computed at cross sections and interpolated between cross sections. The floodways were based on hydraulic considerations with regard to requirements of the National Flood Insurance Program. Floodway widths and other pertinent floodway data are provided in the Flood Insurance Study report for this jurisdiction.

Certain areas not in Special Flood Hazard Areas may be protected by **flood control structures**. Refer to Section 2.4 "Flood Protection Measures" of the Flood Insurance Study report for information on flood control structures for this jurisdiction.

The **projection** used in the preparation of this map was *Arizona State Plane Zone 3176 (central Arizona)*. The **horizontal datum** was *NAD83, GRS80 spheroid*. Differences in datum, spheroid, projection or State Plane zones used in the production of FIRMs for adjacent jurisdictions may result in slight positional differences in map features across jurisdiction boundaries. These differences do not affect the accuracy of this FIRM.

Flood elevations on this map are referenced to the *National Geodetic Vertical Datum of 1929*. These flood elevations must be compared to structure and ground elevations referenced to the same **vertical datum**. For information regarding conversion between the National Geodetic Vertical Datum of 1929 and the North American Vertical Datum of 1988, visit the National Geodetic Survey website at http://www.ngs.noaa.gov or contact the National Geodetic Survey at the following address:

Spatial Reference System Division
National Geodetic Survey, NOAA
Silver Spring Metro Center
1315 East-West Highway
Silver Spring, Maryland 20910
(301) 713-3191

To obtain current elevation, description, and/or location information for **bench marks** shown on this map, please contact the Information Services Branch of the National Geodetic Survey at **(301) 713-3242**, or visit its website at http://www.ngs.noaa.gov.

Base map information shown on this FIRM was derived from multiple sources. Base map files were provided in Sigital format by Maricopa County. Orthophoto images were produced at a scale of 1:8000 using HARN for control. Aerial photography is dated December 2000 to December 2002.

This map reflects more detailed and up-to-date **stream channel configurations** than those shown on the previous FIRM for this jurisdiction. The floodplains and floodways that were transferred from the previous FIRM may have been adjusted to conform to these new stream channel configurations. As a result, the Flood Profiles and Floodway Data tables in the Flood Insurance Study report (which contains authoritative hydraulic data) may reflect stream channel distances that differ from what is shown on this map.

Corporate limits shown on this map are based on the best data available at the time of publication. Because changes due to annexations or de-annexations may have occurred after this map was published, map users should contact appropriate community officials to verify current corporate limit locations.

Please refer to the separately printed **Map Index** for an overview map of the county showing the layout of map panels; community map repository addresses; and a Listing of Communities table containing National Flood Insurance Program dates for each community as well as a listing of the panels on which each community is located.

Contact the **FEMA Map Service Center** at 1-800-358-9616 for information on available products associated with this FIRM. Available products may include previously issued Letters of Map Change, a Flood Insurance Study report, and/or digital versions of this map. The FEMA Map Service Center may also be reached by Fax at 1-800-358-9620 and its website at http://www.msc.fema.gov.

If you have **questions about this map**, or questions concerning the National Flood Insurance Program in general, please call **1-877-FEMAMAP** (1-877-336-2627) or visit the FEMA website at http://www.fema.gov.

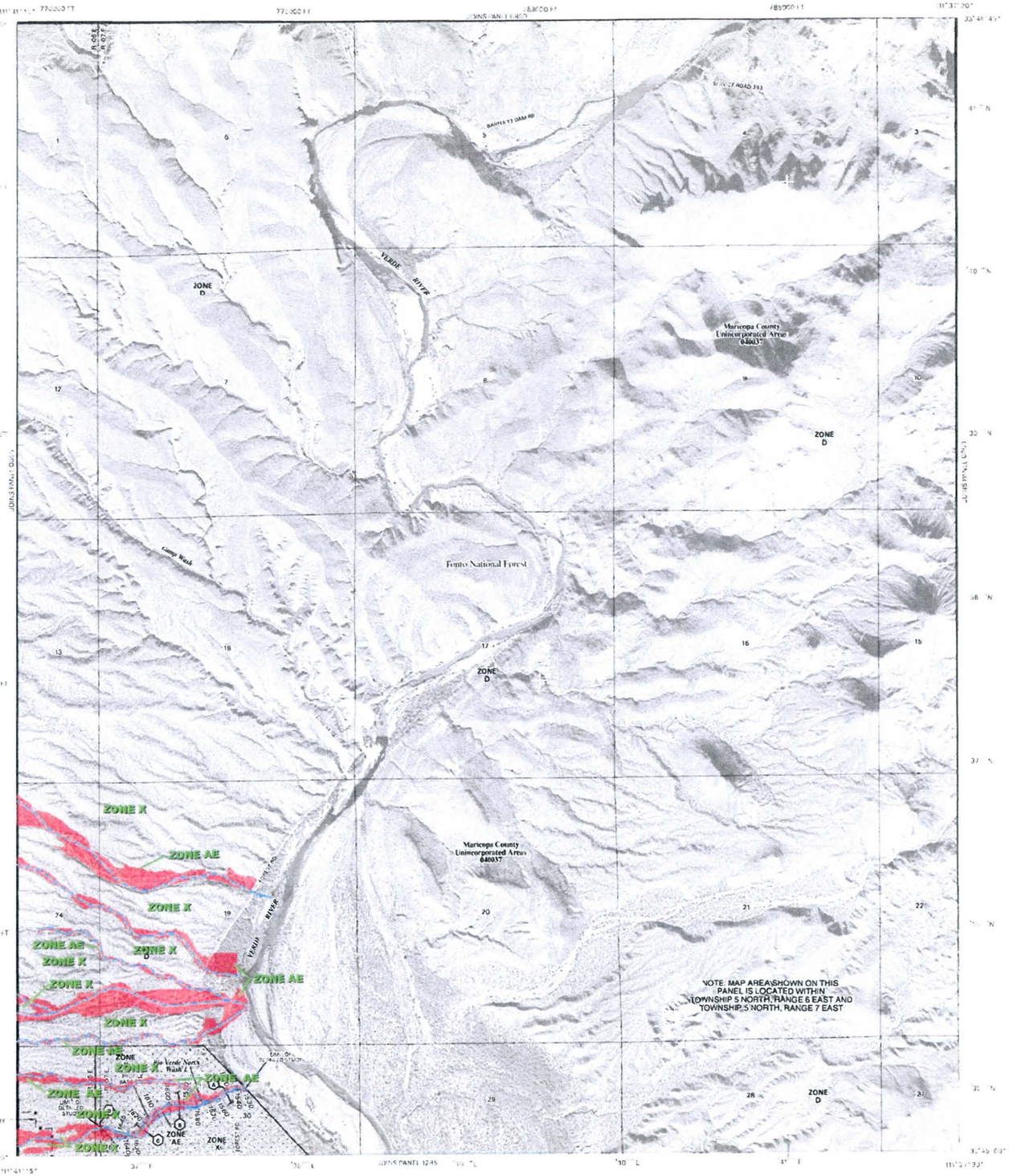

LEGEND

SPECIAL FLOOD HAZARD AREAS SUBJECT TO INUNDATION BY THE 1% ANNUAL CHANCE FLOOD

The 1% annual chance flood (100-year flood), also known as the base flood, is the flood that has a 1% or greater chance of being equaled or exceeded in any given year. The Special Flood Hazard Area is the area subject to flooding by the 1% annual chance flood. Areas of Special Flood Hazard include Zones A, AE, AH, AO, AR, A99, V and VE. The Base Flood Elevation is the water-surface elevation of the 1% annual chance flood.

ZONE A — No Base Flood Elevations determined

ZONE AE — Base Flood Elevations determined

The 1% annual chance flood (100-year flood)

Wash F — The floodplain baseline

ZONE AE — Base Flood Elevations determined

ZONE X — Areas of 0.2% annual chance flood; areas of 1% annual chance flood with average depths of less than 1 foot or with drainage areas less than 1 square mile; and areas protected by levees from 1% annual chance flood

OTHER AREAS

ZONE X — Areas determined to be outside the 0.2% annual chance floodplain

ZONE D — Areas in which flood hazards are undetermined, but possible

COASTAL BARRIER RESOURCES SYSTEM (CBRS) AREAS

OTHERWISE PROTECTED AREAS (OPAs)

CBRS areas and OPAs are normally located within or adjacent to Special Flood Hazard Areas.

1% annual chance floodplain boundary

0.2% annual chance floodplain boundary

Floodway boundary

Zone D boundary

CBRS and OPA boundary

Boundary dividing Special Flood Hazard Area zones, and boundary dividing Special Flood Hazard Areas of different Base Flood Elevations, flood depths or flood velocities.

513 — Base Flood Elevation line and value; elevation in feet*

(EL 987) — Base Flood Elevation value where uniform within zone; elevation in feet*

* Referenced to the National Geodetic Vertical Datum of 1929

(A)—(A) — Cross section line

(2)—(2) — Transect line

112°07'08", 33°22'30" — Geographic coordinates referenced to the North American Datum of 1983 (NAD 83)

4276000 E — 1000-meter Universal Transverse Mercator grid ticks, zone 12

875000 FT — 5000-foot grid ticks: Arizona State Plane coordinate system, central zone (FIPSZONE 3176), NAD83 (Transverse Mercator)

X OW2313 — Flood mark (see explanation in Notes to Users section of this FIRM panel)

River flow

MAP REPOSITORY
Refer to Repository listing on Map Index

EFFECTIVE DATE OF COUNTYWIDE
FLOOD INSURANCE RATE MAP
April 16, 1990

EFFECTIVE DATE(S) OF REVISION(S) TO THIS PANEL
July 19, 2001

September 30, 2005 - to update corporate limits, to change Base Flood Elevations, to add Base Flood Elevations, to add Special Flood Hazard Areas, to change zone designations, to add roads and road names, to reflect the previously issued Letters of Map Revision, and to incorporate previously issued Letters of Map Amendment.

For complete flood insurance history prior to countywide mapping, refer to the Community Map History table located in the Flood Insurance Study report for this jurisdiction.

To determine if flood insurance is available in this community, contact your insurance agent or call the National Flood Insurance Program at 1-800-638-6620.

MAP SCALE 1" = 1000'

500 0 1000 2000 FEET

300 0 300 600 METERS

NFIP

NATIONAL FLOOD INSURANCE PROGRAM

PANEL 0870F

FIRM
FLOOD INSURANCE RATE MAP
MARICOPA COUNTY, ARIZONA
AND INCORPORATED AREAS

PANEL 870 OF 4350

(SEE MAP INDEX FOR FIRM PANEL LAYOUT)

CONTAINS:

COMMUNITY	NUMBER	PANEL	SUFFIX
MARICOPA COUNTY	040037	0870	F

Notice to User: The **Map Number** shown below should be used when placing map orders; the **Community Number** shown above should be used on insurance applications for the subject community.

MAP NUMBER
04013C0870F

MAP REVISED
SEPTEMBER 30, 2005

Federal Emergency Management Agency

NOTES TO USERS

This map is for use in administering the National Flood Insurance Program. It does not necessarily identify all areas subject to flooding, particularly from local drainage sources of small size. The **community map repository** should be consulted for possible updated or additional flood hazard information.

To obtain more detailed information in areas where **Base Flood Elevations** (BFEs) and/or **floodways** have been determined, users are encouraged to consult the Flood Profiles, Floodway Data and/or Summary of Stillwater Elevations tables contained within the Flood Insurance Study (FIS) report that accompanies this FIRM. Users should be aware that BFEs shown on the FIRM represent rounded whole-foot elevations. These BFEs are intended for flood insurance rating purposes only and should not be used as the sole source of flood elevation information. Accordingly, flood elevation data presented in the FIS report should be utilized in conjunction with the FIRM for purposes of construction and/or floodplain management.

Coastal Base Flood Elevations shown on this map apply only landward of 0.0' National Geodetic Vertical Datum of 1929 (NGVD 29). Users of this FIRM should be aware that coastal flood elevations are also provided in the Summary of Stillwater Elevations table in the Flood Insurance Study report for this jurisdiction. Elevations shown in the Summary of Stillwater Elevations table should be used for construction and/or floodplain management purposes when they are higher than the elevations shown on this FIRM.

Boundaries of the **floodways** were computed at cross sections and interpolated between cross sections. The floodways were based on hydraulic considerations with regard to requirements of the National Flood Insurance Program. Floodway widths and other pertinent floodway data are provided in the Flood Insurance Study report for this jurisdiction.

Certain areas not in Special Flood Hazard Areas may be protected by **flood control structures**. Refer to Section 2.4 "Flood Protection Measures" of the Flood Insurance Study report for information on flood control structures for this jurisdiction.

The **projection** used in the preparation of this map was *Arizona State Plane Zone 3176 (central Arizona)*. **The horizontal datum was** *NAD83, GRS80 spheroid*. Differences in datum, spheroid, projection or State Plane zones used in the production of FIRMs for adjacent jurisdictions may result in slight positional differences in map features across jurisdiction boundaries. These differences do not affect the accuracy of this FIRM.

Flood elevations on this map are referenced to the *National Geodetic Vertical Datum of 1929*. These flood elevations must be compared to structure and ground elevations referenced to the same **vertical datum**. For information regarding conversion between the National Geodetic Vertical Datum of 1929 and the North American Vertical Datum of 1988, visit the National Geodetic Survey website at http://www.ngs.noaa.gov or contact the National Geodetic Survey at the following address:

Spatial Reference System Division
National Geodetic Survey, NOAA
Silver Spring Metro Center
1315 East-West Highway
Silver Spring, Maryland 20910
(310) 713-3191

To obtain current elevation, description, and/or location information for **bench marks** shown on this map, please contact the Information Services Branch of the National Geodetic Survey at **(301) 713-3242**, or visit its website at http://www.ngs.noaa.gov.

Base map information shown on this FIRM was derived from multiple sources. Base map files were provided in digital format by Maricopa County. Orthophoto images were produced at a scale of 1:8000 using HARN for control. Aerial photography is dated December 2000 to December 2002.

This map reflects more detailed and up-to-date **stream channel configurations** than those shown on the previous FIRM for this jurisdiction. The floodplains and floodways that were transferred from the previous FIRM may have been adjusted to conform to these new stream channel configurations. As a result, the Flood Profiles and Floodway Data tables in the Flood Insurance Study report (which contains authoritative hydraulic data) may reflect stream channel distances that differ from what is shown on this map.

Corporate limits shown on this map are based on the best data available at the time of publication. Because changes due to annexations or de-annexations may have occurred after this map was published, map users should contact appropriate community officials to verify current corporate limit locations.

Please refer to the separately printed **Map Index** for an overview map of the county showing the layout of map panels; community map repository addresses; and a Listing of Communities table containing National Flood Insurance Program dates for each community as well as a listing of the panels on which each community is located.

Contact the **FEMA Map Service Center** at 1-800-358-9616 for information on available products associated with this FIRM. Available products may include previously issued Letters of Map Change, a Flood Insurance Study report, and/or digital versions of this map. The FEMA Map Service Center may also be reached by Fax at 1-800-358-9620 and its website at http://www.msc.fema.gov/.

If you have **questions about this map** or questions concerning the National Flood Insurance Program in general, please call **1-877-FEMAMAP** (1-877-336-2627) or visit the FEMA website at http://www.fema.gov/

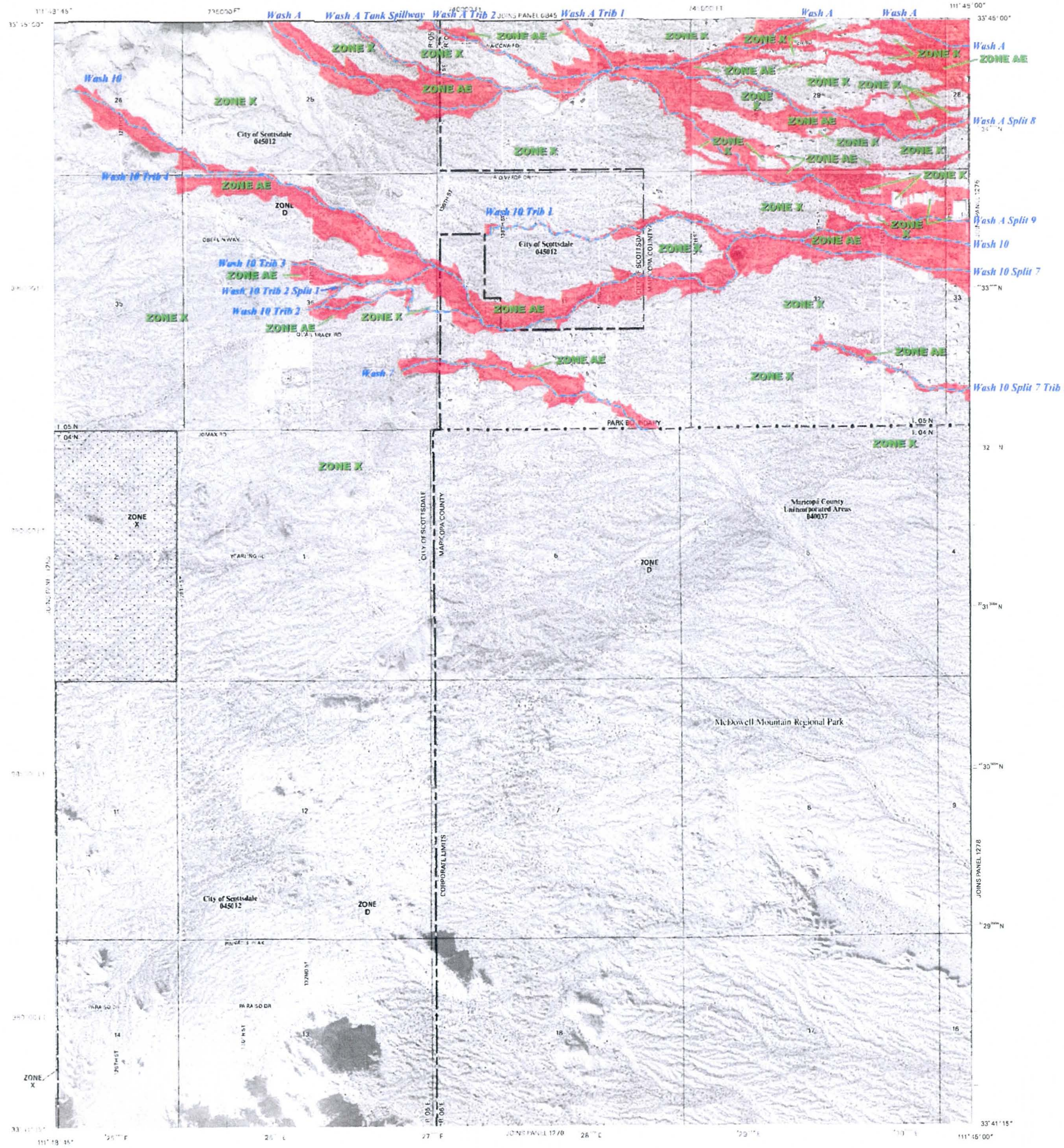

LEGEND

SPECIAL FLOOD HAZARD AREAS SUBJECT TO INUNDATION BY THE 1% ANNUAL CHANCE FLOOD

The 1% annual chance flood (100-year flood), also known as the base flood, is the flood that has a 1% chance of being equaled or exceeded in any given year. The Special Flood Hazard Area is the area subject to flooding by the 1% annual chance flood. Areas of Special Flood Hazard include Zones A, AE, AH, AO, AR, A99, V and VE. The Base Flood Elevation is the water-surface elevation of the 1% annual chance flood.

ZONE A — No Base Flood Elevations determined.

The 1% annual chance flood (100-year flood)

Wash 10 — The floodplain baseline

ZONE AE — Base Flood Elevations determined

OTHER FLOOD AREAS

ZONE X — Areas of 0.2% annual chance flood; areas of 1% annual chance flood with average depths of less than 1 foot or with drainage areas less than 1 square mile; and areas protected by levees from 1% annual chance flood.

OTHER AREAS

ZONE X — Areas determined to be outside the 0.2% annual chance floodplain.

ZONE D — Areas in which flood hazards are undetermined, but possible.

COASTAL BARRIER RESOURCES SYSTEM (CBRS) AREAS

OTHERWISE PROTECTED AREAS (OPAs)

CBRS areas and OPAs are normally located within or adjacent to Special Flood Hazard Areas.

1% annual chance floodplain boundary
0.2% annual chance floodplain boundary
Floodway boundary
Zone D boundary
CBRS and OPA boundary
Boundary dividing Special Flood Hazard Area Zones and boundary dividing Special Flood Hazard Areas of different Base Flood Elevations, flood depths or flood velocities.
Base Flood Elevation line and value; elevation in feet*
Base Flood Elevation value where uniform within zone; elevation in feet*

* Referenced to the National Geodetic Vertical Datum of 1929

Ⓐ Cross section line
② Transect line

112°07'08", 33°25'41" — Geographic coordinates referenced to the North American Datum of 1983 (NAD 83), Western Hemisphere

76 E — 1000-meter Universal Transverse Mercator grid ticks, zone 12

875000 FT — 5000-foot grid tick values: Arizona State Plane coordinate system, central zone (FIPSZONE 3176), NAD83 (Transverse Mercator)

DV2313 — Bench mark (see explanation in Notes to Users section of this FIRM panel)

M1.5 — River Mile

MAP REPOSITORY
Refer to Repository Listing on Map Index

EFFECTIVE DATE OF COUNTYWIDE FLOOD INSURANCE RATE MAP
April 15, 1988

EFFECTIVE DATE(S) OF REVISION(S) TO THIS PANEL
July 19, 2001

September 30, 2005 - to update corporate limits, to change Base Flood Elevations, to add Base Flood Elevations, to add Special Flood Hazard Areas, to change Special Flood Hazard Areas, to change zone designations, to add roads and road names, to incorporate previously issued Letters of Map Revision, and to incorporate previously issued Letters of Map Amendment.

For community map revision history prior to countywide mapping, refer to the Community Map History table located in the Flood Insurance Study report for this jurisdiction.

To determine if flood insurance is available in this community, contact your insurance agent or call the National Flood Insurance Program at 1-800-638-6620.

MAP SCALE 1" = 1000'

500 0 1000 2000 FEET

300 0 300 600 METERS

NFIP

PANEL 1260F

NATIONAL FLOOD INSURANCE PROGRAM

FIRM
FLOOD INSURANCE RATE MAP
MARICOPA COUNTY, ARIZONA
AND INCORPORATED AREAS

PANEL 1260 OF 4350

(SEE MAP INDEX FOR FIRM PANEL LAYOUT)

CONTAINS:

COMMUNITY	NUMBER	PANEL	SUFFIX
MARICOPA COUNTY	040037	1260	F
SCOTTSDALE, CITY OF	045012	1260	F

Notice to User: The **Map Number** shown below should be used when placing map orders; the **Community Number** shown above should be used on insurance applications for the subject community.

MAP NUMBER
04013C1260F

MAP REVISED
SEPTEMBER 30, 2005

Federal Emergency Management Agency

NOTES TO USERS

This map is for use in administering the National Flood Insurance Program. It does not necessarily identify all areas subject to flooding, particularly from local drainage sources of small size. The **community map repository** should be consulted for possible updated or additional flood hazard information.

To obtain more detailed information in areas where **Base Flood Elevations** (BFEs) and/or **floodways** have been determined, users are encouraged to consult the Flood Profiles, Floodway Data and/or Summary of Stillwater Elevations tables contained within the Flood Insurance Study (FIS) report that accompanies this FIRM. Users should be aware that BFEs shown on the FIRM represent rounded whole-foot elevations. These BFEs are intended for flood insurance rating purposes only and should not be used as the sole source of flood elevation information. Accordingly, flood elevation data presented in the FIS report should be utilized in conjunction with the FIRM for purposes of construction and/or floodplain management.

Coastal Base Flood Elevations shown on this map apply only landward of 0.0' National Geodetic Vertical Datum of 1929 (NGVD 29). Users of this FIRM should be aware that coastal flood elevations are also provided in the Summary of Stillwater Elevations table in the Flood Insurance Study report for this jurisdiction. Elevations shown in the Summary of Stillwater Elevations table should be used for construction and/or floodplain management purposes when they are higher than the elevations shown on this FIRM.

Boundaries of the **Floodways** were computed at cross sections and interpolated between cross sections. The floodways were based on hydraulic considerations with regard to requirements of the National Flood Insurance Program. Floodway widths and other pertinent floodway data are provided in the Flood Insurance Study report for this jurisdiction.

Certain areas not in Special Flood Hazard Areas may be protected by **flood control structures**. Refer to Section 2.4 "Flood Protection Measures" of the Flood Insurance Study report for information on flood control structures for this jurisdiction.

The **projection** used in the preparation of this map was *Arizona State Plane Zone 31 (central Arizona)*. The **horizontal datum** was *NAD83, GRS80 spheroid*. Differences in datum, spheroid, projection or State Plane zones used in the production of FIRMs for adjacent jurisdictions may result in slight positional differences in map features across jurisdiction boundaries. These differences do not affect the accuracy of this FIRM.

Flood elevations on this map are referenced to the *National Geodetic Vertical Datum of 1929*. These flood elevations must be compared to structure and ground elevations referenced to the same **vertical datum**. For information regarding conversion between the National Geodetic Vertical Datum of 1929 and the North American Vertical Datum of 1988, visit National Geodetic Survey website at http://www.ngs.noaa.gov or contact the National Geodetic Survey at the following address:

Spatial Reference System Division
National Geodetic Survey, NOAA
Silver Spring Metro Center
1315 East-West Highway
Silver Spring, Maryland 20910
(310) 713-3191

To obtain current elevation, description, and/or location information for bench marks shown on this map, please contact the Information Services Branch of the National Geodetic Survey at **(301) 713-3242**, or visit its website at http://www.ngs.noaa.gov.

Base map information shown on this FIRM was derived from multiple sources. Base map files were provided in digital format by Maricopa County. Orthophoto images were produced at a scale of 1:8000 using HARN for control. Aerial photography is dated December 2000 - December 2002.

This map reflects more detailed and up-to-date **stream channel configurations** than those shown on the previous FIRM for this jurisdiction. The floodplains and floodways that were transferred from the previous FIRM may have been adjusted to conform to these new stream channel configurations. As a result, the Flood Profiles and Floodway Data tables in the Flood Insurance Study report (which contains authoritative hydraulic data) may reflect stream channel distances that differ from what is shown on this map.

Corporate limits shown on this map are based on the best data available at the time of publication. Because changes due to annexations or de-annexations may have occurred after this map was published, map users should contact appropriate community officials to verify current corporate limit locations.

Please refer to the separately printed **Map Index** for an overview map of the county showing the layout of map panels; community map repository addresses; and a Listing of Communities table containing National Flood Insurance Program dates for each community as well as a listing of the panels on which each community is located.

Contact the **FEMA Map Service Center** at 1-800-358-9616 for information on available products associated with this FIRM. Available products may include previously issued Letters of Map Change, a Flood Insurance Study report, and/or digital versions of this map. The FEMA Map Service Center may also be reached by Fax at 1-800-358-9620 and its website at http://www.msc.fema.gov.

If you have **questions about this map**, or questions concerning the National Flood Insurance Program in general, please call **1-877-FEMAMAP** (1-877-336-2627) or visit the FEMA website at http://www.fema.gov.

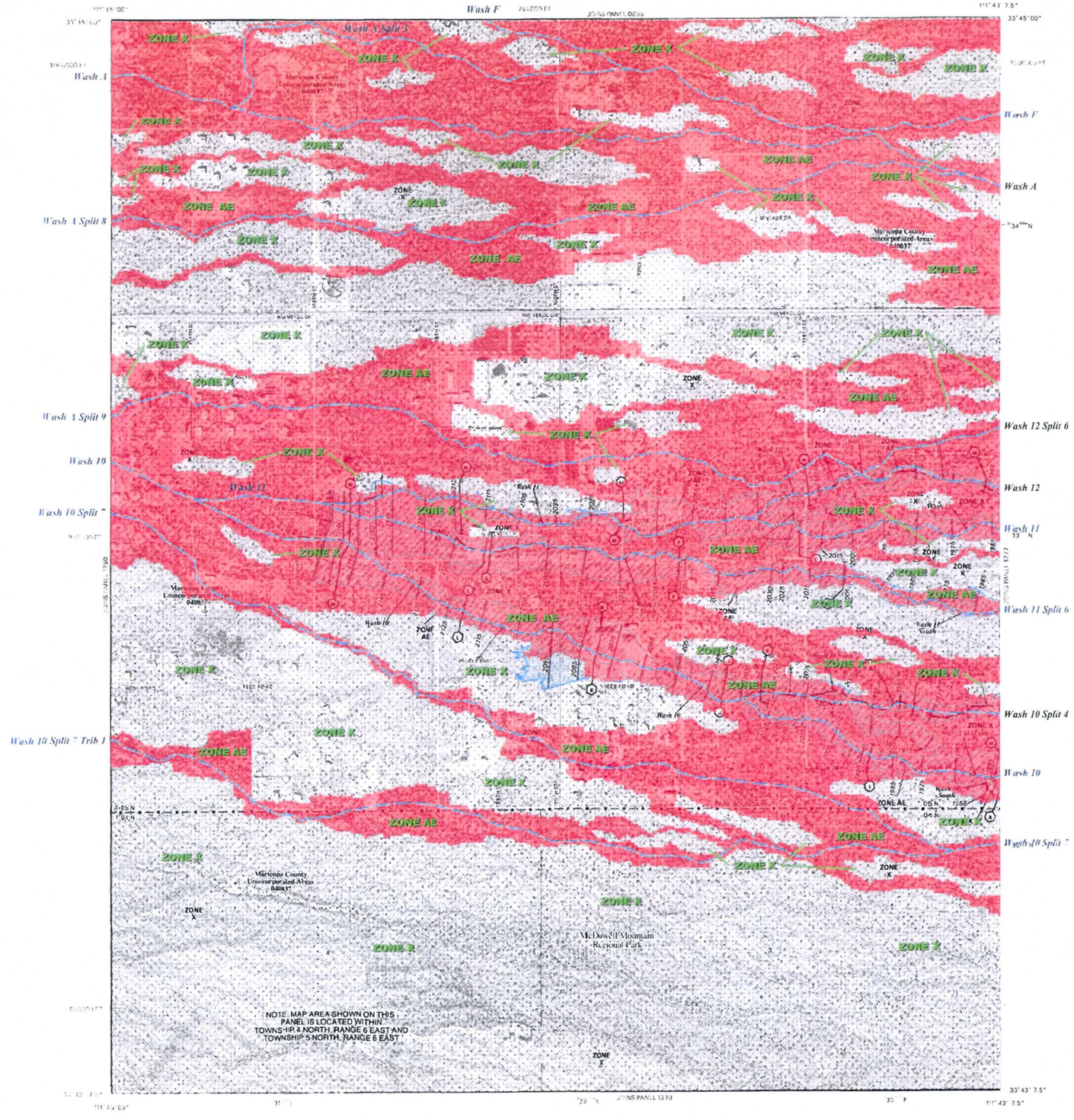

LEGEND

SPECIAL FLOOD HAZARD AREAS SUBJECT TO INUNDATION BY THE 1% ANNUAL CHANCE FLOOD

The 1% annual chance flood (100-year flood), also known as the base flood, is the flood that has a 1% chance of being equaled or exceeded in any given year. The Special Flood Hazard Area is the area subject to flooding by the 1% annual chance flood. Areas of Special Flood Hazard include Zones A, AE, AH, AO, AR, A99, V and VE. The Base Flood Elevation is the water-surface elevation of the 1% annual chance flood.

ZONE A — No Base Flood Elevations determined.

ZONE AE — Base Flood Elevations determined.

The 1% annual chance flood (100-year flood)

Wash F — The floodplain baseline

ZONE AE — Base Flood Elevations determined

OTHER FLOOD AREAS

ZONE X — Areas of 0.2% annual chance flood; areas of 1% annual chance flood with average depths of less than 1 foot or with drainage areas less than 1 square mile; and areas protected by levees from 1% annual chance flood.

OTHER AREAS

ZONE X — Areas determined to be outside the 0.2% annual chance floodplain.

ZONE D — Areas in which flood hazards are undetermined, but possible.

COASTAL BARRIER RESOURCES SYSTEM (CBRS) AREAS

OTHERWISE PROTECTED AREAS (OPAs)

CBRS areas and OPAs are normally located within or adjacent to Special Flood Hazard Areas.

1% annual chance floodplain boundary

0.2% annual chance floodplain boundary

Floodway boundary

Zone D boundary

CBRS and OPA boundary

Boundary dividing Special Flood Hazard Areas of different Base Flood Elevations, flood depths or flood velocities.

513 — Base Flood Elevation line and value; elevation in feet*

(EL 987) — Base Flood Elevation value where uniform within zone; elevation in feet*

* Referenced to the National Geodetic Vertical Datum of 1929

(A) (A) — Cross section line

(2) (2) — Transect line

32°07'08", 33°25'41" — Geographic coordinates referenced to the North American Datum of 1983 (NAD 83), Western hemisphere

3976000 m E — 10,000-meter Universal Transverse Mercator grid ticks, zone 12

R75000 FT — 1000-foot grid ticks, Arizona State Plane coordinate system, central zone (FIPSZONE 3101), NAD83 (Transverse Mercator)

DV2313 — Bench mark (see explanation in Notes to Users section of this FIRM panel)

• M1.5 — River Mile

MAP REPOSITORY
Refer to Repository Listing on Map Index

EFFECTIVE DATE OF COUNTYWIDE
FLOOD INSURANCE RATE MAP
April 15, 1988

EFFECTIVE DATE(S) OF REVISION(S) TO THIS PANEL
September 4, 1991; July 19, 2001

September 30, 2005 - to update corporate limits, to add Base Flood Elevations, to add Special Flood Hazard Areas, to change Zone Designations, to add notes and Flood Hazard, to incorporate previously issued Letters of Map Revision, and to incorporate previously issued Letters of Map Amendment.

For community map revision history prior to countywide mapping, refer to the Community Map History table located in the Flood Insurance Study report for this jurisdiction.

To determine if flood insurance is available in this community, contact your insurance agent or call the National Flood Insurance Program at 1-800-638-6620.

MAP SCALE 1" = 500'

250 0 500 1000 FEET

150 0 150 300 METERS

NFIP

NATIONAL FLOOD INSURANCE PROGRAM

PANEL 1276G

FIRM
FLOOD INSURANCE RATE MAP
MARICOPA COUNTY, ARIZONA
AND INCORPORATED AREAS

PANEL 1276 OF 4350

(SEE MAP INDEX FOR FIRM PANEL LAYOUT)

CONTAINS:

COMMUNITY	NUMBER	PANEL	SUFFIX
MARICOPA COUNTY	040037	1276	G

Notice to User: The **Map Number** shown below should be used when placing map orders; the **Community Number** shown above should be used on insurance applications for the subject community.

MAP NUMBER
04013C1276G

MAP REVISED
SEPTEMBER 30, 2005

Federal Emergency Management Agency

NOTES TO USERS

This map is for use in administering the National Flood Insurance Program. It does not necessarily identify all areas subject to flooding, particularly from local drainage sources of small size. The **community map repository** should be consulted for possible updated or additional flood hazard information.

To obtain more detailed information in areas where **Base Flood Elevations** (BFEs) and/or **floodways** have been determined, users are encouraged to consult the Flood Profiles, Floodway Data and/or Summary of Stillwater Elevations tables contained within the Flood Insurance Study (FIS) report that accompanies this FIRM. Users should be aware that BFEs shown on the FIRM represent rounded whole-foot elevations. These BFEs are intended for flood insurance rating purposes only and should not be used as the sole source of flood elevation information. Accordingly, flood elevation data presented in the FIS report should be utilized in conjunction with the FIRM for purposes of construction and/or floodplain management.

Coastal Base Flood Elevations shown on this map apply only landward of 0.0' National Geodetic Vertical Datum of 1929 (NGVD 29). Users of this FIRM should be aware that coastal flood elevations are also provided in the Summary of Stillwater Elevations table in the Flood Insurance Study report for this jurisdiction. Elevations shown in the Summary of Stillwater Elevations table should be used for construction and/or floodplain management purposes when they are higher than the elevations shown on this FIRM.

Boundaries of the **floodways** were computed at cross sections and interpolated between cross sections. The floodways were based on hydraulic considerations with regard to requirements of the National Flood Insurance Program. Floodway widths and other pertinent floodway data are provided in the Flood Insurance Study report for this jurisdiction.

Certain areas not in Special Flood Hazard Areas may be protected by **flood control structures**. Refer to Section 2.4 "Flood Protection Measures" of the Flood Insurance Study report for information on flood control structures for this jurisdiction.

The **projection** used in the preparation of this map was Arizona State Plane Zone 0176 (central Arizona). The **horizontal datum** was NAD83, GRS80 spheroid. Differences in datum, spheroid, projection or State Plane zones used in the production of FIRMs for adjacent jurisdictions may result in slight positional discrepancies in map features across jurisdiction boundaries. These differences do not affect the accuracy of this FIRM.

Flood elevations on this map are referenced to the National Geodetic Vertical Datum of 1929. These flood elevations must be compared to structure and ground elevations referenced to the **same vertical datum**. For information regarding conversion between the National Geodetic Vertical Datum of 1929 and the North American Vertical Datum of 1988, visit the National Geodetic Survey website at http://www.ngs.noaa.gov or contact the National Geodetic Survey at the following address:

Spatial Reference System Division
National Geodetic Survey, NOAA
Silver Spring Metro Center
1315 East-West Highway
Silver Spring, Maryland 20910
(301) 713-3191

To obtain current elevation, description, and/or location information for **bench marks** shown on this map, please contact the Information Services Branch of the National Geodetic Survey at **(301) 713-3242**, or view it on the Internet at http://www.ngs.noaa.gov.

Base map information shown on this FIRM was derived from multiple sources. Base map files were provided in digital format by Maricopa County. Orthophoto images were produced at a scale of 1:5000 using HARN for control. Aerial photography was dated December 2000 December 2002.

This map reflects more detailed and up-to-date **stream channel configurations** than those shown on the previous FIRM for this jurisdiction. The floodplains and floodways that were transferred from the previous FIRM may have been adjusted to conform to these new stream channel configurations. As a result, the Flood Profiles and Floodway Data tables in the Flood Insurance Study report (which contains authoritative hydraulic data) may reflect stream channel distances that differ from what is shown on this map.

Corporate limits shown on this map are based on the best data available at the time of publication. Because changes due to annexations or de-annexations may have occurred after this map was published, map users should contact appropriate community officials to verify current corporate limit locations.

Please refer to the separately printed **Map Index** for an overview map of the county showing the layout of map panels; community map repository addresses; and a Listing of Communities table containing National Flood Insurance Program dates for each community as well as a listing of the panels on which each community is located.

Contact the **FEMA Map Service Center** at 1-800-358-9616 for information on available products associated with this FIRM. Available products may include previously issued Letters of Map Change, a Flood Insurance Study report, and/or digital versions of this map. The FEMA Map Service Center may also be reached by Fax at 1-800-358-9620 and its website at http://www.msc.fema.gov/

If you have **questions about this map** or questions concerning the National Flood Insurance Program in general, please call 1-877-FEMAMAP (1-877-336-2627) or visit the FEMA website at http://www.fema.gov/

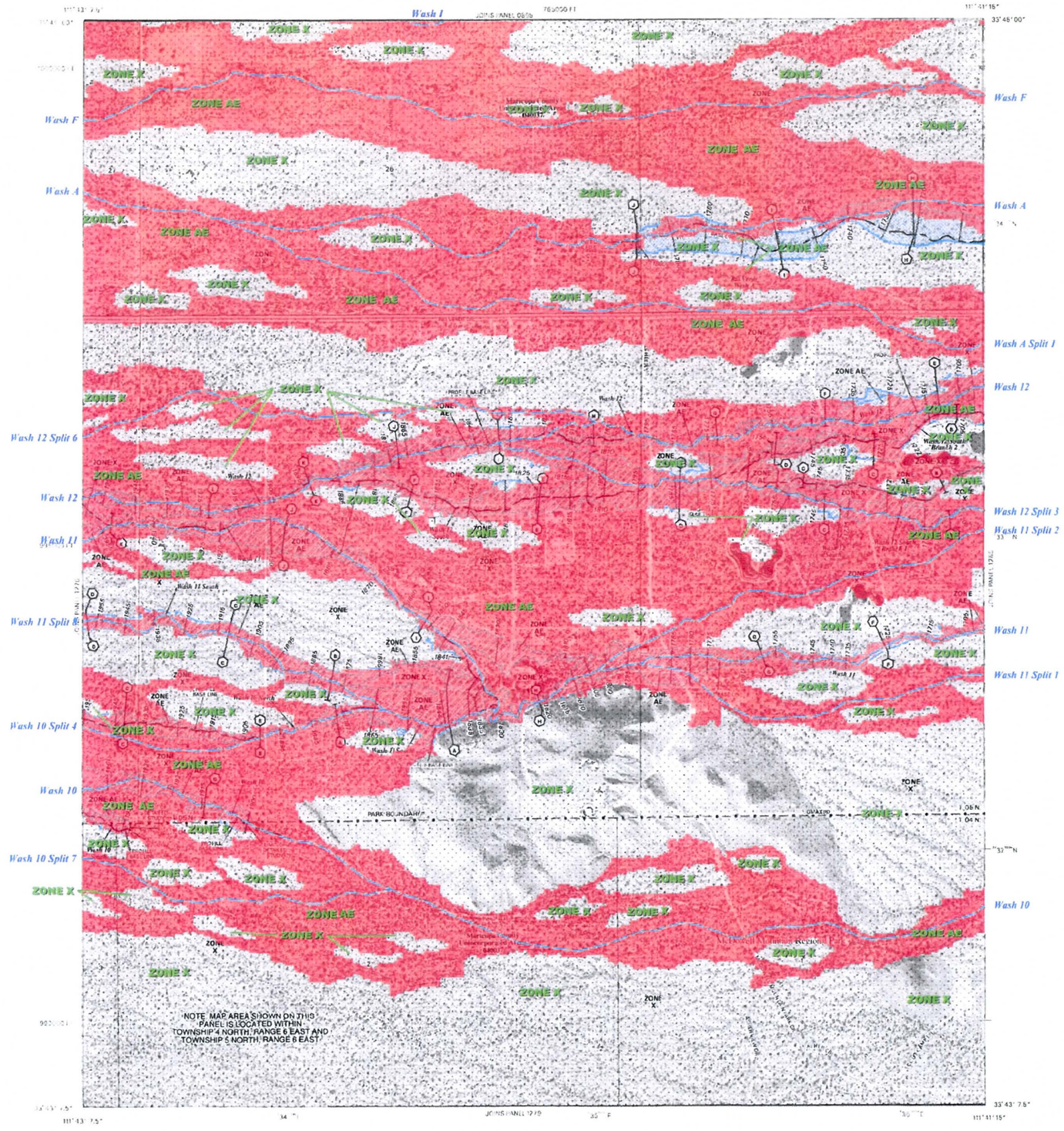

LEGEND

SPECIAL FLOOD HAZARD AREAS SUBJECT TO INUNDATION BY THE 1% ANNUAL CHANCE FLOOD

The 1% annual chance flood (100-year flood), also known as the base flood, is the flood that has a 1% chance of being equaled or exceeded in any given year. The Special Flood Hazard Area is the area subject to flooding by the 1% annual chance flood. Areas of Special Flood Hazard include Zones A, AE, AH, AO, AR, A99, V and VE. The Base Flood Elevation is the water surface elevation of the 1% annual chance flood.

ZONE A — No Base Flood Elevations determined

ZONE AE — Base Flood Elevations determined

The 1% annual chance flood (100-year flood)

Wash F — The floodplain baseline

ZONE AE — Base Flood Elevations determined

OTHER FLOOD AREAS

ZONE X — Areas of 0.2% annual chance flood; areas of 1% annual chance flood with average depths of less than 1 foot or with drainage areas less than 1 square mile; and areas protected by levees from 1% annual chance flood

OTHER AREAS

ZONE X — Areas determined to be outside the 0.2% annual chance floodplain

ZONE D — Areas in which flood hazards are undetermined, but possible

COASTAL BARRIER RESOURCES SYSTEM (CBRS) AREAS

OTHERWISE PROTECTED AREAS (OPAs)

CBRS areas and OPAs are generally located within or near areas of Special Flood Hazard Areas.

Limit of Moderate Wave Action (LiMWA)

0.2% Annual Chance Floodplain Boundary

Floodway Boundary

Zone D Boundary

CBRS and OPA boundary

Boundary Dividing Special Flood Hazard Areas of different Base Flood Elevations, flood depths or flood velocities.

513 — Base Flood Elevation line and value; elevation in feet*

(EL 987) — Base Flood Elevation value where uniform within zone; elevation in feet*

* Elevation is referenced to the National Geodetic Vertical Datum of 1929

(A) (A) — Cross section line

(2) (2) — Transect line

112°07'08", 33°25'41" — Geographic coordinates referenced to the North American Datum of 1983 (NAD 83) Western Hemisphere

7670000 FT — 1000-meter Universal Transverse Mercator grid ticks, zone 12

875000 FT — 5000-foot grid ticks: Arizona State Plane coordinate system, central zone (FIPSZONE 3176), NAD83 (Transverse Mercator)

X DV2313 — Bench mark (see explanation in Notes to Users section of this FIRM panel)

• M1.5 — River Mile

MAP REPOSITORY

Refer to Repository Listing on Map Index

EFFECTIVE DATE OF COUNTY-WIDE

FLOOD INSURANCE RATE MAP

April 15, 1988

EFFECTIVE DATE(S) OF REVISION(S) TO THIS PANEL

September 4, 1991, July 19, 2001

Sept. 1991: To update corporate limits, to change Base Flood Elevations, to add Base Flood Elevations, to add Special Flood Hazard Areas, to change zone designations, to add roads and road names, to incorporate previously issued Letters of Map Revision, and to incorporate previously issued Letters of Map Amendment.

For community map revision history prior to countywide mapping, refer to the Community Map History table located in the Flood Insurance Study report for this jurisdiction.

To determine if flood insurance is available in this community, contact your insurance agent or call the National Flood Insurance Program at 1-800-638-6620.

MAP SCALE 1" = 500'

250 0 500 1000 FEET

150 0 150 300 METERS

NFIP

NATIONAL FLOOD INSURANCE PROGRAM

PANEL 1277G

FIRM
FLOOD INSURANCE RATE MAP
MARICOPA COUNTY, ARIZONA
AND INCORPORATED AREAS

PANEL 1277 OF 4350

(SEE MAP INDEX FOR FIRM PANEL LAYOUT)

CONTAINS:

COMMUNITY	NUMBER	PANEL	SUFFIX
MARICOPA COUNTY	040073	1277	G

Notice to User: The Map Number shown below should be used when placing map orders; the Community Number shown above should be used on insurance applications for the subject community.

MAP NUMBER
04013C1277G

MAP REVISED
SEPTEMBER 30, 2005

Federal Emergency Management Agency

NOTES TO USERS

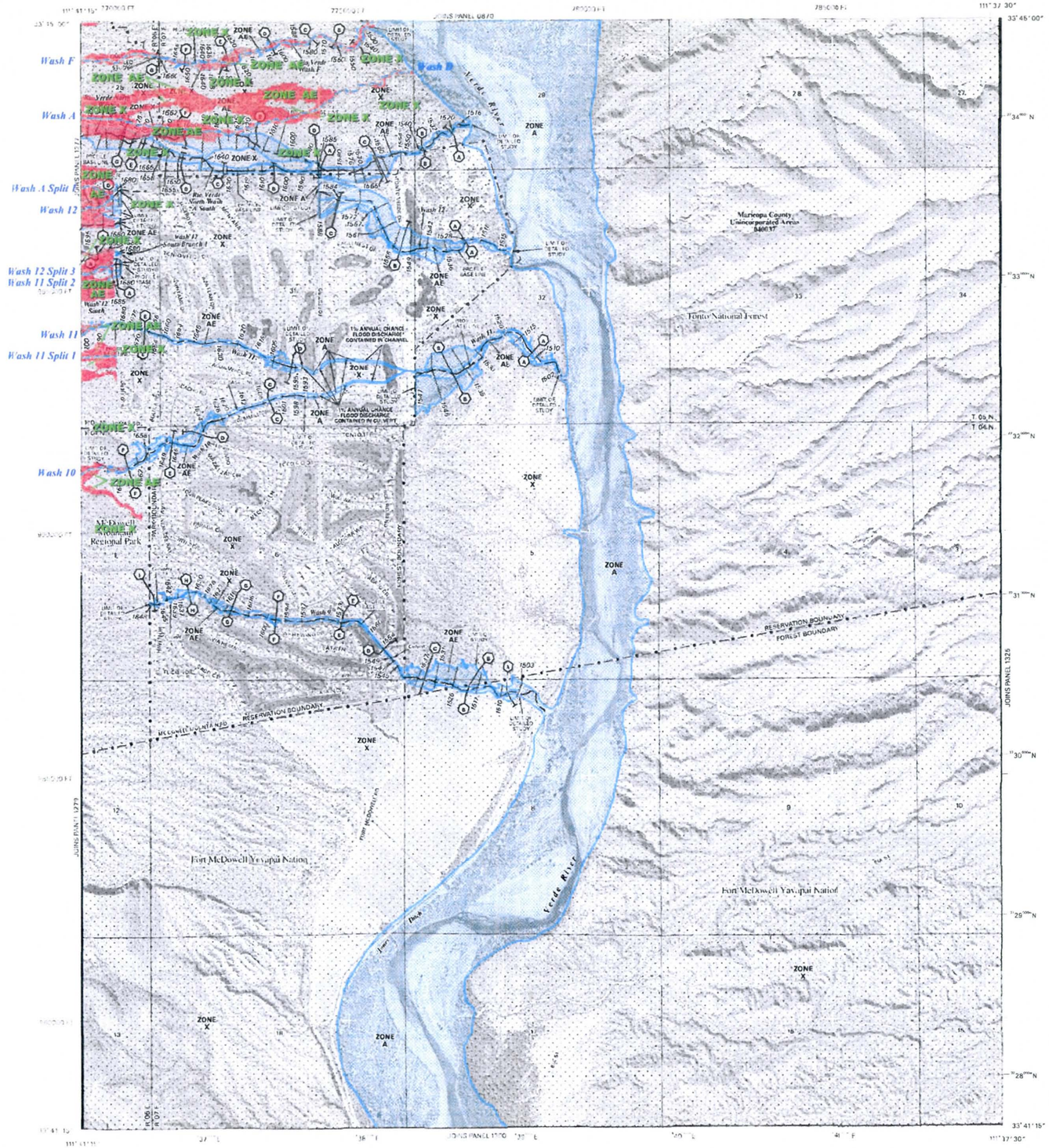

LEGEND

The 1% annual chance flood (100-year flood)

Wash F The floodplain baseline

ZONE AE Base Flood Elevations determined

OTHER FLOOD AREAS

ZONE X

OTHER AREAS

ZONE X

ZONE D

COASTAL BARRIER RESOURCES SYSTEM (CBRS) AREAS

OTHERWISE PROTECTED AREA (OPA)

MAP SCALE 1" = 1000'

500 0 1000 2000 FEET

100 0 300 600 METERS

NFIP

NATIONAL FLOOD INSURANCE PROGRAM

PANEL 1285G

FIRM

FLOOD INSURANCE RATE MAP

MARICOPA COUNTY, ARIZONA

AND INCORPORATED AREAS

PANEL 1285 OF 4350

(SEE MAP INDEX FOR FIRM PANEL LAYOUT)

COMMUNITY	NUMBER	PANEL	SUFFIX
MARICOPA COUNTY	040037	1285	G

Federal Emergency Management Agency

MAP NUMBER

04013C1285G

MAP REVISED

SEPTEMBER 30, 2005