FLOOD CONTROL
DISTRICT
of
MARICOPA
COUNTY
1959

Property of
Flood Control District of MC Library
2801 W Durango
Phoenix, AZ 85009

CAVE CREEK FLOODPLAIN DELINEATION

Cave Buttes Dam to the Arizona Canal Diversion Channel

FCD 88-56

FINAL HYDROLOGY REPORT

Book 1 of 2

January, 1990

Montgomery & Nipko, Inc.
Engineers and Architects

FLOOD CONTROL DISTRICT OF MARICOPA COUNTY

CAVE CREEK AND EAST FORK OF CAVE CREEK
FLOODPLAIN DELINEATION STUDY
ARIZONA CANAL DIVERSION CHANNEL TO CAVE BUTTE DAM

FINAL HYDROLOGY REPORT

BOOK 1 OF 2

Prepared By

BURGESS & NIPLE, INC.

JANUARY 1990

Registered Professional Engineer (Civil)
CERTIFICATE NO.
12739
THOMAS R.
LOOMIS
Date Signed 1-29-90
ARIZONA, U.S.A.

TABLE OF CONTENTS
Book 1 of 2
(Main Body)

Description	Page
SYNOPSIS	1
INTRODUCTION	2
VICINITY MAP	3
STUDY PARAMETERS	
A. Study Area	4
B. Mapping	5
C. Study Criteria	6
HYDROLOGY	
A. General	7
B. Preliminary Hydrology Report Revisions	7
C. Parameter Estimation	9
Drainage Area Boundaries	9
Statistical Parameters	10
Physical Parameters	11
Flood Routing	13
D. Calibration	15
E. Special Problems	16
RESULTS AND CONCLUSIONS	
A. General	20
B. Major Detention Basins	20
C. On-Site Retention	20
D. Peak Discharges	20

APPENDIX A - Listing of References

APPENDIX B - Statistical and Physical Hydrologic Parameters

APPENDIX C - Land Use Calculation Sheets

APPENDIX D - Open Channel Hydraulic Calculations for Hydrograph Routing

APPENDIX E - Open Channel Hydraulic Calculations for Determination of Flow Diversion Rating Curves

APPENDIX F - Pipe Flow Hydraulic Calculations

APPENDIX G - Sub-Basin Time of Concentration Calculations

APPENDIX H - Open Channel Hydraulic Calculations for Time of Concentration Estimation

TABLE OF CONTENTS (Continued)
Book 1 of 2
(Main Body)

Description
APPENDIX I - Miscellaneous Design Charts for Time of Concentration Estimation
APPENDIX J - HEC-1 Hydrology Results for a 10-Year 24-Hour Duration Storm
APPENDIX K - HEC-1 Hydrology Results for a 50-Year 24-Hour Duration Storm
APPENDIX L - HEC-1 Hydrology Results for a 100-Year 24-Hour Duration Storm

LIST OF TABLES

Description	Page
TABLE 1 - Summary of Sub-Basin Data and Results	23
TABLE 2 - Peak Discharges in Cave Creek	25
TABLE 3 - Peak Discharges in the East Fork of Cave Creek	26
TABLE 4 - Peak Discharges in Moon Valley Wash	27
TABLE 5 - Comparison of 100-Year Peak Discharges in Cave Creek with Previous Studies	28
TABLE 6 - 100-Year Peak Discharge in the East Fork at the Confluence with Cave Creek - Comparison with Previous Studies	29
TABLE 7 - City of Phoenix Point Precipitation Values	APPENDIX "A"
TABLE 8 - Aerial Precipitation Reduction Data	APPENDIX "A"
TABLE 9 - Point Precipitation Values Used For This Study	APPENDIX "A"
TABLE 10 - Initial and Uniform Loss Rates	APPENDIX "A"
TABLE 11 - Percent Impervious Estimates for City of Phoenix Zoning Classifications	APPENDIX "A"
TABLE 12 - 2-Hour Storm Rainfall Distribution	APPENDIX "A"
TABLE 13 - 6-Hour Storm Rainfall Distribution	APPENDIX "A"
TABLE 14 - 24-Hour Storm Rainfall Distribution	APPENDIX "A"

Registered Professional Engineer (Civil)
CERTIFICATE NO. 12739
THOMAS R. LOOMIS
Date Signed 1-26-90
ARIZONA, U.S.A.

TABLE OF CONTENTS
Book 2 of 2
(Exhibits)

Description

Exhibit "A" - Major Drainage Basin Map and Street Index for Exhibits "B" and "C"

Exhibit "B" - Drainage Basin Land Use Map

Exhibit "C" - Time of Concentration Flow Paths and Flood Routing Map

Exhibit "D" - Hydrograph Routing Diagram

Registered Professional Engineer
CERTIFICATE NO.
12739
THOMAS R.
LOOMIS
Date Signed 1-26-90
ARIZONA, U.S.A.

SYNOPSIS

The following are the peak discharges from a 24-hour duration storm at the control locations along Cave Creek. These values are recommended for use in the hydraulic analysis portion of the flood plain delineation study:

LOCATION	D.A. (S.M.)	10-YR. (cfs)	50-YR. (cfs)	100-YR. (cfs)
Above the Central Arizona Project Canal	2.5	1,600	2,300	2,900
Below the Central Arizona Project Canal	4.0	2,600	3,800	4,600
Below Deer Valley Drive	5.0	2,800	4,200	5,200
Above the East Fork Cave Creek	8.6	3,000	4,600	5,700
Below the East Fork Cave Creek	23.5	8,200	12,400	14,600
Below 19th Avenue	25.5	8,700	13,000	15,400
Above Moon Valley Wash	26.5	8,700	13,000	15,400
Below Moon Valley Wash	33.1	9,900	15,300	17,500
At the Confluence with the Arizona Canal Diversion Channel	34.7	10,200	16,100	18,500

Total Watershed Area = 34.7 s.m.

The total watershed area of 34.7 square miles is greater than the previous FEMA value of 30.4 square miles. This is primarily due to additional contributing area in Basins 3 and 4 that has not been considered in previous studies. There are also other minor changes in basin delineation which are resultant from flow patterns changed by recent urbanization. Refer to Exhibit "A" for major drainage basin delineation and a graphic location of the peak discharge concentration points listed above.

INTRODUCTION

Burgess & Niple, Inc. (B&N) was retained by the Flood Control District of Maricopa County (FCDMC) to perform a floodplain delineation study on a portion of Cave Creek in July, 1989. The Notice to Proceed was issued on July 11, 1989. The study reach of Cave Creek is delimited by the U.S. Army Corps of Engineers (COE) Arizona Canal Diversion Channel (ACDC) on the south and the Cave Buttes Dam on the north.

The Flood Insurance Study (FIS) hydrologic analysis for Cave Creek below Cave Creek Dam and the East Fork Cave Creek was revised by Cella, Barr, Evans and Associates in 1980. Numerous hydraulic revisions have occurred since 1980 and are reflected in the April 15, 1988 revision of the Flood Insurance Study for Maricopa County, Arizona and Incorporated Areas. The purpose in preparing this current revision is to reflect increased urbanization of the watershed and improvements to the Cave Creek channel. The most distinct channel improvement is the 1.86 mile concrete lined channel recently constructed by the COE north from the ACDC.

Contained in this report are the hydrologic assumptions, criteria and calculations done in order to provide current existing condition flow rates for the hydraulic analysis portion of this study. Incorporated in this report are comments and corrections noted from a review of the preliminary version of this report, which was dated October, 1989. Comments were received from FCDMC, the City of Phoenix (COP) and the Arizona Department of Water Resources (ADWR).

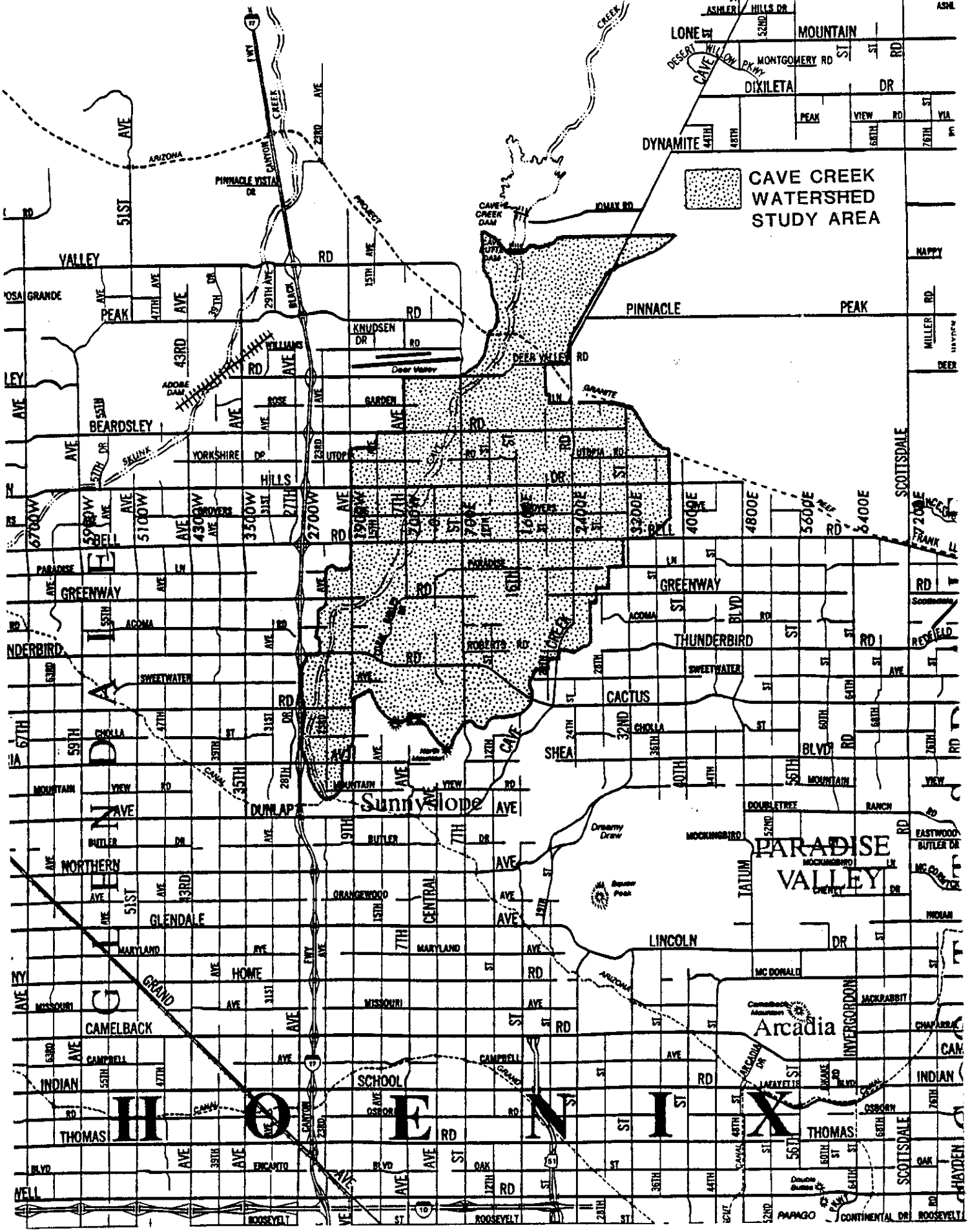

VICINITY MAP

N.T.S.

STUDY PARAMETERS

A. Study Area

The contributing watershed is approximately 34.7 square miles in area. Refer to Exhibit "A" for the watershed boundary delineation. The most northerly boundary consists of Cave Buttes Dam and the levee system for the dam. The northerly boundary east of Cave Creek Road is set by the Central Arizona Project Canal (CAP). The southerly boundary is predominantly fixed by the Phoenix Mountains, and the watershed concentration point is at the ACDC, just west of 23rd Avenue. The westerly and easterly boundaries are less rigidly fixed. Spillovers will occur at various points along these boundaries because of the natural tendency for sheet flow to occur in the flatter urbanized areas.

The watershed was broken into six (6) major drainage basins. Basin 1 is the region mostly north of the CAP which is almost totally undeveloped. Basin 2 is the region known as the East Fork Cave Creek. This basin is heavily urbanized with undeveloped land predominantly lying in the northeast corner. Basin 3 consists of Cave Creek itself, and urbanized land immediately adjacent to the channel, lying between Basin 1 and Greenway Road. Basin 4 is the urbanized area west of Basin 3 and Cave Creek from Sweetwater Avenue north to Basin 3. Basin 5 is the region known as Moon Valley. Basin 5 is heavily urbanized except for the areas in the Phoenix Mountains Preserve. Basin 6 is Cave Creek, and immediately adjacent urbanized areas, from Sweetwater Avenue to the ACDC.

The watershed contains a varied terrain consisting of high urban density in the flatter areas, steep desert mountains, and undeveloped desert. Soils vary from Soil Conservation Service (SCS) B and C classification soil types in the flatter desert areas, to Type D soils in the steep mountain areas. Much of the watershed has a high runoff potential.

B. Mapping

The available mapping utilized in this study was as follows:

1) USGS Quadrangle Maps: Sunnyslope, Union Hills, Paradise Valley and Currys Corner, Arizona. The horizontal scale is 1 inch to 2000 feet. The contour interval is 10 feet. The Currys Corner, Paradise Valley and Sunnyslope quadrangles were photorevised in 1982. The Union Hills quadrangle was photorevised in 1981. All four are 7.5 minute maps;

2) City of Phoenix, Arizona Quarter Section Maps: These maps provide photo and contour coverage of most of the watershed area. The majority of the photographs are dated February, 1986 and are 1 inch to 100 foot scale. The contour mapping was dated anywhere from 1969 to 1980. The majority of the maps are pre-1975. Both 1 inch to 100 feet and 1 inch to 200 feet scale maps were used;

3) City of Phoenix 1000 Scale Photography: This mapping is dated December, 1988 and provides coverage of the entire watershed area north of Paradise Lane;

4) City of Phoenix Storm Drain Maps: These maps are at a scale of 1-inch to 600 feet and provide a schematic location of storm drains in the area. Revision dates vary from January, 1982 to January, 1989;

5) FIS Mapping: The Cave Creek Wash was flown as a part of this study for the purpose of obtaining 1 inch to 200 foot scale contour mapping of the 100-year flood plain area. The contour mapping was not available when this study was performed. However, the 880 scale photograph contact prints from the August, 1989 flight were utilized;

6) As-Built Drawings: The as-built drawings referenced in Appendix "A" were utilized, and

7) City of Phoenix 400 Scale Zoning Maps.

C. Study Criteria

The following criteria and guidelines were set forth by FCDMC prior to commencing work on the study:

1) Hydrology calculations were to be done for the 10, 50 and 100-year storms;

2) Storm durations of 2, 6 and 24-hours were to be evaluated for all three storms in order to determine which duration storm results in the highest magnitude peak discharge;

3) The COE HEC-1 computer program was to be utilized for hydrograph computation;

4) Sub-basins were to be delineated approximately one (1) square mile in area;

5) The SCS unit hydrograph was to be utilized;

6) The Initial and Uniform Loss method was to be utilized for estimation of precipitation losses;

7) Cave Buttes Dam was assumed to completely retain the 100-year storm runoff volume from the watershed area upstream of the dam. The low level outlet conveys 420 cfs when the 100-year volume is detained. This flow was considered negligible and was not included in the HEC-1 computer model;

8) Rainfall distributions for the three (3) storm durations were furnished by FCDMC; and

9) Only existing condition flow rates were to be estimated. Future condition flows were not to be estimated.

10) Channel infiltration losses were not to be considered.

HYDROLOGY

A. General

The watershed was modeled using the COE HEC-1 computer program. The program version is dated August 2, 1988, as implemented by Dodson and Associates, Inc. in their 1989 version of ProHEC1. The modeling was accomplished using the SCS Unit Hydrograph, Initial and Uniform Losses, and routing, combining and diversion of sub-basin hydrographs. The derivation of input data, assumptions and procedures used in preparation of the computer model will be discussed in the following sections.

B. Preliminary Hydrology Report Revisions

This report is essentially the same as the preliminary report except that modifications and/or corrections have been made in response to review comments from FCDMC, COP, ADWR, and Burgess & Niples' interval review. The revisions are described in the text where appropriate and are covered in the appendices by comments or footnotes. The following are the major report items affected by these revisions:

HEC-1 Computer Model:

1) The lag times for Subbasins 1B and 1C were adjusted to more accurately reflect actual field conditions. Refer to comments in the computer output and notes and revised calculations in Appendices "G" and "H";

2) Routing parameters were adjusted to compensate for differences between the input Muskingum K coefficients and routing flow times calculated by HEC-1. The main time increment of 5 minutes affected the round-off value for the calculated flow times. In several reaches, this round-off error accumulated, resulting in invalid peak times. The reach affected, and the parameters changed, are documented by comments in the HEC-1 input files;

3) Several cross sections for Normal Depth Channel routing were modified to correct typing input errors and to add additional points to the sections. These changes are documents by comments in the HEC-1 input files; and

4) The application of aerial precipitation reduction factors was expanded to include a breakdown for drainage basins in the range of 5, 10, 15, 20 and 35 square miles. Separate HEC-1 input files were created for the 10, 50 and 100-year 24-hour storms and multiple ratios were applied to the storm precipitation value for each run. Peak discharges were then taken from the appropriate output discharge column corresponding to the contributing drainage area at a particular concentration point. Refer to Tables 8 and 9 in Appendix "B" and comments in the HEC-1 input files.

Appendix "B":

Tables 8 and 9 were modified per the above comments.

Appendix "D":

The plots of the Normal Depth Channel cross sections were modified to reflect the changes made in the HEC-1 input model.

Appendix "G" and Appendix "H":

The time of concentration and lag time calculations for subbasins 1B and 1C were modified.

Appendix "J":

The HEC-1 hydrology results for a 2-hour duration storm were replaced with those for a 10-year 24-hour storm.

Appendix "K":

The HEC-1 hydrology results for a 6-hour duration storm were replaced with those for a 50-year 24-hour storm.

Appendix "L":

The HEC-1 hydrology results for a 24-hour duration storm were replaced with those for a 100-year 24-hour storm.

Exhibits "A" and "B":

Street name spelling corrections were made. Peak discharge values were updated.

Exhibit "C":

The time of concentration flow path for subbasin 1B was revised and a street named spelling correction was made.

Exhibit "D":

The routing parameter changes made in the HEC-1 input files were revised, spelling corrections made, and channel status or type was noted.

C. Parameter Estimation

Drainage Area Boundaries:

The lack of current, detailed photography and mapping of the watershed resulted in the necessity of performing a detailed field investigation. The information obtained was directed toward gathering sufficient data to be able to delineate major basin and sub-basin boundaries. At the same time, the existing land use of each parcel was checked against the 100 scale and 1000 scale aerial photographs. Differences and new developments were noted on the 100 scale photographs.

The field survey was accomplished by using "Plate 3 - Subarea Boundaries In Project Area" from the COE Gila River Basin, Hydrology Part 2, Design Memorandum No. 2 as a base. Refer to Appendix "A", FCDMC, item 3. The major basin boundaries for the COE study are depicted on this map. The entire watershed was then driven street by street and flow patterns for every street were recorded on the 100 scale photographs. The flow patterns were determined visually using a hand level and the City of Phoenix 200 scale quarter section contour maps. The basin boundaries depicted on the referenced Plate 3 were traced out on the 100 scale photographs and differences were noted. At the same time, land use data and physical characteristics of drainage conveyances were also noted.

The drainage sub-basins, each approximately one square mile in area, were then delineated in the office using the street flow patterns identified on the 100 scale photographs. Boundaries in non-urbanized areas were delineated using the USGS Quadrangle maps and the 200 scale, 2-foot contour mapping. The sub-basin delineations are depicted on Exhibits "B" and "C".

Finally, the field investigation was also used to identify parcels with onsite retention and non-contributing areas. Parcels with onsite retention were evaluated to determine if the retention system was well designed and constructed and appeared to conform with the current municipal requirement to retain the 100-year, 2-hour storm volume. If judged acceptable, the parcel was so noted on the 100 scale photographs. Areas which will not contribute runoff, such as gravel pits and landfills, were also visually checked and the area limits noted on the 100 and 1000 scale photographs.

Statistical Parameters:

Rainfall Distributions - The rainfall distributions for the 2, 6 and 24-hour duration storms were furnished by FCDMC. Refer to Tables 12, 13, and 14 in Appendix B.

Precipitation Data - Point precipitation values used in this study were derived from those published in the City of Phoenix Storm Drain Design Manual, Subdivision Drainage Design. They were recorded from the Phoenix WBC Station. Refer to Table 7 in Appendix B.

Aerial Precipitation Reduction - The point precipitation values used in this study are the values from Table 7 adjusted to account for reductions in precipitation depth when the storm covers a large area. The basis for applying these reduction factors is the information contained in NOAA Technical Memorandum NWS HYDRO-40. Refer to Appendix A, Miscellaneous References, item K. The factors applied and the resultant adjusted precipitation values are included in Tables 8 and 9 in Appendix B. The values in Tables 8 and 9 have been revised to reflect watershed area values used in the final HEC-1 input data file.

Physical Parameters:

Loss Rate Estimation, Pervious Areas - Precipitation loss rates were estimated using the Initial and Uniform Loss method. The loss rate values used in this study are indicated on Table 10 in Appendix B. They are arranged by SCS hydrologic soil group. The Initial Loss values are also arranged by three (3) soil moisture conditions; dry, normal and saturated. For the purposes of this study all bare, non-irrigated land, such as desert and mountain areas, were characterized as "dry". All urbanized parcels were assumed to meet the "normal" condition. The values used in this study were furnished by FCDMC. The values were applied to all pervious surfaces in the watershed.

Loss Rate Estimation, Impervious Areas - An existing condition land use map was prepared using the field data identified on the 100 scale photographs. The land use boundaries are indicated on this map. The individual parcel identifiers which are indicated on the map tie back to the Land Use Calculation Sheets contained in Appendix C. The most practical way to relate land use to the percent of a parcel which is impervious is via the zoning of the parcel in question. Therefore, a relationship between the two was developed by use of the values in TR-55 Table 2-2a. Refer to Appendix A, Miscellaneous References, item D. These

values were used as a base, along with other values obtained from the City of Phoenix Storm Drain Design Manual. Final values of percent impervious versus parcel zoning were set by spot checking impervious areas for each zone classification on the 100-scale photographs. All such checks were done using a planimeter. The relationship between percent impervious and parcel zoning which was used in this study is contained in Table 11 in Appendix B.

Loss Rate Estimation, Composite - Composite initial and uniform loss rates and percent impervious for each sub-basin were obtained by area averaging the values determined for each sub-area in the sub-basin. All areas were planimetered. Refer to Appendix C. SCS hydrologic soil group boundaries are shown on Exhibit "B". These boundaries were derived from the City of Phoenix Storm Drain Design Manual and spot checked using the SCS Soil Survey of Maricopa County, Arizona. The composite loss rates and percent impervious values were used as input to the computer model for hydrograph generation for each sub-basin.

Time of Concentration and Lag Time - Time of concentration flow routes were determined using the street flow patterns resultant from the field investigation. The longest hydraulic path was determined for each sub-basin and then was broken into physical segments. The segments were based on three (3) different flow conveyance systems. These are sheet flow, shallow concentrated flow and channelized flow.

Calculation of time of concentration was done in accordance with SCS TR-55 procedures. Refer to TR-55 chapter 3. Sheet flow was assumed for a limited number of sub-basins where the upper 300 feet or less of the basin was a parking lot or bare parcel of ground. Shallow concentrated flow was assumed for the first reach of a desert or mountain area where a channel has not formed. Channelized flow was assumed for the remainder of the reach length. Channelized flow was assumed to consist of either street flow with roll or vertical curbs, or a channel configuration. All channels were approximated as rectangular, trapezoidal or triangular in cross section. Where street flow was evaluated, the section was assumed

to flow at the top-of-curb depth. Channels were assumed to be flowing at the top-of-bank, except in the case of major channels. 100-year flow rates were used in this case, taken from previous studies or estimated. The use of the bank fill condition should result in the most conservative, or fastest, flow times. Overbank flows in these channels typically results in a widespread shallow flow condition with a subsequent slower average velocity.

The various reach segments were analyzed hydraulically in order to obtain an average velocity in the reach. The velocity was then used to calculate a reach flow time. Channel configurations were estimated from the available mapping and from visual observations made during the field investigation.

The goal of this procedure was to obtain a lag time for each sub-basin for input to the computer model. Lag time was calculated using the expression Lag = 0.6 x Time of Concentration. The results of the lag time calculations are listed in Table 1 in Appendix B. Supporting calculations are contained in Appendices F, G and H. Time of concentration flow paths and reach breaks are shown on Exhibit "C".

Flood Routing:

After a hydrograph was generated for a sub-basin, it was routed downstream to a confluence with another sub-basin. Three (3) methods were applied in this study to accomplish this. These were the Muskingum method, the Normal Depth Channel-Modified Puls method and the Kinematic Wave method. Refer to Exhibit "D" for a routing diagram of the computer model, and Appendix D for backup calculations.

Muskingum Method - The Muskingum method was applied in the upper and middle reaches of the watershed where the channel cross section varies substantially within the reach, and for routing down urban street alignments. This method was used for channels because an inordinate number of route operations would be required if the Normal Depth Channel - Modified Puls method were applied. More reach break-downs would be required because of variations in cross section geometry. This would be

impractical, and sufficient information was not available. Therefore, an average cross section for the reach was determined, and the Muskingum K coefficient was estimated using the average channel velocity to determine travel time through the reach. For the major washes this velocity was checked against the FEMA Study. The Muskingum X coefficient was initially chosen as 0.3, and then adjusted after evaluating the first computer run. Adjustments were made based on computation stability requirements and relative reach storage.

The Muskingum method was used for routing in street sections because the average velocity in the reach could be easily estimated using the full-flow velocity in the gutter. It would be impractical to obtain cross section data for each street section involved, and the results would not be substantially more accurate. Certain reaches were not included in the model because the reach travel time is less than the five (5) minute computation interval. The Muskingum method becomes numerically unstable for these conditions. The adjacent reach was, therefore, lengthened accordingly. Refer to Exhibit "D", reaches 1 to 2, 11 to 12 and 24 to 25. Adjustments made are described in the HEC-1 input file and indicated on Exhibit "D".

Normal Depth Channel, Modified Puls Method - This method was used in the channel reaches in the lower portion of the East Fork Cave Creek basin, and for routing in Cave Creek from Bell Road south to the confluence with Moon Valley Wash. This method was chosen for these reaches because more uniform cross sections exist and because of the large storage volume capacity of these reaches. This method was not applied to Moon Valley Wash below Thunderbird Road, and Cave Creek below the confluence with Moon Valley Wash, because the flow condition in these reaches is supercritical for the anticipated flows. This method is not applicable for supercritical flow.

Some problems were encountered with this method. Reach conditions were such that the method could be numerically unstable for certain flow conditions. The routed hydrographs for these reaches were examined for oscillations or outflows greater than inflows and found to be acceptable except for one. Refer to Exhibit "D" and reaches 18 to 21, and 22 to 6.

Reach 6 to 7 was not stable and was, therefore, removed from the model. It is unstable because the reach travel time is less than the five (5) minute computation interval.

Kinematic Wave Method - The Kinematic method was applied for one (1) condition. This was for a hydrograph route through a storm drain downstream from the City of Phoenix Detention Basin No. 7. Discharge from the detention basin is controlled by a low level outlet which discharges into a storm drain system. This method works well when it is desirable to translate a hydrograph downstream, but not attenuate it.

Reservoir Routing - There are three (3) major detention basins on the watershed, all in Basin 5. These are City of Phoenix Detention Basins 2a, 2b and 7. All three basins were included in the computer model. The hydrographs for the the contributing sub-basins were routed through their respective detention basins using the Modified Puls method. Reservoir volumes, spillway parameters and low level outlet configurations were taken from the as-built plans. No attempt was made to verify that the as-built volumes and spillway characteristics are correct, as that would be outside the scope of this study.

D. Calibration

B&N was asked by FCDMC to calibrate the model if it was practical. Correspondingly, we obtained 24-hour rain gauge data from the Deer Valley Airport for the period of 1956 through 1985. We also obtained stream gauge data from the USGS for the Peoria Avenue gauge on Cave Creek. The period for this data is 1957 through 1987.

Calibration was not attempted because land use has changed very rapidly on the watershed. We looked at the major 1972 storm. Calibrating to this storm would have required obtaining City of Phoenix aerial photography from several different mapping companies and creating a separate land use map. New time of concentration calculations for the entire watershed would also have to have been done. This work was beyond the scope of our contract, and was, therefore, not attempted. Our only chance would have been to use a storm in 1985. The 1986 100 scale photographs would provide

accurate land use data for that year, but not for preceding years. Unfortunately, there were not any major flows recorded in this period. The largest recorded flow close to 1985 was 138 cfs on December 29, 1984.

E. Special Problems:

Flow Splits - Flow splits were a major problem to be considered when constructing the hydrologic model. The majority of the watershed is relatively flat, with slopes averaging 0.5%. Flow tends to sheet across the sub-basins in a southwesterly direction, concentrating in major streets. Because of this condition, flow splits occur whenever the capacity of a street section is exceeded. A detailed study of the East Fork Cave Creek was done by NBS/Lowery for storm drain master planning purposes. Their approach was to use a two-dimensional diffusion model to simulate sheet flow across one-quarter mile boundaries. The necessity of applying this technique for a more detailed study than this one exemplifies the problem.

We were able to select our sub-basin boundaries so that the number of splits that must be accounted for were minimized. Where splits do occur, the overall effect on the model is minimal because the split flow will converge on the next downstream concentration point very quickly. Since we are not necessarily concerned with fine tuning flows at concentration points other than those on Cave Creek itself, we limited our analysis to those split flow locations which could have an effect on peak discharges in Cave Creek. The assumption made to facilitate this was to neglect split flow lost along major streets at local street intersections. Only major intersections were considered.

This approach narrowed the scope down to five (5) intersections. Four (4) of these directly affect flows in Cave Creek while one, at 7th Street and Bell Road, affects the East Fork Cave Creek routing pattern. The five intersections are:

1) 7th Street and Bell Road;
2) 32nd Street and Bell Road;
3) Renee Drive and 13th Avenue (just above Union Hills Drive);

4) Grovers Avenue and 13th Avenue; and
5) 19th Avenue and Bell Road.

Locations 3, 4 and 5 are in Basin 4. Most of Basin 4 was not considered as contributing area in previous studies. Development in this area has resulted in 19th Avenue being a major north to south channel which ultimately empties in Cave Creek downstream of Greenway Road. 19th Avenue also has a major storm drain in it that collects flow and delivers it to Cave Creek. The problem with these three (3) locations is that intersections 3 and 4 direct split flow from Basin 3 into Basin 4 and ultimately into 19th Avenue above Bell Road. All the flow collected in 19th Avenue north of Bell Road will have a strong impact on the 19th Avenue and Bell Road intersection. The Bell Road crown runs through this intersection which forces water west in Bell Road. However, this intersection will be flooded, which will allow surface flow in addition to pipe flow to continue south in 19th Avenue. The flow which proceeds west in Bell Road leaves the watershed. It was, therefore, necessary to estimate how much flow will continue south in 19th Avenue.

A similiar situation exists at location 2. This intersection will be flooded and flow which proceeds south in 32nd Street, both surface and pipe, leaves the watershed. Flow moving west in Bell Road impacts the East Fork Cave Creek.

The location 1 intersection will also be flooded, but all flow ends up in the East Fork Cave Creek. This split was modeled in order to more accurately estimate the peak discharge at 7th Street and the East Fork Cave Creek.

In order to model these splits, a survey crew was used to obtain detailed, accurate vertical and horizontal data for these intersections. This information was then used to develop a cross section for each of the downstream legs of the intersection. The cross section was assumed to be no wider than the street right-of-way, where the sides were extended vertically. Refer to Exhibit "C". The manning equation was then applied to develop a rating curve for both cross sections. Using relative conveyance capacity curves of the two cross sections, the diversion

routine in HEC-1 was used to split the hydrograph. Refer to Appendix E for support hydraulic calculations.

Storm Drain Pipes - FCDMC requested that we ignore pipe flows in our model. We felt that this was a good assumption except for five (5) locations which we looked at in more detail These were:

1) The 19th Avenue Storm Drain at Bell Road;
2) The 7th Street Storm Drain at Bell Road;
3) The 32nd Street Storm Drain at Bell Road;
4) The Thunderbird Road Storm Drain from 19th Avenue to Cave Creek; and
5) The 7th Street Storm Drain from Detention Basin No. 7 north to Roberts Road.

Locations 1, 2 and 3 were all involved in flow splits which were discussed previously. The pipes for these locations were assumed to flow full at a hydraulic gradient approximating the gutter slope of the street. Only pipes 48" or larger were considered. Number 4, the Thunderbird Road Storm Drain, crosses a sub-basin boundary and diverts flow from sub-basin 5F directly to Cave Creek. We checked the hydraulics of this pipe and determined that, given backwater from Cave Creek, this 75" diameter pipe can convey approximately 100 cfs. The flow in Cave Creek at this point is approximately 11,000 cfs, so we neglected the effects of this pipe.

The pipe at location number 5 conveys flow discharged from the Detention Basin No. 7 low level outlet. This flow was routed downstream in the pipe using the Kinematic Wave method. Refer to Appendix F for pipe hydraulics calculations.

Onsite Retention - The urbanized areas of the watershed for the most part lie within the corporate limits of the City of Phoenix and the Town of Paradise Valley. Both entities have existing requirements which specify that all developments retain the 100-year 2-hour duration storm volume which falls onsite. The field investigation of the watershed yielded the finding that the majority of areas in this watershed have no onsite retention, or at best, minimal retention. Commercial and multi-lot developments constructed within approximately the last five (5) years have

basically complied with the retention requirements. Retention facilities on these parcels are well constructed and most are graded so that virtually no runoff will leave the site during a major storm event. It was decided that the runoff volume retained by these parcels will have a definite effect on the downstream flows, and the effects should be included in the computer model.

There is not any overall mapping available which would allow an accurate estimation of the retention volume on a given parcel. There were some exceptions to this for isolated locations such as the Paradise Valley Golf Course and the Aire Libre neighborhood basin. Where such mapping is available, actual retention volumes were estimated. The remaining parcels were carefully screened during the field investigation. Parcels with questionable volumes were eliminated from consideration. The retention volume on the remaining parcels was assumed to be approximately the 10-year 2-hour rainfall depth, adjusted for aerial reduction. This is a conservative assumption which will account for the fact that some parcels considered to have full retention may only reduce the developed peak flow down to the pre-development value.

This approach was implemented in the computer by use of the diversion routine. The total estimated retention volume for each sub-basin was subtracted from the bottom of the hydrograph by diverting the estimated volume. The resultant hydrograph was then routed downstream. Refer to Table 1 for the estimated total retention volume for each sub-basin.

RESULTS AND CONCLUSIONS

A. General

The results of this study are summarized in Tables 1 through 6 which follow this discussion. Evaluation of the results indicate that peak flow rates result from a 24-hour duration storm for all three (3) recurrence intervals considered. The 6-hour storm results in the second highest flows and the 2-hour storm in the lowest flow values. Refer to Tables 2, 3, and 4. The HEC-1 printouts for the 2-hour and 6-hour storms are not included as a part of this report. Refer to the Preliminary Hydrology Report for these runs. The HEC-1 printouts for the 10-year and 50-year 24-hour storms were substituted for the 2-hour and 6-hour storm printouts for this final report, and are contained in Appendices "J" and "K".

B. Major Detention Basins

The City of Phoenix detention basin numbers 2a, 2b and 7, located in major basin number 5, are included in the computer model. It was determined that all three (3) detention basins have sufficient capacity to detain the 100-year 24-hour storm runoff volume without flow occurring in the spillway. Outflow from the low level outlets of all three (3) basins was routed downstream.

C. On-Site Retention

The simulation of the effects of on-site retention in the watershed had no effect on the downstream peak discharges for any of the three (3) recurrence interval storms. The estimated retention volume was insignificant compared to the total volume of runoff for any particular sub-basin.

D. Peak Discharges

The 100-year 24-hour peak discharges in Cave Creek compare favorably with the results of previous studies for the reach from the top of the

watershed down to the confluence with the East Fork Cave Creek. Refer to Tables 5 and 6. The B&N peak discharge in Cave Creek is 5,700 cfs at this point, which is 300 cfs higher than the previous FEMA value. The B&N peak discharge is 100 cfs lower than the COE future condition value. The differences at this point are attributed to urbanization on the watershed. The peak discharge in the East Fork Cave Creek at the confluence with Cave Creek is 500 cfs higher than the previous FEMA value. It is 100 cfs lower than the future condition value estimated by NBS/Lowery, and the same as and Dibble and Associates value.

The estimated peak discharge values in Cave Creek below the East Fork Cave Creek confluence are dramatically higher than the previous FEMA and COE values. The B&N value at this location is 14,600 cfs while the FEMA and COE values are 11,000 and 14,000 cfs, respectively. Since the upstream values compare relatively well, the difference is in timing. The Cave Creek peak discharge occurs at 13.0 hours while the East Fork Cave Creek peak occurs at 12.8 hours. These peaks are essentially coincidental, which results in the high downstream value. The 1980 FEMA hydrology report is not available for review, so we can not make comparisons with the previous timing values. The COE only published values for Cave Creek. The COE Muskingum average routing velocity from Deer Valley Road to the ACDC is 8 fps. The B&N average velocity is 10.5 fps. It is assumed that this difference is primarily due to channelization of Cave Creek downstream from Bell Road which has been done by private development. Muskingum K and X coefficients compare favorably. The B&N average K and X values per reach are 0.23 and 0.3, respectively, as compared to 0.25 and 0.3 for the COE.

Runoff from most of major basin 4 impacts Cave Creek approximately 600 feet downstream of the 19th Avenue crossing. Most of this three (3) square mile basin has not been included as contributing watershed in previous studies. Urbanization, local street patterns in the area and construction of 19th Avenue and the 19th Avenue storm drain system have resulted in this change. Although some surface flow leaves the watershed at Bell Road and 19th Avenue, the majority of the area impacts Cave Creek. At this point, the peak flow in Cave Creek increases from 14,600 to 15,400 cfs.

The next major concentration point on Cave Creek is at the confluence with Moon Valley Wash. The peak discharge here increases from 15,400 cfs to 17,500 cfs. The previous FEMA and future condition COE values at this location are 12,000 and 16,000 cfs respectively. Again, timing appears to be the controlling difference. The Cave Creek time to peak at this location is 13.0 hours, while the Moon Valley Wash time to peak is 12.5 hours. The peak discharge from Moon Valley Wash is not included in the 1988 FEMA "Summary of Discharges" table. The COE did not publish their peak discharge either, so the difference could be due to land use changes as well. The land use percent impervious value for the entire watershed averaged 32%, as compared to the COE value of 40%. Since the B&N value is based on a land use parcel by parcel breakdown, it is assumed to be the more accurate. Refer to Appendix A, FCDMC, reference C for the source of the COE data discussed above. Summary tables 1 through 6 follow.

TABLE 1

SUMMARY OF SUB-BASIN DATA AND RESULTS

SUB-BASIN I.D.	AREA (S.M.)	% IMPERVIOUS (%)	INITIAL RAINFALL LOSS (IN.)	UNIFORM RAINFALL LOSS RATE (IN./HR.)	LAG TIME (HRS.)	10-YEAR STORM RETENTION VOL. (AC.-FT.)	100-YEAR PEAK DISCHARGE (CFS)
1A	0.903	0	0.49	0.13	0.53	0	1095
1B	1.601	0	.48	.21	0.29	0	2703
1C	1.492	0.6	.50	.20	0.45	0	1943
1D	0.963	6.3	.45	.18	0.28	0	1679
SUB-TOTALS =	4.959	0.2% (AVG.)	0.48 (AVG.)	0.19 (AVG.)		0	
2A	0.870	19.6	.37	.20	0.25	0	1578
2B	0.414	12.0	.37	.25	0.19	0	853
2C	1.177	53.3	.32	.25	0.61	0.1	1310
2D	1.191	32.8	.34	.25	0.65	4	1234
2E	1.095	39.7	.33	.22	0.42	0	1537
2F	0.952	58.0	.33	.23	0.45	3.9	1303
2G	0.917	29.2	.33	.16	0.39	0	1362
2H	1.425	44.4	.32	.23	0.81	11.6	1293
2I	0.985	40.3	.37	.24	0.48	7.7	1272
2J	0.704	24.6	.37	.20	0.71	2.4	692
2K	1.336	42.3	.36	.24	0.38	7.7	1994
2L	0.681	66.2	.31	.25	0.33	2.0	986
2M	1.174	40.6	.34	.21	0.24	8.9	2210
2N	0.475	33.3	.31	.16	0.20	0	995
2O	0.639	38.1	.31	.23	0.67	2.4	657
2P	0.592	55.7	.31	.25	0.53	1.8	725
SUB-TOTALS =	14.547	40.3% (AVG.)	0.34 (AVG.)	0.23 (AVG.)		49.5	
3A	1.111	2.3	.43	.14	0.32	0	1823
3B	0.944	31.5	.39	.25	1.02	0	695
3C	1.559	31.6	.38	.20	0.40	4.2	2257
3D	0.408	18.2	.43	.24	0.17	0	871
SUB-TOTALS =	4.022	22.1% (AVG.)	0.40 (AVG.)	0.20 (AVG)		4.2	
4A	1.264	46.8	.32	.19	0.85	7.8	1124
4B	0.675	79.4	.30	.20	0.24	4.3	1307
4C	1.029	39.7	.31	.24	0.62	5.1	1117
SUB-TOTALS =	2.968	51.8% (AVG.)	0.31 (AVG.)	0.21 (AVG.)		17.2	
5A	1.268	25.5	.27	.17	0.21	0	2582
5B	0.686	38.0	.30	.25	0.40	0	985
5C	0.514	14.6	.34	.05	0.16	0	1155

TABLE 1

SUMMARY OF SUB-BASIN DATA AND RESULTS (Continued)

SUB-BASIN I.D.	AREA (S.M.)	% IMPERVIOUS (%)	INITIAL RAINFALL LOSS (IN.)	UNIFORM RAINFALL LOSS RATE (IN./HR.)	LAG TIME (HRS.)	10-YEAR STORM RETENTION VOL. (AC.-FT.)	PEAK DISCHARGE (CFS)
5D	0.554	2.1	.39	.05	0.10	0	1431
5E	1.592	39.8	.27	.11	0.37	6.0	2483
5F	1.522	28.3	.26	.14	0.50	5.0	1952
5G	0.429	3.3	.38	.05	0.17	0	957
SUB-TOTALS	4.565	26.6% (AVG.)	0.29 (AVG.)	0.13 (AVG.)		11.0	
6A	0.459	43.8	.33	.20	0.45	1.4	623
6B	1.138	61.5	.32	.20	0.63	13.0	1272
SUB-TOTALS	1.597	56.4% (AVG.)	0.32	0.20 (AVG.)		14.4	
TOTALS =	34.636 S.M.	31.6% (AVG.)	0.35"(AVG.)	0.20"(AVG.)		95.3 AC-FT	

TABLE 2

PEAK DISCHARGES IN CAVE CREEK
(cfs)

Location	HEC-1 Operation	10 YEAR 24 hr	50 YEAR 24 hr.	100 YEAR 24 hr.	100-Year Time To Peak (Hrs.)
Above CAP Canal	HC1	1,700	2,500	2,900	12.2
Below CAP Canal	HC2	2,700	4,000	4,600	12.3
Below Deer Valley Drive	HC3	3,000	4,500	5,200	12.4
Above East Fork	HC5.1	3,300	4,900	5,700	13.0
Below East Fork	HC6.2	8,400	12,700	14,600	13.0
Below 19th Avenue	HC7	8,900	13,400	15,400	13.0
Above Moon Valley Wash	HC7	8,900	13,400	15,400	13.0
Below Moon Valley Wash	HC11.2	10,100	15,300	17,500	12.8
At ACDC	HC13	10,300	16,100	18,500	12.8

TABLE 3

PEAK DISCHARGES IN THE EAST FORK OF CAVE CREEK
(cfs)

Location	HEC-1 Operation	10 YEAR 24 hr	50 YEAR 24 hr.	100 YEAR 24 hr.	100-Year Time To Peak (Hrs.)
Beardsley Road	HC14	1,500	2,100	2,400	12.1
Union Hills Drive	HC15	2,100	3,000	3,500	12.4
Bell Road and 20th St.	HC16	2,200	3,300	3,700	12.8
16th Street	HC17.1	3,700	5,500	6,400	12.9
7th Street	HC18	4,800	7,100	8,100	12.8
Paradise Lane and Central Avenue	HC21	5,300	7,900	9,100	12.7
Coral Gables and 7th Avenue	HC22	5,500	8,200	9,400	12.8
Cave Creek	HC6	5,500	8,300	9,500	12.8

TABLE 4

PEAK DISCHARGES IN MOON VALLEY WASH
(cfs)

Location	HEC-1 Operation	10 YEAR 24 hr	50 YEAR 24 hr.	100 YEAR 24 hr.	100-Year Time To Peak (Hrs.)
Above Thunderbird Road	HC28	2,000	2,900	3,200	12.4
Below Thunderbird Road	HC29	3,000	4,400	5,000	12.4
Cave Creek	HC11	4,000	5,700	6,500	12.5

TABLE 5

COMPARISON OF 100-YEAR PEAK DISCHARGES IN CAVE CREEK

WITH PREVIOUS STUDIES

Location	B&N - 1989 Existing Cond.		FEMA - 1988 Existing Cond.		C.O.E. - 1987 Future Cond.	
	D.A. (S.M.)	Q (cfs)	D.A. (S.M.)	Q (cfs)	D.A. (S.M.)	Q (cfs)
Above CAP Canal	2.5	2,900	---	---	---	---
Below CAP Canal	4.0	4,600	---	---	---	---
Below Deer Valley Road	5.0	5,200	5.0	5,400	5.0	5,400
Above East Fork	8.6	5,700	---	5,400	8.1	5,800
Below East Fork	23.5	14,600	22.5	11,000	21.1	14,000
Below 19th Avenue	25.5	15,400	---	---	---	---
Above Moon Valley Wash	26.5	15,400	---	11,000	22.5	14,000
Below Moon Valley Wash	33.1	17,500	29.3	12,000	29.3	16,000
At ACDC	34.7	18,500	30.4	13,000	30.4	16,000

TABLE 6

100-YEAR PEAK DISCHARGE IN THE EAST FORK AT THE CONFLUENCE WITH CAVE CREEK

COMPARISON WITH PREVIOUS STUDIES

Burgess & Niple, Inc., 1989 (this study)	9,500 CFS, 14.6 s.m.
FEMA, 1988	9,000 cfs, 14.4 s.m.
NBS/Lowry - EFCC Area Drainage Master Study	9,606 cfs, 16.5 s.m.
Dibble & Assoc. - Greenway Road Location Study	9,500 cfs, ...

APPENDIX "A"

LISTING OF REFERENCES

F.C.D.M.C. CAVE CREEK FLOOD INSURANCE STUDY

Summary of Records Research Findings

October, 1989

The records of the following agencies/companies were researched:

1. Flood Control District of Maricopa County (FCDMC)
2. City of Phoenix Floodplain Management (Phoenix)
3. Arizona Department of Water Resources (ADWR)
4. U.S. Soil Conservation Service (SCS)
5. U.S. Geological Survey (USGS)
6. U.S. Army Corps of Engineers (COE)
7. U.S. Bureau of Reclamation (U.S.B.R.)
8. Arizona State University Climatology laboratory
9. Aerial Mapping Company
10. AMWEST Engineering Company, Inc.

A summary of the information gathered is as follows:

FCDMC

1. Wirth Associates, Inc., Cave Creek Wash Master Development Plan Executive Summary, February, 1982.

2. NBS/Lowry, Upper East Fork Cave Creek Area Drainage Master Study, October, 1987.

3. U.S. Army Corps of Engineers, Gila River Basin, Phoenix, Arizona and Vicinity, Hydrology Park 2, Design Memorandum No. 2, 1982.

4. U.S. Soil Conservation Service, Arizona Irrigation Guide, Part 681 Soils, 1986.

5. Excerpts from NOAA Technical Memorandum NWS Hydro-40 Depth-Area Ratios in the Semi-Arid Southwest United States, August, 1984.

6. Two, six and 24-hour Rainfall Distributions.

7. Miscellaneous articles on the Green and Ampt procedure.

8. Uniform Drainage Policies and Standards for Maricopa County, Arizona, February 25, 1987.

9. Preliminary changes to item H. above currently being prepared by FCDMC.

10. Paradise Valley Park and Golf Course as-built contour mapping, furnished by Maricopa County Parks and Recreation Department.

CITY OF PHOENIX

1. U.S. Army Corps of Engineers, Gila River Basin, New River and Phoenix City Streams, Arizona, Design Memorandum No. 2, Hydrology Part 1, 1973.

2. U.S. Army Corps of Engineers, Report on Flood of 22 June, 1972, Phoenix Metropolitan Area, Arizona, October, 1972.

3. U.S. Army Corps of Engineers, Gila River Basin, New River and Phoenix City Streams, Arizona, Design Memorandum No. 3, General Design Memorandum - Phase 1, Plan Formulation, March, 1976.

4. U.S. Army Corps of Engineers, Gila River Basin, Phoenix, Arizona and Vicinity, Arizona Canal Diversion Channel - 40th Street to Cactus Road, April, 1986.

5. Yost and Gardner Engineers, City of Phoenix, Arizona, Cave Creek Flood Maps, project No. ST-74248.00, April, 1975.

6. AMWEST Engineering Company, Inc., Hydraulic Report for the Cave Creek Wash From 11th Avenue to Tierra Buena, April, 1988.

7. Federal Emergency Management Agency, Flood Insurance Study, Maricopa County, Arizona and Incorporated Areas, Volumes 1 through 3, April, 1988.

8. Available one-quarter section Aerial Photographs at 1"=100' scale, and topographic maps at 1"=200' scale, encompassing the study watershed.

9. City of Phoenix 1"=400' scale zoning maps encompassing the study watershed.

10. Cella Barr Associates, North Central Area Master Storm Drainage Study (East Half) Project No. ST-79190.01, April, 1981.

11. Cella Barr Associates, Moon Valley Storm Drainage Study, Project No. ST-79190.01, April, 1982.

12. John Carollo Engineers, Investigation of North Phoenix Mountains Flood Detention Basins, Project No. ST-71185.00, January 17, 1973.

13. Supplement to Report "L", by John Carollo Engineers, dated March 28, 1973.

14. CIV-TECH Engineering Co., Detention Basin Number 7 Spillway Channel Study, Project No. ST-890426, May 23, 1989.

15. City of Phoenix 1"=600' storm drain maps encompassing the watershed area.

16. U.S. Army Corps of Engineers, Gila River Basin, Phoenix, Arizona, and Vicinity, Arizona Canal Diversion Channel Design Memorandum No. 12, April, 1986.

17. Wirth Associates, Inc., Cave Creek Wash Master Development Plan, Cave Buttes Dam South to Greenway Road, February, 1982.

18. City of Phoenix, Arizona, Sweetwater Channel, 15th Ave.-Cave Creek, ST-73141.00, as-built drawings, September 15, 1976.

19. City of Phoenix, Arizona, Detention Dam #7 Survey, April, 1986.

20. City of Phoenix, Arizona, Detention Basin No. 7, Central Ave. & Cactus Rd., ST-75093.00, as-built drawings, August 8, 1978.

21. City of Phoenix, Arizona, North Mountain Detention Dams No. 2a & 2b, 7th Street and Thunderbird Road, Project No. 71183.00, as-built drawings, May 3, 1976.

22. City of Phoenix, Arizona, Peoria Avenue, ST-77079.01, Cave Creek Wash to 18th Ave., as-built drawings, February 2, 1981.

23. City of Phoenix, Arizona, Cholla Street Storm Sewer, Sewer Lateral, Cave Creek Wash to 19th Avenue, ST-79256.00, ST-792564, as-built drawings, February 9, 1983.

24. City of Phoenix, Arizona, Thunderbird Road, 19th Avenue to Coral Gables Drive, FMS Index No. P-780155, P-78015.00, as-built drawings, December 12, 1985.

25. City of Phoenix, Arizona, Aire Libre Paving Improvement District, NP-844621, as-built drawings, March 24, 1989.

26. CIV-TECH Engineering Co., Detention Basin Number 7 Spillway Channel Study.

ADWR

1. Dam safety inspection records, as-built plans and correspondence concerning City of Phoenix Detention Basin Dam Nos. 2a, 2b and 7.

2. Association of State Floodplain Managers documentation standards outline for FIS studies and LOMR's, dated August 8, 1989.

SCS

1. U.S. Soil Conservation Service, Soil Survey of Maricopa County, Arizona, Central Part, September, 1977.

USGS

1. Stream flow gage data for Cave Creek at Peoria Avenue bridge. Record period is 1957 through 1987.

COE

1. Corps of Engineers publications were obtained from other agencies, as listed herein. After all information obtained to date is reviewed, the COE in Los Angeles will be contacted with questions or requests for further detail.

USBR

1. The Arizona Projects Office (APO) was contacted. The Central Arizona Project (CAP) canal, reaches 10 and 11 cross the study watershed. Design hydrology summaries, structure locations, and plan sections were obtained, were applicable.

ARIZONA STATE UNIVERSITY CLIMATOLOGY LABORATORY

1. Precipitation records for the Deer Valley Airport station were obtained. The period of record is from 1950 to 1985, with readings taken every 24 hours.

AERIAL MAPPING COMPANY

1. Aerial photography, dated December, 1988, of the watershed area from Bell Road north to Cave Buttes Dam was obtained at a scale of 1"=1000'.

2. The U.S.G.S. quadrangle maps of the area covered by the aerial photography was photographed and reproduced at a scale of 1"=1000'.

MISCELLANEOUS REFERENCES

The following publications are referenced for use in the hydrology portion of this study:

1. City of Phoenix, Arizona, Storm Drain Design Manual, (not dated).

2. City of Phoenix, Arizona, Storm Drain Design Manual, Subdivision Drainage Design, November 6, 1985.

3. U.S. Soil Conservation Service, National Engineering Handbook, Section 4, Hydrology, August, 1972.

4. U.S. Soil Conservation Service, Urban Hydrology for Small Watersheds, 2nd Edition, (Technical Release Number 55), June, 1986.

5. U.S. Army Corps of Engineers, HEC-1 Flood Hydrograph Package Users Manual, March, 1987.

6. U.S. Army Corps of Engineers, Hydrologic Analysis of Ungaged Watersheds Using HEC-1, April, 1982.

7. U.S. Geological Survey, Flood Characteristics of Urban Watersheds in the United States, 1983.

8. ASCE National Convention, Approximate Method for Quick Flood Plain Mapping, November, 1975.

9. Federal Emergency Management Agency, Conditions and Criteria for Floodway Revisions. Conditions and Criteria for Issuing Letters of Map Revision. Conditions and Criteria for Issuing Letters of Map Amendment, October, 1988.

10. Federal Emergency Management Agency, Flood Insurance Study Guidelines and Specifications for Study Contractors, September, 1985.

11. National Weather Service, NOAA Technical Memorandum NWS Hydro-40, Depth-Area Ratios in the Semi-Arid Southwest United States, August, 1984.

12. Brakensiek, D.L. and W.J. Rawls, 1983. Green-Ampt Infiltration Model Parameters for Hydrologic Classification of Soils, John Borrelli, Victor R. Hasfurther, and Robert D. Burman (ed.) Advances in Irrigation and Drainage Surviving External Pressures. Proceedings of American Society of Civil Engineers specialty conference, New York, New York, pages 226-233.

13. Town of Paradise Valley, Arizona New Subdivision Drainage Design Policy. (Not dated)

14. Hoggan, Daniel H., Computer Assisted Floodplain Hydrology & Hydrolics, McGraw-Hill, Inc., copyright 1989.

16. U. S. Geological Survey, A Technique for Determining Depths for T-Year Discharges in Rigid-Boundary Channels, December, 1977.

17. American Society of Agricultural Engineers, by Rawls, Shalaby and McCuen, Evaluation of Methods for Determining Urban Runoff Curve Numbers, May, 1981.

18. ProHEC1 and ProHEC2 implementations of the COE HEC-1 and HEC-2 computer programs, by Dodson & Associates, Inc., dated 1989.

APPENDIX "B"

STATISTICAL AND PHYSICAL HYDROLOGIC PARAMETERS

TABLE 7

CITY OF PHOENIX POINT PRECIPITATION VALUES

Station: Phoenix WBC
Latitude: 33° 26'
Longitude: 112° 01'
Elevation (feet): 117

RETURN PERIOD (YEARS)

DURATIONS	1	2	5	10	25	50	100
5 min.	0.17	0.26	0.38	0.47	0.59	0.66	0.77
10 min.	0.27	0.40	0.59	0.72	0.81	1.06	1.20
15 min.	0.34	0.50	0.74	0.92	1.15	1.34	1.52
30 min.	0.47	0.70	1.3	1.27	1.60	1.86	2.10
1 hr.	0.80	0.88	1.30	1.61	2.02	2.35	2.66
2 hr.	0.65	0.94	1.39	1.72	2.15	2.49	2.82
3 hr.	0.68	1.01	1.48	1.82	2.27	2.62	2.97
6 hr.	0.81	1.16	1.70	2.07	2.57	2.96	3.35
12 hr.	0.91	1.30	1.90	2.30	2.84	3.25	3.69
24 hr.	1.20	1.44	2.10	2.53	3.12	3.57	4.04

TABLE 8

AERIAL PRECIPITATION REDUCTION DATA

2.54 Year Depth-Area Ratios
Zones A and C - Central Arizona

NOAA Technical Memorandum NWS HYDRO-40

WATERSHED AREA (SQ. MI.)	STORM DURATION		
	2 HR.	6 HR.	24 HR.
5	0.85	0.91	0.98
10	0.80	0.85	0.95
15	0.77	0.82	0.93
20	0.74	0.79	0.92
30	0.69	0.75	0.90
40	0.66	0.72	0.89
50	0.64	0.71	0.88
60	0.63	0.69	0.87
70	0.61	0.68	0.86
80	0.60	0.67	0.86
90	0.59	0.66	0.85
100	0.59	0.65	0.85

Cave Creek Watershed Area = 34.7 sq. mi.

TABLE 9

POINT PRECIPITATION VALUES USED FOR THIS STUDY
(Inches)

WATERSHED AREA (SQUARE MILES.)	RETURN PERIOD (YEARS)		
	10	50	100
5	2.48	3.50	3.96
10	2.40	3.39	3.84
15	2.35	3.32	3.76
20	2.33	3.28	3.72
35	2.28	3.21	3.64

NOTE: Values in this table are the corresponding values from Table 7 adjusted for aerial reduction by the corresponding factors from Table 8 for a 24-hour duration storm.

TABLE 10

INITIAL AND UNIFORM LOSS RATES

Initial Loss plus Uniform Loss Rate parameter values
for bare ground according to hydrologic soil group

Hydrologic Soil Group	Uniform Loss Rate CNSTL	Initial Loss, in inches STRTL [1]		
		Dry	Normal	Saturated
(1)	(2)	(3)	(4)	(5)
A	.40	.6	.5	0
B	.25	.5	.3	0
C	.15	.5	.3	0
D	.05	.4	.2	0

[1] Selection of STRTL:

Dry - for nonirrigated lands such as desert and rangeland
Normal - for irrigated lawn, turf, and permanent pasture
Saturated - for irrigated agricultural land

TABLE 11

PERCENT IMPERVIOUS ESTIMATES FOR CITY OF PHOENIX ZONING CLASSIFICATIONS

CAVE CREEK F.I.S.

Project No. 7833

ZONING TYPES		% IMPERVIOUS (INCLUDING RIGHT-OF-WAY)
RE-43	Single Family Res. 43560 S.F. Lots Minimum	20
RE-35	Single Family Res. 35000 S.F. Lots Minimum	22
RE-24	Single Family Res. 24000 S.F. Lots Minimum	25
R1-18	Single Family Res. 18000 S.F. Lots Minimum	25
R1-14	Single Family Res. 14000 S.F. Lots Minimum	30
R1-10	Single Family Res. 10000 S.F. Lots Minimum	38
R1-8	Single Family Res. 8000 S.F. Lots Minimum	45
R1-6	Single Family Res. 6000 S.F. Lots Minimum	50
R-0	Res. Office	50
R-2	Multi-Family Res. 1-Unit for Each 4000 S.F.	60
R-H	Resort District	65
R-3	Multi-Family Res. 1-Unit For Each 3000 S.F.	65
R-4	Multi-Family Res. 1-Unit For Each 1500 S.F.	65
R-4A	Multi-Family Res. 1-Unit For Each 1000 S.F.	70
R-5	Multi-Family Res. 1-Unit For Each 1000 S.F.	70
C-0	Commercial Office District - Restricted Commercial	75
HR	High Rise District	85
PSC	Planned Shopping Center	85
C-1	Neighborhood Commercial	95
C-2	Intermediate Commercial	95
C-3	General Commercial	95
P-1	Parking (Open)	VARIABLE
P-2	Parking (Structures)	85
IND PARK	Industrial Park	75
A-1	Light Industrial (Excluding Open Mining)	75
A-2	Heavy Industrial	75
P.A.D.	Planned Area Development	85
P.C.D.	Planned Community District	60
D.G.	Dwelling Group	85
RIGHT-OF-WAY (R.O.W.)		VARIABLE
S-1	Ranch or Farm Res. 43560 S.F. Lots Minimum	15
S-2	Ranch or Farm Commercial	18
CP/BP	Business Park	65
DESERT	Natural Desert Cover	0

TABLE 12

2-HOUR STORM RAINFALL DISTRIBUTION
(Furnished by FCDMC)

Time Increment	Cumulative ppt
0.00	0.000
0.25	0.039
0.50	0.087
0.75	0.280
1.00	0.791
1.25	0.872
1.50	0.924
1.75	0.967
2.00	1.000

TABLE 13

6-HOUR STORM RAINFALL DISTRIBUTION
(Furnished by FCDMC)

0.00	0.000
0.25	0.011
0.50	0.022
0.75	0.035
1.00	0.048
1.25	0.062
1.50	0.079
1.75	0.100
2.00	0.125
2.25	0.155
2.50	0.192
2.75	0.339
3.00	0.729
3.25	0.791
3.50	0.830
3.75	0.862
4.00	0.887
4.25	0.908
4.50	0.926
4.75	0.942
5.00	0.956
5.25	0.969
5.50	0.980
5.75	0.990
6.00	1.000

TABLE 14

24-HOUR STORM RAINFALL DISTRIBUTION

STANDARD SCS 24-HOUR, TYPE II DISTRIBUTION
CUMULATIVE RAINFALL TABLE
(REVISED MAY 1982)

TABLE NO.	TIME INCREMENT 0.2500 HRS = 15 MIN.				
5 RAINFL 2					
8	0.0	0.0020	0.0050	0.0080	0.0110
8	0.0140	0.0170	0.0200	0.0230	0.0260
8	0.0290	0.0320	0.0350	0.0380	0.0410
8	0.0440	0.0480	0.0520	0.0560	0.0600
8	0.0640	0.0680	0.0720	0.0760	0.0800
8	0.0850	0.0900	0.0950	0.1000	0.1050
8	0.1100	0.1150	0.1200	0.1260	0.1330
8	0.1400	0.1470	0.1550	0.1630	0.1720
8	0.1810	0.1910	0.2030	0.2180	0.2360
8	0.2570	0.2830	0.3870	0.6630	0.7070
8	0.7350	0.7580	0.7760	0.7910	0.8040
8	0.8150	0.8250	0.8340	0.8420	0.8490
8	0.8560	0.8630	0.8690	0.8750	0.8810
8	0.8870	0.8930	0.8980	0.9030	0.9080
8	0.9130	0.9180	0.9220	0.9260	0.9300
8	0.9340	0.9380	0.9420	0.9460	0.9500
8	0.9530	0.9560	0.9590	0.9620	0.9650
8	0.9680	0.9710	0.9740	0.9770	0.9800
8	0.9830	0.9860	0.9890	0.9920	0.9950
8	0.9980	1.0000	1.0000	1.0000	1.0000
9 ENDTBL					

APPENDIX "C"

LAND USE CALCULATIONS SHEETS

RAINFALL LOSS CHARACTERISITICS

CAVE CREEK F.I.S.

Project No. 7833

SUB BASIN	SUB AREA IDENTIFIER	AREA ACRES	AREA SQ. MI.	SUB AREA PERCENTAGE OF TOTAL SUB BASIN AREA (%)	LAND USE: ACTUAL ZONED LAND USE AUGUST 1989	LAND USE: SUB AREA % IMPERVIOUS AUGUST 1989	LAND USE: SUB BASIN COMPOSITE % IMPERVIOUS AUGUST 1989	SOIL CONDITION: HYDROLOGIC SOIL TYPE	SOIL CONDITION: SOIL TYPE PERCENTAGE OF SUB BASIN AREA (%)	SOIL CONDITION: INITIAL RAINFALL LOSS (IN.)	SOIL CONDITION: UNIFORM RAINFALL LOSS RATE (IN./HR.)	SOIL CONDITION: SUB BASIN COMPOSITE INITIAL RAINFALL LOSS (IN.)	SOIL CONDITION: SUB BASIN COMPOSITE UNIFORM RAINFALL LOSS RATE (IN./HR.)
1A	N/A	578.0	0.903	N/A	DESERT	N/A	0	C	75	.5	.15		
								D	25	.4	.05	0.48	0.13
1B	N/A	1024.4	1.601	N/A	DESERT	N/A	0	B	80	.5	.25		
								C	2	.5	.15		
								D	18	.4	.05	0.48	0.21
1C		955.1	1.492										
	1C1	946.5		99.2	DESERT	0		B	55	.5	.25		
								C	45	.5	.15		
	1C2	8.5		0.8	IND. PK.	75	0.6	B	100	.3	.25	0.50	0.20
1D		616.5	0.963										
	1D1	564.8		91.6	DESERT	0		B	65	.5	.25		
								D	35	.4	.05		
	1D2	37.1		6.0	A-1	75		B	60	.3	.25		
								D	40	.2	.05		
	1D3	14.6		2.4	A-1	75	6.3	B	100	.3	.25	0.45	0.10
2A		556.89	0.870										
	2A1	99.2		17.8	DESERT	0		B	5	.5	.25		
								D	95	.4	.05		
	2A2	36.1		6.5	S-1	15		B	100	.3	.25		
	2A3	20.2		3.6	CP/BP	65		B	100	.3	.25		
	2A4	25.3		4.5	DESERT	0		B	100	.5	.25		
	2A5	77.1		13.8	RE-35	22		B	83	.3	.25		
								D	17	.2	.05		
	2A6	19.21		3.5	S-1	15		B	100	.3	.25		
	2A7	66.54		12.0	DESERT	0		B	100	.5	.25		
	2A8	30.36		5.4	RE-35	22		B	100	.3	.25		
	2A9	12.10		2.2	C-2	95		B	100	.3	.25		
	2A10	25.86		4.6	S-1	15		B	100	.3	.25		
	2A11	9.01		1.6	C-2	95		B	100	.3	.25		
	2A12	9.61		1.7	PSC	85		B	100	.3	.25		
	2A13	10.20		1.8	R-4	65		B	100	.3	.25		
	2A14	13.17		2.4	R1-8	45		B	88	.3	.25		
								D	12	.2	.05		
	2A15	13.17		2.4	R-4	65		B	100	.3	.25		

RAINFALL LOSS CHARACTERISITICS

CAVE CREEK F.I.S.

Project No. 7833

SUB BASIN	SUB AREA IDENTIFIER	AREA ACRES	AREA SQ. MI.	SUB AREA PERCENTAGE OF TOTAL SUB BASIN AREA (%)	LAND USE: ACTUAL ZONED LAND USE AUGUST 1989	LAND USE: SUB AREA % IMPERVIOUS AUGUST 1989	LAND USE: SUB BASIN COMPOSITE % IMPERVIOUS AUGUST 1989	SOIL CONDITION: HYDROLOGIC SOIL TYPE	SOIL CONDITION: SOIL TYPE PERCENTAGE OF SUB BASIN AREA (%)	SOIL CONDITION: INITIAL RAINFALL LOSS (IN.)	SOIL CONDITION: UNIFORM RAINFALL LOSS RATE (IN./HR.)	SOIL CONDITION: SUB BASIN COMPOSITE INITIAL RAINFALL LOSS (IN.)	SOIL CONDITION: SUB BASIN COMPOSITE UNIFORM RAINFALL LOSS RATE (IN./HR.)
	2A16	55.15		9.9	DESERT	0		B	65	.5	.25		
								D	35	.4	.05		
	2A17	6.46		1.2	R1-8	45		D	100	.2	.05		
	2A18	16.17		2.9	DESERT	0		D	100	.4	.05		
	2A19	2.25		0.4	R-3	65		B	100	.3	.25		
	2A20	9.73		1.8	R-3	65	19.6	B	100	.3	.25	0.37	0.20
2B		264.96	0.414										
	2B1	10.32		3.9	DESERT	0		B	100	.5	.25		
	2B2	12.45		4.7	ASSUME P-1	0		B	100	.3	.25		
	2B3	109.63		41.4	RE-35	22		B	100	.3	.25		
	2B4	15.89		6.0	S-1	15		B	100	.3	.25		
	2B5	35.70		13.5	S-1	15		B	100	.3	.25		
	2B6	80.77		30.5	DESERT	0	12.0	B	100	.5	.25	0.37	0.25
2C		753.29	1.177										
	2C1	102.95		13.7	R-2	60		B	100	.3	.25		
	2C2	48.51		6.4	R1-8	45		B	100	.3	.25		
	2C3	114.10		15.1	R1-6	50		B	100	.3	.25		
	2C4	34.04		4.5	C-2	95		B	100	.3	.25		
	2C5	9.49		1.2	C-2	95		B	100	.3	.25		
	2C6	0.71		0.09	C-1	95		B	100	.3	.25		
	2C7	66.90		8.9	R-4	65		B	100	.3	.25		
	2C8	10.20		1.4	R1-8	45		B	100	.3	.25		
	2C9	1.78		0.2	DESERT	0		B	100	.5	.25		
	2C10	29.77		4.0	R-2	60		B	100	.3	.25		
	2C11	7.59		1.0	R-5	70		B	100	.3	.25		
	2C12	2.85		0.4	PSC	85		B	100	.3	.25		
	2C13	3.00		0.4	C-2	95		B	100	.3	.25		
	2C14	36.89		4.9	DESERT	0		B	100	.5	.25		
	2C15	3.56		0.5	C-3	95		B	100	.3	.25		
	2C16	31.55		4.2	R-4	65		B	100	.3	.25		
	2C17	150.75		20.0	R1-8	45		B	100	.3	.25		
	2C18	40.33		5.4	R-2	60		B	100	.3	.25		
	2C19	1.19		0.2	R-3	65		B	100	.3	.25		
	2C20	19.69		2.6	DESERT	0		B	100	.5	.25		
	2C21	22.06		2.9	R-2	60		B	100	.3	.25		

RAINFALL LOSS CHARACTERISITICS

CAVE CREEK F.I.S.

Project No. 7833

SUB BASIN	SUB AREA IDENTIFIER	AREA ACRES	AREA SQ. MI.	SUB AREA PERCENTAGE OF TOTAL SUB BASIN AREA (%)	LAND USE: ACTUAL ZONED LAND USE AUGUST 1989	LAND USE: SUB AREA % IMPERVIOUS AUGUST 1989	LAND USE: SUB BASIN COMPOSITE % IMPERVIOUS AUGUST 1989	SOIL CONDITION: HYDROLOGIC SOIL TYPE	SOIL CONDITION: SOIL TYPE PERCENTAGE OF SUB BASIN AREA (%)	SOIL CONDITION: INITIAL RAINFALL LOSS (IN.)	SOIL CONDITION: UNIFORM RAINFALL LOSS RATE (IN./HR.)	SOIL CONDITION: SUB BASIN COMPOSITE INITIAL RAINFALL LOSS (IN.)	SOIL CONDITION: SUB BASIN COMPOSITE UNIFORM RAINFALL LOSS RATE (IN./HR.)
	2C22	4.63		0.6	C-0	75		B	100	.3	.25		
	2C23	10.67		1.4	C-2	95	53.5	B	100	.3	.25	0.32	0.25
2D		762.21	1.191										
	2D1	76.74		10.1	DESERT	0		B	100	.5	.25		
	2D2	146.01		19.2	R1-6	50		B	100	.3	.25		
	2D3	48.87		6.4	S-1	15		B	100	.3	.25		
	2D4	27.04		3.6	R-2	60		B	100	.3	.25		
	2D5	55.15		7.2	DESERT	0		B	100	.5	.25		
	2D6	6.29		0.8	S-1	15		B	100	.3	.25		
	2D7	192.27		25.2	R1-10	25		B	100	.3	.25		
	2D8	181.71		23.8	R1-6	50		B	100	.3	.25		
	2D9	13.40		1.8	DESERT	0		B	100	.5	.25		
	2D10	14.71		1.9	C-2	95	32.8	B	100	.3	.25	0.34	0.25
2E		700.74	1.095										
	2E1	112.64		16.1	R1-6	50		B	100	.3	.25		
	2E2	33.69		4.8	R-2	60		B	100	.3	.25		
	2E3	10.79		1.5	DESERT	0		B	100	.5	.25		
	2E4	5.22		0.7	C-3	95		B	100	.3	.25		
	2E5	3.68		0.5	R1-8	45		B	100	.3	.25		
	2E6	4.03		0.6	R-5	70		B	100	.3	.25		
	2E7	107.11		15.3	R-4	65		B	100	.3	.25		
	2E8	8.90		1.3	DESERT	0		B	100	.5	.25		
	2E9	3.00		0.5	R-2	60		B	100	.3	.25		
	2E10	3.20		0.5	R-2	60		B	100	.3	.25		
	2E11	7.12		1.0	R1-8	45		B	100	.3	.25		
	2E12	12.34		1.8	DESERT	0		B	100	.5	.25		
	2E13	3.56		0.5	R1-8	45		B	100	.3	.25		
	2E14	4.98		0.7	DESERT	0		B	100	.5	.25		
	2E15	6.17		0.9	R1-6	50		B	100	.3	.25		
	2E16	12.10		1.7	R-2	60		B	100	.3	.25		
	2E17	4.98		0.7	C-2	95		B	100	.3	.25		
	2E18	7.0		1.0	DESERT	0		B	100	.5	.25		
	2E19	0.71		0.1	R1-6	50		B	100	.3	.25		
	2E20	8.07		1.1	R1-8	45		B	15	.3	.25		
								D	85	.2	.05		
	2E21	5.57		0.8	R1-8	45		D	100	.2	.05		

RAINFALL LOSS CHARACTERISITICS

CAVE CREEK F.I.S.

Project No. 7833

SUB BASIN	SUB AREA IDENTIFIER	AREA ACRES	AREA SQ. MI.	SUB AREA PERCENTAGE OF TOTAL SUB BASIN AREA (%)	LAND USE: ACTUAL ZONED LAND USE AUGUST 1989	LAND USE: SUB AREA % IMPERVIOUS AUGUST 1989	LAND USE: SUB BASIN COMPOSITE % IMPERVIOUS AUGUST 1989	SOIL CONDITION: HYDROLOGIC SOIL TYPE	SOIL CONDITION: SOIL TYPE PERCENTAGE OF SUB BASIN AREA (%)	SOIL CONDITION: INITIAL RAINFALL LOSS (IN.)	SOIL CONDITION: UNIFORM RAINFALL LOSS RATE (IN./HR.)	SOIL CONDITION: SUB BASIN COMPOSITE INITIAL RAINFALL LOSS (IN.)	SOIL CONDITION: SUB BASIN COMPOSITE UNIFORM RAINFALL LOSS RATE (IN./HR.)
	2E22	1.78		0.3	R-5	70		D	100	.2	.05		
	2E23	131.30		18.7	DESERT	0		B	45	.5	.25		
								D	55	.2	.05		
	2E24	26.81		3.8	R-2	60		B	50	.3	.25		
								D	50	.2	.05		
	2E25	23.13		3.3	C-2	95		B	100	.3	.25		
	2E26	21.59		3.1	DESERT	0		B	100	.5	.25		
	2E27	26.33		3.8	R1-6	50		B	100	.3	.25		
	2E28	2.49		0.4	P.A.D.	85		B	100	.3	.25		
	2E29	3.32		0.5	C-3	95		B	100	.3	.25		
	2E30	3.32		0.5	R1-6	50		B	100	.3	.25		
	2E31	6.64		1.0	R-3	65		B	100	.3	.25		
	2E32	15.66		2.2	R-4	65		B	100	.3	.25		
	2E33	24.00		3.4	ASSUME RE-43	20		B	100	.3	.25		
	2E34	11.62		1.7	DESERT	0		B	100	.5	.25		
	2E35	19.81		2.8	R1-6	50		B	100	.3	.25		
	2E36	15.54		2.2	ASSUME RE-43	20		B	100	.3	.25		
	2E37	1.66		0.2	DESERT	0	39.7	B	100	.5	.25	0.33	0.22
2F		609.53	0.952										
	2F1	25.74		4.2	C-2	95		B	100	.3	.25		
	2F2	289.17		47.4	R-3	65		B	100	.3	.25		
	2F3	0.83		0.1	P-1	100		B	100	.3	.25		
	2F4	6.80		1.1	P.A.D.	85		B	100	.3	.25		
	2F5	9.73		1.6	P.A.D.	85		B	100	.3	.25		
	2F6	21.82		3.6	P.A.D.	85		B	100	.3	.25		
	2F7	8.42		1.4	DESERT	0		B	100	.5	.25		
	2F8	5.10		0.8	P.A.D.	85		B	100	.3	.25		
	2F9	1.54		0.3	R-3	65		B	100	.3	.25		
	2F10	28.82		4.7	DESERT	0		B	100	.5	.25		
	2F11	10.00		1.7	C-2	95		B	100	.3	.25		
	2F12	44.24		7.3	C-2	95		B	100	.3	.25		
	2F13	7.47		1.2	C-2	95		B	100	.3	.25		
	2F14	1.90		0.3	C-0	75		B	100	.3	.25		
	2F15	3.00		0.6	R-5	70		B	100	.3	.25		
	2F16	23.48		3.9	R1-14	30		B	100	.3	.25		
	2F17	65.83		10.8	R1-6	50		B	100	.3	.25		

RAINFALL LOSS CHARACTERISITICS

CAVE CREEK F.I.S.

Project No. 7833

SUB BASIN	SUB AREA IDENTIFIER	AREA ACRES	AREA SQ. MI.	SUB AREA PERCENTAGE OF TOTAL SUB BASIN AREA (%)	LAND USE: ACTUAL ZONED LAND USE AUGUST 1989	LAND USE: SUB AREA % IMPERVIOUS AUGUST 1989	LAND USE: SUB BASIN COMPOSITE % IMPERVIOUS AUGUST 1989	SOIL CONDITION: HYDROLOGIC SOIL TYPE	SOIL CONDITION: SOIL TYPE PERCENTAGE OF SUB BASIN AREA (%)	SOIL CONDITION: INITIAL RAINFALL LOSS (IN.)	SOIL CONDITION: UNIFORM RAINFALL LOSS RATE (IN./HR.)	SOIL CONDITION: SUB BASIN COMPOSITE INITIAL RAINFALL LOSS (IN.)	SOIL CONDITION: SUB BASIN COMPOSITE UNIFORM RAINFALL LOSS RATE (IN./HR.)
	2F18	54.68		9.0	DESERT	0	58.0	B	22	.5	.25		
								D	78	.4	.05	0.33	0.23
2G		586.77	0.917										
	2G1	1.90		0.3	R1-6	50		B	3	.3	.25		
								D	97	.2	.05		
	2G2	8.30		1.4	DESERT	0		D	100	.4	.05		
	2G3	18.62		3.2	R1-10	38		D	100	.2	.05		
	2G4	19.10		3.3	R1-8	45		B	37	.3	.25		
								D	63	.2	.05		
	2G5	25.74		4.4	DESERT	0		B	40	.5	.25		
								D	60	.4	.05		
	2G6	5.57		1.0	R1-10	38		B	100	.3	.25		
	2G7	12.57		2.1	R-3	65		B	100	.3	.25		
	2G8	2.73		0.5	C-2	95		B	100	.3	.25		
	2G9	5.46		0.9	DESERT	0		B	100	.5	.25		
	2G10	4.15		0.7	C-2	95		B	78	.3	.25		
								D	22	.2	.05		
	2G11	3.56		0.6	P.A.D.	85		B	100	.3	.25		
	2G12	135.69		23.1	R1-6	50		B	93	.3	.25		
								D	7	.2	.05		
	2G13	13.28		2.3	S-1	15		D	100	.2	.05		
	2G14	25.15		4.3	DESERT	0		B	10	.5	.25		
								D	90	.4	.05		
	2G15	7.24		1.2	ASSUME S-1	15		B	33	.3	.25		
								D	67	.2	.05		
	2G16	78.28		13.3	DESERT	0		B	25	.5	.25		
								D	75	.4	.05		
	2G17	11.51		2.0	S-1	15		B	100	.3	.25		
	2G18	100.70		17.2	R1-8	45		B	70	.3	.25		
								D	30	.2	.05		
	2G19	27.87		4.7	R1-6	50		B	100	.3	.25		
	2G20	7.24		1.2	RE-35	22		D	100	.2	.05		
	2G21	68.55		11.7	DESERT	0		B	2	.5	.25		
								D	98	.4	.05		
	2G22	3.56		0.6	R1-8	45	29.2	D	100	.2	.05	0.33	0.16

RAINFALL LOSS CHARACTERISITICS

CAVE CREEK F.I.S.

Project No. 7833

SUB BASIN	SUB AREA IDENTIFIER	AREA ACRES	AREA SQ. MI.	SUB AREA PERCENTAGE OF TOTAL SUB BASIN AREA (%)	LAND USE: ACTUAL ZONED LAND USE AUGUST 1989	LAND USE: SUB AREA % IMPERVIOUS AUGUST 1989	LAND USE: SUB BASIN COMPOSITE % IMPERVIOUS AUGUST 1989	SOIL CONDITION: HYDROLOGIC SOIL TYPE	SOIL CONDITION: SOIL TYPE PERCENTAGE OF SUB BASIN AREA (%)	SOIL CONDITION: INITIAL RAINFALL LOSS (IN.)	SOIL CONDITION: UNIFORM RAINFALL LOSS RATE (IN./HR.)	SOIL CONDITION: COMPOSITE INITIAL RAINFALL LOSS (IN.)	SOIL CONDITION: SUB BASIN COMPOSITE UNIFORM RAINFALL LOSS RATE (IN./HR.)	~~SUB-BASIN~~
2H		911.94	1.425											
	2H1	8.66		1.0	P.A.D.	85		B	100	.3	.25			
	2H2	41.75		4.6	R1-6	50		B	100	.3	.25			
	2H3	60.14		6.6	R1-8	45		B	100	.3	.25			
	2H4	67.49		7.4	R1-6	50		B	100	.3	.25			
	2H5	11.86		1.3	DESERT	0		B	100	.5	.25			
	2H6	75.91		8.3	R1-10	30		B	30	.3	.25			
								D	70	.2	.05			
	2H7	9.25		1.0	R1-8	45		D	100	.2	.05			
	2H8	52.70		5.8	DESERT	0		D	100	.4	.05			
	2H9	22.77		2.5	S-1	15		B	25	.3	.25			
								D	75	.2	.05			
	2H10	50.41		5.5	R-2	60		B	100	.3	.25			
	2H11	3.20		0.3	R1-8	45		B	100	.3	.25			
	2H12	9.01		1.0	DESERT	0		B	100	.5	.25			
	2H13	66.90		7.3	S-1	15		B	100	.3	.25			
	2H14	2.73		0.3	R1-8	45		B	100	.3	.25			
	2H15	2.25		0.3	S-1	15		B	100	.3	.25			
	2H16	1.54		0.2	R1-10	25		B	100	.3	.25			
	2H17	2.13		0.2	RE-35	22		B	100	.3	.25			
	2H18	0.71		0.08	P-1	100		B	100	.3	.25			
	2H19	14.94		1.6	R-3	65		B	100	.3	.25			
	2H20	36.10		4.0	DESERT	0		B	100	.5	.25			
	2H21	4.98		0.5	C-0	75		B	100	.3	.25			
	2H22	33.80		3.7	C-2	95		B	100	.3	.25			
	2H23	9.84		1.1	DESERT	0		B	100	.5	.25			
	2H24	21.47		2.3	R1-6	50		B	100	.3	.25			
	2H25	3.44		0.4	R-2	60		B	100	.3	.25			
	2H26	4.15		0.5	R-4	65		B	100	.3	.25			
	2H27	18.50		2.0	R-2	60		B	100	.3	.25			
	2H28	2.37		0.3	R1-6	50		B	100	.3	.25			
	2H29	3.00		0.3	DESERT	0		B	100	.5	.25			
	2H30	1.42		0.2	R1-6	50		B	100	.3	.25			
	2H31	4.74		0.5	DESERT	0		B	100	.5	.25			
	2H32	4.51		0.5	C-1	95		B	100	.3	.25			
	2H33	19.33		2.1	R-4	65		B	100	.3	.25			
	2H34	8.66		0.9	S-1	15		B	100	.3	.25			
	2H35	4.74		0.5	C-0	75		B	100	.3	.25			
	2H36	4.51		0.5	C-2	95		B	100	.3	.25			

RAINFALL LOSS CHARACTERISITICS

CAVE CREEK F.I.S.

Project No. 7833

SUB BASIN	SUB AREA IDENTIFIER	AREA ACRES	AREA SQ. MI.	SUB AREA PERCENTAGE OF TOTAL SUB BASIN AREA (%)	LAND USE: ACTUAL ZONED LAND USE AUGUST 1989	LAND USE: SUB AREA % IMPERVIOUS AUGUST 1989	LAND USE: SUB BASIN COMPOSITE % IMPERVIOUS AUGUST 1989	SOIL CONDITION: HYDROLOGIC SOIL TYPE	SOIL CONDITION: SOIL TYPE PERCENTAGE OF SUB BASIN AREA (%)	SOIL CONDITION: INITIAL RAINFALL LOSS (IN.)	SOIL CONDITION: UNIFORM RAINFALL LOSS RATE (IN./HR.)	SOIL CONDITION: SUB BASIN COMPOSITE INITIAL RAINFALL LOSS (IN.)	SOIL CONDITION: SUB BASIN COMPOSITE UNIFORM RAINFALL LOSS RATE (IN./HR.)
	2H37	77.93		8.5	R1-8	45		B	100	.3	.25		
	2H38	73.77		8.1	C-2	95		B	100	.3	.25		
	2H39	22.54		2.5	R1-8	45		B	100	.3	.25		
	2H40	27.04		3.0	R1-6	50		B	100	.3	.25		
	2H41	4.15		0.5	DESERT	0		B	100	.5	.25		
	2H42	3.91		0.4	DESERT	0		B	100	.5	.25		
	2H43	12.45		1.4	R1-6	50	44.4	B	100	.3	.25	0.32	0.23
2I		638.43	0.985										
	2I1	64.64		10.3	DESERT	0		B	35	.5	.25		
								D	65	.4	.05		
	2I2	16.84		2.7	R1-6	50		B	100	.3	.25		
	2I3	43.53		6.9	R1-8	45		B	100	.3	.25		
	2I4	3.68		0.6	DESERT	0		B	100	.5	.25		
	2I5	62.39		9.9	R-2	60		B	100	.3	.25		
	2I6	17.44		2.8	R1-8	45		B	100	.3	.25		
	2I7	83.15		13.2	P.A.D.	85		B	100	.3	.25		
	2I8	0.47		0.07	R-2	60		B	100	.3	.25		
	2I9	1.54		0.2	DESERT	0		B	100	.5	.25		
	2I10	18.38		2.9	R1-6	50		B	100	.3	.25		
	2I11	13.05		2.1	R-2	60		B	100	.3	.25		
	2I12	5.10		0.8	DESERT	0		B	100	.5	.25		
	2I13	4.74		0.7	R1-6	50		B	100	.3	.25		
	2I14	97.74		15.5	R-4	65		B	100	.3	.25		
	2I15	9.37		1.5	R1-8	45		B	100	.3	.25		
	2I16	149.11		23.6	DESERT	0		B	100	.5	.25		
	2I17	2.61		0.4	R.O.W.	30		B	100	.5	.25		
	2I18	36.65		5.8	R-2	60	40.3	B	100	.3	.25	0.37	0.24
2J		450.55	0.704										
	2J1	193.30		42.9	DESERT	0		B	45	.5	.25		
								D	55	.4	.05		
	2J2	11.50		2.5	ASSUME C-2	95		B	100	.3	.25		
	2J3	2.16		0.5	DESERT	0		B	100	.5	.25		
	2J4	191.09		42.4	R1-8	45		B	100	.3	.25		
	2J5	21.86		4.8	R1-6	50		B	100	.3	.25		
	2J6	21.37		4.7	DESERT	0		B	100	.5	.25		
	2J7	3.84		0.8	R.O.W.	30		B	100	.5	.25		

RAINFALL LOSS CHARACTERISITICS

CAVE CREEK F.I.S.

Project No. 7833

SUB BASIN	SUB AREA IDENTIFIER	AREA ACRES	AREA SQ. MI.	SUB AREA PERCENTAGE OF TOTAL SUB BASIN AREA (%)	LAND USE: ACTUAL ZONED LAND USE AUGUST 1989	LAND USE: SUB AREA % IMPERVIOUS AUGUST 1989	LAND USE: SUB BASIN COMPOSITE % IMPERVIOUS AUGUST 1989	SOIL CONDITION: HYDROLOGIC SOIL TYPE	SOIL CONDITION: SOIL TYPE PERCENTAGE OF SUB BASIN AREA (%)	SOIL CONDITION: INITIAL RAINFALL LOSS (IN.)	SOIL CONDITION: UNIFORM RAINFALL LOSS RATE (IN./HR.)	SOIL CONDITION: SUB BASIN COMPOSITE INITIAL RAINFALL LOSS (IN.)	SOIL CONDITION: SUB BASIN COMPOSITE UNIFORM RAINFALL LOSS RATE (IN./HR.)
	2J8	5.43		1.2	R1-8	45	24.6	D	100	.2	.05	0.37	0.20
2K		854.09	1.336										
	2K1	237.88		27.8	DESERT	0		B	55	.5	.25		
								D	45	.4	.05		
	2K2	46.44		5.4	R-2	60		B	100	.3	.25		
	2K3	17.08		2.0	R-3	65		B	100	.3	.25		
	2K4	42.70		5.0	P.A.D.	85		B	100	.3	.25		
	2K5	147.25		17.2	R1-8	45		B	100	.3	.25		
	2K6	2.73		0.3	DESERT	0		B	100	.5	.25		
	2K7	17.79		2.1	R1-6	50		B	100	.3	.25		
	2K8	14.00		1.6	C-1	95		B	100	.3	.25		
	2K9	15.66		1.8	PSC	85		B	100	.3	.25		
	2K10	24.79		2.9	DESERT	0		B	100	.5	.25		
	2K11	34.16		4.0	P.A.D.	85		B	100	.3	.25		
	2K12	5.57		0.7	R.O.W.	30		B	100	.5	.25		
	2K13	8.90		1.1	DESERT	4		B	100	.5	.25		
	2K14	76.39		8.9	R-3	65		B	100	.3	.25		
	2K15	78.88		9.2	R-4	65		B	100	.3	.25		
	2K16	42.34		5.0	IND. PK.	75		B	100	.3	.25		
	2K17	23.13		2.7	C-2	95		B	100	.3	.25		
	2K18	19.20		2.3	DESERT	0	42.3	B	100	.5	.25	0.36	0.24
2L		384.82	0.601										
	2L1	29.89		7.8	R-2	60		B	100	.3	.25		
	2L2	33.09		8.6	R1-8	45		B	100	.3	.25		
	2L3	9.25		2.4	ASSUME C-2	95		B	100	.3	.25		
	2L4	151.76		39.4	P.A.D.	85		B	100	.3	.25		
	2L5	68.56		17.8	R1-8	45		B	100	.3	.25		
	2L6	37.60		9.8	R-2	60		B	100	.3	.25		
	2L7	21.35		5.5	C-2	95		B	100	.3	.25		
	2L8	6.40		1.7	DESERT	0		B	100	.5	.25		
	2L9	16.25		4.2	R-4	65		B	100	.3	.25		
	2L10	10.67		2.8	DESERT	0	66.2	B	100	.5	.25	0.31	.25
2M		751.02	1.174										
	2M1	3.06		0.4	R1-6	50		B	100	.3	.25		
	2M2	15.04		2.0	C-2	95		B	100	.3	.25		

RAINFALL LOSS CHARACTERISITICS

CAVE CREEK F.I.S.

Project No. 7833

SUB BASIN	SUB AREA IDENTIFIER	AREA ACRES	AREA SQ. MI.	SUB AREA PERCENTAGE OF TOTAL SUB BASIN AREA (%)	LAND USE: ACTUAL ZONED LAND USE AUGUST 1989	LAND USE: SUB AREA % IMPERVIOUS AUGUST 1989	LAND USE: SUB BASIN COMPOSITE % IMPERVIOUS AUGUST 1989	ESTIMATED 10-YEAR STORM RETENTION VOLUME (AC-FT)	SOIL CONDITION: HYDROLOGIC SOIL TYPE	SOIL CONDITION: SOIL TYPE PERCENTAGE OF SUB BASIN AREA (%)	SOIL CONDITION: INITIAL RAINFALL LOSS (IN.)	SOIL CONDITION: UNIFORM RAINFALL LOSS RATE (IN./HR.)	SOIL CONDITION: SUB BASIN COMPOSITE INITIAL RAINFALL LOSS (IN.)	SOIL CONDITION: SUB BASIN COMPOSITE UNIFORM RAINFALL LOSS RATE (IN./HR.)
	2M3	8.73		1.2	R-4	65			B	100	.3	.25		
	2M4	16.98		2.3	DESERT	0			B	100	.5	.25		
	2M5	73.22		9.7	S-1	15			B	100	.3	.25		
	2M6	33.25		4.4	R1-8	45			B	40	.3	.25		
									D	60	.2	.05		
	2M7	109.23		14.4	DESERT	0			D	100	.4	.05		
	2M8	54.11		7.2	R1-10	38			B	68	.3	.25		
									D	32	.2	.05		
	2M9	21.58		2.9	R1-8	45			B	100	.3	.25		
	2M10	44.21		5.9	DESERT	0			B	100	.5	.25		
	2M11	21.58		2.9	C-2	95			B	100	.3	.25		
	2M12	0.83		0.1	R-3	65			B	100	.3	.25		
	2M13	3.18		0.4	C-1	95			B	100	.3	.25		
	2M14	1.18		0.2	C-0	75			B	100	.3	.25		
	2M15	6.01		0.8	C-2	95			B	100	.3	.25		
	2M16	5.31		0.7	S-1	15			B	100	.3	.25		
	2M17	46.51		6.2	P.A.D.	85			B	100	.3	.25		
	2M18	3.89		0.5	S-1	15			B	100	.3	.25		
	2M19	2.83		0.4	C-0	75			B	100	.3	.25		
	2M20	19.69		2.6	PSC	85			B	100	.3	.25		
	2M21	14.14		1.9	C-2	95			B	100	.3	.25		
	2M22	32.89		4.4	PSC	85			B	100	.3	.25		
	2M23	6.36		0.8	R-5	70			B	100	.3	.25		
	2M24	61.19		8.1	R-3	65			B	100	.3	.25		
	2M25	50.93		6.8	R1-6	50			B	100	.3	.25		
	2M26	55.54		7.4	DESERT	0			B	100	.5	.25		
	2M27	36.07		4.8	R-3	65			B	100	.3	.25		
	2M28	1.65		0.2	R1-10	38			B	100	.3	.25		
	2M29	2.83		0.4	R-2	60		40.6	B	100	.3	.25	0.34	0.21
2N		303.88	0.475											
	2N1	41.15		13.5	R-2	60			B	100	.3	.25		
	2N2	13.36		4.4	S-1	15			B	100	.3	.25		
	2N3	84.76		27.9	DESERT	0			B	100	.5	.25		
	2N4	20.04		6.6	S-1	15			B	100	.3	.25		
	2N5	2.64		0.9	R1-6	50			B	55	.3	.25		
									D	45	.2	.05		
	2N6	37.46		12.3	R1-10	38			D	100	.2	.05		

RAINFALL LOSS CHARACTERISITICS

CAVE CREEK F.I.S.

Project No. 7833

SUB BASIN	SUB AREA IDENTIFIER	AREA ACRES	AREA SQ. MI.	SUB AREA PERCENTAGE OF TOTAL SUB BASIN AREA (%)	LAND USE: ACTUAL ZONED LAND USE AUGUST 1989	LAND USE: SUB AREA % IMPERVIOUS AUGUST 1989	LAND USE: SUB BASIN COMPOSITE % IMPERVIOUS AUGUST 1989	SOIL CONDITION: HYDROLOGIC SOIL TYPE	SOIL CONDITION: SOIL TYPE PERCENTAGE OF SUB BASIN AREA (%)	SOIL CONDITION: INITIAL RAINFALL LOSS (IN.)	SOIL CONDITION: UNIFORM RAINFALL LOSS RATE (IN./HR.)	SOIL CONDITION: SUB BASIN COMPOSITE INITIAL RAINFALL LOSS (IN.)	SOIL CONDITION: SUB BASIN COMPOSITE UNIFORM RAINFALL LOSS RATE (IN./HR.)
	2N7	48.53		16.0	P.A.D.	85		D	100	.2	.05		
	2N8	6.68		2.2	S-1	15		D	100	.2	.05		
	2N9	1.76		0.6	R1-18	25		D	100	.2	.05		
	2N10	1.06		0.3	S-1	15		D	100	.2	.05		
	2N11	2.82		0.9	R1-18	25		D	100	.2	.05		
	2N12	26.38		8.7	ASSUME RE-35	22		D	100	.2	.05		
	2N13	17.24		5.7	R1-10	38	33.3	D	100	.2	.05	0.31	0.16
2O		408.86	0.639										
	2O1	25.89		6.3	DESERT	0		D	100	.4	.05		
	2O2	198.57		48.6	R1-10	38		B	90	.3	.25		
								D	10	.2	.05		
	2O3	12.59		3.1	DESERT	0		B	100	.5	.25		
	2O4	9.22		2.2	C-1	95		B	100	.3	.25		
	2O5	73.23		17.9	R1-6	50		B	100	.3	.25		
	2O6	24.64		6.0	R-3	65		B	100	.3	.25		
	2O7	40.78		10.0	R1-10	38		B	100	.3	.25		
	2O8	23.94		5.9	S-1	15	38.1	B	100	.3	.25	0.31	0.23
2P		378.55	0.592										
	2P1	18.27		4.8	DESERT	0		B	100	.5	.25		
	2P2	20.52		5.4	R-3	65		B	100	.3	.25		
	2P3	80.06		21.2	R1-6	50		B	100	.3	.25		
	2P4	43.06		11.4	R1-8	45		B	100	.3	.25		
	2P5	146.05		38.6	R-3	65		B	100	.3	.25		
	2P6	2.02		0.5	C-3	95		B	100	.3	.25		
	2P7	16.84		4.4	C-3	95		B	100	.3	.25		
	2P8	27.75		7.3	R1-6	50		B	100	.3	.25		
	2P9	4.78		1.3	DESERT	0		B	100	.5	.25		
	2P10	4.75		1.3	DESERT	0		B	100	.5	.25		
	2P11	4.60		1.2	R1-6	50		B	100	.3	.25		
	2P12	9.85		2.6	C-2	95	55.7	B	100	.3	.25	0.31	0.25
3A		710.94	1.111										
	3A1	689.50		97.0	DESERT	0		B	45	.5	.25		
								D	55	.4	.05		
	3A2	21.44		3.0	ASSUME A-1	75	2.3	B	100	.3	.25	0.43	0.14

RAINFALL LOSS CHARACTERISITICS

CAVE CREEK F.I.S.

Project No. 7833

SUB BASIN	SUB AREA IDENTIFIER	AREA ACRES	AREA SQ. MI.	SUB AREA PERCENTAGE OF TOTAL SUB BASIN AREA (%)	LAND USE: ACTUAL ZONED LAND USE AUGUST 1989	LAND USE: SUB AREA % IMPERVIOUS AUGUST 1989	LAND USE: SUB BASIN COMPOSITE % IMPERVIOUS AUGUST 1989	SOIL CONDITION: HYDROLOGIC SOIL TYPE	SOIL CONDITION: SOIL TYPE PERCENTAGE OF SUB BASIN AREA (%)	SOIL CONDITION: INITIAL RAINFALL LOSS (IN.)	SOIL CONDITION: UNIFORM RAINFALL LOSS RATE (IN./HR.)	SOIL CONDITION: SUB BASIN COMPOSITE INITIAL RAINFALL LOSS (IN.)	SOIL CONDITION: SUB BASIN COMPOSITE UNIFORM RAINFALL LOSS RATE (IN./HR.)
3B		604.37	0.944										
	3B1	80.28		13.3	A-1	75		B	100	.3	.25		
	3B2	215.99		35.7	DESERT	0		B	100	.5	.25		
	3B3	42.13		7.0	R1-6	50		B	100	.3	.25		
	3B4	38.82		6.4	R-2	60		B	100	.3	.25		
	3B5	41.06		6.8	R1-8	45		B	100	.3	.25		
	3B6	41.10		6.8	DESERT	0		B	100	.5	.25		
	3B7	133.24		22.1	R1-6	50		B	100	.3	.25		
	3B8	10.32		1.7	DESERT	0		B	100	.5	.25		
	3B9	1.43		0.2	R1-8	45	31.5	B	100	.3	.25	0.39	0.25
3C		997.93	1.559										
	3C1	2.61		0.3	DESERT	0		B	100	.5	.25		
	3C2	22.40		2.3	R1-6	50		B	100	.3	.25		
	3C3	93.78		9.4	R1-8	45		B	7	.3	.25		
								C	93	.3	.15		
	3C4	4.48		0.5	DESERT	0		B	50	.5	.25		
								C	50	.5	.15		
	3C5	2.20		0.2	R1-8	45		B	100	.3	.25		
	3C6	70.20		7.0	R1-6	50		B	80	.3	.25		
								C	20	.3	.15		
	3C7	14.71		1.5	R1-8	45		B	100	.3	.25		
	3C8	134.55		13.5	DESERT	0		B	100	.5	.25		
	3C9	18.84		1.9	ASSUME C-2	95		B	100	.3	.25		
	3C10	5.88		0.6	R-3	65		B	100	.3	.25		
	3C11	83.01		8.3	DESERT	0		B	98	.5	.25		
								C	2	.5	.15		
	3C12	3.16		0.3	S-1	15		C	100	.3	.15		
	3C13	7.27		0.7	ASSUME S-1	15		C	100	.3	.15		
	3C14	5.00		0.05	DESERT	0		C	100	.5	.15		
	3C15	36.67		3.7	R1-6	50		C	100	.3	.15		
	3C16	2.41		0.3	C-2	95		C	100	.3	.15		
	3C17	81.35		8.2	R1-6	50		B	100	.3	.25		
	3C18	9.36		1.0	R1-8	45		B	100	.3	.25		
	3C19	31.14		3.1	R-3	65		B	100	.3	.25		
	3C20	40.91		4.1	R1-8	45		C	100	.3	.15		
	3C21	23.88		2.4	ASSUME RE-43	20		C	100	.3	.15		
	3C22	72.59		7.3	R1-6	50		C	100	.3	.15		

RAINFALL LOSS CHARACTERISITICS

CAVE CREEK F.I.S.

Project No. 7833

SUB BASIN	SUB AREA IDENTIFIER	AREA ACRES	AREA SQ. MI.	SUB AREA PERCENTAGE OF TOTAL SUB BASIN AREA (%)	LAND USE: ACTUAL ZONED LAND USE AUGUST 1989	LAND USE: SUB AREA % IMPERVIOUS AUGUST 1989	LAND USE: SUB BASIN COMPOSITE % IMPERVIOUS AUGUST 1989	SOIL CONDITION: HYDROLOGIC SOIL TYPE	SOIL CONDITION: SOIL TYPE PERCENTAGE OF SUB BASIN AREA (%)	SOIL CONDITION: INITIAL RAINFALL LOSS (IN.)	SOIL CONDITION: UNIFORM RAINFALL LOSS RATE (IN./HR.)	SOIL CONDITION: SUB BASIN COMPOSITE INITIAL RAINFALL LOSS (IN.)	SOIL CONDITION: SUB BASIN COMPOSITE UNIFORM RAINFALL LOSS RATE (IN./HR.)
	3C23	151.11		15.2	DESERT	0		C	100	.5	.15		
	3C24	15.30		1.6	R-4	65		C	100	.3	.15		
	3C25	65.12		6.5	R-2	60	31.6	B	100	.3	.25	0.30	0.20
3D		260.83	0.408										
	3D1	3.20		1.2	DESERT	0		B	100	.5	.25		
	3D2	19.55		7.5	S-1	15		B	100	.3	.25		
	3D3	41.35		15.9	R-2	60		B	100	.3	.25		
	3D4	161.56		61.9	DESERT	0		B	93	.5	.25		
								C	7	.5	.15		
	3D5	4.45		1.7	ASSUME C-3	95		B	100	.3	.25		
	3D6	30.72		11.8	R1-6	50	18.2	B	100	.3	.25	0.43	0.24
4A		808.98	1.264										
	4A1	1.96		0.2	IND. PK.	75		B	100	.3	.25		
	4A2	41.46		5.1	DESERT	0		B	100	.5	.25		
	4A3	3.95		0.5	C-0	75		B	100	.3	.25		
	4A4	17.43		2.2	R-3	65		B	100	.3	.25		
	4A5	0.69		0.09	C-0	75		B	100	.3	.25		
	4A6	404.76		50.0	R1-8	45		B	35	.3	.25		
								C	65	.3	.15		
	4A7	49.87		6.2	R1-6	50		B	100	.3	.25		
	4A8	13.89		1.7	DESERT	0		B	50	.5	.25		
								C	50	.5	.15		
	4A9	5.83		0.7	R-4	65		B	100	.3	.25		
	4A10	12.34		1.5	P.S.C.	85		B	60	.3	.25		
								C	40	.3	.15		
	4A11	4.55		0.6	C-2	95		C	100	.3	.15		
	4A12	7.88		1.0	DESERT	0		C	100	.5	.15		
	4A13	11.56		1.4	DESERT	0		C	100	.5	.15		
	4A14	28.33		3.5	ASSUME S-1	15		C	100	.3	.15		
	4A15	84.33		10.4	R1-6	50		C	100	.3	.15		
	4A16	14.76		1.8	R-4	65		C	100	.3	.15		
	4A17	7.11		0.9	C-2	95		C	100	.3	.15		
	4A18	0.92		0.1	C-2	95		C	100	.3	.15		
	4A19	7.83		1.0	C-1	95		C	100	.3	.15		
	4A20	6.75		0.8	P.A.D.	85		C	100	.3	.15		
	4A21	1.38		0.2	R1-8	45		C	100	.3	.15		

RAINFALL LOSS CHARACTERISITICS

CAVE CREEK F.I.S.

Project No. 7833

SUB BASIN	SUB AREA IDENTIFIER	AREA ACRES	AREA SQ. MI.	SUB AREA PERCENTAGE OF TOTAL SUB BASIN AREA (%)	LAND USE: ACTUAL ZONED LAND USE AUGUST 1989	LAND USE: SUB AREA % IMPERVIOUS AUGUST 1989	LAND USE: SUB BASIN COMPOSITE % IMPERVIOUS AUGUST 1989	SOIL CONDITION: HYDROLOGIC SOIL TYPE	SOIL CONDITION: SOIL TYPE PERCENTAGE OF SUB BASIN AREA (%)	SOIL CONDITION: INITIAL RAINFALL LOSS (IN.)	SOIL CONDITION: UNIFORM RAINFALL LOSS RATE (IN./HR.)	SOIL CONDITION: SUB BASIN COMPOSITE INITIAL RAINFALL LOSS (IN.)	SOIL CONDITION: SUB BASIN COMPOSITE UNIFORM RAINFALL LOSS RATE (IN./HR.)
	4A22	7.78		1.0	R-4	65		C	100	.3	.15		
	4A23	11.21		1.4	R1-8	45		C	100	.3	.15		
	4A24	2.62		0.3	DESERT	0		C	100	.5	.15		
	4A25	2.44		0.3	DESERT	0		C	100	.5	.15		
	4A26	19.75		2.4	R-3	65		C	100	.3	.15		
	4A27	14.76		1.8	C-1	95		C	100	.3	.15		
	4A28	18.17		2.3	C-2	95		C	100	.3	.15		
	4A29	4.67		0.6	C-3	95	46.8	C	100	.3	.15	0.32	0.19
4B		432.19	0.675										
	4B1	8.03		1.9	C-2	95		C	100	.3	.15		
	4B2	241.25		55.8	ASSUME C-3	95		B	55	.3	.25		
								C	45	.3	.15		
	4B3	35.05		8.1	C-2	95		C	100	.3	.15		
	4B4	15.66		3.6	C-2	95		B	100	.3	.25		
	4B5	48.75		11.3	R1-6	50		B	100	.3	.25		
	4B6	3.56		0.8	C-2	95		B	85	.3	.25		
								D	15	.2	.05		
	4B7	3.49		0.8	C-2	95		B	100	.3	.25		
	4B8	11.97		2.8	RE-35	22		B	100	.3	.25		
	4B9	9.43		2.2	S-1	15		B	100	.3	.25		
	4B10	5.52		1.3	P.A.D.	85		D	100	.2	.05		
	4B11	14.24		3.3	DESERT	0		D	100	.4	.05		
	4B12	0.54		0.1	R1-10	38		D	100	.2	.05		
	4B13	24.20		5.6	C-0	75		B	10	.3	.25		
								D	90	.2	.05		
	4B14	10.50		2.4	DESERT	0	79.4	B	100	.5	.25	0.30	0.20
4C		658.29	1.029										
	4C1	66.46		10.1	R1-8	45		B	100	.3	.25		
	4C2	184.54		28.0	S-1	15		B	100	.3	.25		
	4C3	33.58		5.1	DESERT	0		B	100	.5	.25		
	4C4	65.40		9.9	R-4	65		B	100	.3	.25		
	4C5	8.14		1.2	R-3	65		B	100	.3	.25		
	4C6	3.06		0.5	R1-8	45		B	100	.3	.25		
	4C7	55.50		8.4	P.A.D.	85		B	100	.3	.25		
	4C8	27.93		4.2	R1-8	45		B	100	.3	.25		
	4C9	53.02		8.1	ASSUME S-2	18		B	100	.3	.25		

RAINFALL LOSS CHARACTERISITICS

CAVE CREEK F.I.S.

Project No. 7833

SUB BASIN	SUB AREA IDENTIFIER	AREA ACRES	AREA SQ. MI.	SUB AREA PERCENTAGE OF TOTAL SUB BASIN AREA (%)	LAND USE: ACTUAL ZONED LAND USE AUGUST 1989	LAND USE: SUB AREA % IMPERVIOUS AUGUST 1989	LAND USE: SUB BASIN COMPOSITE % IMPERVIOUS AUGUST 1989	SOIL CONDITION: HYDROLOGIC SOIL TYPE	SOIL CONDITION: SOIL TYPE PERCENTAGE OF SUB BASIN AREA (%)	SOIL CONDITION: INITIAL RAINFALL LOSS (IN.)	SOIL CONDITION: UNIFORM RAINFALL LOSS RATE (IN./HR.)	SOIL CONDITION: SUB BASIN COMPOSITE INITIAL RAINFALL LOSS (IN.)	SOIL CONDITION: SUB BASIN COMPOSITE UNIFORM RAINFALL LOSS RATE (IN./HR.)
	4C10	3.86		0.5	R1-6	50		B	100	.3	.25		
	4C11	3.30		0.5	DESERT	0		B	100	.5	.25		
	4C12	10.26		1.6	R-H	65		B	100	.3	.25		
	4C13	80.60		12.2	P.C.D.	60		B	35	.3	.25		
								C	65	.3	.15		
	4C14	4.14		0.6	C-2	95		B	100	.3	.25		
	4C15	25.03		3.8	R-2	60		B	85	.3	.25		
								C	15	.3	.15		
	4C16	4.93		0.8	RE-35	22		C	100	.3	.15		
	4C17	8.55		1.3	DESERT	0		B	50	.5	.25		
								C	50	.3	.15		
	4C18	4.79		0.7	ASSUME C-1	95		B	100	.3	.25		
	4C19	14.98		2.3	RE-35	22		B	100	.3	.25		
	4C20	1.02		0.2	C-2	95	39.7	B	100	.3	.25	0.31	0.24
5A		811.79	1.268										
	5A1	2.13		0.3	S-1	15		D	100	.2	.05		
	5A2	6.76		0.8	S-1	15		D	100	.2	.05		
	5A3	10.32		1.3	R1-10	38		D	100	.2	.05		
	5A4	311.53		38.4	DESERT	0		B	15	.5	.25		
								D	85	.2	.05		
	5A5	32.38		4.0	ASSUME S-1	15		B	55	.3	.25		
								D	45	.2	.05		
	5A6	37.60		4.6	P.A.D.	85		B	100	.3	.25		
	5A7	225.95		27.8	R1-10	38		B	96	.3	.25		
								D	4	.2	.05		
	5A8	3.10		0.4	S-1	15		B	100	.3	.25		
	5A9	1.60		0.2	R1-10	38		B	100	.3	.25		
	5A10	3.20		0.4	R1-10	38		B	100	.3	.25		
	5A11	41.99		5.2	P.A.D.	85		B	60	.3	.25		
								D	40	.2	.05		
	5A12	3.67		0.5	C-1	95		B	100	.3	.25		
	5A13	1.01		0.1	R-2	60		B	100	.3	.25		
	5A14	0.96		0.1	R1-8	45		B	100	.3	.25		
	5A15	68.60		8.4	S-1	15		B	100	.3	.25		
	5A16	2.27		0.3	R-0	50		B	100	.3	.25		
	5A17	2.09		0.3	C-0	75		B	100	.3	.25		
	5A18	1.79		0.2	R-0	50		B	100	.3	.25		

RAINFALL LOSS CHARACTERISITICS

CAVE CREEK F.I.S.

Project No. 7833

SUB BASIN	SUB AREA IDENTIFIER	AREA ACRES	AREA SQ. MI.	SUB AREA PERCENTAGE OF TOTAL SUB BASIN AREA (%)	LAND USE: ACTUAL ZONED LAND USE AUGUST 1989	LAND USE: SUB AREA % IMPERVIOUS AUGUST 1989	LAND USE: SUB BASIN COMPOSITE % IMPERVIOUS AUGUST 1989	SOIL CONDITION: HYDROLOGIC SOIL TYPE	SOIL CONDITION: SOIL TYPE PERCENTAGE OF SUB BASIN AREA (%)	SOIL CONDITION: INITIAL RAINFALL LOSS (IN.)	SOIL CONDITION: UNIFORM RAINFALL LOSS RATE (IN./HR.)	SOIL CONDITION: SUB BASIN COMPOSITE INITIAL RAINFALL LOSS (IN.)	SOIL CONDITION: SUB BASIN COMPOSITE UNIFORM RAINFALL LOSS RATE (IN./HR.)
	5A19	2.33		0.3	P.A.D.	85		B	100	.3	.25		
	5A20	1.80		0.2	S-1	15		B	100	.3	.25		
	5A21	1.59		0.2	C-0	75		B	100	.3	.25		
	5A22	49.04		6.0	R1-10	38	25.5	B	100	.3	.25	0.27	0.17
5B		439.10	0.686										
	5B1	40.29		9.2	ASSUME R1-10	38		B	100	.3	.25		
	5B2	398.89		90.8	R1-10	38	38.0	B	98	.3	.25		
								D	2	.2	.05	0.30	0.25
5C		328.66	0.514										
	5C1	205.16		62.4	DESERT	0		D	100	.4	.05		
	5C2	6.02		1.8	PCD	60		D	100	.2	.05		
	5C3	35.10		10.7	RH	65		D	100	.2	.05		
	5C4	9.58		2.9	P.C.D.	60		D	100	.2	.05		
	5C5	29.06		8.9	S-1	15		D	100	.2	.05		
	5C6	18.00		5.5	DESERT	0		D	100	.4	.05		
	5C7	17.15		5.2	P.C.D.	60		D	100	.2	.05		
	5C8	8.51		2.6	S-1	15	14.6	D	100	.2	.05	0.34	0.05
5D		354.77	0.554										
	5D1	11.26		3.2	RH	65		D	100	.2	.05		
	5D2	343.51		96.8	DESERT	0	2.1	D	100	.4	.05	0.39	0.05
5E		1019.11	1.592										
	5E1	19.03		1.9	ASSUME C-1	95		B	100	.3	.25		
	5E2	41.15		4.0	P.A.D.	85		B	100	.3	.25		
	5E3	20.33		2.0	DESERT	0		B	35	.5	.25		
								D	65	.2	.05		
	5E4	26.52		2.6	S-1	15		D	100	.2	.05		
	5E5	93.00		9.1	DESERT	0		D	100	.4	.05		
	5E6	2.25		0.2	C-0	75		D	100	.2	.05		
	5E7	5.96		0.6	C-0	75		D	100	.2	.05		
	5E8	24.62		2.4	P.S.C.	85		B	40	.3	.25		
								D	60	.2	.05		
	5E9	7.37		0.7	C-0	75		B	100	.3	.25		
	5E10	13.81		1.4	P.A.D.	85		D	100	.2	.05		
	5E11	12.31		1.2	P.A.D.	85		D	100	.2	.05		

RAINFALL LOSS CHARACTERISITICS

CAVE CREEK F.I.S.

Project No. 7833

SUB BASIN	SUB AREA IDENTIFIER	AREA ACRES	AREA SQ. MI.	SUB AREA PERCENTAGE OF TOTAL SUB BASIN AREA (%)	LAND USE: ACTUAL ZONED LAND USE AUGUST 1989	LAND USE: SUB AREA % IMPERVIOUS AUGUST 1989	LAND USE: SUB BASIN COMPOSITE % IMPERVIOUS AUGUST 1989	SOIL CONDITION: HYDROLOGIC SOIL TYPE	SOIL CONDITION: SOIL TYPE PERCENTAGE OF SUB BASIN AREA (%)	SOIL CONDITION: INITIAL RAINFALL LOSS (IN.)	SOIL CONDITION: UNIFORM RAINFALL LOSS RATE (IN./HR.)	SOIL CONDITION: SUB BASIN COMPOSITE INITIAL RAINFALL LOSS (IN.)	SOIL CONDITION: SUB BASIN COMPOSITE UNIFORM RAINFALL LOSS RATE (IN./HR.)
	5E12	80.75		7.9	DESERT	0		D	100	.4	.05		
	5E13	65.05		6.4	P.A.D.	85		D	100	.2	.05		
	5E14	24.62		2.4	ASSUME RE-35	22		D	100	.2	.05		
	5E15	9.99		1.0	DESERT	0		D	100	.4	.05		
	5E16	540.78		53.1	R1-10	38		B	40	.3	.25		
								D	60	.2	.05		
	5E17	31.57		3.1	P.A.D.	85	39.8	B	50	.3	.25		
								D	50	.2	.05	0.27	0.11
5F		974.23	1.522										
	5F1	3.20		0.3	C-2	95		D	100	.2	.05		
	5F2	266.52		27.4	DESERT	0		B	2	.5	.25		
								D	98	.2	.05		
	5F3	2.05		0.2	R-5	70		B	10	.3	.25		
								D	90	.2	.05		
	5F4	82.02		8.4	R1-10	38		B	45	.3	.25		
								D	55	.2	.05		
	5F5	18.74		1.9	DESERT	0		D	100	.4	.05		
	5F6	18.86		1.9	ASSUME RE-35	22		D	100	.2	.05		
	5F7	93.23		9.5	DESERT	0		B	20	.5	.25		
								D	80	.2	.05		
	5F8	0.71		0.07	R1-18	25		D	100	.2	.05		
	5F9	0.70		0.07	S-1	15		D	100	.2	.05		
	5F10	1.20		0.01	R1-18	25		D	100	.2	.05		
	5F11	1.07		0.1	RE-24	25		D	100	.2	.05		
	5F12	2.31		0.3	S-1	15		D	100	.2	.05		
	5F13	2.13		0.2	P.A.D.	85		D	100	.2	.05		
	5F14	40.92		4.2	R1-8	45		B	70	.3	.25		
								D	30	.2	.05		
	5F15	3.68		0.4	S-1	15		B	100	.3	.25		
	5F16	3.22		0.3	S-1	15		B	100	.3	.25		
	5F17	6.05		0.6	P.A.D.	85		B	70	.3	.25		
								D	30	.2	.05		
	5F18	1.70		0.2	P.A.D.	85		D	100	.2	.05		
	5F19	1.72		0.2	C-8	75		B	28	.3	.25		
								D	72	.2	.05		
	5F20	25.15		2.6	C-2	95		B	95	.3	.25		
								D	5	.2	.05		

RAINFALL LOSS CHARACTERISITICS

CAVE CREEK F.I.S.

Project No. 7833

SUB BASIN	SUB AREA IDENTIFIER	AREA ACRES	AREA SQ. MI.	SUB AREA PERCENTAGE OF TOTAL SUB BASIN AREA (%)	LAND USE: ACTUAL ZONED LAND USE AUGUST 1989	LAND USE: SUB AREA % IMPERVIOUS AUGUST 1989	LAND USE: SUB BASIN COMPOSITE % IMPERVIOUS AUGUST 1989	SOIL CONDITION: HYDROLOGIC SOIL TYPE	SOIL CONDITION: SOIL TYPE PERCENTAGE OF SUB BASIN AREA (%)	SOIL CONDITION: INITIAL RAINFALL LOSS (IN.)	SOIL CONDITION: UNIFORM RAINFALL LOSS RATE (IN./HR.)	SOIL CONDITION: SUB BASIN COMPOSITE INITIAL RAINFALL LOSS (IN.)	SOIL CONDITION: SUB BASIN COMPOSITE UNIFORM RAINFALL LOSS RATE (IN./HR.)
	5F21	386.16		39.7	R1-8	45		B	80	.3	.25		
								D	20	.2	.05		
	5F22	12.81		1.3	R-4	65	28.3	B	55	.3	.25		
								D	45	.2	.05	0.26	0.14
5G		274.78	0.429										
	5G1	8.30		3.0	R-3	65		D	100	.2	.05		
	5G2	4.84		1.7	R.O.W.	30		D	100	.4	.05		
	5G3	130.13		47.4	DESERT	0		D	100	.4	.05		
	5G4	117.00		42.6	DESERT	0		D	100	.4	.05		
	5G5	14.51		5.3	S-1	15	3.3	D	100	.2	.05	0.30	0.05
6A		293.56	0.459										
	6A1	1.95		0.7	R-5	70		B	25	.3	.25		
								D	75	.2	.05		
	6A2	11.14		3.8	DESERT	0		D	100	.4	.05		
	6A3	5.66		1.9	R-4	65		B	30	.3	.25		
								C	20	.3	.15		
								D	50	.2	.05		
	6A4	4.48		1.5	C-2	95		B	85	.3	.25		
								D	15	.2	.05		
	6A5	4.24		1.4	R-3	65		B	60	.3	.25		
								C	40	.3	.15		
	6A6	7.78		2.6	P.A.D.	85		C	55	.3	.15		
								D	45	.2	.05		
	6A7	7.26		2.5	C-2	95		C	65	.3	.15		
								D	35	.2	.05		
	6A8	18.69		6.4	R-3	65		C	100	.3	.15		
	6A9	14.37		4.9	ASSUME R1-10	30		C	100	.3	.15		
	6A10	100.98		34.4	R1-6	50		B	50	.3	.25		
								C	50	.3	.15		
	6A11	46.81		16.0	DESERT	0		B	100	.5	.25		
	6A12	70.20		23.9	R1-6	50	43.8	B	100	.3	.25	0.33	0.20
6B		728.03	1.138										
	6B1	4.77		0.7	C-2	95		C	99	.3	.15		
								D	1	.2	.05		
	6B2	14.46		2.0	R-5	70		C	100	.3	.15		

RAINFALL LOSS CHARACTERISITICS

CAVE CREEK F.I.S.

Project No. 7833

SUB BASIN	SUB AREA IDENTIFIER	AREA ACRES	AREA SQ. MI.	SUB AREA PERCENTAGE OF TOTAL SUB BASIN AREA (%)	LAND USE: ACTUAL ZONED LAND USE AUGUST 1989	LAND USE: SUB AREA % IMPERVIOUS AUGUST 1989	LAND USE: SUB BASIN COMPOSITE % IMPERVIOUS AUGUST 1989	SOIL CONDITION: HYDROLOGIC SOIL TYPE	SOIL CONDITION: SOIL TYPE PERCENTAGE OF SUB BASIN AREA (%)	SOIL CONDITION: INITIAL RAINFALL LOSS (IN.)	SOIL CONDITION: UNIFORM RAINFALL LOSS RATE (IN./HR.)	SOIL CONDITION: SUB BASIN COMPOSITE INITIAL RAINFALL LOSS (IN.)	SOIL CONDITION: SUB BASIN COMPOSITE UNIFORM RAINFALL LOSS RATE (IN./HR.)
	6B3	10.49		1.4	DESERT	0		C	100	.5	.15		
	6B4	8.32		1.1	P.S.C.	85		C	100	.3	.15		
	6B5	16.90		2.3	R-3	65		C	100	.3	.15		
	6B6	3.62		0.5	R-2	60		C	100	.3	.15		
	6B7	181.75		25.0	R1-6	50		B	50	.3	.25		
								C	50	.3	.15		
	6B8	24.91		3.4	R-5	70		B	100	.3	.25		
	6B9	62.45		8.6	DESERT	0		B	100	.5	.25		
	6B10	20.20		2.8	C-1	95		B	100	.3	.25		
	6B11	1.95		0.3	IND. PK.	75		C	100	.3	.15		
	6B12	4.27		0.6	IND. PK.	75		C	100	.3	.15		
	6B13	2.49		0.3	C-2	95		C	100	.3	.15		
	6B14	2.50		0.4	A-1	75		C	100	.3	.15		
	6B15	22.79		3.1	IND. PK.	75		B	10	.3	.25		
								C	90	.3	.15		
	6B16	345.29		47.4	A-1	75		B	50	.3	.15		
								C	50	.3	.15		
	6B17	0.71		0.1	R1-6	50	61.5	C	100	.3	.15	0.32	0.20

APPENDIX "D"

OPEN CHANNEL HYDRAULIC CALCULATIONS FOR HYDROGRAPH ROUTING

BURGESS & NIPLE, INC. - COMPUTATION SHEET

JOB NO. _____ JOB NAME _____ SHEET ____ OF _____ SHEETS

SUBJECT _____ PREPARED BY _____ DATE _____

_____ CHECKED BY _____ DATE _____

MODIFIED PULS

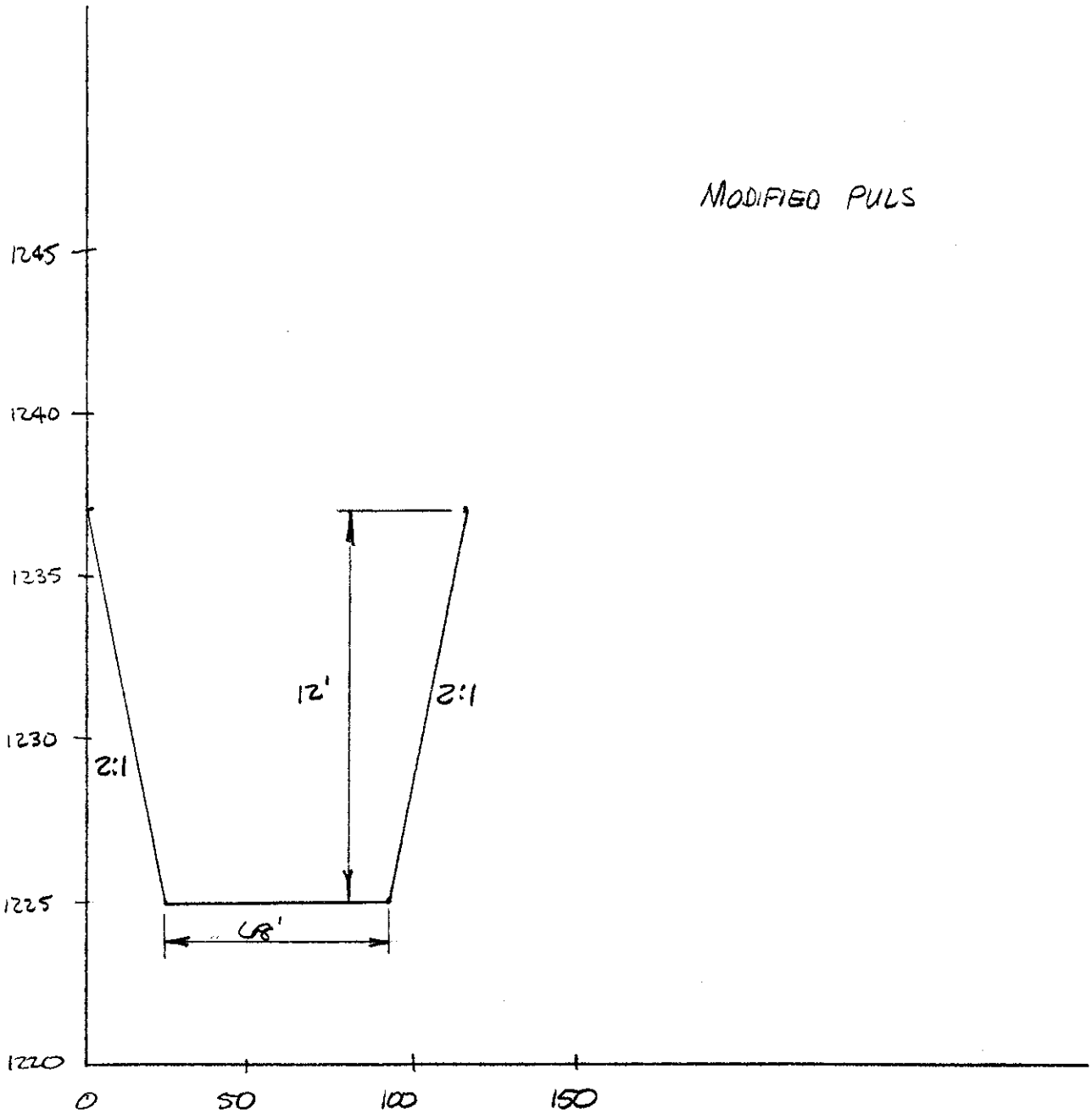

CAVE CREEK from CACTUS ROAD
SOUTH to the ARIZONA CANAL DIVERSION CHANNEL

NODE 12 to NODE 13

BURGESS & NIPLE, INC. - COMPUTATION SHEET

JOB NO. _____ JOB NAME _____ SHEET ____ OF _____ SHEETS

SUBJECT _____ PREPARED BY _____ DATE _____

_____ CHECKED BY _____ DATE _____

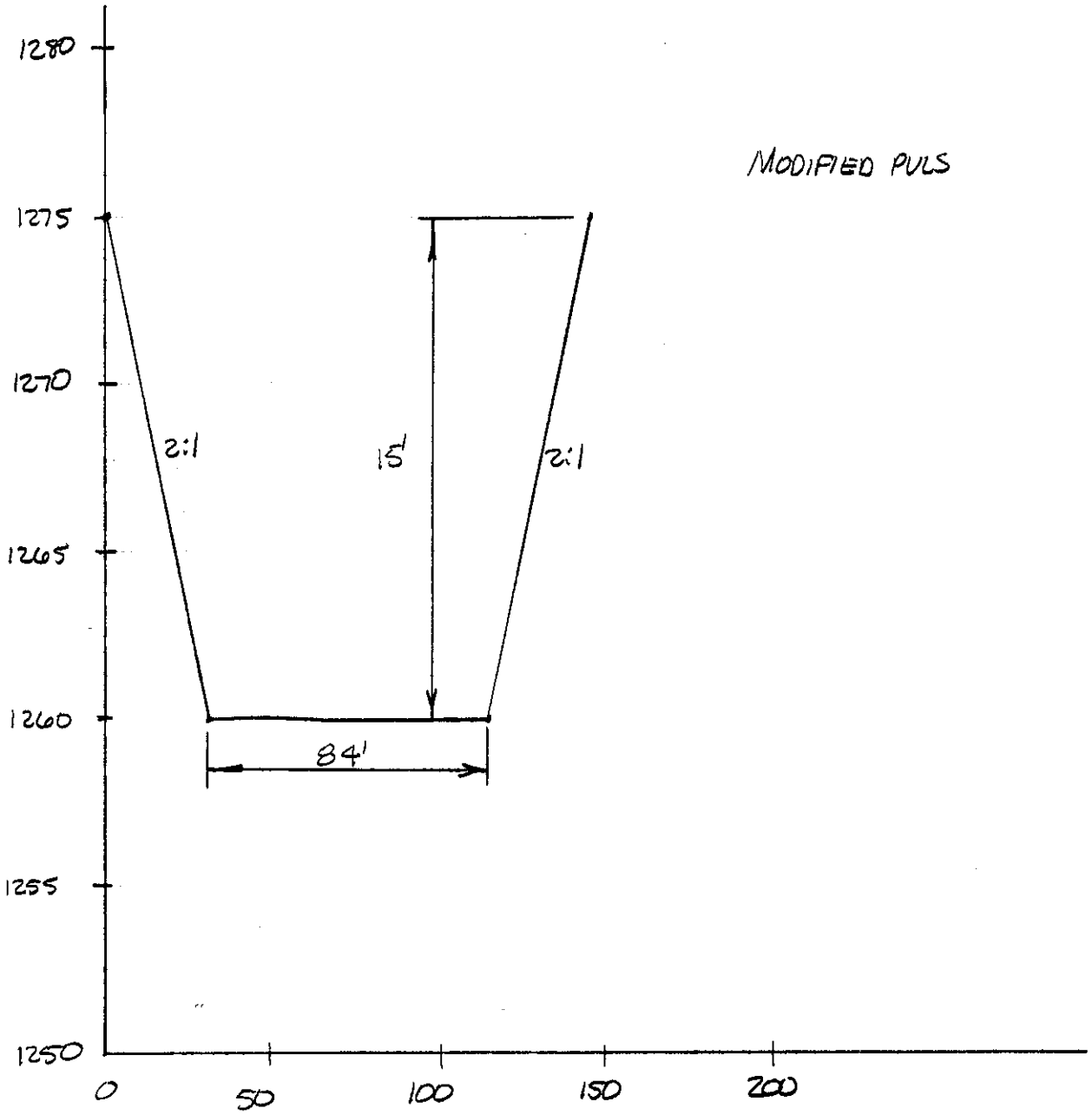

CAVE CREEK from CONFLUENCE with MOON VALLEY WASH
SOUTH to CACTUS ROAD

NODE 11 to NODE 12

BURGESS & NIPLE, INC. - COMPUTATION SHEET

JOB NO. _____ JOB NAME _____ SHEET ____ OF _____ SHEETS

SUBJECT _____ PREPARED BY _____ DATE _____

_____ CHECKED BY _____ DATE _____

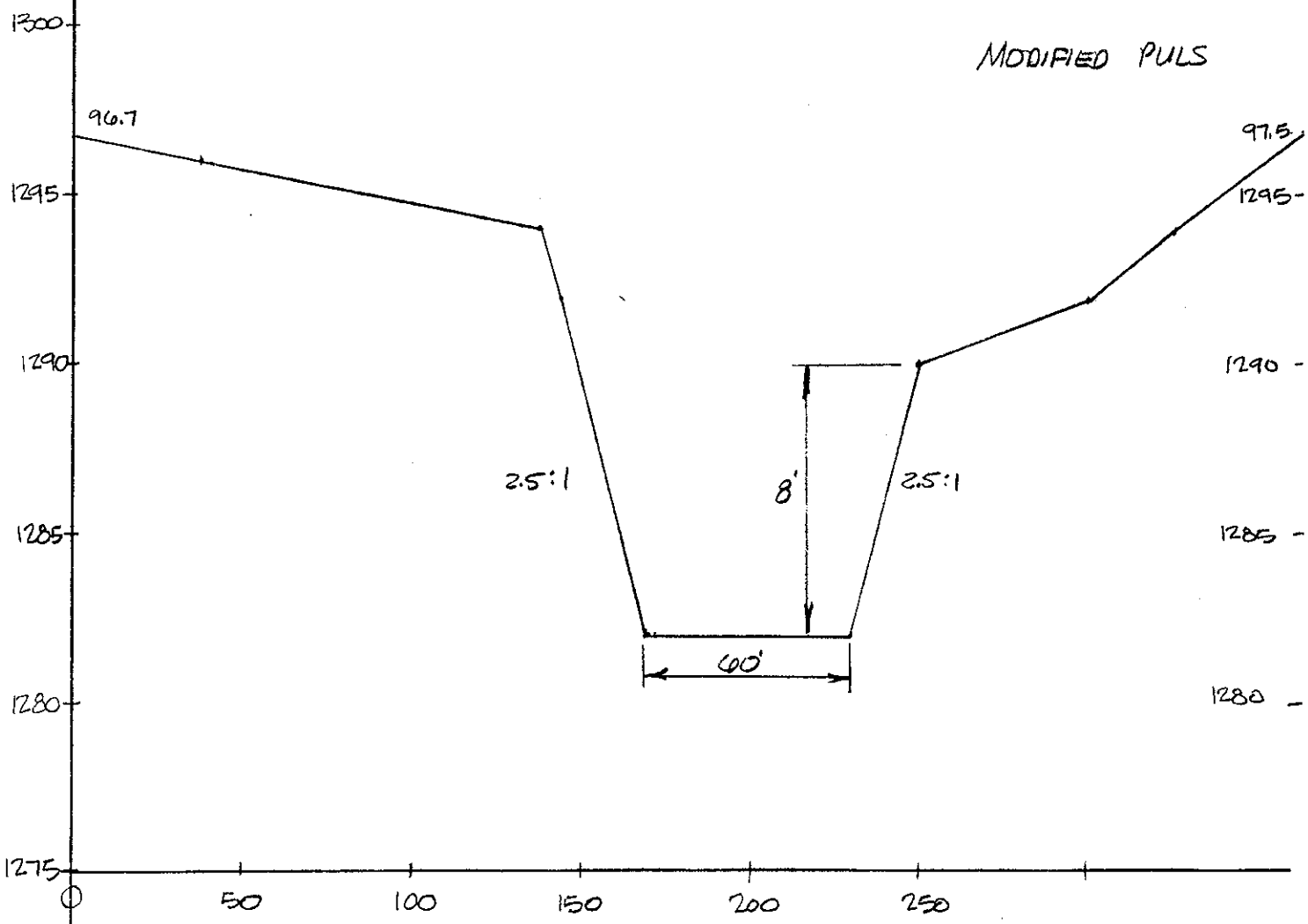

CAVE CREEK from 500' DOWNSTREAM OF 7TH AVENUE SOUTH TO THE CONFLUENCE WITH MOON VALLEY WASH

NODE 7 to NODE 11

MUSKINGUM

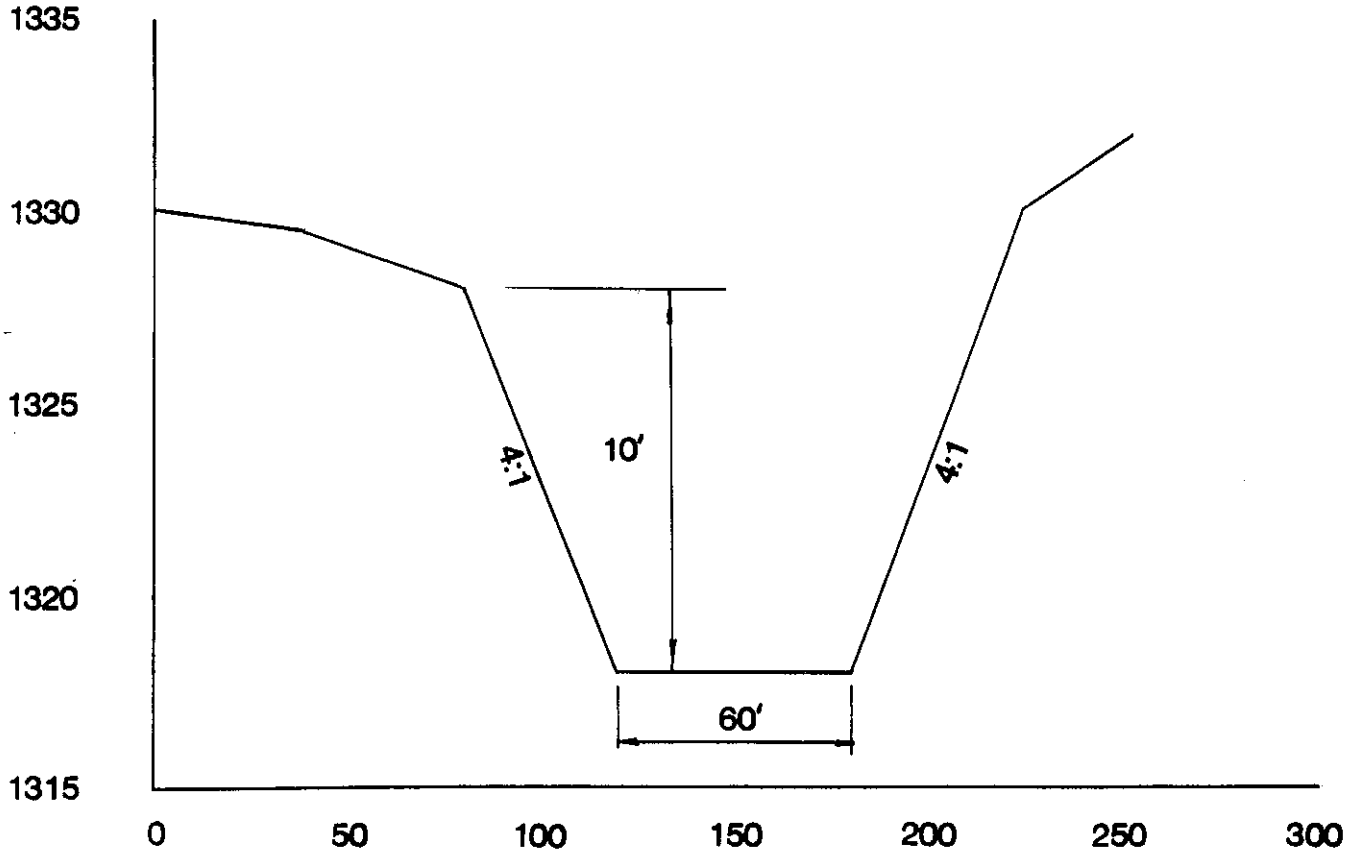

CONFLUENCE with EAST FORK SOUTH to
500' S. of GREENWAY ROAD, 600' W. of 19th Ave.
NODE 6 to NODE 7

Muskingus

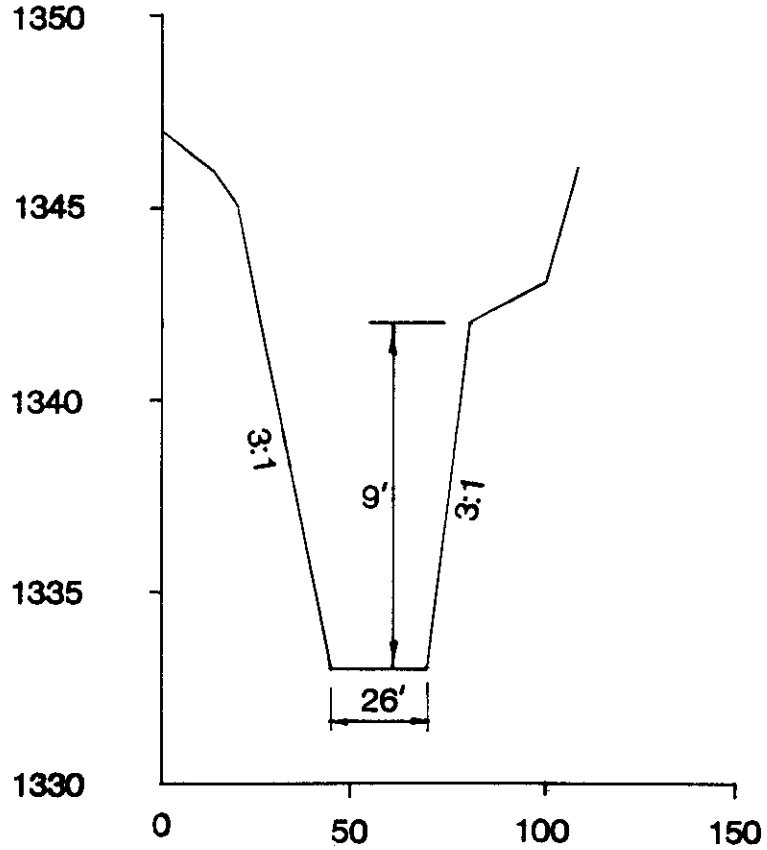

CAVE CREEK from BELL ROAD SOUTH
to the CONFLUENCE with EAST FORK CAVE CREEK

NODE 5 to NODE 6

BURGESS & NIPLE, INC. - COMPUTATION SHEET

JOB NO. _____ JOB NAME _____ SHEET ____ OF _____ SHEETS

SUBJECT _____ PREPARED BY _____ DATE _____

_____ CHECKED BY _____ DATE _____

MODIFIED PULS

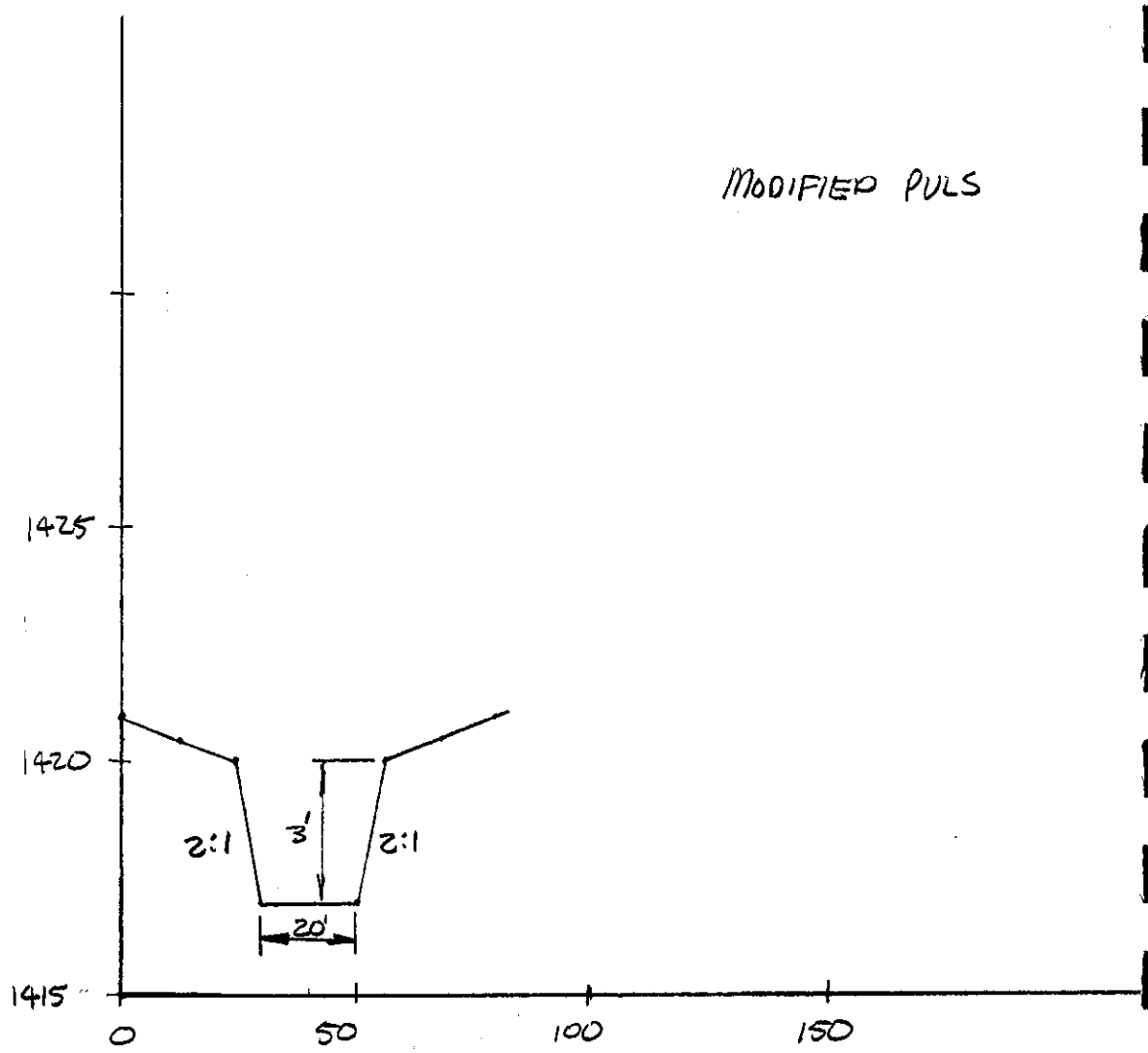

EAST FORK CAVE CREEK

NODE 24 to NODE 25

BURGESS & NIPLE, INC. - COMPUTATION SHEET

JOB NO. _____ JOB NAME _____ SHEET ____ OF _____ SHEETS

SUBJECT _____ PREPARED BY _____ DATE _____

_____ CHECKED BY _____ DATE _____

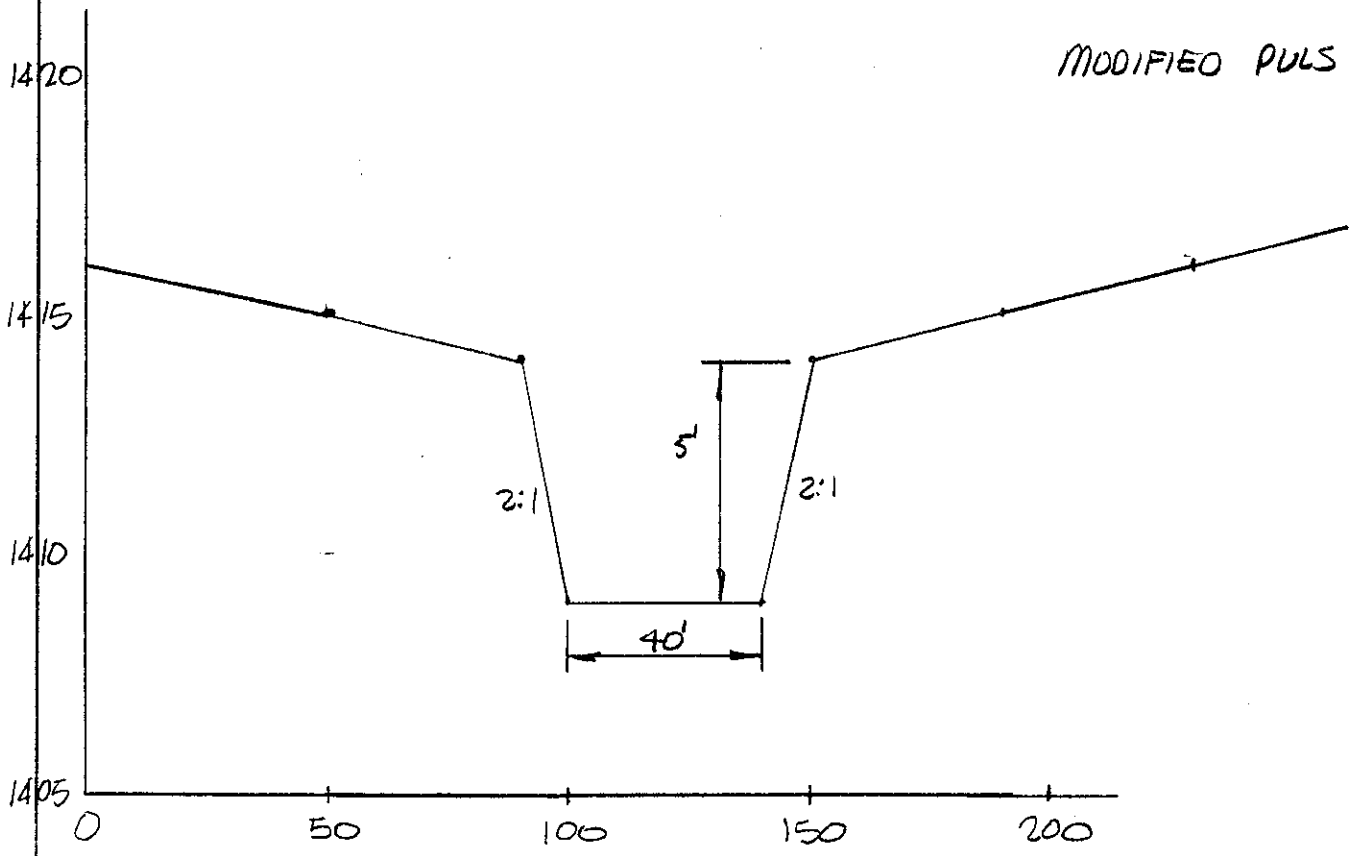

EAST FORK CAVE CREEK

NODE 25 to NODE 17

BURGESS & NIPLE, INC. - COMPUTATION SHEET

JOB NO. _____ JOB NAME _____ SHEET ____ OF _____ SHEETS

SUBJECT _____ PREPARED BY _____ DATE _____

_____ CHECKED BY _____ DATE _____

MODIFIED PULS

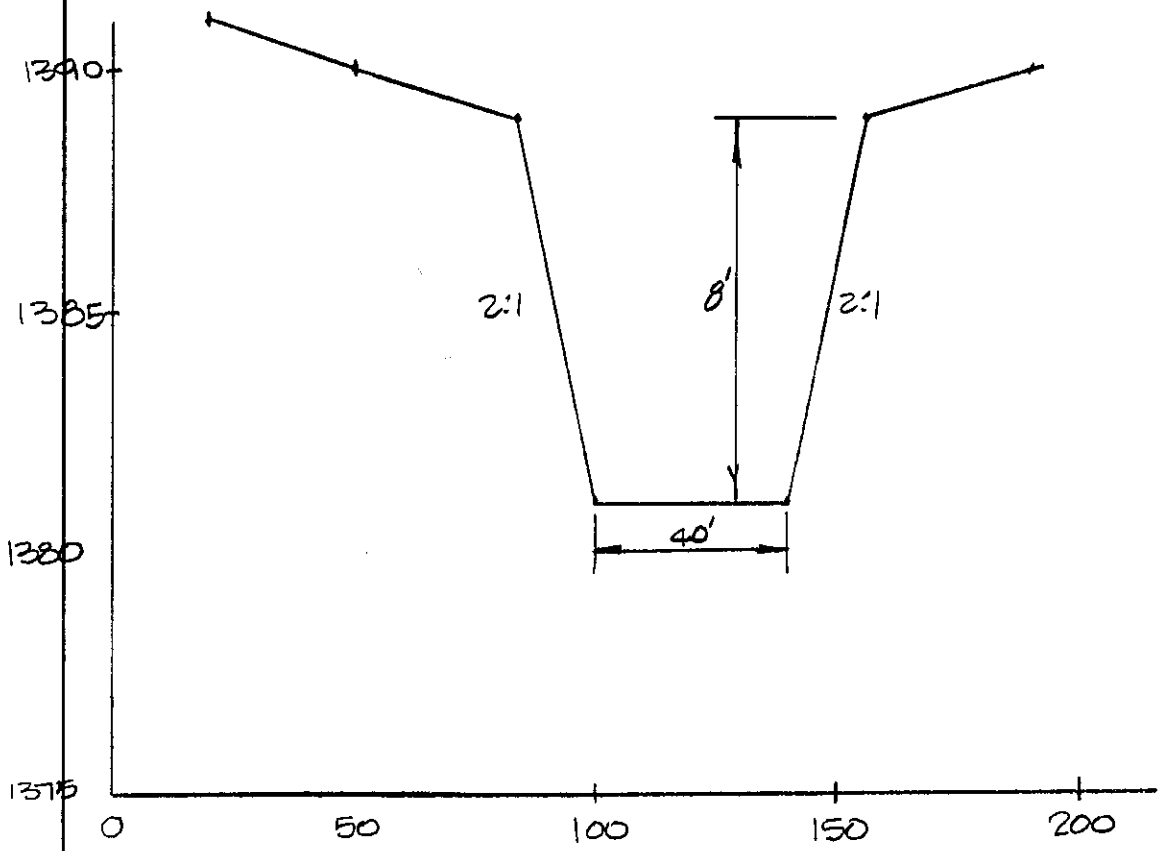

EAST FORK CAVE CREEK

NODE 17 to NODE 18

BURGESS & NIPLE, INC. - COMPUTATION SHEET

JOB NO. _____ JOB NAME _____ SHEET ____ OF _____ SHEETS

SUBJECT _____ PREPARED BY _____ DATE _____

_____ CHECKED BY _____ DATE _____

MODIFIED PULS

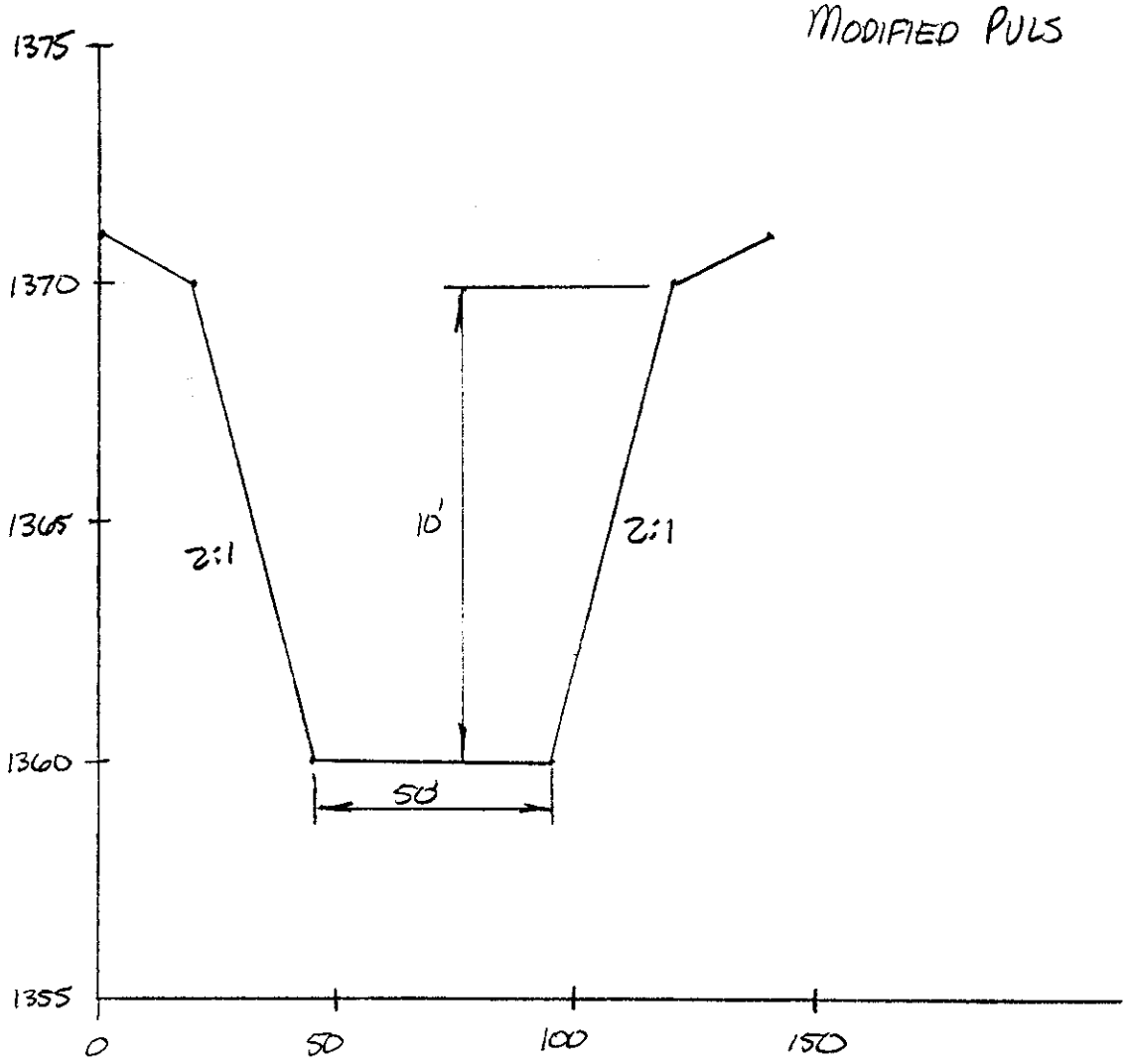

EAST FORK CAVE CREEK

NODE 18 to NODE 21

BURGESS & NIPLE, INC. - COMPUTATION SHEET

JOB NO. _____ JOB NAME _____ SHEET ____ OF _____ SHEETS

SUBJECT _____ PREPARED BY _____ DATE _____

_____ CHECKED BY _____ DATE _____

MODIFIED PULS

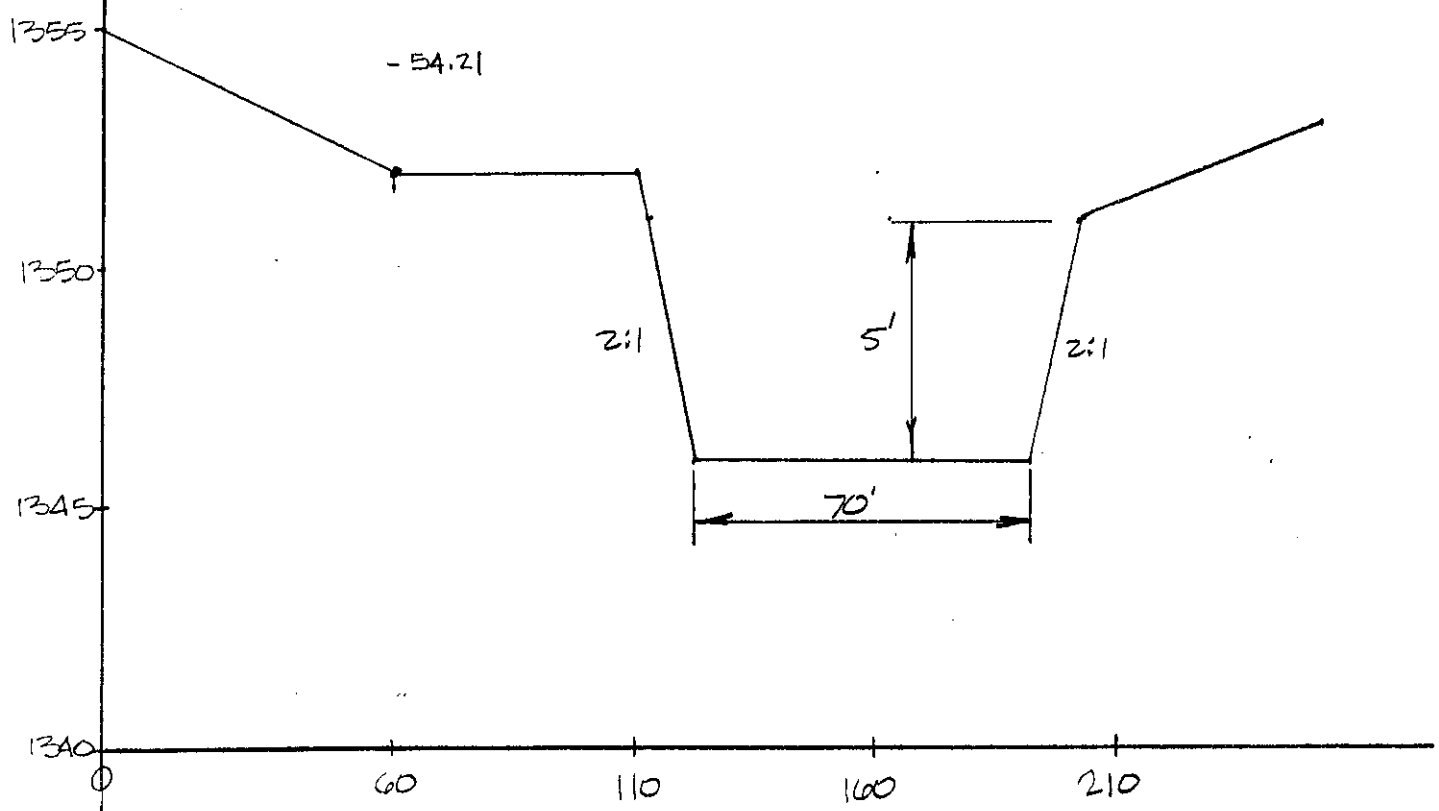

EAST FORK CAVE CREEK

NODE 21 to NODE 22

BURGESS & NIPLE, INC. - COMPUTATION SHEET

JOB NO. _____ JOB NAME _____ SHEET ____ OF _____ SHEETS

SUBJECT _____ PREPARED BY _____ DATE _____

_____ CHECKED BY _____ DATE _____

MODIFIED PULS

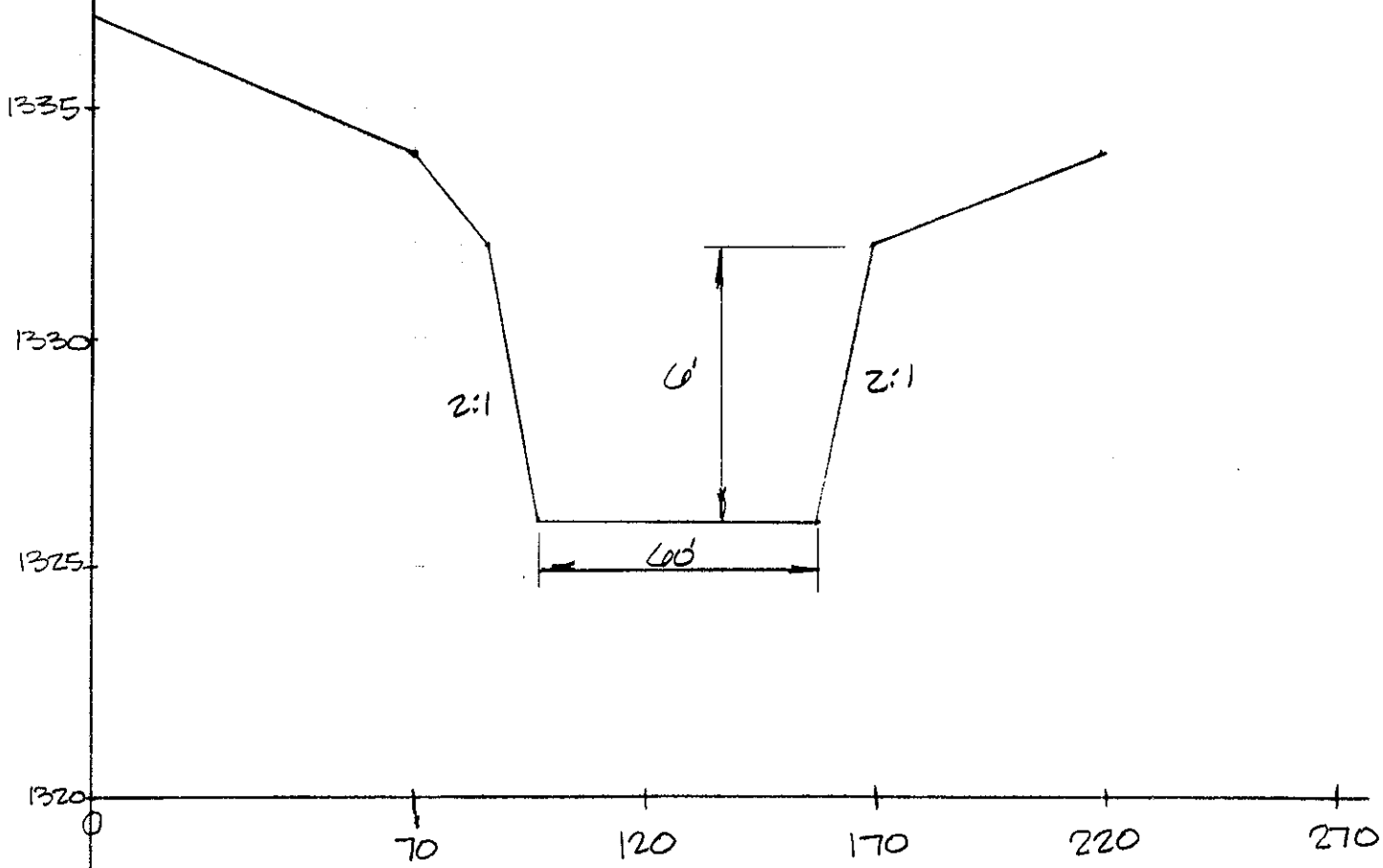

EAST FORK CAVE CREEK

NODE 22 to NODE 6

BURGESS & NIPLE, INC. - COMPUTATION SHEET

JOB NO. 7833 JOB NAME FCDMC - Cave Creek SHEET 1 OF 3 SHEETS

SUBJECT Detention Basin 2a PREPARED BY TRL DATE 10/13/89

CHECKED BY _____ DATE _____

Spillway Parameters : From As-Built Plans dated 5-3-76
Project No. ST-71183.00 C.O.P.

℄ Elev. = 1408 (crest)
Base = 80' (Average)
3:1 Sideslopes $Q = CLH^{1.5}$, C = 2.63, King & Brater, Table 5-3, Pg. 5-46

Low level Outlet : 16"x16" orifice = 1.78 ft.^{2}
℄ outlet = 1392.2, Exp. = 0.5, Coef. = 0.6
Re: King & Brater, Table 4-3, Page

Elev.	Storage Volume (AC-FT.)
1391	0
93	2
97	5
1400	10
1404	25
08	60
09	69
10	81
11	94
12	108

BURGESS & NIPLE, INC. - COMPUTATION SHEET

JOB NO. 7833 JOB NAME FCDMC - Cave Creek SHEET 2 OF 3 SHEETS

SUBJECT Detention Basin No. 26 PREPARED BY TRL DATE 10/13/89

CHECKED BY _____ DATE _____

Spillway Parameters: From As-Built Plans dated 5-3-76
Project No. ST-71183.00 C.O.P.

℄ Elev. = 1412 (crest)
Base = 80' $Q = CLH^{1.5}$
2:1 Sideslopes, Weir Coef. = 2.63 King + Brater, Table 5-3, Pg. 5-46

Low Level Outlet: 16"x16" orifice = 1.78 ft.^{2}
℄ outlet = 1396.7
Exp = 0.5, Coef. = 0.6

Elev.	Storage Volume (AC-Ft)
1395	0
1400	1
1405	18
1410	37
1412	48
1415	68

BURGESS & NIPLE, INC. - COMPUTATION SHEET

JOB NO. 7833 JOB NAME FCDMC-Cave Creek SHEET 3 OF 3 SHEETS

SUBJECT Detention Basin No. 7 PREPARED BY TRL DATE 10/13/89

CHECKED BY _____ DATE _____

Spillway

Elev.	Spillway Q (cfs)	Low Level Outlet Q (cfs)	Storage (AC-Ft.)	h (ft.)	Total Q (cfs)
1368.5	0	0	0	0	0
1392	0	53	120	24'	53
93	309	54	136	25'	363
94	873	55	152	26'	928
95	1604	56	175	27'	1660
96	2469	57	200	28'	2526
97	3450	58	224	29'	3508
98	4535	59	248	30'	4594
99	5715	60	272	31'	5775

Low Level Outlet: 18"x18" orifice = 2.25 ft.^{2}

Elev. of ℄ Outlet: 1367.5 + .75 = 1368.5

Exp = 0.5, Coef. = 0.6 Re: King & Brater Table 4-3, Page 4-29

NODE 6 TO NODE 7

CHANNEL CONFIGURATION IS TRAPEZOIDAL

*** SOLVING FOR DEPTH ***

BASE WIDTH	60.000 FT.
LEFT SIDE SLOPE	4.000 TO ONE
RIGHT SIDE SLOPE	4.000 TO ONE
CHANNEL SLOPE	0.60000 %
MANNINGS N	0.030

FOR DESIGN DISCHARGE =11000.000 C.F.S. :

AREA OF FLOW	838.412 S.F.
WETTED PERIMETER	132.608 FT.
HYDRAULIC RADIUS	6.322 FT.
CHANNEL TOP WIDTH ...	130.440 FT.

NORMAL DEPTH OF FLOW	8.805 FT.
VELOCITY AT NORMAL DEPTH .	13.120 F.P.S.
CRITICAL DEPTH	8.360 FT.
CRITICAL VELOCITY	14.082 F.P.S.
CRITICAL SLOPE	0.75805 %

FLOW CONDITION IS SUBCRITICAL

OPEN CHANNEL HYDRAULICS

****

PROJECT NAME ..... FCDMC CAVE CREEK FIS
PROJECT JOB NUMBER ... 7833
DATE 10-9-89

ROUTING CALC'S FOR CHANNELIZED FLOW

BASIN 1A TO NODE 1

CHANNEL CONFIGURATION IS TRAPEZOIDAL

*** SOLVING FOR DISCHARGE ***

BASE WIDTH ..... 10.000 FT.
LEFT SIDE SLOPE ..... 2.000 TO ONE
RIGHT SIDE SLOPE .... 2.000 TO ONE
CHANNEL SLOPE ..... 0.80000 %
MANNINGS N 0.040

FOR DESIGN DISCHARGE = 257.371 C.F.S. :

AREA OF FLOW ..... 48.000 S.F.
WETTED PERIMETER .... 23.416 FT.
HYDRAULIC RADIUS .... 2.050 FT.
CHANNEL TOP WIDTH ... 22.000 FT.

NORMAL DEPTH OF FLOW ..... 3.000 FT.
VELOCITY AT NORMAL DEPTH . 5.362 F.P.S.
CRITICAL DEPTH ..... 2.328 FT.
CRITICAL VELOCITY ..... 7.543 F.P.S.
CRITICAL SLOPE ..... 2.41880 %

FLOW CONDITION IS SUBCRITICAL

NODE 1 TO NODE 2

CHANNEL CONFIGURATION IS TRAPEZOIDAL

*** SOLVING FOR DISCHARGE ***

BASE WIDTH	20.000	FT.
LEFT SIDE SLOPE	3.000	TO ONE
RIGHT SIDE SLOPE	3.000	TO ONE
CHANNEL SLOPE	1.00000	%
MANNINGS N	0.040	

FOR DESIGN DISCHARGE = 950.433 C.F.S. :

AREA OF FLOW	128.000	S.F.
WETTED PERIMETER	45.298	FT.
HYDRAULIC RADIUS	2.826	FT.
CHANNEL TOP WIDTH ...	44.000	FT.

NORMAL DEPTH OF FLOW	4.000	FT.
VELOCITY AT NORMAL DEPTH .	7.425	F.P.S.
CRITICAL DEPTH	3.444	FT.
CRITICAL VELOCITY	9.098	F.P.S.
CRITICAL SLOPE	1.94951	%

FLOW CONDITION IS SUBCRITICAL

NODE 2 TO NODE 3

CHANNEL CONFIGURATION IS TRAPEZOIDAL

*** SOLVING FOR DISCHARGE ***

BASE WIDTH	50.000 FT.
LEFT SIDE SLOPE	3.000 TO ONE
RIGHT SIDE SLOPE	3.000 TO ONE
CHANNEL SLOPE	0.70000 %
MANNINGS N	0.035

FOR DESIGN DISCHARGE = 1950.126 C.F.S. :

AREA OF FLOW	248.000 S.F.
WETTED PERIMETER	75.298 FT.
HYDRAULIC RADIUS	3.294 FT.
CHANNEL TOP WIDTH ...	74.000 FT.

NORMAL DEPTH OF FLOW	4.000 FT.
VELOCITY AT NORMAL DEPTH .	7.863 F.P.S.
CRITICAL DEPTH	3.367 FT.
CRITICAL VELOCITY	9.637 F.P.S.
CRITICAL SLOPE	1.36980 %

FLOW CONDITION IS SUBCRITICAL

NODE 3 TO NODE 4

CHANNEL CONFIGURATION IS TRAPEZOIDAL
==========

*** SOLVING FOR DISCHARGE ***

BASE WIDTH ..... 25.000 FT.
LEFT SIDE SLOPE ..... 3.000 TO ONE
RIGHT SIDE SLOPE .... 3.000 TO ONE
CHANNEL SLOPE ..... 0.50000 %
MANNINGS N 0.035

FOR DESIGN DISCHARGE = 1392.595 C.F.S. :

AREA OF FLOW ..... 200.000 S.F.
WETTED PERIMETER .... 56.623 FT.
HYDRAULIC RADIUS .... 3.532 FT.
CHANNEL TOP WIDTH ... 55.000 FT.

NORMAL DEPTH OF FLOW ..... 5.000 FT.
VELOCITY AT NORMAL DEPTH . 6.963 F.P.S.
CRITICAL DEPTH ..... 3.893 FT.
CRITICAL VELOCITY ..... 9.753 F.P.S.
CRITICAL SLOPE ..... 1.51448 %

FLOW CONDITION IS SUBCRITICAL

NODE 4 TO NODE 5

CHANNEL CONFIGURATION IS TRAPEZOIDAL

*** SOLVING FOR DISCHARGE ***

BASE WIDTH ..... 30.000 FT.
LEFT SIDE SLOPE ..... 2.000 TO ONE
RIGHT SIDE SLOPE .... 2.000 TO ONE
CHANNEL SLOPE ..... 0.60000 %
MANNINGS N 0.035

FOR DESIGN DISCHARGE = 1607.211 C.F.S. :

AREA OF FLOW ..... 200.000 S.F.
WETTED PERIMETER .... 52.361 FT.
HYDRAULIC RADIUS .... 3.820 FT.
CHANNEL TOP WIDTH ... 50.000 FT.

NORMAL DEPTH OF FLOW ..... 5.000 FT.
VELOCITY AT NORMAL DEPTH . 8.036 F.P.S.
CRITICAL DEPTH ..... 4.060 FT.
CRITICAL VELOCITY ..... 10.385 F.P.S.
CRITICAL SLOPE ..... 1.38256 %

FLOW CONDITION IS SUBCRITICAL

NODE 5 TO NODE 6

CHANNEL CONFIGURATION IS TRAPEZOIDAL
==========

*** SOLVING FOR DEPTH ***

```
BASE WIDTH ..........      26.000 FT.
LEFT SIDE SLOPE .....       3.000 TO ONE
RIGHT SIDE SLOPE ....       3.000 TO ONE
CHANNEL SLOPE .......       0.70000 %
MANNINGS N ..........       0.030

FOR DESIGN DISCHARGE = 5400.000 C.F.S. :
----------------------------------------
AREA OF FLOW ........     423.759 S.F.
WETTED PERIMETER ....      78.601 FT.
HYDRAULIC RADIUS ....       5.391 FT.
CHANNEL TOP WIDTH ...      75.902 FT.

NORMAL DEPTH OF FLOW .....       8.317 FT.
VELOCITY AT NORMAL DEPTH .      12.743 F.P.S.
CRITICAL DEPTH ...........       8.097 FT.
CRITICAL VELOCITY ........      13.261 F.P.S.
CRITICAL SLOPE ...........       0.79770 %

FLOW CONDITION IS  SUBCRITICAL
```

NODE 7 TO NODE 8

CHANNEL CONFIGURATION IS TRAPEZOIDAL

*** SOLVING FOR DISCHARGE ***

BASE WIDTH	60.000	FT.
LEFT SIDE SLOPE	2.500	TO ONE
RIGHT SIDE SLOPE	2.500	TO ONE
CHANNEL SLOPE	0.30000	%
MANNINGS N	0.035	

FOR DESIGN DISCHARGE = 7550.634 C.F.S. :

AREA OF FLOW	850.000	S.F.
WETTED PERIMETER	113.852	FT.
HYDRAULIC RADIUS	7.466	FT.
CHANNEL TOP WIDTH ...	110.000	FT.

NORMAL DEPTH OF FLOW	10.000	FT.
VELOCITY AT NORMAL DEPTH .	8.883	F.P.S.
CRITICAL DEPTH	7.111	FT.
CRITICAL VELOCITY	13.652	F.P.S.
CRITICAL SLOPE	1.22929	%

FLOW CONDITION IS SUBCRITICAL

NODE 11 TO NODE 12

CHANNEL CONFIGURATION IS TRAPEZOIDAL

*** SOLVING FOR DEPTH ***

BASE WIDTH	84.000 FT.
LEFT SIDE SLOPE	2.000 TO ONE
RIGHT SIDE SLOPE	2.000 TO ONE
CHANNEL SLOPE	0.60000 %
MANNINGS N	0.015

FOR DESIGN DISCHARGE =12000.000 C.F.S. :

AREA OF FLOW	539.405 S.F.
WETTED PERIMETER	109.308 FT.
HYDRAULIC RADIUS	4.935 FT.
CHANNEL TOP WIDTH ...	106.636 FT.

NORMAL DEPTH OF FLOW	5.659 FT.
VELOCITY AT NORMAL DEPTH .	22.247 F.P.S.
CRITICAL DEPTH	8.032 FT.
CRITICAL VELOCITY	14.931 F.P.S.
CRITICAL SLOPE	0.16363 %

FLOW CONDITION IS SUPERCRITICAL

NODE 12 TO NODE 13

CHANNEL CONFIGURATION IS TRAPEZOIDAL

*** SOLVING FOR DEPTH ***

BASE WIDTH	68.000 FT.
LEFT SIDE SLOPE	2.000 TO ONE
RIGHT SIDE SLOPE	2.000 TO ONE
CHANNEL SLOPE	0.40000 %
MANNINGS N	0.015

FOR DESIGN DISCHARGE =13000.000 C.F.S. :

AREA OF FLOW	620.345 S.F.
WETTED PERIMETER	101.443 FT.
HYDRAULIC RADIUS	6.115 FT.
CHANNEL TOP WIDTH ...	97.912 FT.

NORMAL DEPTH OF FLOW	7.478 FT.
VELOCITY AT NORMAL DEPTH .	20.956 F.P.S.
CRITICAL DEPTH	9.457 FT.
CRITICAL VELOCITY	15.816 F.P.S.
CRITICAL SLOPE	0.16064 %

FLOW CONDITION IS SUPERCRITICAL

NODE 14 TO NODE 15

CHANNEL CONFIGURATION IS TRAPEZOIDAL

*** SOLVING FOR DISCHARGE ***

BASE WIDTH ..... 10.000 FT.
LEFT SIDE SLOPE ..... 2.500 TO ONE
RIGHT SIDE SLOPE .... 2.500 TO ONE
CHANNEL SLOPE ..... 0.50000 %
MANNINGS N 0.040

FOR DESIGN DISCHARGE = 390.853 C.F.S. :

AREA OF FLOW ..... 80.000 S.F.
WETTED PERIMETER .... 31.541 FT.
HYDRAULIC RADIUS .... 2.536 FT.
CHANNEL TOP WIDTH ... 30.000 FT.

NORMAL DEPTH OF FLOW ..... 4.000 FT.
VELOCITY AT NORMAL DEPTH . 4.886 F.P.S.
CRITICAL DEPTH ..... 2.841 FT.
CRITICAL VELOCITY ..... 8.044 F.P.S.
CRITICAL SLOPE ..... 2.55219 %

FLOW CONDITION IS SUBCRITICAL

NODE 15 TO NODE 16

CHANNEL CONFIGURATION IS TRAPEZOIDAL

*** SOLVING FOR DISCHARGE ***

```
BASE WIDTH ..........      20.000 FT.
LEFT SIDE SLOPE .....       2.000 TO ONE
RIGHT SIDE SLOPE ....       2.000 TO ONE
CHANNEL SLOPE .......       0.60000 %
MANNINGS N ..........       0.030

FOR DESIGN DISCHARGE =  885.111 C.F.S. :
-----------------------------------------------------------
AREA OF FLOW ........     112.000 S.F.
WETTED PERIMETER ....      37.889 FT.
HYDRAULIC RADIUS ....       2.956 FT.
CHANNEL TOP WIDTH ...      36.000 FT.

NORMAL DEPTH OF FLOW .....       4.000 FT.
VELOCITY AT NORMAL DEPTH .       7.903 F.P.S.
CRITICAL DEPTH ...........       3.479 FT.
CRITICAL VELOCITY ........       9.437 F.P.S.
CRITICAL SLOPE ...........       1.06731 %

FLOW CONDITION IS  SUBCRITICAL
```

NODE 24 TO NODE 25

CHANNEL CONFIGURATION IS TRAPEZOIDAL

*** SOLVING FOR DISCHARGE ***

BASE WIDTH	20.000 FT.
LEFT SIDE SLOPE	2.000 TO ONE
RIGHT SIDE SLOPE	2.000 TO ONE
CHANNEL SLOPE	0.50000 %
MANNINGS N	0.030

FOR DESIGN DISCHARGE = 480.729 C.F.S. :

AREA OF FLOW	78.000 S.F.
WETTED PERIMETER	33.416 FT.
HYDRAULIC RADIUS	2.334 FT.
CHANNEL TOP WIDTH ...	32.000 FT.

NORMAL DEPTH OF FLOW	3.000 FT.
VELOCITY AT NORMAL DEPTH .	6.163 F.P.S.
CRITICAL DEPTH	2.405 FT.
CRITICAL VELOCITY	8.057 F.P.S.
CRITICAL SLOPE	1.19753 %

FLOW CONDITION IS SUBCRITICAL

BASIN 2G TO NODE 25

CHANNEL CONFIGURATION IS TRAPEZOIDAL

*** SOLVING FOR DISCHARGE ***

BASE WIDTH	15.000 FT.
LEFT SIDE SLOPE	2.000 TO ONE
RIGHT SIDE SLOPE	2.000 TO ONE
CHANNEL SLOPE	0.40000 %
MANNINGS N	0.030

FOR DESIGN DISCHARGE = 335.569 C.F.S. :

AREA OF FLOW	63.000 S.F.
WETTED PERIMETER	28.416 FT.
HYDRAULIC RADIUS	2.217 FT.
CHANNEL TOP WIDTH ...	27.000 FT.

NORMAL DEPTH OF FLOW	3.000 FT.
VELOCITY AT NORMAL DEPTH .	5.326 F.P.S.
CRITICAL DEPTH	2.245 FT.
CRITICAL VELOCITY	7.669 F.P.S.
CRITICAL SLOPE	1.31017 %

FLOW CONDITION IS SUBCRITICAL

NODE 25 TO NODE 17

CHANNEL CONFIGURATION IS TRAPEZOIDAL

*** SOLVING FOR DISCHARGE ***

BASE WIDTH	40.000	FT.
LEFT SIDE SLOPE	2.000	TO ONE
RIGHT SIDE SLOPE	2.000	TO ONE
CHANNEL SLOPE	0.30000	%
MANNINGS N	0.030	

FOR DESIGN DISCHARGE = 1711.661 C.F.S. :

AREA OF FLOW	250.000	S.F.
WETTED PERIMETER	62.361	FT.
HYDRAULIC RADIUS	4.009	FT.
CHANNEL TOP WIDTH ...	60.000	FT.

NORMAL DEPTH OF FLOW	5.000	FT.
VELOCITY AT NORMAL DEPTH .	6.847	F.P.S.
CRITICAL DEPTH	3.609	FT.
CRITICAL VELOCITY	10.044	F.P.S.
CRITICAL SLOPE	1.05112	%

FLOW CONDITION IS SUBCRITICAL

NODE 17 TO NODE 18

CHANNEL CONFIGURATION IS TRAPEZOIDAL

*** SOLVING FOR DISCHARGE ***

BASE WIDTH	40.000 FT.
LEFT SIDE SLOPE	2.000 TO ONE
RIGHT SIDE SLOPE	2.000 TO ONE
CHANNEL SLOPE	0.50000 %
MANNINGS N	0.030

FOR DESIGN DISCHARGE = 1495.625 C.F.S. :

AREA OF FLOW	192.000 S.F.
WETTED PERIMETER	57.889 FT.
HYDRAULIC RADIUS	3.317 FT.
CHANNEL TOP WIDTH ...	56.000 FT.

NORMAL DEPTH OF FLOW	4.000 FT.
VELOCITY AT NORMAL DEPTH .	7.790 F.P.S.
CRITICAL DEPTH	3.316 FT.
CRITICAL VELOCITY	9.672 F.P.S.
CRITICAL SLOPE	1.01531 %

FLOW CONDITION IS SUBCRITICAL

NODE 18 TO NODE 21

CHANNEL CONFIGURATION IS TRAPEZOIDAL

*** SOLVING FOR DISCHARGE ***

BASE WIDTH	50.000	FT.
LEFT SIDE SLOPE	2.000	TO ONE
RIGHT SIDE SLOPE	2.000	TO ONE
CHANNEL SLOPE	0.70000	%
MANNINGS N	0.030	

FOR DESIGN DISCHARGE = 3208.585 C.F.S. :

AREA OF FLOW	300.000	S.F.
WETTED PERIMETER	72.361	FT.
HYDRAULIC RADIUS	4.146	FT.
CHANNEL TOP WIDTH ...	70.000	FT.

NORMAL DEPTH OF FLOW	5.000	FT.
VELOCITY AT NORMAL DEPTH .	10.695	F.P.S.
CRITICAL DEPTH	4.715	FT.
CRITICAL VELOCITY	11.451	F.P.S.
CRITICAL SLOPE	0.87474	%

FLOW CONDITION IS SUBCRITICAL

NODE 20 TO NODE 21

CHANNEL CONFIGURATION IS TRAPEZOIDAL

*** SOLVING FOR DISCHARGE ***

BASE WIDTH ..... 20.000 FT.
LEFT SIDE SLOPE ..... 2.000 TO ONE
RIGHT SIDE SLOPE .... 2.000 TO ONE
CHANNEL SLOPE ..... 0.60000 %
MANNINGS N 0.035

FOR DESIGN DISCHARGE = 326.768 C.F.S. :

AREA OF FLOW ..... 62.500 S.F.
WETTED PERIMETER .... 31.180 FT.
HYDRAULIC RADIUS .... 2.004 FT.
CHANNEL TOP WIDTH ... 30.000 FT.

NORMAL DEPTH OF FLOW ..... 2.500 FT.
VELOCITY AT NORMAL DEPTH . 5.228 F.P.S.
CRITICAL DEPTH ..... 1.893 FT.
CRITICAL VELOCITY ..... 7.257 F.P.S.
CRITICAL SLOPE ..... 1.75274 %

FLOW CONDITION IS SUBCRITICAL

NODE 21 TO NODE 22

CHANNEL CONFIGURATION IS TRAPEZOIDAL

*** SOLVING FOR DISCHARGE ***

BASE WIDTH	70.000 FT.
LEFT SIDE SLOPE	2.000 TO ONE
RIGHT SIDE SLOPE	2.000 TO ONE
CHANNEL SLOPE	0.40000 %
MANNINGS N	0.035

FOR DESIGN DISCHARGE = 2853.794 C.F.S. :

AREA OF FLOW	400.000 S.F.
WETTED PERIMETER	92.361 FT.
HYDRAULIC RADIUS	4.331 FT.
CHANNEL TOP WIDTH ...	90.000 FT.

NORMAL DEPTH OF FLOW	5.000 FT.
VELOCITY AT NORMAL DEPTH .	7.134 F.P.S.
CRITICAL DEPTH	3.593 FT.
CRITICAL VELOCITY	10.290 F.P.S.
CRITICAL SLOPE	1.33438 %

FLOW CONDITION IS SUBCRITICAL

NODE 22 TO NODE 6

CHANNEL CONFIGURATION IS TRAPEZOIDAL

*** SOLVING FOR DISCHARGE ***

BASE WIDTH	60.000	FT.
LEFT SIDE SLOPE	2.000	TO ONE
RIGHT SIDE SLOPE	2.000	TO ONE
CHANNEL SLOPE	0.50000	%
MANNINGS N	0.035	

FOR DESIGN DISCHARGE = 3779.660 C.F.S. :

AREA OF FLOW	432.000	S.F.
WETTED PERIMETER	86.833	FT.
HYDRAULIC RADIUS	4.975	FT.
CHANNEL TOP WIDTH ...	84.000	FT.

NORMAL DEPTH OF FLOW	6.000	FT.
VELOCITY AT NORMAL DEPTH .	8.749	F.P.S.
CRITICAL DEPTH	4.710	FT.
CRITICAL VELOCITY	11.560	F.P.S.
CRITICAL SLOPE	1.24504	%

FLOW CONDITION IS SUBCRITICAL

BASIN 5C TO NODE 26

CHANNEL CONFIGURATION IS CIRCULAR

*** SOLVING FOR DISCHARGE ***

PIPE DIAMETER	54.000	INCHES
FULL FLOW Q	101.052	C.F.S
FULL FLOW VELOCITY ..	6.354	F.P.S.
CHANNEL SLOPE	0.90000	%
MANNINGS N	0.024	

FOR DESIGN DISCHARGE = 101.052 C.F.S. :

AREA OF FLOW	15.904	S.F.
WETTED PERIMETER	14.137	FT.
HYDRAULIC RADIUS	1.125	FT.
CHANNEL TOP WIDTH ...	0.000	FT.

NORMAL DEPTH OF FLOW	4.500	FT.
VELOCITY AT NORMAL DEPTH .	6.354	F.P.S.
CRITICAL DEPTH	2.953	FT.
CRITICAL VELOCITY	9.134	F.P.S.
CRITICAL SLOPE	1.85992	%

FLOW CONDITION IS SUBCRITICAL

BASIN 5G TO NODE 26

CHANNEL CONFIGURATION IS TRAPEZOIDAL

*** SOLVING FOR DISCHARGE ***

BASE WIDTH	2.000 FT.
LEFT SIDE SLOPE	2.000 TO ONE
RIGHT SIDE SLOPE	2.000 TO ONE
CHANNEL SLOPE	0.90000 %
MANNINGS N	0.035

FOR DESIGN DISCHARGE = 311.980 C.F.S. :

AREA OF FLOW	48.000 S.F.
WETTED PERIMETER	23.416 FT.
HYDRAULIC RADIUS	2.050 FT.
CHANNEL TOP WIDTH ...	22.000 FT.

NORMAL DEPTH OF FLOW	3.000 FT.
VELOCITY AT NORMAL DEPTH .	6.500 F.P.S.
CRITICAL DEPTH	2.599 FT.
CRITICAL VELOCITY	7.898 F.P.S.
CRITICAL SLOPE	1.69029 %

FLOW CONDITION IS SUBCRITICAL

NODE 26 TO NODE 28

CHANNEL CONFIGURATION IS TRAPEZOIDAL

*** SOLVING FOR DISCHARGE ***

BASE WIDTH	15.000 FT.
LEFT SIDE SLOPE	2.000 TO ONE
RIGHT SIDE SLOPE	2.000 TO ONE
CHANNEL SLOPE	0.80000 %
MANNINGS N	0.025

FOR DESIGN DISCHARGE = 274.871 C.F.S. :

AREA OF FLOW	38.000 S.F.
WETTED PERIMETER	23.944 FT.
HYDRAULIC RADIUS	1.587 FT.
CHANNEL TOP WIDTH ...	23.000 FT.

NORMAL DEPTH OF FLOW	2.000 FT.
VELOCITY AT NORMAL DEPTH .	7.233 F.P.S.
CRITICAL DEPTH	1.989 FT.
CRITICAL VELOCITY	7.282 F.P.S.
CRITICAL SLOPE	0.81755 %

FLOW CONDITION IS SUBCRITICAL

BASIN 5A TO NODE 27

CHANNEL CONFIGURATION IS TRAPEZOIDAL

*** SOLVING FOR DISCHARGE ***

BASE WIDTH	35.000 FT.
LEFT SIDE SLOPE	2.000 TO ONE
RIGHT SIDE SLOPE	2.000 TO ONE
CHANNEL SLOPE	0.40000 %
MANNINGS N	0.030

FOR DESIGN DISCHARGE = 358.220 C.F.S. :

AREA OF FLOW	78.000 S.F.
WETTED PERIMETER	43.944 FT.
HYDRAULIC RADIUS	1.775 FT.
CHANNEL TOP WIDTH ...	43.000 FT.

NORMAL DEPTH OF FLOW	2.000 FT.
VELOCITY AT NORMAL DEPTH .	4.593 F.P.S.
CRITICAL DEPTH	1.440 FT.
CRITICAL VELOCITY	6.567 F.P.S.
CRITICAL SLOPE	1.30003 %

FLOW CONDITION IS SUBCRITICAL

NODE 27 TO NODE 28

CHANNEL CONFIGURATION IS TRAPEZOIDAL

*** SOLVING FOR DISCHARGE ***

BASE WIDTH	20.000	FT.
LEFT SIDE SLOPE	2.000	TO ONE
RIGHT SIDE SLOPE	2.000	TO ONE
CHANNEL SLOPE	0.10000	%
MANNINGS N	0.030	

FOR DESIGN DISCHARGE = 105.339 C.F.S. :

AREA OF FLOW	48.000	S.F.
WETTED PERIMETER	28.944	FT.
HYDRAULIC RADIUS	1.658	FT.
CHANNEL TOP WIDTH ...	28.000	FT.

NORMAL DEPTH OF FLOW	2.000	FT.
VELOCITY AT NORMAL DEPTH .	2.195	F.P.S.
CRITICAL DEPTH	0.921	FT.
CRITICAL VELOCITY	5.236	F.P.S.
CRITICAL SLOPE	1.75417	%

FLOW CONDITION IS SUBCRITICAL

NODE 28 TO NODE 29

CHANNEL CONFIGURATION IS TRAPEZOIDAL

*** SOLVING FOR DISCHARGE ***

BASE WIDTH	25.000 FT.
LEFT SIDE SLOPE	2.000 TO ONE
RIGHT SIDE SLOPE	2.000 TO ONE
CHANNEL SLOPE	0.60000 %
MANNINGS N	0.030

FOR DESIGN DISCHARGE = 467.836 C.F.S. :

AREA OF FLOW	75.000 S.F.
WETTED PERIMETER	36.180 FT.
HYDRAULIC RADIUS	2.073 FT.
CHANNEL TOP WIDTH ...	35.000 FT.

NORMAL DEPTH OF FLOW	2.500 FT.
VELOCITY AT NORMAL DEPTH .	6.238 F.P.S.
CRITICAL DEPTH	2.089 FT.
CRITICAL VELOCITY	7.675 F.P.S.
CRITICAL SLOPE	1.18267 %

FLOW CONDITION IS SUBCRITICAL

BASIN 5D TO NODE 29

CHANNEL CONFIGURATION IS TRAPEZOIDAL

*** SOLVING FOR DISCHARGE ***

BASE WIDTH	10.000	FT.
LEFT SIDE SLOPE	2.000	TO ONE
RIGHT SIDE SLOPE	2.000	TO ONE
CHANNEL SLOPE	0.80000	%
MANNINGS N	0.030	

FOR DESIGN DISCHARGE = 160.961 C.F.S. :

AREA OF FLOW	28.000	S.F.
WETTED PERIMETER	18.944	FT.
HYDRAULIC RADIUS	1.478	FT.
CHANNEL TOP WIDTH ...	18.000	FT.

NORMAL DEPTH OF FLOW	2.000	FT.
VELOCITY AT NORMAL DEPTH .	5.749	F.P.S.
CRITICAL DEPTH	1.769	FT.
CRITICAL VELOCITY	6.721	F.P.S.
CRITICAL SLOPE	1.32829	%

FLOW CONDITION IS SUBCRITICAL

NODE 29 TO NODE 11

CHANNEL CONFIGURATION IS TRAPEZOIDAL

*** SOLVING FOR DISCHARGE ***

BASE WIDTH ..... 38.000 FT.
LEFT SIDE SLOPE ..... 1.000 TO ONE
RIGHT SIDE SLOPE .... 1.000 TO ONE
CHANNEL SLOPE ..... 0.50000 %
MANNINGS N 0.020

FOR DESIGN DISCHARGE = 1998.377 C.F.S. :

AREA OF FLOW ..... 168.000 S.F.
WETTED PERIMETER .... 49.314 FT.
HYDRAULIC RADIUS .... 3.407 FT.
CHANNEL TOP WIDTH ... 46.000 FT.

NORMAL DEPTH OF FLOW ..... 4.000 FT.
VELOCITY AT NORMAL DEPTH . 11.895 F.P.S.
CRITICAL DEPTH ..... 4.244 FT.
CRITICAL VELOCITY ..... 11.146 F.P.S.
CRITICAL SLOPE ..... 0.40641 %

FLOW CONDITION IS SUPERCRITICAL

APPENDIX "E"

OPEN CHANNEL HYDRAULIC CALCULATIONS FOR DETERMINATION OF FLOW DIVERSION RATING CURVES

BURGESS & NIPLE, INC. – COMPUTATION SHEET

JOB NO. 7833 JOB NAME FCDMC – Cave Creek FIS SHEET 1 OF 5 SHEETS

SUBJECT Split Flow Cross Sections PREPARED BY TRL DATE 10/14/89

19 th Ave. and Bell Road CHECKED BY _____ DATE _____

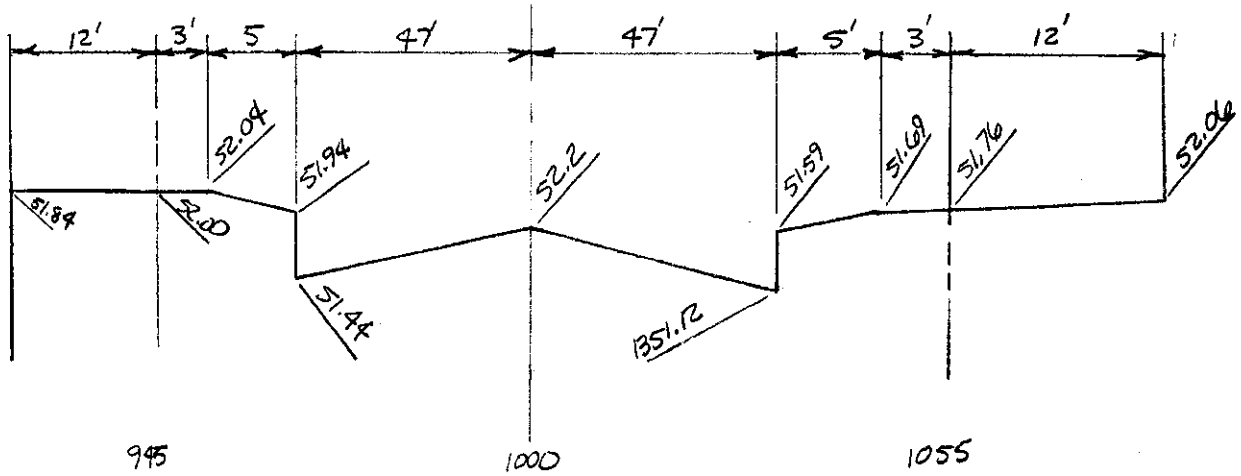

19th Avenue South of Bell Road

nts

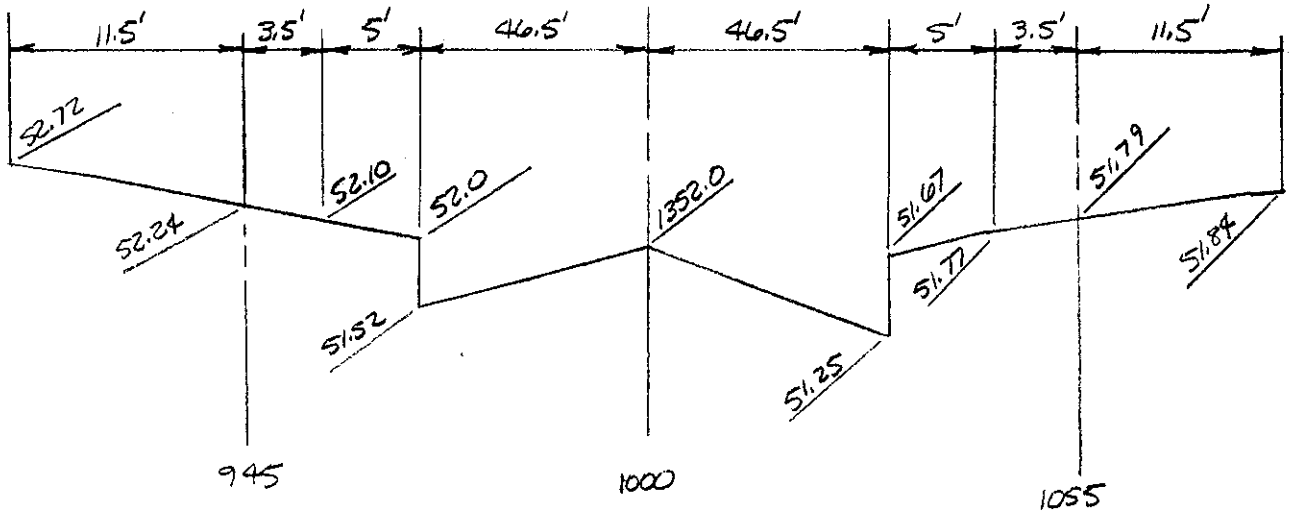

Bell Road West of 19th Avenue

nts

BURGESS & NIPLE, INC. - COMPUTATION SHEET

JOB NO. 7833 JOB NAME FCDMC-Cave Creek FIS SHEET 2 OF 5 SHEETS

SUBJECT Split Flow Cross Sections PREPARED BY TRC DATE 10/14/89

7th Street and Bell Road CHECKED BY _____ DATE _____

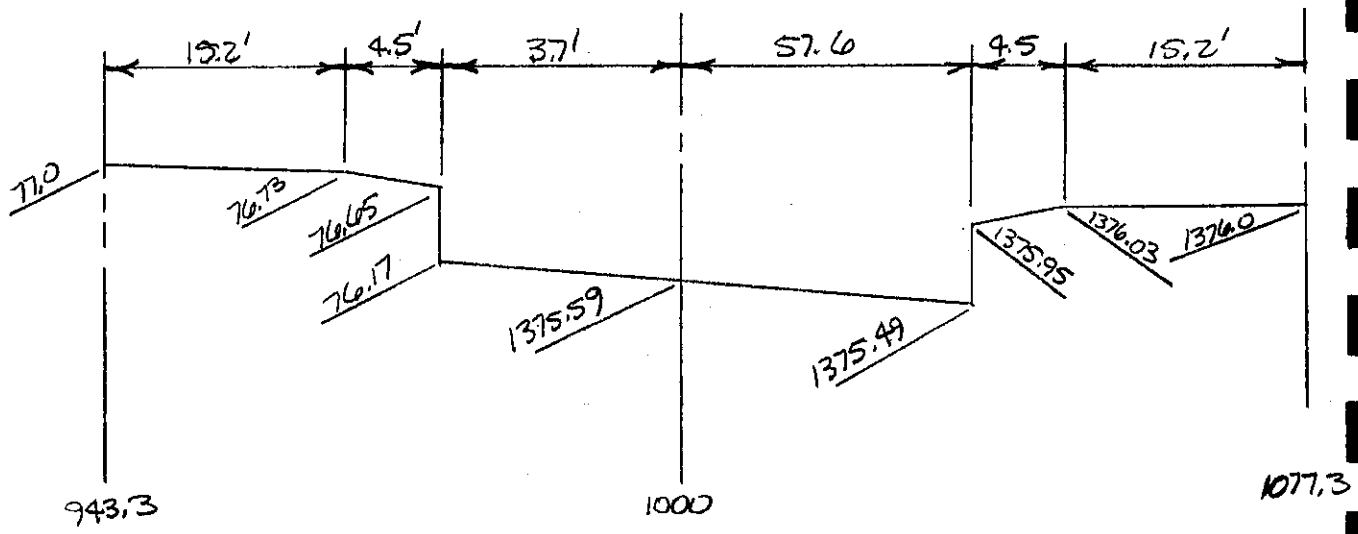

7th Street South of Bell Road

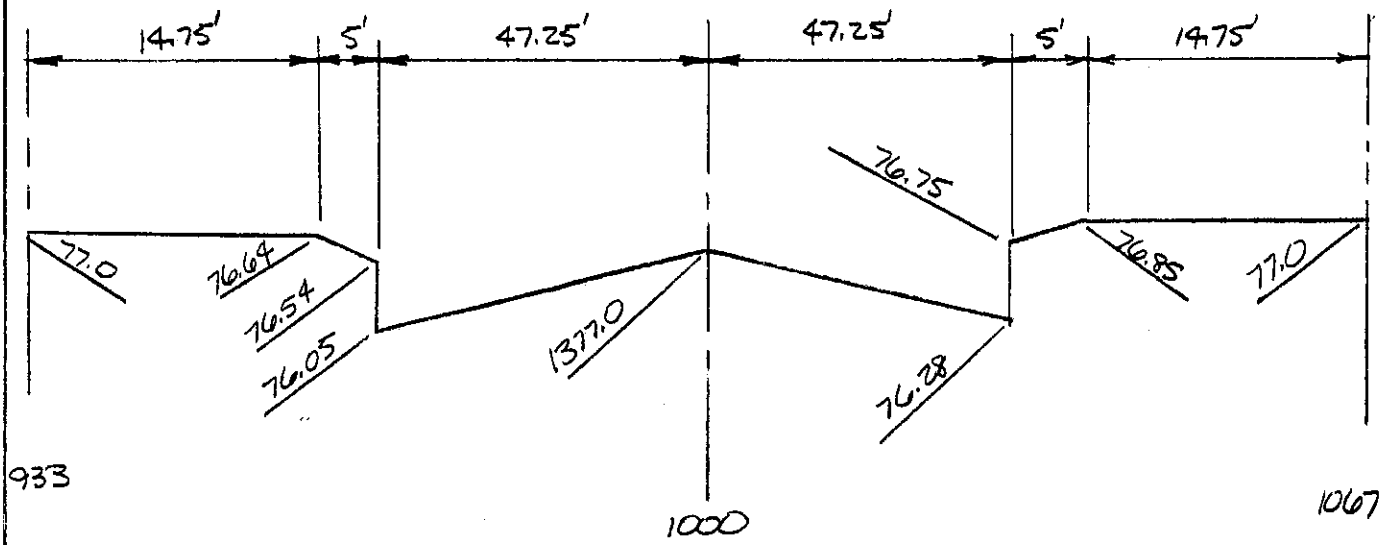

Bell Road West of 7th Street

BURGESS & NIPLE, INC. - COMPUTATION SHEET

JOB NO. 7833 JOB NAME FCDMC - CAVE CREEK FIS SHEET 3 OF 5 SHEETS

SUBJECT Split Flow Cross Sections PREPARED BY TRL DATE 10/14/89

13th Avenue and Renee Drive CHECKED BY _____ DATE _____

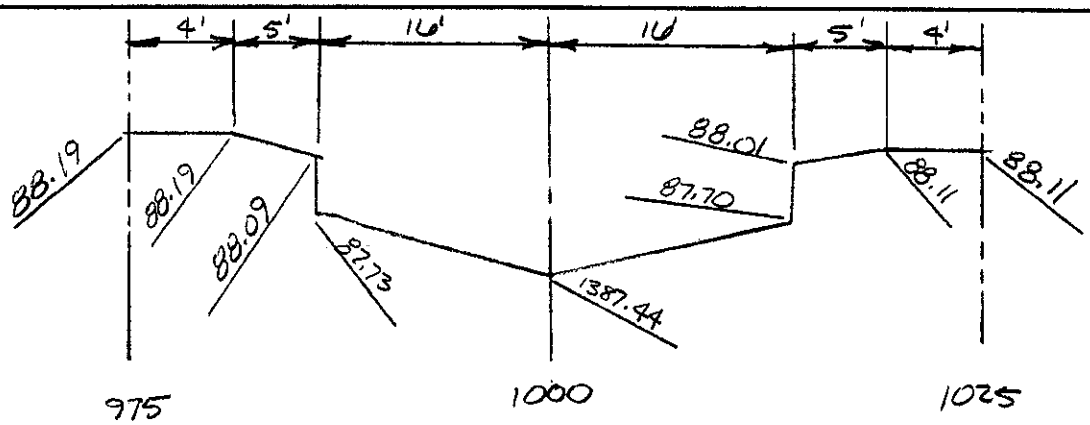

13th Avenue South of Renee Drive

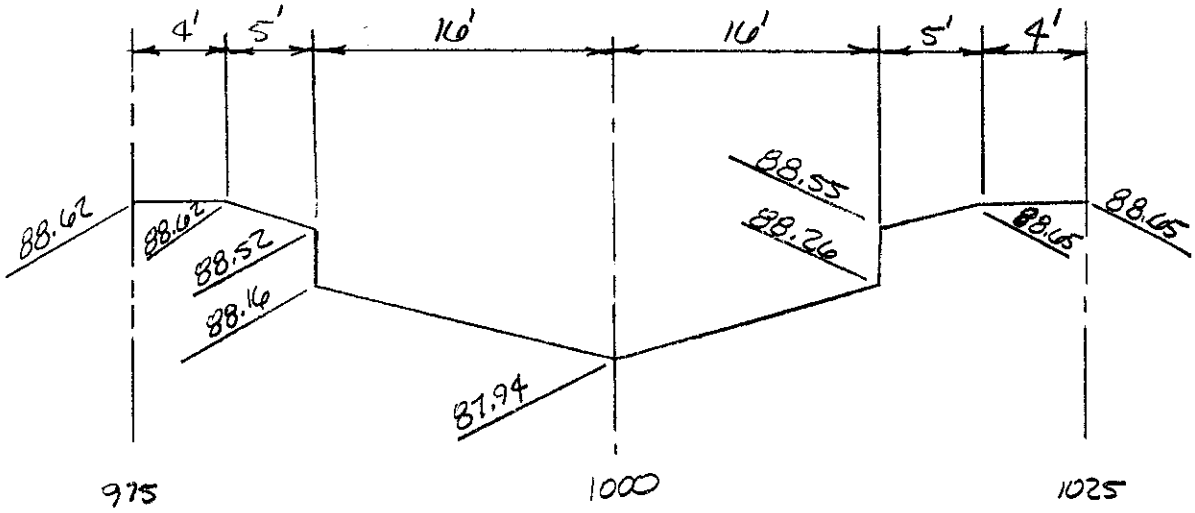

RENEE DRIVE WEST OF 13th AVENUE

BURGESS & NIPLE, INC. - COMPUTATION SHEET

JOB NO. 7833 JOB NAME FCDMC - Cave Creek FIS SHEET 4 OF 5 SHEETS

SUBJECT Split Flow Cross Sections PREPARED BY TRL DATE 10/14/89

13th Avenue and Grovers Avenue CHECKED BY _____ DATE _____

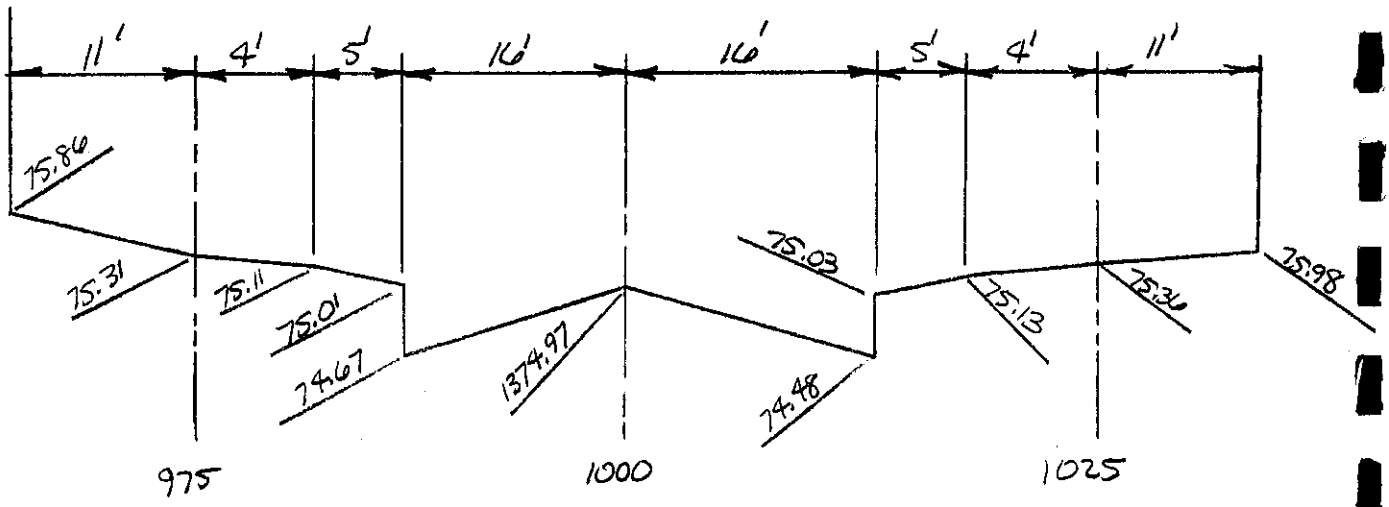

13th Avenue South of Grovers Avenue

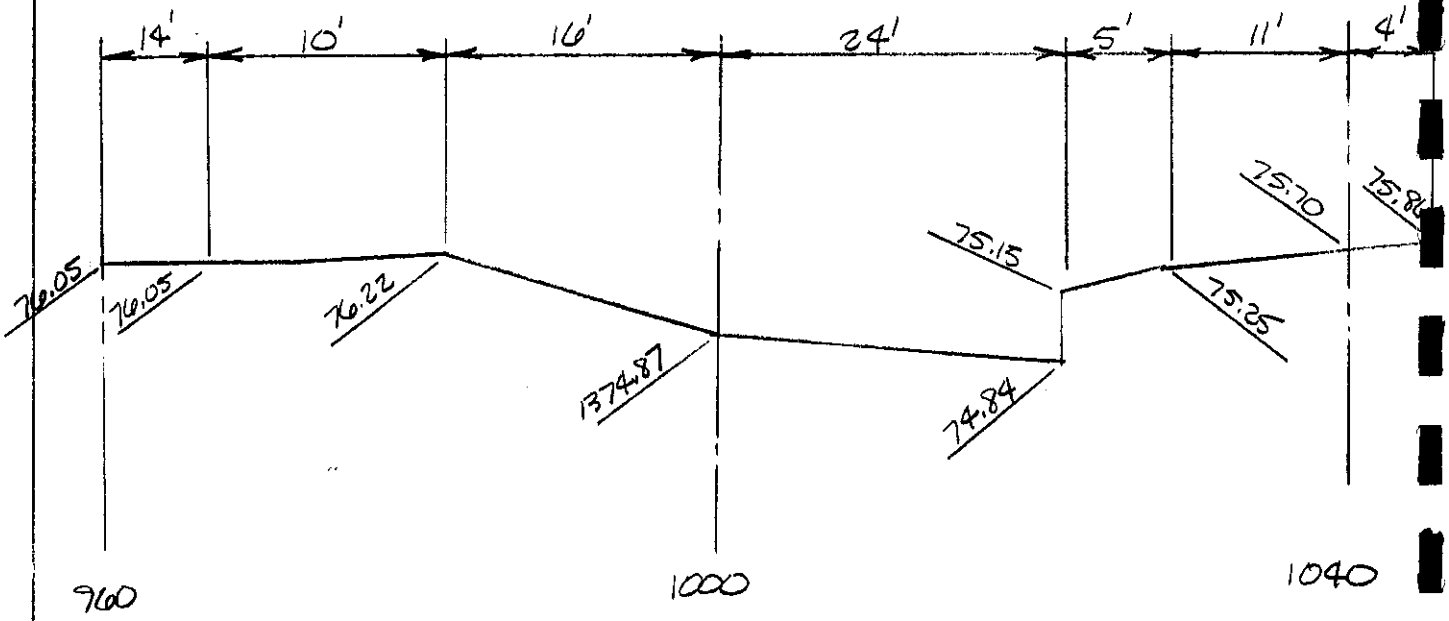

Grovers Avenue West of 13th Avenue

BURGESS & NIPLE, INC. - COMPUTATION SHEET

JOB NO. 7833 JOB NAME FCDMC -Cave Creek FIS SHEET 5 OF 5 SHEETS

SUBJECT Split Flow Cross Section PREPARED BY TRL DATE 10/14/89

32nd Street and Bell Road CHECKED BY _____ DATE _____

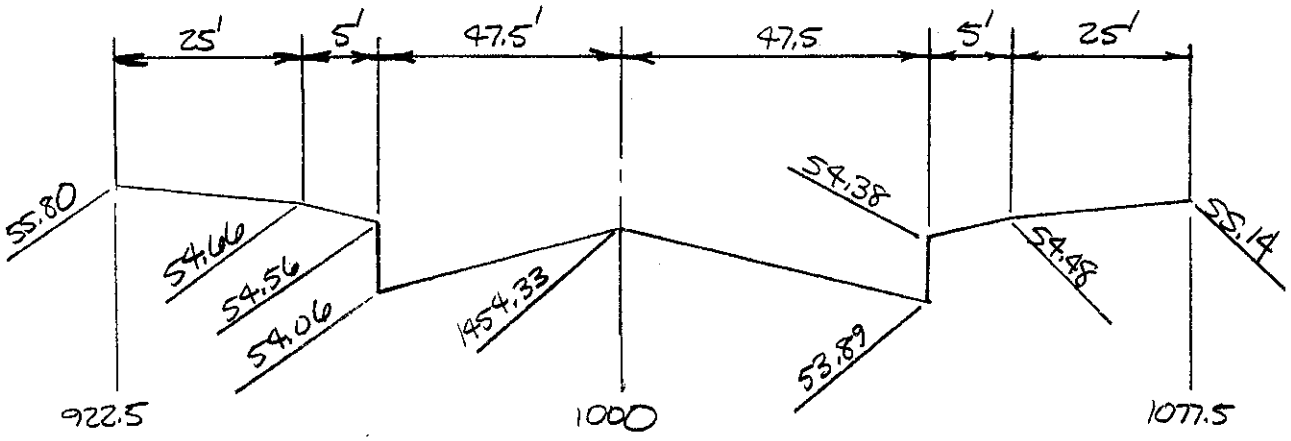

32nd Street South of Bell Road

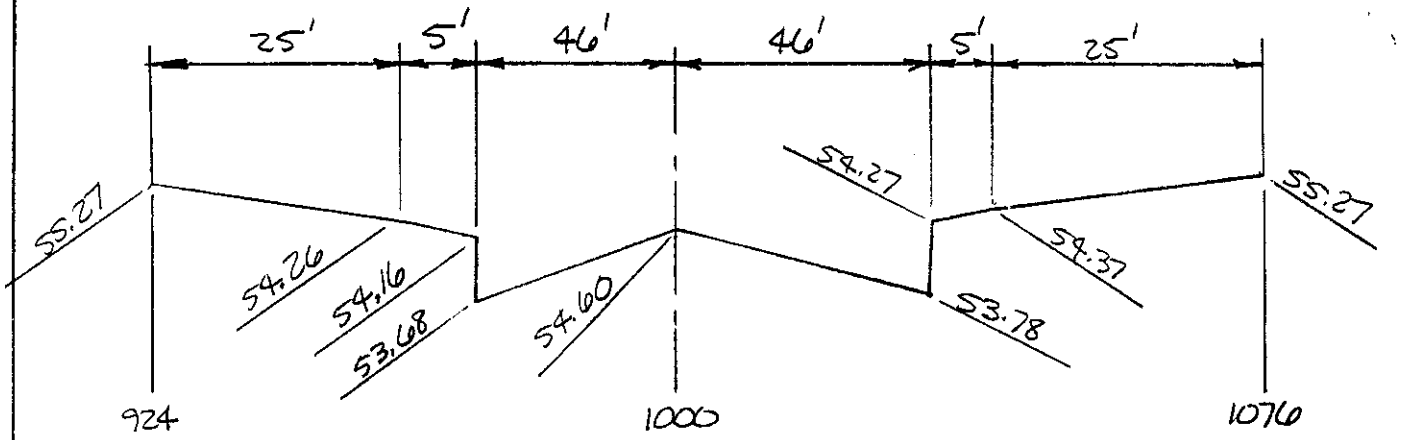

Bell Road West of 32nd Street

OPEN CHANNEL HYDRAULICS

****

PROJECT NAME ..... FCDMC CAVE CREEK FIS
PROJECT JOB NUMBER ... 7833
DATE 10/13/89

32ND STREET AND BELL ROAD SPLIT FLOW CALCULATIONS
SOUTH LEG OF 32ND STREET

CHANNEL CONFIGURATION IS NATURAL

*** SOLVING FOR DISCHARGE ***

FLOWLINE ELEVATION .. 1453.890
MAXIMUM ELEVATION ... 1457.000
CHANNEL SLOPE ..... 1.00000 %
MANNINGS N 0.015

CHANNEL CROSS SECTION DATA :

PT. #	STA.	ELEV.
1.0	922.50	1457.00
2.0	922.50	1455.80
3.0	947.50	1454.66
4.0	952.50	1454.56
5.0	952.50	1454.06
6.0	1000.00	1454.33
7.0	1047.50	1453.89
8.0	1047.50	1454.38
9.0	1052.50	1454.48
10.0	1077.50	1455.14
11.0	1077.50	1457.00

FOR DESIGN DISCHARGE = 2.969 C.F.S. :

AREA OF FLOW ..... 1.561 S.F.
WETTED PERIMETER .... 18.552 FT.
HYDRAULIC RADIUS .... 0.084 FT.
CHANNEL TOP WIDTH ... 18.381 FT.

NORMAL DEPTH OF FLOW ..... 0.170 FT.
NORMAL W.S. ELEVATION 1454.060

```
VELOCITY AT NORMAL DEPTH .        1.902 F.P.S.
CRITICAL DEPTH ............       0.182 FT.
CRITICAL VELOCITY .........       1.649 F.P.S.
CRITICAL SLOPE ............       0.77763 %

FLOW CONDITION IS  SUPERCRITICAL
```

CHANNEL CONFIGURATION IS NATURAL
==========

*** SOLVING FOR DISCHARGE ***

FLOWLINE ELEVATION .. 1453.890
MAXIMUM ELEVATION ... 1457.000
CHANNEL SLOPE ..... 1.00000 %
MANNINGS N 0.015

CHANNEL CROSS SECTION DATA :

PT. #	STA.	ELEV.
1.0	922.50	1457.00
2.0	922.50	1455.80
3.0	947.50	1454.66
4.0	952.50	1454.56
5.0	952.50	1454.06
6.0	1000.00	1454.33
7.0	1047.50	1453.89
8.0	1047.50	1454.38
9.0	1052.50	1454.48
10.0	1077.50	1455.14
11.0	1077.50	1457.00

FOR DESIGN DISCHARGE = 37.347 C.F.S. :

AREA OF FLOW ..... 10.449 S.F.
WETTED PERIMETER .... 48.212 FT.
HYDRAULIC RADIUS .... 0.217 FT.
CHANNEL TOP WIDTH ... 47.500 FT.

NORMAL DEPTH OF FLOW ..... 0.440 FT.
NORMAL W.S. ELEVATION 1454.330
VELOCITY AT NORMAL DEPTH . 3.574 F.P.S.
CRITICAL DEPTH ..... 0.429 FT.
CRITICAL VELOCITY ..... 2.359 F.P.S.
CRITICAL SLOPE ..... 0.59690 %

FLOW CONDITION IS SUBCRITICAL

CHANNEL CONFIGURATION IS NATURAL

*** SOLVING FOR DISCHARGE ***

FLOWLINE ELEVATION .. 1453.890
MAXIMUM ELEVATION ... 1457.000
CHANNEL SLOPE ..... 1.00000 %
MANNINGS N 0.015

CHANNEL CROSS SECTION DATA :

PT. #	STA.	ELEV.
1.0	922.50	1457.00
2.0	922.50	1455.80
3.0	947.50	1454.66
4.0	952.50	1454.56
5.0	952.50	1454.06
6.0	1000.00	1454.33
7.0	1047.50	1453.89
8.0	1047.50	1454.38
9.0	1052.50	1454.48
10.0	1077.50	1455.14
11.0	1077.50	1457.00

FOR DESIGN DISCHARGE = 79.633 C.F.S. :

AREA OF FLOW ..... 21.616 S.F.
WETTED PERIMETER .... 95.323 FT.
HYDRAULIC RADIUS .... 0.227 FT.
CHANNEL TOP WIDTH ... 95.000 FT.

NORMAL DEPTH OF FLOW ..... 0.490 FT.
NORMAL W.S. ELEVATION 1454.380
VELOCITY AT NORMAL DEPTH . 3.684 F.P.S.
CRITICAL DEPTH ..... 0.543 FT.
CRITICAL VELOCITY ..... 2.980 F.P.S.
CRITICAL SLOPE ..... 0.51554 %

FLOW CONDITION IS SUPERCRITICAL

CHANNEL CONFIGURATION IS NATURAL

*** SOLVING FOR DISCHARGE ***

FLOWLINE ELEVATION .. 1453.890
MAXIMUM ELEVATION ... 1457.000
CHANNEL SLOPE ..... 1.00000 %
MANNINGS N 0.015

CHANNEL CROSS SECTION DATA :

PT. #	STA.	ELEV.
1.0	922.50	1457.00
2.0	922.50	1455.80
3.0	947.50	1454.66
4.0	952.50	1454.56
5.0	952.50	1454.06
6.0	1000.00	1454.33
7.0	1047.50	1453.89
8.0	1047.50	1454.38
9.0	1052.50	1454.48
10.0	1077.50	1455.14
11.0	1077.50	1457.00

FOR DESIGN DISCHARGE = 145.524 C.F.S. :

AREA OF FLOW ..... 31.114 S.F.
WETTED PERIMETER .... 95.913 FT.
HYDRAULIC RADIUS .... 0.324 FT.
CHANNEL TOP WIDTH ... 95.000 FT.

NORMAL DEPTH OF FLOW ..... 0.590 FT.
NORMAL W.S. ELEVATION 1454.480
VELOCITY AT NORMAL DEPTH . 4.677 F.P.S.
CRITICAL DEPTH ..... 0.683 FT.
CRITICAL VELOCITY ..... 3.564 F.P.S.
CRITICAL SLOPE ..... 0.45689 %

FLOW CONDITION IS SUPERCRITICAL

CHANNEL CONFIGURATION IS NATURAL

*** SOLVING FOR DISCHARGE ***

FLOWLINE ELEVATION .. 1453.890
MAXIMUM ELEVATION ... 1457.000
CHANNEL SLOPE ..... 1.00000 %
MANNINGS N 0.015

CHANNEL CROSS SECTION DATA :

PT. #	STA.	ELEV.
1.0	922.50	1457.00
2.0	922.50	1455.80
3.0	947.50	1454.66
4.0	952.50	1454.56
5.0	952.50	1454.06
6.0	1000.00	1454.33
7.0	1047.50	1453.89
8.0	1047.50	1454.38
9.0	1052.50	1454.48
10.0	1077.50	1455.14
11.0	1077.50	1457.00

FOR DESIGN DISCHARGE = 205.122 C.F.S. :

AREA OF FLOW ..... 39.493 S.F.
WETTED PERIMETER .... 104.034 FT.
HYDRAULIC RADIUS .... 0.380 FT.
CHANNEL TOP WIDTH ... 103.039 FT.

NORMAL DEPTH OF FLOW ..... 0.670 FT.
NORMAL W.S. ELEVATION 1454.560
VELOCITY AT NORMAL DEPTH . 5.194 F.P.S.
CRITICAL DEPTH ..... 0.793 FT.
CRITICAL VELOCITY ..... 3.884 F.P.S.
CRITICAL SLOPE ..... 0.42968 %

FLOW CONDITION IS SUPERCRITICAL

CHANNEL CONFIGURATION IS NATURAL

*** SOLVING FOR DISCHARGE ***

FLOWLINE ELEVATION .. 1453.890
MAXIMUM ELEVATION ... 1457.000
CHANNEL SLOPE ..... 1.00000 %
MANNINGS N 0.015

CHANNEL CROSS SECTION DATA :

PT. #	STA.	ELEV.
1.0	922.50	1457.00
2.0	922.50	1455.80
3.0	947.50	1454.66
4.0	952.50	1454.56
5.0	952.50	1454.06
6.0	1000.00	1454.33
7.0	1047.50	1453.89
8.0	1047.50	1454.38
9.0	1052.50	1454.48
10.0	1077.50	1455.14
11.0	1077.50	1457.00

FOR DESIGN DISCHARGE = 290.177 C.F.S. :

AREA OF FLOW ..... 50.234 S.F.
WETTED PERIMETER .... 112.920 FT.
HYDRAULIC RADIUS .... 0.445 FT.
CHANNEL TOP WIDTH ... 111.823 FT.

NORMAL DEPTH OF FLOW ..... 0.770 FT.
NORMAL W.S. ELEVATION 1454.660
VELOCITY AT NORMAL DEPTH . 5.777 F.P.S.
CRITICAL DEPTH ..... 0.923 FT.
CRITICAL VELOCITY ..... 4.265 F.P.S.
CRITICAL SLOPE ..... 0.40365 %

FLOW CONDITION IS SUPERCRITICAL

CHANNEL CONFIGURATION IS NATURAL

*** SOLVING FOR DISCHARGE ***

FLOWLINE ELEVATION .. 1453.890
MAXIMUM ELEVATION ... 1457.000
CHANNEL SLOPE ..... 1.00000 %
MANNINGS N 0.015

CHANNEL CROSS SECTION DATA :

PT. #	STA.	ELEV.
1.0	922.50	1457.00
2.0	922.50	1455.80
3.0	947.50	1454.66
4.0	952.50	1454.56
5.0	952.50	1454.06
6.0	1000.00	1454.33
7.0	1047.50	1453.89
8.0	1047.50	1454.38
9.0	1052.50	1454.48
10.0	1077.50	1455.14
11.0	1077.50	1457.00

FOR DESIGN DISCHARGE = 932.863 C.F.S. :

AREA OF FLOW ..... 102.545 S.F.
WETTED PERIMETER .... 116.533 FT.
HYDRAULIC RADIUS .... 0.880 FT.
CHANNEL TOP WIDTH ... 115.527 FT.

NORMAL DEPTH OF FLOW ..... 1.250 FT.
NORMAL W.S. ELEVATION 1455.140
VELOCITY AT NORMAL DEPTH . 9.097 F.P.S.
CRITICAL DEPTH ..... 1.582 FT.
CRITICAL VELOCITY ..... 5.880 F.P.S.
CRITICAL SLOPE ..... 0.32439 %

FLOW CONDITION IS SUPERCRITICAL

CHANNEL CONFIGURATION IS NATURAL

*** SOLVING FOR DISCHARGE ***

FLOWLINE ELEVATION .. 1453.890
MAXIMUM ELEVATION ... 1457.000
CHANNEL SLOPE ..... 1.00000 %
MANNINGS N 0.015

CHANNEL CROSS SECTION DATA :

PT. #	STA.	ELEV.
1.0	922.50	1457.00
2.0	922.50	1455.80
3.0	947.50	1454.66
4.0	952.50	1454.56
5.0	952.50	1454.06
6.0	1000.00	1454.33
7.0	1047.50	1453.89
8.0	1047.50	1454.38
9.0	1052.50	1454.48
10.0	1077.50	1455.14
11.0	1077.50	1457.00

FOR DESIGN DISCHARGE = 2495.360 C.F.S. :

AREA OF FLOW ..... 208.324 S.F.
WETTED PERIMETER .... 156.690 FT.
HYDRAULIC RADIUS .... 1.330 FT.
CHANNEL TOP WIDTH ... 155.000 FT.

NORMAL DEPTH OF FLOW ..... 1.910 FT.
NORMAL W.S. ELEVATION 1455.800
VELOCITY AT NORMAL DEPTH . 11.978 F.P.S.
CRITICAL DEPTH ..... 2.570 FT.
CRITICAL VELOCITY ..... 8.034 F.P.S.
CRITICAL SLOPE ..... 0.26706 %

FLOW CONDITION IS SUPERCRITICAL

CHANNEL CONFIGURATION IS NATURAL

*** SOLVING FOR DISCHARGE ***

FLOWLINE ELEVATION .. 1453.890
MAXIMUM ELEVATION ... 1457.000
CHANNEL SLOPE ..... 1.00000 %
MANNINGS N 0.015

CHANNEL CROSS SECTION DATA :

PT. #	STA.	ELEV.
1.0	922.50	1457.00
2.0	922.50	1455.80
3.0	947.50	1454.66
4.0	952.50	1454.56
5.0	952.50	1454.06
6.0	1000.00	1454.33
7.0	1047.50	1453.89
8.0	1047.50	1454.38
9.0	1052.50	1454.48
10.0	1077.50	1455.14
11.0	1077.50	1457.00

FOR DESIGN DISCHARGE = 3138.950 C.F.S. :

AREA OF FLOW ..... 239.317 S.F.
WETTED PERIMETER .... 157.090 FT.
HYDRAULIC RADIUS .... 1.523 FT.
CHANNEL TOP WIDTH ... 155.000 FT.

NORMAL DEPTH OF FLOW ..... 2.110 FT.
NORMAL W.S. ELEVATION 1456.000
VELOCITY AT NORMAL DEPTH . 13.116 F.P.S.
CRITICAL DEPTH ..... 2.901 FT.
CRITICAL VELOCITY ..... 8.673 F.P.S.
CRITICAL SLOPE ..... 0.25526 %

FLOW CONDITION IS SUPERCRITICAL

OPEN CHANNEL HYDRAULICS

****

PROJECT NAME ..... FCDMC CAVE CREEK FIS
PROJECT JOB NUMBER ... 7833
DATE 10/13/89

32ND STREET AND BELL ROAD SPLIT FLOW CALCULATIONS
WEST LEG OF BELL ROAD

CHANNEL CONFIGURATION IS NATURAL

*** SOLVING FOR DISCHARGE ***

FLOWLINE ELEVATION .. 1453.680
MAXIMUM ELEVATION ... 1457.000
CHANNEL SLOPE ..... 0.50000 %
MANNINGS N 0.015

CHANNEL CROSS SECTION DATA :

PT. #	STA.	ELEV.
1.0	924.00	1457.00
2.0	924.00	1455.27
3.0	949.00	1454.26
4.0	954.00	1454.16
5.0	954.00	1453.68
6.0	1000.00	1454.60
7.0	1046.00	1453.78
8.0	1046.00	1454.27
9.0	1051.00	1454.37
10.0	1076.00	1455.27
11.0	1076.00	1457.00

FOR DESIGN DISCHARGE = 24.471 C.F.S. :

AREA OF FLOW ..... 9.813 S.F.
WETTED PERIMETER .... 46.197 FT.
HYDRAULIC RADIUS .... 0.212 FT.
CHANNEL TOP WIDTH ... 45.329 FT.

NORMAL DEPTH OF FLOW ..... 0.480 FT.
NORMAL W.S. ELEVATION 1454.160

```
VELOCITY AT NORMAL DEPTH .        2.494 F.P.S.
CRITICAL DEPTH ............       0.470 FT.
CRITICAL VELOCITY .........       2.615 F.P.S.
CRITICAL SLOPE ............       0.56693 %

FLOW CONDITION IS  SUBCRITICAL
```

CHANNEL CONFIGURATION IS NATURAL

*** SOLVING FOR DISCHARGE ***

FLOWLINE ELEVATION .. 1453.680
MAXIMUM ELEVATION ... 1457.000
CHANNEL SLOPE ..... 0.50000 %
MANNINGS N 0.015

CHANNEL CROSS SECTION DATA :

PT. #	STA.	ELEV.
1.0	924.00	1457.00
2.0	924.00	1455.27
3.0	949.00	1454.26
4.0	954.00	1454.16
5.0	954.00	1453.68
6.0	1000.00	1454.60
7.0	1046.00	1453.78
8.0	1046.00	1454.27
9.0	1051.00	1454.37
10.0	1076.00	1455.27
11.0	1076.00	1457.00

FOR DESIGN DISCHARGE = 41.400 C.F.S. :

AREA OF FLOW ..... 15.124 S.F.
WETTED PERIMETER .... 61.901 FT.
HYDRAULIC RADIUS .... 0.244 FT.
CHANNEL TOP WIDTH ... 60.930 FT.

NORMAL DEPTH OF FLOW ..... 0.580 FT.
NORMAL W.S. ELEVATION 1454.260
VELOCITY AT NORMAL DEPTH . 2.738 F.P.S.
CRITICAL DEPTH ..... 0.573 FT.
CRITICAL VELOCITY ..... 2.817 F.P.S.
CRITICAL SLOPE ..... 0.53701 %

FLOW CONDITION IS SUBCRITICAL

CHANNEL CONFIGURATION IS NATURAL

*** SOLVING FOR DISCHARGE ***

FLOWLINE ELEVATION .. 1453.680
MAXIMUM ELEVATION ... 1457.000
CHANNEL SLOPE ..... 0.50000 %
MANNINGS N 0.015

CHANNEL CROSS SECTION DATA :

PT. #	STA.	ELEV.
1.0	924.00	1457.00
2.0	924.00	1455.27
3.0	949.00	1454.26
4.0	954.00	1454.16
5.0	954.00	1453.68
6.0	1000.00	1454.60
7.0	1046.00	1453.78
8.0	1046.00	1454.27
9.0	1051.00	1454.37
10.0	1076.00	1455.27
11.0	1076.00	1457.00

FOR DESIGN DISCHARGE = 43.867 C.F.S. :

AREA OF FLOW ..... 15.741 S.F.
WETTED PERIMETER .... 62.731 FT.
HYDRAULIC RADIUS .... 0.251 FT.
CHANNEL TOP WIDTH ... 62.240 FT.

NORMAL DEPTH OF FLOW ..... 0.590 FT.
NORMAL W.S. ELEVATION 1454.270
VELOCITY AT NORMAL DEPTH . 2.787 F.P.S.
CRITICAL DEPTH ..... 0.585 FT.
CRITICAL VELOCITY ..... 2.844 F.P.S.
CRITICAL SLOPE ..... 0.53301 %

FLOW CONDITION IS SUBCRITICAL

CHANNEL CONFIGURATION IS NATURAL

*** SOLVING FOR DISCHARGE ***

FLOWLINE ELEVATION .. 1453.680
MAXIMUM ELEVATION ... 1457.000
CHANNEL SLOPE ..... 0.50000 %
MANNINGS N 0.015

CHANNEL CROSS SECTION DATA :

PT. #	STA.	ELEV.
1.0	924.00	1457.00
2.0	924.00	1455.27
3.0	949.00	1454.26
4.0	954.00	1454.16
5.0	954.00	1453.68
6.0	1000.00	1454.60
7.0	1046.00	1453.78
8.0	1046.00	1454.27
9.0	1051.00	1454.37
10.0	1076.00	1455.27
11.0	1076.00	1457.00

FOR DESIGN DISCHARGE = 70.432 C.F.S. :

AREA OF FLOW ..... 22.617 S.F.
WETTED PERIMETER .... 76.307 FT.
HYDRAULIC RADIUS .... 0.296 FT.
CHANNEL TOP WIDTH ... 75.322 FT.

NORMAL DEPTH OF FLOW ..... 0.690 FT.
NORMAL W.S. ELEVATION 1454.370
VELOCITY AT NORMAL DEPTH . 3.114 F.P.S.
CRITICAL DEPTH ..... 0.694 FT.
CRITICAL VELOCITY ..... 3.038 F.P.S.
CRITICAL SLOPE ..... 0.50631 %

FLOW CONDITION IS SUPERCRITICAL

CHANNEL CONFIGURATION IS NATURAL

*** SOLVING FOR DISCHARGE ***

FLOWLINE ELEVATION .. 1453.680
MAXIMUM ELEVATION ... 1457.000
CHANNEL SLOPE ..... 0.50000 %
MANNINGS N 0.015

CHANNEL CROSS SECTION DATA :

PT. #	STA.	ELEV.
1.0	924.00	1457.00
2.0	924.00	1455.27
3.0	949.00	1454.26
4.0	954.00	1454.16
5.0	954.00	1453.68
6.0	1000.00	1454.60
7.0	1046.00	1453.78
8.0	1046.00	1454.27
9.0	1051.00	1454.37
10.0	1076.00	1455.27
11.0	1076.00	1457.00

FOR DESIGN DISCHARGE = 83.092 C.F.S. :

AREA OF FLOW ..... 24.374 S.F.
WETTED PERIMETER .... 71.793 FT.
HYDRAULIC RADIUS .... 0.339 FT.
CHANNEL TOP WIDTH ... 70.803 FT.

NORMAL DEPTH OF FLOW ..... 0.920 FT.
NORMAL W.S. ELEVATION 1454.600
VELOCITY AT NORMAL DEPTH . 3.409 F.P.S.
CRITICAL DEPTH ..... 0.734 FT.
CRITICAL VELOCITY ..... 3.130 F.P.S.
CRITICAL SLOPE ..... 0.49529 %

FLOW CONDITION IS SUBCRITICAL

CHANNEL CONFIGURATION IS NATURAL

*** SOLVING FOR DISCHARGE ***

FLOWLINE ELEVATION .. 1453.680
MAXIMUM ELEVATION ... 1457.000
CHANNEL SLOPE ..... 0.50000 %
MANNINGS N 0.015

CHANNEL CROSS SECTION DATA :

PT. #	STA.	ELEV.
1.0	924.00	1457.00
2.0	924.00	1455.27
3.0	949.00	1454.26
4.0	954.00	1454.16
5.0	954.00	1453.68
6.0	1000.00	1454.60
7.0	1046.00	1453.78
8.0	1046.00	1454.27
9.0	1051.00	1454.37
10.0	1076.00	1455.27
11.0	1076.00	1457.00

FOR DESIGN DISCHARGE = 854.281 C.F.S. :

AREA OF FLOW ..... 124.339 S.F.
WETTED PERIMETER .... 128.009 FT.
HYDRAULIC RADIUS .... 0.971 FT.
CHANNEL TOP WIDTH ... 127.000 FT.

NORMAL DEPTH OF FLOW ..... 1.590 FT.
NORMAL W.S. ELEVATION 1455.270
VELOCITY AT NORMAL DEPTH . 6.871 F.P.S.
CRITICAL DEPTH ..... 1.691 FT.
CRITICAL VELOCITY ..... 5.660 F.P.S.
CRITICAL SLOPE ..... 0.33304 %

FLOW CONDITION IS SUPERCRITICAL

CHANNEL CONFIGURATION IS NATURAL

*** SOLVING FOR DISCHARGE ***

FLOWLINE ELEVATION .. 1453.680
MAXIMUM ELEVATION ... 1457.000
CHANNEL SLOPE ..... 0.50000 %
MANNINGS N 0.015

CHANNEL CROSS SECTION DATA :

PT. #	STA.	ELEV.
1.0	924.00	1457.00
2.0	924.00	1455.27
3.0	949.00	1454.26
4.0	954.00	1454.16
5.0	954.00	1453.68
6.0	1000.00	1454.60
7.0	1046.00	1453.78
8.0	1046.00	1454.27
9.0	1051.00	1454.37
10.0	1076.00	1455.27
11.0	1076.00	1457.00

FOR DESIGN DISCHARGE = 2358.600 C.F.S. :

AREA OF FLOW ..... 246.547 S.F.
WETTED PERIMETER .... 154.485 FT.
HYDRAULIC RADIUS .... 1.596 FT.
CHANNEL TOP WIDTH ... 152.000 FT.

NORMAL DEPTH OF FLOW ..... 2.320 FT.
NORMAL W.S. ELEVATION 1456.000
VELOCITY AT NORMAL DEPTH . 9.567 F.P.S.
CRITICAL DEPTH ..... 2.653 FT.
CRITICAL VELOCITY ..... 7.938 F.P.S.
CRITICAL SLOPE ..... 0.26991 %

FLOW CONDITION IS SUPERCRITICAL

CHANNEL CONFIGURATION IS NATURAL

*** SOLVING FOR DISCHARGE ***

FLOWLINE ELEVATION .. 1453.680
MAXIMUM ELEVATION ... 1457.000
CHANNEL SLOPE ..... 0.50000 %
MANNINGS N 0.015

CHANNEL CROSS SECTION DATA :

PT. #	STA.	ELEV.
1.0	924.00	1457.00
2.0	924.00	1455.27
3.0	949.00	1454.26
4.0	954.00	1454.16
5.0	954.00	1453.68
6.0	1000.00	1454.60
7.0	1046.00	1453.78
8.0	1046.00	1454.27
9.0	1051.00	1454.37
10.0	1076.00	1455.27
11.0	1076.00	1457.00

FOR DESIGN DISCHARGE = 5245.430 C.F.S. :

AREA OF FLOW ..... 398.547 S.F.
WETTED PERIMETER .... 154.755 FT.
HYDRAULIC RADIUS .... 2.575 FT.
CHANNEL TOP WIDTH ... 152.000 FT.

OPEN CHANNEL HYDRAULICS

****

PROJECT NAME ..... FCDMC CAVE CREEK FIS
PROJECT JOB NUMBER ... 7833
DATE 10/13/89

7TH STREET AND BELL ROAD SPLIT FLOW CALCULATIONS
SOUTH LEG OF 7TH STREET

CHANNEL CONFIGURATION IS NATURAL
==========

*** SOLVING FOR DISCHARGE ***

FLOWLINE ELEVATION .. 1375.490
MAXIMUM ELEVATION ... 1381.000
CHANNEL SLOPE ..... 1.00000 %
MANNINGS N 0.015

CHANNEL CROSS SECTION DATA :

PT. #	STA.	ELEV.
1.0	943.30	1381.00
2.0	943.30	1377.00
3.0	958.50	1376.73
4.0	963.00	1376.65
5.0	963.00	1376.17
6.0	1000.00	1375.59
7.0	1057.60	1375.49
8.0	1057.60	1375.95
9.0	1062.10	1376.03
10.0	1077.30	1376.00
11.0	1077.30	1381.00

FOR DESIGN DISCHARGE = 3.862 C.F.S. :

AREA OF FLOW ..... 2.876 S.F.
WETTED PERIMETER .... 57.630 FT.
HYDRAULIC RADIUS .... 0.050 FT.
CHANNEL TOP WIDTH ... 57.530 FT.

NORMAL DEPTH OF FLOW ..... 0.100 FT.
NORMAL W.S. ELEVATION 1375.590

```
VELOCITY AT NORMAL DEPTH .      1.343 F.P.S.
CRITICAL DEPTH ............     0.101 FT.
CRITICAL VELOCITY .........     1.317 F.P.S.
CRITICAL SLOPE ............     0.94018 %

FLOW CONDITION IS  SUPERCRITICAL
```

CHANNEL CONFIGURATION IS NATURAL

*** SOLVING FOR DISCHARGE ***

FLOWLINE ELEVATION .. 1375.490
MAXIMUM ELEVATION ... 1381.000
CHANNEL SLOPE ..... 1.00000 %
MANNINGS N 0.015

CHANNEL CROSS SECTION DATA :

PT. #	STA.	ELEV.
1.0	943.30	1381.00
2.0	943.30	1377.00
3.0	958.50	1376.73
4.0	963.00	1376.65
5.0	963.00	1376.17
6.0	1000.00	1375.59
7.0	1057.60	1375.49
8.0	1057.60	1375.95
9.0	1062.10	1376.03
10.0	1077.30	1376.00
11.0	1077.30	1381.00

FOR DESIGN DISCHARGE = 135.021 C.F.S. :

AREA OF FLOW ..... 27.742 S.F.
WETTED PERIMETER .... 80.562 FT.
HYDRAULIC RADIUS .... 0.344 FT.
CHANNEL TOP WIDTH ... 80.559 FT.

NORMAL DEPTH OF FLOW ..... 0.460 FT.
NORMAL W.S. ELEVATION 1375.950
VELOCITY AT NORMAL DEPTH . 4.867 F.P.S.
CRITICAL DEPTH ..... 0.583 FT.
CRITICAL VELOCITY ..... 3.428 F.P.S.
CRITICAL SLOPE ..... 0.46302 %

FLOW CONDITION IS SUPERCRITICAL

CHANNEL CONFIGURATION IS NATURAL

*** SOLVING FOR DISCHARGE ***

FLOWLINE ELEVATION .. 1375.490
MAXIMUM ELEVATION ... 1381.000
CHANNEL SLOPE ..... 1.00000 %
MANNINGS N 0.015

CHANNEL CROSS SECTION DATA :

PT. #	STA.	ELEV.
1.0	943.30	1381.00
2.0	943.30	1377.00
3.0	958.50	1376.73
4.0	963.00	1376.65
5.0	963.00	1376.17
6.0	1000.00	1375.59
7.0	1057.60	1375.49
8.0	1057.60	1375.95
9.0	1062.10	1376.03
10.0	1077.30	1376.00
11.0	1077.30	1381.00

FOR DESIGN DISCHARGE = 167.627 C.F.S. :

AREA OF FLOW ..... 34.626 S.F.
WETTED PERIMETER .... 101.361 FT.
HYDRAULIC RADIUS .... 0.342 FT.
CHANNEL TOP WIDTH ... 100.867 FT.

NORMAL DEPTH OF FLOW ..... 0.540 FT.
NORMAL W.S. ELEVATION 1376.030
VELOCITY AT NORMAL DEPTH . 4.841 F.P.S.
CRITICAL DEPTH ..... 0.643 FT.
CRITICAL VELOCITY ..... 3.645 F.P.S.
CRITICAL SLOPE ..... 0.44643 %

FLOW CONDITION IS SUPERCRITICAL

CHANNEL CONFIGURATION IS NATURAL

*** SOLVING FOR DISCHARGE ***

FLOWLINE ELEVATION .. 1375.490
MAXIMUM ELEVATION ... 1381.000
CHANNEL SLOPE ..... 1.00000 %
MANNINGS N 0.015

CHANNEL CROSS SECTION DATA :

PT. #	STA.	ELEV.
1.0	943.30	1381.00
2.0	943.30	1377.00
3.0	958.50	1376.73
4.0	963.00	1376.65
5.0	963.00	1376.17
6.0	1000.00	1375.59
7.0	1057.60	1375.49
8.0	1057.60	1375.95
9.0	1062.10	1376.03
10.0	1077.30	1376.00
11.0	1077.30	1381.00

FOR DESIGN DISCHARGE = 162.063 C.F.S. :

AREA OF FLOW ..... 31.924 S.F.
WETTED PERIMETER .... 87.028 FT.
HYDRAULIC RADIUS .... 0.367 FT.
CHANNEL TOP WIDTH ... 86.564 FT.

NORMAL DEPTH OF FLOW ..... 0.510 FT.
NORMAL W.S. ELEVATION 1376.000
VELOCITY AT NORMAL DEPTH . 5.077 F.P.S.
CRITICAL DEPTH ..... 0.633 FT.
CRITICAL VELOCITY ..... 3.611 F.P.S.
CRITICAL SLOPE ..... 0.44906 %

FLOW CONDITION IS SUPERCRITICAL

CHANNEL CONFIGURATION IS NATURAL

*** SOLVING FOR DISCHARGE ***

FLOWLINE ELEVATION .. 1375.490
MAXIMUM ELEVATION ... 1381.000
CHANNEL SLOPE ..... 1.00000 %
MANNINGS N 0.015

CHANNEL CROSS SECTION DATA :

PT. #	STA.	ELEV.
1.0	943.30	1381.00
2.0	943.30	1377.00
3.0	958.50	1376.73
4.0	963.00	1376.65
5.0	963.00	1376.17
6.0	1000.00	1375.59
7.0	1057.60	1375.49
8.0	1057.60	1375.95
9.0	1062.10	1376.03
10.0	1077.30	1376.00
11.0	1077.30	1381.00

FOR DESIGN DISCHARGE = 286.134 C.F.S. :

AREA OF FLOW ..... 50.184 S.F.
WETTED PERIMETER .... 114.936 FT.
HYDRAULIC RADIUS .... 0.437 FT.
CHANNEL TOP WIDTH ... 114.300 FT.

NORMAL DEPTH OF FLOW ..... 0.680 FT.
NORMAL W.S. ELEVATION 1376.170
VELOCITY AT NORMAL DEPTH . 5.702 F.P.S.
CRITICAL DEPTH ..... 0.820 FT.
CRITICAL VELOCITY ..... 4.324 F.P.S.
CRITICAL SLOPE ..... 0.39903 %

FLOW CONDITION IS SUPERCRITICAL

CHANNEL CONFIGURATION IS NATURAL

*** SOLVING FOR DISCHARGE ***

FLOWLINE ELEVATION .. 1375.490
MAXIMUM ELEVATION ... 1381.000
CHANNEL SLOPE ..... 1.00000 %
MANNINGS N 0.015

CHANNEL CROSS SECTION DATA :

PT. #	STA.	ELEV.
1.0	943.30	1381.00
2.0	943.30	1377.00
3.0	958.50	1376.73
4.0	963.00	1376.65
5.0	963.00	1376.17
6.0	1000.00	1375.59
7.0	1057.60	1375.49
8.0	1057.60	1375.95
9.0	1062.10	1376.03
10.0	1077.30	1376.00
11.0	1077.30	1381.00

FOR DESIGN DISCHARGE = 974.651 C.F.S. :

AREA OF FLOW ..... 105.046 S.F.
WETTED PERIMETER .... 115.896 FT.
HYDRAULIC RADIUS .... 0.906 FT.
CHANNEL TOP WIDTH ... 114.300 FT.

NORMAL DEPTH OF FLOW ..... 1.160 FT.
NORMAL W.S. ELEVATION 1376.650
VELOCITY AT NORMAL DEPTH . 9.278 F.P.S.
CRITICAL DEPTH ..... 1.581 FT.
CRITICAL VELOCITY ..... 6.168 F.P.S.
CRITICAL SLOPE ..... 0.31765 %

FLOW CONDITION IS SUPERCRITICAL

CHANNEL CONFIGURATION IS NATURAL

*** SOLVING FOR DISCHARGE ***

FLOWLINE ELEVATION .. 1375.490
MAXIMUM ELEVATION ... 1381.000
CHANNEL SLOPE ..... 1.00000 %
MANNINGS N 0.015

CHANNEL CROSS SECTION DATA :

PT. #	STA.	ELEV.
1.0	943.30	1381.00
2.0	943.30	1377.00
3.0	958.50	1376.73
4.0	963.00	1376.65
5.0	963.00	1376.17
6.0	1000.00	1375.59
7.0	1057.60	1375.49
8.0	1057.60	1375.95
9.0	1062.10	1376.03
10.0	1077.30	1376.00
11.0	1077.30	1381.00

FOR DESIGN DISCHARGE = 1094.330 C.F.S. :

AREA OF FLOW ..... 114.365 S.F.
WETTED PERIMETER .... 120.476 FT.
HYDRAULIC RADIUS .... 0.949 FT.
CHANNEL TOP WIDTH ... 118.800 FT.

NORMAL DEPTH OF FLOW ..... 1.240 FT.
NORMAL W.S. ELEVATION 1376.730
VELOCITY AT NORMAL DEPTH . 9.569 F.P.S.
CRITICAL DEPTH ..... 1.676 FT.
CRITICAL VELOCITY ..... 6.409 F.P.S.
CRITICAL SLOPE ..... 0.30990 %

FLOW CONDITION IS SUPERCRITICAL

CHANNEL CONFIGURATION IS NATURAL

*** SOLVING FOR DISCHARGE ***

FLOWLINE ELEVATION .. 1375.490
MAXIMUM ELEVATION ... 1381.000
CHANNEL SLOPE ..... 1.00000 %
MANNINGS N 0.015

CHANNEL CROSS SECTION DATA :

PT. #	STA.	ELEV.
1.0	943.30	1381.00
2.0	943.30	1377.00
3.0	958.50	1376.73
4.0	963.00	1376.65
5.0	963.00	1376.17
6.0	1000.00	1375.59
7.0	1057.60	1375.49
8.0	1057.60	1375.95
9.0	1062.10	1376.03
10.0	1077.30	1376.00
11.0	1077.30	1381.00

FOR DESIGN DISCHARGE = 1560.270 C.F.S. :

AREA OF FLOW ..... 148.495 S.F.
WETTED PERIMETER .... 135.949 FT.
HYDRAULIC RADIUS .... 1.092 FT.
CHANNEL TOP WIDTH ... 134.000 FT.

NORMAL DEPTH OF FLOW ..... 1.510 FT.
NORMAL W.S. ELEVATION 1377.000
VELOCITY AT NORMAL DEPTH . 10.507 F.P.S.
CRITICAL DEPTH ..... 2.016 FT.
CRITICAL VELOCITY ..... 7.214 F.P.S.
CRITICAL SLOPE ..... 0.28830 %

FLOW CONDITION IS SUPERCRITICAL

CHANNEL CONFIGURATION IS NATURAL

*** SOLVING FOR DISCHARGE ***

FLOWLINE ELEVATION .. 1375.490
MAXIMUM ELEVATION ... 1381.000
CHANNEL SLOPE ..... 1.00000 %
MANNINGS N 0.015

CHANNEL CROSS SECTION DATA :

PT. #	STA.	ELEV.
1.0	943.30	1381.00
2.0	943.30	1377.00
3.0	958.50	1376.73
4.0	963.00	1376.65
5.0	963.00	1376.17
6.0	1000.00	1375.59
7.0	1057.60	1375.49
8.0	1057.60	1375.95
9.0	1062.10	1376.03
10.0	1077.30	1376.00
11.0	1077.30	1381.00

FOR DESIGN DISCHARGE = 4513.030 C.F.S. :

AREA OF FLOW ..... 282.495 S.F.
WETTED PERIMETER .... 137.949 FT.
HYDRAULIC RADIUS .... 2.048 FT.
CHANNEL TOP WIDTH ... 134.000 FT.

NORMAL DEPTH OF FLOW ..... 2.510 FT.
NORMAL W.S. ELEVATION 1378.000
VELOCITY AT NORMAL DEPTH . 15.976 F.P.S.
CRITICAL DEPTH ..... 3.679 FT.
CRITICAL VELOCITY ..... 10.277 F.P.S.
CRITICAL SLOPE ..... 0.23502 %

FLOW CONDITION IS SUPERCRITICAL

OPEN CHANNEL HYDRAULICS

****

PROJECT NAME ..... FCDMC CAVE CREEK FIS
PROJECT JOB NUMBER ... 7833
DATE 10/13/89

7TH STREET AND BELL ROAD SPLIT FLOW CALCULATIONS
WEST LEG OF BELL ROAD

CHANNEL CONFIGURATION IS NATURAL

*** SOLVING FOR DISCHARGE ***

FLOWLINE ELEVATION .. 1376.050
MAXIMUM ELEVATION ... 1379.000
CHANNEL SLOPE ..... 0.12000 %
MANNINGS N 0.015

CHANNEL CROSS SECTION DATA :

PT. #	STA.	ELEV.
1.0	933.00	1379.00
2.0	933.00	1377.00
3.0	947.75	1376.64
4.0	952.75	1376.54
5.0	952.75	1376.05
6.0	1000.00	1377.00
7.0	1047.25	1376.28
8.0	1047.25	1376.75
9.0	1052.25	1376.85
10.0	1067.00	1377.00
11.0	1067.00	1379.00

FOR DESIGN DISCHARGE = 1.053 C.F.S. :

AREA OF FLOW ..... 1.315 S.F.
WETTED PERIMETER .... 11.671 FT.
HYDRAULIC RADIUS .... 0.113 FT.
CHANNEL TOP WIDTH ... 11.439 FT.

NORMAL DEPTH OF FLOW ..... 0.230 FT.
NORMAL W.S. ELEVATION 1376.280

```
VELOCITY AT NORMAL DEPTH .      0.801 F.P.S.
CRITICAL DEPTH ............     0.161 FT.
CRITICAL VELOCITY .........     1.634 F.P.S.
CRITICAL SLOPE ............     0.80348 %

FLOW CONDITION IS  SUBCRITICAL
```

CHANNEL CONFIGURATION IS NATURAL

*** SOLVING FOR DISCHARGE ***

FLOWLINE ELEVATION .. 1376.050
MAXIMUM ELEVATION ... 1379.000
CHANNEL SLOPE ..... 0.12000 %
MANNINGS N 0.015

CHANNEL CROSS SECTION DATA :

PT. #	STA.	ELEV.
1.0	933.00	1379.00
2.0	933.00	1377.00
3.0	947.75	1376.64
4.0	952.75	1376.54
5.0	952.75	1376.05
6.0	1000.00	1377.00
7.0	1047.25	1376.28
8.0	1047.25	1376.75
9.0	1052.25	1376.85
10.0	1067.00	1377.00
11.0	1067.00	1379.00

FOR DESIGN DISCHARGE = 9.421 C.F.S. :

AREA OF FLOW ..... 8.189 S.F.
WETTED PERIMETER .... 42.193 FT.
HYDRAULIC RADIUS .... 0.194 FT.
CHANNEL TOP WIDTH ... 41.436 FT.

NORMAL DEPTH OF FLOW ..... 0.490 FT.
NORMAL W.S. ELEVATION 1376.540
VELOCITY AT NORMAL DEPTH . 1.150 F.P.S.
CRITICAL DEPTH ..... 0.378 FT.
CRITICAL VELOCITY ..... 2.204 F.P.S.
CRITICAL SLOPE ..... 0.63758 %

FLOW CONDITION IS SUBCRITICAL

CHANNEL CONFIGURATION IS NATURAL

*** SOLVING FOR DISCHARGE ***

FLOWLINE ELEVATION .. 1376.050
MAXIMUM ELEVATION ... 1379.000
CHANNEL SLOPE ..... 0.12000 %
MANNINGS N 0.015

CHANNEL CROSS SECTION DATA :

PT. #	STA.	ELEV.
1.0	933.00	1379.00
2.0	933.00	1377.00
3.0	947.75	1376.64
4.0	952.75	1376.54
5.0	952.75	1376.05
6.0	1000.00	1377.00
7.0	1047.25	1376.28
8.0	1047.25	1376.75
9.0	1052.25	1376.85
10.0	1067.00	1377.00
11.0	1067.00	1379.00

FOR DESIGN DISCHARGE = 16.639 C.F.S. :

AREA OF FLOW ..... 13.158 S.F.
WETTED PERIMETER .... 58.829 FT.
HYDRAULIC RADIUS .... 0.224 FT.
CHANNEL TOP WIDTH ... 57.970 FT.

NORMAL DEPTH OF FLOW ..... 0.590 FT.
NORMAL W.S. ELEVATION 1376.640
VELOCITY AT NORMAL DEPTH . 1.265 F.P.S.
CRITICAL DEPTH ..... 0.456 FT.
CRITICAL VELOCITY ..... 2.429 F.P.S.
CRITICAL SLOPE ..... 0.59484 %

FLOW CONDITION IS SUBCRITICAL

CHANNEL CONFIGURATION IS NATURAL

*** SOLVING FOR DISCHARGE ***

FLOWLINE ELEVATION .. 1376.050
MAXIMUM ELEVATION ... 1379.000
CHANNEL SLOPE ..... 0.12000 %
MANNINGS N 0.015

CHANNEL CROSS SECTION DATA :

PT. #	STA.	ELEV.
1.0	933.00	1379.00
2.0	933.00	1377.00
3.0	947.75	1376.64
4.0	952.75	1376.54
5.0	952.75	1376.05
6.0	1000.00	1377.00
7.0	1047.25	1376.28
8.0	1047.25	1376.75
9.0	1052.25	1376.85
10.0	1067.00	1377.00
11.0	1067.00	1379.00

FOR DESIGN DISCHARGE = 29.407 C.F.S. :

AREA OF FLOW ..... 20.480 S.F.
WETTED PERIMETER .... 75.668 FT.
HYDRAULIC RADIUS .... 0.271 FT.
CHANNEL TOP WIDTH ... 75.165 FT.

NORMAL DEPTH OF FLOW ..... 0.700 FT.
NORMAL W.S. ELEVATION 1376.750
VELOCITY AT NORMAL DEPTH . 1.436 F.P.S.
CRITICAL DEPTH ..... 0.554 FT.
CRITICAL VELOCITY ..... 2.631 F.P.S.
CRITICAL SLOPE ..... 0.55942 %

FLOW CONDITION IS SUBCRITICAL

CHANNEL CONFIGURATION IS NATURAL

*** SOLVING FOR DISCHARGE ***

FLOWLINE ELEVATION .. 1376.050
MAXIMUM ELEVATION ... 1379.000
CHANNEL SLOPE ..... 0.12000 %
MANNINGS N 0.015

CHANNEL CROSS SECTION DATA :

PT. #	STA.	ELEV.
1.0	933.00	1379.00
2.0	933.00	1377.00
3.0	947.75	1376.64
4.0	952.75	1376.54
5.0	952.75	1376.05
6.0	1000.00	1377.00
7.0	1047.25	1376.28
8.0	1047.25	1376.75
9.0	1052.25	1376.85
10.0	1067.00	1377.00
11.0	1067.00	1379.00

FOR DESIGN DISCHARGE = 45.579 C.F.S. :

AREA OF FLOW ..... 28.776 S.F.
WETTED PERIMETER .... 91.771 FT.
HYDRAULIC RADIUS .... 0.314 FT.
CHANNEL TOP WIDTH ... 90.795 FT.

NORMAL DEPTH OF FLOW ..... 0.800 FT.
NORMAL W.S. ELEVATION 1376.850
VELOCITY AT NORMAL DEPTH . 1.584 F.P.S.
CRITICAL DEPTH ..... 0.638 FT.
CRITICAL VELOCITY ..... 2.828 F.P.S.
CRITICAL SLOPE ..... 0.53771 %

FLOW CONDITION IS SUBCRITICAL

CHANNEL CONFIGURATION IS NATURAL

*** SOLVING FOR DISCHARGE ***

FLOWLINE ELEVATION .. 1376.050
MAXIMUM ELEVATION ... 1379.000
CHANNEL SLOPE ..... 0.12000 %
MANNINGS N 0.015

CHANNEL CROSS SECTION DATA :

PT. #	STA.	ELEV.
1.0	933.00	1379.00
2.0	933.00	1377.00
3.0	947.75	1376.64
4.0	952.75	1376.54
5.0	952.75	1376.05
6.0	1000.00	1377.00
7.0	1047.25	1376.28
8.0	1047.25	1376.75
9.0	1052.25	1376.85
10.0	1067.00	1377.00
11.0	1067.00	1379.00

FOR DESIGN DISCHARGE = 35.802 C.F.S. :

AREA OF FLOW ..... 22.714 S.F.
WETTED PERIMETER .... 72.972 FT.
HYDRAULIC RADIUS .... 0.311 FT.
CHANNEL TOP WIDTH ... 72.000 FT.

NORMAL DEPTH OF FLOW ..... 0.950 FT.
NORMAL W.S. ELEVATION 1377.000
VELOCITY AT NORMAL DEPTH . 1.576 F.P.S.
CRITICAL DEPTH ..... 0.591 FT.
CRITICAL VELOCITY ..... 2.709 F.P.S.
CRITICAL SLOPE ..... 0.54958 %

FLOW CONDITION IS SUBCRITICAL

CHANNEL CONFIGURATION IS NATURAL

*** SOLVING FOR DISCHARGE ***

FLOWLINE ELEVATION .. 1376.050
MAXIMUM ELEVATION ... 1379.000
CHANNEL SLOPE ..... 0.12000 %
MANNINGS N 0.015

CHANNEL CROSS SECTION DATA :

PT. #	STA.	ELEV.
1.0	933.00	1379.00
2.0	933.00	1377.00
3.0	947.75	1376.64
4.0	952.75	1376.54
5.0	952.75	1376.05
6.0	1000.00	1377.00
7.0	1047.25	1376.28
8.0	1047.25	1376.75
9.0	1052.25	1376.85
10.0	1067.00	1377.00
11.0	1067.00	1379.00

FOR DESIGN DISCHARGE = 742.883 C.F.S. :

AREA OF FLOW ..... 180.263 S.F.
WETTED PERIMETER .... 136.982 FT.
HYDRAULIC RADIUS .... 1.316 FT.
CHANNEL TOP WIDTH ... 134.000 FT.

NORMAL DEPTH OF FLOW ..... 1.950 FT.
NORMAL W.S. ELEVATION 1378.000
VELOCITY AT NORMAL DEPTH . 4.121 F.P.S.
CRITICAL DEPTH ..... 1.589 FT.
CRITICAL VELOCITY ..... 5.632 F.P.S.
CRITICAL SLOPE ..... 0.33759 %

FLOW CONDITION IS SUBCRITICAL

OPEN CHANNEL HYDRAULICS

****

PROJECT NAME ..... FCDMC CAVE CREEK FIS
PROJECT JOB NUMBER ... 7833
DATE 10/13/89

13TH AVENUE AND RENEE DRIVE SPLIT FLOW CALCULATIONS
SOUTH LEG OF 13TH AVENUE

CHANNEL CONFIGURATION IS NATURAL

*** SOLVING FOR DISCHARGE ***

FLOWLINE ELEVATION .. 1387.440
MAXIMUM ELEVATION ... 1389.000
CHANNEL SLOPE ..... 0.35000 %
MANNINGS N 0.015

CHANNEL CROSS SECTION DATA :

PT. #	STA.	ELEV.
1.0	975.00	1389.00
2.0	975.00	1388.19
3.0	979.00	1388.19
4.0	984.00	1388.09
5.0	984.00	1387.73
6.0	1000.00	1387.44
7.0	1016.00	1387.70
8.0	1016.00	1388.01
9.0	1021.00	1388.11
10.0	1025.00	1388.11
11.0	1025.00	1389.00

FOR DESIGN DISCHARGE = 2.802 C.F.S. :

AREA OF FLOW ..... 1.864 S.F.
WETTED PERIMETER .... 14.345 FT.
HYDRAULIC RADIUS .... 0.130 FT.
CHANNEL TOP WIDTH ... 14.343 FT.

NORMAL DEPTH OF FLOW ..... 0.260 FT.
NORMAL W.S. ELEVATION 1387.700

```
VELOCITY AT NORMAL DEPTH .      1.503 F.P.S.
CRITICAL DEPTH ............     0.170 FT.
CRITICAL VELOCITY .........     1.660 F.P.S.
CRITICAL SLOPE ............     0.75118 %

FLOW CONDITION IS  SUBCRITICAL
```

CHANNEL CONFIGURATION IS NATURAL

*** SOLVING FOR DISCHARGE ***

FLOWLINE ELEVATION .. 1387.440
MAXIMUM ELEVATION ... 1389.000
CHANNEL SLOPE ..... 0.35000 %
MANNINGS N 0.015

CHANNEL CROSS SECTION DATA :

PT. #	STA.	ELEV.
1.0	975.00	1389.00
2.0	975.00	1388.19
3.0	979.00	1388.19
4.0	984.00	1388.09
5.0	984.00	1387.73
6.0	1000.00	1387.44
7.0	1016.00	1387.70
8.0	1016.00	1388.01
9.0	1021.00	1388.11
10.0	1025.00	1388.11
11.0	1025.00	1389.00

FOR DESIGN DISCHARGE = 8.155 C.F.S. :

AREA OF FLOW ..... 4.879 S.F.
WETTED PERIMETER .... 32.035 FT.
HYDRAULIC RADIUS .... 0.152 FT.
CHANNEL TOP WIDTH ... 32.000 FT.

NORMAL DEPTH OF FLOW ..... 0.290 FT.
NORMAL W.S. ELEVATION 1387.730
VELOCITY AT NORMAL DEPTH . 1.671 F.P.S.
CRITICAL DEPTH ..... 0.260 FT.
CRITICAL VELOCITY ..... 2.066 F.P.S.
CRITICAL SLOPE ..... 0.66051 %

FLOW CONDITION IS SUBCRITICAL

BURGESS & NIPLE, INC. - COMPUTATION SHEET

JOB NO. 7833 JOB NAME FCDMC-CAVE CREEK SHEET 1 OF 5 SHEETS
SUBJECT SPLIT FLOW DIVERSIONS PREPARED BY TRL DATE 10/4/89
32nd Street + Bell Road CHECKED BY _____ DATE _____

R/W Lines were assumed to be the Channel Banks For Most Intersections

Cross Sections taken at the curb returns, south leg and west legs of intersection.

Slope South = 1%, Slope West = 0.5%

Flow in West gutter 32nd St. turns corner heads west.

Flow in East gutter 32nd St. and North gutter Bell Rd. is trapped at catch basin inlets

South Leg

Elev.	Flow
1454.1	3
1454.3	37
1454.4	80
1454.5	146
1454.6	205
1454.7	290
1455.1	933
1455.8	2495

West Leg

Elev.	Flow
1454.2	25
1454.3	44
1454.4	70
1454.6	83
1455.3	854
1456	2359

Flow Tops Bell Rd. Crown at 1454.9
60" RCP in 32nd St. Assume to Flow Full = 160 cfs

Flow South in 32nd St.	Flow West in Bell Rd.
160 cfs	25 cfs
160 cfs	83 cfs
933 + 160 = 1093 cfs.	854 cfs
2495 + 160 = 2655 cfs	2359 cfs

Total Flow	Flow South
0	0
185	160
243	160
1947	1093
5014	2655

BURGESS & NIPLE, INC. - COMPUTATION SHEET

JOB NO. 7833 JOB NAME FCDMC - Cave Creek SHEET 2 OF 5 SHEETS

SUBJECT Split Flow Diversions, 7th Street + Bell Road PREPARED BY TRL DATE 10/14/89

CHECKED BY _____ DATE _____

Slope South = 1% , Slope West = 0.12% 2745 cfs

Bell Road Crown = 1377.1

South Leg Elev.	South Leg Flow	West Leg Elev.	West Leg Flow
		1376.3	1
1375.6	4	1376.5	9
1376.0	162	1376.6	17
1376.2	286	1376.8	29
1376.7	1094	1377.0	36
1377.0	1560	1378.0	743
1378.0	4513		

84" and 36" RCPS flowing South in 7th St. = 300 cfs

Flow South in 7th St.	Flow West in Bell Rd
300	9
300	36
4513 + 300 = 4813	743

Total Flow	Flow West
0	0
309	9
336	36
5556	743

BURGESS & NIPLE, INC. - COMPUTATION SHEET

JOB NO. 7833 JOB NAME FCDMC - Cave Creek SHEET 3 OF 5 SHEETS

SUBJECT Split Flow Diversions PREPARED BY TRL DATE 10/14/89

13th Ave. and Renee Dr. CHECKED BY _____ DATE _____

Slope South = 0.35% , Slope West = 0.70%, 614 cfs

Low Flows are forced South in 13th Ave.
when Flow exceeds elev. 87.7, Flow starts to the west

South Leg		West Leg	
Elev.	Flow	Elev.	Flow
1387.7	8		
1388.0	46		
1388.1	57		
1388.2	71	1388.2	6
1388.5	169	1388.5	68
1389.0	404	1388.6	85
1390	1052	1389.0	243
		1390	992

	TOTAL FLOW	FLOW West
87.5	0	0
87.7	8	0
88.2	78	6
89.0	647	243
90.0	2044	992

BURGESS & NIPLE, INC. - COMPUTATION SHEET

JOB NO. 7833 JOB NAME FCDMC - Cave Creek SHEET 4 OF 5 SHEETS

SUBJECT Split Flow Diversions PREPARED BY TRL DATE 10/14/89

13 Ave. + Grovers Ave. CHECKED BY _____ DATE _____

South Slope = 0.9% , West Slope = 0.5% , Q ≈ 300 cfs

Low Flows are forced South in 13th Ave., Flow starts west when elev. 75.2 is exceeded.

South Leg.		West Leg	
Elev.	Flow	Elev.	Flow
1374.7	1		
1375.0	27		
1375.1	44		
1375.3	104	1375.3	37
1375.4	128	1375.7	146
1376.0	531	1376.0	303

Flow South	Flow West
0	0
27	0
44	0
104	37
531	303

Total Flow	Flow West
0	0
27	0
44	0
141	37
834	303

BURGESS & NIPLE, INC. - COMPUTATION SHEET

JOB NO. 7833 JOB NAME FCDMC - Cave Creek SHEET 5 OF 5 SHEETS

SUBJECT Split Flow Diversions PREPARED BY TRL DATE 10/14/89

19th Ave. & Bell Rd. CHECKED BY _____ DATE _____

South Slope = 0.9% , West Slope = 0.9% , Q = 1059

South Leg Elev.	South Leg Flow	West Leg Elev.	West Leg Flow
1351.4	6	1351.5	6
1351.6	17		
1351.7	30	1351.7	18
1351.8	46	1351.8	41
1351.9	109		
1352.0	135	1352.0	91
1352.2	180	1352.2	336
1353.0	1463	1353.0	1517

There is a 90" pipe in 19th Ave. $Q_{Full} \approx 490$ cfs
Flow Tops Intersection at Elev. 52.5 (Bell Crown)

	Total Flow	Flow West
	0	0
52: 490+135+336	961	336
490+180+336	1006	336
490+1463+1517	3470	1517

CHANNEL CONFIGURATION IS NATURAL

*** SOLVING FOR DISCHARGE ***

FLOWLINE ELEVATION .. 1387.440
MAXIMUM ELEVATION ... 1389.000
CHANNEL SLOPE ..... 0.35000 %
MANNINGS N 0.015

CHANNEL CROSS SECTION DATA :

PT. #	STA.	ELEV.
1.0	975.00	1389.00
2.0	975.00	1388.19
3.0	979.00	1388.19
4.0	984.00	1388.09
5.0	984.00	1387.73
6.0	1000.00	1387.44
7.0	1016.00	1387.70
8.0	1016.00	1388.01
9.0	1021.00	1388.11
10.0	1025.00	1388.11
11.0	1025.00	1389.00

FOR DESIGN DISCHARGE = 46.116 C.F.S. :

AREA OF FLOW ..... 13.840 S.F.
WETTED PERIMETER .... 32.285 FT.
HYDRAULIC RADIUS .... 0.429 FT.
CHANNEL TOP WIDTH ... 32.000 FT.

NORMAL DEPTH OF FLOW ..... 0.570 FT.
NORMAL W.S. ELEVATION 1388.010
VELOCITY AT NORMAL DEPTH . 3.332 F.P.S.
CRITICAL DEPTH ..... 0.538 FT.
CRITICAL VELOCITY ..... 3.598 F.P.S.
CRITICAL SLOPE ..... 0.45676 %

FLOW CONDITION IS SUBCRITICAL

CHANNEL CONFIGURATION IS NATURAL

*** SOLVING FOR DISCHARGE ***

FLOWLINE ELEVATION .. 1387.440
MAXIMUM ELEVATION ... 1389.000
CHANNEL SLOPE ..... 0.35000 %
MANNINGS N 0.015

CHANNEL CROSS SECTION DATA :

PT. #	STA.	ELEV.
1.0	975.00	1389.00
2.0	975.00	1388.19
3.0	979.00	1388.19
4.0	984.00	1388.09
5.0	984.00	1387.73
6.0	1000.00	1387.44
7.0	1016.00	1387.70
8.0	1016.00	1388.01
9.0	1021.00	1388.11
10.0	1025.00	1388.11
11.0	1025.00	1389.00

FOR DESIGN DISCHARGE = 57.115 C.F.S. :

AREA OF FLOW ..... 16.558 S.F.
WETTED PERIMETER .... 36.674 FT.
HYDRAULIC RADIUS .... 0.451 FT.
CHANNEL TOP WIDTH ... 35.999 FT.

NORMAL DEPTH OF FLOW ..... 0.650 FT.
NORMAL W.S. ELEVATION 1388.090
VELOCITY AT NORMAL DEPTH . 3.449 F.P.S.
CRITICAL DEPTH ..... 0.607 FT.
CRITICAL VELOCITY ..... 3.792 F.P.S.
CRITICAL SLOPE ..... 0.44219 %

FLOW CONDITION IS SUBCRITICAL

CHANNEL CONFIGURATION IS NATURAL

*** SOLVING FOR DISCHARGE ***

FLOWLINE ELEVATION .. 1387.440
MAXIMUM ELEVATION ... 1389.000
CHANNEL SLOPE ..... 0.35000 %
MANNINGS N 0.015

CHANNEL CROSS SECTION DATA :

PT. #	STA.	ELEV.
1.0	975.00	1389.00
2.0	975.00	1388.19
3.0	979.00	1388.19
4.0	984.00	1388.09
5.0	984.00	1387.73
6.0	1000.00	1387.44
7.0	1016.00	1387.70
8.0	1016.00	1388.01
9.0	1021.00	1388.11
10.0	1025.00	1388.11
11.0	1025.00	1389.00

FOR DESIGN DISCHARGE = 63.479 C.F.S. :

AREA OF FLOW ..... 17.049 S.F.
WETTED PERIMETER .... 33.670 FT.
HYDRAULIC RADIUS .... 0.506 FT.
CHANNEL TOP WIDTH ... 32.995 FT.

NORMAL DEPTH OF FLOW ..... 0.670 FT.
NORMAL W.S. ELEVATION 1388.110
VELOCITY AT NORMAL DEPTH . 3.723 F.P.S.
CRITICAL DEPTH ..... 0.648 FT.
CRITICAL VELOCITY ..... 3.850 F.P.S.
CRITICAL SLOPE ..... 0.43693 %

FLOW CONDITION IS SUBCRITICAL

CHANNEL CONFIGURATION IS NATURAL

*** SOLVING FOR DISCHARGE ***

FLOWLINE ELEVATION .. 1387.440
MAXIMUM ELEVATION ... 1389.000
CHANNEL SLOPE ..... 0.35000 %
MANNINGS N 0.015

CHANNEL CROSS SECTION DATA :

PT. #	STA.	ELEV.
1.0	975.00	1389.00
2.0	975.00	1388.19
3.0	979.00	1388.19
4.0	984.00	1388.09
5.0	984.00	1387.73
6.0	1000.00	1387.44
7.0	1016.00	1387.70
8.0	1016.00	1388.01
9.0	1021.00	1388.11
10.0	1025.00	1388.11
11.0	1025.00	1389.00

FOR DESIGN DISCHARGE = 71.141 C.F.S. :

AREA OF FLOW ..... 20.817 S.F.
WETTED PERIMETER .... 46.751 FT.
HYDRAULIC RADIUS .... 0.445 FT.
CHANNEL TOP WIDTH ... 45.994 FT.

NORMAL DEPTH OF FLOW ..... 0.750 FT.
NORMAL W.S. ELEVATION 1388.190
VELOCITY AT NORMAL DEPTH . 3.418 F.P.S.
CRITICAL DEPTH ..... 0.710 FT.
CRITICAL VELOCITY ..... 3.740 F.P.S.
CRITICAL SLOPE ..... 0.44556 %

FLOW CONDITION IS SUBCRITICAL

CHANNEL CONFIGURATION IS NATURAL

*** SOLVING FOR DISCHARGE ***

FLOWLINE ELEVATION .. 1387.440
MAXIMUM ELEVATION ... 1389.000
CHANNEL SLOPE ..... 0.35000 %
MANNINGS N 0.015

CHANNEL CROSS SECTION DATA :

PT. #	STA.	ELEV.
1.0	975.00	1389.00
2.0	975.00	1388.19
3.0	979.00	1388.19
4.0	984.00	1388.09
5.0	984.00	1387.73
6.0	1000.00	1387.44
7.0	1016.00	1387.70
8.0	1016.00	1388.01
9.0	1021.00	1388.11
10.0	1025.00	1388.11
11.0	1025.00	1389.00

FOR DESIGN DISCHARGE = 168.917 C.F.S. :

AREA OF FLOW ..... 36.319 S.F.
WETTED PERIMETER .... 51.377 FT.
HYDRAULIC RADIUS .... 0.707 FT.
CHANNEL TOP WIDTH ... 50.000 FT.

NORMAL DEPTH OF FLOW ..... 1.060 FT.
NORMAL W.S. ELEVATION 1388.500
VELOCITY AT NORMAL DEPTH . 4.651 F.P.S.
CRITICAL DEPTH ..... 1.041 FT.
CRITICAL VELOCITY ..... 4.775 F.P.S.
CRITICAL SLOPE ..... 0.38182 %

FLOW CONDITION IS SUBCRITICAL

CHANNEL CONFIGURATION IS NATURAL

*** SOLVING FOR DISCHARGE ***

FLOWLINE ELEVATION .. 1387.940
MAXIMUM ELEVATION ... 1391.000
CHANNEL SLOPE ..... 0.70000 %
MANNINGS N 0.015

CHANNEL CROSS SECTION DATA :

PT. #	STA.	ELEV.
1.0	975.00	1391.00
2.0	975.00	1388.62
3.0	979.00	1388.62
4.0	984.00	1388.52
5.0	984.00	1388.16
6.0	1000.00	1387.94
7.0	1016.00	1388.26
8.0	1016.00	1388.55
9.0	1021.00	1388.65
10.0	1025.00	1388.65
11.0	1025.00	1391.00

FOR DESIGN DISCHARGE = 67.916 C.F.S. :

AREA OF FLOW ..... 14.240 S.F.
WETTED PERIMETER .... 32.625 FT.
HYDRAULIC RADIUS .... 0.436 FT.
CHANNEL TOP WIDTH ... 32.000 FT.

NORMAL DEPTH OF FLOW ..... 0.580 FT.
NORMAL W.S. ELEVATION 1388.520
VELOCITY AT NORMAL DEPTH . 4.769 F.P.S.
CRITICAL DEPTH ..... 0.699 FT.
CRITICAL VELOCITY ..... 3.638 F.P.S.
CRITICAL SLOPE ..... 0.45049 %

FLOW CONDITION IS SUPERCRITICAL

CHANNEL CONFIGURATION IS NATURAL

*** SOLVING FOR DISCHARGE ***

FLOWLINE ELEVATION .. 1387.940
MAXIMUM ELEVATION ... 1391.000
CHANNEL SLOPE ..... 0.70000 %
MANNINGS N 0.015

CHANNEL CROSS SECTION DATA :

PT. #	STA.	ELEV.
1.0	975.00	1391.00
2.0	975.00	1388.62
3.0	979.00	1388.62
4.0	984.00	1388.52
5.0	984.00	1388.16
6.0	1000.00	1387.94
7.0	1016.00	1388.26
8.0	1016.00	1388.55
9.0	1021.00	1388.65
10.0	1025.00	1388.65
11.0	1025.00	1391.00

FOR DESIGN DISCHARGE = 74.045 C.F.S. :

AREA OF FLOW ..... 15.224 S.F.
WETTED PERIMETER .... 33.867 FT.
HYDRAULIC RADIUS .... 0.450 FT.
CHANNEL TOP WIDTH ... 33.502 FT.

NORMAL DEPTH OF FLOW ..... 0.610 FT.
NORMAL W.S. ELEVATION 1388.550
VELOCITY AT NORMAL DEPTH . 4.864 F.P.S.
CRITICAL DEPTH ..... 0.734 FT.
CRITICAL VELOCITY ..... 3.634 F.P.S.
CRITICAL SLOPE ..... 0.45432 %

FLOW CONDITION IS SUPERCRITICAL

CHANNEL CONFIGURATION IS NATURAL

*** SOLVING FOR DISCHARGE ***

FLOWLINE ELEVATION .. 1387.940
MAXIMUM ELEVATION ... 1391.000
CHANNEL SLOPE ..... 0.70000 %
MANNINGS N 0.015

CHANNEL CROSS SECTION DATA :

PT. #	STA.	ELEV.
1.0	975.00	1391.00
2.0	975.00	1388.62
3.0	979.00	1388.62
4.0	984.00	1388.52
5.0	984.00	1388.16
6.0	1000.00	1387.94
7.0	1016.00	1388.26
8.0	1016.00	1388.55
9.0	1021.00	1388.65
10.0	1025.00	1388.65
11.0	1025.00	1391.00

FOR DESIGN DISCHARGE = 84.471 C.F.S. :

AREA OF FLOW ..... 17.812 S.F.
WETTED PERIMETER .... 41.155 FT.
HYDRAULIC RADIUS .... 0.433 FT.
CHANNEL TOP WIDTH ... 40.498 FT.

NORMAL DEPTH OF FLOW ..... 0.680 FT.
NORMAL W.S. ELEVATION 1388.620
VELOCITY AT NORMAL DEPTH . 4.742 F.P.S.
CRITICAL DEPTH ..... 0.772 FT.
CRITICAL VELOCITY ..... 3.793 F.P.S.
CRITICAL SLOPE ..... 0.44025 %

FLOW CONDITION IS SUPERCRITICAL

CHANNEL CONFIGURATION IS NATURAL
==========

*** SOLVING FOR DISCHARGE ***

FLOWLINE ELEVATION .. 1387.940
MAXIMUM ELEVATION ... 1391.000
CHANNEL SLOPE ..... 0.70000 %
MANNINGS N 0.015

CHANNEL CROSS SECTION DATA :

PT. #	STA.	ELEV.
1.0	975.00	1391.00
2.0	975.00	1388.62
3.0	979.00	1388.62
4.0	984.00	1388.52
5.0	984.00	1388.16
6.0	1000.00	1387.94
7.0	1016.00	1388.26
8.0	1016.00	1388.55
9.0	1021.00	1388.65
10.0	1025.00	1388.65
11.0	1025.00	1391.00

FOR DESIGN DISCHARGE = 92.621 C.F.S. :

AREA OF FLOW ..... 18.921 S.F.
WETTED PERIMETER .... 41.686 FT.
HYDRAULIC RADIUS .... 0.454 FT.
CHANNEL TOP WIDTH ... 41.000 FT.

NORMAL DEPTH OF FLOW ..... 0.710 FT.
NORMAL W.S. ELEVATION 1388.650
VELOCITY AT NORMAL DEPTH . 4.895 F.P.S.
CRITICAL DEPTH ..... 0.800 FT.
CRITICAL VELOCITY ..... 3.912 F.P.S.
CRITICAL SLOPE ..... 0.43237 %

FLOW CONDITION IS SUPERCRITICAL

CHANNEL CONFIGURATION IS NATURAL

*** SOLVING FOR DISCHARGE ***

FLOWLINE ELEVATION .. 1387.940
MAXIMUM ELEVATION ... 1391.000
CHANNEL SLOPE ..... 0.70000 %
MANNINGS N 0.015

CHANNEL CROSS SECTION DATA :

PT. #	STA.	ELEV.
1.0	975.00	1391.00
2.0	975.00	1388.62
3.0	979.00	1388.62
4.0	984.00	1388.52
5.0	984.00	1388.16
6.0	1000.00	1387.94
7.0	1016.00	1388.26
8.0	1016.00	1388.55
9.0	1021.00	1388.65
10.0	1025.00	1388.65
11.0	1025.00	1391.00

FOR DESIGN DISCHARGE = 242.706 C.F.S. :

AREA OF FLOW ..... 36.669 S.F.
WETTED PERIMETER .... 51.387 FT.
HYDRAULIC RADIUS .... 0.714 FT.
CHANNEL TOP WIDTH ... 50.000 FT.

NORMAL DEPTH OF FLOW ..... 1.060 FT.
NORMAL W.S. ELEVATION 1389.000
VELOCITY AT NORMAL DEPTH . 6.619 F.P.S.
CRITICAL DEPTH ..... 1.227 FT.
CRITICAL VELOCITY ..... 5.390 F.P.S.
CRITICAL SLOPE ..... 0.35619 %

FLOW CONDITION IS SUPERCRITICAL

CHANNEL CONFIGURATION IS NATURAL
==========

*** SOLVING FOR DISCHARGE ***

FLOWLINE ELEVATION .. 1387.940
MAXIMUM ELEVATION ... 1391.000
CHANNEL SLOPE ..... 0.70000 %
MANNINGS N 0.015

CHANNEL CROSS SECTION DATA :

PT. #	STA.	ELEV.
1.0	975.00	1391.00
2.0	975.00	1388.62
3.0	979.00	1388.62
4.0	984.00	1388.52
5.0	984.00	1388.16
6.0	1000.00	1387.94
7.0	1016.00	1388.26
8.0	1016.00	1388.55
9.0	1021.00	1388.65
10.0	1025.00	1388.65
11.0	1025.00	1391.00

FOR DESIGN DISCHARGE = 992.271 C.F.S. :

AREA OF FLOW ..... 86.669 S.F.
WETTED PERIMETER .... 53.387 FT.
HYDRAULIC RADIUS .... 1.623 FT.
CHANNEL TOP WIDTH ... 50.000 FT.

NORMAL DEPTH OF FLOW ..... 2.060 FT.
NORMAL W.S. ELEVATION 1390.000
VELOCITY AT NORMAL DEPTH . 11.449 F.P.S.
CRITICAL DEPTH ..... 2.630 FT.
CRITICAL VELOCITY ..... 8.616 F.P.S.
CRITICAL SLOPE ..... 0.27908 %

FLOW CONDITION IS SUPERCRITICAL

OPEN CHANNEL HYDRAULICS

****

PROJECT NAME ..... FCDMC CAVE CREEK FIS
PROJECT JOB NUMBER ... 7833
DATE 10/13/89

13TH AVENUE AND GROVERS AVENUE SPLIT FLOW CALCULATIONS
SOUTH LEG OF 13TH AVENUE

CHANNEL CONFIGURATION IS NATURAL

*** SOLVING FOR DISCHARGE ***

FLOWLINE ELEVATION .. 1374.480
MAXIMUM ELEVATION ... 1378.000
CHANNEL SLOPE ..... 0.90000 %
MANNINGS N 0.015

CHANNEL CROSS SECTION DATA :

PT. #	STA.	ELEV.
1.0	975.00	1378.00
2.0	975.00	1375.31
3.0	979.00	1375.11
4.0	984.00	1375.01
5.0	984.00	1374.67
6.0	1000.00	1374.97
7.0	1016.00	1374.48
8.0	1016.00	1375.03
9.0	1021.00	1375.13
10.0	1025.00	1375.36
11.0	1025.00	1378.00

FOR DESIGN DISCHARGE = 1.131 C.F.S. :

AREA OF FLOW ..... 0.590 S.F.
WETTED PERIMETER .... 6.399 FT.
HYDRAULIC RADIUS .... 0.092 FT.
CHANNEL TOP WIDTH ... 6.206 FT.

NORMAL DEPTH OF FLOW ..... 0.190 FT.
NORMAL W.S. ELEVATION 1374.670

OPEN CHANNEL HYDRAULICS

****

PROJECT NAME ..... FCDMC CAVE CREEK FIS
PROJECT JOB NUMBER ... 7833
DATE 10/13/89

13TH AVENUE AND RENEE DRIVE SPLIT FLOW CALCULATIONS
WEST LEG OF RENEE DRIVE

CHANNEL CONFIGURATION IS NATURAL
==========

*** SOLVING FOR DISCHARGE ***

FLOWLINE ELEVATION .. 1387.940
MAXIMUM ELEVATION ... 1391.000
CHANNEL SLOPE ..... 0.70000 %
MANNINGS N 0.015

CHANNEL CROSS SECTION DATA :

PT. #	STA.	ELEV.
1.0	975.00	1391.00
2.0	975.00	1388.62
3.0	979.00	1388.62
4.0	984.00	1388.52
5.0	984.00	1388.16
6.0	1000.00	1387.94
7.0	1016.00	1388.26
8.0	1016.00	1388.55
9.0	1021.00	1388.65
10.0	1025.00	1388.65
11.0	1025.00	1391.00

FOR DESIGN DISCHARGE = 5.653 C.F.S. :

AREA OF FLOW ..... 2.971 S.F.
WETTED PERIMETER .... 27.004 FT.
HYDRAULIC RADIUS .... 0.110 FT.
CHANNEL TOP WIDTH ... 27.000 FT.

NORMAL DEPTH OF FLOW ..... 0.220 FT.
NORMAL W.S. ELEVATION 1388.160

```
VELOCITY AT NORMAL DEPTH .        1.903 F.P.S.
CRITICAL DEPTH ...........        0.220 FT.
CRITICAL VELOCITY ........        1.903 F.P.S.
CRITICAL SLOPE ...........        0.70000 %

FLOW CONDITION IS  SUPERCRITICAL
```

CHANNEL CONFIGURATION IS NATURAL
==========

*** SOLVING FOR DISCHARGE ***

FLOWLINE ELEVATION .. 1387.940
MAXIMUM ELEVATION ... 1391.000
CHANNEL SLOPE ..... 0.70000 %
MANNINGS N 0.015

CHANNEL CROSS SECTION DATA :

PT. #	STA.	ELEV.
1.0	975.00	1391.00
2.0	975.00	1388.62
3.0	979.00	1388.62
4.0	984.00	1388.52
5.0	984.00	1388.16
6.0	1000.00	1387.94
7.0	1016.00	1388.26
8.0	1016.00	1388.55
9.0	1021.00	1388.65
10.0	1025.00	1388.65
11.0	1025.00	1391.00

FOR DESIGN DISCHARGE = 9.800 C.F.S. :

AREA OF FLOW ..... 3.360 S.F.
WETTED PERIMETER .... 16.102 FT.
HYDRAULIC RADIUS .... 0.209 FT.
CHANNEL TOP WIDTH ... 16.000 FT.

NORMAL DEPTH OF FLOW ..... 0.320 FT.
NORMAL W.S. ELEVATION 1388.260
VELOCITY AT NORMAL DEPTH . 2.916 F.P.S.
CRITICAL DEPTH ..... 0.272 FT.
CRITICAL VELOCITY ..... 2.206 F.P.S.
CRITICAL SLOPE ..... 0.62331 %

FLOW CONDITION IS SUBCRITICAL

```
VELOCITY AT NORMAL DEPTH .      1.918 F.P.S.
CRITICAL DEPTH ............     0.199 FT.
CRITICAL VELOCITY .........     1.744 F.P.S.
CRITICAL SLOPE ............     0.76526 %

FLOW CONDITION IS  SUPERCRITICAL
```

CHANNEL CONFIGURATION IS NATURAL

*** SOLVING FOR DISCHARGE ***

FLOWLINE ELEVATION .. 1374.480
MAXIMUM ELEVATION ... 1378.000
CHANNEL SLOPE ..... 0.90000 %
MANNINGS N 0.015

CHANNEL CROSS SECTION DATA :

PT. #	STA.	ELEV.
1.0	975.00	1378.00
2.0	975.00	1375.31
3.0	979.00	1375.11
4.0	984.00	1375.01
5.0	984.00	1374.67
6.0	1000.00	1374.97
7.0	1016.00	1374.48
8.0	1016.00	1375.03
9.0	1021.00	1375.13
10.0	1025.00	1375.36
11.0	1025.00	1378.00

FOR DESIGN DISCHARGE = 13.964 C.F.S. :

AREA OF FLOW ..... 3.920 S.F.
WETTED PERIMETER .... 16.797 FT.
HYDRAULIC RADIUS .... 0.233 FT.
CHANNEL TOP WIDTH ... 16.000 FT.

NORMAL DEPTH OF FLOW ..... 0.490 FT.
NORMAL W.S. ELEVATION 1374.970
VELOCITY AT NORMAL DEPTH . 3.562 F.P.S.
CRITICAL DEPTH ..... 0.469 FT.
CRITICAL VELOCITY ..... 2.464 F.P.S.
CRITICAL SLOPE ..... 0.59530 %

FLOW CONDITION IS SUBCRITICAL

CHANNEL CONFIGURATION IS NATURAL

*** SOLVING FOR DISCHARGE ***

FLOWLINE ELEVATION .. 1374.480
MAXIMUM ELEVATION ... 1378.000
CHANNEL SLOPE ..... 0.90000 %
MANNINGS N 0.015

CHANNEL CROSS SECTION DATA :

PT. #	STA.	ELEV.
1.0	975.00	1378.00
2.0	975.00	1375.31
3.0	979.00	1375.11
4.0	984.00	1375.01
5.0	984.00	1374.67
6.0	1000.00	1374.97
7.0	1016.00	1374.48
8.0	1016.00	1375.03
9.0	1021.00	1375.13
10.0	1025.00	1375.36
11.0	1025.00	1378.00

FOR DESIGN DISCHARGE = 26.905 C.F.S. :

AREA OF FLOW ..... 7.601 S.F.
WETTED PERIMETER .... 32.880 FT.
HYDRAULIC RADIUS .... 0.231 FT.
CHANNEL TOP WIDTH ... 32.000 FT.

NORMAL DEPTH OF FLOW ..... 0.530 FT.
NORMAL W.S. ELEVATION 1375.010
VELOCITY AT NORMAL DEPTH . 3.540 F.P.S.
CRITICAL DEPTH ..... 0.581 FT.
CRITICAL VELOCITY ..... 2.886 F.P.S.
CRITICAL SLOPE ..... 0.53337 %

FLOW CONDITION IS SUPERCRITICAL

CHANNEL CONFIGURATION IS NATURAL

*** SOLVING FOR DISCHARGE ***

FLOWLINE ELEVATION .. 1374.480
MAXIMUM ELEVATION ... 1378.000
CHANNEL SLOPE ..... 0.90000 %
MANNINGS N 0.015

CHANNEL CROSS SECTION DATA :

PT. #	STA.	ELEV.
1.0	975.00	1378.00
2.0	975.00	1375.31
3.0	979.00	1375.11
4.0	984.00	1375.01
5.0	984.00	1374.67
6.0	1000.00	1374.97
7.0	1016.00	1374.48
8.0	1016.00	1375.03
9.0	1021.00	1375.13
10.0	1025.00	1375.36
11.0	1025.00	1378.00

FOR DESIGN DISCHARGE = 30.561 C.F.S. :

AREA OF FLOW ..... 8.251 S.F.
WETTED PERIMETER .... 33.352 FT.
HYDRAULIC RADIUS .... 0.247 FT.
CHANNEL TOP WIDTH ... 33.001 FT.

NORMAL DEPTH OF FLOW ..... 0.550 FT.
NORMAL W.S. ELEVATION 1375.030
VELOCITY AT NORMAL DEPTH . 3.704 F.P.S.
CRITICAL DEPTH ..... 0.610 FT.
CRITICAL VELOCITY ..... 2.936 F.P.S.
CRITICAL SLOPE ..... 0.52691 %

FLOW CONDITION IS SUPERCRITICAL

CHANNEL CONFIGURATION IS NATURAL

*** SOLVING FOR DISCHARGE ***

FLOWLINE ELEVATION .. 1374.480
MAXIMUM ELEVATION ... 1378.000
CHANNEL SLOPE ..... 0.90000 %
MANNINGS N 0.015

CHANNEL CROSS SECTION DATA :

PT. #	STA.	ELEV.
1.0	975.00	1378.00
2.0	975.00	1375.31
3.0	979.00	1375.11
4.0	984.00	1375.01
5.0	984.00	1374.67
6.0	1000.00	1374.97
7.0	1016.00	1374.48
8.0	1016.00	1375.03
9.0	1021.00	1375.13
10.0	1025.00	1375.36
11.0	1025.00	1378.00

FOR DESIGN DISCHARGE = 43.741 C.F.S. :

AREA OF FLOW ..... 11.210 S.F.
WETTED PERIMETER .... 41.901 FT.
HYDRAULIC RADIUS .... 0.268 FT.
CHANNEL TOP WIDTH ... 40.999 FT.

NORMAL DEPTH OF FLOW ..... 0.630 FT.
NORMAL W.S. ELEVATION 1375.110
VELOCITY AT NORMAL DEPTH . 3.902 F.P.S.
CRITICAL DEPTH ..... 0.689 FT.
CRITICAL VELOCITY ..... 3.187 F.P.S.
CRITICAL SLOPE ..... 0.50065 %

FLOW CONDITION IS SUPERCRITICAL

CHANNEL CONFIGURATION IS NATURAL

*** SOLVING FOR DISCHARGE ***

FLOWLINE ELEVATION .. 1374.480
MAXIMUM ELEVATION ... 1378.000
CHANNEL SLOPE ..... 0.90000 %
MANNINGS N 0.015

CHANNEL CROSS SECTION DATA :

PT. #	STA.	ELEV.
1.0	975.00	1378.00
2.0	975.00	1375.31
3.0	979.00	1375.11
4.0	984.00	1375.01
5.0	984.00	1374.67
6.0	1000.00	1374.97
7.0	1016.00	1374.48
8.0	1016.00	1375.03
9.0	1021.00	1375.13
10.0	1025.00	1375.36
11.0	1025.00	1378.00

FOR DESIGN DISCHARGE = 50.547 C.F.S. :

AREA OF FLOW ..... 11.794 S.F.
WETTED PERIMETER .... 38.302 FT.
HYDRAULIC RADIUS .... 0.308 FT.
CHANNEL TOP WIDTH ... 37.401 FT.

NORMAL DEPTH OF FLOW ..... 0.650 FT.
NORMAL W.S. ELEVATION 1375.130
VELOCITY AT NORMAL DEPTH . 4.286 F.P.S.
CRITICAL DEPTH ..... 0.724 FT.
CRITICAL VELOCITY ..... 3.307 F.P.S.
CRITICAL SLOPE ..... 0.48538 %

FLOW CONDITION IS SUPERCRITICAL

CHANNEL CONFIGURATION IS NATURAL

*** SOLVING FOR DISCHARGE ***

FLOWLINE ELEVATION .. 1374.480
MAXIMUM ELEVATION ... 1378.000
CHANNEL SLOPE ..... 0.90000 %
MANNINGS N 0.015

CHANNEL CROSS SECTION DATA :

PT. #	STA.	ELEV.
1.0	975.00	1378.00
2.0	975.00	1375.31
3.0	979.00	1375.11
4.0	984.00	1375.01
5.0	984.00	1374.67
6.0	1000.00	1374.97
7.0	1016.00	1374.48
8.0	1016.00	1375.03
9.0	1021.00	1375.13
10.0	1025.00	1375.36
11.0	1025.00	1378.00

FOR DESIGN DISCHARGE = 104.417 C.F.S. :

AREA OF FLOW ..... 20.285 S.F.
WETTED PERIMETER .... 50.044 FT.
HYDRAULIC RADIUS .... 0.405 FT.
CHANNEL TOP WIDTH ... 49.132 FT.

NORMAL DEPTH OF FLOW ..... 0.830 FT.
NORMAL W.S. ELEVATION 1375.310
VELOCITY AT NORMAL DEPTH . 5.147 F.P.S.
CRITICAL DEPTH ..... 0.938 FT.
CRITICAL VELOCITY ..... 4.069 F.P.S.
CRITICAL SLOPE ..... 0.42257 %

FLOW CONDITION IS SUPERCRITICAL

CHANNEL CONFIGURATION IS NATURAL

*** SOLVING FOR DISCHARGE ***

FLOWLINE ELEVATION .. 1374.480
MAXIMUM ELEVATION ... 1378.000
CHANNEL SLOPE ..... 0.90000 %
MANNINGS N 0.015

CHANNEL CROSS SECTION DATA :

PT. #	STA.	ELEV.
1.0	975.00	1378.00
2.0	975.00	1375.31
3.0	979.00	1375.11
4.0	984.00	1375.01
5.0	984.00	1374.67
6.0	1000.00	1374.97
7.0	1016.00	1374.48
8.0	1016.00	1375.03
9.0	1021.00	1375.13
10.0	1025.00	1375.36
11.0	1025.00	1378.00

FOR DESIGN DISCHARGE = 127.569 C.F.S. :

AREA OF FLOW ..... 22.300 S.F.
WETTED PERIMETER .... 46.957 FT.
HYDRAULIC RADIUS .... 0.475 FT.
CHANNEL TOP WIDTH ... 46.000 FT.

NORMAL DEPTH OF FLOW ..... 0.880 FT.
NORMAL W.S. ELEVATION 1375.360
VELOCITY AT NORMAL DEPTH . 5.721 F.P.S.
CRITICAL DEPTH ..... 1.011 FT.
CRITICAL VELOCITY ..... 4.353 F.P.S.
CRITICAL SLOPE ..... 0.40641 %

FLOW CONDITION IS SUPERCRITICAL

CHANNEL CONFIGURATION IS NATURAL

*** SOLVING FOR DISCHARGE ***

FLOWLINE ELEVATION .. 1374.480
MAXIMUM ELEVATION ... 1378.000
CHANNEL SLOPE ..... 0.90000 %
MANNINGS N 0.015

CHANNEL CROSS SECTION DATA :

PT. #	STA.	ELEV.
1.0	975.00	1378.00
2.0	975.00	1375.31
3.0	979.00	1375.11
4.0	984.00	1375.01
5.0	984.00	1374.67
6.0	1000.00	1374.97
7.0	1016.00	1374.48
8.0	1016.00	1375.03
9.0	1021.00	1375.13
10.0	1025.00	1375.36
11.0	1025.00	1378.00

FOR DESIGN DISCHARGE = 531.050 C.F.S. :

AREA OF FLOW ..... 54.760 S.F.
WETTED PERIMETER .... 52.244 FT.
HYDRAULIC RADIUS .... 1.048 FT.
CHANNEL TOP WIDTH ... 50.000 FT.

NORMAL DEPTH OF FLOW ..... 1.520 FT.
NORMAL W.S. ELEVATION 1376.000
VELOCITY AT NORMAL DEPTH . 9.698 F.P.S.
CRITICAL DEPTH ..... 1.943 FT.
CRITICAL VELOCITY ..... 6.996 F.P.S.
CRITICAL SLOPE ..... 0.30959 %

FLOW CONDITION IS SUPERCRITICAL

OPEN CHANNEL HYDRAULICS

****

PROJECT NAME ..... FCDMC CAVE CREEK FIS
PROJECT JOB NUMBER ... 7833
DATE 10/13/89

13TH AVENUE AND GROVERS AVENUE SPLIT FLOW CALCULATIONS
WEST LEG OF GROVERS AVENUE

CHANNEL CONFIGURATION IS NATURAL
==========

*** SOLVING FOR DISCHARGE ***

FLOWLINE ELEVATION .. 1374.840
MAXIMUM ELEVATION ... 1379.000
CHANNEL SLOPE ..... 0.50000 %
MANNINGS N 0.015

CHANNEL CROSS SECTION DATA :

PT. #	STA.	ELEV.
1.0	960.00	1379.00
2.0	960.00	1376.05
3.0	974.00	1376.05
4.0	984.00	1376.22
5.0	1000.00	1374.87
6.0	1024.00	1374.84
7.0	1024.00	1375.15
8.0	1029.00	1375.25
9.0	1040.00	1375.70
10.0	1040.00	1379.00

FOR DESIGN DISCHARGE = 22.405 C.F.S. :

AREA OF FLOW ..... 7.544 S.F.
WETTED PERIMETER .... 27.331 FT.
HYDRAULIC RADIUS .... 0.276 FT.
CHANNEL TOP WIDTH ... 27.319 FT.

NORMAL DEPTH OF FLOW ..... 0.310 FT.
NORMAL W.S. ELEVATION 1375.150
VELOCITY AT NORMAL DEPTH . 2.970 F.P.S.
CRITICAL DEPTH ..... 0.309 FT.

CRITICAL VELOCITY ..... 2.980 F.P.S.
CRITICAL SLOPE ..... 0.51329 %

FLOW CONDITION IS SUBCRITICAL

CHANNEL CONFIGURATION IS NATURAL

*** SOLVING FOR DISCHARGE ***

FLOWLINE ELEVATION .. 1374.840
MAXIMUM ELEVATION ... 1379.000
CHANNEL SLOPE ..... 0.50000 %
MANNINGS N 0.015

CHANNEL CROSS SECTION DATA :

PT. #	STA.	ELEV.
1.0	960.00	1379.00
2.0	960.00	1376.05
3.0	974.00	1376.05
4.0	984.00	1376.22
5.0	1000.00	1374.87
6.0	1024.00	1374.84
7.0	1024.00	1375.15
8.0	1029.00	1375.25
9.0	1040.00	1375.70
10.0	1040.00	1379.00

FOR DESIGN DISCHARGE = 36.533 C.F.S. :

AREA OF FLOW ..... 10.335 S.F.
WETTED PERIMETER .... 28.830 FT.
HYDRAULIC RADIUS .... 0.358 FT.
CHANNEL TOP WIDTH ... 28.504 FT.

NORMAL DEPTH OF FLOW ..... 0.410 FT.
NORMAL W.S. ELEVATION 1375.250
VELOCITY AT NORMAL DEPTH . 3.535 F.P.S.
CRITICAL DEPTH ..... 0.429 FT.
CRITICAL VELOCITY ..... 3.253 F.P.S.
CRITICAL SLOPE ..... 0.48212 %

FLOW CONDITION IS SUPERCRITICAL

CHANNEL CONFIGURATION IS NATURAL
==========

*** SOLVING FOR DISCHARGE ***

FLOWLINE ELEVATION .. 1374.840
MAXIMUM ELEVATION ... 1379.000
CHANNEL SLOPE ..... 0.50000 %
MANNINGS N 0.015

CHANNEL CROSS SECTION DATA :

PT. #	STA.	ELEV.
1.0	960.00	1379.00
2.0	960.00	1376.05
3.0	974.00	1376.05
4.0	984.00	1376.22
5.0	1000.00	1374.87
6.0	1024.00	1374.84
7.0	1024.00	1375.15
8.0	1029.00	1375.25
9.0	1040.00	1375.70
10.0	1040.00	1379.00

FOR DESIGN DISCHARGE = 146.279 C.F.S. :

AREA OF FLOW ..... 26.860 S.F.
WETTED PERIMETER .... 39.183 FT.
HYDRAULIC RADIUS .... 0.685 FT.
CHANNEL TOP WIDTH ... 38.837 FT.

NORMAL DEPTH OF FLOW ..... 0.860 FT.
NORMAL W.S. ELEVATION 1375.700
VELOCITY AT NORMAL DEPTH . 5.446 F.P.S.
CRITICAL DEPTH ..... 0.918 FT.
CRITICAL VELOCITY ..... 4.536 F.P.S.
CRITICAL SLOPE ..... 0.38562 %

FLOW CONDITION IS SUPERCRITICAL

CHANNEL CONFIGURATION IS NATURAL
==========

*** SOLVING FOR DISCHARGE ***

FLOWLINE ELEVATION .. 1374.840
MAXIMUM ELEVATION ... 1379.000
CHANNEL SLOPE ..... 0.50000 %
MANNINGS N 0.015

CHANNEL CROSS SECTION DATA :

PT. #	STA.	ELEV.
1.0	960.00	1379.00
2.0	960.00	1376.05
3.0	974.00	1376.05
4.0	984.00	1376.22
5.0	1000.00	1374.87
6.0	1024.00	1374.84
7.0	1024.00	1375.15
8.0	1029.00	1375.25
9.0	1040.00	1375.70
10.0	1040.00	1379.00

FOR DESIGN DISCHARGE = 367.473 C.F.S. :

AREA OF FLOW ..... 59.232 S.F.
WETTED PERIMETER .... 71.067 FT.
HYDRAULIC RADIUS .... 0.833 FT.
CHANNEL TOP WIDTH ... 70.000 FT.

NORMAL DEPTH OF FLOW ..... 1.380 FT.
NORMAL W.S. ELEVATION 1376.220
VELOCITY AT NORMAL DEPTH . 6.204 F.P.S.
CRITICAL DEPTH ..... 1.497 FT.
CRITICAL VELOCITY ..... 5.291 F.P.S.
CRITICAL SLOPE ..... 0.35202 %

FLOW CONDITION IS SUPERCRITICAL

CHANNEL CONFIGURATION IS NATURAL

*** SOLVING FOR DISCHARGE ***

FLOWLINE ELEVATION .. 1374.840
MAXIMUM ELEVATION ... 1379.000
CHANNEL SLOPE ..... 0.50000 %
MANNINGS N 0.015

CHANNEL CROSS SECTION DATA :

PT. #	STA.	ELEV.
1.0	960.00	1379.00
2.0	960.00	1376.05
3.0	974.00	1376.05
4.0	984.00	1376.22
5.0	1000.00	1374.87
6.0	1024.00	1374.84
7.0	1024.00	1375.15
8.0	1029.00	1375.25
9.0	1040.00	1375.70
10.0	1040.00	1379.00

FOR DESIGN DISCHARGE = 302.928 C.F.S. :

AREA OF FLOW ..... 47.508 S.F.
WETTED PERIMETER .... 54.706 FT.
HYDRAULIC RADIUS .... 0.868 FT.
CHANNEL TOP WIDTH ... 53.986 FT.

NORMAL DEPTH OF FLOW ..... 1.210 FT.
NORMAL W.S. ELEVATION 1376.050
VELOCITY AT NORMAL DEPTH . 6.376 F.P.S.
CRITICAL DEPTH ..... 1.392 FT.
CRITICAL VELOCITY ..... 4.962 F.P.S.
CRITICAL SLOPE ..... 0.36635 %

FLOW CONDITION IS SUPERCRITICAL

CHANNEL CONFIGURATION IS NATURAL
==========

*** SOLVING FOR DISCHARGE ***

FLOWLINE ELEVATION .. 1374.840
MAXIMUM ELEVATION ... 1379.000
CHANNEL SLOPE ..... 0.50000 %
MANNINGS N 0.015

CHANNEL CROSS SECTION DATA :

PT. #	STA.	ELEV.
1.0	960.00	1379.00
2.0	960.00	1376.05
3.0	974.00	1376.05
4.0	984.00	1376.22
5.0	1000.00	1374.87
6.0	1024.00	1374.84
7.0	1024.00	1375.15
8.0	1029.00	1375.25
9.0	1040.00	1375.70
10.0	1040.00	1379.00

FOR DESIGN DISCHARGE = 1115.470 C.F.S. :

AREA OF FLOW ..... 122.484 S.F.
WETTED PERIMETER .... 82.629 FT.
HYDRAULIC RADIUS .... 1.482 FT.
CHANNEL TOP WIDTH ... 80.000 FT.

NORMAL DEPTH OF FLOW ..... 2.160 FT.
NORMAL W.S. ELEVATION 1377.000
VELOCITY AT NORMAL DEPTH . 9.107 F.P.S.
CRITICAL DEPTH ..... 2.449 FT.
CRITICAL VELOCITY ..... 7.661 F.P.S.
CRITICAL SLOPE ..... 0.28356 %

FLOW CONDITION IS SUPERCRITICAL

OPEN CHANNEL HYDRAULICS

****

PROJECT NAME ..... FCDMC CAVE CREEK FIS
PROJECT JOB NUMBER ... 7833
DATE 10/13/89

19TH AVENUE AND BELL ROAD SPLIT FLOW CALCULATIONS
SOUTH LEG OF 19TH AVENUE

CHANNEL CONFIGURATION IS NATURAL
==========

*** SOLVING FOR DISCHARGE ***

FLOWLINE ELEVATION .. 1351.120
MAXIMUM ELEVATION ... 1354.000
CHANNEL SLOPE ..... 0.90000 %
MANNINGS N 0.015

CHANNEL CROSS SECTION DATA :

PT. #	STA.	ELEV.
1.0	945.00	1354.00
2.0	945.00	1352.00
3.0	948.00	1352.04
4.0	953.00	1351.94
5.0	953.00	1351.44
6.0	1000.00	1352.20
7.0	1047.00	1351.12
8.0	1047.00	1351.59
9.0	1052.00	1351.69
10.0	1055.00	1351.76
11.0	1055.00	1354.00

FOR DESIGN DISCHARGE = 6.075 C.F.S. :

AREA OF FLOW ..... 2.227 S.F.
WETTED PERIMETER .... 14.248 FT.
HYDRAULIC RADIUS .... 0.156 FT.
CHANNEL TOP WIDTH ... 13.924 FT.

NORMAL DEPTH OF FLOW ..... 0.320 FT.
NORMAL W.S. ELEVATION 1351.440

```
VELOCITY AT NORMAL DEPTH .        2.727 F.P.S.
CRITICAL DEPTH ............       0.350 FT.
CRITICAL VELOCITY .........       2.256 F.P.S.
CRITICAL SLOPE ............       0.62727 %

FLOW CONDITION IS  SUPERCRITICAL
```

CHANNEL CONFIGURATION IS NATURAL

*** SOLVING FOR DISCHARGE ***

FLOWLINE ELEVATION .. 1351.120
MAXIMUM ELEVATION ... 1354.000
CHANNEL SLOPE ..... 0.90000 %
MANNINGS N 0.015

CHANNEL CROSS SECTION DATA :

PT. #	STA.	ELEV.
1.0	945.00	1354.00
2.0	945.00	1352.00
3.0	948.00	1352.04
4.0	953.00	1351.94
5.0	953.00	1351.44
6.0	1000.00	1352.20
7.0	1047.00	1351.12
8.0	1047.00	1351.59
9.0	1052.00	1351.69
10.0	1055.00	1351.76
11.0	1055.00	1354.00

FOR DESIGN DISCHARGE = 16.558 C.F.S. :

AREA OF FLOW ..... 5.501 S.F.
WETTED PERIMETER .... 30.351 FT.
HYDRAULIC RADIUS .... 0.181 FT.
CHANNEL TOP WIDTH ... 29.725 FT.

NORMAL DEPTH OF FLOW ..... 0.470 FT.
NORMAL W.S. ELEVATION 1351.590
VELOCITY AT NORMAL DEPTH . 3.010 F.P.S.
CRITICAL DEPTH ..... 0.507 FT.
CRITICAL VELOCITY ..... 2.469 F.P.S.
CRITICAL SLOPE ..... 0.58658 %

FLOW CONDITION IS SUPERCRITICAL

CHANNEL CONFIGURATION IS NATURAL

*** SOLVING FOR DISCHARGE ***

FLOWLINE ELEVATION .. 1351.120
MAXIMUM ELEVATION ... 1354.000
CHANNEL SLOPE ..... 0.90000 %
MANNINGS N 0.015

CHANNEL CROSS SECTION DATA :

PT. #	STA.	ELEV.
1.0	945.00	1354.00
2.0	945.00	1352.00
3.0	948.00	1352.04
4.0	953.00	1351.94
5.0	953.00	1351.44
6.0	1000.00	1352.20
7.0	1047.00	1351.12
8.0	1047.00	1351.59
9.0	1052.00	1351.69
10.0	1055.00	1351.76
11.0	1055.00	1354.00

FOR DESIGN DISCHARGE = 29.840 C.F.S. :

AREA OF FLOW ..... 9.249 S.F.
WETTED PERIMETER .... 45.983 FT.
HYDRAULIC RADIUS .... 0.201 FT.
CHANNEL TOP WIDTH ... 45.253 FT.

NORMAL DEPTH OF FLOW ..... 0.570 FT.
NORMAL W.S. ELEVATION 1351.690
VELOCITY AT NORMAL DEPTH . 3.226 F.P.S.
CRITICAL DEPTH ..... 0.611 FT.
CRITICAL VELOCITY ..... 2.657 F.P.S.
CRITICAL SLOPE ..... 0.55681 %

FLOW CONDITION IS SUPERCRITICAL

CHANNEL CONFIGURATION IS NATURAL

*** SOLVING FOR DISCHARGE ***

FLOWLINE ELEVATION .. 1351.120
MAXIMUM ELEVATION ... 1354.000
CHANNEL SLOPE ..... 0.90000 %
MANNINGS N 0.015

CHANNEL CROSS SECTION DATA :

PT. #	STA.	ELEV.
1.0	945.00	1354.00
2.0	945.00	1352.00
3.0	948.00	1352.04
4.0	953.00	1351.94
5.0	953.00	1351.44
6.0	1000.00	1352.20
7.0	1047.00	1351.12
8.0	1047.00	1351.59
9.0	1052.00	1351.69
10.0	1055.00	1351.76
11.0	1055.00	1354.00

FOR DESIGN DISCHARGE = 45.665 C.F.S. :

AREA OF FLOW ..... 12.679 S.F.
WETTED PERIMETER .... 53.444 FT.
HYDRAULIC RADIUS .... 0.237 FT.
CHANNEL TOP WIDTH ... 52.643 FT.

NORMAL DEPTH OF FLOW ..... 0.640 FT.
NORMAL W.S. ELEVATION 1351.760
VELOCITY AT NORMAL DEPTH . 3.602 F.P.S.
CRITICAL DEPTH ..... 0.691 FT.
CRITICAL VELOCITY ..... 2.897 F.P.S.
CRITICAL SLOPE ..... 0.53039 %

FLOW CONDITION IS SUPERCRITICAL

CHANNEL CONFIGURATION IS NATURAL

*** SOLVING FOR DISCHARGE ***

FLOWLINE ELEVATION .. 1351.120
MAXIMUM ELEVATION ... 1354.000
CHANNEL SLOPE ..... 0.90000 %
MANNINGS N 0.015

CHANNEL CROSS SECTION DATA :

PT. #	STA.	ELEV.
1.0	945.00	1354.00
2.0	945.00	1352.00
3.0	948.00	1352.04
4.0	953.00	1351.94
5.0	953.00	1351.44
6.0	1000.00	1352.20
7.0	1047.00	1351.12
8.0	1047.00	1351.59
9.0	1052.00	1351.69
10.0	1055.00	1351.76
11.0	1055.00	1354.00

FOR DESIGN DISCHARGE = 108.486 C.F.S. :

AREA OF FLOW ..... 24.501 S.F.
WETTED PERIMETER .... 75.768 FT.
HYDRAULIC RADIUS .... 0.323 FT.
CHANNEL TOP WIDTH ... 74.602 FT.

NORMAL DEPTH OF FLOW ..... 0.820 FT.
NORMAL W.S. ELEVATION 1351.940
VELOCITY AT NORMAL DEPTH . 4.428 F.P.S.
CRITICAL DEPTH ..... 0.914 FT.
CRITICAL VELOCITY ..... 3.365 F.P.S.
CRITICAL SLOPE ..... 0.47391 %

FLOW CONDITION IS SUPERCRITICAL

CHANNEL CONFIGURATION IS NATURAL

*** SOLVING FOR DISCHARGE ***

FLOWLINE ELEVATION .. 1351.120
MAXIMUM ELEVATION ... 1354.000
CHANNEL SLOPE ..... 0.90000 %
MANNINGS N 0.015

CHANNEL CROSS SECTION DATA :

PT. #	STA.	ELEV.
1.0	945.00	1354.00
2.0	945.00	1352.00
3.0	948.00	1352.04
4.0	953.00	1351.94
5.0	953.00	1351.44
6.0	1000.00	1352.20
7.0	1047.00	1351.12
8.0	1047.00	1351.59
9.0	1052.00	1351.69
10.0	1055.00	1351.76
11.0	1055.00	1354.00

FOR DESIGN DISCHARGE = 155.183 C.F.S. :

AREA OF FLOW ..... 32.747 S.F.
WETTED PERIMETER .... 91.458 FT.
HYDRAULIC RADIUS .... 0.358 FT.
CHANNEL TOP WIDTH ... 90.150 FT.

NORMAL DEPTH OF FLOW ..... 0.920 FT.
NORMAL W.S. ELEVATION 1352.040
VELOCITY AT NORMAL DEPTH . 4.739 F.P.S.
CRITICAL DEPTH ..... 1.019 FT.
CRITICAL VELOCITY ..... 3.648 F.P.S.
CRITICAL SLOPE ..... 0.45265 %

FLOW CONDITION IS SUPERCRITICAL

CHANNEL CONFIGURATION IS NATURAL

*** SOLVING FOR DISCHARGE ***

FLOWLINE ELEVATION .. 1351.120
MAXIMUM ELEVATION ... 1354.000
CHANNEL SLOPE ..... 0.90000 %
MANNINGS N 0.015

CHANNEL CROSS SECTION DATA :

PT. #	STA.	ELEV.
1.0	945.00	1354.00
2.0	945.00	1352.00
3.0	948.00	1352.04
4.0	953.00	1351.94
5.0	953.00	1351.44
6.0	1000.00	1352.20
7.0	1047.00	1351.12
8.0	1047.00	1351.59
9.0	1052.00	1351.69
10.0	1055.00	1351.76
11.0	1055.00	1354.00

FOR DESIGN DISCHARGE = 134.919 C.F.S. :

AREA OF FLOW ..... 29.262 S.F.
WETTED PERIMETER .... 85.156 FT.
HYDRAULIC RADIUS .... 0.344 FT.
CHANNEL TOP WIDTH ... 83.928 FT.

NORMAL DEPTH OF FLOW ..... 0.880 FT.
NORMAL W.S. ELEVATION 1352.000
VELOCITY AT NORMAL DEPTH . 4.611 F.P.S.
CRITICAL DEPTH ..... 0.976 FT.
CRITICAL VELOCITY ..... 3.534 F.P.S.
CRITICAL SLOPE ..... 0.46224 %

FLOW CONDITION IS SUPERCRITICAL

CHANNEL CONFIGURATION IS NATURAL

*** SOLVING FOR DISCHARGE ***

FLOWLINE ELEVATION .. 1351.120
MAXIMUM ELEVATION ... 1354.000
CHANNEL SLOPE ..... 0.90000 %
MANNINGS N 0.015

CHANNEL CROSS SECTION DATA :

PT. #	STA.	ELEV.
1.0	945.00	1354.00
2.0	945.00	1352.00
3.0	948.00	1352.04
4.0	953.00	1351.94
5.0	953.00	1351.44
6.0	1000.00	1352.20
7.0	1047.00	1351.12
8.0	1047.00	1351.59
9.0	1052.00	1351.69
10.0	1055.00	1351.76
11.0	1055.00	1354.00

FOR DESIGN DISCHARGE = 180.382 C.F.S. :

AREA OF FLOW ..... 31.192 S.F.
WETTED PERIMETER .... 64.626 FT.
HYDRAULIC RADIUS .... 0.483 FT.
CHANNEL TOP WIDTH ... 63.000 FT.

NORMAL DEPTH OF FLOW ..... 1.080 FT.
NORMAL W.S. ELEVATION 1352.200
VELOCITY AT NORMAL DEPTH . 5.783 F.P.S.
CRITICAL DEPTH ..... 1.069 FT.
CRITICAL VELOCITY ..... 3.770 F.P.S.
CRITICAL SLOPE ..... 0.44180 %

FLOW CONDITION IS SUBCRITICAL

CHANNEL CONFIGURATION IS NATURAL

*** SOLVING FOR DISCHARGE ***

FLOWLINE ELEVATION .. 1351.120
MAXIMUM ELEVATION ... 1354.000
CHANNEL SLOPE ..... 0.90000 %
MANNINGS N 0.015

CHANNEL CROSS SECTION DATA :

PT. #	STA.	ELEV.
1.0	945.00	1354.00
2.0	945.00	1352.00
3.0	948.00	1352.04
4.0	953.00	1351.94
5.0	953.00	1351.44
6.0	1000.00	1352.20
7.0	1047.00	1351.12
8.0	1047.00	1351.59
9.0	1052.00	1351.69
10.0	1055.00	1351.76
11.0	1055.00	1354.00

FOR DESIGN DISCHARGE = 1462.950 C.F.S. :

AREA OF FLOW ..... 137.055 S.F.
WETTED PERIMETER .... 113.232 FT.
HYDRAULIC RADIUS .... 1.210 FT.
CHANNEL TOP WIDTH ... 110.000 FT.

NORMAL DEPTH OF FLOW ..... 1.880 FT.
NORMAL W.S. ELEVATION 1353.000
VELOCITY AT NORMAL DEPTH . 10.674 F.P.S.
CRITICAL DEPTH ..... 2.398 FT.
CRITICAL VELOCITY ..... 7.539 F.P.S.
CRITICAL SLOPE ..... 0.28588 %

FLOW CONDITION IS SUPERCRITICAL

OPEN CHANNEL HYDRAULICS

****

PROJECT NAME ..... FCDMC CAVE CREEK FIS
PROJECT JOB NUMBER ... 7833
DATE 10/13/89

19TH AVENUE AND BELL ROAD SPLIT FLOW CALCULATIONS
WEST LEG OF BELL ROAD

CHANNEL CONFIGURATION IS NATURAL

*** SOLVING FOR DISCHARGE ***

FLOWLINE ELEVATION .. 1351.250
MAXIMUM ELEVATION ... 1355.000
CHANNEL SLOPE ..... 0.90000 %
MANNINGS N 0.015

CHANNEL CROSS SECTION DATA :

PT. #	STA.	ELEV.
1.0	945.00	1355.00
2.0	945.00	1352.24
3.0	948.50	1352.10
4.0	953.50	1352.00
5.0	953.50	1351.52
6.0	1000.00	1352.00
7.0	1046.50	1351.25
8.0	1046.50	1351.67
9.0	1051.50	1351.77
10.0	1055.00	1351.79
11.0	1055.00	1355.00

FOR DESIGN DISCHARGE = 5.531 C.F.S. :

AREA OF FLOW ..... 2.260 S.F.
WETTED PERIMETER .... 17.013 FT.
HYDRAULIC RADIUS .... 0.133 FT.
CHANNEL TOP WIDTH ... 16.741 FT.

```
NORMAL DEPTH OF FLOW .....      0.270 FT.
NORMAL W.S. ELEVATION ....   1351.520
VELOCITY AT NORMAL DEPTH .      2.447 F.P.S.
CRITICAL DEPTH ............     0.292 FT.
CRITICAL VELOCITY .........     2.074 F.P.S.
CRITICAL SLOPE ............     0.66727 %

FLOW CONDITION IS  SUPERCRITICAL
```

CHANNEL CONFIGURATION IS NATURAL

*** SOLVING FOR DISCHARGE ***

FLOWLINE ELEVATION .. 1351.250
MAXIMUM ELEVATION ... 1355.000
CHANNEL SLOPE ..... 0.90000 %
MANNINGS N 0.015

CHANNEL CROSS SECTION DATA :

PT. #	STA.	ELEV.
1.0	945.00	1355.00
2.0	945.00	1352.24
3.0	948.50	1352.10
4.0	953.50	1352.00
5.0	953.50	1351.52
6.0	1000.00	1352.00
7.0	1046.50	1351.25
8.0	1046.50	1351.67
9.0	1051.50	1351.77
10.0	1055.00	1351.79
11.0	1055.00	1355.00

FOR DESIGN DISCHARGE = 18.249 C.F.S. :

AREA OF FLOW ..... 6.560 S.F.
WETTED PERIMETER .... 40.731 FT.
HYDRAULIC RADIUS .... 0.161 FT.
CHANNEL TOP WIDTH ... 40.577 FT.

NORMAL DEPTH OF FLOW ..... 0.420 FT.
NORMAL W.S. ELEVATION 1351.670
VELOCITY AT NORMAL DEPTH . 2.782 F.P.S.
CRITICAL DEPTH ..... 0.449 FT.
CRITICAL VELOCITY ..... 2.333 F.P.S.
CRITICAL SLOPE ..... 0.60995 %

FLOW CONDITION IS SUPERCRITICAL

CHANNEL CONFIGURATION IS NATURAL

*** SOLVING FOR DISCHARGE ***

FLOWLINE ELEVATION .. 1351.250
MAXIMUM ELEVATION ... 1355.000
CHANNEL SLOPE ..... 0.90000 %
MANNINGS N 0.015

CHANNEL CROSS SECTION DATA :

PT. #	STA.	ELEV.
1.0	945.00	1355.00
2.0	945.00	1352.24
3.0	948.50	1352.10
4.0	953.50	1352.00
5.0	953.50	1351.52
6.0	1000.00	1352.00
7.0	1046.50	1351.25
8.0	1046.50	1351.67
9.0	1051.50	1351.77
10.0	1055.00	1351.79
11.0	1055.00	1355.00

FOR DESIGN DISCHARGE = 36.639 C.F.S. :

AREA OF FLOW ..... 11.410 S.F.
WETTED PERIMETER .... 57.137 FT.
HYDRAULIC RADIUS .... 0.200 FT.
CHANNEL TOP WIDTH ... 56.461 FT.

NORMAL DEPTH OF FLOW ..... 0.520 FT.
NORMAL W.S. ELEVATION 1351.770
VELOCITY AT NORMAL DEPTH . 3.211 F.P.S.
CRITICAL DEPTH ..... 0.560 FT.
CRITICAL VELOCITY ..... 2.553 F.P.S.
CRITICAL SLOPE ..... 0.57071 %

FLOW CONDITION IS SUPERCRITICAL

CHANNEL CONFIGURATION IS NATURAL

*** SOLVING FOR DISCHARGE ***

FLOWLINE ELEVATION .. 1351.250
MAXIMUM ELEVATION ... 1355.000
CHANNEL SLOPE ..... 0.90000 %
MANNINGS N 0.015

CHANNEL CROSS SECTION DATA :

PT. #	STA.	ELEV.
1.0	945.00	1355.00
2.0	945.00	1352.24
3.0	948.50	1352.10
4.0	953.50	1352.00
5.0	953.50	1351.52
6.0	1000.00	1352.00
7.0	1046.50	1351.25
8.0	1046.50	1351.67
9.0	1051.50	1351.77
10.0	1055.00	1351.79
11.0	1055.00	1355.00

FOR DESIGN DISCHARGE = 41.228 C.F.S. :

AREA OF FLOW ..... 12.923 S.F.
WETTED PERIMETER .... 65.339 FT.
HYDRAULIC RADIUS .... 0.198 FT.
CHANNEL TOP WIDTH ... 64.642 FT.

NORMAL DEPTH OF FLOW ..... 0.540 FT.
NORMAL W.S. ELEVATION 1351.790
VELOCITY AT NORMAL DEPTH . 3.190 F.P.S.
CRITICAL DEPTH ..... 0.579 FT.
CRITICAL VELOCITY ..... 2.621 F.P.S.
CRITICAL SLOPE ..... 0.56255 %

FLOW CONDITION IS SUPERCRITICAL

CHANNEL CONFIGURATION IS NATURAL

*** SOLVING FOR DISCHARGE ***

FLOWLINE ELEVATION .. 1351.250
MAXIMUM ELEVATION ... 1355.000
CHANNEL SLOPE ..... 0.90000 %
MANNINGS N 0.015

CHANNEL CROSS SECTION DATA :

PT. #	STA.	ELEV.
1.0	945.00	1355.00
2.0	945.00	1352.24
3.0	948.50	1352.10
4.0	953.50	1352.00
5.0	953.50	1351.52
6.0	1000.00	1352.00
7.0	1046.50	1351.25
8.0	1046.50	1351.67
9.0	1051.50	1351.77
10.0	1055.00	1351.79
11.0	1055.00	1355.00

FOR DESIGN DISCHARGE = 91.414 C.F.S. :

AREA OF FLOW ..... 19.607 S.F.
WETTED PERIMETER .... 56.117 FT.
HYDRAULIC RADIUS .... 0.349 FT.
CHANNEL TOP WIDTH ... 55.000 FT.

NORMAL DEPTH OF FLOW ..... 0.750 FT.
NORMAL W.S. ELEVATION 1352.000
VELOCITY AT NORMAL DEPTH . 4.662 F.P.S.
CRITICAL DEPTH ..... 0.738 FT.
CRITICAL VELOCITY ..... 3.092 F.P.S.
CRITICAL SLOPE ..... 0.49924 %

FLOW CONDITION IS SUBCRITICAL

CHANNEL CONFIGURATION IS NATURAL
==========

*** SOLVING FOR DISCHARGE ***

FLOWLINE ELEVATION .. 1351.250
MAXIMUM ELEVATION ... 1355.000
CHANNEL SLOPE ..... 0.90000 %
MANNINGS N 0.015

CHANNEL CROSS SECTION DATA :

PT. #	STA.	ELEV.
1.0	945.00	1355.00
2.0	945.00	1352.24
3.0	948.50	1352.10
4.0	953.50	1352.00
5.0	953.50	1351.52
6.0	1000.00	1352.00
7.0	1046.50	1351.25
8.0	1046.50	1351.67
9.0	1051.50	1351.77
10.0	1055.00	1351.79
11.0	1055.00	1355.00

FOR DESIGN DISCHARGE = 203.728 C.F.S. :

AREA OF FLOW ..... 41.164 S.F.
WETTED PERIMETER .... 107.721 FT.
HYDRAULIC RADIUS .... 0.382 FT.
CHANNEL TOP WIDTH ... 106.500 FT.

NORMAL DEPTH OF FLOW ..... 0.850 FT.
NORMAL W.S. ELEVATION 1352.100
VELOCITY AT NORMAL DEPTH . 4.949 F.P.S.
CRITICAL DEPTH ..... 0.950 FT.
CRITICAL VELOCITY ..... 3.923 F.P.S.
CRITICAL SLOPE ..... 0.42810 %

FLOW CONDITION IS SUPERCRITICAL

CHANNEL CONFIGURATION IS NATURAL

*** SOLVING FOR DISCHARGE ***

FLOWLINE ELEVATION .. 1351.250
MAXIMUM ELEVATION ... 1355.000
CHANNEL SLOPE ..... 0.90000 %
MANNINGS N 0.015

CHANNEL CROSS SECTION DATA :

PT. #	STA.	ELEV.
1.0	945.00	1355.00
2.0	945.00	1352.24
3.0	948.50	1352.10
4.0	953.50	1352.00
5.0	953.50	1351.52
6.0	1000.00	1352.00
7.0	1046.50	1351.25
8.0	1046.50	1351.67
9.0	1051.50	1351.77
10.0	1055.00	1351.79
11.0	1055.00	1355.00

FOR DESIGN DISCHARGE = 335.997 C.F.S. :

AREA OF FLOW ..... 56.321 S.F.
WETTED PERIMETER .... 111.363 FT.
HYDRAULIC RADIUS .... 0.506 FT.
CHANNEL TOP WIDTH ... 110.000 FT.

NORMAL DEPTH OF FLOW ..... 0.990 FT.
NORMAL W.S. ELEVATION 1352.240
VELOCITY AT NORMAL DEPTH . 5.966 F.P.S.
CRITICAL DEPTH ..... 1.139 FT.
CRITICAL VELOCITY ..... 4.621 F.P.S.
CRITICAL SLOPE ..... 0.38541 %

FLOW CONDITION IS SUPERCRITICAL

CHANNEL CONFIGURATION IS NATURAL

*** SOLVING FOR DISCHARGE ***

FLOWLINE ELEVATION .. 1351.250
MAXIMUM ELEVATION ... 1355.000
CHANNEL SLOPE ..... 0.90000 %
MANNINGS N 0.015

CHANNEL CROSS SECTION DATA :

PT. #	STA.	ELEV.
1.0	945.00	1355.00
2.0	945.00	1352.24
3.0	948.50	1352.10
4.0	953.50	1352.00
5.0	953.50	1351.52
6.0	1000.00	1352.00
7.0	1046.50	1351.25
8.0	1046.50	1351.67
9.0	1051.50	1351.77
10.0	1055.00	1351.79
11.0	1055.00	1355.00

FOR DESIGN DISCHARGE = 1517.420 C.F.S. :

AREA OF FLOW ..... 139.922 S.F.
WETTED PERIMETER .... 112.883 FT.
HYDRAULIC RADIUS .... 1.240 FT.
CHANNEL TOP WIDTH ... 110.000 FT.

NORMAL DEPTH OF FLOW ..... 1.750 FT.
NORMAL W.S. ELEVATION 1353.000
VELOCITY AT NORMAL DEPTH . 10.845 F.P.S.
CRITICAL DEPTH ..... 2.285 FT.
CRITICAL VELOCITY ..... 7.634 F.P.S.
CRITICAL SLOPE ..... 0.28278 %

FLOW CONDITION IS SUPERCRITICAL

APPENDIX "F"

PIPE FLOW HYDRAULIC CALCULATIONS

OPEN CHANNEL HYDRAULICS

****

PROJECT NAME ..... FCDMC CAVE CREEK FIS
PROJECT JOB NUMBER ... 7833
DATE 10/12/89

PIPE STORM DRAIN ANALYSES

60" RCP RUN SOUTH IN 32nd STREET FROM BELL ROAD
DIVERTS FLOW FROM THE WATERSHED

CHANNEL CONFIGURATION IS CIRCULAR
==========

*** SOLVING FOR DISCHARGE ***

PIPE DIAMETER ..... 60.000 INCHES
FULL FLOW Q ..... 159.606 C.F.S
FULL FLOW VELOCITY .. 8.129 F.P.S.
CHANNEL SLOPE ..... 0.50000 %
MANNINGS N 0.015

FOR DESIGN DISCHARGE = 159.606 C.F.S. :

AREA OF FLOW ..... 19.635 S.F.
WETTED PERIMETER .... 15.708 FT.
HYDRAULIC RADIUS .... 1.250 FT.
CHANNEL TOP WIDTH ... 0.000 FT.

NORMAL DEPTH OF FLOW ..... 5.000 FT.
VELOCITY AT NORMAL DEPTH . 8.129 F.P.S.
CRITICAL DEPTH ..... 3.622 FT.
CRITICAL VELOCITY ..... 10.478 F.P.S.
CRITICAL SLOPE ..... 0.83073 %

FLOW CONDITION IS SUBCRITICAL

SPLIT FLOW AT 7th STREET AND BELL ROAD
84" RCP FLOWING SOUTH FROM BELL RD. TO THE EAST FORK

CHANNEL CONFIGURATION IS CIRCULAR

*** SOLVING FOR DISCHARGE ***

PIPE DIAMETER	84.000	INCHES
FULL FLOW Q	271.234	C.F.S
FULL FLOW VELOCITY ..	7.048	F.P.S.
CHANNEL SLOPE	0.24000	%
MANNINGS N	0.015	

FOR DESIGN DISCHARGE = 271.234 C.F.S. :

AREA OF FLOW	38.484	S.F.
WETTED PERIMETER	21.991	FT.
HYDRAULIC RADIUS	1.750	FT.
CHANNEL TOP WIDTH ...	0.000	FT.

NORMAL DEPTH OF FLOW	7.000	FT.
VELOCITY AT NORMAL DEPTH .	7.048	F.P.S.
CRITICAL DEPTH	4.323	FT.
CRITICAL VELOCITY	10.871	F.P.S.
CRITICAL SLOPE	0.57102	%

FLOW CONDITION IS SUBCRITICAL

SPLIT FLOW AT 7th STREET AND BELL ROAD
36" RCP FLOWING SOUTH FROM BELL RD. TO THE EAST FORK

CHANNEL CONFIGURATION IS CIRCULAR

*** SOLVING FOR DISCHARGE ***

PIPE DIAMETER	36.000 INCHES
FULL FLOW Q	28.319 C.F.S
FULL FLOW VELOCITY ..	4.006 F.P.S.
CHANNEL SLOPE	0.24000 %
MANNINGS N	0.015

FOR DESIGN DISCHARGE = 28.319 C.F.S. :

AREA OF FLOW	7.069 S.F.
WETTED PERIMETER	9.425 FT.
HYDRAULIC RADIUS	0.750 FT.
CHANNEL TOP WIDTH ...	0.000 FT.

NORMAL DEPTH OF FLOW	3.000 FT.
VELOCITY AT NORMAL DEPTH .	4.006 F.P.S.
CRITICAL DEPTH	1.721 FT.
CRITICAL VELOCITY	6.751 F.P.S.
CRITICAL SLOPE	0.68145 %

FLOW CONDITION IS SUBCRITICAL

SPLIT FLOW AT 19th AVENUE AND BELL ROAD
90" RCP FLOWING SOUTH TO CAVE CREEK

CHANNEL CONFIGURATION IS CIRCULAR

*** SOLVING FOR DISCHARGE ***

PIPE DIAMETER	90.000	INCHES
FULL FLOW Q	489.032	C.F.S
FULL FLOW VELOCITY ..	11.069	F.P.S.
CHANNEL SLOPE	0.54000	%
MANNINGS N	0.015	

FOR DESIGN DISCHARGE = 489.032 C.F.S. :

AREA OF FLOW	44.179	S.F.
WETTED PERIMETER	23.562	FT.
HYDRAULIC RADIUS	1.875	FT.
CHANNEL TOP WIDTH ...	0.000	FT.

NORMAL DEPTH OF FLOW	7.500	FT.
VELOCITY AT NORMAL DEPTH .	11.069	F.P.S.
CRITICAL DEPTH	5.724	FT.
CRITICAL VELOCITY	13.517	F.P.S.
CRITICAL SLOPE	0.80521	%

FLOW CONDITION IS SUBCRITICAL

BURGESS & NIPLE, INC. - COMPUTATION SHEET

JOB NO. 7833 JOB NAME FCDMC Cave Creek FIS SHEET 1 OF 1 SHEETS
SUBJECT Thunderbird Rd. Storm Drain at Cave Creek PREPARED BY TRC DATE 9/25/89
CHECKED BY _____ DATE _____

100 yr. W.S. Elev. in Cave Creek at Thunderbird Road = 1301

Thunderbird Rd. + 19th Avenue, Elev. @ T/C ≈ 1302.4

Driving Head = 1.4'

Length of Pipe = 2500'

Estimated Hydraulic Gradient = 0.056%

Pipe Dia. at Cave Creek = 75", n = 0.015

Est. full flow Q = 100 cfs

Q_{100} in Cave Creek (April 15, 1988) = 11,000 cfs

100 cfs < 1% ∴ Neglect Pipe routed flow at Thunderbird Rd.

APPENDIX "G"

SUB-BASIN TIME OF CONCENTRATION CALCULATIONS

SUBBASIN TIME OF CONCENTRATION CALCULATIONS

SUBBASIN I.D.	REACH NO.	SHEET FLOW (MANNINGS n) (1)	SHALLOW CONCENTRATED FLOW (P=PAVED) (U=UNPAVED) (2)	CHANNEL FLOW (3) (SV=STREET, VERT. CURB) (SR=STREET, ROLL. CURB) (C=CHANNEL)	FLOW LENGTH L (FT.)	TOP ELEVATION	BOTTOM ELEVATION	SLOPE Y (FT./FT.)	CHANNEL BASE WIDTH (FT.)	CHANNEL DEPTH (FT.)	CHANNEL SIDE SLOPE (H:V)	CHANNEL ROUGHNESS COEF.	VELOCITY V (FPS)	TRAVEL TIME T_t (HRS) (4)	TIME OF CONCENTRATION T_c (HRS.)	LAG TIME T_L (HRS.) (5)
1A	1		U		4500	1700	1640	.013					1.8	0.69		
	2			C	5500	1640	1591	.009	20	4	3:1	.035	8.1	0.19	0.88	0.53
1B	1		U		800	2020	1760	.325					9.2	0.02		
	2			C	10000	1760	1515	.025	~~20~~	~~4~~	~~3:1~~	~~.035~~	6.0 ~~13.4~~	0.46 ~~0.21~~	0.48 ~~0.43~~	0.29 ~~0.26~~
1C	1		U		300	1700	1660	.133					5.8	0.01		
	2			C	16000	1660	1506	.010	90 ~~30~~	2 ~~6~~	3:1	.040 ~~.035~~	6.0 ~~12.1~~	0.74 ~~0.44~~	0.75 ~~0.45~~	0.45 ~~0.27~~

NOTES:

1) Sheet flow is based on TR-55 equation 3-3 : $T_t = \frac{0.007\,(nL)^{0.8}}{(P_2)^{0.5}\,S^{0.4}}$ n is from TR-55 Table 3-1. P_2 = 1.44".

2) Shallow concentrated flow is from TR-55 Figure 3-1.

3) Street flow velocities are estimated from the City of Phoenix Storm Drain Design Manual Gutter Flow Chart on page 26. Flow depth is assumed to be at the top of curb. Other channel velocities are estimated using the Manning equation, assuming flow depth is at the top of bank.

4) T_t = L/(3600V).

5) T_L = 0.6 T_c.

Revised Subbasins 1B & 1C 01/16/90 trl

SUBBASIN TIME OF CONCENTRATION CALCULATIONS

SUBBASIN I.D.	REACH NO.	SHEET FLOW (MANNINGS n) (1)	SHALLOW CONCENTRATED FLOW (P=PAVED) (U=UNPAVED) (2)	CHANNEL FLOW (3) (SV=STREET, VERT. CURB) (SR=STREET, ROLL. CURB) (C=CHANNEL)	FLOW LENGTH L (FT.)	TOP ELEVATION	BOTTOM ELEVATION	SLOPE Y (FT./FT.)	CHANNEL BASE WIDTH (FT.)	CHANNEL DEPTH (FT.)	CHANNEL SIDE SLOPE (H:V)	CHANNEL ROUGHNESS COEF.	VELOCITY V (FPS)	TRAVEL TIME T_t (HRS) (4)	TIME OF CONCENTRATION T_c (HRS.)	LAG TIME T_L (HRS.) (5)
1D	1		U		4000	2075	1511	.141					6.1	0.18		
	2			C	7400	1511	1463	.006	50	4	3:1	.035	7.3	0.28	0.46	0.28

NOTES:

1) Sheet flow is based on TR-55 equation 3-3 : $T_t = \frac{0.007\,(nL)^{0.8}}{(P_2)^{0.5}\,S^{0.4}}$ n is from TR-55 Table 3-1. $P_2 = 1.44"$.

2) Shallow concentrated flow is from TR-55 Figure 3-1.

3) Street flow velocities are estimated from the City of Phoenix Storm Drain Design Manual Gutter Flow Chart on page 26. Flow depth is assumed to be at the top of curb. Other channel velocities are estimated using the Manning equation, assuming flow depth is at the top of bank.

4. $T_t = L/(3600V)$.

5) $T_L = 0.6\ T_c$.

SUBBASIN TIME OF CONCENTRATION CALCULATIONS

SUBBASIN I.D.	REACH NO.	SHEET FLOW (MANNINGS n) (1)	SHALLOW CONCENTRATED FLOW (P-PAVED) (U-UNPAVED) (2)	CHANNEL FLOW (3) (SV=STREET, VERT. CURB) (SR=STREET, ROLL. CURB) (C=CHANNEL)	FLOW LENGTH L (FT.)	TOP ELEVATION	BOTTOM ELEVATION	SLOPE Y (FT./FT.)	CHANNEL BASE WIDTH (FT.)	CHANNEL DEPTH (FT.)	CHANNEL SIDE SLOPE (H:V)	CHANNEL ROUGHNESS COEF.	VELOCITY V (FPS)	TRAVEL TIME T_t (HRS) (4)	TIME OF CONCENTRATION T_c (HRS.)	LAG TIME T_L (HRS.) (5)
2A	1		U		950	2075	1600	.500					11.5	.02		
	2			C	3500	1600	1510	.026	5	1	2:1	.035	5.6	.17		
	3			C	3400	1510	1491	.006	10	2	2:1	.035	4.3	.22	0.41	0.25
2B	1			C	1530	1525	1512	.008	5	1	2:1	.035	3.1	.14		
	2			C	2500	1512	1491	.008	10	2	4:1	.040	4.1	.17	0.31	0.19

NOTES:

1) Sheet flow is based on TR-55 equation 3-3 : $T_t = \frac{0.007\,(nL)^{0.8}}{(P_2)^{0.5}\,S^{0.4}}$ n is from TR-55 Table 3-1. $P_2 = 1.44"$.

2) Shallow concentrated flow is from TR-55 Figure 3-1.

3) Street flow velocities are estimated from the City of Phoenix Storm Drain Design Manual Gutter Flow Chart on page 26. Flow depth is assumed to be at the top of curb. Other channel velocities are estimated using the Manning equation, assuming flow depth is at the top of bank.

4. $T_t = L/(3600V)$.

5) $T_L = 0.6\ T_c$.

SUBBASIN TIME OF CONCENTRATION CALCULATIONS

SUBBASIN I.D.	REACH NO.	SHEET FLOW (MANNINGS n) (1)	SHALLOW CONCENTRATED FLOW (P-PAVED) (U-UNPAVED) (2)	CHANNEL FLOW (3) (SV-STREET, VERT. CURB) (SR-STREET, ROLL. CURB) (C-CHANNEL)	FLOW LENGTH L (FT.)	TOP ELEVATION	BOTTOM ELEVATION	SLOPE Y (FT./FT.)	CHANNEL BASE WIDTH (FT.)	CHANNEL DEPTH (FT.)	CHANNEL SIDE SLOPE (H:V)	CHANNEL ROUGHNESS COEF.	VELOCITY V (FPS)	TRAVEL TIME T_t (HRS) (4)	TIME OF CONCENTRATION T_c (HRS.)	LAG TIME T_L (HRS.) (5)
2C	1	.035			100	1520	1528	.007						0.28		
	2			C	3300	1528	1499	.009	10	2	2:1	.035	5.2	0.17		
	3			SR	3900	1499	1481	.005					2.5	0.43		
	4			C	2600	1481	1465	.006	10	4	3:1	.040	5.3	0.14	1.02	0.61
3D	1			C	1400	1528	1512	.011	10	1	3:1	.035	3.8	0.10		
	2			SR	2800	1512	1499	.006					2.8	0.38		
	3			C	3000	1499	1470	.006	5	1	4:1	.030	3.0	0.28		
	4			SR	1500	1470	1465	.005					2.5	0.17		

NOTES:

1) Sheet flow is based on TR-55 equation 3-3 : $T_t = \frac{0.007\,(nL)^{0.8}}{(P_2)^{0.5}\,S^{0.4}}$ n is from TR-55 Table 3-1. P_2 = 1.44".

2) Shallow concentrated flow is from TR-55 Figure 3-1.

3) Street flow velocities are estimated from the City of Phoenix Storm Drain Design Manual Gutter Flow Chart on page 26. Flow depth is assumed to be at the top of curb. Other channel velocities are estimated using the Manning equation, assuming flow depth is at the top of bank.

4. $T_t = L/(3600V)$.

5) $T_L = 0.6\ T_c$.

SUBBASIN TIME OF CONCENTRATION CALCULATIONS

SUBBASIN I.D.	REACH NO.	SHEET FLOW (MANNINGS n) (1)	SHALLOW CONCENTRATED FLOW (P-PAVED) (U-UNPAVED) (2)	CHANNEL FLOW (3) (SV-STREET, VERT. CURB) (SR-STREET, ROLL. CURB) (C-CHANNEL)	FLOW LENGTH L (FT.)	TOP ELEVATION	BOTTOM ELEVATION	SLOPE Y (FT./FT.)	CHANNEL BASE WIDTH (FT.)	CHANNEL DEPTH (FT.)	CHANNEL SIDE SLOPE (H:V)	CHANNEL ROUGHNESS COEF.	VELOCITY V (FPS)	TRAVEL TIME T_t (HRS) (4)	TIME OF CONCENTRATION T_c (HRS.)	LAG TIME T_L (HRS.) (5)
	5			SV	1850	1463	1454	.005					3.3	0.16	1.09	0.65
2E	1			SR	1000	1570	1550	.020					5.0	0.06		
	2			C	3600	1550	1470	.022	10	2	3:1	.035	7.9	0.13		
	3			SV	2000	1470	1448	.011					4.9	0.11		
	4			C	2600	1448	1434	.005	20	4	2:1	.030	7.2	0.10		
	5			SV	2640	1434	1425	.003					2.5	0.29	0.69	0.42

NOTES:

1) Sheet flow is based on TR-55 equation 3-3 : $T_t = \frac{0.007\ (nL)^{0.8}}{(P_2)^{0.5}\ S^{0.4}}$ n is from TR-55 Table 3-1. P_2 = 1.44".

2) Shallow concentrated flow is from TR-55 Figure 3-1.

3) Street flow velocities are estimated from the City of Phoenix Storm Drain Design Manual Gutter Flow Chart on page 26. Flow depth is assumed to be at the top of curb. Other channel velocities are estimated using the Manning equation, assuming flow depth is at the top of bank.

4. $T_t = L/(3600V)$.

5) $T_L = 0.6\ T_c$.

SUBBASIN TIME OF CONCENTRATION CALCULATIONS

SUBBASIN I.D.	REACH NO.	SHEET FLOW (MANNINGS n) (1)	SHALLOW CONCENTRATED FLOW (P=PAVED) (U=UNPAVED) (2)	CHANNEL FLOW (3) (SV=STREET, VERT. CURB) (SR=STREET, ROLL. CURB) (C=CHANNEL)	FLOW LENGTH L (FT.)	TOP ELEVATION	BOTTOM ELEVATION	SLOPE Y (FT./FT.)	CHANNEL BASE WIDTH (FT.)	CHANNEL DEPTH (FT.)	CHANNEL SIDE SLOPE (H:V)	CHANNEL ROUGHNESS COEF.	VELOCITY V (FPS)	TRAVEL TIME T_t (HRS) (4)	TIME OF CONCENTRATION T_c (HRS.)	LAG TIME T_L (HRS.) (5)
2F	1			C	850	1453	1445	.009	10	1	3:1	.035	3.5	0.07		
	2			SR	5650	1445	1422	.004					2.3	0.68	0.75	0.45
2G	1		U		700	1650	1528	0.174					5.8	0.03		
	2			C	1350	1528	1473	0.041	2	1	4:1	.035	6.0	0.06		
	3			SR	6500	1473	1424	0.008					3.2	0.56	0.65	0.39

NOTES:

1) Sheet flow is based on TR-55 equation 3-3 : $T_t = \frac{0.007\,(nL)^{0.8}}{(P_2)^{0.5}\,S^{0.4}}$ n is from TR-55 Table 3-1. $P_2 = 1.44"$.

2) Shallow concentrated flow is from TR-55 Figure 3-1.

3) Street flow velocities are estimated from the City of Phoenix Storm Drain Design Manual Gutter Flow Chart on page 26. Flow depth is assumed to be at the top of curb. Other channel velocities are estimated using the Manning equation, assuming flow depth is at the top of bank.

4. $T_t = L/(3600V)$.

5) $T_L = 0.6\,T_c$.

SUBBASIN TIME OF CONCENTRATION CALCULATIONS

SUBBASIN I.D.	REACH NO.	SHEET FLOW (MANNINGS n) (1)	SHALLOW CONCENTRATED FLOW (P-PAVED) (U-UNPAVED) (2)	CHANNEL FLOW (3) (SV=STREET, VERT. CURB) (SR=STREET, ROLL. CURB) (C=CHANNEL)	FLOW LENGTH L (FT.)	TOP ELEVATION	BOTTOM ELEVATION	SLOPE Y (FT./FT.)	CHANNEL BASE WIDTH (FT.)	CHANNEL DEPTH (FT.)	CHANNEL SIDE SLOPE (H:V)	CHANNEL ROUGHNESS COEF.	VELOCITY V (FPS)	TRAVEL TIME T_t (HRS) (4)	TIME OF CONCENTRATION T_c (HRS.)	LAG TIME T_L (HRS.) (5)
2H	1	.030			300	1453	1450	.010						0.21		
	2			C	2200	1450	1431	.009	10	1	3:1	.035	3.5	0.17		
	3			SR	5000	1431	1416	.003					1.9	0.73		
	4			C	4200	1416	1402	.003	20	3	2:1	.030	4.8	0.24	1.35	0.81
2I	1		U		860	1680	1500	.209					7.4	0.03		
	2			C	2520	1500	1445	.022	15	2	4:1	.035	8.1	0.09		
	3			SR	1900	1445	1432	.007					2.9	0.18		
	4			C	1490	1432	1418	.009	15	2	3:1	.040	4.7	0.09		

NOTES:

1) Sheet flow is based on TR-55 equation 3-3 : $T_t = \frac{0.007\,(nL)^{0.8}}{(P_2)^{0.5}\,S^{0.4}}$ n is from TR-55 Table 3-1. P_2 = 1.44".

2) Shallow concentrated flow is from TR-55 Figure 3-1.

3) Street flow velocities are estimated from the City of Phoenix Storm Drain Design Manual Gutter Flow Chart on page 26. Flow depth is assumed to be at the top of curb. Other channel velocities are estimated using the Manning equation, assuming flow depth is at the top of bank.

4. $T_t = L/(3600V)$.

5) $T_L = 0.6\ T_c$.

SUBBASIN TIME OF CONCENTRATION CALCULATIONS

SUBBASIN I.D.	REACH NO.	SHEET FLOW (MANNINGS n) (1)	SHALLOW CONCENTRATED FLOW (P-PAVED) (U-UNPAVED) (2)	CHANNEL FLOW (3) (SV-STREET, VERT. CURB) (SR-STREET, ROLL. CURB) (C-CHANNEL)	FLOW LENGTH L (FT.)	TOP ELEVATION	BOTTOM ELEVATION	SLOPE Y (FT./FT.)	CHANNEL BASE WIDTH (FT.)	CHANNEL DEPTH (FT.)	CHANNEL SIDE SLOPE (H:V)	CHANNEL ROUGHNESS COEF.	VELOCITY V (FPS)	TRAVEL TIME T_t (HRS) (4)	TIME OF CONCENTRATION T_c (HRS.)	LAG TIME T_L (HRS.) (5)
	5			SR	1470	1418	1410	.005					2.5	0.16		
	6			C	3400	1410	1393	.005	10	2	3:1	.035	3.8	0.25	0.80	0.48
2J	1		U		2000	1800	1520	.140					6.1	0.09		
	2			C	1500	1520	1479	.027	40	1	4:1	.035	6.6	0.06		
	3			SR	5555	1479	1418	.011					1.5	1.03	1.18	0.71

NOTES:

1) Sheet flow is based on TR-55 equation 3-3 : $T_t = \frac{0.007\,(nL)^{0.8}}{(P_2)^{0.5}\,S^{0.4}}$ n is from TR-55 Table 3-1. $P_2 = 1.44"$.

2) Shallow concentrated flow is from TR-55 Figure 3-1.

3) Street flow velocities are estimated from the City of Phoenix Storm Drain Design Manual Gutter Flow Chart on page 26. Flow depth is assumed to be at the top of curb. Other channel velocities are estimated using the Manning equation, assuming flow depth is at the top of bank.

4. $T_t = L/(3600V)$.

5) $T_L = 0.6\,T_c$.

SUBBASIN TIME OF CONCENTRATION CALCULATIONS

SUBBASIN I.D.	REACH NO.	SHEET FLOW (MANNINGS n) (1)	SHALLOW CONCENTRATED FLOW (P-PAVED) (U-UNPAVED) (2)	CHANNEL FLOW (3) (SV-STREET, VERT. CURB) (SR-STREET, ROLL. CURB) (C-CHANNEL)	FLOW LENGTH L (FT.)	TOP ELEVATION	BOTTOM ELEVATION	SLOPE Y (FT./FT.)	CHANNEL BASE WIDTH (FT.)	CHANNEL DEPTH (FT.)	CHANNEL SIDE SLOPE (H:V)	CHANNEL ROUGHNESS COEF.	VELOCITY V (FPS)	TRAVEL TIME T_t (HRS) (4)	TIME OF CONCENTRATION T_c (HRS.)	LAG TIME T_L (HRS.) (5)
2K	1		U		460	1639	1520	.259					8.1	0.02		
	2			C	3337	1520	1449	.021	10	2	2:1	.035	8.0	0.12		
	3			C	3100	1449	1424	.008	1	2	40:1	.015	8.9	0.10		
	4			C	2590	1424	1409	.006	10	3	0:1	.015	11.7	0.06		
	5			C	5290	1409	1384	.005	1	2	40:1	.015	7.0	0.21		
	6			SV	1340	1384	1378	.004					3.0	0.12	0.63	0.38

NOTES:

1) Sheet flow is based on TR-55 equation 3-3 : $T_t = \frac{0.007\,(nL)^{0.8}}{(P_2)^{0.5}\,S^{0.4}}$ n is from TR-55 Table 3-1. P_2 = 1.44".

2) Shallow concentrated flow is from TR-55 Figure 3-1.

3) Street flow velocities are estimated from the City of Phoenix Storm Drain Design Manual Gutter Flow Chart on page 26. Flow depth is assumed to be at the top of curb. Other channel velocities are estimated using the Manning equation, assuming flow depth is at the top of bank.

4. $T_t = L/(3600V)$.

5) $T_L = 0.6\,T_c$.

SUBBASIN TIME OF CONCENTRATION CALCULATIONS

SUBBASIN I.D.	REACH NO.	SHEET FLOW (MANNINGS n) (1)	SHALLOW CONCENTRATED FLOW (P-PAVED) (U-UNPAVED) (2)	CHANNEL FLOW (3) (SV-STREET, VERT. CURB) (SR-STREET, ROLL. CURB) (C-CHANNEL)	FLOW LENGTH L (FT.)	TOP ELEVATION	BOTTOM ELEVATION	SLOPE Y (FT./FT.)	CHANNEL BASE WIDTH (FT.)	CHANNEL DEPTH (FT.)	CHANNEL SIDE SLOPE (H:V)	CHANNEL ROUGHNESS COEF.	VELOCITY V (FPS)	TRAVEL TIME T_t (HRS) (4)	TIME OF CONCENTRATION T_c (HRS.)	LAG TIME T_L (HRS.) (5)
2L	1			SR	6720	1424	1391	.046					7.6	0.25		
	2			C	300	1391	1389	.007	15	2	0:1	.035	4.8	0.02		
	3			SR	1990	1389	1374	.008					3.2	0.17		
	4			C	1600	1374	1368	.004	10	2	2:1	.030	4.1	0.11	0.55	0.33
2M	1		U		800	2054	1600	.568					12.2	0.02		
	2			C	3700	1600	1401	.054	15	1	3:1	.030	10.3	0.10		
	3			C	4740	1401	1375	.005	40	4	2:1	.030	7.8	0.17		
	4			C	3700	1375	1350	.007	50	4	2:1	.030	9.4	0.11	0.40	0.24

NOTES:

1) Sheet flow is based on TR-55 equation 3-3 : $T_t = \frac{0.007\,(nL)^{0.8}}{(P_2)^{0.5}\,S^{0.4}}$ n is from TR-55 Table 3-1. $P_2 = 1.44"$.

2) Shallow concentrated flow is from TR-55 Figure 3-1.

3) Street flow velocities are estimated from the City of Phoenix Storm Drain Design Manual Gutter Flow Chart on page 26. Flow depth is assumed to be at the top of curb. Other channel velocities are estimated using the Manning equation, assuming flow depth is at the top of bank.

4. $T_t = L/(3600V)$.

5) $T_L = 0.6\,T_c$.

SUBBASIN TIME OF CONCENTRATION CALCULATIONS

SUBBASIN I.D.	REACH NO.	SHEET FLOW (MANNINGS n) (1)	SHALLOW CONCENTRATED FLOW (P-PAVED) (U-UNPAVED) (2)	CHANNEL FLOW (3) (SV=STREET, VERT. CURB) (SR=STREET, ROLL. CURB) (C=CHANNEL)	FLOW LENGTH L (FT.)	TOP ELEVATION	BOTTOM ELEVATION	SLOPE Y (FT./FT.)	CHANNEL BASE WIDTH (FT.)	CHANNEL DEPTH (FT.)	CHANNEL SIDE SLOPE (H:V)	CHANNEL ROUGHNESS COEF.	VELOCITY V (FPS)	TRAVEL TIME T_t (HRS) (4)	TIME OF CONCENTRATION T_c (HRS.)	LAG TIME T_L (HRS.) (5)
2N	1			SR	1140	1358	1349	.008					3.2	0.10		
	2			C	3600	1349	1333	.004	70	5	2:1	.040	6.2	0.16		
	3			C	2590	1333	1320	.005	60	5	2:1	.030	9.2	0.08	0.34	0.20
20	1		U		810	1710	1460	.309					8.9	0.03		
	2			C	3100	1460	1370	.029	20	2	3:1	.035	9.9	0.09		
	3			SR	2460	1370	1368	.001					1.1	0.62		
	4			SV	4500	1368	1346	.005					3.3	0.38	1.12	0.67

NOTES:

1) Sheet flow is based on TR-55 equation 3-3 : $T_t = \frac{0.007\,(nL)^{0.8}}{(P_2)^{0.5}\,S^{0.4}}$ n is from TR-55 Table 3-1. $P_2 = 1.44"$.

2) Shallow concentrated flow is from TR-55 Figure 3-1.

3) Street flow velocities are estimated from the City of Phoenix Storm Drain Design Manual Gutter Flow Chart on page 26. Flow depth is assumed to be at the top of curb. Other channel velocities are estimated using the Manning equation, assuming flow depth is at the top of bank.

4. $T_t = L/(3600V)$.

5) $T_L = 0.6\ T_c$.

SUBBASIN TIME OF CONCENTRATION CALCULATIONS

SUBBASIN I.D.	REACH NO.	SHEET FLOW (MANNINGS n) (1)	SHALLOW CONCENTRATED FLOW (P=PAVED) (U=UNPAVED) (2)	CHANNEL FLOW (3) (SV=STREET, VERT. CURB) (SR=STREET, ROLL. CURB) (C=CHANNEL)	FLOW LENGTH L (FT.)	TOP ELEVATION	BOTTOM ELEVATION	SLOPE Y (FT./FT.)	CHANNEL BASE WIDTH (FT.)	CHANNEL DEPTH (FT.)	CHANNEL SIDE SLOPE (H:V)	CHANNEL ROUGHNESS COEF.	VELOCITY V (FPS)	TRAVEL TIME T_t (HRS) (4)	TIME OF CONCENTRATION T_c (HRS.)	LAG TIME T_L (HRS.) (5)
2P	1	.035			300	1482	1478	.013						0.22		
	2			C	580	1478	1474	.007	30	1	4:1	.035	3.3	0.05		
	3			SR	3100	1474	1454	.006					2.8	0.31		
	4			SV	3700	1454	1436	.005					3.3	0.31	0.89	0.53

NOTES:

1) Sheet flow is based on TR-55 equation 3-3 : $T_t = \frac{0.007\,(nL)^{0.8}}{(P_2)^{0.5}\,S^{0.4}}$ n is from TR-55 Table 3-1. P_2 = 1.44".

2) Shallow concentrated flow is from TR-55 Figure 3-1.

3) Street flow velocities are estimated from the City of Phoenix Storm Drain Design Manual Gutter Flow Chart on page 26. Flow depth is assumed to be at the top of curb. Other channel velocities are estimated using the Manning equation, assuming flow depth is at the top of bank.

4. $T_t = L/(3600V)$.

5) $T_L = 0.6\,T_c$.

SUBBASIN TIME OF CONCENTRATION CALCULATIONS

SUBBASIN I.D.	REACH NO.	SHEET FLOW (MANNINGS n) (1)	SHALLOW CONCENTRATED FLOW (P=PAVED) (U=UNPAVED) (2)	CHANNEL FLOW (3) (SV=STREET, VERT. CURB) (SR=STREET, ROLL. CURB) (C=CHANNEL)	FLOW LENGTH L (FT.)	TOP ELEVATION	BOTTOM ELEVATION	SLOPE Y (FT./FT.)	CHANNEL BASE WIDTH (FT.)	CHANNEL DEPTH (FT.)	CHANNEL SIDE SLOPE (H:V)	CHANNEL ROUGHNESS COEF.	VELOCITY V (FPS)	TRAVEL TIME T_t (HRS) (4)	TIME OF CONCENTRATION T_c (HRS.)	LAG TIME T_L (HRS.) (5)
3A	1		U		1150	1590	1540	.035					3.0	0.11		
	2			C	11,100	1540	1428	.010	25	3	4:1	.035	7.3	0.42	0.53	0.32
3B	1		U		5730	1470	1435	.006					1.2	1.33		
	2			SV	2640	1435	1423	.005					3.3	0.22		
	3			C	2600	1423	1410	.005	10	3	2:1	.035	4.8	0.15	1.70	1.02

NOTES:

1) Sheet flow is based on TR-55 equation 3-3 : $T_t = \frac{0.007\,(nL)^{0.8}}{(P_2)^{0.5}\,S^{0.4}}$ n is from TR-55 Table 3-1. $P_2 = 1.44"$.

2) Shallow concentrated flow is from TR-55 Figure 3-1.

3) Street flow velocities are estimated from the City of Phoenix Storm Drain Design Manual Gutter Flow Chart on page 26. Flow depth is assumed to be at the top of curb. Other channel velocities are estimated using the Manning equation, assuming flow depth is at the top of bank.

4. $T_t = L/(3600V)$.

5) $T_L = 0.6\ T_c$.

SUBBASIN TIME OF CONCENTRATION CALCULATIONS

SUBBASIN I.D.	REACH NO.	SHEET FLOW (MANNINGS n) (1)	SHALLOW CONCENTRATED FLOW (P-PAVED) (U-UNPAVED) (2)	CHANNEL FLOW (3) (SV-STREET, VERT. CURB) (SR-STREET, ROLL. CURB) (C-CHANNEL)	FLOW LENGTH L (FT.)	TOP ELEVATION	BOTTOM ELEVATION	SLOPE Y (FT./FT.)	CHANNEL BASE WIDTH (FT.)	CHANNEL DEPTH (FT.)	CHANNEL SIDE SLOPE (H:V)	CHANNEL ROUGHNESS COEF.	VELOCITY V (FPS)	TRAVEL TIME T_t (HRS) (4)	TIME OF CONCENTRATION T_c (HRS.)	LAG TIME T_L (HRS.) (5)
3C	1	.011			260	1435	1434	.004						0.12		
	2			SR	1300	1434	1428	.005					2.5	0.14		
	3			C	900	1428	1419	.010	20	2	6:1	.035	5.4	0.05		
	4			C	9570	1419	1367	.005	30	5	2:1	.035	7.3	0.36	0.67	0.40
3D	1			C	2800	1370	1352	.006	20	2	5:1	.035	4.3	0.18		
	2			C	4690	1352	1320	.007	26	8	3:1	.050	12.5	0.10	0.28	0.17

NOTES:

1) Sheet flow is based on TR-55 equation 3-3 : $T_t = \frac{0.007\,(nL)^{0.8}}{(P_2)^{0.5}\,S^{0.4}}$ n is from TR-55 Table 3-1. $P_2 = 1.44"$.

2) Shallow concentrated flow is from TR-55 Figure 3-1.

3) Street flow velocities are estimated from the City of Phoenix Storm Drain Design Manual Gutter Flow Chart on page 26. Flow depth is assumed to be at the top of curb. Other channel velocities are estimated using the Manning equation, assuming flow depth is at the top of bank.

4. $T_t = L/(3600V)$.

5) $T_L = 0.6\ T_c$.

SUBBASIN TIME OF CONCENTRATION CALCULATIONS

SUBBASIN I.D.	REACH NO.	SHEET FLOW (MANNINGS n) (1)	SHALLOW CONCENTRATED FLOW (P=PAVED) (U=UNPAVED) (2)	CHANNEL FLOW (3) (SV=STREET, VERT. CURB) (SR=STREET, ROLL. CURB) (C=CHANNEL)	FLOW LENGTH L (FT.)	TOP ELEVATION	BOTTOM ELEVATION	SLOPE Y (FT./FT.)	CHANNEL BASE WIDTH (FT.)	CHANNEL DEPTH (FT.)	CHANNEL SIDE SLOPE (H:V)	CHANNEL ROUGHNESS COEF.	VELOCITY V (FPS)	TRAVEL TIME T_t (HRS) (4)	TIME OF CONCENTRATION T_c (HRS.)	LAG TIME T_L (HRS.) (5)
4A	1		U		1900	1423	1409	.007					1.3	0.41		
	2			C	2500	1409	1398	.004	10	3	0:1	.015	9.5	0.07		
	3			SR	1160	1398	1393	.004					2.3	0.14		
	4			C	1815	1393	1385	.004	10	1	0:1	.035	2.4	0.21		
	5			SV	7000	1385	1353	.005					3.3	0.59	1.42	0.85
4B	1			C	5120	1370	1334	.007	20	3	2:1	.035	6.3	0.23		
	2			SV	2850	1334	1306	.010					4.7	0.17	0.40	0.24

NOTES:

1) Sheet flow is based on TR-55 equation 3-3 : $T_t = \frac{0.007\ (nL)^{0.8}}{(P_2)^{0.5}\ S^{0.4}}$ n is from TR-55 Table 3-1. P_2 = 1.44".

2) Shallow concentrated flow is from TR-55 Figure 3-1.

3) Street flow velocities are estimated from the City of Phoenix Storm Drain Design Manual Gutter Flow Chart on page 26. Flow depth is assumed to be at the top of curb. Other channel velocities are estimated using the Manning equation, assuming flow depth is at the top of bank.

4. $T_t = L/(3600V)$.

5) $T_L = 0.6\ T_c$.

SUBBASIN TIME OF CONCENTRATION CALCULATIONS

SUBBASIN I.D.	REACH NO.	SHEET FLOW (MANNINGS n) (1)	SHALLOW CONCENTRATED FLOW (P-PAVED) (U-UNPAVED) (2)	CHANNEL FLOW (3) (SV-STREET, VERT. CURB) (SR-STREET, ROLL. CURB) (C-CHANNEL)	FLOW LENGTH L (FT.)	TOP ELEVATION	BOTTOM ELEVATION	SLOPE Y (FT./FT.)	CHANNEL BASE WIDTH (FT.)	CHANNEL DEPTH (FT.)	CHANNEL SIDE SLOPE (H:V)	CHANNEL ROUGHNESS COEF.	VELOCITY V (FPS)	TRAVEL TIME T_t (HRS) (4)	TIME OF CONCENTRATION T_c (HRS.)	LAG TIME T_L (HRS.) (5)
4C	1	.011			200	1338	1337	.005						0.09		
	2		P		2500	1337	1326	.005					1.5	0.46		
	3			SV	1980	1326	1321	.003					2.5	0.22		
	4			C	700	1321	1302	.027	10	3	2:1	.035	11.3	0.02		
	5			C	7550	1302	1276	.003	60	10	2.5:1	.035	8.9	0.24	1.03	0.62

NOTES:

1) Sheet flow is based on TR-55 equation 3-3 : $T_t = \frac{0.007\,(nL)^{0.8}}{(P_2)^{0.5}\,S^{0.4}}$ n is from TR-55 Table 3-1. $P_2 = 1.44"$.

2) Shallow concentrated flow is from TR-55 Figure 3-1.

3) Street flow velocities are estimated from the City of Phoenix Storm Drain Design Manual Gutter Flow Chart on page 26. Flow depth is assumed to be at the top of curb. Other channel velocities are estimated using the Manning equation, assuming flow depth is at the top of bank.

4. $T_t = L/(3600V)$.

5) $T_L = 0.6\,T_c$.

SUBBASIN TIME OF CONCENTRATION CALCULATIONS

SUBBASIN I.D.	REACH NO.	SHEET FLOW (MANNINGS n) (1)	SHALLOW CONCENTRATED FLOW (P-PAVED) (U-UNPAVED) (2)	CHANNEL FLOW (3) (SV-STREET, VERT. CURB) (SR-STREET, ROLL. CURB) (C-CHANNEL)	FLOW LENGTH L (FT.)	TOP ELEVATION	BOTTOM ELEVATION	SLOPE Y (FT./FT.)	CHANNEL BASE WIDTH (FT.)	CHANNEL DEPTH (FT.)	CHANNEL SIDE SLOPE (H:V)	CHANNEL ROUGHNESS COEF.	VELOCITY V (FPS)	TRAVEL TIME T_t (HRS) (4)	TIME OF CONCENTRATION T_c (HRS.)	LAG TIME T_L (HRS.) (5)
5A	1		U		1300	2054	1520	.411					10.3	0.04		
	2			C	7500	1520	1366	.021	15	3	2:1	.040	9.2	0.23		
	3			C	2180	1366	1342	.011	10	4	0:1	.035	7.6	0.08	0.35	0.21
5B	1	.011			250	1383	1378	.020						0.06		
	2			SR	5690	1378	1335	.008					3.2	0.49		
	3			C	2100	1335	1326	.004	10	3	2:1	.030	5.1	0.11	0.66	0.40

NOTES:

1) Sheet flow is based on TR-55 equation 3-3 : $T_t = \frac{0.007\,(nL)^{0.8}}{(P_2)^{0.5}\,S^{0.4}}$ n is from TR-55 Table 3-1. P_2 = 1.44".

2) Shallow concentrated flow is from TR-55 Figure 3-1.

3) Street flow velocities are estimated from the City of Phoenix Storm Drain Design Manual Gutter Flow Chart on page 26. Flow depth is assumed to be at the top of curb. Other channel velocities are estimated using the Manning equation, assuming flow depth is at the top of bank.

4. $T_t = L/(3600V)$.

5) $T_L = 0.6\ T_c$.

SUBBASIN TIME OF CONCENTRATION CALCULATIONS

SUBBASIN I.D.	REACH NO.	SHEET FLOW (MANNINGS n) (1)	SHALLOW CONCENTRATED FLOW (P-PAVED) (U-UNPAVED) (2)	CHANNEL FLOW (3) (SV-STREET, VERT. CURB) (SR-STREET, ROLL. CURB) (C-CHANNEL)	FLOW LENGTH L (FT.)	TOP ELEVATION	BOTTOM ELEVATION	SLOPE Y (FT./FT.)	CHANNEL BASE WIDTH (FT.)	CHANNEL DEPTH (FT.)	CHANNEL SIDE SLOPE (H:V)	CHANNEL ROUGHNESS COEF.	VELOCITY V (FPS)	TRAVEL TIME T_t (HRS) (4)	TIME OF CONCENTRATION T_c (HRS.)	LAG TIME T_L (HRS.) (5)
5C	1		U		500	1691	1560	.262					8.4	0.02		
	2			C	6000	1560	1390	.028	10	2	4:1	.045	6.8	0.25	0.27	0.16
5D	1		U		500	2015	1760	.510					11.5	0.01		
	2			C	6050	1760	1368	.065	10	2	4:1	.045	10.3	0.16	0.17	0.10

NOTES:

1) Sheet flow is based on TR-55 equation 3-3 : $T_t = \frac{0.007\,(nL)^{0.8}}{(P_2)^{0.5}\,S^{0.4}}$ n is from TR-55 Table 3-1. $P_2 = 1.44"$.

2) Shallow concentrated flow is from TR-55 Figure 3-1.

3) Street flow velocities are estimated from the City of Phoenix Storm Drain Design Manual Gutter Flow Chart on page 26. Flow depth is assumed to be at the top of curb. Other channel velocities are estimated using the Manning equation, assuming flow depth is at the top of bank.

4. $T_t = L/(3600V)$.

5) $T_L = 0.6\ T_c$.

SUBBASIN TIME OF CONCENTRATION CALCULATIONS

SUBBASIN I.D.	REACH NO.	SHEET FLOW (MANNINES n) (1)	SHALLOW CONCENTRATED FLOW (P-PAVED) (U-UNPAVED) (2)	CHANNEL FLOW (3) (SV=STREET, VERT. CURB) (SR=STREET, ROLL. CURB) (C=CHANNEL)	FLOW LENGTH L (FT.)	TOP ELEVATION	BOTTOM ELEVATION	SLOPE Y (FT./FT.)	CHANNEL BASE WIDTH (FT.)	CHANNEL DEPTH (FT.)	CHANNEL SIDE SLOPE (H:V)	CHANNEL ROUGHNESS COEF.	VELOCITY V (FPS)	TRAVEL TIME T_t (HRS) (4)	TIME OF CONCENTRATION T_c (HRS.)	LAG TIME T_L (HRS.) (5)
SE	1		U		2600	1520	1391	.050					3.6	0.20		
	2			C	2950	1391	1362	.010	10	2	2:1	.055	5.5	0.15		
	3			C	2200	1362	1340	.010	15	2	0:1	.015	13.4	0.05		
	4			C	2490	1340	1325	.006	15	3	2:1	.035	5.6	0.12		
	5			C	1200	1325	1319	.005	20	3	2:1	.030	6.2	0.05		
	6			C	900	1319	1313	.007	10	4	20:1	.050	6.8	0.04	0.61	0.37

NOTES:

1) Sheet flow is based on TR-55 equation 3-3 : $T_t = \frac{0.007\,(nL)^{0.8}}{(P_2)^{0.5}\,S^{0.4}}$ n is from TR-55 Table 3-1. P_2 = 1.44".

2) Shallow concentrated flow is from TR-55 Figure 3-1.

3) Street flow velocities are estimated from the City of Phoenix Storm Drain Design Manual Gutter Flow Chart on page 26. Flow depth is assumed to be at the top of curb. Other channel velocities are estimated using the Manning equation, assuming flow depth is at the top of bank.

4. $T_t = L/(3600V)$.

5) $T_L = 0.6\ T_c$.

SUBBASIN TIME OF CONCENTRATION CALCULATIONS

SUBBASIN I.D.	REACH NO.	SHEET FLOW (MANNINGS n) (1)	SHALLOW CONCENTRATED FLOW (P=PAVED) (U=UNPAVED) (2)	CHANNEL FLOW (3) (SW=STREET, VERT. CURB) (SR=STREET, ROLL. CURB) (C=CHANNEL)	FLOW LENGTH L (FT.)	TOP ELEVATION	BOTTOM ELEVATION	SLOPE Y (FT./FT.)	CHANNEL BASE WIDTH (FT.)	CHANNEL DEPTH (FT.)	CHANNEL SIDE SLOPE (H:V)	CHANNEL ROUGHNESS COEF.	VELOCITY V (FPS)	TRAVEL TIME T_t (HRS) (4)	TIME OF CONCENTRATION T_c (HRS.)	LAG TIME T_L (HRS.) (5)
SF	1			C	1470	1458	1319	.095	10	1	2:1	.035	11.6	0.04		
	2			SR	1000	1319	1318	.001					1.1	0.25		
	3			SV	5760	1318	1289	.005					3.3	0.48		
	4			C	2780	1289	1280	.003	40	4	1:1	.015	12.3	0.06	0.83	0.50
SG	1		U		500	1691	1560	.262					8.4	0.02		
	2			C	5810	1560	1392	.029	10	1.5	3:1	.045	6.1	0.26	0.28	0.17

NOTES:

1) Sheet flow is based on TR-55 equation 3-3 : $T_t = \frac{0.007\,(nL)^{0.8}}{(P_2)^{0.5}\,S^{0.4}}$ n is from TR-55 Table 3-1. P_2 = 1.44".

2) Shallow concentrated flow is from TR-55 Figure 3-1.

3) Street flow velocities are estimated from the City of Phoenix Storm Drain Design Manual Gutter Flow Chart on page 26. Flow depth is assumed to be at the top of curb. Other channel velocities are estimated using the Manning equation, assuming flow depth is at the top of bank.

4. $T_t = L/(3600V)$.

5) $T_L = 0.6\,T_c$.

SUBBASIN TIME OF CONCENTRATION CALCULATIONS

SUBBASIN I.D.	REACH NO.	SHEET FLOW (MANNINGS n) (1)	SHALLOW CONCENTRATED FLOW (P-PAVED) (U-UNPAVED) (2)	CHANNEL FLOW (3) (SV=STREET, VERT. CURB) (SR=STREET, ROLL. CURB) (C=CHANNEL)	FLOW LENGTH L (FT.)	TOP ELEVATION	BOTTOM ELEVATION	SLOPE Y (FT./FT.)	CHANNEL BASE WIDTH (FT.)	CHANNEL DEPTH (FT.)	CHANNEL SIDE SLOPE (H:V)	CHANNEL ROUGHNESS COEF.	VELOCITY V (FPS)	TRAVEL TIME T_t (HRS) (4)	TIME OF CONCENTRATION T_c (HRS.)	LAG TIME T_L (HRS.) (5)
6A	1	.011			300	1295	1293	.007						0.11		
	2		P		500	1293	1291	.004					1.3	0.11		
	3			SR	3900	1291	1275	.004					2.3	0.47		
	4			SV	1140	1275	1259	.014					4.9	0.06	0.75	0.45
6B	1	.011			300	1284	1282	.007						0.11		
	2		P		1700	1282	1270	.007					1.7	0.28		
	3			SV	6740	1270	1238	.005					3.3	0.57		
	4			C	3330	1238	1206	.010	35	6	3:1	.035	11.3	0.08	1.04	0.63

NOTES:

1) Sheet flow is based on TR-55 equation 3-3 : $T_t = \frac{0.007\,(nL)^{0.8}}{(P_2)^{0.5}\,S^{0.4}}$ n is from TR-55 Table 3-1. P_2 = 1.44".

2) Shallow concentrated flow is from TR-55 Figure 3-1.

3) Street flow velocities are estimated from the City of Phoenix Storm Drain Design Manual Gutter Flow Chart on page 26. Flow depth is assumed to be at the top of curb. Other channel velocities are estimated using the Manning equation, assuming flow depth is at the top of bank.

4. $T_t = L/(3600V)$.

5) $T_L = 0.6\,T_c$.

APPENDIX "H"

OPEN CHANNEL HYDRAULIC CALCULATIONS FOR TIME OF CONCENTRATION ESTIMATION

SUB BASIN 1A, REACH 2

CHANNEL CONFIGURATION IS TRAPEZOIDAL

*** SOLVING FOR DEPTH ***

BASE WIDTH	20.000 FT.
LEFT SIDE SLOPE	3.000 TO ONE
RIGHT SIDE SLOPE	3.000 TO ONE
CHANNEL SLOPE	0.90000 %
MANNINGS N	0.035

FOR DESIGN DISCHARGE = 1030.470 C.F.S. :

AREA OF FLOW	128.000 S.F.
WETTED PERIMETER	45.298 FT.
HYDRAULIC RADIUS	2.826 FT.
CHANNEL TOP WIDTH ...	44.000 FT.

NORMAL DEPTH OF FLOW	4.000 FT.
VELOCITY AT NORMAL DEPTH .	8.051 F.P.S.
CRITICAL DEPTH	3.606 FT.
CRITICAL VELOCITY	9.273 F.P.S.
CRITICAL SLOPE	1.43150 %

FLOW CONDITION IS SUBCRITICAL

SUB BASIN 1B, REACH 2

The main channel for subbasin 1B passes through a large gravel pit near the bottom of the reach. This pit has extensive volume and will considerably reduce the reach flow time. For this reason, the average velocity was reduced to 6.0 fps. This reduction is based on judgement and should be conservative. The retention volume in 1B was not accounted for in the model, which is also a conservative assumption

CHANNEL CONFIGURATION IS TRAPEZOIDAL

*** SOLVING FOR DEPTH ***

BASE WIDTH	50.000 FT.
LEFT SIDE SLOPE	3.000 TO ONE
RIGHT SIDE SLOPE	3.000 TO ONE
CHANNEL SLOPE	2.50000 %
MANNINGS N	0.045

FOR DESIGN DISCHARGE = 1600.000 C.F.S. :

AREA OF FLOW	167.875 S.F.
WETTED PERIMETER	68.120 FT.
HYDRAULIC RADIUS	2.464 FT.
CHANNEL TOP WIDTH ...	67.190 FT.

NORMAL DEPTH OF FLOW	2.865 FT.
VELOCITY AT NORMAL DEPTH .	9.531 F.P.S.
CRITICAL DEPTH	2.976 FT.
CRITICAL VELOCITY	9.124 F.P.S.
CRITICAL SLOPE	2.16646 %

FLOW CONDITION IS SUPERCRITICAL

SUB BASIN 1C. REACH 2

The average floodplain width was used for this computation because the low flow channel has very limited capacity. The 10-year peak was input and assumed to be the average flow through the reach.

CHANNEL CONFIGURATION IS TRAPEZOIDAL

*** SOLVING FOR DEPTH ***

BASE WIDTH	85.000 FT.
LEFT SIDE SLOPE	3.000 TO ONE
RIGHT SIDE SLOPE	3.000 TO ONE
CHANNEL SLOPE	1.00000 %
MANNINGS N	0.040

FOR DESIGN DISCHARGE = 1200.000 C.F.S. :

AREA OF FLOW	201.127 S.F.
WETTED PERIMETER	98.889 FT.
HYDRAULIC RADIUS	2.034 FT.
CHANNEL TOP WIDTH ...	98.176 FT.

NORMAL DEPTH OF FLOW	2.196 FT.
VELOCITY AT NORMAL DEPTH .	5.966 F.P.S.
CRITICAL DEPTH	1.796 FT.
CRITICAL VELOCITY	7.392 F.P.S.
CRITICAL SLOPE	2.03809 %

FLOW CONDITION IS SUBCRITICAL

SUB BASIN 1D, REACH 2

CHANNEL CONFIGURATION IS TRAPEZOIDAL

*** SOLVING FOR DEPTH ***

BASE WIDTH	50.000 FT.
LEFT SIDE SLOPE	3.000 TO ONE
RIGHT SIDE SLOPE	3.000 TO ONE
CHANNEL SLOPE	0.60000 %
MANNINGS N	0.035

FOR DESIGN DISCHARGE = 1805.470 C.F.S. :

AREA OF FLOW	248.000 S.F.
WETTED PERIMETER	75.298 FT.
HYDRAULIC RADIUS	3.294 FT.
CHANNEL TOP WIDTH ...	74.000 FT.

NORMAL DEPTH OF FLOW	4.000 FT.
VELOCITY AT NORMAL DEPTH .	7.280 F.P.S.
CRITICAL DEPTH	3.209 FT.
CRITICAL VELOCITY	9.436 F.P.S.
CRITICAL SLOPE	1.41289 %

FLOW CONDITION IS SUBCRITICAL

SUB BASIN 2A, REACH 2

CHANNEL CONFIGURATION IS TRAPEZOIDAL

*** SOLVING FOR DEPTH ***

BASE WIDTH	5.000 FT.
LEFT SIDE SLOPE	2.000 TO ONE
RIGHT SIDE SLOPE	2.000 TO ONE
CHANNEL SLOPE	2.60000 %
MANNINGS N	0.035

FOR DESIGN DISCHARGE = 39.171 C.F.S. :

AREA OF FLOW	7.000 S.F.
WETTED PERIMETER	9.472 FT.
HYDRAULIC RADIUS	0.739 FT.
CHANNEL TOP WIDTH ...	9.000 FT.

NORMAL DEPTH OF FLOW	1.000 FT.
VELOCITY AT NORMAL DEPTH .	5.596 F.P.S.
CRITICAL DEPTH	1.067 FT.
CRITICAL VELOCITY	5.146 F.P.S.
CRITICAL SLOPE	1.98331 %

FLOW CONDITION IS SUPERCRITICAL

SUUBASIN 2A, REACH 3

CHANNEL CONFIGURATION IS TRAPEZOIDAL

*** SOLVING FOR DISCHARGE ***

BASE WIDTH	10.000 FT.
LEFT SIDE SLOPE	2.000 TO ONE
RIGHT SIDE SLOPE	2.000 TO ONE
CHANNEL SLOPE	0.60000 %
MANNINGS N	0.035

FOR DESIGN DISCHARGE = 119.483 C.F.S. :

AREA OF FLOW	28.000 S.F.
WETTED PERIMETER	18.944 FT.
HYDRAULIC RADIUS	1.478 FT.
CHANNEL TOP WIDTH ...	18.000 FT.

NORMAL DEPTH OF FLOW	2.000 FT.
VELOCITY AT NORMAL DEPTH .	4.267 F.P.S.
CRITICAL DEPTH	1.480 FT.
CRITICAL VELOCITY	6.229 F.P.S.
CRITICAL SLOPE	2.05583 %

FLOW CONDITION IS SUBCRITICAL

SUB BASIN 2B, REACH 1

CHANNEL CONFIGURATION IS TRAPEZOIDAL

*** SOLVING FOR DEPTH ***

BASE WIDTH	5.000 FT.
LEFT SIDE SLOPE	2.000 TO ONE
RIGHT SIDE SLOPE	2.000 TO ONE
CHANNEL SLOPE	0.80000 %
MANNINGS N	0.035

FOR DESIGN DISCHARGE = 21.728 C.F.S. :

AREA OF FLOW	7.000 S.F.
WETTED PERIMETER	9.472 FT.
HYDRAULIC RADIUS	0.739 FT.
CHANNEL TOP WIDTH ...	9.000 FT.

NORMAL DEPTH OF FLOW	1.000 FT.
VELOCITY AT NORMAL DEPTH .	3.104 F.P.S.
CRITICAL DEPTH	0.752 FT.
CRITICAL VELOCITY	4.443 F.P.S.
CRITICAL SLOPE	2.56928 %

FLOW CONDITION IS SUBCRITICAL

SUB BASIN 2B, REACH 2

CHANNEL CONFIGURATION IS TRAPEZOIDAL

*** SOLVING FOR DEPTH ***

BASE WIDTH	10.000 FT.
LEFT SIDE SLOPE	4.000 TO ONE
RIGHT SIDE SLOPE	4.000 TO ONE
CHANNEL SLOPE	0.80000 %
MANNINGS N	0.040

FOR DESIGN DISCHARGE = 146.755 C.F.S. :

AREA OF FLOW	36.000 S.F.
WETTED PERIMETER	26.492 FT.
HYDRAULIC RADIUS	1.359 FT.
CHANNEL TOP WIDTH ...	26.000 FT.

NORMAL DEPTH OF FLOW	2.000 FT.
VELOCITY AT NORMAL DEPTH .	4.077 F.P.S.
CRITICAL DEPTH	1.526 FT.
CRITICAL VELOCITY	5.972 F.P.S.
CRITICAL SLOPE	2.82702 %

FLOW CONDITION IS SUBCRITICAL

SUB BASIN 2C, REACH 2

CHANNEL CONFIGURATION IS TRAPEZOIDAL

*** SOLVING FOR DEPTH ***

BASE WIDTH	10.000 FT.
LEFT SIDE SLOPE	2.000 TO ONE
RIGHT SIDE SLOPE	2.000 TO ONE
CHANNEL SLOPE	0.90000 %
MANNINGS N	0.035

FOR DESIGN DISCHARGE = 146.336 C.F.S. :

AREA OF FLOW	28.000 S.F.
WETTED PERIMETER	18.944 FT.
HYDRAULIC RADIUS	1.478 FT.
CHANNEL TOP WIDTH ...	18.000 FT.

NORMAL DEPTH OF FLOW	2.000 FT.
VELOCITY AT NORMAL DEPTH .	5.226 F.P.S.
CRITICAL DEPTH	1.671 FT.
CRITICAL VELOCITY	6.564 F.P.S.
CRITICAL SLOPE	1.88655 %

FLOW CONDITION IS SUBCRITICAL

SUB BASIN 2C, REACH 4

CHANNEL CONFIGURATION IS TRAPEZOIDAL

*** SOLVING FOR DEPTH ***

BASE WIDTH	10.000 FT.
LEFT SIDE SLOPE	3.000 TO ONE
RIGHT SIDE SLOPE	3.000 TO ONE
CHANNEL SLOPE	0.60000 %
MANNINGS N	0.040

FOR DESIGN DISCHARGE = 465.590 C.F.S. :

AREA OF FLOW	88.000 S.F.
WETTED PERIMETER	35.298 FT.
HYDRAULIC RADIUS	2.493 FT.
CHANNEL TOP WIDTH ...	34.000 FT.

NORMAL DEPTH OF FLOW	4.000 FT.
VELOCITY AT NORMAL DEPTH .	5.291 F.P.S.
CRITICAL DEPTH	3.014 FT.
CRITICAL VELOCITY	8.112 F.P.S.
CRITICAL SLOPE	2.44212 %

FLOW CONDITION IS SUBCRITICAL

SUB BASIN 2D, REACH 1

CHANNEL CONFIGURATION IS TRAPEZOIDAL

*** SOLVING FOR DEPTH ***

BASE WIDTH	10.000 FT.
LEFT SIDE SLOPE	3.000 TO ONE
RIGHT SIDE SLOPE	3.000 TO ONE
CHANNEL SLOPE	1.10000 %
MANNINGS N	0.035

FOR DESIGN DISCHARGE = 49.735 C.F.S. :

AREA OF FLOW	13.000 S.F.
WETTED PERIMETER	16.325 FT.
HYDRAULIC RADIUS	0.796 FT.
CHANNEL TOP WIDTH ...	16.000 FT.

NORMAL DEPTH OF FLOW	1.000 FT.
VELOCITY AT NORMAL DEPTH .	3.826 F.P.S.
CRITICAL DEPTH	0.838 FT.
CRITICAL VELOCITY	4.743 F.P.S.
CRITICAL SLOPE	2.23373 %

FLOW CONDITION IS SUBCRITICAL

SUB BASIN 2D, REACH 3

CHANNEL CONFIGURATION IS TRAPEZOIDAL

*** SOLVING FOR DEPTH ***

BASE WIDTH	5.000 FT.
LEFT SIDE SLOPE	4.000 TO ONE
RIGHT SIDE SLOPE	4.000 TO ONE
CHANNEL SLOPE	0.60000 %
MANNINGS N	0.030

FOR DESIGN DISCHARGE = 26.688 C.F.S. :

AREA OF FLOW	9.000 S.F.
WETTED PERIMETER	13.246 FT.
HYDRAULIC RADIUS	0.679 FT.
CHANNEL TOP WIDTH ...	13.000 FT.

NORMAL DEPTH OF FLOW	1.000 FT.
VELOCITY AT NORMAL DEPTH .	2.965 F.P.S.
CRITICAL DEPTH	0.775 FT.
CRITICAL VELOCITY	4.251 F.P.S.
CRITICAL SLOPE	1.97422 %

FLOW CONDITION IS SUBCRITICAL

SUB BASIN 2E, REACH 2

CHANNEL CONFIGURATION IS TRAPEZOIDAL

*** SOLVING FOR DEPTH ***

BASE WIDTH	10.000 FT.
LEFT SIDE SLOPE	3.000 TO ONE
RIGHT SIDE SLOPE	3.000 TO ONE
CHANNEL SLOPE	2.20000 %
MANNINGS N	0.035

FOR DESIGN DISCHARGE = 253.734 C.F.S. :

AREA OF FLOW	32.000 S.F.
WETTED PERIMETER	22.649 FT.
HYDRAULIC RADIUS	1.413 FT.
CHANNEL TOP WIDTH ...	22.000 FT.

NORMAL DEPTH OF FLOW	2.000 FT.
VELOCITY AT NORMAL DEPTH .	7.929 F.P.S.
CRITICAL DEPTH	2.170 FT.
CRITICAL VELOCITY	7.082 F.P.S.
CRITICAL SLOPE	1.51966 %

FLOW CONDITION IS SUPERCRITICAL

SUB BASIN 2E, REACH 4

CHANNEL CONFIGURATION IS TRAPEZOIDAL

*** SOLVING FOR DEPTH ***

BASE WIDTH	20.000 FT.
LEFT SIDE SLOPE	2.000 TO ONE
RIGHT SIDE SLOPE	2.000 TO ONE
CHANNEL SLOPE	0.50000 %
MANNINGS N	0.030

FOR DESIGN DISCHARGE = 807.993 C.F.S. :

AREA OF FLOW	112.000 S.F.
WETTED PERIMETER	37.889 FT.
HYDRAULIC RADIUS	2.956 FT.
CHANNEL TOP WIDTH ...	36.000 FT.

NORMAL DEPTH OF FLOW	4.000 FT.
VELOCITY AT NORMAL DEPTH .	7.214 F.P.S.
CRITICAL DEPTH	3.295 FT.
CRITICAL VELOCITY	9.222 F.P.S.
CRITICAL SLOPE	1.11032 %

FLOW CONDITION IS SUBCRITICAL

SUB BASIN 2F, REACH 2

CHANNEL CONFIGURATION IS TRAPEZOIDAL

*** SOLVING FOR DEPTH ***

BASE WIDTH	10.000 FT.
LEFT SIDE SLOPE	3.000 TO ONE
RIGHT SIDE SLOPE	3.000 TO ONE
CHANNEL SLOPE	0.90000 %
MANNINGS N	0.035

FOR DESIGN DISCHARGE = 44.987 C.F.S. :

AREA OF FLOW	13.000 S.F.
WETTED PERIMETER	16.325 FT.
HYDRAULIC RADIUS	0.796 FT.
CHANNEL TOP WIDTH ...	16.000 FT.

NORMAL DEPTH OF FLOW	1.000 FT.
VELOCITY AT NORMAL DEPTH .	3.461 F.P.S.
CRITICAL DEPTH	0.788 FT.
CRITICAL VELOCITY	4.617 F.P.S.
CRITICAL SLOPE	2.33057 %

FLOW CONDITION IS SUBCRITICAL

SUBBASIN 2G, REACH 2

CHANNEL CONFIGURATION IS TRAPEZOIDAL

*** SOLVING FOR DISCHARGE ***

BASE WIDTH	2.000 FT.
LEFT SIDE SLOPE	4.000 TO ONE
RIGHT SIDE SLOPE	4.000 TO ONE
CHANNEL SLOPE	4.10000 %
MANNINGS N	0.035

FOR DESIGN DISCHARGE = 36.104 C.F.S. :

AREA OF FLOW	6.000 S.F.
WETTED PERIMETER	10.246 FT.
HYDRAULIC RADIUS	0.586 FT.
CHANNEL TOP WIDTH ...	10.000 FT.

NORMAL DEPTH OF FLOW	1.000 FT.
VELOCITY AT NORMAL DEPTH .	6.017 F.P.S.
CRITICAL DEPTH	1.159 FT.
CRITICAL VELOCITY	4.694 F.P.S.
CRITICAL SLOPE	1.81128 %

FLOW CONDITION IS SUPERCRITICAL

SUB BASIN 2H, REACH 2

CHANNEL CONFIGURATION IS TRAPEZOIDAL

*** SOLVING FOR DEPTH ***

BASE WIDTH	10.000 FT.
LEFT SIDE SLOPE	3.000 TO ONE
RIGHT SIDE SLOPE	3.000 TO ONE
CHANNEL SLOPE	0.90000 %
MANNINGS N	0.035

FOR DESIGN DISCHARGE = 44.987 C.F.S. :

AREA OF FLOW	13.000 S.F.
WETTED PERIMETER	16.325 FT.
HYDRAULIC RADIUS	0.796 FT.
CHANNEL TOP WIDTH ...	16.000 FT.

NORMAL DEPTH OF FLOW	1.000 FT.
VELOCITY AT NORMAL DEPTH .	3.461 F.P.S.
CRITICAL DEPTH	0.788 FT.
CRITICAL VELOCITY	4.617 F.P.S.
CRITICAL SLOPE	2.33057 %

FLOW CONDITION IS SUBCRITICAL

SUB BASIN 2H, REACH 4

CHANNEL CONFIGURATION IS TRAPEZOIDAL

*** SOLVING FOR DEPTH ***

BASE WIDTH	20.000 FT.
LEFT SIDE SLOPE	2.000 TO ONE
RIGHT SIDE SLOPE	2.000 TO ONE
CHANNEL SLOPE	0.30000 %
MANNINGS N	0.030

FOR DESIGN DISCHARGE = 372.371 C.F.S. :

AREA OF FLOW	78.000 S.F.
WETTED PERIMETER	33.416 FT.
HYDRAULIC RADIUS	2.334 FT.
CHANNEL TOP WIDTH ...	32.000 FT.

NORMAL DEPTH OF FLOW	3.000 FT.
VELOCITY AT NORMAL DEPTH .	4.774 F.P.S.
CRITICAL DEPTH	2.054 FT.
CRITICAL VELOCITY	7.520 F.P.S.
CRITICAL SLOPE	1.32453 %

FLOW CONDITION IS SUBCRITICAL

SUB BASIN 2I, REACH 2

CHANNEL CONFIGURATION IS TRAPEZOIDAL

*** SOLVING FOR DEPTH ***

BASE WIDTH	15.000 FT.
LEFT SIDE SLOPE	4.000 TO ONE
RIGHT SIDE SLOPE	4.000 TO ONE
CHANNEL SLOPE	2.20000 %
MANNINGS N	0.035

FOR DESIGN DISCHARGE = 372.925 C.F.S. :

AREA OF FLOW	46.000 S.F.
WETTED PERIMETER	31.492 FT.
HYDRAULIC RADIUS	1.461 FT.
CHANNEL TOP WIDTH ...	31.000 FT.

NORMAL DEPTH OF FLOW	2.000 FT.
VELOCITY AT NORMAL DEPTH .	8.107 F.P.S.
CRITICAL DEPTH	2.188 FT.
CRITICAL VELOCITY	7.176 F.P.S.
CRITICAL SLOPE	1.47075 %

FLOW CONDITION IS SUPERCRITICAL

SUB BASIN 2I, REACH 4

CHANNEL CONFIGURATION IS TRAPEZOIDAL

*** SOLVING FOR DEPTH ***

BASE WIDTH	15.000 FT.
LEFT SIDE SLOPE	3.000 TO ONE
RIGHT SIDE SLOPE	3.000 TO ONE
CHANNEL SLOPE	0.90000 %
MANNINGS N	0.040

FOR DESIGN DISCHARGE = 195.603 C.F.S. :

AREA OF FLOW	42.000 S.F.
WETTED PERIMETER	27.649 FT.
HYDRAULIC RADIUS	1.519 FT.
CHANNEL TOP WIDTH ...	27.000 FT.

NORMAL DEPTH OF FLOW	2.000 FT.
VELOCITY AT NORMAL DEPTH .	4.657 F.P.S.
CRITICAL DEPTH	1.560 FT.
CRITICAL VELOCITY	6.371 F.P.S.
CRITICAL SLOPE	2.52724 %

FLOW CONDITION IS SUBCRITICAL

SUB BASIN 2I, REACH 6

CHANNEL CONFIGURATION IS TRAPEZOIDAL

*** SOLVING FOR DEPTH ***

BASE WIDTH	10.000 FT.
LEFT SIDE SLOPE	3.000 TO ONE
RIGHT SIDE SLOPE	3.000 TO ONE
CHANNEL SLOPE	0.50000 %
MANNINGS N	0.035

FOR DESIGN DISCHARGE = 120.963 C.F.S. :

AREA OF FLOW	32.000 S.F.
WETTED PERIMETER	22.649 FT.
HYDRAULIC RADIUS	1.413 FT.
CHANNEL TOP WIDTH ...	22.000 FT.

NORMAL DEPTH OF FLOW	2.000 FT.
VELOCITY AT NORMAL DEPTH .	3.780 F.P.S.
CRITICAL DEPTH	1.425 FT.
CRITICAL VELOCITY	5.946 F.P.S.
CRITICAL SLOPE	2.22185 %

FLOW CONDITION IS SUBCRITICAL

SUB BASIN 2J, REACH 2

CHANNEL CONFIGURATION IS TRAPEZOIDAL

*** SOLVING FOR DEPTH ***

BASE WIDTH	40.000 FT.
LEFT SIDE SLOPE	4.000 TO ONE
RIGHT SIDE SLOPE	4.000 TO ONE
CHANNEL SLOPE	2.70000 %
MANNINGS N	0.035

FOR DESIGN DISCHARGE = 288.677 C.F.S. :

AREA OF FLOW	44.000 S.F.
WETTED PERIMETER	48.246 FT.
HYDRAULIC RADIUS	0.912 FT.
CHANNEL TOP WIDTH ...	48.000 FT.

NORMAL DEPTH OF FLOW	1.000 FT.
VELOCITY AT NORMAL DEPTH .	6.561 F.P.S.
CRITICAL DEPTH	1.128 FT.
CRITICAL VELOCITY	5.749 F.P.S.
CRITICAL SLOPE	1.74198 %

FLOW CONDITION IS SUPERCRITICAL

SUB BASIN 2K, REACH 2

CHANNEL CONFIGURATION IS TRAPEZOIDAL

*** SOLVING FOR DEPTH ***

BASE WIDTH	10.000 FT.
LEFT SIDE SLOPE	2.000 TO ONE
RIGHT SIDE SLOPE	2.000 TO ONE
CHANNEL SLOPE	2.10000 %
MANNINGS N	0.035

FOR DESIGN DISCHARGE = 223.531 C.F.S. :

AREA OF FLOW	28.000 S.F.
WETTED PERIMETER	18.944 FT.
HYDRAULIC RADIUS	1.478 FT.
CHANNEL TOP WIDTH ...	18.000 FT.

NORMAL DEPTH OF FLOW	2.000 FT.
VELOCITY AT NORMAL DEPTH .	7.983 F.P.S.
CRITICAL DEPTH	2.145 FT.
CRITICAL VELOCITY	7.293 F.P.S.
CRITICAL SLOPE	1.56775 %

FLOW CONDITION IS SUPERCRITICAL

SUB BASIN 2K, REACH 3

CHANNEL CONFIGURATION IS TRAPEZOIDAL

*** SOLVING FOR DEPTH ***

BASE WIDTH	1.000 FT.
LEFT SIDE SLOPE	40.000 TO ONE
RIGHT SIDE SLOPE	40.000 TO ONE
CHANNEL SLOPE	0.80000 %
MANNINGS N	0.015

FOR DESIGN DISCHARGE = 1441.090 C.F.S. :

AREA OF FLOW	162.000 S.F.
WETTED PERIMETER	161.050 FT.
HYDRAULIC RADIUS	1.006 FT.
CHANNEL TOP WIDTH ...	161.000 FT.

NORMAL DEPTH OF FLOW	2.000 FT.
VELOCITY AT NORMAL DEPTH .	8.896 F.P.S.
CRITICAL DEPTH	2.393 FT.
CRITICAL VELOCITY	6.226 F.P.S.
CRITICAL SLOPE	0.24361 %

FLOW CONDITION IS SUPERCRITICAL

SUB BASIN 2K, REACH 4

CHANNEL CONFIGURATION IS RECTANGULAR

*** SOLVING FOR DEPTH ***

BASE WIDTH	10.000 FT.
LEFT SIDE SLOPE	0.000 TO ONE
RIGHT SIDE SLOPE	0.000 TO ONE
CHANNEL SLOPE	0.60000 %
MANNINGS N	0.015

FOR DESIGN DISCHARGE = 350.047 C.F.S. :

AREA OF FLOW	30.000 S.F.
WETTED PERIMETER	16.000 FT.
HYDRAULIC RADIUS	1.875 FT.
CHANNEL TOP WIDTH ...	10.000 FT.

NORMAL DEPTH OF FLOW	3.000 FT.
VELOCITY AT NORMAL DEPTH .	11.668 F.P.S.
CRITICAL DEPTH	3.363 FT.
CRITICAL VELOCITY	10.409 F.P.S.
CRITICAL SLOPE	0.43501 %

FLOW CONDITION IS SUPERCRITICAL

SUB BASIN 2K, REACH 5

CHANNEL CONFIGURATION IS TRAPEZOIDAL

*** SOLVING FOR DEPTH ***

BASE WIDTH	1.000 FT.
LEFT SIDE SLOPE	40.000 TO ONE
RIGHT SIDE SLOPE	40.000 TO ONE
CHANNEL SLOPE	0.50000 %
MANNINGS N	0.015

FOR DESIGN DISCHARGE = 1139.280 C.F.S. :

AREA OF FLOW	162.000 S.F.
WETTED PERIMETER	161.050 FT.
HYDRAULIC RADIUS	1.006 FT.
CHANNEL TOP WIDTH ...	161.000 FT.

NORMAL DEPTH OF FLOW	2.000 FT.
VELOCITY AT NORMAL DEPTH .	7.033 F.P.S.
CRITICAL DEPTH	2.177 FT.
CRITICAL VELOCITY	5.941 F.P.S.
CRITICAL SLOPE	0.28506 %

FLOW CONDITION IS SUPERCRITICAL

SUB BASIN 2L, REACH 2

CHANNEL CONFIGURATION IS RECTANGULAR

*** SOLVING FOR DEPTH ***

BASE WIDTH	15.000 FT.
LEFT SIDE SLOPE	0.000 TO ONE
RIGHT SIDE SLOPE	0.000 TO ONE
CHANNEL SLOPE	0.70000 %
MANNINGS N	0.035

FOR DESIGN DISCHARGE = 144.500 C.F.S. :

AREA OF FLOW	30.000 S.F.
WETTED PERIMETER	19.000 FT.
HYDRAULIC RADIUS	1.579 FT.
CHANNEL TOP WIDTH ...	15.000 FT.

NORMAL DEPTH OF FLOW	2.000 FT.
VELOCITY AT NORMAL DEPTH .	4.817 F.P.S.
CRITICAL DEPTH	1.423 FT.
CRITICAL VELOCITY	6.770 F.P.S.
CRITICAL SLOPE	2.00248 %

FLOW CONDITION IS SUBCRITICAL

SUB BASIN 2L, REACH 4

CHANNEL CONFIGURATION IS TRAPEZOIDAL

*** SOLVING FOR DEPTH ***

BASE WIDTH	10.000 FT.
LEFT SIDE SLOPE	2.000 TO ONE
RIGHT SIDE SLOPE	2.000 TO ONE
CHANNEL SLOPE	0.40000 %
MANNINGS N	0.030

FOR DESIGN DISCHARGE = 113.817 C.F.S. :

AREA OF FLOW	28.000 S.F.
WETTED PERIMETER	18.944 FT.
HYDRAULIC RADIUS	1.478 FT.
CHANNEL TOP WIDTH ...	18.000 FT.

NORMAL DEPTH OF FLOW	2.000 FT.
VELOCITY AT NORMAL DEPTH .	4.065 F.P.S.
CRITICAL DEPTH	1.437 FT.
CRITICAL VELOCITY	6.152 F.P.S.
CRITICAL SLOPE	1.54276 %

FLOW CONDITION IS SUBCRITICAL

SUB BASIN 2M, REACH 2

CHANNEL CONFIGURATION IS TRAPEZOIDAL

*** SOLVING FOR DEPTH ***

BASE WIDTH	15.000 FT.
LEFT SIDE SLOPE	3.000 TO ONE
RIGHT SIDE SLOPE	3.000 TO ONE
CHANNEL SLOPE	5.40000 %
MANNINGS N	0.030

FOR DESIGN DISCHARGE = 185.053 C.F.S. :

AREA OF FLOW	18.000 S.F.
WETTED PERIMETER	21.325 FT.
HYDRAULIC RADIUS	0.844 FT.
CHANNEL TOP WIDTH ...	21.000 FT.

NORMAL DEPTH OF FLOW	1.000 FT.
VELOCITY AT NORMAL DEPTH .	10.281 F.P.S.
CRITICAL DEPTH	1.508 FT.
CRITICAL VELOCITY	6.285 F.P.S.
CRITICAL SLOPE	1.07297 %

FLOW CONDITION IS SUPERCRITICAL

SUB BASIN 2M, REACH 3

CHANNEL CONFIGURATION IS TRAPEZOIDAL

*** SOLVING FOR DEPTH ***

BASE WIDTH	40.000 FT.
LEFT SIDE SLOPE	2.000 TO ONE
RIGHT SIDE SLOPE	2.000 TO ONE
CHANNEL SLOPE	0.50000 %
MANNINGS N	0.030

FOR DESIGN DISCHARGE = 1495.630 C.F.S. :

AREA OF FLOW	192.000 S.F.
WETTED PERIMETER	57.889 FT.
HYDRAULIC RADIUS	3.317 FT.
CHANNEL TOP WIDTH ...	56.000 FT.

NORMAL DEPTH OF FLOW	4.000 FT.
VELOCITY AT NORMAL DEPTH .	7.790 F.P.S.
CRITICAL DEPTH	3.316 FT.
CRITICAL VELOCITY	9.672 F.P.S.
CRITICAL SLOPE	1.01531 %

FLOW CONDITION IS SUBCRITICAL

SUB BASIN 2M, REACH 4

CHANNEL CONFIGURATION IS TRAPEZOIDAL

*** SOLVING FOR DEPTH ***

BASE WIDTH	50.000	FT.
LEFT SIDE SLOPE	2.000	TO ONE
RIGHT SIDE SLOPE	2.000	TO ONE
CHANNEL SLOPE	0.70000	%
MANNINGS N	0.030	

FOR DESIGN DISCHARGE = 2181.380 C.F.S. :

AREA OF FLOW	232.000	S.F.
WETTED PERIMETER	67.889	FT.
HYDRAULIC RADIUS	3.417	FT.
CHANNEL TOP WIDTH ...	66.000	FT.

NORMAL DEPTH OF FLOW	4.000	FT.
VELOCITY AT NORMAL DEPTH .	9.402	F.P.S.
CRITICAL DEPTH	3.699	FT.
CRITICAL VELOCITY	10.274	F.P.S.
CRITICAL SLOPE	0.93589	%

FLOW CONDITION IS SUBCRITICAL

SUB BASIN 2N, REACH 2

CHANNEL CONFIGURATION IS TRAPEZOIDAL

*** SOLVING FOR DEPTH ***

BASE WIDTH	70.000 FT.
LEFT SIDE SLOPE	2.000 TO ONE
RIGHT SIDE SLOPE	2.000 TO ONE
CHANNEL SLOPE	0.40000 %
MANNINGS N	0.040

FOR DESIGN DISCHARGE = 2497.070 C.F.S. :

AREA OF FLOW	400.000 S.F.
WETTED PERIMETER	92.361 FT.
HYDRAULIC RADIUS	4.331 FT.
CHANNEL TOP WIDTH ...	90.000 FT.

NORMAL DEPTH OF FLOW	5.000 FT.
VELOCITY AT NORMAL DEPTH .	6.243 F.P.S.
CRITICAL DEPTH	3.297 FT.
CRITICAL VELOCITY	9.888 F.P.S.
CRITICAL SLOPE	1.81828 %

FLOW CONDITION IS SUBCRITICAL

SUB BASIN 2N, REACH 3

CHANNEL CONFIGURATION IS TRAPEZOIDAL

*** SOLVING FOR DEPTH ***

BASE WIDTH	60.000 FT.
LEFT SIDE SLOPE	2.000 TO ONE
RIGHT SIDE SLOPE	2.000 TO ONE
CHANNEL SLOPE	0.50000 %
MANNINGS N	0.030

FOR DESIGN DISCHARGE = 3216.250 C.F.S. :

AREA OF FLOW	350.000 S.F.
WETTED PERIMETER	82.361 FT.
HYDRAULIC RADIUS	4.250 FT.
CHANNEL TOP WIDTH ...	80.000 FT.

NORMAL DEPTH OF FLOW	5.000 FT.
VELOCITY AT NORMAL DEPTH .	9.189 F.P.S.
CRITICAL DEPTH	4.253 FT.
CRITICAL VELOCITY	11.039 F.P.S.
CRITICAL SLOPE	0.91206 %

FLOW CONDITION IS SUBCRITICAL

SUB BASIN 20, REACH 2

CHANNEL CONFIGURATION IS TRAPEZOIDAL

*** SOLVING FOR DEPTH ***

BASE WIDTH	20.000 FT.
LEFT SIDE SLOPE	3.000 TO ONE
RIGHT SIDE SLOPE	3.000 TO ONE
CHANNEL SLOPE	2.90000 %
MANNINGS N	0.035

FOR DESIGN DISCHARGE = 512.754 C.F.S. :

AREA OF FLOW	52.000 S.F.
WETTED PERIMETER	32.649 FT.
HYDRAULIC RADIUS	1.593 FT.
CHANNEL TOP WIDTH ...	32.000 FT.

NORMAL DEPTH OF FLOW	2.000 FT.
VELOCITY AT NORMAL DEPTH .	9.861 F.P.S.
CRITICAL DEPTH	2.406 FT.
CRITICAL VELOCITY	7.830 F.P.S.
CRITICAL SLOPE	1.35992 %

FLOW CONDITION IS SUPERCRITICAL

SUB BASIN 2P, REACH 2

CHANNEL CONFIGURATION IS TRAPEZOIDAL

*** SOLVING FOR DEPTH ***

BASE WIDTH	30.000	FT.
LEFT SIDE SLOPE	4.000	TO ONE
RIGHT SIDE SLOPE	4.000	TO ONE
CHANNEL SLOPE	0.70000	%
MANNINGS N	0.035	

FOR DESIGN DISCHARGE = 111.662 C.F.S. :

AREA OF FLOW	34.000	S.F.
WETTED PERIMETER	38.246	FT.
HYDRAULIC RADIUS	0.889	FT.
CHANNEL TOP WIDTH ...	38.000	FT.

NORMAL DEPTH OF FLOW	1.000	FT.
VELOCITY AT NORMAL DEPTH .	3.284	F.P.S.
CRITICAL DEPTH	0.729	FT.
CRITICAL VELOCITY	4.653	F.P.S.
CRITICAL SLOPE	2.22765	%

FLOW CONDITION IS SUBCRITICAL

SUB BASIN 3A, REACH 2

CHANNEL CONFIGURATION IS TRAPEZOIDAL

*** SOLVING FOR DEPTH ***

BASE WIDTH	25.000 FT.
LEFT SIDE SLOPE	4.000 TO ONE
RIGHT SIDE SLOPE	4.000 TO ONE
CHANNEL SLOPE	1.00000 %
MANNINGS N	0.035

FOR DESIGN DISCHARGE = 804.809 C.F.S. :

AREA OF FLOW	111.000 S.F.
WETTED PERIMETER	49.739 FT.
HYDRAULIC RADIUS	2.232 FT.
CHANNEL TOP WIDTH ...	49.000 FT.

NORMAL DEPTH OF FLOW	3.000 FT.
VELOCITY AT NORMAL DEPTH .	7.251 F.P.S.
CRITICAL DEPTH	2.729 FT.
CRITICAL VELOCITY	8.211 F.P.S.
CRITICAL SLOPE	1.50883 %

FLOW CONDITION IS SUBCRITICAL

SUB BASIN 3B, REACH 3

CHANNEL CONFIGURATION IS TRAPEZOIDAL

*** SOLVING FOR DEPTH ***

BASE WIDTH	10.000 FT.
LEFT SIDE SLOPE	2.000 TO ONE
RIGHT SIDE SLOPE	2.000 TO ONE
CHANNEL SLOPE	0.50000 %
MANNINGS N	0.035

FOR DESIGN DISCHARGE = 232.536 C.F.S. :

AREA OF FLOW	48.000 S.F.
WETTED PERIMETER	23.416 FT.
HYDRAULIC RADIUS	2.050 FT.
CHANNEL TOP WIDTH ...	22.000 FT.

NORMAL DEPTH OF FLOW	3.000 FT.
VELOCITY AT NORMAL DEPTH .	4.845 F.P.S.
CRITICAL DEPTH	2.195 FT.
CRITICAL VELOCITY	7.362 F.P.S.
CRITICAL SLOPE	1.94437 %

FLOW CONDITION IS SUBCRITICAL

SUB BASIN 3C, REACH 3

CHANNEL CONFIGURATION IS TRAPEZOIDAL

*** SOLVING FOR DEPTH ***

BASE WIDTH	20.000 FT.
LEFT SIDE SLOPE	6.000 TO ONE
RIGHT SIDE SLOPE	6.000 TO ONE
CHANNEL SLOPE	1.00000 %
MANNINGS N	0.035

FOR DESIGN DISCHARGE = 347.093 C.F.S. :

AREA OF FLOW	64.000 S.F.
WETTED PERIMETER	44.331 FT.
HYDRAULIC RADIUS	1.444 FT.
CHANNEL TOP WIDTH ...	44.000 FT.

NORMAL DEPTH OF FLOW	2.000 FT.
VELOCITY AT NORMAL DEPTH .	5.423 F.P.S.
CRITICAL DEPTH	1.754 FT.
CRITICAL VELOCITY	6.483 F.P.S.
CRITICAL SLOPE	1.80872 %

FLOW CONDITION IS SUBCRITICAL

SUB BASIN 3C, REACH 4

CHANNEL CONFIGURATION IS TRAPEZOIDAL

*** SOLVING FOR DEPTH ***

BASE WIDTH	30.000 FT.
LEFT SIDE SLOPE	2.000 TO ONE
RIGHT SIDE SLOPE	2.000 TO ONE
CHANNEL SLOPE	0.50000 %
MANNINGS N	0.035

FOR DESIGN DISCHARGE = 1467.180 C.F.S. :

AREA OF FLOW	200.000 S.F.
WETTED PERIMETER	52.361 FT.
HYDRAULIC RADIUS	3.820 FT.
CHANNEL TOP WIDTH ...	50.000 FT.

NORMAL DEPTH OF FLOW	5.000 FT.
VELOCITY AT NORMAL DEPTH .	7.336 F.P.S.
CRITICAL DEPTH	3.841 FT.
CRITICAL VELOCITY	10.137 F.P.S.
CRITICAL SLOPE	1.43450 %

FLOW CONDITION IS SUBCRITICAL

SUB BASIN 3D, REACH 1

CHANNEL CONFIGURATION IS TRAPEZOIDAL

*** SOLVING FOR DEPTH ***

BASE WIDTH	20.000 FT.
LEFT SIDE SLOPE	5.000 TO ONE
RIGHT SIDE SLOPE	5.000 TO ONE
CHANNEL SLOPE	0.60000 %
MANNINGS N	0.035

FOR DESIGN DISCHARGE = 256.874 C.F.S. :

AREA OF FLOW	60.000 S.F.
WETTED PERIMETER	40.396 FT.
HYDRAULIC RADIUS	1.485 FT.
CHANNEL TOP WIDTH ...	40.000 FT.

NORMAL DEPTH OF FLOW	2.000 FT.
VELOCITY AT NORMAL DEPTH .	4.281 F.P.S.
CRITICAL DEPTH	1.509 FT.
CRITICAL VELOCITY	6.180 F.P.S.
CRITICAL SLOPE	2.02821 %

FLOW CONDITION IS SUBCRITICAL

SUB BASIN 3D, REACH 2

CHANNEL CONFIGURATION IS TRAPEZOIDAL

*** SOLVING FOR DEPTH ***

BASE WIDTH	26.000 FT.
LEFT SIDE SLOPE	3.000 TO ONE
RIGHT SIDE SLOPE	3.000 TO ONE
CHANNEL SLOPE	0.70000 %
MANNINGS N	0.030

FOR DESIGN DISCHARGE = 4989.700 C.F.S. :

AREA OF FLOW	400.000 S.F.
WETTED PERIMETER	76.597 FT.
HYDRAULIC RADIUS	5.222 FT.
CHANNEL TOP WIDTH ...	74.000 FT.

NORMAL DEPTH OF FLOW	8.000 FT.
VELOCITY AT NORMAL DEPTH .	12.474 F.P.S.
CRITICAL DEPTH	7.766 FT.
CRITICAL VELOCITY	13.033 F.P.S.
CRITICAL SLOPE	0.80805 %

FLOW CONDITION IS SUBCRITICAL

SUB BASIN 4A, REACH 2

CHANNEL CONFIGURATION IS RECTANGULAR

*** SOLVING FOR DEPTH ***

BASE WIDTH	10.000 FT.
LEFT SIDE SLOPE	0.000 TO ONE
RIGHT SIDE SLOPE	0.000 TO ONE
CHANNEL SLOPE	0.40000 %
MANNINGS N	0.015

FOR DESIGN DISCHARGE = 285.812 C.F.S. :

AREA OF FLOW	30.000 S.F.
WETTED PERIMETER	16.000 FT.
HYDRAULIC RADIUS	1.875 FT.
CHANNEL TOP WIDTH ...	10.000 FT.

NORMAL DEPTH OF FLOW	3.000 FT.
VELOCITY AT NORMAL DEPTH .	9.527 F.P.S.
CRITICAL DEPTH	2.938 FT.
CRITICAL VELOCITY	9.728 F.P.S.
CRITICAL SLOPE	0.42441 %

FLOW CONDITION IS SUBCRITICAL

SUB BASIN 4A, REACH 4

CHANNEL CONFIGURATION IS RECTANGULAR

*** SOLVING FOR DEPTH ***

BASE WIDTH	10.000 FT.
LEFT SIDE SLOPE	0.000 TO ONE
RIGHT SIDE SLOPE	0.000 TO ONE
CHANNEL SLOPE	0.40000 %
MANNINGS N	0.035

FOR DESIGN DISCHARGE = 23.779 C.F.S. :

AREA OF FLOW	10.000 S.F.
WETTED PERIMETER	12.000 FT.
HYDRAULIC RADIUS	0.833 FT.
CHANNEL TOP WIDTH ...	10.000 FT.

NORMAL DEPTH OF FLOW	1.000 FT.
VELOCITY AT NORMAL DEPTH .	2.378 F.P.S.
CRITICAL DEPTH	0.559 FT.
CRITICAL VELOCITY	4.254 F.P.S.
CRITICAL SLOPE	2.51082 %

FLOW CONDITION IS SUBCRITICAL

SUB BASIN 4B, REACH 1

CHANNEL CONFIGURATION IS TRAPEZOIDAL

*** SOLVING FOR DEPTH ***

BASE WIDTH	20.000 FT.
LEFT SIDE SLOPE	2.000 TO ONE
RIGHT SIDE SLOPE	2.000 TO ONE
CHANNEL SLOPE	0.70000 %
MANNINGS N	0.035

FOR DESIGN DISCHARGE = 487.549 C.F.S. :

AREA OF FLOW	78.000 S.F.
WETTED PERIMETER	33.416 FT.
HYDRAULIC RADIUS	2.334 FT.
CHANNEL TOP WIDTH ...	32.000 FT.

NORMAL DEPTH OF FLOW	3.000 FT.
VELOCITY AT NORMAL DEPTH .	6.251 F.P.S.
CRITICAL DEPTH	2.426 FT.
CRITICAL VELOCITY	8.087 F.P.S.
CRITICAL SLOPE	1.62053 %

FLOW CONDITION IS SUBCRITICAL

SUB BASIN 4C, REACH 4

CHANNEL CONFIGURATION IS TRAPEZOIDAL
==========

*** SOLVING FOR DEPTH ***

BASE WIDTH	10.000 FT.
LEFT SIDE SLOPE	2.000 TO ONE
RIGHT SIDE SLOPE	2.000 TO ONE
CHANNEL SLOPE	2.70000 %
MANNINGS N	0.035

FOR DESIGN DISCHARGE = 540.366 C.F.S. :

AREA OF FLOW	48.000 S.F.
WETTED PERIMETER	23.416 FT.
HYDRAULIC RADIUS	2.050 FT.
CHANNEL TOP WIDTH ...	22.000 FT.

NORMAL DEPTH OF FLOW	3.000 FT.
VELOCITY AT NORMAL DEPTH .	11.258 F.P.S.
CRITICAL DEPTH	3.531 FT.
CRITICAL VELOCITY	8.969 F.P.S.
CRITICAL SLOPE	1.30264 %

FLOW CONDITION IS SUPERCRITICAL

SUB BASIN 4C, REACH 5

CHANNEL CONFIGURATION IS TRAPEZOIDAL

*** SOLVING FOR DEPTH ***

BASE WIDTH	60.000 FT.
LEFT SIDE SLOPE	2.500 TO ONE
RIGHT SIDE SLOPE	2.500 TO ONE
CHANNEL SLOPE	0.30000 %
MANNINGS N	0.035

FOR DESIGN DISCHARGE = 7550.650 C.F.S. :

AREA OF FLOW	850.000 S.F.
WETTED PERIMETER	113.852 FT.
HYDRAULIC RADIUS	7.466 FT.
CHANNEL TOP WIDTH ...	110.000 FT.

NORMAL DEPTH OF FLOW	10.000 FT.
VELOCITY AT NORMAL DEPTH .	8.883 F.P.S.
CRITICAL DEPTH	7.111 FT.
CRITICAL VELOCITY	13.652 F.P.S.
CRITICAL SLOPE	1.22930 %

FLOW CONDITION IS SUBCRITICAL

SUB BASIN 5A, REACH 2

CHANNEL CONFIGURATION IS TRAPEZOIDAL

*** SOLVING FOR DEPTH ***

BASE WIDTH	15.000	FT.
LEFT SIDE SLOPE	2.000	TO ONE
RIGHT SIDE SLOPE	2.000	TO ONE
CHANNEL SLOPE	2.10000	%
MANNINGS N	0.040	

FOR DESIGN DISCHARGE = 576.665 C.F.S. :

AREA OF FLOW	63.000	S.F.
WETTED PERIMETER	28.416	FT.
HYDRAULIC RADIUS	2.217	FT.
CHANNEL TOP WIDTH ...	27.000	FT.

NORMAL DEPTH OF FLOW	3.000	FT.
VELOCITY AT NORMAL DEPTH .	9.153	F.P.S.
CRITICAL DEPTH	3.097	FT.
CRITICAL VELOCITY	8.786	F.P.S.
CRITICAL SLOPE	1.83920	%

FLOW CONDITION IS SUPERCRITICAL

SUB BASIN 5A, REACH 3

CHANNEL CONFIGURATION IS RECTANGULAR

*** SOLVING FOR DEPTH ***

BASE WIDTH	10.000 FT.
LEFT SIDE SLOPE	0.000 TO ONE
RIGHT SIDE SLOPE	0.000 TO ONE
CHANNEL SLOPE	1.10000 %
MANNINGS N	0.035

FOR DESIGN DISCHARGE = 303.319 C.F.S. :

AREA OF FLOW	40.000 S.F.
WETTED PERIMETER	18.000 FT.
HYDRAULIC RADIUS	2.222 FT.
CHANNEL TOP WIDTH ...	10.000 FT.

NORMAL DEPTH OF FLOW	4.000 FT.
VELOCITY AT NORMAL DEPTH .	7.583 F.P.S.
CRITICAL DEPTH	3.057 FT.
CRITICAL VELOCITY	9.922 F.P.S.
CRITICAL SLOPE	2.32549 %

FLOW CONDITION IS SUBCRITICAL

SUB BASIN 5B, REACH 3

CHANNEL CONFIGURATION IS TRAPEZOIDAL

*** SOLVING FOR DEPTH ***

BASE WIDTH	10.000 FT.
LEFT SIDE SLOPE	2.000 TO ONE
RIGHT SIDE SLOPE	2.000 TO ONE
CHANNEL SLOPE	0.40000 %
MANNINGS N	0.030

FOR DESIGN DISCHARGE = 242.651 C.F.S. :

AREA OF FLOW	48.000 S.F.
WETTED PERIMETER	23.416 FT.
HYDRAULIC RADIUS	2.050 FT.
CHANNEL TOP WIDTH ...	22.000 FT.

NORMAL DEPTH OF FLOW	3.000 FT.
VELOCITY AT NORMAL DEPTH .	5.055 F.P.S.
CRITICAL DEPTH	2.250 FT.
CRITICAL VELOCITY	7.438 F.P.S.
CRITICAL SLOPE	1.39955 %

FLOW CONDITION IS SUBCRITICAL

SUB BASIN 5C, REACH 2

CHANNEL CONFIGURATION IS TRAPEZOIDAL

*** SOLVING FOR DEPTH ***

BASE WIDTH	10.000 FT.
LEFT SIDE SLOPE	4.000 TO ONE
RIGHT SIDE SLOPE	4.000 TO ONE
CHANNEL SLOPE	2.80000 %
MANNINGS N	0.045

FOR DESIGN DISCHARGE = 244.048 C.F.S. :

AREA OF FLOW	36.000 S.F.
WETTED PERIMETER	26.492 FT.
HYDRAULIC RADIUS	1.359 FT.
CHANNEL TOP WIDTH ...	26.000 FT.

NORMAL DEPTH OF FLOW	2.000 FT.
VELOCITY AT NORMAL DEPTH .	6.779 F.P.S.
CRITICAL DEPTH	2.016 FT.
CRITICAL VELOCITY	6.701 F.P.S.
CRITICAL SLOPE	2.69560 %

FLOW CONDITION IS SUPERCRITICAL

SUB BASIN 5D, REACH 2

CHANNEL CONFIGURATION IS TRAPEZOIDAL

*** SOLVING FOR DEPTH ***

BASE WIDTH	10.000	FT.
LEFT SIDE SLOPE	4.000	TO ONE
RIGHT SIDE SLOPE	4.000	TO ONE
CHANNEL SLOPE	6.50000	%
MANNINGS N	0.045	

FOR DESIGN DISCHARGE = 371.837 C.F.S. :

AREA OF FLOW	36.000	S.F.
WETTED PERIMETER	26.492	FT.
HYDRAULIC RADIUS	1.359	FT.
CHANNEL TOP WIDTH ...	26.000	FT.

NORMAL DEPTH OF FLOW	2.000	FT.
VELOCITY AT NORMAL DEPTH .	10.329	F.P.S.
CRITICAL DEPTH	2.519	FT.
CRITICAL VELOCITY	7.353	F.P.S.
CRITICAL SLOPE	2.12341	%

FLOW CONDITION IS SUPERCRITICAL

SUB BASIN 5E, REACH 2

CHANNEL CONFIGURATION IS TRAPEZOIDAL

*** SOLVING FOR DEPTH ***

BASE WIDTH	10.000 FT.
LEFT SIDE SLOPE	2.000 TO ONE
RIGHT SIDE SLOPE	2.000 TO ONE
CHANNEL SLOPE	1.00000 %
MANNINGS N	0.035

FOR DESIGN DISCHARGE = 154.251 C.F.S. :

AREA OF FLOW	28.000 S.F.
WETTED PERIMETER	18.944 FT.
HYDRAULIC RADIUS	1.478 FT.
CHANNEL TOP WIDTH ...	18.000 FT.

NORMAL DEPTH OF FLOW	2.000 FT.
VELOCITY AT NORMAL DEPTH .	5.509 F.P.S.
CRITICAL DEPTH	1.724 FT.
CRITICAL VELOCITY	6.653 F.P.S.
CRITICAL SLOPE	1.84523 %

FLOW CONDITION IS SUBCRITICAL

SUB BASIN 5E, REACH 3

CHANNEL CONFIGURATION IS RECTANGULAR

*** SOLVING FOR DEPTH ***

BASE WIDTH	15.000 FT.
LEFT SIDE SLOPE	0.000 TO ONE
RIGHT SIDE SLOPE	0.000 TO ONE
CHANNEL SLOPE	1.00000 %
MANNINGS N	0.015

FOR DESIGN DISCHARGE = 402.990 C.F.S. :

AREA OF FLOW	30.000 S.F.
WETTED PERIMETER	19.000 FT.
HYDRAULIC RADIUS	1.579 FT.
CHANNEL TOP WIDTH ...	15.000 FT.

NORMAL DEPTH OF FLOW	2.000 FT.
VELOCITY AT NORMAL DEPTH .	13.433 F.P.S.
CRITICAL DEPTH	2.819 FT.
CRITICAL VELOCITY	9.530 F.P.S.
CRITICAL SLOPE	0.35563 %

FLOW CONDITION IS SUPERCRITICAL

SUB BASIN 5E, REACH 4

CHANNEL CONFIGURATION IS TRAPEZOIDAL

*** SOLVING FOR DEPTH ***

BASE WIDTH	15.000 FT.
LEFT SIDE SLOPE	2.000 TO ONE
RIGHT SIDE SLOPE	2.000 TO ONE
CHANNEL SLOPE	0.60000 %
MANNINGS N	0.035

FOR DESIGN DISCHARGE = 352.275 C.F.S. :

AREA OF FLOW	63.000 S.F.
WETTED PERIMETER	28.416 FT.
HYDRAULIC RADIUS	2.217 FT.
CHANNEL TOP WIDTH ...	27.000 FT.

NORMAL DEPTH OF FLOW	3.000 FT.
VELOCITY AT NORMAL DEPTH .	5.592 F.P.S.
CRITICAL DEPTH	2.312 FT.
CRITICAL VELOCITY	7.764 F.P.S.
CRITICAL SLOPE	1.74549 %

FLOW CONDITION IS SUBCRITICAL

SUB BASIN 5E, REACH 5

CHANNEL CONFIGURATION IS TRAPEZOIDAL

*** SOLVING FOR DEPTH ***

BASE WIDTH	20.000 FT.
LEFT SIDE SLOPE	2.000 TO ONE
RIGHT SIDE SLOPE	2.000 TO ONE
CHANNEL SLOPE	0.50000 %
MANNINGS N	0.030

FOR DESIGN DISCHARGE = 480.729 C.F.S. :

AREA OF FLOW	78.000 S.F.
WETTED PERIMETER	33.416 FT.
HYDRAULIC RADIUS	2.334 FT.
CHANNEL TOP WIDTH ...	32.000 FT.

NORMAL DEPTH OF FLOW	3.000 FT.
VELOCITY AT NORMAL DEPTH .	6.163 F.P.S.
CRITICAL DEPTH	2.405 FT.
CRITICAL VELOCITY	8.057 F.P.S.
CRITICAL SLOPE	1.19754 %

FLOW CONDITION IS SUBCRITICAL

SUB BASIN 5E, REACH 6

CHANNEL CONFIGURATION IS TRAPEZOIDAL

*** SOLVING FOR DEPTH ***

BASE WIDTH	10.000 FT.
LEFT SIDE SLOPE	20.000 TO ONE
RIGHT SIDE SLOPE	20.000 TO ONE
CHANNEL SLOPE	0.70000 %
MANNINGS N	0.030

FOR DESIGN DISCHARGE = 2458.360 C.F.S. :

AREA OF FLOW	360.000 S.F.
WETTED PERIMETER	170.200 FT.
HYDRAULIC RADIUS	2.115 FT.
CHANNEL TOP WIDTH ...	170.000 FT.

NORMAL DEPTH OF FLOW	4.000 FT.
VELOCITY AT NORMAL DEPTH .	6.829 F.P.S.
CRITICAL DEPTH	3.690 FT.
CRITICAL VELOCITY	7.950 F.P.S.
CRITICAL SLOPE	1.16173 %

FLOW CONDITION IS SUBCRITICAL

SUB BASIN 5F, REACH 1

CHANNEL CONFIGURATION IS TRAPEZOIDAL

*** SOLVING FOR DEPTH ***

BASE WIDTH	10.000 FT.
LEFT SIDE SLOPE	2.000 TO ONE
RIGHT SIDE SLOPE	2.000 TO ONE
CHANNEL SLOPE	9.50000 %
MANNINGS N	0.035

FOR DESIGN DISCHARGE = 138.599 C.F.S. :

AREA OF FLOW	12.000 S.F.
WETTED PERIMETER	14.472 FT.
HYDRAULIC RADIUS	0.829 FT.
CHANNEL TOP WIDTH ...	14.000 FT.

NORMAL DEPTH OF FLOW	1.000 FT.
VELOCITY AT NORMAL DEPTH .	11.550 F.P.S.
CRITICAL DEPTH	1.618 FT.
CRITICAL VELOCITY	6.472 F.P.S.
CRITICAL SLOPE	1.46397 %

FLOW CONDITION IS SUPERCRITICAL

SUB BASIN 5F, REACH 4

CHANNEL CONFIGURATION IS TRAPEZOIDAL

*** SOLVING FOR DEPTH ***

BASE WIDTH	40.000 FT.
LEFT SIDE SLOPE	1.000 TO ONE
RIGHT SIDE SLOPE	1.000 TO ONE
CHANNEL SLOPE	0.30000 %
MANNINGS N	0.015

FOR DESIGN DISCHARGE = 2171.970 C.F.S. :

AREA OF FLOW	176.000 S.F.
WETTED PERIMETER	51.314 FT.
HYDRAULIC RADIUS	3.430 FT.
CHANNEL TOP WIDTH ...	48.000 FT.

NORMAL DEPTH OF FLOW	4.000 FT.
VELOCITY AT NORMAL DEPTH .	12.341 F.P.S.
CRITICAL DEPTH	4.341 FT.
CRITICAL VELOCITY	11.284 F.P.S.
CRITICAL SLOPE	0.22544 %

FLOW CONDITION IS SUPERCRITICAL

SUB BASIN 5G, REACH 2

CHANNEL CONFIGURATION IS TRAPEZOIDAL

*** SOLVING FOR DEPTH ***

BASE WIDTH	10.000 FT.
LEFT SIDE SLOPE	3.000 TO ONE
RIGHT SIDE SLOPE	3.000 TO ONE
CHANNEL SLOPE	2.90000 %
MANNINGS N	0.045

FOR DESIGN DISCHARGE = 131.607 C.F.S. :

AREA OF FLOW	21.750 S.F.
WETTED PERIMETER	19.487 FT.
HYDRAULIC RADIUS	1.116 FT.
CHANNEL TOP WIDTH ...	19.000 FT.

NORMAL DEPTH OF FLOW	1.500 FT.
VELOCITY AT NORMAL DEPTH .	6.051 F.P.S.
CRITICAL DEPTH	1.497 FT.
CRITICAL VELOCITY	6.067 F.P.S.
CRITICAL SLOPE	2.92511 %

FLOW CONDITION IS SUBCRITICAL

SUB BASIN 6B, REACH 4

CHANNEL CONFIGURATION IS TRAPEZOIDAL

*** SOLVING FOR DEPTH ***

BASE WIDTH	35.000 FT.
LEFT SIDE SLOPE	3.000 TO ONE
RIGHT SIDE SLOPE	3.000 TO ONE
CHANNEL SLOPE	1.00000 %
MANNINGS N	0.035

FOR DESIGN DISCHARGE = 3602.930 C.F.S. :

AREA OF FLOW	318.000 S.F.
WETTED PERIMETER	72.947 FT.
HYDRAULIC RADIUS	4.359 FT.
CHANNEL TOP WIDTH ...	71.000 FT.

NORMAL DEPTH OF FLOW	6.000 FT.
VELOCITY AT NORMAL DEPTH .	11.330 F.P.S.
CRITICAL DEPTH	5.803 FT.
CRITICAL VELOCITY	11.847 F.P.S.
CRITICAL SLOPE	1.15768 %

FLOW CONDITION IS SUBCRITICAL

APPENDIX "I"

MISCELLANEOUS DESIGN CHARTS FOR TIME OF CONCENTRATION ESTIMATION

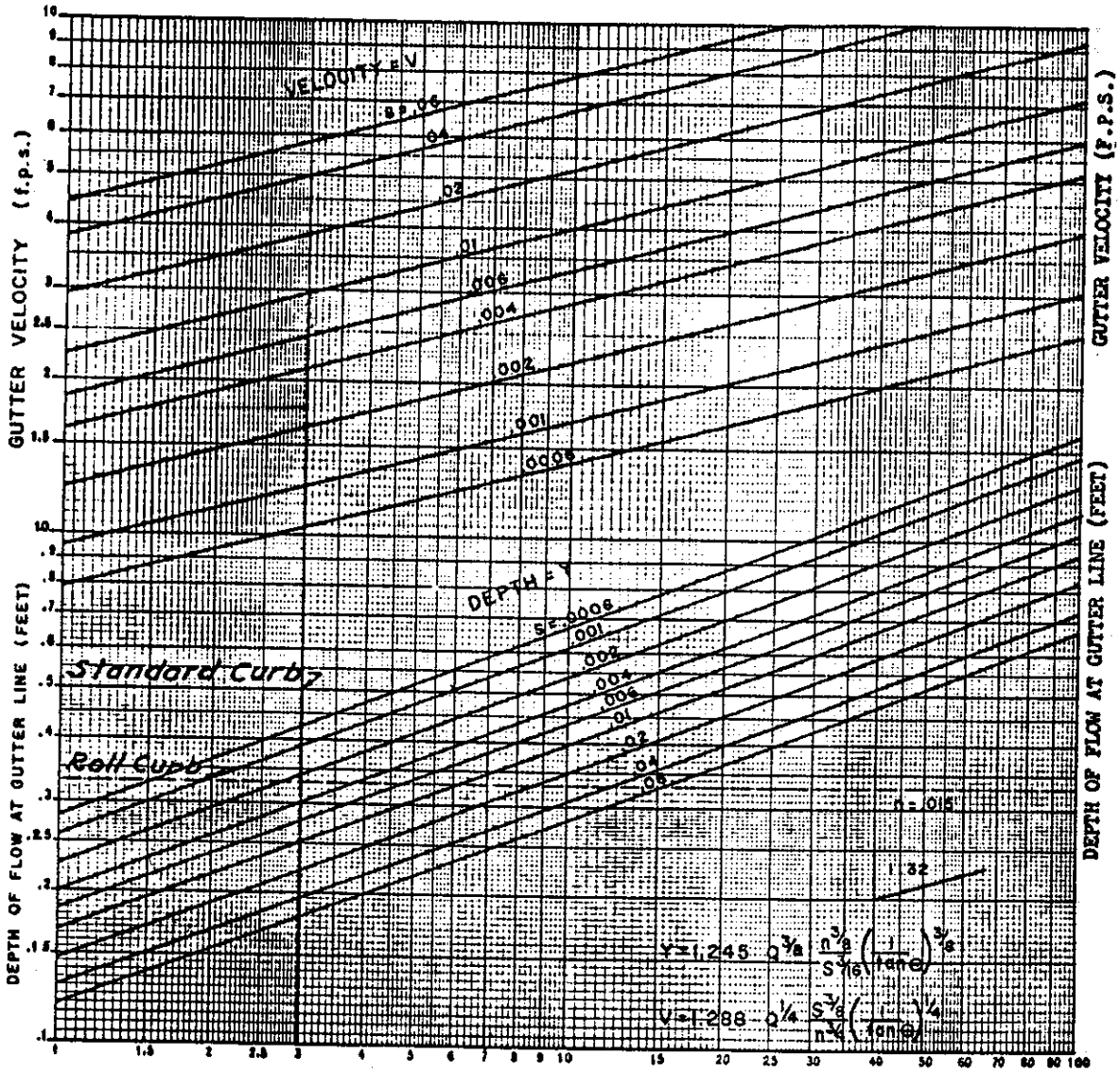

GUTTER FLOW = Q (C.F.S.)

Sheet flow

Sheet flow is flow over plane surfaces. It usually occurs in the headwater of streams. With sheet flow, the friction value (Manning's n) is an effective roughness coefficient that includes the effect of raindrop impact; drag over the plane surface; obstacles such as litter, crop ridges, and rocks; and erosion and transportation of sediment. These n values are for very shallow flow depths of about 0.1 foot or so. Table 3-1 gives Manning's n values for sheet flow for various surface conditions.

For sheet flow of less than 300 feet, use Manning's kinematic solution (Overton and Meadows 1976) to compute T_t:

$$T_t = \frac{0.007\,(nL)^{0.8}}{(P_2)^{0.5}\,s^{0.4}} \qquad \text{[Eq. 3-3]}$$

Table 3-1.—Roughness coefficients (Manning's n) for sheet flow

Surface description	n[1]
Smooth surfaces (concrete, asphalt, gravel, or bare soil)	0.011
Fallow (no residue)	0.05
Cultivated soils:	
Residue cover ≤20%	0.06
Residue cover >20%	0.17
Grass:	
Short grass prairie	0.15
Dense grasses[2]	0.24
Bermudagrass	0.41
Range (natural)	0.13
Woods:[3]	
Light underbrush	0.40
Dense underbrush	0.80

[1]The n values are a composite of information compiled by Engman (1986).
[2]Includes species such as weeping lovegrass, bluegrass, buffalo grass, blue grama grass, and native grass mixtures.
[3]When selecting n, consider cover to a height of about 0.1 ft. This is the only part of the plant cover that will obstruct sheet flow.

where

T_t = travel time (hr),
n = Manning's roughness coefficient (table 3-1),
L = flow length (ft),
P_2 = 2-year, 24-hour rainfall (in), and
s = slope of hydraulic grade line (land slope, ft/ft).

This simplified form of the Manning's kinematic solution is based on the following: (1) shallow steady uniform flow, (2) constant intensity of rainfall excess (that part of a rain available for runoff), (3) rainfall duration of 24 hours, and (4) minor effect of infiltration on travel time. Rainfall depth can be obtained from appendix B.

Shallow concentrated flow

After a maximum of 300 feet, sheet flow usually becomes shallow concentrated flow. The average velocity for this flow can be determined from figure 3-1, in which average velocity is a function of watercourse slope and type of channel. For slopes less than 0.005 ft/ft, use equations given in appendix F for figure 3-1. Tillage can affect the direction of shallow concentrated flow. Flow may not always be directly down the watershed slope if tillage runs across the slope.

After determining average velocity in figure 3-1, use equation 3-1 to estimate travel time for the shallow concentrated flow segment.

Open channels

Open channels are assumed to begin where surveyed cross section information has been obtained, where channels are visible on aerial photographs, or where blue lines (indicating streams) appear on United States Geological Survey (USGS) quadrangle sheets. Manning's equation or water surface profile information can be used to estimate average flow velocity. Average flow velocity is usually determined for bank-full elevation.

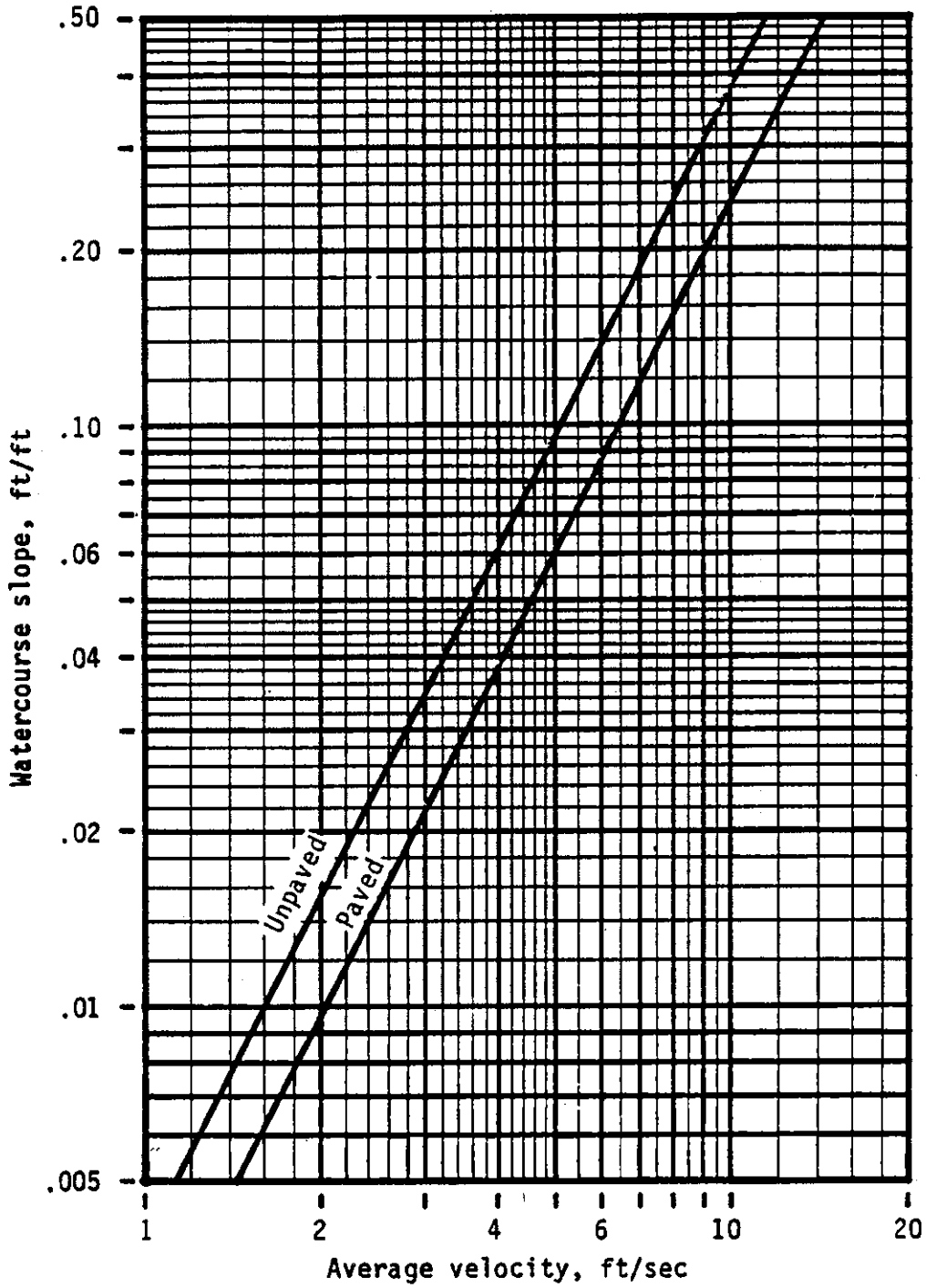

Figure 3-1.—Average velocities for estimating travel time for shallow concentrated flow.

APPENDIX "J"

HEC-1 HYDROLOGY RESULTS FOR A 10-YEAR 24-HOUR DURATION STORM

```
*************************************
*                                   *
*  FLOOD HYDROGRAPH PACKAGE  (HEC-1)  *
*     BY THE COE IN FEBRUARY 1981     *
*          REVISED 02 AUG 88          *
*                                   *
* RUN DATE  01/16/1990  TIME  14:43:11 *
*                                   *
*************************************
```

```
*************************************
*                                   *
*    DODSON AND ASSOCIATES, INC.    *
*  HYDROLOGIST AND CIVIL ENGINEERS  *
*     7015 W TIDWELL SUITE 107      *
*       HOUSTON, TEXAS  77092       *
*         (713) 895-8322            *
*                                   *
*************************************
```

```
X     X  XXXXXXX   XXXXX          X
X     X  X       X     X        XX
X     X  X       X              X
XXXXXXX  XXXX     X       XXXXX  X
X     X  X       X              X
X     X  X       X     X        X
X     X  XXXXXXX   XXXXX        XXX
```

THIS PROGRAM REPLACES ALL PREVIOUS VERSIONS OF HEC-1 KNOWN AS HEC1 (JAN 73), HEC1GS, HEC1DB, AND HEC1KW.

THE DEFINITIONS OF VARIABLES -RTIMP- AND -RTIOR- HAVE CHANGED FROM THOSE USED WITH THE 1973-STYLE INPUT STRUCTURE.
THE DEFINITION OF -AMSKK- ON RM-CARD WAS CHANGED WITH REVISIONS DATED 28 SEP 81. THIS IS THE FORTRAN77 VERSION
NEW OPTIONS: DAMBREAK OUTFLOW SUBMERGENCE , SINGLE EVENT DAMAGE CALCULATION, DSS:WRITE STAGE FREQUENCY,
DSS:READ TIME SERIES AT DESIRED CALCULATION INTERVAL LOSS RATE:GREEN AND AMPT INFILTRATION
KINEMATIC WAVE: NEW FINITE DIFFERENCE ALGORITHM

HEC-1 INPUT PAGE 1

```
LINE        ID.......1.......2.......3.......4.......5.......6.......7.......8.......9......10

  1         ID  FCDMC CAVE CREEK FIS, JOB NO. 7833
  2         ID  10-YEAR 24-HR DURATION STORM
  3         ID  FILE = 783310Y.IN : 01/12/90 trl
  4         ID  STORM PRECIP : 5 SM Area = 2.48", 10 SM = 2.40", 15 SM = 2.35", 20 SM = 2.33"
  5         ID  STORM PRECIP : 35 SM = 2.28"
            *
            *
            * **** Revisions:
            *
            *       10/15/89 trl - File submitted to agencies as part of Prelim. Report.
            *
            *       10/16/89 trl - Changed Basin 1C LU card.  Was - LU,,.50,.20,0.6
            *                                                 Now - LU,.50,.20,0.6
            *
            *       12/12/89 trl - The following changes were made in order to address
            *                      Amir Motamedi's concerns that the calculated routing
            *                      flow times did not agree with the input Muskingum
```

K coefficient. The difference in timing could affect combined peak flow rates at combination points.

1. RM15-16 : Changed NSteps from 4 to 5.
2. RM20-23 : Changed NSteps from 4 to 3.
3. RM23-24 : Changed NSteps from 5 to 6.
4. RM26-25 : Changed NSteps from 1 to 2.
5. RM25-17 : Changed NSteps from 1 to 2.
6. RM18-21 : Changed NSteps from 1 to 2.
7. RM17-18 : Changed NSteps from 1 to 3.
8. RM19-20 : Changed NSteps from 2 to 3.
9. RM21-22 : Changed NSteps from 1 to 2.
10. RM2-3 : Changed NSteps from 2 to 3.
11. RM4-5 : Changed NSteps from 4 to 5.
12. RM3B-8 : Changed NSteps from 5 to 6.
13. RM8-9 : Changed NSteps from 2 to 3.
14. RM5-6 : Changed NSteps from 1 to 2.
15. RM10-7 : Changed NSteps from 6 to 5 and X from .3 to .2.
16. RM7-11 : Changed NSteps from 1 to 4.
17. RM5A-27 : Changed NSteps from 2 to 3.
18. RM26-28 : Changed NSteps from 2 to 3.
19. RM5D-29 : Changed NSteps from 3 to 4.
20. RM12-13 : Changed NSteps from 1 to 2.

12/13/89 trl - The following changes were made in order to address ADWR'S concerns regarding the Normal Depth Channel rout cross sections.

1. RS25-17 : The cross section was extended to 8 effective points.
2. RS17-18 : The cross section was extended to 8 effective points.
3. RS18-21 : The cross section was extended to 8 effective points.
4. RS21-22 : The cross section was extended to 8 effective points, and sufficient depth was added to eliminate the overtopping condition.
5. RS22-6 : The cross section was extended to 8 effective points.
6. RS7-11 : The cross section was changed to 8 effective points, and sufficient depth was added to eliminate the overtopping condition.

12/14/89 trl - This file was created to account for Aerial Reduction Factor changes requested by Amir Motamedi. They account for watershed areas of 5, 10, 15, 20 and 35 square miles for a 100-year storm.

01/12/90 trl - The following changes were made in order to address FCDMC concerns regarding the Time of Concentration computations for SubBasins 1B and 1C.

1. SubBasin 1B: The average flow velocity for the channelized portion was changed from 13.4 fps to 5.0 fps. This was done after a more in-depth look at actual

```
                    *                        field conditions.  See the appropriate Appendix
                    *                        for more detail.  The resultant Lag is 0.29 hrs.
                    *
                    *          2. SubBasin 1C: The average flow velocity for the channelized
                    *                        portion was changed from 10.1 fps to 5.9 fps.
                    *                        This was done after a more in-depth look at actual
                    *                        field conditions.  The resultant Lag is 0.45 hrs.
                    *
*** FREE ***
                    *DIAGRAM
                                                HEC-1 INPUT                                    PAGE  2

        LINE        ID.......1.......2.......3.......4.......5.......6.......7.......8.......9......10

          6         IT      5                   300
          7         IO      5      0
          8         IN     15
                    *
                    *  JR RATIO'S : 1.0=5-SM, 0.968=10-SM, 0.948=15-SM, 20-SM=0.940, 35-SM=0.919
                    *
          9         JR    FREC     1.0   0.968   0.948   0.940   0.919
                    *
                    *
                    *    EAST FORK OF CAVE CREEK
                    *    SUB-BASINS 2A-2P
                    *
                    *

         10         KK      2A
         11         KM      RUNOFF GENERATED ON SUB-BASIN 2A
         12         BA   0.870
         13         PB    2.48
                    *
                    *     FCDMC SCS TYPE II RAINFALL DISTRIBUTION - 15 MIN INTERVAL
                    *
         14         PC    .000    .002    .005    .008    .011    .014    .017    .020    .023    .026
         15         PC    .029    .032    .035    .038    .041    .044    .048    .052    .056    .060
         16         PC    .064    .068    .072    .076    .080    .085    .090    .095    .100    .105
         17         PC    .110    .115    .120    .126    .133    .140    .147    .155    .163    .172
         18         PC    .181    .191    .203    .218    .236    .257    .283    .387    .663    .707
         19         PC    .735    .758    .776    .791    .804    .815    .825    .834    .842    .849
         20         PC    .856    .863    .869    .875    .881    .887    .893    .898    .903    .908
         21         PC    .913    .918    .922    .926    .930    .934    .938    .942    .946    .950
         22         PC    .953    .956    .959    .962    .965    .968    .971    .974    .977    .980
         23         PC    .983    .986    .989    .992    .995    .998   1.00
         24         LU     .37     .20    19.6
         25         UD     .25
                    *

         26         KK      2B
         27         KM      RUNOFF GENERATED ON SUB-BASIN 2B
         28         BA   0.414
         29         LU     .37     .25    12.0
         30         UD     .19
                    *
```

```
          *
          * NEXT OPERATION IS TOTAL FLOW AT BEARDSLEY ROAD EAST OF CAVE CREEK ROAD,
          *
          *

 31       KK    HC14
 32       KM      COMBINE SURFACE RUNOFF AT NODE 14
 33       KM         2A+2B
 34       HC       2
          *
                                   HEC-1 INPUT                                    PAGE  3

LINE      ID.......1.......2.......3.......4.......5.......6.......7.......8.......9......10


 35       KK RM14-15
 36       KM      MUSKINGUM ROUTE IN CHANNEL FROM NODE 14 TO NODE 15
 37       KM                                        1) Reach Length= 5600 FT.
 38       KM                                        2) Average Velocity= 4.9 FPS
 39       RM       4     .32      .3
          *

 40       KK      2C
 41       KM      RUNOFF GENERATED ON SUB-BASIN 2C
 42       BA   1.177
 43       LU    .32     .25    53.3
 44       UD    .61
          *

 45       KK    DT2C
 46       KM   THROW AWAY 10-YR 2-HR RETENTION VOLUME:1) 0.1 AC-FT FROM SUB-BASIN 2C
 47       KM                                            (Hydrograph identified as OR-2C)
 48       KM                                         2) Balance of runoff continues on.
 49       KM                                            (Hydrograph identified as DT2C)
 50       DT   OR-2C     0.1
 51       DI       0   10000
 52       DQ       0   10000
          *
          *
          * NEXT OPERATION IS TOTAL FLOW AT UNION HILLS DRIVE EAST OF CAVE CREEK ROAD.
          *
          *

 53       KK    HC15
 54       KM      COMBINE SURFACE RUNOFF AT NODE 15
 55       KM        RM14-15 + DT2C
 56       HC       2
          *

 57       KK RM15-16
 58       KM      MUSKINGUM ROUTE IN CHANNEL AND STREET FROM NODE 15 TO NODE 16
 59       KM                                        1) Reach Length= 8000 FT.
 60       KM                                        2) Average Velocity= 5.7 FPS
 61       RM       5     .39      .3
          *
```

```
62        KK     2E
63        KM     RUNOFF GENERATED ON SUB-BASIN 2E
64        BA  1.095
65        LU    .33     .22    39.7
66        UD    .42
          *
          *
          * NEXT OPERATION IS TOTAL FLOW AT 20TH ST AND BELL ROAD.
          *
          *
```



```
LINE      ID.......1.......2.......3.......4.......5.......6.......7.......8.......9......10

67        KK   HC16
68        KM     COMBINE SURFACE RUNOFF AT NODE 16
69        KM       RM15-16 + 2E
70        HC      2
          *

71        KK RM16-17
72        KM     MUSKINGUM ROUTE IN STREET FROM NODE 16 TO NODE 17
73        KM                                    1) Reach Length= 3950 FT.
74        KM                                    2) Average Velocity= 4.0 FPS
75        RM      3    .27     .3
          *

76        KK     2H
77        KM     RUNOFF GENERATED ON SUB-BASIN 2H
78        BA  1.425
79        LU    .32     .23    44.4
80        UD    .81
          *

81        KK   DT2H
82        KM   THROW AWAY 10-YR 2-HR RETENTION VOLUME:1) 11.6 AC-FT FROM SUB-BASIN 2H
83        KM                                            (Hydrograph identified as OR-2H)
84        KM                                          2) Balance of runoff continues on.
85        KM                                            (Hydrograph identified as DT2H)
86        DT  OR-2H   11.6
87        DI      0  10000
88        DQ      0  10000
          *

89        KK   HC17
90        KM     COMBINE SURFACE RUNOFF AT NODE 17
91        KM       RM16-17 + DT2H
92        HC      2
          *
          *
          * ****** BREAK SEQUENCE AT 16TH STREET 1000' NORTH OF PARADISE LN.
          *          MOVE UP TO SUB-BASIN 2D
          *
```

```
        *

 93     KK     2D
 94     KM     RUNOFF GENERATED ON SUB-BASIN 2D
 95     BA  1.191
 96     LU    .34     .25    32.8
 97     UD    .65
        *

 98     KK   DT2D
 99     KM   THROW AWAY 10-YR 2-HR RETENTION VOLUME:1) 4.0 AC-FT FROM SUB-BASIN 2D
100     KM                                             (Hydrograph identified as OR-2D)
101     KM                                          2) Balance of runoff continues on.
102     KM                                             (Hydrograph identified as DT2D)
103     DT   OR-2D     4.0
```



```
LINE    ID.......1.......2.......3.......4.......5.......6.......7.......8.......9......10

104     DI      0  10000
105     DQ      0  10000
        *

106     KK   DT2DS
107     KM   SPLIT FLOW AT INTERSECTION OF 32nd ST AND BELL RD.
108     KM
109     KM    SEND FLOW SOUTH IN 32nd STREET OUT OF WATERSHED IN STREET AND 60" PIPE.
110     KM    (Hydrograph identified as FL-2D) (160 cfs in PIPE)
111     KM
112     KM    REMAINDER FLOWS WEST IN BELL RD.  (Hydrograph identified as DT2D)
113     KM
114     DT   FL-2D
115     DI      0     185     243    1947    5014
116     DQ      0     160     160    1093    2655
        *

117     KK RM2D-23
118     KM     MUSKINGUM ROUTE IN STREET FROM SUB-BASIN 2D TO NODE 23
119     KM                                          1) Reach Length= 3900 FT.
120     KM                                          2) Average Velocity= 3.5 FPS
121     RM      3     .31      .2
        *

122     KK     2P
123     KM     RUNOFF GENERATED ON SUB-BASIN 2P
124     BA  0.592
125     LU    .31     .25    55.7
126     UD    .53
        *

127     KK   DT2P
128     KM   THROW AWAY 10-YR 2-HR RETENTION VOLUME:1) 1.8 AC-FT FROM SUB-BASIN 2P
129     KM                                             (Hydrograph identified as OR-2P)
130     KM                                          2) Balance of runoff continues on.
131     KM                                             (Hydrograph identified as DT2P)
```

```
132        DT   OR-2P     1.8
133        DI      0   10000
134        DQ      0   10000
           *

135        KK    HC23
136        KM      COMBINE SURFACE RUNOFF AT NODE 23
137        KM        RM2D-23 + DT2P
138        HC      2
           *

139        KK RM23-24
140        KM      MUSKINGUM ROUTE IN STREET FROM NODE 23 TO NODE 24
141        KM                                      1) Reach Length= 4400 FT.
142        KM                                      2) Average Velocity= 2.6 FPS
143        KM                                      3) .05 hrs added to K for reach
144        KM                                         RM24-25.
145        RM      6     .52      .3
           *
```



```
LINE       ID.......1.......2.......3.......4.......5.......6.......7.......8.......9......10

146        KK      2F
147        KM      RUNOFF GENERATED ON SUB-BASIN 2F
148        KM          Lag lengthened 0.5 hrs to account for reach RM24-25.
149        BA   0.952
150        LU     .33     .23    58.0
151        UD     .45
           *

152        KK    DT2F
153        KM   THROW AWAY 10-YR 2-HR RETENTION VOLUME:1) 3.9 AC-FT FROM SUB-BASIN 2F
154        KM                                            (Hydrograph identified as OR-2F)
155        KM                                          2) Balance of runoff continues on.
156        KM                                            (Hydrograph identified as DT2F)
157        DT   OR-2F     3.9
158        DI      0   10000
159        DQ      0   10000
           *
           *
           * NEXT OPERATION IS TOTAL FLOW IN EAST FORK AT CAVE CREEK ROAD
           *  600' SOUTH OF PARADISE LN.
           *
           *

160        KK    HC24
161        KM      COMBINE SURFACE RUNOFF AT NODE 24
162        KM        RM23-24 + DT2F
163        KO                                  21
164        HC      2
           *
           * ***** REACH IS TOO SHORT FOR A STABLE ROUTE, ADD TO RM23-24 AND EXTEND LAG
           *       for SUB-BASIN 2F
```

```
          *
          * KK,RM24-25
          * KM    MUSKINGUM ROUTE IN CHANNEL FROM NODE 24 TO NODE 25
          * KM                                        1) Reach Length= 1200 FT.
          * KM                                        2) Average Velocity= 6.2 FPS
          * RM,1,.05,.3
          *

165       KK     2G
166       KM     RUNOFF GENERATED ON SUB-BASIN 2G
167       BA   0.917
168       LU    .33     .16    29.2
169       UD    .39
          *

170       KK RM2G-25
171       KM     MUSKINGUM ROUTE IN CHANNEL FROM SUB-BASIN 2G TO NODE 25
172       KM                                        1) Reach Length= 2350 FT.
173       KM                                        2) Average Velocity= 5.3 FPS
174       RM      2     .12      .3
          *
          *
          * NEXT OPERATION IS TOTAL FLOW IN EAST FORK 1350' WEST OF CAVE CREEK ROAD
          *  AND 400' SOUTH OF PARADISE LANE.
          *
          *
                                   HEC-1 INPUT                                    PAGE  7

LINE      ID.......1.......2.......3.......4.......5.......6.......7.......8.......9......10


175       KK    HC25
176       KM     COMBINE SURFACE RUNOFF AT NODE 25
177       KM       HC24 + RM2G-25
178       HC      2
          *

179       KK RS25-17
180       KM     NORMAL DEPTH CHANNEL ROUTE FROM NODE 25 TO NODE 17
181       KM                                        1) Reach Length= 4400 FT.
182       KM                                        2) Average Velocity= 6.8 FPS
183       RS      2   FLOW     -1
184       RC   .035    .03   .035   4400   .003   1416
185       RX      7     50     90    100    140    150    190    220
186       RY   1416   1415   1414   1409   1409   1414   1415   1416
          *
          *
          * NEXT OPERATION IS TOTAL FLOW AT 16TH ST 1000' NORTH OF PARADISE LANE
          *
          *

187       KK  HC17.1
188       KM     COMBINE SURFACE RUNOFF AT NODE 17
189       KM       HC17 + RS25-17
190       HC      2
```

```
          *
191       KK RS17-18
192       KM     NORMAL DEPTH CHANNEL ROUTE FROM NODE 17 TO NODE 18
193       KM                                    1) Reach Length= 5250 FT.
194       KM                                    2) Average Velocity= 7.0 FPS
195       RS      3   FLOW     -1
196       RC   .035    .03   .035   5250   .005   1391
197       RX     15     50     84    100    140    156    190    231
198       RY   1391   1390   1389   1381   1381   1389   1390   1391
          *
          *
          * ****** BREAK SEQUENCE AT 7TH STREET 1000' SOUTH OF BELL ROAD.
          *         MOVE UP TO SUB-BASIN 2J
          *
          *

199       KK     2J
200       KM     RUNOFF GENERATED ON SUB-BASIN 2J
201       BA  0.704
202       LU    .37    .20   24.6
203       UD    .71
          *

204       KK   DT2J
205       KM  THROW AWAY 10-YR 2-HR RETENTION VOLUME:1) 2.4 AC-FT FROM SUB-BASIN 2J
206       KM                                            (Hydrograph identified as OR-2J)
207       KM                                         2) Balance of runoff continues on.
208       KM                                            (Hydrograph identified as DT2J)
209       DT  OR-2J    2.4
                                   HEC-1 INPUT                                    PAGE  8

LINE      ID.......1.......2.......3.......4.......5.......6.......7.......8.......9......10

210       DI      0  10000
211       DQ      0  10000
          *

212       KK RM2J-19
213       KM     MUSKINGUM ROUTE IN STREET FROM NODE 2J TO NODE 19
214       KM                                    1) Reach Length= 7600 FT.
215       KM                                    2) Average Velocity= 4.0 FPS
216       RM      3    .53     .2
          *

217       KK     2I
218       KM     RUNOFF GENERATED ON SUB-BASIN 2I
219       BA  0.985
220       LU    .37    .24   40.3
221       UD    .48
          *

222       KK   DT2I
223       KM  THROW AWAY 10-YR 2-HR RETENTION VOLUME:1) 7.7 AC-FT FROM SUB-BASIN 2I
224       KM                                            (Hydrograph identified as OR-2I)
```

```
225     KM                                  2) Balance of runoff continues on.
226     KM                                     (Hydrograph identified as DT2I)
227     DT  OR-2I    7.7
228     DI     0  10000
229     DQ     0  10000
        *

230     KK RM2I-19
231     KM     MUSKINGUM ROUTE IN STREET FROM NODE 2I TO NODE 19
232     KM                                  1) Reach Length= 2650 FT.
233     KM                                  2) Average Velocity= 4.0 FPS
234     RM     1    .18     .2
        *

235     KK     2K
236     KM     RUNOFF GENERATED ON SUB-BASIN 2K
237     BA  1.336
238     LU   .36    .24   42.3
239     UD   .38
        *

240     KK   DT2K
241     KM  THROW AWAY 10-YR 2-HR RETENTION VOLUME:1) 7.7 AC-FT FROM SUB-BASIN 2K
242     KM                                     (Hydrograph identified as OR-2K)
243     KM                                  2) Balance of runoff continues on.
244     KM                                     (Hydrograph identified as DT2K)
245     DT  OR-2K    7.7
246     DI     0  10000
247     DQ     0  10000
        *
        *
        * NEXT OPERATION IS TOTAL FLOW IN THE EAST FORK AT 7th STREET AND BELL ROAD.
        *
        *
```

HEC-1 INPUT PAGE 9

```
LINE    ID.......1.......2.......3.......4.......5.......6.......7.......8.......9......10

248     KK   HC19
249     KM     COMBINE SURFACE RUNOFF AT NODE 19
250     KM       RM2J-19 + RM2I-19 + DT2K
251     HC     3
        *

252     KK   DT19
253     KM  SPLIT FLOW AT INTERSECTION OF 7th ST AND BELL RD.
254     KM
255     KM    SEND FLOW WEST IN BELL ROAD TO NODE 20 IN STREET 84" & 36" PIPES.
256     KM      (Hydrograph identified as FL-19) (300 cfs total in PIPES)
257     KM
258     KM    REST FLOWS SOUTH IN 7tH ST TO NODE 18. (Hydrograph identified as DT19)
259     KM
260     DT  FL-19
261     DI     0    309    336   5556
```

```
262        DQ      0      9     36    743
           *

263        KK RM19-18
264        KM     MUSKINGUM ROUTE IN CHANNEL FROM NODE 19 TO NODE 18
265        KM                                   1) Reach Length= 1000 FT.
266        KM                                   2) Average Velocity= 3.6 FPS
267        RM      1    .00     .3
           *
           *
           * NEXT OPERATION IS TOTAL FLOW IN EAST FORK AT 7th STREET
           *  1000' SOUTH OF BELL ROAD,
           *
           *

268        KK   HC18
269        KM     COMBINE SURFACE RUNOFF AT NODE 18
270        KM       DT19 + RS17-18
271        HC      2
           *

272        KK RS18-21
273        KM     NORMAL DEPTH CHANNEL ROUTE FROM NODE 18 TO NODE 21
274        KM                                   1) Reach Length= 3700 FT.
275        KM                                   2) Average Velocity= 10.7 FPS
276        RS      2   FLOW     -1
277        RC   .035    .03   .035   3700   .007   1371
278        RX      0     10     20     45     95    120    130    140
279        RY   1371  1370.5   1370   1360   1360   1370  1370.5   1371
           *
           *
           * ##### BREAK SEQUENCE AND JUMP TO BACK TO FLOW DIVERTED WEST
           *        FROM 7th ST & BELL RD.
           *
           *
```



```
LINE       ID.......1.......2.......3.......4.......5.......6.......7.......8.......9......10

280        KK   FL-19
281        KM    RECALL DIVERTED HYDROGRAPH FROM 7th ST AND BELL RD.
282        DR   FL-19
           *

283        KK RM19-20
284        KM     MUSKINGUM ROUTE IN STREET FROM NODE 19 TO NODE 20
285        KM                                   1) Reach Length= 2350 FT.
286        KM                                   2) Average Velocity= 3.0 FPS
287        RM      3    .22     .3
           *

288        KK     2L
289        KM     RUNOFF GENERATED ON SUB-BASIN 2L
290        BA   0.601
```

```
291        LU    .31     .25    66.2
292        UD    .33
           *

293        KK    DT2L
294        KM   THROW AWAY 10-YR 2-HR RETENTION VOLUME:1) 2.0 AC-FT FROM SUB-BASIN 2L
295        KM                                            (Hydrograph identified as OR-2L)
296        KM                                         2) Balance of runoff continues on.
297        KM                                            (Hydrograph identified as DT2L)
298        DT   OR-2L    2.0
299        DI      0   10000
300        DQ      0   10000
           *

301        KK    HC20
302        KM      COMBINE SURFACE RUNOFF AT NODE 20
303        KM        RM19-20 + DT2L
304        HC      2
           *

305        KK RM20-21
306        KM      MUSKINGUM ROUTE IN CHANNEL FROM NODE 20 TO NODE 21
307        KM                                         1) Reach Length= 3150 FT.
308        KM                                         2) Average Velocity= 5.2 FPS
309        RM      2     .17      .3
           *

310        KK      2M
311        KM      RUNOFF GENERATED ON SUB-BASIN 2M
312        BA   1.174
313        LU    .34     .21    40.6
314        UD    .24
           *
```



```
LINE       ID.......1.......2.......3.......4.......5.......6.......7.......8.......9......10

315        KK    DT2M
316        KM   THROW AWAY 10-YR 2-HR RETENTION VOLUME:1) 8.9 AC-FT FROM SUB-BASIN 2M
317        KM                                            (Hydrograph identified as OR-2M)
318        KM                                         2) Balance of runoff continues on.
319        KM                                            (Hydrograph identified as DT2M)
320        DT   OR-2M    8.9
321        DI      0   10000
322        DQ      0   10000
           *
           *
           * NEXT OPERATION IS TOTAL FLOW AT PARADISE LANE AND CENTRAL AVE.
           *
           *

323        KK    HC21
324        KM      COMBINE SURFACE RUNOFF AT NODE 21
325        KM        RM20-21 + RM18-21 + DT2M
```

```
326        HC      3
           *

327        KK RS21-22
328        KM     NORMAL DEPTH CHANNEL ROUTE FROM NODE 21 TO NODE 22
329        KM                                    1) Reach Length= 4150 FT.
330        KM                                    2) Average Velocity= 7.1 FPS
331        RS      2   FLOW     -1
332        RC    .04   .035    .04   4150   .004   1355
333        RX      0     60    110    123    193    203    253    300
334        RY   1355   1352   1352   1346   1346   1351   1353   1355
           *

335        KK     20
336        KM     RUNOFF GENERATED ON SUB-BASIN 20
337        BA   .639
338        LU    .31    .23   38.1
339        UD    .67
           *

340        KK   DT20
341        KM   THROW AWAY 10-YR 2-HR RETENTION VOLUME:1) 2.4 AC-FT FROM SUB-BASIN 20
342        KM                                            (Hydrograph identified as OR-20)
343        KM                                         2) Balance of runoff continues on.
344        KM                                            (Hydrograph identified as DT20)
345        DT   OR-20    2.4
346        DI      0  10000
347        DQ      0  10000
           *
           *
           * NEXT OPERATION IS TOTAL FLOW AT CORAL GABLES AND 7th AVENUE.
           *
           *
```



```
LINE       ID.......1.......2.......3.......4.......5.......6.......7.......8.......9......10

348        KK   HC22
349        KM     COMBINE SURFACE RUNOFF AT NODE 22
350        KM       RM21-22 + DT20
351        HC      2
           *

352        KK  RS22-6
353        KM     NORMAL DEPTH CHANNEL ROUTE FROM NODE 22 TO NODE 6
354        KM                                    1) Reach Length= 2700 FT.
355        KM                                    2) Average Velocity= 8.8 FPS
356        RS      1   FLOW     -1
357        RC    .04   .035    .04   2700   .005   1337
358        RX      0     70     85     97    157    169    219    279
359        RY   1337   1334   1332   1326   1326   1332   1334   1337
           *

360        KK     2N
```

```
361        KM     RUNOFF GENERATED ON SUB-BASIN 2N
362        BA  0.475
363        LU    .31     .16    33.3
364        UD    .20
           *
           *
           * NEXT OPERATION IS TOTAL FLOW IN THE EAST FORK AT CAVE CREEK.
           *
           *

365        KK    HC6
366        KM     COMBINE SURFACE RUNOFF AT NODE 6
367        KM       RM22-6 + 2N
368        KO                                  21
369        HC      2
           *
           *
           *
           *
           *   CAVE CREEK
           *   SUB-BASINS 1A-1D, 3A-3D, 4A-4C AND 6A-6B
           *
           *
           *
           *

370        KK     1A
371        KM     RUNOFF GENERATED ON SUB-BASIN 1A
372        BA  0.903
373        LU    .48     .13      0
374        UD    .53
           *
                                HEC-1 INPUT                                    PAGE 13

LINE       ID.......1.......2.......3.......4.......5.......6.......7.......8.......9......10


375        KK  RM1A-1
376        KM     MUSKINGUM ROUTE IN CHANNEL FROM NODE 1A TO NODE 1
377        KM                                     1) Reach Length= 9900 FT.
378        KM                                     2) Average Velocity= 5.4 FPS
379        RM      3    .51     .2
           *

380        KK     1B
381        KM     RUNOFF GENERATED ON SUB-BASIN 1B
382        BA  1.601
383        LU    .48     .21      0
384        UD    .29
           *
           *
           * NEXT OPERATION IS TOTAL FLOW IN CAVE CREEK 850' NORTH OF THE C.A.P.
           *
           *
```

```
385        KK     HC1
386        KM      COMBINE SURFACE RUNOFF AT NODE 1
387        KM        RM1A-1 + 1B
388        HC       2
           *
           * THE FOLLOWING REACH IS TOO SHORT FOR A STABLE MUSKINGUM ROUTE.  THE K VALUE
           *   OF ROUTE RM2-3 WAS THEREFORE CHANGED FROM .21 hrs TO .24 hrs.  THIS REACH
           *   WAS CHOSEN FOR EXTENTION BECAUSE THE VELOCITY IN REACH RM1-2 MORE CLOSELY
           *   MATCHES RM2-3 THAN RM1A-1.
           *
           * KK,RM1-2
           * KM    MUSKINGUM ROUTE IN CHANNEL FROM NODE 1 TO NODE 2
           * KM                                    1) Reach Length= 850 FT.
           * KM                                    2) Average Velocity= 7.4 FPS
           * RM,1,.03,.2
           *

389        KK      1C
390        KM      RUNOFF GENERATED ON SUB-BASIN 1C
391        BA   1.492
392        LU    .50     .20     0.6
393        UD    .45
           *
           *
           * NEXT OPERATION IS TOTAL FLOW IN CAVE CREEK AT THE C.A.P. CANAL
           *
           *

394        KK     HC2
395        KM      COMBINE SURFACE RUNOFF AT NODE 2
396        KM        RM1-2 + 1C
397        HC       2
           *
```



```
LINE       ID.......1.......2.......3.......4.......5.......6.......7.......8.......9......10

398        KK   RM2-3
399        KM      MUSKINGUM ROUTE IN CHANNEL FROM NODE 2 TO NODE 3
400        KM                                    1) Reach Length= 6100 FT.
401        KM                                    2) Average Velocity= 7.9 FPS
402        KM                                    3) Use K=.24. Includes .03 hrs
403        KM                                       from reach RM1-2.
404        RM       3     .24      .2
           *

405        KK      1D
406        KM      RUNOFF GENERATED ON SUB-BASIN 1D
407        BA   0.963
408        LU    .45     .18     6.3
409        UD    .28
           *
           *
           * NEXT OPERATION IS TOTAL FLOW IN CAVE CREEK 500' SOUTH OF DEER VALLEY DRIVE.
```

```
          *
          *

410       KK    HC3
411       KM     COMBINE SURFACE RUNOFF AT NODE 3
412       KM       RM2-3 + 1D
413       HC      2
          *

414       KK   RM3-4
415       KM     MUSKINGUM ROUTE IN CHANNEL FROM NODE 3 TO NODE 4
416       KM                                    1) Reach Length= 6800 FT.
417       KM                                    2) Average Velocity= 7.0 FPS
418       RM      3    .27     .3
          *

419       KK     3A
420       KM     RUNOFF GENERATED ON SUB-BASIN 3A
421       BA   1.111
422       LU    .43    .14    2.3
423       UD    .32
          *
          *
          * NEXT OPERATION IS TOTAL FLOW IN CAVE CREEK 1000' SOUTH OF BEARDSLEY ROAD.
          *
          *

424       KK    HC4
425       KM     COMBINE SURFACE RUNOFF AT NODE 4
426       KM       RM3-4 + 3A
427       HC      2
          *
```



```
LINE      ID.......1.......2.......3.......4.......5.......6.......7.......8.......9......10


428       KK   RM4-5
429       KM     MUSKINGUM ROUTE IN CHANNEL FROM NODE 4 TO NODE 5
430       KM                                    1) Reach Length= 11,450 FT.
431       KM                                    2) Average Velocity= 8.0 FPS
432       RM      5    .40     .3
          *

433       KK     3C
434       KM     RUNOFF GENERATED ON SUB-BASIN 3C
435       BA   1.559
436       LU    .38    .20   31.6
437       UD    .40
          *

438       KK    DT3C
439       KM   THROW AWAY 10-YR 2-HR RETENTION VOLUME:1) 4.2 AC-FT FROM SUB-BASIN 3C
440       KM                                            (Hydrograph identified as DR-3C)
441       KM                                         2) Balance of runoff continues on.
```

```
442        KM                                        (Hydrograph identified as DT3C)
443        DT   OR-3C     4.2
444        DI       0   10000
445        DQ       0   10000
           *
           *
           * NEXT OPERATION IS FLOW ABOVE BELL ROAD.
           *
           *

446        KK     HC5
447        KM      COMBINE SURFACE RUNOFF AT NODE 5
448        KM        RM4-5 + DT3C
449        HC       2
           *
           *
           * ###### BREAK SEQUENCE AND JUMP TO SUB-BASIN 3B.
           *
           *

450        KK      3B
451        KM      RUNOFF GENERATED ON SUB-BASIN 3B
452        BA   0.944
453        LU     .39     .25    31.5
454        UD    1.02
           *

455        KK  RM3B-8
456        KM      MUSKINGUM ROUTE IN STREET FROM SUB-BASIN 3B TO NODE 8
457        KM                                        1) Reach Length= 4500 FT.
458        KM                                        2) Average Velocity= 2.5 FPS
459        RM      6      .5      .3
           *
```



```
LINE       ID.......1.......2.......3.......4.......5.......6.......7.......8.......9......10

460        KK     DT8
461        KM   SPLIT FLOW AT INTERSECTION OF RENEE DRIVE AND 13th AVENUE
462        KM
463        KM     SEND FLOW SOUTH IN 13th AVENUE
464        KM     (Hydrograph identified as FL-8)
465        KM
466        KM     REMAINDER FLOWS WEST IN RENEE DRIVE.  (Hydrograph identified as DT8)
467        KM
468        DT    FL-8
469        DI       0       8      78     647    2044
470        DQ       0       0       6     243     992
           *

471        KK   RM8-9
472        KM      MUSKINGUM ROUTE IN STREET FROM NODE 8 TO NODE 9
473        KM                                        1) Reach Length= 2750 FT.
474        KM                                        2) Average Velocity= 3.5 FPS
```

```
475        RM      3     .22      .2
           *

476        KK    DT9
477        KM   SPLIT FLOW AT INTERSECTION OF GROVERS AVENUE AND 13th AVENUE
478        KM
479        KM     SEND FLOW SOUTH IN 13th AVENUE
480        KM     (Hydrograph identified as FL-9)
481        KM
482        KM     REMAINDER FLOWS WEST IN GROVERS AVENUE. (Hydrograph identified as DT9)
483        KM
484        DT    FL-9
485        DI      0     27     44    141    834
486        DQ      0      0      0     37    303
           *

487        KK   RM9-5
488        KM     MUSKINGUM ROUTE IN STREET FROM NODE 9 TO NODE 5
489        KM                                    1) Reach Length= 3950 FT.
490        KM                                    2) Average Velocity= 2.0 FPS
491        RM      6    .54      .2
           *
           *
           * NEXT OPERATION IS TOTAL FLOW AT CAVE CREEK AND BELL ROAD.
           *
           *

492        KK   HC5.1
493        KM     COMBINE SURFACE RUNOFF AT NODE 5.1
494        KM       HC5 + RM9-5
495        HC      2
           *
                                HEC-1 INPUT                                    PAGE 17

LINE       ID.......1.......2.......3.......4.......5.......6.......7.......8.......9......10


496        KK   RS5-6
497        KM     NORMAL DEPTH CHANNEL ROUTE FROM NODE 5 TO NODE 6.1
498        KM                                    1) Reach Length     = 6400 FT.
499        KM                                    2) Average Velocity = 12.7 FPS
500        RS      2   FLOW     -1
501        RC   .035    .03   .035   6400   .007   1347
502        RX      0     15     17     44     70     97    100    108
503        RY   1347   1346   1345   1333   1333   1342   1343   1346
           *
           *

504        KK     3D
505        KM     RUNOFF GENERATED ON SUB-BASIN 3D
506        BA   0.408
507        LU    .43    .24   18.2
508        UD    .17
           *
           *
```

```
          * NEXT OPERATION IS TOTAL FLOW AT THE CONFLUENCE OF CAVE CREEK AND THE EAST
          * FORK OF CAVE CREEK
          *
          *

509       KK   HC6.2
510       KM      COMBINE SURFACE RUNOFF AT NODE 6.2
511       KM        RS5-6 + HC6 + 3D
512       HC       3
          *
          *   ****** REACH REMOVED FROM MODEL.  IT IS TOO SHORT FOR STABLE CALCULATINS.
          *
          * KK,RS6-7
          * KM    NORMAL DEPTH CHANNEL ROUTE FROM NODE 6 TO NODE 7
          * KM                                        1) Reach Length= 2250 FT.
          * KM                                        2) Average Velocity= 13.1 FPS
          * KO,,,,,21
          * RS,1,FLOW,-1
          * RC,.035,.03,.035,2250,.006,1335
          * RX,0,40,80,120,180,228,253,253
          * RY,1330,1329.5,1328,1318,1318,1330,1332,1332
          *
          *
          *   ****** BREAK SEQUENCE AND JUMP BACK TO DIVERTED FLOW FROM NODE 8.
          *
          *

513       KK    FL-8
514       KM    RECALL DIVERTED HYDROGRAPH FROM RENEE DRIVE AND 13th AVENUE
515       DR    FL-8
          *
```



```
LINE      ID.......1.......2.......3.......4.......5.......6.......7.......8.......9......10

516       KK  RM8-10
517       KM      MUSKINGUM ROUTE IN STREET FROM NODE 8 TO NODE 10
518       KM                                        1) Reach Length= 8200 FT.
519       KM                                        2) Average Velocity= 3.0 FPS
520       RM      4     .76     .2
          *

521       KK      4A
522       KM      RUNOFF GENERATED ON SUB-BASIN 4A
523       BA   1.264
524       LU    .32     .19    46.8
525       UD    .85
          *

526       KK    DT4A
527       KM   THROW AWAY 10-YR 2-HR RETENTION VOLUME:1) 7.8 AC-FT FROM SUB-BASIN 4A
528       KM                                            (Hydrograph identified as OR-4A)
529       KM                                         2) Balance of runoff continues on.
530       KM                                            (Hydrograph identified as DT4A)
```

```
531        DT   OR-4A     7.8
532        DI      0   10000
533        DQ      0   10000
           *

534        KK   FL-9
535        KM   RECALL DIVERTED HYDROGRAPH FROM GROVERS AVENUE AND 13th AVENUE
536        DR   FL-9
           *

537        KK  RM9-10
538        KM     MUSKINGUM ROUTE IN STREET FROM NODE 9 TO NODE 10
539        KM                                    1) Reach Length= 5750 FT.
540        KM                                    2) Average Velocity= 3.0 FPS
541        RM      3     .53     .2
           *
           *
           * NEXT OPERATION IS TOTAL FLOW AT 19th AVENUE AND BELL ROAD.
           *
           *

542        KK   HC10
543        KM     COMBINE SURFACE RUNOFF AT NODE 10
544        KM       RM8-10 + DT4A + RM9-10
545        HC      3
           *

546        KK   DT10
547        KM  SPLIT FLOW AT INTERSECTION OF 19th AVENUE AND BELL ROAD.
548        KM
549        KM    SEND FLOW WEST IN BELL ROAD OUT OF WATERSHED IN STREET.
550        KM    (Hydrograph identified as FL-10)
551        KM
552        KM    REMAINDER FLOWS SOUTH IN 19th AVE. STREET AND 90" PIPE.
553        KM    (Hydrograph identified as DT10) (490 cfs in PIPE)
```



```
LINE       ID.......1.......2.......3.......4.......5.......6.......7.......8.......9......10

554        KM
555        DT  FL-10
556        DI      0    961    1006    3470
557        DQ      0    336     336    1517
           *

558        KK  RM10-7
559        KM     MUSKINGUM ROUTE IN STREET FROM NODE 10 TO NODE 7
560        KM                                    1) Reach Length= 6850 FT.
561        KM                                    2) Average Velocity= 4.0 FPS
562        RM      5    .48     .2
           *

563        KK     4B
564        KM     RUNOFF GENERATED ON SUB-BASIN 4B
565        BA  0.675
```

```
566        LU     .3     .2   79.4
567        UD    .24
           *

568        KK   DT4B
569        KM   THROW AWAY 10-YR 2-HR RETENTION VOLUME:1) 4.3 AC-FT FROM SUB-BASIN 4B
570        KM                                             (Hydrograph identified as OR-4B)
571        KM                                           2) Balance of runoff continues on.
572        KM                                             (Hydrograph identified as DT4B)
573        DT   OR-4B    4.3
574        DI      0  10000
575        DQ      0  10000
           *
           *
           * NEXT OPERATION IS TOTAL FLOW IN CAVE CREEK 500' SOUTH OF GREENWAY ROAD
           * AND 600' WEST OF 19th AVENUE.
           *
           *

576        KK    HC7
577        KM     COMBINE SURFACE RUNOFF AT NODE 7
578        KM       HC6.2 + RM10-7 + DT4B
579        HC      3
           *

580        KK  RS7-11
581        KM     NORMAL DEPTH CHANNEL ROUTE FROM NODE 7 TO NODE 11.1
582        KM                                         1) Reach Length= 8900 FT.
583        KM                                         2) Average Velocity= 8.9 FPS
584        RS      4   FLOW     -1
585        RC    .04   .035    .04   8900   .003  1297.5
586        RX      0    137    169    229    249    300    325    365
587        RY 1296.7   1294   1282   1282   1290   1292   1294 1297.5
           *
```



```
LINE       ID.......1.......2.......3.......4.......5.......6.......7.......8.......9......10

588        KK     4C
589        KM     RUNOFF GENERATED ON SUB-BASIN 4C
590        BA  1.029
591        LU    .31    .24   39.7
592        UD    .62
           *

593        KK   DT4C
594        KM     THROW AWAY 10-YR 2-HR RETENTION VOLUME:1) 5.1 AC-FT FROM SUB-BASIN 4C
595        KM                                             (Hydrograph identified as OR-4C)
596        KM                                           2) Balance of runoff continues on.
597        KM                                             (Hydrograph identified as DT4C)
598        DT   OR-4C    5.1
599        DI      0  10000
600        DQ      0  10000
           *
```

```
601        KK  HC11.1
602        KM      COMBINE SURFACE RUNOFF AT NODE 11.1
603        KM        RS7-11 + DT4C
604        HC      2
           *
           *
           * ****** BREAK SEQUENCE AND JUMP TO SUB-BASIN 5G
           *
           *
           *
           *    MOON VALLEY WASH
           *    SUB-BASING 5A-5G
           *
           *
           *

605        KK      5G
606        KM      RUNOFF GENERATED ON SUB-BASIN 5G
607        BA   0.429
608        LU     .38     .05     3.3
609        UD     .17
           *

610        KK    RS5G
611        KM      RESERVOR ROUTE THROUGH DETENTION BASIN NO. 2B
612        KM                                    1) Total Volume  = 48 AC-FT.
613        KM                                    2) Spillway Elev = 1412
614        RS      1    ELEV
615        SV      0      1      18      37      48      68
616        SE   1395   1400    1405    1410    1412    1415
617        SS   1412     80    2.63     1.5
618        SL  1396.7   1.78     .6      .5
           *
                                  HEC-1 INPUT                                    PAGE 21

LINE       ID.......1.......2.......3.......4.......5.......6.......7.......8.......9......10


619        KK RM5G-26
620        KM      MUSKINGUM ROUTE IN CHANNEL FROM SUB-BASIN 5G TO NODE 26
621        KM                                    1) Reach Length= 2550 FT.
622        KM                                    2) Average Velocity= 6.5 FPS
623        RM      1     .11      .3
           *

624        KK      5C
625        KM      RUNOFF GENERATED ON SUB-BASIN 5C
626        BA   0.514
627        LU     .34     .05    14.6
628        UD     .16
           *

629        KK    RS5C
630        KM      RESERVOR ROUTE THROUGH DETENTION BASIN NO. 2A
```

```
KM                                        1) Total Volume  = 60 AC-FT.
KM                                        2) Spillway Elev = 1408
RS      1   ELEV
SV      0     2     5    10    25    60    69    81    94   108
SE   1391  1393  1397  1400  1404  1408  1409  1410  1411  1412
SS   1408  80.0  2.63   1.5
SL 1392.2  1.78    .6    .5
*

KK RK5C-26
KM     KINEMATIC WAVE ROUTE IN PIPE FROM SUB-BASIN 5C TO NODE 26
KM                                        1) Reach Length      = 2400 FT.
KM                                        2) Avg. Pipe Diameter = 54"
KM                                        3) Average Velocity   = 6.4 FPS
RK   2400   .009   .015          CIRC    4.5
*
*
* NEXT OPERATION IS TOTAL FLOW AT 7th STREET AND ROBERTS ROAD.
*
*

KK   HC26
KM     COMBINE SURFACE RUNOFF AT NODE 26
KM       RM5G-26 + RK5C-26
HC      2
*

KK RM26-28
KM     MUSKINGUM ROUTE IN CHANNEL FROM NODE 26 TO NODE 28
KM                                        1) Reach Length= 5500 FT.
KM                                        2) Average Velocity= 7.2 FPS
RM      3    .21     .3
*
*
* ****** BREAK SEQUENCE AND JUMP TO SUB-BASIN 5A
*
*
*
```

HEC-1 INPUT PAGE 22

```
LINE      ID.......1.......2.......3.......4.......5.......6.......7.......8.......9......10

KK     5A
KM     RUNOFF GENERATED ON SUB-BASIN 5A
BA  1.268
LU    .27    .17   25.5
UD    .21
*

KK RM5A-27
KM     MUSKINGUM ROUTE IN CHANNEL FROM SUB-BASIN 5A TO NODE 27
KM                                        1) Reach Length= 3600 FT.
KM                                        2) Average Velocity= 4.6 FPS
RM      3    .22     .3
```

```
        *

663     KK     5B
664     KM     RUNOFF GENERATED ON SUB-BASIN 5B
665     BA  0.686
666     LU     .3     .25    38.0
667     UD    .40
        *

668     KK    HC27
669     KM     COMBINE SURFACE RUNOFF AT NODE 27
670     KM       RM5A-27 + 5B
671     HC      2
        *

672     KK RM27-28
673     KM     MUSKINGUM ROUTE IN CHANNEL FROM NODE 27 TO NODE 28
674     KM                                        1) Reach Length= 900 FT.
675     KM                                        2) Average Velocity= 2.2 FPS
676     RM      1     .11      .3
        *

677     KK    HC28
678     KM     COMBINE SURFACE RUNOFF AT NODE 28
679     KM       RM26-28 + RM27-28
680     HC      2
        *

681     KK RM28-29
682     KM     MUSKINGUM ROUTE IN CHANNEL FROM NODE 28 TO NODE 29
683     KM                                        1) Reach Length= 2150 FT.
684     KM                                        2) Average Velocity= 6.2 FPS
685     RM      1     .10      .3
        *

686     KK     5D
687     KM     RUNOFF GENERATED ON SUB-BASIN 5D
688     BA  0.554
689     LU    .39     .05     2.1
690     UD    .10
        *
```



```
LINE    ID.......1.......2.......3.......4.......5.......6.......7.......8.......9......10

691     KK    RS5D
692     KM     RESERVOR ROUTE THROUGH DETENTION BASIN NO. 7
693     KM                                        1) Total Volume  = 120 AC-FT.
694     KM                                        2) Spillway Elev = 1392
695     RS      1    ELEV
696     SV      0     120     136     152     175     200     224     248     272
697     SE   1369    1392    1393    1394    1395    1396    1397    1398    1399
698     SQ      0      53     363     928    1660    2526    3588    4594    5775
        *
```

```
699        KK RM5D-29
700        KM     MUSKINGUM ROUTE IN CHANNEL FROM SUB-BASIN 5D TO NODE 29
701        KM                                        1) Reach Length= 6700 FT.
702        KM                                        2) Average Velocity= 5.8 FPS
703        RM      4     .32      .3
           *

704        KK     5E
705        KM     RUNOFF GENERATED ON SUB-BASIN 5E
706        BA   1.592
707        LU    .27     .11    39.8
708        UD    .37
           *

709        KK    DT5E
710        KM   THROW AWAY 10-YR 2-HR RETENTION VOLUME:1) 6.0 AC-FT FROM SUB-BASIN 5E
711        KM                                            (Hydrograph identified as OR-2E)
712        KM                                         2) Balance of runoff continues on.
713        KM                                            (Hydrograph identified as DT2E)
714        DT   OR-2E    6.0
715        DI      0   10000
716        DQ      0   10000
           *
           *
           * NEXT OPERATION IS TOTAL FLOW AT THUNDERBIRD ROAD WEST OF CORAL GABLES
           *
           *

717        KK    HC29
718        KM     COMBINE SURFACE RUNOFF AT NODE 29
719        KM       RM28-29 + RM5D-29 + DT5E
720        HC      3
           *

721        KK RM29-11
722        KM     MUSKINGUM ROUTE IN CHANNEL FROM NODE 29 TO NODE 11
723        KM                                        1) Reach Length= 7000 FT.
724        KM                                        2) Average Velocity= 11.9 FPS
725        RM      2     .16      .3
           *
```



```
LINE       ID.......1.......2.......3.......4.......5.......6.......7.......8.......9......10

726        KK     5F
727        KM     RUNOFF GENERATED ON SUB-BASIN 5F
728        BA   1.522
729        LU    .26     .14    28.3
730        UD    .50
           *

731        KK    DT5F
732        KM   THROW AWAY 10-YR 2-HR RETENTION VOLUME:1) 5.0 AC-FT FROM SUB-BASIN 5F
```

```
733     KM                                        (Hydrograph identified as OR-5F)
734     KM                                     2) Balance of runoff continues on.
735     KM                                        (Hydrograph identified as DT5F)
736     DT   OR-5F    5.0
737     DI      0   10000
738     DQ      0   10000
        *
        *
        * NEXT OPERATION IS TOTAL FLOW IN MOON VALLEY WASH AT CAVE CREEK
        *
        *

739     KK    HC11
740     KM      COMBINE SURFACE RUNOFF AT NODE 11
741     KM        RM29-11 + DT5F
742     KO                                  21
743     HC      2
        *
        *
        * NEXT OPERATION IS TOTAL FLOW AT THE CONFLUENCE OF CAVE CREEK WITH MOON
        * VALLEY WASH
        *
        *

744     KK  HC11.2
745     KM      COMBINE SURFACE RUNOFF AT NODE 11.2
746     KM        HC11.1 + HC11
747     HC      2
        *
        *  ******* REACH REMOVED FROM MODEL.  IT IS TOO SHORT FOR STABLE CALCULATIONS.
        *           .03 hrs was added to reach RM12-13.
        *
        * KK,RM11-12
        * KM    MUSKINGUM ROUTE IN CHANNEL FROM NODE 11 TO NODE 12
        * KM                                     1) Reach Length= 2700 FT.
        * KM                                     2) Average Velocity= 22.2 FPS
        * RM,1,.03,.2
        *

748     KK      6A
749     KM      RUNOFF GENERATED ON SUB-BASIN 6A
750     KM
751     BA   0.459
752     LU    .33     .20    43.8
753     UD    .45
        *
```



```
LINE    ID.......1.......2.......3.......4.......5.......6.......7.......8.......9......10

754     KK    DT6A
755     KM   THROW AWAY 10-YR 2-HR RETENTION VOLUME:1) 1.4 AC-FT FROM SUB-BASIN 6A
756     KM                                        (Hydrograph identified as OR-6A)
757     KM                                     2) Balance of runoff continues on.
```

```
758        KM                                        (Hydrograph identified as DT6A)
759        DT   OR-6A     1.4
760        DI       0   10000
761        DQ       0   10000
           *
           *
           * NEXT OPERATION IS TOTAL FLOW IN CAVE CREEK AT CACTUS ROAD.
           *
           *

762        KK    HC12
763        KM      COMBINE SURFACE RUNOFF AT NODE 12
764        KM        HC11 + DT6A
765        HC       2
           *

766        KK RM12-13
767        KM      MUSKINGUM ROUTE IN CHANNEL FROM NODE 12 TO NODE 13
768        KM                                      1) Reach Length= 9000 FT.
769        KM                                      2) Average Velocity= 21.0 FPS.
770        RM       2     .15      .2
           *

771        KK      6B
772        KM      RUNOFF GENERATED ON SUB-BASIN 6B
773        BA   1.138
774        LU     .32     .20    61.5
775        UD     .63
           *

776        KK    DT6B
777        KM   THROW AWAY 10-YR 2-HR RETENTION VOLUME:1) 13.0 AC-FT FROM SUB-BASIN 6B
778        KM                                            (Hydrograph identified as OR-6B)
779        KM                                         2) Balance of runoff continues on.
780        KM                                            (Hydrograph identified as DT6B)
781        DT   OR-6B    13.0
782        DI       0   10000
783        DQ       0   10000
           *
           *
           * NEXT OPERATION IS TOTAL FLOW IN CAVE CREEK AT THE CONFLUENCE WITH THE
           * ARIZONA CANAL DIVERSION CHANNEL.
           *
           *
```



```
LINE       ID.......1.......2.......3.......4.......5.......6.......7.......8.......9......10

784        KK    HC13
785        KM      COMBINE SURFACE RUNOFF AT NODE 13
786        KM        RM12-13 + DT6B
787        KO                                  21
788        HC       2
           *
```

789 ZZ

SCHEMATIC DIAGRAM OF STREAM NETWORK

```
INPUT
 LINE     (V) ROUTING          (--->) DIVERSION OR PUMP FLOW

 NO.      (.) CONNECTOR        (<---) RETURN OF DIVERTED OR PUMPED FLOW

 10         2A
            .
            .
 26         .          2B
            .          .
            .          .
 31       HC14............
            V
            V
 35     RM14-15
            .
            .
 40         .          2C
            .          .
            .          .
 50         .          .-------> OR-2C
 45         .        DT2C
            .          .
            .          .
 53       HC15............
            V
            V
 57     RM15-16
            .
            .
 62         .          2E
            .          .
            .          .
 67       HC16............
            V
            V
 71     RM16-17
            .
            .
 76         .          2H
            .          .
            .          .
 86         .          .-------> OR-2H
 81         .        DT2H
            .          .
            .          .
 89       HC17............
            .
            .
 93         .          2D
            .          .
            .          .
```

```
103          .          .-------> OR-2D
 98          .      DT2D
             .          .
             .          .
114          .          .-------> FL-2D
106          .     DT2DS
             .          V
             .          V
117          .    RM2D-23
             .          .
             .          .
122          .          .        2P
             .          .         .
             .          .         .
132          .          .         .-------> OR-2P
127          .          .      DT2P
             .          .         .
             .          .         .
135          .      HC23............
             .          V
             .          V
139          .    RM23-24
             .          .
             .          .
146          .          .        2F
             .          .         .
             .          .         .
157          .          .         .-------> OR-2F
152          .          .      DT2F
             .          .         .
             .          .         .
160          .      HC24............
             .          .
             .          .
165          .          .        2G
             .          .         V
             .          .         V
170          .          .    RM2G-25
             .          .         .
             .          .         .
175          .      HC25............
             .          V
             .          V
179          .    RS25-17
             .          .
             .          .
187     HC17.1............
             V
             V
191     RS17-18
             .
             .
199          .        2J
             .          .
             .          .
```

```
209          .          .------>  OR-2J
204          .       DT2J
             .         V
             .         V
212          .    RM2J-19
             .         .
             .         .
217          .         .        2I
             .         .         .
             .         .         .
227          .         .         .------>  OR-2I
222          .         .      DT2I
             .         .         V
             .         .         V
230          .         .    RM2I-19
             .         .         .
             .         .         .
235          .         .         .        2K
             .         .         .         .
             .         .         .         .
245          .         .         .         .------>  OR-2K
240          .         .         .      DT2K
             .         .         .         .
             .         .         .         .
248          .       HC19.......................
             .         .
             .         .
260          .         .------>  FL-19
252          .       DT19
             .         V
             .         V
263          .    RM19-18
             .         .
             .         .
268        HC18............
             V
             V
272     RS18-21
             .
             .
282          .         .<------  FL-19
280          .      FL-19
             .         V
             .         V
283          .    RM19-20
             .         .
             .         .
288          .         .        2L
             .         .         .
             .         .         .
298          .         .         .------>  OR-2L
293          .         .      DT2L
             .         .         .
             .         .         .
301          .       HC20............
```

```
            .         V
            .         V
305         .    RM20-21
            .         .
            .         .
310         .         .        2M
            .         .         .
            .         .         .
320         .         .         .-------> OR-2M
315         .         .      DT2M
            .         .         .
            .         .         .
323       HC21.......................
            V
            V
327     RS21-22
            .
            .
335         .        2D
            .         .
            .         .
345         .         .-------> OR-2D
340         .      DT2D
            .         .
            .         .
348       HC22............
            V
            V
352     RS22-6
            .
            .
360         .        2N
            .         .
            .         .
365       HC6............
            .
            .
370         .        1A
            .         V
            .         V
375         .    RM1A-1
            .         .
            .         .
380         .         .        1B
            .         .         .
            .         .         .
385         .      HC1............
            .         .
            .         .
389         .         .        1C
            .         .         .
            .         .         .
394         .      HC2............
            .         V
            .         V
```

```
398     .     RM2-3
        .       .
        .       .
405     .       .        1D
        .       .         .
        .       .         .
410     .     HC3............
        .       V
        .       V
414     .     RM3-4
        .       .
        .       .
419     .       .        3A
        .       .         .
        .       .         .
424     .     HC4............
        .       V
        .       V
428     .     RM4-5
        .       .
        .       .
433     .       .        3C
        .       .         .
        .       .         .
443     .       .         .-------> OR-3C
438     .       .      DT3C
        .       .         .
        .       .         .
446     .     HC5............
        .       .
        .       .
450     .       .        3B
        .       .         V
        .       .         V
455     .       .     RM3B-8
        .       .         .
        .       .         .
468     .       .         .-------> FL-8
460     .       .       DT8
        .       .         V
        .       .         V
471     .       .      RM8-9
        .       .         .
        .       .         .
484     .       .         .-------> FL-9
476     .       .       DT9
        .       .         V
        .       .         V
487     .       .      RM9-5
        .       .         .
        .       .         .
492     .     HC5.1...........
        .       V
        .       V
496     .     RS5-6
```

```
              .         .
              .         .
504           .         .        3D
              .         .         .
              .         .         .
509       HC6.2.......................
              .
              .
515           .         .<------   FL-8
513           .      FL-8
              .         V
              .         V
516           .     RM8-10
              .         .
              .         .
521           .         .        4A
              .         .         .
              .         .         .
531           .         .         .-------> DR-4A
526           .         .      DT4A
              .         .         .
              .         .         .
536           .         .         .         .<------   FL-9
534           .         .         .      FL-9
              .         .         .         V
              .         .         .         V
537           .         .         .     RM9-10
              .         .         .         .
              .         .         .         .
542           .      HC10.......................
              .         .
              .         .
555           .         .-------> FL-10
546           .      DT10
              .         V
              .         V
558           .     RM10-7
              .         .
              .         .
563           .         .        4B
              .         .         .
              .         .         .
573           .         .         .-------> DR-4B
568           .         .      DT4B
              .         .         .
              .         .         .
576        HC7.......................
           V
           V
580     RS7-11
              .
              .
588           .        4C
              .         .
              .         .
```

```
598          .          .-------> OR-4C
593          .       DT4C
             .          .
             .          .
601     HC11.1............
             .
             .
605          .         5G
             .          V
             .          V
610          .       RS5G
             .          V
             .          V
619          .     RM5G-26
             .          .
             .          .
624          .          .         5C
             .          .          V
             .          .          V
629          .          .       RS5C
             .          .          V
             .          .          V
638          .          .     RK5C-26
             .          .          .
             .          .          .
644          .       HC26............
             .          V
             .          V
648          .     RM26-28
             .          .
             .          .
653          .          .         5A
             .          .          V
             .          .          V
658          .          .     RM5A-27
             .          .          .
             .          .          .
663          .          .          .         5B
             .          .          .          .
             .          .          .          .
668          .          .       HC27............
             .          .          V
             .          .          V
672          .          .     RM27-28
             .          .          .
             .          .          .
677          .       HC28............
             .          V
             .          V
681          .     RM28-29
             .          .
             .          .
686          .          .         5D
             .          .          V
             .          .          V
```

```
691          .          .        RS5D
             .          .          V
             .          .          V
699          .          .     RM5D-29
             .          .          .
             .          .          .
704          .          .          .          5E
             .          .          .           .
             .          .          .           .
714          .          .          .           .------> OR-2E
709          .          .          .        DT5E
             .          .          .           .
             .          .          .           .
717          .        HC29.......................
             .          V
             .          V
721          .     RM29-11
             .          .
             .          .
726          .          .         5F
             .          .          .
             .          .          .
736          .          .          .------> OR-5F
731          .          .        DT5F
             .          .          .
             .          .          .
739          .        HC11............
             .          .
             .          .
744      HC11.2............
             .
             .
748          .         6A
             .          .
             .          .
759          .          .------> OR-6A
754          .        DT6A
             .          .
             .          .
762        HC12............
             V
             V
766     RM12-13
             .
             .
771          .         6B
             .          .
             .          .
781          .          .------> OR-6B
776          .        DT6B
             .          .
             .          .
784        HC13............
```

(***) RUNOFF ALSO COMPUTED AT THIS LOCATION

```
****************************************
*                                      *
*  FLOOD HYDROGRAPH PACKAGE  (HEC-1)   *
*     BY THE COE IN FEBRUARY 1981      *
*         REVISED 02 AUG 88            *
*                                      *
* RUN DATE  01/16/1990  TIME  14:43:11 *
*                                      *
****************************************
```

```
****************************************
*                                      *
*    DODSON AND ASSOCIATES, INC.       *
*  HYDROLOGIST AND CIVIL ENGINEERS     *
*     7015 W TIDWELL SUITE 107         *
*       HOUSTON, TEXAS  77092          *
*         (713) 895-8322               *
*                                      *
****************************************
```

```
                    FCDMC CAVE CREEK FIS, JOB NO. 7833
                    10-YEAR 24-HR DURATION STORM
                    FILE = 783310Y.IN : 01/12/90 trl
                    STORM PRECIP : 5 SM Area = 2.48", 10 SM = 2.40", 15 SM = 2.35", 20 SM = 2.33"
                    STORM PRECIP : 35 SM = 2.28"

  7 IO        OUTPUT CONTROL VARIABLES
                   IPRNT          5  PRINT CONTROL
                   IPLOT          0  PLOT CONTROL
                   QSCAL         0.  HYDROGRAPH PLOT SCALE

   IT         HYDROGRAPH TIME DATA
                    NMIN          5  MINUTES IN COMPUTATION INTERVAL
                   IDATE     1    0  STARTING DATE
                   ITIME       0000  STARTING TIME
                      NQ        300  NUMBER OF HYDROGRAPH ORDINATES
                  NDDATE     2    0  ENDING DATE
                  NDTIME       0055  ENDING TIME
                   ICENT         19  CENTURY MARK

              COMPUTATION INTERVAL     .08 HOURS
                  TOTAL TIME BASE   24.92 HOURS

        ENGLISH UNITS
            DRAINAGE AREA        SQUARE MILES
            PRECIPITATION DEPTH  INCHES
            LENGTH, ELEVATION    FEET
            FLOW                 CUBIC FEET PER SECOND
            STORAGE VOLUME       ACRE-FEET
            SURFACE AREA         ACRES
            TEMPERATURE          DEGREES FAHRENHEIT

   JP         MULTI-PLAN OPTION
                   NPLAN          1  NUMBER OF PLANS

   JR         MULTI-RATIO OPTION
                RATIOS OF PRECIPITATION
               1.00      .97      .95      .94      .92
```

```
*** *** *** *** *** *** *** *** *** *** *** *** *** *** *** *** *** *** *** *** *** *** *** *** *** *** *** *** *** *** *** *** *** *** ***

        ##############
        #            #
160 KK  #     HC24   #
        #            #
        ##############

163 KO        OUTPUT CONTROL VARIABLES
                   IPRNT         5  PRINT CONTROL
                   IPLOT         0  PLOT CONTROL
                   QSCAL        0.  HYDROGRAPH PLOT SCALE
                   IPNCH         0  PUNCH COMPUTED HYDROGRAPH
                    IOUT        21  SAVE HYDROGRAPH ON THIS UNIT
                   ISAV1         1  FIRST ORDINATE PUNCHED OR SAVED
                   ISAV2       300  LAST ORDINATE PUNCHED OR SAVED
                  TIMINT      .083  TIME INTERVAL IN HOURS


*** *** *** *** *** *** *** *** *** *** *** *** *** *** *** *** *** *** *** *** *** *** *** *** *** *** *** *** *** *** *** *** *** *** ***

        ##############
        #            #
365 KK  #      HC6   #
        #            #
        ##############

368 KO        OUTPUT CONTROL VARIABLES
                   IPRNT         5  PRINT CONTROL
                   IPLOT         0  PLOT CONTROL
                   QSCAL        0.  HYDROGRAPH PLOT SCALE
                   IPNCH         0  PUNCH COMPUTED HYDROGRAPH
                    IOUT        21  SAVE HYDROGRAPH ON THIS UNIT
                   ISAV1         1  FIRST ORDINATE PUNCHED OR SAVED
                   ISAV2       300  LAST ORDINATE PUNCHED OR SAVED
                  TIMINT      .083  TIME INTERVAL IN HOURS


*** *** *** *** *** *** *** *** *** *** *** *** *** *** *** *** *** *** *** *** *** *** *** *** *** *** *** *** *** *** *** *** *** *** ***

        ##############
        #            #
739 KK  #     HC11   #
        #            #
        ##############

742 KO        OUTPUT CONTROL VARIABLES
                   IPRNT         5  PRINT CONTROL
```

IPLOT	0	PLOT CONTROL
QSCAL	0.	HYDROGRAPH PLOT SCALE
IPNCH	0	PUNCH COMPUTED HYDROGRAPH
IOUT	21	SAVE HYDROGRAPH ON THIS UNIT
ISAV1	1	FIRST ORDINATE PUNCHED OR SAVED
ISAV2	300	LAST ORDINATE PUNCHED OR SAVED
TIMINT	.083	TIME INTERVAL IN HOURS

*** ***

```
          ##############
          #            #
784 KK    #     HC13   #
          #            #
          ##############
```

787 KO OUTPUT CONTROL VARIABLES

IPRNT	5	PRINT CONTROL
IPLOT	0	PLOT CONTROL
QSCAL	0.	HYDROGRAPH PLOT SCALE
IPNCH	0	PUNCH COMPUTED HYDROGRAPH
IOUT	21	SAVE HYDROGRAPH ON THIS UNIT
ISAV1	1	FIRST ORDINATE PUNCHED OR SAVED
ISAV2	300	LAST ORDINATE PUNCHED OR SAVED
TIMINT	.083	TIME INTERVAL IN HOURS

PEAK FLOW AND STAGE (END-OF-PERIOD) SUMMARY FOR MULTIPLE PLAN-RATIO ECONOMIC COMPUTATIONS
FLOWS IN CUBIC FEET PER SECOND, AREA IN SQUARE MILES
TIME TO PEAK IN HOURS

					RATIOS APPLIED TO PRECIPITATION				
OPERATION	STATION	AREA	PLAN		RATIO 1	RATIO 2	RATIO 3	RATIO 4	RATIO 5
					1.00	.97	.95	.94	.92
HYDROGRAPH AT	2A	.87	1	FLOW	954.	921.	900.	892.	870.
				TIME	12.17	12.17	12.17	12.17	12.17
HYDROGRAPH AT	2B	.41	1	FLOW	513.	494.	483.	478.	466.
				TIME	12.08	12.08	12.08	12.08	12.08
2 COMBINED AT	HC14	1.28	1	FLOW	1463.	1412.	1380.	1367.	1333.
				TIME	12.08	12.08	12.08	12.08	12.08
ROUTED TO	RM14-15	1.28	1	FLOW	1293.	1247.	1218.	1206.	1176.
				TIME	12.42	12.42	12.42	12.42	12.42
HYDROGRAPH AT	2C	1.18	1	FLOW	790.	763.	746.	739.	721.
				TIME	12.50	12.50	12.50	12.50	12.50

DIVERSION TO	OR-2C	1.18	1	FLOW	4.	4.	4.	4.	4.
				TIME	.67	.67	.67	.67	.67
HYDROGRAPH AT	DT2C	1.18	1	FLOW	790.	763.	746.	739.	721.
				TIME	12.50	12.50	12.50	12.50	12.50
2 COMBINED AT	HC15	2.46	1	FLOW	2080.	2006.	1961.	1942.	1894.
				TIME	12.42	12.42	12.42	12.42	12.42
ROUTED TO	RM15-16	2.46	1	FLOW	1913.	1845.	1802.	1785.	1741.
				TIME	12.83	12.83	12.83	12.83	12.83
HYDROGRAPH AT	2E	1.10	1	FLOW	929.	896.	876.	868.	847.
				TIME	12.25	12.25	12.25	12.25	12.25
2 COMBINED AT	HC16	3.56	1	FLOW	2212.	2131.	2082.	2062.	2010.
				TIME	12.75	12.75	12.75	12.75	12.75
ROUTED TO	RM16-17	3.56	1	FLOW	2135.	2057.	2009.	1989.	1939.
				TIME	13.08	13.08	13.08	13.08	13.08
HYDROGRAPH AT	2H	1.42	1	FLOW	771.	744.	726.	720.	701.
				TIME	12.67	12.67	12.67	12.67	12.67
DIVERSION TO	OR-2H	1.42	1	FLOW	28.	28.	28.	28.	28.
				TIME	9.67	9.83	9.92	9.92	10.08
HYDROGRAPH AT	DT2H	1.42	1	FLOW	771.	744.	726.	720.	701.
				TIME	12.67	12.67	12.67	12.67	12.67
2 COMBINED AT	HC17	4.98	1	FLOW	2753.	2652.	2590.	2565.	2500.
				TIME	13.00	13.00	13.00	13.00	13.00
HYDROGRAPH AT	2D	1.19	1	FLOW	730.	703.	687.	680.	663.
				TIME	12.50	12.50	12.50	12.50	12.50
DIVERSION TO	OR-2D	1.19	1	FLOW	11.	11.	11.	11.	11.
				TIME	6.58	6.75	6.83	6.83	7.00
HYDROGRAPH AT	DT2D	1.19	1	FLOW	730.	703.	687.	680.	663.
				TIME	12.50	12.50	12.50	12.50	12.50
DIVERSION TO	FL-2D	1.19	1	FLOW	427.	412.	403.	400.	390.
				TIME	12.50	12.50	12.50	12.50	12.50
HYDROGRAPH AT	DT2DS	1.19	1	FLOW	303.	291.	284.	281.	273.
				TIME	12.50	12.50	12.50	12.50	12.50
ROUTED TO	RM2D-23	1.19	1	FLOW	284.	272.	265.	262.	255.
				TIME	12.83	12.83	12.83	12.83	12.83
HYDROGRAPH AT	2P	.59	1	FLOW	439.	424.	415.	411.	401.
				TIME	12.42	12.42	12.42	12.42	12.42

DIVERSION TO	OR-2P	.59	1	FLOW	7.	7.	7.	7.	7.
				TIME	4.17	4.25	4.33	4.33	4.42
HYDROGRAPH AT	DT2P	.59	1	FLOW	439.	424.	415.	411.	401.
				TIME	12.42	12.42	12.42	12.42	12.42
2 COMBINED AT	HC23	1.78	1	FLOW	610.	587.	573.	567.	552.
				TIME	12.58	12.58	12.58	12.58	12.58
ROUTED TO	RM23-24	1.78	1	FLOW	585.	563.	549.	544.	529.
				TIME	13.08	13.08	13.08	13.08	13.08
HYDROGRAPH AT	2F	.95	1	FLOW	794.	767.	750.	743.	726.
				TIME	12.33	12.33	12.33	12.33	12.33
DIVERSION TO	OR-2F	.95	1	FLOW	14.	13.	13.	13.	13.
				TIME	4.83	4.92	5.00	5.08	5.17
HYDROGRAPH AT	DT2F	.95	1	FLOW	794.	767.	750.	743.	726.
				TIME	12.33	12.33	12.33	12.33	12.33
2 COMBINED AT	HC24	2.74	1	FLOW	901.	870.	851.	843.	823.
				TIME	12.33	12.33	12.33	12.33	12.33
HYDROGRAPH AT	2G	.92	1	FLOW	828.	799.	781.	774.	755.
				TIME	12.25	12.25	12.25	12.25	12.25
ROUTED TO	RM2G-25	.92	1	FLOW	802.	774.	757.	750.	732.
				TIME	12.42	12.42	12.42	12.42	12.42
2 COMBINED AT	HC25	3.65	1	FLOW	1701.	1642.	1606.	1591.	1553.
				TIME	12.33	12.33	12.33	12.33	12.33
ROUTED TO	RS25-17	3.65	1	FLOW	1653.	1592.	1556.	1541.	1503.
				TIME	12.50	12.50	12.50	12.50	12.50
			** PEAK STAGES IN FEET **						
			1	STAGE	1413.89	1413.79	1413.73	1413.70	1413.63
				TIME	12.50	12.50	12.50	12.50	12.50
2 COMBINED AT	HC17.1	8.63	1	FLOW	3884.	3742.	3655.	3620.	3520.
				TIME	12.92	12.92	12.92	12.92	12.92
ROUTED TO	RS17-18	8.63	1	FLOW	3871.	3730.	3643.	3608.	3516.
				TIME	13.00	13.00	13.00	13.00	13.00
			** PEAK STAGES IN FEET **						
			1	STAGE	1387.84	1387.70	1387.61	1387.57	1387.48
				TIME	13.00	13.00	13.00	13.00	13.00
HYDROGRAPH AT	2J	.70	1	FLOW	409.	394.	385.	381.	371.
				TIME	12.58	12.58	12.58	12.58	12.58
DIVERSION TO	OR-2J	.70	1	FLOW	6.	5.	5.	5.	5.
				TIME	8.00	8.25	8.33	8.42	8.50

HYDROGRAPH AT	DT2J	.70	1	FLOW	409.	394.	385.	381.	371.
				TIME	12.58	12.58	12.58	12.58	12.58
ROUTED TO	RM2J-19	.70	1	FLOW	358.	344.	336.	333.	324.
				TIME	13.08	13.08	13.08	13.08	13.08
HYDROGRAPH AT	2I	.99	1	FLOW	765.	738.	721.	714.	696.
				TIME	12.33	12.33	12.33	12.33	12.33
DIVERSION TO	OR-2I	.99	1	FLOW	19.	19.	19.	19.	19.
				TIME	9.50	9.67	9.75	9.83	9.92
HYDROGRAPH AT	DT2I	.99	1	FLOW	765.	738.	721.	714.	696.
				TIME	12.33	12.33	12.33	12.33	12.33
ROUTED TO	RM2I-19	.99	1	FLOW	701.	676.	660.	654.	638.
				TIME	12.50	12.50	12.50	12.50	12.50
HYDROGRAPH AT	2K	1.34	1	FLOW	1205.	1163.	1137.	1126.	1099.
				TIME	12.25	12.25	12.25	12.25	12.25
DIVERSION TO	OR-2K	1.34	1	FLOW	18.	18.	17.	17.	17.
				TIME	7.58	7.75	7.83	7.92	8.00
HYDROGRAPH AT	DT2K	1.34	1	FLOW	1205.	1163.	1137.	1126.	1099.
				TIME	12.25	12.25	12.25	12.25	12.25
3 COMBINED AT	HC19	3.03	1	FLOW	1808.	1743.	1703.	1687.	1645.
				TIME	12.33	12.33	12.33	12.33	12.33
DIVERSION TO	FL-19	3.03	1	FLOW	235.	227.	221.	219.	213.
				TIME	12.33	12.33	12.33	12.33	12.33
HYDROGRAPH AT	DT19	3.03	1	FLOW	1573.	1516.	1482.	1468.	1431.
				TIME	12.33	12.33	12.33	12.33	12.33
ROUTED TO	RM19-18	3.03	1	FLOW	1555.	1499.	1465.	1451.	1415.
				TIME	12.42	12.42	12.42	12.42	12.42
2 COMBINED AT	HC18	11.66	1	FLOW	4963.	4781.	4667.	4621.	4502.
				TIME	12.67	12.67	12.67	12.67	12.67
ROUTED TO	RS18-21	11.66	1	FLOW	4955.	4773.	4661.	4616.	4498.
				TIME	12.75	12.75	12.75	12.75	12.75
			** PEAK STAGES IN FEET **						
			1	STAGE	1366.27	1366.14	1366.06	1366.03	1365.94
				TIME	12.75	12.75	12.75	12.75	12.75
HYDROGRAPH AT	FL-19	.00	1	FLOW	235.	227.	221.	219.	213.
				TIME	12.33	12.33	12.33	12.33	12.33
ROUTED TO	RM19-20	.00	1	FLOW	228.	220.	214.	212.	207.
				TIME	12.58	12.58	12.58	12.58	12.58

HYDROGRAPH AT	2L	.60	1	FLOW	606.	585.	573.	568.	554.
				TIME	12.17	12.17	12.17	12.17	12.17
DIVERSION TO	OR-2L	.60	1	FLOW	8.	7.	7.	7.	7.
				TIME	2.00	2.00	2.00	3.83	3.92
HYDROGRAPH AT	DT2L	.60	1	FLOW	606.	585.	573.	568.	554.
				TIME	12.17	12.17	12.17	12.17	12.17
2 COMBINED AT	HC20	.60	1	FLOW	726.	701.	685.	679.	662.
				TIME	12.25	12.25	12.25	12.25	12.25
ROUTED TO	RM20-21	.60	1	FLOW	701.	676.	661.	655.	639.
				TIME	12.42	12.42	12.42	12.42	12.42
HYDROGRAPH AT	2M	1.17	1	FLOW	1349.	1303.	1274.	1263.	1232.
				TIME	12.00	12.00	12.00	12.00	12.00
DIVERSION TO	OR-2M	1.17	1	FLOW	21.	21.	22.	22.	22.
				TIME	9.00	9.17	9.33	9.33	9.42
HYDROGRAPH AT	DT2M	1.17	1	FLOW	1349.	1303.	1274.	1263.	1232.
				TIME	12.00	12.00	12.00	12.00	12.00
3 COMBINED AT	HC21	13.43	1	FLOW	5666.	5454.	5322.	5269.	5129.
				TIME	12.67	12.67	12.67	12.67	12.67
ROUTED TO	RS21-22	13.43	1	FLOW	5566.	5356.	5226.	5175.	5038.
				TIME	12.83	12.83	12.83	12.83	12.83
			** PEAK STAGES IN FEET **						
			1	STAGE	1353.00	1352.88	1352.81	1352.78	1352.70
				TIME	12.83	12.83	12.83	12.83	12.83
HYDROGRAPH AT	2O	.64	1	FLOW	391.	377.	369.	365.	356.
				TIME	12.50	12.50	12.50	12.50	12.50
DIVERSION TO	OR-2O	.64	1	FLOW	6.	6.	6.	7.	7.
				TIME	6.42	6.58	6.67	6.75	6.83
HYDROGRAPH AT	DT2O	.64	1	FLOW	391.	377.	369.	365.	356.
				TIME	12.50	12.50	12.50	12.50	12.50
2 COMBINED AT	HC22	14.07	1	FLOW	5873.	5652.	5515.	5461.	5316.
				TIME	12.83	12.83	12.83	12.83	12.83
ROUTED TO	RS22-6	14.07	1	FLOW	5829.	5610.	5475.	5420.	5278.
				TIME	12.92	12.92	12.92	12.92	12.92
			** PEAK STAGES IN FEET **						
			1	STAGE	1333.46	1333.32	1333.23	1333.19	1333.10
				TIME	12.92	12.92	12.92	12.92	12.92
HYDROGRAPH AT	2N	.47	1	FLOW	611.	591.	578.	572.	559.

				TIME	12.08	12.08	12.08	12.08	12.08
2 COMBINED AT	HC6	14.55	1	FLOW	5874.	5649.	5511.	5456.	5312.
				TIME	12.83	12.83	12.83	12.92	12.92
HYDROGRAPH AT	1A	.90	1	FLOW	657.	634.	619.	613.	598.
				TIME	12.42	12.42	12.42	12.42	12.42
ROUTED TO	RM1A-1	.90	1	FLOW	550.	530.	518.	513.	499.
				TIME	12.92	12.92	12.92	12.92	12.92
HYDROGRAPH AT	1B	1.60	1	FLOW	1612.	1554.	1517.	1503.	1465.
				TIME	12.17	12.17	12.17	12.17	12.17
2 COMBINED AT	HC1	2.50	1	FLOW	1692.	1629.	1590.	1574.	1532.
				TIME	12.17	12.17	12.17	12.17	12.17
HYDROGRAPH AT	1C	1.49	1	FLOW	1147.	1104.	1077.	1067.	1039.
				TIME	12.33	12.33	12.33	12.33	12.33
2 COMBINED AT	HC2	4.00	1	FLOW	2717.	2615.	2552.	2526.	2460.
				TIME	12.25	12.25	12.25	12.25	12.25
ROUTED TO	RM2-3	4.00	1	FLOW	2515.	2420.	2360.	2337.	2274.
				TIME	12.50	12.50	12.50	12.50	12.50
HYDROGRAPH AT	1D	.96	1	FLOW	1013.	977.	955.	946.	922.
				TIME	12.17	12.17	12.17	12.17	12.17
2 COMBINED AT	HC3	4.96	1	FLOW	3000.	2894.	2823.	2795.	2720.
				TIME	12.42	12.42	12.42	12.42	12.42
ROUTED TO	RM3-4	4.96	1	FLOW	2889.	2779.	2710.	2683.	2611.
				TIME	12.67	12.67	12.67	12.67	12.67
HYDROGRAPH AT	3A	1.11	1	FLOW	1105.	1066.	1042.	1033.	1007.
				TIME	12.17	12.17	12.17	12.17	12.17
2 COMBINED AT	HC4	6.07	1	FLOW	3204.	3060.	3003.	2973.	2892.
				TIME	12.67	12.67	12.67	12.67	12.67
ROUTED TO	RM4-5	6.07	1	FLOW	3105.	2986.	2911.	2881.	2803.
				TIME	13.00	13.00	13.00	13.00	13.00
HYDROGRAPH AT	3C	1.56	1	FLOW	1363.	1315.	1285.	1273.	1242.
				TIME	12.25	12.25	12.25	12.25	12.25
DIVERSION TO	OR-3C	1.56	1	FLOW	13.	12.	12.	12.	12.
				TIME	5.50	5.58	5.67	5.75	5.83
HYDROGRAPH AT	DT3C	1.56	1	FLOW	1363.	1315.	1285.	1273.	1242.
				TIME	12.25	12.25	12.25	12.25	12.25
2 COMBINED AT	HC5	7.63	1	FLOW	3355.	3223.	3141.	3108.	3022.
				TIME	13.00	13.00	13.00	13.00	13.00

HYDROGRAPH AT	3B	.94	1	FLOW	404.	389.	379.	376.	366.
				TIME	12.92	12.92	12.92	12.83	12.83
ROUTED TO	RM3B-8	.94	1	FLOW	395.	380.	371.	367.	358.
				TIME	13.42	13.42	13.42	13.42	13.42
DIVERSION TO	FL-8	.94	1	FLOW	138.	132.	128.	126.	122.
				TIME	13.42	13.42	13.42	13.42	13.42
HYDROGRAPH AT	DT8	.94	1	FLOW	257.	248.	243.	241.	235.
				TIME	13.42	13.42	13.42	13.42	13.42
ROUTED TO	RM8-9	.94	1	FLOW	254.	245.	240.	238.	232.
				TIME	13.58	13.58	13.58	13.58	13.58
DIVERSION TO	FL-9	.94	1	FLOW	80.	77.	75.	74.	72.
				TIME	13.58	13.58	13.58	13.58	13.58
HYDROGRAPH AT	DT9	.94	1	FLOW	174.	168.	165.	164.	160.
				TIME	13.58	13.58	13.58	13.58	13.58
ROUTED TO	RM9-5	.94	1	FLOW	168.	163.	160.	159.	155.
				TIME	14.17	14.17	14.17	14.17	14.17
2 COMBINED AT	HC5.1	8.57	1	FLOW	3395.	3262.	3179.	3146.	3059.
				TIME	13.00	13.00	13.00	13.00	13.00
ROUTED TO	RS5-6	8.57	1	FLOW	3358.	3223.	3141.	3109.	3023.
				TIME	13.08	13.08	13.08	13.08	13.08
			** PEAK STAGES IN FEET **						
			1	STAGE	1339.70	1339.57	1339.47	1339.44	1339.34
				TIME	13.08	13.08	13.08	13.08	13.08
HYDROGRAPH AT	3D	.41	1	FLOW	526.	508.	496.	491.	479.
				TIME	12.08	12.08	12.08	12.08	12.08
3 COMBINED AT	HC6.2	23.53	1	FLOW	9086.	8739.	8524.	8438.	8213.
				TIME	13.00	13.00	13.00	13.00	13.00
HYDROGRAPH AT	FL-8	.00	1	FLOW	138.	132.	128.	126.	122.
				TIME	13.42	13.42	13.42	13.42	13.42
ROUTED TO	RM8-10	.00	1	FLOW	121.	115.	112.	111.	107.
				TIME	14.17	14.17	14.17	14.17	14.17
HYDROGRAPH AT	4A	1.26	1	FLOW	676.	652.	637.	631.	615.
				TIME	12.75	12.75	12.75	12.75	12.75
DIVERSION TO	OR-4A	1.26	1	FLOW	19.	18.	18.	18.	18.
				TIME	8.00	8.17	8.25	8.33	8.42
HYDROGRAPH AT	DT4A	1.26	1	FLOW	676.	652.	637.	631.	615.
				TIME	12.75	12.75	12.75	12.75	12.75

HYDROGRAPH AT	FL-9	.00	1	FLOW	80.	77.	75.	74.	72.
				TIME	13.58	13.58	13.58	13.58	13.58
ROUTED TO	RM9-10	.00	1	FLOW	74.	71.	69.	68.	67.
				TIME	14.17	14.17	14.17	14.17	14.17
3 COMBINED AT	HC10	1.26	1	FLOW	677.	653.	638.	632.	617.
				TIME	12.75	12.75	12.75	12.75	12.75
DIVERSION TO	FL-10	1.26	1	FLOW	237.	228.	223.	221.	216.
				TIME	12.75	12.75	12.75	12.75	12.75
HYDROGRAPH AT	DT10	1.26	1	FLOW	441.	425.	415.	411.	401.
				TIME	12.75	12.75	12.75	12.75	12.75
ROUTED TO	RM10-7	1.26	1	FLOW	419.	404.	395.	391.	381.
				TIME	13.25	13.25	13.25	13.25	13.25
HYDROGRAPH AT	4B	.68	1	FLOW	812.	785.	769.	762.	745.
				TIME	12.00	12.00	12.00	12.00	12.00
DIVERSION TO	OR-4B	.68	1	FLOW	14.	13.	13.	13.	13.
				TIME	5.00	5.00	5.00	5.00	5.00
HYDROGRAPH AT	DT4B	.68	1	FLOW	812.	785.	769.	762.	745.
				TIME	12.00	12.00	12.00	12.00	12.00
3 COMBINED AT	HC7	25.47	1	FLOW	9559.	9195.	8970.	8880.	8644.
				TIME	13.00	13.00	13.00	13.00	13.00
ROUTED TO	RS7-11	25.47	1	FLOW	9455.	9097.	8873.	8783.	8547.
				TIME	13.17	13.17	13.17	13.17	13.17
			** PEAK STAGES IN FEET **						
			1	STAGE	1293.43	1293.26	1293.15	1293.11	1292.99
				TIME	13.17	13.17	13.17	13.17	13.17
HYDROGRAPH AT	4C	1.03	1	FLOW	667.	643.	628.	622.	606.
				TIME	12.50	12.50	12.50	12.50	12.50
DIVERSION TO	OR-4C	1.03	1	FLOW	13.	13.	12.	12.	12.
				TIME	7.42	7.58	7.67	7.75	7.83
HYDROGRAPH AT	DT4C	1.03	1	FLOW	667.	643.	628.	622.	606.
				TIME	12.50	12.50	12.50	12.50	12.50
2 COMBINED AT	HC11.1	26.50	1	FLOW	9694.	9327.	9097.	9005.	8763.
				TIME	13.17	13.17	13.17	13.17	13.17
HYDROGRAPH AT	5G	.43	1	FLOW	594.	575.	563.	558.	545.
				TIME	12.00	12.00	12.00	12.00	12.00
ROUTED TO	RS5G	.43	1	FLOW	27.	27.	27.	27.	27.
				TIME	13.42	13.33	13.33	13.33	13.25

			** PEAK STAGES IN FEET **						
			1	STAGE	1407.14	1406.86	1406.69	1406.62	1406.44
				TIME	13.42	13.33	13.33	13.33	13.33
ROUTED TO	RM56-26	.43	1	FLOW	27.	27.	27.	27.	27.
				TIME	13.50	13.42	13.42	13.42	13.42
HYDROGRAPH AT	5C	.51	1	FLOW	718.	695.	680.	674.	659.
				TIME	12.00	12.00	12.00	12.00	12.00
ROUTED TO	RS5C	.51	1	FLOW	31.	30.	30.	30.	30.
				TIME	13.50	13.42	13.42	13.42	13.33
			** PEAK STAGES IN FEET **						
			1	STAGE	1405.02	1404.86	1404.77	1404.73	1404.63
				TIME	13.50	13.50	13.42	13.42	13.42
ROUTED TO	RK5C-26	.51	1	FLOW	31.	30.	30.	30.	30.
				TIME	13.50	13.50	13.42	13.42	13.42
2 COMBINED AT	HC26	.94	1	FLOW	58.	58.	57.	57.	57.
				TIME	13.50	13.50	13.42	13.42	13.42
ROUTED TO	RM26-28	.94	1	FLOW	58.	58.	57.	57.	57.
				TIME	13.75	13.67	13.67	13.67	13.67
HYDROGRAPH AT	5A	1.27	1	FLOW	1578.	1524.	1491.	1477.	1442.
				TIME	12.00	12.00	12.00	12.00	12.00
ROUTED TO	RM5A-27	1.27	1	FLOW	1421.	1373.	1342.	1330.	1298.
				TIME	12.33	12.33	12.33	12.33	12.33
HYDROGRAPH AT	5B	.69	1	FLOW	593.	572.	559.	553.	540.
				TIME	12.25	12.25	12.25	12.25	12.25
2 COMBINED AT	HC27	1.95	1	FLOW	1993.	1924.	1881.	1863.	1818.
				TIME	12.33	12.33	12.33	12.33	12.33
ROUTED TO	RM27-28	1.95	1	FLOW	1927.	1860.	1818.	1801.	1757.
				TIME	12.42	12.42	12.42	12.42	12.42
2 COMBINED AT	HC28	2.90	1	FLOW	1979.	1911.	1869.	1853.	1808.
				TIME	12.42	12.42	12.42	12.42	12.42
ROUTED TO	RM28-29	2.90	1	FLOW	1915.	1850.	1809.	1793.	1750.
				TIME	12.50	12.50	12.50	12.50	12.50
HYDROGRAPH AT	5D	.55	1	FLOW	890.	861.	843.	835.	816.
				TIME	12.00	12.00	12.00	12.00	12.00
ROUTED TO	RS5D	.55	1	FLOW	17.	17.	16.	16.	16.
				TIME	14.00	14.00	14.00	14.00	13.92

** PEAK STAGES IN FEET **

			1	STAGE	1376.50	1376.20	1376.02	1375.94	1375.75
				TIME	14.00	14.00	14.00	14.00	14.00
ROUTED TO	RM5D-29	.55	1	FLOW	17.	17.	16.	16.	16.
				TIME	14.33	14.33	14.33	14.33	14.25
HYDROGRAPH AT	5E	1.59	1	FLOW	1529.	1478.	1446.	1434.	1400.
				TIME	12.25	12.25	12.25	12.25	12.25
DIVERSION TO	DR-2E	1.59	1	FLOW	16.	16.	16.	15.	16.
				TIME	5.67	5.67	6.17	6.17	6.25
HYDROGRAPH AT	DT5E	1.59	1	FLOW	1529.	1478.	1446.	1434.	1400.
				TIME	12.25	12.25	12.25	12.25	12.25
3 COMBINED AT	HC29	5.04	1	FLOW	3033.	2929.	2865.	2839.	2771.
				TIME	12.42	12.42	12.42	12.42	12.42
ROUTED TO	RM29-11	5.04	1	FLOW	2958.	2857.	2794.	2769.	2702.
				TIME	12.58	12.58	12.58	12.58	12.58
HYDROGRAPH AT	5F	1.52	1	FLOW	1186.	1145.	1119.	1109.	1082.
				TIME	12.33	12.33	12.33	12.33	12.33
DIVERSION TO	DR-5F	1.52	1	FLOW	13.	13.	13.	13.	13.
				TIME	6.92	7.08	7.17	7.25	7.33
HYDROGRAPH AT	DT5F	1.52	1	FLOW	1186.	1145.	1119.	1109.	1082.
				TIME	12.33	12.33	12.33	12.33	12.33
2 COMBINED AT	HC11	6.56	1	FLOW	3967.	3830.	3745.	3711.	3622.
				TIME	12.50	12.50	12.50	12.50	12.50
2 COMBINED AT	HC11.2	33.06	1	FLOW	11284.	10795.	10483.	10369.	10051.
				TIME	12.92	12.92	13.00	13.00	13.00
HYDROGRAPH AT	6A	.46	1	FLOW	378.	365.	357.	354.	345.
				TIME	12.33	12.33	12.33	12.33	12.33
DIVERSION TO	DR-6A	.46	1	FLOW	5.	5.	5.	5.	5.
				TIME	4.83	4.92	5.00	5.00	5.08
HYDROGRAPH AT	DT6A	.46	1	FLOW	378.	365.	357.	354.	345.
				TIME	12.33	12.33	12.33	12.33	12.33
2 COMBINED AT	HC12	33.52	1	FLOW	11403.	10909.	10574.	10459.	10138.
				TIME	12.92	12.92	13.00	13.00	13.00
ROUTED TO	RM12-13	33.52	1	FLOW	11303.	10816.	10486.	10367.	10052.
				TIME	13.08	13.08	13.17	13.17	13.17
HYDROGRAPH AT	6B	1.14	1	FLOW	777.	750.	734.	727.	710.
				TIME	12.50	12.50	12.50	12.50	12.50
DIVERSION TO	DR-6B	1.14	1	FLOW	31.	32.	32.	32.	32.

				TIME	9.50	9.67	9.75	9.83	9.92
HYDROGRAPH AT	DT6B	1.14	1	FLOW	777.	750.	734.	727.	710.
				TIME	12.50	12.50	12.50	12.50	12.50
2 COMBINED AT	HC13	34.66	1	FLOW	11666.	11166.	10818.	10679.	10339.
				TIME	13.08	13.08	13.08	13.08	13.17

*** NORMAL END OF HEC-1 ***

APPENDIX "K"

HEC-1 HYDROLOGY RESULTS FOR A 50-YEAR 24-HOUR DURATION STORM

```
************************************
*                                  *
*  FLOOD HYDROGRAPH PACKAGE  (HEC-1)  *
*     BY THE COE IN FEBRUARY 1981     *
*          REVISED 02 AUG 88          *
*                                  *
* RUN DATE  01/16/1990  TIME  14:13:38 *
*                                  *
************************************
```

```
************************************
*                                  *
*    DODSON AND ASSOCIATES, INC.    *
*  HYDROLOGIST AND CIVIL ENGINEERS  *
*     7015 W TIDWELL SUITE 107      *
*       HOUSTON, TEXAS  77092       *
*          (713) 895-8322           *
*                                  *
************************************
```

```
X     X  XXXXXXX   XXXXX          X
X     X  X       X     X        XX
X     X  X       X              X
XXXXXXX  XXXX    X       XXXXX  X
X     X  X       X              X
X     X  X       X     X        X
X     X  XXXXXXX   XXXXX        XXX
```

THIS PROGRAM REPLACES ALL PREVIOUS VERSIONS OF HEC-1 KNOWN AS HEC1 (JAN 73), HEC1GS, HEC1DB, AND HEC1KW.

THE DEFINITIONS OF VARIABLES -RTIMP- AND -RTIOR- HAVE CHANGED FROM THOSE USED WITH THE 1973-STYLE INPUT STRUCTURE.
THE DEFINITION OF -AMSKK- ON RM-CARD WAS CHANGED WITH REVISIONS DATED 28 SEP 81. THIS IS THE FORTRAN77 VERSION
NEW OPTIONS: DAMBREAK OUTFLOW SUBMERGENCE , SINGLE EVENT DAMAGE CALCULATION, DSS:WRITE STAGE FREQUENCY,
DSS:READ TIME SERIES AT DESIRED CALCULATION INTERVAL LOSS RATE:GREEN AND AMPT INFILTRATION
KINEMATIC WAVE: NEW FINITE DIFFERENCE ALGORITHM

HEC-1 INPUT PAGE 1

```
LINE        ID.......1.......2.......3.......4.......5.......6.......7.......8.......9......10

  1         ID   FCDMC CAVE CREEK FIS, JOB NO. 7833
  2         ID   50-YEAR 24-HR DURATION STORM
  3         ID   FILE = 783350Y.IN ; 01/12/90 trl
  4         ID   STORM PRECIP : 5 SM Area = 3.50", 10 SM = 3.39", 15 SM = 3.32", 20 SM = 3.28"
  5         ID   STORM PRECIP : 35 SM = 3.21"
            *
            *
            *  **** Revisions:
            *
            *        10/15/89 trl - File submitted to agencies as part of Prelim. Report.
            *
            *        10/16/89 trl - Changed Basin IC LU card.  Was - LU,,.50,.20,0.6
            *                                                  Now - LU,.50,.20,0.6
            *
            *        12/12/89 trl - The following changes were made in order to address
            *                       Amir Motamedi's concerns that the calculated routing
            *                       flow times did not agree with the input Muskingum
```

```
*                K coefficient.  The difference in timing could affect
*                combined peak flow rates at combination points.
*
*        1. RM15-16 : Changed NSteps from 4 to 5.
*        2. RM20-23 : Changed NSteps from 4 to 3.
*        3. RM23-24 : Changed NSteps from 5 to 6.
*        4. RM26-25 : Changed NSteps from 1 to 2.
*        5. RM25-17 : Changed NSteps from 1 to 2.
*        6. RM18-21 : Changed NSteps from 1 to 2.
*        7. RM17-18 : Changed NSteps from 1 to 3.
*        8. RM19-20 : Changed NSteps from 2 to 3.
*        9. RM21-22 : Changed NSteps from 1 to 2.
*       10. RM2-3   : Changed NSteps from 2 to 3.
*       11. RM4-5   : Changed NSteps from 4 to 5.
*       12. RM3B-8  : Changed NSteps from 5 to 6.
*       13. RM8-9   : Changed NSteps from 2 to 3.
*       14. RM5-6   : Changed NSteps from 1 to 2.
*       15. RM10-7  : Changed NSteps from 6 to 5 and X from .3 to .2.
*       16. RM7-11  : Changed NSteps from 1 to 4.
*       17. RM5A-27 : Changed NSteps from 2 to 3.
*       18. RM26-28 : Changed NSteps from 2 to 3.
*       19. RM5D-29 : Changed NSteps from 3 to 4.
*       20. RM12-13 : Changed NSteps from 1 to 2.
*
*     12/13/89 trl - The following changes were made in order to address
*                ADWR'S concerns regarding the Normal Depth Channel
*                rout cross sections.
*
*        1. RS25-17 : The cross section was extended to 8 effective
*                     points.
*        2. RS17-18 : The cross section was extended to 8 effective
*                     points.
*        3. RS18-21 : The cross section was extended to 8 effective
*                     points.
*        4. RS21-22 : The cross section was extended to 8 effective
*                     points, and sufficient depth was added to
*                     eliminate the overtopping condition.
*        5. RS22-6  : The cross section was extended to 8 effective
*                     points.
*        6. RS7-11  : The cross section was changed to 8 effective
*                     points, and sufficient depth was added to
*                     eliminate the overtopping condition.
*
*     12/14/89 trl - This file was created to account for Aerial Reduction
*                Factor changes requested by Amir Motamedi.  They
*                account for watershed areas of 5, 10, 15, 20 and 35
*                square miles for a 100-year storm.
*
*     01/12/90 trl - The following changes were made in order to address
*                FCDMC concerns regarding the Time of Concentration
*                computations for SubBasins 1B and 1C.
*
*        1. SubBasin 1B: The average flow velocity for the channelized
*                        portion was changed from 13.4 fps to 5.0 fps.
*                        This was done after a more in-depth look at actual
```

```
                    *                        field conditions.  See the appropriate Appendix
                    *                        for more detail.  The resultant Lag is 0.29 hrs.
                    *
                    *          2. SubBasin 1C: The average flow velocity for the channelized
                    *                        portion was changed from 10.1 fps to 5.9 fps.
                    *                        This was done after a more in-depth look at actual
                    *                        field conditions.  The resultant Lag is 0.45 hrs.
                    *
                    *
*** FREE ***
                    *DIAGRAM
                                                HEC-1 INPUT                                    PAGE  2

          LINE      ID.......1.......2.......3.......4.......5.......6.......7.......8.......9......10

            6       IT      5                   300
            7       IO      5      0
            8       IN     15
                    *
                    * JR RATIO'S : 1.0=5-SM, 0.968=10-SM, 0.948=15-SM, 20-SM=0.940, 35-SM=0.919
                    *
            9       JR   PREC    1.0   0.968   0.948   0.940   0.919
                    *
                    *
                    *   EAST FORK OF CAVE CREEK
                    *   SUB-BASINS 2A-2P
                    *
                    *

           10       KK     2A
           11       KM     RUNOFF GENERATED ON SUB-BASIN 2A
           12       BA   0.870
           13       PB    3.50
                    *
                    *    FCDMC SCS TYPE II RAINFALL DISTRIBUTION - 15 MIN INTERVAL
                    *
           14       PC   .000   .002   .005   .008   .011   .014   .017   .020   .023   .026
           15       PC   .029   .032   .035   .038   .041   .044   .048   .052   .056   .060
           16       PC   .064   .068   .072   .076   .080   .085   .090   .095   .100   .105
           17       PC   .110   .115   .120   .126   .133   .140   .147   .155   .163   .172
           18       PC   .181   .191   .203   .218   .236   .257   .283   .387   .663   .707
           19       PC   .735   .758   .776   .791   .804   .815   .825   .834   .842   .849
           20       PC   .856   .863   .869   .875   .881   .887   .893   .898   .903   .908
           21       PC   .913   .918   .922   .926   .930   .934   .938   .942   .946   .950
           22       PC   .953   .956   .959   .962   .965   .968   .971   .974   .977   .980
           23       PC   .983   .986   .989   .992   .995   .998   1.00
           24       LU    .37    .20   19.6
           25       UD    .25
                    *

           26       KK     2B
           27       KM     RUNOFF GENERATED ON SUB-BASIN 2B
           28       BA   0.414
           29       LU    .37    .25   12.0
           30       UD    .19
```

```
          *
          *
          * NEXT OPERATION IS TOTAL FLOW AT BEARDSLEY ROAD EAST OF CAVE CREEK ROAD,
          *
          *

 31       KK    HC14
 32       KM      COMBINE SURFACE RUNOFF AT NODE 14
 33       KM        2A+2B
 34       HC      2
          *
                                   HEC-1 INPUT                                    PAGE  3

LINE      ID.......1.......2.......3.......4.......5.......6.......7.......8.......9......10


 35       KK RM14-15
 36       KM      MUSKINGUM ROUTE IN CHANNEL FROM NODE 14 TO NODE 15
 37       KM                                        1) Reach Length= 5600 FT.
 38       KM                                        2) Average Velocity= 4.9 FPS
 39       RM      4     .32      .3
          *

 40       KK      2C
 41       KM      RUNOFF GENERATED ON SUB-BASIN 2C
 42       BA   1.177
 43       LU    .32     .25    53.3
 44       UD    .61
          *

 45       KK    DT2C
 46       KM   THROW AWAY 10-YR 2-HR RETENTION VOLUME:1) 0.1 AC-FT FROM SUB-BASIN 2C
 47       KM                                            (Hydrograph identified as OR-2C)
 48       KM                                         2) Balance of runoff continues on.
 49       KM                                            (Hydrograph identified as DT2C)
 50       DT   OR-2C    0.1
 51       DI      0   10000
 52       DQ      0   10000
          *
          *
          * NEXT OPERATION IS TOTAL FLOW AT UNION HILLS DRIVE EAST OF CAVE CREEK ROAD.
          *
          *

 53       KK    HC15
 54       KM      COMBINE SURFACE RUNOFF AT NODE 15
 55       KM        RM14-15 + DT2C
 56       HC      2
          *

 57       KK RM15-16
 58       KM      MUSKINGUM ROUTE IN CHANNEL AND STREET FROM NODE 15 TO NODE 16
 59       KM                                        1) Reach Length= 8000 FT.
 60       KM                                        2) Average Velocity= 5.7 FPS
 61       RM      5     .39      .3
```

```
          *
62        KK     2E
63        KM     RUNOFF GENERATED ON SUB-BASIN 2E
64        BA  1.095
65        LU    .33     .22    39.7
66        UD    .42
          *
          *
          * NEXT OPERATION IS TOTAL FLOW AT 20TH ST AND BELL ROAD.
          *
          *
```



```
LINE      ID.......1.......2.......3.......4.......5.......6.......7.......8.......9......10

67        KK   HC16
68        KM     COMBINE SURFACE RUNOFF AT NODE 16
69        KM       RM15-16 + 2E
70        HC      2
          *

71        KK RM16-17
72        KM     MUSKINGUM ROUTE IN STREET FROM NODE 16 TO NODE 17
73        KM                                    1) Reach Length= 3950 FT.
74        KM                                    2) Average Velocity= 4.0 FPS
75        RM      3     .27      .3
          *

76        KK     2H
77        KM     RUNOFF GENERATED ON SUB-BASIN 2H
78        BA  1.425
79        LU    .32     .23    44.4
80        UD    .81
          *

81        KK   DT2H
82        KM  THROW AWAY 10-YR 2-HR RETENTION VOLUME:1) 11.6 AC-FT FROM SUB-BASIN 2H
83        KM                                           (Hydrograph identified as OR-2H)
84        KM                                         2) Balance of runoff continues on.
85        KM                                           (Hydrograph identified as DT2H)
86        DT  OR-2H   11.6
87        DI      0  10000
88        DQ      0  10000
          *

89        KK   HC17
90        KM     COMBINE SURFACE RUNOFF AT NODE 17
91        KM       RM16-17 + DT2H
92        HC      2
          *
          *
          * ****** BREAK SEQUENCE AT 16TH STREET 1000' NORTH OF PARADISE LN.
          *          MOVE UP TO SUB-BASIN 2D
```

```
          *
          *

 93       KK     2D
 94       KM     RUNOFF GENERATED ON SUB-BASIN 2D
 95       BA  1.191
 96       LU    .34     .25    32.8
 97       UD    .65
          *

 98       KK   DT2D
 99       KM   THROW AWAY 10-YR 2-HR RETENTION VOLUME:1) 4.0 AC-FT FROM SUB-BASIN 2D
100       KM                                             (Hydrograph identified as OR-2D)
101       KM                                          2) Balance of runoff continues on.
102       KM                                             (Hydrograph identified as DT2D)
103       DT   OR-2D     4.0
                                   HEC-1 INPUT                                    PAGE  5

LINE      ID.......1.......2.......3.......4.......5.......6.......7.......8.......9......10

104       DI      0   10000
105       DQ      0   10000
          *

106       KK   DT2DS
107       KM   SPLIT FLOW AT INTERSECTION OF 32nd ST AND BELL RD.
108       KM
109       KM    SEND FLOW SOUTH IN 32nd STREET OUT OF WATERSHED IN STREET AND 60" PIPE.
110       KM    (Hydrograph identified as FL-2D) (160 cfs in PIPE)
111       KM
112       KM    REMAINDER FLOWS WEST IN BELL RD.  (Hydrograph identified as DT2D)
113       KM
114       DT   FL-2D
115       DI      0     185     243    1947    5014
116       DQ      0     160     160    1093    2655
          *

117       KK RM2D-23
118       KM     MUSKINGUM ROUTE IN STREET FROM SUB-BASIN 2D TO NODE 23
119       KM                                          1) Reach Length= 3900 FT.
120       KM                                          2) Average Velocity= 3.5 FPS
121       RM      3     .31      .3
          *

122       KK     2P
123       KM     RUNOFF GENERATED ON SUB-BASIN 2P
124       BA  0.592
125       LU    .31     .25    55.7
126       UD    .53
          *

127       KK   DT2P
128       KM   THROW AWAY 10-YR 2-HR RETENTION VOLUME:1) 1.8 AC-FT FROM SUB-BASIN 2P
129       KM                                             (Hydrograph identified as OR-2P)
130       KM                                          2) Balance of runoff continues on.
```

```
131        KM                                        (Hydrograph identified as DT2P)
132        DT   OR-2P     1.8
133        DI       0   10000
134        DQ       0   10000
           *

135        KK    HC23
136        KM      COMBINE SURFACE RUNOFF AT NODE 23
137        KM        RM2D-23 + DT2P
138        HC       2
           *

139        KK RM23-24
140        KM      MUSKINGUM ROUTE IN STREET FROM NODE 23 TO NODE 24
141        KM                                      1) Reach Length= 4400 FT.
142        KM                                      2) Average Velocity= 2.6 FPS
143        KM                                      3) .05 hrs added to K for reach
144        KM                                         RM24-25.
145        RM       6     .52      .3
           *
                                  HEC-1 INPUT                                    PAGE  6

LINE       ID.......1.......2.......3.......4.......5.......6.......7.......8.......9......10


146        KK      2F
147        KM      RUNOFF GENERATED ON SUB-BASIN 2F
148        KM          Lag lengthened 0.5 hrs to account for reach RM24-25.
149        BA   0.952
150        LU     .33     .23    58.0
151        UD     .45
           *

152        KK    DT2F
153        KM   THROW AWAY 10-YR 2-HR RETENTION VOLUME:1) 3.9 AC-FT FROM SUB-BASIN 2F
154        KM                                            (Hydrograph identified as OR-2F)
155        KM                                          2) Balance of runoff continues on.
156        KM                                            (Hydrograph identified as DT2F)
157        DT   OR-2F     3.9
158        DI       0   10000
159        DQ       0   10000
           *
           *
           * NEXT OPERATION IS TOTAL FLOW IN EAST FORK AT CAVE CREEK ROAD
           *  600' SOUTH OF PARADISE LN.
           *
           *

160        KK    HC24
161        KM      COMBINE SURFACE RUNOFF AT NODE 24
162        KM        RM23-24 + DT2F
163        KO                                  21
164        HC       2
           *
           * ***** REACH IS TOO SHORT FOR A STABLE ROUTE, ADD TO RM23-24 AND EXTEND LAG
```

```
*       for SUB-BASIN 2F
*
* KK,RM24-25
* KM    MUSKINGUM ROUTE IN CHANNEL FROM NODE 24 TO NODE 25
* KM                                        1) Reach Length= 1200 FT.
* KM                                        2) Average Velocity= 6.2 FPS
* RM,1,.05,.3
*

KK      2G
KM      RUNOFF GENERATED ON SUB-BASIN 2G
BA   0.917
LU     .33     .16    29.2
UD     .39
*

KK RM2G-25
KM      MUSKINGUM ROUTE IN CHANNEL FROM SUB-BASIN 2G TO NODE 25
KM                                        1) Reach Length= 2350 FT.
KM                                        2) Average Velocity= 5.3 FPS
RM       2     .12      .3
*
*
* NEXT OPERATION IS TOTAL FLOW IN EAST FORK 1350' WEST OF CAVE CREEK ROAD
*  AND 400' SOUTH OF PARADISE LANE.
*
*
```



```
LINE      ID.......1.......2.......3.......4.......5.......6.......7.......8.......9......10

KK    HC25
KM      COMBINE SURFACE RUNOFF AT NODE 25
KM        HC24 + RM2G-25
HC       2
*

KK RS25-17
KM      NORMAL DEPTH CHANNEL ROUTE FROM NODE 25 TO NODE 17
KM                                        1) Reach Length= 4400 FT.
KM                                        2) Average Velocity= 6.8 FPS
RS       2    FLOW      -1
RC    .035     .03    .035    4400    .003    1416
RX       7      50      90     100     140     150     190     228
RY    1416    1415    1414    1409    1409    1414    1415    1416
*
*
* NEXT OPERATION IS TOTAL FLOW AT 16TH ST 1000' NORTH OF PARADISE LANE
*
*

KK  HC17.1
KM      COMBINE SURFACE RUNOFF AT NODE 17
KM        HC17 + RS25-17
```

```
190        HC      2
           *

191        KK RS17-18
192        KM     NORMAL DEPTH CHANNEL ROUTE FROM NODE 17 TO NODE 18
193        KM                                      1) Reach Length= 5250 FT.
194        KM                                      2) Average Velocity= 7.8 FPS
195        RS      3   FLOW     -1
196        RC   .035    .03   .035   5250   .005   1391
197        RX     15     50     84    100    140    156    190    231
198        RY   1391   1390   1389   1381   1381   1389   1390   1391
           *
           *
           * ****** BREAK SEQUENCE AT 7TH STREET 1000' SOUTH OF BELL ROAD.
           *          MOVE UP TO SUB-BASIN 2J
           *
           *

199        KK     2J
200        KM     RUNOFF GENERATED ON SUB-BASIN 2J
201        BA  0.704
202        LU    .37    .20   24.6
203        UD    .71
           *

204        KK   DT2J
205        KM   THROW AWAY 10-YR 2-HR RETENTION VOLUME:1) 2.4 AC-FT FROM SUB-BASIN 2J
206        KM                                             (Hydrograph identified as DR-2J)
207        KM                                           2) Balance of runoff continues on.
208        KM                                             (Hydrograph identified as DT2J)
209        DT   DR-2J    2.4
```



```
LINE       ID.......1.......2.......3.......4.......5.......6.......7.......8.......9......10

210        DI      0  10000
211        DQ      0  10000
           *

212        KK RM2J-19
213        KM     MUSKINGUM ROUTE IN STREET FROM NODE 2J TO NODE 19
214        KM                                      1) Reach Length= 7600 FT.
215        KM                                      2) Average Velocity= 4.0 FPS
216        RM      3    .53     .2
           *

217        KK     2I
218        KM     RUNOFF GENERATED ON SUB-BASIN 2I
219        BA  0.985
220        LU    .37    .24   40.3
221        UD    .48
           *

222        KK   DT2I
223        KM   THROW AWAY 10-YR 2-HR RETENTION VOLUME:1) 7.7 AC-FT FROM SUB-BASIN 2I
```

```
224     KM                                        (Hydrograph identified as OR-2I)
225     KM                                     2) Balance of runoff continues on.
226     KM                                        (Hydrograph identified as DT2I)
227     DT   OR-2I     7.7
228     DI       0   10000
229     DQ       0   10000
        *

230     KK RM2I-19
231     KM      MUSKINGUM ROUTE IN STREET FROM NODE 2I TO NODE 19
232     KM                                      1) Reach Length= 2650 FT.
233     KM                                      2) Average Velocity= 4.0 FPS
234     RM       1     .18      .2
        *

235     KK      2K
236     KM      RUNOFF GENERATED ON SUB-BASIN 2K
237     BA   1.336
238     LU     .36     .24    42.3
239     UD     .38
        *

240     KK    DT2K
241     KM   THROW AWAY 10-YR 2-HR RETENTION VOLUME:1) 7.7 AC-FT FROM SUB-BASIN 2K
242     KM                                        (Hydrograph identified as OR-2K)
243     KM                                     2) Balance of runoff continues on.
244     KM                                        (Hydrograph identified as DT2K)
245     DT   OR-2K     7.7
246     DI       0   10000
247     DQ       0   10000
        *
        *
        * NEXT OPERATION IS TOTAL FLOW IN THE EAST FORK AT 7th STREET AND BELL ROAD.
        *
        *
```



```
LINE    ID.......1.......2.......3.......4.......5.......6.......7.......8.......9......10

248     KK    HC19
249     KM      COMBINE SURFACE RUNOFF AT NODE 19
250     KM        RM2J-19 + RM2I-19 + DT2K
251     HC       3
        *

252     KK    DT19
253     KM   SPLIT FLOW AT INTERSECTION OF 7th ST AND BELL RD.
254     KM
255     KM     SEND FLOW WEST IN BELL ROAD TO NODE 20 IN STREET 84" & 36" PIPES.
256     KM       (Hydrograph identified as FL-19) (300 cfs total in PIPES)
257     KM
258     KM     REST FLOWS SOUTH IN 7tH ST TO NODE 18. (Hydrograph identified as DT19)
259     KM
260     DT   FL-19
```

```
261        DI      0    309    336   5556
262        DQ      0      9     36    743
           *

263        KK RM19-18
264        KM     MUSKINGUM ROUTE IN CHANNEL FROM NODE 19 TO NODE 18
265        KM                                   1) Reach Length= 1000 FT.
266        KM                                   2) Average Velocity= 3.6 FPS
267        RM      1    .08     .3
           *
           *
           * NEXT OPERATION IS TOTAL FLOW IN EAST FORK AT 7th STREET
           *  1000' SOUTH OF BELL ROAD,
           *
           *

268        KK   HC18
269        KM     COMBINE SURFACE RUNOFF AT NODE 18
270        KM       DT19 + RS17-18
271        HC      2
           *

272        KK RS18-21
273        KM     NORMAL DEPTH CHANNEL ROUTE FROM NODE 18 TO NODE 21
274        KM                                   1) Reach Length= 3700 FT.
275        KM                                   2) Average Velocity= 10.7 FPS
276        RS      2   FLOW     -1
277        RC   .035    .03   .035   3700   .007   1371
278        RX      0     10     20     45     95    120    130    140
279        RY   1371  1370.5  1370   1360   1360   1370  1370.5   1371
           *
           *
           * ****** BREAK SEQUENCE AND JUMP TO BACK TO FLOW DIVERTED WEST
           *         FROM 7th ST & BELL RD.
           *
           *
```



```
LINE       ID.......1.......2.......3.......4.......5.......6.......7.......8.......9......10

280        KK  FL-19
281        KM   RECALL DIVERTED HYDROGRAPH FROM 7th ST AND BELL RD.
282        DR  FL-19
           *

283        KK RM19-20
284        KM     MUSKINGUM ROUTE IN STREET FROM NODE 19 TO NODE 20
285        KM                                   1) Reach Length= 2350 FT.
286        KM                                   2) Average Velocity= 3.0 FPS
287        RM      3    .22     .3
           *

288        KK     2L
289        KM     RUNOFF GENERATED ON SUB-BASIN 2L
```

```
290        BA   0.601
291        LU     .31     .25    66.2
292        UD     .33
           *

293        KK    DT2L
294        KM   THROW AWAY 10-YR 2-HR RETENTION VOLUME:1) 2.0 AC-FT FROM SUB-BASIN 2L
295        KM                                             (Hydrograph identified as OR-2L)
296        KM                                          2) Balance of runoff continues on.
297        KM                                             (Hydrograph identified as DT2L)
298        DT   OR-2L     2.0
299        DI      0   10000
300        DQ      0   10000
           *

301        KK    HC20
302        KM      COMBINE SURFACE RUNOFF AT NODE 20
303        KM        RM19-20 + DT2L
304        HC      2
           *

305        KK RM20-21
306        KM      MUSKINGUM ROUTE IN CHANNEL FROM NODE 20 TO NODE 21
307        KM                                          1) Reach Length= 3150 FT.
308        KM                                          2) Average Velocity= 5.2 FPS
309        RM      2     .17      .3
           *

310        KK      2M
311        KM      RUNOFF GENERATED ON SUB-BASIN 2M
312        BA   1.174
313        LU    .34     .21    40.6
314        UD    .24
           *
```



```
LINE       ID.......1.......2.......3.......4.......5.......6.......7.......8.......9......10

315        KK    DT2M
316        KM   THROW AWAY 10-YR 2-HR RETENTION VOLUME:1) 8.9 AC-FT FROM SUB-BASIN 2M
317        KM                                             (Hydrograph identified as OR-2M)
318        KM                                          2) Balance of runoff continues on.
319        KM                                             (Hydrograph identified as DT2M)
320        DT   OR-2M     8.9
321        DI      0   10000
322        DQ      0   10000
           *
           *
           * NEXT OPERATION IS TOTAL FLOW AT PARADISE LANE AND CENTRAL AVE.
           *
           *

323        KK    HC21
324        KM      COMBINE SURFACE RUNOFF AT NODE 21
```

```
325        KM       RM20-21 + RM18-21 + DT2M
326        HC      3
           *

327        KK RS21-22
328        KM     NORMAL DEPTH CHANNEL ROUTE FROM NODE 21 TO NODE 22
329        KM                                    1) Reach Length= 4150 FT.
330        KM                                    2) Average Velocity= 7.1 FPS
331        RS      2   FLOW     -1
332        RC    .04   .035    .04   4150   .004   1355
333        RX      0     60    110    123    193    203    253    300
334        RY   1355   1352   1352   1346   1346   1351   1353   1355
           *

335        KK     20
336        KM     RUNOFF GENERATED ON SUB-BASIN 20
337        BA   .639
338        LU    .31    .23   39.1
339        UD    .67
           *

340        KK   DT20
341        KM  THROW AWAY 10-YR 2-HR RETENTION VOLUME:1) 2.4 AC-FT FROM SUB-BASIN 20
342        KM                                           (Hydrograph identified as OR-20)
343        KM                                         2) Balance of runoff continues on.
344        KM                                           (Hydrograph identified as DT20)
345        DT  OR-20    2.4
346        DI      0  10000
347        DQ      0  10000
           *
           *
           * NEXT OPERATION IS TOTAL FLOW AT CORAL GABLES AND 7th AVENUE.
           *
           *
```



```
LINE       ID.......1.......2.......3.......4.......5.......6.......7.......8.......9......10

340        KK   HC22
349        KM     COMBINE SURFACE RUNOFF AT NODE 22
350        KM       RM21-22 + DT20
351        HC      2
           *

352        KK  RS22-6
353        KM     NORMAL DEPTH CHANNEL ROUTE FROM NODE 22 TO NODE 6
354        KM                                    1) Reach Length= 2700 FT.
355        KM                                    2) Average Velocity= 8.8 FPS
356        RS      1   FLOW     -1
357        RC    .04   .035    .04   2700   .005   1337
358        RX      0     70     85     97    157    169    219    279
359        RY   1337   1334   1332   1326   1326   1332   1334   1337
           *
```

```
360        KK     2N
361        KM     RUNOFF GENERATED ON SUB-BASIN 2N
362        BA   0.475
363        LU     .31     .16    33.3
364        UD     .20
           *
           *
           * NEXT OPERATION IS TOTAL FLOW IN THE EAST FORK AT CAVE CREEK.
           *
           *

365        KK    HC6
366        KM     COMBINE SURFACE RUNOFF AT NODE 6
367        KM       RM22-6 + 2N
368        KO                                   21
369        HC      2
           *
           *
           *
           *
           *   CAVE CREEK
           *   SUB-BASINS 1A-1D, 3A-3D, 4A-4C AND 6A-6B
           *
           *
           *
           *

370        KK     1A
371        KM     RUNOFF GENERATED ON SUB-BASIN 1A
372        BA   0.903
373        LU     .48     .13      0
374        UD     .53
           *
```



```
LINE       ID.......1.......2.......3.......4.......5.......6.......7.......8.......9......10


375        KK  RM1A-1
376        KM     MUSKINGUM ROUTE IN CHANNEL FROM NODE 1A TO NODE 1
377        KM                                     1) Reach Length= 9900 FT.
378        KM                                     2) Average Velocity= 5.4 FPS
379        RM      3     .51      .2
           *

380        KK     1B
381        KM     RUNOFF GENERATED ON SUB-BASIN 1B
382        BA   1.601
383        LU     .48     .21      0
384        UD     .29
           *
           *
           * NEXT OPERATION IS TOTAL FLOW IN CAVE CREEK 850' NORTH OF THE C.A.P.
           *
           *
```

```
385        KK    HC1
386        KM     COMBINE SURFACE RUNOFF AT NODE 1
387        KM       RM1A-1 + 1B
388        HC      2
           *
           * THE FOLLOWING REACH IS TOO SHORT FOR A STABLE MUSKINGUM ROUTE.  THE K VALUE
           *  OF ROUTE RM2-3 WAS THEREFORE CHANGED FROM .21 hrs TO .24 hrs.  THIS REACH
           *  WAS CHOSEN FOR EXTENTION BECAUSE THE VELOCITY IN REACH RM1-2 MORE CLOSELY
           *  MATCHES RM2-3 THAN RM1A-1.
           *
           * KK,RM1-2
           * KM    MUSKINGUM ROUTE IN CHANNEL FROM NODE 1 TO NODE 2
           * KM                                        1) Reach Length= 850 FT.
           * KM                                        2) Average Velocity= 7.4 FPS
           * RM,1,.03,.2
           *

389        KK     1C
390        KM     RUNOFF GENERATED ON SUB-BASIN 1C
391        BA   1.492
392        LU    .50     .20     0.6
393        UD    .45
           *
           *
           * NEXT OPERATION IS TOTAL FLOW IN CAVE CREEK AT THE C.A.P. CANAL
           *
           *

394        KK    HC2
395        KM     COMBINE SURFACE RUNOFF AT NODE 2
396        KM       RM1-2 + 1C
397        HC      2
           *
```



```
LINE       ID.......1.......2.......3.......4.......5.......6.......7.......8.......9......10

398        KK   RM2-3
399        KM     MUSKINGUM ROUTE IN CHANNEL FROM NODE 2 TO NODE 3
400        KM                                        1) Reach Length= 6100 FT.
401        KM                                        2) Average Velocity= 7.9 FPS
402        KM                                        3) Use K=.24. Includes .03 hrs
403        KM                                           from reach RM1-2.
404        RM      3     .24      .2
           *

405        KK     1D
406        KM     RUNOFF GENERATED ON SUB-BASIN 1D
407        BA   0.963
408        LU    .45     .18     6.3
409        UD    .28
           *
           *
```

```
          * NEXT OPERATION IS TOTAL FLOW IN CAVE CREEK 500' SOUTH OF DEER VALLEY DRIVE.
          *
          *

410       KK     HC3
411       KM      COMBINE SURFACE RUNOFF AT NODE 3
412       KM        RM2-3 + 1D
413       HC       2
          *

414       KK   RM3-4
415       KM      MUSKINGUM ROUTE IN CHANNEL FROM NODE 3 TO NODE 4
416       KM                                        1) Reach Length= 6800 FT.
417       KM                                        2) Average Velocity= 7.0 FPS
418       RM       3     .27      .3
          *

419       KK      3A
420       KM      RUNOFF GENERATED ON SUB-BASIN 3A
421       BA   1.111
422       LU     .43     .14     2.3
423       UD     .32
          *
          *
          * NEXT OPERATION IS TOTAL FLOW IN CAVE CREEK 1000' SOUTH OF BEARDSLEY ROAD.
          *
          *

424       KK     HC4
425       KM      COMBINE SURFACE RUNOFF AT NODE 4
426       KM        RM3-4 + 3A
427       HC       2
          *
```



```
LINE      ID.......1.......2.......3.......4.......5.......6.......7.......8.......9......10


428       KK   RM4-5
429       KM      MUSKINGUM ROUTE IN CHANNEL FROM NODE 4 TO NODE 5
430       KM                                        1) Reach Length= 11,450 FT.
431       KM                                        2) Average Velocity= 8.0 FPS
432       RM       5     .40      .3
          *

433       KK      3C
434       KM      RUNOFF GENERATED ON SUB-BASIN 3C
435       BA   1.559
436       LU     .38     .20    31.6
437       UD     .40
          *

438       KK    DT3C
439       KM   THROW AWAY 10-YR 2-HR RETENTION VOLUME:1) 4.2 AC-FT FROM SUB-BASIN 3C
440       KM                                          (Hydrograph identified as OR-3C)
```

```
441        KM                                    2) Balance of runoff continues on.
442        KM                                       (Hydrograph identified as DT3C)
443        DT   DR-3C     4.2
444        DI       0   10000
445        DQ       0   10000
           *
           *
           * NEXT OPERATION IS FLOW ABOVE BELL ROAD.
           *
           *

446        KK     HC5
447        KM      COMBINE SURFACE RUNOFF AT NODE 5
448        KM        RM4-5 + DT3C
449        HC       2
           *
           *
           * ****** BREAK SEQUENCE AND JUMP TO SUB-BASIN 3B.
           *
           *

450        KK      3B
451        KM      RUNOFF GENERATED ON SUB-BASIN 3B
452        BA   0.944
453        LU    .39     .25    31.5
454        UD   1.02
           *

455        KK  RM3B-8
456        KM      MUSKINGUM ROUTE IN STREET FROM SUB-BASIN 3B TO NODE 8
457        KM                                    1) Reach Length= 4500 FT.
458        KM                                    2) Average Velocity= 2.5 FPS
459        RM      6      .5      .3
           *
```



```
LINE       ID.......1.......2.......3.......4.......5.......6.......7.......8.......9......10

460        KK     DT8
461        KM   SPLIT FLOW AT INTERSECTION OF RENEE DRIVE AND 13th AVENUE
462        KM
463        KM     SEND FLOW SOUTH IN 13th AVENUE
464        KM     (Hydrograph identified as FL-8)
465        KM
466        KM     REMAINDER FLOWS WEST IN RENEE DRIVE.  (Hydrograph identified as DT8)
467        KM
468        DT    FL-8
469        DI       0       8      78     647    2044
470        DQ       0       0       6     243     992
           *

471        KK   RM8-9
472        KM      MUSKINGUM ROUTE IN STREET FROM NODE 8 TO NODE 9
473        KM                                    1) Reach Length= 2750 FT.
```

```
474     KM                                      2) Average Velocity= 3.5 FPS
475     RM      3     .22      .2
        *

476     KK    DT9
477     KM   SPLIT FLOW AT INTERSECTION OF GROVERS AVENUE AND 13th AVENUE
478     KM
479     KM    SEND FLOW SOUTH IN 13th AVENUE
480     KM    (Hydrograph identified as FL-9)
481     KM
482     KM    REMAINDER FLOWS WEST IN GROVERS AVENUE. (Hydrograph identified as DT9)
483     KM
484     DT   FL-9
485     DI      0     27     44    141    834
486     DQ      0      0      0     37    303
        *

487     KK   RM9-5
488     KM     MUSKINGUM ROUTE IN STREET FROM NODE 9 TO NODE 5
489     KM                                      1) Reach Length= 3950 FT.
490     KM                                      2) Average Velocity= 2.0 FPS
491     RM      6    .54      .2
        *
        *
        * NEXT OPERATION IS TOTAL FLOW AT CAVE CREEK AND BELL ROAD.
        *
        *

492     KK   HC5.1
493     KM     COMBINE SURFACE RUNOFF AT NODE 5.1
494     KM       HC5 + RM9-5
495     HC      2
        *
```



```
LINE    ID.......1.......2.......3.......4.......5.......6.......7.......8.......9......10


496     KK   RS5-6
497     KM     NORMAL DEPTH CHANNEL ROUTE FROM NODE 5 TO NODE 6.1
498     KM                                      1) Reach Length     = 6400 FT.
499     KM                                      2) Average Velocity = 12.7 FPS
500     RS      2   FLOW     -1
501     RC   .035    .03   .035   6400   .007   1347
502     RX      0     15     17     44     70     97    100    108
503     RY   1347   1346   1345   1333   1333   1342   1343   1346
        *
        *

504     KK     3D
505     KM     RUNOFF GENERATED ON SUB-BASIN 3D
506     BA   0.408
507     LU    .43    .24   18.2
508     UD    .17
        *
```

```
          *
          * NEXT OPERATION IS TOTAL FLOW AT THE CONFLUENCE OF CAVE CREEK AND THE EAST
          * FORK OF CAVE CREEK
          *
          *

509       KK   HC6.2
510       KM      COMBINE SURFACE RUNOFF AT NODE 6.2
511       KM        RS5-6 + HC6 + 3D
512       HC       3
          *
          *   ****** REACH REMOVED FROM MODEL.  IT IS TOO SHORT FOR STABLE CALCULATINS.
          *
          * KK,RS6-7
          * KM    NORMAL DEPTH CHANNEL ROUTE FROM NODE 6 TO NODE 7
          * KM                                        1) Reach Length= 2250 FT.
          * KM                                        2) Average Velocity= 13.1 FPS
          * KO,,,,,21
          * RS,1,FLOW,-1
          * RC,.035,.03,.035,2250,.006,1335
          * RX,0,40,80,120,180,228,253,253
          * RY,1330,1329.5,1328,1318,1318,1330,1332,1332
          *
          *
          *   ****** BREAK SEQUENCE AND JUMP BACK TO DIVERTED FLOW FROM NODE 8.
          *
          *

513       KK    FL-8
514       KM    RECALL DIVERTED HYDROGRAPH FROM RENEE DRIVE AND 13th AVENUE
515       DR    FL-8
          *
```



```
LINE      ID.......1.......2.......3.......4.......5.......6.......7.......8.......9......10

516       KK  RM8-10
517       KM      MUSKINGUM ROUTE IN STREET FROM NODE 8 TO NODE 10
518       KM                                        1) Reach Length= 8200 FT.
519       KM                                        2) Average Velocity= 3.0 FPS
520       RM      4     .76      .2
          *

521       KK      4A
522       KM      RUNOFF GENERATED ON SUB-BASIN 4A
523       BA   1.264
524       LU    .32     .19    46.8
525       UD    .85
          *

526       KK    DT4A
527       KM   THROW AWAY 10-YR 2-HR RETENTION VOLUME:1) 7.8 AC-FT FROM SUB-BASIN 4A
528       KM                                            (Hydrograph identified as OR-4A)
529       KM                                         2) Balance of runoff continues on.
```

```
530     KM                                        (Hydrograph identified as DT4A)
531     DT   OR-4A     7.8
532     DI       0   10000
533     DQ       0   10000
        *

534     KK    FL-9
535     KM    RECALL DIVERTED HYDROGRAPH FROM GROVERS AVENUE AND 13th AVENUE
536     DR    FL-9
        *

537     KK  RM9-10
538     KM      MUSKINGUM ROUTE IN STREET FROM NODE 9 TO NODE 10
539     KM                                        1) Reach Length= 5750 FT.
540     KM                                        2) Average Velocity= 3.0 FPS
541     RM       3     .53      .2
        *
        *
        * NEXT OPERATION IS TOTAL FLOW AT 19th AVENUE AND BELL ROAD.
        *
        *

542     KK    HC10
543     KM      COMBINE SURFACE RUNOFF AT NODE 10
544     KM        RM8-10 + DT4A + RM9-10
545     HC       3
        *

546     KK    DT10
547     KM   SPLIT FLOW AT INTERSECTION OF 19th AVENUE AND BELL ROAD.
548     KM
549     KM     SEND FLOW WEST IN BELL ROAD OUT OF WATERSHED IN STREET.
550     KM     (Hydrograph identified as FL-10)
551     KM
552     KM     REMAINDER FLOWS SOUTH IN 19th AVE. STREET AND 90" PIPE.
553     KM     (Hydrograph identified as DT10) (490 cfs in PIPE)
```



```
LINE    ID.......1.......2.......3.......4.......5.......6.......7.......8.......9......10

554     KM
555     DT   FL-10
556     DI       0     961    1006    3470
557     DQ       0     336     336    1517
        *

558     KK  RM10-7
559     KM      MUSKINGUM ROUTE IN STREET FROM NODE 10 TO NODE 7
560     KM                                        1) Reach Length= 6850 FT.
561     KM                                        2) Average Velocity= 4.0 FPS
562     RM       5     .48      .2
        *

563     KK      4B
564     KM      RUNOFF GENERATED ON SUB-BASIN 4B
```

```
565        BA   0.675
566        LU     .3      .2    79.4
567        UD    .24
           *

568        KK    DT4B
569        KM   THROW AWAY 10-YR 2-HR RETENTION VOLUME:1) 4.3 AC-FT FROM SUB-BASIN 4B
570        KM                                             (Hydrograph identified as OR-4B)
571        KM                                          2) Balance of runoff continues on.
572        KM                                             (Hydrograph identified as DT4B)
573        DT   OR-4B     4.3
574        DI       0   10000
575        DQ       0   10000
           *
           *
           * NEXT OPERATION IS TOTAL FLOW IN CAVE CREEK 500' SOUTH OF GREENWAY ROAD
           * AND 600' WEST OF 19th AVENUE.
           *
           *

576        KK     HC7
577        KM      COMBINE SURFACE RUNOFF AT NODE 7
578        KM        HC6.2 + RM10-7 + DT4B
579        HC       3
           *

580        KK  RS7-11
581        KM      NORMAL DEPTH CHANNEL ROUTE FROM NODE 7 TO NODE 11.1
582        KM                                          1) Reach Length= 8900 FT.
583        KM                                          2) Average Velocity= 8.9 FPS
584        RS       4    FLOW      -1
585        RC     .04    .035     .04    8900    .003  1297.5
586        RX       0     137     169     229     249     300     325     365
587        RY  1296.7    1294    1282    1282    1290    1292    1294  1297.5
           *
```



```
LINE       ID.......1.......2.......3.......4.......5.......6.......7.......8.......9......10

588        KK      4C
589        KM      RUNOFF GENERATED ON SUB-BASIN 4C
590        BA   1.029
591        LU     .31      .24    39.7
592        UD     .62
           *

593        KK    DT4C
594        KM      THROW AWAY 10-YR 2-HR RETENTION VOLUME:1) 5.1 AC-FT FROM SUB-BASIN 4C
595        KM                                             (Hydrograph identified as OR-4C)
596        KM                                          2) Balance of runoff continues on.
597        KM                                             (Hydrograph identified as DT4C)
598        DT   OR-4C     5.1
599        DI       0   10000
600        DQ       0   10000
```

```
          *

601       KK  HC11.1
602       KM     COMBINE SURFACE RUNOFF AT NODE 11.1
603       KM       RS7-11 + DT4C
604       HC      2
          *
          *
          * ****** BREAK SEQUENCE AND JUMP TO SUB-BASIN 5G
          *
          *
          *
          *   MOON VALLEY WASH
          *   SUB-BASINS 5A-5G
          *
          *
          *

605       KK     5G
606       KM     RUNOFF GENERATED ON SUB-BASIN 5G
607       BA  0.429
608       LU    .38     .05     3.3
609       UD    .17
          *

610       KK   RS5G
611       KM     RESERVOR ROUTE THROUGH DETENTION BASIN NO. 28
612       KM                                    1) Total Volume  = 48 AC-FT.
613       KM                                    2) Spillway Elev = 1412
614       RS      1   ELEV
615       SV      0      1     18     37     48     68
616       SE   1395   1400   1405   1410   1412   1415
617       SS   1412     80   2.63    1.5
618       SL 1396.7   1.78     .6     .5
          *
                                HEC-1 INPUT                                    PAGE 21

LINE      ID.......1.......2.......3.......4.......5.......6.......7.......8.......9......10


619       KK RM5G-26
620       KM     MUSKINGUM ROUTE IN CHANNEL FROM SUB-BASIN 5G TO NODE 26
621       KM                                    1) Reach Length= 2550 FT.
622       KM                                    2) Average Velocity= 6.5 FPS
623       RM      1    .11      .3
          *

624       KK     5C
625       KM     RUNOFF GENERATED ON SUB-BASIN 5C
626       BA  0.514
627       LU    .34     .05    14.6
628       UD    .16
          *

629       KK   RS5C
```

```
630     KM     RESERVOR ROUTE THROUGH DETENTION BASIN NO. 2A
631     KM                                        1) Total Volume  = 60 AC-FT.
632     KM                                        2) Spillway Elev = 1408
633     RS      1    ELEV
634     SV      0      2      5     10     25     60     69     81     94    108
635     SE   1391   1393   1397   1400   1404   1408   1409   1410   1411   1412
636     SS   1408   80.0   2.63    1.5
637     SL 1392.2   1.78     .6     .5
        *

638     KK RK5C-26
639     KM     KINEMATIC WAVE ROUTE IN PIPE FROM SUB-BASIN 5C TO NODE 26
640     KM                                        1) Reach Length      = 2400 FT.
641     KM                                        2) Avg. Pipe Diameter = 54"
642     KM                                        3) Average Velocity   = 6.4 FPS
643     RK   2400   .009   .015          CIRC    4.5
        *
        *
        * NEXT OPERATION IS TOTAL FLOW AT 7th STREET AND ROBERTS ROAD.
        *
        *

644     KK   HC26
645     KM     COMBINE SURFACE RUNOFF AT NODE 26
646     KM       RM5G-26 + RK5C-26
647     HC      2
        *

648     KK RM26-28
649     KM     MUSKINGUM ROUTE IN CHANNEL FROM NODE 26 TO NODE 28
650     KM                                        1) Reach Length= 5500 FT.
651     KM                                        2) Average Velocity= 7.2 FPS
652     RM      3    .21     .3
        *
        *
        * ****** BREAK SEQUENCE AND JUMP TO SUB-BASIN 5A
        *
        *
        *
```



```
LINE    ID.......1.......2.......3.......4.......5.......6.......7.......8.......9......10

653     KK     5A
654     KM     RUNOFF GENERATED ON SUB-BASIN 5A
655     BA  1.268
656     LU    .27    .17   25.5
657     UD    .21
        *

658     KK RM5A-27
659     KM     MUSKINGUM ROUTE IN CHANNEL FROM SUB-BASIN 5A TO NODE 27
660     KM                                        1) Reach Length= 3600 FT.
661     KM                                        2) Average Velocity= 4.6 FPS
```

```
662     RM      3     .22      .3
        *

663     KK     5B
664     KM     RUNOFF GENERATED ON SUB-BASIN 5B
665     BA   0.686
666     LU     .3     .25    38.0
667     UD    .40
        *

668     KK    HC27
669     KM     COMBINE SURFACE RUNOFF AT NODE 27
670     KM       RM5A-27 + 5B
671     HC      2
        *

672     KK RM27-28
673     KM     MUSKINGUM ROUTE IN CHANNEL FROM NODE 27 TO NODE 28
674     KM                                        1) Reach Length= 900 FT.
675     KM                                        2) Average Velocity= 2.2 FPS
676     RM      1     .11      .3
        *

677     KK    HC28
678     KM     COMBINE SURFACE RUNOFF AT NODE 28
679     KM       RM26-28 + RM27-28
680     HC      2
        *

681     KK RM28-29
682     KM     MUSKINGUM ROUTE IN CHANNEL FROM NODE 28 TO NODE 29
683     KM                                        1) Reach Length= 2150 FT.
684     KM                                        2) Average Velocity= 6.2 FPS
685     RM      1     .10      .3
        *

686     KK     5D
687     KM     RUNOFF GENERATED ON SUB-BASIN 5D
688     BA   0.554
689     LU    .39     .05     2.1
690     UD    .10
        *
```



```
LINE    ID.......1.......2.......3.......4.......5.......6.......7.......8.......9......10

691     KK    RS5D
692     KM     RESERVOR ROUTE THROUGH DETENTION BASIN NO. 7
693     KM                                        1) Total Volume  = 120 AC-FT.
694     KM                                        2) Spillway Elev = 1392
695     RS      1    ELEV
696     SV      0     120     136     152     175     200     224     248     272
697     SE   1369    1392    1393    1394    1395    1396    1397    1398    1399
698     SQ      0      53     363     928    1660    2526    3508    4594    5775
```

```
*
KK RM5D-29
KM     MUSKINGUM ROUTE IN CHANNEL FROM SUB-BASIN 5D TO NODE 29
KM                                        1) Reach Length= 6700 FT.
KM                                        2) Average Velocity= 5.8 FPS
RM      4     .32      .3
*
KK     5E
KM     RUNOFF GENERATED ON SUB-BASIN 5E
BA   1.592
LU    .27     .11    39.8
UD    .37
*
KK    DT5E
KM   THROW AWAY 10-YR 2-HR RETENTION VOLUME:1) 6.0 AC-FT FROM SUB-BASIN 5E
KM                                            (Hydrograph identified as OR-2E)
KM                                         2) Balance of runoff continues on.
KM                                            (Hydrograph identified as DT2E)
DT   OR-2E     6.0
DI      0   10000
DQ      0   10000
*
*
* NEXT OPERATION IS TOTAL FLOW AT THUNDERBIRD ROAD WEST OF CORAL GABLES
*
*
KK    HC29
KM     COMBINE SURFACE RUNOFF AT NODE 29
KM       RM28-29 + RM5D-29 + DT5E
HC      3
*
KK RM29-11
KM     MUSKINGUM ROUTE IN CHANNEL FROM NODE 29 TO NODE 11
KM                                        1) Reach Length= 7000 FT.
KM                                        2) Average Velocity= 11.9 FPS
RM      2     .16      .3
*
```



```
LINE      ID.......1.......2.......3.......4.......5.......6.......7.......8.......9......10

KK     5F
KM     RUNOFF GENERATED ON SUB-BASIN 5F
BA   1.522
LU    .26     .14    28.3
UD    .50
*
KK    DT5F
```

```
732     KM   THROW AWAY 10-YR 2-HR RETENTION VOLUME:1) 5.0 AC-FT FROM SUB-BASIN 5F
733     KM                                            (Hydrograph identified as OR-5F)
734     KM                                         2) Balance of runoff continues on.
735     KM                                            (Hydrograph identified as DT5F)
736     DT   OR-5F     5.0
737     DI       0   10000
738     DQ       0   10000
        *
        *
        * NEXT OPERATION IS TOTAL FLOW IN MOON VALLEY WASH AT CAVE CREEK
        *
        *

739     KK    HC11
740     KM      COMBINE SURFACE RUNOFF AT NODE 11
741     KM        RM29-11 + DT5F
742     KO                                    21
743     HC       2
        *
        *
        * NEXT OPERATION IS TOTAL FLOW AT THE CONFLUENCE OF CAVE CREEK WITH MOON
        * VALLEY WASH
        *
        *

744     KK  HC11.2
745     KM      COMBINE SURFACE RUNOFF AT NODE 11.2
746     KM        HC11.1 + HC11
747     HC       2
        *
        *  ******* REACH REMOVED FROM MODEL.  IT IS TOO SHORT FOR STABLE CALCULATIONS.
        *           .03 hrs was added to reach RM12-13.
        *
        * KK,RM11-12
        * KM    MUSKINGUM ROUTE IN CHANNEL FROM NODE 11 TO NODE 12
        * KM                                         1) Reach Length= 2700 FT.
        * KM                                         2) Average Velocity= 22.2 FPS
        * RM,1,.03,.2
        *

748     KK      6A
749     KM      RUNOFF GENERATED ON SUB-BASIN 6A
750     KM
751     BA   0.459
752     LU     .33     .20    43.0
753     UD     .45
        *
```



```
LINE    ID.......1.......2.......3.......4.......5.......6.......7.......8.......9......10

754     KK    DT6A
755     KM   THROW AWAY 10-YR 2-HR RETENTION VOLUME:1) 1.4 AC-FT FROM SUB-BASIN 6A
756     KM                                            (Hydrograph identified as OR-6A)
```

```
757        KM                                    2) Balance of runoff continues on.
758        KM                                       (Hydrograph identified as DT6A)
759        DT   OR-6A     1.4
760        DI       0   10000
761        DQ       0   10000
           *
           *
           * NEXT OPERATION IS TOTAL FLOW IN CAVE CREEK AT CACTUS ROAD.
           *
           *

762        KK    HC12
763        KM      COMBINE SURFACE RUNOFF AT NODE 12
764        KM        HC11 + DT6A
765        HC       2
           *

766        KK RM12-13
767        KM      MUSKINGUM ROUTE IN CHANNEL FROM NODE 12 TO NODE 13
768        KM                                    1) Reach Length= 9000 FT.
769        KM                                    2) Average Velocity= 21.0 FPS.
770        RM       2     .15      .2
           *

771        KK      6B
772        KM      RUNOFF GENERATED ON SUB-BASIN 6B
773        BA   1.138
774        LU     .32     .20    61.5
775        UD     .63
           *

776        KK    DT6B
777        KM   THROW AWAY 10-YR 2-HR RETENTION VOLUME:1) 13.0 AC-FT FROM SUB-BASIN 6B
778        KM                                       (Hydrograph identified as OR-6B)
779        KM                                    2) Balance of runoff continues on.
780        KM                                       (Hydrograph identified as DT6B)
781        DT   OR-6B    13.0
782        DI       0   10000
783        DQ       0   10000
           *
           *
           * NEXT OPERATION IS TOTAL FLOW IN CAVE CREEK AT THE CONFLUENCE WITH THE
           * ARIZONA CANAL DIVERSION CHANNEL.
           *
           *
```



```
LINE       ID.......1.......2.......3.......4.......5.......6.......7.......8.......9......10

784        KK    HC13
785        KM      COMBINE SURFACE RUNOFF AT NODE 13
786        KM        RM12-13 + DT6B
787        KO                                 21
788        HC       2
```

```
                    t
        789         ZZ

            SCHEMATIC DIAGRAM OF STREAM NETWORK
INPUT
 LINE     (V) ROUTING        (--->) DIVERSION OR PUMP FLOW

  NO.     (.) CONNECTOR      (<---) RETURN OF DIVERTED OR PUMPED FLOW

  10        2A
            .
            .
  26        .         2B
            .          .
            .          .
  31      HC14............
            V
            V
  35    RM14-15
            .
            .
  40        .         2C
            .          .
            .          .
  50        .          .-------> OR-2C
  45        .       DT2C
            .          .
            .          .
  53      HC15............
            V
            V
  57    RM15-16
            .
            .
  62        .         2E
            .          .
            .          .
  67      HC16............
            V
            V
  71    RM16-17
            .
            .
  76        .         2H
            .          .
            .          .
  86        .          .-------> OR-2H
  81        .       DT2H
            .          .
            .          .
  89      HC17............
            .
            .
  93        .         2D
            .          .
```

```
          .         .
103       .         .-------> OR-2D
 98       .      DT2D
          .         .
          .         .
114       .         .-------> FL-2D
106       .      DT2DS
          .         V
          .         V
117       .    RM2D-23
          .         .
          .         .
122       .         .        2P
          .         .         .
          .         .         .
132       .         .         .-------> OR-2P
127       .         .      DT2P
          .         .         .
          .         .         .
135       .      HC23............
          .         V
          .         V
139       .    RM23-24
          .         .
          .         .
146       .         .        2F
          .         .         .
          .         .         .
157       .         .         .-------> OR-2F
152       .         .      DT2F
          .         .         .
          .         .         .
160       .      HC24............
          .         .
          .         .
165       .         .        2G
          .         .         V
          .         .         V
170       .         .    RM2G-25
          .         .         .
          .         .         .
175       .      HC25............
          .         V
          .         V
179       .    RS25-17
          .         .
          .         .
187    HC17.1............
          V
          V
191    RS17-18
          .
          .
199       .        2J
          .         .
```

```
          .         .
209       .         .------>  OR-2J
204       .      DT2J
          .        V
          .        V
212       .    RM2J-19
          .         .
          .         .
217       .         .        2I
          .         .         .
          .         .         .
227       .         .         .------>  OR-2I
222       .         .      DT2I
          .         .        V
          .         .        V
230       .         .    RM2I-19
          .         .         .
          .         .         .
235       .         .         .        2K
          .         .         .         .
          .         .         .         .
245       .         .         .         .------>  OR-2K
240       .         .         .      DT2K
          .         .         .         .
          .         .         .         .
248       .      HC19.......................
          .         .
          .         .
260       .         .------>  FL-19
252       .      DT19
          .        V
          .        V
263       .    RM19-18
          .         .
          .         .
268     HC18............
          V
          V
272   RS18-21
          .
          .
282       .         .<------  FL-19
280       .     FL-19
          .        V
          .        V
283       .    RM19-20
          .         .
          .         .
288       .         .        2L
          .         .         .
          .         .         .
298       .         .         .------>  OR-2L
293       .         .      DT2L
          .         .         .
          .         .         .
```

```
301          .      HC20...........
             .        V
             .        V
305          .    RM20-21
             .        .
             .        .
310          .        .        2M
             .        .         .
             .        .         .
320          .        .         .-------> OR-2M
315          .        .      DT2M
             .        .         .
             .        .         .
323       HC21......................
            V
            V
327     RS21-22
             .
             .
335          .        2D
             .        .
             .        .
345          .        .-------> OR-2D
340          .      DT2D
             .        .
             .        .
348       HC22...........
            V
            V
352     RS22-6
             .
             .
360          .        2N
             .        .
             .        .
365       HC6............
             .
             .
370          .        1A
             .        V
             .        V
375          .    RM1A-1
             .        .
             .        .
380          .        .        1B
             .        .         .
             .        .         .
385          .      HC1............
             .        .
             .        .
389          .        .        1C
             .        .         .
             .        .         .
394          .      HC2............
             .        V
```

```
          .        V
398       .     RM2-3
          .        .
          .        .
405       .        .        1D
          .        .         .
          .        .         .
410       .      HC3............
          .        V
          .        V
414       .     RM3-4
          .        .
          .        .
419       .        .        3A
          .        .         .
          .        .         .
424       .      HC4............
          .        V
          .        V
428       .     RM4-5
          .        .
          .        .
433       .        .        3C
          .        .         .
          .        .         .
443       .        .         .-------> OR-3C
438       .        .      DT3C
          .        .         .
          .        .         .
446       .      HC5............
          .        .
          .        .
450       .        .        3B
          .        .         V
          .        .         V
455       .        .     RM3B-8
          .        .         .
          .        .         .
468       .        .         .-------> FL-8
460       .        .      DT8
          .        .         V
          .        .         V
471       .        .     RM8-9
          .        .         .
          .        .         .
484       .        .         .-------> FL-9
476       .        .      DT9
          .        .         V
          .        .         V
487       .        .     RM9-5
          .        .         .
          .        .         .
492       .     HC5.1............
          .        V
          .        V
```

```
496        .     RS5-6
           .       .
           .       .
504        .       .        3D
           .       .         .
           .       .         .
509     HC6.2.....................
           .
           .
515        .       .<------   FL-8
513        .     FL-8
           .       V
           .       V
516        .    RM3-10
           .       .
           .       .
521        .       .        4A
           .       .         .
           .       .         .
531        .       .         .------>  OR-4A
526        .       .      DT4A
           .       .         .
           .       .         .
536        .       .         .        .<------   FL-9
534        .       .         .     FL-9
           .       .         .       V
           .       .         .       V
537        .       .         .    RM9-10
           .       .         .         .
           .       .         .         .
542        .     HC10.....................
           .       .
           .       .
555        .       .------>  FL-10
546        .     DT10
           .       V
           .       V
558        .    RM10-7
           .       .
           .       .
563        .       .        4B
           .       .         .
           .       .         .
573        .       .         .------>  OR-4B
568        .       .      DT4B
           .       .         .
           .       .         .
576     HC7.....................
        V
        V
580  RS7-11
        .
        .
588     .       4C
        .       .
```

```
          .         .
598       .         .-------> DR-4C
593       .      DT4C
          .         .
          .         .
601    HC11.1............
          .
          .
605       .        5G
          .         V
          .         V
610       .      RS5G
          .         V
          .         V
619       .    RM5G-26
          .         .
          .         .
624       .         .        5C
          .         .         V
          .         .         V
629       .         .      RS5C
          .         .         V
          .         .         V
638       .         .    RK5C-26
          .         .         .
          .         .         .
644       .      HC26............
          .         V
          .         V
648       .    RM26-28
          .         .
          .         .
653       .         .        5A
          .         .         V
          .         .         V
658       .         .    RM5A-27
          .         .         .
          .         .         .
663       .         .         .        5B
          .         .         .         .
          .         .         .         .
668       .         .      HC27............
          .         .         V
          .         .         V
672       .         .    RM27-28
          .         .         .
          .         .         .
677       .      HC28............
          .         V
          .         V
681       .    RM28-29
          .         .
          .         .
686       .         .        5D
          .         .         V
```

```
          .         .         V
691       .         .       RS5D
          .         .         V
          .         .         V
699       .         .     RM5D-29
          .         .         .
          .         .         .
704       .         .         .         5E
          .         .         .         .
          .         .         .         .
714       .         .         .         .-------> OR-2E
709       .         .         .       DT5E
          .         .         .         .
          .         .         .         .
717       .       HC29.......................
          .         V
          .         V
721       .     RM29-11
          .         .
          .         .
726       .         .         5F
          .         .         .
          .         .         .
736       .         .         .-------> OR-5F
731       .         .       DT5F
          .         .         .
          .         .         .
739       .       HC11............
          .         .
          .         .
744     HC11.2............
          .
          .
748       .         6A
          .         .
          .         .
759       .         .-------> OR-6A
754       .       DT6A
          .         .
          .         .
762     HC12............
          V
          V
766     RM12-13
          .
          .
771       .         6B
          .         .
          .         .
781       .         .-------> OR-6B
776       .       DT6B
          .         .
          .         .
784     HC13............
```

```
(***) RUNOFF ALSO COMPUTED AT THIS LOCATION
****************************************
*                                      *
*  FLOOD HYDROGRAPH PACKAGE  (HEC-1)   *
*     BY THE COE IN FEBRUARY 1981      *
*          REVISED 02 AUG 88           *
*                                      *
* RUN DATE  01/16/1990  TIME  14:13:38 *
*                                      *
****************************************
```

```
****************************************
*                                      *
*    DODSON AND ASSOCIATES, INC.       *
*  HYDROLOGIST AND CIVIL ENGINEERS     *
*     7015 W TIDWELL SUITE 107         *
*       HOUSTON, TEXAS  77092          *
*         (713) 895-8322               *
*                                      *
****************************************
```

```
                    FCDMC CAVE CREEK FIS, JOB NO. 7833
                    50-YEAR 24-HR DURATION STORM
                    FILE = 783350Y.IN : 01/12/90 trl
                    STORM PRECIP : 5 SM Area = 3.50", 10 SM = 3.39", 15 SM = 3.32", 20 SM = 3.28"
                    STORM PRECIP : 35 SM = 3.21"

  7 ID        OUTPUT CONTROL VARIABLES
                   IPRNT          5  PRINT CONTROL
                   IPLOT          0  PLOT CONTROL
                   QSCAL         0.  HYDROGRAPH PLOT SCALE

   IT         HYDROGRAPH TIME DATA
                    NMIN          5  MINUTES IN COMPUTATION INTERVAL
                   IDATE     1    0  STARTING DATE
                   ITIME       0000  STARTING TIME
                      NQ        300  NUMBER OF HYDROGRAPH ORDINATES
                  NDDATE     2    0  ENDING DATE
                  NDTIME       0055  ENDING TIME
                   ICENT         19  CENTURY MARK

              COMPUTATION INTERVAL     .08 HOURS
                   TOTAL TIME BASE   24.92 HOURS

        ENGLISH UNITS
            DRAINAGE AREA        SQUARE MILES
            PRECIPITATION DEPTH  INCHES
            LENGTH, ELEVATION    FEET
            FLOW                 CUBIC FEET PER SECOND
            STORAGE VOLUME       ACRE-FEET
            SURFACE AREA         ACRES
            TEMPERATURE          DEGREES FAHRENHEIT

   JP         MULTI-PLAN OPTION
                   NPLAN          1  NUMBER OF PLANS

   JR         MULTI-RATIO OPTION
                 RATIOS OF PRECIPITATION
               1.00      .97      .95      .94      .92
```

```
*** *** *** *** *** *** *** *** *** *** *** *** *** *** *** *** *** *** *** *** *** *** *** *** *** *** *** *** *** *** *** *** ***

          **************
          *            *
160 KK    *     HC24   *
          *            *
          **************

163 KO         OUTPUT CONTROL VARIABLES
                    IPRNT          5  PRINT CONTROL
                    IPLOT          0  PLOT CONTROL
                    QSCAL         0.  HYDROGRAPH PLOT SCALE
                    IPNCH          0  PUNCH COMPUTED HYDROGRAPH
                     IOUT         21  SAVE HYDROGRAPH ON THIS UNIT
                    ISAV1          1  FIRST ORDINATE PUNCHED OR SAVED
                    ISAV2        300  LAST ORDINATE PUNCHED OR SAVED
                   TIMINT       .083  TIME INTERVAL IN HOURS


*** *** *** *** *** *** *** *** *** *** *** *** *** *** *** *** *** *** *** *** *** *** *** *** *** *** *** *** *** *** *** *** ***

          **************
          *            *
365 KK    *     HC6    *
          *            *
          **************

368 KO         OUTPUT CONTROL VARIABLES
                    IPRNT          5  PRINT CONTROL
                    IPLOT          0  PLOT CONTROL
                    QSCAL         0.  HYDROGRAPH PLOT SCALE
                    IPNCH          0  PUNCH COMPUTED HYDROGRAPH
                     IOUT         21  SAVE HYDROGRAPH ON THIS UNIT
                    ISAV1          1  FIRST ORDINATE PUNCHED OR SAVED
                    ISAV2        300  LAST ORDINATE PUNCHED OR SAVED
                   TIMINT       .083  TIME INTERVAL IN HOURS


*** *** *** *** *** *** *** *** *** *** *** *** *** *** *** *** *** *** *** *** *** *** *** *** *** *** *** *** *** *** *** *** ***

          **************
          *            *
739 KK    *     HC11   *
          *            *
          **************

742 KO         OUTPUT CONTROL VARIABLES
```

```
IPRNT        5  PRINT CONTROL
IPLOT        0  PLOT CONTROL
QSCAL       0.  HYDROGRAPH PLOT SCALE
IPNCH        0  PUNCH COMPUTED HYDROGRAPH
 IOUT       21  SAVE HYDROGRAPH ON THIS UNIT
ISAV1        1  FIRST ORDINATE PUNCHED OR SAVED
ISAV2      300  LAST ORDINATE PUNCHED OR SAVED
TIMINT    .083  TIME INTERVAL IN HOURS
```

*** ***

```
         **************
         *            *
784 KK   *     HC13   *
         *            *
         **************

787 KO        OUTPUT CONTROL VARIABLES
                IPRNT        5  PRINT CONTROL
                IPLOT        0  PLOT CONTROL
                QSCAL       0.  HYDROGRAPH PLOT SCALE
                IPNCH        0  PUNCH COMPUTED HYDROGRAPH
                 IOUT       21  SAVE HYDROGRAPH ON THIS UNIT
                ISAV1        1  FIRST ORDINATE PUNCHED OR SAVED
                ISAV2      300  LAST ORDINATE PUNCHED OR SAVED
               TIMINT    .083  TIME INTERVAL IN HOURS
```

PEAK FLOW AND STAGE (END-OF-PERIOD) SUMMARY FOR MULTIPLE PLAN-RATIO ECONOMIC COMPUTATIONS
FLOWS IN CUBIC FEET PER SECOND, AREA IN SQUARE MILES
TIME TO PEAK IN HOURS

					RATIOS APPLIED TO PRECIPITATION				
OPERATION	STATION	AREA	PLAN		RATIO 1	RATIO 2	RATIO 3	RATIO 4	RATIO 5
					1.00	.97	.95	.94	.92
HYDROGRAPH AT	2A	.87	1	FLOW	1384.	1337.	1307.	1296.	1265.
				TIME	12.17	12.17	12.17	12.17	12.17
HYDROGRAPH AT	2B	.41	1	FLOW	748.	722.	706.	699.	682.
				TIME	12.08	12.08	12.08	12.08	12.08
2 COMBINED AT	HC14	1.28	1	FLOW	2126.	2054.	2008.	1990.	1942.
				TIME	12.08	12.08	12.08	12.08	12.08
ROUTED TO	RM14-15	1.28	1	FLOW	1885.	1920.	1780.	1763.	1721.
				TIME	12.42	12.42	12.42	12.42	12.42
HYDROGRAPH AT	2C	1.18	1	FLOW	1148.	1109.	1084.	1074.	1048.

				TIME	12.50	12.50	12.50	12.50	12.50
DIVERSION TO	OR-2C	1.18	1	FLOW	4.	4.	4.	4.	4.
				TIME	.58	.58	.58	.58	.67
HYDROGRAPH AT	DT2C	1.18	1	FLOW	1148.	1109.	1084.	1074.	1048.
				TIME	12.50	12.50	12.50	12.50	12.50
2 COMBINED AT	HC15	2.46	1	FLOW	3028.	2924.	2859.	2833.	2764.
				TIME	12.42	12.42	12.42	12.42	12.42
ROUTED TO	RM15-16	2.46	1	FLOW	2793.	2696.	2636.	2611.	2548.
				TIME	12.83	12.83	12.83	12.83	12.83
HYDROGRAPH AT	2E	1.10	1	FLOW	1348.	1302.	1273.	1262.	1231.
				TIME	12.25	12.25	12.25	12.25	12.25
2 COMBINED AT	HC16	3.56	1	FLOW	3252.	3138.	3066.	3038.	2962.
				TIME	12.75	12.75	12.75	12.75	12.75
ROUTED TO	RM16-17	3.56	1	FLOW	3143.	3032.	2963.	2935.	2863.
				TIME	13.08	13.08	13.08	13.08	13.08
HYDROGRAPH AT	2H	1.42	1	FLOW	1130.	1090.	1066.	1056.	1030.
				TIME	12.67	12.67	12.67	12.67	12.67
DIVERSION TO	OR-2H	1.42	1	FLOW	28.	27.	27.	27.	26.
				TIME	7.92	8.08	8.17	8.17	8.33
HYDROGRAPH AT	DT2H	1.42	1	FLOW	1130.	1090.	1066.	1056.	1030.
				TIME	12.67	12.67	12.67	12.67	12.67
2 COMBINED AT	HC17	4.98	1	FLOW	4059.	3915.	3825.	3789.	3695.
				TIME	13.00	13.00	13.00	13.00	13.00
HYDROGRAPH AT	2D	1.19	1	FLOW	1077.	1039.	1015.	1005.	980.
				TIME	12.50	12.50	12.50	12.50	12.50
DIVERSION TO	OR-2D	1.19	1	FLOW	14.	13.	13.	13.	13.
				TIME	5.17	5.33	5.42	5.42	5.50
HYDROGRAPH AT	DT2D	1.19	1	FLOW	1077.	1039.	1015.	1005.	980.
				TIME	12.50	12.50	12.50	12.50	12.50
DIVERSION TO	FL-2D	1.19	1	FLOW	617.	596.	583.	577.	564.
				TIME	12.50	12.50	12.50	12.50	12.50
HYDROGRAPH AT	DT2DS	1.19	1	FLOW	460.	443.	432.	428.	416.
				TIME	12.50	12.50	12.50	12.50	12.50
ROUTED TO	RM2D-23	1.19	1	FLOW	441.	424.	414.	409.	398.
				TIME	12.83	12.83	12.83	12.83	12.83
HYDROGRAPH AT	2P	.59	1	FLOW	636.	614.	601.	596.	581.
				TIME	12.42	12.42	12.42	12.42	12.42

DIVERSION TO	OR-2P	.59	1	FLOW	9.	9.	8.	8.	8.
				TIME	2.92	2.92	2.92	2.92	2.92
HYDROGRAPH AT	DT2P	.59	1	FLOW	636.	614.	601.	596.	581.
				TIME	12.42	12.42	12.42	12.42	12.42
2 COMBINED AT	HC23	1.78	1	FLOW	911.	878.	858.	850.	828.
				TIME	12.58	12.58	12.58	12.58	12.58
ROUTED TO	RM23-24	1.78	1	FLOW	875.	843.	823.	815.	794.
				TIME	13.00	13.00	13.00	13.00	13.00
HYDROGRAPH AT	2F	.95	1	FLOW	1144.	1106.	1082.	1072.	1047.
				TIME	12.33	12.33	12.33	12.33	12.33
DIVERSION TO	OR-2F	.95	1	FLOW	15.	15.	14.	14.	14.
				TIME	2.58	3.83	3.92	3.92	4.00
HYDROGRAPH AT	DT2F	.95	1	FLOW	1144.	1106.	1082.	1072.	1047.
				TIME	12.33	12.33	12.33	12.33	12.33
2 COMBINED AT	HC24	2.74	1	FLOW	1306.	1261.	1233.	1222.	1192.
				TIME	12.33	12.33	12.33	12.33	12.33
HYDROGRAPH AT	2G	.92	1	FLOW	1196.	1155.	1130.	1120.	1094.
				TIME	12.25	12.25	12.25	12.25	12.25
ROUTED TO	RM2G-25	.92	1	FLOW	1160.	1120.	1096.	1086.	1060.
				TIME	12.42	12.42	12.42	12.42	12.42
2 COMBINED AT	HC25	3.65	1	FLOW	2465.	2381.	2328.	2307.	2251.
				TIME	12.42	12.42	12.42	12.42	12.42
ROUTED TO	RS25-17	3.65	1	FLOW	2346.	2268.	2221.	2203.	2156.
				TIME	12.58	12.58	12.50	12.50	12.50
			** PEAK STAGES IN FEET **						
			1	STAGE	1414.81	1414.72	1414.66	1414.64	1414.59
				TIME	12.50	12.50	12.50	12.50	12.50
2 COMBINED AT	HC17.1	8.63	1	FLOW	5748.	5529.	5395.	5343.	5207.
				TIME	12.92	12.92	12.92	12.92	12.92
ROUTED TO	RS17-18	8.63	1	FLOW	5735.	5520.	5387.	5335.	5197.
				TIME	13.00	13.00	13.00	13.00	13.00
			** PEAK STAGES IN FEET **						
			1	STAGE	1389.41	1389.26	1389.16	1389.12	1389.02
				TIME	13.00	13.00	13.00	13.00	13.00
HYDROGRAPH AT	2J	.70	1	FLOW	604.	583.	569.	564.	550.
				TIME	12.58	12.58	12.58	12.58	12.58
DIVERSION TO	OR-2J	.70	1	FLOW	7.	6.	7.	6.	6.

				TIME	6.50	6.58	6.75	6.75	6.83
HYDROGRAPH AT	DT2J	.70	1	FLOW	604.	583.	569.	564.	550.
				TIME	12.58	12.58	12.58	12.58	12.58
ROUTED TO	RM2J-19	.70	1	FLOW	530.	511.	499.	495.	482.
				TIME	13.08	13.08	13.08	13.08	13.08
HYDROGRAPH AT	2I	.99	1	FLOW	1114.	1076.	1052.	1042.	1017.
				TIME	12.33	12.33	12.33	12.33	12.33
DIVERSION TO	OR-2I	.99	1	FLOW	18.	17.	17.	17.	17.
				TIME	7.75	7.92	8.00	8.08	8.17
HYDROGRAPH AT	DT2I	.99	1	FLOW	1114.	1076.	1052.	1042.	1017.
				TIME	12.33	12.33	12.33	12.33	12.33
ROUTED TO	RM2I-19	.99	1	FLOW	1023.	988.	966.	957.	933.
				TIME	12.50	12.50	12.50	12.50	12.50
HYDROGRAPH AT	2K	1.34	1	FLOW	1748.	1689.	1651.	1636.	1597.
				TIME	12.25	12.25	12.25	12.25	12.25
DIVERSION TO	OR-2K	1.34	1	FLOW	20.	20.	20.	20.	20.
				TIME	5.75	6.17	6.25	6.25	6.33
HYDROGRAPH AT	DT2K	1.34	1	FLOW	1748.	1689.	1651.	1636.	1597.
				TIME	12.25	12.25	12.25	12.25	12.25
3 COMBINED AT	HC19	3.03	1	FLOW	2649.	2556.	2498.	2474.	2414.
				TIME	12.33	12.33	12.33	12.33	12.33
DIVERSION TO	FL-19	3.03	1	FLOW	349.	337.	329.	326.	317.
				TIME	12.33	12.33	12.33	12.33	12.33
HYDROGRAPH AT	DT19	3.03	1	FLOW	2300.	2219.	2169.	2149.	2096.
				TIME	12.33	12.33	12.33	12.33	12.33
ROUTED TO	RM19-18	3.03	1	FLOW	2275.	2195.	2145.	2126.	2074.
				TIME	12.42	12.42	12.42	12.42	12.42
2 COMBINED AT	HC18	11.66	1	FLOW	7333.	7070.	6905.	6839.	6666.
				TIME	12.75	12.75	12.75	12.75	12.67
ROUTED TO	RS18-21	11.66	1	FLOW	7331.	7071.	6905.	6838.	6666.
				TIME	12.75	12.75	12.75	12.75	12.75

** PEAK STAGES IN FEET **

			1	STAGE	1367.79	1367.63	1367.54	1367.50	1367.39
				TIME	12.75	12.75	12.75	12.75	12.75
HYDROGRAPH AT	FL-19	.00	1	FLOW	349.	337.	329.	326.	317.
				TIME	12.33	12.33	12.33	12.33	12.33
ROUTED TO	RM19-20	.00	1	FLOW	340.	327.	320.	317.	308.

				TIME	12.58	12.58	12.58	12.58	12.58
HYDROGRAPH AT	2L	.60	1	FLOW	868.	839.	821.	814.	795.
				TIME	12.17	12.17	12.17	12.17	12.17
DIVERSION TO	OR-2L	.60	1	FLOW	11.	10.	10.	10.	10.
				TIME	2.00	2.00	2.00	2.00	2.00
HYDROGRAPH AT	DT2L	.60	1	FLOW	868.	839.	821.	814.	795.
				TIME	12.17	12.17	12.17	12.17	12.17
2 COMBINED AT	HC20	.60	1	FLOW	1053.	1017.	994.	985.	962.
				TIME	12.25	12.25	12.25	12.25	12.25
ROUTED TO	RM20-21	.60	1	FLOW	1017.	982.	960.	952.	929.
				TIME	12.42	12.42	12.42	12.42	12.42
HYDROGRAPH AT	2M	1.17	1	FLOW	1943.	1877.	1837.	1820.	1778.
				TIME	12.08	12.08	12.08	12.08	12.08
DIVERSION TO	OR-2M	1.17	1	FLOW	22.	21.	20.	20.	20.
				TIME	7.25	7.33	7.33	7.33	7.33
HYDROGRAPH AT	DT2M	1.17	1	FLOW	1943.	1877.	1837.	1820.	1778.
				TIME	12.08	12.08	12.08	12.08	12.08
3 COMBINED AT	HC21	13.43	1	FLOW	8391.	8091.	7903.	7829.	7636.
				TIME	12.67	12.67	12.67	12.67	12.67
ROUTED TO	RS21-22	13.43	1	FLOW	8287.	7989.	7801.	7725.	7529.
				TIME	12.83	12.83	12.83	12.83	12.83
			** PEAK STAGES IN FEET **						
			1	STAGE	1354.30	1354.18	1354.10	1354.07	1353.98
				TIME	12.83	12.83	12.83	12.83	12.83
HYDROGRAPH AT	20	.64	1	FLOW	574.	554.	541.	536.	523.
				TIME	12.50	12.50	12.50	12.50	12.50
DIVERSION TO	OR-20	.64	1	FLOW	8.	8.	8.	8.	8.
				TIME	5.08	5.17	5.25	5.33	5.42
HYDROGRAPH AT	DT20	.64	1	FLOW	574.	554.	541.	536.	523.
				TIME	12.50	12.50	12.50	12.50	12.50
2 COMBINED AT	HC22	14.07	1	FLOW	8744.	8429.	8230.	8151.	7944.
				TIME	12.83	12.83	12.83	12.83	12.83
ROUTED TO	RS22-6	14.07	1	FLOW	8692.	8377.	8179.	8101.	7896.
				TIME	12.83	12.83	12.83	12.83	12.83
			** PEAK STAGES IN FEET **						
			1	STAGE	1335.01	1334.86	1334.77	1334.73	1334.63
				TIME	12.83	12.83	12.83	12.83	12.83

HYDROGRAPH AT	2N	.47	1	FLOW	876.	847.	829.	821.	802.
				TIME	12.08	12.08	12.08	12.08	12.08
2 COMBINED AT	HC6	14.55	1	FLOW	8773.	8455.	8254.	8175.	7968.
				TIME	12.83	12.83	12.83	12.83	12.83
HYDROGRAPH AT	1A	.90	1	FLOW	959.	926.	905.	897.	875.
				TIME	12.42	12.42	12.42	12.42	12.42
ROUTED TO	RM1A-1	.90	1	FLOW	807.	779.	761.	754.	736.
				TIME	12.92	12.92	12.92	12.92	12.92
HYDROGRAPH AT	1B	1.60	1	FLOW	2364.	2281.	2230.	2209.	2155.
				TIME	12.17	12.17	12.17	12.17	12.17
2 COMBINED AT	HC1	2.50	1	FLOW	2505.	2416.	2360.	2338.	2279.
				TIME	12.17	12.17	12.17	12.17	12.17
HYDROGRAPH AT	1C	1.49	1	FLOW	1695.	1635.	1597.	1582.	1543.
				TIME	12.33	12.33	12.33	12.33	12.33
2 COMBINED AT	HC2	4.00	1	FLOW	4029.	3885.	3795.	3759.	3664.
				TIME	12.25	12.25	12.25	12.25	12.25
ROUTED TO	RM2-3	4.00	1	FLOW	3744.	3609.	3524.	3491.	3402.
				TIME	12.50	12.50	12.50	12.50	12.50
HYDROGRAPH AT	1D	.96	1	FLOW	1472.	1422.	1390.	1378.	1344.
				TIME	12.17	12.17	12.17	12.17	12.17
2 COMBINED AT	HC3	4.96	1	FLOW	4482.	4320.	4218.	4178.	4072.
				TIME	12.42	12.42	12.42	12.42	12.42
ROUTED TO	RM3-4	4.96	1	FLOW	4313.	4156.	4058.	4019.	3917.
				TIME	12.67	12.67	12.67	12.67	12.67
HYDROGRAPH AT	3A	1.11	1	FLOW	1600.	1545.	1511.	1498.	1462.
				TIME	12.17	12.17	12.17	12.17	12.17
2 COMBINED AT	HC4	6.07	1	FLOW	4797.	4621.	4512.	4468.	4353.
				TIME	12.67	12.67	12.67	12.67	12.67
ROUTED TO	RM4-5	6.07	1	FLOW	4656.	4485.	4378.	4336.	4224.
				TIME	13.00	13.00	13.00	13.00	13.00
HYDROGRAPH AT	3C	1.56	1	FLOW	1979.	1912.	1869.	1852.	1808.
				TIME	12.25	12.25	12.25	12.25	12.25
DIVERSION TO	OR-3C	1.56	1	FLOW	16.	16.	16.	16.	16.
				TIME	4.25	4.42	4.42	4.50	4.58
HYDROGRAPH AT	DT3C	1.56	1	FLOW	1979.	1912.	1869.	1852.	1808.
				TIME	12.25	12.25	12.25	12.25	12.25
2 COMBINED AT	HC5	7.63	1	FLOW	5061.	4873.	4755.	4708.	4585.

				TIME	13.00	13.00	13.00	13.00	13.00
HYDROGRAPH AT	3B	.94	1	FLOW	603.	581.	567.	562.	547.
				TIME	12.92	12.92	12.92	12.92	12.92
ROUTED TO	RM3B-8	.94	1	FLOW	590.	568.	555.	549.	535.
				TIME	13.42	13.42	13.42	13.42	13.42
DIVERSION TO	FL-8	.94	1	FLOW	219.	210.	205.	202.	196.
				TIME	13.42	13.42	13.42	13.42	13.42
HYDROGRAPH AT	DT8	.94	1	FLOW	371.	359.	350.	347.	339.
				TIME	13.42	13.42	13.42	13.42	13.42
ROUTED TO	RM8-9	.94	1	FLOW	366.	354.	346.	343.	334.
				TIME	13.58	13.58	13.58	13.58	13.58
DIVERSION TO	FL-9	.94	1	FLOW	123.	119.	116.	114.	111.
				TIME	13.58	13.58	13.58	13.58	13.58
HYDROGRAPH AT	DT9	.94	1	FLOW	243.	235.	230.	228.	223.
				TIME	13.58	13.58	13.58	13.58	13.58
ROUTED TO	RM9-5	.94	1	FLOW	235.	228.	223.	221.	216.
				TIME	14.17	14.17	14.17	14.17	14.17
2 COMBINED AT	HC5.1	8.57	1	FLOW	5116.	4926.	4800.	4760.	4636.
				TIME	13.00	13.00	13.00	13.00	13.00
ROUTED TO	RS5-6	8.57	1	FLOW	5073.	4881.	4763.	4716.	4593.
				TIME	13.08	13.08	13.08	13.08	13.08
			** PEAK STAGES IN FEET **						
			1	STAGE	1341.26	1341.11	1341.01	1340.97	1340.86
				TIME	13.08	13.08	13.08	13.08	13.08
HYDROGRAPH AT	3D	.41	1	FLOW	764.	738.	721.	715.	698.
				TIME	12.08	12.08	12.08	12.08	12.08
3 COMBINED AT	HC6.2	23.53	1	FLOW	13647.	13138.	12824.	12698.	12367.
				TIME	13.00	13.00	13.00	13.00	13.00
HYDROGRAPH AT	FL-8	.00	1	FLOW	219.	210.	205.	202.	196.
				TIME	13.42	13.42	13.42	13.42	13.42
ROUTED TO	RM8-10	.00	1	FLOW	194.	186.	181.	179.	174.
				TIME	14.17	14.17	14.17	14.17	14.17
HYDROGRAPH AT	4A	1.26	1	FLOW	984.	950.	929.	921.	898.
				TIME	12.75	12.75	12.75	12.75	12.75
DIVERSION TO	OR-4A	1.26	1	FLOW	22.	21.	21.	21.	21.
				TIME	6.42	6.58	6.67	6.67	6.83
HYDROGRAPH AT	DT4A	1.26	1	FLOW	984.	950.	929.	921.	898.

				TIME	12.75	12.75	12.75	12.75	12.75
HYDROGRAPH AT	FL-9	.00	1	FLOW	123.	119.	116.	114.	111.
				TIME	13.58	13.58	13.58	13.58	13.58
ROUTED TO	RM9-10	.00	1	FLOW	115.	110.	107.	106.	103.
				TIME	14.17	14.17	14.17	14.17	14.17
3 COMBINED AT	HC10	1.26	1	FLOW	990.	955.	933.	925.	902.
				TIME	12.75	12.75	12.75	12.75	12.75
DIVERSION TO	FL-10	1.26	1	FLOW	336.	334.	326.	323.	315.
				TIME	12.67	12.75	12.75	12.75	12.75
HYDROGRAPH AT	DT10	1.26	1	FLOW	654.	621.	607.	601.	587.
				TIME	12.75	12.75	12.75	12.75	12.75
ROUTED TO	RM10-7	1.26	1	FLOW	618.	593.	579.	574.	560.
				TIME	13.25	13.25	13.25	13.25	13.25
HYDROGRAPH AT	4B	.68	1	FLOW	1153.	1116.	1092.	1083.	1058.
				TIME	12.08	12.08	12.08	12.08	12.08
DIVERSION TO	OR-4B	.68	1	FLOW	15.	16.	17.	16.	17.
				TIME	3.92	4.00	4.08	4.08	4.17
HYDROGRAPH AT	DT4B	.68	1	FLOW	1153.	1116.	1092.	1083.	1058.
				TIME	12.08	12.08	12.08	12.08	12.08
3 COMBINED AT	HC7	25.47	1	FLOW	14343.	13807.	13478.	13346.	12999.
				TIME	13.00	13.00	13.00	13.00	13.00
ROUTED TO	RS7-11	25.47	1	FLOW	14129.	13602.	13275.	13143.	12796.
				TIME	13.25	13.25	13.25	13.25	13.25
				** PEAK STAGES IN FEET **					
			1	STAGE	1295.51	1295.32	1295.20	1295.15	1295.02
				TIME	13.25	13.25	13.25	13.25	13.25
HYDROGRAPH AT	4C	1.03	1	FLOW	976.	942.	921.	912.	890.
				TIME	12.50	12.50	12.50	12.50	12.50
DIVERSION TO	OR-4C	1.03	1	FLOW	15.	14.	14.	14.	14.
				TIME	5.92	6.08	6.17	6.17	6.25
HYDROGRAPH AT	DT4C	1.03	1	FLOW	976.	942.	921.	912.	890.
				TIME	12.50	12.50	12.50	12.50	12.50
2 COMBINED AT	HC11.1	26.50	1	FLOW	14448.	13908.	13572.	13438.	13082.
				TIME	13.25	13.25	13.25	13.25	13.25
HYDROGRAPH AT	5G	.43	1	FLOW	844.	817.	799.	793.	775.
				TIME	12.08	12.08	12.08	12.08	12.08
ROUTED TO	RS5G	.43	1	FLOW	32.	32.	31.	31.	31.

				TIME	13.75	13.75	13.67	13.67	13.67
			** PEAK STAGES IN FEET **						
			1	STAGE	1410.58	1410.28	1410.10	1410.03	1409.77
				TIME	13.75	13.75	13.67	13.67	13.67
ROUTED TO	RM5G-26	.43	1	FLOW	32.	32.	31.	31.	31.
				TIME	13.83	13.83	13.83	13.75	13.75
HYDROGRAPH AT	5C	.51	1	FLOW	1019.	986.	966.	957.	936.
				TIME	12.08	12.08	12.08	12.08	12.08
ROUTED TO	RS5C	.51	1	FLOW	33.	33.	33.	32.	32.
				TIME	14.00	13.92	13.92	13.92	13.83
			** PEAK STAGES IN FEET **						
			1	STAGE	1407.06	1406.83	1406.69	1406.63	1406.48
				TIME	14.08	14.00	13.92	13.92	13.92
ROUTED TO	RM5C-26	.51	1	FLOW	33.	33.	33.	32.	32.
				TIME	14.08	14.00	13.92	13.92	13.92
2 COMBINED AT	HC26	.94	1	FLOW	65.	64.	64.	64.	63.
				TIME	13.92	13.92	13.83	13.83	13.83
ROUTED TO	RM26-28	.94	1	FLOW	65.	64.	64.	64.	63.
				TIME	14.17	14.08	14.08	14.08	14.00
HYDROGRAPH AT	5A	1.27	1	FLOW	2270.	2194.	2146.	2127.	2077.
				TIME	12.08	12.08	12.08	12.08	12.08
ROUTED TO	RM5A-27	1.27	1	FLOW	2049.	1980.	1937.	1919.	1874.
				TIME	12.33	12.33	12.33	12.33	12.33
HYDROGRAPH AT	5B	.69	1	FLOW	863.	833.	815.	807.	788.
				TIME	12.25	12.25	12.25	12.25	12.25
2 COMBINED AT	HC27	1.95	1	FLOW	2882.	2785.	2724.	2699.	2635.
				TIME	12.33	12.33	12.33	12.33	12.33
ROUTED TO	RM27-28	1.95	1	FLOW	2789.	2694.	2635.	2611.	2549.
				TIME	12.42	12.42	12.42	12.42	12.42
2 COMBINED AT	HC28	2.90	1	FLOW	2846.	2751.	2691.	2668.	2605.
				TIME	12.42	12.42	12.42	12.42	12.42
ROUTED TO	RM28-29	2.90	1	FLOW	2756.	2664.	2606.	2583.	2523.
				TIME	12.50	12.50	12.50	12.50	12.50
HYDROGRAPH AT	5D	.55	1	FLOW	1263.	1222.	1196.	1186.	1159.
				TIME	12.00	12.00	12.00	12.00	12.00
ROUTED TO	RS5D	.55	1	FLOW	26.	25.	25.	24.	24.
				TIME	14.33	14.33	14.25	14.25	14.25

** PEAK STAGES IN FEET **

			1	STAGE	1380.42	1379.98	1379.71	1379.61	1379.33
				TIME	14.33	14.33	14.33	14.33	14.25
ROUTED TO	RM5D-29	.55	1	FLOW	26.	25.	25.	24.	24.
				TIME	14.67	14.58	14.58	14.58	14.58
HYDROGRAPH AT	5E	1.59	1	FLOW	2186.	2114.	2069.	2051.	2004.
				TIME	12.25	12.25	12.25	12.25	12.25
DIVERSION TO	DR-2E	1.59	1	FLOW	22.	22.	21.	21.	21.
				TIME	4.58	4.67	4.75	4.75	4.83
HYDROGRAPH AT	DT5E	1.59	1	FLOW	2186.	2114.	2069.	2051.	2004.
				TIME	12.25	12.25	12.25	12.25	12.25
3 COMBINED AT	HC29	5.04	1	FLOW	4364.	4218.	4126.	4090.	3994.
				TIME	12.42	12.42	12.42	12.42	12.42
ROUTED TO	RM29-11	5.04	1	FLOW	4258.	4115.	4026.	3990.	3897.
				TIME	12.58	12.58	12.58	12.58	12.58
HYDROGRAPH AT	5F	1.52	1	FLOW	1713.	1656.	1619.	1605.	1567.
				TIME	12.33	12.33	12.33	12.33	12.33
DIVERSION TO	DR-5F	1.52	1	FLOW	16.	15.	15.	15.	14.
				TIME	5.50	5.58	5.67	5.75	5.83
HYDROGRAPH AT	DT5F	1.52	1	FLOW	1713.	1656.	1619.	1605.	1567.
				TIME	12.33	12.33	12.33	12.33	12.33
2 COMBINED AT	HC11	6.56	1	FLOW	5722.	5529.	5409.	5361.	5234.
				TIME	12.50	12.50	12.50	12.50	12.50
2 COMBINED AT	HC11.2	33.06	1	FLOW	16778.	16218.	15857.	15713.	15328.
				TIME	12.75	12.75	12.75	12.75	12.75
HYDROGRAPH AT	6A	.46	1	FLOW	547.	529.	517.	512.	500.
				TIME	12.33	12.33	12.33	12.33	12.33
DIVERSION TO	DR-6A	.46	1	FLOW	5.	5.	5.	5.	5.
				TIME	2.58	3.83	3.83	3.92	4.00
HYDROGRAPH AT	DT6A	.46	1	FLOW	547.	529.	517.	512.	500.
				TIME	12.33	12.33	12.33	12.33	12.33
2 COMBINED AT	HC12	33.52	1	FLOW	17039.	16469.	16103.	15956.	15565.
				TIME	12.75	12.75	12.75	12.75	12.75
ROUTED TO	RM12-13	33.52	1	FLOW	16934.	16352.	15988.	15843.	15459.
				TIME	12.92	12.92	12.92	12.92	12.92
HYDROGRAPH AT	6B	1.14	1	FLOW	1118.	1080.	1057.	1048.	1023.
				TIME	12.50	12.50	12.50	12.50	12.50

DIVERSION TO	OR-6B	1.14	1	FLOW	31.	30.	30.	30.	29.
				TIME	7.75	7.92	8.00	8.00	8.17
HYDROGRAPH AT	DT6B	1.14	1	FLOW	1118.	1080.	1057.	1048.	1023.
				TIME	12.50	12.50	12.50	12.50	12.50
2 COMBINED AT	HC13	34.66	1	FLOW	17688.	17059.	16666.	16514.	16114.
				TIME	12.83	12.83	12.92	12.92	12.92

*** NORMAL END OF HEC-1 ***

APPENDIX "L"

HEC-1 HYDROLOGY RESULTS FOR A 100-YEAR 24-HOUR DURATION STORM

```
****************************************
*                                      *
*  FLOOD HYDROGRAPH PACKAGE  (HEC-1)   *
*     BY THE COE IN FEBRUARY 1981      *
*          REVISED 02 AUG 88           *
*                                      *
* RUN DATE  01/16/1990  TIME  13:48:36 *
*                                      *
****************************************
```

```
****************************************
*                                      *
*    DODSON AND ASSOCIATES, INC.       *
*  HYDROLOGIST AND CIVIL ENGINEERS     *
*     7015 W TIDWELL SUITE 107         *
*       HOUSTON, TEXAS  77092          *
*         (713) 895-8322               *
*                                      *
****************************************
```

```
X     X  XXXXXXX   XXXXX          X
X     X  X       X     X        XX
X     X  X       X              X
XXXXXXX  XXXX    X       XXXXX  X
X     X  X       X              X
X     X  X       X     X        X
X     X  XXXXXXX   XXXXX        XXX
```

THIS PROGRAM REPLACES ALL PREVIOUS VERSIONS OF HEC-1 KNOWN AS HEC1 (JAN 73), HEC1GS, HEC1DB, AND HEC1KW.

THE DEFINITIONS OF VARIABLES -RTIMP- AND -RTIOR- HAVE CHANGED FROM THOSE USED WITH THE 1973-STYLE INPUT STRUCTURE.
THE DEFINITION OF -AMSKK- ON RM-CARD WAS CHANGED WITH REVISIONS DATED 28 SEP 81. THIS IS THE FORTRAN77 VERSION
NEW OPTIONS: DAMBREAK OUTFLOW SUBMERGENCE , SINGLE EVENT DAMAGE CALCULATION, DSS:WRITE STAGE FREQUENCY,
DSS:READ TIME SERIES AT DESIRED CALCULATION INTERVAL LOSS RATE:GREEN AND AMPT INFILTRATION
KINEMATIC WAVE: NEW FINITE DIFFERENCE ALGORITHM

HEC-1 INPUT PAGE 1

```
LINE          ID.......1.......2.......3.......4.......5.......6.......7.......8.......9......10

  1           ID   FCDMC CAVE CREEK FIS, JOB NO. 7833
  2           ID   100-YEAR 24-HR DURATION STORM
  3           ID   FILE = 7833100Y.IN : 01/12/90 trl
  4           ID   STORM PRECIP : 5 SM Area = 3.96", 10 SM = 3.84", 15 SM = 3.76", 20 SM = 3.72"
  5           ID   STORM PRECIP : 35 SM = 3.64"
              *
              *
              *  **** Revisions:
              *
              *        10/15/89 trl - File submitted to agencies as part of Prelim. Report.
              *
              *        10/16/89 trl - Changed Basin IC LU card.  Was - LU,,.50,.20,0.6
              *                                                  Now - LU,.50,.20,0.6
              *
              *        12/12/89 trl - The following changes were made in order to address
              *                       Amir Motamedi's concerns that the calculated routing
              *                       flow times did not agree with the input Muskingum
```

```
*                    K coefficient.  The difference in timing could affect
*                    combined peak flow rates at combination points.
*
*          1. RM15-16 : Changed NSteps from 4 to 5.
*          2. RM2D-23 : Changed NSteps from 3 to 4.
*          3. RM23-24 : Changed NSteps from 5 to 6.
*          4. RM2G-25 : Changed NSteps from 1 to 2.
*          5. RM25-17 : Changed NSteps from 1 to 2.
*          6. RM18-21 : Changed NSteps from 1 to 2.
*          7. RM17-18 : Changed NSteps from 1 to 3.
*          8. RM19-20 : Changed NSteps from 2 to 3.
*          9. RM21-22 : Changed NSteps from 1 to 2.
*         10. RM2-3   : Changed NSteps from 2 to 3.
*         11. RM4-5   : Changed NSteps from 4 to 5.
*         12. RM3B-8  : Changed NSteps from 5 to 6.
*         13. RM8-9   : Changed NSteps from 2 to 3.
*         14. RM5-6   : Changed NSteps from 1 to 2.
*         15. RM10-7  : Changed NSteps from 5 to 6 and X from .3 to .2.
*         16. RM7-11  : Changed NSteps from 1 to 4.
*         17. RM5A-27 : Changed NSteps from 2 to 3.
*         18. RM26-28 : Changed NSteps from 2 to 3.
*         19. RM5D-29 : Changed NSteps from 3 to 4.
*         20. RM12-13 : Changed NSteps from 1 to 2.
*
*       12/13/89 trl - The following changes were made in order to address
*                    ADWR'S concerns regarding the Normal Depth Channel
*                    rout cross sections.
*
*          1. RS25-17 : The cross section was extended to 8 effective
*                       points.
*          2. RS17-18 : The cross section was extended to 8 effective
*                       points.
*          3. RS18-21 : The cross section was extended to 8 effective
*                       points.
*          4. RS21-22 : The cross section was extended to 8 effective
*                       points, and sufficient depth was added to
*                       eliminate the overtopping condition.
*          5. RS22-6  : The cross section was extended to 8 effective
*                       points.
*          6. RS7-11  : The cross section was changed to 8 effective
*                       points, and sufficient depth was added to
*                       eliminate the overtopping condition.
*
*       12/14/89 trl - This file was created to account for Aerial Reduction
*                    Factor changes requested by Amir Motamedi.  They
*                    account for watershed areas of 5, 10, 15, 20 and 35
*                    square miles for a 100-year storm.
*
*       01/12/90 trl - The following changes were made in order to address
*                    FCDMC concerns regarding the Time of Concentration
*                    computations for SubBasins 1B and 1C.
*
*          1. SubBasin 1B: The average flow velocity for the channelized
*                          portion was changed from 13.4 fps to 6.0 fps.
*                          This was done after a more in-depth look at actual
```

```
                    *                        field conditions.  See the appropriate Appendix
                    *                        for more detail.  The resultant Lag is 0.29 hrs.
                    *
                    *          2. SubBasin 1C: The average flow velocity for the channelized
                    *                        portion was changed from 10.1 fps to 5.9 fps.
                    *                        This was done after a more in-depth look at actual
                    *                        field conditions.  The resultant Lag is 0.45 hrs.
                    *
*** FREE ***
                    *DIAGRAM
                                                HEC-1 INPUT                                          PAGE  2

          LINE      ID.......1.......2.......3.......4.......5.......6.......7.......8.......9......10

            6       IT      5                   300
            7       IO      3      0
            8       IN     15
                    *
                    *  JR RATIO'S : 1.0=5-SM, 0.968=10-SM, 0.948=15-SM, 20-SM=0.940, 35-SM=0.919
                    *
            9       JR   PREC    1.0   0.968   0.948   0.940   0.919
                    *
                    *
                    *   EAST FORK OF CAVE CREEK
                    *   SUB-BASINS 2A-2P
                    *
                    *

           10       KK     2A
           11       KM     RUNOFF GENERATED ON SUB-BASIN 2A
           12       BA   0.870
           13       PB    3.96
                    *
                    *    FCDMC SCS TYPE II RAINFALL DISTRIBUTION - 15 MIN INTERVAL
                    *
           14       PC   .000   .002   .005   .008   .011   .014   .017   .020   .023   .026
           15       PC   .029   .032   .035   .038   .041   .044   .048   .052   .056   .060
           16       PC   .064   .068   .072   .076   .080   .085   .090   .095   .100   .105
           17       PC   .110   .115   .120   .126   .133   .140   .147   .155   .163   .172
           18       PC   .181   .191   .203   .219   .236   .257   .283   .387   .663   .707
           19       PC   .735   .758   .776   .791   .804   .815   .825   .834   .842   .849
           20       PC   .856   .863   .869   .875   .881   .887   .893   .898   .903   .908
           21       PC   .913   .918   .922   .926   .930   .934   .938   .942   .946   .950
           22       PC   .953   .956   .959   .962   .965   .968   .971   .974   .977   .980
           23       PC   .983   .986   .989   .992   .995   .998   1.00
           24       LU    .37    .20   19.6
           25       UD    .25
                    *

           26       KK     2B
           27       KM     RUNOFF GENERATED ON SUB-BASIN 2B
           28       BA   0.414
           29       LU    .37    .25   12.0
           30       UD    .19
                    *
```

```
          *
          * NEXT OPERATION IS TOTAL FLOW AT BEARDSLEY ROAD EAST OF CAVE CREEK ROAD.
          *
          *

 31       KK    HC14
 32       KM      COMBINE SURFACE RUNOFF AT NODE 14
 33       KM         2A+2B
 34       HC       2
          *
                                   HEC-1 INPUT                                    PAGE  3

LINE      ID.......1.......2.......3.......4.......5.......6.......7.......8.......9......10


 35       KK RM14-15
 36       KM      MUSKINGUM ROUTE IN CHANNEL FROM NODE 14 TO NODE 15
 37       KM                                        1) Reach Length= 5600 FT.
 38       KM                                        2) Average Velocity= 4.9 FPS
 39       RM       4     .32      .3
          *

 40       KK      2C
 41       KM      RUNOFF GENERATED ON SUB-BASIN 2C
 42       BA   1.177
 43       LU    .32     .25    53.3
 44       UD    .61
          *

 45       KK    DT2C
 46       KM   THROW AWAY 10-YR 2-HR RETENTION VOLUME:1) 0.1 AC-FT FROM SUB-BASIN 2C
 47       KM                                            (Hydrograph identified as OR-2C)
 48       KM                                         2) Balance of runoff continues on.
 49       KM                                            (Hydrograph identified as DT2C)
 50       DT   OR-2C     0.1
 51       DI       0   10000
 52       DQ       0   10000
          *
          *
          * NEXT OPERATION IS TOTAL FLOW AT UNION HILLS DRIVE EAST OF CAVE CREEK ROAD.
          *
          *

 53       KK    HC15
 54       KM      COMBINE SURFACE RUNOFF AT NODE 15
 55       KM        RM14-15 + DT2C
 56       HC      .2
          *

 57       KK RM15-16
 58       KM      MUSKINGUM ROUTE IN CHANNEL AND STREET FROM NODE 15 TO NODE 16
 59       KM                                        1) Reach Length= 8000 FT.
 60       KM                                        2) Average Velocity= 5.7 FPS
 61       RM       5     .39      .3
          *
```

```
 62        KK     2E
 63        KM     RUNOFF GENERATED ON SUB-BASIN 2E
 64        BA   1.095
 65        LU    .33     .22    39.7
 66        UD    .42
           *
           *
           * NEXT OPERATION IS TOTAL FLOW AT 20TH ST AND BELL ROAD.
           *
           *
```



```
LINE       ID.......1.......2.......3.......4.......5.......6.......7.......8.......9......10

 67        KK    HC16
 68        KM     COMBINE SURFACE RUNOFF AT NODE 16
 69        KM       RM15-16 + 2E
 70        HC      2
           *

 71        KK RM16-17
 72        KM     MUSKINGUM ROUTE IN STREET FROM NODE 16 TO NODE 17
 73        KM                                    1) Reach Length= 3950 FT.
 74        KM                                    2) Average Velocity= 4.0 FPS
 75        RM      3     .27      .3
           *

 76        KK     2H
 77        KM     RUNOFF GENERATED ON SUB-BASIN 2H
 78        BA   1.425
 79        LU    .32     .23    44.4
 80        UD    .81
           *

 81        KK    DT2H
 82        KM   THROW AWAY 10-YR 2-HR RETENTION VOLUME:1) 11.6 AC-FT FROM SUB-BASIN 2H
 83        KM                                            (Hydrograph identified as OR-2H)
 84        KM                                          2) Balance of runoff continues on.
 85        KM                                            (Hydrograph identified as DT2H)
 86        DT   OR-2H    11.6
 87        DI      0   10000
 88        DQ      0   10000
           *

 89        KK    HC17
 90        KM     COMBINE SURFACE RUNOFF AT NODE 17
 91        KM       RM16-17 + DT2H
 92        HC      2
           *
           *
           * ****** BREAK SEQUENCE AT 16TH STREET 1000' NORTH OF PARADISE LN.
           *          MOVE UP TO SUB-BASIN 2D
           *
```

```
          *

 93       KK     2D
 94       KM     RUNOFF GENERATED ON SUB-BASIN 2D
 95       BA   1.191
 96       LU    .34     .25    32.8
 97       UD    .65
          *

 98       KK    DT2D
 99       KM   THROW AWAY 10-YR 2-HR RETENTION VOLUME:1) 4.0 AC-FT FROM SUB-BASIN 2D
100       KM                                             (Hydrograph identified as OR-2D)
101       KM                                          2) Balance of runoff continues on.
102       KM                                             (Hydrograph identified as DT2D)
103       DT   OR-2D     4.0
                                   HEC-1 INPUT                                    PAGE  5

LINE      ID.......1.......2.......3.......4.......5.......6.......7.......8.......9......10

104       DI      0   10000
105       DQ      0   10000
          *

106       KK   DT2DS
107       KM   SPLIT FLOW AT INTERSECTION OF 32nd ST AND BELL RD.
108       KM
109       KM     SEND FLOW SOUTH IN 32nd STREET OUT OF WATERSHED IN STREET AND 60" PIPE.
110       KM     (Hydrograph identified as FL-2D) (160 cfs in PIPE)
111       KM
112       KM     REMAINDER FLOWS WEST IN BELL RD.  (Hydrograph identified as DT2D)
113       KM
114       DT   FL-2D
115       DI      0     195     243    1947    5014
116       DQ      0     160     160    1093    2655
          *

117       KK RM2D-23
118       KM     MUSKINGUM ROUTE IN STREET FROM SUB-BASIN 2D TO NODE 23
119       KM                                          1) Reach Length= 3900 FT.
120       KM                                          2) Average Velocity= 3.5 FPS
121       RM      4     .31      .3
          *

122       KK     2P
123       KM     RUNOFF GENERATED ON SUB-BASIN 2P
124       BA   0.592
125       LU    .31     .25    55.7
126       UD    .53
          *

127       KK    DT2P
128       KM   THROW AWAY 10-YR 2-HR RETENTION VOLUME:1) 1.8 AC-FT FROM SUB-BASIN 2P
129       KM                                             (Hydrograph identified as OR-2P)
130       KM                                          2) Balance of runoff continues on.
131       KM                                             (Hydrograph identified as DT2P)
```

```
132        DT   OR-2P    1.8
133        DI      0   10000
134        DQ      0   10000
           *

135        KK    HC23
136        KM      COMBINE SURFACE RUNOFF AT NODE 23
137        KM        RM2D-23 + DT2P
138        HC      2
           *

139        KK RM23-24
140        KM      MUSKINGUM ROUTE IN STREET FROM NODE 23 TO NODE 24
141        KM                                        1) Reach Length= 4400 FT.
142        KM                                        2) Average Velocity= 2.6 FPS
143        KM                                        3) .05 hrs added to K for reach
144        KM                                           RM24-25.
145        RM      6     .52      .3
           *
```



```
LINE       ID.......1.......2.......3.......4.......5.......6.......7.......8.......9.......10

146        KK      2F
147        KM      RUNOFF GENERATED ON SUB-BASIN 2F
148        KM          Lag lengthened 0.5 hrs to account for reach RM24-25.
149        BA   0.952
150        LU     .33     .23    58.0
151        UD     .45
           *

152        KK    DT2F
153        KM   THROW AWAY 10-YR 2-HR RETENTION VOLUME:1) 3.9 AC-FT FROM SUB-BASIN 2F
154        KM                                            (Hydrograph identified as OR-2F)
155        KM                                          2) Balance of runoff continues on.
156        KM                                            (Hydrograph identified as DT2F)
157        DT   OR-2F     3.9
158        DI      0   10000
159        DQ      0   10000
           *
           *
           * NEXT OPERATION IS TOTAL FLOW IN EAST FORK AT CAVE CREEK ROAD
           *  600' SOUTH OF PARADISE LN.
           *
           *

160        KK    HC24
161        KM      COMBINE SURFACE RUNOFF AT NODE 24
162        KM        RM23-24 + DT2F
163        KO                                  21
164        HC      2
           *
           * ***** REACH IS TOO SHORT FOR A STABLE ROUTE, ADD TO RM23-24 AND EXTEND LAG
           *       for SUB-BASIN 2F
```

```
          *
          * KK,RM24-25
          * KM    MUSKINGUM ROUTE IN CHANNEL FROM NODE 24 TO NODE 25
          * KM                                        1) Reach Length= 1200 FT.
          * KM                                        2) Average Velocity= 6.2 FPS
          * RM,1,.05,.3
          *

165       KK      2G
166       KM      RUNOFF GENERATED ON SUB-BASIN 2G
167       BA   0.917
168       LU     .33     .16    29.2
169       UD     .39
          *

170       KK RM2G-25
171       KM      MUSKINGUM ROUTE IN CHANNEL FROM SUB-BASIN 2G TO NODE 25
172       KM                                        1) Reach Length= 2350 FT.
173       KM                                        2) Average Velocity= 5.3 FPS
174       RM       2     .12      .3
          *
          *
          * NEXT OPERATION IS TOTAL FLOW IN EAST FORK 1350' WEST OF CAVE CREEK ROAD
          *  AND 400' SOUTH OF PARADISE LANE.
          *
          *
                                   HEC-1 INPUT                                    PAGE  7

LINE      ID.......1.......2.......3.......4.......5.......6.......7.......8.......9......10


175       KK    HC25
176       KM      COMBINE SURFACE RUNOFF AT NODE 25
177       KM        HC24 + RM2G-25
178       HC       2
          *

179       KK RS25-17
180       KM      NORMAL DEPTH CHANNEL ROUTE FROM NODE 25 TO NODE 17
181       KM                                        1) Reach Length= 4400 FT.
182       KM                                        2) Average Velocity= 6.8 FPS
183       RS       2   FLOW      -1
184       RC    .035     .03    .035    4400    .003    1416
185       RX       7      50      90     100     140     150     190     228
186       RY    1416    1415    1414    1409    1409    1414    1415    1416
          *
          *
          * NEXT OPERATION IS TOTAL FLOW AT 16TH ST 1000' NORTH OF PARADISE LANE
          *
          *

187       KK  HC17.1
188       KM      COMBINE SURFACE RUNOFF AT NODE 17
189       KM        HC17 + RS25-17
190       HC       2
```

```
            *
191         KK RS17-18
192         KM     NORMAL DEPTH CHANNEL ROUTE FROM NODE 17 TO NODE 18
193         KM                                    1) Reach Length= 5250 FT.
194         KM                                    2) Average Velocity= 7.9 FPS
195         RS      3   FLOW     -1
196         RC   .035    .03   .035   5250   .005   1391
197         RX     15     50     84    100    140    156    190    231
198         RY   1391   1390   1389   1381   1381   1389   1390   1391
            *
            *
            * ****** BREAK SEQUENCE AT 7TH STREET 1000' SOUTH OF BELL ROAD.
            *         MOVE UP TO SUB-BASIN 2J
            *
            *

199         KK     2J
200         KM     RUNOFF GENERATED ON SUB-BASIN 2J
201         BA  0.704
202         LU    .37    .20   24.6
203         UD    .71
            *

204         KK   DT2J
205         KM   THROW AWAY 10-YR 2-HR RETENTION VOLUME:1) 2.4 AC-FT FROM SUB-BASIN 2J
206         KM                                            (Hydrograph identified as OR-2J)
207         KM                                         2) Balance of runoff continues on.
208         KM                                            (Hydrograph identified as DT2J)
209         DT   OR-2J    2.4
```



```
LINE        ID.......1.......2.......3.......4.......5.......6.......7.......8.......9......10

210         DI      0  10000
211         DQ      0  10000
            *

212         KK RM2J-19
213         KM     MUSKINGUM ROUTE IN STREET FROM NODE 2J TO NODE 19
214         KM                                    1) Reach Length= 7600 FT.
215         KM                                    2) Average Velocity= 4.0 FPS
216         RM      3    .53     .2
            *

217         KK     2I
218         KM     RUNOFF GENERATED ON SUB-BASIN 2I
219         BA  0.985
220         LU    .37    .24   40.3
221         UD    .48
            *

222         KK   DT2I
223         KM   THROW AWAY 10-YR 2-HR RETENTION VOLUME:1) 7.7 AC-FT FROM SUB-BASIN 2I
224         KM                                            (Hydrograph identified as OR-2I)
```

```
225        KM                                    2) Balance of runoff continues on.
226        KM                                       (Hydrograph identified as DT2I)
227        DT   OR-2I     7.7
228        DI       0   10000
229        DQ       0   10000
           *

230        KK RM2I-19
231        KM      MUSKINGUM ROUTE IN STREET FROM NODE 2I TO NODE 19
232        KM                                     1) Reach Length= 2650 FT.
233        KM                                     2) Average Velocity= 4.0 FPS
234        RM       1     .18      .2
           *

235        KK      2K
236        KM      RUNOFF GENERATED ON SUB-BASIN 2K
237        BA   1.336
238        LU     .36     .24    42.3
239        UD     .38
           *

240        KK    DT2K
241        KM   THROW AWAY 10-YR 2-HR RETENTION VOLUME:1) 7.7 AC-FT FROM SUB-BASIN 2K
242        KM                                        (Hydrograph identified as OR-2K)
243        KM                                     2) Balance of runoff continues on.
244        KM                                        (Hydrograph identified as DT2K)
245        DT   OR-2K     7.7
246        DI       0   10000
247        DQ       0   10000
           *
           *
           * NEXT OPERATION IS TOTAL FLOW IN THE EAST FORK AT 7th STREET AND BELL ROAD.
           *
           *
```



```
LINE       ID.......1.......2.......3.......4.......5.......6.......7.......8.......9......10

248        KK    HC19
249        KM      COMBINE SURFACE RUNOFF AT NODE 19
250        KM        RM2J-19 + RM2I-19 + DT2K
251        HC       3
           *

252        KK    DT19
253        KM   SPLIT FLOW AT INTERSECTION OF 7th ST AND BELL RD.
254        KM
255        KM     SEND FLOW WEST IN BELL ROAD TO NODE 20 IN STREET 84" & 36" PIPES.
256        KM       (Hydrograph identified as FL-19) (300 cfs total in PIPES)
257        KM
258        KM     REST FLOWS SOUTH IN 7th ST TO NODE 18. (Hydrograph identified as DT19)
259        KM
260        DT   FL-19
261        DI       0     309     336    5556
```

```
262        DQ      0      9     36    743
           *

263        KK RM19-18
264        KM      MUSKINGUM ROUTE IN CHANNEL FROM NODE 19 TO NODE 18
265        KM                                      1) Reach Length= 1000 FT.
266        KM                                      2) Average Velocity= 3.6 FPS
267        RM      1     .08     .3
           *
           *
           * NEXT OPERATION IS TOTAL FLOW IN EAST FORK AT 7th STREET
           *  1000' SOUTH OF BELL ROAD,
           *
           *

268        KK    HC18
269        KM      COMBINE SURFACE RUNOFF AT NODE 18
270        KM        DT19 + RS17-18
271        HC      2
           *

272        KK RS18-21
273        KM      NORMAL DEPTH CHANNEL ROUTE FROM NODE 18 TO NODE 21
274        KM                                      1) Reach Length= 3700 FT.
275        KM                                      2) Average Velocity= 10.7 FPS
276        RS      2   FLOW     -1
277        RC   .035    .03   .035   3700   .007   1371
278        RX      0     10     20     45     95    120    130    140
279        RY   1371  1370.5  1370   1360   1360   1370  1370.5   1371
           *
           *
           * ###### BREAK SEQUENCE AND JUMP TO BACK TO FLOW DIVERTED WEST
           *         FROM 7th ST & BELL RD.
           *
           *
```



```
LINE       ID.......1.......2.......3.......4.......5.......6.......7.......8.......9......10

280        KK   FL-19
281        KM    RECALL DIVERTED HYDROGRAPH FROM 7th ST AND BELL RD.
282        DR   FL-19
           *

283        KK RM19-20
284        KM    MUSKINGUM ROUTE IN STREET FROM NODE 19 TO NODE 20
285        KM                                      1) Reach Length= 2350 FT.
286        KM                                      2) Average Velocity= 3.0 FPS
287        RM      3    .22     .3
           *

288        KK      2L
289        KM      RUNOFF GENERATED ON SUB-BASIN 2L
290        BA   0.601
```

```
291        LU     .31     .25    66.2
292        UD     .33
           *

293        KK    DT2L
294        KM   THROW AWAY 10-YR 2-HR RETENTION VOLUME:1) 2.0 AC-FT FROM SUB-BASIN 2L
295        KM                                             (Hydrograph identified as OR-2L)
296        KM                                           2) Balance of runoff continues on.
297        KM                                             (Hydrograph identified as DT2L)
298        DT   OR-2L     2.0
299        DI      0   10000
300        DQ      0   10000
           *

301        KK    HC20
302        KM      COMBINE SURFACE RUNOFF AT NODE 20
303        KM        RM19-20 + DT2L
304        HC       2
           *

305        KK RM20-21
306        KM      MUSKINGUM ROUTE IN CHANNEL FROM NODE 20 TO NODE 21
307        KM                                           1) Reach Length= 3150 FT.
308        KM                                           2) Average Velocity= 5.2 FPS
309        RM       2     .17      .3
           *

310        KK      2M
311        KM      RUNOFF GENERATED ON SUB-BASIN 2M
312        BA   1.174
313        LU     .34     .21    40.6
314        UD     .24
           *
```



```
LINE       ID.......1.......2.......3.......4.......5.......6.......7.......8.......9......10


315        KK    DT2M
316        KM   THROW AWAY 10-YR 2-HR RETENTION VOLUME:1) 8.9 AC-FT FROM SUB-BASIN 2M
317        KM                                             (Hydrograph identified as OR-2M)
318        KM                                           2) Balance of runoff continues on.
319        KM                                             (Hydrograph identified as DT2M)
320        DT   OR-2M     8.9
321        DI      0   10000
322        DQ      0   10000
           *
           *
           * NEXT OPERATION IS TOTAL FLOW AT PARADISE LANE AND CENTRAL AVE.
           *
           *

323        KK    HC21
324        KM      COMBINE SURFACE RUNOFF AT NODE 21
325        KM        RM20-21 + RM18-21 + DT2M
```

```
326        HC      3
           *

327        KK RS21-22
328        KM     NORMAL DEPTH CHANNEL ROUTE FROM NODE 21 TO NODE 22
329        KM                                    1) Reach Length= 4150 FT.
330        KM                                    2) Average Velocity= 7.1 FPS
331        RS      2   FLOW     -1
332        RC    .04   .035    .04   4150   .004   1355
333        RX      0     60    110    123    193    203    253    300
334        RY   1355   1352   1352   1346   1346   1351   1353   1355
           *

335        KK     20
336        KM     RUNOFF GENERATED ON SUB-BASIN 20
337        BA   .639
338        LU    .31    .23   39.1
339        UD    .67
           *

340        KK   DT20
341        KM   THROW AWAY 10-YR 2-HR RETENTION VOLUME:1) 2.4 AC-FT FROM SUB-BASIN 20
342        KM                                            (Hydrograph identified as OR-20)
343        KM                                         2) Balance of runoff continues on.
344        KM                                            (Hydrograph identified as DT20)
345        DT  OR-20    2.4
346        DI      0  10000
347        DQ      0  10000
           *
           *
           * NEXT OPERATION IS TOTAL FLOW AT CORAL GABLES AND 7th AVENUE.
           *
           *
```



```
LINE       ID.......1.......2.......3.......4.......5.......6.......7.......8.......9......10

348        KK   HC22
349        KM     COMBINE SURFACE RUNOFF AT NODE 22
350        KM       RM21-22 + DT20
351        HC      2
           *

352        KK  RS22-6
353        KM     NORMAL DEPTH CHANNEL ROUTE FROM NODE 22 TO NODE 6
354        KM                                    1) Reach Length= 2700 FT.
355        KM                                    2) Average Velocity= 8.8 FPS
356        RS      1   FLOW     -1
357        RC    .04   .035    .04   2700   .005   1337
358        RX      0     70     85     97    157    169    219    279
359        RY   1337   1334   1332   1326   1326   1332   1334   1337
           *

360        KK     2N
```

```
361        KM      RUNOFF GENERATED ON SUB-BASIN 2N
362        BA   0.475
363        LU     .31     .16    33.3
364        UD     .20
           *
           *
           * NEXT OPERATION IS TOTAL FLOW IN THE EAST FORK AT CAVE CREEK.
           *
           *

365        KK     HC6
366        KM      COMBINE SURFACE RUNOFF AT NODE 6
367        KM        RM22-6 + 2N
368        KO                                   21
369        HC       2
           *
           *
           *
           *
           *    CAVE CREEK
           *    SUB-BASINS 1A-1D, 3A-3D, 4A-4C AND 6A-6B
           *
           *
           *
           *

370        KK      1A
371        KM      RUNOFF GENERATED ON SUB-BASIN 1A
372        BA   0.903
373        LU     .48     .13      0
374        UD     .53
           *
```

HEC-1 INPUT PAGE 13

```
LINE       ID.......1.......2.......3.......4.......5.......6.......7.......8.......9......10

375        KK  RM1A-1
376        KM      MUSKINGUM ROUTE IN CHANNEL FROM NODE 1A TO NODE 1
377        KM                                        1) Reach Length= 9900 FT.
378        KM                                        2) Average Velocity= 5.4 FPS
379        RM       3     .51      .2
           *

380        KK      1B
381        KM      RUNOFF GENERATED ON SUB-BASIN 1B
382        BA   1.601
383        LU     .48     .21      0
384        UD     .29
           *
           *
           * NEXT OPERATION IS TOTAL FLOW IN CAVE CREEK 850' NORTH OF THE C.A.P.
           *
           *
```

```
385        KK     HC1
386        KM      COMBINE SURFACE RUNOFF AT NODE 1
387        KM        RM1A-1 + 1B
388        HC       2
           *
           * THE FOLLOWING REACH IS TOO SHORT FOR A STABLE MUSKINGUM ROUTE.  THE K VALUE
           *   OF ROUTE RM2-3 WAS THEREFORE CHANGED FROM .21 hrs TO .24 hrs.  THIS REACH
           *   WAS CHOSEN FOR EXTENTION BECAUSE THE VELOCITY IN REACH RM1-2 MORE CLOSELY
           *   MATCHES RM2-3 THAN RM1A-1.
           *
           * KK,RM1-2
           * KM    MUSKINGUM ROUTE IN CHANNEL FROM NODE 1 TO NODE 2
           * KM                                      1) Reach Length= 850 FT.
           * KM                                      2) Average Velocity= 7.4 FPS
           * RM,1,.03,.2
           *

389        KK      1C
390        KM      RUNOFF GENERATED ON SUB-BASIN 1C
391        BA   1.492
392        LU     .50     .20     0.6
393        UD     .45
           *
           *
           * NEXT OPERATION IS TOTAL FLOW IN CAVE CREEK AT THE C.A.P. CANAL
           *
           *

394        KK     HC2
395        KM      COMBINE SURFACE RUNOFF AT NODE 2
396        KM        RM1-2 + 1C
397        HC       2
           *
```



```
LINE       ID.......1.......2.......3.......4.......5.......6.......7.......8.......9......10

398        KK   RM2-3
399        KM      MUSKINGUM ROUTE IN CHANNEL FROM NODE 2 TO NODE 3
400        KM                                      1) Reach Length= 6100 FT.
401        KM                                      2) Average Velocity= 7.9 FPS
402        KM                                      3) Use K=.24. Includes .03 hrs
403        KM                                         from reach RM1-2.
404        RM      3     .24      .2
           *

405        KK      1D
406        KM      RUNOFF GENERATED ON SUB-BASIN 1D
407        BA   0.963
408        LU     .45     .18     6.3
409        UD     .28
           *
           *
           * NEXT OPERATION IS TOTAL FLOW IN CAVE CREEK 500' SOUTH OF DEER VALLEY DRIVE.
```

```
          *
          *

410       KK    HC3
411       KM     COMBINE SURFACE RUNOFF AT NODE 3
412       KM       RM2-3 + 1D
413       HC      2
          *

414       KK   RM3-4
415       KM     MUSKINGUM ROUTE IN CHANNEL FROM NODE 3 TO NODE 4
416       KM                                        1) Reach Length= 6800 FT.
417       KM                                        2) Average Velocity= 7.0 FPS
418       RM      3     .27      .3
          *

419       KK     3A
420       KM     RUNOFF GENERATED ON SUB-BASIN 3A
421       BA   1.111
422       LU    .43     .14     2.3
423       UD    .32
          *
          *
          * NEXT OPERATION IS TOTAL FLOW IN CAVE CREEK 1000' SOUTH OF BEARDSLEY ROAD.
          *
          *

424       KK    HC4
425       KM     COMBINE SURFACE RUNOFF AT NODE 4
426       KM       RM3-4 + 3A
427       HC      2
          *
```



```
LINE      ID.......1.......2.......3.......4.......5.......6.......7.......8.......9......10


428       KK   RM4-5
429       KM     MUSKINGUM ROUTE IN CHANNEL FROM NODE 4 TO NODE 5
430       KM                                        1) Reach Length= 11,450 FT.
431       KM                                        2) Average Velocity= 8.0 FPS
432       RM      5     .40      .3
          *

433       KK     3C
434       KM     RUNOFF GENERATED ON SUB-BASIN 3C
435       BA   1.559
436       LU    .38     .20    31.6
437       UD    .40
          *

438       KK    DT3C
439       KM   THROW AWAY 10-YR 2-HR RETENTION VOLUME:1) 4.2 AC-FT FROM SUB-BASIN 3C
440       KM                                            (Hydrograph identified as OR-3C)
441       KM                                          2) Balance of runoff continues on.
```

```
442        KM                                        (Hydrograph identified as DT3C)
443        DT   OR-3C     4.2
444        DI       0   10000
445        DQ       0   10000
           *
           *
           * NEXT OPERATION IS FLOW ABOVE BELL ROAD.
           *
           *

446        KK     HC5
447        KM      COMBINE SURFACE RUNOFF AT NODE 5
448        KM        RM4-5 + DT3C
449        HC       2
           *
           *
           * ****** BREAK SEQUENCE AND JUMP TO SUB-BASIN 3B.
           *
           *

450        KK      3B
451        KM      RUNOFF GENERATED ON SUB-BASIN 3B
452        BA   0.944
453        LU     .39     .25    31.5
454        UD    1.02
           *

455        KK  RM3B-8
456        KM      MUSKINGUM ROUTE IN STREET FROM SUB-BASIN 3B TO NODE 8
457        KM                                     1) Reach Length= 4500 FT.
458        KM                                     2) Average Velocity= 2.5 FPS
459        RM       6      .5      .3
           *
```



```
LINE       ID.......1.......2.......3.......4.......5.......6.......7.......8.......9......10

460        KK     DT8
461        KM   SPLIT FLOW AT INTERSECTION OF RENEE DRIVE AND 13th AVENUE
462        KM
463        KM     SEND FLOW SOUTH IN 13th AVENUE
464        KM     (Hydrograph identified as FL-8)
465        KM
466        KM     REMAINDER FLOWS WEST IN RENEE DRIVE.  (Hydrograph identified as DT8)
467        KM
468        DT   FL-8
469        DI       0       8      78     647    2044
470        DQ       0       0       6     243     992
           *

471        KK   RM8-9
472        KM      MUSKINGUM ROUTE IN STREET FROM NODE 8 TO NODE 9
473        KM                                     1) Reach Length= 2750 FT.
474        KM                                     2) Average Velocity= 3.5 FPS
```

```
475        RM      3     .22      .2
           *

476        KK    DT9
477        KM   SPLIT FLOW AT INTERSECTION OF GROVERS AVENUE AND 13th AVENUE
478        KM
479        KM    SEND FLOW SOUTH IN 13th AVENUE
480        KM    (Hydrograph identified as FL-9)
481        KM
482        KM    REMAINDER FLOWS WEST IN GROVERS AVENUE. (Hydrograph identified as DT9)
483        KM
484        DT   FL-9
485        DI      0      27      44     141     834
486        DQ      0       0       0      37     303
           *

487        KK   RM9-5
488        KM     MUSKINGUM ROUTE IN STREET FROM NODE 9 TO NODE 5
489        KM                                    1) Reach Length= 3950 FT.
490        KM                                    2) Average Velocity= 2.0 FPS
491        RM      6     .54      .2
           *
           *
           * NEXT OPERATION IS TOTAL FLOW AT CAVE CREEK AND BELL ROAD.
           *
           *

492        KK   HC5.1
493        KM     COMBINE SURFACE RUNOFF AT NODE 5.1
494        KM       HC5 + RM9-5
495        HC      2
           *
```



```
LINE       ID.......1.......2.......3.......4.......5.......6.......7.......8.......9......10


496        KK   RS5-6
497        KM     NORMAL DEPTH CHANNEL ROUTE FROM NODE 5 TO NODE 6.1
498        KM                                    1) Reach Length     = 6400 FT.
499        KM                                    2) Average Velocity = 12.7 FPS
500        RS      2   FLOW     -1
501        RC   .035    .03    .035    6400    .007    1347
502        RX      0     15      17      44      70      97     100     108
503        RY   1347   1346    1345    1333    1333    1342    1343    1346
           *
           *     ..

504        KK     3D
505        KM     RUNOFF GENERATED ON SUB-BASIN 3D
506        BA   0.408
507        LU    .43     .24    18.2
508        UD    .17
           *
           *
```

```
          * NEXT OPERATION IS TOTAL FLOW AT THE CONFLUENCE OF CAVE CREEK AND THE EAST
          * FORK OF CAVE CREEK
          *
          *

509       KK   HC6.2
510       KM      COMBINE SURFACE RUNOFF AT NODE 6.2
511       KM        RS5-6 + HC6 + 3D
512       HC       3
          *
          *   ****** REACH REMOVED FROM MODEL.  IT IS TOO SHORT FOR STABLE CALCULATINS.
          *
          * KK,RS6-7
          * KM    NORMAL DEPTH CHANNEL ROUTE FROM NODE 6 TO NODE 7
          * KM                                      1) Reach Length= 2250 FT.
          * KM                                      2) Average Velocity= 13.1 FPS
          * KO,,,,,21
          * RS,1,FLOW,-1
          * RC,.035,.03,.035,2250,.006,1335
          * RX,0,40,80,120,180,228,253,253
          * RY,1330,1329.5,1328,1318,1318,1330,1332,1332
          *
          *
          *   ****** BREAK SEQUENCE AND JUMP BACK TO DIVERTED FLOW FROM NODE 8.
          *
          *

513       KK    FL-9
514       KM    RECALL DIVERTED HYDROGRAPH FROM RENEE DRIVE AND 13th AVENUE
515       DR    FL-8
          *
```



```
LINE      ID.......1.......2.......3.......4.......5.......6.......7.......8.......9......10

516       KK  RMB-10
517       KM      MUSKINGUM ROUTE IN STREET FROM NODE 8 TO NODE 10
518       KM                                      1) Reach Length= 8200 FT.
519       KM                                      2) Average Velocity= 3.0 FPS
520       RM      4     .76      .2
          *

521       KK      4A
522       KM      RUNOFF GENERATED ON SUB-BASIN 4A
523       BA   1.264
524       LU   .32     .19    46.8
525       UD    .85
          *

526       KK    DT4A
527       KM   THROW AWAY 10-YR 2-HR RETENTION VOLUME:1) 7.8 AC-FT FROM SUB-BASIN 4A
528       KM                                            (Hydrograph identified as OR-4A)
529       KM                                         2) Balance of runoff continues on.
530       KM                                            (Hydrograph identified as DT4A)
```

```
531        DT   OR-4A     7.8
532        DI       0   10000
533        DQ       0   10000
           *

534        KK    FL-9
535        KM    RECALL DIVERTED HYDROGRAPH FROM GROVERS AVENUE AND 13th AVENUE
536        DR    FL-9
           *

537        KK  RM9-10
538        KM      MUSKINGUM ROUTE IN STREET FROM NODE 9 TO NODE 10
539        KM                                        1) Reach Length= 5750 FT.
540        KM                                        2) Average Velocity= 3.0 FPS
541        RM       3     .53      .2
           *
           *
           * NEXT OPERATION IS TOTAL FLOW AT 19th AVENUE AND BELL ROAD.
           *
           *

542        KK    HC10
543        KM      COMBINE SURFACE RUNOFF AT NODE 10
544        KM        RM8-10 + DT4A + RM9-10
545        HC       3
           *

546        KK    DT10
547        KM   SPLIT FLOW AT INTERSECTION OF 19th AVENUE AND BELL ROAD.
548        KM
549        KM     SEND FLOW WEST IN BELL ROAD OUT OF WATERSHED IN STREET.
550        KM     (Hydrograph identified as FL-10)
551        KM
552        KM     REMAINDER FLOWS SOUTH IN 19th AVE. STREET AND 90" PIPE.
553        KM     (Hydrograph identified as DT10) (490 cfs in PIPE)
```



```
LINE       ID.......1.......2.......3.......4.......5.......6.......7.......8.......9......10

554        KM
555        DT   FL-10
556        DI       0     961    1006    3470
557        DQ       0     336     336    1517
           *

558        KK  RM10-7
559        KM      MUSKINGUM ROUTE IN STREET FROM NODE 10 TO NODE 7
560        KM                                        1) Reach Length= 6850 FT.
561        KM                                        2) Average Velocity= 4.0 FPS
562        RM       6     .48      .2
           *

563        KK      4B
564        KM      RUNOFF GENERATED ON SUB-BASIN 4B
565        BA   0.675
```

```
566        LU      .3      .2    79.4
567        UD     .24
           *

568        KK    DT4B
569        KM   THROW AWAY 10-YR 2-HR RETENTION VOLUME:1) 4.3 AC-FT FROM SUB-BASIN 4B
570        KM                                            (Hydrograph identified as OR-4B)
571        KM                                         2) Balance of runoff continues on.
572        KM                                            (Hydrograph identified as DT4B)
573        DT   OR-4B     4.3
574        DI       0   10000
575        DQ       0   10000
           *
           *
           * NEXT OPERATION IS TOTAL FLOW IN CAVE CREEK 500' SOUTH OF GREENWAY ROAD
           * AND 600' WEST OF 19th AVENUE.
           *
           *

576        KK     HC7
577        KM      COMBINE SURFACE RUNOFF AT NODE 7
578        KM        HC6.2 + RM10-7 + DT4B
579        HC       3
           *

580        KK  RS7-11
581        KM      NORMAL DEPTH CHANNEL ROUTE FROM NODE 7 TO NODE 11.1
582        KM                                         1) Reach Length= 8900 FT.
583        KM                                         2) Average Velocity= 8.9 FPS
584        RS       4    FLOW      -1
585        RC     .04    .035     .04    8900    .003  1297.5
586        RX       0     137     169     229     249     300     325     365
587        RY  1296.7    1294    1282    1282    1290    1292    1294  1297.5
           *
```



```
LINE       ID.......1.......2.......3.......4.......5.......6.......7.......8.......9.......10

588        KK      4C
589        KM      RUNOFF GENERATED ON SUB-BASIN 4C
590        BA   1.029
591        LU     .31     .24    39.7
592        UD     .62
           *

593        KK   DT4C
594        KM      THROW AWAY 10-YR 2-HR RETENTION VOLUME:1) 5.1 AC-FT FROM SUB-BASIN 4C
595        KM                                            (Hydrograph identified as OR-4C)
596        KM                                         2) Balance of runoff continues on.
597        KM                                            (Hydrograph identified as DT4C)
598        DT   OR-4C     5.1
599        DI       0   10000
600        DQ       0   10000
           *
```

```
601        KK  HC11.1
602        KM      COMBINE SURFACE RUNOFF AT NODE 11.1
603        KM        RS7-11 + DT4C
604        HC       2
           *
           *
           * ****** BREAK SEQUENCE AND JUMP TO SUB-BASIN 5G
           *
           *
           *
           *    MOON VALLEY WASH
           *    SUB-BASINS 5A-5G
           *
           *
           *

605        KK      5G
606        KM      RUNOFF GENERATED ON SUB-BASIN 5G
607        BA   0.429
608        LU     .38     .05     3.3
609        UD     .17
           *

610        KK    RS5G
611        KM      RESERVOR ROUTE THROUGH DETENTION BASIN NO. 2B
612        KM                                    1) Total Volume  = 48 AC-FT.
613        KM                                    2) Spillway Elev = 1412
614        RS       1    ELEV
615        SV       0       1      18      37      48      68
616        SE    1395    1400    1405    1410    1412    1415
617        SS    1412      80    2.63     1.5
618        SL  1396.7    1.78      .6      .5
           *
```



```
LINE       ID.......1.......2.......3.......4.......5.......6.......7.......8.......9......10

619        KK RM5G-26
620        KM      MUSKINGUM ROUTE IN CHANNEL FROM SUB-BASIN 5G TO NODE 26
621        KM                                    1) Reach Length= 2550 FT.
622        KM                                    2) Average Velocity= 6.5 FPS
623        RM       1     .11      .3
           *

624        KK      5C
625        KM      RUNOFF GENERATED ON SUB-BASIN 5C
626        BA   0.514
627        LU     .34     .05    14.6
628        UD     .16
           *

629        KK    RS5C
630        KM      RESERVOR ROUTE THROUGH DETENTION BASIN NO. 2A
```

```
KM                                        1) Total Volume  = 60 AC-FT.
KM                                        2) Spillway Elev = 1408
RS      1    ELEV
SV      0      2      5     10     25     60     69     81     94    100
SE   1391   1393   1397   1400   1404   1408   1409   1410   1411   1412
SS   1408   80.0   2.63    1.5
SL 1392.2   1.78     .6     .5
*

KK RK5C-26
KM     KINEMATIC WAVE ROUTE IN PIPE FROM SUB-BASIN 5C TO NODE 26
KM                                        1) Reach Length       = 2400 FT.
KM                                        2) Avg. Pipe Diameter = 54"
KM                                        3) Average Velocity   = 6.4 FPS
RK   2400   .009   .015          CIRC    4.5
*
*
* NEXT OPERATION IS TOTAL FLOW AT 7th STREET AND ROBERTS ROAD.
*
*

KK    HC26
KM     COMBINE SURFACE RUNOFF AT NODE 26
KM       RM5G-26 + RK5C-26
HC      2
*

KK RM26-28
KM     MUSKINGUM ROUTE IN CHANNEL FROM NODE 26 TO NODE 28
KM                                        1) Reach Length= 5500 FT.
KM                                        2) Average Velocity= 7.2 FPS
RM      3    .21     .3
*
*
* ****** BREAK SEQUENCE AND JUMP TO SUB-BASIN 5A
*
*
*
```



```
LINE      ID.......1.......2.......3.......4.......5.......6.......7.......8.......9......10

KK      5A
KM      RUNOFF GENERATED ON SUB-BASIN 5A
BA   1.268
LU    .27     .17    25.5
UD     .21
*

KK RM5A-27
KM      MUSKINGUM ROUTE IN CHANNEL FROM SUB-BASIN 5A TO NODE 27
KM                                        1) Reach Length= 3600 FT.
KM                                        2) Average Velocity= 4.6 FPS
RM      3    .22     .3
```

```
*

KK     5B
KM     RUNOFF GENERATED ON SUB-BASIN 5B
BA   0.686
LU     .3     .25    38.0
UD    .40
*

KK    HC27
KM     COMBINE SURFACE RUNOFF AT NODE 27
KM       RM5A-27 + 5B
HC      2
*

KK RM27-28
KM     MUSKINGUM ROUTE IN CHANNEL FROM NODE 27 TO NODE 28
KM                                        1) Reach Length= 900 FT.
KM                                        2) Average Velocity= 2.2 FPS
RM      1     .11      .3
*

KK    HC28
KM     COMBINE SURFACE RUNOFF AT NODE 28
KM       RM26-28 + RM27-28
HC      2
*

KK RM28-29
KM     MUSKINGUM ROUTE IN CHANNEL FROM NODE 28 TO NODE 29
KM                                        1) Reach Length= 2150 FT.
KM                                        2) Average Velocity= 6.2 FPS
RM      1     .10      .3
*

KK     5D
KM     RUNOFF GENERATED ON SUB-BASIN 5D
BA   0.554
LU    .39     .05     2.1
UD    .10
*
```



```
LINE      ID.......1.......2.......3.......4.......5.......6.......7.......8.......9......10

KK    RS5D
KM     RESERVOR ROUTE THROUGH DETENTION BASIN NO. 7
KM                                        1) Total Volume  = 120 AC-FT.
KM                                        2) Spillway Elev = 1392
RS      1    ELEV
SV      0     120     136     152     175     200     224     248     272
SE   1369    1392    1393    1394    1395    1396    1397    1398    1399
SQ      0      53     363     928    1660    2526    3508    4594    5775
*
```

```
699        KK RM5D-29
700        KM     MUSKINGUM ROUTE IN CHANNEL FROM SUB-BASIN 5D TO NODE 29
701        KM                                    1) Reach Length= 6700 FT.
702        KM                                    2) Average Velocity= 5.8 FPS
703        RM      4     .32      .3
           *

704        KK     5E
705        KM     RUNOFF GENERATED ON SUB-BASIN 5E
706        BA   1.592
707        LU    .27     .11    39.8
708        UD    .37
           *

709        KK    DT5E
710        KM   THROW AWAY 10-YR 2-HR RETENTION VOLUME:1) 6.0 AC-FT FROM SUB-BASIN 5E
711        KM                                            (Hydrograph identified as DR-2E)
712        KM                                          2) Balance of runoff continues on.
713        KM                                            (Hydrograph identified as DT2E)
714        DT   DR-2E     6.0
715        DI      0   10000
716        DQ      0   10000
           *
           *
           * NEXT OPERATION IS TOTAL FLOW AT THUNDERBIRD ROAD WEST OF CORAL GABLES
           *
           *

717        KK    HC29
718        KM     COMBINE SURFACE RUNOFF AT NODE 29
719        KM       RM28-29 + RM5D-29 + DT5E
720        HC      3
           *

721        KK RM29-11
722        KM     MUSKINGUM ROUTE IN CHANNEL FROM NODE 29 TO NODE 11
723        KM                                    1) Reach Length= 7000 FT.
724        KM                                    2) Average Velocity= 11.9 FPS
725        RM      2     .16      .3
           *
```



```
LINE       ID.......1.......2.......3.......4.......5.......6.......7.......8.......9......10

726        KK    5F
727        KM     RUNOFF GENERATED ON SUB-BASIN 5F
728        BA   1.522
729        LU    .26     .14    28.3
730        UD    .50
           *

731        KK    DT5F
732        KM   THROW AWAY 10-YR 2-HR RETENTION VOLUME:1) 5.0 AC-FT FROM SUB-BASIN 5F
```

```
733        KM                                        (Hydrograph identified as OR-5F)
734        KM                                     2) Balance of runoff continues on.
735        KM                                        (Hydrograph identified as DT5F)
736        DT   OR-5F     5.0
737        DI       0   10000
738        DQ       0   10000
           *
           *
           * NEXT OPERATION IS TOTAL FLOW IN MOON VALLEY WASH AT CAVE CREEK
           *
           *

739        KK    HC11
740        KM      COMBINE SURFACE RUNOFF AT NODE 11
741        KM        RM29-11 + DT5F
742        KO                                   21
743        HC       2
           *
           *
           * NEXT OPERATION IS TOTAL FLOW AT THE CONFLUENCE OF CAVE CREEK WITH MOON
           * VALLEY WASH
           *
           *

744        KK  HC11.2
745        KM      COMBINE SURFACE RUNOFF AT NODE 11.2
746        KM        HC11.1 + HC11
747        HC       2
           *
           *  ******* REACH REMOVED FROM MODEL.  IT IS TOO SHORT FOR STABLE CALCULATIONS.
           *            .03 hrs was added to reach RM12-13.
           *
           * KK,RM11-12
           * KM    MUSKINGUM ROUTE IN CHANNEL FROM NODE 11 TO NODE 12
           * KM                                     1) Reach Length= 2700 FT.
           * KM                                     2) Average Velocity= 22.2 FPS
           * RM,1,.03,.2
           *

748        KK      6A
749        KM      RUNOFF GENERATED ON SUB-BASIN 6A
750        KM
751        BA   0.459
752        LU     .33     .20    43.8
753        UD     .45
           *
```



```
LINE       ID.......1.......2.......3.......4.......5.......6.......7.......8.......9......10

754        KK    DT6A
755        KM   THROW AWAY 10-YR 2-HR RETENTION VOLUME:1) 1.4 AC-FT FROM SUB-BASIN 6A
756        KM                                        (Hydrograph identified as OR-6A)
757        KM                                     2) Balance of runoff continues on.
```

```
758        KM                                        (Hydrograph identified as DT6A)
759        DT   OR-6A     1.4
760        DI       0   10000
761        DQ       0   10000
           *
           *
           * NEXT OPERATION IS TOTAL FLOW IN CAVE CREEK AT CACTUS ROAD.
           *
           *

762        KK    HC12
763        KM      COMBINE SURFACE RUNOFF AT NODE 12
764        KM        HC11 + DT6A
765        HC       2
           *

766        KK RM12-13
767        KM      MUSKINGUM ROUTE IN CHANNEL FROM NODE 12 TO NODE 13
768        KM                                      1) Reach Length= 9000 FT.
769        KM                                      2) Average Velocity= 21.0 FPS.
770        RM       2     .15      .2
           *

771        KK      6B
772        KM      RUNOFF GENERATED ON SUB-BASIN 6B
773        BA   1.139
774        LU     .32     .20    61.5
775        UD     .63
           *

776        KK    DT6B
777        KM   THROW AWAY 10-YR 2-HR RETENTION VOLUME:1) 13.0 AC-FT FROM SUB-BASIN 6B
778        KM                                            (Hydrograph identified as OR-6B)
779        KM                                         2) Balance of runoff continues on.
780        KM                                            (Hydrograph identified as DT6B)
781        DT   OR-6B    13.0
782        DI       0   10000
783        DQ       0   10000
           *
           *
           * NEXT OPERATION IS TOTAL FLOW IN CAVE CREEK AT THE CONFLUENCE WITH THE
           * ARIZONA CANAL DIVERSION CHANNEL.
           *
           *
```



```
LINE       ID.....1.......2.......3.......4.......5.......6.......7.......8.......9......10

784        KK    HC13
785        KM      COMBINE SURFACE RUNOFF AT NODE 13
786        KM        RM12-13 + DT6B
787        KD                                 21
788        HC       2
           *
```

789 ZZ

SCHEMATIC DIAGRAM OF STREAM NETWORK

```
INPUT
 LINE     (V) ROUTING          (--->) DIVERSION OR PUMP FLOW

  NO.     (.) CONNECTOR        (<---) RETURN OF DIVERTED OR PUMPED FLOW

  10        2A
             .
             .
  26         .         2B
             .          .
             .          .
  31      HC14............
             V
             V
  35    RM14-15
             .
             .
  40         .         2C
             .          .
             .          .
  50         .          .-------> OR-2C
  45         .       DT2C
             .          .
             .          .
  53      HC15............
             V
             V
  57    RM15-16
             .
             .
  62         .         2E
             .          .
             .          .
  67      HC16............
             V
             V
  71    RM16-17
             .
             .
  76         .         2H
             .          .
             .          .
  86         .          .-------> OR-2H
  81         .       DT2H
             .          .
             .          .
  89      HC17............
             .
             .
  93         .         2D
             .          .
             .          .
```

```
103          .          .-------> OR-2D
 98          .       DT2D
             .          .
             .          .
114          .          .-------> FL-2D
106          .      DT2DS
             .          V
             .          V
117          .     RM2D-23
             .          .
             .          .
122          .          .        2P
             .          .         .
             .          .         .
132          .          .         .-------> OR-2P
127          .          .      DT2P
             .          .         .
             .          .         .
135          .       HC23............
             .          V
             .          V
139          .     RM23-24
             .          .
             .          .
146          .          .        2F
             .          .         .
             .          .         .
157          .          .         .-------> OR-2F
152          .          .      DT2F
             .          .         .
             .          .         .
160          .       HC24............
             .          .
             .          .
165          .          .        2G
             .          .         V
             .          .         V
170          .          .    RM2G-25
             .          .         .
             .          .         .
175          .       HC25............
             .          V
             .          V
179          .     RS25-17
             .          .
             .          .
187     HC17.1............
             V
             V
191     RS17-18
             .
             .
199          .        2J
             .          .
             .          .
```

```
209          .          .-------> OR-2J
204          .       DT2J
             .         V
             .         V
212          .     RM2J-19
             .         .
             .         .
217          .         .        2I
             .         .         .
             .         .         .
227          .         .         .-------> OR-2I
222          .         .      DT2I
             .         .         V
             .         .         V
230          .         .    RM2I-19
             .         .         .
             .         .         .
235          .         .         .        2K
             .         .         .         .
             .         .         .         .
245          .         .         .         .-------> OR-2K
240          .         .         .      DT2K
             .         .         .         .
             .         .         .         .
248          .       HC19......................
             .         .
             .         .
260          .         .-------> FL-19
252          .       DT19
             .         V
             .         V
263          .     RM19-18
             .         .
             .         .
268        HC18............
             V
             V
272      RS18-21
             .
             .
282          .         .<------- FL-19
280          .      FL-19
             .         V
             .         V
283          .     RM19-20
             .         .
             .         .
288          .         .        2L
             .         .         .
             .         .         .
298          .         .         .-------> OR-2L
293          .         .      DT2L
             .         .         .
             .         .         .
301          .       HC20............
```

```
            .         V
            .         V
305         .    RM20-21
            .         .
            .         .
310         .         .        2M
            .         .         .
            .         .         .
320         .         .         .-------> OR-2M
315         .         .      DT2M
            .         .         .
            .         .         .
323       HC21......................
            V
            V
327     RS21-22
            .
            .
335         .        20
            .         .
            .         .
345         .         .-------> OR-20
340         .      DT20
            .         .
            .         .
348       HC22............
            V
            V
352     RS22-6
            .
            .
360         .        2N
            .         .
            .         .
365       HC6............
            .
            .
370         .        1A
            .         V
            .         V
375         .    RM1A-1
            .         .
            .         .
380         .         .        1B
            .         .         .
            .         .         .
385         .      HC1............
            .         .
            .         .
389         .         .        1C
            .         .         .
            .         .         .
394         .      HC2............
            .         V
            .         V
```

```
398         .     RM2-3
            .       .
            .       .
405         .       .        1D
            .       .         .
            .       .         .
410         .     HC3............
            .       V
            .       V
414         .     RM3-4
            .       .
            .       .
419         .       .        3A
            .       .         .
            .       .         .
424         .     HC4............
            .       V
            .       V
428         .     RM4-5
            .       .
            .       .
433         .       .        3C
            .       .         .
            .       .         .
443         .       .         .-------> OR-3C
438         .       .      DT3C
            .       .         .
            .       .         .
446         .     HC5............
            .       .
            .       .
450         .       .        3B
            .       .         V
            .       .         V
455         .       .    RM3B-8
            .       .         .
            .       .         .
468         .       .         .-------> FL-8
460         .       .       DT8
            .       .         V
            .       .         V
471         .       .     RM8-9
            .       .         .
            .       .         .
484         .       .         .-------> FL-9
476         .       .       DT9
            .       .         V
            .       .         V
487         .       .     RM9-5
            .       .         .
            .       .         .
492         .     HC5.1..........
            .       V
            .       V
496         .     RS5-6
```

```
          .         .
          .         .
504       .         .        3D
          .         .         .
          .         .         .
509     HC6.2.......................
          .
          .
515       .         .<-------   FL-8
513       .      FL-8
          .         V
          .         V
516       .     RM8-10
          .         .
          .         .
521       .         .        4A
          .         .         .
          .         .         .
531       .         .         .-------> OR-4A
526       .         .      DT4A
          .         .         .
          .         .         .
536       .         .         .         .<-------   FL-9
534       .         .         .      FL-9
          .         .         .         V
          .         .         .         V
537       .         .         .     RM9-10
          .         .         .         .
          .         .         .         .
542       .      HC10.......................
          .         .
          .         .
555       .         .-------> FL-10
546       .      DT10
          .         V
          .         V
558       .     RM10-7
          .         .
          .         .
563       .         .        4B
          .         .         .
          .         .         .
573       .         .         .-------> OR-4B
568       .         .      DT4B
          .         .         .
          .         .         .
576     HC7.........................
        V
        V
580   RS7-11
          .
          .
588       .        4C
          .         .
          .         .
```

```
598          .          .-------> OR-4C
593          .       DT4C
             .         .
             .         .
601     HC11.1............
             .
             .
605          .         5G
             .         V
             .         V
610          .       RS5G
             .         V
             .         V
619          .     RM5G-26
             .         .
             .         .
624          .         .         5C
             .         .         V
             .         .         V
629          .         .       RS5C
             .         .         V
             .         .         V
638          .         .     RK5C-26
             .         .         .
             .         .         .
644          .       HC26............
             .         V
             .         V
648          .     RM26-28
             .         .
             .         .
653          .         .         5A
             .         .         V
             .         .         V
658          .         .     RM5A-27
             .         .         .
             .         .         .
663          .         .         .         5B
             .         .         .          .
             .         .         .          .
668          .         .       HC27............
             .         .         V
             .         .         V
672          .         .     RM27-28
             .         .         .
             .         .         .
677          .       HC28............
             .         V
             .         V
681          .     RM28-29
             .         .
             .         .
686          .         .         5D
             .         .         V
             .         .         V
```

```
691          .          .       RS5D
             .          .         V
             .          .         V
699          .          .     RM5D-29
             .          .         .
             .          .         .
704          .          .         .        5E
             .          .         .         .
             .          .         .         .
714          .          .         .         .-------> DR-2E
709          .          .         .      DT5E
             .          .         .         .
             .          .         .         .
717          .        HC29.......................
             .          V
             .          V
721          .     RM29-11
             .          .
             .          .
726          .          .        5F
             .          .         .
             .          .         .
736          .          .         .-------> DR-5F
731          .          .       DT5F
             .          .         .
             .          .         .
739          .        HC11............
             .          .
             .          .
744     HC11.2............
             .
             .
748          .         6A
             .          .
             .          .
759          .          .-------> DR-6A
754          .        DT6A
             .          .
             .          .
762       HC12............
             V
             V
766     RM12-13
             .
             .
771          .         6B
             .          .
             .          .
781          .          .-------> DR-6B
776          .        DT6B
             .          .
             .          .
784       HC13............
```

(***) RUNOFF ALSO COMPUTED AT THIS LOCATION

```
****************************************
*                                      *
*  FLOOD HYDROGRAPH PACKAGE  (HEC-1)   *
*     BY THE COE IN FEBRUARY 1981      *
*         REVISED 02 AUG 88            *
*                                      *
* RUN DATE  01/16/1990  TIME  13:48:36 *
*                                      *
****************************************
```

```
****************************************
*                                      *
*    DODSON AND ASSOCIATES, INC.       *
*  HYDROLOGIST AND CIVIL ENGINEERS     *
*     7015 W TIDWELL SUITE 107         *
*       HOUSTON, TEXAS  77092          *
*          (713) 895-8322              *
*                                      *
****************************************
```

```
                    FCDMC CAVE CREEK FIS, JOB NO. 7833
                    100-YEAR 24-HR DURATION STORM
                    FILE = 7833100Y.IN : 01/12/90 trl
                    STORM PRECIP : 5 SM Area = 3.96", 10 SM = 3.84", 15 SM = 3.76", 20 SM = 3.72"
                    STORM PRECIP : 35 SM = 3.64"

 7 IO        OUTPUT CONTROL VARIABLES
                  IPRNT          3  PRINT CONTROL
                  IPLOT          0  PLOT CONTROL
                  QSCAL         0.  HYDROGRAPH PLOT SCALE

  IT         HYDROGRAPH TIME DATA
                   NMIN          5  MINUTES IN COMPUTATION INTERVAL
                  IDATE     1    0  STARTING DATE
                  ITIME       0000  STARTING TIME
                     NQ        300  NUMBER OF HYDROGRAPH ORDINATES
                 NDDATE     2    0  ENDING DATE
                 NDTIME       0055  ENDING TIME
                  ICENT         19  CENTURY MARK

              COMPUTATION INTERVAL     .08 HOURS
                   TOTAL TIME BASE   24.92 HOURS

       ENGLISH UNITS
           DRAINAGE AREA        SQUARE MILES
           PRECIPITATION DEPTH  INCHES
           LENGTH, ELEVATION    FEET
           FLOW                 CUBIC FEET PER SECOND
           STORAGE VOLUME       ACRE-FEET
           SURFACE AREA         ACRES
           TEMPERATURE          DEGREES FAHRENHEIT

  JP         MULTI-PLAN OPTION
                  NPLAN          1  NUMBER OF PLANS

  JR         MULTI-RATIO OPTION
                RATIOS OF PRECIPITATION
               1.00      .97      .95      .94      .92
```

*** ***

```
        ***************
        *             *
10 KK   *       2A    *
        *             *
        ***************
                    RUNOFF GENERATED ON SUB-BASIN 2A

 8 IN        TIME DATA FOR INPUT TIME SERIES
                 JXMIN          15  TIME INTERVAL IN MINUTES
                JXDATE     1    0  STARTING DATE
                JXTIME          0  STARTING TIME

          SUBBASIN RUNOFF DATA

12 BA        SUBBASIN CHARACTERISTICS
                 TAREA        .87  SUBBASIN AREA

             PRECIPITATION DATA

13 PB            STORM       3.96  BASIN TOTAL PRECIPITATION

14 PI          INCREMENTAL PRECIPITATION PATTERN
                .00      .00      .00      .00      .00      .00      .00      .00      .00      .00
                .00      .00      .00      .00      .00      .00      .00      .00      .00      .00
                .00      .00      .00      .00      .00      .00      .00      .00      .00      .00
                .00      .00      .00      .00      .00      .00      .00      .00      .00      .00
                .00      .00      .00      .00      .00      .00      .00      .00      .00      .00
                .00      .00      .00      .00      .00      .00      .00      .00      .00      .00
                .00      .00      .00      .00      .00      .00      .00      .00      .00      .00
                .00      .00      .00      .00      .00      .00      .00      .00      .00      .00
                .00      .00      .00      .00      .00      .00      .00      .00      .00      .00
                .00      .00      .00      .00      .00      .00      .00      .00      .00      .00
                .00      .00      .00      .00      .00      .00      .00      .00      .00      .00
                .00      .00      .00      .00      .00      .00      .00      .00      .00      .00
                .00      .00      .00      .00      .00      .00      .00      .01      .00      .01
                .01      .01      .01      .01      .01      .01      .01      .01      .03      .03
                .03      .09      .09      .09      .01      .01      .01      .01      .01      .01
                .01      .01      .01      .01      .01      .01      .00      .00      .00      .00
                .00      .00      .00      .00      .00      .00      .00      .00      .00      .00
                .00      .00      .00      .00      .00      .00      .00      .00      .00      .00
                .00      .00      .00      .00      .00      .00      .00      .00      .00      .00
                .00      .00      .00      .00      .00      .00      .00      .00      .00      .00
                .00      .00      .00      .00      .00      .00      .00      .00      .00      .00
                .00      .00      .00      .00      .00      .00      .00      .00      .00      .00
                .00      .00      .00      .00      .00      .00      .00      .00      .00      .00
                .00      .00      .00      .00      .00      .00      .00      .00      .00      .00
                .00      .00      .00      .00      .00      .00      .00      .00      .00      .00
                .00      .00      .00      .00      .00      .00      .00      .00      .00      .00
                .00      .00      .00      .00      .00      .00      .00      .00      .00      .00
                .00      .00      .00      .00      .00      .00      .00      .00      .00      .00
                .00      .00      .00      .00      .00      .00      .00      .00
```

```
24 LU        UNIFORM LOSS RATE
                  STRTL        .37  INITIAL LOSS
                  CNSTL        .20  UNIFORM LOSS RATE
                  RTIMP      19.60  PERCENT IMPERVIOUS AREA

25 UD        SCS DIMENSIONLESS UNITGRAPH
                  TLAG        .25  LAG

                                                  ***

                                              UNIT HYDROGRAPH
                                         17 END-OF-PERIOD ORDINATES
          255.    874.   1391.   1391.   1084.    649.    404.    261.    163.    102.
           64.     40.     25.     16.     11.      6.      2.

  TOTAL RAINFALL =   3.96, TOTAL LOSS =   1.75, TOTAL EXCESS =   2.21

PEAK FLOW    TIME                        MAXIMUM AVERAGE FLOW
 (CFS)       (HR)                 6-HR      24-HR      72-HR    24.92-HR
 1578.      12.17       (CFS)     185.       52.        50.        50.
                      (INCHES)   1.981      2.206      2.207      2.207
                       (AC-FT)     92.      102.       102.       102.

                     CUMULATIVE AREA =    .87 SQ MI


   ***          ***          ***          ***          ***

                     HYDROGRAPH AT STATION      2A
                       FOR PLAN 1, RATIO = 1.00

  TOTAL RAINFALL =   3.96, TOTAL LOSS =   1.75, TOTAL EXCESS =   2.21

PEAK FLOW    TIME                        MAXIMUM AVERAGE FLOW
 (CFS)       (HR)                 6-HR      24-HR      72-HR    24.92-HR
 1578.      12.17       (CFS)     185.       52.        50.        50.
                      (INCHES)   1.981      2.206      2.207      2.207
                       (AC-FT)     92.      102.       102.       102.

                     CUMULATIVE AREA =    .87 SQ MI


   ***          ***          ***          ***          ***

                     HYDROGRAPH AT STATION      2A
                       FOR PLAN 1, RATIO =  .97

  TOTAL RAINFALL =   3.83, TOTAL LOSS =   1.71, TOTAL EXCESS =   2.12

PEAK FLOW    TIME                        MAXIMUM AVERAGE FLOW
 (CFS)       (HR)                 6-HR      24-HR      72-HR    24.92-HR
 1524.      12.17       (CFS)     178.       50.        48.        48.
                      (INCHES)   1.903      2.120      2.121      2.121
                       (AC-FT)     88.       98.        98.        98.
```

CUMULATIVE AREA = .87 SQ MI

*** *** *** *** ***

HYDROGRAPH AT STATION 2A
FOR PLAN 1, RATIO = .95

TOTAL RAINFALL = 3.75, TOTAL LOSS = 1.69, TOTAL EXCESS = 2.07

PEAK FLOW (CFS)	TIME (HR)		MAXIMUM AVERAGE FLOW 6-HR	24-HR	72-HR	24.92-HR
1491.	12.17	(CFS)	173.	48.	47.	47.
		(INCHES)	1.854	2.067	2.068	2.068
		(AC-FT)	86.	96.	96.	96.

CUMULATIVE AREA = .87 SQ MI

*** *** *** *** ***

HYDROGRAPH AT STATION 2A
FOR PLAN 1, RATIO = .94

TOTAL RAINFALL = 3.72, TOTAL LOSS = 1.68, TOTAL EXCESS = 2.05

PEAK FLOW (CFS)	TIME (HR)		MAXIMUM AVERAGE FLOW 6-HR	24-HR	72-HR	24.92-HR
1478.	12.17	(CFS)	172.	48.	46.	46.
		(INCHES)	1.835	2.046	2.047	2.047
		(AC-FT)	85.	95.	95.	95.

CUMULATIVE AREA = .87 SQ MI

*** *** *** *** ***

HYDROGRAPH AT STATION 2A
FOR PLAN 1, RATIO = .92

TOTAL RAINFALL = 3.64, TOTAL LOSS = 1.65, TOTAL EXCESS = 1.99

PEAK FLOW (CFS)	TIME (HR)		MAXIMUM AVERAGE FLOW 6-HR	24-HR	72-HR	24.92-HR
1443.	12.17	(CFS)	167.	47.	45.	45.
		(INCHES)	1.784	1.991	1.992	1.992
		(AC-FT)	83.	92.	92.	92.

CUMULATIVE AREA = .87 SQ MI

*** ***

```
          ***************
          *             *
26 KK     *        2B   *
          *             *
          ***************
                    RUNOFF GENERATED ON SUB-BASIN 2B

        SUBBASIN RUNOFF DATA

28 BA       SUBBASIN CHARACTERISTICS
                TAREA        .41  SUBBASIN AREA

            PRECIPITATION DATA

13 PB           STORM       3.96  BASIN TOTAL PRECIPITATION

14 PI         INCREMENTAL PRECIPITATION PATTERN
                .00      .00      .00      .00      .00      .00      .00      .00      .00      .00
                .00      .00      .00      .00      .00      .00      .00      .00      .00      .00
                .00      .00      .00      .00      .00      .00      .00      .00      .00      .00
                .00      .00      .00      .00      .00      .00      .00      .00      .00      .00
                .00      .00      .00      .00      .00      .00      .00      .00      .00      .00
                .00      .00      .00      .00      .00      .00      .00      .00      .00      .00
                .00      .00      .00      .00      .00      .00      .00      .00      .00      .00
                .00      .00      .00      .00      .00      .00      .00      .00      .00      .00
                .00      .00      .00      .00      .00      .00      .00      .00      .00      .00
                .00      .00      .00      .00      .00      .00      .00      .00      .00      .00
                .00      .00      .00      .00      .00      .00      .00      .00      .00      .00
                .00      .00      .00      .00      .00      .00      .00      .00      .00      .00
                .00      .00      .00      .00      .00      .00      .00      .01      .00      .01
                .01      .01      .01      .01      .01      .01      .01      .01      .03      .03
                .03      .09      .09      .09      .01      .01      .01      .01      .01      .01
                .01      .01      .01      .01      .01      .01      .00      .00      .00      .00
                .00      .00      .00      .00      .00      .00      .00      .00      .00      .00
                .00      .00      .00      .00      .00      .00      .00      .00      .00      .00
                .00      .00      .00      .00      .00      .00      .00      .00      .00      .00
                .00      .00      .00      .00      .00      .00      .00      .00      .00      .00
                .00      .00      .00      .00      .00      .00      .00      .00      .00      .00
                .00      .00      .00      .00      .00      .00      .00      .00      .00      .00
                .00      .00      .00      .00      .00      .00      .00      .00      .00      .00
                .00      .00      .00      .00      .00      .00      .00      .00      .00      .00
                .00      .00      .00      .00      .00      .00      .00      .00      .00      .00
                .00      .00      .00      .00      .00      .00      .00      .00      .00      .00
                .00      .00      .00      .00      .00      .00      .00      .00      .00      .00
                .00      .00      .00      .00      .00      .00      .00      .00      .00      .00
                .00      .00      .00      .00      .00      .00      .00      .00      .00      .00
                .00      .00      .00      .00      .00      .00      .00      .00      .00      .00
                .00      .00      .00      .00      .00      .00      .00      .00

29 LU       UNIFORM LOSS RATE
                STRTL        .37  INITIAL LOSS
                CNSTL        .25  UNIFORM LOSS RATE
                RTIMP      12.00  PERCENT IMPERVIOUS AREA

30 UD       SCS DIMENSIONLESS UNITGRAPH
                TLAG         .19  LAG
```

***

UNIT HYDROGRAPH
13 END-OF-PERIOD ORDINATES

225.	725.	854.	638.	337.	191.	106.	59.	33.	18.
10.	6.	3.							

TOTAL RAINFALL = 3.96, TOTAL LOSS = 2.04, TOTAL EXCESS = 1.92

PEAK FLOW (CFS)	TIME (HR)		MAXIMUM AVERAGE FLOW 6-HR	24-HR	72-HR	24.92-HR
853.	12.08	(CFS)	80.	21.	21.	21.
		(INCHES)	1.786	1.924	1.925	1.925
		(AC-FT)	39.	42.	42.	42.

CUMULATIVE AREA = .41 SQ MI

*** *** *** *** ***

HYDROGRAPH AT STATION 2B
FOR PLAN 1, RATIO = 1.00

TOTAL RAINFALL = 3.96, TOTAL LOSS = 2.04, TOTAL EXCESS = 1.92

PEAK FLOW (CFS)	TIME (HR)		MAXIMUM AVERAGE FLOW 6-HR	24-HR	72-HR	24.92-HR
853.	12.08	(CFS)	80.	21.	21.	21.
		(INCHES)	1.786	1.924	1.925	1.925
		(AC-FT)	39.	42.	42.	42.

CUMULATIVE AREA = .41 SQ MI

*** *** *** *** ***

HYDROGRAPH AT STATION 2B
FOR PLAN 1, RATIO = .97

TOTAL RAINFALL = 3.83, TOTAL LOSS = 1.99, TOTAL EXCESS = 1.85

PEAK FLOW (CFS)	TIME (HR)		MAXIMUM AVERAGE FLOW 6-HR	24-HR	72-HR	24.92-HR
824.	12.08	(CFS)	76.	21.	20.	20.
		(INCHES)	1.713	1.847	1.847	1.847
		(AC-FT)	38.	41.	41.	41.

CUMULATIVE AREA = .41 SQ MI

*** *** *** *** ***

HYDROGRAPH AT STATION 2B
FOR PLAN 1, RATIO = .95

TOTAL RAINFALL = 3.75, TOTAL LOSS = 1.94, TOTAL EXCESS = 1.80

PEAK FLOW (CFS)	TIME (HR)		6-HR	MAXIMUM AVERAGE FLOW 24-HR	72-HR	24.92-HR
806.	12.08	(CFS)	74.	20.	19.	19.
		(INCHES)	1.668	1.798	1.799	1.799
		(AC-FT)	37.	40.	40.	40.

CUMULATIVE AREA = .41 SQ MI

*** *** *** *** ***

HYDROGRAPH AT STATION 2B
FOR PLAN 1, RATIO = .94

TOTAL RAINFALL = 3.72, TOTAL LOSS = 1.94, TOTAL EXCESS = 1.78

PEAK FLOW (CFS)	TIME (HR)		6-HR	MAXIMUM AVERAGE FLOW 24-HR	72-HR	24.92-HR
799.	12.08	(CFS)	73.	20.	19.	19.
		(INCHES)	1.650	1.779	1.780	1.780
		(AC-FT)	36.	39.	39.	39.

CUMULATIVE AREA = .41 SQ MI

*** *** *** *** ***

HYDROGRAPH AT STATION 2B
FOR PLAN 1, RATIO = .92

TOTAL RAINFALL = 3.64, TOTAL LOSS = 1.91, TOTAL EXCESS = 1.73

PEAK FLOW (CFS)	TIME (HR)		6-HR	MAXIMUM AVERAGE FLOW 24-HR	72-HR	24.92-HR
780.	12.08	(CFS)	71.	19.	19.	19.
		(INCHES)	1.602	1.728	1.729	1.729
		(AC-FT)	35.	38.	38.	38.

CUMULATIVE AREA = .41 SQ MI

*** ***

```
         **************
         *            *
31 KK    *     HC14   *
         *            *
         **************
```

COMBINE SURFACE RUNOFF AT NODE 14

2A+2B

34 HC HYDROGRAPH COMBINATION
ICOMP 2 NUMBER OF HYDROGRAPHS TO COMBINE

*** *** *** *** *** ***

HYDROGRAPH AT STATION HC14
FOR PLAN 1, RATIO = 1.00

PEAK FLOW (CFS)	TIME (HR)		MAXIMUM AVERAGE FLOW 6-HR	24-HR	72-HR	24.92-HR
2425.	12.08	(CFS)	265.	73.	70.	70.
		(INCHES)	1.918	2.115	2.116	2.116
		(AC-FT)	131.	145.	145.	145.

CUMULATIVE AREA = 1.28 SQ MI

*** *** *** *** ***

HYDROGRAPH AT STATION HC14
FOR PLAN 1, RATIO = .97

PEAK FLOW (CFS)	TIME (HR)		MAXIMUM AVERAGE FLOW 6-HR	24-HR	72-HR	24.92-HR
2343.	12.08	(CFS)	254.	70.	68.	68.
		(INCHES)	1.842	2.032	2.033	2.033
		(AC-FT)	126.	139.	139.	139.

CUMULATIVE AREA = 1.28 SQ MI

*** *** *** *** ***

HYDROGRAPH AT STATION HC14
FOR PLAN 1, RATIO = .95

PEAK FLOW (CFS)	TIME (HR)		MAXIMUM AVERAGE FLOW 6-HR	24-HR	72-HR	24.92-HR
2292.	12.08	(CFS)	248.	68.	66.	66.
		(INCHES)	1.794	1.981	1.981	1.981
		(AC-FT)	123.	136.	136.	136.

CUMULATIVE AREA = 1.28 SQ MI

*** *** *** *** ***

HYDROGRAPH AT STATION HC14
FOR PLAN 1, RATIO = .94

PEAK FLOW TIME MAXIMUM AVERAGE FLOW

(CFS)	(HR)		6-HR	24-HR	72-HR	24.92-HR
2271.	12.00	(CFS)	245.	68.	65.	65.
		(INCHES)	1.775	1.960	1.961	1.961
		(AC-FT)	122.	134.	134.	134.

CUMULATIVE AREA = 1.28 SQ MI

*** *** *** *** ***

HYDROGRAPH AT STATION HC14
FOR PLAN 1, RATIO = .92

PEAK FLOW (CFS)	TIME (HR)		MAXIMUM AVERAGE FLOW 6-HR	24-HR	72-HR	24.92-HR
2217.	12.00	(CFS)	238.	66.	63.	63.
		(INCHES)	1.725	1.906	1.907	1.907
		(AC-FT)	118.	131.	131.	131.

CUMULATIVE AREA = 1.28 SQ MI

*** ***

```
          **************
          *            *
35 KK     *  RM14-15   *
          *            *
          **************
```

MUSKINGUM ROUTE IN CHANNEL FROM NODE 14 TO NODE 15
1) Reach Length= 5600 FT.
2) Average Velocity= 4.9 FPS

HYDROGRAPH ROUTING DATA

39 RM MUSKINGUM ROUTING

NSTPS	4	NUMBER OF SUBREACHES
AMSKK	.32	MUSKINGUM K
X	.30	MUSKINGUM X

***

*** *** *** *** ***

HYDROGRAPH AT STATION RM14-15
FOR PLAN 1, RATIO = 1.00

PEAK FLOW (CFS)	TIME (HR)		MAXIMUM AVERAGE FLOW 6-HR	24-HR	72-HR	24.92-HR
2153.	12.42	(CFS)	265.	73.	70.	70.
		(INCHES)	1.918	2.115	2.116	2.116
		(AC-FT)	131.	145.	145.	145.

CUMULATIVE AREA = 1.28 SQ MI

*** *** *** *** ***

HYDROGRAPH AT STATION RM14-15
FOR PLAN 1, RATIO = .97

PEAK FLOW (CFS)	TIME (HR)		MAXIMUM AVERAGE FLOW 6-HR	24-HR	72-HR	24.92-HR
2079.	12.42	(CFS)	254.	70.	69.	68.
		(INCHES)	1.842	2.032	2.033	2.033
		(AC-FT)	126.	139.	139.	139.

CUMULATIVE AREA = 1.28 SQ MI

*** *** *** *** ***

HYDROGRAPH AT STATION RM14-15
FOR PLAN 1, RATIO = .95

PEAK FLOW (CFS)	TIME (HR)		MAXIMUM AVERAGE FLOW 6-HR	24-HR	72-HR	24.92-HR
2033.	12.42	(CFS)	248.	68.	66.	66.
		(INCHES)	1.794	1.981	1.981	1.981
		(AC-FT)	123.	136.	136.	136.

CUMULATIVE AREA = 1.28 SQ MI

*** *** *** *** ***

HYDROGRAPH AT STATION RM14-15
FOR PLAN 1, RATIO = .94

PEAK FLOW (CFS)	TIME (HR)		MAXIMUM AVERAGE FLOW 6-HR	24-HR	72-HR	24.92-HR
2015.	12.42	(CFS)	245.	68.	65.	65.
		(INCHES)	1.775	1.960	1.961	1.961
		(AC-FT)	122.	134.	134.	134.

CUMULATIVE AREA = 1.28 SQ MI

*** *** *** *** ***

HYDROGRAPH AT STATION RM14-15
FOR PLAN 1, RATIO = .92

PEAK FLOW (CFS)	TIME (HR)		MAXIMUM AVERAGE FLOW 6-HR	24-HR	72-HR	24.92-HR
1966.	12.42	(CFS)	238.	66.	63.	63.
		(INCHES)	1.725	1.906	1.907	1.907

(AC-FT) 118. 131. 131. 131.

CUMULATIVE AREA = 1.28 SQ MI

*** ***

```
        ##############
        #            #
40 KK   #        2C  #
        #            #
        ##############
```

RUNOFF GENERATED ON SUB-BASIN 2C

SUBBASIN RUNOFF DATA

42 BA SUBBASIN CHARACTERISTICS

TAREA 1.18 SUBBASIN AREA

PRECIPITATION DATA

13 PB STORM 3.96 BASIN TOTAL PRECIPITATION

14 PI INCREMENTAL PRECIPITATION PATTERN

.00	.00	.00	.00	.00	.00	.00	.00	.00	.00
.00	.00	.00	.00	.00	.00	.00	.00	.00	.00
.00	.00	.00	.00	.00	.00	.00	.00	.00	.00
.00	.00	.00	.00	.00	.00	.00	.00	.00	.00
.00	.00	.00	.00	.00	.00	.00	.00	.00	.00
.00	.00	.00	.00	.00	.00	.00	.00	.00	.00
.00	.00	.00	.00	.00	.00	.00	.00	.00	.00
.00	.00	.00	.00	.00	.00	.00	.00	.00	.00
.00	.00	.00	.00	.00	.00	.00	.00	.00	.00
.00	.00	.00	.00	.00	.00	.00	.00	.00	.00
.00	.00	.00	.00	.00	.00	.00	.00	.00	.00
.00	.00	.00	.00	.00	.00	.00	.00	.00	.00
.00	.00	.00	.00	.00	.00	.00	.01	.00	.01
.01	.01	.01	.01	.01	.01	.01	.01	.03	.03
.03	.09	.09	.09	.01	.01	.01	.01	.01	.01
.01	.01	.01	.01	.01	.01	.00	.00	.00	.00
.00	.00	.00	.00	.00	.00	.00	.00	.00	.00
.00	.00	.00	.00	.00	.00	.00	.00	.00	.00
.00	.00	.00	.00	.00	.00	.00	.00	.00	.00
.00	.00	.00	.00	.00	.00	.00	.00	.00	.00
.00	.00	.00	.00	.00	.00	.00	.00	.00	.00
.00	.00	.00	.00	.00	.00	.00	.00	.00	.00
.00	.00	.00	.00	.00	.00	.00	.00	.00	.00
.00	.00	.00	.00	.00	.00	.00	.00	.00	.00
.00	.00	.00	.00	.00	.00	.00	.00	.00	.00
.00	.00	.00	.00	.00	.00	.00	.00	.00	.00
.00	.00	.00	.00	.00	.00	.00	.00	.00	.00
.00	.00	.00	.00	.00	.00	.00	.00	.00	.00
.00	.00	.00	.00	.00	.00	.00	.00	.00	.00

```
                .00      .00      .00      .00      .00      .00      .00      .00

43 LU        UNIFORM LOSS RATE
                 STRTL        .32  INITIAL LOSS
                 CNSTL        .25  UNIFORM LOSS RATE
                 RTIMP      53.30  PERCENT IMPERVIOUS AREA

44 UD        SCS DIMENSIONLESS UNITGRAPH
                 TLAG        .61  LAG

                                                  ***

                                              UNIT HYDROGRAPH
                                          39 END-OF-PERIOD ORDINATES
          43.     131.     253.     429.     631.     780.     862.     871.     837.     764.
         675.     557.     434.     346.     280.     230.     189.     154.     123.     101.
          82.      66.      54.      43.      35.      29.      23.      19.      15.      12.
          10.       9.       7.       6.       5.       3.       2.       1.       0.

  TOTAL RAINFALL =   3.96, TOTAL LOSS =   1.03, TOTAL EXCESS =   2.93

PEAK FLOW    TIME                      MAXIMUM AVERAGE FLOW
  (CFS)      (HR)              6-HR      24-HR      72-HR    24.92-HR
  1310.    12.50     (CFS)     286.       91.       88.        88.
                   (INCHES)   2.263     2.873     2.877      2.877
                   (AC-FT)    142.      180.      181.       181.

                 CUMULATIVE AREA =   1.19 SQ MI


   ***          ***          ***          ***          ***

                 HYDROGRAPH AT STATION      2C
                   FOR PLAN 1, RATIO = 1.00

  TOTAL RAINFALL =   3.96, TOTAL LOSS =   1.03, TOTAL EXCESS =   2.93

PEAK FLOW    TIME                      MAXIMUM AVERAGE FLOW
  (CFS)      (HR)              6-HR      24-HR      72-HR    24.92-HR
  1310.    12.50     (CFS)     286.       91.       88.        88.
                   (INCHES)   2.263     2.873     2.877      2.877
                   (AC-FT)    142.      180.      181.       181.

                 CUMULATIVE AREA =   1.19 SQ MI


   ***          ***          ***          ***          ***

                 HYDROGRAPH AT STATION      2C
                   FOR PLAN 1, RATIO =  .97

  TOTAL RAINFALL =   3.83, TOTAL LOSS =   1.05, TOTAL EXCESS =   2.78

PEAK FLOW    TIME                      MAXIMUM AVERAGE FLOW
  (CFS)      (HR)              6-HR      24-HR      72-HR    24.92-HR
```

1265.	12.50	(CFS)	276.	88.	85.	85.
		(INCHES)	2.182	2.773	2.777	2.777
		(AC-FT)	137.	174.	174.	174.

CUMULATIVE AREA = 1.18 SQ MI

*** *** *** *** ***

HYDROGRAPH AT STATION 2C
FOR PLAN 1, RATIO = .95

TOTAL RAINFALL = 3.75, TOTAL LOSS = 1.04, TOTAL EXCESS = 2.72

PEAK FLOW (CFS)	TIME (HR)		6-HR	MAXIMUM AVERAGE FLOW 24-HR	72-HR	24.92-HR
1238.	12.50	(CFS)	270.	86.	83.	83.
		(INCHES)	2.132	2.710	2.714	2.714
		(AC-FT)	134.	170.	170.	170.

CUMULATIVE AREA = 1.18 SQ MI

*** *** *** *** ***

HYDROGRAPH AT STATION 2C
FOR PLAN 1, RATIO = .94

TOTAL RAINFALL = 3.72, TOTAL LOSS = 1.03, TOTAL EXCESS = 2.69

PEAK FLOW (CFS)	TIME (HR)		6-HR	MAXIMUM AVERAGE FLOW 24-HR	72-HR	24.92-HR
1226.	12.50	(CFS)	267.	85.	82.	82.
		(INCHES)	2.112	2.685	2.689	2.689
		(AC-FT)	133.	169.	169.	169.

CUMULATIVE AREA = 1.18 SQ MI

*** *** *** *** ***

HYDROGRAPH AT STATION 2C
FOR PLAN 1, RATIO = .92

TOTAL RAINFALL = 3.64, TOTAL LOSS = 1.01, TOTAL EXCESS = 2.63

PEAK FLOW (CFS)	TIME (HR)		6-HR	MAXIMUM AVERAGE FLOW 24-HR	72-HR	24.92-HR
1197.	12.50	(CFS)	261.	83.	80.	80.
		(INCHES)	2.059	2.619	2.623	2.623
		(AC-FT)	129.	164.	165.	165.

CUMULATIVE AREA = 1.18 SQ MI

*** ***

```
          **************
          *            *
 45 KK    *     DT2C   *
          *            *
          **************
                    THROW AWAY 10-YR 2-HR RETENTION VOLUME:1) 0.1 AC-FT FROM SUB-BASIN 2C
                                                              (Hydrograph identified as OR-2C)
                                                            2) Balance of runoff continues on.
                                                              (Hydrograph identified as DT2C)

   DT         DIVERSION
                   ISTAD      OR-2C  DIVERSION HYDROGRAPH IDENTIFICATION
                  DSTRMX        .10  MAXIMUM VOLUME TO BE DIVERTED

   DI           INFLOW        .00  10000.00

   DO     DIVERTED FLOW       .00  10000.00

                                                        ***

    ***          ***          ***          ***          ***

                   DIVERSION HYDROGRAPH    OR-2C
                    FOR PLAN 1, RATIO = 1.00

PEAK FLOW    TIME                      MAXIMUM AVERAGE FLOW
 (CFS)       (HR)              6-HR      24-HR      72-HR    24.92-HR
   5.        .50      (CFS)     0.         0.         0.         0.
                    (INCHES)   .002       .002       .002       .002
                     (AC-FT)     0.         0.         0.         0.

                   CUMULATIVE AREA =    1.18 SQ MI

    ***          ***          ***          ***          ***

                   HYDROGRAPH AT STATION     DT2C
                    FOR PLAN 1, RATIO = 1.00

PEAK FLOW    TIME                      MAXIMUM AVERAGE FLOW
 (CFS)       (HR)              6-HR      24-HR      72-HR    24.92-HR
 1310.      12.50      (CFS)   286.        91.        88.        88.
                    (INCHES)  2.263      2.873      2.876      2.876
                     (AC-FT)   142.       180.       181.       181.

                   CUMULATIVE AREA =    1.18 SQ MI

    ***          ***          ***          ***          ***
```

DIVERSION HYDROGRAPH OR-2C
FOR PLAN 1, RATIO = .97

PEAK FLOW (CFS)	TIME (HR)		MAXIMUM AVERAGE FLOW 6-HR	24-HR	72-HR	24.92-HR
5.	.58	(CFS)	0.	0.	0.	0.
		(INCHES)	.002	.002	.002	.002
		(AC-FT)	0.	0.	0.	0.

CUMULATIVE AREA = 1.18 SQ MI

*** *** *** *** ***

HYDROGRAPH AT STATION DT2C
FOR PLAN 1, RATIO = .97

PEAK FLOW (CFS)	TIME (HR)		MAXIMUM AVERAGE FLOW 6-HR	24-HR	72-HR	24.92-HR
1265.	12.50	(CFS)	276.	88.	85.	85.
		(INCHES)	2.182	2.773	2.775	2.775
		(AC-FT)	137.	174.	174.	174.

CUMULATIVE AREA = 1.18 SQ MI

*** *** *** *** ***

DIVERSION HYDROGRAPH OR-2C
FOR PLAN 1, RATIO = .95

PEAK FLOW (CFS)	TIME (HR)		MAXIMUM AVERAGE FLOW 6-HR	24-HR	72-HR	24.92-HR
5.	.58	(CFS)	0.	0.	0.	0.
		(INCHES)	.002	.002	.002	.002
		(AC-FT)	0.	0.	0.	0.

CUMULATIVE AREA = 1.18 SQ MI

*** *** *** *** ***

HYDROGRAPH AT STATION DT2C
FOR PLAN 1, RATIO = .95

PEAK FLOW (CFS)	TIME (HR)		MAXIMUM AVERAGE FLOW 6-HR	24-HR	72-HR	24.92-HR
1238.	12.50	(CFS)	270.	86.	83.	83.
		(INCHES)	2.132	2.710	2.712	2.712
		(AC-FT)	134.	170.	170.	170.

CUMULATIVE AREA = 1.18 SQ MI

*** *** *** *** ***

DIVERSION HYDROGRAPH DR-2C
FOR PLAN 1, RATIO = .94

PEAK FLOW (CFS)	TIME (HR)		MAXIMUM AVERAGE FLOW 6-HR	24-HR	72-HR	24.92-HR
5.	.58	(CFS)	0.	0.	0.	0.
		(INCHES)	.002	.002	.002	.002
		(AC-FT)	0.	0.	0.	0.

CUMULATIVE AREA = 1.18 SQ MI

*** *** *** *** ***

HYDROGRAPH AT STATION DT2C
FOR PLAN 1, RATIO = .94

PEAK FLOW (CFS)	TIME (HR)		MAXIMUM AVERAGE FLOW 6-HR	24-HR	72-HR	24.92-HR
1226.	12.50	(CFS)	267.	85.	82.	82.
		(INCHES)	2.112	2.685	2.687	2.687
		(AC-FT)	133.	169.	169.	169.

CUMULATIVE AREA = 1.18 SQ MI

*** *** *** *** ***

DIVERSION HYDROGRAPH DR-2C
FOR PLAN 1, RATIO = .92

PEAK FLOW (CFS)	TIME (HR)		MAXIMUM AVERAGE FLOW 6-HR	24-HR	72-HR	24.92-HR
5.	.58	(CFS)	0.	0.	0.	0.
		(INCHES)	.002	.002	.002	.002
		(AC-FT)	0.	0.	0.	0.

CUMULATIVE AREA = 1.18 SQ MI

*** *** *** *** ***

HYDROGRAPH AT STATION DT2C
FOR PLAN 1, RATIO = .92

PEAK FLOW (CFS)	TIME (HR)		MAXIMUM AVERAGE FLOW 6-HR	24-HR	72-HR	24.92-HR
1197.	12.50	(CFS)	261.	83.	80.	80.
		(INCHES)	2.059	2.619	2.621	2.621
		(AC-FT)	129.	164.	165.	165.

CUMULATIVE AREA = 1.18 SQ MI

*** ***

```
          **************
          *            *
 53 KK    *     HC15   *
          *            *
          **************
```

COMBINE SURFACE RUNOFF AT NODE 15
RM14-15 + DT2C

56 HC HYDROGRAPH COMBINATION
ICOMP 2 NUMBER OF HYDROGRAPHS TO COMBINE

*** *** *** *** ***

HYDROGRAPH AT STATION HC15
FOR PLAN 1, RATIO = 1.00

PEAK FLOW (CFS)	TIME (HR)		MAXIMUM AVERAGE FLOW 6-HR	24-HR	72-HR	24.92-HR
3457.	12.42	(CFS)	551.	164.	158.	158.
		(INCHES)	2.083	2.478	2.479	2.479
		(AC-FT)	273.	325.	325.	325.

CUMULATIVE AREA = 2.46 SQ MI

*** *** *** *** ***

HYDROGRAPH AT STATION HC15
FOR PLAN 1, RATIO = .97

PEAK FLOW (CFS)	TIME (HR)		MAXIMUM AVERAGE FLOW 6-HR	24-HR	72-HR	24.92-HR
3339.	12.42	(CFS)	531.	158.	152.	152.
		(INCHES)	2.004	2.386	2.388	2.388
		(AC-FT)	263.	313.	313.	313.

CUMULATIVE AREA = 2.46 SQ MI

*** *** *** *** ***

HYDROGRAPH AT STATION HC15
FOR PLAN 1, RATIO = .95

PEAK FLOW (CFS)	TIME (HR)		MAXIMUM AVERAGE FLOW 6-HR	24-HR	72-HR	24.92-HR
3265.	12.42	(CFS)	518.	154.	149.	149.
		(INCHES)	1.956	2.329	2.331	2.331

(AC-FT)	257.	306.	306.	306.

CUMULATIVE AREA = 2.46 SQ MI

*** *** *** *** ***

HYDROGRAPH AT STATION HC15
FOR PLAN 1, RATIO = .94

PEAK FLOW (CFS)	TIME (HR)		MAXIMUM AVERAGE FLOW 6-HR	24-HR	72-HR	24.92-HR
3235.	12.42	(CFS)	512.	153.	147.	147.
		(INCHES)	1.936	2.307	2.308	2.308
		(AC-FT)	254.	303.	303.	303.

CUMULATIVE AREA = 2.46 SQ MI

*** *** *** *** ***

HYDROGRAPH AT STATION HC15
FOR PLAN 1, RATIO = .92

PEAK FLOW (CFS)	TIME (HR)		MAXIMUM AVERAGE FLOW 6-HR	24-HR	72-HR	24.92-HR
3158.	12.42	(CFS)	499.	149.	143.	143.
		(INCHES)	1.885	2.247	2.249	2.249
		(AC-FT)	247.	295.	295.	295.

CUMULATIVE AREA = 2.46 SQ MI

*** ***

```
          **************
          *            *
57 KK     *  RM15-16   *
          *            *
          **************
```

MUSKINGUM ROUTE IN CHANNEL AND STREET FROM NODE 15 TO NODE 16
1) Reach Length= 8000 FT.
2) Average Velocity= 5.7 FPS

HYDROGRAPH ROUTING DATA

61 RM MUSKINGUM ROUTING

NSTPS	5	NUMBER OF SUBREACHES
AMSKK	.39	MUSKINGUM K
X	.30	MUSKINGUM X

***

*** *** *** *** ***

HYDROGRAPH AT STATION RM15-16
FOR PLAN 1, RATIO = 1.00

PEAK FLOW (CFS)	TIME (HR)		MAXIMUM AVERAGE FLOW 6-HR	24-HR	72-HR	24.92-HR
3191.	12.83	(CFS)	551.	164.	158.	158.
		(INCHES)	2.083	2.477	2.477	2.477
		(AC-FT)	273.	325.	325.	325.

CUMULATIVE AREA = 2.46 SQ MI

*** *** *** *** ***

HYDROGRAPH AT STATION RM15-16
FOR PLAN 1, RATIO = .97

PEAK FLOW (CFS)	TIME (HR)		MAXIMUM AVERAGE FLOW 6-HR	24-HR	72-HR	24.92-HR
3081.	12.83	(CFS)	531.	158.	152.	152.
		(INCHES)	2.004	2.385	2.385	2.385
		(AC-FT)	263.	313.	313.	313.

CUMULATIVE AREA = 2.46 SQ MI

*** *** *** *** ***

HYDROGRAPH AT STATION RM15-16
FOR PLAN 1, RATIO = .95

PEAK FLOW (CFS)	TIME (HR)		MAXIMUM AVERAGE FLOW 6-HR	24-HR	72-HR	24.92-HR
3012.	12.83	(CFS)	518.	154.	148.	148.
		(INCHES)	1.955	2.329	2.329	2.329
		(AC-FT)	257.	306.	306.	306.

CUMULATIVE AREA = 2.46 SQ MI

*** *** *** *** ***

HYDROGRAPH AT STATION RM15-16
FOR PLAN 1, RATIO = .94

PEAK FLOW (CFS)	TIME (HR)		MAXIMUM AVERAGE FLOW 6-HR	24-HR	72-HR	24.92-HR
2985.	12.83	(CFS)	512.	153.	147.	147.
		(INCHES)	1.936	2.306	2.306	2.306
		(AC-FT)	254.	303.	303.	303.

CUMULATIVE AREA = 2.46 SQ MI

*** *** *** ***

HYDROGRAPH AT STATION RM15-16
FOR PLAN 1, RATIO = .92

PEAK FLOW (CFS)	TIME (HR)		MAXIMUM AVERAGE FLOW 6-HR	24-HR	72-HR	24.92-HR
2913.	12.83	(CFS)	499.	149.	143.	143.
		(INCHES)	1.884	2.246	2.246	2.246
		(AC-FT)	247.	295.	295.	295.

CUMULATIVE AREA = 2.46 SQ MI

*** ***

```
        ***************
        *             *
62 KK   *        2E   *
        *             *
        ***************
```

RUNOFF GENERATED ON SUB-BASIN 2E

SUBBASIN RUNOFF DATA

64 BA SUBBASIN CHARACTERISTICS
TAREA 1.10 SUBBASIN AREA

PRECIPITATION DATA

13 PB STORM 3.96 BASIN TOTAL PRECIPITATION

14 PI INCREMENTAL PRECIPITATION PATTERN

.00	.00	.00	.00	.00	.00	.00	.00	.00	.00
.00	.00	.00	.00	.00	.00	.00	.00	.00	.00
.00	.00	.00	.00	.00	.00	.00	.00	.00	.00
.00	.00	.00	.00	.00	.00	.00	.00	.00	.00
.00	.00	.00	.00	.00	.00	.00	.00	.00	.00
.00	.00	.00	.00	.00	.00	.00	.00	.00	.00
.00	.00	.00	.00	.00	.00	.00	.00	.00	.00
.00	.00	.00	.00	.00	.00	.00	.00	.00	.00
.00	.00	.00	.00	.00	.00	.00	.00	.00	.00
.00	.00	.00	.00	.00	.00	.00	.00	.00	.00
.00	.00	.00	.00	.00	.00	.00	.00	.00	.00
.00	.00	.00	.00	.00	.00	.00	.00	.00	.00
.00	.00	.00	.00	.00	.00	.00	.01	.00	.01
.01	.01	.01	.01	.01	.01	.01	.01	.03	.03
.03	.09	.09	.09	.01	.01	.01	.01	.01	.01
.01	.01	.01	.01	.01	.01	.00	.00	.00	.00
.00	.00	.00	.00	.00	.00	.00	.00	.00	.00

.00	.00	.00	.00	.00	.00	.00	.00	.00	.00
.00	.00	.00	.00	.00	.00	.00	.00	.00	.00
.00	.00	.00	.00	.00	.00	.00	.00	.00	.00
.00	.00	.00	.00	.00	.00	.00	.00	.00	.00
.00	.00	.00	.00	.00	.00	.00	.00	.00	.00
.00	.00	.00	.00	.00	.00	.00	.00	.00	.00
.00	.00	.00	.00	.00	.00	.00	.00	.00	.00
.00	.00	.00	.00	.00	.00	.00	.00	.00	.00
.00	.00	.00	.00	.00	.00	.00	.00	.00	.00
.00	.00	.00	.00	.00	.00	.00	.00	.00	.00
.00	.00	.00	.00	.00	.00	.00	.00	.00	.00
.00	.00	.00	.00	.00	.00	.00	.00		

65 LU UNIFORM LOSS RATE

STRTL	.33	INITIAL LOSS
CNSTL	.22	UNIFORM LOSS RATE
RTIMP	39.70	PERCENT IMPERVIOUS AREA

66 UD SCS DIMENSIONLESS UNITGRAPH

TLAG	.42	LAG

***

UNIT HYDROGRAPH
27 END-OF-PERIOD ORDINATES

99.	301.	628.	967.	1134.	1135.	1014.	843.	613.	443.
329.	251.	187.	139.	104.	77.	57.	43.	32.	24.
17.	13.	11.	8.	6.	4.	1.			

TOTAL RAINFALL = 3.96, TOTAL LOSS = 1.35, TOTAL EXCESS = 2.61

PEAK FLOW (CFS)	TIME (HR)		MAXIMUM AVERAGE FLOW 6-HR	24-HR	72-HR	24.92-HR
1537.	12.25	(CFS)	254.	77.	74.	74.
		(INCHES)	2.153	2.608	2.611	2.611
		(AC-FT)	126.	152.	152.	152.

CUMULATIVE AREA = 1.10 SQ MI

*** *** *** *** ***

HYDROGRAPH AT STATION 2E
FOR PLAN 1, RATIO = 1.00

TOTAL RAINFALL = 3.96, TOTAL LOSS = 1.35, TOTAL EXCESS = 2.61

PEAK FLOW (CFS)	TIME (HR)		MAXIMUM AVERAGE FLOW 6-HR	24-HR	72-HR	24.92-HR
1537.	12.25	(CFS)	254.	77.	74.	74.
		(INCHES)	2.153	2.608	2.611	2.611
		(AC-FT)	126.	152.	152.	152.

CUMULATIVE AREA = 1.10 SQ MI

*** *** *** *** ***

HYDROGRAPH AT STATION 2E
FOR PLAN 1, RATIO = .97

TOTAL RAINFALL = 3.83, TOTAL LOSS = 1.32, TOTAL EXCESS = 2.52

PEAK FLOW (CFS)	TIME (HR)		MAXIMUM AVERAGE FLOW 6-HR	24-HR	72-HR	24.92-HR
1485.	12.25	(CFS)	244.	74.	71.	71.
		(INCHES)	2.073	2.513	2.516	2.516
		(AC-FT)	121.	147.	147.	147.

CUMULATIVE AREA = 1.10 SQ MI

*** *** *** *** ***

HYDROGRAPH AT STATION 2E
FOR PLAN 1, RATIO = .95

TOTAL RAINFALL = 3.75, TOTAL LOSS = 1.30, TOTAL EXCESS = 2.46

PEAK FLOW (CFS)	TIME (HR)		MAXIMUM AVERAGE FLOW 6-HR	24-HR	72-HR	24.92-HR
1453.	12.25	(CFS)	238.	72.	70.	70.
		(INCHES)	2.022	2.454	2.456	2.456
		(AC-FT)	118.	143.	143.	143.

CUMULATIVE AREA = 1.10 SQ MI

*** *** *** *** ***

HYDROGRAPH AT STATION 2E
FOR PLAN 1, RATIO = .94

TOTAL RAINFALL = 3.72, TOTAL LOSS = 1.29, TOTAL EXCESS = 2.43

PEAK FLOW (CFS)	TIME (HR)		MAXIMUM AVERAGE FLOW 6-HR	24-HR	72-HR	24.92-HR
1440.	12.25	(CFS)	236.	72.	69.	69.
		(INCHES)	2.002	2.430	2.432	2.432
		(AC-FT)	117.	142.	142.	142.

CUMULATIVE AREA = 1.10 SQ MI

*** *** *** *** ***

HYDROGRAPH AT STATION 2E
FOR PLAN 1, RATIO = .92

TOTAL RAINFALL = 3.64, TOTAL LOSS = 1.27, TOTAL EXCESS = 2.37

PEAK FLOW (CFS)	TIME (HR)		MAXIMUM AVERAGE FLOW 6-HR	24-HR	72-HR	24.92-HR
1405.	12.25	(CFS)	230.	70.	67.	67.
		(INCHES)	1.950	2.368	2.370	2.370
		(AC-FT)	114.	138.	138.	138.

CUMULATIVE AREA = 1.10 SQ MI

*** ***

```
         **************
         *            *
67 KK    *     HC16   *
         *            *
         **************
```

COMBINE SURFACE RUNOFF AT NODE 16
RM15-16 + 2E

70 HC HYDROGRAPH COMBINATION
ICOMP 2 NUMBER OF HYDROGRAPHS TO COMBINE

*** *** *** *** ***

HYDROGRAPH AT STATION HC16
FOR PLAN 1, RATIO = 1.00

PEAK FLOW (CFS)	TIME (HR)		MAXIMUM AVERAGE FLOW 6-HR	24-HR	72-HR	24.92-HR
3722.	12.75	(CFS)	805.	241.	232.	232.
		(INCHES)	2.104	2.516	2.518	2.518
		(AC-FT)	399.	477.	478.	478.

CUMULATIVE AREA = 3.56 SQ MI

*** *** *** *** ***

HYDROGRAPH AT STATION HC16
FOR PLAN 1, RATIO = .97

PEAK FLOW (CFS)	TIME (HR)		MAXIMUM AVERAGE FLOW 6-HR	24-HR	72-HR	24.92-HR
3593.	12.75	(CFS)	774.	232.	223.	223.
		(INCHES)	2.025	2.424	2.426	2.426
		(AC-FT)	384.	460.	460.	460.

CUMULATIVE AREA = 3.56 SQ MI

*** *** *** *** ***

HYDROGRAPH AT STATION HC16
FOR PLAN 1, RATIO = .95

PEAK FLOW (CFS)	TIME (HR)		MAXIMUM AVERAGE FLOW 6-HR	24-HR	72-HR	24.92-HR
3512.	12.75	(CFS)	755.	226.	218.	218.
		(INCHES)	1.975	2.366	2.368	2.368
		(AC-FT)	375.	449.	449.	449.

CUMULATIVE AREA = 3.56 SQ MI

*** *** *** *** ***

HYDROGRAPH AT STATION HC16
FOR PLAN 1, RATIO = .94

PEAK FLOW (CFS)	TIME (HR)		MAXIMUM AVERAGE FLOW 6-HR	24-HR	72-HR	24.92-HR
3479.	12.75	(CFS)	748.	224.	216.	216.
		(INCHES)	1.955	2.343	2.345	2.345
		(AC-FT)	371.	444.	445.	445.

CUMULATIVE AREA = 3.56 SQ MI

*** *** *** *** ***

HYDROGRAPH AT STATION HC16
FOR PLAN 1, RATIO = .92

PEAK FLOW (CFS)	TIME (HR)		MAXIMUM AVERAGE FLOW 6-HR	24-HR	72-HR	24.92-HR
3394.	12.75	(CFS)	728.	218.	210.	210.
		(INCHES)	1.904	2.283	2.284	2.284
		(AC-FT)	361.	433.	433.	433.

CUMULATIVE AREA = 3.56 SQ MI

*** ***

```
        ##############
        #            #
71 KK   #  RM16-17   #
        #            #
        ##############
```

MUSKINGUM ROUTE IN STREET FROM NODE 16 TO NODE 17
1) Reach Length= 3950 FT.

2) Average Velocity= 4.0 FPS

HYDROGRAPH ROUTING DATA

75 RM MUSKINGUM ROUTING

NSTPS	3	NUMBER OF SUBREACHES
AMSKK	.27	MUSKINGUM K
X	.30	MUSKINGUM X

***

*** *** *** *** ***

HYDROGRAPH AT STATION RM16-17
FOR PLAN 1, RATIO = 1.00

PEAK FLOW (CFS)	TIME (HR)		MAXIMUM AVERAGE FLOW 6-HR	24-HR	72-HR	24.92-HR
3600.	13.08	(CFS)	805.	240.	232.	232.
		(INCHES)	2.104	2.515	2.516	2.516
		(AC-FT)	399.	477.	477.	477.

CUMULATIVE AREA = 3.56 SQ MI

*** *** *** *** ***

HYDROGRAPH AT STATION RM16-17
FOR PLAN 1, RATIO = .97

PEAK FLOW (CFS)	TIME (HR)		MAXIMUM AVERAGE FLOW 6-HR	24-HR	72-HR	24.92-HR
3474.	13.08	(CFS)	774.	232.	223.	223.
		(INCHES)	2.024	2.422	2.423	2.423
		(AC-FT)	384.	459.	460.	460.

CUMULATIVE AREA = 3.56 SQ MI

*** *** *** *** ***

HYDROGRAPH AT STATION RM16-17
FOR PLAN 1, RATIO = .95

PEAK FLOW (CFS)	TIME (HR)		MAXIMUM AVERAGE FLOW 6-HR	24-HR	72-HR	24.92-HR
3395.	13.08	(CFS)	755.	226.	218.	218.
		(INCHES)	1.975	2.365	2.365	2.365
		(AC-FT)	375.	448.	449.	449.

CUMULATIVE AREA = 3.56 SQ MI

*** *** *** *** ***

HYDROGRAPH AT STATION RM16-17
FOR PLAN 1, RATIO = .94

PEAK FLOW (CFS)	TIME (HR)		MAXIMUM AVERAGE FLOW 6-HR	24-HR	72-HR	24.92-HR
3364.	13.00	(CFS)	748.	224.	216.	216.
		(INCHES)	1.955	2.342	2.342	2.342
		(AC-FT)	371.	444.	444.	444.

CUMULATIVE AREA = 3.56 SQ MI

*** *** *** *** ***

HYDROGRAPH AT STATION RM16-17
FOR PLAN 1, RATIO = .92

PEAK FLOW (CFS)	TIME (HR)		MAXIMUM AVERAGE FLOW 6-HR	24-HR	72-HR	24.92-HR
3281.	13.00	(CFS)	728.	218.	210.	210.
		(INCHES)	1.904	2.281	2.282	2.282
		(AC-FT)	361.	433.	433.	433.

CUMULATIVE AREA = 3.56 SQ MI

*** ***

```
         **************
         *            *
76 KK    *       2H   *
         *            *
         **************
```

RUNOFF GENERATED ON SUB-BASIN 2H

SUBBASIN RUNOFF DATA

78 BA SUBBASIN CHARACTERISTICS
TAREA 1.42 SUBBASIN AREA

PRECIPITATION DATA

13 PB STORM 3.95 BASIN TOTAL PRECIPITATION

14 PI INCREMENTAL PRECIPITATION PATTERN

.00	.00	.00	.00	.00	.00	.00	.00	.00	.00
.00	.00	.00	.00	.00	.00	.00	.00	.00	.00
.00	.00	.00	.00	.00	.00	.00	.00	.00	.00
.00	.00	.00	.00	.00	.00	.00	.00	.00	.00
.00	.00	.00	.00	.00	.00	.00	.00	.00	.00
.00	.00	.00	.00	.00	.00	.00	.00	.00	.00
.00	.00	.00	.00	.00	.00	.00	.00	.00	.00

.00	.00	.00	.00	.00	.00	.00	.00	.00	.00
.00	.00	.00	.00	.00	.00	.00	.00	.00	.00
.00	.00	.00	.00	.00	.00	.00	.00	.00	.00
.00	.00	.00	.00	.00	.00	.00	.00	.00	.00
.00	.00	.00	.00	.00	.00	.00	.00	.00	.00
.00	.00	.00	.00	.00	.00	.00	.01	.00	.01
.01	.01	.01	.01	.01	.01	.01	.01	.03	.03
.03	.09	.09	.09	.01	.01	.01	.01	.01	.01
.01	.01	.01	.01	.01	.01	.00	.00	.00	.00
.00	.00	.00	.00	.00	.00	.00	.00	.00	.00
.00	.00	.00	.00	.00	.00	.00	.00	.00	.00
.00	.00	.00	.00	.00	.00	.00	.00	.00	.00
.00	.00	.00	.00	.00	.00	.00	.00	.00	.00
.00	.00	.00	.00	.00	.00	.00	.00	.00	.00
.00	.00	.00	.00	.00	.00	.00	.00	.00	.00
.00	.00	.00	.00	.00	.00	.00	.00	.00	.00
.00	.00	.00	.00	.00	.00	.00	.00	.00	.00
.00	.00	.00	.00	.00	.00	.00	.00	.00	.00
.00	.00	.00	.00	.00	.00	.00	.00	.00	.00
.00	.00	.00	.00	.00	.00	.00	.00	.00	.00
.00	.00	.00	.00	.00	.00	.00	.00	.00	.00
.00	.00	.00	.00	.00	.00	.00	.00		

```
79 LU        UNIFORM LOSS RATE
                 STRTL        .32  INITIAL LOSS
                 CNSTL        .23  UNIFORM LOSS RATE
                 RTIMP      44.40  PERCENT IMPERVIOUS AREA

80 UD        SCS DIMENSIONLESS UNITGRAPH
                 TLAG        .81  LAG

                                        ***

                                   UNIT HYDROGRAPH
                              51 END-OF-PERIOD ORDINATES
          24.     78.    149.    242.    366.    514.    644.    737.    791.    807.
         802.    765.    711.    650.    576.    496.    402.    337.    287.    244.
         210.    181.    155.    131.    111.     96.     81.     70.     59.     50.
          42.     37.     31.     27.     23.     19.     16.     14.     12.     10.
           9.      8.      7.      6.      5.      4.      3.      2.      2.      1.
           0.

  TOTAL RAINFALL =   3.96, TOTAL LOSS =   1.26, TOTAL EXCESS =   2.70

PEAK FLOW    TIME                     MAXIMUM AVERAGE FLOW
 (CFS)       (HR)              6-HR      24-HR      72-HR    24.92-HR
 1293.      12.67     (CFS)    335.       103.       100.       100.
                    (INCHES)  2.185      2.694      2.696      2.696
                    (AC-FT)   166.       205.       205.       205.

                 CUMULATIVE AREA =   1.42 SQ MI

   ***          ***          ***          ***          ***
```

HYDROGRAPH AT STATION 2H
FOR PLAN 1, RATIO = 1.00

TOTAL RAINFALL = 3.96, TOTAL LOSS = 1.26, TOTAL EXCESS = 2.70

PEAK FLOW (CFS)	TIME (HR)		MAXIMUM AVERAGE FLOW 6-HR	24-HR	72-HR	24.92-HR
1293.	12.67	(CFS)	335.	103.	100.	100.
		(INCHES)	2.185	2.694	2.696	2.696
		(AC-FT)	166.	205.	205.	205.

CUMULATIVE AREA = 1.42 SQ MI

*** *** *** *** ***

HYDROGRAPH AT STATION 2H
FOR PLAN 1, RATIO = .97

TOTAL RAINFALL = 3.83, TOTAL LOSS = 1.23, TOTAL EXCESS = 2.60

PEAK FLOW (CFS)	TIME (HR)		MAXIMUM AVERAGE FLOW 6-HR	24-HR	72-HR	24.92-HR
1248.	12.67	(CFS)	322.	99.	96.	96.
		(INCHES)	2.104	2.596	2.599	2.599
		(AC-FT)	160.	197.	197.	197.

CUMULATIVE AREA = 1.42 SQ MI

*** *** *** *** ***

HYDROGRAPH AT STATION 2H
FOR PLAN 1, RATIO = .95

TOTAL RAINFALL = 3.75, TOTAL LOSS = 1.21, TOTAL EXCESS = 2.54

PEAK FLOW (CFS)	TIME (HR)		MAXIMUM AVERAGE FLOW 6-HR	24-HR	72-HR	24.92-HR
1220.	12.67	(CFS)	315.	97.	94.	94.
		(INCHES)	2.054	2.537	2.539	2.539
		(AC-FT)	156.	193.	193.	193.

CUMULATIVE AREA = 1.42 SQ MI

*** *** *** *** ***

HYDROGRAPH AT STATION 2H
FOR PLAN 1, RATIO = .94

TOTAL RAINFALL = 3.72, TOTAL LOSS = 1.20, TOTAL EXCESS = 2.52

PEAK FLOW (CFS)	TIME (HR)	MAXIMUM AVERAGE FLOW 6-HR	24-HR	72-HR	24.92-HR

```
 1209.    12.67      (CFS)     312.       96.       93.       93.
                  (INCHES)    2.035     2.513     2.515     2.515
                   (AC-FT)     155.      191.      191.      191.

                  CUMULATIVE AREA =   1.42 SQ MI


  ***          ***          ***          ***          ***

                 HYDROGRAPH AT STATION      2H
                  FOR PLAN 1, RATIO =  .92

 TOTAL RAINFALL =   3.64, TOTAL LOSS =   1.18, TOTAL EXCESS =   2.46

PEAK FLOW    TIME                      MAXIMUM AVERAGE FLOW
 (CFS)       (HR)              6-HR      24-HR      72-HR    24.92-HR
 1179.    12.67      (CFS)     304.       94.       91.       91.
                  (INCHES)    1.983     2.450     2.452     2.452
                   (AC-FT)     151.      186.      186.      186.

                  CUMULATIVE AREA =   1.42 SQ MI


*** *** *** *** *** *** *** *** *** *** *** *** *** *** *** *** *** *** *** *** *** *** *** *** *** *** *** *** *** *** *** *** ***


         **************
         *            *
 81 KK   *     DT2H   *
         *            *
         **************
                 THROW AWAY 10-YR 2-HR RETENTION VOLUME:1) 11.6 AC-FT FROM SUB-BASIN 2H
                                                           (Hydrograph identified as OR-2H)
                                                        2) Balance of runoff continues on.
                                                           (Hydrograph identified as DT2H)

 DT        DIVERSION
                ISTAD      OR-2H  DIVERSION HYDROGRAPH IDENTIFICATION
              DSTRMX      11.60  MAXIMUM VOLUME TO BE DIVERTED

 DI          INFLOW        .00  10000.00

 DQ     DIVERTED FLOW      .00  10000.00

                                                  ***

  ***          ***          ***          ***          ***

                 DIVERSION HYDROGRAPH    OR-2H
                  FOR PLAN 1, RATIO = 1.00

PEAK FLOW    TIME                      MAXIMUM AVERAGE FLOW
 (CFS)       (HR)              6-HR      24-HR      72-HR    24.92-HR
```

31.	7.33	(CFS)	22.	6.	6.	6.
		(INCHES)	.144	.153	.153	.153
		(AC-FT)	11.	12.	12.	12.

CUMULATIVE AREA = 1.42 SQ MI

*** *** *** *** ***

HYDROGRAPH AT STATION DT2H
FOR PLAN 1, RATIO = 1.00

PEAK FLOW (CFS)	TIME (HR)		MAXIMUM AVERAGE FLOW 6-HR	24-HR	72-HR	24.92-HR
1293.	12.67	(CFS)	335.	97.	94.	94.
		(INCHES)	2.185	2.543	2.543	2.543
		(AC-FT)	166.	193.	193.	193.

CUMULATIVE AREA = 1.42 SQ MI

*** *** *** *** ***

DIVERSION HYDROGRAPH OR-2H
FOR PLAN 1, RATIO = .97

PEAK FLOW (CFS)	TIME (HR)		MAXIMUM AVERAGE FLOW 6-HR	24-HR	72-HR	24.92-HR
30.	7.42	(CFS)	22.	6.	6.	6.
		(INCHES)	.142	.153	.153	.153
		(AC-FT)	11.	12.	12.	12.

CUMULATIVE AREA = 1.42 SQ MI

*** *** *** *** ***

HYDROGRAPH AT STATION DT2H
FOR PLAN 1, RATIO = .97

PEAK FLOW (CFS)	TIME (HR)		MAXIMUM AVERAGE FLOW 6-HR	24-HR	72-HR	24.92-HR
1248.	12.67	(CFS)	322.	94.	90.	90.
		(INCHES)	2.104	2.446	2.446	2.446
		(AC-FT)	160.	186.	186.	186.

CUMULATIVE AREA = 1.42 SQ MI

*** *** *** *** ***

DIVERSION HYDROGRAPH OR-2H
FOR PLAN 1, RATIO = .95

PEAK FLOW TIME MAXIMUM AVERAGE FLOW

(CFS)	(HR)		6-HR	24-HR	72-HR	24.92-HR
30.	7.50	(CFS)	22.	6.	6.	6.
		(INCHES)	.141	.153	.153	.153
		(AC-FT)	11.	12.	12.	12.

CUMULATIVE AREA = 1.42 SQ MI

*** *** *** *** ***

HYDROGRAPH AT STATION DT2H
FOR PLAN 1, RATIO = .95

PEAK FLOW (CFS)	TIME (HR)		MAXIMUM AVERAGE FLOW 6-HR	24-HR	72-HR	24.92-HR
1220.	12.67	(CFS)	315.	91.	88.	88.
		(INCHES)	2.054	2.386	2.386	2.386
		(AC-FT)	156.	181.	181.	181.

CUMULATIVE AREA = 1.42 SQ MI

*** *** *** *** ***

DIVERSION HYDROGRAPH DR-2H
FOR PLAN 1, RATIO = .94

PEAK FLOW (CFS)	TIME (HR)		MAXIMUM AVERAGE FLOW 6-HR	24-HR	72-HR	24.92-HR
29.	7.58	(CFS)	21.	6.	6.	6.
		(INCHES)	.140	.153	.153	.153
		(AC-FT)	11.	12.	12.	12.

CUMULATIVE AREA = 1.42 SQ MI

*** *** *** *** ***

HYDROGRAPH AT STATION DT2H
FOR PLAN 1, RATIO = .94

PEAK FLOW (CFS)	TIME (HR)		MAXIMUM AVERAGE FLOW 6-HR	24-HR	72-HR	24.92-HR
1209.	12.67	(CFS)	312.	91.	87.	87.
		(INCHES)	2.035	2.362	2.362	2.362
		(AC-FT)	155.	180.	180.	180.

CUMULATIVE AREA = 1.42 SQ MI

*** *** *** *** ***

DIVERSION HYDROGRAPH DR-2H
FOR PLAN 1, RATIO = .92

PEAK FLOW (CFS)	TIME (HR)		MAXIMUM AVERAGE FLOW 6-HR	24-HR	72-HR	24.92-HR
29.	7.67	(CFS)	21.	6.	6.	6.
		(INCHES)	.139	.153	.153	.153
		(AC-FT)	11.	12.	12.	12.

CUMULATIVE AREA = 1.42 SQ MI

*** *** *** *** ***

HYDROGRAPH AT STATION DT2H
FOR PLAN 1, RATIO = .92

PEAK FLOW (CFS)	TIME (HR)		MAXIMUM AVERAGE FLOW 6-HR	24-HR	72-HR	24.92-HR
1179.	12.67	(CFS)	304.	88.	85.	85.
		(INCHES)	1.983	2.300	2.300	2.300
		(AC-FT)	151.	175.	175.	175.

CUMULATIVE AREA = 1.42 SQ MI

*** ***

```
          **************
          *            *
 89 KK    *     HC17   *
          *            *
          **************
```

COMBINE SURFACE RUNOFF AT NODE 17
RM16-17 + DT2H

92 HC HYDROGRAPH COMBINATION
ICOMP 2 NUMBER OF HYDROGRAPHS TO COMBINE

***

*** *** *** *** ***

HYDROGRAPH AT STATION HC17
FOR PLAN 1, RATIO = 1.00

PEAK FLOW (CFS)	TIME (HR)		MAXIMUM AVERAGE FLOW 6-HR	24-HR	72-HR	24.92-HR
4650.	13.00	(CFS)	1139.	338.	326.	326.
		(INCHES)	2.127	2.523	2.523	2.523
		(AC-FT)	565.	670.	670.	670.

CUMULATIVE AREA = 4.98 SQ MI

*** *** *** *** ***

HYDROGRAPH AT STATION HC17
FOR PLAN 1, RATIO = .97

PEAK FLOW (CFS)	TIME (HR)		6-HR	MAXIMUM AVERAGE FLOW 24-HR	72-HR	24.92-HR
4487.	13.00	(CFS)	1097.	325.	313.	313.
		(INCHES)	2.047	2.429	2.430	2.430
		(AC-FT)	544.	645.	645.	645.

CUMULATIVE AREA = 4.98 SQ MI

*** *** *** *** ***

HYDROGRAPH AT STATION HC17
FOR PLAN 1, RATIO = .95

PEAK FLOW (CFS)	TIME (HR)		6-HR	MAXIMUM AVERAGE FLOW 24-HR	72-HR	24.92-HR
4385.	13.00	(CFS)	1070.	318.	306.	306.
		(INCHES)	1.998	2.371	2.371	2.371
		(AC-FT)	531.	630.	630.	630.

CUMULATIVE AREA = 4.98 SQ MI

*** *** *** *** ***

HYDROGRAPH AT STATION HC17
FOR PLAN 1, RATIO = .94

PEAK FLOW (CFS)	TIME (HR)		6-HR	MAXIMUM AVERAGE FLOW 24-HR	72-HR	24.92-HR
4344.	13.00	(CFS)	1060.	314.	303.	303.
		(INCHES)	1.978	2.348	2.348	2.348
		(AC-FT)	525.	624.	624.	624.

CUMULATIVE AREA = 4.98 SQ MI

*** *** *** *** ***

HYDROGRAPH AT STATION HC17
FOR PLAN 1, RATIO = .92

PEAK FLOW (CFS)	TIME (HR)		6-HR	MAXIMUM AVERAGE FLOW 24-HR	72-HR	24.92-HR
4237.	13.00	(CFS)	1032.	306.	295.	295.
		(INCHES)	1.926	2.287	2.287	2.287
		(AC-FT)	512.	607.	608.	608.

CUMULATIVE AREA = 4.98 SQ MI

*** ***

```
        **************
        *            *
93 KK   *       2D   *
        *            *
        **************
                    RUNOFF GENERATED ON SUB-BASIN 2D

          SUBBASIN RUNOFF DATA

95 BA        SUBBASIN CHARACTERISTICS
                  TAREA        1.19  SUBBASIN AREA

             PRECIPITATION DATA

13 PB             STORM        3.96  BASIN TOTAL PRECIPITATION

14 PI          INCREMENTAL PRECIPITATION PATTERN
                 .00      .00      .00      .00      .00      .00      .00      .00      .00      .00
                 .00      .00      .00      .00      .00      .00      .00      .00      .00      .00
                 .00      .00      .00      .00      .00      .00      .00      .00      .00      .00
                 .00      .00      .00      .00      .00      .00      .00      .00      .00      .00
                 .00      .00      .00      .00      .00      .00      .00      .00      .00      .00
                 .00      .00      .00      .00      .00      .00      .00      .00      .00      .00
                 .00      .00      .00      .00      .00      .00      .00      .00      .00      .00
                 .00      .00      .00      .00      .00      .00      .00      .00      .00      .00
                 .00      .00      .00      .00      .00      .00      .00      .00      .00      .00
                 .00      .00      .00      .00      .00      .00      .00      .00      .00      .00
                 .00      .00      .00      .00      .00      .00      .00      .00      .00      .00
                 .00      .00      .00      .00      .00      .00      .00      .00      .00      .00
                 .00      .00      .00      .00      .00      .00      .00      .01      .00      .01
                 .01      .01      .01      .01      .01      .01      .01      .01      .03      .03
                 .03      .07      .07      .07      .01      .01      .01      .01      .01      .01
                 .01      .01      .01      .01      .01      .01      .00      .00      .00      .00
                 .00      .00      .00      .00      .00      .00      .00      .00      .00      .00
                 .00      .00      .00      .00      .00      .00      .00      .00      .00      .00
                 .00      .00      .00      .00      .00      .00      .00      .00      .00      .00
                 .00      .00      .00      .00      .00      .00      .00      .00      .00      .00
                 .00      .00      .00      .00      .00      .00      .00      .00      .00      .00
                 .00      .00      .00      .00      .00      .00      .00      .00      .00      .00
                 .00      .00      .00      .00      .00      .00      .00      .00      .00      .00
                 .00      .00      .00      .00      .00      .00      .00      .00      .00      .00
                 .00      .00      .00      .00      .00      .00      .00      .00      .00      .00
                 .00      .00      .00      .00      .00      .00      .00      .00      .00      .00
                 .00      .00      .00      .00      .00      .00      .00      .00      .00      .00
                 .00      .00      .00      .00      .00      .00      .00      .00      .00      .00
                 .00      .00      .00      .00      .00      .00      .00      .00      .00      .00
                 .00      .00      .00      .00      .00      .00      .00      .00
```

```
96 LU        UNIFORM LOSS RATE
                  STRTL        .34  INITIAL LOSS
```

```
                    CNSTL        .25  UNIFORM LOSS RATE
                    RTIMP      32.00  PERCENT IMPERVIOUS AREA

97 UD          SCS DIMENSIONLESS UNITGRAPH
                    TLAG        .65  LAG

                                                    ***

                                                UNIT HYDROGRAPH
                                          41 END-OF-PERIOD ORDINATES
            37.    114.    219.    367.    552.    703.    795.    829.    825.    771.
           699.    611.    500.    394.    321.    263.    218.    182.    150.    121.
           101.     83.     68.     56.     45.     37.     31.     25.     21.     17.
            14.     12.     10.      8.      7.      6.      5.      4.      3.      2.
             1.

   TOTAL RAINFALL =   3.96, TOTAL LOSS =   1.55, TOTAL EXCESS =   2.41

PEAK FLOW    TIME                        MAXIMUM AVERAGE FLOW
  (CFS)      (HR)                 6-HR     24-HR     72-HR    24.92-HR
  1234.    12.50        (CFS)    260.       77.       74.        74.
                      (INCHES)   2.026     2.401     2.404      2.404
                       (AC-FT)   129.      153.      153.       153.

                    CUMULATIVE AREA =   1.19 SQ MI


   ***          ***          ***          ***          ***

                    HYDROGRAPH AT STATION      2D
                      FOR PLAN 1, RATIO = 1.00

   TOTAL RAINFALL =   3.96, TOTAL LOSS =   1.55, TOTAL EXCESS =   2.41

PEAK FLOW    TIME                        MAXIMUM AVERAGE FLOW
  (CFS)      (HR)                 6-HR     24-HR     72-HR    24.92-HR
  1234.    12.50        (CFS)    260.       77.       74.        74.
                      (INCHES)   2.026     2.401     2.404      2.404
                       (AC-FT)   129.      153.      153.       153.

                    CUMULATIVE AREA =   1.19 SQ MI


   ***          ***          ***          ***          ***

                    HYDROGRAPH AT STATION      2D
                      FOR PLAN 1, RATIO =  .97

   TOTAL RAINFALL =   3.83, TOTAL LOSS =   1.52, TOTAL EXCESS =   2.32

PEAK FLOW    TIME                        MAXIMUM AVERAGE FLOW
  (CFS)      (HR)                 6-HR     24-HR     72-HR    24.92-HR
  1191.    12.50        (CFS)    250.       74.       71.        71.
                      (INCHES)   1.949     2.313     2.315      2.315
                       (AC-FT)   124.      147.      147.       147.
```

CUMULATIVE AREA = 1.19 SQ MI

*** *** *** *** ***

HYDROGRAPH AT STATION 2D
FOR PLAN 1, RATIO = .95

TOTAL RAINFALL = 3.75, TOTAL LOSS = 1.49, TOTAL EXCESS = 2.26

PEAK FLOW (CFS)	TIME (HR)		MAXIMUM AVERAGE FLOW 6-HR	24-HR	72-HR	24.92-HR
1164.	12.50	(CFS)	244.	72.	70.	70.
		(INCHES)	1.901	2.257	2.259	2.259
		(AC-FT)	121.	143.	144.	144.

CUMULATIVE AREA = 1.19 SQ MI

*** *** *** *** ***

HYDROGRAPH AT STATION 2D
FOR PLAN 1, RATIO = .94

TOTAL RAINFALL = 3.72, TOTAL LOSS = 1.48, TOTAL EXCESS = 2.24

PEAK FLOW (CFS)	TIME (HR)		MAXIMUM AVERAGE FLOW 6-HR	24-HR	72-HR	24.92-HR
1153.	12.50	(CFS)	241.	72.	69.	69.
		(INCHES)	1.882	2.235	2.237	2.237
		(AC-FT)	120.	142.	142.	142.

CUMULATIVE AREA = 1.19 SQ MI

*** *** *** *** ***

HYDROGRAPH AT STATION 2D
FOR PLAN 1, RATIO = .92

TOTAL RAINFALL = 3.64, TOTAL LOSS = 1.46, TOTAL EXCESS = 2.18

PEAK FLOW (CFS)	TIME (HR)		MAXIMUM AVERAGE FLOW 6-HR	24-HR	72-HR	24.92-HR
1125.	12.50	(CFS)	235.	70.	67.	67.
		(INCHES)	1.831	2.176	2.178	2.178
		(AC-FT)	116.	138.	138.	138.

CUMULATIVE AREA = 1.19 SQ MI

*** ***

```
          **************
          *            *
 98 KK    *     DT2D   *
          *            *
          **************
                    THROW AWAY 10-YR 2-HR RETENTION VOLUME:1) 4.0 AC-FT FROM SUB-BASIN 2D
                                                              (Hydrograph identified as OR-2D)
                                                           2) Balance of runoff continues on.
                                                              (Hydrograph identified as DT2D)

   DT         DIVERSION
                   ISTAD      OR-2D  DIVERSION HYDROGRAPH IDENTIFICATION
                  DSTRMX       4.00  MAXIMUM VOLUME TO BE DIVERTED

   DI           INFLOW        .00  10000.00

   DQ     DIVERTED FLOW       .00  10000.00

                                                        ***

    ***          ***          ***          ***          ***

                    DIVERSION HYDROGRAPH    OR-2D
                      FOR PLAN 1, RATIO = 1.00

PEAK FLOW    TIME                        MAXIMUM AVERAGE FLOW
 (CFS)       (HR)                6-HR      24-HR      72-HR     24.92-HR
   15.       4.75       (CFS)     8.         2.         2.          2.
                     (INCHES)    .063       .063       .063        .063
                      (AC-FT)     4.         4.         4.          4.

                    CUMULATIVE AREA =    1.19 SQ MI


    ***          ***          ***          ***          ***

                    HYDROGRAPH AT STATION     DT2D
                      FOR PLAN 1, RATIO = 1.00

PEAK FLOW    TIME                        MAXIMUM AVERAGE FLOW
 (CFS)       (HR)                6-HR      24-HR      72-HR     24.92-HR
 1234.       12.50      (CFS)   260.        75.        72.         72.
                     (INCHES)   2.026      2.341      2.341       2.341
                      (AC-FT)   129.        149.       149.        149.

                    CUMULATIVE AREA =    1.19 SQ MI


    ***          ***          ***          ***          ***

                    DIVERSION HYDROGRAPH    OR-2D
                      FOR PLAN 1, RATIO =  .97
```

PEAK FLOW (CFS)	TIME (HR)		MAXIMUM AVERAGE FLOW 6-HR	24-HR	72-HR	24.92-HR
15.	4.92	(CFS)	8.	2.	2.	2.
		(INCHES)	.063	.063	.063	.063
		(AC-FT)	4.	4.	4.	4.

CUMULATIVE AREA = 1.19 SQ MI

*** *** *** *** ***

HYDROGRAPH AT STATION DT2D
FOR PLAN 1, RATIO = .97

PEAK FLOW (CFS)	TIME (HR)		MAXIMUM AVERAGE FLOW 6-HR	24-HR	72-HR	24.92-HR
1191.	12.50	(CFS)	250.	72.	69.	69.
		(INCHES)	1.949	2.252	2.252	2.252
		(AC-FT)	124.	143.	143.	143.

CUMULATIVE AREA = 1.19 SQ MI

*** *** *** *** ***

DIVERSION HYDROGRAPH OR-2D
FOR PLAN 1, RATIO = .95

PEAK FLOW (CFS)	TIME (HR)		MAXIMUM AVERAGE FLOW 6-HR	24-HR	72-HR	24.92-HR
14.	4.92	(CFS)	8.	2.	2.	2.
		(INCHES)	.063	.063	.063	.063
		(AC-FT)	4.	4.	4.	4.

CUMULATIVE AREA = 1.19 SQ MI

*** *** *** *** ***

HYDROGRAPH AT STATION DT2D
FOR PLAN 1, RATIO = .95

PEAK FLOW (CFS)	TIME (HR)		MAXIMUM AVERAGE FLOW 6-HR	24-HR	72-HR	24.92-HR
1164.	12.50	(CFS)	244.	70.	68.	68.
		(INCHES)	1.901	2.196	2.196	2.196
		(AC-FT)	121.	140.	140.	140.

CUMULATIVE AREA = 1.19 SQ MI

*** *** *** *** ***

DIVERSION HYDROGRAPH OR-2D
FOR PLAN 1, RATIO = .94

PEAK FLOW (CFS)	TIME (HR)		MAXIMUM AVERAGE FLOW 6-HR	24-HR	72-HR	24.92-HR
14.	5.00	(CFS)	8.	2.	2.	2.
		(INCHES)	.063	.063	.063	.063
		(AC-FT)	4.	4.	4.	4.

CUMULATIVE AREA = 1.19 SQ MI

*** *** *** *** ***

HYDROGRAPH AT STATION DT2D
FOR PLAN 1, RATIO = .94

PEAK FLOW (CFS)	TIME (HR)		MAXIMUM AVERAGE FLOW 6-HR	24-HR	72-HR	24.92-HR
1153.	12.50	(CFS)	241.	70.	67.	67.
		(INCHES)	1.882	2.174	2.174	2.174
		(AC-FT)	120.	138.	138.	138.

CUMULATIVE AREA = 1.19 SQ MI

*** *** *** *** ***

DIVERSION HYDROGRAPH OR-2D
FOR PLAN 1, RATIO = .92

PEAK FLOW (CFS)	TIME (HR)		MAXIMUM AVERAGE FLOW 6-HR	24-HR	72-HR	24.92-HR
14.	5.00	(CFS)	8.	2.	2.	2.
		(INCHES)	.063	.063	.063	.063
		(AC-FT)	4.	4.	4.	4.

CUMULATIVE AREA = 1.19 SQ MI

*** *** *** *** ***

HYDROGRAPH AT STATION DT2D
FOR PLAN 1, RATIO = .92

PEAK FLOW (CFS)	TIME (HR)		MAXIMUM AVERAGE FLOW 6-HR	24-HR	72-HR	24.92-HR
1125.	12.50	(CFS)	235.	68.	65.	65.
		(INCHES)	1.831	2.116	2.116	2.116
		(AC-FT)	116.	134.	134.	134.

CUMULATIVE AREA = 1.19 SQ MI

*** ***

```
          ***************
          *             *
106 KK    *    DT2DS    *
          *             *
          ***************
```

SPLIT FLOW AT INTERSECTION OF 32nd ST AND BELL RD.

SEND FLOW SOUTH IN 32nd STREET OUT OF WATERSHED IN STREET AND 60" PIPE.
(Hydrograph identified as FL-2D) (160 cfs in PIPE)

REMAINDER FLOWS WEST IN BELL RD. (Hydrograph identified as DT2D)

DT	DIVERSION ISTAD	FL-2D	DIVERSION HYDROGRAPH IDENTIFICATION			
DI	INFLOW	.00	185.00	243.00	1947.00	5014.00
DQ	DIVERTED FLOW	.00	160.00	160.00	1093.00	2655.00

*** *** *** *** ***

DIVERSION HYDROGRAPH FL-2D
FOR PLAN 1, RATIO = 1.00

PEAK FLOW (CFS)	TIME (HR)		MAXIMUM AVERAGE FLOW 6-HR	24-HR	72-HR	24.92-HR
703.	12.50	(CFS)	164.	50.	48.	48.
		(INCHES)	1.284	1.556	1.556	1.556
		(AC-FT)	82.	99.	99.	99.

CUMULATIVE AREA = 1.19 SQ MI

*** *** *** *** ***

HYDROGRAPH AT STATION DT2DS
FOR PLAN 1, RATIO = 1.00

PEAK FLOW (CFS)	TIME (HR)		MAXIMUM AVERAGE FLOW 6-HR	24-HR	72-HR	24.92-HR
532.	12.50	(CFS)	95.	25.	24.	24.
		(INCHES)	.742	.785	.785	.785
		(AC-FT)	47.	50.	50.	50.

CUMULATIVE AREA = 1.19 SQ MI

*** *** *** *** ***

DIVERSION HYDROGRAPH FL-2D

FOR PLAN 1, RATIO = .97

PEAK FLOW (CFS)	TIME (HR)		MAXIMUM AVERAGE FLOW 6-HR	24-HR	72-HR	24.92-HR
679.	12.50	(CFS)	159.	48.	46.	46.
		(INCHES)	1.239	1.501	1.501	1.501
		(AC-FT)	79.	95.	95.	95.

CUMULATIVE AREA = 1.19 SQ MI

*** *** *** *** ***

HYDROGRAPH AT STATION DT2DS
FOR PLAN 1, RATIO = .97

PEAK FLOW (CFS)	TIME (HR)		MAXIMUM AVERAGE FLOW 6-HR	24-HR	72-HR	24.92-HR
512.	12.50	(CFS)	91.	24.	23.	23.
		(INCHES)	.710	.751	.751	.751
		(AC-FT)	45.	48.	48.	48.

CUMULATIVE AREA = 1.19 SQ MI

*** *** *** *** ***

DIVERSION HYDROGRAPH FL-2D
FOR PLAN 1, RATIO = .95

PEAK FLOW (CFS)	TIME (HR)		MAXIMUM AVERAGE FLOW 6-HR	24-HR	72-HR	24.92-HR
664.	12.50	(CFS)	155.	47.	45.	45.
		(INCHES)	1.211	1.467	1.467	1.467
		(AC-FT)	77.	93.	93.	93.

CUMULATIVE AREA = 1.19 SQ MI

*** *** *** *** ***

HYDROGRAPH AT STATION DT2DS
FOR PLAN 1, RATIO = .95

PEAK FLOW (CFS)	TIME (HR)		MAXIMUM AVERAGE FLOW 6-HR	24-HR	72-HR	24.92-HR
500.	12.50	(CFS)	88.	23.	23.	23.
		(INCHES)	.690	.730	.730	.730
		(AC-FT)	44.	46.	46.	46.

CUMULATIVE AREA = 1.19 SQ MI

*** *** *** *** ***

DIVERSION HYDROGRAPH FL-2D
FOR PLAN 1, RATIO = .94

PEAK FLOW (CFS)	TIME (HR)		MAXIMUM AVERAGE FLOW 6-HR	24-HR	72-HR	24.92-HR
658.	12.50	(CFS)	154.	47.	45.	45.
		(INCHES)	1.200	1.453	1.453	1.453
		(AC-FT)	76.	92.	92.	92.

CUMULATIVE AREA = 1.19 SQ MI

*** *** *** *** ***

HYDROGRAPH AT STATION DT2DS
FOR PLAN 1, RATIO = .94

PEAK FLOW (CFS)	TIME (HR)		MAXIMUM AVERAGE FLOW 6-HR	24-HR	72-HR	24.92-HR
495.	12.50	(CFS)	87.	23.	22.	22.
		(INCHES)	.682	.721	.721	.721
		(AC-FT)	43.	46.	46.	46.

CUMULATIVE AREA = 1.19 SQ MI

*** *** *** *** ***

DIVERSION HYDROGRAPH FL-2D
FOR PLAN 1, RATIO = .92

PEAK FLOW (CFS)	TIME (HR)		MAXIMUM AVERAGE FLOW 6-HR	24-HR	72-HR	24.92-HR
643.	12.50	(CFS)	150.	45.	44.	44.
		(INCHES)	1.170	1.416	1.416	1.416
		(AC-FT)	74.	90.	90.	90.

CUMULATIVE AREA = 1.19 SQ MI

*** *** *** *** ***

HYDROGRAPH AT STATION DT2DS
FOR PLAN 1, RATIO = .92

PEAK FLOW (CFS)	TIME (HR)		MAXIMUM AVERAGE FLOW 6-HR	24-HR	72-HR	24.92-HR
482.	12.50	(CFS)	85.	22.	22.	22.
		(INCHES)	.661	.699	.699	.699
		(AC-FT)	42.	44.	44.	44.

CUMULATIVE AREA = 1.19 SQ MI

*** ***

```
          **************
          *            *
117 KK    *  RM2D-23   *
          *            *
          **************
```

MUSKINGUM ROUTE IN STREET FROM SUB-BASIN 2D TO NODE 23

1) Reach Length= 3900 FT.

2) Average Velocity= 3.5 FPS

HYDROGRAPH ROUTING DATA

121 RM MUSKINGUM ROUTING

NSTPS	4	NUMBER OF SUBREACHES
AMSKK	.31	MUSKINGUM K
X	.30	MUSKINGUM X

***

*** *** *** *** ***

HYDROGRAPH AT STATION RM2D-23
FOR PLAN 1, RATIO = 1.00

PEAK FLOW (CFS)	TIME (HR)		MAXIMUM AVERAGE FLOW 6-HR	24-HR	72-HR	24.92-HR
515.	12.83	(CFS)	95.	25.	24.	24.
		(INCHES)	.742	.784	.784	.784
		(AC-FT)	47.	50.	50.	50.

CUMULATIVE AREA = 1.19 SQ MI

*** *** *** *** ***

HYDROGRAPH AT STATION RM2D-23
FOR PLAN 1, RATIO = .97

PEAK FLOW (CFS)	TIME (HR)		MAXIMUM AVERAGE FLOW 6-HR	24-HR	72-HR	24.92-HR
496.	12.83	(CFS)	91.	24.	23.	23.
		(INCHES)	.710	.750	.750	.750
		(AC-FT)	45.	48.	48.	48.

CUMULATIVE AREA = 1.19 SQ MI

*** *** *** *** ***

HYDROGRAPH AT STATION RM2D-23
FOR PLAN 1, RATIO = .95

PEAK FLOW (CFS)	TIME (HR)		MAXIMUM AVERAGE FLOW 6-HR	24-HR	72-HR	24.92-HR
484.	12.83	(CFS)	88.	23.	22.	22.
		(INCHES)	.690	.729	.729	.729
		(AC-FT)	44.	46.	46.	46.

CUMULATIVE AREA = 1.19 SQ MI

*** *** *** *** ***

HYDROGRAPH AT STATION RM2D-23
FOR PLAN 1, RATIO = .94

PEAK FLOW (CFS)	TIME (HR)		MAXIMUM AVERAGE FLOW 6-HR	24-HR	72-HR	24.92-HR
479.	12.83	(CFS)	87.	23.	22.	22.
		(INCHES)	.682	.721	.721	.721
		(AC-FT)	43.	46.	46.	46.

CUMULATIVE AREA = 1.19 SQ MI

*** *** *** *** ***

HYDROGRAPH AT STATION RM2D-23
FOR PLAN 1, RATIO = .92

PEAK FLOW (CFS)	TIME (HR)		MAXIMUM AVERAGE FLOW 6-HR	24-HR	72-HR	24.92-HR
467.	12.83	(CFS)	85.	22.	22.	22.
		(INCHES)	.661	.699	.699	.699
		(AC-FT)	42.	44.	44.	44.

CUMULATIVE AREA = 1.19 SQ MI

*** ***

```
          **************
          *            *
122 KK    *        2P  *
          *            *
          **************
```

RUNOFF GENERATED ON SUB-BASIN 2P

SUBBASIN RUNOFF DATA

124 BA SUBBASIN CHARACTERISTICS
TAREA .59 SUBBASIN AREA

PRECIPITATION DATA

13 PB STORM 3.96 BASIN TOTAL PRECIPITATION

14 PI INCREMENTAL PRECIPITATION PATTERN

.00	.00	.00	.00	.00	.00	.00	.00	.00	.00
.00	.00	.00	.00	.00	.00	.00	.00	.00	.00
.00	.00	.00	.00	.00	.00	.00	.00	.00	.00
.00	.00	.00	.00	.00	.00	.00	.00	.00	.00
.00	.00	.00	.00	.00	.00	.00	.00	.00	.00
.00	.00	.00	.00	.00	.00	.00	.00	.00	.00
.00	.00	.00	.00	.00	.00	.00	.00	.00	.00
.00	.00	.00	.00	.00	.00	.00	.00	.00	.00
.00	.00	.00	.00	.00	.00	.00	.00	.00	.00
.00	.00	.00	.00	.00	.00	.00	.00	.00	.00
.00	.00	.00	.00	.00	.00	.00	.00	.00	.00
.00	.00	.00	.00	.00	.00	.00	.00	.00	.00
.00	.00	.00	.00	.00	.00	.00	.01	.00	.01
.01	.01	.01	.01	.01	.01	.01	.01	.03	.03
.03	.09	.09	.09	.01	.01	.01	.01	.01	.01
.01	.01	.01	.01	.01	.01	.00	.00	.00	.00
.00	.00	.00	.00	.00	.00	.00	.00	.00	.00
.00	.00	.00	.00	.00	.00	.00	.00	.00	.00
.00	.00	.00	.00	.00	.00	.00	.00	.00	.00
.00	.00	.00	.00	.00	.00	.00	.00	.00	.00
.00	.00	.00	.00	.00	.00	.00	.00	.00	.00
.00	.00	.00	.00	.00	.00	.00	.00	.00	.00
.00	.00	.00	.00	.00	.00	.00	.00	.00	.00
.00	.00	.00	.00	.00	.00	.00	.00	.00	.00
.00	.00	.00	.00	.00	.00	.00	.00	.00	.00
.00	.00	.00	.00	.00	.00	.00	.00	.00	.00
.00	.00	.00	.00	.00	.00	.00	.00	.00	.00
.00	.00	.00	.00	.00	.00	.00	.00	.00	.00
.00	.00	.00	.00	.00	.00	.00	.00		

125 LU UNIFORM LOSS RATE

STRTL .31 INITIAL LOSS
CNSTL .25 UNIFORM LOSS RATE
RTIMP 55.70 PERCENT IMPERVIOUS AREA

126 UD SCS DIMENSIONLESS UNITGRAPH

TLAG .53 LAG

***

UNIT HYDROGRAPH
34 END-OF-PERIOD ORDINATES

31.	91.	185.	314.	426.	488.	500.	476.	426.	362.
279.	213.	167.	133.	106.	84.	66.	52.	41.	32.
25.	20.	16.	13.	10.	8.	6.	5.	4.	3.
2.	2.	1.	0.						

TOTAL RAINFALL = 3.96, TOTAL LOSS = 1.02, TOTAL EXCESS = 2.94

PEAK FLOW (CFS)	TIME (HR)	MAXIMUM AVERAGE FLOW 6-HR	24-HR	72-HR	24.92-HR

725.	12.42	(CFS)	146.	47.	45.	45.
		(INCHES)	2.292	2.929	2.934	2.934
		(AC-FT)	72.	92.	93.	93.

CUMULATIVE AREA = .59 SQ MI

*** *** *** *** ***

HYDROGRAPH AT STATION 2P
FOR PLAN 1, RATIO = 1.00

TOTAL RAINFALL = 3.96, TOTAL LOSS = 1.02, TOTAL EXCESS = 2.94

PEAK FLOW (CFS)	TIME (HR)		MAXIMUM AVERAGE FLOW 6-HR	24-HR	72-HR	24.92-HR
725.	12.42	(CFS)	146.	47.	45.	45.
		(INCHES)	2.292	2.929	2.934	2.934
		(AC-FT)	72.	92.	93.	93.

CUMULATIVE AREA = .59 SQ MI

*** *** *** *** ***

HYDROGRAPH AT STATION 2P
FOR PLAN 1, RATIO = .97

TOTAL RAINFALL = 3.83, TOTAL LOSS = 1.00, TOTAL EXCESS = 2.83

PEAK FLOW (CFS)	TIME (HR)		MAXIMUM AVERAGE FLOW 6-HR	24-HR	72-HR	24.92-HR
701.	12.42	(CFS)	141.	45.	43.	43.
		(INCHES)	2.210	2.828	2.832	2.832
		(AC-FT)	70.	89.	89.	89.

CUMULATIVE AREA = .59 SQ MI

*** *** *** *** ***

HYDROGRAPH AT STATION 2P
FOR PLAN 1, RATIO = .95

TOTAL RAINFALL = 3.75, TOTAL LOSS = .98, TOTAL EXCESS = 2.77

PEAK FLOW (CFS)	TIME (HR)		MAXIMUM AVERAGE FLOW 6-HR	24-HR	72-HR	24.92-HR
685.	12.42	(CFS)	138.	44.	42.	42.
		(INCHES)	2.160	2.764	2.768	2.768
		(AC-FT)	68.	87.	87.	87.

CUMULATIVE AREA = .59 SQ MI

```
***          ***          ***          ***          ***

                    HYDROGRAPH AT STATION      2P
                      FOR PLAN 1, RATIO =  .94

  TOTAL RAINFALL =   3.72, TOTAL LOSS =    .98, TOTAL EXCESS =   2.74

PEAK FLOW    TIME                      MAXIMUM AVERAGE FLOW
 (CFS)       (HR)              6-HR      24-HR      72-HR    24.92-HR
  679.      12.42     (CFS)    136.        44.        42.        42.
                    (INCHES)  2.139      2.739      2.743      2.743
                    (AC-FT)    68.        86.        87.        87.

                    CUMULATIVE AREA =    .59 SQ MI


***          ***          ***          ***          ***

                    HYDROGRAPH AT STATION      2P
                      FOR PLAN 1, RATIO =  .92

  TOTAL RAINFALL =   3.64, TOTAL LOSS =    .96, TOTAL EXCESS =   2.68

PEAK FLOW    TIME                      MAXIMUM AVERAGE FLOW
 (CFS)       (HR)              6-HR      24-HR      72-HR    24.92-HR
  663.      12.42     (CFS)    133.        43.        41.        41.
                    (INCHES)  2.086      2.672      2.676      2.676
                    (AC-FT)    66.        84.        84.        84.

                    CUMULATIVE AREA =    .59 SQ MI


*** *** *** *** *** *** *** *** *** *** *** *** *** *** *** *** *** *** *** *** *** *** *** *** *** *** *** *** *** *** *** *** ***


         **************
         *            *
127 KK   *     DT2P   *
         *            *
         **************
                    THROW AWAY 10-YR 2-HR RETENTION VOLUME:1) 1.8 AC-FT FROM SUB-BASIN 2P
                                                              (Hydrograph identified as OR-2P)
                                                           2) Balance of runoff continues on.
                                                              (Hydrograph identified as DT2P)

  DT        DIVERSION
                 ISTAD      OR-2P  DIVERSION HYDROGRAPH IDENTIFICATION
               DSTRMX       1.80  MAXIMUM VOLUME TO BE DIVERTED

  DI          INFLOW        .00  10000.00

  DQ     DIVERTED FLOW      .00  10000.00
```

*** *** *** *** ***

DIVERSION HYDROGRAPH OR-2P
FOR PLAN 1, RATIO = 1.00

PEAK FLOW (CFS)	TIME (HR)		MAXIMUM AVERAGE FLOW 6-HR	24-HR	72-HR	24.92-HR
10.	2.83	(CFS)	4.	1.	1.	1.
		(INCHES)	.057	.057	.057	.057
		(AC-FT)	2.	2.	2.	2.

CUMULATIVE AREA = .59 SQ MI

*** *** *** *** ***

HYDROGRAPH AT STATION DT2P
FOR PLAN 1, RATIO = 1.00

PEAK FLOW (CFS)	TIME (HR)		MAXIMUM AVERAGE FLOW 6-HR	24-HR	72-HR	24.92-HR
725.	12.42	(CFS)	146.	46.	44.	44.
		(INCHES)	2.292	2.877	2.877	2.877
		(AC-FT)	72.	91.	91.	91.

CUMULATIVE AREA = .59 SQ MI

*** *** *** *** ***

DIVERSION HYDROGRAPH OR-2P
FOR PLAN 1, RATIO = .97

PEAK FLOW (CFS)	TIME (HR)		MAXIMUM AVERAGE FLOW 6-HR	24-HR	72-HR	24.92-HR
10.	2.92	(CFS)	4.	1.	1.	1.
		(INCHES)	.057	.057	.057	.057
		(AC-FT)	2.	2.	2.	2.

CUMULATIVE AREA = .59 SQ MI

*** *** *** *** ***

HYDROGRAPH AT STATION DT2P
FOR PLAN 1, RATIO = .97

PEAK FLOW (CFS)	TIME (HR)		MAXIMUM AVERAGE FLOW 6-HR	24-HR	72-HR	24.92-HR
701.	12.42	(CFS)	141.	44.	43.	43.
		(INCHES)	2.210	2.775	2.775	2.775
		(AC-FT)	70.	88.	88.	88.

CUMULATIVE AREA = .59 SQ MI

*** *** *** *** ***

DIVERSION HYDROGRAPH OR-2P
FOR PLAN 1, RATIO = .95

PEAK FLOW (CFS)	TIME (HR)		MAXIMUM AVERAGE FLOW 6-HR	24-HR	72-HR	24.92-HR
10.	2.92	(CFS)	4.	1.	1.	1.
		(INCHES)	.057	.057	.057	.057
		(AC-FT)	2.	2.	2.	2.

CUMULATIVE AREA = .59 SQ MI

*** *** *** *** ***

HYDROGRAPH AT STATION DT2P
FOR PLAN 1, RATIO = .95

PEAK FLOW (CFS)	TIME (HR)		MAXIMUM AVERAGE FLOW 6-HR	24-HR	72-HR	24.92-HR
685.	12.42	(CFS)	138.	43.	42.	42.
		(INCHES)	2.160	2.711	2.711	2.711
		(AC-FT)	68.	86.	86.	86.

CUMULATIVE AREA = .59 SQ MI

*** *** *** *** ***

DIVERSION HYDROGRAPH OR-2P
FOR PLAN 1, RATIO = .94

PEAK FLOW (CFS)	TIME (HR)		MAXIMUM AVERAGE FLOW 6-HR	24-HR	72-HR	24.92-HR
10.	2.92	(CFS)	4.	1.	1.	1.
		(INCHES)	.057	.057	.057	.057
		(AC-FT)	2.	2.	2.	2.

CUMULATIVE AREA = .59 SQ MI

*** *** *** *** ***

HYDROGRAPH AT STATION DT2P
FOR PLAN 1, RATIO = .94

PEAK FLOW (CFS)	TIME (HR)		MAXIMUM AVERAGE FLOW 6-HR	24-HR	72-HR	24.92-HR
679.	12.42	(CFS)	136.	43.	41.	41.
		(INCHES)	2.139	2.686	2.686	2.686
		(AC-FT)	68.	85.	85.	85.

CUMULATIVE AREA = .59 SQ MI

*** *** *** *** ***

DIVERSION HYDROGRAPH OR-2P
FOR PLAN 1, RATIO = .92

PEAK FLOW (CFS)	TIME (HR)		MAXIMUM AVERAGE FLOW 6-HR	24-HR	72-HR	24.92-HR
9.	2.92	(CFS)	4.	1.	1.	1.
		(INCHES)	.057	.057	.057	.057
		(AC-FT)	2.	2.	2.	2.

CUMULATIVE AREA = .59 SQ MI

*** *** *** *** ***

HYDROGRAPH AT STATION DT2P
FOR PLAN 1, RATIO = .92

PEAK FLOW (CFS)	TIME (HR)		MAXIMUM AVERAGE FLOW 6-HR	24-HR	72-HR	24.92-HR
663.	12.42	(CFS)	133.	42.	40.	40.
		(INCHES)	2.086	2.619	2.619	2.619
		(AC-FT)	66.	83.	83.	83.

CUMULATIVE AREA = .59 SQ MI

*** ***

```
          ***************
          *             *
135 KK    *     HC23    *
          *             *
          ***************
```

COMBINE SURFACE RUNOFF AT NODE 23
RM2D-23 + DT2P

138 HC HYDROGRAPH COMBINATION
ICOMP 2 NUMBER OF HYDROGRAPHS TO COMBINE

***

*** *** *** *** ***

HYDROGRAPH AT STATION HC23
FOR PLAN 1, RATIO = 1.00

PEAK FLOW (CFS)	TIME (HR)		MAXIMUM AVERAGE FLOW 6-HR	24-HR	72-HR	24.92-HR
1049.	12.59	(CFS)	241.	71.	68.	68.
		(INCHES)	1.256	1.479	1.479	1.479
		(AC-FT)	119.	141.	141.	141.

CUMULATIVE AREA = 1.78 SQ MI

*** *** *** *** ***

HYDROGRAPH AT STATION HC23
FOR PLAN 1, RATIO = .97

PEAK FLOW (CFS)	TIME (HR)		MAXIMUM AVERAGE FLOW 6-HR	24-HR	72-HR	24.92-HR
1010.	12.58	(CFS)	232.	68.	66.	66.
		(INCHES)	1.209	1.423	1.423	1.423
		(AC-FT)	115.	135.	135.	135.

CUMULATIVE AREA = 1.78 SQ MI

*** *** *** *** ***

HYDROGRAPH AT STATION HC23
FOR PLAN 1, RATIO = .95

PEAK FLOW (CFS)	TIME (HR)		MAXIMUM AVERAGE FLOW 6-HR	24-HR	72-HR	24.92-HR
987.	12.58	(CFS)	226.	67.	64.	64.
		(INCHES)	1.177	1.387	1.387	1.387
		(AC-FT)	112.	132.	132.	132.

CUMULATIVE AREA = 1.78 SQ MI

*** *** *** *** ***

HYDROGRAPH AT STATION HC23
FOR PLAN 1, RATIO = .94

PEAK FLOW (CFS)	TIME (HR)		MAXIMUM AVERAGE FLOW 6-HR	24-HR	72-HR	24.92-HR
978.	12.58	(CFS)	223.	66.	63.	63.
		(INCHES)	1.165	1.373	1.373	1.373
		(AC-FT)	111.	131.	131.	131.

CUMULATIVE AREA = 1.78 SQ MI

*** *** *** *** ***

HYDROGRAPH AT STATION HC23
FOR PLAN 1, RATIO = .92

```
PEAK FLOW    TIME                        MAXIMUM AVERAGE FLOW
 (CFS)       (HR)                6-HR      24-HR      72-HR     24.92-HR
  953.      12.58      (CFS)     217.       64.        62.         62.
                     (INCHES)   1.134      1.336      1.336       1.336
                      (AC-FT)    108.       127.       127.        127.

                    CUMULATIVE AREA =    1.78 SQ MI
```

*** ***

```
          **************
          *            *
139 KK    *  RM23-24   *
          *            *
          **************
                         MUSKINGUM ROUTE IN STREET FROM NODE 23 TO NODE 24
                                                        1) Reach Length= 4400 FT.
                                                        2) Average Velocity= 2.6 FPS
                                                        3) .05 hrs added to K for reach
                                                           RM24-25.

            HYDROGRAPH ROUTING DATA

145 RM        MUSKINGUM ROUTING
                   NSTPS        6 NUMBER OF SUBREACHES
                   AMSKK      .52 MUSKINGUM K
                       X      .30 MUSKINGUM X

                                                   ***

    ***          ***          ***          ***          ***

                  HYDROGRAPH AT STATION  RM23-24
                   FOR PLAN 1, RATIO = 1.00

PEAK FLOW    TIME                        MAXIMUM AVERAGE FLOW
 (CFS)       (HR)                6-HR      24-HR      72-HR     24.92-HR
 1006.      13.08      (CFS)     241.       71.        68.         68.
                     (INCHES)   1.256      1.477      1.477       1.477
                      (AC-FT)    119.       140.       140.        140.

                    CUMULATIVE AREA =    1.78 SQ MI

    ***          ***          ***          ***          ***

                  HYDROGRAPH AT STATION  RM23-24
                   FOR PLAN 1, RATIO =  .97

PEAK FLOW    TIME                        MAXIMUM AVERAGE FLOW
```

(CFS)	(HR)		6-HR	24-HR	72-HR	24.92-HR
970.	13.00	(CFS)	232.	68.	66.	66.
		(INCHES)	1.208	1.420	1.420	1.420
		(AC-FT)	115.	135.	135.	135.

CUMULATIVE AREA = 1.78 SQ MI

*** *** *** *** ***

HYDROGRAPH AT STATION RM23-24
FOR PLAN 1, RATIO = .95

PEAK FLOW (CFS)	TIME (HR)		MAXIMUM AVERAGE FLOW 6-HR	24-HR	72-HR	24.92-HR
948.	13.00	(CFS)	226.	66.	64.	64.
		(INCHES)	1.177	1.385	1.385	1.385
		(AC-FT)	112.	132.	132.	132.

CUMULATIVE AREA = 1.78 SQ MI

*** *** *** *** ***

HYDROGRAPH AT STATION RM23-24
FOR PLAN 1, RATIO = .94

PEAK FLOW (CFS)	TIME (HR)		MAXIMUM AVERAGE FLOW 6-HR	24-HR	72-HR	24.92-HR
939.	13.00	(CFS)	223.	66.	63.	63.
		(INCHES)	1.165	1.371	1.371	1.371
		(AC-FT)	111.	130.	130.	130.

CUMULATIVE AREA = 1.78 SQ MI

*** *** *** *** ***

HYDROGRAPH AT STATION RM23-24
FOR PLAN 1, RATIO = .92

PEAK FLOW (CFS)	TIME (HR)		MAXIMUM AVERAGE FLOW 6-HR	24-HR	72-HR	24.92-HR
915.	13.00	(CFS)	217.	64.	62.	62.
		(INCHES)	1.134	1.334	1.334	1.334
		(AC-FT)	108.	127.	127.	127.

CUMULATIVE AREA = 1.78 SQ MI

*** ***

```
              ***************
              *             *
146 KK        *      2F     *
              *             *
              ***************
```

RUNOFF GENERATED ON SUB-BASIN 2F
Lag lengthened 0.5 hrs to account for reach RM24-25.

SUBBASIN RUNOFF DATA

149 BA SUBBASIN CHARACTERISTICS

TAREA	.95	SUBBASIN AREA

PRECIPITATION DATA

13 PB

STORM	3.96	BASIN TOTAL PRECIPITATION

14 PI INCREMENTAL PRECIPITATION PATTERN

.00	.00	.00	.00	.00	.00	.00	.00	.00	.00
.00	.00	.00	.00	.00	.00	.00	.00	.00	.00
.00	.00	.00	.00	.00	.00	.00	.00	.00	.00
.00	.00	.00	.00	.00	.00	.00	.00	.00	.00
.00	.00	.00	.00	.00	.00	.00	.00	.00	.00
.00	.00	.00	.00	.00	.00	.00	.00	.00	.00
.00	.00	.00	.00	.00	.00	.00	.00	.00	.00
.00	.00	.00	.00	.00	.00	.00	.00	.00	.00
.00	.00	.00	.00	.00	.00	.00	.00	.00	.00
.00	.00	.00	.00	.00	.00	.00	.00	.00	.00
.00	.00	.00	.00	.00	.00	.00	.00	.00	.00
.00	.00	.00	.00	.00	.00	.00	.00	.00	.00
.00	.00	.00	.00	.00	.00	.00	.01	.00	.01
.01	.01	.01	.01	.01	.01	.01	.01	.03	.03
.03	.09	.09	.09	.01	.01	.01	.01	.01	.01
.01	.01	.01	.01	.01	.01	.00	.00	.00	.00
.00	.00	.00	.00	.00	.00	.00	.00	.00	.00
.00	.00	.00	.00	.00	.00	.00	.00	.00	.00
.00	.00	.00	.00	.00	.00	.00	.00	.00	.00
.00	.00	.00	.00	.00	.00	.00	.00	.00	.00
.00	.00	.00	.00	.00	.00	.00	.00	.00	.00
.00	.00	.00	.00	.00	.00	.00	.00	.00	.00
.00	.00	.00	.00	.00	.00	.00	.00	.00	.00
.00	.00	.00	.00	.00	.00	.00	.00	.00	.00
.00	.00	.00	.00	.00	.00	.00	.00	.00	.00
.00	.00	.00	.00	.00	.00	.00	.00	.00	.00
.00	.00	.00	.00	.00	.00	.00	.00	.00	.00
.00	.00	.00	.00	.00	.00	.00	.00	.00	.00
.00	.00	.00	.00	.00	.00	.00	.00	.00	.00
.00	.00	.00	.00	.00	.00	.00	.00		

150 LU UNIFORM LOSS RATE

STRTL	.33	INITIAL LOSS
CNSTL	.23	UNIFORM LOSS RATE
RTIMP	58.00	PERCENT IMPERVIOUS AREA

151 UD SCS DIMENSIONLESS UNITGRAPH

TLAG	.45	LAG

***

UNIT HYDROGRAPH
29 END-OF-PERIOD ORDINATES

74.	222.	455.	735.	898.	935.	879.	763.	608.	436.
329.	251.	193.	145.	111.	84.	64.	48.	36.	28.
21.	16.	12.	10.	8.	6.	4.	2.	1.	

TOTAL RAINFALL = 3.96, TOTAL LOSS = .95, TOTAL EXCESS = 3.01

PEAK FLOW (CFS)	TIME (HR)		MAXIMUM AVERAGE FLOW 6-HR	24-HR	72-HR	24.92-HR
1303.	12.33	(CFS)	240.	77.	74.	74.
		(INCHES)	2.339	3.004	3.008	3.008
		(AC-FT)	119.	153.	153.	153.

CUMULATIVE AREA = .95 SQ MI

*** *** *** *** ***

HYDROGRAPH AT STATION 2F
FOR PLAN 1, RATIO = 1.00

TOTAL RAINFALL = 3.96, TOTAL LOSS = .95, TOTAL EXCESS = 3.01

PEAK FLOW (CFS)	TIME (HR)		MAXIMUM AVERAGE FLOW 6-HR	24-HR	72-HR	24.92-HR
1303.	12.33	(CFS)	240.	77.	74.	74.
		(INCHES)	2.339	3.004	3.008	3.008
		(AC-FT)	119.	153.	153.	153.

CUMULATIVE AREA = .95 SQ MI

*** *** *** *** ***

HYDROGRAPH AT STATION 2F
FOR PLAN 1, RATIO = .97

TOTAL RAINFALL = 3.83, TOTAL LOSS = .93, TOTAL EXCESS = 2.90

PEAK FLOW (CFS)	TIME (HR)		MAXIMUM AVERAGE FLOW 6-HR	24-HR	72-HR	24.92-HR
1259.	12.33	(CFS)	231.	74.	72.	72.
		(INCHES)	2.256	2.899	2.903	2.903
		(AC-FT)	115.	147.	147.	147.

CUMULATIVE AREA = .95 SQ MI

*** *** *** *** ***

HYDROGRAPH AT STATION 2F

FOR PLAN 1, RATIO = .95

TOTAL RAINFALL = 3.75, TOTAL LOSS = .91, TOTAL EXCESS = 2.84

PEAK FLOW (CFS)	TIME (HR)		MAXIMUM AVERAGE FLOW 6-HR	24-HR	72-HR	24.92-HR
1232.	12.33	(CFS)	226.	73.	70.	70.
		(INCHES)	2.205	2.835	2.839	2.839
		(AC-FT)	112.	144.	144.	144.

CUMULATIVE AREA = .95 SQ MI

*** *** *** *** ***

HYDROGRAPH AT STATION 2F
FOR PLAN 1, RATIO = .94

TOTAL RAINFALL = 3.72, TOTAL LOSS = .91, TOTAL EXCESS = 2.81

PEAK FLOW (CFS)	TIME (HR)		MAXIMUM AVERAGE FLOW 6-HR	24-HR	72-HR	24.92-HR
1221.	12.33	(CFS)	224.	72.	69.	69.
		(INCHES)	2.185	2.809	2.813	2.813
		(AC-FT)	111.	143.	143.	143.

CUMULATIVE AREA = .95 SQ MI

*** *** *** *** ***

HYDROGRAPH AT STATION 2F
FOR PLAN 1, RATIO = .92

TOTAL RAINFALL = 3.64, TOTAL LOSS = .89, TOTAL EXCESS = 2.75

PEAK FLOW (CFS)	TIME (HR)		MAXIMUM AVERAGE FLOW 6-HR	24-HR	72-HR	24.92-HR
1192.	12.33	(CFS)	218.	70.	68.	68.
		(INCHES)	2.131	2.742	2.745	2.745
		(AC-FT)	108.	139.	139.	139.

CUMULATIVE AREA = .95 SQ MI

*** ***

```
         ***************
         *             *
152 KK   *     DT2F    *
         *             *
         ***************
```

THROW AWAY 10-YR 2-HR RETENTION VOLUME:1) 3.9 AC-FT FROM SUB-BASIN 2F
(Hydrograph identified as OR-2F)
2) Balance of runoff continues on.
(Hydrograph identified as DT2F)

```
DT        DIVERSION
               ISTAD      OR-2F  DIVERSION HYDROGRAPH IDENTIFICATION
              DSTRMX       3.90  MAXIMUM VOLUME TO BE DIVERTED

DI           INFLOW        .00  10000.00

DQ     DIVERTED FLOW       .00  10000.00
```

***

*** *** *** *** ***

DIVERSION HYDROGRAPH OR-2F
FOR PLAN 1, RATIO = 1.00

PEAK FLOW (CFS)	TIME (HR)		MAXIMUM AVERAGE FLOW 6-HR	24-HR	72-HR	24.92-HR
17.	2.58	(CFS)	8.	2.	2.	2.
		(INCHES)	.077	.077	.077	.077
		(AC-FT)	4.	4.	4.	4.

CUMULATIVE AREA = .95 SQ MI

*** *** *** *** ***

HYDROGRAPH AT STATION DT2F
FOR PLAN 1, RATIO = 1.00

PEAK FLOW (CFS)	TIME (HR)		MAXIMUM AVERAGE FLOW 6-HR	24-HR	72-HR	24.92-HR
1303.	12.33	(CFS)	240.	75.	72.	72.
		(INCHES)	2.339	2.931	2.931	2.931
		(AC-FT)	119.	149.	149.	149.

CUMULATIVE AREA = .95 SQ MI

*** *** *** *** ***

DIVERSION HYDROGRAPH OR-2F
FOR PLAN 1, RATIO = .97

PEAK FLOW (CFS)	TIME (HR)		MAXIMUM AVERAGE FLOW 6-HR	24-HR	72-HR	24.92-HR
16.	2.58	(CFS)	8.	2.	2.	2.
		(INCHES)	.077	.077	.077	.077
		(AC-FT)	4.	4.	4.	4.

CUMULATIVE AREA = .95 SQ MI

*** *** *** *** ***

HYDROGRAPH AT STATION DT2F
FOR PLAN 1, RATIO = .97

PEAK FLOW (CFS)	TIME (HR)		MAXIMUM AVERAGE FLOW 6-HR	24-HR	72-HR	24.92-HR
1259.	12.33	(CFS)	231.	72.	70.	70.
		(INCHES)	2.256	2.827	2.827	2.827
		(AC-FT)	115.	144.	144.	144.

CUMULATIVE AREA = .95 SQ MI

*** *** *** *** ***

DIVERSION HYDROGRAPH DR-2F
FOR PLAN 1, RATIO = .95

PEAK FLOW (CFS)	TIME (HR)		MAXIMUM AVERAGE FLOW 6-HR	24-HR	72-HR	24.92-HR
16.	2.58	(CFS)	8.	2.	2.	2.
		(INCHES)	.077	.077	.077	.077
		(AC-FT)	4.	4.	4.	4.

CUMULATIVE AREA = .95 SQ MI

*** *** *** *** ***

HYDROGRAPH AT STATION DT2F
FOR PLAN 1, RATIO = .95

PEAK FLOW (CFS)	TIME (HR)		MAXIMUM AVERAGE FLOW 6-HR	24-HR	72-HR	24.92-HR
1232.	12.33	(CFS)	226.	71.	68.	68.
		(INCHES)	2.205	2.762	2.762	2.762
		(AC-FT)	112.	140.	140.	140.

CUMULATIVE AREA = .95 SQ MI

*** *** *** *** ***

DIVERSION HYDROGRAPH DR-2F
FOR PLAN 1, RATIO = .94

PEAK FLOW (CFS)	TIME (HR)		MAXIMUM AVERAGE FLOW 6-HR	24-HR	72-HR	24.92-HR
16.	2.58	(CFS)	8.	2.	2.	2.
		(INCHES)	.077	.077	.077	.077
		(AC-FT)	4.	4.	4.	4.

CUMULATIVE AREA = .95 SQ MI

*** *** *** *** ***

HYDROGRAPH AT STATION DT2F
FOR PLAN 1, RATIO = .94

PEAK FLOW (CFS)	TIME (HR)		MAXIMUM AVERAGE FLOW 6-HR	24-HR	72-HR	24.92-HR
1221.	12.33	(CFS)	224.	70.	67.	67.
		(INCHES)	2.185	2.736	2.736	2.736
		(AC-FT)	111.	139.	139.	139.

CUMULATIVE AREA = .95 SQ MI

*** *** *** *** ***

DIVERSION HYDROGRAPH DR-2F
FOR PLAN 1, RATIO = .92

PEAK FLOW (CFS)	TIME (HR)		MAXIMUM AVERAGE FLOW 6-HR	24-HR	72-HR	24.92-HR
16.	2.58	(CFS)	8.	2.	2.	2.
		(INCHES)	.077	.077	.077	.077
		(AC-FT)	4.	4.	4.	4.

CUMULATIVE AREA = .95 SQ MI

*** *** *** *** ***

HYDROGRAPH AT STATION DT2F
FOR PLAN 1, RATIO = .92

PEAK FLOW (CFS)	TIME (HR)		MAXIMUM AVERAGE FLOW 6-HR	24-HR	72-HR	24.92-HR
1192.	12.33	(CFS)	218.	68.	66.	66.
		(INCHES)	2.131	2.669	2.669	2.669
		(AC-FT)	108.	135.	135.	135.

CUMULATIVE AREA = .95 SQ MI

*** ***

```
          **************
          *            *
160 KK    *     HC24   *
          *            *
          **************
```

COMBINE SURFACE RUNOFF AT NODE 24
RMZ3-2A + DT2F

```
163 KO        OUTPUT CONTROL VARIABLES
                   IPRNT          3  PRINT CONTROL
                   IPLOT          0  PLOT CONTROL
                   QSCAL         0.  HYDROGRAPH PLOT SCALE
                   IPNCH          0  PUNCH COMPUTED HYDROGRAPH
                    IOUT         21  SAVE HYDROGRAPH ON THIS UNIT
                   ISAV1          1  FIRST ORDINATE PUNCHED OR SAVED
                   ISAV2        300  LAST ORDINATE PUNCHED OR SAVED
                  TIMINT       .083  TIME INTERVAL IN HOURS


164 HC        HYDROGRAPH COMBINATION
                   ICOMP          2  NUMBER OF HYDROGRAPHS TO COMBINE
```

***

*** *** *** *** ***

HYDROGRAPH AT STATION HC24
FOR PLAN 1, RATIO = 1.00

PEAK FLOW (CFS)	TIME (HR)		MAXIMUM AVERAGE FLOW 6-HR	24-HR	72-HR	24.92-HR
1492.	12.42	(CFS)	480.	146.	140.	140.
		(INCHES)	1.632	1.983	1.983	1.983
		(AC-FT)	238.	289.	289.	289.

CUMULATIVE AREA = 2.74 SQ MI

*** *** *** *** ***

HYDROGRAPH AT STATION HC24
FOR PLAN 1, RATIO = .97

PEAK FLOW (CFS)	TIME (HR)		MAXIMUM AVERAGE FLOW 6-HR	24-HR	72-HR	24.92-HR
1440.	12.42	(CFS)	462.	140.	135.	135.
		(INCHES)	1.571	1.910	1.910	1.910
		(AC-FT)	229.	279.	279.	279.

CUMULATIVE AREA = 2.74 SQ MI

*** *** *** *** ***

HYDROGRAPH AT STATION HC24
FOR PLAN 1, RATIO = .95

PEAK FLOW (CFS)	TIME (HR)		MAXIMUM AVERAGE FLOW 6-HR	24-HR	72-HR	24.92-HR
1408.	12.33	(CFS)	451.	137.	132.	132.

(INCHES)	1.534	1.864	1.864	1.864
(AC-FT)	224.	272.	272.	272.

CUMULATIVE AREA = 2.74 SQ MI

*** *** *** *** ***

HYDROGRAPH AT STATION HC24
FOR PLAN 1, RATIO = .94

PEAK FLOW (CFS)	TIME (HR)		MAXIMUM AVERAGE FLOW 6-HR	24-HR	72-HR	24.92-HR
1395.	12.33	(CFS)	447.	136.	131.	131.
		(INCHES)	1.519	1.846	1.846	1.846
		(AC-FT)	222.	269.	269.	269.

CUMULATIVE AREA = 2.74 SQ MI

*** *** *** *** ***

HYDROGRAPH AT STATION HC24
FOR PLAN 1, RATIO = .92

PEAK FLOW (CFS)	TIME (HR)		MAXIMUM AVERAGE FLOW 6-HR	24-HR	72-HR	24.92-HR
1361.	12.33	(CFS)	435.	132.	127.	127.
		(INCHES)	1.480	1.799	1.799	1.799
		(AC-FT)	216.	262.	262.	262.

CUMULATIVE AREA = 2.74 SQ MI

*** ***

```
          ##############
          #            #
165 KK    #       2G   #
          #            #
          ##############
```

RUNOFF GENERATED ON SUB-BASIN 2G

SUBBASIN RUNOFF DATA

167 BA SUBBASIN CHARACTERISTICS
TAREA .92 SUBBASIN AREA

PRECIPITATION DATA

13 PB STORM 3.96 BASIN TOTAL PRECIPITATION

14 PI INCREMENTAL PRECIPITATION PATTERN

.00	.00	.00	.00	.00	.00	.00	.00	.00	.00
.00	.00	.00	.00	.00	.00	.00	.00	.00	.00
.00	.00	.00	.00	.00	.00	.00	.00	.00	.00
.00	.00	.00	.00	.00	.00	.00	.00	.00	.00
.00	.00	.00	.00	.00	.00	.00	.00	.00	.00
.00	.00	.00	.00	.00	.00	.00	.00	.00	.00
.00	.00	.00	.00	.00	.00	.00	.00	.00	.00
.00	.00	.00	.00	.00	.00	.00	.00	.00	.00
.00	.00	.00	.00	.00	.00	.00	.00	.00	.00
.00	.00	.00	.00	.00	.00	.00	.00	.00	.00
.00	.00	.00	.00	.00	.00	.00	.00	.00	.00
.00	.00	.00	.00	.00	.00	.00	.00	.00	.00
.00	.00	.00	.00	.00	.00	.00	.01	.00	.01
.01	.01	.01	.01	.01	.01	.01	.01	.03	.03
.03	.09	.09	.09	.01	.01	.01	.01	.01	.01
.01	.01	.01	.01	.01	.01	.00	.00	.00	.00
.00	.00	.00	.00	.00	.00	.00	.00	.00	.00
.00	.00	.00	.00	.00	.00	.00	.00	.00	.00
.00	.00	.00	.00	.00	.00	.00	.00	.00	.00
.00	.00	.00	.00	.00	.00	.00	.00	.00	.00
.00	.00	.00	.00	.00	.00	.00	.00	.00	.00
.00	.00	.00	.00	.00	.00	.00	.00	.00	.00
.00	.00	.00	.00	.00	.00	.00	.00	.00	.00
.00	.00	.00	.00	.00	.00	.00	.00	.00	.00
.00	.00	.00	.00	.00	.00	.00	.00	.00	.00
.00	.00	.00	.00	.00	.00	.00	.00	.00	.00
.00	.00	.00	.00	.00	.00	.00	.00	.00	.00
.00	.00	.00	.00	.00	.00	.00	.00	.00	.00
.00	.00	.00	.00	.00	.00	.00	.00		

168 LU UNIFORM LOSS RATE

STRTL	.33	INITIAL LOSS
CNSTL	.16	UNIFORM LOSS RATE
RTIMP	29.20	PERCENT IMPERVIOUS AREA

169 UD SCS DIMENSIONLESS UNITGRAPH

TLAG	.39	LAG

***

UNIT HYDROGRAPH
25 END-OF-PERIOD ORDINATES

98.	301.	637.	923.	1023.	981.	841.	643.	445.	323.
241.	177.	128.	94.	68.	50.	36.	27.	19.	14.
11.	8.	6.	4.	2.					

TOTAL RAINFALL = 3.96, TOTAL LOSS = 1.45, TOTAL EXCESS = 2.51

PEAK FLOW (CFS)	TIME (HR)		MAXIMUM AVERAGE FLOW 6-HR	24-HR	72-HR	24.92-HR
1362.	12.25	(CFS)	214.	62.	60.	60.
		(INCHES)	2.172	2.507	2.509	2.509
		(AC-FT)	106.	123.	123.	123.

CUMULATIVE AREA = .92 SQ MI

*** *** *** *** ***

HYDROGRAPH AT STATION 26
FOR PLAN 1, RATIO = 1.00

TOTAL RAINFALL = 3.96, TOTAL LOSS = 1.45, TOTAL EXCESS = 2.51

PEAK FLOW (CFS)	TIME (HR)		MAXIMUM AVERAGE FLOW 6-HR	24-HR	72-HR	24.92-HR
1362.	12.25	(CFS)	214.	62.	60.	60.
		(INCHES)	2.172	2.507	2.509	2.509
		(AC-FT)	106.	123.	123.	123.

CUMULATIVE AREA = .92 SQ MI

*** *** *** *** ***

HYDROGRAPH AT STATION 26
FOR PLAN 1, RATIO = .97

TOTAL RAINFALL = 3.83, TOTAL LOSS = 1.42, TOTAL EXCESS = 2.42

PEAK FLOW (CFS)	TIME (HR)		MAXIMUM AVERAGE FLOW 6-HR	24-HR	72-HR	24.92-HR
1316.	12.25	(CFS)	206.	60.	57.	57.
		(INCHES)	2.090	2.414	2.416	2.416
		(AC-FT)	102.	118.	118.	118.

CUMULATIVE AREA = .92 SQ MI

*** *** *** *** ***

HYDROGRAPH AT STATION 26
FOR PLAN 1, RATIO = .95

TOTAL RAINFALL = 3.75, TOTAL LOSS = 1.40, TOTAL EXCESS = 2.36

PEAK FLOW (CFS)	TIME (HR)		MAXIMUM AVERAGE FLOW 6-HR	24-HR	72-HR	24.92-HR
1288.	12.25	(CFS)	201.	58.	56.	56.
		(INCHES)	2.039	2.356	2.358	2.358
		(AC-FT)	100.	115.	115.	115.

CUMULATIVE AREA = .92 SQ MI

*** *** *** *** ***

HYDROGRAPH AT STATION 26
FOR PLAN 1, RATIO = .94

```
   TOTAL RAINFALL =   3.72, TOTAL LOSS =   1.39, TOTAL EXCESS =   2.33

PEAK FLOW    TIME                        MAXIMUM AVERAGE FLOW
 (CFS)       (HR)                 6-HR     24-HR     72-HR    24.92-HR
  1276.     12.25       (CFS)     199.       58.       55.        55.
                      (INCHES)   2.018     2.333     2.335      2.335
                       (AC-FT)     99.      114.      114.       114.

                     CUMULATIVE AREA =    .92 SQ MI


   ***          ***          ***          ***          ***

                     HYDROGRAPH AT STATION      26
                       FOR PLAN 1, RATIO =  .92

   TOTAL RAINFALL =   3.64, TOTAL LOSS =   1.37, TOTAL EXCESS =   2.27

PEAK FLOW    TIME                        MAXIMUM AVERAGE FLOW
 (CFS)       (HR)                 6-HR     24-HR     72-HR    24.92-HR
  1246.     12.25       (CFS)     194.       56.       54.        54.
                      (INCHES)   1.964     2.272     2.274      2.274
                       (AC-FT)     96.      111.      111.       111.

                     CUMULATIVE AREA =    .92 SQ MI


*** *** *** *** *** *** *** *** *** *** *** *** *** *** *** *** *** *** *** *** *** *** *** *** *** *** *** *** *** *** *** *** *** *** ***


         ***************
         *             *
170 KK   *  RM26-25    *
         *             *
         ***************
                    MUSKINGUM ROUTE IN CHANNEL FROM SUB-BASIN 26 TO NODE 25
                                                  1) Reach Length= 2350 FT.
                                                  2) Average Velocity= 5.3 FPS

          HYDROGRAPH ROUTING DATA

174 RM        MUSKINGUM ROUTING
                  NSTPS        2 NUMBER OF SUBREACHES
                  AMSKK      .12 MUSKINGUM K
                      X      .30 MUSKINGUM X

                                                 ***

   ***          ***          ***          ***          ***

                     HYDROGRAPH AT STATION  RM26-25
                       FOR PLAN 1, RATIO = 1.00
```

PEAK FLOW (CFS)	TIME (HR)		MAXIMUM AVERAGE FLOW 6-HR	24-HR	72-HR	24.92-HR
1321.	12.42	(CFS)	214.	62.	60.	60.
		(INCHES)	2.172	2.507	2.509	2.509
		(AC-FT)	106.	123.	123.	123.

CUMULATIVE AREA = .92 SQ MI

*** *** *** *** ***

HYDROGRAPH AT STATION RM26-25
FOR PLAN 1, RATIO = .97

PEAK FLOW (CFS)	TIME (HR)		MAXIMUM AVERAGE FLOW 6-HR	24-HR	72-HR	24.92-HR
1276.	12.42	(CFS)	206.	60.	57.	57.
		(INCHES)	2.090	2.414	2.416	2.416
		(AC-FT)	102.	118.	118.	118.

CUMULATIVE AREA = .92 SQ MI

*** *** *** *** ***

HYDROGRAPH AT STATION RM26-25
FOR PLAN 1, RATIO = .95

PEAK FLOW (CFS)	TIME (HR)		MAXIMUM AVERAGE FLOW 6-HR	24-HR	72-HR	24.92-HR
1249.	12.42	(CFS)	201.	58.	56.	56.
		(INCHES)	2.039	2.356	2.358	2.358
		(AC-FT)	100.	115.	115.	115.

CUMULATIVE AREA = .92 SQ MI

*** *** *** *** ***

HYDROGRAPH AT STATION RM26-25
FOR PLAN 1, RATIO = .94

PEAK FLOW (CFS)	TIME (HR)		MAXIMUM AVERAGE FLOW 6-HR	24-HR	72-HR	24.92-HR
1238.	12.42	(CFS)	199.	58.	55.	55.
		(INCHES)	2.018	2.333	2.335	2.335
		(AC-FT)	99.	114.	114.	114.

CUMULATIVE AREA = .92 SQ MI

*** *** *** *** ***

HYDROGRAPH AT STATION RM26-25

```
***          ***          ***          ***          ***

                    HYDROGRAPH AT STATION   HC17.1
                     FOR PLAN 1, RATIO =  .92

PEAK FLOW    TIME                        MAXIMUM AVERAGE FLOW
 (CFS)       (HR)                 6-HR     24-HR     72-HR    24.92-HR
  6016.      12.92       (CFS)    1661.     494.      476.      476.
                       (INCHES)   1.789    2.127     2.128     2.128
                        (AC-FT)    823.     980.      980.      980.

                    CUMULATIVE AREA =    8.63 SQ MI


*** *** *** *** *** *** *** *** *** *** *** *** *** *** *** *** *** *** *** *** *** *** *** *** *** *** *** *** *** *** *** *** ***


          ***************
          *             *
191 KK    *  RS17-18    *
          *             *
          ***************
                         NORMAL DEPTH CHANNEL ROUTE FROM NODE 17 TO NODE 18
                                                        1) Reach Length= 5250 FT.
                                                        2) Average Velocity= 7.8 FPS

            HYDROGRAPH ROUTING DATA

195 RS        STORAGE ROUTING
                   NSTPS          3  NUMBER OF SUBREACHES
                    ITYP       FLOW  TYPE OF INITIAL CONDITION
                  RSVRIC      -1.00  INITIAL CONDITION
                       X        .00 WORKING R AND D COEFFICIENT

196 RC        NORMAL DEPTH CHANNEL ROUTING
                     ANL       .035  LEFT OVERBANK N-VALUE
                    ANCH       .030  MAIN CHANNEL N-VALUE
                     ANR       .035  RIGHT OVERBANK N-VALUE
                   RLNTH      5250.  REACH LENGTH
                     SEL      .0050  ENERGY SLOPE
                   ELMAX     1391.0  MAX. ELEV. FOR STORAGE/OUTFLOW CALCULATION

                                        CROSS-SECTION DATA
                         --- LEFT OVERBANK --- + ------ MAIN CHANNEL ------- + --- RIGHT OVERBANK ---
198 RY       ELEVATION  1391.00  1390.00  1389.00  1391.00  1391.00  1389.00  1390.00  1391.00
197 RX       DISTANCE     15.00    50.00    84.00   100.00   140.00   156.00   190.00   231.00

                                                  ***

                                        COMPUTED STORAGE-OUTFLOW-ELEVATION DATA

          STORAGE       .00     2.60     5.34     8.21    11.22    14.36    17.63    21.04    24.57    28.25
```

OUTFLOW	.00	48.46	154.78	306.36	498.62	729.20	996.74	1300.47	1639.99	2015.14
ELEVATION	1381.00	1381.53	1382.05	1382.58	1383.11	1383.63	1384.16	1384.68	1385.21	1385.74
STORAGE	32.05	35.99	40.07	44.28	48.62	53.09	58.38	65.91	75.81	88.25
OUTFLOW	2425.93	2872.49	3355.07	3873.96	4429.52	5022.15	5745.05	6572.09	7513.52	8601.69
ELEVATION	1386.26	1386.79	1387.32	1387.84	1388.37	1388.90	1389.42	1389.95	1390.47	1391.00

*** WARNING *** MODIFIED PULS ROUTING MAY BE NUMERICALLY UNSTABLE FOR OUTFLOWS BETWEEN 1640. TO 6572.
THE ROUTED HYDROGRAPH SHOULD BE EXAMINED FOR OSCILLATIONS OR OUTFLOWS GREATER THAN PEAK INFLOWS.
THIS CAN BE CORRECTED BY DECREASING THE TIME INTERVAL OR INCREASING STORAGE (USE A LONGER REACH.)

*** *** *** *** ***

HYDROGRAPH AT STATION RS17-18
FOR PLAN 1, RATIO = 1.00

PEAK FLOW (CFS)	TIME (HR)		MAXIMUM AVERAGE FLOW 6-HR	24-HR	72-HR	24.92-HR
6614.	13.00	(CFS)	1833.	543.	523.	523.
		(INCHES)	1.974	2.341	2.341	2.341
		(AC-FT)	909.	1078.	1078.	1078.

PEAK STORAGE (AC-FT)	TIME (HR)	MAXIMUM AVERAGE STORAGE 6-HR	24-HR	72-HR	24.92-HR
22.	13.00	8.	3.	3.	3.

PEAK STAGE (FEET)	TIME (HR)	MAXIMUM AVERAGE STAGE 6-HR	24-HR	72-HR	24.92-HR
1389.97	13.00	1384.74	1382.55	1382.49	1382.49

CUMULATIVE AREA = 8.63 SQ MI

*** *** *** *** ***

HYDROGRAPH AT STATION RS17-18
FOR PLAN 1, RATIO = .97

PEAK FLOW (CFS)	TIME (HR)		MAXIMUM AVERAGE FLOW 6-HR	24-HR	72-HR	24.92-HR
6374.	13.00	(CFS)	1765.	523.	504.	504.
		(INCHES)	1.901	2.253	2.253	2.253
		(AC-FT)	875.	1038.	1038.	1038.

PEAK STORAGE (AC-FT)	TIME (HR)	MAXIMUM AVERAGE STORAGE 6-HR	24-HR	72-HR	24.92-HR
21.	13.00	8.	3.	3.	3.

PEAK STAGE (FEET)	TIME (HR)	MAXIMUM AVERAGE STAGE 6-HR	24-HR	72-HR	24.92-HR
1389.82	13.00	1384.67	1382.52	1382.46	1382.46

CUMULATIVE AREA = 8.63 SQ MI

2498.	12.58	(CFS)	646.	193.	186.	186.
		(INCHES)	1.644	1.961	1.961	1.961
		(AC-FT)	320.	382.	382.	382.

PEAK STORAGE (AC-FT)	TIME (HR)	MAXIMUM AVERAGE STORAGE 6-HR	24-HR	72-HR	24.92-HR
18.	12.58	6.	2.	2.	2.

PEAK STAGE (FEET)	TIME (HR)	MAXIMUM AVERAGE STAGE 6-HR	24-HR	72-HR	24.92-HR
1414.98	12.58	1411.40	1409.98	1409.95	1409.95

CUMULATIVE AREA = 3.65 SQ MI

*** *** *** ***

HYDROGRAPH AT STATION RS25-17
FOR PLAN 1, RATIO = .92

PEAK FLOW (CFS)	TIME (HR)		MAXIMUM AVERAGE FLOW 6-HR	24-HR	72-HR	24.92-HR
2442.	12.58	(CFS)	629.	188.	181.	181.
		(INCHES)	1.601	1.911	1.911	1.911
		(AC-FT)	312.	372.	372.	372.

PEAK STORAGE (AC-FT)	TIME (HR)	MAXIMUM AVERAGE STORAGE 6-HR	24-HR	72-HR	24.92-HR
17.	12.58	6.	2.	2.	2.

PEAK STAGE (FEET)	TIME (HR)	MAXIMUM AVERAGE STAGE 6-HR	24-HR	72-HR	24.92-HR
1414.92	12.58	1411.37	1409.97	1409.93	1409.93

CUMULATIVE AREA = 3.65 SQ MI

*** ***

```
          **************
          *            *
197 KK    *   HC17.1   *
          *            *
          **************
```

COMBINE SURFACE RUNOFF AT NODE 17
HC17 + RS25-17

190 HC HYDROGRAPH COMBINATION
ICOMP 2 NUMBER OF HYDROGRAPHS TO COMBINE

***

*** *** *** *** ***

HYDROGRAPH AT STATION HC17.1
FOR PLAN 1, RATIO = 1.00

PEAK FLOW (CFS)	TIME (HR)		MAXIMUM AVERAGE FLOW 6-HR	24-HR	72-HR	24.92-HR
6643.	12.92	(CFS)	1834.	545.	525.	525.
		(INCHES)	1.975	2.347	2.347	2.347
		(AC-FT)	909.	1081.	1081.	1081.

CUMULATIVE AREA = 8.63 SQ MI

*** *** *** *** ***

HYDROGRAPH AT STATION HC17.1
FOR PLAN 1, RATIO = .97

PEAK FLOW (CFS)	TIME (HR)		MAXIMUM AVERAGE FLOW 6-HR	24-HR	72-HR	24.92-HR
6393.	12.92	(CFS)	1765.	525.	505.	505.
		(INCHES)	1.901	2.260	2.260	2.260
		(AC-FT)	875.	1041.	1041.	1041.

CUMULATIVE AREA = 8.63 SQ MI

*** *** *** *** ***

HYDROGRAPH AT STATION HC17.1
FOR PLAN 1, RATIO = .95

PEAK FLOW (CFS)	TIME (HR)		MAXIMUM AVERAGE FLOW 6-HR	24-HR	72-HR	24.92-HR
6236.	12.92	(CFS)	1722.	512.	493.	493.
		(INCHES)	1.855	2.206	2.206	2.206
		(AC-FT)	854.	1016.	1016.	1016.

CUMULATIVE AREA = 8.63 SQ MI

*** *** *** *** ***

HYDROGRAPH AT STATION HC17.1
FOR PLAN 1, RATIO = .94

PEAK FLOW (CFS)	TIME (HR)		MAXIMUM AVERAGE FLOW 6-HR	24-HR	72-HR	24.92-HR
6174.	12.92	(CFS)	1705.	507.	488.	488.
		(INCHES)	1.837	2.184	2.185	2.185
		(AC-FT)	846.	1006.	1006.	1006.

CUMULATIVE AREA = 8.63 SQ MI

1) Reach Length= 4400 FT.
2) Average Velocity= 6.8 FPS

HYDROGRAPH ROUTING DATA

183 RS	STORAGE ROUTING		
	NSTPS	2	NUMBER OF SUBREACHES
	ITYP	FLOW	TYPE OF INITIAL CONDITION
	RSVRIC	-1.00	INITIAL CONDITION
	X	.00	WORKING R AND D COEFFICIENT
184 RC	NORMAL DEPTH CHANNEL ROUTING		
	ANL	.035	LEFT OVERBANK N-VALUE
	ANCH	.030	MAIN CHANNEL N-VALUE
	ANR	.035	RIGHT OVERBANK N-VALUE
	RLNTH	4400.	REACH LENGTH
	SEL	.0030	ENERGY SLOPE
	ELMAX	1416.0	MAX. ELEV. FOR STORAGE/OUTFLOW CALCULATION

CROSS-SECTION DATA

		--- LEFT OVERBANK ---			+ ------ MAIN CHANNEL -------			+ --- RIGHT OVERBANK ---	
186 RY	ELEVATION	1416.00	1415.00	1414.00	1409.00	1409.00	1414.00	1415.00	1416.00
185 RX	DISTANCE	7.00	50.00	90.00	100.00	140.00	150.00	190.00	228.00

***

COMPUTED STORAGE-OUTFLOW-ELEVATION DATA

STORAGE	.00	1.52	3.09	4.71	6.39	8.13	9.92	11.76	13.66	15.62
OUTFLOW	.00	20.67	65.90	130.11	211.17	307.90	419.52	545.55	685.63	839.54
ELEVATION	1409.00	1409.37	1409.74	1410.11	1410.47	1410.84	1411.21	1411.58	1411.95	1412.32
STORAGE	17.63	19.69	21.81	23.98	26.31	29.56	33.91	39.35	45.91	53.58
OUTFLOW	1007.11	1188.26	1382.94	1591.13	1826.33	2103.05	2416.98	2777.59	3193.36	3671.89
ELEVATION	1412.68	1413.05	1413.42	1413.79	1414.16	1414.53	1414.89	1415.26	1415.63	1416.00

*** *** *** *** ***

HYDROGRAPH AT STATION RS25-17
FOR PLAN 1, RATIO = 1.00

PEAK FLOW (CFS)	TIME (HR)		MAXIMUM AVERAGE FLOW 6-HR	24-HR	72-HR	24.92-HR
2663.	12.58	(CFS)	694.	207.	199.	199.
		(INCHES)	1.767	2.107	2.107	2.107
		(AC-FT)	344.	410.	410.	410.

PEAK STORAGE (AC-FT)	TIME (HR)	MAXIMUM AVERAGE STORAGE 6-HR	24-HR	72-HR	24.92-HR
19.	12.58	6.	2.	2.	2.

PEAK STAGE (FEET)	TIME (HR)	MAXIMUM AVERAGE STAGE 6-HR	24-HR	72-HR	24.92-HR
1415.15	12.58	1411.50	1410.03	1409.99	1409.99

CUMULATIVE AREA = 3.65 SQ MI

*** *** *** *** ***

HYDROGRAPH AT STATION RS25-17
FOR PLAN 1, RATIO = .97

PEAK FLOW (CFS)	TIME (HR)		MAXIMUM AVERAGE FLOW 6-HR	24-HR	72-HR	24.92-HR
2575.	12.58	(CFS)	668.	199.	192.	192.
		(INCHES)	1.701	2.029	2.029	2.029
		(AC-FT)	331.	395.	395.	395.

PEAK STORAGE (AC-FT)	TIME (HR)	MAXIMUM AVERAGE STORAGE 6-HR	24-HR	72-HR	24.92-HR
18.	12.58	6.	2.	2.	2.

PEAK STAGE (FEET)	TIME (HR)	MAXIMUM AVERAGE STAGE 6-HR	24-HR	72-HR	24.92-HR
1415.06	12.58	1411.45	1410.01	1409.97	1409.97

CUMULATIVE AREA = 3.65 SQ MI

*** *** *** *** ***

HYDROGRAPH AT STATION RS25-17
FOR PLAN 1, RATIO = .95

PEAK FLOW (CFS)	TIME (HR)		MAXIMUM AVERAGE FLOW 6-HR	24-HR	72-HR	24.92-HR
2520.	12.58	(CFS)	652.	195.	187.	187.
		(INCHES)	1.660	1.981	1.981	1.981
		(AC-FT)	323.	386.	386.	386.

PEAK STORAGE (AC-FT)	TIME (HR)	MAXIMUM AVERAGE STORAGE 6-HR	24-HR	72-HR	24.92-HR
18.	12.58	6.	2.	2.	2.

PEAK STAGE (FEET)	TIME (HR)	MAXIMUM AVERAGE STAGE 6-HR	24-HR	72-HR	24.92-HR
1415.00	12.58	1411.42	1409.99	1409.95	1409.95

CUMULATIVE AREA = 3.65 SQ MI

*** *** *** *** ***

HYDROGRAPH AT STATION RS25-17
FOR PLAN 1, RATIO = .94

PEAK FLOW (CFS)	TIME (HR)	MAXIMUM AVERAGE FLOW 6-HR	24-HR	72-HR	24.92-HR

FOR PLAN 1, RATIO = .92

PEAK FLOW (CFS)	TIME (HR)		MAXIMUM AVERAGE FLOW 6-HR	24-HR	72-HR	24.92-HR
1209.	12.42	(CFS)	194.	56.	54.	54.
		(INCHES)	1.964	2.272	2.274	2.274
		(AC-FT)	96.	111.	111.	111.

CUMULATIVE AREA = .92 SQ MI

*** ***

```
          ***************
          *             *
175 KK    *     HC25    *
          *             *
          ***************
```

COMBINE SURFACE RUNOFF AT NODE 25
HC24 + RMZG-25

178 HC HYDROGRAPH COMBINATION
ICOMP 2 NUMBER OF HYDROGRAPHS TO COMBINE

***

*** *** *** *** ***

HYDROGRAPH AT STATION HC25
FOR PLAN 1, RATIO = 1.00

PEAK FLOW (CFS)	TIME (HR)		MAXIMUM AVERAGE FLOW 6-HR	24-HR	72-HR	24.92-HR
2812.	12.42	(CFS)	694.	208.	200.	200.
		(INCHES)	1.768	2.114	2.115	2.115
		(AC-FT)	344.	412.	412.	412.

CUMULATIVE AREA = 3.65 SQ MI

*** *** *** *** ***

HYDROGRAPH AT STATION HC25
FOR PLAN 1, RATIO = .97

PEAK FLOW (CFS)	TIME (HR)		MAXIMUM AVERAGE FLOW 6-HR	24-HR	72-HR	24.92-HR
2716.	12.42	(CFS)	668.	200.	193.	193.
		(INCHES)	1.702	2.036	2.037	2.037
		(AC-FT)	331.	397.	397.	397.

CUMULATIVE AREA = 3.65 SQ MI

*** *** *** *** ***

HYDROGRAPH AT STATION HC25
FOR PLAN 1, RATIO = .95

PEAK FLOW (CFS)	TIME (HR)		MAXIMUM AVERAGE FLOW 6-HR	24-HR	72-HR	24.92-HR
2656.	12.42	(CFS)	652.	195.	188.	188.
		(INCHES)	1.661	1.987	1.988	1.988
		(AC-FT)	323.	387.	387.	387.

CUMULATIVE AREA = 3.65 SQ MI

*** *** *** *** ***

HYDROGRAPH AT STATION HC25
FOR PLAN 1, RATIO = .94

PEAK FLOW (CFS)	TIME (HR)		MAXIMUM AVERAGE FLOW 6-HR	24-HR	72-HR	24.92-HR
2632.	12.42	(CFS)	646.	193.	186.	186.
		(INCHES)	1.644	1.968	1.969	1.969
		(AC-FT)	320.	383.	383.	383.

CUMULATIVE AREA = 3.65 SQ MI

*** *** *** *** ***

HYDROGRAPH AT STATION HC25
FOR PLAN 1, RATIO = .92

PEAK FLOW (CFS)	TIME (HR)		MAXIMUM AVERAGE FLOW 6-HR	24-HR	72-HR	24.92-HR
2569.	12.42	(CFS)	629.	188.	181.	181.
		(INCHES)	1.601	1.917	1.918	1.918
		(AC-FT)	312.	373.	374.	374.

CUMULATIVE AREA = 3.65 SQ MI

*** ***

```
         ##############
         #            #
179 KK   #  RS25-17   #
         #            #
         ##############
```

NORMAL DEPTH CHANNEL ROUTE FROM NODE 25 TO NODE 17

*** *** *** *** ***

HYDROGRAPH AT STATION RS17-18
FOR PLAN 1, RATIO = .95

PEAK FLOW (CFS)	TIME (HR)		MAXIMUM AVERAGE FLOW 6-HR	24-HR	72-HR	24.92-HR
6221.	13.00	(CFS)	1722.	511.	492.	492.
		(INCHES)	1.855	2.199	2.199	2.199
		(AC-FT)	854.	1013.	1013.	1013.

PEAK STORAGE (AC-FT)	TIME (HR)	MAXIMUM AVERAGE STORAGE 6-HR	24-HR	72-HR	24.92-HR
21.	13.00	7.	3.	3.	3.

PEAK STAGE (FEET)	TIME (HR)	MAXIMUM AVERAGE STAGE 6-HR	24-HR	72-HR	24.92-HR
1389.72	13.00	1384.62	1382.49	1382.44	1382.44

CUMULATIVE AREA = 8.63 SQ MI

*** *** *** *** ***

HYDROGRAPH AT STATION RS17-18
FOR PLAN 1, RATIO = .94

PEAK FLOW (CFS)	TIME (HR)		MAXIMUM AVERAGE FLOW 6-HR	24-HR	72-HR	24.92-HR
6160.	13.00	(CFS)	1705.	506.	487.	487.
		(INCHES)	1.836	2.178	2.178	2.178
		(AC-FT)	845.	1003.	1003.	1003.

PEAK STORAGE (AC-FT)	TIME (HR)	MAXIMUM AVERAGE STORAGE 6-HR	24-HR	72-HR	24.92-HR
21.	13.00	7.	3.	3.	3.

PEAK STAGE (FEET)	TIME (HR)	MAXIMUM AVERAGE STAGE 6-HR	24-HR	72-HR	24.92-HR
1389.69	13.00	1384.60	1382.48	1382.43	1382.43

CUMULATIVE AREA = 8.63 SQ MI

*** *** *** *** ***

HYDROGRAPH AT STATION RS17-18
FOR PLAN 1, RATIO = .92

PEAK FLOW (CFS)	TIME (HR)		MAXIMUM AVERAGE FLOW 6-HR	24-HR	72-HR	24.92-HR
5999.	13.00	(CFS)	1661.	492.	474.	474.
		(INCHES)	1.788	2.121	2.121	2.121
		(AC-FT)	823.	977.	977.	977.

PEAK STORAGE (AC-FT)	TIME (HR)	MAXIMUM AVERAGE STORAGE 6-HR	24-HR	72-HR	24.92-HR
20.	13.00	7.	3.	3.	3.

PEAK STAGE (FEET)	TIME (HR)	MAXIMUM AVERAGE STAGE 6-HR	24-HR	72-HR	24.92-HR
1389.58	13.00	1384.55	1382.46	1382.41	1382.41

CUMULATIVE AREA = 8.63 SQ MI

*** ***

```
          **************
          *            *
199 KK    *       2J   *
          *            *
          **************
```

RUNOFF GENERATED ON SUB-BASIN 2J

SUBBASIN RUNOFF DATA

201 BA SUBBASIN CHARACTERISTICS

TAREA .70 SUBBASIN AREA

PRECIPITATION DATA

13 PB STORM 3.96 BASIN TOTAL PRECIPITATION

14 PI INCREMENTAL PRECIPITATION PATTERN

.00	.00	.00	.00	.00	.00	.00	.00	.00	.00
.00	.00	.00	.00	.00	.00	.00	.00	.00	.00
.00	.00	.00	.00	.00	.00	.00	.00	.00	.00
.00	.00	.00	.00	.00	.00	.00	.00	.00	.00
.00	.00	.00	.00	.00	.00	.00	.00	.00	.00
.00	.00	.00	.00	.00	.00	.00	.00	.00	.00
.00	.00	.00	.00	.00	.00	.00	.00	.00	.00
.00	.00	.00	.00	.00	.00	.00	.00	.00	.00
.00	.00	.00	.00	.00	.00	.00	.00	.00	.00
.00	.00	.00	.00	.00	.00	.00	.00	.00	.00
.00	.00	.00	.00	.00	.00	.00	.00	.00	.00
.00	.00	.00	.00	.00	.00	.00	.00	.00	.00
.00	.00	.00	.00	.00	.00	.00	.01	.00	.01
.01	.01	.01	.01	.01	.01	.01	.01	.03	.03
.03	.09	.09	.09	.01	.01	.01	.01	.01	.01
.01	.01	.01	.01	.01	.01	.00	.00	.00	.00
.00	.00	.00	.00	.00	.00	.00	.00	.00	.00
.00	.00	.00	.00	.00	.00	.00	.00	.00	.00
.00	.00	.00	.00	.00	.00	.00	.00	.00	.00
.00	.00	.00	.00	.00	.00	.00	.00	.00	.00
.00	.00	.00	.00	.00	.00	.00	.00	.00	.00

.00	.00	.00	.00	.00	.00	.00	.00	.00	.00
.00	.00	.00	.00	.00	.00	.00	.00	.00	.00
.00	.00	.00	.00	.00	.00	.00	.00	.00	.00
.00	.00	.00	.00	.00	.00	.00	.00	.00	.00
.00	.00	.00	.00	.00	.00	.00	.00	.00	.00
.00	.00	.00	.00	.00	.00	.00	.00	.00	.00
.00	.00	.00	.00	.00	.00	.00	.00	.00	.00
.00	.00	.00	.00	.00	.00	.00	.00		

202 LU UNIFORM LOSS RATE

STRTL	.37	INITIAL LOSS
CNSTL	.20	UNIFORM LOSS RATE
RTIMP	24.60	PERCENT IMPERVIOUS AREA

203 UD SCS DIMENSIONLESS UNITGRAPH

TLAG	.71	LAG

***

UNIT HYDROGRAPH
45 END-OF-PERIOD ORDINATES

17.	54.	104.	172.	259.	346.	409.	444.	452.	445.
415.	378.	334.	279.	225.	185.	153.	128.	109.	91.
76.	63.	53.	44.	37.	31.	25.	21.	18.	15.
12.	10.	9.	7.	6.	5.	4.	4.	3.	3.
2.	2.	1.	1.	0.					

TOTAL RAINFALL = 3.96, TOTAL LOSS = 1.64, TOTAL EXCESS = 2.32

PEAK FLOW (CFS)	TIME (HR)		MAXIMUM AVERAGE FLOW 6-HR	24-HR	72-HR	24.92-HR
692.	12.58	(CFS)	154.	44.	42.	42.
		(INCHES)	2.031	2.313	2.314	2.314
		(AC-FT)	76.	87.	87.	87.

CUMULATIVE AREA = .70 SQ MI

*** *** *** *** ***

HYDROGRAPH AT STATION 2J
FOR PLAN 1, RATIO = 1.00

TOTAL RAINFALL = 3.96, TOTAL LOSS = 1.64, TOTAL EXCESS = 2.32

PEAK FLOW (CFS)	TIME (HR)		MAXIMUM AVERAGE FLOW 6-HR	24-HR	72-HR	24.92-HR
692.	12.58	(CFS)	154.	44.	42.	42.
		(INCHES)	2.031	2.313	2.314	2.314
		(AC-FT)	76.	87.	87.	87.

CUMULATIVE AREA = .70 SQ MI

*** *** *** *** ***

HYDROGRAPH AT STATION 2J
FOR PLAN 1, RATIO = .97

TOTAL RAINFALL = 3.83, TOTAL LOSS = 1.61, TOTAL EXCESS = 2.23

PEAK FLOW (CFS)	TIME (HR)		MAXIMUM AVERAGE FLOW 6-HR	24-HR	72-HR	24.92-HR
668.	12.58	(CFS)	148.	42.	41.	41.
		(INCHES)	1.952	2.224	2.226	2.226
		(AC-FT)	73.	84.	84.	84.

CUMULATIVE AREA = .70 SQ MI

*** *** *** *** ***

HYDROGRAPH AT STATION 2J
FOR PLAN 1, RATIO = .95

TOTAL RAINFALL = 3.75, TOTAL LOSS = 1.58, TOTAL EXCESS = 2.17

PEAK FLOW (CFS)	TIME (HR)		MAXIMUM AVERAGE FLOW 6-HR	24-HR	72-HR	24.92-HR
653.	12.58	(CFS)	144.	41.	40.	40.
		(INCHES)	1.903	2.170	2.171	2.171
		(AC-FT)	71.	81.	82.	82.

CUMULATIVE AREA = .70 SQ MI

*** *** *** *** ***

HYDROGRAPH AT STATION 2J
FOR PLAN 1, RATIO = .94

TOTAL RAINFALL = 3.72, TOTAL LOSS = 1.57, TOTAL EXCESS = 2.15

PEAK FLOW (CFS)	TIME (HR)		MAXIMUM AVERAGE FLOW 6-HR	24-HR	72-HR	24.92-HR
647.	12.58	(CFS)	143.	41.	39.	39.
		(INCHES)	1.883	2.148	2.150	2.150
		(AC-FT)	71.	81.	81.	81.

CUMULATIVE AREA = .70 SQ MI

*** *** *** *** ***

HYDROGRAPH AT STATION 2J
FOR PLAN 1, RATIO = .92

TOTAL RAINFALL = 3.64, TOTAL LOSS = 1.55, TOTAL EXCESS = 2.09

PEAK FLOW TIME MAXIMUM AVERAGE FLOW

(CFS)	(HR)		6-HR	24-HR	72-HR	24.92-HR
631.	12.50	(CFS)	139.	40.	38.	38.
		(INCHES)	1.832	2.091	2.092	2.092
		(AC-FT)	69.	79.	79.	79.

CUMULATIVE AREA = .70 SQ MI

*** ***

```
          **************
          *            *
204 KK    *     DT2J   *
          *            *
          **************
```

THROW AWAY 10-YR 2-HR RETENTION VOLUME:1) 2.4 AC-FT FROM SUB-BASIN 2J
(Hydrograph identified as OR-2J)
2) Balance of runoff continues on.
(Hydrograph identified as DT2J)

DT	DIVERSION		
	ISTAD	OR-2J	DIVERSION HYDROGRAPH IDENTIFICATION
	DSTRMX	2.40	MAXIMUM VOLUME TO BE DIVERTED
DI	INFLOW	.00	10000.00
DO	DIVERTED FLOW	.00	10000.00

***

*** *** *** *** ***

DIVERSION HYDROGRAPH OR-2J
FOR PLAN 1, RATIO = 1.00

PEAK FLOW (CFS)	TIME (HR)		MAXIMUM AVERAGE FLOW 6-HR	24-HR	72-HR	24.92-HR
7.	5.92	(CFS)	5.	1.	1.	1.
		(INCHES)	.064	.064	.064	.064
		(AC-FT)	2.	2.	2.	2.

CUMULATIVE AREA = .70 SQ MI

*** *** *** *** ***

HYDROGRAPH AT STATION DT2J
FOR PLAN 1, RATIO = 1.00

PEAK FLOW (CFS)	TIME (HR)		MAXIMUM AVERAGE FLOW 6-HR	24-HR	72-HR	24.92-HR
692.	12.50	(CFS)	154.	43.	41.	41.

(INCHES)	2.031	2.250	2.250	2.250
(AC-FT)	76.	84.	84.	84.

CUMULATIVE AREA = .70 SQ MI

*** *** *** *** ***

DIVERSION HYDROGRAPH OR-2J
FOR PLAN 1, RATIO = .97

PEAK FLOW (CFS)	TIME (HR)		MAXIMUM AVERAGE FLOW 6-HR	24-HR	72-HR	24.92-HR
7.	6.08	(CFS)	5.	1.	1.	1.
		(INCHES)	.064	.064	.064	.064
		(AC-FT)	2.	2.	2.	2.

CUMULATIVE AREA = .70 SQ MI

*** *** *** *** ***

HYDROGRAPH AT STATION DT2J
FOR PLAN 1, RATIO = .97

PEAK FLOW (CFS)	TIME (HR)		MAXIMUM AVERAGE FLOW 6-HR	24-HR	72-HR	24.92-HR
668.	12.58	(CFS)	148.	41.	39.	39.
		(INCHES)	1.952	2.162	2.162	2.162
		(AC-FT)	73.	81.	81.	81.

CUMULATIVE AREA = .70 SQ MI

*** *** *** *** ***

DIVERSION HYDROGRAPH OR-2J
FOR PLAN 1, RATIO = .95

PEAK FLOW (CFS)	TIME (HR)		MAXIMUM AVERAGE FLOW 6-HR	24-HR	72-HR	24.92-HR
7.	6.17	(CFS)	5.	1.	1.	1.
		(INCHES)	.064	.064	.064	.064
		(AC-FT)	2.	2.	2.	2.

CUMULATIVE AREA = .70 SQ MI

*** *** *** *** ***

HYDROGRAPH AT STATION DT2J
FOR PLAN 1, RATIO = .95

PEAK FLOW (CFS)	TIME (HR)	MAXIMUM AVERAGE FLOW 6-HR	24-HR	72-HR	24.92-HR

653.	12.58	(CFS)	144.	40.	38.	38.
		(INCHES)	1.903	2.107	2.107	2.107
		(AC-FT)	71.	79.	79.	79.

CUMULATIVE AREA = .70 SQ MI

*** *** *** *** ***

DIVERSION HYDROGRAPH OR-2J
FOR PLAN 1, RATIO = .94

PEAK FLOW (CFS)	TIME (HR)		MAXIMUM AVERAGE FLOW 6-HR	24-HR	72-HR	24.92-HR
7.	6.17	(CFS)	5.	1.	1.	1.
		(INCHES)	.064	.064	.064	.064
		(AC-FT)	2.	2.	2.	2.

CUMULATIVE AREA = .70 SQ MI

*** *** *** *** ***

HYDROGRAPH AT STATION DT2J
FOR PLAN 1, RATIO = .94

PEAK FLOW (CFS)	TIME (HR)		MAXIMUM AVERAGE FLOW 6-HR	24-HR	72-HR	24.92-HR
647.	12.58	(CFS)	143.	39.	38.	38.
		(INCHES)	1.983	2.086	2.086	2.086
		(AC-FT)	71.	78.	78.	78.

CUMULATIVE AREA = .70 SQ MI

*** *** *** *** ***

DIVERSION HYDROGRAPH OR-2J
FOR PLAN 1, RATIO = .92

PEAK FLOW (CFS)	TIME (HR)		MAXIMUM AVERAGE FLOW 6-HR	24-HR	72-HR	24.92-HR
7.	6.33	(CFS)	5.	1.	1.	1.
		(INCHES)	.064	.064	.064	.064
		(AC-FT)	2.	2.	2.	2.

CUMULATIVE AREA = .70 SQ MI

*** *** *** *** ***

HYDROGRAPH AT STATION DT2J
FOR PLAN 1, RATIO = .92

PEAK FLOW TIME MAXIMUM AVERAGE FLOW

(CFS)	(HR)		6-HR	24-HR	72-HR	24.92-HR
631.	12.58	(CFS)	139.	38.	37.	37.
		(INCHES)	1.832	2.028	2.028	2.028
		(AC-FT)	69.	76.	76.	76.

CUMULATIVE AREA = .70 SQ MI

*** ***

```
         **************
         *            *
212 KK   *  RM2J-19   *
         *            *
         **************
```

MUSKINGUM ROUTE IN STREET FROM NODE 2J TO NODE 19

1) Reach Length= 7600 FT.

2) Average Velocity= 4.0 FPS

HYDROGRAPH ROUTING DATA

216 RM MUSKINGUM ROUTING

NSTPS	3	NUMBER OF SUBREACHES
AMSKK	.53	MUSKINGUM K
X	.20	MUSKINGUM X

***

*** *** *** *** ***

HYDROGRAPH AT STATION RM2J-19
FOR PLAN 1, RATIO = 1.00

PEAK FLOW (CFS)	TIME (HR)		MAXIMUM AVERAGE FLOW 6-HR	24-HR	72-HR	24.92-HR
609.	13.08	(CFS)	154.	43.	41.	41.
		(INCHES)	2.030	2.246	2.246	2.246
		(AC-FT)	76.	84.	84.	84.

CUMULATIVE AREA = .70 SQ MI

*** *** *** *** ***

HYDROGRAPH AT STATION RM2J-19
FOR PLAN 1, RATIO = .97

PEAK FLOW (CFS)	TIME (HR)		MAXIMUM AVERAGE FLOW 6-HR	24-HR	72-HR	24.92-HR
587.	13.08	(CFS)	148.	41.	39.	39.
		(INCHES)	1.951	2.158	2.158	2.158
		(AC-FT)	73.	81.	81.	81.

CUMULATIVE AREA = .70 SQ MI

*** *** *** *** ***

HYDROGRAPH AT STATION RM2J-19
FOR PLAN 1, RATIO = .95

PEAK FLOW (CFS)	TIME (HR)		MAXIMUM AVERAGE FLOW 6-HR	24-HR	72-HR	24.92-HR
574.	13.08	(CFS)	144.	40.	39.	38.
		(INCHES)	1.902	2.104	2.104	2.104
		(AC-FT)	71.	79.	79.	79.

CUMULATIVE AREA = .70 SQ MI

*** *** *** *** ***

HYDROGRAPH AT STATION RM2J-19
FOR PLAN 1, RATIO = .94

PEAK FLOW (CFS)	TIME (HR)		MAXIMUM AVERAGE FLOW 6-HR	24-HR	72-HR	24.92-HR
568.	13.08	(CFS)	143.	39.	38.	38.
		(INCHES)	1.883	2.082	2.082	2.082
		(AC-FT)	71.	78.	78.	78.

CUMULATIVE AREA = .70 SQ MI

*** *** *** *** ***

HYDROGRAPH AT STATION RM2J-19
FOR PLAN 1, RATIO = .92

PEAK FLOW (CFS)	TIME (HR)		MAXIMUM AVERAGE FLOW 6-HR	24-HR	72-HR	24.92-HR
554.	13.08	(CFS)	139.	38.	37.	37.
		(INCHES)	1.831	2.025	2.025	2.025
		(AC-FT)	69.	76.	76.	76.

CUMULATIVE AREA = .70 SQ MI

*** ***

```
          **************
          *            *
217 KK    *       2I   *
          *            *
```

```
**************
                    RUNOFF GENERATED ON SUB-BASIN 2I

          SUBBASIN RUNOFF DATA

219 BA        SUBBASIN CHARACTERISTICS
                   TAREA        .99  SUBBASIN AREA

              PRECIPITATION DATA

 13 PB             STORM       3.96  BASIN TOTAL PRECIPITATION

 14 PI          INCREMENTAL PRECIPITATION PATTERN
                   .00      .00      .00      .00      .00      .00      .00      .00      .00      .00
                   .00      .00      .00      .00      .00      .00      .00      .00      .00      .00
                   .00      .00      .00      .00      .00      .00      .00      .00      .00      .00
                   .00      .00      .00      .00      .00      .00      .00      .00      .00      .00
                   .00      .00      .00      .00      .00      .00      .00      .00      .00      .00
                   .00      .00      .00      .00      .00      .00      .00      .00      .00      .00
                   .00      .00      .00      .00      .00      .00      .00      .00      .00      .00
                   .00      .00      .00      .00      .00      .00      .00      .00      .00      .00
                   .00      .00      .00      .00      .00      .00      .00      .00      .00      .00
                   .00      .00      .00      .00      .00      .00      .00      .00      .00      .00
                   .00      .00      .00      .00      .00      .00      .00      .00      .00      .00
                   .00      .00      .00      .00      .00      .00      .00      .00      .00      .00
                   .00      .00      .00      .00      .00      .00      .00      .01      .00      .01
                   .01      .01      .01      .01      .01      .01      .01      .01      .03      .03
                   .03      .09      .09      .09      .01      .01      .01      .01      .01      .01
                   .01      .01      .01      .01      .01      .01      .00      .00      .00      .00
                   .00      .00      .00      .00      .00      .00      .00      .00      .00      .00
                   .00      .00      .00      .00      .00      .00      .00      .00      .00      .00
                   .00      .00      .00      .00      .00      .00      .00      .00      .00      .00
                   .00      .00      .00      .00      .00      .00      .00      .00      .00      .00
                   .00      .00      .00      .00      .00      .00      .00      .00      .00      .00
                   .00      .00      .00      .00      .00      .00      .00      .00      .00      .00
                   .00      .00      .00      .00      .00      .00      .00      .00      .00      .00
                   .00      .00      .00      .00      .00      .00      .00      .00      .00      .00
                   .00      .00      .00      .00      .00      .00      .00      .00      .00      .00
                   .00      .00      .00      .00      .00      .00      .00      .00      .00      .00
                   .00      .00      .00      .00      .00      .00      .00      .00      .00      .00
                   .00      .00      .00      .00      .00      .00      .00      .00      .00      .00
                   .00      .00      .00      .00      .00      .00      .00      .00

220 LU        UNIFORM LOSS RATE
                   STRTL        .37  INITIAL LOSS
                   CNSTL        .24  UNIFORM LOSS RATE
                   RTIMP      40.30  PERCENT IMPERVIOUS AREA

221 UD        SCS DIMENSIONLESS UNITGRAPH
                   TLAG        .48  LAG

                                 ***

                              UNIT HYDROGRAPH
                          31 END-OF-PERIOD ORDINATES
```

66.	195.	398.	659.	847.	909.	893.	799.	677.	514.
383.	293.	230.	179.	135.	106.	82.	63.	48.	37.
29.	22.	17.	13.	10.	8.	7.	5.	3.	2.
0.									

TOTAL RAINFALL = 3.96, TOTAL LOSS = 1.37, TOTAL EXCESS = 2.59

PEAK FLOW (CFS)	TIME (HR)		MAXIMUM AVERAGE FLOW 6-HR	24-HR	72-HR	24.92-HR
1272.	12.33	(CFS)	225.	69.	66.	66.
		(INCHES)	2.127	2.589	2.592	2.592
		(AC-FT)	112.	136.	136.	136.

CUMULATIVE AREA = .99 SQ MI

*** *** *** *** ***

HYDROGRAPH AT STATION 2I
FOR PLAN 1, RATIO = 1.00

TOTAL RAINFALL = 3.96, TOTAL LOSS = 1.37, TOTAL EXCESS = 2.59

PEAK FLOW (CFS)	TIME (HR)		MAXIMUM AVERAGE FLOW 6-HR	24-HR	72-HR	24.92-HR
1272.	12.33	(CFS)	225.	69.	66.	66.
		(INCHES)	2.127	2.589	2.592	2.592
		(AC-FT)	112.	136.	136.	136.

CUMULATIVE AREA = .99 SQ MI

*** *** *** *** ***

HYDROGRAPH AT STATION 2I
FOR PLAN 1, RATIO = .97

TOTAL RAINFALL = 3.83, TOTAL LOSS = 1.33, TOTAL EXCESS = 2.50

PEAK FLOW (CFS)	TIME (HR)		MAXIMUM AVERAGE FLOW 6-HR	24-HR	72-HR	24.92-HR
1229.	12.33	(CFS)	217.	66.	64.	64.
		(INCHES)	2.049	2.496	2.499	2.499
		(AC-FT)	108.	131.	131.	131.

CUMULATIVE AREA = .99 SQ MI

*** *** *** *** ***

HYDROGRAPH AT STATION 2I
FOR PLAN 1, RATIO = .95

TOTAL RAINFALL = 3.75, TOTAL LOSS = 1.31, TOTAL EXCESS = 2.44

PEAK FLOW (CFS)	TIME (HR)		MAXIMUM AVERAGE FLOW 6-HR	24-HR	72-HR	24.92-HR
1202.	12.33	(CFS)	212.	65.	62.	62.
		(INCHES)	2.000	2.437	2.440	2.440
		(AC-FT)	105.	128.	128.	128.

CUMULATIVE AREA = .99 SQ MI

*** *** *** *** ***

HYDROGRAPH AT STATION 2I
FOR PLAN 1, RATIO = .94

TOTAL RAINFALL = 3.72, TOTAL LOSS = 1.30, TOTAL EXCESS = 2.42

PEAK FLOW (CFS)	TIME (HR)		MAXIMUM AVERAGE FLOW 6-HR	24-HR	72-HR	24.92-HR
1191.	12.33	(CFS)	210.	64.	62.	62.
		(INCHES)	1.980	2.414	2.417	2.417
		(AC-FT)	104.	127.	127.	127.

CUMULATIVE AREA = .99 SQ MI

*** *** *** *** ***

HYDROGRAPH AT STATION 2I
FOR PLAN 1, RATIO = .92

TOTAL RAINFALL = 3.64, TOTAL LOSS = 1.28, TOTAL EXCESS = 2.36

PEAK FLOW (CFS)	TIME (HR)		MAXIMUM AVERAGE FLOW 6-HR	24-HR	72-HR	24.92-HR
1162.	12.33	(CFS)	204.	62.	60.	60.
		(INCHES)	1.929	2.353	2.356	2.356
		(AC-FT)	101.	124.	124.	124.

CUMULATIVE AREA = .99 SQ MI

*** ***

```
         **************
         *            *
ZZZ KK   *     DT2I   *
         *            *
         **************
```

THROW AWAY 10-YR 2-HR RETENTION VOLUME:1) 7.7 AC-FT FROM SUB-BASIN 2I
(Hydrograph identified as OR-2I)
2) Balance of runoff continues on.
(Hydrograph identified as DT2I)

```
DT        DIVERSION
                ISTAD      OR-2I  DIVERSION HYDROGRAPH IDENTIFICATION
               DSTRMX       7.70  MAXIMUM VOLUME TO BE DIVERTED

DI          INFLOW        .00  10000.00

DQ     DIVERTED FLOW      .00  10000.00

                                                        ***

 ***         ***         ***         ***         ***

                DIVERSION HYDROGRAPH    OR-2I
                 FOR PLAN 1, RATIO = 1.00

PEAK FLOW    TIME                      MAXIMUM AVERAGE FLOW
 (CFS)       (HR)              6-HR      24-HR      72-HR    24.92-HR
   20.       7.17     (CFS)     14.        4.         4.         4.
                    (INCHES)   .136       .147       .147       .147
                     (AC-FT)     7.         8.         8.         8.

                CUMULATIVE AREA =     .99 SQ MI

 ***         ***         ***         ***         ***

                HYDROGRAPH AT STATION     DT2I
                 FOR PLAN 1, RATIO = 1.00

PEAK FLOW    TIME                      MAXIMUM AVERAGE FLOW
 (CFS)       (HR)              6-HR      24-HR      72-HR    24.92-HR
 1272.       12.33    (CFS)    225.       65.        62.        62.
                    (INCHES)  2.127      2.445      2.445      2.445
                     (AC-FT)   112.      128.       128.       128.

                CUMULATIVE AREA =     .99 SQ MI

 ***         ***         ***         ***         ***

                DIVERSION HYDROGRAPH    OR-2I
                 FOR PLAN 1, RATIO =  .97

PEAK FLOW    TIME                      MAXIMUM AVERAGE FLOW
 (CFS)       (HR)              6-HR      24-HR      72-HR    24.92-HR
   19.       7.25     (CFS)     14.        4.         4.         4.
                    (INCHES)   .134       .147       .147       .147
                     (AC-FT)     7.         8.         8.         8.

                CUMULATIVE AREA =     .99 SQ MI

 ***         ***         ***         ***         ***
```

HYDROGRAPH AT STATION DT2I
FOR PLAN 1, RATIO = .97

PEAK FLOW (CFS)	TIME (HR)		MAXIMUM AVERAGE FLOW 6-HR	24-HR	72-HR	24.92-HR
1229.	12.33	(CFS)	217.	62.	60.	60.
		(INCHES)	2.049	2.352	2.352	2.352
		(AC-FT)	108.	124.	124.	124.

CUMULATIVE AREA = .99 SQ MI

*** *** *** *** ***

DIVERSION HYDROGRAPH OR-2I
FOR PLAN 1, RATIO = .95

PEAK FLOW (CFS)	TIME (HR)		MAXIMUM AVERAGE FLOW 6-HR	24-HR	72-HR	24.92-HR
19.	7.42	(CFS)	14.	4.	4.	4.
		(INCHES)	.132	.147	.147	.147
		(AC-FT)	7.	8.	8.	8.

CUMULATIVE AREA = .99 SQ MI

*** *** *** *** ***

HYDROGRAPH AT STATION DT2I
FOR PLAN 1, RATIO = .95

PEAK FLOW (CFS)	TIME (HR)		MAXIMUM AVERAGE FLOW 6-HR	24-HR	72-HR	24.92-HR
1202.	12.33	(CFS)	212.	61.	59.	59.
		(INCHES)	2.000	2.294	2.294	2.294
		(AC-FT)	105.	120.	120.	120.

CUMULATIVE AREA = .99 SQ MI

*** *** *** *** ***

DIVERSION HYDROGRAPH OR-2I
FOR PLAN 1, RATIO = .94

PEAK FLOW (CFS)	TIME (HR)		MAXIMUM AVERAGE FLOW 6-HR	24-HR	72-HR	24.92-HR
19.	7.42	(CFS)	14.	4.	4.	4.
		(INCHES)	.131	.147	.147	.147
		(AC-FT)	7.	8.	8.	8.

CUMULATIVE AREA = .99 SQ MI

*** *** *** *** ***

HYDROGRAPH AT STATION DT2I
FOR PLAN 1, RATIO = .94

PEAK FLOW (CFS)	TIME (HR)		MAXIMUM AVERAGE FLOW 6-HR	24-HR	72-HR	24.92-HR
1191.	12.33	(CFS)	210.	60.	58.	58.
		(INCHES)	1.980	2.270	2.270	2.270
		(AC-FT)	104.	119.	119.	119.

CUMULATIVE AREA = .99 SQ MI

*** *** *** *** ***

DIVERSION HYDROGRAPH DR-2I
FOR PLAN 1, RATIO = .92

PEAK FLOW (CFS)	TIME (HR)		MAXIMUM AVERAGE FLOW 6-HR	24-HR	72-HR	24.92-HR
19.	7.58	(CFS)	14.	4.	4.	4.
		(INCHES)	.130	.147	.147	.147
		(AC-FT)	7.	8.	8.	8.

CUMULATIVE AREA = .99 SQ MI

*** *** *** *** ***

HYDROGRAPH AT STATION DT2I
FOR PLAN 1, RATIO = .92

PEAK FLOW (CFS)	TIME (HR)		MAXIMUM AVERAGE FLOW 6-HR	24-HR	72-HR	24.92-HR
1162.	12.33	(CFS)	204.	59.	56.	56.
		(INCHES)	1.929	2.209	2.209	2.209
		(AC-FT)	101.	116.	116.	116.

CUMULATIVE AREA = .99 SQ MI

*** ***

```
         ##############
         #            #
230 KK   #  RM2I-19   #
         #            #
         ##############
```

MUSKINGUM ROUTE IN STREET FROM NODE 2I TO NODE 19
1) Reach Length= 2650 FT.
2) Average Velocity= 4.0 FPS

HYDROGRAPH ROUTING DATA

234 RM MUSKINGUM ROUTING

NSTPS	1	NUMBER OF SUBREACHES
AMSKK	.18	MUSKINGUM K
X	.20	MUSKINGUM X

***

*** *** *** *** ***

HYDROGRAPH AT STATION RM2I-19
FOR PLAN 1, RATIO = 1.00

PEAK FLOW (CFS)	TIME (HR)		MAXIMUM AVERAGE FLOW 6-HR	24-HR	72-HR	24.92-HR
1170.	12.50	(CFS)	225.	65.	62.	62.
		(INCHES)	2.127	2.444	2.444	2.444
		(AC-FT)	112.	128.	128.	128.

CUMULATIVE AREA = .99 SQ MI

*** *** *** *** ***

HYDROGRAPH AT STATION RM2I-19
FOR PLAN 1, RATIO = .97

PEAK FLOW (CFS)	TIME (HR)		MAXIMUM AVERAGE FLOW 6-HR	24-HR	72-HR	24.92-HR
1129.	12.50	(CFS)	217.	62.	60.	60.
		(INCHES)	2.049	2.351	2.351	2.351
		(AC-FT)	108.	124.	124.	124.

CUMULATIVE AREA = .99 SQ MI

*** *** *** *** ***

HYDROGRAPH AT STATION RM2I-19
FOR PLAN 1, RATIO = .95

PEAK FLOW (CFS)	TIME (HR)		MAXIMUM AVERAGE FLOW 6-HR	24-HR	72-HR	24.92-HR
1104.	12.50	(CFS)	212.	61.	58.	58.
		(INCHES)	2.000	2.293	2.293	2.293
		(AC-FT)	105.	120.	120.	120.

CUMULATIVE AREA = .99 SQ MI

*** *** *** *** ***

HYDROGRAPH AT STATION RM2I-19
FOR PLAN 1, RATIO = .94

PEAK FLOW (CFS)	TIME (HR)		MAXIMUM AVERAGE FLOW 6-HR	24-HR	72-HR	24.92-HR
1094.	12.50	(CFS)	210.	60.	58.	58.
		(INCHES)	1.980	2.270	2.270	2.270
		(AC-FT)	104.	119.	119.	119.

CUMULATIVE AREA = .99 SQ MI

*** *** *** *** ***

HYDROGRAPH AT STATION RM21-19
FOR PLAN 1, RATIO = .92

PEAK FLOW (CFS)	TIME (HR)		MAXIMUM AVERAGE FLOW 6-HR	24-HR	72-HR	24.92-HR
1068.	12.50	(CFS)	204.	58.	56.	56.
		(INCHES)	1.929	2.208	2.208	2.208
		(AC-FT)	101.	116.	116.	116.

CUMULATIVE AREA = .99 SQ MI

*** ***

```
         ##############
         #            #
235 KK   #       2K   #
         #            #
         ##############
```

RUNOFF GENERATED ON SUB-BASIN 2K

SUBBASIN RUNOFF DATA

237 BA SUBBASIN CHARACTERISTICS
TAREA 1.34 SUBBASIN AREA

PRECIPITATION DATA

13 PB STORM 3.96 BASIN TOTAL PRECIPITATION

14 PI INCREMENTAL PRECIPITATION PATTERN

.00	.00	.00	.00	.00	.00	.00	.00	.00	.00
.00	.00	.00	.00	.00	.00	.00	.00	.00	.00
.00	.00	.00	.00	.00	.00	.00	.00	.00	.00
.00	.00	.00	.00	.00	.00	.00	.00	.00	.00
.00	.00	.00	.00	.00	.00	.00	.00	.00	.00
.00	.00	.00	.00	.00	.00	.00	.00	.00	.00
.00	.00	.00	.00	.00	.00	.00	.00	.00	.00
.00	.00	.00	.00	.00	.00	.00	.00	.00	.00
.00	.00	.00	.00	.00	.00	.00	.00	.00	.00

.00	.00	.00	.00	.00	.00	.00	.00	.00	.00
.00	.00	.00	.00	.00	.00	.00	.00	.00	.00
.00	.00	.00	.00	.00	.00	.00	.00	.00	.00
.00	.00	.00	.00	.00	.00	.00	.01	.00	.01
.01	.01	.01	.01	.01	.01	.01	.01	.03	.03
.03	.09	.09	.09	.01	.01	.01	.01	.01	.01
.01	.01	.01	.01	.01	.01	.00	.00	.00	.00
.00	.00	.00	.00	.00	.00	.00	.00	.00	.00
.00	.00	.00	.00	.00	.00	.00	.00	.00	.00
.00	.00	.00	.00	.00	.00	.00	.00	.00	.00
.00	.00	.00	.00	.00	.00	.00	.00	.00	.00
.00	.00	.00	.00	.00	.00	.00	.00	.00	.00
.00	.00	.00	.00	.00	.00	.00	.00	.00	.00
.00	.00	.00	.00	.00	.00	.00	.00	.00	.00
.00	.00	.00	.00	.00	.00	.00	.00	.00	.00
.00	.00	.00	.00	.00	.00	.00	.00	.00	.00
.00	.00	.00	.00	.00	.00	.00	.00	.00	.00
.00	.00	.00	.00	.00	.00	.00	.00	.00	.00
.00	.00	.00	.00	.00	.00	.00	.00	.00	.00
.00	.00	.00	.00	.00	.00	.00	.00	.00	.00
.00	.00	.00	.00	.00	.00	.00	.00	.00	.00
.00	.00	.00	.00	.00	.00	.00	.00		

238 LU UNIFORM LOSS RATE

STRTL	.36	INITIAL LOSS
CNSTL	.24	UNIFORM LOSS RATE
RTIMP	42.30	PERCENT IMPERVIOUS AREA

239 UD SCS DIMENSIONLESS UNITGRAPH

TLAG	.38	LAG

***

UNIT HYDROGRAPH
25 END-OF-PERIOD ORDINATES

151.	466.	990.	1409.	1530.	1438.	1215.	893.	620.	447.
332.	238.	173.	126.	90.	66.	48.	35.	25.	18.
14.	10.	7.	4.	1.					

TOTAL RAINFALL = 3.96, TOTAL LOSS = 1.32, TOTAL EXCESS = 2.64

PEAK FLOW (CFS)	TIME (HR)		MAXIMUM AVERAGE FLOW 6-HR	24-HR	72-HR	24.92-HR
1994.	12.25	(CFS)	309.	95.	91.	91.
		(INCHES)	2.150	2.635	2.638	2.638
		(AC-FT)	153.	188.	188.	188.

CUMULATIVE AREA = 1.34 SQ MI

*** *** *** *** ***

HYDROGRAPH AT STATION 2K
FOR PLAN 1, RATIO = 1.00

TOTAL RAINFALL = 3.96, TOTAL LOSS = 1.32, TOTAL EXCESS = 2.64

PEAK FLOW (CFS)	TIME (HR)		MAXIMUM AVERAGE FLOW 6-HR	24-HR	72-HR	24.92-HR
1994.	12.25	(CFS)	309.	95.	91.	91.
		(INCHES)	2.150	2.635	2.638	2.638
		(AC-FT)	153.	188.	188.	188.

CUMULATIVE AREA = 1.34 SQ MI

*** *** *** *** ***

HYDROGRAPH AT STATION 2K
FOR PLAN 1, RATIO = .97

TOTAL RAINFALL = 3.83, TOTAL LOSS = 1.29, TOTAL EXCESS = 2.54

PEAK FLOW (CFS)	TIME (HR)		MAXIMUM AVERAGE FLOW 6-HR	24-HR	72-HR	24.92-HR
1926.	12.25	(CFS)	298.	91.	88.	88.
		(INCHES)	2.072	2.541	2.544	2.544
		(AC-FT)	148.	181.	181.	181.

CUMULATIVE AREA = 1.34 SQ MI

*** *** *** *** ***

HYDROGRAPH AT STATION 2K
FOR PLAN 1, RATIO = .95

TOTAL RAINFALL = 3.75, TOTAL LOSS = 1.27, TOTAL EXCESS = 2.49

PEAK FLOW (CFS)	TIME (HR)		MAXIMUM AVERAGE FLOW 6-HR	24-HR	72-HR	24.92-HR
1884.	12.25	(CFS)	291.	89.	86.	86.
		(INCHES)	2.022	2.482	2.485	2.485
		(AC-FT)	144.	177.	177.	177.

CUMULATIVE AREA = 1.34 SQ MI

*** *** *** *** ***

HYDROGRAPH AT STATION 2K
FOR PLAN 1, RATIO = .94

TOTAL RAINFALL = 3.72, TOTAL LOSS = 1.26, TOTAL EXCESS = 2.46

PEAK FLOW (CFS)	TIME (HR)		MAXIMUM AVERAGE FLOW 6-HR	24-HR	72-HR	24.92-HR
1867.	12.25	(CFS)	288.	88.	85.	85.
		(INCHES)	2.003	2.458	2.461	2.461
		(AC-FT)	143.	175.	175.	175.

CUMULATIVE AREA = 1.34 SQ MI

```
***          ***          ***          ***          ***

                    HYDROGRAPH AT STATION      2K
                     FOR PLAN 1, RATIO =  .92

   TOTAL RAINFALL =   3.64, TOTAL LOSS =   1.24, TOTAL EXCESS =   2.40

PEAK FLOW    TIME                        MAXIMUM AVERAGE FLOW
  (CFS)      (HR)                6-HR      24-HR      72-HR    24.92-HR
  1823.     12.25      (CFS)     280.       86.        83.        83.
                     (INCHES)   1.951      2.397      2.399      2.399
                      (AC-FT)   139.       171.       171.       171.

                    CUMULATIVE AREA =   1.34 SQ MI


*** *** *** *** *** *** *** *** *** *** *** *** *** *** *** *** *** *** *** *** *** *** *** *** *** *** *** *** *** *** *** *** *** *** *** ***


          **************
          *            *
240 KK    *     DT2K   *
          *            *
          **************
                    THROW AWAY 10-YR 2-HR RETENTION VOLUME:1) 7.7 AC-FT FROM SUB-BASIN 2K
                                                              (Hydrograph identified as OR-2K)
                                                           2) Balance of runoff continues on.
                                                              (Hydrograph identified as DT2K)

   DT         DIVERSION
                   ISTAD      OR-2K  DIVERSION HYDROGRAPH IDENTIFICATION
                  DSTRMX       7.70  MAXIMUM VOLUME TO BE DIVERTED

   DI           INFLOW        .00  10000.00

   DQ     DIVERTED FLOW       .00  10000.00

                                                    ***

***          ***          ***          ***          ***

                    DIVERSION HYDROGRAPH    OR-2K
                     FOR PLAN 1, RATIO = 1.00

PEAK FLOW    TIME                        MAXIMUM AVERAGE FLOW
  (CFS)      (HR)                6-HR      24-HR      72-HR    24.92-HR
    23.      5.42       (CFS)     16.        4.         4.         4.
                     (INCHES)    .108       .108       .108       .108
                      (AC-FT)     8.         8.         8.         8.

                    CUMULATIVE AREA =   1.34 SQ MI
```

*** *** *** *** ***

HYDROGRAPH AT STATION DT2K
FOR PLAN 1, RATIO = 1.00

PEAK FLOW (CFS)	TIME (HR)		MAXIMUM AVERAGE FLOW 6-HR	24-HR	72-HR	24.92-HR
1994.	12.25	(CFS)	309.	91.	89.	88.
		(INCHES)	2.150	2.530	2.530	2.530
		(AC-FT)	153.	180.	180.	180.

CUMULATIVE AREA = 1.34 SQ MI

*** *** *** *** ***

DIVERSION HYDROGRAPH OR-2K
FOR PLAN 1, RATIO = .97

PEAK FLOW (CFS)	TIME (HR)		MAXIMUM AVERAGE FLOW 6-HR	24-HR	72-HR	24.92-HR
22.	5.50	(CFS)	16.	4.	4.	4.
		(INCHES)	.108	.108	.108	.108
		(AC-FT)	8.	8.	8.	8.

CUMULATIVE AREA = 1.34 SQ MI

*** *** *** *** ***

HYDROGRAPH AT STATION DT2K
FOR PLAN 1, RATIO = .97

PEAK FLOW (CFS)	TIME (HR)		MAXIMUM AVERAGE FLOW 6-HR	24-HR	72-HR	24.92-HR
1926.	12.25	(CFS)	298.	87.	84.	84.
		(INCHES)	2.072	2.436	2.436	2.436
		(AC-FT)	148.	174.	174.	174.

CUMULATIVE AREA = 1.34 SQ MI

*** *** *** *** ***

DIVERSION HYDROGRAPH OR-2K
FOR PLAN 1, RATIO = .95

PEAK FLOW (CFS)	TIME (HR)		MAXIMUM AVERAGE FLOW 6-HR	24-HR	72-HR	24.92-HR
22.	5.67	(CFS)	16.	4.	4.	4.
		(INCHES)	.108	.108	.108	.108
		(AC-FT)	8.	8.	8.	8.

CUMULATIVE AREA = 1.34 SQ MI

*** *** *** *** ***

HYDROGRAPH AT STATION DT2K
FOR PLAN 1, RATIO = .95

PEAK FLOW (CFS)	TIME (HR)		MAXIMUM AVERAGE FLOW 6-HR	24-HR	72-HR	24.92-HR
1884.	12.25	(CFS)	291.	85.	82.	82.
		(INCHES)	2.022	2.377	2.377	2.377
		(AC-FT)	144.	169.	169.	169.

CUMULATIVE AREA = 1.34 SQ MI

*** *** *** *** ***

DIVERSION HYDROGRAPH OR-2K
FOR PLAN 1, RATIO = .94

PEAK FLOW (CFS)	TIME (HR)		MAXIMUM AVERAGE FLOW 6-HR	24-HR	72-HR	24.92-HR
22.	5.75	(CFS)	16.	4.	4.	4.
		(INCHES)	.108	.108	.108	.108
		(AC-FT)	8.	8.	8.	8.

CUMULATIVE AREA = 1.34 SQ MI

*** *** *** *** ***

HYDROGRAPH AT STATION DT2K
FOR PLAN 1, RATIO = .94

PEAK FLOW (CFS)	TIME (HR)		MAXIMUM AVERAGE FLOW 6-HR	24-HR	72-HR	24.92-HR
1867.	12.25	(CFS)	288.	85.	81.	81.
		(INCHES)	2.003	2.353	2.353	2.353
		(AC-FT)	143.	168.	168.	168.

CUMULATIVE AREA = 1.34 SQ MI

*** *** *** *** ***

DIVERSION HYDROGRAPH OR-2K
FOR PLAN 1, RATIO = .92

PEAK FLOW (CFS)	TIME (HR)		MAXIMUM AVERAGE FLOW 6-HR	24-HR	72-HR	24.92-HR
21.	5.75	(CFS)	16.	4.	4.	4.
		(INCHES)	.108	.108	.108	.108
		(AC-FT)	8.	8.	8.	8.

```
                    CUMULATIVE AREA =    1.34 SQ MI


    ***           ***           ***           ***           ***

                    HYDROGRAPH AT STATION     DT2K
                     FOR PLAN 1, RATIO =  .92

PEAK FLOW    TIME                      MAXIMUM AVERAGE FLOW
  (CFS)      (HR)              6-HR      24-HR      72-HR    24.92-HR
  1823.     12.25     (CFS)    280.        92.        79.        79.
                    (INCHES)  1.951      2.291      2.291      2.291
                     (AC-FT)   139.       163.       163.       163.

                    CUMULATIVE AREA =    1.34 SQ MI


*** *** *** *** *** *** *** *** *** *** *** *** *** *** *** *** *** *** *** *** *** *** *** *** *** *** *** *** *** *** *** *** *** *** ***


         ***************
         *             *
248 KK   *     HC19    *
         *             *
         ***************
                         COMBINE SURFACE RUNOFF AT NODE 19
                          RM2J-19 + RM2I-19 + DT2K

251 HC        HYDROGRAPH COMBINATION
                   ICOMP          3  NUMBER OF HYDROGRAPHS TO COMBINE

                                                          ***

    ***           ***           ***           ***           ***

                    HYDROGRAPH AT STATION     HC19
                     FOR PLAN 1, RATIO = 1.00

PEAK FLOW    TIME                      MAXIMUM AVERAGE FLOW
  (CFS)      (HR)              6-HR      24-HR      72-HR    24.92-HR
  3031.     12.33     (CFS)    687.       198.       191.       191.
                    (INCHES)  2.113      2.436      2.436      2.436
                     (AC-FT)   341.       393.       393.       393.

                    CUMULATIVE AREA =    3.03 SQ MI

    ***           ***           ***           ***           ***

                    HYDROGRAPH AT STATION     HC19
                     FOR PLAN 1, RATIO =  .97
```

PEAK FLOW (CFS)	TIME (HR)		MAXIMUM AVERAGE FLOW 6-HR	24-HR	72-HR	24.92-HR
2926.	12.33	(CFS)	662.	191.	184.	184.
		(INCHES)	2.034	2.344	2.344	2.344
		(AC-FT)	328.	378.	378.	378.

CUMULATIVE AREA = 3.03 SQ MI

*** *** *** *** ***

HYDROGRAPH AT STATION HC19
FOR PLAN 1, RATIO = .95

PEAK FLOW (CFS)	TIME (HR)		MAXIMUM AVERAGE FLOW 6-HR	24-HR	72-HR	24.92-HR
2860.	12.33	(CFS)	646.	186.	179.	179.
		(INCHES)	1.985	2.286	2.286	2.286
		(AC-FT)	320.	369.	369.	369.

CUMULATIVE AREA = 3.03 SQ MI

*** *** *** *** ***

HYDROGRAPH AT STATION HC19
FOR PLAN 1, RATIO = .94

PEAK FLOW (CFS)	TIME (HR)		MAXIMUM AVERAGE FLOW 6-HR	24-HR	72-HR	24.92-HR
2834.	12.33	(CFS)	639.	184.	177.	177.
		(INCHES)	1.965	2.263	2.263	2.263
		(AC-FT)	317.	365.	365.	365.

CUMULATIVE AREA = 3.03 SQ MI

*** *** *** *** ***

HYDROGRAPH AT STATION HC19
FOR PLAN 1, RATIO = .92

PEAK FLOW (CFS)	TIME (HR)		MAXIMUM AVERAGE FLOW 6-HR	24-HR	72-HR	24.92-HR
2765.	12.33	(CFS)	623.	179.	173.	173.
		(INCHES)	1.914	2.202	2.202	2.202
		(AC-FT)	309.	355.	355.	355.

CUMULATIVE AREA = 3.03 SQ MI

*** ***

```
          ***************
          *             *
252 KK    *     DT19    *
          *             *
          ***************
```

SPLIT FLOW AT INTERSECTION OF 7th ST AND BELL RD.

SEND FLOW WEST IN BELL ROAD TO NODE 20 IN STREET 84" & 36" PIPES.
(Hydrograph identified as FL-19) (300 cfs total in PIPES)

REST FLOWS SOUTH IN 7th ST TO NODE 18. (Hydrograph identified as DT19)

DT	DIVERSION ISTAD	FL-19	DIVERSION HYDROGRAPH IDENTIFICATION		
DI	INFLOW	.00	309.00	336.00	5556.00
DQ	DIVERTED FLOW	.00	9.00	36.00	743.00

***

*** *** *** *** ***

DIVERSION HYDROGRAPH FL-19
FOR PLAN 1, RATIO = 1.00

PEAK FLOW (CFS)	TIME (HR)		MAXIMUM AVERAGE FLOW 6-HR	24-HR	72-HR	24.92-HR
401.	12.33	(CFS)	80.	21.	20.	20.
		(INCHES)	.246	.255	.255	.255
		(AC-FT)	40.	41.	41.	41.

CUMULATIVE AREA = 3.03 SQ MI

*** *** *** *** ***

HYDROGRAPH AT STATION DT19
FOR PLAN 1, RATIO = 1.00

PEAK FLOW (CFS)	TIME (HR)		MAXIMUM AVERAGE FLOW 6-HR	24-HR	72-HR	24.92-HR
2630.	12.33	(CFS)	607.	177.	171.	171.
		(INCHES)	1.867	2.181	2.181	2.181
		(AC-FT)	301.	352.	352.	352.

CUMULATIVE AREA = 3.03 SQ MI

*** *** *** *** ***

DIVERSION HYDROGRAPH FL-19
FOR PLAN 1, RATIO = .97

PEAK FLOW (CFS)	TIME (HR)		MAXIMUM AVERAGE FLOW 6-HR	24-HR	72-HR	24.92-HR
397.	12.33	(CFS)	77.	20.	19.	19.
		(INCHES)	.236	.245	.245	.245
		(AC-FT)	38.	39.	39.	39.

CUMULATIVE AREA = 3.03 SQ MI

*** *** *** *** ***

HYDROGRAPH AT STATION DT19
FOR PLAN 1, RATIO = .97

PEAK FLOW (CFS)	TIME (HR)		MAXIMUM AVERAGE FLOW 6-HR	24-HR	72-HR	24.92-HR
2539.	12.33	(CFS)	585.	171.	164.	164.
		(INCHES)	1.798	2.099	2.099	2.099
		(AC-FT)	290.	339.	339.	339.

CUMULATIVE AREA = 3.03 SQ MI

*** *** *** *** ***

DIVERSION HYDROGRAPH FL-19
FOR PLAN 1, RATIO = .95

PEAK FLOW (CFS)	TIME (HR)		MAXIMUM AVERAGE FLOW 6-HR	24-HR	72-HR	24.92-HR
378.	12.33	(CFS)	75.	19.	19.	19.
		(INCHES)	.230	.238	.238	.238
		(AC-FT)	37.	38.	38.	38.

CUMULATIVE AREA = 3.03 SQ MI

*** *** *** *** ***

HYDROGRAPH AT STATION DT19
FOR PLAN 1, RATIO = .95

PEAK FLOW (CFS)	TIME (HR)		MAXIMUM AVERAGE FLOW 6-HR	24-HR	72-HR	24.92-HR
2482.	12.33	(CFS)	571.	167.	160.	160.
		(INCHES)	1.755	2.047	2.047	2.047
		(AC-FT)	283.	330.	330.	330.

CUMULATIVE AREA = 3.03 SQ MI

*** *** *** *** ***

DIVERSION HYDROGRAPH FL-19

FOR PLAN 1, RATIO = .94

PEAK FLOW (CFS)	TIME (HR)		MAXIMUM AVERAGE FLOW 6-HR	24-HR	72-HR	24.92-HR
374.	12.33	(CFS)	74.	19.	18.	18.
		(INCHES)	.227	.236	.236	.236
		(AC-FT)	37.	38.	38.	38.

CUMULATIVE AREA = 3.03 SQ MI

*** *** *** *** ***

HYDROGRAPH AT STATION DT19
FOR PLAN 1, RATIO = .94

PEAK FLOW (CFS)	TIME (HR)		MAXIMUM AVERAGE FLOW 6-HR	24-HR	72-HR	24.92-HR
2459.	12.33	(CFS)	565.	165.	159.	159.
		(INCHES)	1.738	2.027	2.027	2.027
		(AC-FT)	290.	327.	327.	327.

CUMULATIVE AREA = 3.03 SQ MI

*** *** *** *** ***

DIVERSION HYDROGRAPH FL-19
FOR PLAN 1, RATIO = .92

PEAK FLOW (CFS)	TIME (HR)		MAXIMUM AVERAGE FLOW 6-HR	24-HR	72-HR	24.92-HR
365.	12.33	(CFS)	72.	19.	18.	18.
		(INCHES)	.220	.229	.229	.229
		(AC-FT)	36.	37.	37.	37.

CUMULATIVE AREA = 3.03 SQ MI

*** *** *** *** ***

HYDROGRAPH AT STATION DT19
FOR PLAN 1, RATIO = .92

PEAK FLOW (CFS)	TIME (HR)		MAXIMUM AVERAGE FLOW 6-HR	24-HR	72-HR	24.92-HR
2400.	12.33	(CFS)	551.	161.	155.	155.
		(INCHES)	1.693	1.973	1.973	1.973
		(AC-FT)	273.	318.	318.	318.

CUMULATIVE AREA = 3.03 SQ MI

*** ***

```
          **************
          *            *
263 KK    *  RM19-18   *
          *            *
          **************
```

MUSKINGUM ROUTE IN CHANNEL FROM NODE 19 TO NODE 18
1) Reach Length= 1000 FT.
2) Average Velocity= 3.6 FPS

HYDROGRAPH ROUTING DATA

267 RM MUSKINGUM ROUTING

NSTPS	1	NUMBER OF SUBREACHES
AMSKK	.08	MUSKINGUM K
X	.30	MUSKINGUM X

*** *** *** *** *** *** ***

HYDROGRAPH AT STATION RM19-18
FOR PLAN 1, RATIO = 1.00

PEAK FLOW (CFS)	TIME (HR)		MAXIMUM AVERAGE FLOW 6-HR	24-HR	72-HR	24.92-HR
2602.	12.42	(CFS)	607.	177.	171.	171.
		(INCHES)	1.867	2.181	2.181	2.181
		(AC-FT)	301.	352.	352.	352.

CUMULATIVE AREA = 3.03 SQ MI

*** *** *** *** *** *** ***

HYDROGRAPH AT STATION RM19-18
FOR PLAN 1, RATIO = .97

PEAK FLOW (CFS)	TIME (HR)		MAXIMUM AVERAGE FLOW 6-HR	24-HR	72-HR	24.92-HR
2512.	12.42	(CFS)	585.	171.	164.	164.
		(INCHES)	1.798	2.098	2.098	2.098
		(AC-FT)	290.	339.	339.	339.

CUMULATIVE AREA = 3.03 SQ MI

*** *** *** *** *** *** ***

HYDROGRAPH AT STATION RM19-18
FOR PLAN 1, RATIO = .95

PEAK FLOW TIME MAXIMUM AVERAGE FLOW

(CFS)	(HR)		6-HR	24-HR	72-HR	24.92-HR
2456.	12.42	(CFS)	571.	167.	160.	160.
		(INCHES)	1.755	2.047	2.047	2.047
		(AC-FT)	283.	330.	330.	330.

CUMULATIVE AREA = 3.03 SQ MI

*** *** *** *** ***

HYDROGRAPH AT STATION RM19-18
FOR PLAN 1, RATIO = .94

PEAK FLOW (CFS)	TIME (HR)		MAXIMUM AVERAGE FLOW 6-HR	24-HR	72-HR	24.92-HR
2433.	12.42	(CFS)	565.	165.	159.	159.
		(INCHES)	1.738	2.027	2.027	2.027
		(AC-FT)	280.	327.	327.	327.

CUMULATIVE AREA = 3.03 SQ MI

*** *** *** *** ***

HYDROGRAPH AT STATION RM19-18
FOR PLAN 1, RATIO = .92

PEAK FLOW (CFS)	TIME (HR)		MAXIMUM AVERAGE FLOW 6-HR	24-HR	72-HR	24.92-HR
2374.	12.42	(CFS)	551.	160.	155.	155.
		(INCHES)	1.693	1.973	1.973	1.973
		(AC-FT)	273.	318.	318.	318.

CUMULATIVE AREA = 3.03 SQ MI

*** ***

```
         ***************
         *             *
268 KK   *     HC18    *
         *             *
         ***************
```

COMBINE SURFACE RUNOFF AT NODE 18
DT19 + RS17-18

271 HC HYDROGRAPH COMBINATION
ICOMP 2 NUMBER OF HYDROGRAPHS TO COMBINE

***

*** *** *** *** ***

HYDROGRAPH AT STATION HC18
FOR PLAN 1, RATIO = 1.00

PEAK FLOW (CFS)	TIME (HR)		MAXIMUM AVERAGE FLOW 6-HR	24-HR	72-HR	24.92-HR
8349.	12.75	(CFS)	2440.	721.	694.	694.
		(INCHES)	1.946	2.299	2.299	2.299
		(AC-FT)	1210.	1429.	1429.	1429.

CUMULATIVE AREA = 11.66 SQ MI

*** *** *** *** ***

HYDROGRAPH AT STATION HC18
FOR PLAN 1, RATIO = .97

PEAK FLOW (CFS)	TIME (HR)		MAXIMUM AVERAGE FLOW 6-HR	24-HR	72-HR	24.92-HR
8057.	12.75	(CFS)	2349.	694.	668.	668.
		(INCHES)	1.873	2.213	2.213	2.213
		(AC-FT)	1165.	1376.	1376.	1376.

CUMULATIVE AREA = 11.66 SQ MI

*** *** *** *** ***

HYDROGRAPH AT STATION HC18
FOR PLAN 1, RATIO = .95

PEAK FLOW (CFS)	TIME (HR)		MAXIMUM AVERAGE FLOW 6-HR	24-HR	72-HR	24.92-HR
7881.	12.67	(CFS)	2293.	677.	652.	652.
		(INCHES)	1.828	2.160	2.160	2.160
		(AC-FT)	1137.	1343.	1343.	1343.

CUMULATIVE AREA = 11.66 SQ MI

*** *** *** *** ***

HYDROGRAPH AT STATION HC18
FOR PLAN 1, RATIO = .94

PEAK FLOW (CFS)	TIME (HR)		MAXIMUM AVERAGE FLOW 6-HR	24-HR	72-HR	24.92-HR
7818.	12.67	(CFS)	2270.	670.	646.	646.
		(INCHES)	1.810	2.139	2.139	2.139
		(AC-FT)	1126.	1330.	1330.	1330.

CUMULATIVE AREA = 11.66 SQ MI

*** *** *** *** ***

HYDROGRAPH AT STATION HC18
FOR PLAN 1, RATIO = .92

PEAK FLOW (CFS)	TIME (HR)		MAXIMUM AVERAGE FLOW 6-HR	24-HR	72-HR	24.92-HR
7642.	12.67	(CFS)	2211.	653.	629.	629.
		(INCHES)	1.763	2.083	2.083	2.083
		(AC-FT)	1096.	1295.	1295.	1295.

CUMULATIVE AREA = 11.66 SQ MI

*** ***

```
          **************
          *            *
272 KK    *  RS18-21   *
          *            *
          **************
```

NORMAL DEPTH CHANNEL ROUTE FROM NODE 18 TO NODE 21
1) Reach Length= 3700 FT.
2) Average Velocity= 10.7 FPS

HYDROGRAPH ROUTING DATA

276 RS STORAGE ROUTING

NSTPS	2	NUMBER OF SUBREACHES
ITYP	FLOW	TYPE OF INITIAL CONDITION
RSVRIC	-1.00	INITIAL CONDITION
X	.00	WORKING R AND D COEFFICIENT

277 RC NORMAL DEPTH CHANNEL ROUTING

ANL	.035	LEFT OVERBANK N-VALUE
ANCH	.030	MAIN CHANNEL N-VALUE
ANR	.035	RIGHT OVERBANK N-VALUE
RLNTH	3700.	REACH LENGTH
SEL	.0070	ENERGY SLOPE
ELMAX	1371.0	MAX. ELEV. FOR STORAGE/OUTFLOW CALCULATION

CROSS-SECTION DATA

		--- LEFT OVERBANK ---			+ ------ MAIN CHANNEL -------			+ --- RIGHT OVERBANK ---	
279 RY	ELEVATION	1371.00	1370.50	1370.00	1360.00	1360.00	1370.00	1370.50	1371.00
278 RX	DISTANCE	.00	10.00	20.00	45.00	95.00	120.00	130.00	140.00

***

COMPUTED STORAGE-OUTFLOW-ELEVATION DATA

STORAGE	.00	2.53	5.20	8.02	10.97	14.07	17.32	20.70	24.23	27.90
OUTFLOW	.00	84.17	269.43	534.38	871.54	1277.16	1749.22	2286.70	2889.19	3556.68

ELEVATION	1360.00	1360.58	1361.16	1361.74	1362.32	1362.89	1363.47	1364.05	1364.63	1365.21
STORAGE	31.71	35.66	39.76	44.00	48.38	52.90	57.57	62.37	67.59	73.91
OUTFLOW	4289.47	5088.03	5953.00	6885.13	7885.27	8954.32	10093.22	11302.98	12759.94	14391.74
ELEVATION	1365.79	1366.37	1366.95	1367.53	1368.11	1368.68	1369.26	1369.84	1370.42	1371.00

*** WARNING *** MODIFIED PULS ROUTING MAY BE NUMERICALLY UNSTABLE FOR OUTFLOWS BETWEEN 1277. TO 14392.
THE ROUTED HYDROGRAPH SHOULD BE EXAMINED FOR OSCILLATIONS OR OUTFLOWS GREATER THAN PEAK INFLOWS.
THIS CAN BE CORRECTED BY DECREASING THE TIME INTERVAL OR INCREASING STORAGE (USE A LONGER REACH.)

*** *** *** *** ***

HYDROGRAPH AT STATION RS18-21
FOR PLAN 1, RATIO = 1.00

PEAK FLOW (CFS)	TIME (HR)		MAXIMUM AVERAGE FLOW 6-HR	24-HR	72-HR	24.92-HR
8339.	12.83	(CFS)	2440.	719.	693.	693.
		(INCHES)	1.946	2.295	2.295	2.295
		(AC-FT)	1210.	1427.	1427.	1427.

PEAK STORAGE (AC-FT)	TIME (HR)	MAXIMUM AVERAGE STORAGE 6-HR	24-HR	72-HR	24.92-HR
25.	12.83	10.	4.	3.	3.

PEAK STAGE (FEET)	TIME (HR)	MAXIMUM AVERAGE STAGE 6-HR	24-HR	72-HR	24.92-HR
1368.35	12.83	1363.56	1361.43	1361.38	1361.38

CUMULATIVE AREA = 11.66 SQ MI

*** *** *** *** ***

HYDROGRAPH AT STATION RS18-21
FOR PLAN 1, RATIO = .97

PEAK FLOW (CFS)	TIME (HR)		MAXIMUM AVERAGE FLOW 6-HR	24-HR	72-HR	24.92-HR
8052.	12.75	(CFS)	2349.	692.	667.	667.
		(INCHES)	1.873	2.209	2.209	2.209
		(AC-FT)	1165.	1373.	1373.	1373.

PEAK STORAGE (AC-FT)	TIME (HR)	MAXIMUM AVERAGE STORAGE 6-HR	24-HR	72-HR	24.92-HR
25.	12.75	9.	4.	3.	3.

PEAK STAGE (FEET)	TIME (HR)	MAXIMUM AVERAGE STAGE 6-HR	24-HR	72-HR	24.92-HR
1368.20	12.75	1363.48	1361.40	1361.35	1361.35

CUMULATIVE AREA = 11.66 SQ MI

*** *** *** *** ***

HYDROGRAPH AT STATION RS18-21
FOR PLAN 1, RATIO = .95

PEAK FLOW (CFS)	TIME (HR)		MAXIMUM AVERAGE FLOW 6-HR	24-HR	72-HR	24.92-HR
7884.	12.75	(CFS)	2292.	676.	651.	651.
		(INCHES)	1.828	2.156	2.156	2.156
		(AC-FT)	1137.	1340.	1340.	1340.

PEAK STORAGE (AC-FT)	TIME (HR)	MAXIMUM AVERAGE STORAGE 6-HR	24-HR	72-HR	24.92-HR
24.	12.75	9.	3.	3.	3.

PEAK STAGE (FEET)	TIME (HR)	MAXIMUM AVERAGE STAGE 6-HR	24-HR	72-HR	24.92-HR
1368.11	12.75	1363.43	1361.38	1361.33	1361.33

CUMULATIVE AREA = 11.66 SQ MI

*** *** *** *** ***

HYDROGRAPH AT STATION RS18-21
FOR PLAN 1, RATIO = .94

PEAK FLOW (CFS)	TIME (HR)		MAXIMUM AVERAGE FLOW 6-HR	24-HR	72-HR	24.92-HR
7818.	12.75	(CFS)	2270.	669.	644.	644.
		(INCHES)	1.810	2.134	2.134	2.134
		(AC-FT)	1126.	1327.	1327.	1327.

PEAK STORAGE (AC-FT)	TIME (HR)	MAXIMUM AVERAGE STORAGE 6-HR	24-HR	72-HR	24.92-HR
24.	12.75	9.	3.	3.	3.

PEAK STAGE (FEET)	TIME (HR)	MAXIMUM AVERAGE STAGE 6-HR	24-HR	72-HR	24.92-HR
1368.07	12.75	1363.41	1361.37	1361.32	1361.32

CUMULATIVE AREA = 11.66 SQ MI

*** *** *** *** ***

HYDROGRAPH AT STATION RS18-21
FOR PLAN 1, RATIO = .92

PEAK FLOW (CFS)	TIME (HR)		MAXIMUM AVERAGE FLOW 6-HR	24-HR	72-HR	24.92-HR
7643.	12.75	(CFS)	2211.	652.	628.	628.
		(INCHES)	1.763	2.079	2.079	2.079
		(AC-FT)	1096.	1292.	1292.	1292.

PEAK STORAGE (AC-FT)	TIME (HR)	MAXIMUM AVERAGE STORAGE 6-HR	24-HR	72-HR	24.92-HR
24.	12.75	9.	3.	3.	3.

PEAK STAGE (FEET)	TIME (HR)	MAXIMUM AVERAGE STAGE 6-HR	24-HR	72-HR	24.92-HR
1367.97	12.75	1363.36	1361.35	1361.30	1361.30

CUMULATIVE AREA = 11.66 SQ MI

*** ***

```
         **************
         *            *
280 KK   *    FL-19   *
         *            *
         **************
```

RECALL DIVERTED HYDROGRAPH FROM 7th ST AND BELL RD.

282 DR RETRIEVE DIVERSION HYDROGRAPH
ISTAD FL-19 DIVERSION HYDROGRAPH IDENTIFICATION

***

*** *** *** *** ***

HYDROGRAPH AT STATION FL-19
FOR PLAN 1, RATIO = 1.00

PEAK FLOW (CFS)	TIME (HR)		MAXIMUM AVERAGE FLOW 6-HR	24-HR	72-HR	24.92-HR
401.	12.33	(CFS)	80.	21.	20.	20.
		(INCHES)	.064	.066	.066	.066
		(AC-FT)	40.	41.	41.	41.

CUMULATIVE AREA = .00 SQ MI

*** *** *** *** ***

HYDROGRAPH AT STATION FL-19
FOR PLAN 1, RATIO = .97

PEAK FLOW (CFS)	TIME (HR)		MAXIMUM AVERAGE FLOW 6-HR	24-HR	72-HR	24.92-HR
387.	12.33	(CFS)	77.	20.	19.	19.
		(INCHES)	.061	.064	.064	.064
		(AC-FT)	38.	39.	39.	39.

CUMULATIVE AREA = .00 SQ MI

*** *** *** *** ***

HYDROGRAPH AT STATION FL-19
FOR PLAN 1, RATIO = .95

PEAK FLOW (CFS)	TIME (HR)		MAXIMUM AVERAGE FLOW 6-HR	24-HR	72-HR	24.92-HR
378.	12.33	(CFS)	75.	19.	19.	19.
		(INCHES)	.060	.062	.062	.062
		(AC-FT)	37.	38.	38.	38.

CUMULATIVE AREA = .00 SQ MI

*** *** *** *** ***

HYDROGRAPH AT STATION FL-19
FOR PLAN 1, RATIO = .94

PEAK FLOW (CFS)	TIME (HR)		MAXIMUM AVERAGE FLOW 6-HR	24-HR	72-HR	24.92-HR
374.	12.33	(CFS)	74.	19.	18.	18.
		(INCHES)	.059	.061	.061	.061
		(AC-FT)	37.	38.	38.	38.

CUMULATIVE AREA = .00 SQ MI

*** *** *** *** ***

HYDROGRAPH AT STATION FL-19
FOR PLAN 1, RATIO = .92

PEAK FLOW (CFS)	TIME (HR)		MAXIMUM AVERAGE FLOW 6-HR	24-HR	72-HR	24.92-HR
365.	12.33	(CFS)	72.	19.	18.	18.
		(INCHES)	.057	.059	.059	.059
		(AC-FT)	36.	37.	37.	37.

CUMULATIVE AREA = .00 SQ MI

*** ***

```
         ##############
         #            #
283 KK   #  RM19-20   #
         #            #
         ##############
```

MUSKINGUM ROUTE IN STREET FROM NODE 19 TO NODE 20
1) Reach Length= 2350 FT.

2) Average Velocity= 3.0 FPS

HYDROGRAPH ROUTING DATA

287 RM MUSKINGUM ROUTING

NSTPS	3	NUMBER OF SUBREACHES
AMSKK	.22	MUSKINGUM K
X	.30	MUSKINGUM X

***

*** *** *** *** ***

HYDROGRAPH AT STATION RM19-20
FOR PLAN 1, RATIO = 1.00

PEAK FLOW (CFS)	TIME (HR)		MAXIMUM AVERAGE FLOW 6-HR	24-HR	72-HR	24.92-HR
390.	12.58	(CFS)	80.	21.	20.	20.
		(INCHES)	.000	.000	.000	.000
		(AC-FT)	40.	41.	41.	41.

CUMULATIVE AREA = .00 SQ MI

*** *** *** *** ***

HYDROGRAPH AT STATION RM19-20
FOR PLAN 1, RATIO = .97

PEAK FLOW (CFS)	TIME (HR)		MAXIMUM AVERAGE FLOW 6-HR	24-HR	72-HR	24.92-HR
376.	12.58	(CFS)	77.	20.	19.	19.
		(INCHES)	.000	.000	.000	.000
		(AC-FT)	38.	39.	39.	39.

CUMULATIVE AREA = .00 SQ MI

*** *** *** *** ***

HYDROGRAPH AT STATION RM19-20
FOR PLAN 1, RATIO = .95

PEAK FLOW (CFS)	TIME (HR)		MAXIMUM AVERAGE FLOW 6-HR	24-HR	72-HR	24.92-HR
367.	12.58	(CFS)	75.	19.	19.	19.
		(INCHES)	.000	.000	.000	.000
		(AC-FT)	37.	38.	38.	38.

CUMULATIVE AREA = .00 SQ MI

*** *** *** *** ***

HYDROGRAPH AT STATION RM19-20
FOR PLAN 1, RATIO = .94

PEAK FLOW (CFS)	TIME (HR)		MAXIMUM AVERAGE FLOW 6-HR	24-HR	72-HR	24.92-HR
364.	12.58	(CFS)	74.	19.	18.	18.
		(INCHES)	.000	.000	.000	.000
		(AC-FT)	37.	38.	38.	38.

CUMULATIVE AREA = .00 SQ MI

*** *** *** *** ***

HYDROGRAPH AT STATION RM19-20
FOR PLAN 1, RATIO = .92

PEAK FLOW (CFS)	TIME (HR)		MAXIMUM AVERAGE FLOW 6-HR	24-HR	72-HR	24.92-HR
355.	12.58	(CFS)	72.	19.	18.	18.
		(INCHES)	.000	.000	.000	.000
		(AC-FT)	36.	37.	37.	37.

CUMULATIVE AREA = .00 SQ MI

*** ***

```
          **************
          *            *
288 KK    *        2L  *
          *            *
          **************
```

RUNOFF GENERATED ON SUB-BASIN 2L

SUBBASIN RUNOFF DATA

290 BA SUBBASIN CHARACTERISTICS
TAREA .60 SUBBASIN AREA

PRECIPITATION DATA

13 PB STORM 3.96 BASIN TOTAL PRECIPITATION

14 PI INCREMENTAL PRECIPITATION PATTERN

.00	.00	.00	.00	.00	.00	.00	.00	.00	.00
.00	.00	.00	.00	.00	.00	.00	.00	.00	.00
.00	.00	.00	.00	.00	.00	.00	.00	.00	.00
.00	.00	.00	.00	.00	.00	.00	.00	.00	.00
.00	.00	.00	.00	.00	.00	.00	.00	.00	.00
.00	.00	.00	.00	.00	.00	.00	.00	.00	.00
.00	.00	.00	.00	.00	.00	.00	.00	.00	.00

.00	.00	.00	.00	.00	.00	.00	.00	.00	.00
.00	.00	.00	.00	.00	.00	.00	.00	.00	.00
.00	.00	.00	.00	.00	.00	.00	.00	.00	.00
.00	.00	.00	.00	.00	.00	.00	.00	.00	.00
.00	.00	.00	.00	.00	.00	.00	.00	.00	.00
.00	.00	.00	.00	.00	.00	.00	.01	.00	.01
.01	.01	.01	.01	.01	.01	.01	.01	.03	.03
.03	.09	.09	.09	.01	.01	.01	.01	.01	.01
.01	.01	.01	.01	.01	.01	.00	.00	.00	.00
.00	.00	.00	.00	.00	.00	.00	.00	.00	.00
.00	.00	.00	.00	.00	.00	.00	.00	.00	.00
.00	.00	.00	.00	.00	.00	.00	.00	.00	.00
.00	.00	.00	.00	.00	.00	.00	.00	.00	.00
.00	.00	.00	.00	.00	.00	.00	.00	.00	.00
.00	.00	.00	.00	.00	.00	.00	.00	.00	.00
.00	.00	.00	.00	.00	.00	.00	.00	.00	.00
.00	.00	.00	.00	.00	.00	.00	.00	.00	.00
.00	.00	.00	.00	.00	.00	.00	.00	.00	.00
.00	.00	.00	.00	.00	.00	.00	.00	.00	.00
.00	.00	.00	.00	.00	.00	.00	.00	.00	.00
.00	.00	.00	.00	.00	.00	.00	.00		

```
291 LU        UNIFORM LOSS RATE
                   STRTL        .31  INITIAL LOSS
                   CNSTL        .25  UNIFORM LOSS RATE
                   RTIMP      66.20  PERCENT IMPERVIOUS AREA

292 UD        SCS DIMENSIONLESS UNITGRAPH
                   TLAG        .33  LAG

                                          ***

                                      UNIT HYDROGRAPH
                                 22 END-OF-PERIOD ORDINATES
          95.    302.    606.    771.    763.    643.    466.    308.    213.    152.
         104.     73.     50.     35.     24.     17.     12.      8.      6.      4.
           2.      1.

  TOTAL RAINFALL =    3.96, TOTAL LOSS =     .78, TOTAL EXCESS =    3.18

PEAK FLOW    TIME                        MAXIMUM AVERAGE FLOW
  (CFS)      (HR)                 6-HR      24-HR      72-HR    24.92-HR
   986.     12.17      (CFS)     156.        51.        49.        49.
                     (INCHES)   2.415     3.174      3.178      3.178
                      (AC-FT)     77.       102.       102.       102.

                     CUMULATIVE AREA =     .60 SQ MI

   ***          ***          ***          ***          ***

                   HYDROGRAPH AT STATION      2L
                     FOR PLAN 1, RATIO = 1.00
```

TOTAL RAINFALL = 3.96, TOTAL LOSS = .78, TOTAL EXCESS = 3.18

PEAK FLOW (CFS)	TIME (HR)		6-HR	MAXIMUM AVERAGE FLOW 24-HR	72-HR	24.92-HR
986.	12.17	(CFS)	156.	51.	49.	49.
		(INCHES)	2.415	3.174	3.178	3.178
		(AC-FT)	77.	102.	102.	102.

CUMULATIVE AREA = .60 SQ MI

*** *** *** *** ***

HYDROGRAPH AT STATION 2L
FOR PLAN 1, RATIO = .97

TOTAL RAINFALL = 3.83, TOTAL LOSS = .76, TOTAL EXCESS = 3.07

PEAK FLOW (CFS)	TIME (HR)		6-HR	MAXIMUM AVERAGE FLOW 24-HR	72-HR	24.92-HR
954.	12.17	(CFS)	151.	50.	48.	48.
		(INCHES)	2.331	3.066	3.070	3.070
		(AC-FT)	75.	98.	98.	98.

CUMULATIVE AREA = .60 SQ MI

*** *** *** *** ***

HYDROGRAPH AT STATION 2L
FOR PLAN 1, RATIO = .95

TOTAL RAINFALL = 3.75, TOTAL LOSS = .75, TOTAL EXCESS = 3.00

PEAK FLOW (CFS)	TIME (HR)		6-HR	MAXIMUM AVERAGE FLOW 24-HR	72-HR	24.92-HR
933.	12.17	(CFS)	147.	48.	47.	47.
		(INCHES)	2.279	2.999	3.003	3.003
		(AC-FT)	73.	96.	96.	96.

CUMULATIVE AREA = .60 SQ MI

*** *** *** *** ***

HYDROGRAPH AT STATION 2L
FOR PLAN 1, RATIO = .94

TOTAL RAINFALL = 3.72, TOTAL LOSS = .75, TOTAL EXCESS = 2.98

PEAK FLOW (CFS)	TIME (HR)		6-HR	MAXIMUM AVERAGE FLOW 24-HR	72-HR	24.92-HR
925.	12.17	(CFS)	146.	48.	46.	46.
		(INCHES)	2.258	2.972	2.976	2.976
		(AC-FT)	72.	95.	95.	95.

CUMULATIVE AREA = .60 SQ MI

*** *** *** *** ***

HYDROGRAPH AT STATION 2L
FOR PLAN 1, RATIO = .92

TOTAL RAINFALL = 3.64, TOTAL LOSS = .73, TOTAL EXCESS = 2.91

PEAK FLOW (CFS)	TIME (HR)		MAXIMUM AVERAGE FLOW 6-HR	24-HR	72-HR	24.92-HR
904.	12.17	(CFS)	142.	47.	45.	45.
		(INCHES)	2.204	2.901	2.905	2.905
		(AC-FT)	71.	93.	93.	93.

CUMULATIVE AREA = .60 SQ MI

*** ***

```
         **************
         *            *
293 KK   *     DT2L   *
         *            *
         **************
```

THROW AWAY 10-YR 2-HR RETENTION VOLUME:1) 2.0 AC-FT FROM SUB-BASIN 2L
(Hydrograph identified as OR-2L)
2) Balance of runoff continues on.
(Hydrograph identified as DT2L)

DT	DIVERSION		
	ISTAD	OR-2L	DIVERSION HYDROGRAPH IDENTIFICATION
	DSTRMX	2.00	MAXIMUM VOLUME TO BE DIVERTED
DI	INFLOW	.00	10000.00
DQ	DIVERTED FLOW	.00	10000.00

***

*** *** *** *** ***

DIVERSION HYDROGRAPH OR-2L
FOR PLAN 1, RATIO = 1.00

PEAK FLOW (CFS)	TIME (HR)		MAXIMUM AVERAGE FLOW 6-HR	24-HR	72-HR	24.92-HR
12.	2.00	(CFS)	4.	1.	1.	1.
		(INCHES)	.062	.062	.062	.062
		(AC-FT)	2.	2.	2.	2.

CUMULATIVE AREA = .60 SQ MI

*** *** *** *** ***

HYDROGRAPH AT STATION DT2L
FOR PLAN 1, RATIO = 1.00

PEAK FLOW (CFS)	TIME (HR)		MAXIMUM AVERAGE FLOW 6-HR	24-HR	72-HR	24.92-HR
986.	12.17	(CFS)	156.	50.	48.	48.
		(INCHES)	2.415	3.116	3.116	3.116
		(AC-FT)	77.	100.	100.	100.

CUMULATIVE AREA = .60 SQ MI

*** *** *** *** ***

DIVERSION HYDROGRAPH DR-2L
FOR PLAN 1, RATIO = .97

PEAK FLOW (CFS)	TIME (HR)		MAXIMUM AVERAGE FLOW 6-HR	24-HR	72-HR	24.92-HR
12.	2.00	(CFS)	4.	1.	1.	1.
		(INCHES)	.062	.062	.062	.062
		(AC-FT)	2.	2.	2.	2.

CUMULATIVE AREA = .60 SQ MI

*** *** *** *** ***

HYDROGRAPH AT STATION DT2L
FOR PLAN 1, RATIO = .97

PEAK FLOW (CFS)	TIME (HR)		MAXIMUM AVERAGE FLOW 6-HR	24-HR	72-HR	24.92-HR
954.	12.17	(CFS)	151.	49.	47.	47.
		(INCHES)	2.331	3.008	3.008	3.008
		(AC-FT)	75.	96.	96.	96.

CUMULATIVE AREA = .60 SQ MI

*** *** *** *** ***

DIVERSION HYDROGRAPH DR-2L
FOR PLAN 1, RATIO = .95

PEAK FLOW (CFS)	TIME (HR)		MAXIMUM AVERAGE FLOW 6-HR	24-HR	72-HR	24.92-HR
12.	2.00	(CFS)	4.	1.	1.	1.
		(INCHES)	.062	.062	.062	.062

(AC-FT)	2.	2.	2.	2.

CUMULATIVE AREA = .60 SQ MI

*** *** *** *** ***

HYDROGRAPH AT STATION DT2L
FOR PLAN 1, RATIO = .95

PEAK FLOW (CFS)	TIME (HR)		MAXIMUM AVERAGE FLOW 6-HR	24-HR	72-HR	24.92-HR
933.	12.17	(CFS)	147.	48.	46.	46.
		(INCHES)	2.279	2.940	2.940	2.940
		(AC-FT)	73.	94.	94.	94.

CUMULATIVE AREA = .60 SQ MI

*** *** *** *** ***

DIVERSION HYDROGRAPH DR-2L
FOR PLAN 1, RATIO = .94

PEAK FLOW (CFS)	TIME (HR)		MAXIMUM AVERAGE FLOW 6-HR	24-HR	72-HR	24.92-HR
11.	2.00	(CFS)	4.	1.	1.	1.
		(INCHES)	.062	.062	.062	.062
		(AC-FT)	2.	2.	2.	2.

CUMULATIVE AREA = .60 SQ MI

*** *** *** *** ***

HYDROGRAPH AT STATION DT2L
FOR PLAN 1, RATIO = .94

PEAK FLOW (CFS)	TIME (HR)		MAXIMUM AVERAGE FLOW 6-HR	24-HR	72-HR	24.92-HR
925.	12.17	(CFS)	146.	47.	45.	45.
		(INCHES)	2.258	2.914	2.914	2.914
		(AC-FT)	72.	93.	93.	93.

CUMULATIVE AREA = .60 SQ MI

*** *** *** *** ***

DIVERSION HYDROGRAPH DR-2L
FOR PLAN 1, RATIO = .92

PEAK FLOW (CFS)	TIME (HR)		MAXIMUM AVERAGE FLOW 6-HR	24-HR	72-HR	24.92-HR
11.	2.00	(CFS)	4.	1.	1.	1.

```
                    (INCHES)     .062       .062       .062       .062
                     (AC-FT)       2.         2.         2.         2.

                   CUMULATIVE AREA =     .60 SQ MI


     ***           ***           ***           ***           ***

                   HYDROGRAPH AT STATION     DT2L
                     FOR PLAN 1, RATIO =  .92

PEAK FLOW    TIME                      MAXIMUM AVERAGE FLOW
  (CFS)      (HR)              6-HR      24-HR      72-HR    24.92-HR
   904.     12.17     (CFS)     142.        46.        44.        44.
                    (INCHES)   2.204      2.843      2.843      2.843
                     (AC-FT)     71.        91.        91.        91.

                   CUMULATIVE AREA =     .60 SQ MI


*** *** *** *** *** *** *** *** *** *** *** *** *** *** *** *** *** *** *** *** *** *** *** *** *** *** *** *** *** *** *** *** ***


          **************
          *            *
301 KK    *      HC20  *
          *            *
          **************
                        COMBINE SURFACE RUNOFF AT NODE 20
                          RM19-20 + DT2L

304 HC         HYDROGRAPH COMBINATION
                    ICOMP          2  NUMBER OF HYDROGRAPHS TO COMBINE

                                                          ***

     ***           ***           ***           ***           ***

                   HYDROGRAPH AT STATION     HC20
                     FOR PLAN 1, RATIO = 1.00

PEAK FLOW    TIME                      MAXIMUM AVERAGE FLOW
  (CFS)      (HR)              6-HR      24-HR      72-HR    24.92-HR
  1201.     12.25     (CFS)     236.        71.        68.        68.
                    (INCHES)   3.650      4.399      4.399      4.399
                     (AC-FT)    117.       141.       141.       141.

                   CUMULATIVE AREA =     .60 SQ MI


     ***           ***           ***           ***           ***

                   HYDROGRAPH AT STATION     HC20
```

FOR PLAN 1, RATIO = .97

PEAK FLOW (CFS)	TIME (HR)		MAXIMUM AVERAGE FLOW 6-HR	24-HR	72-HR	24.92-HR
1160.	12.25	(CFS)	227.	69.	66.	66.
		(INCHES)	3.517	4.240	4.240	4.240
		(AC-FT)	113.	136.	136.	136.

CUMULATIVE AREA = .60 SQ MI

*** *** *** *** ***

HYDROGRAPH AT STATION HC20
FOR PLAN 1, RATIO = .95

PEAK FLOW (CFS)	TIME (HR)		MAXIMUM AVERAGE FLOW 6-HR	24-HR	72-HR	24.92-HR
1135.	12.25	(CFS)	222.	67.	64.	64.
		(INCHES)	3.434	4.141	4.141	4.141
		(AC-FT)	110.	133.	133.	133.

CUMULATIVE AREA = .60 SQ MI

*** *** *** *** ***

HYDROGRAPH AT STATION HC20
FOR PLAN 1, RATIO = .94

PEAK FLOW (CFS)	TIME (HR)		MAXIMUM AVERAGE FLOW 6-HR	24-HR	72-HR	24.92-HR
1124.	12.25	(CFS)	220.	66.	64.	64.
		(INCHES)	3.401	4.100	4.100	4.100
		(AC-FT)	109.	131.	131.	131.

CUMULATIVE AREA = .60 SQ MI

*** *** *** *** ***

HYDROGRAPH AT STATION HC20
FOR PLAN 1, RATIO = .92

PEAK FLOW (CFS)	TIME (HR)		MAXIMUM AVERAGE FLOW 6-HR	24-HR	72-HR	24.92-HR
1098.	12.25	(CFS)	214.	65.	62.	62.
		(INCHES)	3.312	3.994	3.994	3.994
		(AC-FT)	106.	128.	128.	128.

CUMULATIVE AREA = .60 SQ MI

*** ***

```
          ***************
          *             *
305 KK    *   RM20-21   *
          *             *
          ***************
```

MUSKINGUM ROUTE IN CHANNEL FROM NODE 20 TO NODE 21
1) Reach Length= 3150 FT.
2) Average Velocity= 5.2 FPS

HYDROGRAPH ROUTING DATA

309 RM MUSKINGUM ROUTING

NSTPS	2	NUMBER OF SUBREACHES
AMSKK	.17	MUSKINGUM K
X	.30	MUSKINGUM X

***

*** *** *** *** ***

HYDROGRAPH AT STATION RM20-21
FOR PLAN 1, RATIO = 1.00

PEAK FLOW (CFS)	TIME (HR)		MAXIMUM AVERAGE FLOW 6-HR	24-HR	72-HR	24.92-HR
1161.	12.42	(CFS)	236.	71.	68.	68.
		(INCHES)	3.650	4.399	4.399	4.399
		(AC-FT)	117.	141.	141.	141.

CUMULATIVE AREA = .60 SQ MI

*** *** *** *** ***

HYDROGRAPH AT STATION RM20-21
FOR PLAN 1, RATIO = .97

PEAK FLOW (CFS)	TIME (HR)		MAXIMUM AVERAGE FLOW 6-HR	24-HR	72-HR	24.92-HR
1121.	12.42	(CFS)	227.	69.	66.	66.
		(INCHES)	3.517	4.239	4.239	4.239
		(AC-FT)	113.	136.	136.	136.

CUMULATIVE AREA = .60 SQ MI

*** *** *** *** ***

HYDROGRAPH AT STATION RM20-21
FOR PLAN 1, RATIO = .95

PEAK FLOW TIME MAXIMUM AVERAGE FLOW

(CFS)	(HR)		6-HR	24-HR	72-HR	24.92-HR
1097.	12.42	(CFS)	222.	67.	64.	64.
		(INCHES)	3.434	4.140	4.140	4.140
		(AC-FT)	110.	133.	133.	133.

CUMULATIVE AREA = .60 SQ MI

*** *** *** *** ***

HYDROGRAPH AT STATION RM20-21
FOR PLAN 1, RATIO = .94

PEAK FLOW	TIME			MAXIMUM AVERAGE FLOW		
(CFS)	(HR)		6-HR	24-HR	72-HR	24.92-HR
1087.	12.42	(CFS)	220.	66.	64.	64.
		(INCHES)	3.401	4.100	4.100	4.100
		(AC-FT)	109.	131.	131.	131.

CUMULATIVE AREA = .60 SQ MI

*** *** *** *** ***

HYDROGRAPH AT STATION RM20-21
FOR PLAN 1, RATIO = .92

PEAK FLOW	TIME			MAXIMUM AVERAGE FLOW		
(CFS)	(HR)		6-HR	24-HR	72-HR	24.92-HR
1061.	12.42	(CFS)	214.	65.	62.	62.
		(INCHES)	3.312	3.994	3.994	3.994
		(AC-FT)	106.	128.	128.	128.

CUMULATIVE AREA = .60 SQ MI

*** ***

```
          **************
          *            *
310 KK    *       2M   *
          *            *
          **************
```

RUNOFF GENERATED ON SUB-BASIN 2M

SUBBASIN RUNOFF DATA

312 BA SUBBASIN CHARACTERISTICS
TAREA 1.17 SUBBASIN AREA

PRECIPITATION DATA

13 PB STORM 3.96 BASIN TOTAL PRECIPITATION

14 PI INCREMENTAL PRECIPITATION PATTERN

.00	.00	.00	.00	.00	.00	.00	.00	.00	.00
.00	.00	.00	.00	.00	.00	.00	.00	.00	.00
.00	.00	.00	.00	.00	.00	.00	.00	.00	.00
.00	.00	.00	.00	.00	.00	.00	.00	.00	.00
.00	.00	.00	.00	.00	.00	.00	.00	.00	.00
.00	.00	.00	.00	.00	.00	.00	.00	.00	.00
.00	.00	.00	.00	.00	.00	.00	.00	.00	.00
.00	.00	.00	.00	.00	.00	.00	.00	.00	.00
.00	.00	.00	.00	.00	.00	.00	.00	.00	.00
.00	.00	.00	.00	.00	.00	.00	.00	.00	.00
.00	.00	.00	.00	.00	.00	.00	.00	.00	.00
.00	.00	.00	.00	.00	.00	.00	.00	.00	.00
.00	.00	.00	.00	.00	.00	.00	.01	.00	.01
.01	.01	.01	.01	.01	.01	.01	.01	.03	.03
.03	.09	.09	.09	.01	.01	.01	.01	.01	.01
.01	.01	.01	.01	.01	.01	.00	.00	.00	.00
.00	.00	.00	.00	.00	.00	.00	.00	.00	.00
.00	.00	.00	.00	.00	.00	.00	.00	.00	.00
.00	.00	.00	.00	.00	.00	.00	.00	.00	.00
.00	.00	.00	.00	.00	.00	.00	.00	.00	.00
.00	.00	.00	.00	.00	.00	.00	.00	.00	.00
.00	.00	.00	.00	.00	.00	.00	.00	.00	.00
.00	.00	.00	.00	.00	.00	.00	.00	.00	.00
.00	.00	.00	.00	.00	.00	.00	.00	.00	.00
.00	.00	.00	.00	.00	.00	.00	.00	.00	.00
.00	.00	.00	.00	.00	.00	.00	.00	.00	.00
.00	.00	.00	.00	.00	.00	.00	.00	.00	.00
.00	.00	.00	.00	.00	.00	.00	.00	.00	.00
.00	.00	.00	.00	.00	.00	.00	.00	.00	.00
.00	.00	.00	.00	.00	.00	.00	.00		

313 LU UNIFORM LOSS RATE

STRTL .34 INITIAL LOSS
CNSTL .21 UNIFORM LOSS RATE
RTIMP 40.60 PERCENT IMPERVIOUS AREA

314 UD SCS DIMENSIONLESS UNITGRAPH

TLAG .24 LAG

***

UNIT HYDROGRAPH
16 END-OF-PERIOD ORDINATES

375.	1296.	1976.	1890.	1409.	819.	511.	316.	196.	120.
74.	46.	28.	19.	12.	5.				

TOTAL RAINFALL = 3.96, TOTAL LOSS = 1.31, TOTAL EXCESS = 2.65

PEAK FLOW (CFS)	TIME (HR)		MAXIMUM AVERAGE FLOW 6-HR	24-HR	72-HR	24.92-HR
2210.	12.00	(CFS)	275.	84.	81.	81.
		(INCHES)	2.180	2.646	2.648	2.648
		(AC-FT)	136.	166.	166.	166.

CUMULATIVE AREA = 1.17 SQ MI

*** *** *** *** ***

HYDROGRAPH AT STATION 2M
FOR PLAN 1, RATIO = 1.00

TOTAL RAINFALL = 3.96, TOTAL LOSS = 1.31, TOTAL EXCESS = 2.65

PEAK FLOW (CFS)	TIME (HR)		MAXIMUM AVERAGE FLOW 6-HR	24-HR	72-HR	24.92-HR
2210.	12.08	(CFS)	275.	84.	81.	81.
		(INCHES)	2.180	2.646	2.648	2.648
		(AC-FT)	136.	166.	166.	166.

CUMULATIVE AREA = 1.17 SQ MI

*** *** *** *** ***

HYDROGRAPH AT STATION 2M
FOR PLAN 1, RATIO = .97

TOTAL RAINFALL = 3.83, TOTAL LOSS = 1.28, TOTAL EXCESS = 2.55

PEAK FLOW (CFS)	TIME (HR)		MAXIMUM AVERAGE FLOW 6-HR	24-HR	72-HR	24.92-HR
2137.	12.08	(CFS)	265.	81.	78.	78.
		(INCHES)	2.099	2.550	2.552	2.552
		(AC-FT)	131.	160.	160.	160.

CUMULATIVE AREA = 1.17 SQ MI

*** *** *** *** ***

HYDROGRAPH AT STATION 2M
FOR PLAN 1, RATIO = .95

TOTAL RAINFALL = 3.75, TOTAL LOSS = 1.26, TOTAL EXCESS = 2.49

PEAK FLOW (CFS)	TIME (HR)		MAXIMUM AVERAGE FLOW 6-HR	24-HR	72-HR	24.92-HR
2091.	12.08	(CFS)	259.	79.	76.	76.
		(INCHES)	2.049	2.490	2.492	2.492
		(AC-FT)	128.	156.	156.	156.

CUMULATIVE AREA = 1.17 SQ MI

*** *** *** *** ***

HYDROGRAPH AT STATION 2M

FOR PLAN 1, RATIO = .94

TOTAL RAINFALL = 3.72, TOTAL LOSS = 1.25, TOTAL EXCESS = 2.47

PEAK FLOW (CFS)	TIME (HR)		MAXIMUM AVERAGE FLOW 6-HR	24-HR	72-HR	24.92-HR
2072.	12.00	(CFS)	256.	78.	75.	75.
		(INCHES)	2.028	2.467	2.468	2.468
		(AC-FT)	127.	154.	155.	155.

CUMULATIVE AREA = 1.17 SQ MI

*** *** *** *** ***

HYDROGRAPH AT STATION 2M
FOR PLAN 1, RATIO = .92

TOTAL RAINFALL = 3.64, TOTAL LOSS = 1.23, TOTAL EXCESS = 2.41

PEAK FLOW (CFS)	TIME (HR)		MAXIMUM AVERAGE FLOW 6-HR	24-HR	72-HR	24.92-HR
2024.	12.00	(CFS)	249.	76.	73.	73.
		(INCHES)	1.975	2.404	2.406	2.406
		(AC-FT)	124.	151.	151.	151.

CUMULATIVE AREA = 1.17 SQ MI

*** ***

```
          **************
          *            *
315 KK    *     DT2M   *
          *            *
          **************
```

THROW AWAY 10-YR 2-HR RETENTION VOLUME:1) 8.9 AC-FT FROM SUB-BASIN 2M
(Hydrograph identified as OR-2M)
2) Balance of runoff continues on.
(Hydrograph identified as DT2M)

DT	DIVERSION		
	ISTAD	OR-2M	DIVERSION HYDROGRAPH IDENTIFICATION
	DSTRMX	8.90	MAXIMUM VOLUME TO BE DIVERTED
DI	INFLOW	.00	100000.00
DO	DIVERTED FLOW	.00	100000.00

***

*** *** *** *** ***

DIVERSION HYDROGRAPH DR-2M
FOR PLAN 1, RATIO = 1.00

PEAK FLOW (CFS)	TIME (HR)		MAXIMUM AVERAGE FLOW 6-HR	24-HR	72-HR	24.92-HR
24.	6.67	(CFS)	17.	4.	4.	4.
		(INCHES)	.135	.142	.142	.142
		(AC-FT)	8.	9.	9.	9.

CUMULATIVE AREA = 1.17 SQ MI

*** *** *** *** ***

HYDROGRAPH AT STATION DT2M
FOR PLAN 1, RATIO = 1.00

PEAK FLOW (CFS)	TIME (HR)		MAXIMUM AVERAGE FLOW 6-HR	24-HR	72-HR	24.92-HR
2210.	12.08	(CFS)	275.	79.	76.	76.
		(INCHES)	2.180	2.506	2.506	2.506
		(AC-FT)	136.	157.	157.	157.

CUMULATIVE AREA = 1.17 SQ MI

*** *** *** *** ***

DIVERSION HYDROGRAPH DR-2M
FOR PLAN 1, RATIO = .97

PEAK FLOW (CFS)	TIME (HR)		MAXIMUM AVERAGE FLOW 6-HR	24-HR	72-HR	24.92-HR
23.	6.83	(CFS)	17.	4.	4.	4.
		(INCHES)	.132	.142	.142	.142
		(AC-FT)	8.	9.	9.	9.

CUMULATIVE AREA = 1.17 SQ MI

*** *** *** *** ***

HYDROGRAPH AT STATION DT2M
FOR PLAN 1, RATIO = .97

PEAK FLOW (CFS)	TIME (HR)		MAXIMUM AVERAGE FLOW 6-HR	24-HR	72-HR	24.92-HR
2137.	12.08	(CFS)	265.	76.	73.	73.
		(INCHES)	2.099	2.410	2.410	2.410
		(AC-FT)	131.	151.	151.	151.

CUMULATIVE AREA = 1.17 SQ MI

*** *** *** *** ***

DIVERSION HYDROGRAPH DR-2M
FOR PLAN 1, RATIO = .95

PEAK FLOW (CFS)	TIME (HR)		6-HR	MAXIMUM AVERAGE FLOW 24-HR	72-HR	24.92-HR
23.	6.92	(CFS)	17.	4.	4.	4.
		(INCHES)	.131	.142	.142	.142
		(AC-FT)	8.	9.	9.	9.

CUMULATIVE AREA = 1.17 SQ MI

*** *** *** *** ***

HYDROGRAPH AT STATION DT2M
FOR PLAN 1, RATIO = .95

PEAK FLOW (CFS)	TIME (HR)		6-HR	MAXIMUM AVERAGE FLOW 24-HR	72-HR	24.92-HR
2091.	12.00	(CFS)	259.	74.	71.	71.
		(INCHES)	2.049	2.350	2.350	2.350
		(AC-FT)	128.	147.	147.	147.

CUMULATIVE AREA = 1.17 SQ MI

*** *** *** *** ***

DIVERSION HYDROGRAPH DR-2M
FOR PLAN 1, RATIO = .94

PEAK FLOW (CFS)	TIME (HR)		6-HR	MAXIMUM AVERAGE FLOW 24-HR	72-HR	24.92-HR
23.	6.92	(CFS)	16.	4.	4.	4.
		(INCHES)	.130	.142	.142	.142
		(AC-FT)	8.	9.	9.	9.

CUMULATIVE AREA = 1.17 SQ MI

*** *** *** *** ***

HYDROGRAPH AT STATION DT2M
FOR PLAN 1, RATIO = .94

PEAK FLOW (CFS)	TIME (HR)		6-HR	MAXIMUM AVERAGE FLOW 24-HR	72-HR	24.92-HR
2072.	12.08	(CFS)	256.	73.	71.	71.
		(INCHES)	2.028	2.326	2.326	2.326
		(AC-FT)	127.	146.	146.	146.

CUMULATIVE AREA = 1.17 SQ MI

```
***          ***          ***          ***          ***

                    DIVERSION HYDROGRAPH    OR-2M
                      FOR PLAN 1, RATIO =  .92

PEAK FLOW    TIME                        MAXIMUM AVERAGE FLOW
 (CFS)       (HR)                 6-HR      24-HR      72-HR    24.92-HR
   22.       7.08       (CFS)      16.        4.         4.         4.
                      (INCHES)    .129       .142       .142       .142
                       (AC-FT)      8.         9.         9.         9.

                    CUMULATIVE AREA =    1.17 SQ MI


***          ***          ***          ***          ***

                    HYDROGRAPH AT STATION     DT2M
                      FOR PLAN 1, RATIO =  .92

PEAK FLOW    TIME                        MAXIMUM AVERAGE FLOW
 (CFS)       (HR)                 6-HR      24-HR      72-HR    24.92-HR
 2024.       12.08      (CFS)     249.       71.        69.        69.
                      (INCHES)   1.975      2.263      2.263      2.263
                       (AC-FT)    124.      142.       142.       142.

                    CUMULATIVE AREA =    1.17 SQ MI


*** *** *** *** *** *** *** *** *** *** *** *** *** *** *** *** *** *** *** *** *** *** *** *** *** *** *** *** *** *** *** *** ***


          **************
          *            *
323 KK    *     HC21   *
          *            *
          **************
                      COMBINE SURFACE RUNOFF AT NODE 21
                        RM20-21 + RM18-21 + DT2M

326 HC        HYDROGRAPH COMBINATION
                   ICOMP          3  NUMBER OF HYDROGRAPHS TO COMBINE

                                                          ***

***          ***          ***          ***          ***

                    HYDROGRAPH AT STATION     HC21
                      FOR PLAN 1, RATIO = 1.00

PEAK FLOW    TIME                        MAXIMUM AVERAGE FLOW
 (CFS)       (HR)                 6-HR      24-HR      72-HR    24.92-HR
 9360.       12.67      (CFS)    2949.      870.       838.       838.
```

(INCHES)	2.041	2.407	2.407	2.407
(AC-FT)	1462.	1725.	1725.	1725.

CUMULATIVE AREA = 13.43 SQ MI

*** *** *** *** ***

HYDROGRAPH AT STATION HC21
FOR PLAN 1, RATIO = .97

PEAK FLOW (CFS)	TIME (HR)		MAXIMUM AVERAGE FLOW 6-HR	24-HR	72-HR	24.92-HR
9247.	12.67	(CFS)	2939.	837.	806.	806.
		(INCHES)	1.965	2.317	2.317	2.317
		(AC-FT)	1408.	1660.	1660.	1660.

CUMULATIVE AREA = 13.43 SQ MI

*** *** *** *** ***

HYDROGRAPH AT STATION HC21
FOR PLAN 1, RATIO = .95

PEAK FLOW (CFS)	TIME (HR)		MAXIMUM AVERAGE FLOW 6-HR	24-HR	72-HR	24.92-HR
9049.	12.67	(CFS)	2771.	817.	787.	787.
		(INCHES)	1.918	2.261	2.261	2.261
		(AC-FT)	1374.	1620.	1620.	1620.

CUMULATIVE AREA = 13.43 SQ MI

*** *** *** *** ***

HYDROGRAPH AT STATION HC21
FOR PLAN 1, RATIO = .94

PEAK FLOW (CFS)	TIME (HR)		MAXIMUM AVERAGE FLOW 6-HR	24-HR	72-HR	24.92-HR
8970.	12.67	(CFS)	2744.	909.	779.	779.
		(INCHES)	1.899	2.239	2.239	2.239
		(AC-FT)	1361.	1604.	1604.	1604.

CUMULATIVE AREA = 13.43 SQ MI

*** *** *** *** ***

HYDROGRAPH AT STATION HC21
FOR PLAN 1, RATIO = .92

PEAK FLOW (CFS)	TIME (HR)	MAXIMUM AVERAGE FLOW 6-HR	24-HR	72-HR	24.92-HR

9758.	12.67	(CFS)	2672.	788.	759.	759.
		(INCHES)	1.850	2.180	2.180	2.180
		(AC-FT)	1325.	1562.	1562.	1562.

CUMULATIVE AREA = 13.43 SQ MI

*** ***

```
          ##############
          #            #
327 KK    #  RS21-22   #
          #            #
          ##############
```

NORMAL DEPTH CHANNEL ROUTE FROM NODE 21 TO NODE 22

1) Reach Length= 4150 FT.

2) Average Velocity= 7.1 FPS

HYDROGRAPH ROUTING DATA

```
331 RS        STORAGE ROUTING
                  NSTPS          2  NUMBER OF SUBREACHES
                   ITYP       FLOW  TYPE OF INITIAL CONDITION
                 RSVRIC      -1.00  INITIAL CONDITION
                      X        .00 WORKING R AND D COEFFICIENT

332 RC        NORMAL DEPTH CHANNEL ROUTING
                    ANL       .040  LEFT OVERBANK N-VALUE
                   ANCH       .035  MAIN CHANNEL N-VALUE
                    ANR       .040  RIGHT OVERBANK N-VALUE
                  RLNTH      4150.  REACH LENGTH
                    SEL      .0040  ENERGY SLOPE
                  ELMAX     1355.0  MAX. ELEV. FOR STORAGE/OUTFLOW CALCULATION
```

CROSS-SECTION DATA

		--- LEFT OVERBANK ---		+ ------ MAIN CHANNEL -------			+ --- RIGHT OVERBANK ---	
334 RY	ELEVATION	1355.00	1352.00	1352.00	1346.00	1346.00	1351.00	1353.00	1355.00
333 RX	DISTANCE	.00	60.00	110.00	123.00	193.00	203.00	253.00	300.00

***

COMPUTED STORAGE-OUTFLOW-ELEVATION DATA

STORAGE	.00	3.20	6.50	9.88	13.35	16.91	20.55	24.29	28.12	32.03
OUTFLOW	.00	54.39	173.22	341.61	553.76	806.30	1097.01	1424.32	1787.12	2184.57
ELEVATION	1346.00	1346.47	1346.95	1347.42	1347.89	1348.37	1348.84	1349.32	1349.79	1350.26
STORAGE	36.04	40.18	44.83	50.82	59.21	68.55	78.83	90.04	102.18	115.25
OUTFLOW	2616.04	3091.13	3618.41	4209.30	4922.21	5737.43	6657.17	7684.63	8824.65	10082.31
ELEVATION	1350.74	1351.21	1351.68	1352.16	1352.63	1353.10	1353.58	1354.05	1354.53	1355.00

*** *** *** *** ***

HYDROGRAPH AT STATION RS21-22
FOR PLAN 1, RATIO = 1.00

PEAK FLOW (CFS)	TIME (HR)		MAXIMUM AVERAGE FLOW 6-HR	24-HR	72-HR	24.92-HR
9452.	12.83	(CFS)	2949.	867.	835.	835.
		(INCHES)	2.041	2.400	2.400	2.400
		(AC-FT)	1462.	1720.	1720.	1720.

PEAK STORAGE (AC-FT)	TIME (HR)	MAXIMUM AVERAGE STORAGE 6-HR	24-HR	72-HR	24.92-HR
54.	12.83	20.	7.	7.	7.

PEAK STAGE (FEET)	TIME (HR)	MAXIMUM AVERAGE STAGE 6-HR	24-HR	72-HR	24.92-HR
1354.76	12.83	1350.17	1347.69	1347.63	1347.63

CUMULATIVE AREA = 13.43 SQ MI

*** *** *** *** ***

HYDROGRAPH AT STATION RS21-22
FOR PLAN 1, RATIO = .97

PEAK FLOW (CFS)	TIME (HR)		MAXIMUM AVERAGE FLOW 6-HR	24-HR	72-HR	24.92-HR
9134.	12.83	(CFS)	2839.	835.	804.	804.
		(INCHES)	1.965	2.311	2.311	2.311
		(AC-FT)	1409.	1655.	1655.	1655.

PEAK STORAGE (AC-FT)	TIME (HR)	MAXIMUM AVERAGE STORAGE 6-HR	24-HR	72-HR	24.92-HR
53.	12.83	19.	7.	7.	7.

PEAK STAGE (FEET)	TIME (HR)	MAXIMUM AVERAGE STAGE 6-HR	24-HR	72-HR	24.92-HR
1354.64	12.83	1350.09	1347.66	1347.60	1347.60

CUMULATIVE AREA = 13.43 SQ MI

*** *** *** *** ***

HYDROGRAPH AT STATION RS21-22
FOR PLAN 1, RATIO = .95

PEAK FLOW (CFS)	TIME (HR)		MAXIMUM AVERAGE FLOW 6-HR	24-HR	72-HR	24.92-HR
8935.	12.83	(CFS)	2771.	814.	784.	784.
		(INCHES)	1.918	2.255	2.255	2.255
		(AC-FT)	1374.	1615.	1615.	1615.

PEAK STORAGE (AC-FT)	TIME (HR)	MAXIMUM AVERAGE STORAGE 6-HR	24-HR	72-HR	24.92-HR
52.	12.83	19.	7.	7.	7.

PEAK STAGE (FEET)	TIME (HR)	MAXIMUM AVERAGE STAGE 6-HR	24-HR	72-HR	24.92-HR
1354.57	12.83	1350.04	1347.63	1347.57	1347.57

CUMULATIVE AREA = 13.43 SQ MI

*** *** *** *** ***

HYDROGRAPH AT STATION RS21-22
FOR PLAN 1, RATIO = .94

PEAK FLOW (CFS)	TIME (HR)		MAXIMUM AVERAGE FLOW 6-HR	24-HR	72-HR	24.92-HR
8856.	12.83	(CFS)	2743.	806.	777.	777.
		(INCHES)	1.899	2.232	2.232	2.232
		(AC-FT)	1360.	1599.	1599.	1599.

PEAK STORAGE (AC-FT)	TIME (HR)	MAXIMUM AVERAGE STORAGE 6-HR	24-HR	72-HR	24.92-HR
51.	12.83	18.	7.	6.	6.

PEAK STAGE (FEET)	TIME (HR)	MAXIMUM AVERAGE STAGE 6-HR	24-HR	72-HR	24.92-HR
1354.54	12.83	1350.02	1347.62	1347.56	1347.56

CUMULATIVE AREA = 13.43 SQ MI

*** *** *** *** ***

HYDROGRAPH AT STATION RS21-22
FOR PLAN 1, RATIO = .92

PEAK FLOW (CFS)	TIME (HR)		MAXIMUM AVERAGE FLOW 6-HR	24-HR	72-HR	24.92-HR
8647.	12.83	(CFS)	2672.	785.	756.	756.
		(INCHES)	1.849	2.174	2.174	2.174
		(AC-FT)	1325.	1557.	1557.	1557.

PEAK STORAGE (AC-FT)	TIME (HR)	MAXIMUM AVERAGE STORAGE 6-HR	24-HR	72-HR	24.92-HR
50.	12.83	18.	7.	6.	6.

PEAK STAGE (FEET)	TIME (HR)	MAXIMUM AVERAGE STAGE 6-HR	24-HR	72-HR	24.92-HR
1354.45	12.83	1349.96	1347.60	1347.54	1347.54

CUMULATIVE AREA = 13.43 SQ MI

*** ***

```
              ***************
              *             *
335 KK        *      20     *
              *             *
              ***************
```

RUNOFF GENERATED ON SUB-BASIN 20

SUBBASIN RUNOFF DATA

337 BA SUBBASIN CHARACTERISTICS

TAREA .64 SUBBASIN AREA

PRECIPITATION DATA

13 PB STORM 3.96 BASIN TOTAL PRECIPITATION

14 PI INCREMENTAL PRECIPITATION PATTERN

.00	.00	.00	.00	.00	.00	.00	.00	.00	.00
.00	.00	.00	.00	.00	.00	.00	.00	.00	.00
.00	.00	.00	.00	.00	.00	.00	.00	.00	.00
.00	.00	.00	.00	.00	.00	.00	.00	.00	.00
.00	.00	.00	.00	.00	.00	.00	.00	.00	.00
.00	.00	.00	.00	.00	.00	.00	.00	.00	.00
.00	.00	.00	.00	.00	.00	.00	.00	.00	.00
.00	.00	.00	.00	.00	.00	.00	.00	.00	.00
.00	.00	.00	.00	.00	.00	.00	.00	.00	.00
.00	.00	.00	.00	.00	.00	.00	.00	.00	.00
.00	.00	.00	.00	.00	.00	.00	.00	.00	.00
.00	.00	.00	.00	.00	.00	.00	.00	.00	.00
.00	.00	.00	.00	.00	.00	.00	.01	.00	.01
.01	.01	.01	.01	.01	.01	.01	.01	.03	.03
.03	.09	.09	.09	.01	.01	.01	.01	.01	.01
.01	.01	.01	.01	.01	.01	.00	.00	.00	.00
.00	.00	.00	.00	.00	.00	.00	.00	.00	.00
.00	.00	.00	.00	.00	.00	.00	.00	.00	.00
.00	.00	.00	.00	.00	.00	.00	.00	.00	.00
.00	.00	.00	.00	.00	.00	.00	.00	.00	.00
.00	.00	.00	.00	.00	.00	.00	.00	.00	.00
.00	.00	.00	.00	.00	.00	.00	.00	.00	.00
.00	.00	.00	.00	.00	.00	.00	.00	.00	.00
.00	.00	.00	.00	.00	.00	.00	.00	.00	.00
.00	.00	.00	.00	.00	.00	.00	.00	.00	.00
.00	.00	.00	.00	.00	.00	.00	.00	.00	.00
.00	.00	.00	.00	.00	.00	.00	.00	.00	.00
.00	.00	.00	.00	.00	.00	.00	.00	.00	.00
.00	.00	.00	.00	.00	.00	.00	.00		

339 LU UNIFORM LOSS RATE

STRTL .31 INITIAL LOSS

CNSTL .23 UNIFORM LOSS RATE

RTIMP 38.10 PERCENT IMPERVIOUS AREA

339 UD SCS DIMENSIONLESS UNITGRAPH
TLAG .67 LAG

***

UNIT HYDROGRAPH
42 END-OF-PERIOD ORDINATES

18.	57.	109.	182.	274.	357.	408.	431.	431.	411.
376.	336.	283.	226.	182.	150.	123.	104.	87.	71.
59.	48.	40.	33.	27.	22.	19.	15.	13.	11.
9.	7.	6.	5.	4.	4.	3.	2.	2.	1.
1.	0.								

TOTAL RAINFALL = 3.96, TOTAL LOSS = 1.40, TOTAL EXCESS = 2.56

PEAK FLOW (CFS)	TIME (HR)		MAXIMUM AVERAGE FLOW 6-HR	24-HR	72-HR	24.92-HR
657.	12.50	(CFS)	146.	44.	42.	42.
		(INCHES)	2.117	2.553	2.556	2.556
		(AC-FT)	72.	87.	87.	87.

CUMULATIVE AREA = .64 SQ MI

*** *** *** *** ***

HYDROGRAPH AT STATION 20
FOR PLAN 1, RATIO = 1.00

TOTAL RAINFALL = 3.96, TOTAL LOSS = 1.40, TOTAL EXCESS = 2.56

PEAK FLOW (CFS)	TIME (HR)		MAXIMUM AVERAGE FLOW 6-HR	24-HR	72-HR	24.92-HR
657.	12.50	(CFS)	146.	44.	42.	42.
		(INCHES)	2.117	2.553	2.556	2.556
		(AC-FT)	72.	87.	87.	87.

CUMULATIVE AREA = .64 SQ MI

*** *** *** *** ***

HYDROGRAPH AT STATION 20
FOR PLAN 1, RATIO = .97

TOTAL RAINFALL = 3.83, TOTAL LOSS = 1.37, TOTAL EXCESS = 2.46

PEAK FLOW (CFS)	TIME (HR)		MAXIMUM AVERAGE FLOW 6-HR	24-HR	72-HR	24.92-HR
634.	12.50	(CFS)	140.	42.	41.	41.
		(INCHES)	2.037	2.459	2.462	2.462
		(AC-FT)	69.	84.	84.	84.

CUMULATIVE AREA = .64 SQ MI

*** *** *** *** ***

HYDROGRAPH AT STATION 20
FOR PLAN 1, RATIO = .95

TOTAL RAINFALL = 3.75, TOTAL LOSS = 1.35, TOTAL EXCESS = 2.41

PEAK FLOW (CFS)	TIME (HR)		MAXIMUM AVERAGE FLOW 6-HR	24-HR	72-HR	24.92-HR
619.	12.50	(CFS)	137.	41.	40.	40.
		(INCHES)	1.988	2.402	2.404	2.404
		(AC-FT)	68.	82.	82.	82.

CUMULATIVE AREA = .64 SQ MI

*** *** *** *** ***

HYDROGRAPH AT STATION 20
FOR PLAN 1, RATIO = .94

TOTAL RAINFALL = 3.72, TOTAL LOSS = 1.34, TOTAL EXCESS = 2.38

PEAK FLOW (CFS)	TIME (HR)		MAXIMUM AVERAGE FLOW 6-HR	24-HR	72-HR	24.92-HR
614.	12.50	(CFS)	135.	41.	39.	39.
		(INCHES)	1.969	2.379	2.381	2.381
		(AC-FT)	67.	81.	81.	81.

CUMULATIVE AREA = .64 SQ MI

*** *** *** *** ***

HYDROGRAPH AT STATION 20
FOR PLAN 1, RATIO = .92

TOTAL RAINFALL = 3.64, TOTAL LOSS = 1.32, TOTAL EXCESS = 2.32

PEAK FLOW (CFS)	TIME (HR)		MAXIMUM AVERAGE FLOW 6-HR	24-HR	72-HR	24.92-HR
599.	12.50	(CFS)	132.	40.	39.	39.
		(INCHES)	1.918	2.318	2.321	2.321
		(AC-FT)	65.	79.	79.	79.

CUMULATIVE AREA = .64 SQ MI

*** ***

```
          ***************
          *             *
340 KK    *     DT20    *
          *             *
          ***************
                    THROW AWAY 10-YR 2-HR RETENTION VOLUME:1) 2.4 AC-FT FROM SUB-BASIN 20
                                                              (Hydrograph identified as OR-20)
                                                            2) Balance of runoff continues on.
                                                              (Hydrograph identified as DT20)

   DT        DIVERSION
                 ISTAD      OR-20  DIVERSION HYDROGRAPH IDENTIFICATION
               DSTRMX       2.40  MAXIMUM VOLUME TO BE DIVERTED

   DI          INFLOW        .00  10000.00

   DQ     DIVERTED FLOW      .00  10000.00

                                                        ***

    ***         ***         ***         ***         ***

                  DIVERSION HYDROGRAPH   OR-20
                   FOR PLAN 1, RATIO = 1.00

PEAK FLOW    TIME                      MAXIMUM AVERAGE FLOW
 (CFS)       (HR)              6-HR      24-HR      72-HR    24.92-HR
   9.        4.67     (CFS)     5.         1.         1.         1.
                    (INCHES)   .070       .070       .070       .070
                     (AC-FT)     2.         2.         2.         2.

                  CUMULATIVE AREA =    .64 SQ MI


    ***         ***         ***         ***         ***

                  HYDROGRAPH AT STATION    DT20
                   FOR PLAN 1, RATIO = 1.00

PEAK FLOW    TIME                      MAXIMUM AVERAGE FLOW
 (CFS)       (HR)              6-HR      24-HR      72-HR    24.92-HR
 657.       12.50     (CFS)   146.        43.        41.        41.
                    (INCHES)  2.117      2.486      2.486      2.486
                     (AC-FT)    72.        85.        85.        85.

                  CUMULATIVE AREA =    .64 SQ MI


    ***         ***         ***         ***         ***

                  DIVERSION HYDROGRAPH   OR-20
                   FOR PLAN 1, RATIO =  .97

PEAK FLOW    TIME                      MAXIMUM AVERAGE FLOW
```

(CFS)	(HR)		6-HR	24-HR	72-HR	24.92-HR
9.	4.75	(CFS)	5.	1.	1.	1.
		(INCHES)	.070	.070	.070	.070
		(AC-FT)	2.	2.	2.	2.

CUMULATIVE AREA = .64 SQ MI

*** *** *** *** ***

HYDROGRAPH AT STATION DT20
FOR PLAN 1, RATIO = .97

PEAK FLOW (CFS)	TIME (HR)		MAXIMUM AVERAGE FLOW 6-HR	24-HR	72-HR	24.92-HR
634.	12.50	(CFS)	140.	41.	40.	40.
		(INCHES)	2.037	2.391	2.391	2.391
		(AC-FT)	69.	81.	81.	81.

CUMULATIVE AREA = .64 SQ MI

*** *** *** *** ***

DIVERSION HYDROGRAPH OR-20
FOR PLAN 1, RATIO = .95

PEAK FLOW (CFS)	TIME (HR)		MAXIMUM AVERAGE FLOW 6-HR	24-HR	72-HR	24.92-HR
9.	4.83	(CFS)	5.	1.	1.	1.
		(INCHES)	.070	.070	.070	.070
		(AC-FT)	2.	2.	2.	2.

CUMULATIVE AREA = .64 SQ MI

*** *** *** *** ***

HYDROGRAPH AT STATION DT20
FOR PLAN 1, RATIO = .95

PEAK FLOW (CFS)	TIME (HR)		MAXIMUM AVERAGE FLOW 6-HR	24-HR	72-HR	24.92-HR
619.	12.50	(CFS)	137.	40.	39.	39.
		(INCHES)	1.988	2.334	2.334	2.334
		(AC-FT)	68.	80.	80.	80.

CUMULATIVE AREA = .64 SQ MI

*** *** *** *** ***

DIVERSION HYDROGRAPH OR-20
FOR PLAN 1, RATIO = .94

PEAK FLOW (CFS)	TIME (HR)		MAXIMUM AVERAGE FLOW 6-HR	24-HR	72-HR	24.92-HR
9.	4.92	(CFS)	5.	1.	1.	1.
		(INCHES)	.070	.070	.070	.070
		(AC-FT)	2.	2.	2.	2.

CUMULATIVE AREA = .64 SQ MI

*** *** *** *** ***

HYDROGRAPH AT STATION DT20
FOR PLAN 1, RATIO = .94

PEAK FLOW (CFS)	TIME (HR)		MAXIMUM AVERAGE FLOW 6-HR	24-HR	72-HR	24.92-HR
614.	12.50	(CFS)	135.	40.	38.	38.
		(INCHES)	1.969	2.311	2.311	2.311
		(AC-FT)	67.	79.	79.	79.

CUMULATIVE AREA = .64 SQ MI

*** *** *** *** ***

DIVERSION HYDROGRAPH DR-20
FOR PLAN 1, RATIO = .92

PEAK FLOW (CFS)	TIME (HR)		MAXIMUM AVERAGE FLOW 6-HR	24-HR	72-HR	24.92-HR
9.	4.92	(CFS)	5.	1.	1.	1.
		(INCHES)	.070	.070	.070	.070
		(AC-FT)	2.	2.	2.	2.

CUMULATIVE AREA = .64 SQ MI

*** *** *** *** ***

HYDROGRAPH AT STATION DT20
FOR PLAN 1, RATIO = .92

PEAK FLOW (CFS)	TIME (HR)		MAXIMUM AVERAGE FLOW 6-HR	24-HR	72-HR	24.92-HR
599.	12.50	(CFS)	132.	39.	37.	37.
		(INCHES)	1.918	2.250	2.250	2.250
		(AC-FT)	65.	77.	77.	77.

CUMULATIVE AREA = .64 SQ MI

*** ***

```
          ***************
          *             *
348 KK    *     HC22    *
          *             *
          ***************
```

COMBINE SURFACE RUNOFF AT NODE 22
RM21-22 + DT20

351 HC HYDROGRAPH COMBINATION
ICOMP 2 NUMBER OF HYDROGRAPHS TO COMBINE

*** *** *** *** ***

HYDROGRAPH AT STATION HC22
FOR PLAN 1, RATIO = 1.00

PEAK FLOW (CFS)	TIME (HR)		6-HR	MAXIMUM AVERAGE FLOW 24-HR	72-HR	24.92-HR
10001.	12.75	(CFS)	3094.	910.	876.	876.
		(INCHES)	2.044	2.404	2.404	2.404
		(AC-FT)	1534.	1804.	1804.	1804.

CUMULATIVE AREA = 14.07 SQ MI

*** *** *** *** ***

HYDROGRAPH AT STATION HC22
FOR PLAN 1, RATIO = .97

PEAK FLOW (CFS)	TIME (HR)		6-HR	MAXIMUM AVERAGE FLOW 24-HR	72-HR	24.92-HR
9661.	12.75	(CFS)	2979.	876.	843.	843.
		(INCHES)	1.968	2.314	2.314	2.314
		(AC-FT)	1477.	1737.	1737.	1737.

CUMULATIVE AREA = 14.07 SQ MI

*** *** *** *** ***

HYDROGRAPH AT STATION HC22
FOR PLAN 1, RATIO = .95

PEAK FLOW (CFS)	TIME (HR)		6-HR	MAXIMUM AVERAGE FLOW 24-HR	72-HR	24.92-HR
9444.	12.75	(CFS)	2907.	854.	823.	823.
		(INCHES)	1.921	2.258	2.258	2.258
		(AC-FT)	1441.	1695.	1695.	1695.

CUMULATIVE AREA = 14.07 SQ MI

*** *** *** *** ***

HYDROGRAPH AT STATION HC22
FOR PLAN 1, RATIO = .94

PEAK FLOW (CFS)	TIME (HR)		MAXIMUM AVERAGE FLOW 6-HR	24-HR	72-HR	24.92-HR
9358.	12.75	(CFS)	2878.	846.	815.	815.
		(INCHES)	1.902	2.236	2.236	2.236
		(AC-FT)	1427.	1678.	1678.	1678.

CUMULATIVE AREA = 14.07 SQ MI

*** *** *** *** ***

HYDROGRAPH AT STATION HC22
FOR PLAN 1, RATIO = .92

PEAK FLOW (CFS)	TIME (HR)		MAXIMUM AVERAGE FLOW 6-HR	24-HR	72-HR	24.92-HR
9131.	12.75	(CFS)	2803.	824.	794.	794.
		(INCHES)	1.852	2.177	2.177	2.177
		(AC-FT)	1390.	1634.	1634.	1634.

CUMULATIVE AREA = 14.07 SQ MI

*** ***

```
          **************
          *            *
352 KK    *   RS22-6   *
          *            *
          **************
```

NORMAL DEPTH CHANNEL ROUTE FROM NODE 22 TO NODE 6
1) Reach Length= 2700 FT.
2) Average Velocity= 8.8 FPS

HYDROGRAPH ROUTING DATA

356 RS STORAGE ROUTING

NSTPS	1	NUMBER OF SUBREACHES
ITYP	FLOW	TYPE OF INITIAL CONDITION
RSVRIC	-1.00	INITIAL CONDITION
X	.00	WORKING R AND D COEFFICIENT

357 RC NORMAL DEPTH CHANNEL ROUTING

ANL	.040	LEFT OVERBANK N-VALUE
ANCH	.035	MAIN CHANNEL N-VALUE
ANR	.040	RIGHT OVERBANK N-VALUE

RLNTH	2700.	REACH LENGTH
SEL	.0050	ENERGY SLOPE
ELMAX	1337.0	MAX. ELEV. FOR STORAGE/OUTFLOW CALCULATION

CROSS-SECTION DATA

		--- LEFT OVERBANK ---			+ ------ MAIN CHANNEL -------			+ --- RIGHT OVERBANK ---	
359 RY	ELEVATION	1337.00	1334.00	1332.00	1326.00	1326.00	1332.00	1334.00	1337.00
358 RX	DISTANCE	.00	70.00	85.00	97.00	157.00	169.00	219.00	279.00

***

COMPUTED STORAGE-OUTFLOW-ELEVATION DATA

STORAGE	.00	2.19	4.47	6.83	9.28	11.81	14.42	17.11	19.89	22.75
OUTFLOW	.00	72.91	232.46	459.08	745.33	1087.06	1481.67	1927.46	2423.27	2968.34
ELEVATION	1326.00	1326.58	1327.16	1327.74	1328.32	1328.89	1329.47	1330.05	1330.63	1331.21
STORAGE	25.69	28.83	32.62	37.07	42.21	48.17	55.03	62.80	71.46	81.02
OUTFLOW	3562.21	4255.38	5047.30	5928.10	6909.24	8005.01	9237.94	10620.85	12166.88	13888.82
ELEVATION	1331.79	1332.37	1332.95	1333.53	1334.11	1334.68	1335.26	1335.84	1336.42	1337.00

*** *** *** *** ***

HYDROGRAPH AT STATION RS22-6
FOR PLAN 1, RATIO = 1.00

PEAK FLOW (CFS)	TIME (HR)		MAXIMUM AVERAGE FLOW 6-HR	24-HR	72-HR	24.92-HR
9940.	12.83	(CFS)	3093.	908.	875.	875.
		(INCHES)	2.044	2.400	2.400	2.400
		(AC-FT)	1534.	1801.	1801.	1801.

PEAK STORAGE (AC-FT)	TIME (HR)	MAXIMUM AVERAGE STORAGE 6-HR	24-HR	72-HR	24.92-HR
59.	12.83	22.	8.	8.	8.

PEAK STAGE (FEET)	TIME (HR)	MAXIMUM AVERAGE STAGE 6-HR	24-HR	72-HR	24.92-HR
1335.56	12.83	1330.45	1327.78	1327.72	1327.72

CUMULATIVE AREA = 14.07 SQ MI

*** *** *** *** ***

HYDROGRAPH AT STATION RS22-6
FOR PLAN 1, RATIO = .97

PEAK FLOW (CFS)	TIME (HR)		MAXIMUM AVERAGE FLOW 6-HR	24-HR	72-HR	24.92-HR
9601.	12.83	(CFS)	2978.	874.	842.	842.
		(INCHES)	1.968	2.310	2.310	2.310
		(AC-FT)	1477.	1734.	1734.	1734.

PEAK STORAGE (AC-FT)	TIME (HR)	MAXIMUM AVERAGE STORAGE 6-HR	24-HR	72-HR	24.92-HR
57.	12.83	21.	8.	8.	8.

PEAK STAGE (FEET)	TIME (HR)	MAXIMUM AVERAGE STAGE 6-HR	24-HR	72-HR	24.92-HR
1335.42	12.83	1330.36	1327.74	1327.68	1327.68

CUMULATIVE AREA = 14.07 SQ MI

*** *** *** *** ***

HYDROGRAPH AT STATION RS22-6
FOR PLAN 1, RATIO = .95

PEAK FLOW (CFS)	TIME (HR)		MAXIMUM AVERAGE FLOW 6-HR	24-HR	72-HR	24.92-HR
9386.	12.83	(CFS)	2907.	853.	822.	822.
		(INCHES)	1.920	2.254	2.254	2.254
		(AC-FT)	1441.	1692.	1692.	1692.

PEAK STORAGE (AC-FT)	TIME (HR)	MAXIMUM AVERAGE STORAGE 6-HR	24-HR	72-HR	24.92-HR
56.	12.83	21.	8.	7.	7.

PEAK STAGE (FEET)	TIME (HR)	MAXIMUM AVERAGE STAGE 6-HR	24-HR	72-HR	24.92-HR
1335.33	12.83	1330.31	1327.72	1327.65	1327.65

CUMULATIVE AREA = 14.07 SQ MI

*** *** *** *** ***

HYDROGRAPH AT STATION RS22-6
FOR PLAN 1, RATIO = .94

PEAK FLOW (CFS)	TIME (HR)		MAXIMUM AVERAGE FLOW 6-HR	24-HR	72-HR	24.92-HR
9301.	12.83	(CFS)	2878.	845.	813.	813.
		(INCHES)	1.902	2.232	2.232	2.232
		(AC-FT)	1427.	1675.	1675.	1675.

PEAK STORAGE (AC-FT)	TIME (HR)	MAXIMUM AVERAGE STORAGE 6-HR	24-HR	72-HR	24.92-HR
55.	12.83	21.	8.	7.	7.

PEAK STAGE (FEET)	TIME (HR)	MAXIMUM AVERAGE STAGE 6-HR	24-HR	72-HR	24.92-HR
1335.29	12.83	1330.29	1327.71	1327.65	1327.65

CUMULATIVE AREA = 14.07 SQ MI

*** *** *** *** ***

HYDROGRAPH AT STATION RS22-6
FOR PLAN 1, RATIO = .92

PEAK FLOW (CFS)	TIME (HR)		MAXIMUM AVERAGE FLOW 6-HR	24-HR	72-HR	24.92-HR
9076.	12.83	(CFS)	2803.	822.	792.	792.
		(INCHES)	1.852	2.173	2.173	2.173
		(AC-FT)	1390.	1631.	1631.	1631.

PEAK STORAGE (AC-FT)	TIME (HR)	MAXIMUM AVERAGE STORAGE 6-HR	24-HR	72-HR	24.92-HR
54.	12.83	20.	7.	7.	7.

PEAK STAGE (FEET)	TIME (HR)	MAXIMUM AVERAGE STAGE 6-HR	24-HR	72-HR	24.92-HR
1335.19	12.83	1330.23	1327.68	1327.62	1327.62

CUMULATIVE AREA = 14.07 SQ MI

*** ***

```
          ***************
          *             *
360 KK    *       2N    *
          *             *
          ***************
```

RUNOFF GENERATED ON SUB-BASIN 2N

SUBBASIN RUNOFF DATA

362 BA SUBBASIN CHARACTERISTICS
TAREA .47 SUBBASIN AREA

PRECIPITATION DATA

13 PB STORM 3.96 BASIN TOTAL PRECIPITATION

14 PI INCREMENTAL PRECIPITATION PATTERN

.00	.00	.00	.00	.00	.00	.00	.00	.00	.00
.00	.00	.00	.00	.00	.00	.00	.00	.00	.00
.00	.00	.00	.00	.00	.00	.00	.00	.00	.00
.00	.00	.00	.00	.00	.00	.00	.00	.00	.00
.00	.00	.00	.00	.00	.00	.00	.00	.00	.00
.00	.00	.00	.00	.00	.00	.00	.00	.00	.00
.00	.00	.00	.00	.00	.00	.00	.00	.00	.00
.00	.00	.00	.00	.00	.00	.00	.00	.00	.00
.00	.00	.00	.00	.00	.00	.00	.00	.00	.00
.00	.00	.00	.00	.00	.00	.00	.00	.00	.00
.00	.00	.00	.00	.00	.00	.00	.00	.00	.00

```
.00    .00    .00    .00    .00    .00    .00    .00    .00    .00
.00    .00    .00    .00    .00    .00    .00    .01    .00    .01
.01    .01    .01    .01    .01    .01    .01    .01    .03    .03
.03    .09    .09    .09    .01    .01    .01    .01    .01    .01
.01    .01    .01    .01    .01    .01    .00    .00    .00    .00
.00    .00    .00    .00    .00    .00    .00    .00    .00    .00
.00    .00    .00    .00    .00    .00    .00    .00    .00    .00
.00    .00    .00    .00    .00    .00    .00    .00    .00    .00
.00    .00    .00    .00    .00    .00    .00    .00    .00    .00
.00    .00    .00    .00    .00    .00    .00    .00    .00    .00
.00    .00    .00    .00    .00    .00    .00    .00    .00    .00
.00    .00    .00    .00    .00    .00    .00    .00    .00    .00
.00    .00    .00    .00    .00    .00    .00    .00    .00    .00
.00    .00    .00    .00    .00    .00    .00    .00    .00    .00
.00    .00    .00    .00    .00    .00    .00    .00    .00    .00
.00    .00    .00    .00    .00    .00    .00    .00    .00    .00
.00    .00    .00    .00    .00    .00    .00    .00    .00    .00
.00    .00    .00    .00    .00    .00    .00    .00
```

363 LU UNIFORM LOSS RATE

STRTL	.31	INITIAL LOSS
CNSTL	.16	UNIFORM LOSS RATE
RTIMP	33.30	PERCENT IMPERVIOUS AREA

364 UD SCS DIMENSIONLESS UNITGRAPH

TLAG	.20	LAG

***

UNIT HYDROGRAPH
14 END-OF-PERIOD ORDINATES

232.	763.	947.	757.	421.	242.	137.	79.	45.	26.
14.	9.	5.	2.						

TOTAL RAINFALL = 3.96, TOTAL LOSS = 1.37, TOTAL EXCESS = 2.59

PEAK FLOW (CFS)	TIME (HR)		MAXIMUM AVERAGE FLOW 6-HR	24-HR	72-HR	24.92-HR
995.	12.08	(CFS)	113.	33.	32.	32.
		(INCHES)	2.210	2.592	2.593	2.593
		(AC-FT)	56.	66.	66.	66.

CUMULATIVE AREA = .47 SQ MI

*** *** *** *** ***

HYDROGRAPH AT STATION 2N
FOR PLAN 1, RATIO = 1.00

TOTAL RAINFALL = 3.96, TOTAL LOSS = 1.37, TOTAL EXCESS = 2.59

PEAK FLOW (CFS)	TIME (HR)		MAXIMUM AVERAGE FLOW 6-HR	24-HR	72-HR	24.92-HR
995.	12.08	(CFS)	113.	33.	32.	32.

(INCHES)	2.210	2.592	2.593	2.593
(AC-FT)	56.	66.	66.	66.

CUMULATIVE AREA = .47 SQ MI

*** *** *** *** ***

HYDROGRAPH AT STATION 2N
FOR PLAN 1, RATIO = .97

TOTAL RAINFALL = 3.83, TOTAL LOSS = 1.33, TOTAL EXCESS = 2.50

PEAK FLOW (CFS)	TIME (HR)		MAXIMUM AVERAGE FLOW 6-HR	24-HR	72-HR	24.92-HR
962.	12.00	(CFS)	109.	32.	31.	31.
		(INCHES)	2.127	2.497	2.498	2.498
		(AC-FT)	54.	63.	63.	63.

CUMULATIVE AREA = .47 SQ MI

*** *** *** *** ***

HYDROGRAPH AT STATION 2N
FOR PLAN 1, RATIO = .95

TOTAL RAINFALL = 3.75, TOTAL LOSS = 1.32, TOTAL EXCESS = 2.44

PEAK FLOW (CFS)	TIME (HR)		MAXIMUM AVERAGE FLOW 6-HR	24-HR	72-HR	24.92-HR
942.	12.00	(CFS)	106.	31.	30.	30.
		(INCHES)	2.075	2.438	2.439	2.439
		(AC-FT)	53.	62.	62.	62.

CUMULATIVE AREA = .47 SQ MI

*** *** *** *** ***

HYDROGRAPH AT STATION 2N
FOR PLAN 1, RATIO = .94

TOTAL RAINFALL = 3.72, TOTAL LOSS = 1.31, TOTAL EXCESS = 2.42

PEAK FLOW (CFS)	TIME (HR)		MAXIMUM AVERAGE FLOW 6-HR	24-HR	72-HR	24.92-HR
934.	12.00	(CFS)	105.	31.	30.	30.
		(INCHES)	2.055	2.414	2.415	2.415
		(AC-FT)	52.	61.	61.	61.

CUMULATIVE AREA = .47 SQ MI

*** *** *** *** ***

HYDROGRAPH AT STATION 2N
FOR PLAN 1, RATIO = .92

TOTAL RAINFALL = 3.64, TOTAL LOSS = 1.29, TOTAL EXCESS = 2.35

PEAK FLOW (CFS)	TIME (HR)		MAXIMUM AVERAGE FLOW 6-HR	24-HR	72-HR	24.92-HR
912.	12.08	(CFS)	102.	30.	29.	29.
		(INCHES)	2.000	2.352	2.353	2.353
		(AC-FT)	51.	60.	60.	60.

CUMULATIVE AREA = .47 SQ MI

*** ***

```
         ##############
         #            #
365 KK   #      HC6   #
         #            #
         ##############
```

COMBINE SURFACE RUNOFF AT NODE 6
RN22-6 + 2N

368 KO OUTPUT CONTROL VARIABLES

IPRNT	3	PRINT CONTROL
IPLOT	0	PLOT CONTROL
QSCAL	0.	HYDROGRAPH PLOT SCALE
IPNCH	0	PUNCH COMPUTED HYDROGRAPH
IOUT	21	SAVE HYDROGRAPH ON THIS UNIT
ISAV1	1	FIRST ORDINATE PUNCHED OR SAVED
ISAV2	300	LAST ORDINATE PUNCHED OR SAVED
TIMINT	.083	TIME INTERVAL IN HOURS

369 HC HYDROGRAPH COMBINATION

ICOMP	2	NUMBER OF HYDROGRAPHS TO COMBINE

***

*** *** *** *** ***

HYDROGRAPH AT STATION HC6
FOR PLAN 1, RATIO = 1.00

PEAK FLOW (CFS)	TIME (HR)		MAXIMUM AVERAGE FLOW 6-HR	24-HR	72-HR	24.92-HR
10036.	12.83	(CFS)	3205.	941.	907.	907.
		(INCHES)	2.049	2.406	2.406	2.406
		(AC-FT)	1589.	1867.	1867.	1867.

CUMULATIVE AREA = 14.55 SQ MI

*** *** *** *** ***

HYDROGRAPH AT STATION HC6
FOR PLAN 1, RATIO = .97

PEAK FLOW (CFS)	TIME (HR)		MAXIMUM AVERAGE FLOW 6-HR	24-HR	72-HR	24.92-HR
9693.	12.83	(CFS)	3086.	906.	873.	873.
		(INCHES)	1.972	2.316	2.316	2.316
		(AC-FT)	1530.	1797.	1797.	1797.

CUMULATIVE AREA = 14.55 SQ MI

*** *** *** *** ***

HYDROGRAPH AT STATION HC6
FOR PLAN 1, RATIO = .95

PEAK FLOW (CFS)	TIME (HR)		MAXIMUM AVERAGE FLOW 6-HR	24-HR	72-HR	24.92-HR
9476.	12.83	(CFS)	3012.	884.	852.	852.
		(INCHES)	1.925	2.260	2.260	2.260
		(AC-FT)	1493.	1753.	1754.	1754.

CUMULATIVE AREA = 14.55 SQ MI

*** *** *** *** ***

HYDROGRAPH AT STATION HC6
FOR PLAN 1, RATIO = .94

PEAK FLOW (CFS)	TIME (HR)		MAXIMUM AVERAGE FLOW 6-HR	24-HR	72-HR	24.92-HR
9390.	12.83	(CFS)	2982.	875.	843.	843.
		(INCHES)	1.906	2.238	2.238	2.238
		(AC-FT)	1479.	1736.	1736.	1736.

CUMULATIVE AREA = 14.55 SQ MI

*** *** *** *** ***

HYDROGRAPH AT STATION HC6
FOR PLAN 1, RATIO = .92

PEAK FLOW (CFS)	TIME (HR)		MAXIMUM AVERAGE FLOW 6-HR	24-HR	72-HR	24.92-HR
9162.	12.83	(CFS)	2904.	852.	821.	821.
		(INCHES)	1.856	2.179	2.179	2.179
		(AC-FT)	1440.	1691.	1691.	1691.

CUMULATIVE AREA = 14.55 SQ MI

*** ***

```
          **************
          *            *
370 KK    *       1A   *
          *            *
          **************
```

RUNOFF GENERATED ON SUB-BASIN 1A

SUBBASIN RUNOFF DATA

372 BA SUBBASIN CHARACTERISTICS

TAREA .90 SUBBASIN AREA

PRECIPITATION DATA

13 PB STORM 3.96 BASIN TOTAL PRECIPITATION

14 PI INCREMENTAL PRECIPITATION PATTERN

.00	.00	.00	.00	.00	.00	.00	.00	.00	.00
.00	.00	.00	.00	.00	.00	.00	.00	.00	.00
.00	.00	.00	.00	.00	.00	.00	.00	.00	.00
.00	.00	.00	.00	.00	.00	.00	.00	.00	.00
.00	.00	.00	.00	.00	.00	.00	.00	.00	.00
.00	.00	.00	.00	.00	.00	.00	.00	.00	.00
.00	.00	.00	.00	.00	.00	.00	.00	.00	.00
.00	.00	.00	.00	.00	.00	.00	.00	.00	.00
.00	.00	.00	.00	.00	.00	.00	.00	.00	.00
.00	.00	.00	.00	.00	.00	.00	.00	.00	.00
.00	.00	.00	.00	.00	.00	.00	.00	.00	.00
.00	.00	.00	.00	.00	.00	.00	.00	.00	.00
.00	.00	.00	.00	.00	.00	.00	.01	.00	.01
.01	.01	.01	.01	.01	.01	.01	.01	.03	.03
.03	.09	.09	.09	.01	.01	.01	.01	.01	.01
.01	.01	.01	.01	.01	.01	.00	.00	.00	.00
.00	.00	.00	.00	.00	.00	.00	.00	.00	.00
.00	.00	.00	.00	.00	.00	.00	.00	.00	.00
.00	.00	.00	.00	.00	.00	.00	.00	.00	.00
.00	.00	.00	.00	.00	.00	.00	.00	.00	.00
.00	.00	.00	.00	.00	.00	.00	.00	.00	.00
.00	.00	.00	.00	.00	.00	.00	.00	.00	.00
.00	.00	.00	.00	.00	.00	.00	.00	.00	.00
.00	.00	.00	.00	.00	.00	.00	.00	.00	.00
.00	.00	.00	.00	.00	.00	.00	.00	.00	.00
.00	.00	.00	.00	.00	.00	.00	.00	.00	.00
.00	.00	.00	.00	.00	.00	.00	.00	.00	.00
.00	.00	.00	.00	.00	.00	.00	.00	.00	.00
.00	.00	.00	.00	.00	.00	.00	.00	.00	.00
.00	.00	.00	.00	.00	.00	.00	.00		

```
373 LU        UNIFORM LOSS RATE
                   STRTL        .40  INITIAL LOSS
                   CNSTL        .13  UNIFORM LOSS RATE
                   RTIMP        .00  PERCENT IMPERVIOUS AREA

374 UD        SCS DIMENSIONLESS UNITGRAPH
                   TLAG         .53  LAG

                                                    ***

                                                UNIT HYDROGRAPH
                                            34 END-OF-PERIOD ORDINATES
            47.     139.     282.     479.     650.     744.     762.     726.     649.     551.
           425.     325.     254.     202.     162.     128.     100.      79.      62.      49.
            38.      30.      24.      19.      15.      12.       9.       8.       6.       5.
             4.       3.       1.       0.

   TOTAL RAINFALL =   3.96, TOTAL LOSS =   1.92, TOTAL EXCESS =   2.04

PEAK FLOW    TIME                        MAXIMUM AVERAGE FLOW
  (CFS)      (HR)                 6-HR      24-HR      72-HR    24.92-HR
  1095.     12.42      (CFS)      198.       50.       48.        48.
                     (INCHES)    2.039     2.040     2.040      2.040
                      (AC-FT)     98.       98.       98.        98.

                   CUMULATIVE AREA =    .90 SQ MI


    ***          ***          ***          ***          ***

                   HYDROGRAPH AT STATION      1A
                     FOR PLAN 1, RATIO = 1.00

   TOTAL RAINFALL =   3.96, TOTAL LOSS =   1.92, TOTAL EXCESS =   2.04

PEAK FLOW    TIME                        MAXIMUM AVERAGE FLOW
  (CFS)      (HR)                 6-HR      24-HR      72-HR    24.92-HR
  1095.     12.42      (CFS)      198.       50.       48.        48.
                     (INCHES)    2.039     2.040     2.040      2.040
                      (AC-FT)     98.       98.       98.        98.

                   CUMULATIVE AREA =    .90 SQ MI


    ***          ***          ***          ***          ***

                   HYDROGRAPH AT STATION      1A
                     FOR PLAN 1, RATIO =  .97

   TOTAL RAINFALL =   3.83, TOTAL LOSS =   1.88, TOTAL EXCESS =   1.95

PEAK FLOW    TIME                        MAXIMUM AVERAGE FLOW
  (CFS)      (HR)                 6-HR      24-HR      72-HR    24.92-HR
  1057.     12.42      (CFS)      190.       47.       46.        46.
```

(INCHES)	1.954	1.955	1.955	1.955
(AC-FT)	94.	94.	94.	94.

CUMULATIVE AREA = .90 SQ MI

*** *** *** *** ***

HYDROGRAPH AT STATION 1A
FOR PLAN 1, RATIO = .95

TOTAL RAINFALL = 3.75, TOTAL LOSS = 1.85, TOTAL EXCESS = 1.90

PEAK FLOW (CFS)	TIME (HR)		MAXIMUM AVERAGE FLOW 6-HR	24-HR	72-HR	24.92-HR
1034.	12.42	(CFS)	185.	46.	44.	44.
		(INCHES)	1.901	1.901	1.901	1.901
		(AC-FT)	92.	92.	92.	92.

CUMULATIVE AREA = .90 SQ MI

*** *** *** *** ***

HYDROGRAPH AT STATION 1A
FOR PLAN 1, RATIO = .94

TOTAL RAINFALL = 3.72, TOTAL LOSS = 1.84, TOTAL EXCESS = 1.88

PEAK FLOW (CFS)	TIME (HR)		MAXIMUM AVERAGE FLOW 6-HR	24-HR	72-HR	24.92-HR
1024.	12.42	(CFS)	183.	46.	44.	44.
		(INCHES)	1.880	1.880	1.880	1.880
		(AC-FT)	91.	91.	91.	91.

CUMULATIVE AREA = .90 SQ MI

*** *** *** *** ***

HYDROGRAPH AT STATION 1A
FOR PLAN 1, RATIO = .92

TOTAL RAINFALL = 3.64, TOTAL LOSS = 1.81, TOTAL EXCESS = 1.82

PEAK FLOW (CFS)	TIME (HR)		MAXIMUM AVERAGE FLOW 6-HR	24-HR	72-HR	24.92-HR
1000.	12.42	(CFS)	177.	44.	43.	43.
		(INCHES)	1.824	1.824	1.824	1.824
		(AC-FT)	88.	88.	88.	88.

CUMULATIVE AREA = .90 SQ MI

*** ***

```
          ***************
          *             *
375 KK    *   RM1A-1    *
          *             *
          ***************
```

MUSKINGUM ROUTE IN CHANNEL FROM NODE 1A TO NODE 1
1) Reach Length= 9900 FT.
2) Average Velocity= 5.4 FPS

HYDROGRAPH ROUTING DATA

379 RM MUSKINGUM ROUTING

NSTPS	3	NUMBER OF SUBREACHES
AMSKK	.51	MUSKINGUM K
X	.20	MUSKINGUM X

***

*** *** *** *** ***

HYDROGRAPH AT STATION RM1A-1
FOR PLAN 1, RATIO = 1.00

PEAK FLOW (CFS)	TIME (HR)		MAXIMUM AVERAGE FLOW 6-HR	24-HR	72-HR	24.92-HR
923.	12.92	(CFS)	198.	50.	48.	48.
		(INCHES)	2.039	2.040	2.040	2.040
		(AC-FT)	98.	98.	98.	98.

CUMULATIVE AREA = .90 SQ MI

*** *** *** *** ***

HYDROGRAPH AT STATION RM1A-1
FOR PLAN 1, RATIO = .97

PEAK FLOW (CFS)	TIME (HR)		MAXIMUM AVERAGE FLOW 6-HR	24-HR	72-HR	24.92-HR
891.	12.92	(CFS)	190.	47.	46.	46.
		(INCHES)	1.954	1.955	1.955	1.955
		(AC-FT)	94.	94.	94.	94.

CUMULATIVE AREA = .90 SQ MI

*** *** *** *** ***

HYDROGRAPH AT STATION RM1A-1
FOR PLAN 1, RATIO = .95

PEAK FLOW (CFS)	TIME (HR)		MAXIMUM AVERAGE FLOW 6-HR	24-HR	72-HR	24.92-HR
871.	12.92	(CFS)	185.	46.	44.	44.
		(INCHES)	1.901	1.901	1.901	1.901
		(AC-FT)	92.	92.	92.	92.

CUMULATIVE AREA = .90 SQ MI

*** *** *** *** ***

HYDROGRAPH AT STATION RM1A-1
FOR PLAN 1, RATIO = .94

PEAK FLOW (CFS)	TIME (HR)		MAXIMUM AVERAGE FLOW 6-HR	24-HR	72-HR	24.92-HR
863.	12.92	(CFS)	183.	46.	44.	44.
		(INCHES)	1.880	1.880	1.880	1.880
		(AC-FT)	91.	91.	91.	91.

CUMULATIVE AREA = .90 SQ MI

*** *** *** *** ***

HYDROGRAPH AT STATION RM1A-1
FOR PLAN 1, RATIO = .92

PEAK FLOW (CFS)	TIME (HR)		MAXIMUM AVERAGE FLOW 6-HR	24-HR	72-HR	24.92-HR
842.	12.92	(CFS)	177.	44.	43.	43.
		(INCHES)	1.824	1.824	1.824	1.824
		(AC-FT)	88.	88.	88.	88.

CUMULATIVE AREA = .90 SQ MI

*** ***

```
         ##############
         #            #
380 KK   #        1B  #
         #            #
         ##############
```

RUNOFF GENERATED ON SUB-BASIN 1B

SUBBASIN RUNOFF DATA

382 BA SUBBASIN CHARACTERISTICS
TAREA 1.60 SUBBASIN AREA

PRECIPITATION DATA

13 PB STORM 3.96 BASIN TOTAL PRECIPITATION

14 PI INCREMENTAL PRECIPITATION PATTERN

.00	.00	.00	.00	.00	.00	.00	.00	.00	.00
.00	.00	.00	.00	.00	.00	.00	.00	.00	.00
.00	.00	.00	.00	.00	.00	.00	.00	.00	.00
.00	.00	.00	.00	.00	.00	.00	.00	.00	.00
.00	.00	.00	.00	.00	.00	.00	.00	.00	.00
.00	.00	.00	.00	.00	.00	.00	.00	.00	.00
.00	.00	.00	.00	.00	.00	.00	.00	.00	.00
.00	.00	.00	.00	.00	.00	.00	.00	.00	.00
.00	.00	.00	.00	.00	.00	.00	.00	.00	.00
.00	.00	.00	.00	.00	.00	.00	.00	.00	.00
.00	.00	.00	.00	.00	.00	.00	.00	.00	.00
.00	.00	.00	.00	.00	.00	.00	.00	.00	.00
.00	.00	.00	.00	.00	.00	.00	.00	.00	.00
.00	.00	.00	.00	.00	.00	.00	.01	.00	.01
.01	.01	.01	.01	.01	.01	.01	.01	.03	.03
.03	.09	.09	.09	.01	.01	.01	.01	.01	.01
.01	.01	.01	.01	.01	.01	.00	.00	.00	.00
.00	.00	.00	.00	.00	.00	.00	.00	.00	.00
.00	.00	.00	.00	.00	.00	.00	.00	.00	.00
.00	.00	.00	.00	.00	.00	.00	.00	.00	.00
.00	.00	.00	.00	.00	.00	.00	.00	.00	.00
.00	.00	.00	.00	.00	.00	.00	.00	.00	.00
.00	.00	.00	.00	.00	.00	.00	.00	.00	.00
.00	.00	.00	.00	.00	.00	.00	.00	.00	.00
.00	.00	.00	.00	.00	.00	.00	.00	.00	.00
.00	.00	.00	.00	.00	.00	.00	.00	.00	.00
.00	.00	.00	.00	.00	.00	.00	.00	.00	.00
.00	.00	.00	.00	.00	.00	.00	.00	.00	.00
.00	.00	.00	.00	.00	.00	.00	.00	.00	.00
.00	.00	.00	.00	.00	.00	.00	.00		

383 LU UNIFORM LOSS RATE

STRTL .48 INITIAL LOSS
CNSTL .21 UNIFORM LOSS RATE
RTIMP .00 PERCENT IMPERVIOUS AREA

384 UD SCS DIMENSIONLESS UNITGRAPH

TLAG .29 LAG

***

UNIT HYDROGRAPH
19 END-OF-PERIOD ORDINATES

341.	1109.	2054.	2335.	2080.	1567.	978.	645.	441.	291.
193.	126.	85.	57.	37.	25.	18.	11.	5.	

TOTAL RAINFALL = 3.96, TOTAL LOSS = 2.21, TOTAL EXCESS = 1.75

PEAK FLOW (CFS)	TIME (HR)		MAXIMUM AVERAGE FLOW 6-HR	24-HR	72-HR	24.92-HR
2703.	12.17	(CFS)	302.	75.	73.	73.
		(INCHES)	1.751	1.751	1.751	1.751

(AC-FT)	150.	150.	150.	150.

CUMULATIVE AREA = 1.60 SQ MI

*** *** *** *** ***

HYDROGRAPH AT STATION 1B
FOR PLAN 1, RATIO = 1.00

TOTAL RAINFALL = 3.96, TOTAL LOSS = 2.21, TOTAL EXCESS = 1.75

PEAK FLOW (CFS)	TIME (HR)		6-HR	MAXIMUM AVERAGE FLOW 24-HR	72-HR	24.92-HR
2703.	12.17	(CFS)	302.	75.	73.	73.
		(INCHES)	1.751	1.751	1.751	1.751
		(AC-FT)	150.	150.	150.	150.

CUMULATIVE AREA = 1.60 SQ MI

*** *** *** *** ***

HYDROGRAPH AT STATION 1B
FOR PLAN 1, RATIO = .97

TOTAL RAINFALL = 3.83, TOTAL LOSS = 2.16, TOTAL EXCESS = 1.68

PEAK FLOW (CFS)	TIME (HR)		6-HR	MAXIMUM AVERAGE FLOW 24-HR	72-HR	24.92-HR
2610.	12.17	(CFS)	289.	72.	70.	70.
		(INCHES)	1.676	1.676	1.676	1.676
		(AC-FT)	143.	143.	143.	143.

CUMULATIVE AREA = 1.60 SQ MI

*** *** *** *** ***

HYDROGRAPH AT STATION 1B
FOR PLAN 1, RATIO = .95

TOTAL RAINFALL = 3.75, TOTAL LOSS = 2.12, TOTAL EXCESS = 1.63

PEAK FLOW (CFS)	TIME (HR)		6-HR	MAXIMUM AVERAGE FLOW 24-HR	72-HR	24.92-HR
2551.	12.17	(CFS)	291.	70.	69.	69.
		(INCHES)	1.630	1.630	1.630	1.630
		(AC-FT)	139.	139.	139.	139.

CUMULATIVE AREA = 1.60 SQ MI

*** *** *** *** ***

HYDROGRAPH AT STATION 1B
FOR PLAN 1, RATIO = .94

TOTAL RAINFALL = 3.72, TOTAL LOSS = 2.11, TOTAL EXCESS = 1.61

PEAK FLOW (CFS)	TIME (HR)		6-HR	MAXIMUM AVERAGE FLOW 24-HR	72-HR	24.92-HR
2528.	12.17	(CFS)	277.	69.	67.	67.
		(INCHES)	1.611	1.611	1.611	1.611
		(AC-FT)	138.	138.	138.	138.

CUMULATIVE AREA = 1.60 SQ MI

*** *** *** *** ***

HYDROGRAPH AT STATION 1B
FOR PLAN 1, RATIO = .92

TOTAL RAINFALL = 3.64, TOTAL LOSS = 2.08, TOTAL EXCESS = 1.56

PEAK FLOW (CFS)	TIME (HR)		6-HR	MAXIMUM AVERAGE FLOW 24-HR	72-HR	24.92-HR
2467.	12.17	(CFS)	269.	67.	65.	65.
		(INCHES)	1.562	1.562	1.562	1.562
		(AC-FT)	133.	133.	133.	133.

CUMULATIVE AREA = 1.60 SQ MI

*** ***

```
         ***************
         *             *
385 KK   *      HC1    *
         *             *
         ***************
```

COMBINE SURFACE RUNOFF AT NODE 1
RM1A-1 + 1B

388 HC HYDROGRAPH COMBINATION
ICOMP 2 NUMBER OF HYDROGRAPHS TO COMBINE

***

*** *** *** *** ***

HYDROGRAPH AT STATION HC1
FOR PLAN 1, RATIO = 1.00

PEAK FLOW (CFS)	TIME (HR)	6-HR	MAXIMUM AVERAGE FLOW 24-HR	72-HR	24.92-HR

2873.	12.17	(CFS)	500.	125.	120.	120.
		(INCHES)	1.855	1.855	1.855	1.855
		(AC-FT)	248.	248.	248.	248.

CUMULATIVE AREA = 2.50 SQ MI

*** *** *** *** ***

HYDROGRAPH AT STATION HC1
FOR PLAN 1, RATIO = .97

PEAK FLOW (CFS)	TIME (HR)		MAXIMUM AVERAGE FLOW 6-HR	24-HR	72-HR	24.92-HR
2772.	12.17	(CFS)	478.	120.	115.	115.
		(INCHES)	1.777	1.777	1.777	1.777
		(AC-FT)	237.	237.	237.	237.

CUMULATIVE AREA = 2.50 SQ MI

*** *** *** *** ***

HYDROGRAPH AT STATION HC1
FOR PLAN 1, RATIO = .95

PEAK FLOW (CFS)	TIME (HR)		MAXIMUM AVERAGE FLOW 6-HR	24-HR	72-HR	24.92-HR
2708.	12.17	(CFS)	465.	116.	112.	112.
		(INCHES)	1.728	1.728	1.728	1.728
		(AC-FT)	231.	231.	231.	231.

CUMULATIVE AREA = 2.50 SQ MI

*** *** *** *** ***

HYDROGRAPH AT STATION HC1
FOR PLAN 1, RATIO = .94

PEAK FLOW (CFS)	TIME (HR)		MAXIMUM AVERAGE FLOW 6-HR	24-HR	72-HR	24.92-HR
2683.	12.17	(CFS)	460.	115.	111.	111.
		(INCHES)	1.708	1.708	1.708	1.708
		(AC-FT)	228.	228.	228.	228.

CUMULATIVE AREA = 2.50 SQ MI

*** *** *** *** ***

HYDROGRAPH AT STATION HC1
FOR PLAN 1, RATIO = .92

PEAK FLOW TIME MAXIMUM AVERAGE FLOW

(CFS)	(HR)		6-HR	24-HR	72-HR	24.92-HR
2616.	12.17	(CFS)	446.	112.	107.	107.
		(INCHES)	1.657	1.657	1.657	1.657
		(AC-FT)	221.	221.	221.	221.

CUMULATIVE AREA = 2.50 SQ MI

*** ***

```
          ***************
          *             *
389 KK    *        1C   *
          *             *
          ***************
```

RUNOFF GENERATED ON SUB-BASIN 1C

SUBBASIN RUNOFF DATA

391 BA SUBBASIN CHARACTERISTICS

TAREA 1.49 SUBBASIN AREA

PRECIPITATION DATA

13 PB STORM 3.96 BASIN TOTAL PRECIPITATION

14 PI INCREMENTAL PRECIPITATION PATTERN

.00	.00	.00	.00	.00	.00	.00	.00	.00	.00
.00	.00	.00	.00	.00	.00	.00	.00	.00	.00
.00	.00	.00	.00	.00	.00	.00	.00	.00	.00
.00	.00	.00	.00	.00	.00	.00	.00	.00	.00
.00	.00	.00	.00	.00	.00	.00	.00	.00	.00
.00	.00	.00	.00	.00	.00	.00	.00	.00	.00
.00	.00	.00	.00	.00	.00	.00	.00	.00	.00
.00	.00	.00	.00	.00	.00	.00	.00	.00	.00
.00	.00	.00	.00	.00	.00	.00	.00	.00	.00
.00	.00	.00	.00	.00	.00	.00	.00	.00	.00
.00	.00	.00	.00	.00	.00	.00	.00	.00	.00
.00	.00	.00	.00	.00	.00	.00	.00	.00	.00
.00	.00	.00	.00	.00	.00	.00	.01	.00	.01
.01	.01	.01	.01	.01	.01	.01	.01	.03	.03
.03	.09	.09	.09	.01	.01	.01	.01	.01	.01
.01	.01	.01	.01	.01	.01	.00	.00	.00	.00
.00	.00	.00	.00	.00	.00	.00	.00	.00	.00
.00	.00	.00	.00	.00	.00	.00	.00	.00	.00
.00	.00	.00	.00	.00	.00	.00	.00	.00	.00
.00	.00	.00	.00	.00	.00	.00	.00	.00	.00
.00	.00	.00	.00	.00	.00	.00	.00	.00	.00
.00	.00	.00	.00	.00	.00	.00	.00	.00	.00
.00	.00	.00	.00	.00	.00	.00	.00	.00	.00
.00	.00	.00	.00	.00	.00	.00	.00	.00	.00
.00	.00	.00	.00	.00	.00	.00	.00	.00	.00

.00	.00	.00	.00	.00	.00	.00	.00	.00	.00
.00	.00	.00	.00	.00	.00	.00	.00	.00	.00
.00	.00	.00	.00	.00	.00	.00	.00	.00	.00
.00	.00	.00	.00	.00	.00	.00	.00		

392 LU UNIFORM LOSS RATE

STRTL	.50	INITIAL LOSS
CNSTL	.20	UNIFORM LOSS RATE
RTIMP	.60	PERCENT IMPERVIOUS AREA

393 UD SCS DIMENSIONLESS UNITGRAPH

TLAG	.45	LAG

***

UNIT HYDROGRAPH
29 END-OF-PERIOD ORDINATES

115.	348.	713.	1152.	1407.	1465.	1377.	1197.	953.	683.
516.	393.	302.	228.	174.	132.	100.	75.	57.	43.
33.	25.	19.	15.	12.	9.	6.	4.	1.	

TOTAL RAINFALL = 3.96, TOTAL LOSS = 2.17, TOTAL EXCESS = 1.79

PEAK FLOW (CFS)	TIME (HR)		MAXIMUM AVERAGE FLOW 6-HR	24-HR	72-HR	24.92-HR
1943.	12.33	(CFS)	287.	72.	69.	69.
		(INCHES)	1.786	1.793	1.793	1.793
		(AC-FT)	142.	143.	143.	143.

CUMULATIVE AREA = 1.49 SQ MI

*** *** *** *** ***

HYDROGRAPH AT STATION 1C
FOR PLAN 1, RATIO = 1.00

TOTAL RAINFALL = 3.96, TOTAL LOSS = 2.17, TOTAL EXCESS = 1.79

PEAK FLOW (CFS)	TIME (HR)		MAXIMUM AVERAGE FLOW 6-HR	24-HR	72-HR	24.92-HR
1943.	12.33	(CFS)	287.	72.	69.	69.
		(INCHES)	1.786	1.793	1.793	1.793
		(AC-FT)	142.	143.	143.	143.

CUMULATIVE AREA = 1.49 SQ MI

*** *** *** *** ***

HYDROGRAPH AT STATION 1C
FOR PLAN 1, RATIO = .97

TOTAL RAINFALL = 3.83, TOTAL LOSS = 2.12, TOTAL EXCESS = 1.72

PEAK FLOW (CFS)	TIME (HR)		MAXIMUM AVERAGE FLOW 6-HR	24-HR	72-HR	24.92-HR
1875.	12.33	(CFS)	274.	69.	66.	66.
		(INCHES)	1.710	1.717	1.717	1.717
		(AC-FT)	136.	137.	137.	137.

CUMULATIVE AREA = 1.49 SQ MI

*** *** *** *** ***

HYDROGRAPH AT STATION 1C
FOR PLAN 1, RATIO = .95

TOTAL RAINFALL = 3.75, TOTAL LOSS = 2.08, TOTAL EXCESS = 1.67

PEAK FLOW (CFS)	TIME (HR)		MAXIMUM AVERAGE FLOW 6-HR	24-HR	72-HR	24.92-HR
1832.	12.33	(CFS)	267.	67.	65.	65.
		(INCHES)	1.663	1.670	1.670	1.670
		(AC-FT)	132.	133.	133.	133.

CUMULATIVE AREA = 1.49 SQ MI

*** *** *** *** ***

HYDROGRAPH AT STATION 1C
FOR PLAN 1, RATIO = .94

TOTAL RAINFALL = 3.72, TOTAL LOSS = 2.07, TOTAL EXCESS = 1.65

PEAK FLOW (CFS)	TIME (HR)		MAXIMUM AVERAGE FLOW 6-HR	24-HR	72-HR	24.92-HR
1815.	12.33	(CFS)	264.	66.	64.	64.
		(INCHES)	1.645	1.651	1.651	1.651
		(AC-FT)	131.	131.	131.	131.

CUMULATIVE AREA = 1.49 SQ MI

*** *** *** *** ***

HYDROGRAPH AT STATION 1C
FOR PLAN 1, RATIO = .92

TOTAL RAINFALL = 3.64, TOTAL LOSS = 2.04, TOTAL EXCESS = 1.60

PEAK FLOW (CFS)	TIME (HR)		MAXIMUM AVERAGE FLOW 6-HR	24-HR	72-HR	24.92-HR
1770.	12.33	(CFS)	256.	64.	62.	62.
		(INCHES)	1.596	1.602	1.602	1.602
		(AC-FT)	127.	127.	127.	127.

CUMULATIVE AREA = 1.49 SQ MI

*** ***

```
          **************
          *            *
394 KK    *      HC2   *
          *            *
          **************
```

COMBINE SURFACE RUNOFF AT NODE 2
RMI-2 + 1C

397 HC HYDROGRAPH COMBINATION
ICOMP 2 NUMBER OF HYDROGRAPHS TO COMBINE

***

*** *** *** *** ***

HYDROGRAPH AT STATION HC2
FOR PLAN 1, RATIO = 1.00

PEAK FLOW (CFS)	TIME (HR)		MAXIMUM AVERAGE FLOW 6-HR	24-HR	72-HR	24.92-HR
4622.	12.25	(CFS)	786.	197.	190.	190.
		(INCHES)	1.829	1.832	1.832	1.832
		(AC-FT)	390.	390.	390.	390.

CUMULATIVE AREA = 4.00 SQ MI

*** *** *** *** ***

HYDROGRAPH AT STATION HC2
FOR PLAN 1, RATIO = .97

PEAK FLOW (CFS)	TIME (HR)		MAXIMUM AVERAGE FLOW 6-HR	24-HR	72-HR	24.92-HR
4459.	12.25	(CFS)	753.	189.	182.	182.
		(INCHES)	1.752	1.754	1.754	1.754
		(AC-FT)	373.	374.	374.	374.

CUMULATIVE AREA = 4.00 SQ MI

*** *** *** *** ***

HYDROGRAPH AT STATION HC2
FOR PLAN 1, RATIO = .95

PEAK FLOW (CFS)	TIME (HR)	MAXIMUM AVERAGE FLOW 6-HR	24-HR	72-HR	24.92-HR

4357.	12.25	(CFS)	732.	183.	177.	177.
		(INCHES)	1.704	1.706	1.706	1.706
		(AC-FT)	363.	364.	364.	364.

CUMULATIVE AREA = 4.00 SQ MI

*** *** *** *** ***

HYDROGRAPH AT STATION HC2
FOR PLAN 1, RATIO = .94

PEAK FLOW (CFS)	TIME (HR)		MAXIMUM AVERAGE FLOW 6-HR	24-HR	72-HR	24.92-HR
4316.	12.25	(CFS)	724.	181.	175.	175.
		(INCHES)	1.684	1.687	1.687	1.687
		(AC-FT)	359.	360.	360.	360.

CUMULATIVE AREA = 4.00 SQ MI

*** *** *** *** ***

HYDROGRAPH AT STATION HC2
FOR PLAN 1, RATIO = .92

PEAK FLOW (CFS)	TIME (HR)		MAXIMUM AVERAGE FLOW 6-HR	24-HR	72-HR	24.92-HR
4209.	12.25	(CFS)	702.	176.	169.	169.
		(INCHES)	1.634	1.636	1.636	1.636
		(AC-FT)	348.	349.	349.	349.

CUMULATIVE AREA = 4.00 SQ MI

*** ***

```
          ***************
          *             *
398 KK    *    RM2-3    *
          *             *
          ***************
```

MUSKINGUM ROUTE IN CHANNEL FROM NODE 2 TO NODE 3
1) Reach Length= 6100 FT.
2) Average Velocity= 7.9 FPS
3) Use K=.24. Includes .03 hrs
from reach RM1-2.

HYDROGRAPH ROUTING DATA

404 RM MUSKINGUM ROUTING
NSTPS 3 NUMBER OF SUBREACHES

AMSKK .24 MUSKINGUM K
X .20 MUSKINGUM X

***

*** *** *** *** ***

HYDROGRAPH AT STATION RM2-3
FOR PLAN 1, RATIO = 1.00

PEAK FLOW (CFS)	TIME (HR)		6-HR	MAXIMUM AVERAGE FLOW 24-HR	72-HR	24.92-HR
4299.	12.50	(CFS)	786.	197.	190.	190.
		(INCHES)	1.829	1.832	1.832	1.832
		(AC-FT)	390.	390.	390.	390.

CUMULATIVE AREA = 4.00 SQ MI

*** *** *** *** ***

HYDROGRAPH AT STATION RM2-3
FOR PLAN 1, RATIO = .97

PEAK FLOW (CFS)	TIME (HR)		6-HR	MAXIMUM AVERAGE FLOW 24-HR	72-HR	24.92-HR
4146.	12.50	(CFS)	753.	189.	182.	182.
		(INCHES)	1.752	1.754	1.754	1.754
		(AC-FT)	373.	374.	374.	374.

CUMULATIVE AREA = 4.00 SQ MI

*** *** *** *** ***

HYDROGRAPH AT STATION RM2-3
FOR PLAN 1, RATIO = .95

PEAK FLOW (CFS)	TIME (HR)		6-HR	MAXIMUM AVERAGE FLOW 24-HR	72-HR	24.92-HR
4051.	12.50	(CFS)	732.	183.	177.	177.
		(INCHES)	1.704	1.706	1.706	1.706
		(AC-FT)	363.	364.	364.	364.

CUMULATIVE AREA = 4.00 SQ MI

*** *** *** *** ***

HYDROGRAPH AT STATION RM2-3
FOR PLAN 1, RATIO = .94

PEAK FLOW (CFS)	TIME (HR)		6-HR	MAXIMUM AVERAGE FLOW 24-HR	72-HR	24.92-HR
4012.	12.50	(CFS)	724.	181.	175.	175.

(INCHES)	1.684	1.687	1.687	1.687
(AC-FT)	359.	360.	360.	360.

CUMULATIVE AREA = 4.00 SQ MI

*** *** *** *** ***

HYDROGRAPH AT STATION RM2-3
FOR PLAN 1, RATIO = .92

PEAK FLOW (CFS)	TIME (HR)		MAXIMUM AVERAGE FLOW 6-HR	24-HR	72-HR	24.92-HR
3912.	12.50	(CFS)	702.	176.	169.	169.
		(INCHES)	1.634	1.636	1.636	1.636
		(AC-FT)	348.	349.	349.	349.

CUMULATIVE AREA = 4.00 SQ MI

*** ***

```
          ***************
          *             *
405 KK    *        1D   *
          *             *
          ***************
```

RUNOFF GENERATED ON SUB-BASIN 1D

SUBBASIN RUNOFF DATA

407 BA SUBBASIN CHARACTERISTICS
TAREA .96 SUBBASIN AREA

PRECIPITATION DATA

13 PB STORM 3.96 BASIN TOTAL PRECIPITATION

14 PI INCREMENTAL PRECIPITATION PATTERN

.00	.00	.00	.00	.00	.00	.00	.00	.00	.00
.00	.00	.00	.00	.00	.00	.00	.00	.00	.00
.00	.00	.00	.00	.00	.00	.00	.00	.00	.00
.00	.00	.00	.00	.00	.00	.00	.00	.00	.00
.00	.00	.00	.00	.00	.00	.00	.00	.00	.00
.00	.00	.00	.00	.00	.00	.00	.00	.00	.00
.00	.00	.00	.00	.00	.00	.00	.00	.00	.00
.00	.00	.00	.00	.00	.00	.00	.00	.00	.00
.00	.00	.00	.00	.00	.00	.00	.00	.00	.00
.00	.00	.00	.00	.00	.00	.00	.00	.00	.00
.00	.00	.00	.00	.00	.00	.00	.00	.00	.00
.00	.00	.00	.00	.00	.00	.00	.00	.00	.00
.00	.00	.00	.00	.00	.00	.00	.01	.00	.01

.01	.01	.01	.01	.01	.01	.01	.01	.03	.03
.03	.09	.09	.09	.01	.01	.01	.01	.01	.01
.01	.01	.01	.01	.01	.01	.00	.00	.00	.00
.00	.00	.00	.00	.00	.00	.00	.00	.00	.00
.00	.00	.00	.00	.00	.00	.00	.00	.00	.00
.00	.00	.00	.00	.00	.00	.00	.00	.00	.00
.00	.00	.00	.00	.00	.00	.00	.00	.00	.00
.00	.00	.00	.00	.00	.00	.00	.00	.00	.00
.00	.00	.00	.00	.00	.00	.00	.00	.00	.00
.00	.00	.00	.00	.00	.00	.00	.00	.00	.00
.00	.00	.00	.00	.00	.00	.00	.00	.00	.00
.00	.00	.00	.00	.00	.00	.00	.00	.00	.00
.00	.00	.00	.00	.00	.00	.00	.00	.00	.00
.00	.00	.00	.00	.00	.00	.00	.00	.00	.00
.00	.00	.00	.00	.00	.00	.00	.00	.00	.00
.00	.00	.00	.00	.00	.00	.00	.00	.00	.00
.00	.00	.00	.00	.00	.00	.00	.00		

```
408 LU        UNIFORM LOSS RATE
                   STRTL        .45  INITIAL LOSS
                   CNSTL        .18  UNIFORM LOSS RATE
                   RTIMP       6.30  PERCENT IMPERVIOUS AREA

409 UD        SCS DIMENSIONLESS UNITGRAPH
                   TLAG         .28  LAG

                                                  ***

                                          UNIT HYDROGRAPH
                                     19 END-OF-PERIOD ORDINATES
          222.     730.    1310.    1443.    1250.     890.     553.     367.     243.     159.
          104.      68.      45.      29.      19.      13.       9.       5.       1.

  TOTAL RAINFALL =   3.96, TOTAL LOSS =   1.98, TOTAL EXCESS =   1.98

PEAK FLOW    TIME                      MAXIMUM AVERAGE FLOW
 (CFS)       (HR)                 6-HR      24-HR      72-HR    24.92-HR
 1679.      12.17       (CFS)     197.        51.        49.        49.
                      (INCHES)   1.903     1.976      1.976      1.976
                       (AC-FT)    98.       101.       101.       101.

                     CUMULATIVE AREA =    .96 SQ MI


   ***          ***          ***          ***          ***

                    HYDROGRAPH AT STATION      1D
                      FOR PLAN 1, RATIO = 1.00

  TOTAL RAINFALL =   3.96, TOTAL LOSS =   1.98, TOTAL EXCESS =   1.98

PEAK FLOW    TIME                      MAXIMUM AVERAGE FLOW
 (CFS)       (HR)                 6-HR      24-HR      72-HR    24.92-HR
 1679.      12.17       (CFS)     197.        51.        49.        49.
                      (INCHES)   1.903     1.976      1.976      1.976
                       (AC-FT)    98.       101.       101.       101.
```

CUMULATIVE AREA = .96 SQ MI

*** *** *** *** ***

HYDROGRAPH AT STATION 1D
FOR PLAN 1, RATIO = .97

TOTAL RAINFALL = 3.83, TOTAL LOSS = 1.94, TOTAL EXCESS = 1.90

PEAK FLOW (CFS)	TIME (HR)		MAXIMUM AVERAGE FLOW 6-HR	24-HR	72-HR	24.92-HR
1622.	12.17	(CFS)	189.	49.	47.	47.
		(INCHES)	1.825	1.895	1.895	1.895
		(AC-FT)	94.	97.	97.	97.

CUMULATIVE AREA = .96 SQ MI

*** *** *** *** ***

HYDROGRAPH AT STATION 1D
FOR PLAN 1, RATIO = .95

TOTAL RAINFALL = 3.75, TOTAL LOSS = 1.91, TOTAL EXCESS = 1.84

PEAK FLOW (CFS)	TIME (HR)		MAXIMUM AVERAGE FLOW 6-HR	24-HR	72-HR	24.92-HR
1587.	12.17	(CFS)	184.	48.	46.	46.
		(INCHES)	1.776	1.844	1.845	1.845
		(AC-FT)	91.	95.	95.	95.

CUMULATIVE AREA = .96 SQ MI

*** *** *** *** ***

HYDROGRAPH AT STATION 1D
FOR PLAN 1, RATIO = .94

TOTAL RAINFALL = 3.72, TOTAL LOSS = 1.90, TOTAL EXCESS = 1.82

PEAK FLOW (CFS)	TIME (HR)		MAXIMUM AVERAGE FLOW 6-HR	24-HR	72-HR	24.92-HR
1572.	12.17	(CFS)	182.	47.	46.	46.
		(INCHES)	1.756	1.824	1.825	1.825
		(AC-FT)	90.	94.	94.	94.

CUMULATIVE AREA = .96 SQ MI

*** *** *** *** ***

HYDROGRAPH AT STATION 1D

FOR PLAN 1, RATIO = .92

TOTAL RAINFALL = 3.64, TOTAL LOSS = 1.87, TOTAL EXCESS = 1.77

PEAK FLOW (CFS)	TIME (HR)		MAXIMUM AVERAGE FLOW 6-HR	24-HR	72-HR	24.92-HR
1535.	12.17	(CFS)	177.	46.	44.	44.
		(INCHES)	1.706	1.772	1.773	1.773
		(AC-FT)	88.	91.	91.	91.

CUMULATIVE AREA = .96 SQ MI

*** ***

```
          **************
          *            *
410 KK    *      HC3   *
          *            *
          **************
```

COMBINE SURFACE RUNOFF AT NODE 3
RM2-3 + 1D

413 HC HYDROGRAPH COMBINATION
ICOMP 2 NUMBER OF HYDROGRAPHS TO COMBINE

*** *** *** *** ***

HYDROGRAPH AT STATION HC3
FOR PLAN 1, RATIO = 1.00

PEAK FLOW (CFS)	TIME (HR)		MAXIMUM AVERAGE FLOW 6-HR	24-HR	72-HR	24.92-HR
5148.	12.42	(CFS)	983.	248.	239.	239.
		(INCHES)	1.843	1.860	1.860	1.860
		(AC-FT)	487.	492.	492.	492.

CUMULATIVE AREA = 4.96 SQ MI

*** *** *** *** ***

HYDROGRAPH AT STATION HC3
FOR PLAN 1, RATIO = .97

PEAK FLOW (CFS)	TIME (HR)		MAXIMUM AVERAGE FLOW 6-HR	24-HR	72-HR	24.92-HR
4964.	12.42	(CFS)	942.	238.	229.	229.
		(INCHES)	1.765	1.782	1.782	1.782
		(AC-FT)	467.	471.	471.	471.

CUMULATIVE AREA = 4.96 SQ MI

*** *** *** *** ***

HYDROGRAPH AT STATION HC3
FOR PLAN 1, RATIO = .95

PEAK FLOW (CFS)	TIME (HR)		MAXIMUM AVERAGE FLOW 6-HR	24-HR	72-HR	24.92-HR
4849.	12.42	(CFS)	916.	231.	223.	223.
		(INCHES)	1.717	1.733	1.733	1.733
		(AC-FT)	454.	458.	458.	458.

CUMULATIVE AREA = 4.96 SQ MI

*** *** *** *** ***

HYDROGRAPH AT STATION HC3
FOR PLAN 1, RATIO = .94

PEAK FLOW (CFS)	TIME (HR)		MAXIMUM AVERAGE FLOW 6-HR	24-HR	72-HR	24.92-HR
4904.	12.42	(CFS)	906.	229.	220.	220.
		(INCHES)	1.698	1.714	1.714	1.714
		(AC-FT)	449.	453.	453.	453.

CUMULATIVE AREA = 4.96 SQ MI

*** *** *** *** ***

HYDROGRAPH AT STATION HC3
FOR PLAN 1, RATIO = .92

PEAK FLOW (CFS)	TIME (HR)		MAXIMUM AVERAGE FLOW 6-HR	24-HR	72-HR	24.92-HR
4683.	12.42	(CFS)	879.	222.	214.	214.
		(INCHES)	1.648	1.663	1.663	1.663
		(AC-FT)	436.	440.	440.	440.

CUMULATIVE AREA = 4.96 SQ MI

*** ***

```
          **************
          *            *
414 KK    *    RM3-4   *
          *            *
```

```
***************
                    MUSKINGUM ROUTE IN CHANNEL FROM NODE 3 TO NODE 4
                                                        1) Reach Length= 6800 FT.
                                                        2) Average Velocity= 7.0 FPS

          HYDROGRAPH ROUTING DATA

418 RM        MUSKINGUM ROUTING
                  NSTPS        3 NUMBER OF SUBREACHES
                  AMSKK      .27 MUSKINGUM K
                      X      .30 MUSKINGUM X

                                                        ***

   ***          ***          ***          ***          ***

                HYDROGRAPH AT STATION    RM3-4
                  FOR PLAN 1, RATIO = 1.00

PEAK FLOW    TIME                        MAXIMUM AVERAGE FLOW
  (CFS)      (HR)                 6-HR      24-HR      72-HR     24.92-HR
  4957.      12.67      (CFS)     993.       249.       239.        239.
                      (INCHES)   1.843      1.860      1.860       1.860
                       (AC-FT)    487.       492.       492.        492.

                CUMULATIVE AREA =    4.96 SQ MI

   ***          ***          ***          ***          ***

                HYDROGRAPH AT STATION    RM3-4
                  FOR PLAN 1, RATIO =  .97

PEAK FLOW    TIME                        MAXIMUM AVERAGE FLOW
  (CFS)      (HR)                 6-HR      24-HR      72-HR     24.92-HR
  4779.      12.67      (CFS)     942.       238.       229.        229.
                      (INCHES)   1.765      1.782      1.782       1.782
                       (AC-FT)    467.       471.       471.        471.

                CUMULATIVE AREA =    4.96 SQ MI

   ***          ***          ***          ***          ***

                HYDROGRAPH AT STATION    RM3-4
                  FOR PLAN 1, RATIO =  .95

PEAK FLOW    TIME                        MAXIMUM AVERAGE FLOW
  (CFS)      (HR)                 6-HR      24-HR      72-HR     24.92-HR
  4668.      12.67      (CFS)     916.       231.       223.        223.
                      (INCHES)   1.717      1.733      1.733       1.733
                       (AC-FT)    454.       458.       458.        458.

                CUMULATIVE AREA =    4.96 SQ MI
```

*** *** *** *** ***

HYDROGRAPH AT STATION RM3-4
FOR PLAN 1, RATIO = .94

PEAK FLOW (CFS)	TIME (HR)		MAXIMUM AVERAGE FLOW 6-HR	24-HR	72-HR	24.92-HR
4624.	12.67	(CFS)	906.	228.	228.	228.
		(INCHES)	1.698	1.714	1.714	1.714
		(AC-FT)	449.	453.	453.	453.

CUMULATIVE AREA = 4.96 SQ MI

*** *** *** *** ***

HYDROGRAPH AT STATION RM3-4
FOR PLAN 1, RATIO = .92

PEAK FLOW (CFS)	TIME (HR)		MAXIMUM AVERAGE FLOW 6-HR	24-HR	72-HR	24.92-HR
4500.	12.67	(CFS)	879.	222.	214.	214.
		(INCHES)	1.648	1.663	1.663	1.663
		(AC-FT)	436.	440.	440.	440.

CUMULATIVE AREA = 4.96 SQ MI

*** ***

```
          **************
          *            *
419 KK    *        3A  *
          *            *
          **************
```

RUNOFF GENERATED ON SUB-BASIN 3A

SUBBASIN RUNOFF DATA

421 BA SUBBASIN CHARACTERISTICS
TAREA 1.11 SUBBASIN AREA

PRECIPITATION DATA

13 PB STORM 3.96 BASIN TOTAL PRECIPITATION

14 PI INCREMENTAL PRECIPITATION PATTERN

.00	.00	.00	.00	.00	.00	.00	.00	.00	.00
.00	.00	.00	.00	.00	.00	.00	.00	.00	.00
.00	.00	.00	.00	.00	.00	.00	.00	.00	.00
.00	.00	.00	.00	.00	.00	.00	.00	.00	.00

.00	.00	.00	.00	.00	.00	.00	.00	.00	.00
.00	.00	.00	.00	.00	.00	.00	.00	.00	.00
.00	.00	.00	.00	.00	.00	.00	.00	.00	.00
.00	.00	.00	.00	.00	.00	.00	.00	.00	.00
.00	.00	.00	.00	.00	.00	.00	.00	.00	.00
.00	.00	.00	.00	.00	.00	.00	.00	.00	.00
.00	.00	.00	.00	.00	.00	.00	.00	.00	.00
.00	.00	.00	.00	.00	.00	.00	.00	.00	.00
.00	.00	.00	.00	.00	.00	.00	.01	.00	.01
.01	.01	.01	.01	.01	.01	.01	.01	.03	.03
.03	.09	.09	.09	.01	.01	.01	.01	.01	.01
.01	.01	.01	.01	.01	.01	.00	.00	.00	.00
.00	.00	.00	.00	.00	.00	.00	.00	.00	.00
.00	.00	.00	.00	.00	.00	.00	.00	.00	.00
.00	.00	.00	.00	.00	.00	.00	.00	.00	.00
.00	.00	.00	.00	.00	.00	.00	.00	.00	.00
.00	.00	.00	.00	.00	.00	.00	.00	.00	.00
.00	.00	.00	.00	.00	.00	.00	.00	.00	.00
.00	.00	.00	.00	.00	.00	.00	.00	.00	.00
.00	.00	.00	.00	.00	.00	.00	.00	.00	.00
.00	.00	.00	.00	.00	.00	.00	.00	.00	.00
.00	.00	.00	.00	.00	.00	.00	.00	.00	.00
.00	.00	.00	.00	.00	.00	.00	.00	.00	.00
.00	.00	.00	.00	.00	.00	.00	.00		

422 LU UNIFORM LOSS RATE

STRTL	.43	INITIAL LOSS
CNSTL	.14	UNIFORM LOSS RATE
RTIMP	2.30	PERCENT IMPERVIOUS AREA

423 UD SCS DIMENSIONLESS UNITGRAPH

TLAG	.32	LAG

***

UNIT HYDROGRAPH
21 END-OF-PERIOD ORDINATES

189.	604.	1195.	1471.	1422.	1178.	811.	540.	375.	261.
178.	122.	82.	57.	40.	27.	19.	14.	10.	6.
2.									

TOTAL RAINFALL = 3.96, TOTAL LOSS = 1.92, TOTAL EXCESS = 2.04

PEAK FLOW (CFS)	TIME (HR)		MAXIMUM AVERAGE FLOW 6-HR	24-HR	72-HR	24.92-HR
1823.	12.17	(CFS)	240.	61.	59.	59.
		(INCHES)	2.011	2.037	2.037	2.037
		(AC-FT)	119.	121.	121.	121.

CUMULATIVE AREA = 1.11 SQ MI

*** *** *** *** ***

HYDROGRAPH AT STATION 3A
FOR PLAN 1, RATIO = 1.00

TOTAL RAINFALL = 3.96, TOTAL LOSS = 1.92, TOTAL EXCESS = 2.04

PEAK FLOW (CFS)	TIME (HR)		MAXIMUM AVERAGE FLOW 6-HR	24-HR	72-HR	24.92-HR
1823.	12.17	(CFS)	240.	61.	59.	59.
		(INCHES)	2.011	2.037	2.037	2.037
		(AC-FT)	119.	121.	121.	121.

CUMULATIVE AREA = 1.11 SQ MI

*** *** *** *** ***

HYDROGRAPH AT STATION 3A
FOR PLAN 1, RATIO = .97

TOTAL RAINFALL = 3.83, TOTAL LOSS = 1.88, TOTAL EXCESS = 1.95

PEAK FLOW (CFS)	TIME (HR)		MAXIMUM AVERAGE FLOW 6-HR	24-HR	72-HR	24.92-HR
1761.	12.17	(CFS)	230.	58.	56.	56.
		(INCHES)	1.927	1.953	1.953	1.953
		(AC-FT)	114.	116.	116.	116.

CUMULATIVE AREA = 1.11 SQ MI

*** *** *** *** ***

HYDROGRAPH AT STATION 3A
FOR PLAN 1, RATIO = .95

TOTAL RAINFALL = 3.75, TOTAL LOSS = 1.85, TOTAL EXCESS = 1.90

PEAK FLOW (CFS)	TIME (HR)		MAXIMUM AVERAGE FLOW 6-HR	24-HR	72-HR	24.92-HR
1723.	12.17	(CFS)	224.	57.	55.	55.
		(INCHES)	1.876	1.901	1.901	1.901
		(AC-FT)	111.	113.	113.	113.

CUMULATIVE AREA = 1.11 SQ MI

*** *** *** *** ***

HYDROGRAPH AT STATION 3A
FOR PLAN 1, RATIO = .94

TOTAL RAINFALL = 3.72, TOTAL LOSS = 1.84, TOTAL EXCESS = 1.88

PEAK FLOW (CFS)	TIME (HR)	MAXIMUM AVERAGE FLOW 6-HR	24-HR	72-HR	24.92-HR

1707.	12.17	(CFS)	222.	56.	54.	54.
		(INCHES)	1.856	1.880	1.881	1.881
		(AC-FT)	110.	111.	111.	111.

CUMULATIVE AREA = 1.11 SQ MI

*** *** *** *** ***

HYDROGRAPH AT STATION 3A
FOR PLAN 1, RATIO = .92

TOTAL RAINFALL = 3.64, TOTAL LOSS = 1.81, TOTAL EXCESS = 1.83

PEAK FLOW (CFS)	TIME (HR)		MAXIMUM AVERAGE FLOW 6-HR	24-HR	72-HR	24.92-HR
1667.	12.17	(CFS)	215.	55.	53.	53.
		(INCHES)	1.802	1.826	1.826	1.826
		(AC-FT)	107.	108.	108.	108.

CUMULATIVE AREA = 1.11 SQ MI

*** ***

```
          **************
          *            *
424 KK    *      HC4   *
          *            *
          **************
```

COMBINE SURFACE RUNOFF AT NODE 4
RM3-4 + 3A

427 HC HYDROGRAPH COMBINATION
ICOMP 2 NUMBER OF HYDROGRAPHS TO COMBINE

***

*** *** *** *** ***

HYDROGRAPH AT STATION HC4
FOR PLAN 1, RATIO = 1.00

PEAK FLOW (CFS)	TIME (HR)		MAXIMUM AVERAGE FLOW 6-HR	24-HR	72-HR	24.92-HR
5517.	12.67	(CFS)	1223.	309.	297.	297.
		(INCHES)	1.873	1.892	1.892	1.892
		(AC-FT)	606.	613.	613.	613.

CUMULATIVE AREA = 6.07 SQ MI

*** *** *** *** ***

HYDROGRAPH AT STATION HC4
FOR PLAN 1, RATIO = .97

PEAK FLOW (CFS)	TIME (HR)		MAXIMUM AVERAGE FLOW 6-HR	24-HR	72-HR	24.92-HR
5319.	12.67	(CFS)	1172.	296.	285.	285.
		(INCHES)	1.795	1.813	1.813	1.813
		(AC-FT)	581.	587.	587.	587.

CUMULATIVE AREA = 6.07 SQ MI

*** *** *** *** ***

HYDROGRAPH AT STATION HC4
FOR PLAN 1, RATIO = .95

PEAK FLOW (CFS)	TIME (HR)		MAXIMUM AVERAGE FLOW 6-HR	24-HR	72-HR	24.92-HR
5195.	12.67	(CFS)	1140.	288.	277.	277.
		(INCHES)	1.746	1.764	1.764	1.764
		(AC-FT)	565.	571.	571.	571.

CUMULATIVE AREA = 6.07 SQ MI

*** *** *** *** ***

HYDROGRAPH AT STATION HC4
FOR PLAN 1, RATIO = .94

PEAK FLOW (CFS)	TIME (HR)		MAXIMUM AVERAGE FLOW 6-HR	24-HR	72-HR	24.92-HR
5145.	12.67	(CFS)	1127.	285.	274.	274.
		(INCHES)	1.727	1.744	1.744	1.744
		(AC-FT)	559.	565.	565.	565.

CUMULATIVE AREA = 6.07 SQ MI

*** *** *** *** ***

HYDROGRAPH AT STATION HC4
FOR PLAN 1, RATIO = .92

PEAK FLOW (CFS)	TIME (HR)		MAXIMUM AVERAGE FLOW 6-HR	24-HR	72-HR	24.92-HR
5015.	12.67	(CFS)	1094.	276.	266.	266.
		(INCHES)	1.676	1.693	1.693	1.693
		(AC-FT)	542.	548.	548.	548.

CUMULATIVE AREA = 6.07 SQ MI

*** ***

```
          **************
          *            *
428 KK    *    RM4-5   *
          *            *
          **************
```

MUSKINGUM ROUTE IN CHANNEL FROM NODE 4 TO NODE 5

1) Reach Length= 11,450 FT.

2) Average Velocity= 8.0 FPS

HYDROGRAPH ROUTING DATA

```
432 RM        MUSKINGUM ROUTING
                   NSTPS        5 NUMBER OF SUBREACHES
                   ANSKK      .40 MUSKINGUM K
                       X      .30 MUSKINGUM X
```

***

*** *** *** *** ***

HYDROGRAPH AT STATION RM4-5
FOR PLAN 1, RATIO = 1.00

PEAK FLOW (CFS)	TIME (HR)		6-HR	MAXIMUM AVERAGE FLOW 24-HR	72-HR	24.92-HR
5357.	13.00	(CFS)	1223.	389.	297.	297.
		(INCHES)	1.873	1.892	1.892	1.892
		(AC-FT)	606.	613.	613.	613.

CUMULATIVE AREA = 6.07 SQ MI

*** *** *** *** ***

HYDROGRAPH AT STATION RM4-5
FOR PLAN 1, RATIO = .97

PEAK FLOW (CFS)	TIME (HR)		6-HR	MAXIMUM AVERAGE FLOW 24-HR	72-HR	24.92-HR
5164.	13.00	(CFS)	1172.	296.	285.	285.
		(INCHES)	1.795	1.813	1.813	1.813
		(AC-FT)	581.	587.	587.	587.

CUMULATIVE AREA = 6.07 SQ MI

*** *** *** *** ***

HYDROGRAPH AT STATION RM4-5

FOR PLAN 1, RATIO = .95

PEAK FLOW	TIME		MAXIMUM AVERAGE FLOW			
(CFS)	(HR)		6-HR	24-HR	72-HR	24.92-HR
5043.	13.00	(CFS)	1140.	288.	277.	277.
		(INCHES)	1.746	1.764	1.764	1.764
		(AC-FT)	565.	571.	571.	571.

CUMULATIVE AREA = 6.07 SQ MI

*** *** *** *** ***

HYDROGRAPH AT STATION RM4-5
FOR PLAN 1, RATIO = .94

PEAK FLOW	TIME		MAXIMUM AVERAGE FLOW			
(CFS)	(HR)		6-HR	24-HR	72-HR	24.92-HR
4995.	13.00	(CFS)	1127.	285.	274.	274.
		(INCHES)	1.727	1.744	1.744	1.744
		(AC-FT)	559.	565.	565.	565.

CUMULATIVE AREA = 6.07 SQ MI

*** *** *** *** ***

HYDROGRAPH AT STATION RM4-5
FOR PLAN 1, RATIO = .92

PEAK FLOW	TIME		MAXIMUM AVERAGE FLOW			
(CFS)	(HR)		6-HR	24-HR	72-HR	24.92-HR
4868.	13.00	(CFS)	1094.	276.	266.	266.
		(INCHES)	1.676	1.693	1.693	1.693
		(AC-FT)	542.	548.	548.	548.

CUMULATIVE AREA = 6.07 SQ MI

*** ***

```
          **************
          *            *
433 KK    *        3C  *
          *            *
          **************
                    RUNOFF GENERATED ON SUB-BASIN 3C
```

SUBBASIN RUNOFF DATA

435 BA SUBBASIN CHARACTERISTICS
TAREA 1.56 SUBBASIN AREA

PRECIPITATION DATA

13 PB STORM 3.96 BASIN TOTAL PRECIPITATION

14 PI INCREMENTAL PRECIPITATION PATTERN

.00	.00	.00	.00	.00	.00	.00	.00	.00	.00
.00	.00	.00	.00	.00	.00	.00	.00	.00	.00
.00	.00	.00	.00	.00	.00	.00	.00	.00	.00
.00	.00	.00	.00	.00	.00	.00	.00	.00	.00
.00	.00	.00	.00	.00	.00	.00	.00	.00	.00
.00	.00	.00	.00	.00	.00	.00	.00	.00	.00
.00	.00	.00	.00	.00	.00	.00	.00	.00	.00
.00	.00	.00	.00	.00	.00	.00	.00	.00	.00
.00	.00	.00	.00	.00	.00	.00	.00	.00	.00
.00	.00	.00	.00	.00	.00	.00	.00	.00	.00
.00	.00	.00	.00	.00	.00	.00	.00	.00	.00
.00	.00	.00	.00	.00	.00	.00	.00	.00	.00
.00	.00	.00	.00	.00	.00	.00	.00	.00	.00
.00	.00	.00	.00	.00	.00	.00	.01	.00	.01
.01	.01	.01	.01	.01	.01	.01	.01	.03	.03
.03	.09	.09	.09	.01	.01	.01	.01	.01	.01
.01	.01	.01	.01	.01	.01	.00	.00	.00	.00
.00	.00	.00	.00	.00	.00	.00	.00	.00	.00
.00	.00	.00	.00	.00	.00	.00	.00	.00	.00
.00	.00	.00	.00	.00	.00	.00	.00	.00	.00
.00	.00	.00	.00	.00	.00	.00	.00	.00	.00
.00	.00	.00	.00	.00	.00	.00	.00	.00	.00
.00	.00	.00	.00	.00	.00	.00	.00	.00	.00
.00	.00	.00	.00	.00	.00	.00	.00	.00	.00
.00	.00	.00	.00	.00	.00	.00	.00	.00	.00
.00	.00	.00	.00	.00	.00	.00	.00	.00	.00
.00	.00	.00	.00	.00	.00	.00	.00	.00	.00
.00	.00	.00	.00	.00	.00	.00	.00	.00	.00
.00	.00	.00	.00	.00	.00	.00	.00		

436 LU UNIFORM LOSS RATE

STRTL .38 INITIAL LOSS
CNSTL .20 UNIFORM LOSS RATE
RTIMP 31.60 PERCENT IMPERVIOUS AREA

437 UD SCS DIMENSIONLESS UNITGRAPH

TLAG .40 LAG

***

UNIT HYDROGRAPH
26 END-OF-PERIOD ORDINATES

157.	483.	1016.	1502.	1697.	1657.	1439.	1141.	788.	577.
431.	320.	233.	172.	126.	91.	68.	50.	37.	27.
20.	16.	12.	8.	5.	2.				

TOTAL RAINFALL = 3.96, TOTAL LOSS = 1.49, TOTAL EXCESS = 2.47

PEAK FLOW TIME MAXIMUM AVERAGE FLOW

(CFS)	(HR)		6-HR	24-HR	72-HR	24.92-HR
2257.	12.25	(CFS)	353.	103.	100.	100.
		(INCHES)	2.104	2.466	2.469	2.469
		(AC-FT)	175.	205.	205.	205.

CUMULATIVE AREA = 1.56 SQ MI

*** *** *** *** ***

HYDROGRAPH AT STATION 3C
FOR PLAN 1, RATIO = 1.00

TOTAL RAINFALL = 3.96, TOTAL LOSS = 1.49, TOTAL EXCESS = 2.47

PEAK FLOW (CFS)	TIME (HR)		MAXIMUM AVERAGE FLOW 6-HR	24-HR	72-HR	24.92-HR
2257.	12.25	(CFS)	353.	103.	100.	100.
		(INCHES)	2.104	2.466	2.469	2.469
		(AC-FT)	175.	205.	205.	205.

CUMULATIVE AREA = 1.56 SQ MI

*** *** *** *** ***

HYDROGRAPH AT STATION 3C
FOR PLAN 1, RATIO = .97

TOTAL RAINFALL = 3.83, TOTAL LOSS = 1.46, TOTAL EXCESS = 2.38

PEAK FLOW (CFS)	TIME (HR)		MAXIMUM AVERAGE FLOW 6-HR	24-HR	72-HR	24.92-HR
2181.	12.25	(CFS)	339.	100.	96.	96.
		(INCHES)	2.024	2.374	2.377	2.377
		(AC-FT)	168.	197.	198.	198.

CUMULATIVE AREA = 1.56 SQ MI

*** *** *** *** ***

HYDROGRAPH AT STATION 3C
FOR PLAN 1, RATIO = .95

TOTAL RAINFALL = 3.75, TOTAL LOSS = 1.43, TOTAL EXCESS = 2.32

PEAK FLOW (CFS)	TIME (HR)		MAXIMUM AVERAGE FLOW 6-HR	24-HR	72-HR	24.92-HR
2133.	12.25	(CFS)	331.	97.	94.	94.
		(INCHES)	1.974	2.318	2.320	2.320
		(AC-FT)	164.	193.	193.	193.

CUMULATIVE AREA = 1.56 SQ MI

```
***          ***          ***          ***          ***

                    HYDROGRAPH AT STATION      3C
                      FOR PLAN 1, RATIO =  .94

   TOTAL RAINFALL =   3.72, TOTAL LOSS =   1.43, TOTAL EXCESS =   2.30

PEAK FLOW    TIME                        MAXIMUM AVERAGE FLOW
 (CFS)       (HR)              6-HR      24-HR      72-HR     24.92-HR
 2114.      12.25     (CFS)    328.       96.        93.        93.
                     (INCHES)  1.954     2.295      2.297      2.297
                     (AC-FT)   163.      191.       191.       191.

                    CUMULATIVE AREA =   1.56 SQ MI


***          ***          ***          ***          ***

                    HYDROGRAPH AT STATION      3C
                      FOR PLAN 1, RATIO =  .92

   TOTAL RAINFALL =   3.64, TOTAL LOSS =   1.40, TOTAL EXCESS =   2.24

PEAK FLOW    TIME                        MAXIMUM AVERAGE FLOW
 (CFS)       (HR)              6-HR      24-HR      72-HR     24.92-HR
 2064.      12.25     (CFS)    319.       94.        90.        90.
                     (INCHES)  1.902     2.235      2.237      2.237
                     (AC-FT)   158.      186.       186.       186.

                    CUMULATIVE AREA =   1.56 SQ MI


*** *** *** *** *** *** *** *** *** *** *** *** *** *** *** *** *** *** *** *** *** *** *** *** *** *** *** *** *** *** *** *** *** *** ***


          **************
          *            *
438 KK    *     DT3C   *
          *            *
          **************
                    THROW AWAY 10-YR 2-HR RETENTION VOLUME:1) 4.2 AC-FT FROM SUB-BASIN 3C
                                                              (Hydrograph identified as OR-3C)
                                                           2) Balance of runoff continues on.
                                                              (Hydrograph identified as DT3C)

   DT        DIVERSION
                  ISTAD      OR-3C  DIVERSION HYDROGRAPH IDENTIFICATION
                 DSTRMX       4.20  MAXIMUM VOLUME TO BE DIVERTED

   DI          INFLOW        .00  10000.00

   DQ     DIVERTED FLOW      .00  10000.00
```

***

*** *** *** *** ***

DIVERSION HYDROGRAPH DR-3C
FOR PLAN 1, RATIO = 1.00

PEAK FLOW (CFS)	TIME (HR)		MAXIMUM AVERAGE FLOW 6-HR	24-HR	72-HR	24.92-HR
15.	3.92	(CFS)	8.	2.	2.	2.
		(INCHES)	.051	.051	.051	.051
		(AC-FT)	4.	4.	4.	4.

CUMULATIVE AREA = 1.56 SQ MI

*** *** *** *** ***

HYDROGRAPH AT STATION DT3C
FOR PLAN 1, RATIO = 1.00

PEAK FLOW (CFS)	TIME (HR)		MAXIMUM AVERAGE FLOW 6-HR	24-HR	72-HR	24.92-HR
2257.	12.25	(CFS)	353.	101.	98.	98.
		(INCHES)	2.104	2.418	2.418	2.418
		(AC-FT)	175.	201.	201.	201.

CUMULATIVE AREA = 1.56 SQ MI

*** *** *** *** ***

DIVERSION HYDROGRAPH DR-3C
FOR PLAN 1, RATIO = .97

PEAK FLOW (CFS)	TIME (HR)		MAXIMUM AVERAGE FLOW 6-HR	24-HR	72-HR	24.92-HR
15.	4.00	(CFS)	8.	2.	2.	2.
		(INCHES)	.051	.051	.051	.051
		(AC-FT)	4.	4.	4.	4.

CUMULATIVE AREA = 1.56 SQ MI

*** *** *** *** ***

HYDROGRAPH AT STATION DT3C
FOR PLAN 1, RATIO = .97

PEAK FLOW (CFS)	TIME (HR)		MAXIMUM AVERAGE FLOW 6-HR	24-HR	72-HR	24.92-HR
2181.	12.25	(CFS)	339.	98.	94.	94.
		(INCHES)	2.024	2.326	2.326	2.326
		(AC-FT)	168.	193.	193.	193.

CUMULATIVE AREA = 1.56 SQ MI

*** *** *** *** ***

DIVERSION HYDROGRAPH OR-3C
FOR PLAN 1, RATIO = .95

PEAK FLOW (CFS)	TIME (HR)		MAXIMUM AVERAGE FLOW 6-HR	24-HR	72-HR	24.92-HR
16.	4.08	(CFS)	8.	2.	2.	2.
		(INCHES)	.051	.051	.051	.051
		(AC-FT)	4.	4.	4.	4.

CUMULATIVE AREA = 1.56 SQ MI

*** *** *** *** ***

HYDROGRAPH AT STATION DT3C
FOR PLAN 1, RATIO = .95

PEAK FLOW (CFS)	TIME (HR)		MAXIMUM AVERAGE FLOW 6-HR	24-HR	72-HR	24.92-HR
2133.	12.25	(CFS)	331.	95.	92.	92.
		(INCHES)	1.974	2.269	2.269	2.269
		(AC-FT)	164.	189.	189.	189.

CUMULATIVE AREA = 1.56 SQ MI

*** *** *** *** ***

DIVERSION HYDROGRAPH OR-3C
FOR PLAN 1, RATIO = .94

PEAK FLOW (CFS)	TIME (HR)		MAXIMUM AVERAGE FLOW 6-HR	24-HR	72-HR	24.92-HR
15.	4.08	(CFS)	8.	2.	2.	2.
		(INCHES)	.051	.051	.051	.051
		(AC-FT)	4.	4.	4.	4.

CUMULATIVE AREA = 1.56 SQ MI

*** *** *** *** ***

HYDROGRAPH AT STATION DT3C
FOR PLAN 1, RATIO = .94

PEAK FLOW (CFS)	TIME (HR)		MAXIMUM AVERAGE FLOW 6-HR	24-HR	72-HR	24.92-HR
2114.	12.25	(CFS)	328.	94.	91.	91.
		(INCHES)	1.954	2.246	2.246	2.246

```
                    (AC-FT)      163.       187.       187.       187.

                    CUMULATIVE AREA =    1.56 SQ MI


     ***          ***          ***          ***          ***

                    DIVERSION HYDROGRAPH    OR-3C
                      FOR PLAN 1, RATIO =  .92

PEAK FLOW    TIME                      MAXIMUM AVERAGE FLOW
  (CFS)      (HR)              6-HR      24-HR      72-HR    24.92-HR
    16.      4.17     (CFS)      8.         2.         2.         2.
                    (INCHES)    .051       .051       .051       .051
                    (AC-FT)      4.         4.         4.         4.

                    CUMULATIVE AREA =    1.56 SQ MI


     ***          ***          ***          ***          ***

                    HYDROGRAPH AT STATION     DT3C
                      FOR PLAN 1, RATIO =  .92

PEAK FLOW    TIME                      MAXIMUM AVERAGE FLOW
  (CFS)      (HR)              6-HR      24-HR      72-HR    24.92-HR
  2064.     12.25     (CFS)    319.        92.        88.        88.
                    (INCHES)   1.902      2.187      2.187      2.187
                    (AC-FT)    158.       182.       182.       182.

                    CUMULATIVE AREA =    1.56 SQ MI


*** *** *** *** *** *** *** *** *** *** *** *** *** *** *** *** *** *** *** *** *** *** *** *** *** *** *** *** *** *** *** *** *** *** ***


          ***************
          *             *
446 KK    *       HC5   *
          *             *
          ***************
                      COMBINE SURFACE RUNOFF AT NODE 5
                        RM4-5 + DT3C

449 HC         HYDROGRAPH COMBINATION
                    ICOMP          2  NUMBER OF HYDROGRAPHS TO COMBINE

                                                          ***

     ***          ***          ***          ***          ***

                    HYDROGRAPH AT STATION      HC5
                      FOR PLAN 1, RATIO = 1.00
```

PEAK FLOW (CFS)	TIME (HR)		MAXIMUM AVERAGE FLOW 6-HR	24-HR	72-HR	24.92-HR
5834.	13.00	(CFS)	1574.	410.	395.	395.
		(INCHES)	1.919	2.000	2.000	2.000
		(AC-FT)	781.	814.	814.	814.

CUMULATIVE AREA = 7.63 SQ MI

*** *** *** *** ***

HYDROGRAPH AT STATION HC5
FOR PLAN 1, RATIO = .97

PEAK FLOW (CFS)	TIME (HR)		MAXIMUM AVERAGE FLOW 6-HR	24-HR	72-HR	24.92-HR
5621.	13.00	(CFS)	1510.	393.	379.	379.
		(INCHES)	1.840	1.918	1.918	1.918
		(AC-FT)	749.	780.	780.	780.

CUMULATIVE AREA = 7.63 SQ MI

*** *** *** *** ***

HYDROGRAPH AT STATION HC5
FOR PLAN 1, RATIO = .95

PEAK FLOW (CFS)	TIME (HR)		MAXIMUM AVERAGE FLOW 6-HR	24-HR	72-HR	24.92-HR
5488.	13.00	(CFS)	1470.	393.	369.	369.
		(INCHES)	1.791	1.867	1.867	1.867
		(AC-FT)	729.	760.	760.	760.

CUMULATIVE AREA = 7.63 SQ MI

*** *** *** *** ***

HYDROGRAPH AT STATION HC5
FOR PLAN 1, RATIO = .94

PEAK FLOW (CFS)	TIME (HR)		MAXIMUM AVERAGE FLOW 6-HR	24-HR	72-HR	24.92-HR
5435.	13.00	(CFS)	1454.	379.	365.	365.
		(INCHES)	1.772	1.847	1.847	1.847
		(AC-FT)	721.	751.	751.	751.

CUMULATIVE AREA = 7.63 SQ MI

*** *** *** *** ***

HYDROGRAPH AT STATION HC5

FOR PLAN 1, RATIO = .92

PEAK FLOW (CFS)	TIME (HR)		MAXIMUM AVERAGE FLOW 6-HR	24-HR	72-HR	24.92-HR
5295.	13.00	(CFS)	1412.	368.	354.	354.
		(INCHES)	1.720	1.794	1.794	1.794
		(AC-FT)	700.	730.	730.	730.

CUMULATIVE AREA = 7.63 SQ MI

*** ***

```
         ##############
         #            #
450 KK   #       3B   #
         #            #
         ##############
```

RUNOFF GENERATED ON SUB-BASIN 3B

SUBBASIN RUNOFF DATA

452 BA SUBBASIN CHARACTERISTICS

TAREA .94 SUBBASIN AREA

PRECIPITATION DATA

13 PB STORM 3.96 BASIN TOTAL PRECIPITATION

14 PI INCREMENTAL PRECIPITATION PATTERN

.00	.00	.00	.00	.00	.00	.00	.00	.00	.00
.00	.00	.00	.00	.00	.00	.00	.00	.00	.00
.00	.00	.00	.00	.00	.00	.00	.00	.00	.00
.00	.00	.00	.00	.00	.00	.00	.00	.00	.00
.00	.00	.00	.00	.00	.00	.00	.00	.00	.00
.00	.00	.00	.00	.00	.00	.00	.00	.00	.00
.00	.00	.00	.00	.00	.00	.00	.00	.00	.00
.00	.00	.00	.00	.00	.00	.00	.00	.00	.00
.00	.00	.00	.00	.00	.00	.00	.00	.00	.00
.00	.00	.00	.00	.00	.00	.00	.00	.00	.00
.00	.00	.00	.00	.00	.00	.00	.00	.00	.00
.00	.00	.00	.00	.00	.00	.00	.00	.00	.00
.00	.00	.00	.00	.00	.00	.00	.00	.00	.00
.00	.00	.00	.00	.00	.00	.00	.01	.00	.01
.01	.01	.01	.01	.01	.01	.01	.01	.03	.03
.03	.09	.09	.09	.01	.01	.01	.01	.01	.01
.01	.01	.01	.01	.01	.01	.00	.00	.00	.00
.00	.00	.00	.00	.00	.00	.00	.00	.00	.00
.00	.00	.00	.00	.00	.00	.00	.00	.00	.00
.00	.00	.00	.00	.00	.00	.00	.00	.00	.00
.00	.00	.00	.00	.00	.00	.00	.00	.00	.00
.00	.00	.00	.00	.00	.00	.00	.00	.00	.00
.00	.00	.00	.00	.00	.00	.00	.00	.00	.00

.00	.00	.00	.00	.00	.00	.00	.00	.00	.00
.00	.00	.00	.00	.00	.00	.00	.00	.00	.00
.00	.00	.00	.00	.00	.00	.00	.00	.00	.00
.00	.00	.00	.00	.00	.00	.00	.00	.00	.00
.00	.00	.00	.00	.00	.00	.00	.00	.00	.00
.00	.00	.00	.00	.00	.00	.00	.00	.00	.00
.00	.00	.00	.00	.00	.00	.00	.00		

```
453 LU        UNIFORM LOSS RATE
                  STRTL        .39  INITIAL LOSS
                  CNSTL        .25  UNIFORM LOSS RATE
                  RTIMP      31.50  PERCENT IMPERVIOUS AREA

454 UD        SCS DIMENSIONLESS UNITGRAPH
                  TLAG        1.02  LAG

                                        ***

                                   UNIT HYDROGRAPH
                              63 END-OF-PERIOD ORDINATES
          10.    30.    57.    89.   129.   182.   242.   303.   355.   392.
         416.   427.   429.   425.   405.   383.   358.   329.   296.   256.
         220.   189.   166.   146.   128.   114.   102.    89.    79.    69.
          60.    54.    47.    42.    36.    32.    28.    24.    22.    19.
          17.    15.    13.    12.    10.     9.     8.     7.     6.     5.
           5.     4.     4.     3.     3.     3.     2.     2.     2.     1.
           1.     1.     0.

  TOTAL RAINFALL =   3.96, TOTAL LOSS =   1.58, TOTAL EXCESS =   2.38

PEAK FLOW    TIME                      MAXIMUM AVERAGE FLOW
 (CFS)       (HR)              6-HR     24-HR     72-HR    24.92-HR
  695.      12.92     (CFS)     204.      60.       58.       58.
                    (INCHES)  2.005    2.368     2.369     2.369
                    (AC-FT)    101.     119.      119.      119.

                    CUMULATIVE AREA =    .94 SQ MI


   ***          ***          ***          ***          ***

                    HYDROGRAPH AT STATION      3B
                      FOR PLAN 1, RATIO = 1.00

  TOTAL RAINFALL =   3.96, TOTAL LOSS =   1.58, TOTAL EXCESS =   2.38

PEAK FLOW    TIME                      MAXIMUM AVERAGE FLOW
 (CFS)       (HR)              6-HR     24-HR     72-HR    24.92-HR
  695.      12.92     (CFS)     204.      60.       58.       58.
                    (INCHES)  2.005    2.368     2.369     2.369
                    (AC-FT)    101.     119.      119.      119.

                    CUMULATIVE AREA =    .94 SQ MI
```

*** *** *** *** ***

HYDROGRAPH AT STATION 3B
FOR PLAN 1, RATIO = .97

TOTAL RAINFALL = 3.83, TOTAL LOSS = 1.55, TOTAL EXCESS = 2.29

PEAK FLOW (CFS)	TIME (HR)		MAXIMUM AVERAGE FLOW 6-HR	24-HR	72-HR	24.92-HR
669.	12.92	(CFS)	196.	58.	56.	56.
		(INCHES)	1.928	2.280	2.281	2.281
		(AC-FT)	97.	115.	115.	115.

CUMULATIVE AREA = .94 SQ MI

*** *** *** *** ***

HYDROGRAPH AT STATION 3B
FOR PLAN 1, RATIO = .95

TOTAL RAINFALL = 3.75, TOTAL LOSS = 1.52, TOTAL EXCESS = 2.23

PEAK FLOW (CFS)	TIME (HR)		MAXIMUM AVERAGE FLOW 6-HR	24-HR	72-HR	24.92-HR
654.	12.92	(CFS)	191.	56.	54.	54.
		(INCHES)	1.881	2.225	2.226	2.226
		(AC-FT)	95.	112.	112.	112.

CUMULATIVE AREA = .94 SQ MI

*** *** *** *** ***

HYDROGRAPH AT STATION 3B
FOR PLAN 1, RATIO = .94

TOTAL RAINFALL = 3.72, TOTAL LOSS = 1.51, TOTAL EXCESS = 2.21

PEAK FLOW (CFS)	TIME (HR)		MAXIMUM AVERAGE FLOW 6-HR	24-HR	72-HR	24.92-HR
647.	12.92	(CFS)	189.	56.	54.	54.
		(INCHES)	1.861	2.203	2.204	2.204
		(AC-FT)	94.	111.	111.	111.

CUMULATIVE AREA = .94 SQ MI

*** *** *** *** ***

HYDROGRAPH AT STATION 3B
FOR PLAN 1, RATIO = .92

TOTAL RAINFALL = 3.64, TOTAL LOSS = 1.49, TOTAL EXCESS = 2.15

PEAK FLOW (CFS)	TIME (HR)		MAXIMUM AVERAGE FLOW 6-HR	24-HR	72-HR	24.92-HR
631.	12.92	(CFS)	184.	54.	52.	52.
		(INCHES)	1.811	2.145	2.146	2.146
		(AC-FT)	91.	108.	108.	108.

CUMULATIVE AREA = .94 SQ MI

*** ***

```
          **************
          *            *
455 KK    *   RM3B-8   *
          *            *
          **************
```

MUSKINGUM ROUTE IN STREET FROM SUB-BASIN 3B TO NODE 8
1) Reach Length= 4500 FT.
2) Average Velocity= 2.5 FPS

HYDROGRAPH ROUTING DATA

459 RM MUSKINGUM ROUTING

NSTPS	6	NUMBER OF SUBREACHES
AMSKK	.50	MUSKINGUM K
X	.30	MUSKINGUM X

***

*** *** *** *** ***

HYDROGRAPH AT STATION RM3B-8
FOR PLAN 1, RATIO = 1.00

PEAK FLOW (CFS)	TIME (HR)		MAXIMUM AVERAGE FLOW 6-HR	24-HR	72-HR	24.92-HR
679.	13.42	(CFS)	204.	60.	58.	58.
		(INCHES)	2.005	2.363	2.363	2.363
		(AC-FT)	101.	119.	119.	119.

CUMULATIVE AREA = .94 SQ MI

*** *** *** *** ***

HYDROGRAPH AT STATION RM3B-8
FOR PLAN 1, RATIO = .97

PEAK FLOW (CFS)	TIME (HR)		MAXIMUM AVERAGE FLOW 6-HR	24-HR	72-HR	24.92-HR
655.	13.42	(CFS)	196.	58.	56.	56.
		(INCHES)	1.928	2.275	2.275	2.275

(AC-FT)	97.	115.	115.	115.

CUMULATIVE AREA = .94 SQ MI

*** *** *** *** ***

HYDROGRAPH AT STATION RM3B-8
FOR PLAN 1, RATIO = .95

PEAK FLOW (CFS)	TIME (HR)		MAXIMUM AVERAGE FLOW 6-HR	24-HR	72-HR	24.92-HR
639.	13.42	(CFS)	191.	56.	54.	54.
		(INCHES)	1.990	2.220	2.220	2.220
		(AC-FT)	95.	112.	112.	112.

CUMULATIVE AREA = .94 SQ MI

*** *** *** *** ***

HYDROGRAPH AT STATION RM3B-8
FOR PLAN 1, RATIO = .94

PEAK FLOW (CFS)	TIME (HR)		MAXIMUM AVERAGE FLOW 6-HR	24-HR	72-HR	24.92-HR
633.	13.42	(CFS)	189.	56.	54.	54.
		(INCHES)	1.861	2.198	2.198	2.198
		(AC-FT)	94.	111.	111.	111.

CUMULATIVE AREA = .94 SQ MI

*** *** *** *** ***

HYDROGRAPH AT STATION RM3B-8
FOR PLAN 1, RATIO = .92

PEAK FLOW (CFS)	TIME (HR)		MAXIMUM AVERAGE FLOW 6-HR	24-HR	72-HR	24.92-HR
617.	13.42	(CFS)	184.	54.	52.	52.
		(INCHES)	1.811	2.140	2.140	2.140
		(AC-FT)	91.	108.	108.	108.

CUMULATIVE AREA = .94 SQ MI

*** ***

```
          **************
          *            *
460 KK    *      DT8   *
```

```
*          *
**************
```

SPLIT FLOW AT INTERSECTION OF RENEE DRIVE AND 13th AVENUE

SEND FLOW SOUTH IN 13th AVENUE
(Hydrograph identified as FL-8)

REMAINDER FLOWS WEST IN RENEE DRIVE. (Hydrograph identified as DT8)

DT	DIVERSION ISTAD	FL-8	DIVERSION HYDROGRAPH IDENTIFICATION			
DI	INFLOW	.00	8.00	78.00	647.00	2044.00
DQ	DIVERTED FLOW	.00	.00	6.00	243.00	992.00

***

*** *** *** *** ***

DIVERSION HYDROGRAPH FL-8
FOR PLAN 1, RATIO = 1.00

PEAK FLOW (CFS)	TIME (HR)		MAXIMUM AVERAGE FLOW 6-HR	24-HR	72-HR	24.92-HR
260.	13.42	(CFS)	64.	16.	16.	16.
		(INCHES)	.633	.644	.644	.644
		(AC-FT)	32.	32.	32.	32.

CUMULATIVE AREA = .94 SQ MI

*** *** *** *** ***

HYDROGRAPH AT STATION DT8
FOR PLAN 1, RATIO = 1.00

PEAK FLOW (CFS)	TIME (HR)		MAXIMUM AVERAGE FLOW 6-HR	24-HR	72-HR	24.92-HR
419.	13.42	(CFS)	139.	44.	42.	42.
		(INCHES)	1.372	1.719	1.719	1.719
		(AC-FT)	69.	87.	87.	87.

CUMULATIVE AREA = .94 SQ MI

*** *** *** *** ***

DIVERSION HYDROGRAPH FL-8
FOR PLAN 1, RATIO = .97

PEAK FLOW (CFS)	TIME (HR)		MAXIMUM AVERAGE FLOW 6-HR	24-HR	72-HR	24.92-HR
247.	13.42	(CFS)	61.	16.	15.	15.

(INCHES)	.602	.612	.612	.612
(AC-FT)	30.	31.	31.	31.

CUMULATIVE AREA = .94 SQ MI

*** *** *** *** ***

HYDROGRAPH AT STATION DT8
FOR PLAN 1, RATIO = .97

PEAK FLOW (CFS)	TIME (HR)		MAXIMUM AVERAGE FLOW 6-HR	24-HR	72-HR	24.92-HR
408.	13.42	(CFS)	135.	42.	41.	41.
		(INCHES)	1.326	1.663	1.663	1.663
		(AC-FT)	67.	84.	84.	84.

CUMULATIVE AREA = .94 SQ MI

*** *** *** *** ***

DIVERSION HYDROGRAPH FL-8
FOR PLAN 1, RATIO = .95

PEAK FLOW (CFS)	TIME (HR)		MAXIMUM AVERAGE FLOW 6-HR	24-HR	72-HR	24.92-HR
240.	13.42	(CFS)	59.	15.	15.	15.
		(INCHES)	.583	.593	.593	.593
		(AC-FT)	29.	30.	30.	30.

CUMULATIVE AREA = .94 SQ MI

*** *** *** *** ***

HYDROGRAPH AT STATION DT8
FOR PLAN 1, RATIO = .95

PEAK FLOW (CFS)	TIME (HR)		MAXIMUM AVERAGE FLOW 6-HR	24-HR	72-HR	24.92-HR
399.	13.42	(CFS)	132.	41.	40.	40.
		(INCHES)	1.297	1.627	1.627	1.627
		(AC-FT)	65.	82.	82.	82.

CUMULATIVE AREA = .94 SQ MI

*** *** *** *** ***

DIVERSION HYDROGRAPH FL-8
FOR PLAN 1, RATIO = .94

PEAK FLOW (CFS)	TIME (HR)	MAXIMUM AVERAGE FLOW 6-HR	24-HR	72-HR	24.92-HR

237.	13.42	(CFS)	58.	15.	14.	14.
		(INCHES)	.576	.586	.586	.586
		(AC-FT)	29.	29.	29.	29.

CUMULATIVE AREA = .94 SQ MI

*** *** *** *** ***

HYDROGRAPH AT STATION DT8
FOR PLAN 1, RATIO = .94

PEAK FLOW (CFS)	TIME (HR)		MAXIMUM AVERAGE FLOW 6-HR	24-HR	72-HR	24.92-HR
396.	13.42	(CFS)	130.	41.	39.	39.
		(INCHES)	1.285	1.612	1.612	1.612
		(AC-FT)	65.	81.	81.	81.

CUMULATIVE AREA = .94 SQ MI

*** *** *** *** ***

DIVERSION HYDROGRAPH FL-8
FOR PLAN 1, RATIO = .92

PEAK FLOW (CFS)	TIME (HR)		MAXIMUM AVERAGE FLOW 6-HR	24-HR	72-HR	24.92-HR
230.	13.42	(CFS)	57.	14.	14.	14.
		(INCHES)	.557	.566	.566	.566
		(AC-FT)	28.	28.	28.	28.

CUMULATIVE AREA = .94 SQ MI

*** *** *** *** ***

HYDROGRAPH AT STATION DT8
FOR PLAN 1, RATIO = .92

PEAK FLOW (CFS)	TIME (HR)		MAXIMUM AVERAGE FLOW 6-HR	24-HR	72-HR	24.92-HR
386.	13.42	(CFS)	127.	40.	38.	38.
		(INCHES)	1.254	1.575	1.575	1.575
		(AC-FT)	63.	79.	79.	79.

CUMULATIVE AREA = .94 SQ MI

*** ***

****

```
          *          *
471 KK    *    RM8-9 *
          *          *
          **************
```

MUSKINGUM ROUTE IN STREET FROM NODE 8 TO NODE 9

1) Reach Length= 2750 FT.
2) Average Velocity= 3.5 FPS

HYDROGRAPH ROUTING DATA

```
475 RM        MUSKINGUM ROUTING
                  NSTPS        3 NUMBER OF SUBREACHES
                  AMSKK      .22 MUSKINGUM K
                      X      .20 MUSKINGUM X
```

***

*** *** *** *** ***

HYDROGRAPH AT STATION RM8-9
FOR PLAN 1, RATIO = 1.00

PEAK FLOW (CFS)	TIME (HR)		MAXIMUM AVERAGE FLOW 6-HR	24-HR	72-HR	24.92-HR
415.	13.58	(CFS)	139.	44.	42.	42.
		(INCHES)	1.372	1.716	1.716	1.716
		(AC-FT)	69.	86.	86.	86.

CUMULATIVE AREA = .94 SQ MI

*** *** *** *** ***

HYDROGRAPH AT STATION RM8-9
FOR PLAN 1, RATIO = .97

PEAK FLOW (CFS)	TIME (HR)		MAXIMUM AVERAGE FLOW 6-HR	24-HR	72-HR	24.92-HR
403.	13.58	(CFS)	135.	42.	41.	41.
		(INCHES)	1.326	1.660	1.660	1.660
		(AC-FT)	67.	84.	84.	84.

CUMULATIVE AREA = .94 SQ MI

*** *** *** *** ***

HYDROGRAPH AT STATION RM8-9
FOR PLAN 1, RATIO = .95

PEAK FLOW (CFS)	TIME (HR)		MAXIMUM AVERAGE FLOW 6-HR	24-HR	72-HR	24.92-HR
394.	13.58	(CFS)	132.	41.	40.	40.
		(INCHES)	1.297	1.624	1.624	1.624
		(AC-FT)	65.	82.	82.	82.

CUMULATIVE AREA = .94 SQ MI

*** *** *** *** ***

HYDROGRAPH AT STATION RMB-9
FOR PLAN 1, RATIO = .94

PEAK FLOW (CFS)	TIME (HR)		MAXIMUM AVERAGE FLOW 6-HR	24-HR	72-HR	24.92-HR
391.	13.58	(CFS)	130.	41.	39.	39.
		(INCHES)	1.285	1.610	1.610	1.610
		(AC-FT)	65.	81.	81.	81.

CUMULATIVE AREA = .94 SQ MI

*** *** *** *** ***

HYDROGRAPH AT STATION RMB-9
FOR PLAN 1, RATIO = .92

PEAK FLOW (CFS)	TIME (HR)		MAXIMUM AVERAGE FLOW 6-HR	24-HR	72-HR	24.92-HR
382.	13.58	(CFS)	127.	40.	38.	38.
		(INCHES)	1.254	1.572	1.572	1.572
		(AC-FT)	63.	79.	79.	79.

CUMULATIVE AREA = .94 SQ MI

*** ***

```
         **************
         *            *
476 KK   *      DT9   *
         *            *
         **************
```

SPLIT FLOW AT INTERSECTION OF GROVERS AVENUE AND 13th AVENUE

SEND FLOW SOUTH IN 13th AVENUE
(Hydrograph identified as FL-9)

REMAINDER FLOWS WEST IN GROVERS AVENUE. (Hydrograph identified as DT9)

DT	DIVERSION					
		ISTAD	FL-9	DIVERSION HYDROGRAPH IDENTIFICATION		
DI		INFLOW	.00	27.00	44.00	141.00	834.00

DO	DIVERTED FLOW	.00	.00	.00	37.00	303.00

***

*** *** *** *** ***

DIVERSION HYDROGRAPH FL-9
FOR PLAN 1, RATIO = 1.00

PEAK FLOW (CFS)	TIME (HR)		MAXIMUM AVERAGE FLOW 6-HR	24-HR	72-HR	24.92-HR
142.	13.58	(CFS)	38.	10.	9.	9.
		(INCHES)	.376	.376	.376	.376
		(AC-FT)	19.	19.	19.	19.

CUMULATIVE AREA = .94 SQ MI

*** *** *** *** ***

HYDROGRAPH AT STATION DT9
FOR PLAN 1, RATIO = 1.00

PEAK FLOW (CFS)	TIME (HR)		MAXIMUM AVERAGE FLOW 6-HR	24-HR	72-HR	24.92-HR
273.	13.58	(CFS)	101.	34.	33.	33.
		(INCHES)	.996	1.340	1.340	1.340
		(AC-FT)	50.	67.	67.	67.

CUMULATIVE AREA = .94 SQ MI

*** *** *** *** ***

DIVERSION HYDROGRAPH FL-9
FOR PLAN 1, RATIO = .97

PEAK FLOW (CFS)	TIME (HR)		MAXIMUM AVERAGE FLOW 6-HR	24-HR	72-HR	24.92-HR
138.	13.58	(CFS)	37.	9.	9.	9.
		(INCHES)	.360	.360	.360	.360
		(AC-FT)	18.	18.	18.	18.

CUMULATIVE AREA = .94 SQ MI

*** *** *** *** ***

HYDROGRAPH AT STATION DT9
FOR PLAN 1, RATIO = .97

PEAK FLOW (CFS)	TIME (HR)		MAXIMUM AVERAGE FLOW 6-HR	24-HR	72-HR	24.92-HR
265.	13.58	(CFS)	98.	33.	32.	32.
		(INCHES)	.966	1.300	1.300	1.300

(AC-FT)	49.	65.	65.	65.

CUMULATIVE AREA = .94 SQ MI

*** *** *** *** ***

DIVERSION HYDROGRAPH FL-9
FOR PLAN 1, RATIO = .95

PEAK FLOW (CFS)	TIME (HR)		MAXIMUM AVERAGE FLOW 6-HR	24-HR	72-HR	24.92-HR
134.	13.58	(CFS)	35.	9.	9.	9.
		(INCHES)	.350	.350	.350	.350
		(AC-FT)	18.	18.	18.	18.

CUMULATIVE AREA = .94 SQ MI

*** *** *** *** ***

HYDROGRAPH AT STATION DT9
FOR PLAN 1, RATIO = .95

PEAK FLOW (CFS)	TIME (HR)		MAXIMUM AVERAGE FLOW 6-HR	24-HR	72-HR	24.92-HR
260.	13.58	(CFS)	96.	32.	31.	31.
		(INCHES)	.947	1.274	1.274	1.274
		(AC-FT)	48.	64.	64.	64.

CUMULATIVE AREA = .94 SQ MI

*** *** *** *** ***

DIVERSION HYDROGRAPH FL-9
FOR PLAN 1, RATIO = .94

PEAK FLOW (CFS)	TIME (HR)		MAXIMUM AVERAGE FLOW 6-HR	24-HR	72-HR	24.92-HR
133.	13.58	(CFS)	35.	9.	8.	8.
		(INCHES)	.345	.345	.345	.345
		(AC-FT)	17.	17.	17.	17.

CUMULATIVE AREA = .94 SQ MI

*** *** *** *** ***

HYDROGRAPH AT STATION DT9
FOR PLAN 1, RATIO = .94

PEAK FLOW (CFS)	TIME (HR)		MAXIMUM AVERAGE FLOW 6-HR	24-HR	72-HR	24.92-HR
258.	13.58	(CFS)	95.	32.	31.	31.

(INCHES)	.940	1.264	1.264	1.264
(AC-FT)	47.	64.	64.	64.

CUMULATIVE AREA = .94 SQ MI

*** *** *** *** ***

DIVERSION HYDROGRAPH FL-9
FOR PLAN 1, RATIO = .92

PEAK FLOW (CFS)	TIME (HR)		MAXIMUM AVERAGE FLOW 6-HR	24-HR	72-HR	24.92-HR
129.	13.58	(CFS)	34.	8.	8.	8.
		(INCHES)	.335	.335	.335	.335
		(AC-FT)	17.	17.	17.	17.

CUMULATIVE AREA = .94 SQ MI

*** *** *** *** ***

HYDROGRAPH AT STATION DT9
FOR PLAN 1, RATIO = .92

PEAK FLOW (CFS)	TIME (HR)		MAXIMUM AVERAGE FLOW 6-HR	24-HR	72-HR	24.92-HR
252.	13.58	(CFS)	93.	31.	30.	30.
		(INCHES)	.919	1.237	1.237	1.237
		(AC-FT)	46.	62.	62.	62.

CUMULATIVE AREA = .94 SQ MI

*** ***

```
          ***************
          *             *
487 KK    *    RM9-5    *
          *             *
          ***************
```

MUSKINGUM ROUTE IN STREET FROM NODE 9 TO NODE 5
1) Reach Length= 3950 FT.
2) Average Velocity= 2.0 FPS

HYDROGRAPH ROUTING DATA

491 RM MUSKINGUM ROUTING

NSTPS	6	NUMBER OF SUBREACHES
AMSKK	.54	MUSKINGUM K
X	.20	MUSKINGUM X

***

*** *** *** *** ***

HYDROGRAPH AT STATION RM9-5
FOR PLAN 1, RATIO = 1.00

PEAK FLOW (CFS)	TIME (HR)		MAXIMUM AVERAGE FLOW 6-HR	24-HR	72-HR	24.92-HR
265.	14.17	(CFS)	101.	34.	33.	33.
		(INCHES)	.995	1.332	1.332	1.332
		(AC-FT)	50.	67.	67.	67.

CUMULATIVE AREA = .94 SQ MI

*** *** *** *** ***

HYDROGRAPH AT STATION RM9-5
FOR PLAN 1, RATIO = .97

PEAK FLOW (CFS)	TIME (HR)		MAXIMUM AVERAGE FLOW 6-HR	24-HR	72-HR	24.92-HR
257.	14.17	(CFS)	98.	33.	32.	32.
		(INCHES)	.966	1.292	1.292	1.292
		(AC-FT)	49.	65.	65.	65.

CUMULATIVE AREA = .94 SQ MI

*** *** *** *** ***

HYDROGRAPH AT STATION RM9-5
FOR PLAN 1, RATIO = .95

PEAK FLOW (CFS)	TIME (HR)		MAXIMUM AVERAGE FLOW 6-HR	24-HR	72-HR	24.92-HR
252.	14.17	(CFS)	96.	32.	31.	31.
		(INCHES)	.947	1.267	1.267	1.267
		(AC-FT)	48.	64.	64.	64.

CUMULATIVE AREA = .94 SQ MI

*** *** *** *** ***

HYDROGRAPH AT STATION RM9-5
FOR PLAN 1, RATIO = .94

PEAK FLOW (CFS)	TIME (HR)		MAXIMUM AVERAGE FLOW 6-HR	24-HR	72-HR	24.92-HR
250.	14.17	(CFS)	95.	32.	31.	31.
		(INCHES)	.939	1.257	1.257	1.257
		(AC-FT)	47.	63.	63.	63.

```
                    CUMULATIVE AREA =     .94 SQ MI


     ***           ***           ***           ***           ***

                    HYDROGRAPH AT STATION    RM9-5
                     FOR PLAN 1, RATIO =  .92

PEAK FLOW     TIME                        MAXIMUM AVERAGE FLOW
  (CFS)       (HR)                6-HR      24-HR      72-HR     24.92-HR
   244.      14.17      (CFS)      93.        31.        30.        30.
                       (INCHES)   .919      1.230      1.230      1.230
                       (AC-FT)    46.        62.        62.        62.

                    CUMULATIVE AREA =     .94 SQ MI


*** *** *** *** *** *** *** *** *** *** *** *** *** *** *** *** *** *** *** *** *** *** *** *** *** *** *** *** *** *** *** *** *** ***


          ***************
          *             *
492 KK    *     HC5.1   *
          *             *
          ***************
                        COMBINE SURFACE RUNOFF AT NODE 5.1
                         HC5 + RM9-5

495 HC         HYDROGRAPH COMBINATION
                    ICOMP          2  NUMBER OF HYDROGRAPHS TO COMBINE

                                                          ***

     ***           ***           ***           ***           ***

                    HYDROGRAPH AT STATION    HC5.1
                     FOR PLAN 1, RATIO = 1.00

PEAK FLOW     TIME                        MAXIMUM AVERAGE FLOW
  (CFS)       (HR)                6-HR      24-HR      72-HR     24.92-HR
  5895.      13.00      (CFS)    1672.       444.       428.       428.
                       (INCHES)  1.813      1.926      1.926      1.926
                       (AC-FT)   829.       881.       881.       881.

                    CUMULATIVE AREA =    8.57 SQ MI


     ***           ***           ***           ***           ***

                    HYDROGRAPH AT STATION    HC5.1
                     FOR PLAN 1, RATIO =  .97

PEAK FLOW     TIME                        MAXIMUM AVERAGE FLOW
```

(CFS)	(HR)		6-HR	24-HR	72-HR	24.92-HR
5681.	13.00	(CFS)	1604.	426.	411.	411.
		(INCHES)	1.740	1.849	1.849	1.849
		(AC-FT)	796.	845.	845.	845.

CUMULATIVE AREA = 8.57 SQ MI

*** *** *** *** ***

HYDROGRAPH AT STATION HC5.1
FOR PLAN 1, RATIO = .95

PEAK FLOW (CFS)	TIME (HR)		MAXIMUM AVERAGE FLOW 6-HR	24-HR	72-HR	24.92-HR
5546.	13.00	(CFS)	1562.	415.	400.	400.
		(INCHES)	1.695	1.801	1.801	1.801
		(AC-FT)	775.	823.	823.	823.

CUMULATIVE AREA = 8.57 SQ MI

*** *** *** *** ***

HYDROGRAPH AT STATION HC5.1
FOR PLAN 1, RATIO = .94

PEAK FLOW (CFS)	TIME (HR)		MAXIMUM AVERAGE FLOW 6-HR	24-HR	72-HR	24.92-HR
5493.	13.00	(CFS)	1546.	411.	396.	396.
		(INCHES)	1.676	1.782	1.782	1.782
		(AC-FT)	766.	815.	815.	815.

CUMULATIVE AREA = 8.57 SQ MI

*** *** *** *** ***

HYDROGRAPH AT STATION HC5.1
FOR PLAN 1, RATIO = .92

PEAK FLOW (CFS)	TIME (HR)		MAXIMUM AVERAGE FLOW 6-HR	24-HR	72-HR	24.92-HR
5352.	13.00	(CFS)	1502.	399.	384.	384.
		(INCHES)	1.629	1.732	1.732	1.732
		(AC-FT)	745.	792.	792.	792.

CUMULATIVE AREA = 8.57 SQ MI

*** ***

```
          ***************
          *             *
496 KK    *    RS5-6    *
          *             *
          ***************
```

NORMAL DEPTH CHANNEL ROUTE FROM NODE 5 TO NODE 6.1

1) Reach Length = 6400 FT.
2) Average Velocity = 12.7 FPS

HYDROGRAPH ROUTING DATA

```
500 RS        STORAGE ROUTING
                  NSTPS        2  NUMBER OF SUBREACHES
                   ITYP     FLOW  TYPE OF INITIAL CONDITION
                 RSVRIC    -1.00  INITIAL CONDITION
                      X      .00 WORKING R AND D COEFFICIENT

501 RC        NORMAL DEPTH CHANNEL ROUTING
                    ANL     .035  LEFT OVERBANK N-VALUE
                   ANCH     .030  MAIN CHANNEL N-VALUE
                    ANR     .035  RIGHT OVERBANK N-VALUE
                  RLNTH    6400.  REACH LENGTH
                    SEL    .0070  ENERGY SLOPE
                  ELMAX   1347.0  MAX. ELEV. FOR STORAGE/OUTFLOW CALCULATION
```

CROSS-SECTION DATA

		--- LEFT OVERBANK ---			+ ------ MAIN CHANNEL -------		+ --- RIGHT OVERBANK ---		
503 RY	ELEVATION	1347.00	1346.00	1345.00	1333.00	1333.00	1342.00	1343.00	1346.00
502 RX	DISTANCE	.00	15.00	17.00	44.00	70.00	97.00	100.00	100.00

***

COMPUTED STORAGE-OUTFLOW-ELEVATION DATA

STORAGE	.00	3.02	6.47	10.33	14.61	19.31	24.43	29.96	35.92	42.29
OUTFLOW	.00	66.32	216.03	436.90	727.27	1088.11	1521.45	2029.83	2616.09	3283.18
ELEVATION	1333.00	1333.74	1334.47	1335.21	1335.95	1336.68	1337.42	1338.16	1338.89	1339.63
STORAGE	49.08	56.30	63.93	71.98	80.44	89.30	98.56	108.20	118.27	129.36
OUTFLOW	4034.14	4872.01	5799.88	6915.90	8153.09	9488.11	10923.07	12578.27	14397.47	16354.42
ELEVATION	1340.37	1341.10	1341.84	1342.58	1343.32	1344.05	1344.79	1345.53	1346.26	1347.00

*** WARNING *** MODIFIED PULS ROUTING MAY BE NUMERICALLY UNSTABLE FOR OUTFLOWS BETWEEN 6916. TO 16354.
THE ROUTED HYDROGRAPH SHOULD BE EXAMINED FOR OSCILLATIONS OR OUTFLOWS GREATER THAN PEAK INFLOWS.
THIS CAN BE CORRECTED BY DECREASING THE TIME INTERVAL OR INCREASING STORAGE (USE A LONGER REACH.)

*** *** *** *** ***

HYDROGRAPH AT STATION RS5-6
FOR PLAN 1, RATIO = 1.00

PEAK FLOW (CFS)	TIME (HR)		MAXIMUM AVERAGE FLOW 6-HR	24-HR	72-HR	24.92-HR
5852.	13.08	(CFS)	1672.	444.	427.	427.

	(INCHES)	1.813	1.924	1.924	1.924
	(AC-FT)	829.	880.	880.	880.

PEAK STORAGE (AC-FT)	TIME (HR)	MAXIMUM AVERAGE STORAGE 6-HR	24-HR	72-HR	24.92-HR
32.	13.08	11.	3.	3.	3.

PEAK STAGE (FEET)	TIME (HR)	MAXIMUM AVERAGE STAGE 6-HR	24-HR	72-HR	24.92-HR
1341.88	13.08	1336.79	1334.23	1334.19	1334.19

CUMULATIVE AREA = 8.57 SQ MI

*** *** *** *** ***

HYDROGRAPH AT STATION RS5-6
FOR PLAN 1, RATIO = .97

PEAK FLOW (CFS)	TIME (HR)		MAXIMUM AVERAGE FLOW 6-HR	24-HR	72-HR	24.92-HR
5634.	13.08	(CFS)	1604.	426.	410.	410.
		(INCHES)	1.740	1.847	1.847	1.847
		(AC-FT)	795.	845.	845.	845.

PEAK STORAGE (AC-FT)	TIME (HR)	MAXIMUM AVERAGE STORAGE 6-HR	24-HR	72-HR	24.92-HR
31.	13.08	11.	3.	3.	3.

PEAK STAGE (FEET)	TIME (HR)	MAXIMUM AVERAGE STAGE 6-HR	24-HR	72-HR	24.92-HR
1341.71	13.08	1336.70	1334.20	1334.15	1334.15

CUMULATIVE AREA = 8.57 SQ MI

*** *** *** *** ***

HYDROGRAPH AT STATION RS5-6
FOR PLAN 1, RATIO = .95

PEAK FLOW (CFS)	TIME (HR)		MAXIMUM AVERAGE FLOW 6-HR	24-HR	72-HR	24.92-HR
5501.	13.08	(CFS)	1562.	415.	400.	400.
		(INCHES)	1.694	1.799	1.799	1.799
		(AC-FT)	775.	823.	823.	823.

PEAK STORAGE (AC-FT)	TIME (HR)	MAXIMUM AVERAGE STORAGE 6-HR	24-HR	72-HR	24.92-HR
31.	13.08	11.	3.	3.	3.

PEAK STAGE (FEET)	TIME (HR)	MAXIMUM AVERAGE STAGE 6-HR	24-HR	72-HR	24.92-HR
1341.60	13.08	1336.65	1334.18	1334.14	1334.14

CUMULATIVE AREA = 8.57 SQ MI

*** *** *** *** ***

HYDROGRAPH AT STATION RS5-6
FOR PLAN 1, RATIO = .94

PEAK FLOW (CFS)	TIME (HR)		6-HR	MAXIMUM AVERAGE FLOW 24-HR	72-HR	24.92-HR
5447.	13.08	(CFS)	1545.	410.	395.	395.
		(INCHES)	1.676	1.780	1.780	1.780
		(AC-FT)	766.	814.	814.	814.

PEAK STORAGE (AC-FT)	TIME (HR)	6-HR	MAXIMUM AVERAGE STORAGE 24-HR	72-HR	24.92-HR
31.	13.08	11.	3.	3.	3.

PEAK STAGE (FEET)	TIME (HR)	6-HR	MAXIMUM AVERAGE STAGE 24-HR	72-HR	24.92-HR
1341.56	13.08	1336.62	1334.17	1334.13	1334.13

CUMULATIVE AREA = 8.57 SQ MI

*** *** *** *** ***

HYDROGRAPH AT STATION RS5-6
FOR PLAN 1, RATIO = .92

PEAK FLOW (CFS)	TIME (HR)		6-HR	MAXIMUM AVERAGE FLOW 24-HR	72-HR	24.92-HR
5307.	13.08	(CFS)	1501.	399.	384.	384.
		(INCHES)	1.628	1.730	1.730	1.730
		(AC-FT)	744.	791.	791.	791.

PEAK STORAGE (AC-FT)	TIME (HR)	6-HR	MAXIMUM AVERAGE STORAGE 24-HR	72-HR	24.92-HR
30.	13.08	11.	3.	3.	3.

PEAK STAGE (FEET)	TIME (HR)	6-HR	MAXIMUM AVERAGE STAGE 24-HR	72-HR	24.92-HR
1341.45	13.08	1336.56	1334.15	1334.11	1334.11

CUMULATIVE AREA = 8.57 SQ MI

*** ***

```
          **************
          *            *
504 KK    *       3D   *
```

```
*          *
**************
                    RUNOFF GENERATED ON SUB-BASIN 30

          SUBBASIN RUNOFF DATA

506 BA        SUBBASIN CHARACTERISTICS
                   TAREA        .41  SUBBASIN AREA

              PRECIPITATION DATA

 13 PB             STORM       3.96  BASIN TOTAL PRECIPITATION

 14 PI          INCREMENTAL PRECIPITATION PATTERN
                  .00      .00      .00      .00      .00      .00      .00      .00      .00      .00
                  .00      .00      .00      .00      .00      .00      .00      .00      .00      .00
                  .00      .00      .00      .00      .00      .00      .00      .00      .00      .00
                  .00      .00      .00      .00      .00      .00      .00      .00      .00      .00
                  .00      .00      .00      .00      .00      .00      .00      .00      .00      .00
                  .00      .00      .00      .00      .00      .00      .00      .00      .00      .00
                  .00      .00      .00      .00      .00      .00      .00      .00      .00      .00
                  .00      .00      .00      .00      .00      .00      .00      .00      .00      .00
                  .00      .00      .00      .00      .00      .00      .00      .00      .00      .00
                  .00      .00      .00      .00      .00      .00      .00      .00      .00      .00
                  .00      .00      .00      .00      .00      .00      .00      .00      .00      .00
                  .00      .00      .00      .00      .00      .00      .00      .00      .00      .00
                  .00      .00      .00      .00      .00      .00      .00      .01      .00      .01
                  .01      .01      .01      .01      .01      .01      .01      .01      .03      .03
                  .03      .09      .09      .09      .01      .01      .01      .01      .01      .01
                  .01      .01      .01      .01      .01      .01      .00      .00      .00      .00
                  .00      .00      .00      .00      .00      .00      .00      .00      .00      .00
                  .00      .00      .00      .00      .00      .00      .00      .00      .00      .00
                  .00      .00      .00      .00      .00      .00      .00      .00      .00      .00
                  .00      .00      .00      .00      .00      .00      .00      .00      .00      .00
                  .00      .00      .00      .00      .00      .00      .00      .00      .00      .00
                  .00      .00      .00      .00      .00      .00      .00      .00      .00      .00
                  .00      .00      .00      .00      .00      .00      .00      .00      .00      .00
                  .00      .00      .00      .00      .00      .00      .00      .00      .00      .00
                  .00      .00      .00      .00      .00      .00      .00      .00      .00      .00
                  .00      .00      .00      .00      .00      .00      .00      .00      .00      .00
                  .00      .00      .00      .00      .00      .00      .00      .00      .00      .00
                  .00      .00      .00      .00      .00      .00      .00      .00      .00      .00
                  .00      .00      .00      .00      .00      .00      .00      .00      .00      .00
                  .00      .00      .00      .00      .00      .00      .00      .00
```

```
507 LU        UNIFORM LOSS RATE
                   STRTL        .43  INITIAL LOSS
                   CNSTL        .24  UNIFORM LOSS RATE
                   RTIMP      18.20  PERCENT IMPERVIOUS AREA

508 UD        SCS DIMENSIONLESS UNITGRAPH
                    TLAG        .17  LAG

                                  ***

                              UNIT HYDROGRAPH
```

12 END-OF-PERIOD ORDINATES

283.	857.	881.	552.	277.	148.	78.	41.	22.	11.
7.	3.								

TOTAL RAINFALL = 3.96, TOTAL LOSS = 1.87, TOTAL EXCESS = 2.09

PEAK FLOW (CFS)	TIME (HR)		MAXIMUM AVERAGE FLOW 6-HR	24-HR	72-HR	24.92-HR
871.	12.00	(CFS)	92.	23.	22.	22.
		(INCHES)	1.877	2.086	2.087	2.087
		(AC-FT)	41.	45.	45.	45.

CUMULATIVE AREA = .41 SQ MI

*** *** *** *** ***

HYDROGRAPH AT STATION 3D
FOR PLAN 1, RATIO = 1.00

TOTAL RAINFALL = 3.96, TOTAL LOSS = 1.87, TOTAL EXCESS = 2.09

PEAK FLOW (CFS)	TIME (HR)		MAXIMUM AVERAGE FLOW 6-HR	24-HR	72-HR	24.92-HR
871.	12.00	(CFS)	92.	23.	22.	22.
		(INCHES)	1.877	2.086	2.087	2.087
		(AC-FT)	41.	45.	45.	45.

CUMULATIVE AREA = .41 SQ MI

*** *** *** *** ***

HYDROGRAPH AT STATION 3D
FOR PLAN 1, RATIO = .97

TOTAL RAINFALL = 3.83, TOTAL LOSS = 1.83, TOTAL EXCESS = 2.01

PEAK FLOW (CFS)	TIME (HR)		MAXIMUM AVERAGE FLOW 6-HR	24-HR	72-HR	24.92-HR
841.	12.00	(CFS)	79.	22.	21.	21.
		(INCHES)	1.803	2.005	2.006	2.006
		(AC-FT)	39.	44.	44.	44.

CUMULATIVE AREA = .41 SQ MI

*** *** *** *** ***

HYDROGRAPH AT STATION 3D
FOR PLAN 1, RATIO = .95

TOTAL RAINFALL = 3.75, TOTAL LOSS = 1.80, TOTAL EXCESS = 1.96

PEAK FLOW TIME MAXIMUM AVERAGE FLOW

```
 (CFS)      (HR)                 6-HR       24-HR       72-HR     24.92-HR
  823.     12.08      (CFS)      77.         21.         21.         21.
                    (INCHES)    1.756       1.954       1.955       1.955
                     (AC-FT)     38.         43.         43.         43.

                   CUMULATIVE AREA =     .41 SQ MI


   ***           ***           ***           ***           ***

                    HYDROGRAPH AT STATION      3D
                      FOR PLAN 1, RATIO =  .94

  TOTAL RAINFALL =   3.72, TOTAL LOSS =   1.79, TOTAL EXCESS =   1.93

PEAK FLOW    TIME                        MAXIMUM AVERAGE FLOW
 (CFS)       (HR)                 6-HR       24-HR       72-HR     24.92-HR
  816.     12.08      (CFS)      76.         21.         20.         20.
                    (INCHES)    1.738       1.934       1.935       1.935
                     (AC-FT)     38.         42.         42.         42.

                   CUMULATIVE AREA =     .41 SQ MI


   ***           ***           ***           ***           ***

                    HYDROGRAPH AT STATION      3D
                      FOR PLAN 1, RATIO =  .92

  TOTAL RAINFALL =   3.64, TOTAL LOSS =   1.76, TOTAL EXCESS =   1.88

PEAK FLOW    TIME                        MAXIMUM AVERAGE FLOW
 (CFS)       (HR)                 6-HR       24-HR       72-HR     24.92-HR
  796.     12.08      (CFS)      74.         21.         20.         20.
                    (INCHES)    1.689       1.881       1.882       1.882
                     (AC-FT)     37.         41.         41.         41.

                   CUMULATIVE AREA =     .41 SQ MI


*** *** *** *** *** *** *** *** *** *** *** *** *** *** *** *** *** *** *** *** *** *** *** *** *** *** *** *** *** *** *** *** *** *** ***


          **************
          *            *
509 KK    *    HC6.2   *
          *            *
          **************
                     COMBINE SURFACE RUNOFF AT NODE 6.2
                       RS5-6 + HC6 + 3D

512 HC         HYDROGRAPH COMBINATION
                    ICOMP          3  NUMBER OF HYDROGRAPHS TO COMBINE
```

***

*** *** *** *** ***

HYDROGRAPH AT STATION HC6.2
FOR PLAN 1, RATIO = 1.00

PEAK FLOW (CFS)	TIME (HR)		MAXIMUM AVERAGE FLOW 6-HR	24-HR	72-HR	24.92-HR
15665.	13.00	(CFS)	4957.	1408.	1356.	1356.
		(INCHES)	1.959	2.225	2.225	2.225
		(AC-FT)	2458.	2792.	2792.	2792.

CUMULATIVE AREA = 23.53 SQ MI

*** *** *** *** ***

HYDROGRAPH AT STATION HC6.2
FOR PLAN 1, RATIO = .97

PEAK FLOW (CFS)	TIME (HR)		MAXIMUM AVERAGE FLOW 6-HR	24-HR	72-HR	24.92-HR
15105.	13.00	(CFS)	4767.	1354.	1304.	1304.
		(INCHES)	1.884	2.140	2.140	2.140
		(AC-FT)	2364.	2685.	2685.	2685.

CUMULATIVE AREA = 23.53 SQ MI

*** *** *** *** ***

HYDROGRAPH AT STATION HC6.2
FOR PLAN 1, RATIO = .95

PEAK FLOW (CFS)	TIME (HR)		MAXIMUM AVERAGE FLOW 6-HR	24-HR	72-HR	24.92-HR
14759.	13.00	(CFS)	4649.	1320.	1272.	1272.
		(INCHES)	1.837	2.087	2.087	2.087
		(AC-FT)	2305.	2619.	2619.	2619.

CUMULATIVE AREA = 23.53 SQ MI

*** *** *** *** ***

HYDROGRAPH AT STATION HC6.2
FOR PLAN 1, RATIO = .94

PEAK FLOW (CFS)	TIME (HR)		MAXIMUM AVERAGE FLOW 6-HR	24-HR	72-HR	24.92-HR
14620.	13.00	(CFS)	4602.	1307.	1259.	1259.
		(INCHES)	1.818	2.066	2.066	2.066
		(AC-FT)	2282.	2592.	2592.	2592.

```
                    CUMULATIVE AREA =   23.53 SQ MI

    ***           ***           ***           ***           ***

                    HYDROGRAPH AT STATION    HC6.2
                     FOR PLAN 1, RATIO =  .92

PEAK FLOW    TIME                      MAXIMUM AVERAGE FLOW
  (CFS)      (HR)              6-HR      24-HR      72-HR     24.92-HR
  14257.    13.00     (CFS)    4478.      1272.      1225.       1225.
                    (INCHES)   1.769      2.010      2.010       2.010
                     (AC-FT)   2220.      2522.      2523.       2523.

                    CUMULATIVE AREA =   23.53 SQ MI


*** *** *** *** *** *** *** *** *** *** *** *** *** *** *** *** *** *** *** *** *** *** *** *** *** *** *** *** *** *** *** *** ***


         **************
         *            *
513 KK   *     FL-8   *
         *            *
         **************
                    RECALL DIVERTED HYDROGRAPH FROM RENEE DRIVE AND 13th AVENUE

515 DR        RETRIEVE DIVERSION HYDROGRAPH
                   ISTAD       FL-8  DIVERSION HYDROGRAPH IDENTIFICATION

                                                   ***

    ***           ***           ***           ***           ***

                    HYDROGRAPH AT STATION     FL-8
                     FOR PLAN 1, RATIO = 1.00

PEAK FLOW    TIME                      MAXIMUM AVERAGE FLOW
  (CFS)      (HR)              6-HR      24-HR      72-HR     24.92-HR
    260.    13.42     (CFS)     64.        16.        16.         16.
                    (INCHES)   .025       .026       .026        .026
                     (AC-FT)   32.        32.        32.         32.

                    CUMULATIVE AREA =     .00 SQ MI

    ***           ***           ***           ***           ***

                    HYDROGRAPH AT STATION     FL-8
                     FOR PLAN 1, RATIO =  .97

PEAK FLOW    TIME                      MAXIMUM AVERAGE FLOW
```

(CFS)	(HR)		6-HR	24-HR	72-HR	24.92-HR
247.	13.42	(CFS)	61.	16.	15.	15.
		(INCHES)	.024	.025	.025	.025
		(AC-FT)	30.	31.	31.	31.

CUMULATIVE AREA = .00 SQ MI

*** *** *** *** ***

HYDROGRAPH AT STATION FL-8
FOR PLAN 1, RATIO = .95

PEAK FLOW (CFS)	TIME (HR)		MAXIMUM AVERAGE FLOW 6-HR	24-HR	72-HR	24.92-HR
240.	13.42	(CFS)	59.	15.	15.	15.
		(INCHES)	.023	.024	.024	.024
		(AC-FT)	29.	30.	30.	30.

CUMULATIVE AREA = .00 SQ MI

*** *** *** *** ***

HYDROGRAPH AT STATION FL-8
FOR PLAN 1, RATIO = .94

PEAK FLOW (CFS)	TIME (HR)		MAXIMUM AVERAGE FLOW 6-HR	24-HR	72-HR	24.92-HR
237.	13.42	(CFS)	58.	15.	14.	14.
		(INCHES)	.023	.023	.023	.023
		(AC-FT)	29.	29.	29.	29.

CUMULATIVE AREA = .00 SQ MI

*** *** *** *** ***

HYDROGRAPH AT STATION FL-8
FOR PLAN 1, RATIO = .92

PEAK FLOW (CFS)	TIME (HR)		MAXIMUM AVERAGE FLOW 6-HR	24-HR	72-HR	24.92-HR
230.	13.42	(CFS)	57.	14.	14.	14.
		(INCHES)	.022	.023	.023	.023
		(AC-FT)	28.	28.	28.	28.

CUMULATIVE AREA = .00 SQ MI

*** ***

```
            ##############
            #            #
516 KK      #   RMB-10   #
            #            #
            ##############
```

MUSKINGUM ROUTE IN STREET FROM NODE 8 TO NODE 10

1) Reach Length= 8200 FT.
2) Average Velocity= 3.0 FPS

HYDROGRAPH ROUTING DATA

```
520 RM        MUSKINGUM ROUTING
                  NSTPS        4 NUMBER OF SUBREACHES
                  AMSKK      .76 MUSKINGUM K
                      X      .20 MUSKINGUM X
```

```
                                                  ###

   ###          ###          ###          ###          ###
```

HYDROGRAPH AT STATION RMB-10
FOR PLAN 1, RATIO = 1.00

PEAK FLOW (CFS)	TIME (HR)		MAXIMUM AVERAGE FLOW 6-HR	24-HR	72-HR	24.92-HR
230.	14.17	(CFS)	64.	16.	16.	16.
		(INCHES)	.000	.000	.000	.000
		(AC-FT)	32.	32.	32.	32.

CUMULATIVE AREA = .00 SQ MI

```
   ###          ###          ###          ###          ###
```

HYDROGRAPH AT STATION RMB-10
FOR PLAN 1, RATIO = .97

PEAK FLOW (CFS)	TIME (HR)		MAXIMUM AVERAGE FLOW 6-HR	24-HR	72-HR	24.92-HR
219.	14.17	(CFS)	61.	16.	15.	15.
		(INCHES)	.000	.000	.000	.000
		(AC-FT)	30.	31.	31.	31.

CUMULATIVE AREA = .00 SQ MI

```
   ###          ###          ###          ###          ###
```

HYDROGRAPH AT STATION RMB-10
FOR PLAN 1, RATIO = .95

PEAK FLOW (CFS)	TIME (HR)		MAXIMUM AVERAGE FLOW 6-HR	24-HR	72-HR	24.92-HR
213.	14.17	(CFS)	59.	15.	15.	15.
		(INCHES)	.000	.000	.000	.000

(AC-FT)	29.	30.	30.	30.

CUMULATIVE AREA = .00 SQ MI

*** *** *** *** ***

HYDROGRAPH AT STATION RMB-10
FOR PLAN 1, RATIO = .94

PEAK FLOW (CFS)	TIME (HR)		MAXIMUM AVERAGE FLOW 6-HR	24-HR	72-HR	24.92-HR
211.	14.17	(CFS)	58.	15.	14.	14.
		(INCHES)	.000	.000	.000	.000
		(AC-FT)	29.	29.	29.	29.

CUMULATIVE AREA = .00 SQ MI

*** *** *** *** ***

HYDROGRAPH AT STATION RMB-10
FOR PLAN 1, RATIO = .92

PEAK FLOW (CFS)	TIME (HR)		MAXIMUM AVERAGE FLOW 6-HR	24-HR	72-HR	24.92-HR
205.	14.17	(CFS)	57.	14.	14.	14.
		(INCHES)	.000	.000	.000	.000
		(AC-FT)	28.	28.	28.	28.

CUMULATIVE AREA = .00 SQ MI

*** ***

```
          ***************
          *             *
521 KK    *        4A   *
          *             *
          ***************
```

RUNOFF GENERATED ON SUB-BASIN 4A

SUBBASIN RUNOFF DATA

523 BA SUBBASIN CHARACTERISTICS
TAREA 1.26 SUBBASIN AREA

PRECIPITATION DATA

13 PB STORM 3.96 BASIN TOTAL PRECIPITATION

14 PI INCREMENTAL PRECIPITATION PATTERN

.00	.00	.00	.00	.00	.00	.00	.00	.00	.00
.00	.00	.00	.00	.00	.00	.00	.00	.00	.00
.00	.00	.00	.00	.00	.00	.00	.00	.00	.00
.00	.00	.00	.00	.00	.00	.00	.00	.00	.00
.00	.00	.00	.00	.00	.00	.00	.00	.00	.00
.00	.00	.00	.00	.00	.00	.00	.00	.00	.00
.00	.00	.00	.00	.00	.00	.00	.00	.00	.00
.00	.00	.00	.00	.00	.00	.00	.00	.00	.00
.00	.00	.00	.00	.00	.00	.00	.00	.00	.00
.00	.00	.00	.00	.00	.00	.00	.00	.00	.00
.00	.00	.00	.00	.00	.00	.00	.00	.00	.00
.00	.00	.00	.00	.00	.00	.00	.00	.00	.00
.00	.00	.00	.00	.00	.00	.00	.01	.00	.01
.01	.01	.01	.01	.01	.01	.01	.01	.03	.03
.03	.09	.09	.09	.01	.01	.01	.01	.01	.01
.01	.01	.01	.01	.01	.01	.00	.00	.00	.00
.00	.00	.00	.00	.00	.00	.00	.00	.00	.00
.00	.00	.00	.00	.00	.00	.00	.00	.00	.00
.00	.00	.00	.00	.00	.00	.00	.00	.00	.00
.00	.00	.00	.00	.00	.00	.00	.00	.00	.00
.00	.00	.00	.00	.00	.00	.00	.00	.00	.00
.00	.00	.00	.00	.00	.00	.00	.00	.00	.00
.00	.00	.00	.00	.00	.00	.00	.00	.00	.00
.00	.00	.00	.00	.00	.00	.00	.00	.00	.00
.00	.00	.00	.00	.00	.00	.00	.00	.00	.00
.00	.00	.00	.00	.00	.00	.00	.00	.00	.00
.00	.00	.00	.00	.00	.00	.00	.00	.00	.00
.00	.00	.00	.00	.00	.00	.00	.00	.00	.00
.00	.00	.00	.00	.00	.00	.00	.00	.00	.00
.00	.00	.00	.00	.00	.00	.00	.00	.00	.00
.00	.00	.00	.00	.00	.00	.00	.00		

524 LU UNIFORM LOSS RATE

STRTL	.32	INITIAL LOSS
CNSTL	.19	UNIFORM LOSS RATE
RTIMP	46.00	PERCENT IMPERVIOUS AREA

525 UD SCS DIMENSIONLESS UNITGRAPH

TLAG	.85	LAG

***

UNIT HYDROGRAPH
53 END-OF-PERIOD ORDINATES

19.	62.	118.	191.	286.	401.	512.	598.	654.	681.
683.	669.	630.	585.	533.	469.	393.	327.	279.	239.
205.	178.	154.	133.	114.	97.	84.	72.	62.	52.
45.	38.	33.	29.	25.	21.	18.	16.	13.	12.
10.	9.	7.	7.	6.	5.	4.	4.	3.	2.
2.	1.	0.							

TOTAL RAINFALL = 3.96, TOTAL LOSS = 1.14, TOTAL EXCESS = 2.82

PEAK FLOW (CFS)	TIME (HR)		MAXIMUM AVERAGE FLOW 6-HR	24-HR	72-HR	24.92-HR
1124.	12.75	(CFS)	309.	95.	92.	92.
		(INCHES)	2.271	2.808	2.810	2.810

(AC-FT)	153.	189.	189.	189.

CUMULATIVE AREA = 1.26 SQ MI

*** *** *** *** ***

HYDROGRAPH AT STATION 4A
FOR PLAN 1, RATIO = 1.00

TOTAL RAINFALL = 3.96, TOTAL LOSS = 1.14, TOTAL EXCESS = 2.82

PEAK FLOW (CFS)	TIME (HR)		6-HR	MAXIMUM AVERAGE FLOW 24-HR	72-HR	24.92-HR
1124.	12.75	(CFS)	309.	95.	92.	92.
		(INCHES)	2.271	2.808	2.810	2.810
		(AC-FT)	153.	189.	189.	189.

CUMULATIVE AREA = 1.26 SQ MI

*** *** *** *** ***

HYDROGRAPH AT STATION 4A
FOR PLAN 1, RATIO = .97

TOTAL RAINFALL = 3.83, TOTAL LOSS = 1.12, TOTAL EXCESS = 2.72

PEAK FLOW (CFS)	TIME (HR)		6-HR	MAXIMUM AVERAGE FLOW 24-HR	72-HR	24.92-HR
1086.	12.75	(CFS)	298.	92.	89.	89.
		(INCHES)	2.189	2.708	2.710	2.710
		(AC-FT)	148.	183.	183.	183.

CUMULATIVE AREA = 1.26 SQ MI

*** *** *** *** ***

HYDROGRAPH AT STATION 4A
FOR PLAN 1, RATIO = .95

TOTAL RAINFALL = 3.75, TOTAL LOSS = 1.10, TOTAL EXCESS = 2.65

PEAK FLOW (CFS)	TIME (HR)		6-HR	MAXIMUM AVERAGE FLOW 24-HR	72-HR	24.92-HR
1062.	12.75	(CFS)	291.	90.	87.	87.
		(INCHES)	2.137	2.646	2.648	2.648
		(AC-FT)	144.	178.	179.	179.

CUMULATIVE AREA = 1.26 SQ MI

*** *** *** *** ***

HYDROGRAPH AT STATION 4A
FOR PLAN 1, RATIO = .94

TOTAL RAINFALL = 3.72, TOTAL LOSS = 1.09, TOTAL EXCESS = 2.63

PEAK FLOW (CFS)	TIME (HR)		6-HR	MAXIMUM AVERAGE FLOW 24-HR	72-HR	24.92-HR
1052.	12.75	(CFS)	288.	89.	86.	86.
		(INCHES)	2.117	2.621	2.623	2.623
		(AC-FT)	143.	177.	177.	177.

CUMULATIVE AREA = 1.26 SQ MI

*** *** *** *** ***

HYDROGRAPH AT STATION 4A
FOR PLAN 1, RATIO = .92

TOTAL RAINFALL = 3.64, TOTAL LOSS = 1.08, TOTAL EXCESS = 2.56

PEAK FLOW (CFS)	TIME (HR)		6-HR	MAXIMUM AVERAGE FLOW 24-HR	72-HR	24.92-HR
1027.	12.75	(CFS)	280.	87.	84.	84.
		(INCHES)	2.063	2.556	2.558	2.558
		(AC-FT)	139.	172.	172.	172.

CUMULATIVE AREA = 1.26 SQ MI

*** ***

```
         **************
         *            *
526 KK   *     DT4A   *
         *            *
         **************
```

THROW AWAY 10-YR 2-HR RETENTION VOLUME:1) 7.8 AC-FT FROM SUB-BASIN 4A
(Hydrograph identified as OR-4A)
2) Balance of runoff continues on.
(Hydrograph identified as DT4A)

```
DT        DIVERSION
               ISTAD ,,   OR-4A  DIVERSION HYDROGRAPH IDENTIFICATION
              DSTRMX       7.80  MAXIMUM VOLUME TO BE DIVERTED

DI          INFLOW        .00  10000.00

DQ     DIVERTED FLOW      .00  10000.00
```

***

*** *** *** *** ***

DIVERSION HYDROGRAPH OR-4A
FOR PLAN 1, RATIO = 1.00

PEAK FLOW (CFS)	TIME (HR)		MAXIMUM AVERAGE FLOW 6-HR	24-HR	72-HR	24.92-HR
24.	5.92	(CFS)	16.	4.	4.	4.
		(INCHES)	.116	.116	.116	.116
		(AC-FT)	8.	8.	8.	8.

CUMULATIVE AREA = 1.26 SQ MI

*** *** *** *** ***

HYDROGRAPH AT STATION DT4A
FOR PLAN 1, RATIO = 1.00

PEAK FLOW (CFS)	TIME (HR)		MAXIMUM AVERAGE FLOW 6-HR	24-HR	72-HR	24.92-HR
1124.	12.75	(CFS)	309.	92.	88.	88.
		(INCHES)	2.271	2.694	2.694	2.694
		(AC-FT)	153.	182.	182.	182.

CUMULATIVE AREA = 1.26 SQ MI

*** *** *** *** ***

DIVERSION HYDROGRAPH OR-4A
FOR PLAN 1, RATIO = .97

PEAK FLOW (CFS)	TIME (HR)		MAXIMUM AVERAGE FLOW 6-HR	24-HR	72-HR	24.92-HR
23.	6.08	(CFS)	16.	4.	4.	4.
		(INCHES)	.116	.116	.116	.116
		(AC-FT)	8.	8.	8.	8.

CUMULATIVE AREA = 1.26 SQ MI

*** *** *** *** ***

HYDROGRAPH AT STATION DT4A
FOR PLAN 1, RATIO = .97

PEAK FLOW (CFS)	TIME (HR)		MAXIMUM AVERAGE FLOW 6-HR	24-HR	72-HR	24.92-HR
1086.	12.75	(CFS)	298.	88.	85.	85.
		(INCHES)	2.189	2.595	2.595	2.595
		(AC-FT)	148.	175.	175.	175.

CUMULATIVE AREA = 1.26 SQ MI

*** *** *** *** ***

DIVERSION HYDROGRAPH OR-4A
FOR PLAN 1, RATIO = .95

PEAK FLOW (CFS)	TIME (HR)		MAXIMUM AVERAGE FLOW 6-HR	24-HR	72-HR	24.92-HR
23.	6.17	(CFS)	16.	4.	4.	4.
		(INCHES)	.116	.116	.116	.116
		(AC-FT)	8.	8.	8.	8.

CUMULATIVE AREA = 1.26 SQ MI

*** *** *** *** ***

HYDROGRAPH AT STATION DT4A
FOR PLAN 1, RATIO = .95

PEAK FLOW (CFS)	TIME (HR)		MAXIMUM AVERAGE FLOW 6-HR	24-HR	72-HR	24.92-HR
1062.	12.75	(CFS)	291.	86.	83.	83.
		(INCHES)	2.137	2.532	2.532	2.532
		(AC-FT)	144.	171.	171.	171.

CUMULATIVE AREA = 1.26 SQ MI

*** *** *** *** ***

DIVERSION HYDROGRAPH OR-4A
FOR PLAN 1, RATIO = .94

PEAK FLOW (CFS)	TIME (HR)		MAXIMUM AVERAGE FLOW 6-HR	24-HR	72-HR	24.92-HR
23.	6.17	(CFS)	16.	4.	4.	4.
		(INCHES)	.116	.116	.116	.116
		(AC-FT)	8.	8.	8.	8.

CUMULATIVE AREA = 1.26 SQ MI

*** *** *** *** ***

HYDROGRAPH AT STATION DT4A
FOR PLAN 1, RATIO = .94

PEAK FLOW (CFS)	TIME (HR)		MAXIMUM AVERAGE FLOW 6-HR	24-HR	72-HR	24.92-HR
1052.	12.75	(CFS)	288.	85.	82.	82.
		(INCHES)	2.117	2.507	2.507	2.507
		(AC-FT)	143.	169.	169.	169.

CUMULATIVE AREA = 1.26 SQ MI

```
   ***          ***          ***          ***          ***

                    DIVERSION HYDROGRAPH    DR-4A
                     FOR PLAN 1, RATIO =  .92

PEAK FLOW    TIME                        MAXIMUM AVERAGE FLOW
 (CFS)       (HR)                6-HR      24-HR      72-HR     24.92-HR
   22.       6.25       (CFS)     16.        4.         4.          4.
                       (INCHES)   .116       .116       .116        .116
                       (AC-FT)     8.         8.         8.          8.

                    CUMULATIVE AREA =    1.26 SQ MI


   ***          ***          ***          ***          ***

                    HYDROGRAPH AT STATION     DT4A
                     FOR PLAN 1, RATIO =  .92

PEAK FLOW    TIME                        MAXIMUM AVERAGE FLOW
 (CFS)       (HR)                6-HR      24-HR      72-HR     24.92-HR
  1027.     12.75       (CFS)    280.       83.        80.         80.
                       (INCHES)  2.063     2.442      2.442       2.442
                       (AC-FT)   139.      165.       165.        165.

                    CUMULATIVE AREA =    1.26 SQ MI


*** *** *** *** *** *** *** *** *** *** *** *** *** *** *** *** *** *** *** *** *** *** *** *** *** *** *** *** *** *** *** *** ***


         **************
         *            *
534 KK   *     FL-9   *
         *            *
         **************
                    RECALL DIVERTED HYDROGRAPH FROM GROVERS AVENUE AND 13th AVENUE

536 DR        RETRIEVE DIVERSION HYDROGRAPH
                  ISTAD       FL-9  DIVERSION HYDROGRAPH IDENTIFICATION

                                                          ***

   ***          ***          ***          ***          ***

                    HYDROGRAPH AT STATION     FL-9
                     FOR PLAN 1, RATIO = 1.00

PEAK FLOW    TIME                        MAXIMUM AVERAGE FLOW
 (CFS)       (HR)                6-HR      24-HR      72-HR     24.92-HR
  142.      13.58       (CFS)     38.        10.         9.          9.
```

(INCHES)	.281	.281	.281	.281
(AC-FT)	19.	19.	19.	19.

CUMULATIVE AREA = .00 SQ MI

*** *** *** *** ***

HYDROGRAPH AT STATION FL-9
FOR PLAN 1, RATIO = .97

PEAK FLOW (CFS)	TIME (HR)		MAXIMUM AVERAGE FLOW 6-HR	24-HR	72-HR	24.92-HR
139.	13.58	(CFS)	37.	9.	9.	9.
		(INCHES)	.269	.269	.269	.269
		(AC-FT)	18.	18.	18.	18.

CUMULATIVE AREA = .00 SQ MI

*** *** *** *** ***

HYDROGRAPH AT STATION FL-9
FOR PLAN 1, RATIO = .95

PEAK FLOW (CFS)	TIME (HR)		MAXIMUM AVERAGE FLOW 6-HR	24-HR	72-HR	24.92-HR
134.	13.58	(CFS)	35.	9.	9.	9.
		(INCHES)	.261	.261	.261	.261
		(AC-FT)	18.	18.	18.	19.

CUMULATIVE AREA = .00 SQ MI

*** *** *** *** ***

HYDROGRAPH AT STATION FL-9
FOR PLAN 1, RATIO = .94

PEAK FLOW (CFS)	TIME (HR)		MAXIMUM AVERAGE FLOW 6-HR	24-HR	72-HR	24.92-HR
133.	13.58	(CFS)	35.	9.	8.	8.
		(INCHES)	.258	.258	.258	.258
		(AC-FT)	17.	17.	17.	17.

CUMULATIVE AREA = .00 SQ MI

*** *** *** *** ***

HYDROGRAPH AT STATION FL-9
FOR PLAN 1, RATIO = .92

PEAK FLOW (CFS)	TIME (HR)	MAXIMUM AVERAGE FLOW 6-HR	24-HR	72-HR	24.92-HR

129.	13.58	(CFS)	34.	8.	8.	8.
		(INCHES)	.250	.250	.250	.250
		(AC-FT)	17.	17.	17.	17.

CUMULATIVE AREA = .00 SQ MI

*** ***

```
          **************
          *            *
537 KK    *   RM9-10   *
          *            *
          **************
```

MUSKINGUM ROUTE IN STREET FROM NODE 9 TO NODE 10

1) Reach Length= 5750 FT.
2) Average Velocity= 3.0 FPS

HYDROGRAPH ROUTING DATA

541 RM MUSKINGUM ROUTING

NSTPS 3 NUMBER OF SUBREACHES
AMSKK .53 MUSKINGUM K
X .20 MUSKINGUM X

*** *** *** *** *** ***

HYDROGRAPH AT STATION RM9-10
FOR PLAN 1, RATIO = 1.00

PEAK FLOW (CFS)	TIME (HR)		MAXIMUM AVERAGE FLOW 6-HR	24-HR	72-HR	24.92-HR
133.	14.17	(CFS)	38.	10.	9.	9.
		(INCHES)	.000	.000	.000	.000
		(AC-FT)	19.	19.	19.	19.

CUMULATIVE AREA = .00 SQ MI

*** *** *** *** *** ***

HYDROGRAPH AT STATION RM9-10
FOR PLAN 1, RATIO = .97

PEAK FLOW (CFS)	TIME (HR)		MAXIMUM AVERAGE FLOW 6-HR	24-HR	72-HR	24.92-HR
128.	14.17	(CFS)	37.	9.	9.	9.
		(INCHES)	.000	.000	.000	.000
		(AC-FT)	18.	18.	18.	18.

CUMULATIVE AREA = .00 SQ MI

*** *** *** *** ***

HYDROGRAPH AT STATION RM9-10
FOR PLAN 1, RATIO = .95

PEAK FLOW (CFS)	TIME (HR)		6-HR	MAXIMUM AVERAGE FLOW 24-HR	72-HR	24.92-HR
125.	14.17	(CFS)	35.	9.	9.	9.
		(INCHES)	.000	.000	.000	.000
		(AC-FT)	18.	18.	18.	18.

CUMULATIVE AREA = .00 SQ MI

*** *** *** *** ***

HYDROGRAPH AT STATION RM9-10
FOR PLAN 1, RATIO = .94

PEAK FLOW (CFS)	TIME (HR)		6-HR	MAXIMUM AVERAGE FLOW 24-HR	72-HR	24.92-HR
124.	14.17	(CFS)	35.	9.	8.	8.
		(INCHES)	.000	.000	.000	.000
		(AC-FT)	17.	17.	17.	17.

CUMULATIVE AREA = .00 SQ MI

*** *** *** *** ***

HYDROGRAPH AT STATION RM9-10
FOR PLAN 1, RATIO = .92

PEAK FLOW (CFS)	TIME (HR)		6-HR	MAXIMUM AVERAGE FLOW 24-HR	72-HR	24.92-HR
120.	14.17	(CFS)	34.	8.	8.	8.
		(INCHES)	.000	.000	.000	.000
		(AC-FT)	17.	17.	17.	17.

CUMULATIVE AREA = .00 SQ MI

*** ***

```
         **************
         *            *
542 KK   *     HC10   *
         *            *
         **************
```

COMBINE SURFACE RUNOFF AT NODE 10
RM8-10 + DT4A + RM9-10

545 HC HYDROGRAPH COMBINATION
ICOMP 3 NUMBER OF HYDROGRAPHS TO COMBINE

***

*** *** *** *** ***

HYDROGRAPH AT STATION HC10
FOR PLAN 1, RATIO = 1.00

PEAK FLOW (CFS)	TIME (HR)		MAXIMUM AVERAGE FLOW 6-HR	24-HR	72-HR	24.92-HR
1132.	12.75	(CFS)	410.	117.	113.	113.
		(INCHES)	3.017	3.456	3.456	3.456
		(AC-FT)	203.	233.	233.	233.

CUMULATIVE AREA = 1.26 SQ MI

*** *** *** *** ***

HYDROGRAPH AT STATION HC10
FOR PLAN 1, RATIO = .97

PEAK FLOW (CFS)	TIME (HR)		MAXIMUM AVERAGE FLOW 6-HR	24-HR	72-HR	24.92-HR
1093.	12.75	(CFS)	394.	113.	109.	109.
		(INCHES)	2.900	3.321	3.321	3.321
		(AC-FT)	196.	224.	224.	224.

CUMULATIVE AREA = 1.26 SQ MI

*** *** *** *** ***

HYDROGRAPH AT STATION HC10
FOR PLAN 1, RATIO = .95

PEAK FLOW (CFS)	TIME (HR)		MAXIMUM AVERAGE FLOW 6-HR	24-HR	72-HR	24.92-HR
1068.	12.75	(CFS)	384.	110.	106.	106.
		(INCHES)	2.827	3.236	3.236	3.236
		(AC-FT)	191.	218.	218.	218.

CUMULATIVE AREA = 1.26 SQ MI

*** *** *** *** ***

HYDROGRAPH AT STATION HC10
FOR PLAN 1, RATIO = .94

PEAK FLOW (CFS)	TIME (HR)		MAXIMUM AVERAGE FLOW 6-HR	24-HR	72-HR	24.92-HR
1058.	12.75	(CFS)	380.	109.	105.	105.
		(INCHES)	2.798	3.203	3.203	3.203
		(AC-FT)	189.	216.	216.	216.

CUMULATIVE AREA = 1.26 SQ MI

*** *** *** *** ***

HYDROGRAPH AT STATION HC10
FOR PLAN 1, RATIO = .92

PEAK FLOW (CFS)	TIME (HR)		MAXIMUM AVERAGE FLOW 6-HR	24-HR	72-HR	24.92-HR
1033.	12.75	(CFS)	370.	106.	102.	102.
		(INCHES)	2.722	3.115	3.115	3.115
		(AC-FT)	184.	210.	210.	210.

CUMULATIVE AREA = 1.26 SQ MI

*** ***

```
          **************
          *            *
546 KK    *     DT10   *
          *            *
          **************
```

SPLIT FLOW AT INTERSECTION OF 19th AVENUE AND BELL ROAD.

SEND FLOW WEST IN BELL ROAD OUT OF WATERSHED IN STREET.
(Hydrograph identified as FL-10)

REMAINDER FLOWS SOUTH IN 19th AVE. STREET AND 90" PIPE.
(Hydrograph identified as DT10) (490 cfs in PIPE)

DT	DIVERSION ISTAD	FL-10	DIVERSION HYDROGRAPH IDENTIFICATION		
DI	INFLOW	.00	961.00	1006.00	3470.00
DQ	DIVERTED FLOW	.00	336.00	336.00	1517.00

***

*** *** *** *** ***

DIVERSION HYDROGRAPH FL-10
FOR PLAN 1, RATIO = 1.00

PEAK FLOW (CFS)	TIME (HR)		MAXIMUM AVERAGE FLOW 6-HR	24-HR	72-HR	24.92-HR
397.	12.75	(CFS)	143.	41.	39.	39.
		(INCHES)	1.051	1.204	1.204	1.204
		(AC-FT)	71.	81.	81.	81.

CUMULATIVE AREA = 1.26 SQ MI

*** *** *** *** ***

HYDROGRAPH AT STATION DT10
FOR PLAN 1, RATIO = 1.00

PEAK FLOW (CFS)	TIME (HR)		MAXIMUM AVERAGE FLOW 6-HR	24-HR	72-HR	24.92-HR
736.	12.75	(CFS)	267.	77.	74.	74.
		(INCHES)	1.966	2.252	2.252	2.252
		(AC-FT)	133.	152.	152.	152.

CUMULATIVE AREA = 1.26 SQ MI

*** *** *** *** ***

DIVERSION HYDROGRAPH FL-10
FOR PLAN 1, RATIO = .97

PEAK FLOW (CFS)	TIME (HR)		MAXIMUM AVERAGE FLOW 6-HR	24-HR	72-HR	24.92-HR
378.	12.75	(CFS)	137.	39.	38.	38.
		(INCHES)	1.008	1.155	1.155	1.155
		(AC-FT)	68.	78.	78.	78.

CUMULATIVE AREA = 1.26 SQ MI

*** *** *** *** ***

HYDROGRAPH AT STATION DT10
FOR PLAN 1, RATIO = .97

PEAK FLOW (CFS)	TIME (HR)		MAXIMUM AVERAGE FLOW 6-HR	24-HR	72-HR	24.92-HR
715.	12.75	(CFS)	257.	74.	71.	71.
		(INCHES)	1.892	2.165	2.165	2.165
		(AC-FT)	128.	146.	146.	146.

CUMULATIVE AREA = 1.26 SQ MI

*** *** *** *** ***

DIVERSION HYDROGRAPH FL-10

FOR PLAN 1, RATIO = .95

PEAK FLOW (CFS)	TIME (HR)		MAXIMUM AVERAGE FLOW 6-HR	24-HR	72-HR	24.92-HR
366.	12.75	(CFS)	134.	38.	37.	37.
		(INCHES)	.983	1.126	1.126	1.126
		(AC-FT)	66.	76.	76.	76.

CUMULATIVE AREA = 1.26 SQ MI

*** *** *** *** ***

HYDROGRAPH AT STATION DT10
FOR PLAN 1, RATIO = .95

PEAK FLOW (CFS)	TIME (HR)		MAXIMUM AVERAGE FLOW 6-HR	24-HR	72-HR	24.92-HR
702.	12.75	(CFS)	251.	72.	69.	69.
		(INCHES)	1.845	2.111	2.111	2.111
		(AC-FT)	124.	142.	142.	142.

CUMULATIVE AREA = 1.26 SQ MI

*** *** *** *** ***

DIVERSION HYDROGRAPH FL-10
FOR PLAN 1, RATIO = .94

PEAK FLOW (CFS)	TIME (HR)		MAXIMUM AVERAGE FLOW 6-HR	24-HR	72-HR	24.92-HR
361.	12.75	(CFS)	132.	38.	36.	36.
		(INCHES)	.972	1.114	1.114	1.114
		(AC-FT)	66.	75.	75.	75.

CUMULATIVE AREA = 1.26 SQ MI

*** *** *** *** ***

HYDROGRAPH AT STATION DT10
FOR PLAN 1, RATIO = .94

PEAK FLOW (CFS)	TIME (HR)		MAXIMUM AVERAGE FLOW 6-HR	24-HR	72-HR	24.92-HR
697.	12.75	(CFS)	248.	71.	68.	68.
		(INCHES)	1.826	2.089	2.089	2.089
		(AC-FT)	123.	141.	141.	141.

CUMULATIVE AREA = 1.26 SQ MI

*** *** *** *** ***

DIVERSION HYDROGRAPH FL-10
FOR PLAN 1, RATIO = .92

PEAK FLOW (CFS)	TIME (HR)		MAXIMUM AVERAGE FLOW 6-HR	24-HR	72-HR	24.92-HR
349.	12.75	(CFS)	129.	37.	35.	35.
		(INCHES)	.946	1.083	1.083	1.083
		(AC-FT)	64.	73.	73.	73.

CUMULATIVE AREA = 1.26 SQ MI

*** *** *** *** ***

HYDROGRAPH AT STATION DT10
FOR PLAN 1, RATIO = .92

PEAK FLOW (CFS)	TIME (HR)		MAXIMUM AVERAGE FLOW 6-HR	24-HR	72-HR	24.92-HR
684.	12.75	(CFS)	242.	69.	67.	67.
		(INCHES)	1.777	2.032	2.032	2.032
		(AC-FT)	120.	137.	137.	137.

CUMULATIVE AREA = 1.26 SQ MI

*** ***

```
          **************
          *            *
558 KK    *   RM10-7   *
          *            *
          **************
```

MUSKINGUM ROUTE IN STREET FROM NODE 10 TO NODE 7
1) Reach Length= 6850 FT.
2) Average Velocity= 4.0 FPS

HYDROGRAPH ROUTING DATA

562 RM MUSKINGUM ROUTING
NSTPS 6 NUMBER OF SUBREACHES
AMSKK .48 MUSKINGUM K
X .20 MUSKINGUM X

***

*** *** *** *** ***

HYDROGRAPH AT STATION RM10-7
FOR PLAN 1, RATIO = 1.00

PEAK FLOW TIME MAXIMUM AVERAGE FLOW

(CFS)	(HR)		6-HR	24-HR	72-HR	24.92-HR
712.	13.25	(CFS)	267.	76.	74.	74.
		(INCHES)	1.966	2.247	2.247	2.247
		(AC-FT)	133.	151.	151.	151.

CUMULATIVE AREA = 1.26 SQ MI

*** *** *** *** ***

HYDROGRAPH AT STATION RM10-7
FOR PLAN 1, RATIO = .97

PEAK FLOW (CFS)	TIME (HR)		MAXIMUM AVERAGE FLOW 6-HR	24-HR	72-HR	24.92-HR
691.	13.25	(CFS)	257.	73.	71.	71.
		(INCHES)	1.892	2.161	2.161	2.161
		(AC-FT)	128.	146.	146.	146.

CUMULATIVE AREA = 1.26 SQ MI

*** *** *** *** ***

HYDROGRAPH AT STATION RM10-7
FOR PLAN 1, RATIO = .95

PEAK FLOW (CFS)	TIME (HR)		MAXIMUM AVERAGE FLOW 6-HR	24-HR	72-HR	24.92-HR
678.	13.25	(CFS)	251.	72.	69.	69.
		(INCHES)	1.844	2.106	2.106	2.106
		(AC-FT)	124.	142.	142.	142.

CUMULATIVE AREA = 1.26 SQ MI

*** *** *** *** ***

HYDROGRAPH AT STATION RM10-7
FOR PLAN 1, RATIO = .94

PEAK FLOW (CFS)	TIME (HR)		MAXIMUM AVERAGE FLOW 6-HR	24-HR	72-HR	24.92-HR
672.	13.25	(CFS)	248.	71.	68.	68.
		(INCHES)	1.825	2.084	2.084	2.084
		(AC-FT)	123.	141.	141.	141.

CUMULATIVE AREA = 1.26 SQ MI

*** *** *** *** ***

HYDROGRAPH AT STATION RM10-7
FOR PLAN 1, RATIO = .92

PEAK FLOW (CFS)	TIME (HR)		MAXIMUM AVERAGE FLOW 6-HR	24-HR	72-HR	24.92-HR
656.	13.25	(CFS)	241.	69.	66.	66.
		(INCHES)	1.776	2.027	2.027	2.027
		(AC-FT)	120.	137.	137.	137.

CUMULATIVE AREA = 1.26 SQ MI

*** ***

```
          ##############
          #            #
563 KK    #       4B   #
          #            #
          ##############
```

RUNOFF GENERATED ON SUB-BASIN 4B

SUBBASIN RUNOFF DATA

565 BA SUBBASIN CHARACTERISTICS

TAREA .68 SUBBASIN AREA

PRECIPITATION DATA

13 PB STORM 3.96 BASIN TOTAL PRECIPITATION

14 PI INCREMENTAL PRECIPITATION PATTERN

.00	.00	.00	.00	.00	.00	.00	.00	.00	.00
.00	.00	.00	.00	.00	.00	.00	.00	.00	.00
.00	.00	.00	.00	.00	.00	.00	.00	.00	.00
.00	.00	.00	.00	.00	.00	.00	.00	.00	.00
.00	.00	.00	.00	.00	.00	.00	.00	.00	.00
.00	.00	.00	.00	.00	.00	.00	.00	.00	.00
.00	.00	.00	.00	.00	.00	.00	.00	.00	.00
.00	.00	.00	.00	.00	.00	.00	.00	.00	.00
.00	.00	.00	.00	.00	.00	.00	.00	.00	.00
.00	.00	.00	.00	.00	.00	.00	.00	.00	.00
.00	.00	.00	.00	.00	.00	.00	.00	.00	.00
.00	.00	.00	.00	.00	.00	.00	.00	.00	.00
.00	.00	.00	.00	.00	.00	.00	.01	.00	.01
.01	.01	.01	.01	.01	.01	.01	.01	.03	.03
.03	.09	.09	.09	.01	.01	.01	.01	.01	.01
.01	.01	.01	.01	.01	.01	.00	.00	.00	.00
.00	.00	.00	.00	.00	.00	.00	.00	.00	.00
.00	.00	.00	.00	.00	.00	.00	.00	.00	.00
.00	.00	.00	.00	.00	.00	.00	.00	.00	.00
.00	.00	.00	.00	.00	.00	.00	.00	.00	.00
.00	.00	.00	.00	.00	.00	.00	.00	.00	.00
.00	.00	.00	.00	.00	.00	.00	.00	.00	.00
.00	.00	.00	.00	.00	.00	.00	.00	.00	.00
.00	.00	.00	.00	.00	.00	.00	.00	.00	.00

.00	.00	.00	.00	.00	.00	.00	.00	.00	.00
.00	.00	.00	.00	.00	.00	.00	.00	.00	.00
.00	.00	.00	.00	.00	.00	.00	.00	.00	.00
.00	.00	.00	.00	.00	.00	.00	.00	.00	.00
.00	.00	.00	.00	.00	.00	.00	.00		

566 LU UNIFORM LOSS RATE

STRTL	.30	INITIAL LOSS
CNSTL	.20	UNIFORM LOSS RATE
RTIMP	79.40	PERCENT IMPERVIOUS AREA

567 UD SCS DIMENSIONLESS UNITGRAPH

TLAG	.24	LAG

***

UNIT HYDROGRAPH
16 END-OF-PERIOD ORDINATES

215.	745.	1136.	1087.	810.	471.	294.	181.	113.	69.
43.	27.	16.	11.	7.	3.				

TOTAL RAINFALL = 3.96, TOTAL LOSS = .45, TOTAL EXCESS = 3.51

PEAK FLOW (CFS)	TIME (HR)		MAXIMUM AVERAGE FLOW 6-HR	24-HR	72-HR	24.92-HR
1307.	12.00	(CFS)	188.	64.	61.	61.
		(INCHES)	2.596	3.507	3.511	3.511
		(AC-FT)	93.	126.	126.	126.

CUMULATIVE AREA = .68 SQ MI

*** *** *** *** ***

HYDROGRAPH AT STATION 4B
FOR PLAN 1, RATIO = 1.00

TOTAL RAINFALL = 3.96, TOTAL LOSS = .45, TOTAL EXCESS = 3.51

PEAK FLOW (CFS)	TIME (HR)		MAXIMUM AVERAGE FLOW 6-HR	24-HR	72-HR	24.92-HR
1307.	12.00	(CFS)	188.	64.	61.	61.
		(INCHES)	2.596	3.507	3.511	3.511
		(AC-FT)	93.	126.	126.	126.

CUMULATIVE AREA = .68 SQ MI

*** *** *** *** ***

HYDROGRAPH AT STATION 4B
FOR PLAN 1, RATIO = .97

TOTAL RAINFALL = 3.83, TOTAL LOSS = .44, TOTAL EXCESS = 3.39

PEAK FLOW (CFS)	TIME (HR)		MAXIMUM AVERAGE FLOW 6-HR	24-HR	72-HR	24.92-HR
1265.	12.00	(CFS)	182.	62.	59.	59.
		(INCHES)	2.509	3.391	3.395	3.395
		(AC-FT)	90.	122.	122.	122.

CUMULATIVE AREA = .68 SQ MI

*** *** *** *** ***

HYDROGRAPH AT STATION 4B
FOR PLAN 1, RATIO = .95

TOTAL RAINFALL = 3.75, TOTAL LOSS = .43, TOTAL EXCESS = 3.32

PEAK FLOW (CFS)	TIME (HR)		MAXIMUM AVERAGE FLOW 6-HR	24-HR	72-HR	24.92-HR
1238.	12.00	(CFS)	178.	60.	58.	58.
		(INCHES)	2.454	3.319	3.322	3.322
		(AC-FT)	88.	119.	120.	120.

CUMULATIVE AREA = .68 SQ MI

*** *** *** *** ***

HYDROGRAPH AT STATION 4B
FOR PLAN 1, RATIO = .94

TOTAL RAINFALL = 3.72, TOTAL LOSS = .43, TOTAL EXCESS = 3.29

PEAK FLOW (CFS)	TIME (HR)		MAXIMUM AVERAGE FLOW 6-HR	24-HR	72-HR	24.92-HR
1228.	12.00	(CFS)	177.	60.	58.	58.
		(INCHES)	2.433	3.290	3.293	3.293
		(AC-FT)	88.	119.	119.	119.

CUMULATIVE AREA = .68 SQ MI

*** *** *** *** ***

HYDROGRAPH AT STATION 4B
FOR PLAN 1, RATIO = .92

TOTAL RAINFALL = 3.64, TOTAL LOSS = .42, TOTAL EXCESS = 3.22

PEAK FLOW (CFS)	TIME (HR)		MAXIMUM AVERAGE FLOW 6-HR	24-HR	72-HR	24.92-HR
1200.	12.00	(CFS)	172.	59.	56.	56.
		(INCHES)	2.376	3.214	3.217	3.217
		(AC-FT)	86.	116.	116.	116.

CUMULATIVE AREA = .68 SQ MI

*** ***

```
          **************
          *            *
568 KK    *     DT4B   *
          *            *
          **************
                    THROW AWAY 10-YR 2-HR RETENTION VOLUME:1) 4.3 AC-FT FROM SUB-BASIN 4B
                                                              (Hydrograph identified as OR-4B)
                                                           2) Balance of runoff continues on.
                                                              (Hydrograph identified as DT4B)

   DT        DIVERSION
                  ISTAD      OR-4B  DIVERSION HYDROGRAPH IDENTIFICATION
                 DSTRMX       4.30  MAXIMUM VOLUME TO BE DIVERTED

   DI          INFLOW        .00  10000.00

   DQ     DIVERTED FLOW      .00  10000.00

                                                   ***

    ***          ***          ***          ***          ***

                   DIVERSION HYDROGRAPH    OR-4B
                    FOR PLAN 1, RATIO = 1.00

PEAK FLOW    TIME                      MAXIMUM AVERAGE FLOW
 (CFS)       (HR)              6-HR      24-HR      72-HR    24.92-HR
   16.       1.58     (CFS)     9.         2.         2.         2.
                    (INCHES)   .119       .119       .119       .119
                     (AC-FT)    4.         4.         4.         4.

                   CUMULATIVE AREA =    .69 SQ MI


    ***          ***          ***          ***          ***

                   HYDROGRAPH AT STATION     DT4B
                    FOR PLAN 1, RATIO = 1.00

PEAK FLOW    TIME                      MAXIMUM AVERAGE FLOW
 (CFS)       (HR)              6-HR      24-HR      72-HR    24.92-HR
 1307.      12.00     (CFS)   188.        62.        59.        59.
                    (INCHES) 2.596      3.391      3.391      3.391
                     (AC-FT)   93.       122.       122.       122.

                   CUMULATIVE AREA =    .68 SQ MI
```

*** *** *** *** ***

DIVERSION HYDROGRAPH OR-4B
FOR PLAN 1, RATIO = .97

PEAK FLOW (CFS)	TIME (HR)		MAXIMUM AVERAGE FLOW 6-HR	24-HR	72-HR	24.92-HR
16.	1.58	(CFS)	9.	2.	2.	2.
		(INCHES)	.119	.119	.119	.119
		(AC-FT)	4.	4.	4.	4.

CUMULATIVE AREA = .68 SQ MI

*** *** *** *** ***

HYDROGRAPH AT STATION DT4B
FOR PLAN 1, RATIO = .97

PEAK FLOW (CFS)	TIME (HR)		MAXIMUM AVERAGE FLOW 6-HR	24-HR	72-HR	24.92-HR
1265.	12.00	(CFS)	182.	59.	57.	57.
		(INCHES)	2.500	3.275	3.275	3.275
		(AC-FT)	90.	118.	118.	118.

CUMULATIVE AREA = .68 SQ MI

*** *** *** *** ***

DIVERSION HYDROGRAPH OR-4B
FOR PLAN 1, RATIO = .95

PEAK FLOW (CFS)	TIME (HR)		MAXIMUM AVERAGE FLOW 6-HR	24-HR	72-HR	24.92-HR
16.	1.58	(CFS)	9.	2.	2.	2.
		(INCHES)	.119	.119	.119	.119
		(AC-FT)	4.	4.	4.	4.

CUMULATIVE AREA = .68 SQ MI

*** *** *** *** ***

HYDROGRAPH AT STATION DT4B
FOR PLAN 1, RATIO = .95

PEAK FLOW (CFS)	TIME (HR)		MAXIMUM AVERAGE FLOW 6-HR	24-HR	72-HR	24.92-HR
1238.	12.00	(CFS)	178.	58.	56.	56.
		(INCHES)	2.454	3.203	3.203	3.203
		(AC-FT)	88.	115.	115.	115.

CUMULATIVE AREA = .68 SQ MI

*** *** *** *** ***

DIVERSION HYDROGRAPH OR-4B
FOR PLAN 1, RATIO = .94

PEAK FLOW (CFS)	TIME (HR)		MAXIMUM AVERAGE FLOW 6-HR	24-HR	72-HR	24.92-HR
15.	1.58	(CFS)	9.	2.	2.	2.
		(INCHES)	.119	.119	.119	.119
		(AC-FT)	4.	4.	4.	4.

CUMULATIVE AREA = .68 SQ MI

*** *** *** *** ***

HYDROGRAPH AT STATION DT4B
FOR PLAN 1, RATIO = .94

PEAK FLOW (CFS)	TIME (HR)		MAXIMUM AVERAGE FLOW 6-HR	24-HR	72-HR	24.92-HR
1228.	12.08	(CFS)	177.	58.	55.	55.
		(INCHES)	2.433	3.174	3.174	3.174
		(AC-FT)	88.	114.	114.	114.

CUMULATIVE AREA = .68 SQ MI

*** *** *** *** ***

DIVERSION HYDROGRAPH OR-4B
FOR PLAN 1, RATIO = .92

PEAK FLOW (CFS)	TIME (HR)		MAXIMUM AVERAGE FLOW 6-HR	24-HR	72-HR	24.92-HR
15.	1.58	(CFS)	9.	2.	2.	2.
		(INCHES)	.119	.119	.119	.119
		(AC-FT)	4.	4.	4.	4.

CUMULATIVE AREA = .68 SQ MI

*** *** *** *** ***

HYDROGRAPH AT STATION DT4B
FOR PLAN 1, RATIO = .92

PEAK FLOW (CFS)	TIME (HR)		MAXIMUM AVERAGE FLOW 6-HR	24-HR	72-HR	24.92-HR
1200.	12.08	(CFS)	172.	56.	54.	54.
		(INCHES)	2.376	3.098	3.098	3.098
		(AC-FT)	86.	112.	112.	112.

CUMULATIVE AREA = .68 SQ MI

*** ***

```
          **************
          *            *
576 KK    *      HC7   *
          *            *
          **************
```

COMBINE SURFACE RUNOFF AT NODE 7
HC6.2 + RM10-7 + DT4B

579 HC HYDROGRAPH COMBINATION
ICOMP 3 NUMBER OF HYDROGRAPHS TO COMBINE

*** *** *** *** ***

HYDROGRAPH AT STATION HC7
FOR PLAN 1, RATIO = 1.00

PEAK FLOW (CFS)	TIME (HR)		MAXIMUM AVERAGE FLOW 6-HR	24-HR	72-HR	24.92-HR
16467.	13.00	(CFS)	5409.	1546.	1489.	1489.
		(INCHES)	1.975	2.257	2.257	2.257
		(AC-FT)	2682.	3065.	3066.	3066.

CUMULATIVE AREA = 25.47 SQ MI

*** *** *** *** ***

HYDROGRAPH AT STATION HC7
FOR PLAN 1, RATIO = .97

PEAK FLOW (CFS)	TIME (HR)		MAXIMUM AVERAGE FLOW 6-HR	24-HR	72-HR	24.92-HR
15882.	13.00	(CFS)	5203.	1487.	1432.	1432.
		(INCHES)	1.899	2.171	2.171	2.171
		(AC-FT)	2580.	2949.	2949.	2949.

CUMULATIVE AREA = 25.47 SQ MI

*** *** *** *** ***

HYDROGRAPH AT STATION HC7
FOR PLAN 1, RATIO = .95

PEAK FLOW (CFS)	TIME (HR)	MAXIMUM AVERAGE FLOW 6-HR	24-HR	72-HR	24.92-HR

15518.	13.00	(CFS)	5074.	1450.	1397.	1397.
		(INCHES)	1.852	2.117	2.118	2.118
		(AC-FT)	2516.	2876.	2876.	2876.

CUMULATIVE AREA = 25.47 SQ MI

*** *** *** *** ***

HYDROGRAPH AT STATION HC7
FOR PLAN 1, RATIO = .94

PEAK FLOW (CFS)	TIME (HR)		MAXIMUM AVERAGE FLOW 6-HR	24-HR	72-HR	24.92-HR
15372.	13.00	(CFS)	5023.	1435.	1383.	1383.
		(INCHES)	1.834	2.096	2.096	2.096
		(AC-FT)	2491.	2847.	2847.	2847.

CUMULATIVE AREA = 25.47 SQ MI

*** *** *** *** ***

HYDROGRAPH AT STATION HC7
FOR PLAN 1, RATIO = .92

PEAK FLOW (CFS)	TIME (HR)		MAXIMUM AVERAGE FLOW 6-HR	24-HR	72-HR	24.92-HR
14992.	13.00	(CFS)	4888.	1397.	1346.	1346.
		(INCHES)	1.785	2.040	2.040	2.040
		(AC-FT)	2424.	2771.	2771.	2771.

CUMULATIVE AREA = 25.47 SQ MI

*** ***

```
          **************
          *            *
580 KK    *   RS7-11   *
          *            *
          **************
```

NORMAL DEPTH CHANNEL ROUTE FROM NODE 7 TO NODE 11.1
1) Reach Length= 8700 FT.
2) Average Velocity= 8.9 FPS

HYDROGRAPH ROUTING DATA

584 RS	STORAGE ROUTING		
	NSTPS	4	NUMBER OF SUBREACHES
	ITYP	FLOW	TYPE OF INITIAL CONDITION
	RSVRIC	-1.00	INITIAL CONDITION

```
                    X        .00 WORKING R AND D COEFFICIENT

585 RC        NORMAL DEPTH CHANNEL ROUTING
                   ANL       .040  LEFT OVERBANK N-VALUE
                  ANCH       .035  MAIN CHANNEL N-VALUE
                   ANR       .040  RIGHT OVERBANK N-VALUE
                 RLNTH      9900.  REACH LENGTH
                   SEL      .0030  ENERGY SLOPE
                 ELMAX     1297.5  MAX. ELEV. FOR STORAGE/OUTFLOW CALCULATION

                                   CROSS-SECTION DATA
                      --- LEFT OVERBANK --- + ------ MAIN CHANNEL ------- + --- RIGHT OVERBANK ---
587 RY     ELEVATION  1296.70  1294.00  1292.00  1292.00  1290.00  1292.00  1294.00  1297.50
586 RX     DISTANCE       .00   137.00   169.00   229.00   249.00   300.00   325.00   365.00

                                                  ***

                                   COMPUTED STORAGE-OUTFLOW-ELEVATION DATA

        STORAGE       .00    10.35    21.41    33.16    45.62    58.79    72.65    87.22   102.49   118.46
        OUTFLOW       .00   101.01   325.15   648.06  1061.57  1561.71  2146.48  2814.95  3566.89  4402.54
      ELEVATION   1282.00  1282.82  1283.63  1284.45  1285.26  1286.08  1286.89  1287.71  1288.53  1289.34

        STORAGE    135.19   154.74   178.12   204.84   233.68   264.85   302.87   349.34   404.27   464.33
        OUTFLOW   5188.34  5635.47  6350.74  7736.65  9442.50 11107.28 12875.39 15113.27 17735.86 21013.79
      ELEVATION   1290.16  1290.97  1291.79  1292.61  1293.42  1294.24  1295.05  1295.87  1296.68  1297.50


   ***          ***          ***          ***          ***

                     HYDROGRAPH AT STATION   RS7-11
                      FOR PLAN 1, RATIO = 1.00

PEAK FLOW    TIME                        MAXIMUM AVERAGE FLOW
  (CFS)      (HR)                 6-HR      24-HR      72-HR    24.92-HR
  16239.     13.25      (CFS)     5407.      1539.      1482.      1482.
                      (INCHES)   1.974      2.246      2.246      2.246
                       (AC-FT)   2681.      3051.      3051.      3051.

PEAK STORAGE  TIME                       MAXIMUM AVERAGE STORAGE
  (AC-FT)    (HR)                 6-HR      24-HR      72-HR    24.92-HR
     93.     13.25                 35.        12.        11.        11.

PEAK STAGE   TIME                        MAXIMUM AVERAGE STAGE
  (FEET)     (HR)                 6-HR      24-HR      72-HR    24.92-HR
  1296.22    13.25             1289.12    1284.70    1284.60    1284.60

                     CUMULATIVE AREA =   25.47 SQ MI


   ***          ***          ***          ***          ***

                     HYDROGRAPH AT STATION   RS7-11
                      FOR PLAN 1, RATIO =  .97
```

PEAK FLOW (CFS)	TIME (HR)		MAXIMUM AVERAGE FLOW 6-HR	24-HR	72-HR	24.92-HR
15660.	13.25	(CFS)	5201.	1479.	1425.	1425.
		(INCHES)	1.899	2.160	2.160	2.160
		(AC-FT)	2579.	2934.	2934.	2934.

PEAK STORAGE (AC-FT)	TIME (HR)	MAXIMUM AVERAGE STORAGE 6-HR	24-HR	72-HR	24.92-HR
90.	13.25	34.	12.	11.	11.

PEAK STAGE (FEET)	TIME (HR)	MAXIMUM AVERAGE STAGE 6-HR	24-HR	72-HR	24.92-HR
1296.04	13.25	1288.99	1284.64	1284.55	1284.55

CUMULATIVE AREA = 25.47 SQ MI

*** *** *** *** ***

HYDROGRAPH AT STATION RS7-11
FOR PLAN 1, RATIO = .95

PEAK FLOW (CFS)	TIME (HR)		MAXIMUM AVERAGE FLOW 6-HR	24-HR	72-HR	24.92-HR
15299.	13.25	(CFS)	5072.	1443.	1390.	1390.
		(INCHES)	1.852	2.107	2.107	2.107
		(AC-FT)	2515.	2862.	2862.	2862.

PEAK STORAGE (AC-FT)	TIME (HR)	MAXIMUM AVERAGE STORAGE 6-HR	24-HR	72-HR	24.92-HR
88.	13.25	34.	11.	11.	11.

PEAK STAGE (FEET)	TIME (HR)	MAXIMUM AVERAGE STAGE 6-HR	24-HR	72-HR	24.92-HR
1295.93	13.25	1288.90	1284.61	1284.51	1284.51

CUMULATIVE AREA = 25.47 SQ MI

*** *** *** *** ***

HYDROGRAPH AT STATION RS7-11
FOR PLAN 1, RATIO = .94

PEAK FLOW (CFS)	TIME (HR)		MAXIMUM AVERAGE FLOW 6-HR	24-HR	72-HR	24.92-HR
15154.	13.25	(CFS)	5021.	1428.	1376.	1376.
		(INCHES)	1.833	2.086	2.086	2.086
		(AC-FT)	2490.	2833.	2833.	2833.

PEAK STORAGE (AC-FT)	TIME (HR)	MAXIMUM AVERAGE STORAGE 6-HR	24-HR	72-HR	24.92-HR
88.	13.25	33.	11.	11.	11.

PEAK STAGE TIME MAXIMUM AVERAGE STAGE

(FEET)	(HR)	6-HR	24-HR	72-HR	24.92-HR
1295.88	13.25	1288.87	1284.59	1284.50	1284.50

CUMULATIVE AREA = 25.47 SQ MI

*** *** *** *** ***

HYDROGRAPH AT STATION RS7-11
FOR PLAN 1, RATIO = .92

PEAK FLOW (CFS)	TIME (HR)		MAXIMUM AVERAGE FLOW 6-HR	24-HR	72-HR	24.92-HR
14775.	13.25	(CFS)	4887.	1390.	1339.	1339.
		(INCHES)	1.784	2.030	2.030	2.030
		(AC-FT)	2423.	2757.	2757.	2757.

PEAK STORAGE (AC-FT)	TIME (HR)	MAXIMUM AVERAGE STORAGE 6-HR	24-HR	72-HR	24.92-HR
86.	13.25	33.	11.	11.	11.

PEAK STAGE (FEET)	TIME (HR)	MAXIMUM AVERAGE STAGE 6-HR	24-HR	72-HR	24.92-HR
1295.75	13.25	1288.77	1284.55	1284.46	1284.46

CUMULATIVE AREA = 25.47 SQ MI

*** ***

```
          **************
          *            *
588 KK    *       4C   *
          *            *
          **************
```

RUNOFF GENERATED ON SUB-BASIN 4C

SUBBASIN RUNOFF DATA

590 BA SUBBASIN CHARACTERISTICS
TAREA 1.03 SUBBASIN AREA

PRECIPITATION DATA

13 PB STORM 3.96 BASIN TOTAL PRECIPITATION

14 PI INCREMENTAL PRECIPITATION PATTERN

.00	.00	.00	.00	.00	.00	.00	.00	.00	.00
.00	.00	.00	.00	.00	.00	.00	.00	.00	.00
.00	.00	.00	.00	.00	.00	.00	.00	.00	.00
.00	.00	.00	.00	.00	.00	.00	.00	.00	.00
.00	.00	.00	.00	.00	.00	.00	.00	.00	.00

.00	.00	.00	.00	.00	.00	.00	.00	.00	.00
.00	.00	.00	.00	.00	.00	.00	.00	.00	.00
.00	.00	.00	.00	.00	.00	.00	.00	.00	.00
.00	.00	.00	.00	.00	.00	.00	.00	.00	.00
.00	.00	.00	.00	.00	.00	.00	.00	.00	.00
.00	.00	.00	.00	.00	.00	.00	.00	.00	.00
.00	.00	.00	.00	.00	.00	.00	.00	.00	.00
.00	.00	.00	.00	.00	.00	.00	.01	.00	.01
.01	.01	.01	.01	.01	.01	.01	.01	.03	.03
.03	.09	.09	.09	.01	.01	.01	.01	.01	.01
.01	.01	.01	.01	.01	.01	.00	.00	.00	.00
.00	.00	.00	.00	.00	.00	.00	.00	.00	.00
.00	.00	.00	.00	.00	.00	.00	.00	.00	.00
.00	.00	.00	.00	.00	.00	.00	.00	.00	.00
.00	.00	.00	.00	.00	.00	.00	.00	.00	.00
.00	.00	.00	.00	.00	.00	.00	.00	.00	.00
.00	.00	.00	.00	.00	.00	.00	.00	.00	.00
.00	.00	.00	.00	.00	.00	.00	.00	.00	.00
.00	.00	.00	.00	.00	.00	.00	.00	.00	.00
.00	.00	.00	.00	.00	.00	.00	.00	.00	.00
.00	.00	.00	.00	.00	.00	.00	.00	.00	.00
.00	.00	.00	.00	.00	.00	.00	.00	.00	.00
.00	.00	.00	.00	.00	.00	.00	.00	.00	.00
.00	.00	.00	.00	.00	.00	.00	.00		

591 LU UNIFORM LOSS RATE

STRTL	.31	INITIAL LOSS
CNSTL	.24	UNIFORM LOSS RATE
RTIMP	39.70	PERCENT IMPERVIOUS AREA

592 UD SCS DIMENSIONLESS UNITGRAPH

TLAG	.62	LAG

***

UNIT HYDROGRAPH
39 END-OF-PERIOD ORDINATES

36.	110.	213.	359.	532.	662.	736.	751.	729.	658.
595.	501.	393.	312.	253.	206.	172.	140.	112.	93.
75.	61.	50.	40.	33.	27.	22.	18.	15.	12.
10.	8.	7.	6.	5.	4.	3.	2.	1.	

TOTAL RAINFALL = 3.96, TOTAL LOSS = 1.38, TOTAL EXCESS = 2.58

PEAK FLOW (CFS)	TIME (HR)		MAXIMUM AVERAGE FLOW 6-HR	24-HR	72-HR	24.92-HR
1117.	12.50	(CFS)	235.	71.	69.	69.
		(INCHES)	2.119	2.574	2.577	2.577
		(AC-FT)	116.	141.	141.	141.

CUMULATIVE AREA = 1.03 SQ MI

*** *** *** *** ***

HYDROGRAPH AT STATION 4C
FOR PLAN 1, RATIO = 1.00

TOTAL RAINFALL = 3.96, TOTAL LOSS = 1.38, TOTAL EXCESS = 2.58

PEAK FLOW (CFS)	TIME (HR)		MAXIMUM AVERAGE FLOW 6-HR	24-HR	72-HR	24.92-HR
1117.	12.50	(CFS)	235.	71.	69.	69.
		(INCHES)	2.119	2.574	2.577	2.577
		(AC-FT)	116.	141.	141.	141.

CUMULATIVE AREA = 1.03 SQ MI

*** *** *** *** ***

HYDROGRAPH AT STATION 4C
FOR PLAN 1, RATIO = .97

TOTAL RAINFALL = 3.83, TOTAL LOSS = 1.35, TOTAL EXCESS = 2.49

PEAK FLOW (CFS)	TIME (HR)		MAXIMUM AVERAGE FLOW 6-HR	24-HR	72-HR	24.92-HR
1078.	12.50	(CFS)	226.	69.	66.	66.
		(INCHES)	2.041	2.481	2.484	2.484
		(AC-FT)	112.	136.	136.	136.

CUMULATIVE AREA = 1.03 SQ MI

*** *** *** *** ***

HYDROGRAPH AT STATION 4C
FOR PLAN 1, RATIO = .95

TOTAL RAINFALL = 3.75, TOTAL LOSS = 1.33, TOTAL EXCESS = 2.43

PEAK FLOW (CFS)	TIME (HR)		MAXIMUM AVERAGE FLOW 6-HR	24-HR	72-HR	24.92-HR
1054.	12.50	(CFS)	220.	67.	65.	65.
		(INCHES)	1.992	2.423	2.426	2.426
		(AC-FT)	109.	133.	133.	133.

CUMULATIVE AREA = 1.03 SQ MI

*** *** *** *** ***

HYDROGRAPH AT STATION 4C
FOR PLAN 1, RATIO = .94

TOTAL RAINFALL = 3.72, TOTAL LOSS = 1.32, TOTAL EXCESS = 2.40

PEAK FLOW (CFS)	TIME (HR)	MAXIMUM AVERAGE FLOW 6-HR	24-HR	72-HR	24.92-HR

1044.	12.50	(CFS)	218.	66.	64.	64.
		(INCHES)	1.973	2.400	2.403	2.403
		(AC-FT)	108.	132.	132.	132.

CUMULATIVE AREA = 1.03 SQ MI

*** *** *** *** ***

HYDROGRAPH AT STATION 4C
FOR PLAN 1, RATIO = .92

TOTAL RAINFALL = 3.64, TOTAL LOSS = 1.30, TOTAL EXCESS = 2.34

PEAK FLOW (CFS)	TIME (HR)		6-HR	MAXIMUM AVERAGE FLOW 24-HR	72-HR	24.92-HR
1019.	12.50	(CFS)	213.	65.	62.	62.
		(INCHES)	1.921	2.339	2.342	2.342
		(AC-FT)	105.	128.	129.	129.

CUMULATIVE AREA = 1.03 SQ MI

*** ***

```
         **************
         *            *
593 KK   *     DT4C   *
         *            *
         **************
```

THROW AWAY 10-YR 2-HR RETENTION VOLUME:1) 5.1 AC-FT FROM SUB-BASIN 4C
(Hydrograph identified as OR-4C)
2) Balance of runoff continues on.
(Hydrograph identified as DT4C)

DT	DIVERSION		
	ISTAO	OR-4C	DIVERSION HYDROGRAPH IDENTIFICATION
	DSTRMX	5.10	MAXIMUM VOLUME TO BE DIVERTED
DI	INFLOW	.00	10000.00
DQ	DIVERTED FLOW	.00	10000.00

***

*** *** *** *** ***

DIVERSION HYDROGRAPH OR-4C
FOR PLAN 1, RATIO = 1.00

PEAK FLOW (CFS)	TIME (HR)	6-HR	MAXIMUM AVERAGE FLOW 24-HR	72-HR	24.92-HR

16.	5.42	(CFS)	10.	3.	2.	2.
		(INCHES)	.093	.093	.093	.093
		(AC-FT)	5.	5.	5.	5.

CUMULATIVE AREA = 1.03 SQ MI

*** *** *** *** ***

HYDROGRAPH AT STATION DT4C
FOR PLAN 1, RATIO = 1.00

PEAK FLOW (CFS)	TIME (HR)		MAXIMUM AVERAGE FLOW 6-HR	24-HR	72-HR	24.92-HR
1117.	12.50	(CFS)	235.	69.	66.	66.
		(INCHES)	2.119	2.484	2.484	2.484
		(AC-FT)	116.	136.	136.	136.

CUMULATIVE AREA = 1.03 SQ MI

*** *** *** *** ***

DIVERSION HYDROGRAPH OR-4C
FOR PLAN 1, RATIO = .97

PEAK FLOW (CFS)	TIME (HR)		MAXIMUM AVERAGE FLOW 6-HR	24-HR	72-HR	24.92-HR
16.	5.58	(CFS)	10.	3.	2.	2.
		(INCHES)	.093	.093	.093	.093
		(AC-FT)	5.	5.	5.	5.

CUMULATIVE AREA = 1.03 SQ MI

*** *** *** *** ***

HYDROGRAPH AT STATION DT4C
FOR PLAN 1, RATIO = .97

PEAK FLOW (CFS)	TIME (HR)		MAXIMUM AVERAGE FLOW 6-HR	24-HR	72-HR	24.92-HR
1078.	12.50	(CFS)	226.	66.	64.	64.
		(INCHES)	2.041	2.391	2.391	2.391
		(AC-FT)	112.	131.	131.	131.

CUMULATIVE AREA = 1.03 SQ MI

*** *** *** *** ***

DIVERSION HYDROGRAPH OR-4C
FOR PLAN 1, RATIO = .95

PEAK FLOW TIME MAXIMUM AVERAGE FLOW

(CFS)	(HR)		6-HR	24-HR	72-HR	24.92-HR
16.	5.67	(CFS)	10.	3.	2.	2.
		(INCHES)	.093	.093	.093	.093
		(AC-FT)	5.	5.	5.	5.

CUMULATIVE AREA = 1.03 SQ MI

*** *** *** *** ***

HYDROGRAPH AT STATION DT4C
FOR PLAN 1, RATIO = .95

PEAK FLOW	TIME		MAXIMUM AVERAGE FLOW			
(CFS)	(HR)		6-HR	24-HR	72-HR	24.92-HR
1054.	12.50	(CFS)	220.	65.	62.	62.
		(INCHES)	1.992	2.333	2.333	2.333
		(AC-FT)	109.	128.	128.	128.

CUMULATIVE AREA = 1.03 SQ MI

*** *** *** *** ***

DIVERSION HYDROGRAPH DR-4C
FOR PLAN 1, RATIO = .94

PEAK FLOW	TIME		MAXIMUM AVERAGE FLOW			
(CFS)	(HR)		6-HR	24-HR	72-HR	24.92-HR
16.	5.67	(CFS)	10.	3.	2.	2.
		(INCHES)	.093	.093	.093	.093
		(AC-FT)	5.	5.	5.	5.

CUMULATIVE AREA = 1.03 SQ MI

*** *** *** *** ***

HYDROGRAPH AT STATION DT4C
FOR PLAN 1, RATIO = .94

PEAK FLOW	TIME		MAXIMUM AVERAGE FLOW			
(CFS)	(HR)		6-HR	24-HR	72-HR	24.92-HR
1044.	12.50	(CFS)	218.	64.	62.	62.
		(INCHES)	1.973	2.310	2.310	2.310
		(AC-FT)	108.	127.	127.	127.

CUMULATIVE AREA = 1.03 SQ MI

*** *** *** *** ***

DIVERSION HYDROGRAPH DR-4C
FOR PLAN 1, RATIO = .92

PEAK FLOW (CFS)	TIME (HR)		MAXIMUM AVERAGE FLOW 6-HR	24-HR	72-HR	24.92-HR
15.	5.75	(CFS)	10.	3.	2.	2.
		(INCHES)	.093	.093	.093	.093
		(AC-FT)	5.	5.	5.	5.

CUMULATIVE AREA = 1.03 SQ MI

*** *** *** *** ***

HYDROGRAPH AT STATION DT4C
FOR PLAN 1, RATIO = .92

PEAK FLOW (CFS)	TIME (HR)		MAXIMUM AVERAGE FLOW 6-HR	24-HR	72-HR	24.92-HR
1019.	12.50	(CFS)	213.	62.	60.	60.
		(INCHES)	1.921	2.249	2.249	2.249
		(AC-FT)	105.	123.	123.	123.

CUMULATIVE AREA = 1.03 SQ MI

*** ***

```
          **************
          *            *
601 KK    *   HC11.1   *
          *            *
          **************
```

COMBINE SURFACE RUNOFF AT NODE 11.1
RS7-11 + DT4C

604 HC HYDROGRAPH COMBINATION
ICOMP 2 NUMBER OF HYDROGRAPHS TO COMBINE

***

*** *** *** *** ***

HYDROGRAPH AT STATION HC11.1
FOR PLAN 1, RATIO = 1.00

PEAK FLOW (CFS)	TIME (HR)		MAXIMUM AVERAGE FLOW 6-HR	24-HR	72-HR	24.92-HR
16612.	13.25	(CFS)	5640.	1607.	1548.	1548.
		(INCHES)	1.979	2.255	2.255	2.255
		(AC-FT)	2797.	3187.	3187.	3187.

CUMULATIVE AREA = 26.50 SQ MI

*** *** *** *** ***

HYDROGRAPH AT STATION HC11.1
FOR PLAN 1, RATIO = .97

PEAK FLOW (CFS)	TIME (HR)		MAXIMUM AVERAGE FLOW 6-HR	24-HR	72-HR	24.92-HR
16018.	13.25	(CFS)	5425.	1546.	1489.	1489.
		(INCHES)	1.904	2.169	2.169	2.169
		(AC-FT)	2690.	3066.	3066.	3066.

CUMULATIVE AREA = 26.50 SQ MI

*** *** *** *** ***

HYDROGRAPH AT STATION HC11.1
FOR PLAN 1, RATIO = .95

PEAK FLOW (CFS)	TIME (HR)		MAXIMUM AVERAGE FLOW 6-HR	24-HR	72-HR	24.92-HR
15647.	13.25	(CFS)	5291.	1507.	1452.	1452.
		(INCHES)	1.857	2.116	2.116	2.116
		(AC-FT)	2624.	2990.	2990.	2990.

CUMULATIVE AREA = 26.50 SQ MI

*** *** *** *** ***

HYDROGRAPH AT STATION HC11.1
FOR PLAN 1, RATIO = .94

PEAK FLOW (CFS)	TIME (HR)		MAXIMUM AVERAGE FLOW 6-HR	24-HR	72-HR	24.92-HR
15499.	13.25	(CFS)	5237.	1492.	1437.	1437.
		(INCHES)	1.838	2.094	2.094	2.094
		(AC-FT)	2597.	2960.	2960.	2960.

CUMULATIVE AREA = 26.50 SQ MI

*** *** *** *** ***

HYDROGRAPH AT STATION HC11.1
FOR PLAN 1, RATIO = .92

PEAK FLOW (CFS)	TIME (HR)		MAXIMUM AVERAGE FLOW 6-HR	24-HR	72-HR	24.92-HR
15110.	13.25	(CFS)	5097.	1452.	1399.	1399.
		(INCHES)	1.789	2.038	2.038	2.038
		(AC-FT)	2528.	2880.	2880.	2880.

CUMULATIVE AREA = 26.50 SQ MI

*** ***

```
          ***************
          *             *
605 KK    *        5G   *
          *             *
          ***************
```

RUNOFF GENERATED ON SUB-BASIN 5G

SUBBASIN RUNOFF DATA

607 BA SUBBASIN CHARACTERISTICS

TAREA .43 SUBBASIN AREA

PRECIPITATION DATA

13 PB STORM 3.96 BASIN TOTAL PRECIPITATION

14 PI INCREMENTAL PRECIPITATION PATTERN

.00	.00	.00	.00	.00	.00	.00	.00	.00	.00
.00	.00	.00	.00	.00	.00	.00	.00	.00	.00
.00	.00	.00	.00	.00	.00	.00	.00	.00	.00
.00	.00	.00	.00	.00	.00	.00	.00	.00	.00
.00	.00	.00	.00	.00	.00	.00	.00	.00	.00
.00	.00	.00	.00	.00	.00	.00	.00	.00	.00
.00	.00	.00	.00	.00	.00	.00	.00	.00	.00
.00	.00	.00	.00	.00	.00	.00	.00	.00	.00
.00	.00	.00	.00	.00	.00	.00	.00	.00	.00
.00	.00	.00	.00	.00	.00	.00	.00	.00	.00
.00	.00	.00	.00	.00	.00	.00	.00	.00	.00
.00	.00	.00	.00	.00	.00	.00	.00	.00	.00
.00	.00	.00	.00	.00	.00	.00	.01	.00	.01
.01	.01	.01	.01	.01	.01	.01	.01	.03	.03
.03	.09	.09	.09	.01	.01	.01	.01	.01	.01
.01	.01	.01	.01	.01	.01	.00	.00	.00	.00
.00	.00	.00	.00	.00	.00	.00	.00	.00	.00
.00	.00	.00	.00	.00	.00	.00	.00	.00	.00
.00	.00	.00	.00	.00	.00	.00	.00	.00	.00
.00	.00	.00	.00	.00	.00	.00	.00	.00	.00
.00	.00	.00	.00	.00	.00	.00	.00	.00	.00
.00	.00	.00	.00	.00	.00	.00	.00	.00	.00
.00	.00	.00	.00	.00	.00	.00	.00	.00	.00
.00	.00	.00	.00	.00	.00	.00	.00	.00	.00
.00	.00	.00	.00	.00	.00	.00	.00	.00	.00
.00	.00	.00	.00	.00	.00	.00	.00	.00	.00
.00	.00	.00	.00	.00	.00	.00	.00	.00	.00
.00	.00	.00	.00	.00	.00	.00	.00	.00	.00
.00	.00	.00	.00	.00	.00	.00	.00	.00	.00
.00	.00	.00	.00	.00	.00	.00	.00	.00	.00
.00	.00	.00	.00	.00	.00	.00	.00	.00	.00

608 LU UNIFORM LOSS RATE

STRTL .38 INITIAL LOSS

```
                    CNSTL        .05  UNIFORM LOSS RATE
                    RTIMP       3.30  PERCENT IMPERVIOUS AREA

609 UD          SCS DIMENSIONLESS UNITGRAPH
                    TLAG        .17  LAG

                                                    ***

                                                UNIT HYDROGRAPH
                                            12 END-OF-PERIOD ORDINATES
            298.     901.     926.     581.     291.     156.      82.      43.      23.      12.
              7.       3.

   TOTAL RAINFALL =   3.96, TOTAL LOSS =   1.19, TOTAL EXCESS =   2.77

PEAK FLOW    TIME                        MAXIMUM AVERAGE FLOW
  (CFS)      (HR)                 6-HR     24-HR     72-HR    24.92-HR
   957.    12.00        (CFS)     116.       32.       31.        31.
                      (INCHES)   2.517    2.775     2.775     2.775
                       (AC-FT)     58.       63.       63.        63.

                    CUMULATIVE AREA =    .43 SQ MI


    ***          ***          ***          ***          ***

                    HYDROGRAPH AT STATION      5G
                      FOR PLAN 1, RATIO = 1.00

   TOTAL RAINFALL =   3.96, TOTAL LOSS =   1.19, TOTAL EXCESS =   2.77

PEAK FLOW    TIME                        MAXIMUM AVERAGE FLOW
  (CFS)      (HR)                 6-HR     24-HR     72-HR    24.92-HR
   957.    12.00        (CFS)     116.       32.       31.        31.
                      (INCHES)   2.517    2.775     2.775     2.775
                       (AC-FT)     58.       63.       63.        63.

                    CUMULATIVE AREA =    .43 SQ MI


    ***          ***          ***          ***          ***

                    HYDROGRAPH AT STATION      5G
                      FOR PLAN 1, RATIO =  .97

   TOTAL RAINFALL =   3.83, TOTAL LOSS =   1.17, TOTAL EXCESS =   2.66

PEAK FLOW    TIME                        MAXIMUM AVERAGE FLOW
  (CFS)      (HR)                 6-HR     24-HR     72-HR    24.92-HR
   926.    12.00        (CFS)     112.       31.       30.        30.
                      (INCHES)   2.428    2.662     2.662     2.662
                       (AC-FT)     56.       61.       61.        61.

                    CUMULATIVE AREA =    .43 SQ MI
```

*** *** *** *** ***

HYDROGRAPH AT STATION 56
FOR PLAN 1, RATIO = .95

TOTAL RAINFALL = 3.75, TOTAL LOSS = 1.16, TOTAL EXCESS = 2.59

PEAK FLOW (CFS)	TIME (HR)		6-HR	MAXIMUM AVERAGE FLOW 24-HR	72-HR	24.92-HR
906.	12.08	(CFS)	109.	30.	29.	29.
		(INCHES)	2.371	2.591	2.592	2.592
		(AC-FT)	54.	59.	59.	59.

CUMULATIVE AREA = .43 SQ MI

*** *** *** *** ***

HYDROGRAPH AT STATION 56
FOR PLAN 1, RATIO = .94

TOTAL RAINFALL = 3.72, TOTAL LOSS = 1.16, TOTAL EXCESS = 2.56

PEAK FLOW (CFS)	TIME (HR)		6-HR	MAXIMUM AVERAGE FLOW 24-HR	72-HR	24.92-HR
899.	12.08	(CFS)	108.	30.	28.	28.
		(INCHES)	2.349	2.563	2.564	2.564
		(AC-FT)	54.	59.	59.	59.

CUMULATIVE AREA = .43 SQ MI

*** *** *** *** ***

HYDROGRAPH AT STATION 56
FOR PLAN 1, RATIO = .92

TOTAL RAINFALL = 3.64, TOTAL LOSS = 1.15, TOTAL EXCESS = 2.49

PEAK FLOW (CFS)	TIME (HR)		6-HR	MAXIMUM AVERAGE FLOW 24-HR	72-HR	24.92-HR
878.	12.08	(CFS)	106.	29.	28.	28.
		(INCHES)	2.290	2.490	2.490	2.490
		(AC-FT)	52.	57.	57.	57.

CUMULATIVE AREA = .43 SQ MI

*** ***

****

```
          *             *
610 KK    *     RS5G    *
          *             *
          ***************
```

RESERVOR ROUTE THROUGH DETENTION BASIN NO. 20

1) Total Volume = 40 AC-FT.
2) Spillway Elev = 1412

HYDROGRAPH ROUTING DATA

```
614 RS      STORAGE ROUTING
                 NSTPS          1  NUMBER OF SUBREACHES
                  ITYP       ELEV  TYPE OF INITIAL CONDITION
                RSVRIC        .00  INITIAL CONDITION
                     X        .00 WORKING R AND D COEFFICIENT

615 SV        STORAGE         .0       1.0      18.0      37.0      48.0      68.0

616 SE      ELEVATION    1395.00   1400.00   1405.00   1410.00   1412.00   1415.00

618 SL      LOW-LEVEL OUTLET
                 ELEVL    1396.70  ELEVATION AT CENTER OF OUTLET
                 CAREA       1.78  CROSS-SECTIONAL AREA
                  COOL        .60  COEFFICIENT
                  EXPL        .50  EXPONENT OF HEAD

617 SS      SPILLWAY
                  CREL    1412.00  SPILLWAY CREST ELEVATION
                 SPWID      80.00  SPILLWAY WIDTH
                  COOW       2.63  WEIR COEFFICIENT
                  EXPW       1.50  EXPONENT OF HEAD
```

***

COMPUTED OUTFLOW-ELEVATION DATA

OUTFLOW	.00	.00	7.59	8.53	9.74	11.35	13.60	16.96	22.52	33.50
ELEVATION	1395.00	1396.70	1397.48	1397.69	1397.99	1398.46	1399.22	1400.62	1403.61	1412.00
OUTFLOW	34.69	42.60	63.74	104.63	171.81	271.76	411.04	596.12	833.57	1129.91
ELEVATION	1412.03	1412.12	1412.27	1412.48	1412.75	1413.08	1413.47	1413.92	1414.43	1415.00

COMPUTED STORAGE-OUTFLOW-ELEVATION DATA

STORAGE	.00	.34	.50	.54	.60	.69	.84	1.00	3.11	13.28
OUTFLOW	.00	.00	7.59	8.53	9.74	11.35	13.60	15.56	16.96	22.52
ELEVATION	1395.00	1396.70	1397.48	1397.69	1397.99	1398.46	1399.22	1400.00	1400.62	1403.61
STORAGE	18.00	37.00	48.00	48.21	48.81	49.82	51.22	53.02	55.22	57.82
OUTFLOW	24.68	31.24	33.50	34.69	42.60	63.74	104.63	171.81	271.76	411.04
ELEVATION	1405.00	1410.00	1412.00	1412.03	1412.12	1412.27	1412.48	1412.75	1413.08	1413.47
STORAGE	60.81	64.21	68.00							
OUTFLOW	596.12	833.57	1129.91							

ELEVATION 1413.92 1414.43 1415.00

*** *** *** *** ***

HYDROGRAPH AT STATION RS5G
FOR PLAN 1, RATIO = 1.00

PEAK FLOW (CFS)	TIME (HR)		MAXIMUM AVERAGE FLOW 6-HR	24-HR	72-HR	24.92-HR
33.	13.92	(CFS)	33.	19.	19.	19.
		(INCHES)	.710	1.690	1.690	1.690
		(AC-FT)	16.	39.	39.	39.

PEAK STORAGE (AC-FT)	TIME (HR)	MAXIMUM AVERAGE STORAGE 6-HR	24-HR	72-HR	24.92-HR
47.	13.92	44.	21.	20.	20.

PEAK STAGE (FEET)	TIME (HR)	MAXIMUM AVERAGE STAGE 6-HR	24-HR	72-HR	24.92-HR
1411.80	14.00	1411.36	1404.17	1403.84	1403.84

CUMULATIVE AREA = .43 SQ MI

*** *** *** *** ***

HYDROGRAPH AT STATION RS5G
FOR PLAN 1, RATIO = .97

PEAK FLOW (CFS)	TIME (HR)		MAXIMUM AVERAGE FLOW 6-HR	24-HR	72-HR	24.92-HR
33.	13.92	(CFS)	32.	19.	18.	18.
		(INCHES)	.702	1.656	1.656	1.656
		(AC-FT)	16.	38.	38.	38.

PEAK STORAGE (AC-FT)	TIME (HR)	MAXIMUM AVERAGE STORAGE 6-HR	24-HR	72-HR	24.92-HR
45.	13.92	43.	20.	19.	19.

PEAK STAGE (FEET)	TIME (HR)	MAXIMUM AVERAGE STAGE 6-HR	24-HR	72-HR	24.92-HR
1411.46	13.92	1411.01	1403.91	1403.59	1403.59

CUMULATIVE AREA = .43 SQ MI

*** *** *** *** ***

HYDROGRAPH AT STATION RS5G
FOR PLAN 1, RATIO = .95

PEAK FLOW (CFS)	TIME (HR)		MAXIMUM AVERAGE FLOW 6-HR	24-HR	72-HR	24.92-HR
33.	13.83	(CFS)	32.	19.	18.	18.
		(INCHES)	.696	1.634	1.634	1.634

		(AC-FT)	16.	37.	37.	37.

PEAK STORAGE (AC-FT)	TIME (HR)	MAXIMUM AVERAGE STORAGE 6-HR	24-HR	72-HR	24.92-HR
44.	13.83	41.	19.	19.	19.

PEAK STAGE (FEET)	TIME (HR)	MAXIMUM AVERAGE STAGE 6-HR	24-HR	72-HR	24.92-HR
1411.25	13.92	1410.79	1403.75	1403.43	1403.43

CUMULATIVE AREA = .43 SQ MI

*** *** *** *** ***

HYDROGRAPH AT STATION RS5G
FOR PLAN 1, RATIO = .94

PEAK FLOW (CFS)	TIME (HR)		MAXIMUM AVERAGE FLOW 6-HR	24-HR	72-HR	24.92-HR
33.	13.83	(CFS)	32.	19.	18.	18.
		(INCHES)	.694	1.625	1.625	1.625
		(AC-FT)	16.	37.	37.	37.

PEAK STORAGE (AC-FT)	TIME (HR)	MAXIMUM AVERAGE STORAGE 6-HR	24-HR	72-HR	24.92-HR
43.	13.83	41.	19.	18.	18.

PEAK STAGE (FEET)	TIME (HR)	MAXIMUM AVERAGE STAGE 6-HR	24-HR	72-HR	24.92-HR
1411.17	13.83	1410.70	1403.68	1403.36	1403.36

CUMULATIVE AREA = .43 SQ MI

*** *** *** *** ***

HYDROGRAPH AT STATION RS5G
FOR PLAN 1, RATIO = .92

PEAK FLOW (CFS)	TIME (HR)		MAXIMUM AVERAGE FLOW 6-HR	24-HR	72-HR	24.92-HR
32.	13.83	(CFS)	32.	18.	18.	18.
		(INCHES)	.688	1.601	1.601	1.601
		(AC-FT)	16.	37.	37.	37.

PEAK STORAGE (AC-FT)	TIME (HR)	MAXIMUM AVERAGE STORAGE 6-HR	24-HR	72-HR	24.92-HR
42.	13.83	40.	18.	18.	18.

PEAK STAGE (FEET)	TIME (HR)	MAXIMUM AVERAGE STAGE 6-HR	24-HR	72-HR	24.92-HR
1410.94	13.83	1410.47	1403.50	1403.19	1403.19

CUMULATIVE AREA = .43 SQ MI

*** ***

```
          ***************
          *             *
619 KK    *  RM56-26    *
          *             *
          ***************
```

MUSKINGUM ROUTE IN CHANNEL FROM SUB-BASIN 56 TO NODE 26
1) Reach Length= 2550 FT.
2) Average Velocity= 6.5 FPS

HYDROGRAPH ROUTING DATA

623 RM MUSKINGUM ROUTING

NSTPS	1	NUMBER OF SUBREACHES
AMSKK	.11	MUSKINGUM K
X	.30	MUSKINGUM X

***

*** *** *** *** ***

HYDROGRAPH AT STATION RM56-26
FOR PLAN 1, RATIO = 1.00

PEAK FLOW (CFS)	TIME (HR)		MAXIMUM AVERAGE FLOW 6-HR	24-HR	72-HR	24.92-HR
33.	14.00	(CFS)	33.	19.	19.	19.
		(INCHES)	.710	1.680	1.680	1.680
		(AC-FT)	16.	38.	38.	38.

CUMULATIVE AREA = .43 SQ MI

*** *** *** *** ***

HYDROGRAPH AT STATION RM56-26
FOR PLAN 1, RATIO = .97

PEAK FLOW (CFS)	TIME (HR)		MAXIMUM AVERAGE FLOW 6-HR	24-HR	72-HR	24.92-HR
33.	14.00	(CFS)	32.	19.	19.	19.
		(INCHES)	.702	1.645	1.645	1.645
		(AC-FT)	16.	38.	38.	38.

CUMULATIVE AREA = .43 SQ MI

*** *** *** *** ***

HYDROGRAPH AT STATION RM5G-26
FOR PLAN 1, RATIO = .95

PEAK FLOW (CFS)	TIME (HR)		MAXIMUM AVERAGE FLOW 6-HR	24-HR	72-HR	24.92-HR
33.	14.00	(CFS)	32.	19.	18.	18.
		(INCHES)	.696	1.623	1.623	1.623
		(AC-FT)	16.	37.	37.	37.

CUMULATIVE AREA = .43 SQ MI

*** *** *** *** ***

HYDROGRAPH AT STATION RM5G-26
FOR PLAN 1, RATIO = .94

PEAK FLOW (CFS)	TIME (HR)		MAXIMUM AVERAGE FLOW 6-HR	24-HR	72-HR	24.92-HR
33.	13.92	(CFS)	32.	19.	18.	18.
		(INCHES)	.694	1.615	1.615	1.615
		(AC-FT)	16.	37.	37.	37.

CUMULATIVE AREA = .43 SQ MI

*** *** *** *** ***

HYDROGRAPH AT STATION RM5G-26
FOR PLAN 1, RATIO = .92

PEAK FLOW (CFS)	TIME (HR)		MAXIMUM AVERAGE FLOW 6-HR	24-HR	72-HR	24.92-HR
32.	13.92	(CFS)	32.	18.	18.	18.
		(INCHES)	.688	1.591	1.591	1.591
		(AC-FT)	16.	36.	36.	36.

CUMULATIVE AREA = .43 SQ MI

*** ***

```
          **************
          *            *
624 KK    *        5C  *
          *            *
          **************
```

RUNOFF GENERATED ON SUB-BASIN 5C

SUBBASIN RUNOFF DATA

626 BA SUBBASIN CHARACTERISTICS

```
                TAREA        .51  SUBBASIN AREA

            PRECIPITATION DATA

13 PB           STORM       3.96  BASIN TOTAL PRECIPITATION

14 PI         INCREMENTAL PRECIPITATION PATTERN
                .00     .00     .00     .00     .00     .00     .00     .00     .00     .00
                .00     .00     .00     .00     .00     .00     .00     .00     .00     .00
                .00     .00     .00     .00     .00     .00     .00     .00     .00     .00
                .00     .00     .00     .00     .00     .00     .00     .00     .00     .00
                .00     .00     .00     .00     .00     .00     .00     .00     .00     .00
                .00     .00     .00     .00     .00     .00     .00     .00     .00     .00
                .00     .00     .00     .00     .00     .00     .00     .00     .00     .00
                .00     .00     .00     .00     .00     .00     .00     .00     .00     .00
                .00     .00     .00     .00     .00     .00     .00     .00     .00     .00
                .00     .00     .00     .00     .00     .00     .00     .00     .00     .00
                .00     .00     .00     .00     .00     .00     .00     .00     .00     .00
                .00     .00     .00     .00     .00     .00     .00     .00     .00     .00
                .00     .00     .00     .00     .00     .00     .00     .00     .00     .00
                .00     .00     .00     .00     .00     .00     .00     .01     .00     .01
                .01     .01     .01     .01     .01     .01     .01     .01     .03     .03
                .03     .09     .09     .09     .01     .01     .01     .01     .01     .01
                .01     .01     .01     .01     .01     .01     .00     .00     .00     .00
                .00     .00     .00     .00     .00     .00     .00     .00     .00     .00
                .00     .00     .00     .00     .00     .00     .00     .00     .00     .00
                .00     .00     .00     .00     .00     .00     .00     .00     .00     .00
                .00     .00     .00     .00     .00     .00     .00     .00     .00     .00
                .00     .00     .00     .00     .00     .00     .00     .00     .00     .00
                .00     .00     .00     .00     .00     .00     .00     .00     .00     .00
                .00     .00     .00     .00     .00     .00     .00     .00     .00     .00
                .00     .00     .00     .00     .00     .00     .00     .00     .00     .00
                .00     .00     .00     .00     .00     .00     .00     .00     .00     .00
                .00     .00     .00     .00     .00     .00     .00     .00     .00     .00
                .00     .00     .00     .00     .00     .00     .00     .00     .00     .00
                .00     .00     .00     .00     .00     .00     .00     .00     .00     .00
                .00     .00     .00     .00     .00     .00     .00     .00     .00     .00
                .00     .00     .00     .00     .00     .00     .00     .00

627 LU        UNIFORM LOSS RATE
                STRTL        .34  INITIAL LOSS
                CNSTL        .05  UNIFORM LOSS RATE
                RTIMP      14.00  PERCENT IMPERVIOUS AREA

628 UD        SCS DIMENSIONLESS UNITGRAPH
                TLAG         .16  LAG

                                        ***

                                    UNIT HYDROGRAPH
                                 12 END-OF-PERIOD ORDINATES
          411.    1174.    1120.     630.     318.     163.      83.      42.      22.      12.
            6.       1.

  TOTAL RAINFALL =   3.96, TOTAL LOSS =   1.03, TOTAL EXCESS =   2.93

PEAK FLOW    TIME                    MAXIMUM AVERAGE FLOW
```

(CFS)	(HR)		6-HR	24-HR	72-HR	24.92-HR
1155.	12.00	(CFS)	141.	40.	39.	39.
		(INCHES)	2.551	2.925	2.926	2.926
		(AC-FT)	70.	80.	80.	80.

CUMULATIVE AREA = .51 SQ MI

*** *** *** *** ***

HYDROGRAPH AT STATION 5C
FOR PLAN 1, RATIO = 1.00

TOTAL RAINFALL = 3.96, TOTAL LOSS = 1.03, TOTAL EXCESS = 2.93

PEAK FLOW	TIME		MAXIMUM AVERAGE FLOW			
(CFS)	(HR)		6-HR	24-HR	72-HR	24.92-HR
1155.	12.00	(CFS)	141.	40.	39.	39.
		(INCHES)	2.551	2.925	2.926	2.926
		(AC-FT)	70.	80.	80.	80.

CUMULATIVE AREA = .51 SQ MI

*** *** *** *** ***

HYDROGRAPH AT STATION 5C
FOR PLAN 1, RATIO = .97

TOTAL RAINFALL = 3.83, TOTAL LOSS = 1.02, TOTAL EXCESS = 2.81

PEAK FLOW	TIME		MAXIMUM AVERAGE FLOW			
(CFS)	(HR)		6-HR	24-HR	72-HR	24.92-HR
1118.	12.00	(CFS)	136.	39.	37.	37.
		(INCHES)	2.462	2.810	2.811	2.811
		(AC-FT)	67.	77.	77.	77.

CUMULATIVE AREA = .51 SQ MI

*** *** *** *** ***

HYDROGRAPH AT STATION 5C
FOR PLAN 1, RATIO = .95

TOTAL RAINFALL = 3.75, TOTAL LOSS = 1.02, TOTAL EXCESS = 2.74

PEAK FLOW	TIME		MAXIMUM AVERAGE FLOW			
(CFS)	(HR)		6-HR	24-HR	72-HR	24.92-HR
1094.	12.00	(CFS)	133.	38.	36.	36.
		(INCHES)	2.405	2.738	2.739	2.739
		(AC-FT)	66.	75.	75.	75.

CUMULATIVE AREA = .51 SQ MI

```
***          ***          ***          ***          ***

                    HYDROGRAPH AT STATION      5C
                      FOR PLAN 1, RATIO =  .94

  TOTAL RAINFALL =   3.72, TOTAL LOSS =   1.01, TOTAL EXCESS =   2.71

PEAK FLOW    TIME                      MAXIMUM AVERAGE FLOW
 (CFS)       (HR)              6-HR      24-HR      72-HR    24.92-HR
 1085.      12.00     (CFS)    132.       37.        36.        36.
                     (INCHES)  2.383     2.710      2.710      2.710
                     (AC-FT)    65.       74.        74.        74.

                    CUMULATIVE AREA =    .51 SQ MI


***          ***          ***          ***          ***

                    HYDROGRAPH AT STATION      5C
                      FOR PLAN 1, RATIO =  .92

  TOTAL RAINFALL =   3.64, TOTAL LOSS =   1.00, TOTAL EXCESS =   2.64

PEAK FLOW    TIME                      MAXIMUM AVERAGE FLOW
 (CFS)       (HR)              6-HR      24-HR      72-HR    24.92-HR
 1060.      12.00     (CFS)    128.       36.        35.        35.
                     (INCHES)  2.324     2.635      2.635      2.635
                     (AC-FT)    64.       72.        72.        72.

                    CUMULATIVE AREA =    .51 SQ MI


*** *** *** *** *** *** *** *** *** *** *** *** *** *** *** *** *** *** *** *** *** *** *** *** *** *** *** *** *** *** *** *** *** ***


          ***************
          *             *
629 KK    *     RS5C    *
          *             *
          ***************
                    RESERVOR ROUTE THROUGH DETENTION BASIN NO. 2A
                                                  1) Total Volume  = 60 AC-FT.
                                                  2) Spillway Elev = 1408

          HYDROGRAPH ROUTING DATA

633 RS       STORAGE ROUTING
                 NSTPS        1  NUMBER OF SUBREACHES
                  ITYP     ELEV  TYPE OF INITIAL CONDITION
                RSVRIC      .00  INITIAL CONDITION
                     X      .00 WORKING R AND D COEFFICIENT
```

634 SV	STORAGE	.0	2.0	5.0	10.0	25.0	60.0	69.0	91.0	94.0	108.0
635 SE	ELEVATION	1391.00	1393.00	1397.00	1400.00	1404.00	1408.00	1409.00	1410.00	1411.00	1412.00

637 SL LOW-LEVEL OUTLET

ELEVL	1392.20	ELEVATION AT CENTER OF OUTLET
CAREA	1.78	CROSS-SECTIONAL AREA
COQL	.60	COEFFICIENT
EXPL	.50	EXPONENT OF HEAD

636 SS SPILLWAY

CREL	1408.00	SPILLWAY CREST ELEVATION
SPWID	80.00	SPILLWAY WIDTH
COQW	2.63	WEIR COEFFICIENT
EXPW	1.50	EXPONENT OF HEAD

***

COMPUTED OUTFLOW-ELEVATION DATA

OUTFLOW	.00	.00	7.59	8.54	9.76	11.38	13.65	17.06	22.73	34.05
ELEVATION	1391.00	1392.20	1392.99	1393.19	1393.50	1393.97	1394.74	1396.17	1399.24	1408.00
OUTFLOW	35.85	47.97	80.43	143.29	246.59	400.37	614.71	899.58	1265.12	1721.31
ELEVATION	1408.04	1408.16	1408.36	1408.64	1409.00	1409.44	1409.96	1410.56	1411.24	1412.00

COMPUTED STORAGE-OUTFLOW-ELEVATION DATA

STORAGE	.00	1.20	1.99	2.00	2.15	2.37	2.72	3.31	4.39	5.00
OUTFLOW	.00	.00	7.59	7.66	8.54	9.76	11.38	13.65	17.06	18.77
ELEVATION	1391.00	1392.20	1392.99	1393.00	1393.19	1393.50	1393.97	1394.74	1396.17	1397.00
STORAGE	8.74	10.00	25.00	60.00	60.37	61.46	63.27	65.79	69.00	74.32
OUTFLOW	22.73	23.92	29.42	34.05	35.85	47.97	80.43	143.29	245.51	400.37
ELEVATION	1399.24	1400.00	1404.00	1408.00	1408.04	1408.16	1408.36	1408.64	1409.00	1409.44
STORAGE	80.55	81.00	88.31	94.00	97.38	108.00				
OUTFLOW	614.71	631.24	899.58	1130.41	1265.12	1721.31				
ELEVATION	1409.96	1410.00	1410.56	1411.00	1411.24	1412.00				

*** *** *** *** ***

HYDROGRAPH AT STATION RS5C
FOR PLAN 1, RATIO = 1.00

PEAK FLOW (CFS)	TIME (HR)		MAXIMUM AVERAGE FLOW 6-HR	24-HR	72-HR	24.92-HR
35.	14.25	(CFS)	34.	21.	20.	20.
		(INCHES)	.613	1.512	1.512	1.512
		(AC-FT)	17.	41.	41.	41.

PEAK STORAGE TIME MAXIMUM AVERAGE STORAGE

(AC-FT)	(HR)	6-HR	24-HR	72-HR	24.92-HR
60.	14.25	58.	29.	28.	28.

PEAK STAGE (FEET)	TIME (HR)	MAXIMUM AVERAGE STAGE 6-HR	24-HR	72-HR	24.92-HR
1408.02	14.25	1407.78	1400.81	1400.45	1400.45

CUMULATIVE AREA = .51 SQ MI

*** *** *** *** ***

HYDROGRAPH AT STATION R55C
FOR PLAN 1, RATIO = .97

PEAK FLOW (CFS)	TIME (HR)		MAXIMUM AVERAGE FLOW 6-HR	24-HR	72-HR	24.92-HR
34.	14.17	(CFS)	33.	21.	20.	20.
		(INCHES)	.606	1.486	1.486	1.486
		(AC-FT)	17.	41.	41.	41.

PEAK STORAGE (AC-FT)	TIME (HR)	MAXIMUM AVERAGE STORAGE 6-HR	24-HR	72-HR	24.92-HR
58.	14.25	56.	28.	27.	27.

PEAK STAGE (FEET)	TIME (HR)	MAXIMUM AVERAGE STAGE 6-HR	24-HR	72-HR	24.92-HR
1407.76	14.25	1407.51	1400.62	1400.26	1400.26

CUMULATIVE AREA = .51 SQ MI

*** *** *** *** ***

HYDROGRAPH AT STATION R55C
FOR PLAN 1, RATIO = .95

PEAK FLOW (CFS)	TIME (HR)		MAXIMUM AVERAGE FLOW 6-HR	24-HR	72-HR	24.92-HR
34.	14.17	(CFS)	33.	20.	20.	20.
		(INCHES)	.602	1.472	1.472	1.472
		(AC-FT)	17.	40.	40.	40.

PEAK STORAGE (AC-FT)	TIME (HR)	MAXIMUM AVERAGE STORAGE 6-HR	24-HR	72-HR	24.92-HR
56.	14.17	54.	27.	26.	26.

PEAK STAGE (FEET)	TIME (HR)	MAXIMUM AVERAGE STAGE 6-HR	24-HR	72-HR	24.92-HR
1407.59	14.17	1407.34	1400.49	1400.14	1400.14

CUMULATIVE AREA = .51 SQ MI

*** *** *** *** ***

HYDROGRAPH AT STATION RS5C
FOR PLAN 1, RATIO = .94

PEAK FLOW (CFS)	TIME (HR)		MAXIMUM AVERAGE FLOW 6-HR	24-HR	72-HR	24.92-HR
33.	14.17	(CFS)	33.	20.	20.	20.
		(INCHES)	.601	1.466	1.466	1.466
		(AC-FT)	16.	40.	40.	40.

PEAK STORAGE (AC-FT)	TIME (HR)	MAXIMUM AVERAGE STORAGE 6-HR	24-HR	72-HR	24.92-HR
56.	14.17	54.	27.	26.	26.

PEAK STAGE (FEET)	TIME (HR)	MAXIMUM AVERAGE STAGE 6-HR	24-HR	72-HR	24.92-HR
1407.52	14.17	1407.27	1400.44	1400.10	1400.10

CUMULATIVE AREA = .51 SQ MI

*** *** *** *** ***

HYDROGRAPH AT STATION RS5C
FOR PLAN 1, RATIO = .92

PEAK FLOW (CFS)	TIME (HR)		MAXIMUM AVERAGE FLOW 6-HR	24-HR	72-HR	24.92-HR
33.	14.00	(CFS)	33.	20.	19.	19.
		(INCHES)	.597	1.450	1.450	1.450
		(AC-FT)	16.	40.	40.	40.

PEAK STORAGE (AC-FT)	TIME (HR)	MAXIMUM AVERAGE STORAGE 6-HR	24-HR	72-HR	24.92-HR
54.	14.17	52.	26.	25.	25.

PEAK STAGE (FEET)	TIME (HR)	MAXIMUM AVERAGE STAGE 6-HR	24-HR	72-HR	24.92-HR
1407.35	14.17	1407.09	1400.31	1399.97	1399.97

CUMULATIVE AREA = .51 SQ MI

*** ***

```
          **************
          *            *
638 KK    *  RK5C-26   *
          *            *
          **************
```

KINEMATIC WAVE ROUTE IN PIPE FROM SUB-BASIN 5C TO NODE 26
1) Reach Length = 2400 FT.

2) Avg. Pipe Diameter = 54"
3) Average Velocity = 6.4 FPS

HYDROGRAPH ROUTING DATA

643 RK KINEMATIC WAVE STREAM ROUTING

L	2400.	CHANNEL LENGTH
S	.0090	SLOPE
N	.015	CHANNEL ROUGHNESS COEFFICIENT
CA	.00	CONTRIBUTING AREA
SHAPE	CIRC	CHANNEL SHAPE
WD	4.50	BOTTOM WIDTH OR DIAMETER
Z	.00	SIDE SLOPE
DXMIN	2	MINIMUM NUMBER OF DX INTERVALS

***

COMPUTED KINEMATIC PARAMETERS
VARIABLE TIME STEP
(DT SHOWN IS A MINIMUM)

ELEMENT	ALPHA	M	DT (MIN)	DX (FT)	PEAK (CFS)	TIME TO PEAK (MIN)	VOLUME (IN)	MAXIMUM CELERITY (FPS)
3	6.53	1.25	.88	600.00	35.06	857.45	1.51	11.43

CONTINUITY SUMMARY (AC-FT) - INFLOW= 41.442 EXCESS= .000 OUTFLOW= 41.315 BASIN STORAGE= .130 PERCENT ERROR= -.007

INTERPOLATED TO SPECIFIED COMPUTATION INTERVAL

3	6.53	1.25	5.00		35.05	860.00	1.51

*** *** *** *** ***

HYDROGRAPH AT STATION RK5C-26
FOR PLAN 1, RATIO = 1.00

PEAK FLOW (CFS)	TIME (HR)		MAXIMUM AVERAGE FLOW 6-HR	24-HR	72-HR	24.92-HR
35.	14.33	(CFS)	34.	21.	20.	20.
		(INCHES)	.613	1.506	1.506	1.506
		(AC-FT)	17.	41.	41.	41.

CUMULATIVE AREA = .51 SQ MI

COMPUTED KINEMATIC PARAMETERS
VARIABLE TIME STEP
(DT SHOWN IS A MINIMUM)

ELEMENT	ALPHA	M	DT (MIN)	DX (FT)	PEAK (CFS)	TIME TO PEAK (MIN)	VOLUME (IN)	MAXIMUM CELERITY (FPS)
3	6.53	1.25	.88	600.00	33.77	857.12	1.48	11.34

CONTINUITY SUMMARY (AC-FT) - INFLOW= 40.746 EXCESS= .000 OUTFLOW= 40.629 BASIN STORAGE= .129 PERCENT ERROR= -.028

INTERPOLATED TO SPECIFIED COMPUTATION INTERVAL

3	6.53	1.25	5.00	33.77	855.00	1.48

*** *** *** *** ***

HYDROGRAPH AT STATION RK5C-26
FOR PLAN 1, RATIO = .97

PEAK FLOW (CFS)	TIME (HR)		MAXIMUM AVERAGE FLOW 6-HR	24-HR	72-HR	24.92-HR
34.	14.25	(CFS)	33.	20.	20.	20.
		(INCHES)	.606	1.481	1.481	1.481
		(AC-FT)	17.	41.	41.	41.

CUMULATIVE AREA = .51 SQ MI

COMPUTED KINEMATIC PARAMETERS
VARIABLE TIME STEP
(DT SHOWN IS A MINIMUM)

ELEMENT	ALPHA	M	DT (MIN)	DX (FT)	PEAK (CFS)	TIME TO PEAK (MIN)	VOLUME (IN)	MAXIMUM CELERITY (FPS)
3	6.53	1.25	.88	600.00	33.57	852.91	1.47	11.33

CONTINUITY SUMMARY (AC-FT) - INFLOW= 40.342 EXCESS= .000 OUTFLOW= 40.230 BASIN STORAGE= .128 PERCENT ERROR= -.042

INTERPOLATED TO SPECIFIED COMPUTATION INTERVAL

3	6.53	1.25	5.00	33.57	855.00	1.47

*** *** *** *** ***

HYDROGRAPH AT STATION RK5C-26
FOR PLAN 1, RATIO = .95

PEAK FLOW (CFS)	TIME (HR)		MAXIMUM AVERAGE FLOW 6-HR	24-HR	72-HR	24.92-HR
34.	14.17	(CFS)	33.	20.	20.	20.
		(INCHES)	.602	1.466	1.466	1.466
		(AC-FT)	17.	40.	40.	40.

CUMULATIVE AREA = .51 SQ MI

COMPUTED KINEMATIC PARAMETERS

VARIABLE TIME STEP
(DT SHOWN IS A MINIMUM)

ELEMENT	ALPHA	M	DT (MIN)	DX (FT)	PEAK (CFS)	TIME TO PEAK (MIN)	VOLUME (IN)	MAXIMUM CELERITY (FPS)
3	6.53	1.25	.88	600.00	33.50	852.86	1.46	11.32

CONTINUITY SUMMARY (AC-FT) - INFLOW= 40.180 EXCESS= .000 OUTFLOW= 40.043 BASIN STORAGE= .128 PERCENT ERROR= .023

INTERPOLATED TO SPECIFIED COMPUTATION INTERVAL

3	6.53	1.25	5.00		33.50	855.00	1.46

*** *** *** *** ***

HYDROGRAPH AT STATION RK5C-26
FOR PLAN 1, RATIO = .94

PEAK FLOW (CFS)	TIME (HR)		MAXIMUM AVERAGE FLOW 6-HR	24-HR	72-HR	24.92-HR
33.	14.17	(CFS)	33.	20.	19.	19.
		(INCHES)	.601	1.460	1.460	1.460
		(AC-FT)	16.	40.	40.	40.

CUMULATIVE AREA = .51 SQ MI

COMPUTED KINEMATIC PARAMETERS
VARIABLE TIME STEP
(DT SHOWN IS A MINIMUM)

ELEMENT	ALPHA	M	DT (MIN)	DX (FT)	PEAK (CFS)	TIME TO PEAK (MIN)	VOLUME (IN)	MAXIMUM CELERITY (FPS)
3	6.53	1.25	.88	600.00	33.30	852.10	1.45	11.31

CONTINUITY SUMMARY (AC-FT) - INFLOW= 39.757 EXCESS= .000 OUTFLOW= 39.626 BASIN STORAGE= .127 PERCENT ERROR= .010

INTERPOLATED TO SPECIFIED COMPUTATION INTERVAL

3	6.53	1.25	5.00		33.30	850.00	1.45

*** *** *** *** ***

HYDROGRAPH AT STATION RK5C-26
FOR PLAN 1, RATIO = .92

PEAK FLOW (CFS)	TIME (HR)	MAXIMUM AVERAGE FLOW 6-HR	24-HR	72-HR	24.92-HR

```
 33.    14.17      (CFS)      33.        20.        19.        19.
                (INCHES)     .597      1.445      1.445      1.445
                 (AC-FT)      16.        40.        40.        40.

                 CUMULATIVE AREA =     .51 SQ MI


*** *** *** *** *** *** *** *** *** *** *** *** *** *** *** *** *** *** *** *** *** *** *** *** *** *** *** *** *** *** *** *** *** ***


         **************
         *            *
644 KK   *     HC26   *
         *            *
         **************
                        COMBINE SURFACE RUNOFF AT NODE 26
                          RM5G-26 + RK5C-26

647 HC         HYDROGRAPH COMBINATION
                    ICOMP          2  NUMBER OF HYDROGRAPHS TO COMBINE

                                                        ***

    ***            ***            ***            ***            ***

                     HYDROGRAPH AT STATION     HC26
                       FOR PLAN 1, RATIO = 1.00

PEAK FLOW    TIME                        MAXIMUM AVERAGE FLOW
  (CFS)      (HR)                6-HR      24-HR      72-HR    24.92-HR
    68.    14.25      (CFS)      67.        40.        39.        39.
                    (INCHES)     .657      1.585      1.585      1.585
                     (AC-FT)      33.        80.        80.        80.

                 CUMULATIVE AREA =     .94 SQ MI


    ***            ***            ***            ***            ***

                     HYDROGRAPH AT STATION     HC26
                       FOR PLAN 1, RATIO =  .97

PEAK FLOW    TIME                        MAXIMUM AVERAGE FLOW
  (CFS)      (HR)                6-HR      24-HR      72-HR    24.92-HR
    67.    14.08      (CFS)      66.        39.        38.        38.
                    (INCHES)     .649      1.556      1.556      1.556
                     (AC-FT)      33.        78.        78.        78.

                 CUMULATIVE AREA =     .94 SQ MI


    ***            ***            ***            ***            ***
```

HYDROGRAPH AT STATION HC26
FOR PLAN 1, RATIO = .95

PEAK FLOW (CFS)	TIME (HR)		MAXIMUM AVERAGE FLOW 6-HR	24-HR	72-HR	24.92-HR
66.	14.00	(CFS)	65.	39.	38.	38.
		(INCHES)	.645	1.538	1.538	1.538
		(AC-FT)	32.	77.	77.	77.

CUMULATIVE AREA = .94 SQ MI

*** *** *** *** ***

HYDROGRAPH AT STATION HC26
FOR PLAN 1, RATIO = .94

PEAK FLOW (CFS)	TIME (HR)		MAXIMUM AVERAGE FLOW 6-HR	24-HR	72-HR	24.92-HR
66.	14.00	(CFS)	65.	39.	37.	37.
		(INCHES)	.643	1.531	1.531	1.531
		(AC-FT)	32.	77.	77.	77.

CUMULATIVE AREA = .94 SQ MI

*** *** *** *** ***

HYDROGRAPH AT STATION HC26
FOR PLAN 1, RATIO = .92

PEAK FLOW (CFS)	TIME (HR)		MAXIMUM AVERAGE FLOW 6-HR	24-HR	72-HR	24.92-HR
66.	14.00	(CFS)	65.	38.	37.	37.
		(INCHES)	.638	1.512	1.512	1.512
		(AC-FT)	32.	76.	76.	76.

CUMULATIVE AREA = .94 SQ MI

*** ***

```
          ***************
          *             *
648 KK    *  RM26-28    *
          *             *
          ***************
```

MUSKINGUM ROUTE IN CHANNEL FROM NODE 26 TO NODE 28
1) Reach Length= 5500 FT.
2) Average Velocity= 7.2 FPS

HYDROGRAPH ROUTING DATA

652 RM MUSKINGUM ROUTING

NSTPS	3	NUMBER OF SUBREACHES
AMSKK	.21	MUSKINGUM K
X	.30	MUSKINGUM X

***

*** *** *** *** ***

HYDROGRAPH AT STATION RM26-28
FOR PLAN 1, RATIO = 1.00

PEAK FLOW (CFS)	TIME (HR)		MAXIMUM AVERAGE FLOW 6-HR	24-HR	72-HR	24.92-HR
68.	14.50	(CFS)	67.	40.	38.	38.
		(INCHES)	.657	1.565	1.565	1.565
		(AC-FT)	33.	79.	79.	79.

CUMULATIVE AREA = .94 SQ MI

*** *** *** *** ***

HYDROGRAPH AT STATION RM26-28
FOR PLAN 1, RATIO = .97

PEAK FLOW (CFS)	TIME (HR)		MAXIMUM AVERAGE FLOW 6-HR	24-HR	72-HR	24.92-HR
67.	14.33	(CFS)	66.	39.	38.	38.
		(INCHES)	.649	1.536	1.536	1.536
		(AC-FT)	33.	77.	77.	77.

CUMULATIVE AREA = .94 SQ MI

*** *** *** *** ***

HYDROGRAPH AT STATION RM26-28
FOR PLAN 1, RATIO = .95

PEAK FLOW (CFS)	TIME (HR)		MAXIMUM AVERAGE FLOW 6-HR	24-HR	72-HR	24.92-HR
66.	14.25	(CFS)	65.	38.	37.	37.
		(INCHES)	.645	1.518	1.518	1.518
		(AC-FT)	32.	76.	76.	76.

CUMULATIVE AREA = .94 SQ MI

*** *** *** *** ***

HYDROGRAPH AT STATION RM26-28
FOR PLAN 1, RATIO = .94

PEAK FLOW (CFS)	TIME (HR)		MAXIMUM AVERAGE FLOW 6-HR	24-HR	72-HR	24.92-HR
66.	14.25	(CFS)	65.	38.	37.	37.
		(INCHES)	.643	1.511	1.511	1.511
		(AC-FT)	32.	76.	76.	76.

CUMULATIVE AREA = .94 SQ MI

*** *** *** *** ***

HYDROGRAPH AT STATION RM26-28
FOR PLAN 1, RATIO = .92

PEAK FLOW (CFS)	TIME (HR)		MAXIMUM AVERAGE FLOW 6-HR	24-HR	72-HR	24.92-HR
66.	14.25	(CFS)	65.	38.	36.	36.
		(INCHES)	.638	1.492	1.492	1.492
		(AC-FT)	32.	75.	75.	75.

CUMULATIVE AREA = .94 SQ MI

*** ***

```
          **************
          *            *
653 KK    *      5A    *
          *            *
          **************
```

RUNOFF GENERATED ON SUB-BASIN 5A

SUBBASIN RUNOFF DATA

655 BA SUBBASIN CHARACTERISTICS
TAREA 1.27 SUBBASIN AREA

PRECIPITATION DATA

13 PB STORM 3.96 BASIN TOTAL PRECIPITATION

14 PI INCREMENTAL PRECIPITATION PATTERN

.00	.00	.00	.00	.00	.00	.00	.00	.00	.00
.00	.00	.00	.00	.00	.00	.00	.00	.00	.00
.00	.00	.00	.00	.00	.00	.00	.00	.00	.00
.00	.00	.00	.00	.00	.00	.00	.00	.00	.00
.00	.00	.00	.00	.00	.00	.00	.00	.00	.00
.00	.00	.00	.00	.00	.00	.00	.00	.00	.00
.00	.00	.00	.00	.00	.00	.00	.00	.00	.00
.00	.00	.00	.00	.00	.00	.00	.00	.00	.00
.00	.00	.00	.00	.00	.00	.00	.00	.00	.00
.00	.00	.00	.00	.00	.00	.00	.00	.00	.00

.00	.00	.00	.00	.00	.00	.00	.00	.00	.00
.00	.00	.00	.00	.00	.00	.00	.00	.00	.00
.00	.00	.00	.00	.00	.00	.00	.01	.00	.01
.01	.01	.01	.01	.01	.01	.01	.01	.03	.03
.03	.09	.09	.09	.01	.01	.01	.01	.01	.01
.01	.01	.01	.01	.01	.01	.00	.00	.00	.00
.00	.00	.00	.00	.00	.00	.00	.00	.00	.00
.00	.00	.00	.00	.00	.00	.00	.00	.00	.00
.00	.00	.00	.00	.00	.00	.00	.00	.00	.00
.00	.00	.00	.00	.00	.00	.00	.00	.00	.00
.00	.00	.00	.00	.00	.00	.00	.00	.00	.00
.00	.00	.00	.00	.00	.00	.00	.00	.00	.00
.00	.00	.00	.00	.00	.00	.00	.00	.00	.00
.00	.00	.00	.00	.00	.00	.00	.00	.00	.00
.00	.00	.00	.00	.00	.00	.00	.00	.00	.00
.00	.00	.00	.00	.00	.00	.00	.00	.00	.00
.00	.00	.00	.00	.00	.00	.00	.00	.00	.00
.00	.00	.00	.00	.00	.00	.00	.00	.00	.00
.00	.00	.00	.00	.00	.00	.00	.00		

656 LU UNIFORM LOSS RATE

STRTL	.27	INITIAL LOSS
CNSTL	.17	UNIFORM LOSS RATE
RTIMP	25.50	PERCENT IMPERVIOUS AREA

657 UD SCS DIMENSIONLESS UNITGRAPH

TLAG	.21	LAG

***

UNIT HYDROGRAPH
15 END-OF-PERIOD ORDINATES

555.	1854.	2439.	2051.	1231.	700.	419.	243.	140.	83.
48.	28.	18.	9.	1.					

TOTAL RAINFALL = 3.96, TOTAL LOSS = 1.55, TOTAL EXCESS = 2.41

PEAK FLOW (CFS)	TIME (HR)		MAXIMUM AVERAGE FLOW 6-HR	24-HR	72-HR	24.92-HR
2582.	12.08	(CFS)	288.	82.	79.	79.
		(INCHES)	2.114	2.406	2.407	2.407
		(AC-FT)	143.	163.	163.	163.

CUMULATIVE AREA = 1.27 SQ MI

*** *** *** *** ***

HYDROGRAPH AT STATION 5A
FOR PLAN 1, RATIO = 1.00

TOTAL RAINFALL = 3.96, TOTAL LOSS = 1.55, TOTAL EXCESS = 2.41

PEAK FLOW (CFS)	TIME (HR)	MAXIMUM AVERAGE FLOW 6-HR	24-HR	72-HR	24.92-HR

2582.	12.00	(CFS)	288.	82.	79.	79.
		(INCHES)	2.114	2.406	2.407	2.407
		(AC-FT)	143.	163.	163.	163.

CUMULATIVE AREA = 1.27 SQ MI

*** *** *** *** ***

HYDROGRAPH AT STATION 5A
FOR PLAN 1, RATIO = .97

TOTAL RAINFALL = 3.83, TOTAL LOSS = 1.52, TOTAL EXCESS = 2.32

PEAK FLOW (CFS)	TIME (HR)		6-HR	MAXIMUM AVERAGE FLOW 24-HR	72-HR	24.92-HR
2496.	12.00	(CFS)	277.	79.	76.	76.
		(INCHES)	2.032	2.315	2.316	2.316
		(AC-FT)	137.	157.	157.	157.

CUMULATIVE AREA = 1.27 SQ MI

*** *** *** *** ***

HYDROGRAPH AT STATION 5A
FOR PLAN 1, RATIO = .95

TOTAL RAINFALL = 3.75, TOTAL LOSS = 1.49, TOTAL EXCESS = 2.26

PEAK FLOW (CFS)	TIME (HR)		6-HR	MAXIMUM AVERAGE FLOW 24-HR	72-HR	24.92-HR
2442.	12.00	(CFS)	270.	77.	74.	74.
		(INCHES)	1.981	2.259	2.260	2.260
		(AC-FT)	134.	153.	153.	153.

CUMULATIVE AREA = 1.27 SQ MI

*** *** *** *** ***

HYDROGRAPH AT STATION 5A
FOR PLAN 1, RATIO = .94

TOTAL RAINFALL = 3.72, TOTAL LOSS = 1.48, TOTAL EXCESS = 2.24

PEAK FLOW (CFS)	TIME (HR)		6-HR	MAXIMUM AVERAGE FLOW 24-HR	72-HR	24.92-HR
2421.	12.00	(CFS)	267.	76.	73.	73.
		(INCHES)	1.961	2.237	2.238	2.238
		(AC-FT)	133.	151.	151.	151.

CUMULATIVE AREA = 1.27 SQ MI

```
***          ***          ***          ***          ***

                    HYDROGRAPH AT STATION      5A
                      FOR PLAN 1, RATIO =  .92

   TOTAL RAINFALL =    3.64, TOTAL LOSS =    1.46, TOTAL EXCESS =    2.18

PEAK FLOW    TIME                        MAXIMUM AVERAGE FLOW
 (CFS)       (HR)                6-HR      24-HR      72-HR     24.92-HR
 2364.      12.00       (CFS)    260.        74.        72.         72.
                      (INCHES)  1.900      2.177      2.178       2.178
                       (AC-FT)   129.       147.       147.        147.

                     CUMULATIVE AREA =    1.27 SQ MI


*** *** *** *** *** *** *** *** *** *** *** *** *** *** *** *** *** *** *** *** *** *** *** *** *** *** *** *** *** *** *** *** ***


         **************
         *            *
658 KK   *  RM5A-27   *
         *            *
         **************
                        MUSKINGUM ROUTE IN CHANNEL FROM SUB-BASIN 5A TO NODE 27
                                                        1) Reach Length= 3600 FT.
                                                        2) Average Velocity= 4.6 FPS

           HYDROGRAPH ROUTING DATA

662 RM        MUSKINGUM ROUTING
                  NSTPS        3 NUMBER OF SUBREACHES
                  AMSKK      .22 MUSKINGUM K
                      X      .30 MUSKINGUM X

                                                   ***

***          ***          ***          ***          ***

                    HYDROGRAPH AT STATION  RM5A-27
                      FOR PLAN 1, RATIO = 1.00

PEAK FLOW    TIME                        MAXIMUM AVERAGE FLOW
 (CFS)       (HR)                6-HR      24-HR      72-HR     24.92-HR
 2331.      12.33       (CFS)    288.        82.        79.         79.
                      (INCHES)  2.114      2.406      2.407       2.407
                       (AC-FT)   143.       163.       163.        163.

                     CUMULATIVE AREA =    1.27 SQ MI

***          ***          ***          ***          ***
```

HYDROGRAPH AT STATION RM5A-27
FOR PLAN 1, RATIO = .97

PEAK FLOW (CFS)	TIME (HR)		MAXIMUM AVERAGE FLOW 6-HR	24-HR	72-HR	24.92-HR
2254.	12.33	(CFS)	277.	79.	76.	76.
		(INCHES)	2.032	2.315	2.316	2.316
		(AC-FT)	137.	157.	157.	157.

CUMULATIVE AREA = 1.27 SQ MI

*** *** *** *** ***

HYDROGRAPH AT STATION RM5A-27
FOR PLAN 1, RATIO = .95

PEAK FLOW (CFS)	TIME (HR)		MAXIMUM AVERAGE FLOW 6-HR	24-HR	72-HR	24.92-HR
2205.	12.33	(CFS)	270.	77.	74.	74.
		(INCHES)	1.981	2.259	2.260	2.260
		(AC-FT)	134.	153.	153.	153.

CUMULATIVE AREA = 1.27 SQ MI

*** *** *** *** ***

HYDROGRAPH AT STATION RM5A-27
FOR PLAN 1, RATIO = .94

PEAK FLOW (CFS)	TIME (HR)		MAXIMUM AVERAGE FLOW 6-HR	24-HR	72-HR	24.92-HR
2185.	12.33	(CFS)	267.	76.	73.	73.
		(INCHES)	1.961	2.236	2.238	2.238
		(AC-FT)	133.	151.	151.	151.

CUMULATIVE AREA = 1.27 SQ MI

*** *** *** *** ***

HYDROGRAPH AT STATION RM5A-27
FOR PLAN 1, RATIO = .92

PEAK FLOW (CFS)	TIME (HR)		MAXIMUM AVERAGE FLOW 6-HR	24-HR	72-HR	24.92-HR
2134.	12.33	(CFS)	260.	74.	72.	72.
		(INCHES)	1.908	2.177	2.178	2.178
		(AC-FT)	129.	147.	147.	147.

CUMULATIVE AREA = 1.27 SQ MI

*** ***

```
          **************
          *            *
663 KK    *      5B    *
          *            *
          **************
                    RUNOFF GENERATED ON SUB-BASIN 5B

            SUBBASIN RUNOFF DATA

665 BA        SUBBASIN CHARACTERISTICS
                  TAREA        .69  SUBBASIN AREA

              PRECIPITATION DATA

 13 PB            STORM       3.96  BASIN TOTAL PRECIPITATION

 14 PI          INCREMENTAL PRECIPITATION PATTERN
                  .00      .00      .00      .00      .00      .00      .00      .00      .00      .00
                  .00      .00      .00      .00      .00      .00      .00      .00      .00      .00
                  .00      .00      .00      .00      .00      .00      .00      .00      .00      .00
                  .00      .00      .00      .00      .00      .00      .00      .00      .00      .00
                  .00      .00      .00      .00      .00      .00      .00      .00      .00      .00
                  .00      .00      .00      .00      .00      .00      .00      .00      .00      .00
                  .00      .00      .00      .00      .00      .00      .00      .00      .00      .00
                  .00      .00      .00      .00      .00      .00      .00      .00      .00      .00
                  .00      .00      .00      .00      .00      .00      .00      .00      .00      .00
                  .00      .00      .00      .00      .00      .00      .00      .00      .00      .00
                  .00      .00      .00      .00      .00      .00      .00      .00      .00      .00
                  .00      .00      .00      .00      .00      .00      .00      .00      .00      .00
                  .00      .00      .00      .00      .00      .00      .00      .01      .00      .01
                  .01      .01      .01      .01      .01      .01      .01      .01      .03      .03
                  .03      .09      .09      .09      .01      .01      .01      .01      .01      .01
                  .01      .01      .01      .01      .01      .01      .00      .00      .00      .00
                  .00      .00      .00      .00      .00      .00      .00      .00      .00      .00
                  .00      .00      .00      .00      .00      .00      .00      .00      .00      .00
                  .00      .00      .00      .00      .00      .00      .00      .00      .00      .00
                  .00      .00      .00      .00      .00      .00      .00      .00      .00      .00
                  .00      .00      .00      .00      .00      .00      .00      .00      .00      .00
                  .00      .00      .00      .00      .00      .00      .00      .00      .00      .00
                  .00      .00      .00      .00      .00      .00      .00      .00      .00      .00
                  .00      .00      .00      .00      .00      .00      .00      .00      .00      .00
                  .00      .00      .00      .00      .00      .00      .00      .00      .00      .00
                  .00      .00      .00      .00      .00      .00      .00      .00      .00      .00
                  .00      .00      .00      .00      .00      .00      .00      .00      .00      .00
                  .00      .00      .00      .00      .00      .00      .00      .00      .00      .00
                  .00      .00      .00      .00      .00      .00      .00      .00      .00      .00
                  .00      .00      .00      .00      .00      .00      .00      .00

666 LU        UNIFORM LOSS RATE
                  STRTL        .30  INITIAL LOSS
                  CNSTL        .25  UNIFORM LOSS RATE
                  RTIMP      30.00  PERCENT IMPERVIOUS AREA
```

667 UD SCS DIMENSIONLESS UNITGRAPH
TLAG .40 LAG

***

UNIT HYDROGRAPH
26 END-OF-PERIOD ORDINATES

69.	212.	447.	661.	747.	729.	633.	502.	347.	254.
190.	141.	102.	76.	55.	40.	30.	22.	16.	12.
9.	7.	5.	4.	2.	1.				

TOTAL RAINFALL = 3.96, TOTAL LOSS = 1.43, TOTAL EXCESS = 2.53

PEAK FLOW (CFS)	TIME (HR)		MAXIMUM AVERAGE FLOW 6-HR	24-HR	72-HR	24.92-HR
985.	12.25	(CFS)	154.	47.	45.	45.
		(INCHES)	2.080	2.523	2.526	2.526
		(AC-FT)	76.	92.	92.	92.

CUMULATIVE AREA = .69 SQ MI

*** *** *** *** ***

HYDROGRAPH AT STATION 5B
FOR PLAN 1, RATIO = 1.00

TOTAL RAINFALL = 3.96, TOTAL LOSS = 1.43, TOTAL EXCESS = 2.53

PEAK FLOW (CFS)	TIME (HR)		MAXIMUM AVERAGE FLOW 6-HR	24-HR	72-HR	24.92-HR
985.	12.25	(CFS)	154.	47.	45.	45.
		(INCHES)	2.080	2.523	2.526	2.526
		(AC-FT)	76.	92.	92.	92.

CUMULATIVE AREA = .69 SQ MI

*** *** *** *** ***

HYDROGRAPH AT STATION 5B
FOR PLAN 1, RATIO = .97

TOTAL RAINFALL = 3.83, TOTAL LOSS = 1.40, TOTAL EXCESS = 2.43

PEAK FLOW (CFS)	TIME (HR)		MAXIMUM AVERAGE FLOW 6-HR	24-HR	72-HR	24.92-HR
952.	12.25	(CFS)	148.	45.	43.	43.
		(INCHES)	2.010	2.431	2.434	2.434
		(AC-FT)	74.	89.	89.	89.

CUMULATIVE AREA = .69 SQ MI

*** *** *** *** ***

HYDROGRAPH AT STATION 5B
FOR PLAN 1, RATIO = .95

TOTAL RAINFALL = 3.75, TOTAL LOSS = 1.38, TOTAL EXCESS = 2.38

PEAK FLOW (CFS)	TIME (HR)		MAXIMUM AVERAGE FLOW 6-HR	24-HR	72-HR	24.92-HR
931.	12.25	(CFS)	145.	44.	42.	42.
		(INCHES)	1.961	2.374	2.376	2.376
		(AC-FT)	72.	87.	87.	87.

CUMULATIVE AREA = .69 SQ MI

*** *** *** *** ***

HYDROGRAPH AT STATION 5B
FOR PLAN 1, RATIO = .94

TOTAL RAINFALL = 3.72, TOTAL LOSS = 1.37, TOTAL EXCESS = 2.35

PEAK FLOW (CFS)	TIME (HR)		MAXIMUM AVERAGE FLOW 6-HR	24-HR	72-HR	24.92-HR
922.	12.25	(CFS)	143.	43.	42.	42.
		(INCHES)	1.941	2.351	2.353	2.353
		(AC-FT)	71.	86.	86.	86.

CUMULATIVE AREA = .69 SQ MI

*** *** *** *** ***

HYDROGRAPH AT STATION 5B
FOR PLAN 1, RATIO = .92

TOTAL RAINFALL = 3.64, TOTAL LOSS = 1.35, TOTAL EXCESS = 2.29

PEAK FLOW (CFS)	TIME (HR)		MAXIMUM AVERAGE FLOW 6-HR	24-HR	72-HR	24.92-HR
900.	12.25	(CFS)	139.	42.	41.	41.
		(INCHES)	1.890	2.290	2.293	2.293
		(AC-FT)	69.	84.	84.	84.

CUMULATIVE AREA = .69 SQ MI

*** ***

****
* *

668 KK * HC27 *
* *
****

COMBINE SURFACE RUNOFF AT NODE 27
RM5A-27 + 5B

671 HC HYDROGRAPH COMBINATION
ICOMP 2 NUMBER OF HYDROGRAPHS TO COMBINE

***

*** *** *** *** ***

HYDROGRAPH AT STATION HC27
FOR PLAN 1, RATIO = 1.00

PEAK FLOW (CFS)	TIME (HR)		MAXIMUM AVERAGE FLOW 6-HR	24-HR	72-HR	24.92-HR
3284.	12.33	(CFS)	442.	129.	124.	124.
		(INCHES)	2.104	2.447	2.449	2.449
		(AC-FT)	219.	255.	255.	255.

CUMULATIVE AREA = 1.95 SQ MI

*** *** *** *** ***

HYDROGRAPH AT STATION HC27
FOR PLAN 1, RATIO = .97

PEAK FLOW (CFS)	TIME (HR)		MAXIMUM AVERAGE FLOW 6-HR	24-HR	72-HR	24.92-HR
3173.	12.33	(CFS)	425.	124.	119.	119.
		(INCHES)	2.024	2.356	2.358	2.358
		(AC-FT)	211.	246.	246.	246.

CUMULATIVE AREA = 1.95 SQ MI

*** *** *** *** ***

HYDROGRAPH AT STATION HC27
FOR PLAN 1, RATIO = .95

PEAK FLOW (CFS)	TIME (HR)		MAXIMUM AVERAGE FLOW 6-HR	24-HR	72-HR	24.92-HR
3104.	12.33	(CFS)	415.	121.	116.	116.
		(INCHES)	1.974	2.299	2.301	2.301
		(AC-FT)	206.	240.	240.	240.

CUMULATIVE AREA = 1.95 SQ MI

*** *** *** *** ***

HYDROGRAPH AT STATION HC27
FOR PLAN 1, RATIO = .94

PEAK FLOW (CFS)	TIME (HR)		MAXIMUM AVERAGE FLOW 6-HR	24-HR	72-HR	24.92-HR
3076.	12.33	(CFS)	411.	120.	115.	115.
		(INCHES)	1.954	2.277	2.278	2.278
		(AC-FT)	204.	237.	237.	237.

CUMULATIVE AREA = 1.95 SQ MI

*** *** *** *** ***

HYDROGRAPH AT STATION HC27
FOR PLAN 1, RATIO = .92

PEAK FLOW (CFS)	TIME (HR)		MAXIMUM AVERAGE FLOW 6-HR	24-HR	72-HR	24.92-HR
3004.	12.33	(CFS)	400.	116.	112.	112.
		(INCHES)	1.902	2.217	2.219	2.219
		(AC-FT)	198.	231.	231.	231.

CUMULATIVE AREA = 1.95 SQ MI

*** ***

```
          **************
          *            *
672 KK    *  RM27-28   *
          *            *
          **************
```

MUSKINGUM ROUTE IN CHANNEL FROM NODE 27 TO NODE 28
1) Reach Length= 900 FT.
2) Average Velocity= 2.2 FPS

HYDROGRAPH ROUTING DATA

676 RM MUSKINGUM ROUTING

NSTPS	1	NUMBER OF SUBREACHES
AMSKK	.11	MUSKINGUM K
X	.30	MUSKINGUM X

***

*** *** *** *** ***

HYDROGRAPH AT STATION RM27-28
FOR PLAN 1, RATIO = 1.00

PEAK FLOW TIME MAXIMUM AVERAGE FLOW

(CFS)	(HR)		6-HR	24-HR	72-HR	24.92-HR
3178.	12.42	(CFS)	442.	129.	124.	124.
		(INCHES)	2.104	2.447	2.449	2.449
		(AC-FT)	219.	255.	255.	255.

CUMULATIVE AREA = 1.95 SQ MI

*** *** *** *** ***

HYDROGRAPH AT STATION RM27-28
FOR PLAN 1, RATIO = .97

PEAK FLOW (CFS)	TIME (HR)		MAXIMUM AVERAGE FLOW 6-HR	24-HR	72-HR	24.92-HR
3071.	12.42	(CFS)	425.	124.	119.	119.
		(INCHES)	2.024	2.356	2.357	2.357
		(AC-FT)	211.	246.	246.	246.

CUMULATIVE AREA = 1.95 SQ MI

*** *** *** *** ***

HYDROGRAPH AT STATION RM27-28
FOR PLAN 1, RATIO = .95

PEAK FLOW (CFS)	TIME (HR)		MAXIMUM AVERAGE FLOW 6-HR	24-HR	72-HR	24.92-HR
3004.	12.42	(CFS)	415.	121.	116.	116.
		(INCHES)	1.974	2.299	2.301	2.301
		(AC-FT)	206.	240.	240.	240.

CUMULATIVE AREA = 1.95 SQ MI

*** *** *** *** ***

HYDROGRAPH AT STATION RM27-28
FOR PLAN 1, RATIO = .94

PEAK FLOW (CFS)	TIME (HR)		MAXIMUM AVERAGE FLOW 6-HR	24-HR	72-HR	24.92-HR
2977.	12.42	(CFS)	411.	120.	115.	115.
		(INCHES)	1.954	2.276	2.278	2.278
		(AC-FT)	204.	237.	237.	237.

CUMULATIVE AREA = 1.95 SQ MI

*** *** *** *** ***

HYDROGRAPH AT STATION RM27-28
FOR PLAN 1, RATIO = .92

PEAK FLOW (CFS)	TIME (HR)		MAXIMUM AVERAGE FLOW 6-HR	24-HR	72-HR	24.92-HR
2907.	12.42	(CFS)	400.	116.	112.	112.
		(INCHES)	1.902	2.217	2.218	2.218
		(AC-FT)	198.	231.	231.	231.

CUMULATIVE AREA = 1.95 SQ MI

*** ***

```
          **************
          *            *
677 KK    *     HC28   *
          *            *
          **************
```

COMBINE SURFACE RUNOFF AT NODE 28
RM26-28 + RM27-28

680 HC HYDROGRAPH COMBINATION
ICOMP 2 NUMBER OF HYDROGRAPHS TO COMBINE

*** *** *** *** ***

HYDROGRAPH AT STATION HC28
FOR PLAN 1, RATIO = 1.00

PEAK FLOW (CFS)	TIME (HR)		MAXIMUM AVERAGE FLOW 6-HR	24-HR	72-HR	24.92-HR
3237.	12.42	(CFS)	499.	168.	162.	162.
		(INCHES)	1.602	2.159	2.161	2.161
		(AC-FT)	248.	334.	334.	334.

CUMULATIVE AREA = 2.90 SQ MI

*** *** *** *** ***

HYDROGRAPH AT STATION HC28
FOR PLAN 1, RATIO = .97

PEAK FLOW (CFS)	TIME (HR)		MAXIMUM AVERAGE FLOW 6-HR	24-HR	72-HR	24.92-HR
3130.	12.42	(CFS)	482.	163.	157.	157.
		(INCHES)	1.546	2.088	2.090	2.090
		(AC-FT)	239.	323.	323.	323.

CUMULATIVE AREA = 2.90 SQ MI

*** *** *** *** ***

HYDROGRAPH AT STATION HC28
FOR PLAN 1, RATIO = .95

PEAK FLOW (CFS)	TIME (HR)		MAXIMUM AVERAGE FLOW 6-HR	24-HR	72-HR	24.92-HR
3062.	12.42	(CFS)	471.	159.	154.	154.
		(INCHES)	1.511	2.044	2.046	2.046
		(AC-FT)	234.	316.	316.	316.

CUMULATIVE AREA = 2.90 SQ MI

*** *** *** *** ***

HYDROGRAPH AT STATION HC28
FOR PLAN 1, RATIO = .94

PEAK FLOW (CFS)	TIME (HR)		MAXIMUM AVERAGE FLOW 6-HR	24-HR	72-HR	24.92-HR
3035.	12.42	(CFS)	467.	158.	152.	152.
		(INCHES)	1.498	2.026	2.028	2.028
		(AC-FT)	231.	313.	313.	313.

CUMULATIVE AREA = 2.90 SQ MI

*** *** *** *** ***

HYDROGRAPH AT STATION HC28
FOR PLAN 1, RATIO = .92

PEAK FLOW (CFS)	TIME (HR)		MAXIMUM AVERAGE FLOW 6-HR	24-HR	72-HR	24.92-HR
2965.	12.42	(CFS)	455.	154.	149.	149.
		(INCHES)	1.461	1.980	1.982	1.982
		(AC-FT)	226.	306.	306.	306.

CUMULATIVE AREA = 2.90 SQ MI

*** ***

```
         ***************
         *             *
681 KK   *  RM28-29    *
         *             *
         ***************
```

MUSKINGUM ROUTE IN CHANNEL FROM NODE 28 TO NODE 29
1) Reach Length= 2150 FT.
2) Average Velocity= 6.2 FPS

HYDROGRAPH ROUTING DATA

685 RM MUSKINGUM ROUTING

NSTPS	1	NUMBER OF SUBREACHES
AMSKK	.10	MUSKINGUM K
X	.30	MUSKINGUM X

***

*** *** *** *** ***

HYDROGRAPH AT STATION RM28-29
FOR PLAN 1, RATIO = 1.00

PEAK FLOW (CFS)	TIME (HR)		MAXIMUM AVERAGE FLOW 6-HR	24-HR	72-HR	24.92-HR
3136.	12.50	(CFS)	499.	168.	162.	162.
		(INCHES)	1.602	2.156	2.158	2.158
		(AC-FT)	248.	333.	333.	333.

CUMULATIVE AREA = 2.90 SQ MI

*** *** *** *** ***

HYDROGRAPH AT STATION RM28-29
FOR PLAN 1, RATIO = .97

PEAK FLOW (CFS)	TIME (HR)		MAXIMUM AVERAGE FLOW 6-HR	24-HR	72-HR	24.92-HR
3031.	12.50	(CFS)	482.	162.	157.	157.
		(INCHES)	1.546	2.085	2.087	2.087
		(AC-FT)	239.	322.	322.	322.

CUMULATIVE AREA = 2.90 SQ MI

*** *** *** *** ***

HYDROGRAPH AT STATION RM28-29
FOR PLAN 1, RATIO = .95

PEAK FLOW (CFS)	TIME (HR)		MAXIMUM AVERAGE FLOW 6-HR	24-HR	72-HR	24.92-HR
2966.	12.50	(CFS)	471.	159.	153.	153.
		(INCHES)	1.511	2.041	2.043	2.043
		(AC-FT)	234.	315.	316.	316.

CUMULATIVE AREA = 2.90 SQ MI

*** *** *** *** ***

HYDROGRAPH AT STATION RM29-29

FOR PLAN 1, RATIO = .94

PEAK FLOW (CFS)	TIME (HR)		MAXIMUM AVERAGE FLOW 6-HR	24-HR	72-HR	24.92-HR
2940.	12.50	(CFS)	467.	158.	152.	152.
		(INCHES)	1.498	2.024	2.025	2.025
		(AC-FT)	231.	313.	313.	313.

CUMULATIVE AREA = 2.90 SQ MI

*** *** *** ***

HYDROGRAPH AT STATION RM28-29
FOR PLAN 1, RATIO = .92

PEAK FLOW (CFS)	TIME (HR)		MAXIMUM AVERAGE FLOW 6-HR	24-HR	72-HR	24.92-HR
2871.	12.50	(CFS)	455.	154.	148.	148.
		(INCHES)	1.461	1.977	1.979	1.979
		(AC-FT)	226.	306.	306.	306.

CUMULATIVE AREA = 2.90 SQ MI

*** ***

```
          ***************
          *             *
686 KK    *        50   *
          *             *
          ***************
```

RUNOFF GENERATED ON SUB-BASIN 50

SUBBASIN RUNOFF DATA

688 BA SUBBASIN CHARACTERISTICS
TAREA .55 SUBBASIN AREA

PRECIPITATION DATA

13 PB STORM 3.96 BASIN TOTAL PRECIPITATION

14 PI INCREMENTAL PRECIPITATION PATTERN

.00	.00	.00	.00	.00	.00	.00	.00	.00	.00
.00	.00	.00	.00	.00	.00	.00	.00	.00	.00
.00	.00	.00	.00	.00	.00	.00	.00	.00	.00
.00	.00	.00	.00	.00	.00	.00	.00	.00	.00
.00	.00	.00	.00	.00	.00	.00	.00	.00	.00
.00	.00	.00	.00	.00	.00	.00	.00	.00	.00
.00	.00	.00	.00	.00	.00	.00	.00	.00	.00
.00	.00	.00	.00	.00	.00	.00	.00	.00	.00

.00	.00	.00	.00	.00	.00	.00	.00	.00	.00
.00	.00	.00	.00	.00	.00	.00	.00	.00	.00
.00	.00	.00	.00	.00	.00	.00	.00	.00	.00
.00	.00	.00	.00	.00	.00	.00	.00	.00	.00
.00	.00	.00	.00	.00	.00	.00	.01	.00	.01
.01	.01	.01	.01	.01	.01	.01	.01	.03	.03
.03	.09	.09	.09	.01	.01	.01	.01	.01	.01
.01	.01	.01	.01	.01	.01	.00	.00	.00	.00
.00	.00	.00	.00	.00	.00	.00	.00	.00	.00
.00	.00	.00	.00	.00	.00	.00	.00	.00	.00
.00	.00	.00	.00	.00	.00	.00	.00	.00	.00
.00	.00	.00	.00	.00	.00	.00	.00	.00	.00
.00	.00	.00	.00	.00	.00	.00	.00	.00	.00
.00	.00	.00	.00	.00	.00	.00	.00	.00	.00
.00	.00	.00	.00	.00	.00	.00	.00	.00	.00
.00	.00	.00	.00	.00	.00	.00	.00	.00	.00
.00	.00	.00	.00	.00	.00	.00	.00	.00	.00
.00	.00	.00	.00	.00	.00	.00	.00	.00	.00
.00	.00	.00	.00	.00	.00	.00	.00	.00	.00
.00	.00	.00	.00	.00	.00	.00	.00	.00	.00
.00	.00	.00	.00	.00	.00	.00	.00		

```
689 LU        UNIFORM LOSS RATE
                   STRTL        .39  INITIAL LOSS
                   CNSTL        .05  UNIFORM LOSS RATE
                   RTIMP       2.10  PERCENT IMPERVIOUS AREA

690 UD        SCS DIMENSIONLESS UNITGRAPH
                   TLAG        .10  LAG

                                          ***

                                       UNIT HYDROGRAPH
                                    8 END-OF-PERIOD ORDINATES
          1213.    1796.     789.     306.     117.      45.      18.       6.

  TOTAL RAINFALL =   3.96, TOTAL LOSS =   1.20, TOTAL EXCESS =   2.76

PEAK FLOW    TIME                     MAXIMUM AVERAGE FLOW
 (CFS)       (HR)              6-HR      24-HR      72-HR    24.92-HR
 1431.      12.00     (CFS)    150.        41.        40.        40.
                    (INCHES)  2.514      2.756      2.757      2.757
                    (AC-FT)    74.        81.        81.        81.

                    CUMULATIVE AREA =    .55 SQ MI


   ***          ***          ***          ***          ***

                   HYDROGRAPH AT STATION      5D
                     FOR PLAN 1, RATIO = 1.00

  TOTAL RAINFALL =   3.96, TOTAL LOSS =   1.20, TOTAL EXCESS =   2.76

PEAK FLOW    TIME                     MAXIMUM AVERAGE FLOW
```

(CFS)	(HR)		6-HR	24-HR	72-HR	24.92-HR
1431.	12.00	(CFS)	150.	41.	40.	40.
		(INCHES)	2.514	2.756	2.757	2.757
		(AC-FT)	74.	81.	81.	81.

CUMULATIVE AREA = .55 SQ MI

*** *** *** *** ***

HYDROGRAPH AT STATION 50
FOR PLAN 1, RATIO = .97

TOTAL RAINFALL = 3.83, TOTAL LOSS = 1.19, TOTAL EXCESS = 2.64

PEAK FLOW (CFS)	TIME (HR)		MAXIMUM AVERAGE FLOW 6-HR	24-HR	72-HR	24.92-HR
1385.	12.00	(CFS)	144.	39.	38.	38.
		(INCHES)	2.424	2.644	2.644	2.644
		(AC-FT)	72.	78.	78.	78.

CUMULATIVE AREA = .55 SQ MI

*** *** *** *** ***

HYDROGRAPH AT STATION 50
FOR PLAN 1, RATIO = .95

TOTAL RAINFALL = 3.75, TOTAL LOSS = 1.18, TOTAL EXCESS = 2.57

PEAK FLOW (CFS)	TIME (HR)		MAXIMUM AVERAGE FLOW 6-HR	24-HR	72-HR	24.92-HR
1356.	12.00	(CFS)	141.	38.	37.	37.
		(INCHES)	2.368	2.574	2.574	2.574
		(AC-FT)	70.	76.	76.	76.

CUMULATIVE AREA = .55 SQ MI

*** *** *** *** ***

HYDROGRAPH AT STATION 50
FOR PLAN 1, RATIO = .94

TOTAL RAINFALL = 3.72, TOTAL LOSS = 1.18, TOTAL EXCESS = 2.55

PEAK FLOW (CFS)	TIME (HR)		MAXIMUM AVERAGE FLOW 6-HR	24-HR	72-HR	24.92-HR
1344.	12.00	(CFS)	140.	38.	37.	37.
		(INCHES)	2.345	2.546	2.546	2.546
		(AC-FT)	69.	75.	75.	75.

CUMULATIVE AREA = .55 SQ MI

```
***          ***          ***          ***          ***

                    HYDROGRAPH AT STATION      5D
                      FOR PLAN 1, RATIO =  .92

  TOTAL RAINFALL =   3.64, TOTAL LOSS =   1.17, TOTAL EXCESS =   2.47

PEAK FLOW    TIME                        MAXIMUM AVERAGE FLOW
  (CFS)      (HR)                6-HR      24-HR      72-HR     24.92-HR
  1314.     12.00      (CFS)     136.        37.        35.        35.
                     (INCHES)   2.287      2.473      2.473      2.473
                      (AC-FT)     68.        73.        73.        73.

                    CUMULATIVE AREA =    .55 SQ MI


*** *** *** *** *** *** *** *** *** *** *** *** *** *** *** *** *** *** *** *** *** *** *** *** *** *** *** *** *** *** *** *** ***


          **************
          *            *
691 KK    *     RS5D   *
          *            *
          **************
                    RESERVOR ROUTE THROUGH DETENTION BASIN NO. 7
                                                  1) Total Volume  = 120 AC-FT.
                                                  2) Spillway Elev = 1392

            HYDROGRAPH ROUTING DATA

695 RS        STORAGE ROUTING
                  NSTPS          1  NUMBER OF SUBREACHES
                   ITYP       ELEV  TYPE OF INITIAL CONDITION
                 RSVRIC        .00  INITIAL CONDITION
                      X        .00 WORKING R AND D COEFFICIENT

696 SV          STORAGE        .0    120.0    136.0    152.0    175.0    200.0    224.0    248.0    272.0

697 SE        ELEVATION    1369.00  1392.00  1393.00  1394.00  1395.00  1396.00  1397.00  1398.00  1399.00

698 SQ        DISCHARGE        0.      53.     363.     928.    1660.    2526.    3508.    4594.    5775.

                                                        ***

***          ***          ***          ***          ***

                    HYDROGRAPH AT STATION     RS5D
                      FOR PLAN 1, RATIO = 1.00

PEAK FLOW    TIME                        MAXIMUM AVERAGE FLOW
  (CFS)      (HR)                6-HR      24-HR      72-HR     24.92-HR
    30.     14.42      (CFS)      30.        15.        15.        15.
```

		(INCHES)	.497	1.025	1.025	1.025
		(AC-FT)	15.	30.	30.	30.

PEAK STORAGE (AC-FT)	TIME (HR)	MAXIMUM AVERAGE STORAGE 6-HR	24-HR	72-HR	24.92-HR
69.	14.42	67.	35.	33.	33.

PEAK STAGE (FEET)	TIME (HR)	MAXIMUM AVERAGE STAGE 6-HR	24-HR	72-HR	24.92-HR
1382.21	14.42	1381.86	1375.62	1375.38	1375.38

CUMULATIVE AREA = .55 SQ MI

*** *** *** *** ***

HYDROGRAPH AT STATION RS5D
FOR PLAN 1, RATIO = .97

PEAK FLOW (CFS)	TIME (HR)		MAXIMUM AVERAGE FLOW 6-HR	24-HR	72-HR	24.92-HR
29.	14.33	(CFS)	28.	15.	14.	14.
		(INCHES)	.478	.983	.983	.983
		(AC-FT)	14.	29.	29.	29.

PEAK STORAGE (AC-FT)	TIME (HR)	MAXIMUM AVERAGE STORAGE 6-HR	24-HR	72-HR	24.92-HR
66.	14.33	65.	33.	32.	32.

PEAK STAGE (FEET)	TIME (HR)	MAXIMUM AVERAGE STAGE 6-HR	24-HR	72-HR	24.92-HR
1381.71	14.33	1381.36	1375.35	1375.12	1375.12

CUMULATIVE AREA = .55 SQ MI

*** *** *** *** ***

HYDROGRAPH AT STATION RS5D
FOR PLAN 1, RATIO = .95

PEAK FLOW (CFS)	TIME (HR)		MAXIMUM AVERAGE FLOW 6-HR	24-HR	72-HR	24.92-HR
29.	14.33	(CFS)	28.	14.	14.	14.
		(INCHES)	.466	.957	.957	.957
		(AC-FT)	14.	28.	28.	28.

PEAK STORAGE (AC-FT)	TIME (HR)	MAXIMUM AVERAGE STORAGE 6-HR	24-HR	72-HR	24.92-HR
65.	14.33	63.	32.	31.	31.

PEAK STAGE (FEET)	TIME (HR)	MAXIMUM AVERAGE STAGE 6-HR	24-HR	72-HR	24.92-HR
1381.40	14.33	1381.06	1375.19	1374.96	1374.96

CUMULATIVE AREA = .55 SQ MI

*** *** *** *** ***

HYDROGRAPH AT STATION R55D
FOR PLAN 1, RATIO = .94

PEAK FLOW (CFS)	TIME (HR)		MAXIMUM AVERAGE FLOW 6-HR	24-HR	72-HR	24.92-HR
28.	14.33	(CFS)	27.	14.	14.	14.
		(INCHES)	.461	.947	.947	.947
		(AC-FT)	14.	29.	29.	29.

PEAK STORAGE (AC-FT)	TIME (HR)	MAXIMUM AVERAGE STORAGE 6-HR	24-HR	72-HR	24.92-HR
64.	14.33	62.	32.	31.	31.

PEAK STAGE (FEET)	TIME (HR)	MAXIMUM AVERAGE STAGE 6-HR	24-HR	72-HR	24.92-HR
1381.28	14.33	1380.93	1375.12	1374.90	1374.90

CUMULATIVE AREA = .55 SQ MI

*** *** *** *** ***

HYDROGRAPH AT STATION R55D
FOR PLAN 1, RATIO = .92

PEAK FLOW (CFS)	TIME (HR)		MAXIMUM AVERAGE FLOW 6-HR	24-HR	72-HR	24.92-HR
28.	14.33	(CFS)	27.	14.	13.	13.
		(INCHES)	.449	.920	.920	.920
		(AC-FT)	13.	27.	27.	27.

PEAK STORAGE (AC-FT)	TIME (HR)	MAXIMUM AVERAGE STORAGE 6-HR	24-HR	72-HR	24.92-HR
62.	14.33	61.	31.	30.	30.

PEAK STAGE (FEET)	TIME (HR)	MAXIMUM AVERAGE STAGE 6-HR	24-HR	72-HR	24.92-HR
1380.96	14.33	1380.61	1374.95	1374.73	1374.73

CUMULATIVE AREA = .55 SQ MI

*** ***

```
          ***************
          *             *
699 KK    *  RM5D-29    *
```

```
*          *
**************
```

MUSKINGUM ROUTE IN CHANNEL FROM SUB-BASIN 50 TO NODE 29
1) Reach Length= 6700 FT.
2) Average Velocity= 5.8 FPS

HYDROGRAPH ROUTING DATA

703 RM MUSKINGUM ROUTING

NSTPS	4	NUMBER OF SUBREACHES
AMSKK	.32	MUSKINGUM K
X	.30	MUSKINGUM X

***

*** *** *** *** ***

HYDROGRAPH AT STATION RM50-29
FOR PLAN 1, RATIO = 1.00

PEAK FLOW (CFS)	TIME (HR)		MAXIMUM AVERAGE FLOW 6-HR	24-HR	72-HR	24.92-HR
30.	14.67	(CFS)	30.	15.	14.	14.
		(INCHES)	.497	1.004	1.004	1.004
		(AC-FT)	15.	30.	30.	30.

CUMULATIVE AREA = .55 SQ MI

*** *** *** *** ***

HYDROGRAPH AT STATION RM50-29
FOR PLAN 1, RATIO = .97

PEAK FLOW (CFS)	TIME (HR)		MAXIMUM AVERAGE FLOW 6-HR	24-HR	72-HR	24.92-HR
29.	14.67	(CFS)	28.	14.	14.	14.
		(INCHES)	.478	.963	.963	.963
		(AC-FT)	14.	28.	29.	28.

CUMULATIVE AREA = .55 SQ MI

*** *** *** *** ***

HYDROGRAPH AT STATION RM50-29
FOR PLAN 1, RATIO = .95

PEAK FLOW (CFS)	TIME (HR)		MAXIMUM AVERAGE FLOW 6-HR	24-HR	72-HR	24.92-HR
29.	14.67	(CFS)	28.	14.	13.	13.
		(INCHES)	.466	.938	.938	.938
		(AC-FT)	14.	28.	28.	28.

CUMULATIVE AREA = .55 SQ MI

```
***          ***          ***          ***          ***

                    HYDROGRAPH AT STATION  RM5D-29
                      FOR PLAN 1, RATIO =  .94

PEAK FLOW    TIME                        MAXIMUM AVERAGE FLOW
 (CFS)       (HR)                 6-HR     24-HR      72-HR     24.92-HR
   28.      14.67       (CFS)     27.       14.        13.         13.
                      (INCHES)   .461      .928       .928        .928
                       (AC-FT)    14.       27.        27.         27.

                    CUMULATIVE AREA =     .55 SQ MI


***          ***          ***          ***          ***

                    HYDROGRAPH AT STATION  RM5D-29
                      FOR PLAN 1, RATIO =  .92

PEAK FLOW    TIME                        MAXIMUM AVERAGE FLOW
 (CFS)       (HR)                 6-HR     24-HR      72-HR     24.92-HR
   28.      14.67       (CFS)     27.       13.        13.         13.
                      (INCHES)   .449      .902       .902        .902
                       (AC-FT)    13.       27.        27.         27.

                    CUMULATIVE AREA =     .55 SQ MI


*** *** *** *** *** *** *** *** *** *** *** *** *** *** *** *** *** *** *** *** *** *** *** *** *** *** *** *** *** *** *** *** *** *** ***


          **************
          *            *
704 KK    *       5E   *
          *            *
          **************
                        RUNOFF GENERATED ON SUB-BASIN 5E

            SUBBASIN RUNOFF DATA

706 BA        SUBBASIN CHARACTERISTICS
                   TAREA        1.59  SUBBASIN AREA

              PRECIPITATION DATA

 13 PB             STORM        3.96  BASIN TOTAL PRECIPITATION

 14 PI          INCREMENTAL PRECIPITATION PATTERN
                  .00       .00       .00       .00       .00       .00       .00       .00       .00       .00
                  .00       .00       .00       .00       .00       .00       .00       .00       .00       .00
                  .00       .00       .00       .00       .00       .00       .00       .00       .00       .00
```

.00	.00	.00	.00	.00	.00	.00	.00	.00	.00
.00	.00	.00	.00	.00	.00	.00	.00	.00	.00
.00	.00	.00	.00	.00	.00	.00	.00	.00	.00
.00	.00	.00	.00	.00	.00	.00	.00	.00	.00
.00	.00	.00	.00	.00	.00	.00	.00	.00	.00
.00	.00	.00	.00	.00	.00	.00	.00	.00	.00
.00	.00	.00	.00	.00	.00	.00	.00	.00	.00
.00	.00	.00	.00	.00	.00	.00	.00	.00	.00
.00	.00	.00	.00	.00	.00	.00	.00	.00	.00
.00	.00	.00	.00	.00	.00	.00	.01	.00	.01
.01	.01	.01	.01	.01	.01	.01	.01	.03	.03
.03	.09	.09	.09	.01	.01	.01	.01	.01	.01
.01	.01	.01	.01	.01	.01	.00	.00	.00	.00
.00	.00	.00	.00	.00	.00	.00	.00	.00	.00
.00	.00	.00	.00	.00	.00	.00	.00	.00	.00
.00	.00	.00	.00	.00	.00	.00	.00	.00	.00
.00	.00	.00	.00	.00	.00	.00	.00	.00	.00
.00	.00	.00	.00	.00	.00	.00	.00	.00	.00
.00	.00	.00	.00	.00	.00	.00	.00	.00	.00
.00	.00	.00	.00	.00	.00	.00	.00	.00	.00
.00	.00	.00	.00	.00	.00	.00	.00	.00	.00
.00	.00	.00	.00	.00	.00	.00	.00	.00	.00
.00	.00	.00	.00	.00	.00	.00	.00	.00	.00
.00	.00	.00	.00	.00	.00	.00	.00	.00	.00
.00	.00	.00	.00	.00	.00	.00	.00	.00	.00
.00	.00	.00	.00	.00	.00	.00	.00		

707 LU UNIFORM LOSS RATE

STRTL	.27	INITIAL LOSS
CNSTL	.11	UNIFORM LOSS RATE
RTIMP	39.00	PERCENT IMPERVIOUS AREA

708 UD SCS DIMENSIONLESS UNITGRAPH

TLAG	.37	LAG

***

UNIT HYDROGRAPH
24 END-OF-PERIOD ORDINATES

191.	594.	1256.	1750.	1868.	1720.	1427.	1011.	705.	507.
372.	264.	191.	137.	98.	71.	51.	37.	26.	19.
15.	10.	6.	3.						

TOTAL RAINFALL = 3.96, TOTAL LOSS = 1.09, TOTAL EXCESS = 2.87

PEAK FLOW (CFS)	TIME (HR)		MAXIMUM AVERAGE FLOW 6-HR	24-HR	72-HR	24.92-HR
2483.	12.25	(CFS)	413.	123.	118.	118.
		(INCHES)	2.409	2.867	2.869	2.869
		(AC-FT)	205.	243.	244.	244.

CUMULATIVE AREA = 1.59 SQ MI

*** *** *** *** ***

HYDROGRAPH AT STATION 5E
FOR PLAN 1, RATIO = 1.00

TOTAL RAINFALL = 3.96, TOTAL LOSS = 1.09, TOTAL EXCESS = 2.87

PEAK FLOW (CFS)	TIME (HR)		MAXIMUM AVERAGE FLOW 6-HR	24-HR	72-HR	24.92-HR
2483.	12.25	(CFS)	413.	123.	118.	118.
		(INCHES)	2.409	2.867	2.869	2.869
		(AC-FT)	205.	243.	244.	244.

CUMULATIVE AREA = 1.59 SQ MI

###

HYDROGRAPH AT STATION 5E
FOR PLAN 1, RATIO = .97

TOTAL RAINFALL = 3.83, TOTAL LOSS = 1.07, TOTAL EXCESS = 2.77

PEAK FLOW (CFS)	TIME (HR)		MAXIMUM AVERAGE FLOW 6-HR	24-HR	72-HR	24.92-HR
2401.	12.25	(CFS)	397.	118.	114.	114.
		(INCHES)	2.320	2.762	2.765	2.765
		(AC-FT)	197.	235.	235.	235.

CUMULATIVE AREA = 1.59 SQ MI

###

HYDROGRAPH AT STATION 5E
FOR PLAN 1, RATIO = .95

TOTAL RAINFALL = 3.75, TOTAL LOSS = 1.05, TOTAL EXCESS = 2.70

PEAK FLOW (CFS)	TIME (HR)		MAXIMUM AVERAGE FLOW 6-HR	24-HR	72-HR	24.92-HR
2350.	12.25	(CFS)	380.	115.	111.	111.
		(INCHES)	2.265	2.698	2.700	2.700
		(AC-FT)	192.	229.	229.	229.

CUMULATIVE AREA = 1.59 SQ MI

###

HYDROGRAPH AT STATION 5E
FOR PLAN 1, RATIO = .94

TOTAL RAINFALL = 3.72, TOTAL LOSS = 1.05, TOTAL EXCESS = 2.67

PEAK FLOW TIME MAXIMUM AVERAGE FLOW

```
 (CFS)      (HR)                 6-HR       24-HR       72-HR     24.92-HR
 2330.     12.25      (CFS)      394.        114.        110.        110.
                    (INCHES)    2.243       2.672       2.674       2.674
                     (AC-FT)     190.        227.        227.        227.

                   CUMULATIVE AREA =    1.59 SQ MI


   ***          ***          ***          ***          ***

                  HYDROGRAPH AT STATION      5E
                   FOR PLAN 1, RATIO =  .92

  TOTAL RAINFALL =    3.64, TOTAL LOSS =    1.03, TOTAL EXCESS =    2.61

PEAK FLOW    TIME                        MAXIMUM AVERAGE FLOW
 (CFS)      (HR)                 6-HR       24-HR       72-HR     24.92-HR
 2276.     12.25      (CFS)      374.        111.        107.        107.
                    (INCHES)    2.185       2.604       2.607       2.607
                     (AC-FT)     185.        221.        221.        221.

                   CUMULATIVE AREA =    1.59 SQ MI


*** *** *** *** *** *** *** *** *** *** *** *** *** *** *** *** *** *** *** *** *** *** *** *** *** *** *** *** *** *** *** *** *** *** *** ***


          **************
          *            *
709 KK    *     DT5E   *
          *            *
          **************
                   THROW AWAY 10-YR 2-HR RETENTION VOLUME:1) 6.0 AC-FT FROM SUB-BASIN 5E
                                                             (Hydrograph identified as OR-2E)
                                                           2) Balance of runoff continues on.
                                                             (Hydrograph identified as DT2E)

   DT         DIVERSION
                   ISTAD      OR-2E  DIVERSION HYDROGRAPH IDENTIFICATION
                  DSTRMX       6.00  MAXIMUM VOLUME TO BE DIVERTED

   DI           INFLOW        .00  100000.00

   DQ      DIVERTED FLOW      .00  100000.00

                                                   ***

   ***          ***          ***          ***          ***

                 DIVERSION HYDROGRAPH    OR-2E
                   FOR PLAN 1, RATIO = 1.00

PEAK FLOW    TIME                        MAXIMUM AVERAGE FLOW
```

(CFS)	(HR)		6-HR	24-HR	72-HR	24.92-HR
22.	4.17	(CFS)	12.	3.	3.	3.
		(INCHES)	.071	.071	.071	.071
		(AC-FT)	6.	6.	6.	6.

CUMULATIVE AREA = 1.59 SQ MI

*** *** *** *** ***

HYDROGRAPH AT STATION DT5E
FOR PLAN 1, RATIO = 1.00

PEAK FLOW (CFS)	TIME (HR)		MAXIMUM AVERAGE FLOW 6-HR	24-HR	72-HR	24.92-HR
2483.	12.25	(CFS)	413.	120.	115.	115.
		(INCHES)	2.409	2.799	2.799	2.799
		(AC-FT)	205.	238.	238.	238.

CUMULATIVE AREA = 1.59 SQ MI

*** *** *** *** ***

DIVERSION HYDROGRAPH OR-2E
FOR PLAN 1, RATIO = .97

PEAK FLOW (CFS)	TIME (HR)		MAXIMUM AVERAGE FLOW 6-HR	24-HR	72-HR	24.92-HR
23.	4.25	(CFS)	12.	3.	3.	3.
		(INCHES)	.071	.071	.071	.071
		(AC-FT)	6.	6.	6.	6.

CUMULATIVE AREA = 1.59 SQ MI

*** *** *** *** ***

HYDROGRAPH AT STATION DT5E
FOR PLAN 1, RATIO = .97

PEAK FLOW (CFS)	TIME (HR)		MAXIMUM AVERAGE FLOW 6-HR	24-HR	72-HR	24.92-HR
2401.	12.25	(CFS)	397.	115.	111.	111.
		(INCHES)	2.320	2.694	2.694	2.694
		(AC-FT)	197.	229.	229.	229.

CUMULATIVE AREA = 1.59 SQ MI

*** *** *** *** ***

DIVERSION HYDROGRAPH OR-2E
FOR PLAN 1, RATIO = .95

PEAK FLOW (CFS)	TIME (HR)		MAXIMUM AVERAGE FLOW 6-HR	24-HR	72-HR	24.92-HR
23.	4.33	(CFS)	12.	3.	3.	3.
		(INCHES)	.071	.071	.071	.071
		(AC-FT)	6.	6.	6.	6.

CUMULATIVE AREA = 1.59 SQ MI

*** *** *** *** ***

HYDROGRAPH AT STATION DT5E
FOR PLAN 1, RATIO = .95

PEAK FLOW (CFS)	TIME (HR)		MAXIMUM AVERAGE FLOW 6-HR	24-HR	72-HR	24.92-HR
2350.	12.25	(CFS)	388.	113.	108.	108.
		(INCHES)	2.265	2.630	2.630	2.630
		(AC-FT)	192.	223.	223.	223.

CUMULATIVE AREA = 1.59 SQ MI

*** *** *** *** ***

DIVERSION HYDROGRAPH OR-2E
FOR PLAN 1, RATIO = .94

PEAK FLOW (CFS)	TIME (HR)		MAXIMUM AVERAGE FLOW 6-HR	24-HR	72-HR	24.92-HR
23.	4.42	(CFS)	12.	3.	3.	3.
		(INCHES)	.071	.071	.071	.071
		(AC-FT)	6.	6.	6.	6.

CUMULATIVE AREA = 1.59 SQ MI

*** *** *** *** ***

HYDROGRAPH AT STATION DT5E
FOR PLAN 1, RATIO = .94

PEAK FLOW (CFS)	TIME (HR)		MAXIMUM AVERAGE FLOW 6-HR	24-HR	72-HR	24.92-HR
2330.	12.25	(CFS)	384.	111.	107.	107.
		(INCHES)	2.243	2.604	2.604	2.604
		(AC-FT)	190.	221.	221.	221.

CUMULATIVE AREA = 1.59 SQ MI

*** *** *** *** ***

DIVERSION HYDROGRAPH OR-2E
FOR PLAN 1, RATIO = .92

PEAK FLOW (CFS)	TIME (HR)		MAXIMUM AVERAGE FLOW 6-HR	24-HR	72-HR	24.92-HR
23.	4.42	(CFS)	12.	3.	3.	3.
		(INCHES)	.071	.071	.071	.071
		(AC-FT)	6.	6.	6.	6.

CUMULATIVE AREA = 1.59 SQ MI

*** *** *** *** ***

HYDROGRAPH AT STATION DT5E
FOR PLAN 1, RATIO = .92

PEAK FLOW (CFS)	TIME (HR)		MAXIMUM AVERAGE FLOW 6-HR	24-HR	72-HR	24.92-HR
2276.	12.25	(CFS)	374.	109.	105.	105.
		(INCHES)	2.185	2.536	2.536	2.536
		(AC-FT)	185.	215.	215.	215.

CUMULATIVE AREA = 1.59 SQ MI

*** ***

```
         **************
         *            *
717 KK   *     HC29   *
         *            *
         **************
```

COMBINE SURFACE RUNOFF AT NODE 29
RM28-29 + RM5D-29 + DT5E

720 HC HYDROGRAPH COMBINATION
ICOMP 3 NUMBER OF HYDROGRAPHS TO COMBINE

***

*** *** *** *** ***

HYDROGRAPH AT STATION HC29
FOR PLAN 1, RATIO = 1.00

PEAK FLOW (CFS)	TIME (HR)		MAXIMUM AVERAGE FLOW 6-HR	24-HR	72-HR	24.92-HR
4964.	12.42	(CFS)	928.	303.	292.	292.
		(INCHES)	1.711	2.232	2.233	2.233
		(AC-FT)	460.	600.	601.	601.

CUMULATIVE AREA = 5.04 SQ MI

*** *** *** *** ***

HYDROGRAPH AT STATION HC29
FOR PLAN 1, RATIO = .97

PEAK FLOW (CFS)	TIME (HR)		MAXIMUM AVERAGE FLOW 6-HR	24-HR	72-HR	24.92-HR
4799.	12.42	(CFS)	895.	292.	281.	281.
		(INCHES)	1.650	2.154	2.155	2.155
		(AC-FT)	444.	579.	580.	580.

CUMULATIVE AREA = 5.04 SQ MI

*** *** *** *** ***

HYDROGRAPH AT STATION HC29
FOR PLAN 1, RATIO = .95

PEAK FLOW (CFS)	TIME (HR)		MAXIMUM AVERAGE FLOW 6-HR	24-HR	72-HR	24.92-HR
4696.	12.42	(CFS)	874.	286.	275.	275.
		(INCHES)	1.612	2.106	2.107	2.107
		(AC-FT)	434.	566.	567.	567.

CUMULATIVE AREA = 5.04 SQ MI

*** *** *** *** ***

HYDROGRAPH AT STATION HC29
FOR PLAN 1, RATIO = .94

PEAK FLOW (CFS)	TIME (HR)		MAXIMUM AVERAGE FLOW 6-HR	24-HR	72-HR	24.92-HR
4654.	12.42	(CFS)	866.	283.	273.	273.
		(INCHES)	1.597	2.086	2.087	2.087
		(AC-FT)	429.	561.	561.	561.

CUMULATIVE AREA = 5.04 SQ MI

*** *** *** *** ***

HYDROGRAPH AT STATION HC29
FOR PLAN 1, RATIO = .92

PEAK FLOW (CFS)	TIME (HR)		MAXIMUM AVERAGE FLOW 6-HR	24-HR	72-HR	24.92-HR
4546.	12.42	(CFS)	844.	276.	266.	266.
		(INCHES)	1.557	2.036	2.036	2.036
		(AC-FT)	419.	547.	548.	548.

CUMULATIVE AREA = 5.04 SQ MI

*** ***

```
          ***************
          *             *
721 KK    *   RM29-11   *
          *             *
          ***************
```

MUSKINGUM ROUTE IN CHANNEL FROM NODE 29 TO NODE 11

1) Reach Length= 7000 FT.

2) Average Velocity= 11.9 FPS

HYDROGRAPH ROUTING DATA

725 RM MUSKINGUM ROUTING

NSTPS	2	NUMBER OF SUBREACHES
AMSKK	.16	MUSKINGUM K
X	.30	MUSKINGUM X

***

*** *** *** *** ***

HYDROGRAPH AT STATION RM29-11
FOR PLAN 1, RATIO = 1.00

PEAK FLOW (CFS)	TIME (HR)		6-HR	MAXIMUM AVERAGE FLOW 24-HR	72-HR	24.92-HR
4845.	12.58	(CFS)	928.	302.	291.	291.
		(INCHES)	1.711	2.229	2.229	2.229
		(AC-FT)	460.	599.	600.	600.

CUMULATIVE AREA = 5.04 SQ MI

*** *** *** *** ***

HYDROGRAPH AT STATION RM29-11
FOR PLAN 1, RATIO = .97

PEAK FLOW (CFS)	TIME (HR)		6-HR	MAXIMUM AVERAGE FLOW 24-HR	72-HR	24.92-HR
4683.	12.58	(CFS)	895.	292.	281.	281.
		(INCHES)	1.650	2.151	2.151	2.151
		(AC-FT)	444.	578.	579.	579.

CUMULATIVE AREA = 5.04 SQ MI

*** *** *** *** ***

HYDROGRAPH AT STATION RM29-11
FOR PLAN 1, RATIO = .95

PEAK FLOW (CFS)	TIME (HR)		MAXIMUM AVERAGE FLOW 6-HR	24-HR	72-HR	24.92-HR
4582.	12.58	(CFS)	874.	285.	275.	275.
		(INCHES)	1.612	2.102	2.103	2.103
		(AC-FT)	434.	565.	566.	566.

CUMULATIVE AREA = 5.04 SQ MI

*** *** *** *** ***

HYDROGRAPH AT STATION RM29-11
FOR PLAN 1, RATIO = .94

PEAK FLOW (CFS)	TIME (HR)		MAXIMUM AVERAGE FLOW 6-HR	24-HR	72-HR	24.92-HR
4542.	12.58	(CFS)	866.	282.	272.	272.
		(INCHES)	1.597	2.083	2.083	2.083
		(AC-FT)	429.	560.	560.	560.

CUMULATIVE AREA = 5.04 SQ MI

*** *** *** *** ***

HYDROGRAPH AT STATION RM29-11
FOR PLAN 1, RATIO = .92

PEAK FLOW (CFS)	TIME (HR)		MAXIMUM AVERAGE FLOW 6-HR	24-HR	72-HR	24.92-HR
4436.	12.58	(CFS)	844.	276.	265.	265.
		(INCHES)	1.557	2.032	2.032	2.032
		(AC-FT)	419.	547.	547.	547.

CUMULATIVE AREA = 5.04 SQ MI

*** ***

```
          **************
          *            *
726 KK    *       5F   *
          *            *
          **************
```

RUNOFF GENERATED ON SUB-BASIN 5F

SUBBASIN RUNOFF DATA

728 BA SUBBASIN CHARACTERISTICS

TAREA 1.52 SUBBASIN AREA

PRECIPITATION DATA

13 PB STORM 3.96 BASIN TOTAL PRECIPITATION

14 PI INCREMENTAL PRECIPITATION PATTERN

.00	.00	.00	.00	.00	.00	.00	.00	.00	.00
.00	.00	.00	.00	.00	.00	.00	.00	.00	.00
.00	.00	.00	.00	.00	.00	.00	.00	.00	.00
.00	.00	.00	.00	.00	.00	.00	.00	.00	.00
.00	.00	.00	.00	.00	.00	.00	.00	.00	.00
.00	.00	.00	.00	.00	.00	.00	.00	.00	.00
.00	.00	.00	.00	.00	.00	.00	.00	.00	.00
.00	.00	.00	.00	.00	.00	.00	.00	.00	.00
.00	.00	.00	.00	.00	.00	.00	.00	.00	.00
.00	.00	.00	.00	.00	.00	.00	.00	.00	.00
.00	.00	.00	.00	.00	.00	.00	.00	.00	.00
.00	.00	.00	.00	.00	.00	.00	.00	.00	.00
.00	.00	.00	.00	.00	.00	.00	.00	.00	.00
.00	.00	.00	.00	.00	.00	.00	.01	.00	.01
.01	.01	.01	.01	.01	.01	.01	.01	.03	.03
.03	.09	.09	.09	.01	.01	.01	.01	.01	.01
.01	.01	.01	.01	.01	.01	.00	.00	.00	.00
.00	.00	.00	.00	.00	.00	.00	.00	.00	.00
.00	.00	.00	.00	.00	.00	.00	.00	.00	.00
.00	.00	.00	.00	.00	.00	.00	.00	.00	.00
.00	.00	.00	.00	.00	.00	.00	.00	.00	.00
.00	.00	.00	.00	.00	.00	.00	.00	.00	.00
.00	.00	.00	.00	.00	.00	.00	.00	.00	.00
.00	.00	.00	.00	.00	.00	.00	.00	.00	.00
.00	.00	.00	.00	.00	.00	.00	.00	.00	.00
.00	.00	.00	.00	.00	.00	.00	.00	.00	.00
.00	.00	.00	.00	.00	.00	.00	.00	.00	.00
.00	.00	.00	.00	.00	.00	.00	.00	.00	.00
.00	.00	.00	.00	.00	.00	.00	.00	.00	.00
.00	.00	.00	.00	.00	.00	.00	.00		

729 LU UNIFORM LOSS RATE

STRTL .26 INITIAL LOSS

CNSTL .14 UNIFORM LOSS RATE

RTIMP 20.30 PERCENT IMPERVIOUS AREA

730 UD SCS DIMENSIONLESS UNITGRAPH

TLAG .50 LAG

***

UNIT HYDROGRAPH

32 END-OF-PERIOD ORDINATES

92.	270.	555.	929.	1217.	1347.	1347.	1233.	1076.	861.
635.	492.	380.	304.	237.	183.	142.	111.	86.	67.
52.	41.	32.	25.	19.	15.	12.	10.	7.	5.
3.	1.								

TOTAL RAINFALL = 3.96, TOTAL LOSS = 1.41, TOTAL EXCESS = 2.55

PEAK FLOW (CFS)	TIME (HR)		MAXIMUM AVERAGE FLOW 6-HR	24-HR	72-HR	24.92-HR
1952.	12.33	(CFS)	364.	104.	100.	100.
		(INCHES)	2.222	2.546	2.548	2.548
		(AC-FT)	180.	207.	207.	207.

CUMULATIVE AREA = 1.52 SQ MI

*** *** *** *** ***

HYDROGRAPH AT STATION 5F
FOR PLAN 1, RATIO = 1.00

TOTAL RAINFALL = 3.96, TOTAL LOSS = 1.41, TOTAL EXCESS = 2.55

PEAK FLOW (CFS)	TIME (HR)		MAXIMUM AVERAGE FLOW 6-HR	24-HR	72-HR	24.92-HR
1952.	12.33	(CFS)	364.	104.	100.	100.
		(INCHES)	2.222	2.546	2.548	2.548
		(AC-FT)	180.	207.	207.	207.

CUMULATIVE AREA = 1.52 SQ MI

*** *** *** *** ***

HYDROGRAPH AT STATION 5F
FOR PLAN 1, RATIO = .97

TOTAL RAINFALL = 3.83, TOTAL LOSS = 1.38, TOTAL EXCESS = 2.45

PEAK FLOW (CFS)	TIME (HR)		MAXIMUM AVERAGE FLOW 6-HR	24-HR	72-HR	24.92-HR
1886.	12.33	(CFS)	350.	100.	97.	97.
		(INCHES)	2.137	2.451	2.453	2.453
		(AC-FT)	173.	199.	199.	199.

CUMULATIVE AREA = 1.52 SQ MI

*** *** *** *** ***

HYDROGRAPH AT STATION 5F
FOR PLAN 1, RATIO = .95

TOTAL RAINFALL = 3.75, TOTAL LOSS = 1.36, TOTAL EXCESS = 2.39

PEAK FLOW (CFS)	TIME (HR)		MAXIMUM AVERAGE FLOW 6-HR	24-HR	72-HR	24.92-HR
1845.	12.33	(CFS)	341.	98.	94.	94.
		(INCHES)	2.084	2.392	2.394	2.394
		(AC-FT)	169.	194.	194.	194.

```
                    CUMULATIVE AREA =    1.52 SQ MI


    ***           ***           ***           ***           ***

                     HYDROGRAPH AT STATION      5F
                       FOR PLAN 1, RATIO =  .94

   TOTAL RAINFALL =   3.72, TOTAL LOSS =   1.35, TOTAL EXCESS =   2.37

PEAK FLOW    TIME                        MAXIMUM AVERAGE FLOW
 (CFS)       (HR)                6-HR      24-HR      72-HR    24.92-HR
  1829.     12.33      (CFS)     338.       97.        93.        93.
                     (INCHES)   2.063      2.368      2.370      2.370
                     (AC-FT)    167.       192.       192.       192.

                    CUMULATIVE AREA =    1.52 SQ MI


    ***           ***           ***           ***           ***

                     HYDROGRAPH AT STATION      5F
                       FOR PLAN 1, RATIO =  .92

   TOTAL RAINFALL =   3.64, TOTAL LOSS =   1.33, TOTAL EXCESS =   2.31

PEAK FLOW    TIME                        MAXIMUM AVERAGE FLOW
 (CFS)       (HR)                6-HR      24-HR      72-HR    24.92-HR
  1786.     12.33      (CFS)     329.       94.        91.        91.
                     (INCHES)   2.008      2.306      2.308      2.308
                     (AC-FT)    163.       187.       187.       187.

                    CUMULATIVE AREA =    1.52 SQ MI


*** *** *** *** *** *** *** *** *** *** *** *** *** *** *** *** *** *** *** *** *** *** *** *** *** *** *** *** *** *** *** *** *** *** ***


          **************
          *            *
731 KK    *     DT5F   *
          *            *
          **************
                    THROW AWAY 10-YR 2-HR RETENTION VOLUME:1) 5.0 AC-FT FROM SUB-BASIN 5F
                                                              (Hydrograph identified as OR-5F)
                                                           2) Balance of runoff continues on.
                                                              (Hydrograph identified as DT5F)

   DT         DIVERSION
                   ISTAD      OR-5F  DIVERSION HYDROGRAPH IDENTIFICATION
                  DSTRMX       5.00  MAXIMUM VOLUME TO BE DIVERTED

   DI           INFLOW        .00  10000.00
```

DQ DIVERTED FLOW .00 10000.00

***

*** *** *** *** ***

DIVERSION HYDROGRAPH OR-5F
FOR PLAN 1, RATIO = 1.00

PEAK FLOW (CFS)	TIME (HR)		MAXIMUM AVERAGE FLOW 6-HR	24-HR	72-HR	24.92-HR
17.	5.00	(CFS)	10.	3.	2.	2.
		(INCHES)	.062	.062	.062	.062
		(AC-FT)	5.	5.	5.	5.

CUMULATIVE AREA = 1.52 SQ MI

*** *** *** *** ***

HYDROGRAPH AT STATION DT5F
FOR PLAN 1, RATIO = 1.00

PEAK FLOW (CFS)	TIME (HR)		MAXIMUM AVERAGE FLOW 6-HR	24-HR	72-HR	24.92-HR
1952.	12.33	(CFS)	364.	102.	98.	98.
		(INCHES)	2.222	2.487	2.487	2.487
		(AC-FT)	180.	202.	202.	202.

CUMULATIVE AREA = 1.52 SQ MI

*** *** *** *** ***

DIVERSION HYDROGRAPH OR-5F
FOR PLAN 1, RATIO = .97

PEAK FLOW (CFS)	TIME (HR)		MAXIMUM AVERAGE FLOW 6-HR	24-HR	72-HR	24.92-HR
17.	5.00	(CFS)	10.	3.	2.	2.
		(INCHES)	.062	.062	.062	.062
		(AC-FT)	5.	5.	5.	5.

CUMULATIVE AREA = 1.52 SQ MI

*** *** *** *** ***

HYDROGRAPH AT STATION DT5F
FOR PLAN 1, RATIO = .97

PEAK FLOW (CFS)	TIME (HR)		MAXIMUM AVERAGE FLOW 6-HR	24-HR	72-HR	24.92-HR
1886.	12.33	(CFS)	350.	98.	94.	94.

(INCHES)	2.137	2.391	2.391	2.391
(AC-FT)	173.	194.	194.	194.

CUMULATIVE AREA = 1.52 SQ MI

*** *** *** *** ***

DIVERSION HYDROGRAPH OR-5F
FOR PLAN 1, RATIO = .95

PEAK FLOW (CFS)	TIME (HR)		MAXIMUM AVERAGE FLOW 6-HR	24-HR	72-HR	24.92-HR
17.	5.17	(CFS)	10.	3.	2.	2.
		(INCHES)	.062	.062	.062	.062
		(AC-FT)	5.	5.	5.	5.

CUMULATIVE AREA = 1.52 SQ MI

*** *** *** *** ***

HYDROGRAPH AT STATION DT5F
FOR PLAN 1, RATIO = .95

PEAK FLOW (CFS)	TIME (HR)		MAXIMUM AVERAGE FLOW 6-HR	24-HR	72-HR	24.92-HR
1845.	12.33	(CFS)	341.	95.	92.	92.
		(INCHES)	2.084	2.332	2.332	2.332
		(AC-FT)	169.	189.	189.	189.

CUMULATIVE AREA = 1.52 SQ MI

*** *** *** *** ***

DIVERSION HYDROGRAPH OR-5F
FOR PLAN 1, RATIO = .94

PEAK FLOW (CFS)	TIME (HR)		MAXIMUM AVERAGE FLOW 6-HR	24-HR	72-HR	24.92-HR
16.	5.25	(CFS)	10.	3.	2.	2.
		(INCHES)	.062	.062	.062	.062
		(AC-FT)	5.	5.	5.	5.

CUMULATIVE AREA = 1.52 SQ MI

*** *** *** *** ***

HYDROGRAPH AT STATION DT5F
FOR PLAN 1, RATIO = .94

PEAK FLOW (CFS)	TIME (HR)	MAXIMUM AVERAGE FLOW 6-HR	24-HR	72-HR	24.92-HR

1829.	12.33	(CFS)	338.	94.	91.	91.
		(INCHES)	2.063	2.308	2.308	2.308
		(AC-FT)	167.	187.	187.	187.

CUMULATIVE AREA = 1.52 SQ MI

*** *** *** *** ***

DIVERSION HYDROGRAPH OR-5F
FOR PLAN 1, RATIO = .92

PEAK FLOW (CFS)	TIME (HR)		MAXIMUM AVERAGE FLOW 6-HR	24-HR	72-HR	24.92-HR
16.	5.33	(CFS)	10.	3.	2.	2.
		(INCHES)	.062	.062	.062	.062
		(AC-FT)	5.	5.	5.	5.

CUMULATIVE AREA = 1.52 SQ MI

*** *** *** *** ***

HYDROGRAPH AT STATION DT5F
FOR PLAN 1, RATIO = .92

PEAK FLOW (CFS)	TIME (HR)		MAXIMUM AVERAGE FLOW 6-HR	24-HR	72-HR	24.92-HR
1786.	12.33	(CFS)	329.	92.	89.	89.
		(INCHES)	2.008	2.247	2.247	2.247
		(AC-FT)	163.	182.	182.	182.

CUMULATIVE AREA = 1.52 SQ MI

*** ***

```
          **************
          *            *
739 KK    *     HC11   *
          *            *
          **************
```

COMBINE SURFACE RUNOFF AT NODE 11
,RM29-11 + DT5F

742 KO OUTPUT CONTROL VARIABLES

IPRNT	3	PRINT CONTROL
IPLOT	0	PLOT CONTROL
QSCAL	0.	HYDROGRAPH PLOT SCALE
IPNCH	0	PUNCH COMPUTED HYDROGRAPH
IOUT	21	SAVE HYDROGRAPH ON THIS UNIT
ISAV1	1	FIRST ORDINATE PUNCHED OR SAVED

ISAV2 300 LAST ORDINATE PUNCHED OR SAVED
TIMINT .083 TIME INTERVAL IN HOURS

743 HC HYDROGRAPH COMBINATION
ICOMP 2 NUMBER OF HYDROGRAPHS TO COMBINE

***

*** *** *** *** ***

HYDROGRAPH AT STATION HC11
FOR PLAN 1, RATIO = 1.00

PEAK FLOW (CFS)	TIME (HR)		MAXIMUM AVERAGE FLOW 6-HR	24-HR	72-HR	24.92-HR
6515.	12.50	(CFS)	1291.	404.	389.	389.
		(INCHES)	1.828	2.288	2.289	2.289
		(AC-FT)	640.	801.	801.	801.

CUMULATIVE AREA = 6.56 SQ MI

*** *** *** *** ***

HYDROGRAPH AT STATION HC11
FOR PLAN 1, RATIO = .97

PEAK FLOW (CFS)	TIME (HR)		MAXIMUM AVERAGE FLOW 6-HR	24-HR	72-HR	24.92-HR
6296.	12.50	(CFS)	1243.	389.	375.	375.
		(INCHES)	1.761	2.206	2.207	2.207
		(AC-FT)	617.	772.	773.	773.

CUMULATIVE AREA = 6.56 SQ MI

*** *** *** *** ***

HYDROGRAPH AT STATION HC11
FOR PLAN 1, RATIO = .95

PEAK FLOW (CFS)	TIME (HR)		MAXIMUM AVERAGE FLOW 6-HR	24-HR	72-HR	24.92-HR
6160.	12.50	(CFS)	1214.	380.	367.	367.
		(INCHES)	1.720	2.155	2.156	2.156
		(AC-FT)	602.	755.	755.	755.

CUMULATIVE AREA = 6.56 SQ MI

*** *** *** *** ***

HYDROGRAPH AT STATION HC11
FOR PLAN 1, RATIO = .94

PEAK FLOW (CFS)	TIME (HR)		MAXIMUM AVERAGE FLOW 6-HR	24-HR	72-HR	24.92-HR
6105.	12.50	(CFS)	1203.	377.	363.	363.
		(INCHES)	1.703	2.135	2.135	2.135
		(AC-FT)	596.	748.	748.	748.

CUMULATIVE AREA = 6.56 SQ MI

*** *** *** *** ***

HYDROGRAPH AT STATION HC11
FOR PLAN 1, RATIO = .92

PEAK FLOW (CFS)	TIME (HR)		MAXIMUM AVERAGE FLOW 6-HR	24-HR	72-HR	24.92-HR
5962.	12.50	(CFS)	1172.	367.	354.	354.
		(INCHES)	1.660	2.082	2.082	2.082
		(AC-FT)	581.	729.	729.	729.

CUMULATIVE AREA = 6.56 SQ MI

*** ***

```
          ***************
          *             *
744 KK    *   HC11.2    *
          *             *
          ***************
```

COMBINE SURFACE RUNOFF AT NODE 11.2
HC11.1 + HC11

747 HC HYDROGRAPH COMBINATION
ICOMP 2 NUMBER OF HYDROGRAPHS TO COMBINE

***

*** *** *** *** ***

HYDROGRAPH AT STATION HC11.2
FOR PLAN 1, RATIO = 1.00

PEAK FLOW (CFS)	TIME (HR)		MAXIMUM AVERAGE FLOW 6-HR	24-HR	72-HR	24.92-HR
19204.	12.83	(CFS)	6927.	2011.	1937.	1937.
		(INCHES)	1.948	2.262	2.262	2.262
		(AC-FT)	3435.	3989.	3989.	3989.

CUMULATIVE AREA = 33.06 SQ MI

*** *** *** *** ***

HYDROGRAPH AT STATION HC11.2
FOR PLAN 1, RATIO = .97

PEAK FLOW (CFS)	TIME (HR)		MAXIMUM AVERAGE FLOW 6-HR	24-HR	72-HR	24.92-HR
18490.	12.83	(CFS)	6665.	1935.	1864.	1864.
		(INCHES)	1.874	2.177	2.177	2.177
		(AC-FT)	3305.	3838.	3838.	3838.

CUMULATIVE AREA = 33.06 SQ MI

*** *** *** *** ***

HYDROGRAPH AT STATION HC11.2
FOR PLAN 1, RATIO = .95

PEAK FLOW (CFS)	TIME (HR)		MAXIMUM AVERAGE FLOW 6-HR	24-HR	72-HR	24.92-HR
18046.	12.83	(CFS)	6503.	1888.	1818.	1818.
		(INCHES)	1.829	2.124	2.124	2.124
		(AC-FT)	3224.	3745.	3745.	3745.

CUMULATIVE AREA = 33.06 SQ MI

*** *** *** *** ***

HYDROGRAPH AT STATION HC11.2
FOR PLAN 1, RATIO = .94

PEAK FLOW (CFS)	TIME (HR)		MAXIMUM AVERAGE FLOW 6-HR	24-HR	72-HR	24.92-HR
17880.	12.75	(CFS)	6438.	1869.	1800.	1800.
		(INCHES)	1.810	2.102	2.103	2.103
		(AC-FT)	3192.	3707.	3707.	3707.

CUMULATIVE AREA = 33.06 SQ MI

*** *** *** *** ***

HYDROGRAPH AT STATION HC11.2
FOR PLAN 1, RATIO = .92

PEAK FLOW (CFS)	TIME (HR)		MAXIMUM AVERAGE FLOW 6-HR	24-HR	72-HR	24.92-HR
17459.	12.75	(CFS)	6267.	1820.	1753.	1753.
		(INCHES)	1.762	2.047	2.047	2.047
		(AC-FT)	3108.	3609.	3609.	3609.

CUMULATIVE AREA = 33.06 SQ MI

*** ***

```
        ***************
        *             *
748 KK  *        6A   *
        *             *
        ***************
```

RUNOFF GENERATED ON SUB-BASIN 6A

SUBBASIN RUNOFF DATA

751 BA SUBBASIN CHARACTERISTICS

TAREA .46 SUBBASIN AREA

PRECIPITATION DATA

13 PB STORM 3.96 BASIN TOTAL PRECIPITATION

14 PI INCREMENTAL PRECIPITATION PATTERN

.00	.00	.00	.00	.00	.00	.00	.00	.00	.00
.00	.00	.00	.00	.00	.00	.00	.00	.00	.00
.00	.00	.00	.00	.00	.00	.00	.00	.00	.00
.00	.00	.00	.00	.00	.00	.00	.00	.00	.00
.00	.00	.00	.00	.00	.00	.00	.00	.00	.00
.00	.00	.00	.00	.00	.00	.00	.00	.00	.00
.00	.00	.00	.00	.00	.00	.00	.00	.00	.00
.00	.00	.00	.00	.00	.00	.00	.00	.00	.00
.00	.00	.00	.00	.00	.00	.00	.00	.00	.00
.00	.00	.00	.00	.00	.00	.00	.00	.00	.00
.00	.00	.00	.00	.00	.00	.00	.00	.00	.00
.00	.00	.00	.00	.00	.00	.00	.00	.00	.00
.00	.00	.00	.00	.00	.00	.00	.00	.00	.00
.00	.00	.00	.00	.00	.00	.00	.01	.00	.01
.01	.01	.01	.01	.01	.01	.01	.01	.03	.03
.03	.09	.09	.09	.01	.01	.01	.01	.01	.01
.01	.01	.01	.01	.01	.01	.00	.00	.00	.00
.00	.00	.00	.00	.00	.00	.00	.00	.00	.00
.00	.00	.00	.00	.00	.00	.00	.00	.00	.00
.00	.00	.00	.00	.00	.00	.00	.00	.00	.00
.00	.00	.00	.00	.00	.00	.00	.00	.00	.00
.00	.00	.00	.00	.00	.00	.00	.00	.00	.00
.00	.00	.00	.00	.00	.00	.00	.00	.00	.00
.00	.00	.00	.00	.00	.00	.00	.00	.00	.00
.00	.00	.00	.00	.00	.00	.00	.00	.00	.00
.00	.00	.00	.00	.00	.00	.00	.00	.00	.00
.00	.00	.00	.00	.00	.00	.00	.00	.00	.00
.00	.00	.00	.00	.00	.00	.00	.00	.00	.00
.00	.00	.00	.00	.00	.00	.00	.00	.00	.00
.00	.00	.00	.00	.00	.00	.00	.00		

752 LU UNIFORM LOSS RATE

STRTL	.33	INITIAL LOSS
CNSTL	.20	UNIFORM LOSS RATE
RTIMP	43.00	PERCENT IMPERVIOUS AREA

753 UD SCS DIMENSIONLESS UNITGRAPH

TLAG	.45	LAG

***

UNIT HYDROGRAPH
29 END-OF-PERIOD ORDINATES

36.	107.	219.	354.	433.	451.	424.	368.	293.	210.
159.	121.	93.	70.	54.	41.	31.	23.	18.	13.
10.	8.	6.	5.	4.	3.	2.	1.	0.	

TOTAL RAINFALL = 3.96, TOTAL LOSS = 1.23, TOTAL EXCESS = 2.73

PEAK FLOW (CFS)	TIME (HR)		MAXIMUM AVERAGE FLOW 6-HR	24-HR	72-HR	24.92-HR
623.	12.33	(CFS)	110.	34.	33.	33.
		(INCHES)	2.229	2.731	2.734	2.734
		(AC-FT)	55.	67.	67.	67.

CUMULATIVE AREA = .46 SQ MI

*** *** *** *** ***

HYDROGRAPH AT STATION 6A
FOR PLAN 1, RATIO = 1.00

TOTAL RAINFALL = 3.96, TOTAL LOSS = 1.23, TOTAL EXCESS = 2.73

PEAK FLOW (CFS)	TIME (HR)		MAXIMUM AVERAGE FLOW 6-HR	24-HR	72-HR	24.92-HR
623.	12.33	(CFS)	110.	34.	33.	33.
		(INCHES)	2.229	2.731	2.734	2.734
		(AC-FT)	55.	67.	67.	67.

CUMULATIVE AREA = .46 SQ MI

*** *** *** *** ***

HYDROGRAPH AT STATION 6A
FOR PLAN 1, RATIO = .97

TOTAL RAINFALL = 3.83, TOTAL LOSS = 1.20, TOTAL EXCESS = 2.64

PEAK FLOW (CFS)	TIME (HR)		MAXIMUM AVERAGE FLOW 6-HR	24-HR	72-HR	24.92-HR
602.	12.33	(CFS)	106.	32.	31.	31.
		(INCHES)	2.147	2.633	2.636	2.636
		(AC-FT)	53.	64.	65.	65.

CUMULATIVE AREA = .46 SQ MI

*** *** *** *** ***

HYDROGRAPH AT STATION 6A
FOR PLAN 1, RATIO = .95

TOTAL RAINFALL = 3.75, TOTAL LOSS = 1.18, TOTAL EXCESS = 2.58

PEAK FLOW (CFS)	TIME (HR)		MAXIMUM AVERAGE FLOW 6-HR	24-HR	72-HR	24.92-HR
589.	12.33	(CFS)	103.	32.	31.	31.
		(INCHES)	2.096	2.572	2.575	2.575
		(AC-FT)	51.	63.	63.	63.

CUMULATIVE AREA = .46 SQ MI

*** *** *** *** ***

HYDROGRAPH AT STATION 6A
FOR PLAN 1, RATIO = .94

TOTAL RAINFALL = 3.72, TOTAL LOSS = 1.17, TOTAL EXCESS = 2.55

PEAK FLOW (CFS)	TIME (HR)		MAXIMUM AVERAGE FLOW 6-HR	24-HR	72-HR	24.92-HR
584.	12.33	(CFS)	102.	31.	30.	30.
		(INCHES)	2.076	2.548	2.551	2.551
		(AC-FT)	51.	62.	62.	62.

CUMULATIVE AREA = .46 SQ MI

*** *** *** *** ***

HYDROGRAPH AT STATION 6A
FOR PLAN 1, RATIO = .92

TOTAL RAINFALL = 3.64, TOTAL LOSS = 1.15, TOTAL EXCESS = 2.49

PEAK FLOW (CFS)	TIME (HR)		MAXIMUM AVERAGE FLOW 6-HR	24-HR	72-HR	24.92-HR
570.	12.33	(CFS)	100.	31.	30.	30.
		(INCHES)	2.023	2.484	2.487	2.487
		(AC-FT)	50.	61.	61.	61.

CUMULATIVE AREA = .46 SQ MI

*** ***

```
          ***************
          *             *
754 KK    *     DT6A    *
          *             *
          ***************
                    THROW AWAY 10-YR 2-HR RETENTION VOLUME:1) 1.4 AC-FT FROM SUB-BASIN 6A
                                                              (Hydrograph identified as OR-6A)
                                                            2) Balance of runoff continues on.
                                                              (Hydrograph identified as DT6A)

   DT        DIVERSION
                 ISTAD      OR-6A  DIVERSION HYDROGRAPH IDENTIFICATION
               DSTRMX       1.40  MAXIMUM VOLUME TO BE DIVERTED

   DI          INFLOW       .00  10000.00

   DQ     DIVERTED FLOW     .00  10000.00

                                                   ***

    ***         ***         ***         ***         ***

                  DIVERSION HYDROGRAPH   OR-6A
                   FOR PLAN 1, RATIO = 1.00

PEAK FLOW    TIME                      MAXIMUM AVERAGE FLOW
 (CFS)       (HR)              6-HR      24-HR      72-HR     24.92-HR
   6.        2.50     (CFS)     3.         1.         1.         1.
                    (INCHES)   .057       .057       .057       .057
                    (AC-FT)     1.         1.         1.         1.

                  CUMULATIVE AREA =    .46 SQ MI


    ***         ***         ***         ***         ***

                  HYDROGRAPH AT STATION    DT6A
                   FOR PLAN 1, RATIO = 1.00

PEAK FLOW    TIME                      MAXIMUM AVERAGE FLOW
 (CFS)       (HR)              6-HR      24-HR      72-HR     24.92-HR
 623.       12.33     (CFS)   110.        33.        32.        32.
                    (INCHES)  2.229      2.677      2.677      2.677
                    (AC-FT)    55.        66.        66.        66.

                  CUMULATIVE AREA =    .46 SQ MI


    ***         ***         ***         ***         ***

                  DIVERSION HYDROGRAPH   OR-6A
                   FOR PLAN 1, RATIO =  .97
```

PEAK FLOW (CFS)	TIME (HR)		MAXIMUM AVERAGE FLOW 6-HR	24-HR	72-HR	24.92-HR
6.	2.50	(CFS)	3.	1.	1.	1.
		(INCHES)	.057	.057	.057	.057
		(AC-FT)	1.	1.	1.	1.

CUMULATIVE AREA = .46 SQ MI

*** *** *** *** ***

HYDROGRAPH AT STATION DT6A
FOR PLAN 1, RATIO = .97

PEAK FLOW (CFS)	TIME (HR)		MAXIMUM AVERAGE FLOW 6-HR	24-HR	72-HR	24.92-HR
602.	12.33	(CFS)	106.	32.	31.	31.
		(INCHES)	2.147	2.579	2.579	2.579
		(AC-FT)	53.	63.	63.	63.

CUMULATIVE AREA = .46 SQ MI

*** *** *** *** ***

DIVERSION HYDROGRAPH DR-6A
FOR PLAN 1, RATIO = .95

PEAK FLOW (CFS)	TIME (HR)		MAXIMUM AVERAGE FLOW 6-HR	24-HR	72-HR	24.92-HR
6.	2.50	(CFS)	3.	1.	1.	1.
		(INCHES)	.057	.057	.057	.057
		(AC-FT)	1.	1.	1.	1.

CUMULATIVE AREA = .46 SQ MI

*** *** *** *** ***

HYDROGRAPH AT STATION DT6A
FOR PLAN 1, RATIO = .95

PEAK FLOW (CFS)	TIME (HR)		MAXIMUM AVERAGE FLOW 6-HR	24-HR	72-HR	24.92-HR
589.	12.33	(CFS)	103.	31.	30.	30.
		(INCHES)	2.096	2.518	2.518	2.518
		(AC-FT)	51.	62.	62.	62.

CUMULATIVE AREA = .46 SQ MI

*** *** *** *** ***

DIVERSION HYDROGRAPH DR-6A
FOR PLAN 1, RATIO = .94

PEAK FLOW (CFS)	TIME (HR)		MAXIMUM AVERAGE FLOW 6-HR	24-HR	72-HR	24.92-HR
6.	2.50	(CFS)	3.	1.	1.	1.
		(INCHES)	.057	.057	.057	.057
		(AC-FT)	1.	1.	1.	1.

CUMULATIVE AREA = .46 SQ MI

*** *** *** *** ***

HYDROGRAPH AT STATION DT6A
FOR PLAN 1, RATIO = .94

PEAK FLOW (CFS)	TIME (HR)		MAXIMUM AVERAGE FLOW 6-HR	24-HR	72-HR	24.92-HR
584.	12.33	(CFS)	102.	31.	30.	30.
		(INCHES)	2.076	2.494	2.494	2.494
		(AC-FT)	51.	61.	61.	61.

CUMULATIVE AREA = .46 SQ MI

*** *** *** *** ***

DIVERSION HYDROGRAPH OR-6A
FOR PLAN 1, RATIO = .92

PEAK FLOW (CFS)	TIME (HR)		MAXIMUM AVERAGE FLOW 6-HR	24-HR	72-HR	24.92-HR
6.	2.50	(CFS)	3.	1.	1.	1.
		(INCHES)	.057	.057	.057	.057
		(AC-FT)	1.	1.	1.	1.

CUMULATIVE AREA = .46 SQ MI

*** *** *** *** ***

HYDROGRAPH AT STATION DT6A
FOR PLAN 1, RATIO = .92

PEAK FLOW (CFS)	TIME (HR)		MAXIMUM AVERAGE FLOW 6-HR	24-HR	72-HR	24.92-HR
570.	12.33	(CFS)	100.	30.	29.	29.
		(INCHES)	2.023	2.430	2.430	2.430
		(AC-FT)	50.	59.	59.	59.

CUMULATIVE AREA = .46 SQ MI

*** ***

```
          ***************
          *             *
762 KK    *     HC12    *
          *             *
          ***************
                          COMBINE SURFACE RUNOFF AT NODE 12
                            HC11 + DT6A

765 HC          HYDROGRAPH COMBINATION
                     ICOMP          2  NUMBER OF HYDROGRAPHS TO COMBINE

                                                                  ***

     ***            ***            ***            ***            ***

                      HYDROGRAPH AT STATION     HC12
                        FOR PLAN 1, RATIO = 1.00

PEAK FLOW     TIME                          MAXIMUM AVERAGE FLOW
  (CFS)       (HR)                 6-HR      24-HR      72-HR    24.92-HR
 19453.      12.83       (CFS)     7036.      2044.      1969.      1969.
                       (INCHES)    1.952      2.268      2.268      2.268
                        (AC-FT)    3489.      4054.      4054.      4054.

                      CUMULATIVE AREA =   33.52 SQ MI


     ***            ***            ***            ***            ***

                      HYDROGRAPH AT STATION     HC12
                        FOR PLAN 1, RATIO =  .97

PEAK FLOW     TIME                          MAXIMUM AVERAGE FLOW
  (CFS)       (HR)                 6-HR      24-HR      72-HR    24.92-HR
 18751.      12.75       (CFS)     6770.      1967.      1895.      1895.
                       (INCHES)    1.878      2.182      2.182      2.182
                        (AC-FT)    3357.      3901.      3901.      3901.

                      CUMULATIVE AREA =   33.52 SQ MI


     ***            ***            ***            ***            ***

                      HYDROGRAPH AT STATION     HC12
                        FOR PLAN 1, RATIO =  .95

PEAK FLOW     TIME                          MAXIMUM AVERAGE FLOW
  (CFS)       (HR)                 6-HR      24-HR      72-HR    24.92-HR
 18326.      12.75       (CFS)     6605.      1919.      1848.      1848.
                       (INCHES)    1.832      2.129      2.129      2.129
                        (AC-FT)    3275.      3806.      3806.      3806.

                      CUMULATIVE AREA =   33.52 SQ MI
```

*** *** *** *** ***

HYDROGRAPH AT STATION HC12
FOR PLAN 1, RATIO = .94

PEAK FLOW (CFS)	TIME (HR)		6-HR	MAXIMUM AVERAGE FLOW 24-HR	72-HR	24.92-HR
18159.	12.75	(CFS)	6539.	1900.	1830.	1830.
		(INCHES)	1.814	2.108	2.108	2.108
		(AC-FT)	3242.	3768.	3768.	3768.

CUMULATIVE AREA = 33.52 SQ MI

*** *** *** *** ***

HYDROGRAPH AT STATION HC12
FOR PLAN 1, RATIO = .92

PEAK FLOW (CFS)	TIME (HR)		6-HR	MAXIMUM AVERAGE FLOW 24-HR	72-HR	24.92-HR
17732.	12.67	(CFS)	6366.	1850.	1782.	1782.
		(INCHES)	1.766	2.052	2.052	2.052
		(AC-FT)	3157.	3669.	3669.	3669.

CUMULATIVE AREA = 33.52 SQ MI

*** ***

```
          **************
          *            *
766 KK    *  RM12-13   *
          *            *
          **************
```

MUSKINGUM ROUTE IN CHANNEL FROM NODE 12 TO NODE 13
1) Reach Length= 9000 FT.
2) Average Velocity= 21.0 FPS.

HYDROGRAPH ROUTING DATA

770 RM MUSKINGUM ROUTING

NSTPS	2	NUMBER OF SUBREACHES
AMSKK	.15	MUSKINGUM K
X	.20	MUSKINGUM X

***

*** *** *** *** ***

HYDROGRAPH AT STATION RM12-13
FOR PLAN 1, RATIO = 1.00

PEAK FLOW (CFS)	TIME (HR)		MAXIMUM AVERAGE FLOW 6-HR	24-HR	72-HR	24.92-HR
19395.	13.00	(CFS)	7036.	2042.	1967.	1967.
		(INCHES)	1.952	2.266	2.266	2.266
		(AC-FT)	3489.	4050.	4050.	4050.

CUMULATIVE AREA = 33.52 SQ MI

*** *** *** *** ***

HYDROGRAPH AT STATION RM12-13
FOR PLAN 1, RATIO = .97

PEAK FLOW (CFS)	TIME (HR)		MAXIMUM AVERAGE FLOW 6-HR	24-HR	72-HR	24.92-HR
18699.	12.92	(CFS)	6770.	1965.	1893.	1893.
		(INCHES)	1.878	2.180	2.180	2.180
		(AC-FT)	3357.	3897.	3898.	3898.

CUMULATIVE AREA = 33.52 SQ MI

*** *** *** *** ***

HYDROGRAPH AT STATION RM12-13
FOR PLAN 1, RATIO = .95

PEAK FLOW (CFS)	TIME (HR)		MAXIMUM AVERAGE FLOW 6-HR	24-HR	72-HR	24.92-HR
18269.	12.92	(CFS)	6605.	1917.	1847.	1847.
		(INCHES)	1.832	2.127	2.127	2.127
		(AC-FT)	3275.	3803.	3803.	3803.

CUMULATIVE AREA = 33.52 SQ MI

*** *** *** *** ***

HYDROGRAPH AT STATION RM12-13
FOR PLAN 1, RATIO = .94

PEAK FLOW (CFS)	TIME (HR)		MAXIMUM AVERAGE FLOW 6-HR	24-HR	72-HR	24.92-HR
18099.	12.92	(CFS)	6539.	1898.	1828.	1828.
		(INCHES)	1.814	2.106	2.106	2.106
		(AC-FT)	3242.	3765.	3765.	3765.

CUMULATIVE AREA = 33.52 SQ MI

*** *** *** *** ***

HYDROGRAPH AT STATION RM12-13
FOR PLAN 1, RATIO = .92

PEAK FLOW (CFS)	TIME (HR)		MAXIMUM AVERAGE FLOW 6-HR	24-HR	72-HR	24.92-HR
17658.	12.92	(CFS)	6365.	1849.	1780.	1780.
		(INCHES)	1.766	2.050	2.050	2.050
		(AC-FT)	3156.	3665.	3665.	3665.

CUMULATIVE AREA = 33.52 SQ MI

*** ***

```
         **************
         *            *
771 KK   *       6B   *
         *            *
         **************
```

RUNOFF GENERATED ON SUB-BASIN 6B

SUBBASIN RUNOFF DATA

773 BA SUBBASIN CHARACTERISTICS
TAREA 1.14 SUBBASIN AREA

PRECIPITATION DATA

13 PB STORM 3.96 BASIN TOTAL PRECIPITATION

14 PI INCREMENTAL PRECIPITATION PATTERN

.00	.00	.00	.00	.00	.00	.00	.00	.00	.00
.00	.00	.00	.00	.00	.00	.00	.00	.00	.00
.00	.00	.00	.00	.00	.00	.00	.00	.00	.00
.00	.00	.00	.00	.00	.00	.00	.00	.00	.00
.00	.00	.00	.00	.00	.00	.00	.00	.00	.00
.00	.00	.00	.00	.00	.00	.00	.00	.00	.00
.00	.00	.00	.00	.00	.00	.00	.00	.00	.00
.00	.00	.00	.00	.00	.00	.00	.00	.00	.00
.00	.00	.00	.00	.00	.00	.00	.00	.00	.00
.00	.00	.00	.00	.00	.00	.00	.00	.00	.00
.00	.00	.00	.00	.00	.00	.00	.00	.00	.00
.00	.00	.00	.00	.00	.00	.00	.00	.00	.00
.00	.00	.00	.00	.00	.00	.00	.01	.00	.01
.01	.01	.01	.01	.01	.01	.01	.01	.03	.03
.03	.09	.09	.09	.01	.01	.01	.01	.01	.01
.01	.01	.01	.01	.01	.01	.00	.00	.00	.00
.00	.00	.00	.00	.00	.00	.00	.00	.00	.00
.00	.00	.00	.00	.00	.00	.00	.00	.00	.00
.00	.00	.00	.00	.00	.00	.00	.00	.00	.00
.00	.00	.00	.00	.00	.00	.00	.00	.00	.00

.00	.00	.00	.00	.00	.00	.00	.00	.00	.00
.00	.00	.00	.00	.00	.00	.00	.00	.00	.00
.00	.00	.00	.00	.00	.00	.00	.00	.00	.00
.00	.00	.00	.00	.00	.00	.00	.00	.00	.00
.00	.00	.00	.00	.00	.00	.00	.00	.00	.00
.00	.00	.00	.00	.00	.00	.00	.00	.00	.00
.00	.00	.00	.00	.00	.00	.00	.00	.00	.00
.00	.00	.00	.00	.00	.00	.00	.00	.00	.00
.00	.00	.00	.00	.00	.00	.00	.00		

774 LU UNIFORM LOSS RATE

STRTL	.32	INITIAL LOSS
CNSTL	.20	UNIFORM LOSS RATE
RTIMP	61.50	PERCENT IMPERVIOUS AREA

775 UD SCS DIMENSIONLESS UNITGRAPH

TLAG	.63	LAG

***

UNIT HYDROGRAPH
40 END-OF-PERIOD ORDINATES

38.	117.	227.	380.	567.	711.	795.	818.	802.	738.
662.	566.	448.	355.	289.	235.	197.	161.	131.	107.
87.	72.	59.	47.	39.	32.	26.	21.	17.	14.
12.	9.	8.	7.	6.	4.	3.	2.	1.	0.

TOTAL RAINFALL = 3.96, TOTAL LOSS = .84, TOTAL EXCESS = 3.12

PEAK FLOW (CFS)	TIME (HR)		MAXIMUM AVERAGE FLOW 6-HR	24-HR	72-HR	24.92-HR
1272.	12.50	(CFS)	295.	95.	92.	92.
		(INCHES)	2.409	3.113	3.117	3.117
		(AC-FT)	146.	189.	189.	189.

CUMULATIVE AREA = 1.14 SQ MI

*** *** *** *** ***

HYDROGRAPH AT STATION 68
FOR PLAN 1, RATIO = 1.00

TOTAL RAINFALL = 3.96, TOTAL LOSS = .84, TOTAL EXCESS = 3.12

PEAK FLOW (CFS)	TIME (HR)		MAXIMUM AVERAGE FLOW 6-HR	24-HR	72-HR	24.92-HR
1272.	12.50	(CFS)	295.	95.	92.	92.
		(INCHES)	2.409	3.113	3.117	3.117
		(AC-FT)	146.	189.	189.	189.

CUMULATIVE AREA = 1.14 SQ MI

*** *** *** *** ***

HYDROGRAPH AT STATION 6B
FOR PLAN 1, RATIO = .97

TOTAL RAINFALL = 3.83, TOTAL LOSS = .82, TOTAL EXCESS = 3.01

PEAK FLOW (CFS)	TIME (HR)		6-HR	MAXIMUM AVERAGE FLOW 24-HR	72-HR	24.92-HR
1230.	12.50	(CFS)	284.	92.	89.	89.
		(INCHES)	2.324	3.006	3.010	3.010
		(AC-FT)	141.	182.	183.	183.

CUMULATIVE AREA = 1.14 SQ MI

*** *** *** *** ***

HYDROGRAPH AT STATION 6B
FOR PLAN 1, RATIO = .95

TOTAL RAINFALL = 3.75, TOTAL LOSS = .81, TOTAL EXCESS = 2.95

PEAK FLOW (CFS)	TIME (HR)		6-HR	MAXIMUM AVERAGE FLOW 24-HR	72-HR	24.92-HR
1203.	12.50	(CFS)	278.	90.	87.	87.
		(INCHES)	2.272	2.939	2.944	2.944
		(AC-FT)	138.	178.	179.	179.

CUMULATIVE AREA = 1.14 SQ MI

*** *** *** *** ***

HYDROGRAPH AT STATION 6B
FOR PLAN 1, RATIO = .94

TOTAL RAINFALL = 3.72, TOTAL LOSS = .80, TOTAL EXCESS = 2.92

PEAK FLOW (CFS)	TIME (HR)		6-HR	MAXIMUM AVERAGE FLOW 24-HR	72-HR	24.92-HR
1192.	12.50	(CFS)	276.	89.	86.	86.
		(INCHES)	2.251	2.913	2.917	2.917
		(AC-FT)	137.	177.	177.	177.

CUMULATIVE AREA = 1.14 SQ MI

*** *** *** *** ***

HYDROGRAPH AT STATION 6B
FOR PLAN 1, RATIO = .92

TOTAL RAINFALL = 3.64, TOTAL LOSS = .79, TOTAL EXCESS = 2.85

PEAK FLOW TIME MAXIMUM AVERAGE FLOW

(CFS)	(HR)		6-HR	24-HR	72-HR	24.92-HR
1165.	12.50	(CFS)	269.	87.	84.	84.
		(INCHES)	2.196	2.843	2.847	2.847
		(AC-FT)	133.	173.	173.	173.

CUMULATIVE AREA = 1.14 SQ MI

*** ***

```
          **************
          *            *
776 KK    *     DT6B   *
          *            *
          **************
```

THROW AWAY 10-YR 2-HR RETENTION VOLUME:1) 13.0 AC-FT FROM SUB-BASIN 6B
(Hydrograph identified as OR-6B)
2) Balance of runoff continues on.
(Hydrograph identified as DT6B)

DT	DIVERSION		
	ISTAQ	OR-6B	DIVERSION HYDROGRAPH IDENTIFICATION
	DSTRMX	13.00	MAXIMUM VOLUME TO BE DIVERTED
DI	INFLOW	.00	100000.00
DQ	DIVERTED FLOW	.00	100000.00

***

*** *** *** *** ***

DIVERSION HYDROGRAPH OR-6B
FOR PLAN 1, RATIO = 1.00

PEAK FLOW (CFS)	TIME (HR)		MAXIMUM AVERAGE FLOW 6-HR	24-HR	72-HR	24.92-HR
34.	7.17	(CFS)	25.	7.	6.	6.
		(INCHES)	.202	.214	.214	.214
		(AC-FT)	12.	13.	13.	13.

CUMULATIVE AREA = 1.14 SQ MI

*** *** *** *** ***

HYDROGRAPH AT STATION DT6B
FOR PLAN 1, RATIO = 1.00

PEAK FLOW (CFS)	TIME (HR)		MAXIMUM AVERAGE FLOW 6-HR	24-HR	72-HR	24.92-HR
1272.	12.50	(CFS)	295.	89.	86.	86.

(INCHES)	2.409	2.903	2.903	2.903
(AC-FT)	146.	176.	176.	176.

CUMULATIVE AREA = 1.14 SQ MI

*** *** *** *** ***

DIVERSION HYDROGRAPH OR-6B
FOR PLAN 1, RATIO = .97

PEAK FLOW (CFS)	TIME (HR)		6-HR	MAXIMUM AVERAGE FLOW 24-HR	72-HR	24.92-HR
34.	7.25	(CFS)	24.	7.	6.	6.
		(INCHES)	.199	.214	.214	.214
		(AC-FT)	12.	13.	13.	13.

CUMULATIVE AREA = 1.14 SQ MI

*** *** *** *** ***

HYDROGRAPH AT STATION DT6B
FOR PLAN 1, RATIO = .97

PEAK FLOW (CFS)	TIME (HR)		6-HR	MAXIMUM AVERAGE FLOW 24-HR	72-HR	24.92-HR
1230.	12.50	(CFS)	284.	86.	82.	82.
		(INCHES)	2.324	2.796	2.796	2.796
		(AC-FT)	141.	170.	170.	170.

CUMULATIVE AREA = 1.14 SQ MI

*** *** *** *** ***

DIVERSION HYDROGRAPH OR-6B
FOR PLAN 1, RATIO = .95

PEAK FLOW (CFS)	TIME (HR)		6-HR	MAXIMUM AVERAGE FLOW 24-HR	72-HR	24.92-HR
33.	7.42	(CFS)	24.	7.	6.	6.
		(INCHES)	.197	.214	.214	.214
		(AC-FT)	12.	13.	13.	13.

CUMULATIVE AREA = 1.14 SQ MI

*** *** *** *** ***

HYDROGRAPH AT STATION DT6B
FOR PLAN 1, RATIO = .95

PEAK FLOW (CFS)	TIME (HR)	6-HR	MAXIMUM AVERAGE FLOW 24-HR	72-HR	24.92-HR

1203.	12.50	(CFS)	278.	84.	80.	80.
		(INCHES)	2.272	2.730	2.730	2.730
		(AC-FT)	138.	166.	166.	166.

CUMULATIVE AREA = 1.14 SQ MI

*** *** *** *** ***

DIVERSION HYDROGRAPH OR-6B
FOR PLAN 1, RATIO = .94

PEAK FLOW (CFS)	TIME (HR)		6-HR	MAXIMUM AVERAGE FLOW 24-HR	72-HR	24.92-HR
33.	7.42	(CFS)	24.	7.	6.	6.
		(INCHES)	.196	.214	.214	.214
		(AC-FT)	12.	13.	13.	13.

CUMULATIVE AREA = 1.14 SQ MI

*** *** *** *** ***

HYDROGRAPH AT STATION DT6B
FOR PLAN 1, RATIO = .94

PEAK FLOW (CFS)	TIME (HR)		6-HR	MAXIMUM AVERAGE FLOW 24-HR	72-HR	24.92-HR
1192.	12.50	(CFS)	276.	83.	80.	80.
		(INCHES)	2.251	2.703	2.703	2.703
		(AC-FT)	137.	164.	164.	164.

CUMULATIVE AREA = 1.14 SQ MI

*** *** *** *** ***

DIVERSION HYDROGRAPH OR-6B
FOR PLAN 1, RATIO = .92

PEAK FLOW (CFS)	TIME (HR)		6-HR	MAXIMUM AVERAGE FLOW 24-HR	72-HR	24.92-HR
32.	7.50	(CFS)	24.	7.	6.	6.
		(INCHES)	.194	.214	.214	.214
		(AC-FT)	12.	13.	13.	13.

CUMULATIVE AREA = 1.14 SQ MI

*** *** *** *** ***

HYDROGRAPH AT STATION DT6B
FOR PLAN 1, RATIO = .92

PEAK FLOW TIME MAXIMUM AVERAGE FLOW

```
 (CFS)     (HR)                 6-HR      24-HR      72-HR    24.92-HR
 1165.    12.50      (CFS)     269.        81.        78.        78.
                   (INCHES)   2.196      2.633      2.633      2.633
                    (AC-FT)    133.       160.       160.       160.

                  CUMULATIVE AREA =    1.14 SQ MI


*** *** *** *** *** *** *** *** *** *** *** *** *** *** *** *** *** *** *** *** *** *** *** *** *** *** *** *** *** *** *** *** *** *** ***


         **************
         *            *
784 KK   *     HC13   *
         *            *
         **************
                        COMBINE SURFACE RUNOFF AT NODE 13
                          RM12-13 + DT68

797 KO         OUTPUT CONTROL VARIABLES
                    IPRNT          3  PRINT CONTROL
                    IPLOT          0  PLOT CONTROL
                    QSCAL         0.  HYDROGRAPH PLOT SCALE
                    IPNCH          0  PUNCH COMPUTED HYDROGRAPH
                     IOUT         21  SAVE HYDROGRAPH ON THIS UNIT
                    ISAV1          1  FIRST ORDINATE PUNCHED OR SAVED
                    ISAV2        300  LAST ORDINATE PUNCHED OR SAVED
                   TIMINT       .083  TIME INTERVAL IN HOURS


788 HC         HYDROGRAPH COMBINATION
                    ICOMP          2  NUMBER OF HYDROGRAPHS TO COMBINE

                                                        ***

    ***            ***            ***            ***            ***

                     HYDROGRAPH AT STATION     HC13
                       FOR PLAN 1, RATIO = 1.00

PEAK FLOW     TIME                        MAXIMUM AVERAGE FLOW
 (CFS)        (HR)                 6-HR      24-HR      72-HR    24.92-HR
 20212.      12.92      (CFS)    7327.      2131.      2052.      2052.
                      (INCHES)   1.966      2.287      2.287      2.287
                       (AC-FT)   3633.      4226.      4227.      4227.

                     CUMULATIVE AREA =   34.66 SQ MI


    ***            ***            ***            ***            ***

                     HYDROGRAPH AT STATION     HC13
                       FOR PLAN 1, RATIO =  .97
```

PEAK FLOW (CFS)	TIME (HR)		MAXIMUM AVERAGE FLOW 6-HR	24-HR	72-HR	24.92-HR
19504.	12.83	(CFS)	7051.	2051.	1975.	1975.
		(INCHES)	1.892	2.200	2.200	2.200
		(AC-FT)	3496.	4067.	4067.	4067.

CUMULATIVE AREA = 34.66 SQ MI

*** *** *** *** ***

HYDROGRAPH AT STATION HC13
FOR PLAN 1, RATIO = .95

PEAK FLOW (CFS)	TIME (HR)		MAXIMUM AVERAGE FLOW 6-HR	24-HR	72-HR	24.92-HR
19072.	12.83	(CFS)	6880.	2001.	1927.	1927.
		(INCHES)	1.846	2.147	2.147	2.147
		(AC-FT)	3411.	3968.	3968.	3968.

CUMULATIVE AREA = 34.66 SQ MI

*** *** *** *** ***

HYDROGRAPH AT STATION HC13
FOR PLAN 1, RATIO = .94

PEAK FLOW (CFS)	TIME (HR)		MAXIMUM AVERAGE FLOW 6-HR	24-HR	72-HR	24.92-HR
18900.	12.83	(CFS)	6811.	1981.	1908.	1908.
		(INCHES)	1.827	2.125	2.125	2.125
		(AC-FT)	3377.	3929.	3929.	3929.

CUMULATIVE AREA = 34.66 SQ MI

*** *** *** *** ***

HYDROGRAPH AT STATION HC13
FOR PLAN 1, RATIO = .92

PEAK FLOW (CFS)	TIME (HR)		MAXIMUM AVERAGE FLOW 6-HR	24-HR	72-HR	24.92-HR
18448.	12.83	(CFS)	6631.	1928.	1857.	1857.
		(INCHES)	1.779	2.069	2.069	2.069
		(AC-FT)	3288.	3825.	3825.	3825.

CUMULATIVE AREA = 34.66 SQ MI

PEAK FLOW AND STAGE (END-OF-PERIOD) SUMMARY FOR MULTIPLE PLAN-RATIO ECONOMIC COMPUTATIONS
FLOWS IN CUBIC FEET PER SECOND, AREA IN SQUARE MILES
TIME TO PEAK IN HOURS

					RATIOS APPLIED TO PRECIPITATION				
OPERATION	STATION	AREA	PLAN		RATIO 1	RATIO 2	RATIO 3	RATIO 4	RATIO 5
					1.00	.97	.95	.94	.92
HYDROGRAPH AT	2A	.87	1	FLOW	1578.	1524.	1491.	1478.	1443.
				TIME	12.17	12.17	12.17	12.17	12.17
HYDROGRAPH AT	2B	.41	1	FLOW	853.	824.	806.	799.	780.
				TIME	12.08	12.08	12.08	12.08	12.08
2 COMBINED AT	HC14	1.28	1	FLOW	2425.	2343.	2292.	2271.	2217.
				TIME	12.08	12.08	12.08	12.08	12.08
ROUTED TO	RM14-15	1.28	1	FLOW	2153.	2079.	2033.	2015.	1966.
				TIME	12.42	12.42	12.42	12.42	12.42
HYDROGRAPH AT	2C	1.18	1	FLOW	1310.	1265.	1238.	1226.	1197.
				TIME	12.50	12.50	12.50	12.50	12.50
DIVERSION TO	OR-2C	1.18	1	FLOW	5.	5.	5.	5.	5.
				TIME	.58	.58	.58	.58	.58
HYDROGRAPH AT	DT2C	1.18	1	FLOW	1310.	1265.	1238.	1226.	1197.
				TIME	12.50	12.50	12.50	12.50	12.50
2 COMBINED AT	HC15	2.46	1	FLOW	3457.	3339.	3265.	3235.	3158.
				TIME	12.42	12.42	12.42	12.42	12.42
ROUTED TO	RM15-16	2.46	1	FLOW	3191.	3081.	3012.	2985.	2913.
				TIME	12.83	12.83	12.83	12.83	12.83
HYDROGRAPH AT	2E	1.10	1	FLOW	1537.	1485.	1453.	1440.	1405.
				TIME	12.25	12.25	12.25	12.25	12.25
2 COMBINED AT	HC16	3.56	1	FLOW	3722.	3593.	3512.	3479.	3394.
				TIME	12.75	12.75	12.75	12.75	12.75
ROUTED TO	RM16-17	3.56	1	FLOW	3600.	3474.	3395.	3364.	3281.
				TIME	13.08	13.08	13.08	13.08	13.08
HYDROGRAPH AT	2H	1.42	1	FLOW	1293.	1248.	1220.	1209.	1179.
				TIME	12.67	12.67	12.67	12.67	12.67
DIVERSION TO	OR-2H	1.42	1	FLOW	31.	30.	30.	29.	29.
				TIME	7.33	7.42	7.50	7.58	7.67
HYDROGRAPH AT	DT2H	1.42	1	FLOW	1293.	1248.	1220.	1209.	1179.
				TIME	12.67	12.67	12.67	12.67	12.67

2 COMBINED AT	HC17	4.98	1	FLOW	4650.	4497.	4385.	4344.	4237.
				TIME	13.00	13.00	13.00	13.00	13.00
HYDROGRAPH AT	2D	1.19	1	FLOW	1234.	1191.	1164.	1153.	1125.
				TIME	12.50	12.50	12.50	12.50	12.50
DIVERSION TO	DR-2D	1.19	1	FLOW	15.	15.	14.	14.	14.
				TIME	4.75	4.92	4.92	5.00	5.00
HYDROGRAPH AT	DT2D	1.19	1	FLOW	1234.	1191.	1164.	1153.	1125.
				TIME	12.50	12.50	12.50	12.50	12.50
DIVERSION TO	FL-2D	1.19	1	FLOW	703.	679.	664.	658.	643.
				TIME	12.50	12.50	12.50	12.50	12.50
HYDROGRAPH AT	DT2DS	1.19	1	FLOW	532.	512.	500.	495.	482.
				TIME	12.50	12.50	12.50	12.50	12.50
ROUTED TO	RM2D-23	1.19	1	FLOW	515.	496.	484.	479.	467.
				TIME	12.83	12.83	12.83	12.83	12.83
HYDROGRAPH AT	2P	.59	1	FLOW	725.	701.	685.	679.	663.
				TIME	12.42	12.42	12.42	12.42	12.42
DIVERSION TO	DR-2P	.59	1	FLOW	10.	10.	10.	10.	9.
				TIME	2.83	2.92	2.92	2.92	2.92
HYDROGRAPH AT	DT2P	.59	1	FLOW	725.	701.	685.	679.	663.
				TIME	12.42	12.42	12.42	12.42	12.42
2 COMBINED AT	HC23	1.78	1	FLOW	1048.	1010.	987.	978.	953.
				TIME	12.58	12.58	12.58	12.58	12.58
ROUTED TO	RM23-24	1.78	1	FLOW	1006.	970.	948.	939.	915.
				TIME	13.08	13.08	13.08	13.08	13.08
HYDROGRAPH AT	2F	.95	1	FLOW	1303.	1259.	1232.	1221.	1192.
				TIME	12.33	12.33	12.33	12.33	12.33
DIVERSION TO	DR-2F	.95	1	FLOW	17.	16.	16.	16.	16.
				TIME	2.58	2.58	2.58	2.58	2.58
HYDROGRAPH AT	DT2F	.95	1	FLOW	1303.	1259.	1232.	1221.	1192.
				TIME	12.33	12.33	12.33	12.33	12.33
2 COMBINED AT	HC24	2.74	1	FLOW	1492.	1440.	1408.	1395.	1361.
				TIME	12.42	12.42	12.33	12.33	12.33
HYDROGRAPH AT	2G	.92	1	FLOW	1362.	1316.	1288.	1276.	1246.
				TIME	12.25	12.25	12.25	12.25	12.25
ROUTED TO	RM2G-25	.92	1	FLOW	1321.	1276.	1249.	1238.	1208.
				TIME	12.42	12.42	12.42	12.42	12.42

2 COMBINED AT	HC25	3.65	1	FLOW	2812.	2716.	2656.	2632.	2569.
				TIME	12.42	12.42	12.42	12.42	12.42
ROUTED TO	RS25-17	3.65	1	FLOW	2663.	2575.	2520.	2498.	2442.
				TIME	12.58	12.58	12.58	12.58	12.58
			** PEAK STAGES IN FEET **						
			1	STAGE	1415.15	1415.06	1415.00	1414.98	1414.92
				TIME	12.58	12.58	12.58	12.58	12.58
2 COMBINED AT	HC17.1	8.63	1	FLOW	6643.	6393.	6236.	6174.	6016.
				TIME	12.92	12.92	12.92	12.92	12.92
ROUTED TO	RS17-18	8.63	1	FLOW	6614.	6374.	6221.	6160.	5999.
				TIME	13.00	13.00	13.00	13.00	13.00
			** PEAK STAGES IN FEET **						
			1	STAGE	1389.97	1389.82	1389.72	1389.69	1389.58
				TIME	13.00	13.00	13.00	13.00	13.00
HYDROGRAPH AT	2J	.70	1	FLOW	692.	668.	653.	647.	631.
				TIME	12.58	12.58	12.58	12.58	12.58
DIVERSION TO	DR-2J	.70	1	FLOW	7.	7.	7.	7.	7.
				TIME	5.92	6.08	6.17	6.17	6.33
HYDROGRAPH AT	DT2J	.70	1	FLOW	692.	668.	653.	647.	631.
				TIME	12.58	12.58	12.58	12.58	12.58
ROUTED TO	RM2J-19	.70	1	FLOW	609.	587.	574.	568.	554.
				TIME	13.08	13.08	13.08	13.08	13.08
HYDROGRAPH AT	2I	.99	1	FLOW	1272.	1229.	1202.	1191.	1162.
				TIME	12.33	12.33	12.33	12.33	12.33
DIVERSION TO	DR-2I	.99	1	FLOW	20.	19.	19.	19.	19.
				TIME	7.17	7.25	7.42	7.42	7.58
HYDROGRAPH AT	DT2I	.99	1	FLOW	1272.	1229.	1202.	1191.	1162.
				TIME	12.33	12.33	12.33	12.33	12.33
ROUTED TO	RM2I-19	.99	1	FLOW	1170.	1129.	1104.	1094.	1068.
				TIME	12.50	12.50	12.50	12.50	12.50
HYDROGRAPH AT	2K	1.34	1	FLOW	1994.	1926.	1884.	1867.	1823.
				TIME	12.25	12.25	12.25	12.25	12.25
DIVERSION TO	DR-2K	1.34	1	FLOW	23.	22.	22.	22.	21.
				TIME	5.42	5.58	5.67	5.75	5.75
HYDROGRAPH AT	DT2K	1.34	1	FLOW	1994.	1926.	1884.	1867.	1823.
				TIME	12.25	12.25	12.25	12.25	12.25
3 COMBINED AT	HC19	3.03	1	FLOW	3031.	2926.	2860.	2834.	2765.
				TIME	12.33	12.33	12.33	12.33	12.33

DIVERSION TO	FL-19	3.03	1	FLOW	401.	387.	378.	374.	365.
				TIME	12.33	12.33	12.33	12.33	12.33
HYDROGRAPH AT	DT19	3.03	1	FLOW	2630.	2539.	2482.	2459.	2400.
				TIME	12.33	12.33	12.33	12.33	12.33
ROUTED TO	RM19-18	3.03	1	FLOW	2602.	2512.	2456.	2433.	2374.
				TIME	12.42	12.42	12.42	12.42	12.42
2 COMBINED AT	HC18	11.66	1	FLOW	8349.	8057.	7881.	7818.	7642.
				TIME	12.75	12.75	12.67	12.67	12.67
ROUTED TO	RS18-21	11.66	1	FLOW	8339.	8052.	7884.	7818.	7643.
				TIME	12.83	12.75	12.75	12.75	12.75
			** PEAK STAGES IN FEET **						
			1	STAGE	1368.35	1368.20	1368.11	1368.07	1367.97
				TIME	12.83	12.75	12.75	12.75	12.75
HYDROGRAPH AT	FL-19	.00	1	FLOW	401.	387.	378.	374.	365.
				TIME	12.33	12.33	12.33	12.33	12.33
ROUTED TO	RM19-20	.00	1	FLOW	390.	376.	367.	364.	355.
				TIME	12.58	12.58	12.58	12.58	12.58
HYDROGRAPH AT	2L	.60	1	FLOW	986.	954.	933.	925.	904.
				TIME	12.17	12.17	12.17	12.17	12.17
DIVERSION TO	OR-2L	.60	1	FLOW	12.	12.	12.	11.	11.
				TIME	2.00	2.00	2.00	2.00	2.00
HYDROGRAPH AT	DT2L	.60	1	FLOW	986.	954.	933.	925.	904.
				TIME	12.17	12.17	12.17	12.17	12.17
2 COMBINED AT	HC20	.60	1	FLOW	1201.	1160.	1135.	1124.	1098.
				TIME	12.25	12.25	12.25	12.25	12.25
ROUTED TO	RM20-21	.60	1	FLOW	1161.	1121.	1097.	1087.	1061.
				TIME	12.42	12.42	12.42	12.42	12.42
HYDROGRAPH AT	2M	1.17	1	FLOW	2210.	2137.	2091.	2072.	2024.
				TIME	12.08	12.08	12.08	12.08	12.08
DIVERSION TO	OR-2M	1.17	1	FLOW	24.	23.	23.	23.	22.
				TIME	6.67	6.83	6.92	6.92	7.08
HYDROGRAPH AT	DT2M	1.17	1	FLOW	2210.	2137.	2091.	2072.	2024.
				TIME	12.08	12.08	12.08	12.08	12.08
3 COMBINED AT	HC21	13.43	1	FLOW	9560.	9247.	9049.	8970.	8758.
				TIME	12.67	12.67	12.67	12.67	12.67
ROUTED TO	RS21-22	13.43	1	FLOW	9452.	9134.	8935.	8856.	8647.
				TIME	12.83	12.83	12.83	12.83	12.83

			** PEAK STAGES IN FEET **						
			1	STAGE	1354.76	1354.64	1354.57	1354.54	1354.45
				TIME	12.83	12.83	12.83	12.83	12.83
HYDROGRAPH AT	2D	.64	1	FLOW	657.	634.	619.	614.	599.
				TIME	12.50	12.50	12.50	12.50	12.50
DIVERSION TO	DR-2D	.64	1	FLOW	9.	9.	9.	9.	9.
				TIME	4.67	4.75	4.83	4.92	4.92
HYDROGRAPH AT	DT2D	.64	1	FLOW	657.	634.	619.	614.	599.
				TIME	12.50	12.50	12.50	12.50	12.50
2 COMBINED AT	HC22	14.07	1	FLOW	10001.	9661.	9444.	9358.	9131.
				TIME	12.75	12.75	12.75	12.75	12.75
ROUTED TO	RS22-6	14.07	1	FLOW	9940.	9601.	9386.	9301.	9076.
				TIME	12.83	12.83	12.83	12.83	12.83
			** PEAK STAGES IN FEET **						
			1	STAGE	1335.56	1335.42	1335.33	1335.29	1335.19
				TIME	12.83	12.83	12.83	12.83	12.83
HYDROGRAPH AT	2N	.47	1	FLOW	995.	962.	942.	934.	912.
				TIME	12.08	12.08	12.08	12.08	12.08
2 COMBINED AT	HC6	14.55	1	FLOW	10036.	9693.	9476.	9390.	9162.
				TIME	12.83	12.83	12.83	12.83	12.83
HYDROGRAPH AT	1A	.90	1	FLOW	1095.	1057.	1034.	1024.	1000.
				TIME	12.42	12.42	12.42	12.42	12.42
ROUTED TO	RM1A-1	.90	1	FLOW	923.	891.	871.	863.	842.
				TIME	12.92	12.92	12.92	12.92	12.92
HYDROGRAPH AT	1B	1.60	1	FLOW	2703.	2610.	2551.	2528.	2467.
				TIME	12.17	12.17	12.17	12.17	12.17
2 COMBINED AT	HC1	2.50	1	FLOW	2873.	2772.	2708.	2683.	2616.
				TIME	12.17	12.17	12.17	12.17	12.17
HYDROGRAPH AT	1C	1.49	1	FLOW	1943.	1875.	1832.	1815.	1770.
				TIME	12.33	12.33	12.33	12.33	12.33
2 COMBINED AT	HC2	4.00	1	FLOW	4622.	4459.	4357.	4316.	4209.
				TIME	12.25	12.25	12.25	12.25	12.25
ROUTED TO	RM2-3	4.00	1	FLOW	4299.	4146.	4051.	4012.	3912.
				TIME	12.50	12.50	12.50	12.50	12.50
HYDROGRAPH AT	1D	.96	1	FLOW	1679.	1622.	1587.	1572.	1535.
				TIME	12.17	12.17	12.17	12.17	12.17
2 COMBINED AT	HC3	4.96	1	FLOW	5148.	4964.	4849.	4804.	4683.

				TIME	12.42	12.42	12.42	12.42	12.42
ROUTED TO	RM3-4	4.96	1	FLOW	4957.	4779.	4668.	4624.	4508.
				TIME	12.67	12.67	12.67	12.67	12.67
HYDROGRAPH AT	3A	1.11	1	FLOW	1823.	1761.	1723.	1707.	1667.
				TIME	12.17	12.17	12.17	12.17	12.17
2 COMBINED AT	HC4	6.07	1	FLOW	5517.	5319.	5195.	5145.	5015.
				TIME	12.67	12.67	12.67	12.67	12.67
ROUTED TO	RM4-5	6.07	1	FLOW	5357.	5164.	5043.	4995.	4868.
				TIME	13.00	13.00	13.00	13.00	13.00
HYDROGRAPH AT	3C	1.56	1	FLOW	2257.	2191.	2133.	2114.	2064.
				TIME	12.25	12.25	12.25	12.25	12.25
DIVERSION TO	DR-3C	1.56	1	FLOW	15.	15.	16.	15.	16.
				TIME	3.92	4.00	4.08	4.08	4.17
HYDROGRAPH AT	DT3C	1.56	1	FLOW	2257.	2191.	2133.	2114.	2064.
				TIME	12.25	12.25	12.25	12.25	12.25
2 COMBINED AT	HC5	7.63	1	FLOW	5834.	5621.	5488.	5435.	5295.
				TIME	13.00	13.00	13.00	13.00	13.00
HYDROGRAPH AT	3B	.94	1	FLOW	695.	669.	654.	647.	631.
				TIME	12.92	12.92	12.92	12.92	12.92
ROUTED TO	RM3B-8	.94	1	FLOW	679.	655.	639.	633.	617.
				TIME	13.42	13.42	13.42	13.42	13.42
DIVERSION TO	FL-8	.94	1	FLOW	268.	247.	240.	237.	230.
				TIME	13.42	13.42	13.42	13.42	13.42
HYDROGRAPH AT	DT8	.94	1	FLOW	419.	408.	399.	396.	386.
				TIME	13.42	13.42	13.42	13.42	13.42
ROUTED TO	RM8-9	.94	1	FLOW	415.	403.	394.	391.	382.
				TIME	13.58	13.58	13.58	13.58	13.58
DIVERSION TO	FL-9	.94	1	FLOW	142.	138.	134.	133.	129.
				TIME	13.58	13.58	13.58	13.58	13.58
HYDROGRAPH AT	DT9	.94	1	FLOW	273.	265.	260.	258.	252.
				TIME	13.58	13.58	13.58	13.58	13.58
ROUTED TO	RM9-5	.94	1	FLOW	265.	257.	252.	250.	244.
				TIME	14.17	14.17	14.17	14.17	14.17
2 COMBINED AT	HC5.1	8.57	1	FLOW	5895.	5681.	5546.	5493.	5352.
				TIME	13.00	13.00	13.00	13.00	13.00
ROUTED TO	RS5-6	8.57	1	FLOW	5852.	5634.	5501.	5447.	5307.
				TIME	13.08	13.08	13.08	13.08	13.08

** PEAK STAGES IN FEET **

			1	STAGE	1341.88	1341.71	1341.60	1341.56	1341.45
				TIME	13.08	13.08	13.08	13.08	13.08
HYDROGRAPH AT	3D	.41	1	FLOW	871.	841.	823.	816.	796.
				TIME	12.08	12.08	12.08	12.08	12.08
3 COMBINED AT	HC6.2	23.53	1	FLOW	15665.	15105.	14759.	14620.	14257.
				TIME	13.00	13.00	13.00	13.00	13.00
HYDROGRAPH AT	FL-8	.00	1	FLOW	260.	247.	240.	237.	230.
				TIME	13.42	13.42	13.42	13.42	13.42
ROUTED TO	RM8-10	.00	1	FLOW	230.	219.	213.	211.	205.
				TIME	14.17	14.17	14.17	14.17	14.17
HYDROGRAPH AT	4A	1.26	1	FLOW	1124.	1086.	1062.	1052.	1027.
				TIME	12.75	12.75	12.75	12.75	12.75
DIVERSION TO	DR-4A	1.26	1	FLOW	24.	23.	23.	23.	22.
				TIME	5.92	6.08	6.17	6.17	6.25
HYDROGRAPH AT	DT4A	1.26	1	FLOW	1124.	1086.	1062.	1052.	1027.
				TIME	12.75	12.75	12.75	12.75	12.75
HYDROGRAPH AT	FL-9	.00	1	FLOW	142.	138.	134.	133.	129.
				TIME	13.58	13.58	13.58	13.58	13.58
ROUTED TO	RM9-10	.00	1	FLOW	133.	128.	125.	124.	120.
				TIME	14.17	14.17	14.17	14.17	14.17
3 COMBINED AT	HC10	1.26	1	FLOW	1132.	1093.	1068.	1058.	1033.
				TIME	12.75	12.75	12.75	12.75	12.75
DIVERSION TO	FL-10	1.26	1	FLOW	397.	378.	366.	361.	349.
				TIME	12.75	12.75	12.75	12.75	12.75
HYDROGRAPH AT	DT10	1.26	1	FLOW	736.	715.	702.	697.	684.
				TIME	12.75	12.75	12.75	12.75	12.75
ROUTED TO	RM10-7	1.26	1	FLOW	712.	691.	678.	672.	656.
				TIME	13.25	13.25	13.25	13.25	13.25
HYDROGRAPH AT	4B	.68	1	FLOW	1307.	1265.	1238.	1228.	1200.
				TIME	12.08	12.08	12.08	12.08	12.08
DIVERSION TO	DR-4B	.68	1	FLOW	16.	16.	16.	15.	15.
				TIME	1.58	1.58	1.58	1.58	1.58
HYDROGRAPH AT	DT4B	.68	1	FLOW	1307.	1265.	1238.	1228.	1200.
				TIME	12.08	12.08	12.08	12.08	12.08
3 COMBINED AT	HC7	25.47	1	FLOW	16467.	15982.	15618.	15372.	14992.
				TIME	13.00	13.00	13.00	13.00	13.00

ROUTED TO	RS7-11	25.47	1	FLOW	16239.	15660.	15299.	15154.	14775.
				TIME	13.25	13.25	13.25	13.25	13.25
			** PEAK STAGES IN FEET **						
			1	STAGE	1296.22	1296.04	1295.93	1295.88	1295.75
				TIME	13.25	13.25	13.25	13.25	13.25
HYDROGRAPH AT	4C	1.03	1	FLOW	1117.	1078.	1054.	1044.	1019.
				TIME	12.50	12.50	12.50	12.50	12.50
DIVERSION TO	DR-4C	1.03	1	FLOW	16.	16.	16.	16.	15.
				TIME	5.42	5.58	5.67	5.67	5.75
HYDROGRAPH AT	DT4C	1.03	1	FLOW	1117.	1078.	1054.	1044.	1019.
				TIME	12.50	12.50	12.50	12.50	12.50
2 COMBINED AT	HC11.1	26.50	1	FLOW	16612.	16018.	15647.	15499.	15110.
				TIME	13.25	13.25	13.25	13.25	13.25
HYDROGRAPH AT	5G	.43	1	FLOW	957.	926.	906.	899.	878.
				TIME	12.00	12.00	12.00	12.00	12.00
ROUTED TO	RS5G	.43	1	FLOW	33.	33.	33.	33.	32.
				TIME	13.92	13.92	13.83	13.83	13.83
			** PEAK STAGES IN FEET **						
			1	STAGE	1411.80	1411.46	1411.25	1411.17	1410.94
				TIME	14.00	13.92	13.92	13.83	13.83
ROUTED TO	RM5G-26	.43	1	FLOW	33.	33.	33.	33.	32.
				TIME	14.08	14.00	14.00	13.92	13.92
HYDROGRAPH AT	5C	.51	1	FLOW	1155.	1118.	1094.	1085.	1060.
				TIME	12.00	12.00	12.00	12.00	12.00
ROUTED TO	RS5C	.51	1	FLOW	35.	34.	34.	33.	33.
				TIME	14.25	14.17	14.17	14.17	14.08
			** PEAK STAGES IN FEET **						
			1	STAGE	1408.02	1407.76	1407.59	1407.52	1407.35
				TIME	14.25	14.25	14.17	14.17	14.17
ROUTED TO	RK5C-26	.51	1	FLOW	35.	34.	34.	33.	33.
				TIME	14.33	14.25	14.17	14.17	14.17
2 COMBINED AT	HC26	.94	1	FLOW	68.	67.	66.	66.	66.
				TIME	14.25	14.08	14.08	14.08	14.00
ROUTED TO	RM26-28	.94	1	FLOW	68.	67.	66.	66.	66.
				TIME	14.50	14.33	14.25	14.25	14.25
HYDROGRAPH AT	5A	1.27	1	FLOW	2582.	2496.	2442.	2421.	2364.
				TIME	12.00	12.00	12.00	12.00	12.00

ROUTED TO	RM5A-27	1.27	1	FLOW	2331.	2254.	2205.	2185.	2134.
				TIME	12.33	12.33	12.33	12.33	12.33
HYDROGRAPH AT	5B	.69	1	FLOW	985.	952.	931.	922.	900.
				TIME	12.25	12.25	12.25	12.25	12.25
2 COMBINED AT	HC27	1.95	1	FLOW	3284.	3173.	3104.	3076.	3004.
				TIME	12.33	12.33	12.33	12.33	12.33
ROUTED TO	RM27-28	1.95	1	FLOW	3178.	3071.	3004.	2977.	2907.
				TIME	12.42	12.42	12.42	12.42	12.42
2 COMBINED AT	HC28	2.90	1	FLOW	3237.	3130.	3062.	3035.	2965.
				TIME	12.42	12.42	12.42	12.42	12.42
ROUTED TO	RM28-29	2.90	1	FLOW	3136.	3031.	2966.	2940.	2871.
				TIME	12.50	12.50	12.50	12.50	12.50
HYDROGRAPH AT	5D	.55	1	FLOW	1431.	1385.	1356.	1344.	1314.
				TIME	12.00	12.00	12.00	12.00	12.00
ROUTED TO	RS5D	.55	1	FLOW	30.	29.	29.	28.	28.
				TIME	14.42	14.33	14.33	14.33	14.33
			** PEAK STAGES IN FEET **						
			1	STAGE	1382.21	1381.71	1381.40	1381.28	1380.96
				TIME	14.42	14.33	14.33	14.33	14.33
ROUTED TO	RM5D-29	.55	1	FLOW	30.	29.	29.	28.	28.
				TIME	14.67	14.67	14.67	14.67	14.67
HYDROGRAPH AT	5E	1.59	1	FLOW	2483.	2401.	2350.	2330.	2276.
				TIME	12.25	12.25	12.25	12.25	12.25
DIVERSION TO	OR-2E	1.59	1	FLOW	22.	23.	23.	23.	23.
				TIME	4.17	4.25	4.33	4.42	4.42
HYDROGRAPH AT	DT5E	1.59	1	FLOW	2483.	2401.	2350.	2330.	2276.
				TIME	12.25	12.25	12.25	12.25	12.25
3 COMBINED AT	HC29	5.04	1	FLOW	4964.	4799.	4696.	4654.	4546.
				TIME	12.42	12.42	12.42	12.42	12.42
ROUTED TO	RM29-11	5.04	1	FLOW	4845.	4683.	4582.	4542.	4436.
				TIME	12.58	12.58	12.58	12.58	12.58
HYDROGRAPH AT	5F	1.52	1	FLOW	1952.	1886.	1845.	1829.	1786.
				TIME	12.33	12.33	12.33	12.33	12.33
DIVERSION TO	OR-5F	1.52	1	FLOW	17.	17.	17.	16.	16.
				TIME	5.00	5.08	5.17	5.25	5.33
HYDROGRAPH AT	DT5F	1.52	1	FLOW	1952.	1886.	1845.	1829.	1786.
				TIME	12.33	12.33	12.33	12.33	12.33

2 COMBINED AT	HC11	6.56	1	FLOW	6515.	6296.	6160.	6105.	5962.
				TIME	12.50	12.50	12.50	12.50	12.50
2 COMBINED AT	HC11.2	33.06	1	FLOW	19204.	18490.	18046.	17880.	17459.
				TIME	12.83	12.83	12.83	12.75	12.75
HYDROGRAPH AT	6A	.46	1	FLOW	623.	602.	589.	584.	570.
				TIME	12.33	12.33	12.33	12.33	12.33
DIVERSION TO	OR-6A	.46	1	FLOW	6.	6.	6.	6.	6.
				TIME	2.50	2.50	2.50	2.50	2.50
HYDROGRAPH AT	DT6A	.46	1	FLOW	623.	602.	589.	584.	570.
				TIME	12.33	12.33	12.33	12.33	12.33
2 COMBINED AT	HC12	33.52	1	FLOW	19453.	18751.	18326.	18159.	17732.
				TIME	12.83	12.75	12.75	12.75	12.67
ROUTED TO	RM12-13	33.52	1	FLOW	19395.	18699.	18269.	18099.	17658.
				TIME	13.00	12.92	12.92	12.92	12.92
HYDROGRAPH AT	6B	1.14	1	FLOW	1272.	1230.	1203.	1192.	1165.
				TIME	12.50	12.50	12.50	12.50	12.50
DIVERSION TO	OR-6B	1.14	1	FLOW	34.	34.	33.	33.	32.
				TIME	7.17	7.25	7.42	7.42	7.50
HYDROGRAPH AT	DT6B	1.14	1	FLOW	1272.	1230.	1203.	1192.	1165.
				TIME	12.50	12.50	12.50	12.50	12.50
2 COMBINED AT	HC13	34.66	1	FLOW	20212.	19504.	19072.	18900.	18448.
				TIME	12.92	12.83	12.83	12.83	12.83

*** NORMAL END OF HEC-1 ***