SALT RIVER PROJECT

CENTRAL ARIZONA PROJECT/ SALT RIVER PROJECT INTERCONNECTION FACILITY

SCHEMATIC DESIGN REPORT

Property of
Flood Control District of MC Library
Please Return to
2801 W. Durango
Phoenix, AZ 85009

PRC ENGINEERING

OCTOBER 1983

CAP-S-9

SALT RIVER PROJECT

CENTRAL ARIZONA PROJECT/SALT RIVER PROJECT
INTERCONNECTION FACILITY

SCHEMATIC DESIGN REPORT

SPECIFICATION NO. CD82-60

INQUIRY NO. 82-338

PRC ENGINEERING

PHOENIX, ARIZONA ENGLEWOOD, COLORADO

OCTOBER 1983

PRC Engineering
4131 North 24th Street
Phoenix, AZ 85016
602-954-9191

prc
Planning Research Corporation

October 21, 1983

Our File: 1314/8 - DG 1263/83
Subject: Submittal of CAP/SRP Interconnect Facility Schematic Design Report
Reference: Specification No. CD82-60
Inquiry No. 82-338

Salt River Project
Attention: Mr. Timothy N. Stanton
Civil Engineering Department
P.O. Box 1980
Phoenix, Arizona 85001

Dear Mr. Stanton:

We are pleased to submit twelve copies of the "Central Arizona Project/Salt River Project, Schematic Design Report", dated October 1983 and twelve full size copies of each of the Schematic Design, Open-channel Chute and Rock Profiles drawings.

This submittal completes our contractural obligations to the Salt River Project for the Schematic Design of the Interconnect Facility. The final invoice and project progress report for the month of October will be prepared and forwarded to you under separate cover.

We appreciate the assistance and cooperation given to us by the staff of the Salt River Project in preparation of this report. We also anticipate the opportunity to assist you in proceeding into preliminary and final design of the interconnection facility and other projects you plan to pursue in the future.

Please do not hesitate to contact me if you have any questions or require additional assistance.

Respectfully submitted,
PRC ENGINEERING, INC.

Edward A. Adair

Edward A. Adair
Principal-in-Charge

Enclosures
EAA/CCH/td

CERTIFICATE OF ENGINEER

CENTRAL ARIZONA PROJECT/SALT RIVER PROJECT
INTERCONNECTION FACILITY

SCHEMATIC DESIGN REPORT

The technical material and data contained in this report were prepared under the supervision and direction of the undersigned, whose seals as professional engineers are affixed below.

COLORADO REGISTERED PROFESSIONAL ENGINEER
CHARLES C. HUTTON
17795

Chuck Hutton
Project Manager
PRC Engineering, Inc.

STATE OF ALASKA
49TH
Glenn S. Tarbox
No. CE 4871
REGISTERED PROFESSIONAL ENGINEER

Glenn S. Tarbox
Senior Vice President, Engineering
PRC Engineering, Inc.

Registered Professional Engineer (Civil)
CERTIFICATE NO.
9349
EDWARD ALLAIN ADAIR

Edward A. Adair
Principal-in-Charge
PRC Engineering, Inc.

SUMMARY

This report summarizes the results of a schematic design prepared for the Salt River Project to determine the construction cost of a one-directional gravity flow interconnection facility, with and without hydropower, between the Central Arizona Project Granite Reef Aqueduct and the Salt River Project at Granite Reef Diversion Dam. The project site is located approximately 25 miles east of Phoenix, Arizona.

The design for the one-directional gravity flow interconnection facility, with and without hydropower, involved determining the designs and costs for three alternative points of delivery and five different flows. The direct construction costs of the interconnection facility, excluding contingencies, engineering and administration, varied from $373,000 to $1,135,000 depending on the delivery point and design discharge.

The study included determining the technical feasibility of developing the interconnection facility for hydropower generation. A hydropower plant consisting of one horizontal or vertical Francis turbine operating under an approximate net head of 170 feet and having capacities of either 1225, 3478 or 8058 kilowatts for the minimum, most and maximum flow conditions, respectively, was found to be technically feasible. The direct construction costs of the hydropower plant, excluding contingencies, engineering and management were determined to be $1,619,000, $3,034,000 and $5,580,000 for installed capacities of 1225, 3478 and 8058 kilowatts, respectively.

The design for the one-directional gravity flow interconnection facility with an open-channel chute and stilling basin instead of a pressure conduit and energy dissipation valve was performed under an extra work order. This design was for the same three alternative points of delivery and the same five flows. The direct construction costs of this design, excluding contingencies, engineering and administration, varied from $319,000 to $972,000 depending on the delivery point and design discharge.

CENTRAL ARIZONA PROJECT/SALT RIVER PROJECT
INTERCONNECTION FACILITY
SCHEMATIC DESIGN REPORT

TABLE OF CONTENTS

	Page
LETTER OF TRANSMITTAL	
CERTIFICATE OF ENGINEER	
SUMMARY	
TABLE OF CONTENTS	
LIST OF TABLES	
LIST OF FIGURES	
Chapter I: Introduction	I-1
Section 1: Purpose of Study	I-1
Section 2: Authorization	I-1
Section 3: Scope of Work	I-1
Section 4: Subcontractors	I-2
Section 5: Acknowledgements	I-3
Chapter II: Site Characteristics and Existing Features	II-1
Section 1: General	II-1
Section 2: Geology	II-1
Section 3: Site Characteristics	II-3
A. Proposed Salt River Turnout	II-3
B. Existing Commercial Gravel Processing Operation	II-4
C. Dam Tender's Residence	II-4
D. Spook Hill Floodway	II-4
Chapter III: Environmental and Safety Considerations	III-1
Chapter IV: Hydrology and Hydraulics	IV-1

TABLE OF CONTENTS
(Continued)

	Page
Section 1: Interconnection Facility Use	IV-1
Section 2: Hydrology	IV-1
Section 3: Hydraulics	IV-2
Chapter V: One-Directional Gravity Flow Interconnection Facility	V-1
Section 1: Layout and Design	V-1
Section 2: Chutes	V-1
A. General	V-1
B. Without Hydropower	V-3
C. With Hydropower	V-3
Section 3: Energy Dissipation and Flow Control	V-4
Section 4: Diversion and Flow Control	V-6
Section 5: Canal	V-7
Section 6: Road Culvert	V-9
Section 7: Drop Structure	V-9
Annex V-A Open-Channel Chute Design	V-11
A. General	V-11
B. Assumed Turnout Design	V-11
C. Open-channel Chute	V-12
D. Stilling Basin	V-12
E. Flow Measurement	V-12
Chapter VI: Hydropower Facility VI-1	
Section 1: Layout and Design	VI-1
Section 2: Turbine Selection	VI-2
Section 3: By-Pass	VI-4
Section 4: Hydraulic Transients	VI-5

TABLE OF CONTENTS
(Continued)

	Page
A. Closing Time of Wicket Gates and Pressure Rise	VI-5
B. Flywheel Effect and Speed Rise	VI-6
C. Water Hammer/Speed Rise	VI-8
Section 5: Alternative Power Development Schemes	VI-10
Section 6: Power Potential	VI-10
Chapter VII: Estimated Construction Costs	VII-1
Section 1: General	VII-1
Section 2: Basis of Costs	VII-1
A. Direct Construction Costs	VII-1
B. Construction Contingency	VII-3
C. Engineering and Management Costs	VII-3
D. Total Construction Cost	VII-3
REFERENCES	
FIGURES	
APPENDIX A Correspondence	
APPENDIX B Equipment Manufacturers Quotations	
APPENDIX C Soil Report	

LIST OF TABLES

Table No.	Table Title	Page No.
IV-1	Hydropower Flow Rates	IV-2
IV-2	Head Losses Without Hydropower	IV-4
IV-3	Head Losses with Hydropower	IV-5
V-1	Interconnection Facility Without Hydropower Conduit and Valve Sizes	V-3
V-2	Interconnection Facility With Hydropower Conduit and Valve Sizes	V-4
V-3	Radial Gate Dimensions	V-7
VI-1	Schematic Design Power Study, Alternative A1	VI-15
VI-2	Schematic Design Power Study, Alternative A2	VI-16
VI-3	Schematic Design Power Study, Alternative A3	VI-17
VI-4	Schematic Design Power Study, Alternative B1	VI-18
VI-5	Schematic Design Power Study, Alternative C1	VI-19
VII-1	Estimated Direct Construction Cost of Interconnection Facility, Without Hydropower, Delivery to South Canal	VII-4
VII-2	Estimated Direct Construction Cost of Interconnection Facility, Without Hydropower, Delivery to Granite Reef Forebay	VII-5

LIST OF TABLES

(Continued)

Table No.	Table Title	Page No.
VII-3	Estimated Direct Construction Cost of Interconnection Facility, Without Hydropower, Delivery to South Canal and/or Granite Reef Forebay	VII-6
VII-4	Estimated Direct Construction Cost of Interconnection Facility, With Hydropower (Excluding Cost of Hydropower Plant), Delivery to South Canal	VII-7
VII-5	Estimated Direct Construction Cost of Interconnection Facility, With Hydropower (Excluding Cost of Hydropower Plant), Delivery to Granite Reef Forebay	VII-8
VII-6	Estimated Direct Construction Cost of Interconnection Facility, With Hydropower (Excluding Cost of Hydropower Plant), Delivery to South Canal and/or Granite Reef Forebay	VII-9
VII-7	Estimated Direct Construction Cost of Hydropower Plant, Minimum Probable Flows	VII-10
VII-8	Estimated Direct Construction Cost of Hydropower Plant, Most Probable Flows	VII-11
VII-9	Estimated Direct Construction Cost of Hydropower Plant, Maximum Probable Flows	VII-12

LIST OF TABLES

(Continued)

Table No.	Table Title	Page No.
VII-10	Estimated Direct Construction Cost of Interconnection Facility, Open-channel Chute, Delivery to South Canal	VII-13
VII-11	Estimated Direct Construction Cost of Interconnection Facility, Open-channel Chute, Delivery to Granite Reef Forebay	VII-14
VII-12	Estimated Direct Construction Cost of Interconnection Facility, Open-channel Chute, Delivery to South Canal and/or Granite Reef Forebay	VII-15

LIST OF FIGURES

Figure No.	Figure Title
II-1	Location Map
II-2	Vicinity Map
II-3	Area Map
II-4	Rock Profiles
II-5	Salt River Project Turnout
V-1	Schematic Design
V-2	Concrete to Steel Pipe Adapter and Contraction Sections
V-3	Diversion and Radial Gate Structures
V-4	Bank Height for Canals and Freeboard for Hard Surface, Buried Membrane and Earth Linings
V-5	Canal Sections
V-6	Road Culverts
V-7	Vertical Drops at Delivery Points
V-8	Open-channel Chute
VI-1	Turbine Operating Range

LIST OF FIGURES
(Continued)

Figure No.	Figure Title
VI-2	Hydropower Plant Layout - Minimum and Most Probable Flows
VI-3	Hydropower Plant Layout - Maximum Probable Flow
VI-4	Pressure Rise and Speed Rise Curves - Alternative A2
VI-5	Pressure Rise and Speed Rise Curves - Alternative B1
VI-6	Pressure Rise and Speed Rise Curves - Alternative C1
VI-7	Turbine Performance Curves
VI-8	Turbine Efficiency Curves
VII-1	Single Unit One-Line Electrical Diagram (Generator Breaker)
VII-2	Interconnection Facility Direct Construction Cost Curves
VII-3	Hydropower Plant Direct Construction Cost Curves
VII-4	Open-channel Chute Direct Construction Cost Curves

CHAPTER I

INTRODUCTION

CHAPTER I
INTRODUCTION

Section 1: Purpose of the Study

The purpose of this study was to establish the technical feasibility and prepare construction cost estimates and schematic design drawings for a one-directional gravity flow interconnection facility, with and without hydropower, between the Central Arizona Project (CAP) Granite Reef Aqueduct and the Salt River Project (SRP) at Granite Reef Diversion Dam.

Section 2: Authorization

This study was authorized by the Salt River Project, Phoenix, Arizona, by Purchase Order No. V-3003B-R dated June 23, 1983.

Section 3: Scope of Work

The Scope of Work involved preparation of a Schematic Design for a one-directional gravity flow interconnection facility, with and without hydropower development, with three alternative points of delivery and five different flows. The interconnection facility provides a means of conveying water from the CAP Granite Reef Aqueduct near the outlet of the Salt River Siphon to either the Granite Reef Forebay or the South Canal near Granite Reef Diversion Dam or to both. The specific engineering services performed include:

a. Collection and review of existing data on the Project.

b. Preparation of schematic layouts and designs of the various features of the interconnection facility including sizing and alternative cost studies for:

(1) conduit, (2) energy dissipation and by-pass valve, (3) turbines, (4) canal, (5) diversion and flow control structures, (6) road culverts, (7) drop structure, and (8) powerhouse.

c. Calculation of hydraulic losses.

d. Analysis of hydraulic transients.

e. Sizing and selection of hydropower equipment.

f. Preparation of schematic design drawings to document the design concepts developed for each alternative.

g. Preparation of construction cost estimates for five different flows and three alternative points of discharge plus cost estimates for a hydropower plant for three different flow conditions.

h. Preparation of a Schematic Design Report containing the design criteria and results of the studies for each of the alternatives.

Section 4: Subcontractors

Preparation of the topography for the project site was performed using the services of a subcontractor, Aerial Mapping Company, Inc., Phoenix, Arizona, and aerial photos obtained from the United States Bureau of Reclamation (USBR) office in Phoenix, Arizona.

The geotechnical firm, Sergent, Hauskins and Beckwith, Phoenix, Arizona, conducted a seismic refraction survey of the proposed interconnection alignments and prepared a report contained in Appendix C.

Section 5: Acknowledgements

Special acknowledgements are given to the Phoenix and Denver offices of the USBR for the high level of cooperation and assistance provided throughout the course of this study. Acknowledgment is also given to the SRP staff for their close communicaiton and coordination during the study.

CHAPTER II

SITE CHARACTERISTICS AND EXISTING FEATURES

CHAPTER II
SITE CHARACTERISTICS AND EXISTING FACILITIES

Section 1: General

The proposed CAP/SRP Interconnection Facility is located west of Bush Highway between the Salt River and the Central Arizona Project Canal in Maricopa County, approximately 25 miles east of Phoenix, Arizona. The general location is shown on the Location Map, Figure II-1 and the Vicinity Map, Figure II-2. The specific location is shown on the Area Map, Figure II-3.

The CAP Granite Reef Aqueduct is presently under construction and is scheduled for completion and delivery of water to the Phoenix metropolitan area by mid-1985. The turnout is located on Reach 12 of the Granite Reef Aqueduct at Station 793 + 40.L.T. and is scheduled to be constructed under a USBR contract that is presently out for bids. The turnout is scheduled to be completed no later than March 1, 1985.

Section 2: Geology

Extensive geological investigations were performed by the USBR in 1974 for construction of the Salt River Siphon and the Granite Reef Aqueduct. Several drill holes and test pits are located on the centerline of the Salt River Siphon approximately 1,500 feet west of the general area where the interconnection facility will be located. Geologic data associated with these drill holes are as follows:

Hole No.	Ground Elevation (ft)	Top of Rock Elevation (ft)	Water Table Elevation (ft)
DH 2-SGS	1319.8	1269.8	Not determined
DH 110-SRS	1322.8	1302.3	1300.4
DH 111-SRS	1343.9	1304.9	Not reached

The rock in the area of the Granite Reef Aqueduct and Salt-Gila pumping plant is an intensely weathered to decomposed granite. The inspectors for the Salt-Gila Pumping Plant, which is located approximately 3,300 feet downstream from the turnout, reported that the granite near the Salt River Project turnout was ripped with a Caterpiller D-10 tractor (with attached single shank ripper), and that blasting was not used in the excavation.

Estimating the elevations of the top of rock in the vicinity of the proposed powerplant and along the conduit and canal alignment from these drill holes was difficult and would have been inaccurate. The drill holes along the centerline of the Salt River Siphon and the drill hole on the centerline of the Granite Reef Aqueduct near the Salt River Turnout were too far up the slope to extrapolate. The data on this drill hole near the turnout are as follows:

Hole No.	Ground Elevation (ft)	Top of Rock Elevation (ft)	Water Table Elevation (ft)
DH-122-GR12	1482.30	1478.30	Not reached

A more accurate method of determining the elevation of top of the rock was to conduct a seismic refraction survey of the site. A field program and analysis were performed and the results are shown in Appendix C.

The results of the seismic refraction survey indicated that the granite along both canal alignments varies from 5 to 30 feet below the ground surface. The survey also determined that the rock in these areas is not rippable, which is different from the granite found along the Granite Reef Aqueduct. Near the South canal the granite is rippable and is about 30 feet below the ground surface. However, along the west edge of the Spook Hill floodway the granite is approximately 10 feet below the ground surface and is not rippable.

The refraction survey also showed that there is a complex geologic feature at the base of the steep slope near the end of the penstock alignment where the

proposed hydropower plant was located. The feature appears to be an old streambed filled with large rocks and boulders and extends approximately 100 to 150 feet along the alignment of the penstock and canal. The rock profiles are shown on Figure II-4.

The project area is considered to have low seismicity. Based on historical seismicity, Algermissen and Perkins (U.S. Geological Survey Open-File Report No. 76-416, 1976) shows that the interconnection facility alignment is in an area with a 90-percent probability of not having ground shaking with a horizontal acceleration exceeding 0.04g (gravity) in a 50-year period. This probability is equivalent to a source earthquake having a return period of 475 years.

Section 3: Site Characteristics

A. Proposed Salt River Turnout

The proposed SRP turnout consists of a reinforced concrete turnout structure, two slide gates, and two 96-inch diameter precast concrete pressure pipes extending 200 feet from the turnout to a point approximately 275 feet left of the centerline of the Granite Reef Aqueduct at Station 793 + 40. The turnout is shown on Figure II-5. The design criteria for the turnout is listed in the USBR memorandum dated October 28, 1982 shown in Appendix A.

The turnout was designed for downstream flow control and energy dissipation using a sleeve valve. With flow control provided by a sleeve valve, full pipe flow can be maintained in the pipelines for all flows. Full pipe flow is required for use of acoustic flow meters for flow measurement which the USBR proposes to use for flow measurment in the turnout.

The ends of the turnout pipes are located at approximately the edge of the embankment fill for the canal. Therefore, all of the excavation for the interconnection facility should be in original ground, not in fill material.

B. Existing Commercial Gravel Processing Operation

Located north of the roadway and west of the Spook Hill Floodway is a medium-sized gravel processing operation which has been in operation for several years. The operation is privately owned and the owner has a lease to use the land, process the material from the annual dredging of Granite Reef Forebay, and sell the processed gravels commercially. It would be considered good public relations to not disturb this operation with the canal to the Granite Reef Forebay unless it is absolutely necessary.

C. Dam Tender's Residence

Located just south of the left end of the Granite Reef Diversion Dam is the dam tender's permanent residence and parking lot. This residence should not be disturbed in any way by the canals delivering water to either the Granite Reef Forebay or the South Canal.

D. Spook Hill Floodway

Located directly north and to the east of the SRP Turnout is the Spook Hill Floodway. This floodway was constructed by the Flood Control District of Maricopa County. It is designed to catch the flows from the mountains southeast of Bush Highway and to settle out sediment in the runoff water before it enters the Granite Reef Forebay. The floodway should not be used as part of the interconnection facility unless it is redesigned and the design coordinated with the Flood Control District. It was stated in the Environmental Assessment Report that the interconnection facility will not in any way interfere with the operation or function of the Spook Hill Floodway.

CHAPTER III

ENVIRONMENTAL AND SAFETY CONSIDERATIONS

CHAPTER III

ENVIRONMENTAL AND SAFETY CONSIDERATIONS

A Draft Environmental Assessment Report was prepared on the CAP/SRP Interconnection Facility by the SRP Environmental Services Department and submitted to the USBR, Department of the Interior in April 1983. Environmental impact due to construction of the interconnection facility will be minimal. The one item of environmental concern is the reduction of the water quality in the SRP due to introduction of CAP water into the system. It was determined that water quality issues were not part of the scope of work of this study. Further, no work related to water quality was to be performed during this phase of the CAP/SRP Interconnection Facility design. However, water quality was considered in locating the point of delivery to the Granite Reef Forebay.

The Environmental Assessment Report also states that, "Any open channels or ditches will be walled or fenced, both above and below the ground surface, to prevent entrapment of Desert Tortoises and Gila Monsters as well as other species".

CHAPTER IV

HYDROLOGY AND HYDRAULICS

CHAPTER IV

HYDROLOGY AND HYDRAULICS

Section 1: Interconnection Facility Use

The Interconnection Facility will primarily be used to transport CAP water deliveries via the SRP for eligible users as well as upstream exchange deliveries. The location of the interconnection was based on a study conducted by the SRP Water Group Management Staff which produced a report titled, "Location, Design and Funding of the CAP/SRP Interconnection", dated October 1982.

Because the primary purpose of the interconnection is the delivery of irrigation water, which governs the operation of the interconnection, any power production is secondary. The annual energy estimated in this study is, therefore, based on irrigation releases.

Section 2: Hydrology

The flows for design of the interconnection facility and for the hydropower analysis were provided by the SRP. These flows were based on speculative CAP deliveries through the CAP/SRP Interconnection. A statistical analysis was performed by the SRP to arrive at estimates of the minimum, most, and maximum probable deliveries. Based on these results and a similar analysis by the USBR, which established the upper limit delivery rate, the design dischages for the interconnection facility were established at 220, 360, 450, 540 and 800 cubic-feet per second. By developing designs and cost estimates for the interconnection facility for each of these discharges, a cost curve was developed. Therefore, when the final design discharge is known, an estimate of the cost of constructing the interconnection facility can be obtained from the curve. The development of the design discharges for the interconnection facility are explained in more detail in the report, "Location, Design and Funding of the CAP/SRP Interconnection".

The flows for the hydropower analysis were also established by the SRP using a similar approach to that described above. The procedure and criteria are detailed in a letter dated July 26, 1983 from the SRP to PRC Engineering. The results of this analysis were the flow rates shown in Table IV-1 for use in developing the interconnection facility for hydropower generation.

TABLE IV-1

Hydropower Flow Rates (cfs)

	April-September			October-March		
Year	Minimum Probable	Most Probable	Maximum Probable	Minimum Probable	Most Probable	Maximum Probable
1988	77	262	658	40	143	499
2005	119	284	508	61	160	343
2017	128	254	418	66	139	264

The flows for the years beteen 1988 and 2005 and between 2005 and 2017 were determined by linear interpolation and are shown on Tables VI-1, VI-4, and VI-5.

Section 3: Hydraulics

The purpose of the hydraulics studies were to determine the net head available for hydropower generation, to determine the net head at the bypass and energy dissipation valve and to size the various features of the interconnection facility. Net head is calculated by subtracting head losses from gross head.

The CAP Granite Reef Aqueduct normal water surface at the SRP Turnout is at elevation 1493.0 and the interconnection canal water level was set at elevation 1318.0. Therefore, the gross head at the site is approximately 175 feet and is relatively constant. The criteria used to establish the water level in the interconnection facility canal is discussed in Chapter V, Section 5.

The hydraulic losses in the interconnection facility with and without hydropower were computed and the results shown in Tables IV-2 and IV-3. Hydraulic losses through the USBR turnout were estimated to be five-tenths velocity head across the trashrack and through the square and round entrances. Friction losses in the conduit pipe were computed using the Manning's Formula with an "n" value of 0.012 for both steel and concrete pipe. The USBR turnout has about 200 feet of 96-inch diameter concrete pipe. Approximately 400 feet of conduit was required between the end of the USBR turnout pipe and the hydropower plant or the energy dissipation valve. An additional piece of conduit estimated to be approximately 50 feet long was required for the bypass around the hydropower plant. Hydraulic losses were estimated to be one tenth of the difference in velocity head for the tapered contractions from the USBR pipe to the conduit and from the conduit to the energy dissipation valve and five tenths of the difference in velocity head at the bifurcation for the bypass pipe.

The head losses in the box culverts and diversion structures were minimized by sizing the rectangular channel to maintain the same velocity through the structures as was in the canal upstream.

The hydraulic losses in the interconnection to the turbine in the hydropower plant were determined by the computer program written for the power studies. The results are shown in Tables VI-1 through VI-5. Hydraulic losses through the USBR turnout structure, turnout pipe, contractions, and conduit were estimated using the same criteria as for the interconnection without hydropower. Hydraulic losses through the butterfly valve located upstream of the turbine were estimated to be fifteen-hundreths velocity head.

TABLE IV-2

HEAD LOSSES WITHOUT HYDROPOWER

Discharge (cfs)	USBR Turnout Losses (ft)	Conduit Diameter (in)	Contraction Losses (ft)	Friction Loss (ft)	Contraction Loss (ft)	Valve Diameter (in)	Valve Loss (ft)	Total Loss (ft)
220	0.3	30	3.1	91.6	0.0	30	43.2	138.2
360	0.7	42	2.1	40.8	6.2	30	115.1	164.9
450	1.2	42	3.3	64.5	2.9	36	87.2	159.1
540	1.7	42	4.7	91.8	0.0	42	67.8	166.0
800	3.7	54	3.5	52.7	2.4	48	87.2	149.5

TABLE IV-3

HEAD LOSSES WITH HYDROGENERATION

Discharge (cfs)	USBR Turnout Losses (ft)	Conduit Diameter (in)	Contraction Loss (ft)	Friction Loss (ft)	By-pass Conduit Diameter (in)	Contraction Loss (ft)	Friction Loss (ft)	Valve Diameter (in)	Contraction Loss (ft)	Valve Loss (ft)	Total Loss (ft)
220	0.3	54	0.3	4.0	30	14.1	12.3	24	4.5	105.5	141.0
360	0.7	66	0.3	3.7	36	18.4	12.4	30	4.3	115.7	155.5
450	1.2	78	0.2	2.4	36	30.0	19.4	36	0.0	87.2	140.4
540	1.7	84	0.1	2.3	42	22.9	12.3	36	4.2	125.6	169.1
800	3.7	96	0.0	2.4	48	29.5	13.2	48	0.0	87.2	136.0

CHAPTER V

ONE-DIRECTIONAL GRAVITY FLOW INTERCONNECTION FACILITY

CHAPTER V

ONE-DIRECTIONAL GRAVITY FLOW INTERCONNECTION FACILITY

Section 1: Layout and Design

The one-directional gravity flow interconnection facility was designed for flows of 220, 360, 450, 540 and 800 cubic feet per second to convey water to either the Granite Forebay, the South Canal, or to both. In addition, the facility was designed with and without the potential to add a hydropower plant in the future.

The alignment of the interconnection facility was chosen according to the following criteria: (1) provide the shortest possible routes to the Granite Reef Forebay and/or the South Canal; (2) provide maximum amount of mixing of CAP water with SRP water by locating the delivery point to the Granite Reef Forebay as far upstream from the Granite Reef Diversion Dam as practical; (3) provide minimum interference with the aggregate processing operation located adjacent to the west edge of the Spook Hill Floodway; and (4) provide minimum interference with the dam tender's residence and parking area. The layout of the interconnection facility is shown on Figure V-1.

Section 2: Chutes

A. General

Both open-channel and pipe type chutes were considered for that portion of the interconnection facility between the Salt River Project turnout on the Granite Reef Aqueduct and the energy dissipation device. A requirement of the design criteria in the technical specifications was that the interconnection facility should be designed to be compatible with the USBR turnout. Also the interconnection was to be designed to provide control of flow from the turnout.

The designs and design criteria for the turnout are discussed in Chapter II, Section 3. To be compatible with the turnout, which requires downstream flow control and full pipe flow for accurate flow measurement using a acoustic flow meter, the chute had to be a pipe conduit. An open channel chute was not compatible with the USBR turnout. The design utilized only one of the 96-inch diameter turnout pipes for all of the design discharges. A contraction section was selected to reduce the conduit diameter from the 96-inch diameter of the turnout pipe down to the design diameter of the conduit. An adapter section was provided for attaching the welded steel pipe to the end of the proposed precast concrete turnout pipe. The adapter and contraction sections are shown on Figure V-2. A secondary benefit of using only one outlet pipe is that hydropower can be developed in the future by using the other outlet pipe if the interconnection is initially constructed without the provision for hydropower.

Three kinds of pipe materials were considered for the conduit, welded steel, precast concrete, and fiberglass. A welded steel conduit was chosen for the project cost estimate based on experience, reliability, and a cost study comparing the costs of each type of pipe. Welded steel is also the commonly used material for penstocks. In addition, at the South Consolidated Hydroelectric Project on one of the SRP canals near Phoenix the penstock was first bid as concrete pipe, but prices were excessive, so it was rebid as steel pipe. The penstock at this plant was 84 inches in diameter.

Concrete pipe was a viable option and can be competitive in price for the smaller penstock sizes. For the larger diameters, concrete pipe becomes as much as twice as expensive as the welded steel pipe. The concrete pipe is not normally manufactured in the larger diameters for the pressure requirements of this project. Therefore, the concrete pipe would have to be manufactured especially for this project which would increase the cost of the pipe. On the CAP pumping plants, concrete pipe was used for the discharge lines on three of the plants while welded steel pipe was used for the discharge lines on one of the plants. This indicates that concrete pipe was competitive with steel depending on the pipe manufacturer. Both steel and concrete pipe should be included in the

specifications for construction of the interconnection to allow the contractors to bid the type of pipe they believe can be furnished and installed for the least cost.

Fiberglass pipe was slightly less expensive than steel pipe but it has not been used extensively for hydropower applications and therefore there was some reluctance to recommend it for this application.

The conduit could be either exposed or buried. The buried conduit was recommended for this project because it requires less maintenance, experiences smaller temperature stresses, eliminates vandalism and results in better aesthetics.

B. Without Hydropower

The conduit was sized for the scheme without hydropower by balancing the available gross head at the energy dissipation valve with the head losses through the turnout, conduit, and valve. The valve passes the design discharge if the total head losses in the system are less than or equal to the gross available head. If the head losses are greater than the design discharge, the valve will pass less than the design discharge. The losses for the system are shown in Table IV-2. The final conduit and valve sizes are shown in Table V-1.

TABLE V-1

INTERCONNECTION FACILITY WITHOUT HYDROPOWER
CONDUIT AND VALVE SIZES

Design Discharges (cfs)	Conduit Diameter (inches)	Valve Diameter (inches)
220	30	30
360	42	30
450	42	36
540	42	42
800	54	48

C. With Hydropower

The conduit (penstock) diameter for the interconnection with hydropower would normally be determined from an economic study by comparing the change in cost of the conduit with the change in the benefit of energy generated due to a change in head loss in the conduit. Since the scope of work did not include the completion of an economic study and since this was a schematic level design, the conduit diameter was determined by assuming a maximum velocity of 15 feet per second. A conduit diameter based on this velocity produces minimum friction losses and will be close to the diameter determined by an economic analysis. During final design when the design discharge has been established, the penstock diameter should be determined by an economic study as described above.

The bypass conduit and energy dissipation valve diameters were determined by balancing the total losses through the system with the available gross head at the valve. The losses for the system are shown in Table IV-3. The hydropower conduit, bypass conduit, and bypass valve sizes are shown in Table V-2.

TABLE V-2

INTERCONNECTION FACILITY WITH HYDROPOWER
CONDUIT AND BYPASS VALVE SIZES

Design Discharges (cfs)	Conduit Diameter (inches)	By-Pass Diameter (inches)	Valve Diameter (inches)
220	54	30	24
360	66	36	30
450	78	36	36
540	84	42	36
800	96	48	48

Section 3: Energy Dissipation and Flow Control

Once it was determined that the chute would have to be a pressure pipe to be compatible with the turnout, it followed that a valve or gate was required to

provide flow control. The design criteria also required the energy to be dissipated before the water reached the delivery point. The following five types of valves and energy dissipation schemes were considered:

a. Fixed-cone valve (Howell-Bunger).

b. Hollow-jet valve and stilling basin.

c. Sleeve-type valve and stilling well.

d. High pressure slide gate and stilling basin.

e. Jet flow gate and stilling basin.

The Howell-Bunger valve was chosen because it provides both flow control and energy dissipation; does not require a stilling basin; is manufactured commercially in standard sizes and therefore less expensive; and can easily be operated automatically by remote control. The Howell-Bunger valve does have the disadvantage of creating a considerable amount of spray because it normally discharges into the atmosphere. A reinforced concrete cylindrical hood is used when the spray from the dispersed jet is objectionable. A hood was proposed for the design for the interconnection to confine and direct the discharge from the valve. This type of valve cannot be used in locations where the air temperature may drop below freezing because the dispersed jet would create considerable icing problems. The coldest month at the project site is January which has an average daily minimum temperature of 38° F. Rarely does the temperature drop to freezing overnight. Therefore, the Howell-Bunger valve was applicable to the project.

Each of the other types of valves and gates considered are all custom designed and therefore more expensive. Also, each requires the use of a stilling basin which adds more cost. The sleeve-type valve proposed by the USBR in their turnout design criteria is not normally manufactured in the sizes required for this project.

Diameters of the Howell-Bunger valves sized for each of the design discharges and for the schemes with and without hydropower are shown in Tables V-1 and V-2.

Section 4: Diversion and Flow Control

An interconnection facility capable of conveying water to both the Granite Reef Forebay and the South Canal required the addition of a diversion structure to divide and control the flow. A reinforced concrete box shaped structure containing a radial gate to control the flow was selected for the diversion structure. Radial gates were chosen over slide gates because they are preferred for accurate and reliable flow control. The radial gate can also easily be automated for remote control operation. In addition, slide gates would be required where one radial gate can be used to pass the same flows. The use of slide gates requires a more complicated structure and a more complicated control system due to the requirement for more than one controller. The diversion and radial gate structures are shown on Figure V-3.

The sizes of radial gates chosen for the design flows was based on the depth of flow in the canal designed for the most economical channel section. These depths of flow are shown in Table V-3. Using these criteria and rounding off the depth of flow to the next largest one-half foot resulted in the gate heights shown also in Table V-3. The SRP has standard radial gate designs for heights of 6.0, 7.0, and 8.0 feet which are applicable to the gate heights required for each of the design discharges. The actual computed gate heights were used in the cost estimates for the project. The use of the SRP standard gates will increase the costs slightly since they are slightly higher, but this increase in cost will be insignificant and will not effect the results of the study. When the final design discharge has been established, the standard SRP radial gate designs can be utilized.

TABLE V-3

RADIAL GATE DIMENSIONS

Design Discharge (cfs)	Depth of Flow (ft.)	Gate Width (ft.)	Gate Height (ft.)
220	5.05	10.0	5.5
360	6.11	12.5	6.5
450	6.59	13.0	7.0
540	7.14	14.0	7.5
800	8.16	17.0	8.5

Section 5: Canal

A lined trapezoidal canal was selected for the water conveyance channel between the energy dissipation device and the point of delivery. A reinforced concrete pipe was investigated as a possible conveyance channel. The concrete pipe was ten times more expensive than an unreinforced concrete lined canal.

Both unreinforced formed concrete and shotcrete canal linings were investigated. A four-inch thick unreinforced concrete lining was about the same cost as a two inch thick shotcrete lining. It is seldom economical to place shotcrete linings thicker than about two inches and their use is limited to small canals or to mild climates where service requirements are not severe. Shotcrete linings are generally constructed thinner than concrete linings which makes them more readily damaged by hydrostatic pressure and by settlement of the subgrade. Furthermore, the inherent difficulty in controlling the thickness of the shotcrete application may result in a lining with areas where the thickness is less than specified which results in a potential weak area. The shotcrete lining may also be more susceptible to cracking due to the difficulty in controlling the water content in the mix. Curing of shotcrete linings is more difficult because they should be water cured and protected from direct rays of the sun for three days or the canal should be flooded.

The unreinforced concrete lining is less susceptible to shrinkage cracking since it requires less water and cement and the water content can be more accurately controlled. The concrete lining is also smoother which reduces friction and requires less curing compound. Furthermore, the thickness of a formed concrete lining is uniform, eliminating the possibility of thin areas.

The shotcrete lining could be used for the lower range of flows in the study, but would probably not be applicable to the higher range of flows. The two types of linings were almost equal in cost, and the unreinforced concrete lining is applicable over the entire range of flows. Therefore, for consistency of the study, the unreinforced formed concrete lining was used in the cost estimates. During final design when the design flow has been established, the two types of linings will be evaluated again to determine which one is the most applicable.

The canal cross section was designed using the criteria for the most economical channel section. The most economical section has a minimum wetted perimeter, and the minimum amount of excavation and canal lining. The most efficient trapezoidal section with side slopes of 1 vertical to 1.5 horizontal has a base width to depth of flow ratio of six tenths. The canal section for the interconnection facility was designed using these criteria. The amount of rock excavation required along the canal was minimal and did not affect the cost of the canal excavation significantly. If the depth of the canal using these criteria require considerable rock excavation, then a canal section that has a wider bottom and a shallower depth of flow should be considered to minimize the rock excavation.

The canal water surface was selected at elevation 1318.0 to minimize the amount of excavation below the original ground surface throughout the length of the canal. The elevation of the bottom of the canal varies for each of the design flows. The canal section is the same for the interconnection facility with and without hydropower. The top of the canal lining and the earth bank above the water surface was based on standard USBR practice shown in Figure V-4. The canal section dimensions for the design flows are shown in Figure V-5.

The cost of the canal includes the cost of chain link fences and service and access roads on each side of the canal acccording to the requirements of the Environmental Assessment Report and at the request of the SRP staff, respectively.

Section 6: Road Culvert

The interconnection facility crosses the road leading to the Granite Reef Diversion Dam for conveyance of water to the Granite Reef Forebay or to the South Canal. For conveyance to both delivery points, two road crossings are required. Three types of road crossings were investigated, a concrete box culvert (cast-in-place or precast), a bridge, or a reinforced concrete pipe. The cast-in-place concrete box culvert was the preferred road crossing structure because it was the least expensive. Bridge spans of approximately 30 and 45 feet for the lowest and highest design flows were about twice as expensive as the box culvert. Use of reinforced concrete pipe as a road crossing required either one very large pipe or two smaller pipes to pass the design flows. In either case the reinforced concrete pipe was more expensive than the box culvert and the head losses through a pipe were greater than for a box culvert. The road crossing was designed as a single barrel box culvert with a freeboard of approximately 1.90 feet. The width of the culvert was computed to maintain the depth of flow in the canal through the box culvert which minimizes losses through the culvert. The dimensions of the culvert for the design flows are shown in Figure V-6.

Section 7: Drop Structure

The water level in the canal was designed to be at approximate elevations 1317.0 and 1317.5 at the points of delivery to the South Canal and the Granite Reef Forebay, respectively. The water level in the Granite Reef Forebay is normally between elevations 1312.4 and 1311.9 except for a few times during the year when the forebay is drawn down to approximately elevation 1309.3 for maintenance purposes. The water level in the South Canal is at approximately elevation 1307.0 for the minimum flow of 220 cubic feet per second. The drop of

the water surface from the interconnection canal to the Granite Reef Forebay was approximately 5.5 feet and to the South Canal was approximately 10.0 feet. The energy from the falling water, for these heights of drops, can be dissipated satisfactorily by use of a concrete lined vertical drop structure and stilling pool. For larger discharges in the South Canal from either the interconnection or the Granite Forebay, the height of drop was less than 10.0 feet. The dimensions of the drop structures for the interconnection facility were assumed to be the same for the points of delivery to the South Canal and to the Granite Reef Forebay. The design of the drop structure at the South Canal does not include provisions for vehicular access across the structure because access was available by crossing the interconnection facility canal at the road crossing. The design criteria and dimensional data for the drop structure are shown on Figure V-7.

Annex V-A: Open-channel Chute Design

A. General

At the request of the SRP, this alternative was investigated under an extra work order and was added to the report to complete the schematic design study. The open-channel chute and stilling basin are alternatives to the pressure conduit and flow control and energy dissipation valve, assuming the turnout design is modified to provide upstream flow control. The remainder of the interconnection facility, downstream of the energy dissipation device, remains unchanged. However, the design of the interconnection facility with an open-channel chute eliminates the possibility of hydropower development.

The open-channel chute and stilling basin were designed for flows of 220, 360, 450, 540 and 800 cubic feet per second.

B. Assumed Turnout Design

The proposed USBR Salt River turnout was designed for downstream control and energy dissipation to force full pipe flow through the acoustic flow meter. The turnout design has to be modified to be compatible with an open-channel chute which conveys the water down the steep slope into a stilling basin where the energy is dissipated. Based on discussions with the USBR engineering staff, the following modifications were assumed will be made to the proposed turnout design to make it compatible with an open-channel chute:

(1) A slide gate will be added to provide upstream flow control.

(2) The invert of the turnout will be lowered to a level which provides ten diameters of straight, level pipe between the turnout and the acoustic flow meter structure.

(3) A baffle (weir) will be added downstream of the acoustic flow meter to force full pipe flow through the meter for all flows.

A sketch of the assumed turnout configuration is shown in Figure V-8.

C. Open-channel Chute

The open-channel chute was designed as a rectangular channel with the grade following the general slope of the original ground surface. The chute replaces the pressure conduit and some of the canal in the closed conduit design since the slope of the existing ground is steep enough to extend the chute beyond the end of the conduit. The open-channel chute was designed using standard procedures[7/] and the results are shown in Figure V-8.

D. Stilling Basin

The water flows down the steep chute and enters the stilling basin at a velocity greater than the critical velocity. The abrupt change in slope where the flat grade of the stilling basin floor meets the steep slope section, forces the water into a hydraulic jump and energy is dissipated in the resulting turbulence. The stilling basin was proportioned to contain the jump.[7/] In addition, the stilling basin requires tailwater to force the jump to occur where the turbulence can be contained. The general dimensions of the stilling basin for the design flows are shown in Figure V-8.

E. Flow Measurement

There are many different types of devices and structures used for the measurement of flow in irrigation systems. The types most commonly used that are applicable to this project are Parshall flumes and weirs.

Parshall flumes are specially designed inline open-channel measuring structures in which canal water flows over a broad, flat-converging section

through a narrow downward sloping throat section and then diverges on an upward sloping floor. The flume geometry forces the water at free-flow conditions to pass through critical depth on the crest, thereby providing a means of determining the rate of flow from a single water depth measurement. Free-flow conditions occur when the downstream canal water surface (tailwater) is low enough to have no efect on the depth of water on the crest. These conditions prevail over a wide range of tailwater depths. The tailwater elevation may be appreciably higher than the flume crest without affecting the free-flow discharge through the flume. However, if the downstream water surface exceeds specified limits, submerged flow conditions occur and two water depth measurements are required to determine the rate of flow.

Parshall flumes can be designed to measure flow from 0.01 cubic foot per second (cfs) to 3000 cfs. They are recognized as accurate and reliable flow measuring structures and have the following advantages: (1) capable of measuring the rate of flow with relatively small head loss, (2) capable of measuring a wide range of free-flow dischages with relatively high tailwater depths using a single water depth measurement, (3) capable of measuring submerged flow using two water depth measurements when the degree of submergence impedes the free-flow discharge, (4) virtually a self-cleaning structure because of flume geometry and the throat velocity, (5) cannot be easily altered to obtain unallocated water, (6) unaffected by velocity of approach, which is automatically controlled, when the flume is built to standard dimensions and used where the incoming flow is uniform, evenly distributed, and free of turbulence.

Parshall flumes have the following disadvantages: (1) are usually more expensive to construct than weirs, (2) must be constructed carefully and accurately for satisfactory performance.

Modified Parshall flumes are dimensioned so that the flume fits the canal profile. Generally, only flumes operating at free-flow conditions are modified, and the major modifications are made downstream of the throat section. All

critical factors which can significantly affect accurate measurement such as dimensions for the crest, throat, and location of the pressure tap are constructed to standard dimensions. For free-flow measurement, that portion of the flume downstream of the throat is not required.

Stilling wells are used in combination with Parshall flumes and weirs to permit more accurate reading of gages. They provide a water surface essentially free from surface fluctuations. Stilling wells are connected to the measuring structures by small pipes and provide a place for the installation of staff gages, hook gages, float gage recorders or any other type of device suitable for measuring water surface levels. The water surface in the stilling well is essentially the same elevation as in the measuring structure at the pressure taps.

Weirs are overflow structures built across open channels to measure the rate of flow of water. They are the most serviceable and economical measuring device where there is sufficient available fall in the canal and the quantity of water to be measured is not too large. Weirs have been used for many years and offer a simple, reliable method for water measurement if they are built correctly and maintained properly.

Weirs are identified by the shape of their openings. These openings can be either sharp-crested or broad-crested. Sharp-crested weirs are useful only as a means of measuring flowing water. Weirs not sharp-crested are commonly incorporated in hydraulic structures, and though sometimes employed to measure water, this is usually a secondary function.

Weirs have the following advantages: (1) capable of accurately measuring a wide range of flow, (2) easy to construct. Some disadvantages of weirs are: (1) impose a greater head loss in the canal system than other water measurement structures, (2) weir pools must be cleaned of sediment periodically and kept free of weeds and trash, (3) can be easily altered to obtain unallocated water.

The broad-crested weir is recommended for use in measuring the flows in the interconnection facility because: (1) it is less expensive than a Parshall flume, (2) can be easily constructed in a rectangular channel upstream of the drop at the end of the canal, (3) it is the preferred water measurement device by SRP.

CHAPTER VI

HYDROPOWER FACILITY

CHAPTER VI

HYDROPOWER FACILITY

Section 1: Layout and Design

The location of the hydropower plant was determined by maximizing the head on the turbine, minimizing the length of the penstock, which reduces the head loss due to friction and the penstock cost, and minimizing the excavation required for the plant site. These criteria were best satisfied by locating the plant at approximately the toe of the steep slope below the turnout structure location.

During final design, when a specific design discharge has been established, the location of the hydropower plant along the canal alignment should be established by performing an economic study for several sites by comparing the change in penstock and excavation costs with the change in the benefit of energy generated due to a change in head loss in the penstock. A study of this type was not performed for this phase of the project because an economic analysis was not included in the scope of work for the schematic design. This type of economic study would probably not improve the results of the Schematic Design due to the uncertainty of the final design discharges at this time.

The final location of the hydropower plant should be based on the results of more extensive geotechnical investigations. The location chosen for the hydropower plant for this study appears to be an old streambed, as was discussed in Chapter II, Section 2. Depending on the type of turbine to be installed, which is dependent on the final design discharge (see Figure VI-l), a suitable foundation may not be available at this site. If this is the case, the plant should be moved downstream to a point where a more suitable foundation can be obtained.

For a horizontal Francis-type turbine the bottom of the powerhouse structure was relatively shallow and probably does not set on rock. A typical horizontal Francis turbine layout is shown in Figure VI-2.

For a vertical Francis-type turbine, the bottom of the powerhouse structure was relatively deep and may be setting on rock. In addition, some rock excavation may be required for the structure. A typical vertical Francis turbine layout is shown in Figure VI-3.

More extensive field exploration is required prior to final design, including drill holes in the area, to determine the exact depth of the granite and the properties of the materials in the area of the plant location.

For purposes of this study, the powerhouse for a horizontal Francis turbine was assumed not to be founded on rock with no rock excavation. For the powerhouse with a vertical Francis turbine, the excavation was assumed to be 50 percent common and 50 percent rock with the powerhouse founded on rock.

A butterfly valve was provided upstream of the turbine to shut off the flow and provide for maintenance of the turbine.

Section 2: Turbine Selection

Several different types of turbines were considered for use on the project. The water surface in the Granite Reef Aqueduct and the Interconnection Canal were assumed to be constant at elevations 1493.0 and 1318.0, respectively. This gave a gross operating head on the turbine of approximately 175 feet. The water level in the canal fluctuates with the changes in discharge but these fluctuations were considered negligible. These fluctuations were approximately 1.39, 1.86, and 2.57 feet for the minimum, most, and maximum probable flow conditions.

Net head available at the turbine also depends on the head losses in the system between the turnout structure and the turbine. These head losses vary depending on the actual discharge and are shown on Tables VI-1 through VI-5.

Using the minimum, most and maximum probable discharges of 128, 284, and 658 cubic feet per second, respectively, for each of the design discharge

conditions, produced approximate installed generator capacities of 1600, 3600 and 8300 kilowatts, respectively assuming that the plant operated 100 percent of the time. Figure VI-1 shows that horizontal and vertical Francis and Crossflow turbines are applicable for the unit sizes and head at the site. The horizontal Francis was applicable to the minimum and most probable flow conditions and the vertical Francis was applicable to the maximum probable flow condition.

The Crossflow turbine could have been used, but it is a proprietary unit and was more expensive than a Francis turbine. Also, the Crossflow turbine has a peak efficiency of approximately 85% which was less than the peak efficiency of the Francis turbine of approximately 90% for the computed turbine sizes. Consequently, the Crossflow turbine produces less annual energy than a Francis turbine which makes it less economical. The Crossflow turbine should probably be given further consideration during final design if the design discharge chosen is within its operating range.

For the minimum and most probable flow conditions, the horizontal Francis turbine was selected because it is usually set higher with respect to minimum tailwater than a vertical Francis turbine, which decreases the amount of excavation and structure below the ground, thereby reducing costs. Also, generator costs for horizontal units are usually less than for vertical units. The horizontal Francis turbine requires a simpler installation, is more easily maintained, and is installed above tailwater, which provides for easier access and routine repair of the runner. For the maximum probable flow condition, the vertical Francis turbine was selected.

Available head at the site is greater than most Kaplan turbine designs, which eliminates the use of this type of turbine. Several foreign firms indicate in their catalogs that Kaplan units can be manufactured for heads up to 180 feet, but these would be specially custom designed units and would probably be expensive. In addition, experience shows that they have not actually manufactured Kaplan turbines for this high of head.

Pumps were also considered as another possible alternative type of turbine. The use of standard "shelf item" centrifugal pumps as turbines has limited applications due to their relatively narrow operating range. Most of the recent installations of this type have been at sites with relatively low flows, usually less than 100 cubic feet per second, and with installed capacities between 50 and 1,000 kilowatts. Therefore, the use of centrifugal pumps as turbines was not applicable to this project.

Site improvement and tailrace costs were included in the cost estimates. Site improvements include drainage, erosion control, grading and miscellaneous site features including parking, fencing, landscaping, and environmental controls during construction. A much larger service yard and access road to the site will be required for the interconnection facility with hydropower. A tailrace cost was also included in the cost estimates to include the additional excavation required downstream of the hydropower plant.

Section 3: By-Pass

A requirement of the design for the interconnection facility with hydropower was the ability to by-pass the design discharge. A high pressure valve or gate that can be operated automatically by remote control was required adjacent to the hydropower plant to satisfy this requirement. Several types of valves and high pressure gates are available for this application and are listed in Chapter V, Section 3.

The Howell-Bunger valve was selected for the by-pass to provide both energy dissipation and flow control. The valve characteristics are discussed in Chapter V, Section 3. The sizes and hydraulic losses for the by-pass pipe and Howell-Bunger valve are shown in Table IV-3.

Section 4: Hydraulic Transients

A. Closing Time of Wicket Gates and Pressure Rise

It is important to study the hydraulic transients induced by the turbine wicket gate closure and examine the effects on each component of the interconnection facility. Waterhammer is the main hydraulic transient phenomenon, which is defined as the change in pressure, caused by sudden changes in the rate of flow of water. It occurs at all points in the penstock between the Granite Reef Aqueduct and the powerplant.

The USBR concrete pipe extends about 200 feet (measured horizontally) from the canal turnout structure and was designed to withstand the internal pressures listed below:

Horizontal Length from Intake (ft)	Pipe Diameter (Inches)	Design Pressure (ft H_2O)
0 to 50	96	150
50 to 125	96	75
125 to 200	96	125

Governor regulation was selected so that the wicket gate closure times under the most severe conditions did not create a pressure rise in excess of the pipe design pressures.

The pressure rise was calculated for the following alternative installed capacities of power plant:

Alternative	Flow	Design Discharge (cfs)	Design Head (ft)	Penstock Diameter (inches)	Installed Capacities (kw)
A2	Minimum Probable	100	170	36	1225
B1	Most Probable	284	170	60	3478
C1	Maximum Probable	658	170	90	8058

The pressure rise was calculated for the above alternatives using Allevi's charts for various wicket gate closure times and the results are plotted in Figures VI-4, VI-5, and VI-6 11/.

B. Flywheel Effect and Speed Rise

Although the turbine and generator are designed to withstand runaway speed, severe vibrations sometimes develop at excessive speeds, which may possibly damage the gate operating mechanism. To minimize such vibrations, speed rise of a turbine is usually limited to 60 percent for the condition of full load rejection where there is no need for close regulation of the connected electrical system by the turbine.

The following relationship gives the speed change as a function of head change in flywheel effect, WR^2 12/.

$$N^2 - N_o^2 = \frac{1{,}620{,}000\ t\ (hp)}{WR^2}$$

in which, t = Time required by governor to move turbine gates to new position.

hp = Instantaneous change in horsepower delivered externally by the turbine

N_o = Turbine speed in rpm at the instant of external load change

N = Instantaneous turbine speed in rpm at the end of time t.

WR^2 = Polar moment of inertia of rotating masses about axis in pounds-feet-seconds.

$$\text{Speed Rise} = n = \frac{N - No}{N_o} \times 100 \text{ percent}$$

The above computed speed rise requires two corrections: the first to compensate for the fact that at any given head there is an upper limit to the speed which the turbine is capable of reaching, namely the runaway speed; the second to make allowance for the effect of water hammer.

The correction for runaway speed was calculated as follows:

Let S = the relative speed of the turbine at runaway expressed as a percentage to the normal synchronous speed

n_{rs} = Speed rise corrected for runaway speed

$$n_{rs} = \frac{n}{100 + \frac{100\,n}{(S - 100)}}$$

The correction for water hammer was calculated as follows:

The water hammer increment or decrement changes the power supplied to the turbine according to the 3/2 power of the resultant relative value of the increased head in accordance with established principles.

If H_o is the initial head on the turbine and H is the increased head after load rejection due to water hammer, then

$$h = \text{Pressure rise due to water hammer} = \frac{H_1 - H_o}{H_o}$$

The power input of the turbine will be:

$$(HP)_1 = (HP)_0\ (1 + h)^{3/2}$$

Since speed rise varies directly as the power, speed rise corrected for water hammer will be:

$$n_{rs + wh} = n_{rs} (1 + h)^{3/2}$$

The relevant values of pressure rise are obtained from water hammer analysis.

C. Water Hammer/Speed Rise

The determination of acceptable governor characteristics for the turbines in the CAP/SRP Interconnection Facility was subject to three constraints:

1. The allowable pressure rise in the penstock produced by closure of the wicket gate should not overstress the turnout pipe and should not exceed 45 percent of the maximum static head at the wicket gates.

2. The allowable turbine speed rise should not exceed 60 percent of their synchronous speed.

3. The polar moment of inertia (WR^2) added to enhance the flywheel effect of the generator should not exceed 50 percent of the normal polar moment of inertia of the mass of the generator rotating about its axis. Values of additional WR^2 exceeding 50 percent result in considerable cost increases, as well as lowered generator efficiencies.

The values of turbine speed rise for various wicket gate closure times were computed on the basis of the method described above and are plotted in Figures VI-4, VI-5, and VI-6. The wicket gate closure time required to limit speed rise to 60 percent and the corresponding values of maximum pressure rise was read from the curves and are tabulated below for Alternatives A2, B1 and C1:

Alternative	Speed Rise (Percent)	Wicket Gate Closure Time (Seconds)	Corresonding Maximum Pressure Rise (Percent)
A2	60	6.8	20
B1	60	6.5	32
C1	60	9.5	26

The pressure rise was assumed to vary linearly from a maximum at the turbine wicket gates to zero at the water surface in the Granite Reef Aqueduct. The values of the pressure rise were computed for the USBR pipes and found to be well within the allowable pressures for which the pipes were designed as shown below for alternative B1, which has the maximum pressure rise.

Alternative	Distance From Intake (ft)	Pressure Rise (Percent)	Actual Static Head (ft)	Total Head (ft)	Design Head (ft)
B1	0 to 52.7	2.8	30.6	31.4	150
	52.7 to 131.8	6.9	38.93	41.6	75
	131.8 to 211	11.0	80.40	89.3	125

Therefore, a hydropower plant was included as part of the interconnection facility without any adverse effects on the intake structure or the pressure pipe. The outlet valve provided in the interconnection facility was utilized as a bypass valve, which will automatically open when the wicket gates are closed and ensure that the water hammer was minimized. No significant wave action or surges are, therefore, expected in the CAP canal. A more detailed analysis of water hammer in the penstock and surges in the canal should be performed during the final design phase when the actual design discharges have been established.

The alignment and profile of the penstock was designed without any abrupt kinks which ensure that there is no flow separation at any point in the pipeline during negative surges.

Section 5: Alternative Power Development Schemes

One unit was selected which covered the entire range of flows for the most and maximum probable flow conditions. There was no advantage of two units because the amount of annual energy generated was unchanged.

A single unit sized to discharge the maximum flow was not the best alternative for the minimum flow condition. The maximum flow occurs in the last year of the 30-year study period and there were several years at the beginning when no energy was generated because the flow was below the minimum operating flow of the Francis turbine. A more economical installation was one which was sized based on the minimum flow and generates as much energy as possible in the early years of the study. Since the present worth of energy generated in the early years is greater than the present worth of energy generated in the last few years of the study, a greater net benefit is realized with a smaller unit which generates more energy in the early years. An added alternative to the minimum flow condition is to add a small unit some time in the future to utlize the by-passed flows from the unit sized on the minimum flow. The study of this alternative was reserved for the time when the actual design dischages for the interconnection are known.

Only one turbine size was selected for each of the three alternative flow conditions for the study. The next section discusses in detail the selection of these unit sizes.

Section 6: Power Potential

The flows furnished by the SRP, to be used for the hydropower study, and the constant gross head of approximatly 175 feet were the criteria used to select the hydropower plant size. The fluctuation of the canal water surface was discussed in Section 2. The flows are listed in Table IV-1. The design head and design discharge of a turbine were selected to maximize the annual energy generated at the site.

Since the head at the site was relatively constant, the unit operates at approximately 100 percent of design head over the range of flows and the design and maximum discharges are identical for the turbines used in the study. According to Figure VI-7, when the unit is operating at 100 percent of rated head, the maximum discharge is 100 percent of rated discharge and the unit is producing 100 percent of rated capacity.

For a Francis turbine, the lower limit of operation is approximately 40 percent of rated discharge. This corresponds to a desirable lower limit of operation, for reaction turbines, of 75 to 80 percent efficiency, depending on the specific speed of the unit. At lower efficiencies, which correspond to smaller gate openings, there will be accelerated damage from cavitation. To prevent excessive damage from cavitation at low discharges, the runner is made out of stainless steel. The cost estimates in this report include stainless steel runners. The USBR typically specifies that Francis turbines shall be guaranteed to operate at 0.3 gate opening for a specified amount of time without any significant cavitation damage. A gate opening of 0.3 corresponds to discharges below 40 percent for specific speeds between 25 and 75. The specific speeds for the Francis turbines used in this study are within this range. This shows that a lower limit of operation of approximately 40 percent for a Francis turbine is not unreasonable and does not depart from normal turbine design practices.

For an installed capacity determined by the maximum flows of 128, 284 and 658 cubic feet per second for the minimum, most and maximum probable flow conditions, respectively, the minimum flows at which the turbine can operate are 51, 114 and 263 cubic feet per second, respectively. Comparing these minimum flows to the minimum flows for each of the three flow conditions shows that for the most and maximum flow conditions, a unit size based on the maximum flow operates over the entire range of actual flows and produces the maximum amount of energy possible. For the minimum probable flow condition, the unit size based on the maximum flow does not operate over the entire range of flows. There was a period of about nine years starting in 1988 when the unit does not generate any energy during the October to March period because the

flow was below 51 cubic feet per second. A better alternative for this flow condition was to size the unit based on the minimum flow. This required a unit operated between 100 and 40 cubic feet per second. This unit produces almost the same total energy over the 30-year period, depending on the penstock size, because it operates 100 percent of the time. During the years 1998 to 2017, flows varying from 1.7 to 28 cubic feet per second, respectively, are by-passed to satisfy downstream delivery requirements. An additional small unit of about 350 kilowatts added some time after 1998, to utilize these by-passed flows, increases the total energy generated over the 30-year period. Since the design discharge for the interconnection has not been established, it was not worthwhile during this phase of design to investigate the benefits of adding this small unit.

The basic equation used to determine the rated generator capacity in kilowatts when a discharge and net hydraulic head are known is:

$$\text{Rated Capacity} = \frac{Q\,H\,E_t E_g}{11.8} \qquad \text{(Kilowatts)}$$

where

Q	=	discharge in cubic feet per second
H	=	net hydraulic head in feet
E_t	=	turbine efficiency in percent
E_g	=	generator efficiency in percent

Normally, the product of E_t times E_g is taken as 0.85 for preliminary sizing and establishing installed capacity. The operating conditions for the hydropower plant were not given as part of the design data. Therefore, it was assumed that the plant could operate 100 percent of the time, 24 hours per day and 365 days per year. The plant factor was calculated by dividing the average annual energy by the product of installed capacity and 8,760 hours per year. The hydropower unit data for the flow conditions at this site are shown in the following table:

HYDROPOWER UNIT DATA

Alternative	Design Discharge (cfs)	Minimum Discharge (cfs)	Design Head (ft)	Installed Capacity (kw)	Penstock Diameter (ft)	Plant Factor
A 1	128	51	170	1567	3.5	0.59
A 2	100	40	170	1225	3.0	0.76
B 1	284	114	170	3478	5.0	0.74
C 1	658	263	170	8058	7.5	0.69

The penstock size was based on a velocity of 15 feet per second and the maximum flow. A penstock sized on this basis produces minimum head losses due to friction, since the flows vary from summer to winter and from year to year. The velocity equals 15 feet per second only during the six-month summer period for the one year when the maximum flow occurs. At all other times, the flows are less and, therefore, the velocity was less. At minimum flow, the velocity was approximatly 6.0 feet per second. The average velocity was approximately 10 feet per second, which is usually the value chosen if flows are relatively constant. A penstock designed for this velocity has minimal head losses due to friction and the water hammer effect on the penstock does not require extra thickness if the penstock is relatively short.

A computer program was used to compute the energy generated for each six-month period and the total energy for the 30-year period from 1988 to 2017. The program also computed the head losses in the system based on the actual discharges. The program used a generator efficiency of 95 percent and a constant turbine efficiency of 90 percent, for a combined efficiency of 86 percent. Turbine efficiency curves are shown in Figure VI-8. Use of a variable turbine efficiency based on percent of rated discharge was not appropriate for this phase of the design, since the head was practically constant and the final actual design discharges are not known. This kind of refinement can be made during the final design phase when the design discharge has been established. The results of the power studies are shown in Tables VI-1 through VI-5.

Computer printouts for two alternatives for the minimum probable flow condition are provided to allow the SRP staff to perform an economic study to verify that the 1225 kW unit is more economical than the 1567 kW unit. In addition, two printouts for two different penstock diameters for the 1225 kW unit are provided to show that by increasing the penstock diameter six inches the total energy generated increased a small amount. Since the final design discharge has not been established, it was not considered necessary to determine the most economic penstock diameter during this phase of the design.

TABLE VI-1

SALT RIVER PROJECT
CENTRAL ARIZONA PROJECT/SALT RIVER PROJECT INTERCONNECTION FACILITY
SCHEMATIC DESIGN POWER STUDY

SEPTEMBER 21, 1983

ALTERNATIVE: A1
INSTALLED CAPACITY: 1567 KW
DESIGN HEAD: 170 FT
DESIGN DISCHARGE: 128 CFS
MINIMUM DISCHARGE: 51 CFS
GROSS HEAD: 175 FT
PENSTOCK DIAMETER: 3.5 FT

	MINIMUM PROBABLE FLOW RATES (CFS)		TURBINE FLOWS (CFS)		HEAD LOSS (FEET)		MINIMUM PROBABLE ENERGY (MWH)		ANNUAL ENERGY (MWH)
YEAR	APR-SEP	OCT-MAR	APR-SEP	OCT-MAR	APR-SEP	OCT-MAR	APR-SEP	OCT-MAR	TOTAL
1988	77.0	40.0	77.0	0.0	2.7	0.0	4204.	0.	4204.
1989	79.5	41.2	79.5	0.0	2.9	0.0	4334.	0.	4334.
1990	81.9	42.5	81.9	0.0	3.1	0.0	4464.	0.	4464.
1991	84.4	43.7	84.4	0.0	3.2	0.0	4594.	0.	4594.
1992	86.9	44.9	86.9	0.0	3.4	0.0	4723.	0.	4723.
1993	89.4	46.2	89.4	0.0	3.6	0.0	4851.	0.	4851.
1994	91.8	47.4	91.8	0.0	3.8	0.0	4980.	0.	4980.
1995	94.3	48.6	94.3	0.0	4.0	0.0	5107.	0.	5107.
1996	96.8	49.9	96.8	0.0	4.3	0.0	5235.	0.	5235.
1997	99.2	51.1	99.2	51.1	4.5	1.2	5361.	2815.	8176.
1998	101.7	52.4	101.7	52.4	4.7	1.2	5488.	2882.	8370.
1999	104.2	53.6	104.2	53.6	4.9	1.3	5613.	2949.	8562.
2000	106.6	54.8	106.6	54.8	5.2	1.4	5738.	3016.	8754.
2001	109.1	56.1	109.1	56.1	5.4	1.4	5863.	3083.	8946.
2002	111.6	57.3	111.6	57.3	5.7	1.5	5987.	3150.	9136.
2003	114.1	58.5	114.1	58.5	5.9	1.6	6110.	3216.	9327.
2004	116.5	59.8	116.5	59.8	6.2	1.6	6233.	3283.	9516.
2005	119.0	61.0	119.0	61.0	6.4	1.7	6355.	3349.	9705.
2006	119.7	61.4	119.7	61.4	6.5	1.7	6392.	3372.	9764.
2007	120.5	61.8	120.5	61.8	6.6	1.7	6429.	3394.	9823.
2008	121.3	62.3	121.3	62.3	6.7	1.8	6466.	3417.	9883.
2009	122.0	62.7	122.0	62.7	6.8	1.8	6503.	3439.	9942.
2010	122.7	63.1	122.7	63.1	6.8	1.8	6540.	3461.	10001.
2011	123.5	63.5	123.5	63.5	6.9	1.8	6576.	3484.	10060.
2012	124.2	63.9	124.2	63.9	7.0	1.9	6613.	3506.	10119.
2013	125.0	64.3	125.0	64.3	7.1	1.9	6649.	3529.	10178.
2014	125.8	64.8	125.8	64.8	7.2	1.9	6686.	3551.	10237.
2015	126.5	65.2	126.5	65.2	7.3	1.9	6722.	3573.	10296.
2016	127.2	65.6	127.2	65.6	7.4	2.0	6759.	3596.	10354.
2017	128.0	66.0	128.0	66.0	7.4	2.0	6795.	3618.	10413.

TOTAL: 244053.
AVERAGE: 8135.

TABLE VI-2

SALT RIVER PROJECT
CENTRAL ARIZONA PROJECT/SALT RIVER PROJECT INTERCONNECTION FACILITY
SCHEMATIC DESIGN POWER STUDY

SEPTEMBER 21, 1983

ALTERNATIVE: A2
INSTALLED CAPACITY: 1225 KW
DESIGN HEAD: 170 FT
DESIGN DISCHARGE: 100 CFS
MINIMUM DISCHARGE: 40 CFS
GROSS HEAD: 175 FT
PENSTOCK DIAMETER: 3.0 FT

	MINIMUM PROBABLE FLOW RATES (CFS)		TURBINE FLOWS (CFS)		HEAD LOSS (FEET)		MINIMUM PROBABLE ENERGY (MWH)		ANNUAL ENERGY (MWH)
YEAR	APR-SEP	OCT-MAR	APR-SEP	OCT-MAR	APR-SEP	OCT-MAR	APR-SEP	OCT-MAR	TOTAL
1988	77.0	40.0	77.0	40.0	5.4	1.5	4137.	2199.	6337.
1989	79.5	41.2	79.5	41.2	5.8	1.6	4261.	2266.	6527.
1990	81.9	42.5	81.9	42.5	6.1	1.6	4384.	2333.	6717.
1991	84.4	43.7	84.4	43.7	6.5	1.7	4506.	2399.	6905.
1992	86.9	44.9	86.9	44.9	6.9	1.8	4628.	2466.	7093.
1993	89.4	46.2	89.4	46.2	7.3	1.9	4748.	2532.	7280.
1994	91.8	47.4	91.8	47.4	7.7	2.1	4867.	2598.	7465.
1995	94.3	48.6	94.3	48.6	8.1	2.2	4986.	2664.	7650.
1996	96.8	49.9	96.8	49.9	8.5	2.3	5103.	2730.	7833.
1997	99.2	51.1	99.2	51.1	9.0	2.4	5220.	2796.	8015.
1998	101.7	52.4	100.0	52.4	9.1	2.5	5255.	2861.	8117.
1999	104.2	53.6	100.0	53.6	9.1	2.6	5255.	2927.	8182.
2000	106.6	54.8	100.0	54.8	9.1	2.7	5255.	2992.	8247.
2001	109.1	56.1	100.0	56.1	9.1	2.9	5255.	3057.	8313.
2002	111.6	57.3	100.0	57.3	9.1	3.0	5255.	3122.	8378.
2003	114.1	58.5	100.0	58.5	9.1	3.1	5255.	3187.	8443.
2004	116.5	59.8	100.0	59.8	9.1	3.3	5255.	3252.	8507.
2005	119.0	61.0	100.0	61.0	9.1	3.4	5255.	3317.	8572.
2006	119.7	61.4	100.0	61.4	9.1	3.4	5255.	3338.	8594.
2007	120.5	61.8	100.0	61.8	9.1	3.5	5255.	3360.	8615.
2008	121.3	62.3	100.0	62.3	9.1	3.5	5255.	3382.	8637.
2009	122.0	62.7	100.0	62.7	9.1	3.6	5255.	3403.	8659.
2010	122.7	63.1	100.0	63.1	9.1	3.6	5255.	3425.	8680.
2011	123.5	63.5	100.0	63.5	9.1	3.7	5255.	3447.	8702.
2012	124.2	63.9	100.0	63.9	9.1	3.7	5255.	3468.	8724.
2013	125.0	64.3	100.0	64.3	9.1	3.8	5255.	3490.	8745.
2014	125.8	64.8	100.0	64.8	9.1	3.8	5255.	3512.	8767.
2015	126.5	65.2	100.0	65.2	9.1	3.9	5255.	3533.	8788.
2016	127.2	65.6	100.0	65.6	9.1	3.9	5255.	3555.	8810.
2017	128.0	66.0	100.0	66.0	9.1	4.0	5255.	3576.	8832.

TOTAL: 243133.
AVERAGE: 8104.

TABLE VI-3

SALT RIVER PROJECT
CENTRAL ARIZONA PROJECT/SALT RIVER PROJECT INTERCONNECTION FACILITY
SCHEMATIC DESIGN POWER STUDY

SEPTEMBER 21, 1983

ALTERNATIVE: A3
INSTALLED CAPACITY: 1225 KW
DESIGN HEAD: 170 FT
DESIGN DISCHARGE: 100 CFS
MINIMUM DISCHARGE: 40 CFS
GROSS HEAD: 175 FT
PENSTOCK DIAMETER: 3.5 FT

	MINIMUM PROBABLE FLOW RATES (CFS)		TURBINE FLOWS (CFS)		HEAD LOSS (FEET)		MINIMUM PROBABLE ENERGY (MWH)		ANNUAL ENERGY (MWH)
YEAR	APR-SEP	OCT-MAR	APR-SEP	OCT-MAR	APR-SEP	OCT-MAR	APR-SEP	OCT-MAR	TOTAL
1988	77.0	40.0	77.0	40.0	2.7	0.7	4204.	2209.	6412.
1989	79.5	41.2	79.5	41.2	2.9	0.8	4334.	2276.	6610.
1990	81.9	42.5	81.9	42.5	3.1	0.8	4464.	2344.	6808.
1991	84.4	43.7	84.4	43.7	3.2	0.9	4594.	2411.	7005.
1992	86.9	44.9	86.9	44.9	3.4	0.9	4723.	2479.	7201.
1993	89.4	46.2	89.4	46.2	3.6	1.0	4851.	2546.	7397.
1994	91.8	47.4	91.8	47.4	3.8	1.0	4980.	2613.	7593.
1995	94.3	48.6	94.3	48.6	4.0	1.1	5107.	2681.	7788.
1996	96.8	49.9	96.8	49.9	4.3	1.1	5235.	2748.	7982.
1997	99.2	51.1	99.2	51.1	4.5	1.2	5361.	2815.	8176.
1998	101.7	52.4	100.0	52.4	4.5	1.2	5400.	2882.	8283.
1999	104.2	53.6	100.0	53.6	4.5	1.3	5400.	2949.	8350.
2000	106.6	54.8	100.0	54.8	4.5	1.4	5400.	3016.	8416.
2001	109.1	56.1	100.0	56.1	4.5	1.4	5400.	3083.	8483.
2002	111.6	57.3	100.0	57.3	4.5	1.5	5400.	3150.	8550.
2003	114.1	58.5	100.0	58.5	4.5	1.6	5400.	3216.	8617.
2004	116.5	59.8	100.0	59.8	4.5	1.6	5400.	3283.	8683.
2005	119.0	61.0	100.0	61.0	4.5	1.7	5400.	3349.	8750.
2006	119.7	61.4	100.0	61.4	4.5	1.7	5400.	3372.	8772.
2007	120.5	61.8	100.0	61.8	4.5	1.7	5400.	3394.	8795.
2008	121.3	62.3	100.0	62.3	4.5	1.8	5400.	3417.	8817.
2009	122.0	62.7	100.0	62.7	4.5	1.8	5400.	3439.	8840.
2010	122.7	63.1	100.0	63.1	4.5	1.8	5400.	3461.	8862.
2011	123.5	63.5	100.0	63.5	4.5	1.8	5400.	3484.	8884.
2012	124.2	63.9	100.0	63.9	4.5	1.9	5400.	3506.	8907.
2013	125.0	64.3	100.0	64.3	4.5	1.9	5400.	3529.	8929.
2014	125.8	64.8	100.0	64.8	4.5	1.9	5400.	3551.	8951.
2015	126.5	65.2	100.0	65.2	4.5	1.9	5400.	3573.	8974.
2016	127.2	65.6	100.0	65.6	4.5	2.0	5400.	3596.	8996.
2017	128.0	66.0	100.0	66.0	4.5	2.0	5400.	3618.	9018.

TOTAL: 247851.
AVERAGE: 8262.

TABLE VI-4

SALT RIVER PROJECT
CENTRAL ARIZONA PROJECT/SALT RIVER PROJECT INTERCONNECTION FACILITY
SCHEMATIC DESIGN POWER STUDY

SEPTEMBER 21, 1983

ALTERNATIVE: B1
INSTALLED CAPACITY: 3478 KW
DESIGN HEAD: 170 FT
DESIGN DISCHARGE: 284 CFS
MINIMUM DISCHARGE: 114 CFS
GROSS HEAD: 175 FT
PENSTOCK DIAMETER: 5.0 FT

	MOST PROBABLE FLOW RATES (CFS)		TURBINE FLOWS (CFS)		HEAD LOSS (FEET)		MOST PROBABLE ENERGY (MWH)		ANNUAL ENERGY (MWH)
YEAR	APR-SEP	OCT-MAR	APR-SEP	OCT-MAR	APR-SEP	OCT-MAR	APR-SEP	OCT-MAR	TOTAL
1988	262.0	143.0	262.0	143.0	6.1	1.8	14018.	7846.	21863.
1989	263.3	144.0	263.3	144.0	6.2	1.9	14082.	7900.	21981.
1990	264.6	145.0	264.6	145.0	6.3	1.9	14146.	7953.	22099.
1991	265.9	146.0	265.9	146.0	6.3	1.9	14210.	8007.	22217.
1992	267.2	147.0	267.2	147.0	6.4	1.9	14274.	8060.	22334.
1993	268.5	148.0	268.5	148.0	6.4	2.0	14338.	8114.	22452.
1994	269.8	149.0	269.8	149.0	6.5	2.0	14401.	8168.	22569.
1995	271.1	150.0	271.1	150.0	6.6	2.0	14465.	8221.	22686.
1996	272.4	151.0	272.4	151.0	6.6	2.0	14529.	8275.	22803.
1997	273.6	152.0	273.6	152.0	6.7	2.1	14592.	8328.	22921.
1998	274.9	153.0	274.9	153.0	6.8	2.1	14656.	8382.	23037.
1999	276.2	154.0	276.2	154.0	6.8	2.1	14719.	8435.	23154.
2000	277.5	155.0	277.5	155.0	6.9	2.1	14783.	8489.	23271.
2001	278.8	156.0	278.8	156.0	6.9	2.2	14846.	8542.	23388.
2002	280.1	157.0	280.1	157.0	7.0	2.2	14909.	8595.	23504.
2003	281.4	158.0	281.4	158.0	7.1	2.2	14972.	8649.	23621.
2004	282.7	159.0	282.7	159.0	7.1	2.3	15035.	8702.	23737.
2005	284.0	160.0	284.0	160.0	7.2	2.3	15098.	8755.	23853.
2006	281.5	158.3	281.5	158.3	7.1	2.2	14976.	8662.	23638.
2007	279.0	156.5	279.0	156.5	7.0	2.2	14854.	8569.	23423.
2008	276.5	154.8	276.5	154.8	6.8	2.1	14732.	8475.	23207.
2009	274.0	153.0	274.0	153.0	6.7	2.1	14610.	8382.	22991.
2010	271.5	151.3	271.5	151.3	6.6	2.0	14487.	8288.	22775.
2011	269.0	149.5	269.0	149.5	6.5	2.0	14364.	8194.	22558.
2012	266.5	147.8	266.5	147.8	6.3	2.0	14240.	8101.	22341.
2013	264.0	146.0	264.0	146.0	6.2	1.9	14117.	8007.	22124.
2014	261.5	144.3	261.5	144.3	6.1	1.9	13993.	7913.	21906.
2015	259.0	142.5	259.0	142.5	6.0	1.8	13868.	7819.	21687.
2016	256.5	140.8	256.5	140.8	5.9	1.8	13744.	7725.	21469.
2017	254.0	139.0	254.0	139.0	5.8	1.7	13619.	7631.	21250.

TOTAL: 680861.
AVERAGE: 22695.

TABLE VI-5

SALT RIVER PROJECT
CENTRAL ARIZONA PROJECT/SALT RIVER PROJECT INTERCONNECTION FACILITY
SCHEMATIC DESIGN POWER STUDY

SEPTEMBER 21, 1983

ALTERNATIVE: C1
INSTALLED CAPACITY: 8058 KW
DESIGN HEAD: 170 FT
DESIGN DISCHARGE: 658 CFS
MINIMUM DISCHARGE: 263 CFS
GROSS HEAD: 175 FT
PENSTOCK DIAMETER: 7.5 FT

	MAXIMUM PROBABLE FLOW RATES (CFS)		TURBINE FLOWS (CFS)		HEAD LOSS (FEET)		MAXIMUM PROBABLE ENERGY (MWH)		ANNUAL ENERGY (MWH)
YEAR	APR-SEP	OCT-MAR	APR-SEP	OCT-MAR	APR-SEP	OCT-MAR	APR-SEP	OCT-MAR	TOTAL
1988	658.0	499.0	658.0	499.0	7.5	4.3	34920.	26985.	61905.
1989	649.2	489.8	649.2	489.8	7.3	4.2	34493.	26513.	61006.
1990	640.4	480.6	640.4	480.6	7.1	4.0	34064.	26040.	60104.
1991	631.5	471.5	631.5	471.5	6.9	3.8	33633.	25566.	59199.
1992	622.7	462.3	622.7	462.3	6.7	3.7	33201.	25090.	58291.
1993	613.9	453.1	613.9	453.1	6.5	3.6	32767.	24613.	57380.
1994	605.1	443.9	605.1	443.9	6.3	3.4	32332.	24134.	56466.
1995	596.2	434.8	596.2	434.8	6.2	3.3	31895.	23655.	55550.
1996	587.4	425.6	587.4	425.6	6.0	3.1	31457.	23174.	54631.
1997	578.6	416.4	578.6	416.4	5.8	3.0	31017.	22692.	53709.
1998	569.8	407.2	569.8	407.2	5.6	2.9	30576.	22209.	52784.
1999	560.9	398.1	560.9	398.1	5.4	2.7	30133.	21724.	51857.
2000	552.1	388.9	552.1	388.9	5.3	2.6	29689.	21239.	50928.
2001	543.3	379.7	543.3	379.7	5.1	2.5	29243.	20752.	49995.
2002	534.5	370.5	534.5	370.5	4.9	2.4	28796.	20265.	49061.
2003	525.6	361.4	525.6	361.4	4.8	2.3	28348.	19776.	48124.
2004	516.8	352.2	516.8	352.2	4.6	2.1	27898.	19287.	47185.
2005	508.0	343.0	508.0	343.0	4.5	2.0	27447.	18796.	46243.
2006	500.5	336.4	500.5	336.4	4.3	2.0	27062.	18444.	45506.
2007	493.0	329.8	493.0	329.8	4.2	1.9	26677.	18091.	44768.
2008	485.5	323.3	485.5	323.3	4.1	1.8	26291.	17737.	44028.
2009	478.0	316.7	478.0	316.7	4.0	1.7	25903.	17383.	43287.
2010	470.5	310.1	470.5	310.1	3.8	1.7	25515.	17029.	42544.
2011	463.0	303.5	463.0	303.5	3.7	1.6	25126.	16674.	41801.
2012	455.5	296.9	455.5	296.9	3.6	1.5	24737.	16319.	41056.
2013	448.0	290.3	448.0	290.3	3.5	1.5	24346.	15963.	40309.
2014	440.5	283.8	440.5	283.8	3.4	1.4	23955.	15607.	39562.
2015	433.0	277.2	433.0	277.2	3.2	1.3	23562.	15251.	38813.
2016	425.5	270.6	425.5	270.6	3.1	1.3	23169.	14894.	38063.
2017	418.0	264.0	418.0	264.0	3.0	1.2	22775.	14536.	37312.

TOTAL: 1471464.
AVERAGE: 49049.

CHAPTER VII

ESTIMATED CONSTRUCTION COSTS

CHAPTER VII

ESTIMATED CONSTRUCTION COSTS

Section 1: General

Cost estimates were made for each of the alternative project schemes. Costs were based on October 1983 dollars for all components of the interconnection facility except the hydropower plant. Costs for the hydropower plant structure and its associated electrical and mechanical equipment were based on January 1988 dollars.

Section 2: Basis of Costs

A. Direct Construction Cost

This cost includes the total of all costs directly chargeable to the actual construction of the project and can be considered equivalent to a contractor's bid. The direct construction cost for each alternative was obtained by summing the individual items listed in Tables VII-1 through VII-12.

Data for the cost estimates were obtained as follows:

1. Manufacturer's quotations for October 1983 costs were used for the conduit, turbines, generators, butterfly valve, governor, switchgear, station service transformer, control and protection system, and installation. These quotations are included in Appendix B.

2. Feasibility Studies for Small Scale Hydropower Additions USACE, July, 1979 , was used for estimating powerhouse excavation and structure, station electric equipment, and miscellaneous powerplant equipment costs.

These costs were escalated from July 1978 to October 1983 using the appropriate factor for each item reflecting the USBR Cost Indexes for water and power construction in the western states for the corresponding time frame. These factors were 1.37 for the powerhouse excavation and structure and 1.42 for the station electric and miscellaneous powerplant equipment costs.

3. Feasibility level estimates based on the engineer's experience and historical cost data sources were used, in costing the Howell-Bunger valve and structure, canal excavation and lining, road culverts, diversion structure, and radial gates.

The Direct Construction Costs, January 1988, for the hydropower plant and associated electrical and mechanical equipment, were derived by applying an escalation factor to the Direct Construction Costs, October 1983. The escalation factors associated with each item in the hydropower plant cost estimates were determined by extrapolating the USBR cost indexes for each item to January 1988. These escalation factors are as follows:

Item	Escalation Factor October 1983 to January 1988
Turbine, Generators, Excitors and Valves	1.21
Station Electric Equipment	1.21
Miscellaneous Powerplant Equipment	1.21
Powerhouse: Excavation, Structural, and Foundation	1.26
Site Improvements	1.26
Tailrace	1.26

The Direct Construction Costs do not include a cost for a switchyard or transmission line. These costs are to be determined by the SRP. The single unit one-line electrical diagram is shown in Figure VII-1.

Direct Construction Cost curves are shown on Figures VII-2, VII-3 and VII-4 for each alternative.

B. Construction Contingency

To allow for unforeseen conditions during construction and miscellaneous items not included in the estimate, a 20 percent construction contingency would normally be added to the direct construction cost. At the direction of SRP, this cost was omitted from the cost estimate.

C. Engineering and Management Costs

Engineering and management costs are based on actual experience with costs for similar work and include engineering design, administration, supervision and inspection. Normally these costs would be provided for by adding 16 percent to the direct construction cost plus contingency cost. At the direction of SRP, this cost was omitted from the cost estimate.

D. Total Construction Cost

Total construction cost is arrived at by summing total direct construction cost plus contingency and engineering and administration costs.

TABLE VII-1

ESTIMATED DIRECT CONSTRUCTION COST OF INTERCONNECTION FACILITY WITHOUT HYDROPOWER DELIVERY TO SOUTH CANAL

	ALTERNATIVES				
Discharge (cfs)	220	360	450	540	800
	Costs of Alternatives ($ x 1000)				
Item					
Conduit, Transition, Excavation, Bedding, and Backfill	76	97	97	97	120
Howell Bunger Valve, Excavation, Backfill, and Reinforced Concrete	133	133	150	179	201
Canal, Excavation, Lining and Fencing	178	203	215	245	273
Box Culvert, Excavation, Backfill, and Reinforced Concrete	25	29	32	36	39
Drop Structure, Excavation, Backfill, and Reinforced Concrete	17	20	21	22	25
Direct Construction Cost, October 1983	429	482	515	579	658
Construction Contingency (%)					
Direct Construction Cost Plus Contingency					
Engineering and Management (%)					
Total Construction Cost, October 1983					

TABLE VII-2

ESTIMATED DIRECT CONSTRUCTION COST OF INTERCONNECTION FACILITY WITHOUT HYDROPOWER DELIVERY TO GRANITE REEF FOREBAY

	ALTERNATIVES				
Discharge (cfs)	220	360	450	540	800
Item	Costs of Alternatives ($ x 1000)				
Conduit, Transition, Excavation, Bedding, and Backfill	76	97	97	97	120
Howell Bunger Valve, Excavation, Backfill, and Reinforced Concrete	133	133	150	179	201
Canal, Excavation, Lining and Fencing	122	137	147	167	187
Box Culvert, Excavation, Backfill, and Reinforced Concrete	25	29	32	36	39
Drop Structure, Excavation, Backfill, and Reinforced Concrete	17	20	21	22	25
Direct Construction Cost, October 1983	373	416	447	501	574
Construction Contingency (%)					
Direct Construction Cost Plus Contingencies					
Engineering and Management (%)					
Total Construction Cost, October 1983					

TABLE VII-3

ESTIMATED DIRECT CONSTRUCTION COST OF INTERCONNECTION FACILITY WITHOUT HYDROPOWER DELIVERY TO SOUTH CANAL AND/OR GRANITE REEF FOREBAY

	ALTERNATIVES				
Discharge (cfs)	220	360	450	540	800
Item	Costs of Alternatives ($ x 1000)				
Conduit, Transition, Excavation, Bedding, and Backfill	76	97	97	97	120
Howell Bunger Valve, Excavation, Backfill, and Reinforced Concrete	133	133	150	179	201
Canal, Excavation, Lining and Fencing	236	269	287	329	367
Box Culvert, Excavation, Backfill, and Reinforced Concrete	50	58	64	72	78
Diversion Structure, Radial Gate, Excavation, Backfill, and Reinforced Concrete	71	95	110	131	223
Drop Structure, Excavation, Backfill, and Reinforced Concrete	34	40	42	44	50
Direct Construction Cost, October 1983	600	692	750	852	1039
Construction Contingency, (%)					
Direct Construction Cost Plus Contingency					
Engineering and Management (%)					
Total Construction Cost, October 1983					

TABLE VII-4

ESTIMATED DIRECT CONSTRUCTION COST OF INTERCONNECTION FACILITY WITH HYDROPOWER (EXCLUDING COST OF HYDROPOWER PLANT) DELIVERY TO SOUTH CANAL

	ALTERNATIVES				
Discharge (cfs)	220	360	450	540	800
Item	Cost of Alternatives ($ x 1000)				
Conduit, Transition, Bifurcation, Excavation, Bedding, and Backfill	117	143	173	189	225
Howell Bunger Valve, Excavation, Backfill, and Reinforced Concrete	119	133	150	150	192
Canal, Excavation, Lining and Fencing	178	203	215	245	273
Box Culvert, Excavation, Backfill, and Reinforced Concrete	25	29	32	36	39
Drop Structure, Excavation, Backfill, and Reinforced Concrete	17	20	21	22	25
Direct Construction Cost, October 1983	456	528	591	642	754
Construction Contingency (%)					
Direct Construction Cost Plus Contingency					
Engineering and Management (%)					
Total Construction Cost, October 1983					

TABLE VII-5

ESTIMATED DIRECT CONSTRUCTION COST OF INTERCONNECTION FACILITY WITH HYDROPOWER (EXCLUDING COST OF HYDROPOWER PLANT DELIVERY TO GRANITE REEF FOREBAY

	ALTERNATIVES				
Discharge (cfs)	220	360	450	540	800
Item	Costs of Alternatives ($ x 1000)				
Conduit, Transition, Bifurcation, Excavation Bedding, and Backfill	117	143	173	189	225
Howell Bunger Valve, Excavation, Backfill, and Reinforced Concrete	119	133	150	150	192
Canal, Excavation, Lining and Fencing	122	137	147	167	187
Box Culvert, Excavation, Backfill, and Reinforced Concrete	25	29	32	36	39
Drop Structure, Excavation, Backfill, and Reinforced Concrete	17	20	21	22	25
Direct Construction Cost, October 1983	400	462	523	564	668
Construction Contingency (%)					
Direct Construction Cost					
Engineering and Management (%)					
Total Construction Cost, October 1983					

TABLE VII-6

ESTIMATED DIRECT CONSTRUCTION COST OF INTERCONNECTION FACILITY WITH HYDROPOWER (EXCLUDING COST OF HYDROPOWER PLANT) DELIVERY TO SOUTH CANAL AND/OR GRANITE REEF FOREBAY

	ALTERNATIVES				
Discharge (cfs)	220	360	450	540	800
Item	Costs of Alternatives ($ x 1000)				
Conduit, Transition, Bifurcation, Excavation, Bedding, and Backfill	117	143	173	189	225
Howell Bunger Valve, Excavation, Backfill, and Reinforced Concrete	119	133	150	150	192
Canal, Excavation, Lining and Fencing	236	269	287	329	367
Box Culvert, Excavation, Backfill, and Reinforced Concrete	50	58	64	72	78
Diversion Structure, Radial Gate, Excavation, Backfill, and Reinforced Concrete	71	95	110	131	223
Drop Structure, Excavation, Backfill, and Reinforced Concrete	34	40	42	44	50
Direct Construction Cost, October 1983	627	738	826	915	1135
Construction Contingency (%)					
Direct Construction Cost Plus Contingency					
Engineering and Management (%)					
Total Construction Cost, October 1983					

TABLE VII-7

ESTIMATED DIRECT CONSTRUCTION COST OF HYDROPOWER PLANT

MINIMUM PROBABLE FLOW CASE

	ALTERNATIVES	
Rated Capacity (kw)	1,567	1,225
Rated Discharge (cfs)	128	100

Item	Costs of Alternatives ($ x 1,000)	
Turbines, Generators, Excitor, Valve	990	800
Station Electric Equipment	341	298
Miscellaneous Powerplant Equipment	77	68
Powerhouse: Structural	96	85
Excavation, Backfill	24	22
Foundation	4	3
Site Improvements	28	28
Tailrace	27	27
Direct Construction Cost, October 1983	1,587	1,331
Direct Construction Cost, January 1988	1,929	1,619
Construction Contingency (%)		
Direct Construction Cost Plus Contingency		
Engineering and Mangement (%)		
Total Construction Cost, January 1988		

TABLE VII-8

ESTIMATED DIRECT CONSTRUCTION COST OF HYDROPOWER PLANT

MOST PROBABLE FLOW CASE

Rated Capacity (kw)	3,478
Rated Discharge (cfs)	284

Item		Cost ($ x 1,000)
Turbines, Generators, Excitor, Valve		1,720
Station Electric Equipment		454
Miscellaneous Powerplant Equipment		105
Powerhouse:	Structural	140
	Excavation, Backfill	25
	Foundation	4
Site Improvements		29
Tailrace		21
Direct Construction Cost, October 1983		2,498
Direct Construction Cost, January 1988		3,034
Construction Contingency (%)		
Direct Construction Cost Plus Contingency		
Engineering and Management (%)		
Total Construction Cost, January 1988		

TABLE VII-9

ESTIMATED DIRECT CONSTRUCTION COST OF HYDROPOWER PLANT

MAXIMUM PROBABLE FLOW

Rated Capacity (kw)	8,058
Rated Discharge (cfs)	658

Item	Cost ($ x 1,000)
Turbines, Generators, Excitor, Valve	3,300
Station Electric Equipment	575
Miscellaneous Powerplant Equiment	145
Powerhouse: Structural	411
Excavation, Backfill	70
Foundation	11
Site Improvements	44
Tailrace	32
Direct Construction Cost, October 1983	4,588
Direct Construction Cost, January 1988	5,580
Construction Contingency (%)	
Direct Construction Cost Plus Contingency	
Engineering and Mangement (%)	
Total Construction Cost, January 1988	

TABLE VII-10

ESTIMATED DIRECT CONSTRUCTION COST OF INTERCONNECTION FACILITY

OPEN-CHANNEL CHUTE

DELIVERY TO SOUTH CANAL

	ALTERNATIVES				
Discharge (cfs)	220	360	450	540	800
	Costs of Alternatives ($ x 1000)				
Item					
Open-channel Chute, Stilling Basin, Excavation, Backfill and Reinforced Concrete	209	244	263	299	335
Canal, Excavation, Lining and Fencing	124	142	151	171	192
Box Culvert, Excavation, Backfill, and Reinforced Concrete	25	29	32	36	39
Drop Structure, Excavation, Backfill, and Reinforced Concrete	17	20	21	22	25
Direct Construction Cost, October 1983	375	435	467	528	591
Construction Contingency (%)					
Direct Construction Cost Plus Contingency					
Engineering and Management (%)					
Total Construction Cost, October 1983					

TABLE VII-11

ESTIMATED DIRECT CONSTRUCTION COST OF INTERCONNECTION FACILITY
OPEN-CHANNEL CHUTE
DELIVERY TO GRANITE REEF FOREBAY

	ALTERNATIVES				
Discharge (cfs)	220	360	450	540	800
Item	Costs of Alternatives ($ x 1000)				
Open-channel chute, Stilling Basin, Excavation, Backfill, and Reinforced Concrete	209	244	263	299	335
Canal, Excavation, Lining and Fencing	68	76	82	90	104
Box Culvert, Excavation, Backfill, and Reinforced Concrete	25	29	32	36	39
Drop Structure, Excavation, Backfill, and Reinforced Concrete	17	20	21	22	25
Direct Construction Cost, October 1983	319	369	398	447	503
Construction Contingency (%)					
Direct Construction Cost Plus Contingencies					
Engineering and Management (%)					
Total Construction Cost, October 1983					

TABLE VII-12

ESTIMATED DIRECT CONSTRUCTION COST OF INTERCONNECTION FACILITY
OPEN-CHANNEL CHUTE
DELIVERY TO SOUTH CANAL AND/OR GRANITE REEF FOREBAY

	ALTERNATIVES				
Discharge (cfs)	220	360	450	540	800
Item	Costs of Alternatives ($ x 1000)				
Open-channel chute, Stilling Basin, Excavation, Backfill and Reinforced Concrete	209	244	263	299	335
Canal, Excavation, Lining and Fencing	182	208	223	257	286
Box Culvert, Excavation, Backfill, and Reinforced Concrete	50	58	64	72	78
Diversion Structure, Radial Gate, Excavation, Backfill, and Reinforced Concrete	71	95	110	131	223
Drop Structure, Excavation, Backfill, and Reinforced Concrete	34	40	42	44	50
Direct Construction Cost, October 1983	546	645	702	803	972
Construction Contingency, (%)					
Direct Construction Cost Plus Contingency					
Engineering and Management (%)					
Total Construction Cost, October 1983					

REFERENCES

REFERENCES

1. United States Department of the Army, Corps of Engineers. July, 1979. Feasibility Studies for Small Scale Hydropower Additions. Hydrologic Engineering Center, Davis, California.

2. United States Department of the Interior. July, 1980. Reconnaissance Evaluation of Small, Low-Head Hydroelectric Installations. Water and Power Resources Service Engineering and Research Center, Denver, Colorado.

3. United States Department of the Interior, Bureau of Reclamation. 1977. Welded Steel Penstocks. Engineering Monograph No. 3.

4. United States Department of the Interior, Bureau of Reclamation . 1978. Hydraulic Design of Stilling Basins and Energy Dissipators. Engineering Monograph No. 25.

5. United States Department of the Interior, Bureau of Reclamation. Design of Small Dams.

6. United States Department of the Interior, Bureau of Reclamation. 1963. Linings for Irrigation Canals.

7. United States Department of the Interior, Bureau of Reclamation. 1967. Canals and Related Structures. Design Standard No. 3.

8. Salt River Project, October 1982, Report on Location, Design and Funding of the CAP/SRP Interconnection. Phoenix, Arizona.

9. Salt River Project, April 1983. Central Arizona Project/Salt River Project Interconnection, Draft Environmental Assessment Report. Phoenix, Arizona.

REFERENCES (Continued)

10. United States Department of the Interior, Bureau of Reclamation, Lower Colorado Region, July, 1983. Granite Reef Aqueduct Turnouts, Central Arizona Project, Solicitation/Specifications No. 3-SB-30-01050/DC-7563. Boulder City, Nevada.

11. Abbett, R.W., editor. 1956. American Civil Engineering Practice, Volume II. New York, New York: John Wiley & Sons, Inc.

12. Davis and Sorensen, editors. 1970. Handbook of Applied Hydraulics. New York, New York: McGraw-Hill, Inc.

FIGURES

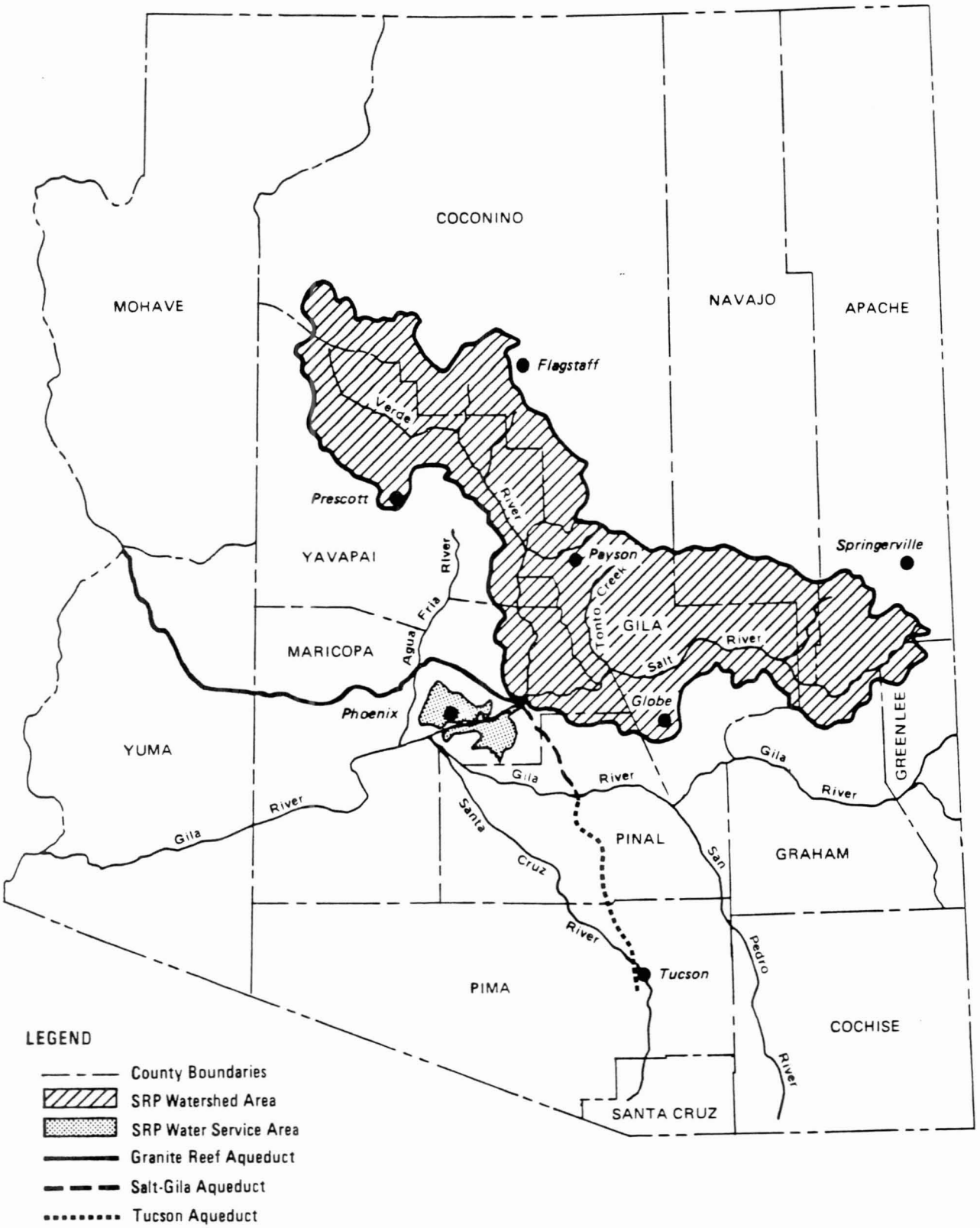

CAP/SRP INTERCONNECTION FACILITY
LOCATION MAP

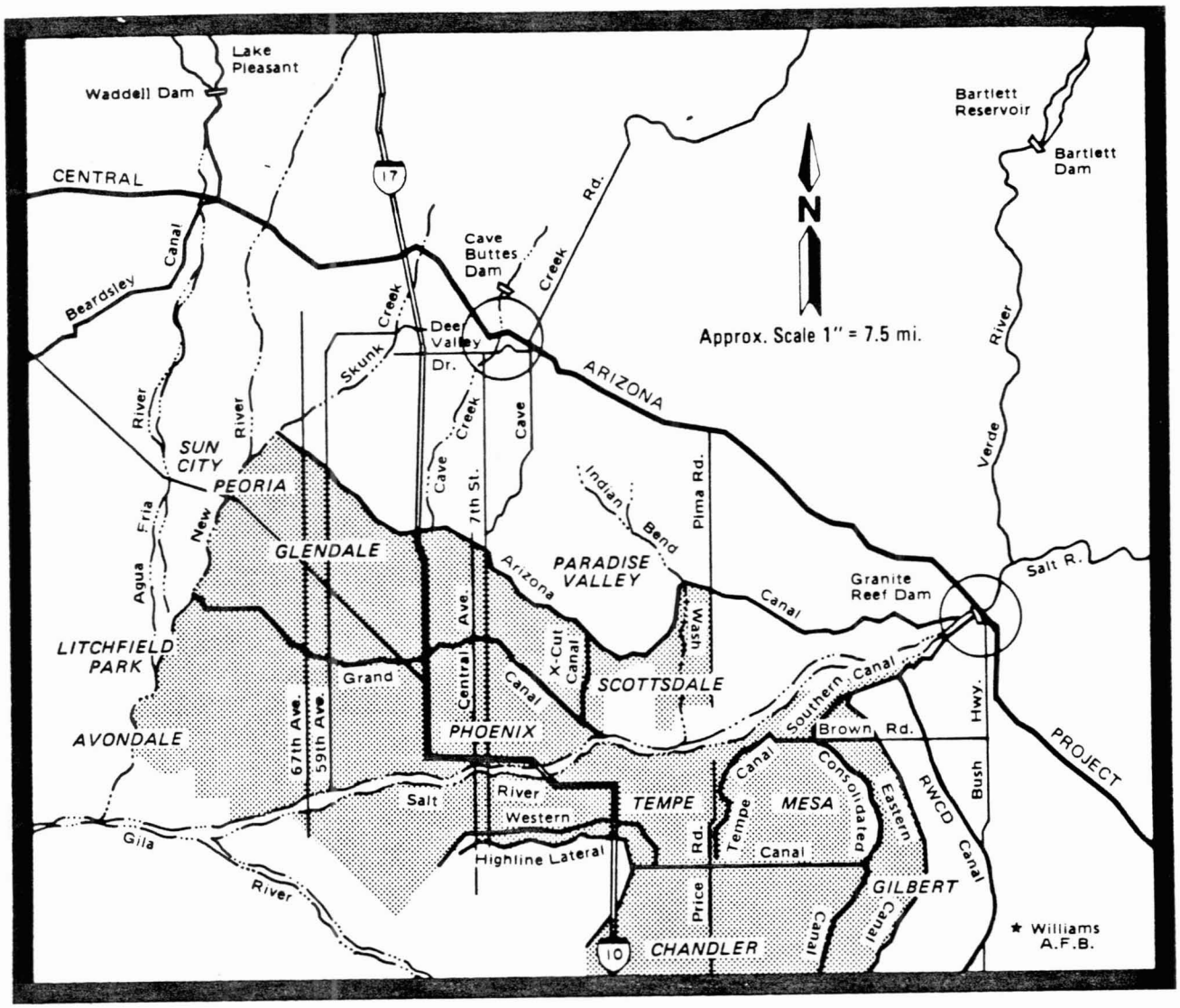

LEGEND

SRP Water Service Area

CAP/SRP INTERCONNECTION FACILITY
VICINITY MAP

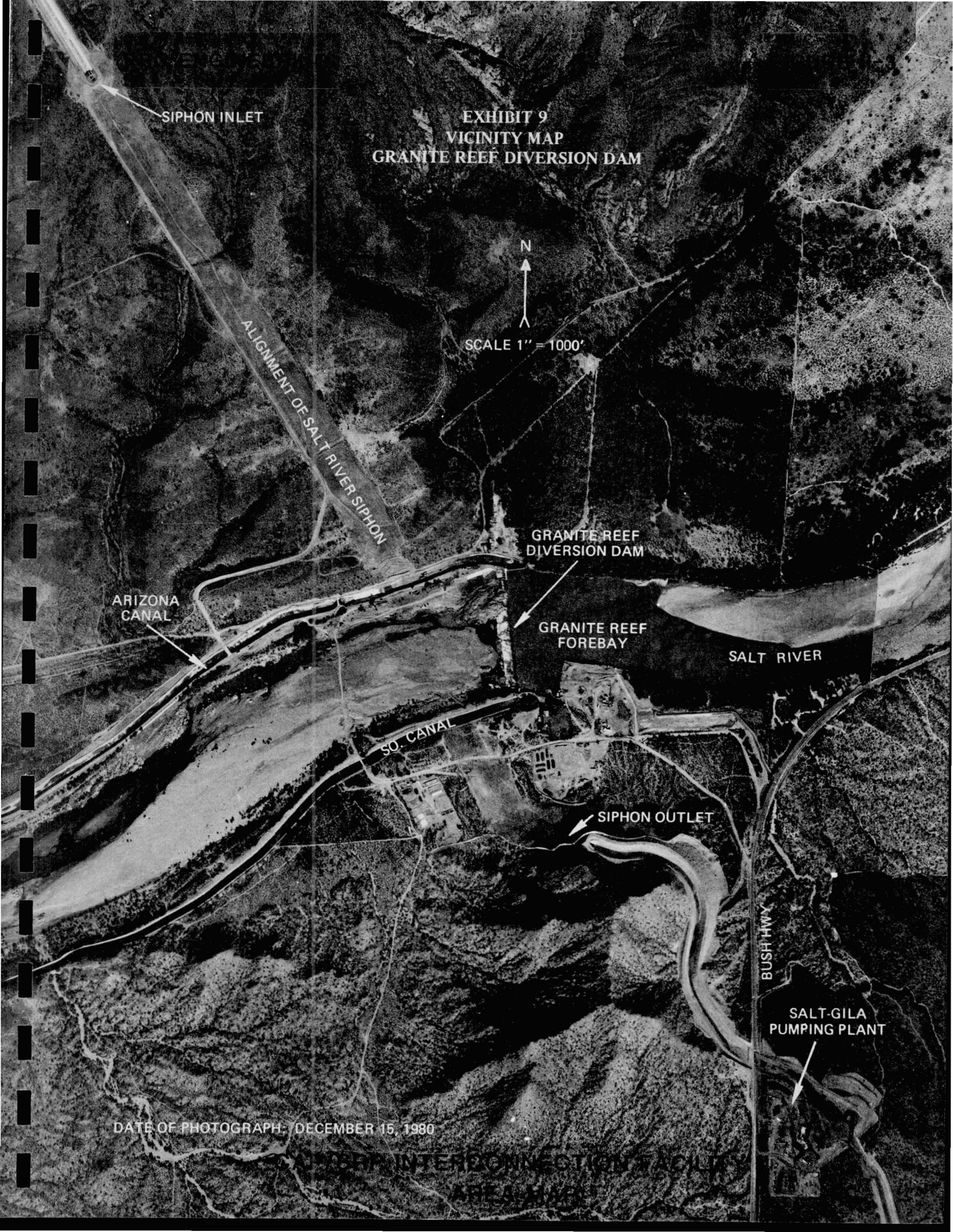
SIPHON INLET
EXHIBIT 9
VICINITY MAP
GRANITE REEF DIVERSION DAM
N
SCALE 1" = 1000'
ALIGNMENT OF SALT RIVER SIPHON
GRANITE REEF
DIVERSION DAM
ARIZONA
CANAL
GRANITE REEF
FOREBAY
SALT RIVER
SO. CANAL
SIPHON OUTLET
BUSH HWY
SALT-GILA
PUMPING PLANT
DATE OF PHOTOGRAPH: DECEMBER 15, 1980

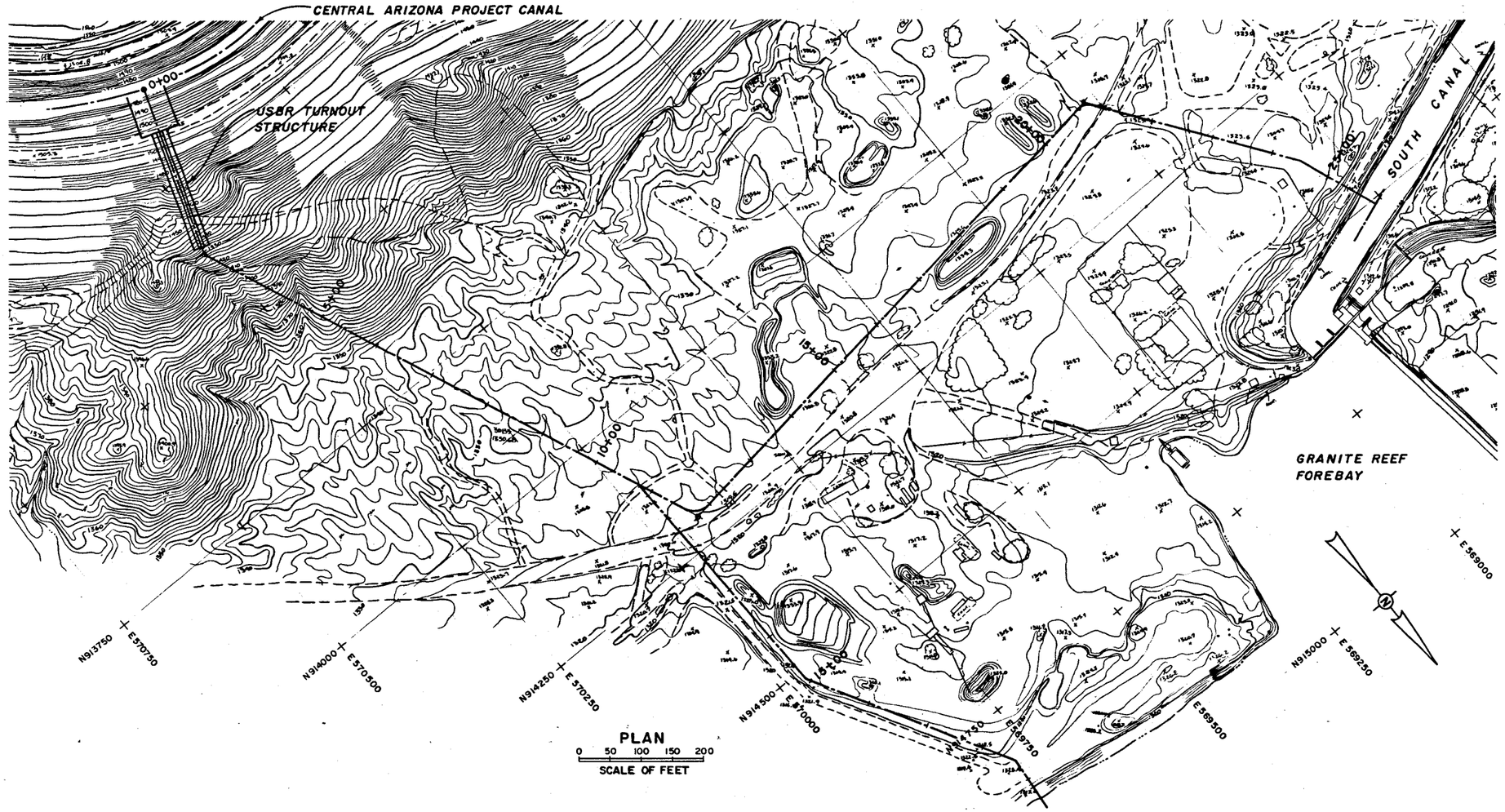

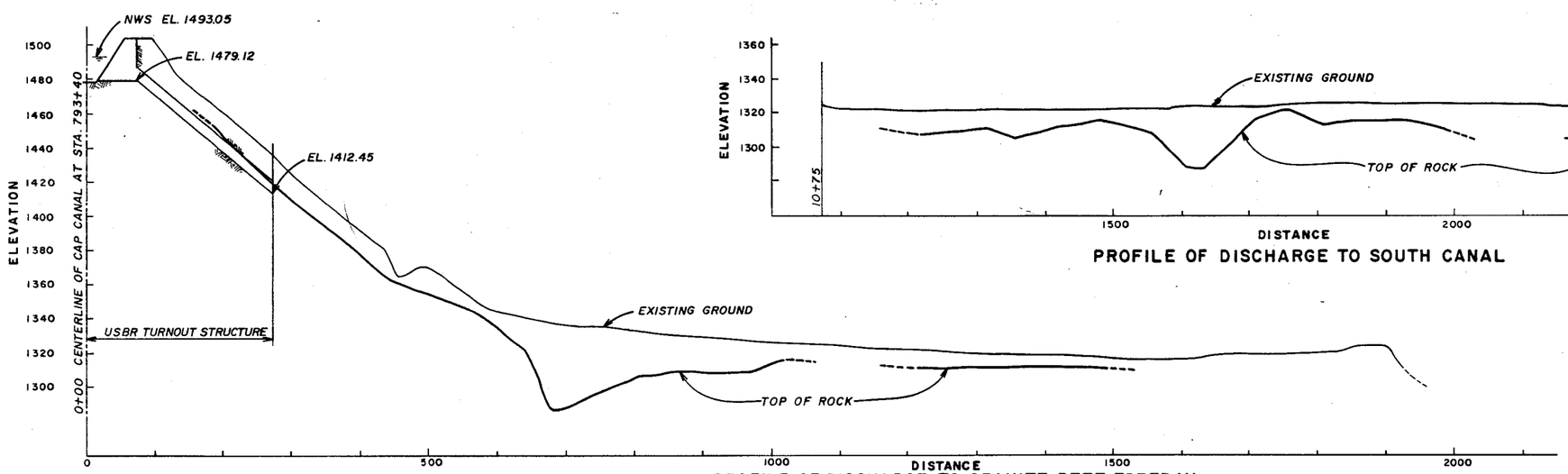

PROFILE OF DISCHARGE TO GRANITE REEF FOREBAY

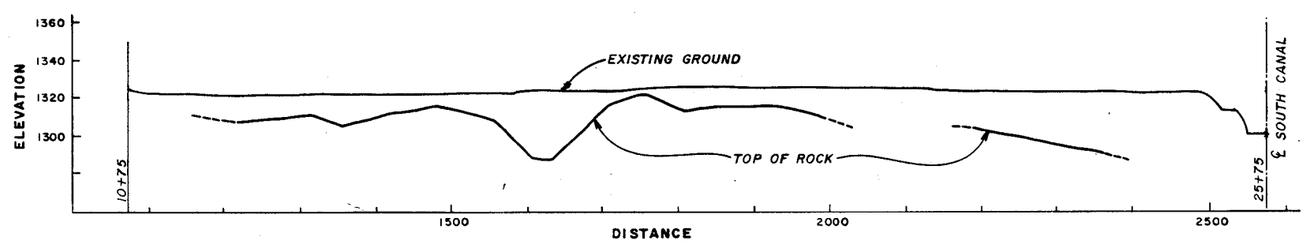

PROFILE OF DISCHARGE TO SOUTH CANAL

CONSULTANT: PRC ENGINEERING

SALT RIVER PROJECT
WATER-POWER PHOENIX, ARIZONA

CENTRAL ARIZONA PROJECT/SALT RIVER PROJECT INTERCONNECTION FACILITY

ROCK PROFILES

FIGURE II-5

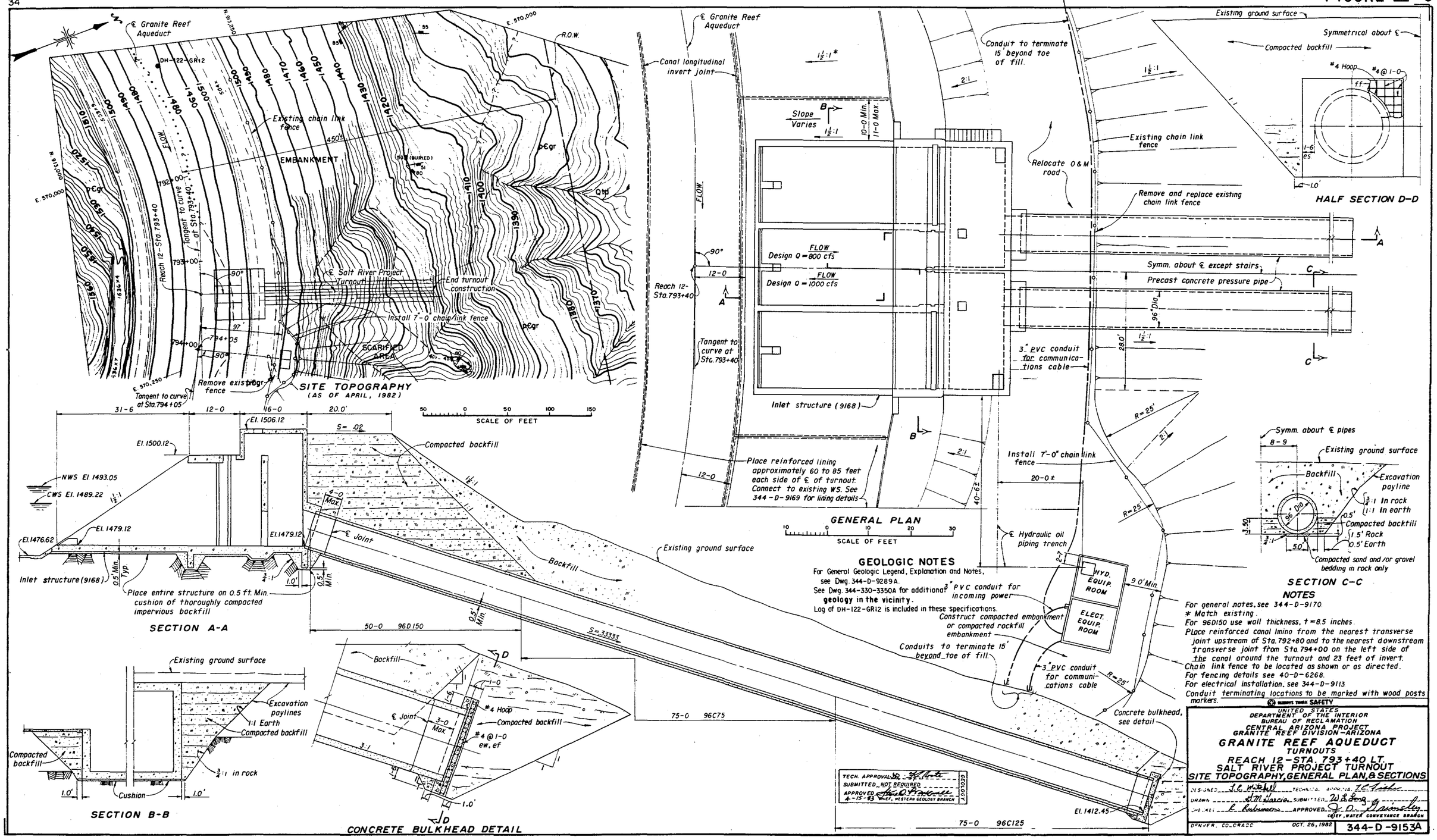
SITE TOPOGRAPHY
(AS OF APRIL, 1982)
SCALE OF FEET
GENERAL PLAN
SCALE OF FEET
SECTION A-A
SECTION B-B
CONCRETE BULKHEAD DETAIL
SECTION C-C
HALF SECTION D-D
GEOLOGIC NOTES
For General Geologic Legend, Explanation and Notes, see Dwg. 344-D-9289A.
See Dwg. 344-330-3350A for additional geology in the vicinity.
Log of DH-122-GR12 is included in these specifications.
NOTES
For general notes, see 344-D-9170.
* Match existing.
For 96D150 use wall thickness, t = 8.5 inches.
Place reinforced canal lining from the nearest transverse joint upstream of Sta. 792+80 and to the nearest downstream transverse joint from Sta. 794+00 on the left side of the canal around the turnout and 23 feet of invert.
Chain link fence to be located as shown or as directed.
For fencing details see 40-D-6268.
For electrical installation, see 344-D-9113.
Conduit terminating locations to be marked with wood posts markers.
ALWAYS THINK SAFETY
UNITED STATES
DEPARTMENT OF THE INTERIOR
BUREAU OF RECLAMATION
CENTRAL ARIZONA PROJECT
GRANITE REEF DIVISION-ARIZONA
GRANITE REEF AQUEDUCT
TURNOUTS
REACH 12-STA. 793+40 LT.
SALT RIVER PROJECT TURNOUT
SITE TOPOGRAPHY, GENERAL PLAN, & SECTIONS
DENVER, CO. CRADC
OCT. 26, 1982
344-D-9153A

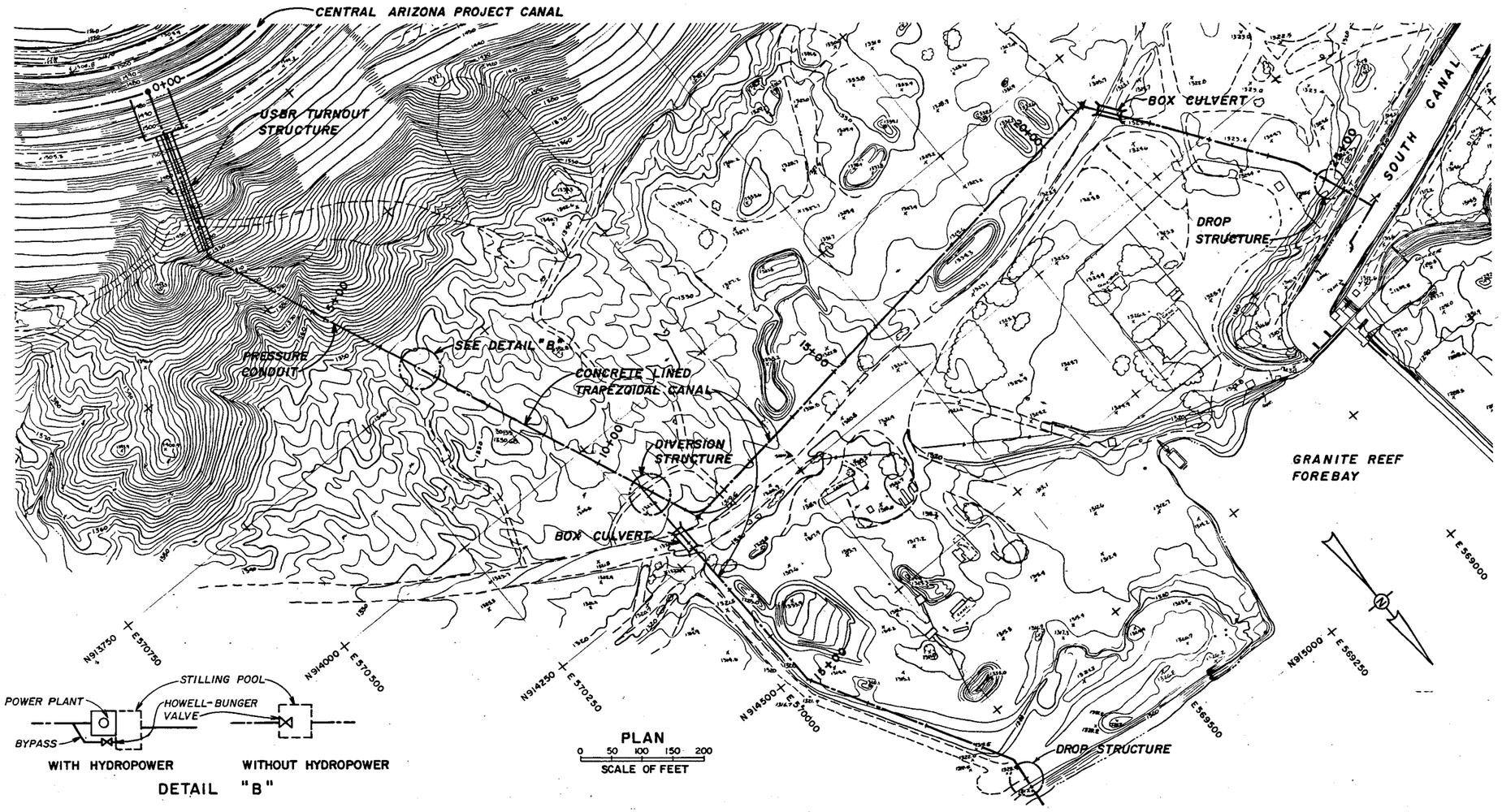

INTERCONNECTION FACILITY DATA

FEATURES \ FLOWS (CFS)	220	360	450	540	800
PRESSURE CONDUIT					
W/O HYDROPOWER					
- CONDUIT DIA. (in.)	30	42	42	42	54
- VALVE DIA. (in.)	30	30	36	42	48
WITH HYDROPOWER					
- PENSTOCK DIA. (in.)	54	66	78	84	96
- BYPASS DIA. (in.)	30	36	36	42	48
- VALVE DIA. (in.)	24	30	36	36	48
LINED CANAL					
- BASE WIDTH (ft.)	3.0	3.5	4.0	4.0	5.0
- HEIGHT OF LINING (ft.)	6.0	7.5	8.0	8.5	9.5
- LINING FREEBOARD (ft.)	1.0	1.4	1.4	1.4	1.4
R.C. BOX CULVERT					
- SINGLE BARREL - WIDTH (ft.)	11.0	13.0	14.0	15.0	16.0
- HEIGHT (ft.)	7.0	8.0	8.5	9.0	10.0
DIVERSION STRUCTURE					
- RADIAL GATES - WIDTH (ft.)	10.0	12.5	13.0	14.0	17.0
- HEIGHT (ft.)	5.5	6.5	7.0	7.5	8.5

HYDROPOWER PLANT DATA

ITEMS \ FLOWS	MINIMUM PROBABLE	MOST PROBABLE	MAXIMUM PROBABLE
INSTALLED CAPACITY (KW)	1225	3478	8058
DESIGN HEAD (ft.)	170	170	170
DESIGN DISCHARGE (CFS)	100	284	658
MINIMUM DISCHARGE (CFS)	40	114	263
PENSTOCK DIAMETER (in.)	42	60	90

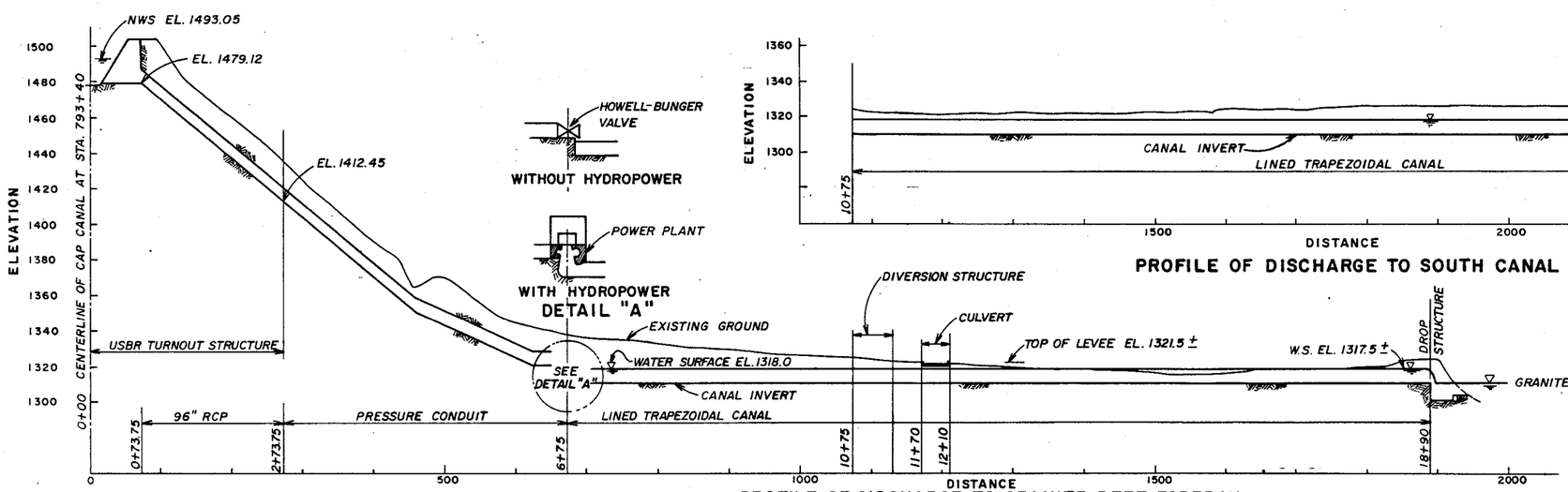

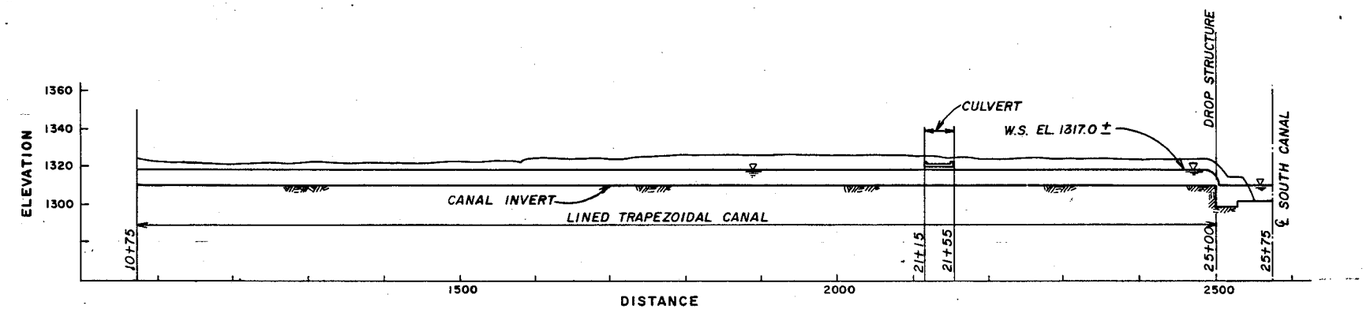

CONSULTANT: PRC ENGINEERING

SALT RIVER PROJECT
WATER-POWER PHOENIX, ARIZONA

CENTRAL ARIZONA PROJECT/SALT RIVER PROJECT INTERCONNECTION FACILITY

SCHEMATIC DESIGN

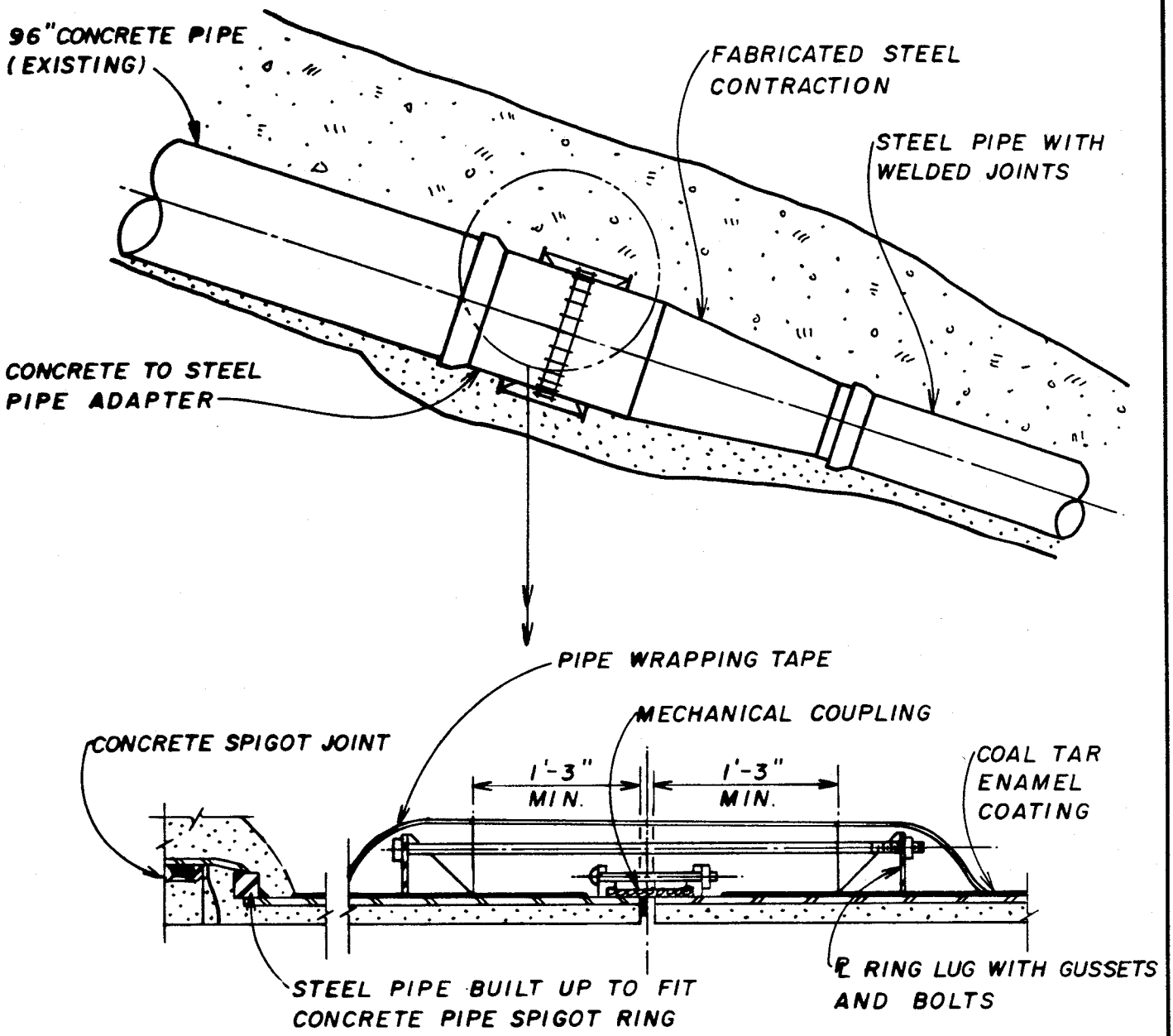

DETAIL
CONCRETE TO STEEL PIPE ADAPTER

CAP/SRP INTERCONNECTION FACILITY
CONCRETE TO STEEL PIPE ADAPTER AND CONTRACTION SECTIONS

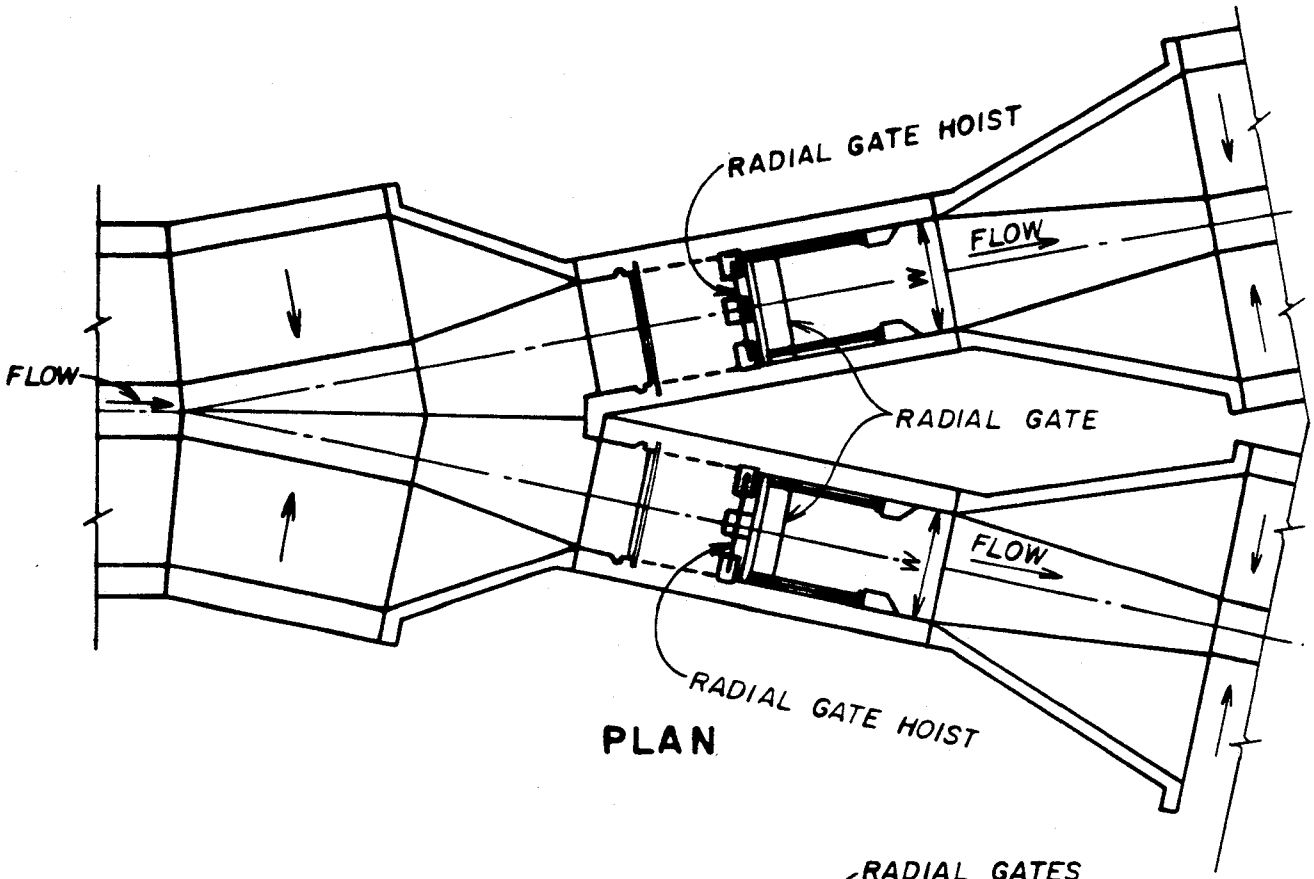

PLAN

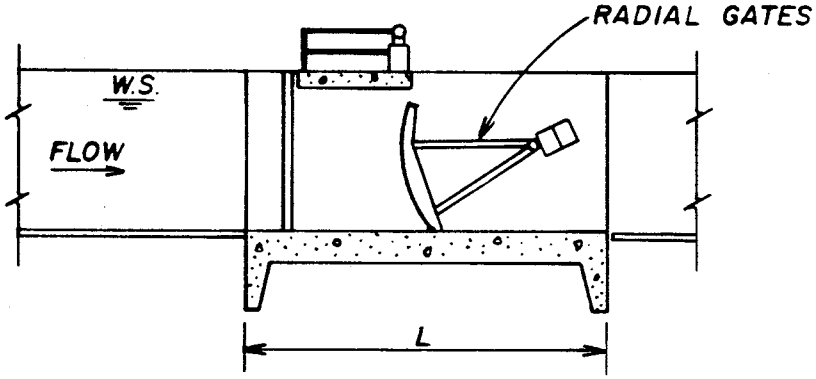

SECTION

DISCHARGE Q (cfs)	WIDTH W (ft)	LENGTH L (ft)
220	10	27
360	12	28
450	13	29
540	14	30
800	17	31

CAP/SRP INTERCONNECTION FACILITY
DIVERSION AND RADIAL GATE
STRUCTURES

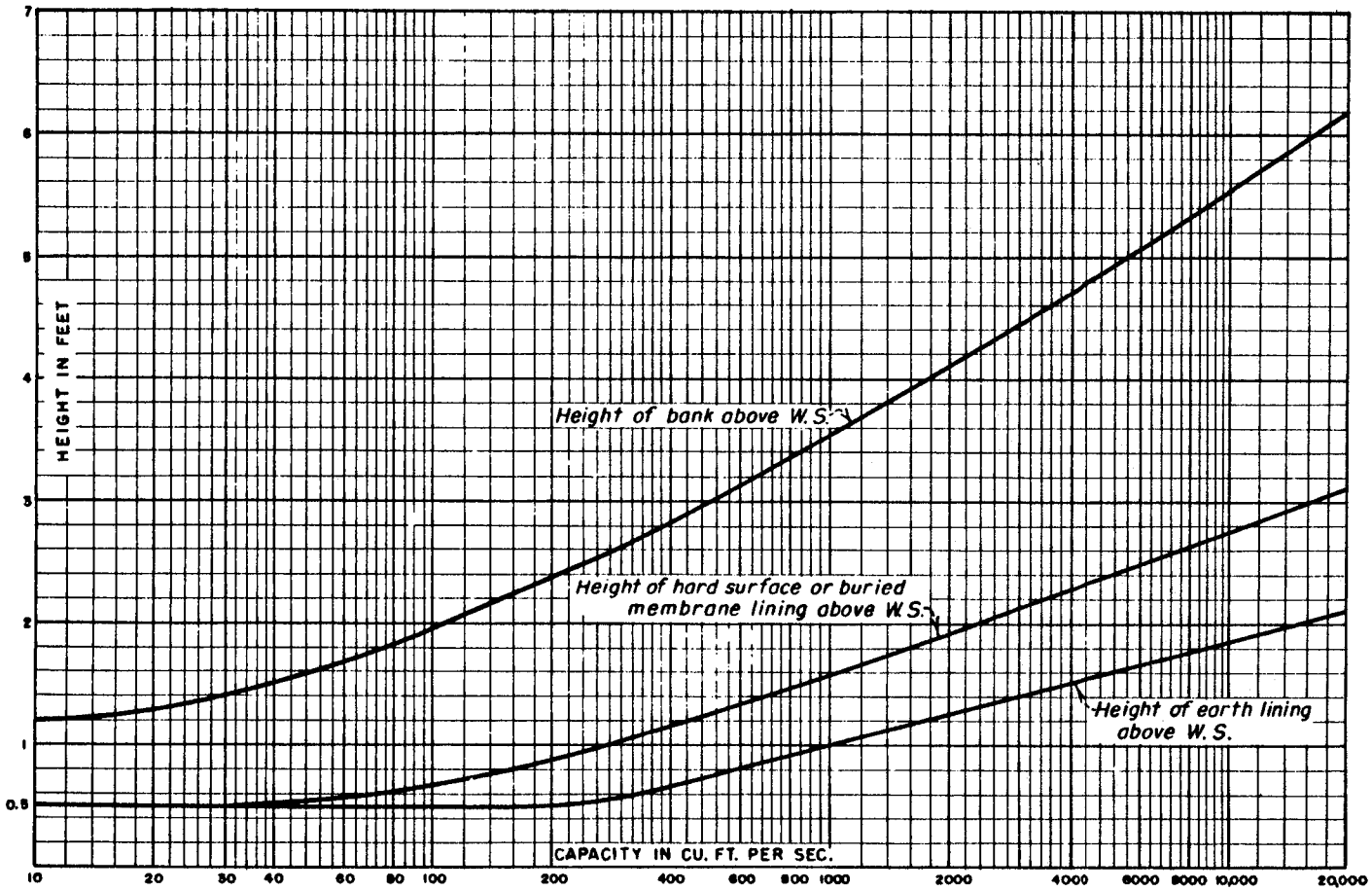

BANK HEIGHT FOR CANALS
AND
FREEBOARD FOR HARD SURFACE, BURIED MEMBRANE, AND EARTH LININGS

SOURCE: USBR DESIGN STANDARD NO. 3,
CANALS AND RELATED STRUCTURES,
CHAPTER I, FIGURE 4.

CAP/SRP INTERCONNECTION FACILITY

PRC ENGINEERING

FIGURE V-4

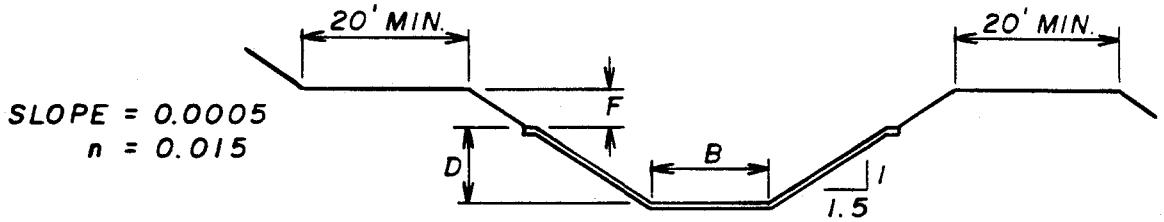

DISCHARGE Q (cfs)	BASE WIDTH B (ft)	DEPTH OF FLOW h (ft)	CRITICAL SLOPE	CRITICAL DEPTH (ft)	LINING HEIGHT D (ft)	BANK HEIGHT F * (ft)	LINING THICKNESS (Inches)	VELOCITY V (ft/s)
220	3.0	5.05	0.0031	3.36	6.0	1.5	2.5	4.12
360	3.5	6.11	0.0029	4.12	7.5	1.5	2.5	4.66
450	4.0	6.59	0.0028	4.47	8.0	2.0	2.5	4.92
540	4.0	7.14	0.0028	4.88	8.5	2.0	3.0	5.15
800	5.0	8.16	0.0026	5.63	9.5	2.0	3.0	5.68

* *MINIMUM*

CAP/SRP INTERCONNECTION FACILITY
CANAL SECTIONS

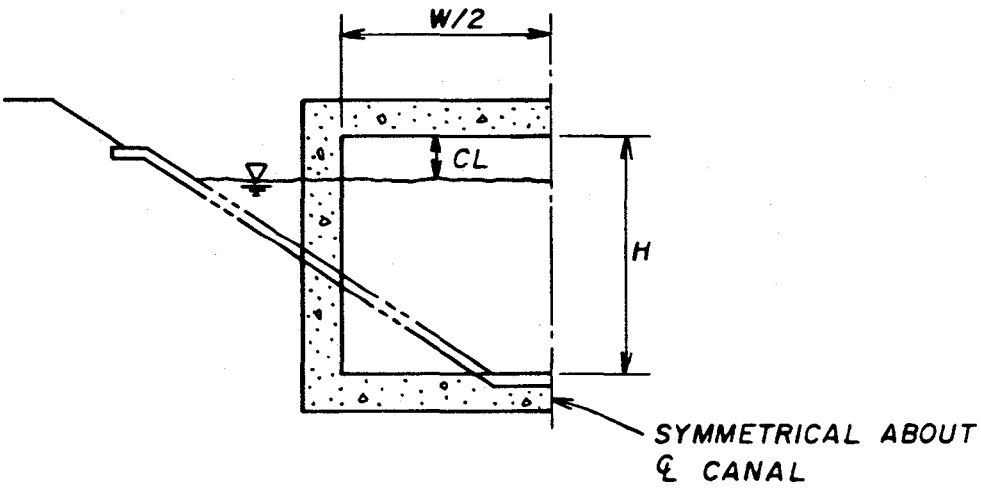

DISCHARGE Q (cfs)	WIDTH W (ft)	HEIGHT H (ft)	CLEARANCE CL (ft)	TRANSITION LENGTH L (ft)
220	11.0	7.0	1.95	18
360	13.0	8.0	1.89	21
450	14.0	8.5	1.91	22
540	15.0	9.0	1.86	24
800	16.0	10.0	1.84	24

CAP/SRP INTERCONNECTION FACILITY
ROAD CULVERTS

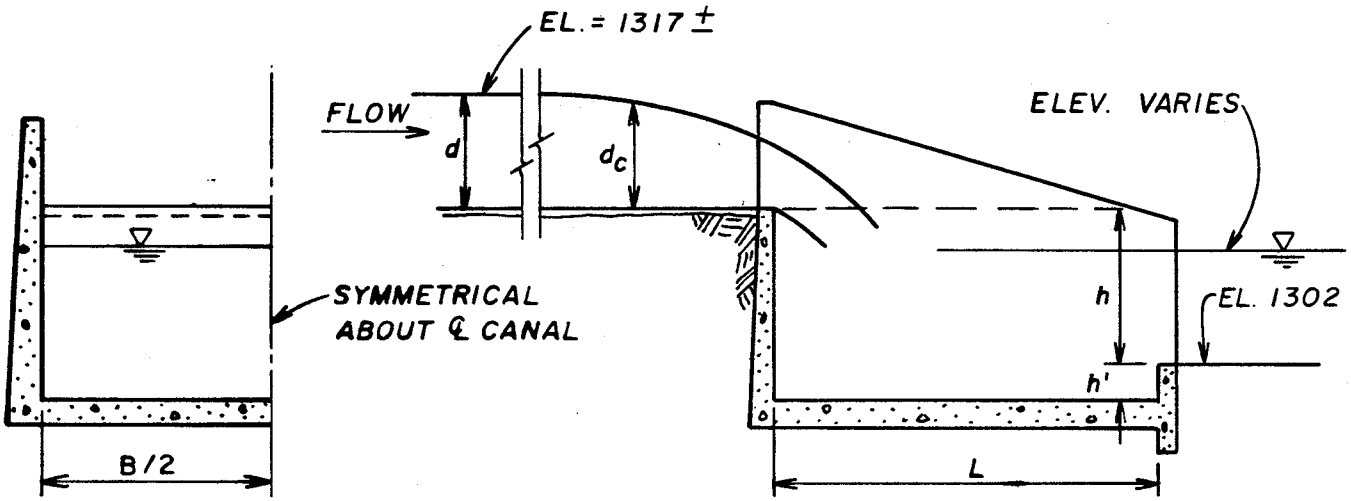

$$L = \left[2.5 + 1.1\frac{d_c}{h} + 0.7\left(\frac{d_c}{h}\right)^3\right]\sqrt{h\,d_c} \qquad h = \frac{d_c}{2}$$

DISCHARGE (cfs)	DEPTH OF FLOW d (ft)	CRITICAL DEPTH d_c (ft)	INVERT OFFSET h (ft)	SILL HEIGHT h' (ft)	BASIN LENGTH L (ft)	BASIN WIDTH B (ft)
220	5.05	2.39	9.95	1.2	14.0	10.5
360	6.11	2.95	8.89	1.5	15.0	12.5
450	6.59	3.26	8.41	1.7	16.0	13.5
500	7.14	3.51	7.86	1.8	16.5	14.5
800	8.16	4.10	6.84	2.1	18.0	17.0

CAP/SRP INTERCONNECTION FACILITY
VERTICAL DROPS AT DELIVERY POINTS

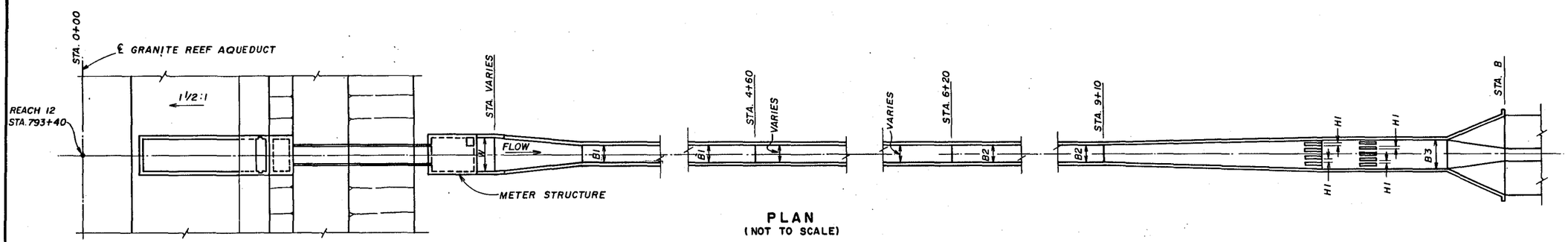

PLAN
(NOT TO SCALE)

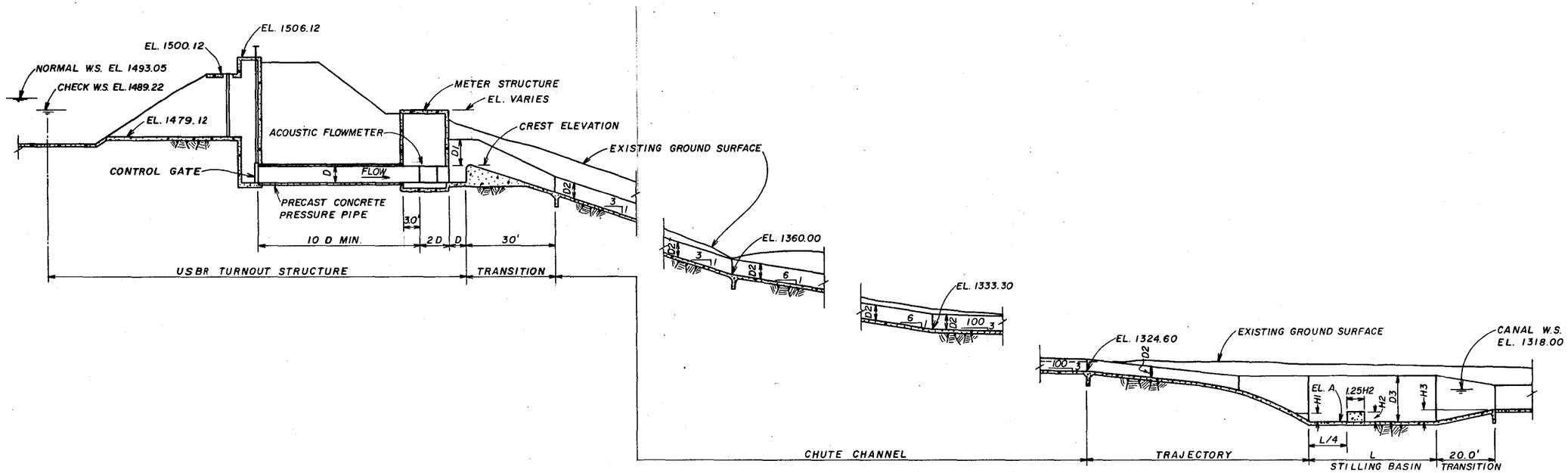

LONGITUDINAL SECTION
(NOT TO SCALE)

NOTES:

1. CHUTE AND STILLING BASIN DIMENSIONS ARE PRELIMINARY AND WILL BE REFINED FOR FINAL DESIGN.
2. CHAIN LINK FENCE PROVIDED ON BOTH SIDES OF CHUTE AND STILLING BASIN.

OPEN-CHANNEL CHUTE AND STILLING BASIN DATA

DESIGN DISCHARGE (CFS)	PIPE DIAMETER (INCHES)	CREST ELEVATION (FT)	D1 (FT)	D2 (FT)	W (FT)	B1 (FT)	B2 (FT)	B3 (FT)	H1 (FT)	H2 (FT)	D3 (FT)	H3 (FT)	L (FT)	ELEVATION A (FT)	TRAJECTORY LENGTH (FT)	STA. B (FT)
220	48	1474.0	4.5	3.3	10.0	3.5	4.0	10.0	0.67	1.6	8.1	1.7	26.0	1311.2	67.0	10+23.0
360	60	1470.0	5.5	3.6	11.0	4.5	5.0	11.0	0.85	2.0	10.3	2.8	35.0	1309.1	72.0	10+37.0
450	66	1468.0	6.0	3.8	11.5	5.0	5.5	11.5	0.96	2.2	11.6	3.6	40.0	1307.8	75.0	10+45.0
540	66	1468.0	7.0	4.4	11.5	5.0	6.0	11.5	1.05	2.3	13.4	4.3	45.0	1306.6	78.0	10+53.0
800	78	1464.0	8.0	4.8	12.5	6.0	7.5	12.5	1.25	2.5	16.1	6.0	55.0	1303.8	83.0	10+68.0

CONSULTANT: PRC ENGINEERING

SALT RIVER PROJECT
WATER-POWER PHOENIX, ARIZONA

CENTRAL ARIZONA PROJECT/SALT RIVER PROJECT INTERCONNECTION FACILITY

OPEN-CHANNEL CHUTE

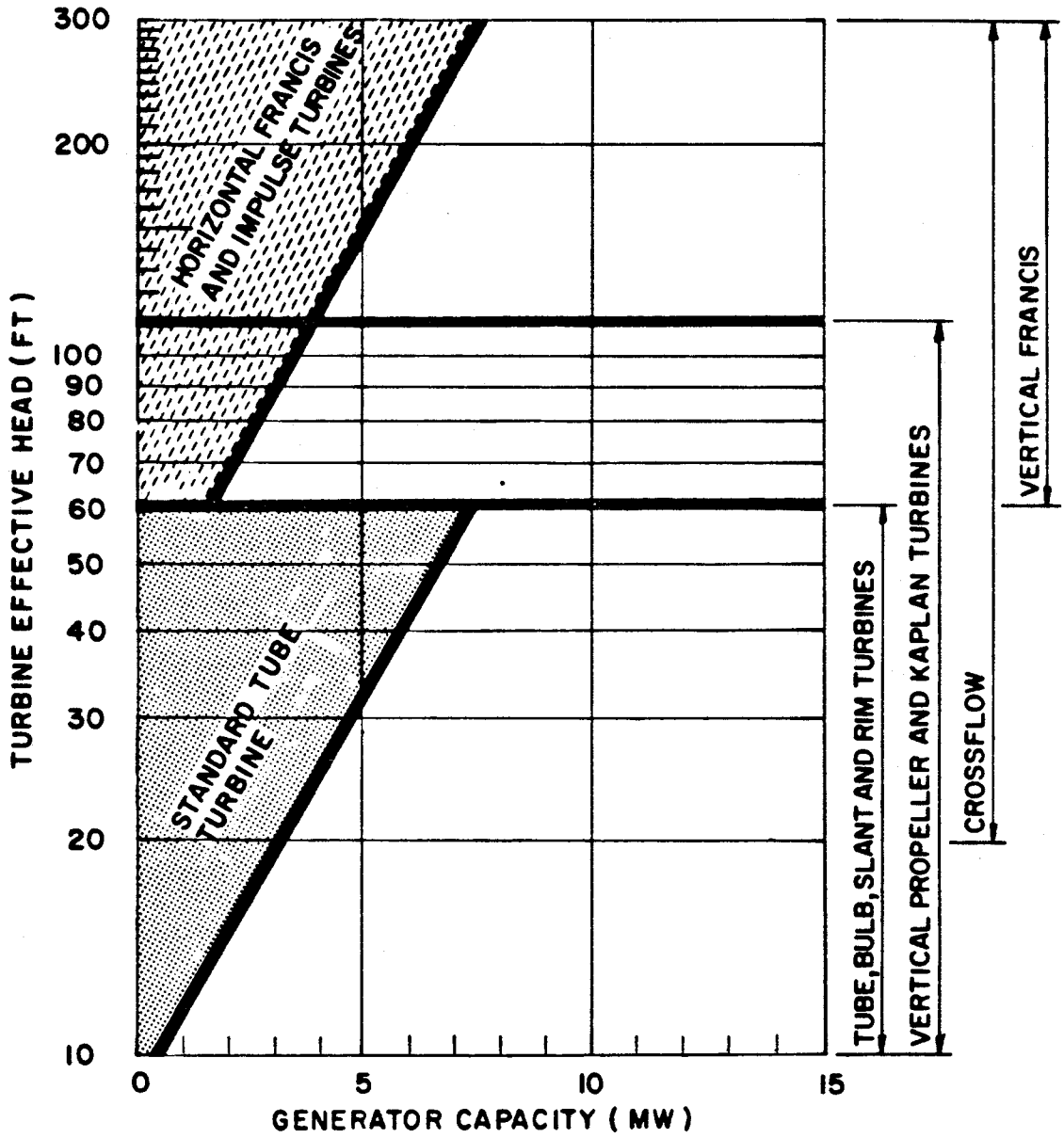

SOURCE: USACE FEASIBILITY STUDIES FOR SMALL SCALE HYDROPOWER ADDITIONS, VOL. V., FIGURE 2-2.

CAP/SRP INTERCONNECTION FACILITY
TURBINE OPERATING RANGE

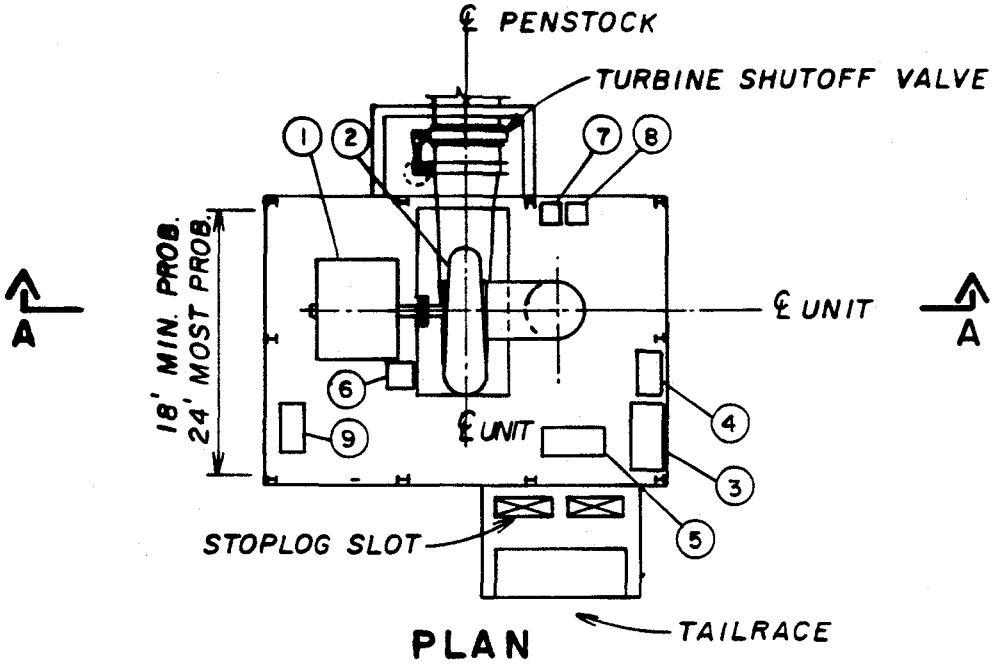

PLAN

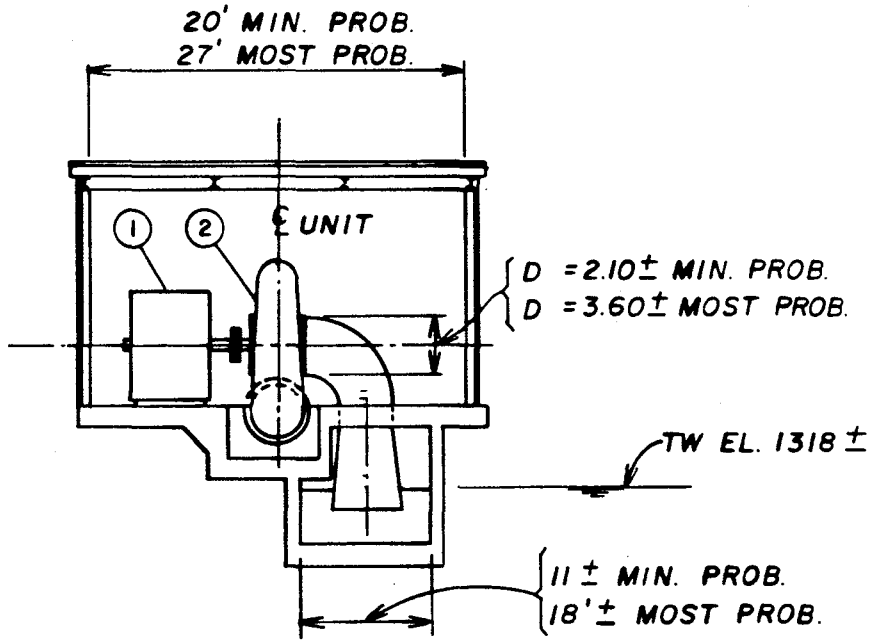

SECTION A

EQUIPMENT:

1. GENERATOR
2. TURBINE
3. GOVERNOR
4. GENERATOR BREAKER
5. CONTROL PANEL
6. NEUTRAL GROUND CUBICLE
7. COOLING PUMPS
8. SUMP PUMPS
9. AIR COMPRESSOR AND TANK

CAP/SRP INTERCONNECTION FACILITY
HYDROPOWER PLANT LAYOUT
MINIMUM AND MOST PROBABLE FLOWS

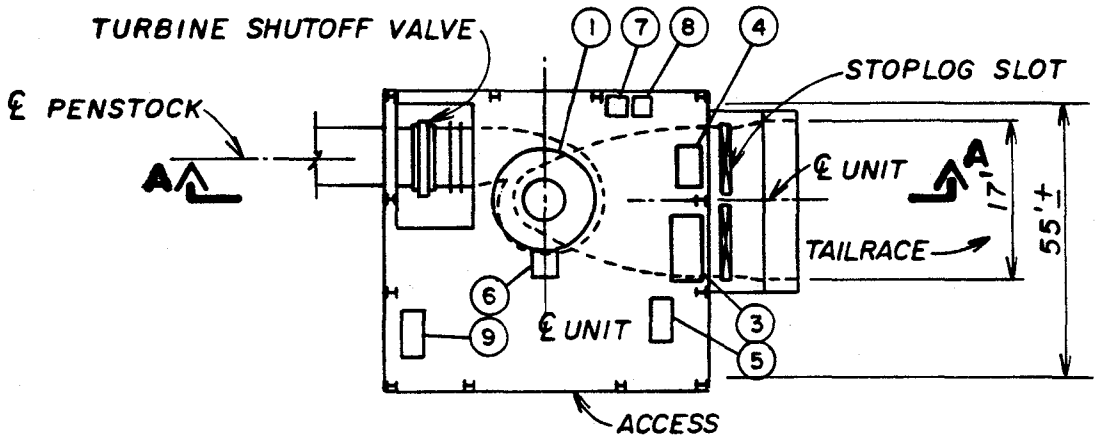

PLAN

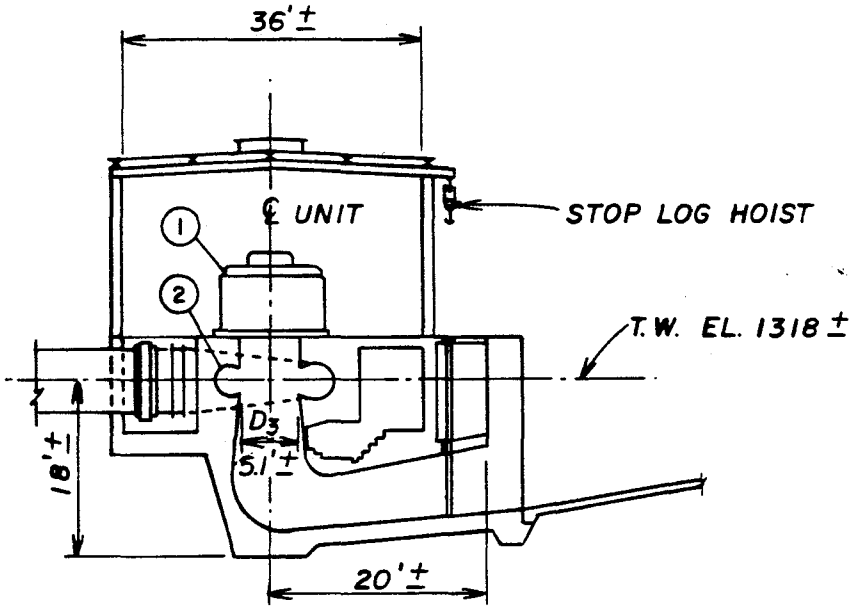

SECTION A

EQUIPMENT:

1. GENERATOR
2. TURBINE
3. GOVERNOR
4. GENERATOR BREAKER
5. CONTROL PANEL
6. NEUTRAL GROUND CUBICLE
7. COOLING PUMPS
8. SUMP PUMPS
9. AIR COMPRESSOR AND TANK

CAP/SRP INTERCONNECTION FACILITY
HYDROPOWER PLANT LAYOUT
MAXIMUM PROBABLE FLOW

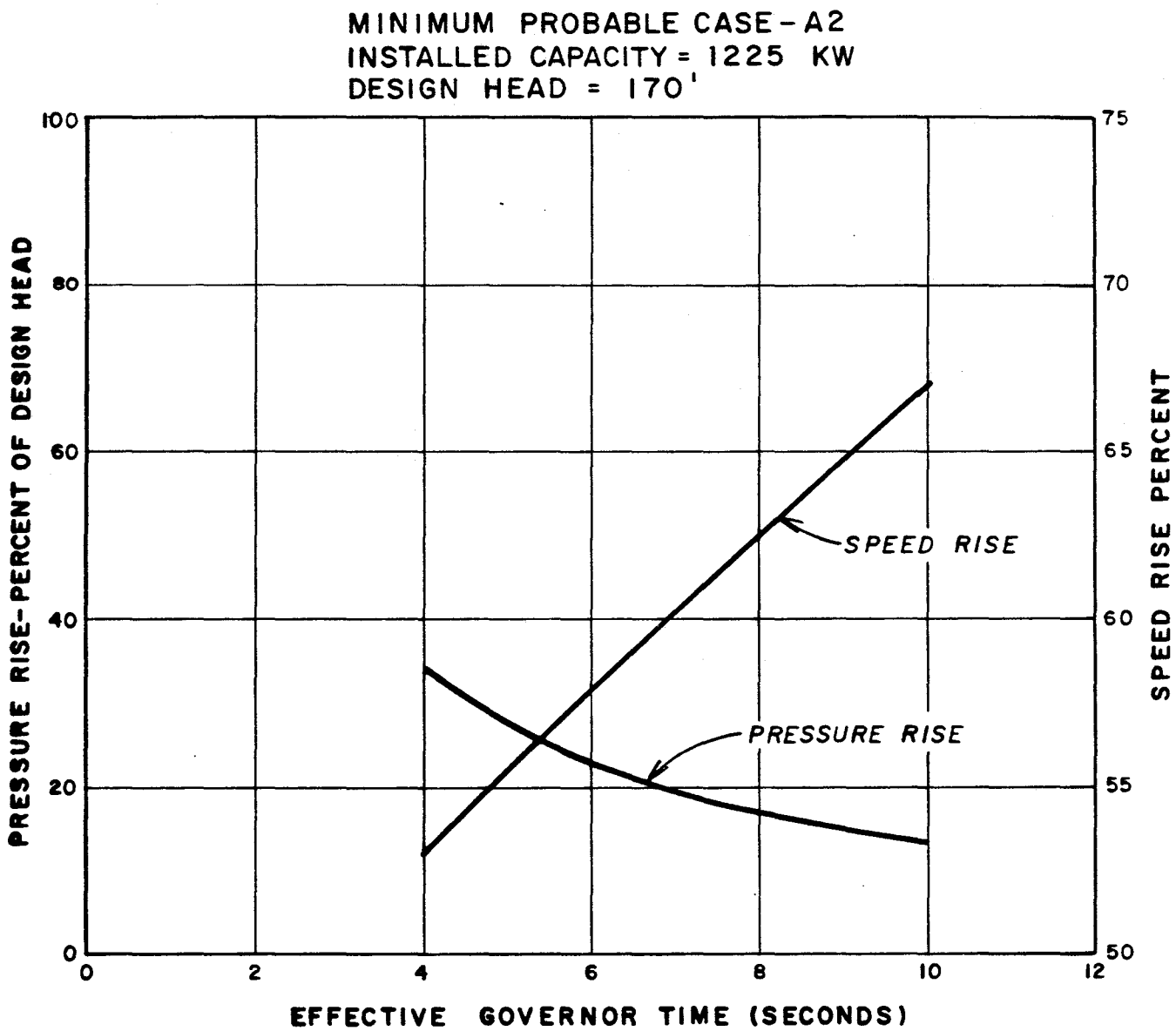

CAP/SRP INTERCONNECTION FACILITY
PRESSURE RISE AND SPEED RISE CURVES
ALTERNATIVE A2

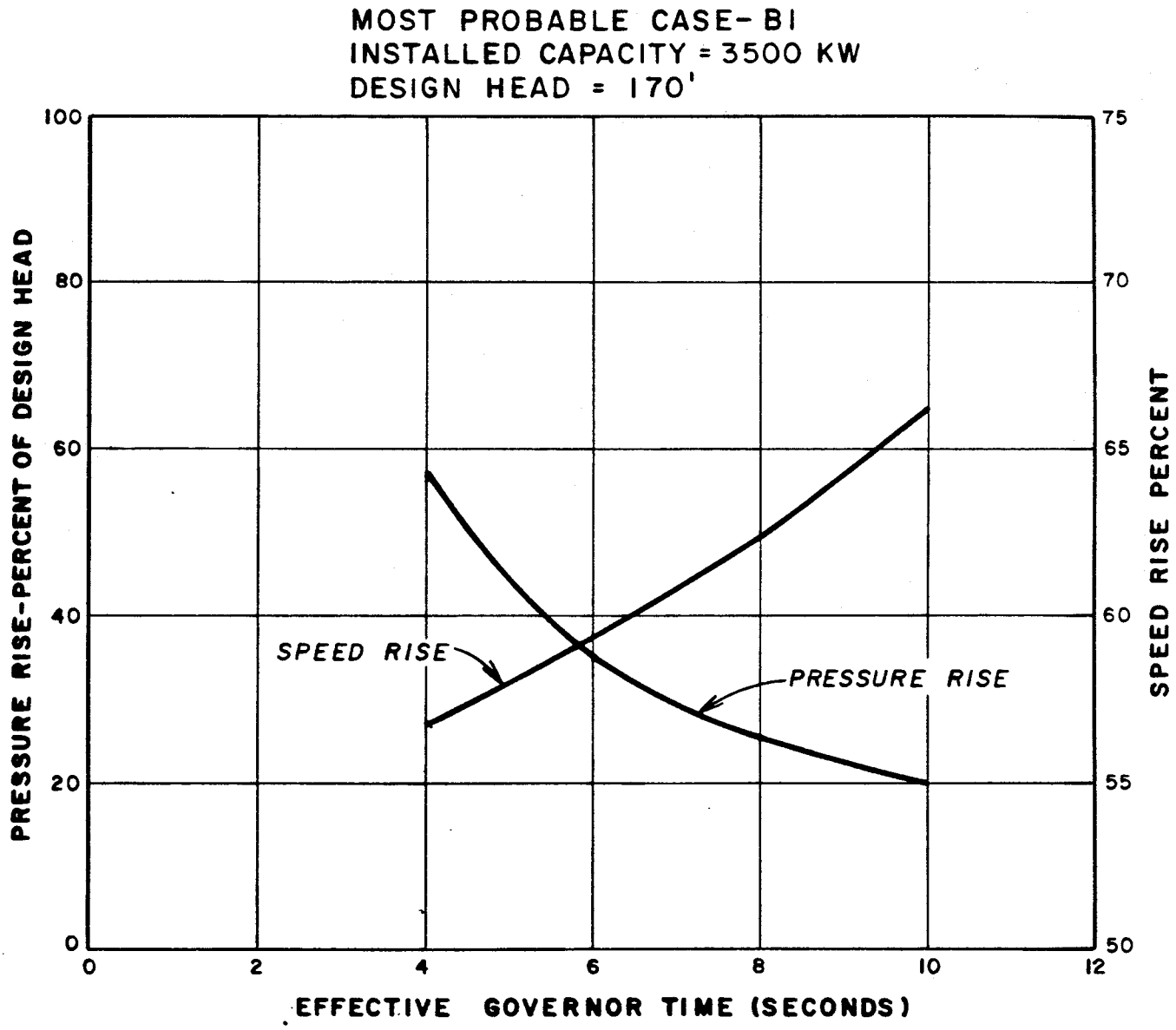

CAP/SRP INTERCONNECTION FACILITY
PRESSURE RISE AND SPEED RISE CURVES
ALTERNATIVE BI

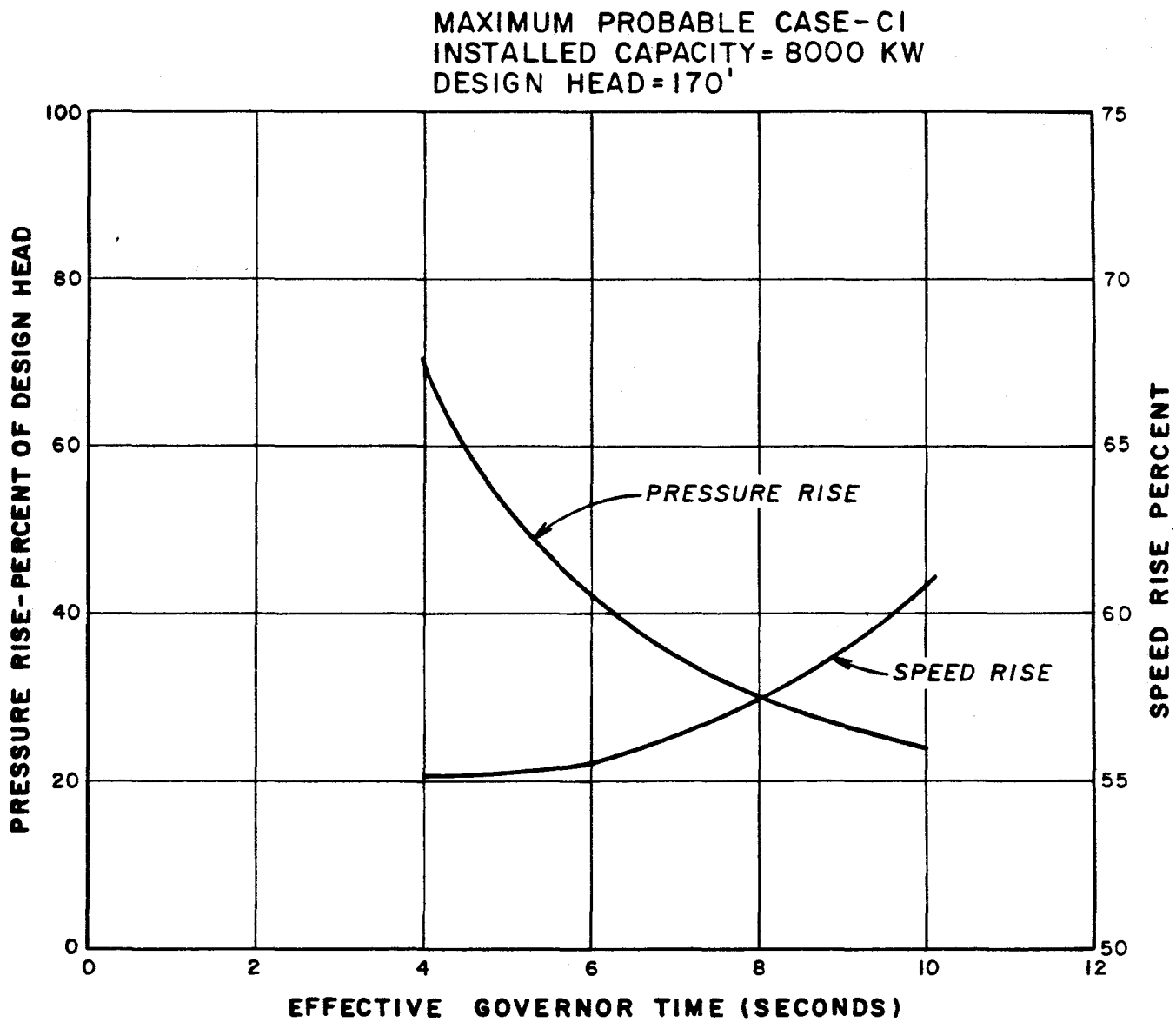

CAP/SRP INTERCONNECTION FACILITY
PRESSURE RISE AND SPEED RISE CURVES
ALTERNATIVE CI

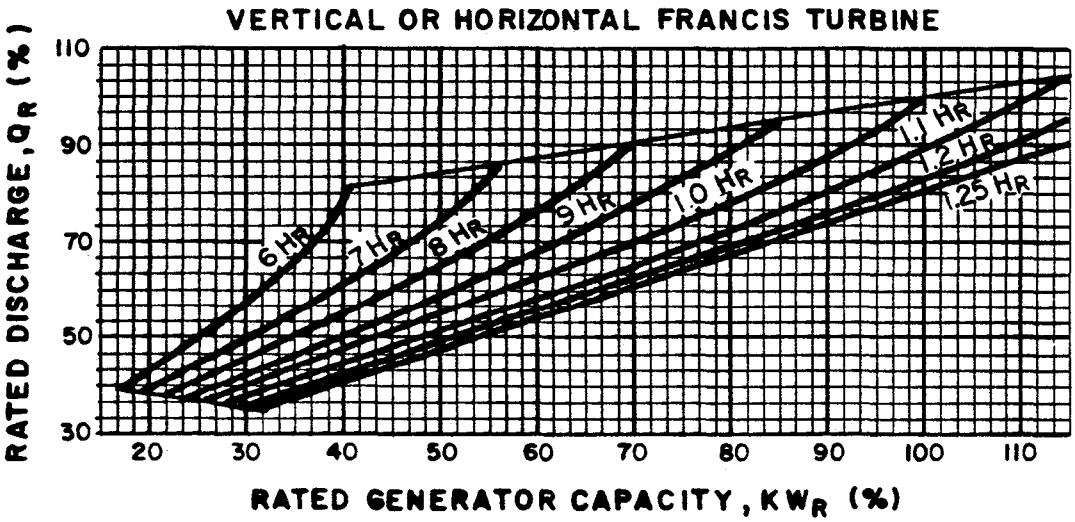

$kW_R = H_R\ Q_R\ E_R\ E_G / 11.81$, (kW)

where:

kW_R = Rated capacity at H_R

H_R = Selected Design Head, (ft.)

Q_R = Turbine Discharge at H_R & kW_R, (cfs)

E_R = Turbine efficiency at H_R & kW_R, (%)

E_G = Generator efficiency, (%)

SOURCE: USACE FEASIBILITY STUDIES FOR SMALL SCALE HYDROPOWER ADDITIONS, VOL. V., FIGURE 3-8.

CAP/SRP INTERCONNECTION FACILITY
TURBINE PERFORMANCE CURVES

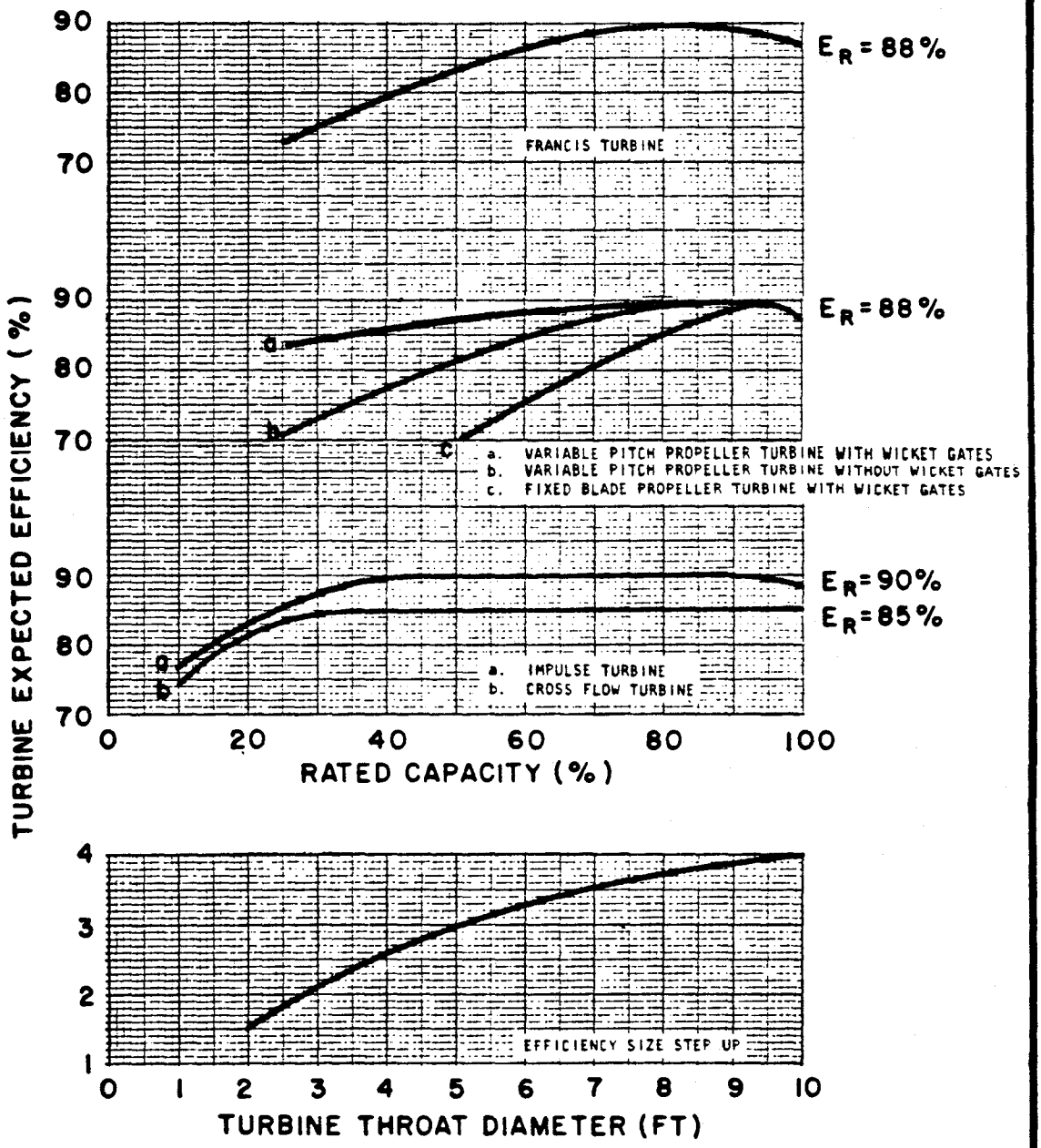

NOTES:

1. E_R = Turbine Efficiency at rated output, kW_R and head, H_R
2. The values shown are typical for a turbine with a 1 foot diameter runner. The values shown in the size step up curve may be added to the E_R values for larger units. Values apply for Francis, fixed and variable pitch propeller, tube, slant, bulb and rim turbines. Do not apply step up on impulse or cross flow turbines.

SOURCE: USACE FEASIBILITY STUDIES FOR SMALL SCALE HYDROPOWER ADDITIONS, VOL. V FIGURE 3-5.

CAP/SRP INTERCONNECTION FACILITY
TURBINE EFFICIENCY CURVES

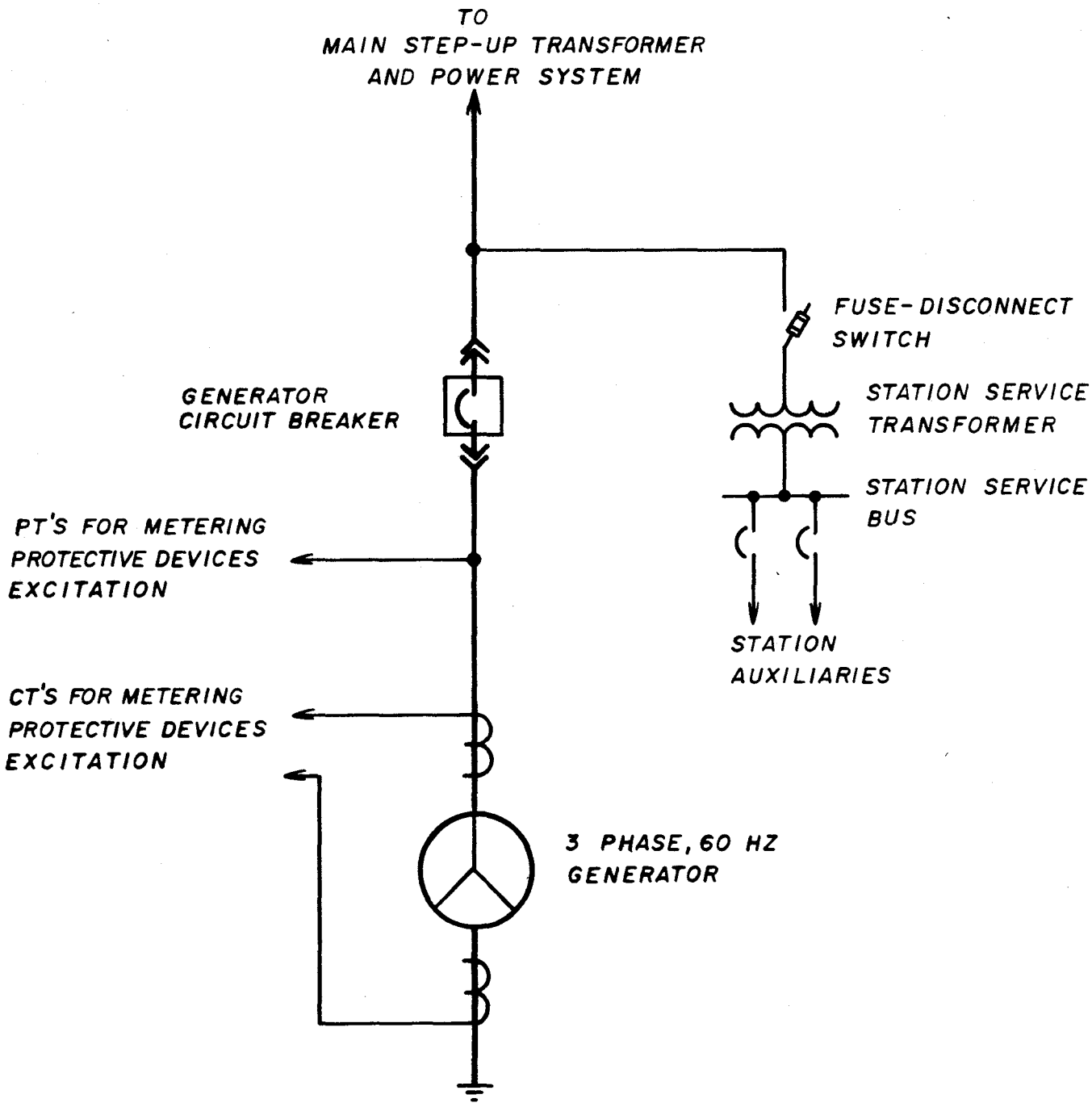

CAP/SRP INTERCONNECTION FACILITY
SINGLE UNIT ONE-LINE ELECTRICAL
DIAGRAM (GENERATOR BREAKER)

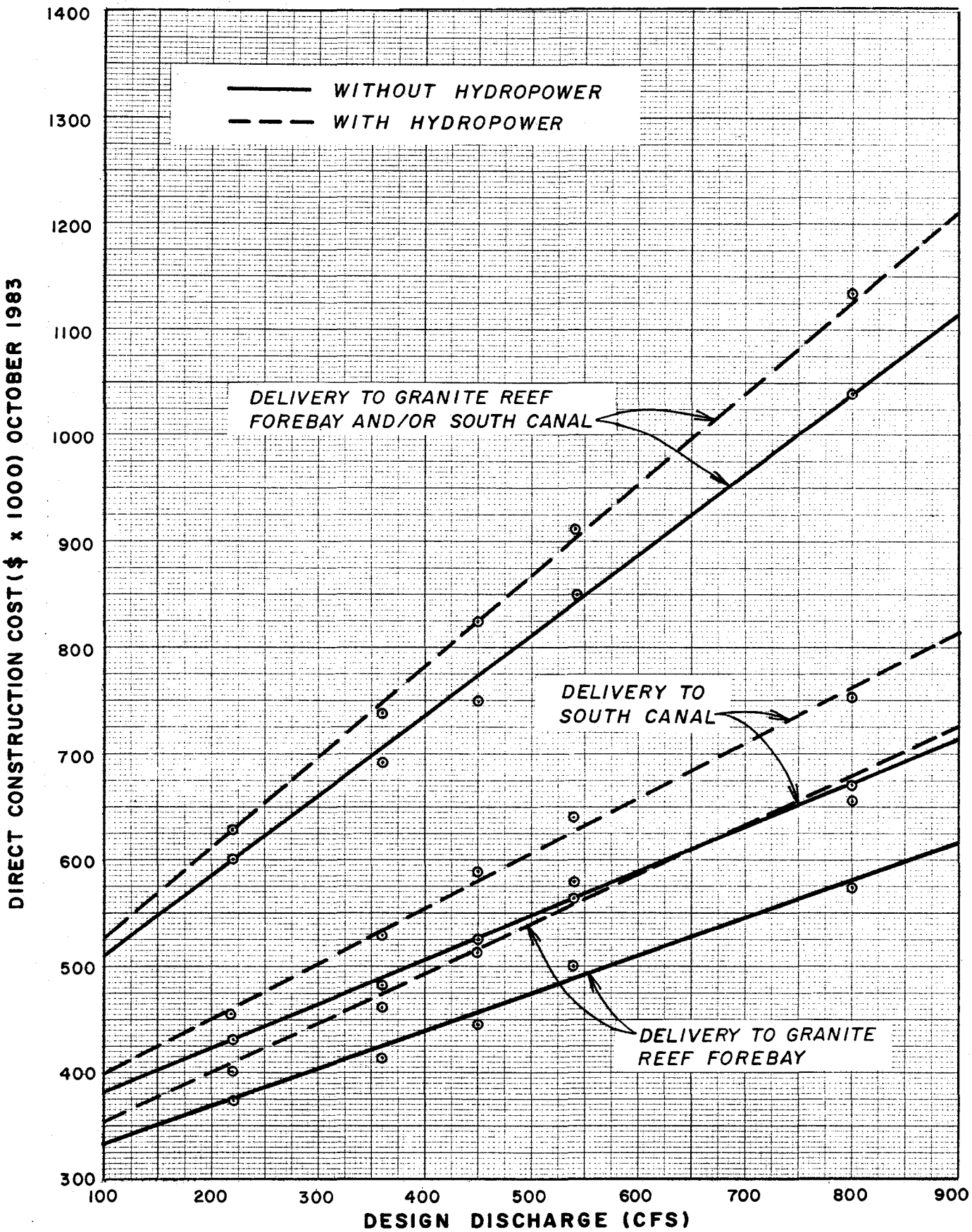

CAP/SRP INTERCONNECTION FACILITY
DIRECT CONSTRUCTION COST CURVES
(EXCLUDING HYDROPOWER PLANT COSTS)

(REVISED OCTOBER 28, 1983)

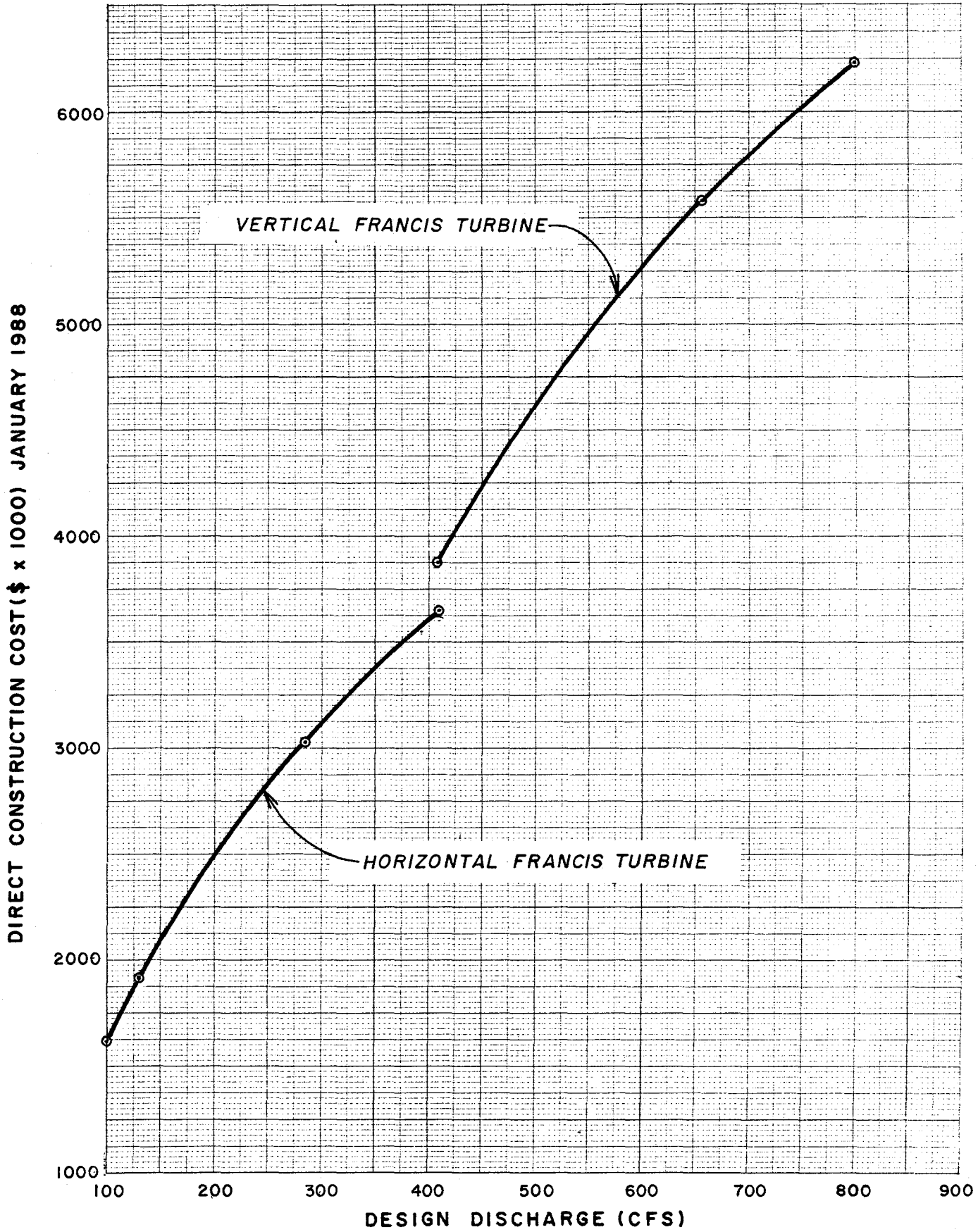

CAP/SRP INTERCONNECTION FACILITY
HYDROPOWER PLANT DIRECT CONSTRUCTION COST CURVES

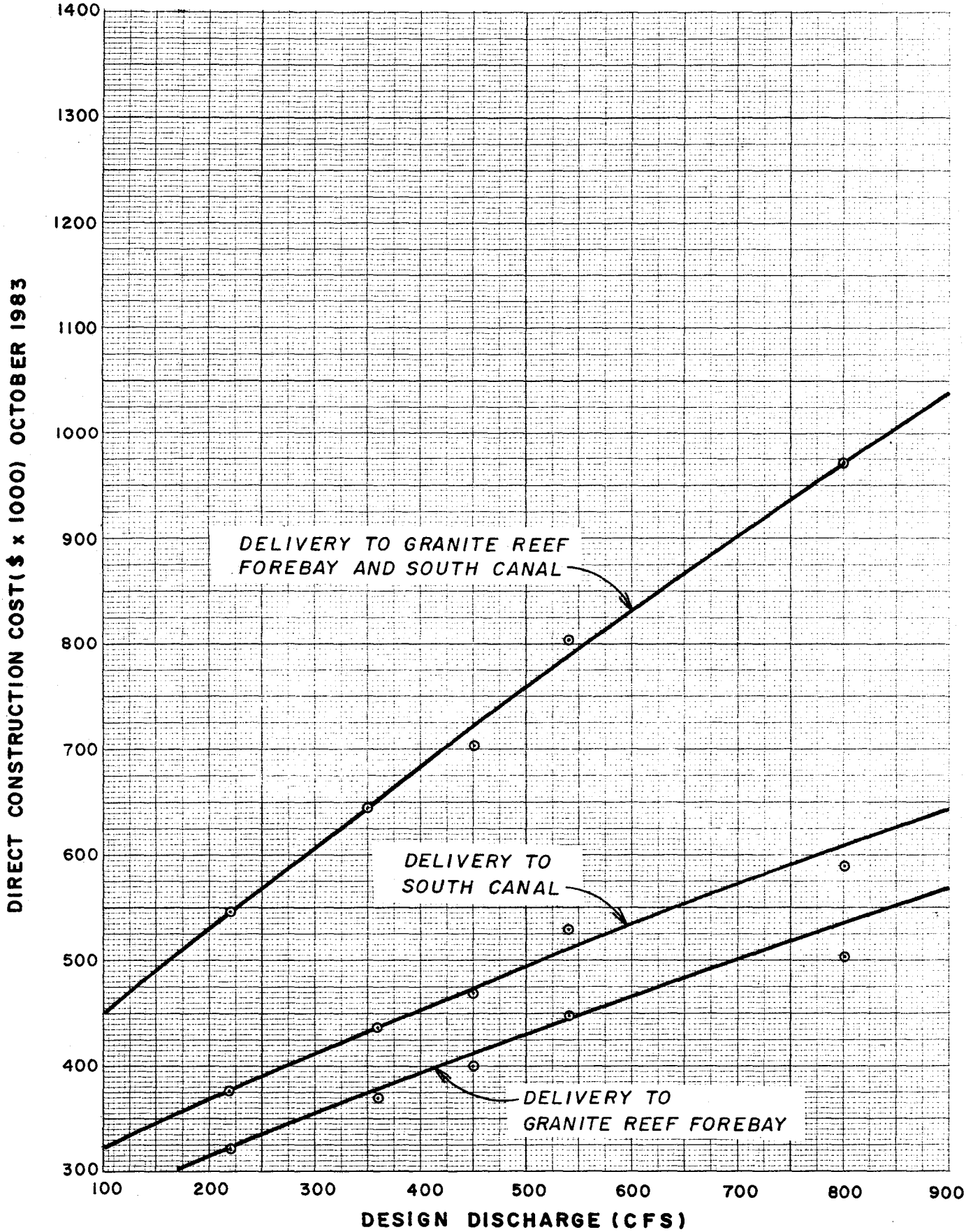

CAP/SRP INTERCONNECTION FACILITY
OPEN - CHANNEL CHUTE
DIRECT CONSTRUCTION COST CURVES

APPENDIX A

Salt River Project
WATER ◆ POWER

BOX 1980 PHOENIX, ARIZONA 85001

TELEPHONE 273-5500

File: RT-20078

July 26, 1983

Mr. Chuck Hutton
PRC Engineering Consultants, Inc.
Denver Technological Center
Building 40 DTC West
P.O. Box 3006
Englewood, CO 80155

Re: Additional Data for the Schematic Design Phase of the CAP/SRP Interconnection

Dear Mr. Hutton:

Enclosed are the following items that were discussed in your telephone conversation with C. J. Kissel:

1. The draft Environmental Assessment Report for the CAP/SRP Interconnection.

2. Profile of the South Canal in area of interest. Also, stage-discharge relationship to broad-crested weir downstream of the South Canal head gates.

3. The following new flow rates are to be used to determine the range of feasibility of developing the interconnection facility for hydropower generation. (Reference Addendum #1, Item 4, Section 6.2.1.2). (See Attachment 1 for background information on Item No. 3.)

Flow Rates (cfs)

	April-September			October-March		
Year	Minmum Probable	Most Probable	Maximum Probable	Minimum Probable	Most Probable	Maximum Probable
1985	69	258	685	36	140	527
1988	77	262	658	40	143	499
2005	119	284	508	61	160	343
2017	128	254	418	66	139	264
2034	142	210	283	73	108	146

You also requested information on the water surface elevation changes in the Granite Reef Forebay, water surface levels in the CAP Aqueduct, and the high-water mark in the vicinity of the Granite Reef Diversion Dam.

The concrete crest of the Granite Reef Diversion is at elevation 1309.8. The tops of the flashboards on the dam crest are at elevation 1312.9. These elevations were taken from Drawing No. A-123-23, entitled the Granite Reef Dam and Intakes (South Side). The drawing is dated June 1908, however, the elevations were recorded in March 1970. Under normal operating conditions the water surface elevation in the Granite Reef Forebay is 0.5 to 1.0 feet below top of flash boards. However, the water surface elevation in the forebay does drop to 0.5 feet below the crest of the dam, a few times during the year for maintenance purposes.

The CAP Aqueduct water levels were obtained from Bruce Hutchison of the USBR. The control water surface elevation is 1489.22. The normal water surface elevation is 1493.05.

The high-water mark in the vicinity of the Granite Reef Diversion Dam was recorded on February 16, 1980. The water level on the south side of the dam was recorded to be 1317.5. However, at the time the high water level was obtained, the river flow breached the north bank and some of the water bypassed the 1000 foot dam crest. From examining the files in the Hydrology Department, the estimated peak discharge at the dam was 170,000 cfs. Assuming that the entire 170,000 cfs flows over the dam crest, the water surface elevation would have been approximately 1321.0. The final flood protection/flood proofing elevation will be dependent on the Consultant's recommendation on the degree of flood protection/flood proofing required for the interconnection facility.

Should you have any questions or comments, do not hesitate to contact C. J. Kissel (602-273-2978).

Sincerely,

for T. N. Stanton, Manager
Civil Engineering

CJK/sw
Attachments
c: Edward A. Adair, PRC Toups, Phoenix, w/attach

ATTACHMENT 1

FORM 82-5005
FORM 137-4400

Memorandum

SALT RIVER PROJECT

Date July 21, 1983

File: ORG 3

TO Joe Kissel

FROM Scott Atkinson

RE: UPDATED DELIVERY ESTIMATES THROUGH CAP/SRP INTERCONNECTION

In accordance with our discussions last week, I have updated the CAP delivery estimates through the CAP/SRP interconnection for use by PRC Toups in preliminary design. The information transmitted in this memo supersedes similar information provided in the report "Location, Design and Funding of the CAP/SRP Interconnection" (October, 1982).

The revised delivery estimates are derived in Attachments 1 and 2 and portrayed graphically in Attachment 3 (Compare Appendix 1, Appendix 2 and Exhibit 3 respectively of October, 1982 report). Over the past several months, Water Group Management Staff has made an active effort to tie down water deliveries through the interconnection. A summary of contacts with potential co-users was distributed in a July 1, 1983 memo from R. W. Mason to Reid W. Teeples. Although many CAP allottees have now been eliminated as potential co-users, others (like AMWUA, Avondale, Goodyear, Chaparral City Water Company and Rio Salado Development District) have been added. At the same time, some co-users have given firm indications of their intent to participate in the interconnection while others are still evaluating other options.

Ironically, the updated range of possible deliveries has increased rather than decreased since October, 1982. Despite our efforts to narrow the range, the "maximum probable" estimate has increased (due mainly to the possibility of substantial deliveries by AMWUA in the early years) and the "minimum probable" estimate has decreased (due to the fact that RWCD and other co-users, who were previously considered certain participants, are now considering other options). The "most probable" delivery estimate, however, has not changed drastically.

Also as requested, I am including Attachment 4 which is an update of flow rates for use in PRC's hydrogeneration analysis (Compare Appendix VI, Figure I, Assumption #7, p. 81 of October, 1982 report). These flow rates were derived using both the updated delivery estimates in Attachment 1 and the following delivery schedule for all co-users but AMWUA and Rio Salado.

- Apr - Sept (6 mo.) -- 66% of annual deliveries
  (11% per month maximum allowable by CAP)
- Oct - Mar (6 mo.) -- 34% of annual deliveries

The delivery schedules for AMWUA and Rio Salado were assumed constant throughout the year because of the non-seasonal nature of their demands.

If you have questions on any of the above information, please let me know.

Scott L. Atkinson

Scott L. Atkinson

SLA/cml
Attachments

xc: R. Mason
E. Kirdar
T. Stanton
H. Mattingly
E. Lauerman
G. Harris
K. Wanttaja

0154a-07/21/83

ATTACHMENT 1

SPECULATIVE CAP DELIVERIES
THROUGH CAP/SRP INTERCONNECTION
(JULY 15, 1983)

	Delivery Canal or Exchange River	Entity	Speculative Deliveries (AF/YR) 1985	2005	2034	Case Min. Probable	Most Probable	Max. Probable
I. Transportation Deliveries								
A. M&I (a)	DNA	AMWUA (b)	250,000	100,000	0			X
	South	Avondale	690	3,058	4,099	X	X	X
	South	Chandler	1,012	2,725	3,668		X	X
	AZ	Glendale (c)	1,000	1,800	2,800			X
	South	Goodyear	712	1,201	2,374	X	X	X
	South	Phoenix (d)	20,000	30,000	46,000	X	X	X
	South	Rio Salado (e)	10,000	21,000	0		X	X
	South	San Tan I.D.	101	183	236			X
	AZ,South	Tempe	1,112	3,367	4,315		X	X
B. Non-Indian Ag. (f)	AZ	Arcadia Water Co.	1,300	980	525	X	X	X
	AZ	Roosevelt I.D.	26,100	19,040	10,430			X
	South	RWCD	59,800	41,440	16,940		X	X
	South	San Tan I.D.	7,700	5,600	3,010			X
	AZ,South	SRP	29,700	21,350	0		X	X
C. Indian	AZ	SRPMIC (g)	2,000	3,000	4,000			X
Transportation Delivery Subtotals (AF/YR):			1985			22,702	124,326	411,227
			2005			35,239	125,121	254,744
			2034			52,998	77,921	98,397
II. Upstream Exchange Deliveries								
A. M&I (a)	Verde	Chaparral City W.C.	1,540	5,310	6,978	X	X	X
	Verde	Cottonwood Water Co.	0	763	1,789			X
	Salt	Globe	0	1,899	3,480			X
	Salt	Inspiration Copper	0	4,613	2,906			X
	Salt	Miami-Claypool	0	1,561	1,829			X
	Verde	Payson	950	2,212	4,995		X	X
	Salt	Phelps-Dodge	14,000	20,746	14,665	X	X	X
	Verde	Pine (E&R Water Co.)	17	69	161		X	X
	Salt	Pinto Valley Copper	0	3,265	2,271	X	X	X
	Verde	Prescott	3,244	4,250	7,127		X	X
	Verde	Rio Verde Utilities	145	264	812	X	X	X
	Verde	State Land Dept. (h)	1,500	1,800	3,900			X

	Delivery Canal or Exchange River	Entity	Speculative Deliveries (AF/YR) 1985	2005	2034	Case Min. Probable	Most Probable	Max. Probable
B. Indian (i)	Verde	Camp Verde	1,200	1,200	1,200			X
	Verde	Ft. McDowell	4,300	4,300	4,300			X
	Verde	Tonto-Apache	128	128	128			X
	Verde	Yavapai-Prescott	500	500	500			X
Upstream Exchange Delivery Sustotals (AF/YR):			1985			15,685	19,896	27,524
			2005			29,585	36,116	52,880
			2034			24,726	37,009	57,041
III. Total Deliveries (I + II)			1985			38,387	144,222	438,751
			2005			64,824	161,237	307,624
			2034			77,724	114,930	155,438

NOTES:

(a) Unless noted otherwise, M&I deliveries for years 1985 and 2005 are based on ADWR Staff Recommendations (Dec. 2, 1981). Year 2034 deliveries are based on final CAP water allocations for M&I (Federal Register, March 24, 1983, pp. 12447-12449).

(b) AMWUA does not have a CAP allocation but anticipates using excess water in the early years of the CAP for groundwater recharge and subsequent withdrawal by AMWUA member cities. Delivery estimates are based on discussions with Leonard Dueker, General Manager of AMWUA (7-14-83).

(c) Glendale wants to use the CAP/SRP interconnection as back-up to main delivery through Glendale's proposed Pyramid Peak Water Treatment Plant on the CAP aqueduct. Delivery estimates arbitrarily assume 20 percent of Glendale's allotment will be conveyed through the interconnection.

(d) Phoenix expects to transport a portion of its CAP allocation through the CAP/SRP interconnection to the Val Vista Water Treatment Plant on the South Canal. Delivery estimates are based on discussions with Bob Steytler, Assistant Director of Water and Wastewater Department for City of Phoenix (7-14-83).

(e) Rio Salado Development District does not have a CAP allocation but still hopes to obtain one or use excess CAP water for its supply source. Delivery estimates are based on discussions with Tim Bray, General Manager of Rio Salado (6-30-83).

(f) See Exhibit 2 for computation of delivery estimates for Non-Indian Ag.

(g) The Salt River Pima-Maricopa Indian Community (SRPMIC) presently takes delivery of about 35,000 AF/year of water via the Arizona Canal. It is assumed that a portion of the tribe's CAP allocation will be delivered by SRP via the same route to alleviate the Indian's supply problems south of the Arizona Canal, with the remainder being delivered through a direct turnout from the CAP Granite Reef aqueduct to serve the Indian land north of the Arizona Canal and south of the CAP aqueduct.

(h) The State Land Department was granted a CAP allocation to provide a water supply for new developments on State of Arizona lands lying outside the service areas of cities and private water companies. One such development is being considered directly north of Fountain Hills with tentative plans to use CAP exchange water as the source of domestic supply. Arizona legislation limits each development to 10 percent of the Land Department's total allocation.

(i) Indian deliveries for years 1985, 2005 and 2034 are based on final CAP water allocations (Federal Register, March 24, 1983, p. 12447).

ATTACHMENT 2

COMPUTATION OF SELECTED NON-INDIAN AG. ALLOCATIONS (a)

Entity	1985 ALLOCATION Percent of Ag. Supply (b)	1985 ALLOCATION AF/YR	PROJECTED 2005 ALLOCATION Percent of Ag. Supply (c)	PROJECTED 2005 ALLOCATION AF/YR	PROJECTED 2034 ALLOCATION Percent of Ag. Supply (c)	PROJECTED 2034 ALLOCATION AF/YR
Arcadia Water Co.	0.13	1,300(d)	0.14	980	0.15	525
Roosevelt I.D.	2.61	26,100	2.72	19,040	2.98	10,430
RWCD	5.98	59,800	5.92	41,440	4.84	16,940
San Tan I.D.	0.77	7,700	0.80	5,600	0.86	3,010
SRP	2.97	29,700	3.05	21,350	0.00	0

NOTES: (a) Estimated non-Indian ag. supplies for the years 1985, 2005 and 2034 are 1000, 700 and 350 KAF/year, respectively (Dennis Sundie, ADWR, 7-14-83).

(b) Allocation percentages for 1985 are based on final CAP water allocations for non-Indian Agriculture (Federal Register, March 24, 1983, pp. 12449).

(c) Allocation percentages for years 2005 and 2034 are projected using 1985 percentages minus supply to be delivered to eligible lands converted to M&I or otherwise removed from irrigation (see ADWR urbanization projections, Dec. 2, 1981).

(d) Sample computation: $1{,}000{,}000 \frac{AF}{yr} \times 0.0013 = 1{,}300 \frac{AF}{yr}$

ATTACHMENT 3

GRAPH OF SPECULATIVE CAP DELIVERIES THROUGH CAP/SRP INTERCONNECTION* BASELINE CASE

YEAR	DELIVERIES (AF/YR.) MIN. PROBABLE	MOST PROBABLE	MAX. PROBABLE
1985	38,387	144,222	438,751
2005	64,824	161,237	307,624
2034	77,724	114,930	155,438

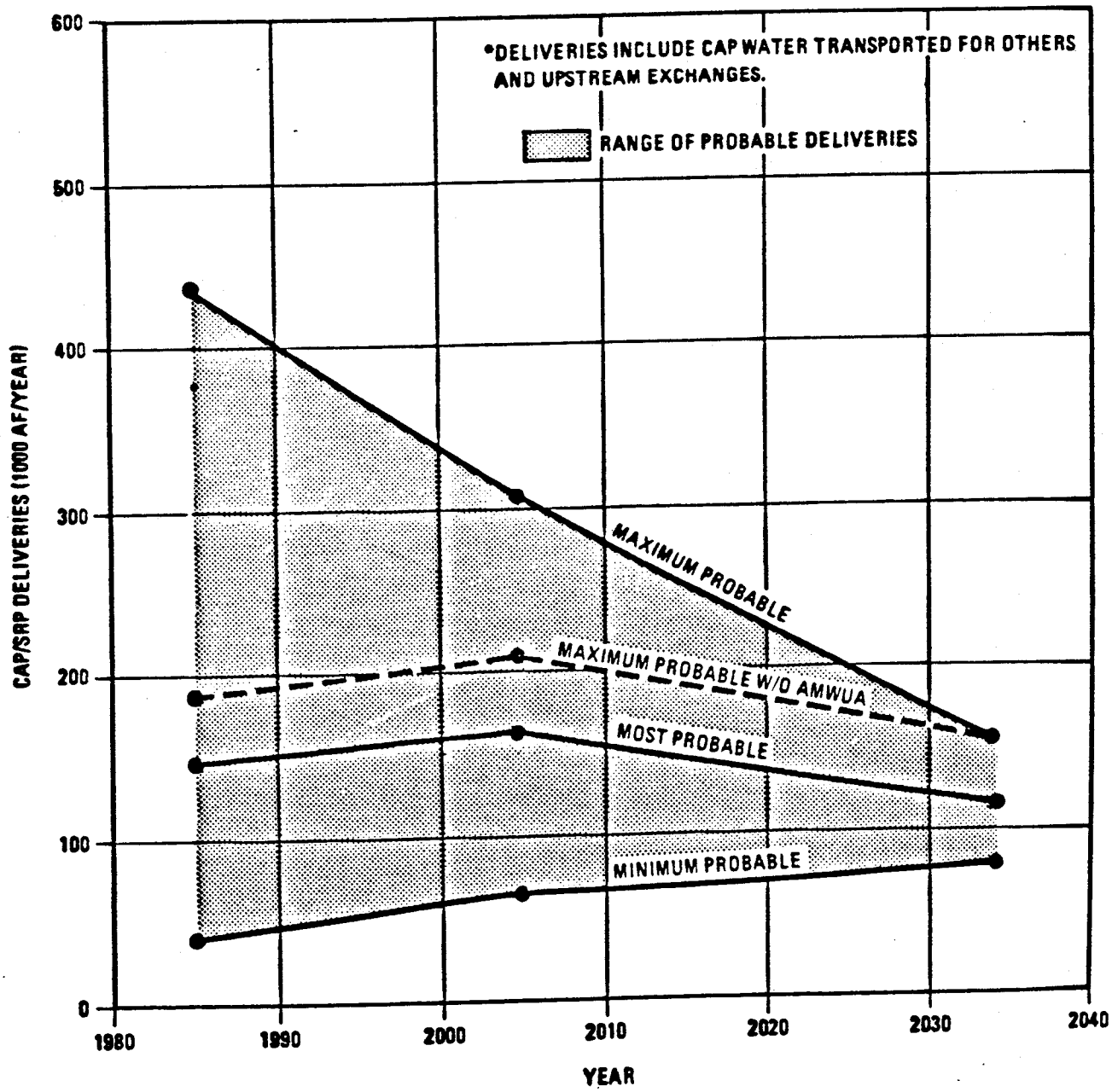

ATTACHMENT 4

SPECULATIVE FLOW RATES (CFS)
THROUGH CAP/SRP INTERCONNECTION

Year	April - September			October - March		
	Min. Prob.	Most Prob.	Max. Prob.	Min. Prob.	Most Prob.	Max. Prob.
1985	69	258	685	36	140	527
1988*	77	262	658	40	143	499
2005	119	284	508	61	160	343
2017*	128	254	418	66	139	264
2034	142	210	283	73	108	146

*Computed by straight-line interpolation.

SRP SOUTH CANAL
SIMPLE TRAPEZOID

DATE 11- 4- 82

FLUME DIMENSIONAL DATA (FT): SILL HEIGHT= 4.690 K= 0.00050000
B1=51.900 Z1= 1.319 X1= 1.000 B3=58.200 Z3= 1.330
TL=15.900
CL=12.000
ER= 6.000

Y1 FT.	Q CFS	YC FT	FR. NO. AT Y	IDEAL-Q	DISC. C	V1	ALF 3	V3	M. L.
4.100	1652.0000	2.86	0.1910	1670.0000	0.9891	2.96	1.002	9.30	0.899
4.200	1719.0000	2.94	0.1960	1737.0000	0.9895	3.04	1.002	9.42	0.901
4.300	1786.0000	3.01	0.2000	1805.0000	0.9897	3.12	1.002	9.53	0.902
4.400	1855.0000	3.09	0.2040	1873.0000	0.9901	3.19	1.002	9.64	0.904
4.500	1925.0000	3.16	0.2080	1943.0000	0.9904	3.27	1.002	9.75	0.905
4.600	1995.0000	3.24	0.2110	2014.0000	0.9907	3.35	1.002	9.86	0.907
4.700	2067.0000	3.31	0.2150	2086.0000	0.9909	3.42	1.002	9.97	0.908
4.800	2140.0000	3.39	0.2190	2159.0000	0.9912	3.50	1.002	10.07	0.909
4.900	2215.0000	3.46	0.2230	2234.0000	0.9915	3.58	1.002	10.18	0.910
5.000	2290.0000	3.54	0.2260	2309.0000	0.9918	3.65	1.002	10.28	0.912

Q_{CFS}	h_1	h_s (on slope	Δh
100.000	0.702	1.162	0.159
200.000	1.089	1.803	0.212
300.000	1.409	2.332	0.249
400.000	1.691	2.799	0.277
500.000	1.947	3.223	0.300
600.000	2.185	3.616	0.319
700.000	2.407	3.984	0.335
800.000	2.617	4.332	0.350
900.000	2.817	4.662	0.363
1000.000	3.008	4.979	0.374
1100.000	3.191	5.282	0.384
1200.000	3.368	5.575	0.394
1300.000	3.539	5.857	0.402
1400.000	3.704	6.131	0.410
→ 1500.000	3.864	6.396	0.417
1600.000	4.020	6.654	0.424
1700.000	4.172	6.906	0.430
1800.000	4.320	7.151	0.436
1900.000	4.465	7.391	0.441
2000.000	4.606	7.625	0.446
2100.000	4.745	7.854	0.451
2200.000	4.880	8.078	0.456

WEIR CREST = 1305.9

h_1 = HEAD ABOVE WEIR CREST

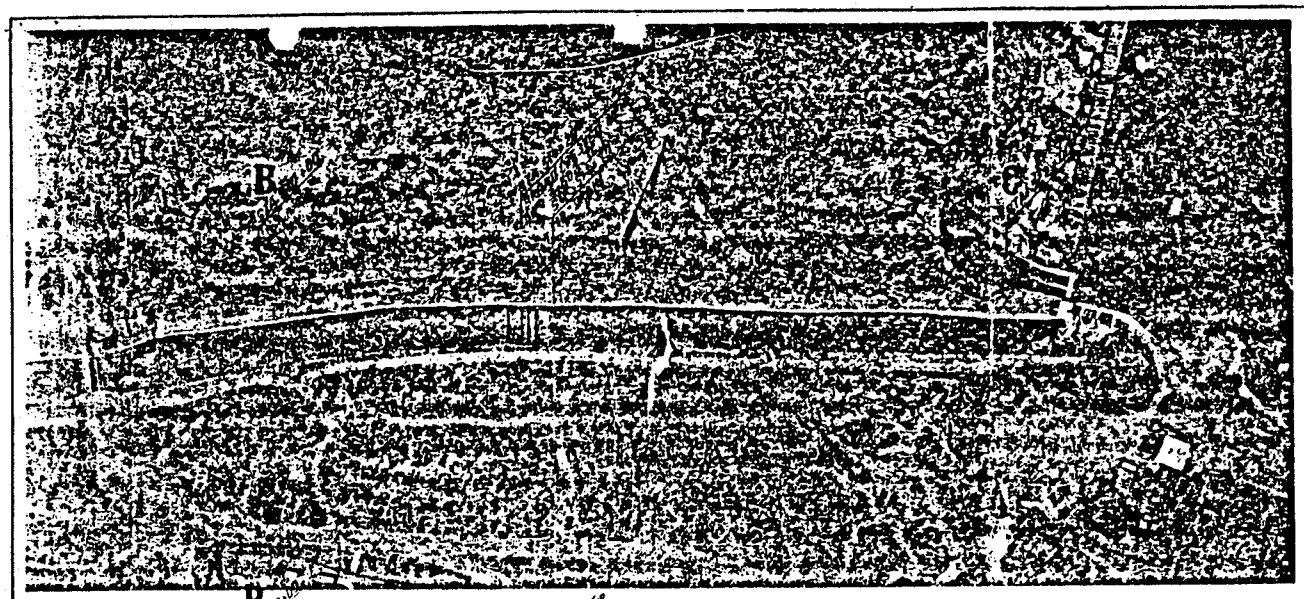

CANAL GATE SEATS (WESTERNMOST SEAT) = 1305.8
CANAL GATE SEATS (EASTERNMOST SEAT) = 1306.8
SOUTH CANAL HEAD GATES AT STATION 523+65

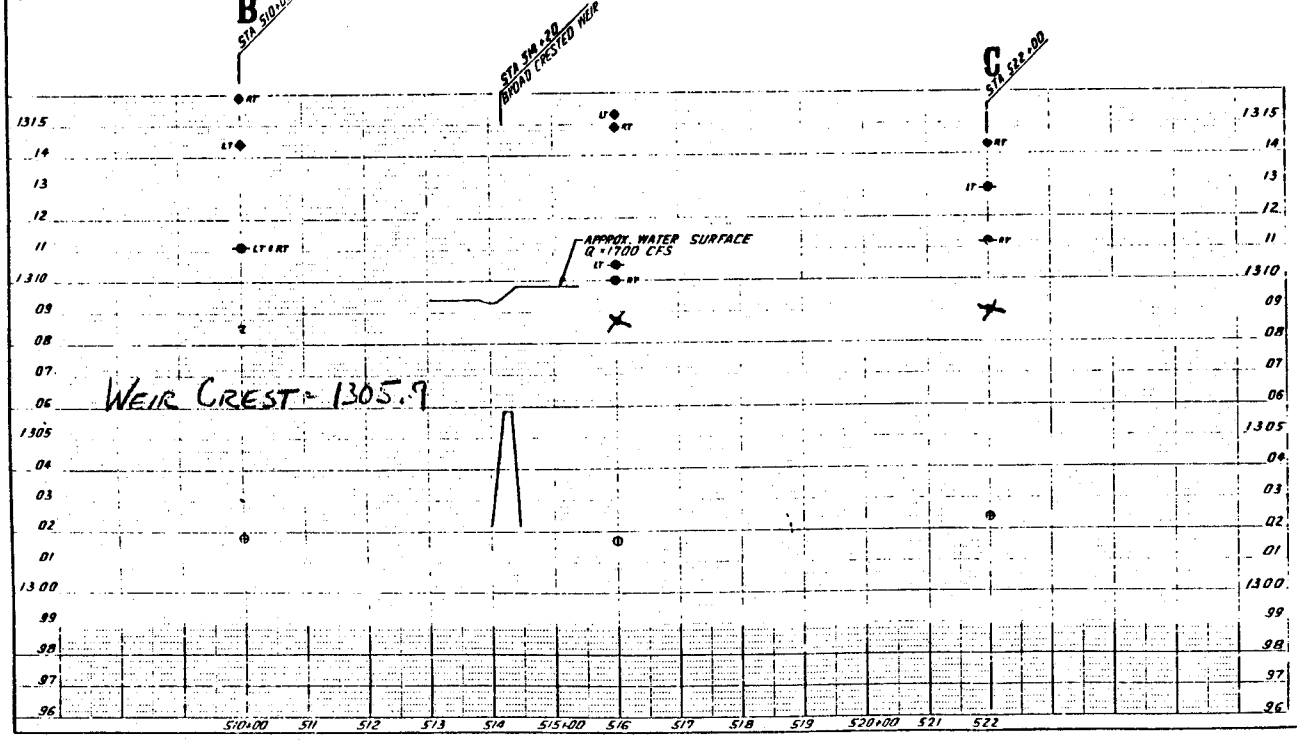

TBM-

STA 510+00 1/2" REBAR N/S CNL EL. 1314.45 BK W-442 P. 48.

STA 516+00 1/2" REBAR N/S CNL EL. 1315.99 BK W-442 P. 47.

STA 522+00 1/2" REBAR N/S CNL EL. 1313.97 BK W-442 P. 47.

STA 522 + 41 U.S. RECLAMATION B.C. TOP LINING EL. 1313.79 BK W-442 P. 34

C & M

SEP 10 1982

SYMBOLS FOR PROFILE

- CENTER LINE OF ROAD
- TOP DIRT BANK
- BED
- AVERAGE GROUND LEFT
- AVERAGE GROUND RIGHT
- TOP CONC. LINING
- HIGH WATER
- BED PVT DELIVERY
- HI GROUND
- LOW GROUND
- BED DRAIN DITCH
- CATCH BASIN

BOOK W. 442
PAGE 49
B1 A.F.

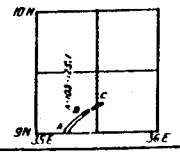

DESIGN BROAD CRESTED WEIR STA 514+20								
RT-2006	1	9-3-82	SWT	AK				
JOB NO	REV	DATE	DESIGN'D	DRAFT	CHECKED		APPROVED	

SALT RIVER PROJECT
WATER AND POWER — PHOENIX, ARIZONA

SOUTH CANAL
SEC. 13 T2N R6E
SW OF 16/16 COR. TO 16/16 COR.

DRAWN A.K	CHKD HLG	SCALE: PLAN 1"=100'	DWG NO 1"=100'	VERT 1"=5'	
SHEET OF	10-027	10-7-81	A-103-125.2		V2

PP

OCT 28 1982

D-270

Memorandum

To: Construction Engineer, Phoenix, Arizona

From: Chief Design Engineer

Subject: Salt River Project Turnout Design Concepts - Turnouts - Granite Reef Aqueduct - Granite Reef Division - Central Arizona Project

This memorandum is in response to a request from personnel on your staff to describe the alternative design concepts for the Salt River Project turnout.

The subject turnout is to be designed to operate initially as a gravity flow turnout with provision for possible future hydrogeneration and pumpback. Presently, the recommended turnout capacity is 800 ft^3/s and the future pumpback capacity is 1,000 ft^3/s. The canalside inlet structure and turnout/pump discharge lines will be located on a steep hillside near Reach 12, Station 793+49. Two 96-inch-diameter pipes are anticipated for the turnout/pump discharge lines and acoustic meters will be used for flow measurement.

The following two design concepts have been considered for control of the initial gravity turnout flow and measurement of flow in either direction:

1. Upstream flow control with slide gates. - A minimum of 10 diameters of straight, level pipe between the canalside inlet structure and the turnout flow acoustic meter installation is required for this alternative. An upward bend would be provided in the pipes beyond the meters for an overflow weir to force the necessary full pipe flow for accurate turnout measurement of all flows. Because of the hillside location, this concept would require a deep canalside inlet structure (approximately 50 feet at the headwall). A separate acoustic meter installation would be required for pumpback flow measurement. Also, the level length of pipe and the upward bend results in a pump discharge line profile that would appear to require downsurge protection. The estimated size of an open surge tank, located at the upward bend to provide downsurge protection, is 20 feet in diameter by 35 feet high.

The water user has indicated that a baffled pipe outlet would be used for energy dissipation for the initial gravity turnout flow. For a turnout flow of 800 ft^3/s and head of approximately 200 feet, the width of the baffled outlet structure would be about 30 feet. However, unless the pipe profile is such that a hydraulic jump forms in the pipe upstream from the baffled outlet, very high entrance velocity will result in high cavitation potential with possible damage to the pipe and/or baffled outlet structure. Depending on the location selected for the gravity turnout outlet and the future hydrogeneration plant, the site topography indicates that the pipe profile may flatten for some distance near the outlet and a hydraulic jump may form

in the pipe. This flow condition should also be avoided; however, since slug flow with attendant high pressure blowback surges may develop for some flow range.

2. Downstream control with sleeve valve. - A 54-inch sleeve valve near the outlet would be utilized for the initial gravity turnout or future hydrogeneration bypass flow control and dissipation of energy. With control of the flow at the outlet by a sleeve valve, full pipe flow can be maintained in the pipelines for all flows.

Later installation of a hydrogeneration plant with wicket gates or proper unit sizing would result in full pipe flow in the pipelines. Of course, full pipe flow would exist in the pumpback mode of operation.

A canalside inlet structure similar to the other Granite Reef Aqueduct turnout inlet structures can be used. The slide gates would be open for normal turnout and pumpback operation and would close only to prevent flow from the canal in case a valve or gate fails to close at the pump-generation plant after a power outage. An overflow weir wall bypass would be incorporated into the inlet structure design to handle the pumpback capacity in the event that the slide gates were closed when pumps were inadvertently turned on.

The upper portion of the buried turnout/pump discharge lines would be laid on a 3:1 slope. With full pipe flow for all conditions, one acoustic meter installation for flow measurement in either direction would be constructed at any desired location along the pipeline where a minimum of 10 pipe diameters of straight pipe can be provided on each side of the meter structure. The acoustic meter installation would have to be constructed in the water user's portion of the pipeline, subject to reimbursement by the Bureau of Reclamation.

The suitability of concept No. 2 may be affected by the water user's commitment to provide pressure conduit for the future hydrogeneration plant and by possible cost participation by the Bureau to accommodate future pumpback operation. However, it appears that with a cost sharing and operating agreement between the water user and the Bureau, design concept No. 2 would be a feasible, economic design and would avoid some of the hydraulic problems associated with the alternative concept.

Unless otherwise advised, we will proceed with design concept No. 2, as described above, for the Salt River Project turnout.

James D. Brown

Copy to: Regional Director, Boulder City, Nevada, Attention: LC-200
Project Manager, Phoenix, Arizona
Resident Engineer, Phoenix, Arizona

Blind to: D-210, D-270, D-273, D-273 (Fisher)

ALNelson:jas

APPENDIX B

ALLIS-CHALMERS

BOX 712 • YORK, PENNSYLVANIA 17405 / 717-792-3511

HYDRO-TURBINE DIVISION
ALLIS-CHALMERS FLUID PRODUCTS COMPANY

September 12, 1983

Planning Research Corporation International
Division of PRC Engineering
Denver Technological Center
Building 40 West
7935 East Prentice Avenue
Englewood, CO 80111

ATTENTION: Dr. B. T. A. Sagar
Assistant Chief Mechanical Engineer

SUBJECT: CAP/SRP Interconnection
Salt River Project
Your File 1314/3-DG 126183
Allis-Chalmers Inquiry 6-34626

Gentlemen:

In response to your letter dated August 24, 1983, we wish to provide present day preliminary prices for hydroelectric generating equipment. Based on the design conditions indicated in Table 2 of your letter, we have estimated the present day cost for a standardized equipment package consisting of the following components:

- Horizontal Francis Turbine (A1, A2, A3, B1, B2, B3)

  or a

- Vertical Francis Turbine (C1, C2, C3)
- Coupling and Guard Screens
- Hydraulic Power Unit
- Wicket Gate Positioning System (Positioner only--black start, isolated operation or speed regulating capability is not included)
- Generator Switchgear
- Control Panel (semi-automatic)
- Protection Cubicle

(NOTE: No intake valve, step-up transformer, high voltage disconnect equipment is included.)

The present day preliminary price F.O.B. shipping point for the equipment package outlined above is as follows:

Alternative	Turbine Size	Preliminary Price
A1	30"	$1,058,000.00
A2	25"	$ 975,000.00
A3	23"	$ 918,000.00
B1	44"	$1,577,000.00
B2	40"	$1,390,000.00
B3	32"	$1,190,000.00
C1	70"	$2,778,000.00
C2	66"	$2,652,000.00
C3	60"	$2,439,000.00

The dimensional data you have requested for the size range of equipment is not available in its entirety. The dimensions shown on the attached sketch (9404-PCS-2) are preliminary and can be scaled directly to the sizes you wish to study.

If you should have any questions regarding the information, scope of our estimate or other outputs of the equipment please let us know. We can be contacted through our area representatives listed below.

Very truly yours,

Robert Baginski

Robert Baginski
Sales Engineer
Standard Turbine

RB/csl
Attachment

cc: Doyle E. Young, U&ISD Denver
303/989-0684
Ted D. Miller, Ted Miller Associates
303/758-3912
L. D. Wyss, U&ISD Los Angeles
714/533-4700

NOTES:

1. ALL DIMENSIONS ARE PRELIMINARY.
2. DISCHARGE OF DRAFT TUBE TO BE SUBMERGED MIN 3' BELOW MIN TAILWATER. SHAPE OF DRAFT TUBE BEYOND A-C SUPPLY SUBJECT TO A-C APPROVAL.
3. GENERATOR LAYOUT SHOWN IS OF THE PEDESTAL BEARING TYPE. THE BRACKET TYPE MAY ACTUALLY BE SUPPLIED.
4. THE ANGLE BETWEEN THE DRAFT TUBE AND THE HORIZONTAL CENTERLINE (SHOWN HERE AS 45°) MAY BE ADJUSTED TO SUIT POWERHOUSE.

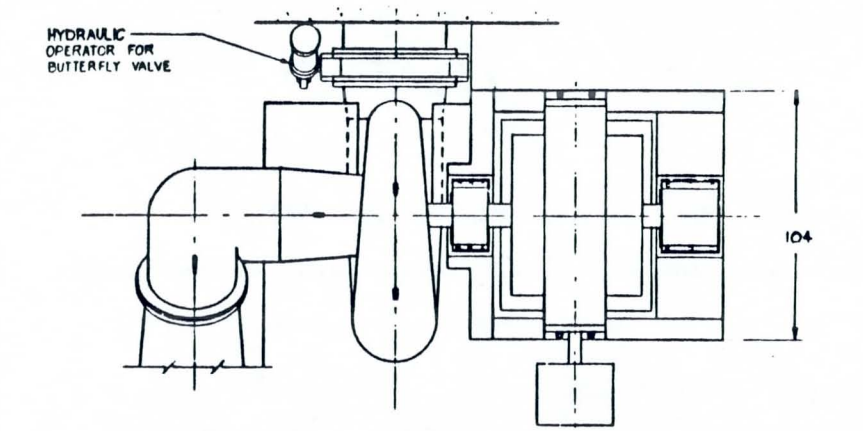

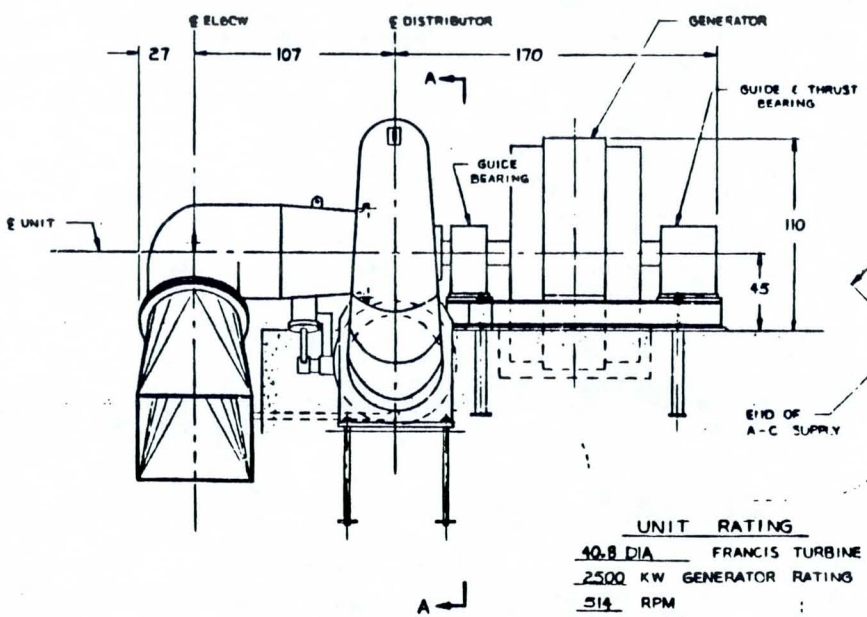

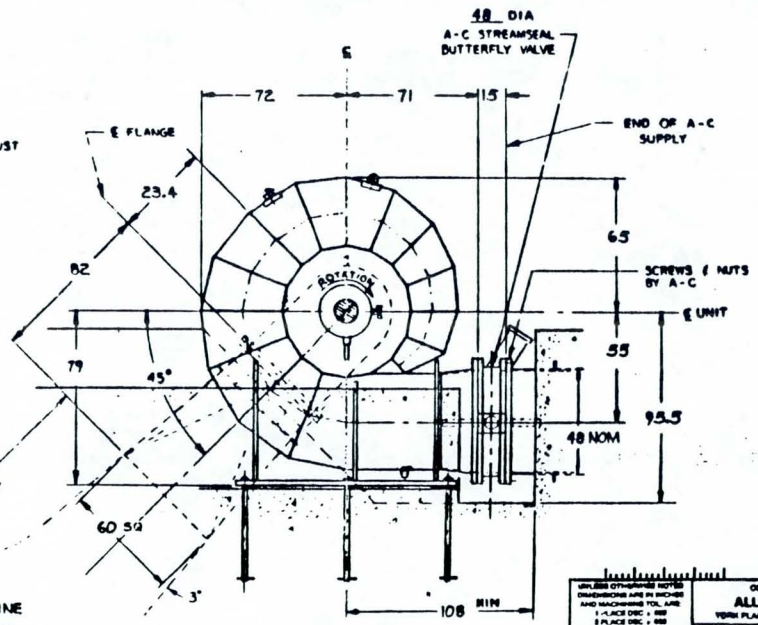

VIEW A-A

UNIT RATING

40.8 DIA FRANCIS TURBINE
2500 KW GENERATOR RATING
514 RPM
173' RATED NET HEAD (TURBINE)

PROPOSAL 6-34120

CONFIDENTIAL — PROPERTY OF ALLIS-CHALMERS CORP. YORK PLANT YORK, PA.

SISKIYOU POWER PROJECT
40.8 STANDARD FRANCIS TURBINE/GENERATOR OUTLINE

MDH

7-19-83

9404-PCS-2

00

AXEL JOHNSON ENGINEERING

September 27, 1983

PRC Engineering Consultants, Inc.
Post Office Box 3006
Englewood, Colorado 80111

Attention: Dr. Sagar

Re: Salt River Project

Gentlemen:

We are pleased to supply budget pricing for water-to-wire Francis turbine packages. The package would comprise direct coupled horizontal Francis turbine, generator, gate positioner, inlet valve, switchgear and controls. In order to offer a firm price we would require a more detailed specification. Equipment would be offered F.O.B. jobsite, 12 months from receipt of a purchase order.

Alternate	Capacity (KW)	Budget Price
A1	1567	$ 866,000
A2	1225	675,000
A3	980	560,000
B1	3478	1,500,000
B2	2817	1,200,000
B3	2204	1,000,000
C1	8058	3,250,000
C2	7347	2,900,000
C3	6735	2,700,000

Please do not hesitate to contact us if you have any further questions.

Very truly yours,

AXEL JOHNSON ENGINEERING CORPORATION

J. Whitehead

Jonathan Whitehead
Sales Manager

JW:ak

Axel Johnson Engineering Corporation
666 Howard Street
San Francisco, CA 94105
Telephone 415 777-3800
Telex 330422
Member of The Axel Johnson Group

Francis Turbines

Francis turbines are suitable for heads of between 20m and 600m. For heads below 50m, Kaplan turbines provide a flatter efficiency curve and higher running speeds, but are more complicated and expensive. For heads above 200m, Pelton turbines also provide a flatter efficiency curve, but have lower running speeds and are more expensive.

Smaller Francis turbines can have a horizontal shaft, which can enable them to be skid-mounted together with a standard-frame generator in the factory, and transported in an assembled state to the site. For horizontal machines, the runner will usually be mounted directly on the generator shaft, with no separate turbine bearing.

Apart from head and output, the main design criterion affecting size and running speed is the available submergence. A higher setting of the machine above the tailwater level will lead to larger dimensions and slower running speeds. Normally, the machine is set so that the runner is just above the tailwater level at zero flow.

The diagrams give the approximate characteristics of Boving Francis turbines.

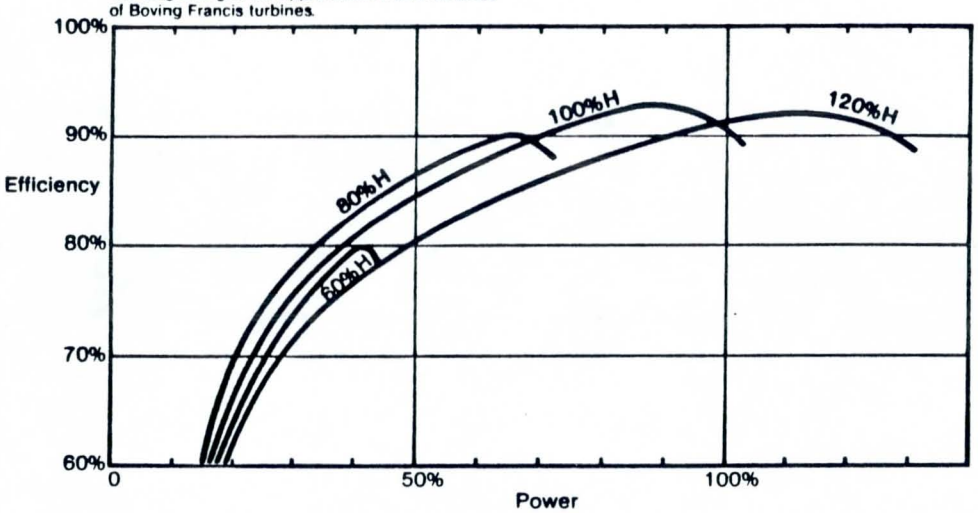

Runner	Precision cast 13%Cr 4%Ni stainless steel
Guide vanes	Precision cast 13%Cr 4%Ni stainless steel
Spiral casing	Fabricated plate steel (optional manhole)
Stayring	Fabricated plate steel
Covers	Fabricated plate steel (optical stainless cheekplates)
Draft tube	Fabricated steel plate (optional manhole)
Bearing	Water lubricated rubber (optional oil lubricated)
Shaft seal	Mechanical
Guide vane protection	Friction device between stem and lever
Guide vane control	Oil servomotor/guide vane link ring
Runner/shaft connection	Removable friction device with axial thrust plate

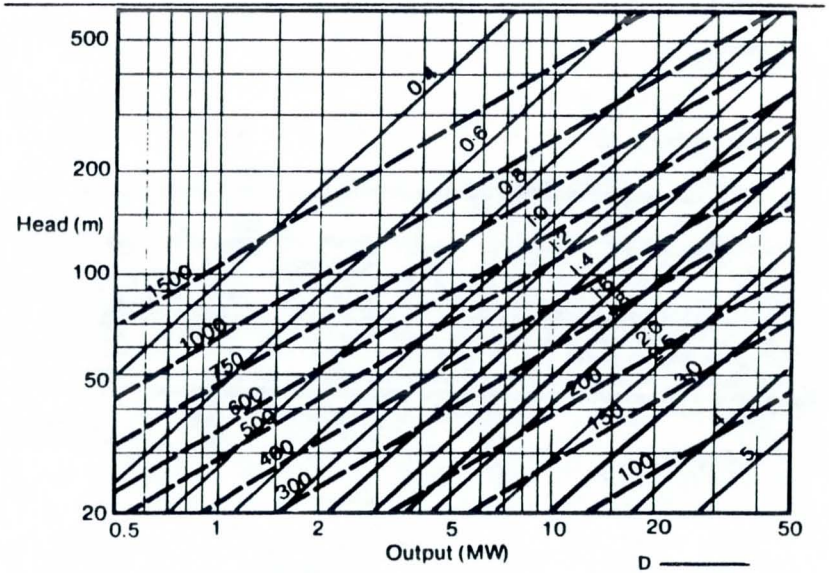

Approximate runner throat diameter D and speed n

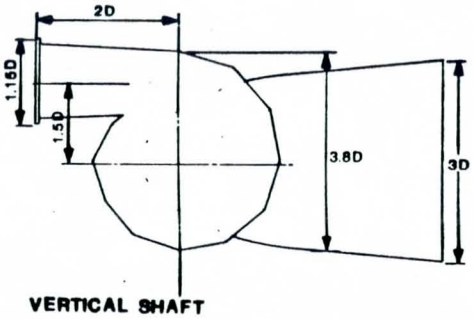

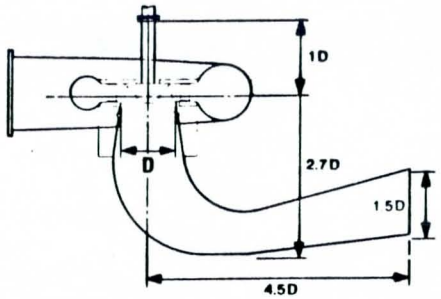

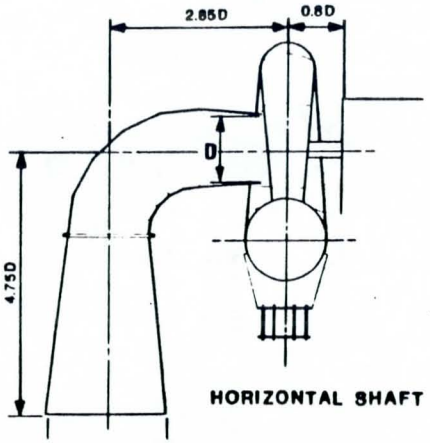

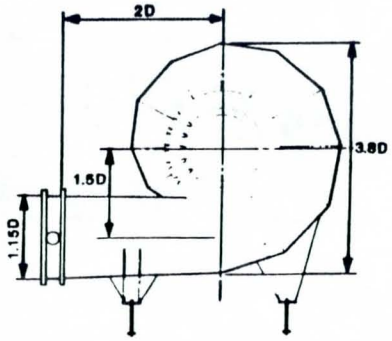

APPENDIX C

SERGENT, HAUSKINS & BECKWITH CONSULTING GEOTECHNICAL ENGINEERS

APPLIED SOIL MECHANICS • ENGINEERING GEOLOGY • MATERIALS ENGINEERING

B. DWAINE SERGENT, P.E.
NORMAN H. WETZ, P.E.
WAYNE A. ERICSON, P.E.
JOHN B. HAUSKINS, P.E.
DALE V. BEDENKOP, P.E.
ROBERT L. FREW
DONALD L. CURRAN, P.E.
GEORGE H. BECKWITH, P.E.
ROBERT R. KOONS, P.E.
DONALD G. METZGER, P.G.
ALLON C. OWEN, JR., P.E.
ROBERT D. BOOTH, P.E.
ROBERT W. CROSSLEY, P.E.
RALPH E. WEEKS, P.G.

September 28, 1983

PRC Engineering Consultants
International
Building 40 DTC West
7935 East Prentice Avenue
Englewood, Colorado 80111

SHB Job No. E83-124

Attention: Mr. Charles Hutton

Re: Seismic Refraction Survey
Near Granite Reef Diversion Dam

Gentlemen,

In accordance with your request, our report concerning seismic refraction survey exploration along an alignment between the CAP Granite Reef Aqueduct and the SRP South Canal at Granite Reef Dam in Maricopa County is submitted herein.

1. Introduction

This report is submitted pursuant to an exploration seismic investigation on the aforementioned site for purposes of obtaining data to assist in the estimation of depth to unrippable material in proposed excavations and trenches on the site.

2. Project Description

Details of the project were provided by Mr. Charles

REPLY TO: 3940 W. CLARENDON, PHOENIX, ARIZONA 85019

PHOENIX (602) 272-6848 ALBUQUERQUE (505) 884-0950 SANTA FE (505) 471-7836 SALT LAKE CITY (801) 566-5411

Hutton of PRC Engineering. Mapping of the site at a scale of 1 inch equals 100 feet with 2-foot contours showing the centerlines to be investigated was provided, along with boring logs of three exploratory holes about 400 feet west of the nearest centerline. These included borings 110SRS, 2SGS and 111SRS drilled for the Salt River siphon of the Central Arizona Project (CAP). Additional geologic and test pit data from near the site was available to SHB from in house CAP documents. These included test pit logs TP-8-SRSO and TP-7-SRSO from the investigation for the same project. (Reference: Specifications 3D-C7448 Salt-Gila Pumping Plant, Central Arizona Project, Arizona, Drawings Volume 3 of 3, U.S. Department of Interior, Water and Power Resources Service.)

It is understood that extensive excavation may be necessary along the centerlines indicated and that a plant will be constructed with foundations which may extend to a depth of up to 40 feet. It is also understood that the results of this investigation may influence the design of the CAP-SRP interconnection.

3. Investigation

Seismic refraction exploration measurements were made by Michael L. Rucker, staff engineer, and John A. Cassidy of Sergent, Hauskins & Beckwith (SHB) on September 19th and 20th, 1983. A Nimbus 12-channel signal enhancement engineering seismograph was used.

3.1 Site Conditions

The site of the proposed CAP-SRP interconnection is roughly south of Granite Reef Dam and extends from the Granite Reef Aqueduct to the SRP South Canal. Two topographies dominate, including flat floodplain topography near the Salt River and Granite Reef Dam, and desert foothill topography from the CAP aqueduct down to the proposed plant location having slopes ranging to 30 percent. From the aqueduct to the Spook Hill Floodway, the ground was covered with thick stands of brush and cactus. The rest of the site had either been cleared in the past or, along one stretch, was a leveled area being used as a sand stockpile. On the surface near the South Canal, there are remnants of old concrete slabs scattered over the area.

3.2 Areas of Investigation

Seismic refraction surveys were performed on two 750-foot test lines and three 300-foot test lines. These lines are shown in Figure 1 and are named to avoid confusion with the number system for individual refraction lines. A single 300-foot line, named "aqueduct", was run north-northeast from the base of the aqueduct. A 750-foot line, named "conduit" and consisting of four overlapping refraction lines, was run down the hill along the proposed conduit centerline. Another 750-foot line, named "stockpile" and consisting of four overlapping refraction lines, crossed through the sand

stockpile area across the road from the damkeeper residence. A single 300-foot refraction line, named "floodway", was run alongside the road in the Spook Hill Floodway. Finally, a single 300-foot refraction line, named "canal", was run near the South Canal. A total of 11 seismic refraction survey lines were run to investigate a total of about 2,200 feet of proposed centerline.

3.3 Seismic Exploration Methodology

Refraction seismic exploration was accomplished using the 12-channel Nimbus signal enhancement seismograph in conjunction with cabling to provide 25-foot spacing between the 12 geophones for a total coverage of 300 feet per setup. This configuration gives a depth of investigation of as great as 100 feet. For refraction lines 9, 10 and 11, the spacing between the source and the first two geophones was reduced to 12.5 feet to improve resolution near the surface. A sledge hammer with a metal plate target served as the seismic energy source. Orientation to the supplied mapping was used as location control. For each refraction line, a forward and reverse refraction profile was obtained to assist in interpretation of the data. Refraction lines were overlapped on the "conduit" and "stockpile" lines to improve coverage for interpreting subsurface conditions. Seismic refraction line setups are shown in profile in Appendix A, along with results of the interpretation.

3.4 Readings

Time-travel plots for the 11 refraction line readings are included in Appendix A.

4. Results of Seismic Refraction Survey

Due to the general and approximate nature of the refraction seismic technique, all depths, locations and velocities must be considered approximate. However, trends and general conditions are apparent.

4.1 Results of Interpretation

Geologic interpretation of the refraction survey is presented in Figures 2 and 3. In general, a layer of low velocity material is present across the site and is usually from about 5 to 15 feet thick, although this layer thickness may be in excess of 30 feet below the base of the foothill. This material has compression wave velocities of 1,000 to 3,000 feet per second and may be assumed to be rippable. It probably consists of in-place weathered granites on the foothill, and river deposits in the floodplain.

Below this low velocity layer is much harder material with compression wave velocities ranging from 8,000 to 12,000 feet per second. This probably is granite and could be considered unrippable by normal equipment, such as a D-9 Caterpillar or its equivalent.

Occasionally at depths in excess of 60 feet, there is evidence of very hard and intact material with compression wave velocities exceeding 16,000 feet per second. This material probably is unweathered granite.

Two subsurface features, one in the center of the "conduit" line and one in the center of the "stockpile" line, should be noted. These features are possibly buried river channels filled with boulders or other rubble having an average velocity of 4,000 feet per second to 7,000 feet per second. The approximate elevation of the bottom of these two features appears to be 1286 feet, which correlates well with the elevation of the granite bedrock in the Salt River bed at the toe of Granite Reef Dam. The feature at the "conduit" line also correlates well with the toe of the foothill. This feature may require further exploration to clarify foundation conditions for the proposed plant.

4.2 Corroboration of Refraction Survey with Other Data

Because the CAP Salt River siphon is adjacent to this site, other investigations have been performed nearby and some of their results were provided to SHB or were available within SHB. Of most use were logs from three borings located about 400 feet west of the "canal" line, and several backhoe test pits located on the foothill about 700 feet west of the "conduit" line. Approximate elevations of unrippable granite based on these logs are shown in Figure 1.

When the boring data is compared with the "canal" line and the west end of the "stockpile" line, it becomes apparent that the elevation of the top of the unrippable granite is dipping to the west and north. At the west end of the "stockpile" line, granite is at elevation 1310 approximately. At the "canal" line, it is at about elevation 1305 away from the river and drops to about elevation 1292 near the canal. Similarly, boring 110SRS reached granite at elevation 1302.5, while nearer the river at boring 2SGS granite was encountered at about elevation 1270.

Backhoe test pits TP-7-SRSO and TP-8-SRSO show that solid rock was encountered at depths of 5 to 7 feet. These pits were located on the foothill west of the "conduit" line and corroborate the approximate 5 to 15-foot depths to unrippable granite determined through the refraction survey.

Should any questions arise concerning this report, please do not hesitate to contact us.

Respectfully submitted,
Sergent, Hauskins & Beckwith Engineers

By Michael L. Rucker
Michael L. Rucker
Staff Engineer

Reviewed by Lawrence A. Hansen
Lawrence A. Hansen, Ph.D., P.E.

Registered Professional Engineer (Civil) CERTIFICATE NO. 13872 LAWRENCE A. HANSEN Date Signed 9-28-83 ARIZONA, U.S.A.

Copies: Addressee (1)
PRC Engineering
Attn: Edward A. Adair, P.E. (1)

APPENDIX A

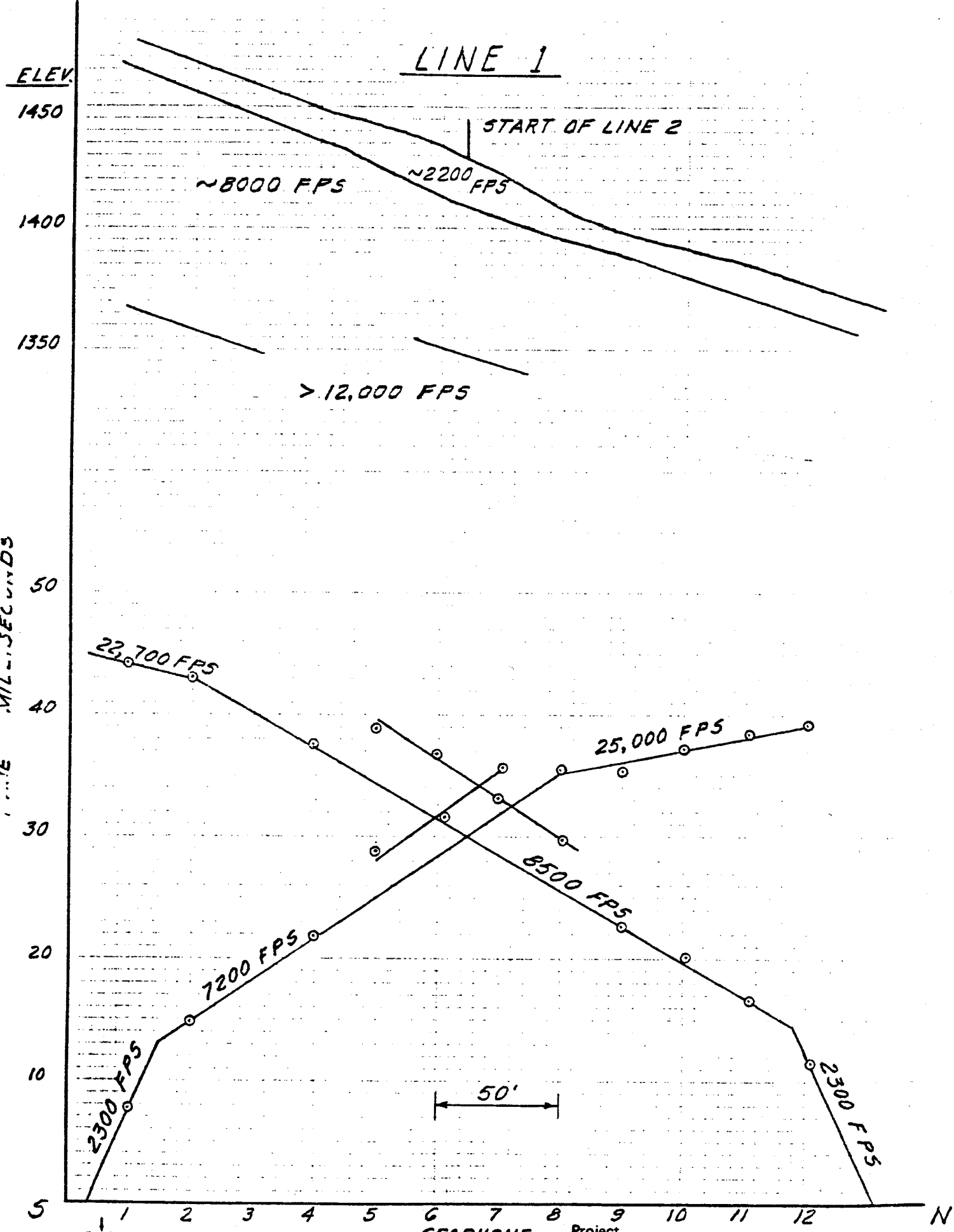

SERGENT, HAUSKINS & BECKWITH
CONSULTING GEOTECHNICAL ENGINEERS
PHOENIX • ALBUQUERQUE • SANTA FE • SALT LAKE CITY

GEOPHONE POSITIONING

Project
Job No: E83-124
Computed by: MLR Ckd. by:
Date 9-83 Page of

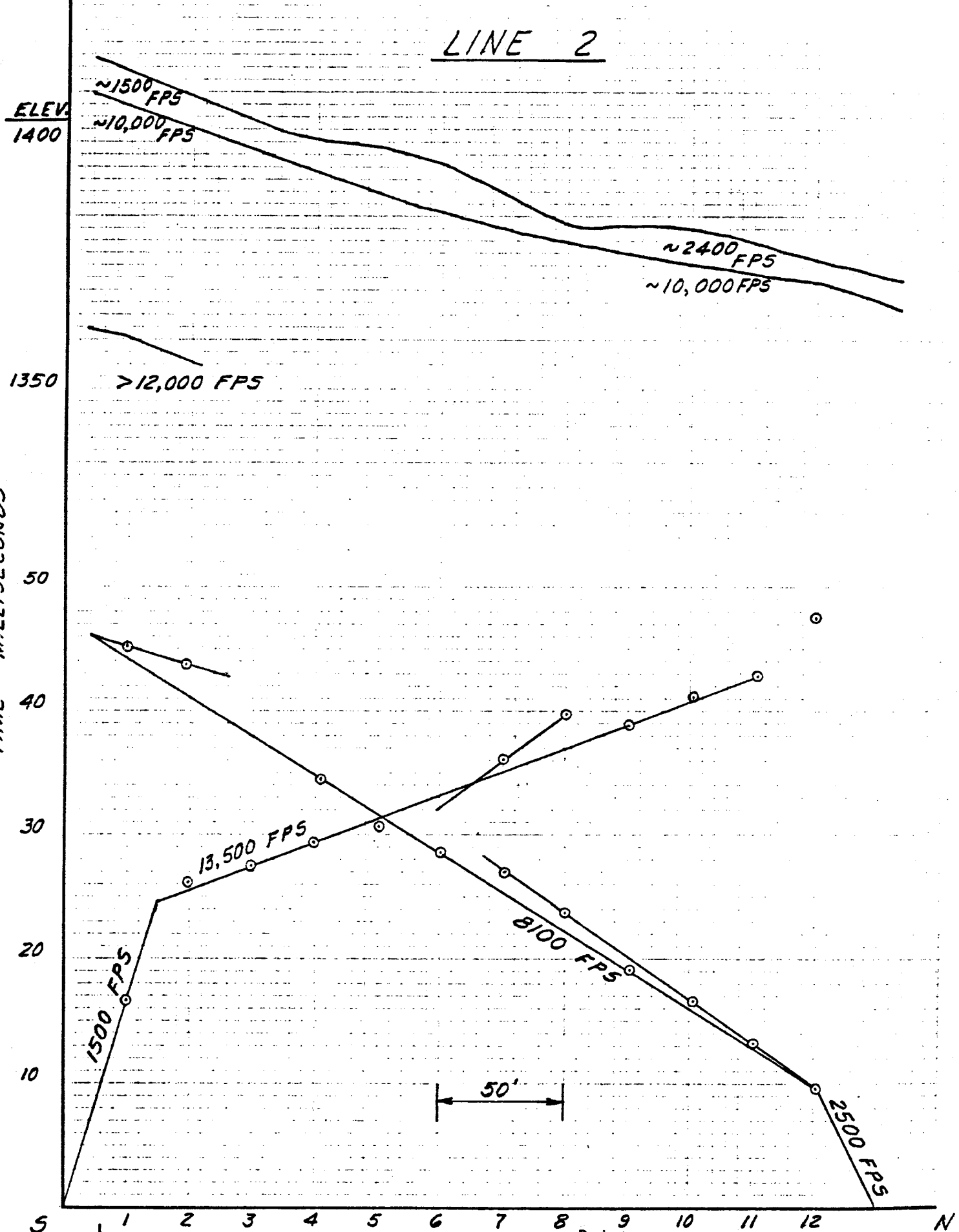

SERGENT, HAUSKINS & BECKWITH
CONSULTING GEOTECHNICAL ENGINEERS
PHOENIX • ALBUQUERQUE • SANTA FE • SALT LAKE CITY

GEOPHONE POSITIONING

Project
Job No: E83-124
Computed by: MLR Ckd. by:
Date 9-83 Page ___ of

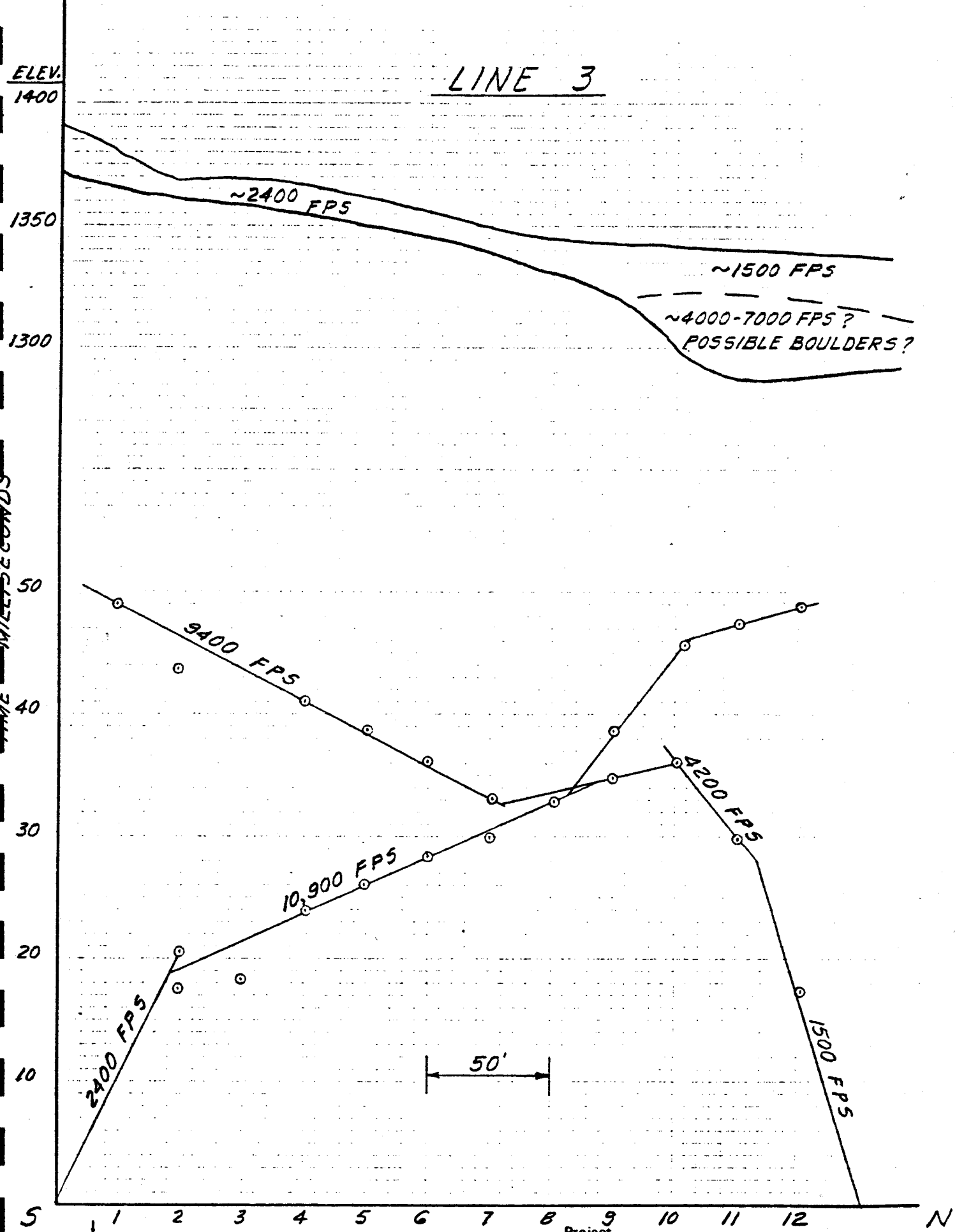

SERGENT, HAUSKINS & BECKWITH

CONSULTING GEOTECHNICAL ENGINEERS
PHOENIX • ALBUQUERQUE • SANTA FE • SALT LAKE CITY

GEOPHONE POSITIONING

Project

Job No: E83-124

Computed by: MLR Ckd. by:

Date 9-83 Page ___ of

LINE 4

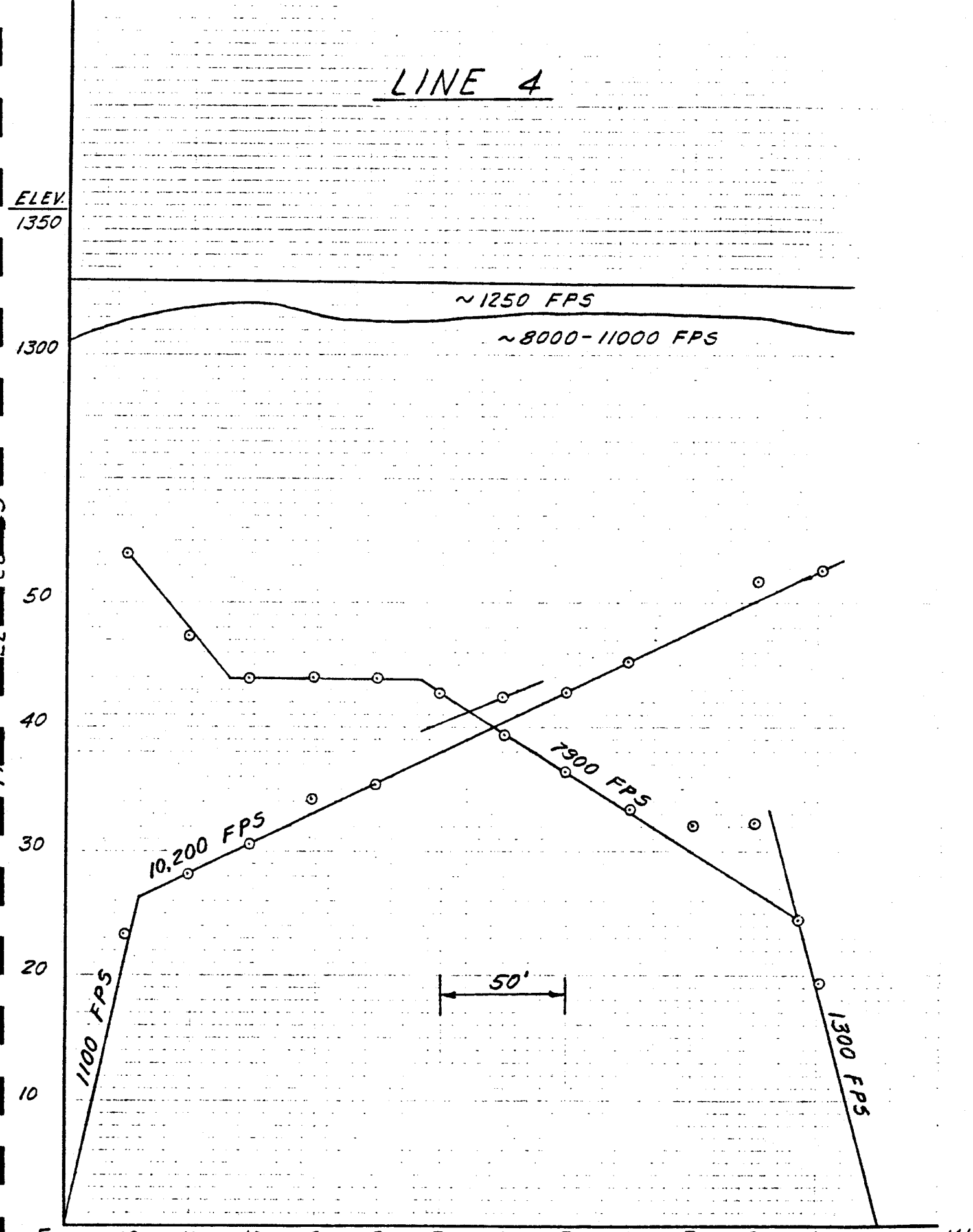

SERGENT, HAUSKINS & BECKWITH

CONSULTING GEOTECHNICAL ENGINEERS
PHOENIX • ALBUQUERQUE • SANTA FE • SALT LAKE CITY

GEOPHONE POSITIONING

Project _____
Job No: E83-124
Computed by: MLR Ckd. by: _____
Date 9-83 Page ____ of _____

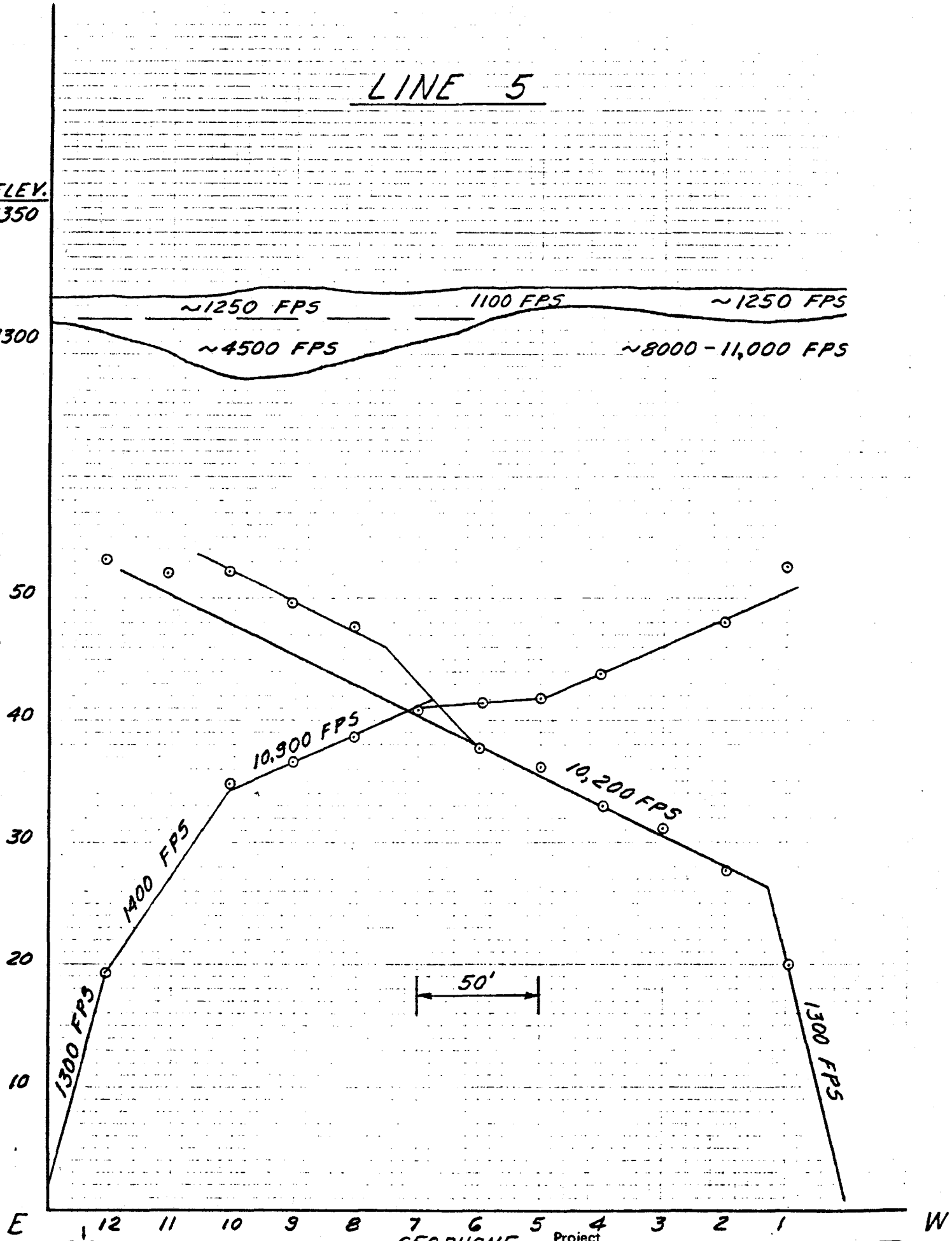

SERGENT, HAUSKINS & BECKWITH
CONSULTING GEOTECHNICAL ENGINEERS
PHOENIX • ALBUQUERQUE • SANTA FE • SALT LAKE CITY

GEOPHONE POSITIONING

Project
Job No: E83-124
Computed by: MLR Ckd. by:
Date 9-83 Page ___ of

LINE 6

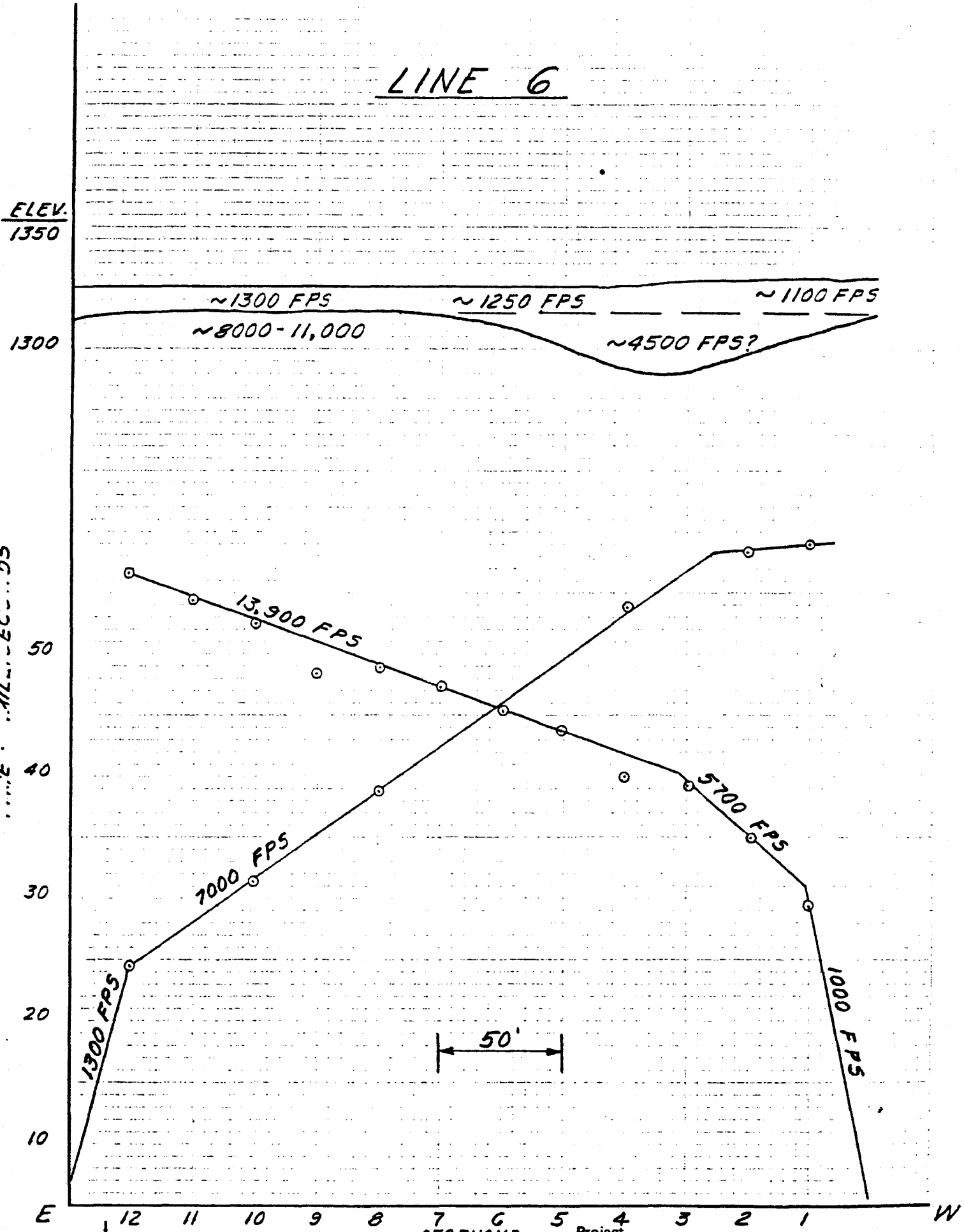

SERGENT, HAUSKINS & BECKWITH
CONSULTING GEOTECHNICAL ENGINEERS
PHOENIX • ALBUQUERQUE • SANTA FE • SALT LAKE CITY

GEOPHONE POSITIONING

Project
Job No: E83-124
Computed by: MLR Ckd. by:
Date 9-83 Page ___ of

LINE 7

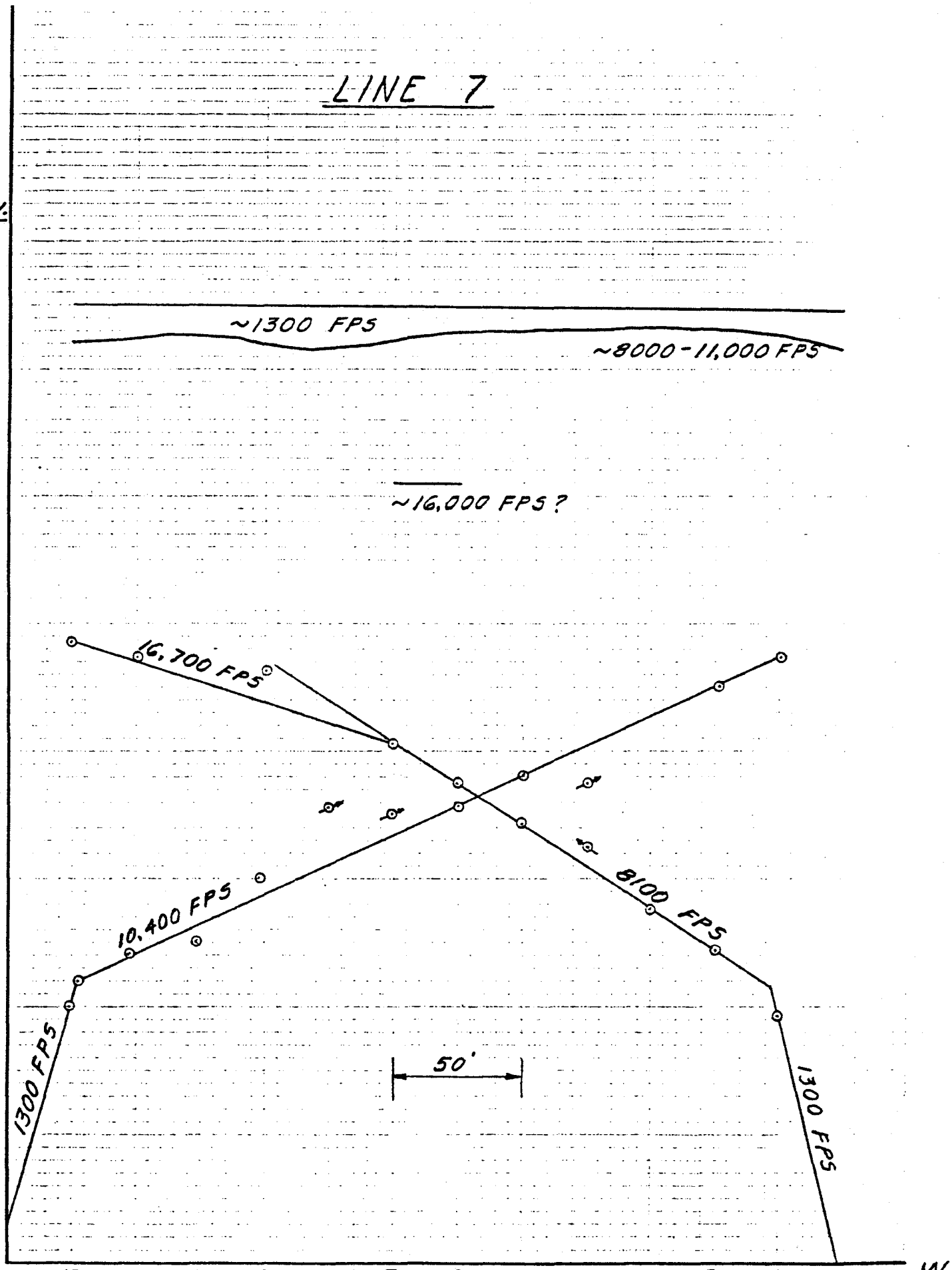

SERGENT, HAUSKINS & BECKWITH
CONSULTING GEOTECHNICAL ENGINEERS
PHOENIX • ALBUQUERQUE • SANTA FE • SALT LAKE CITY

GEOPHONE POSITIONING

Project
Job No: E83-124
Computed by: MLR Ckd. by:
Date 9-83 Page ___ of

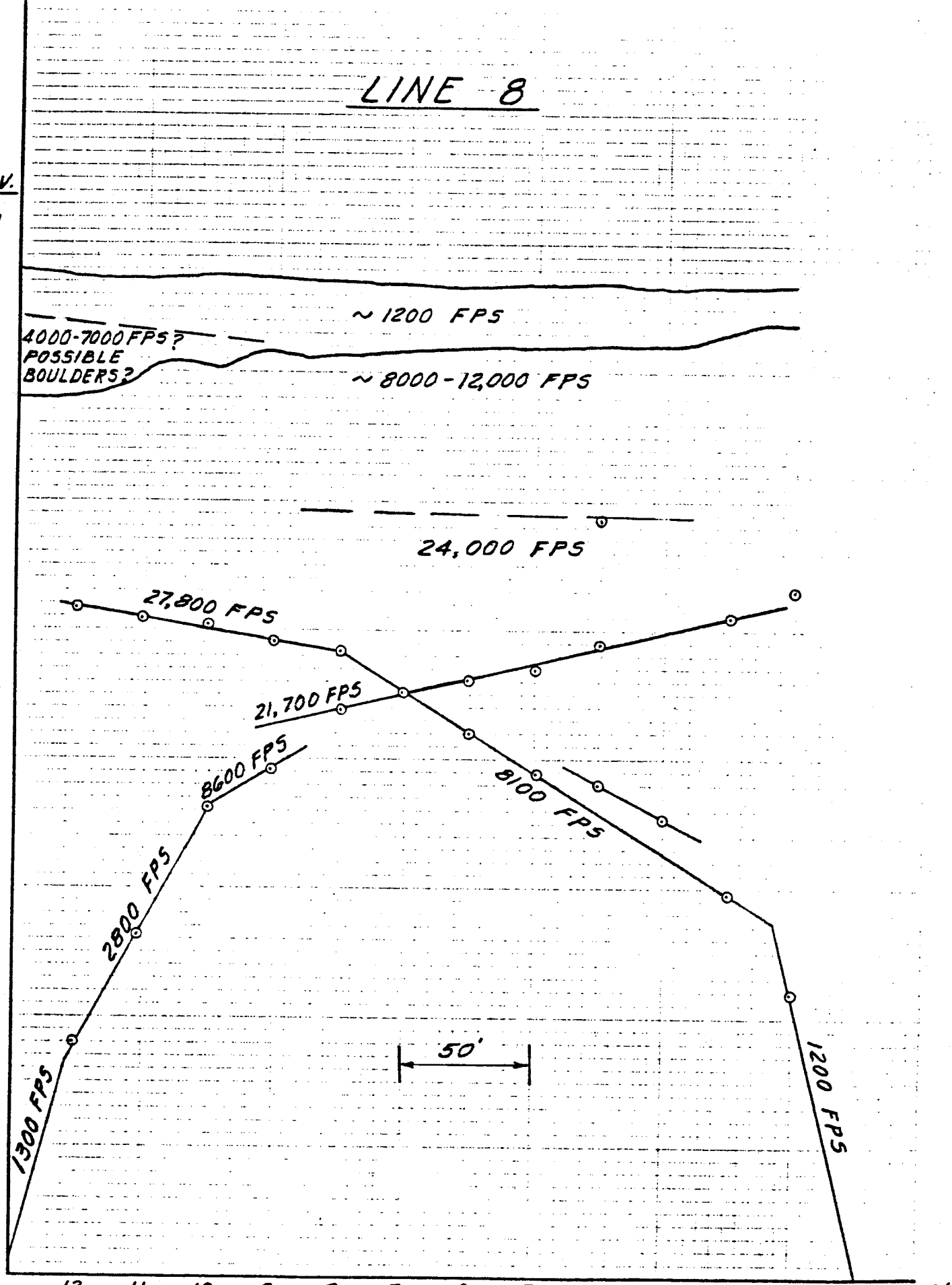

SERGENT, HAUSKINS & BECKWITH

CONSULTING GEOTECHNICAL ENGINEERS
PHOENIX • ALBUQUERQUE • SANTA FE • SALT LAKE CITY

GEOPHONE POSITIONING

Project _____
Job No: E83-124
Computed by: MLR Ckd. by: _____
Date 9-83 Page ___ of _____

LINE 9

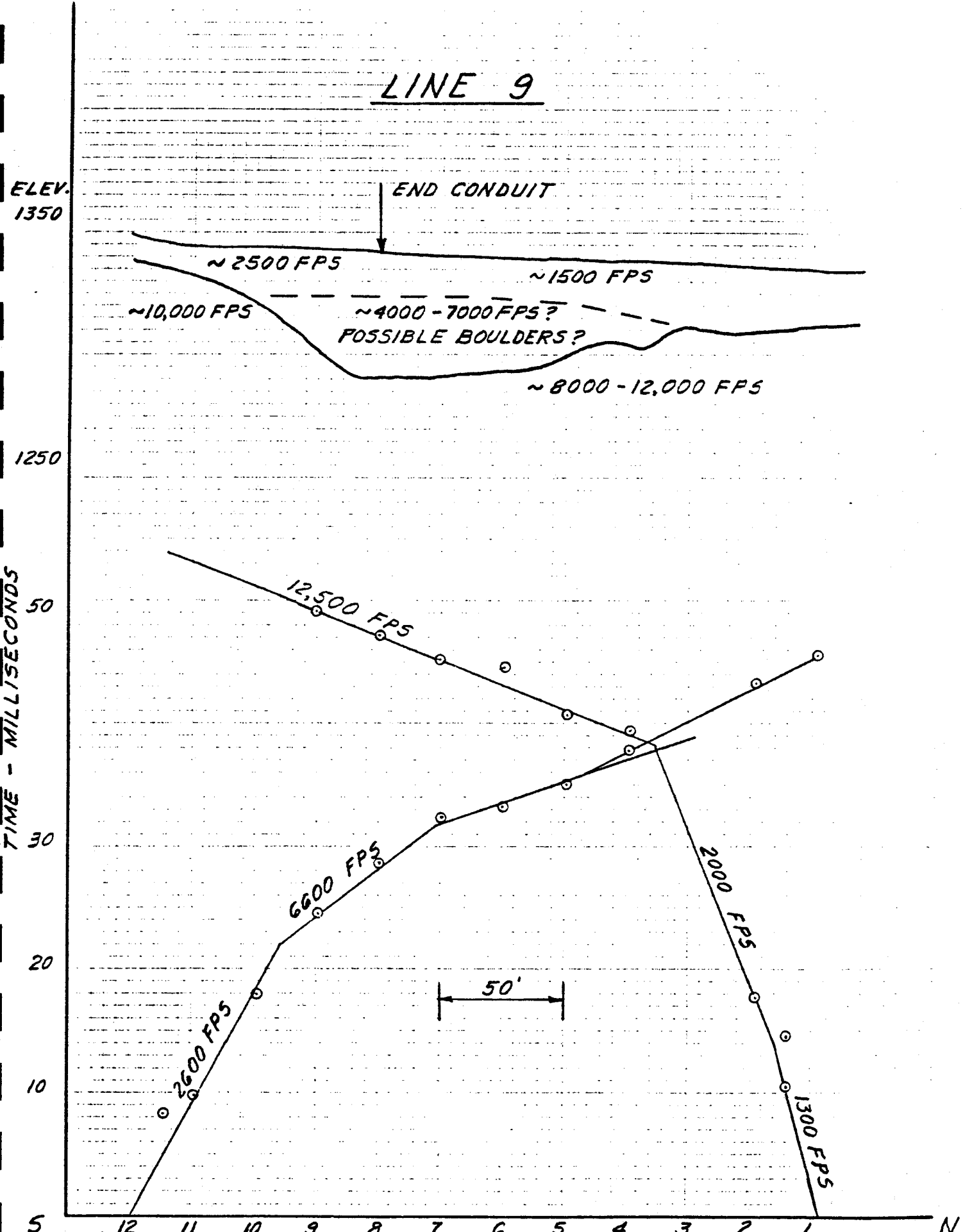

SERGENT, HAUSKINS & BECKWITH
CONSULTING GEOTECHNICAL ENGINEERS
PHOENIX • ALBUQUERQUE • SANTA FE • SALT LAKE CITY

GEOPHONE POSITIONING

Project
Job No: E83-124
Computed by: MLR Ckd. by:
Date 9-83 Page of

LINE 10

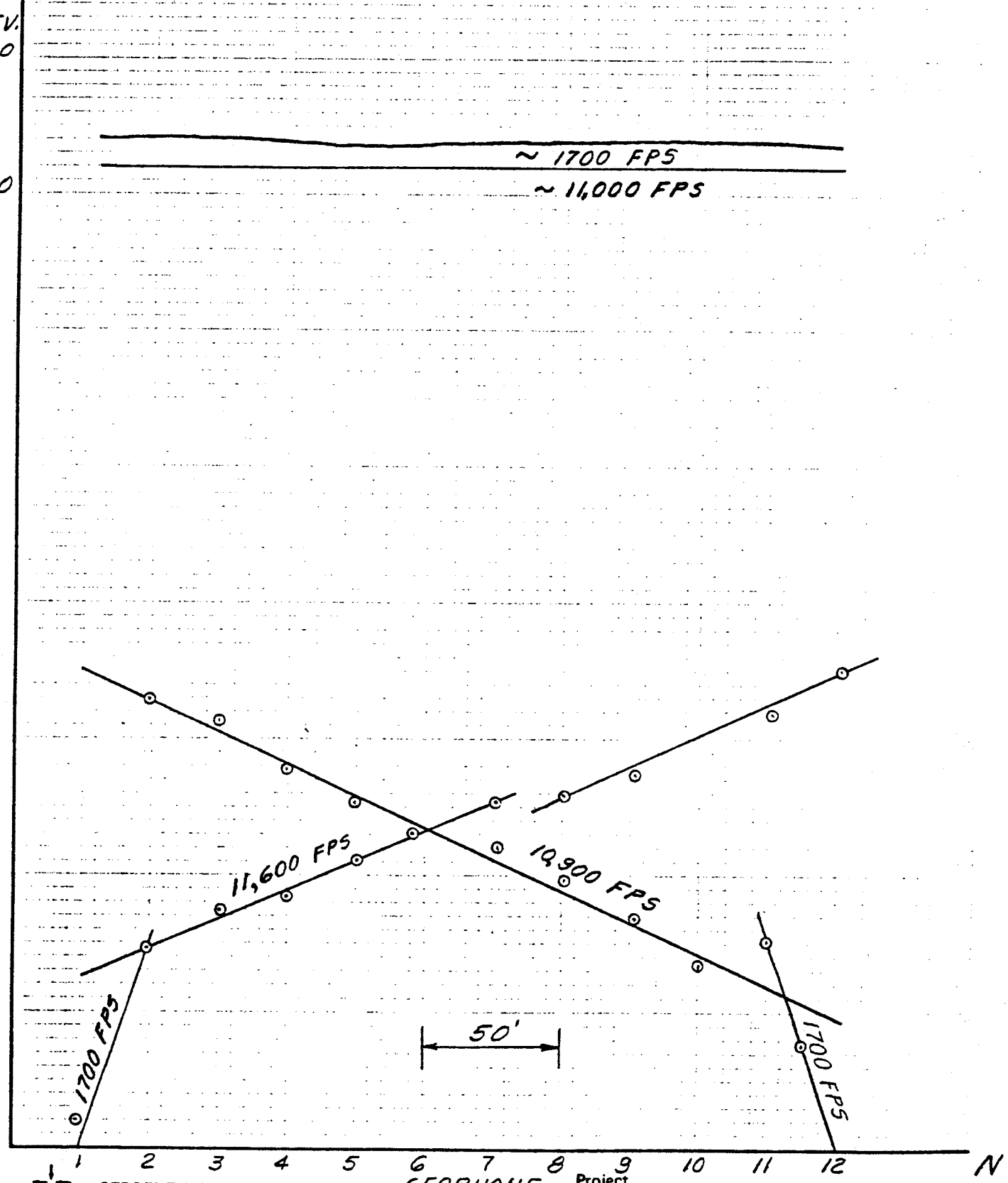

GEOPHONE POSITIONING

SERGENT, HAUSKINS & BECKWITH
CONSULTING GEOTECHNICAL ENGINEERS
PHOENIX • ALBUQUERQUE • SANTA FE • SALT LAKE CITY

Project
Job No: E83-124
Computed by: MLR Ckd. by:
Date 9-83 Page ___ of

LINE 11

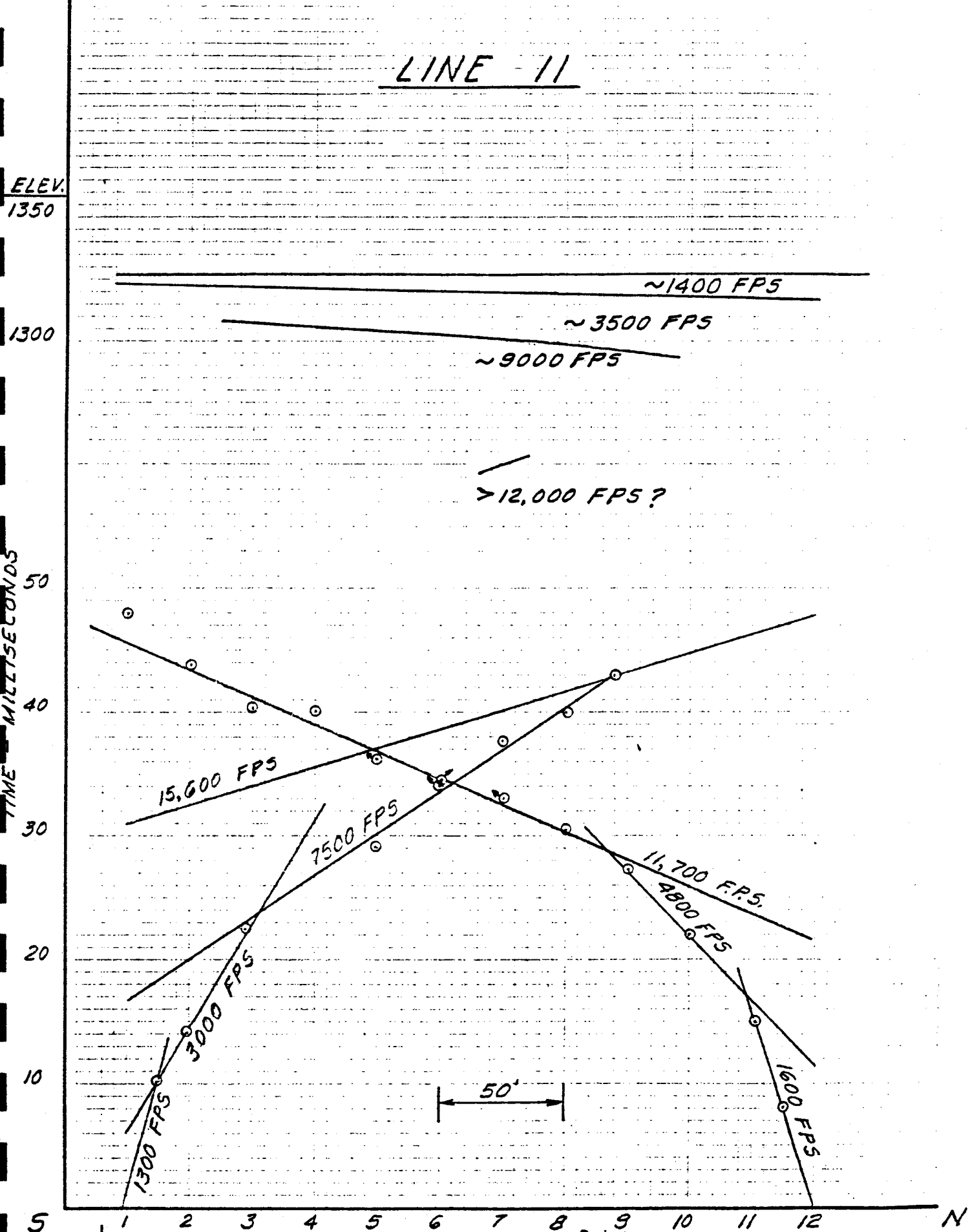

SERGENT, HAUSKINS & BECKWITH
CONSULTING GEOTECHNICAL ENGINEERS
PHOENIX • ALBUQUERQUE • SANTA FE • SALT LAKE CITY

GEOPHONE POSITIONING

Project
Job No: E83-124
Computed by: MLR Ckd. by:
Date 9-83 Page of

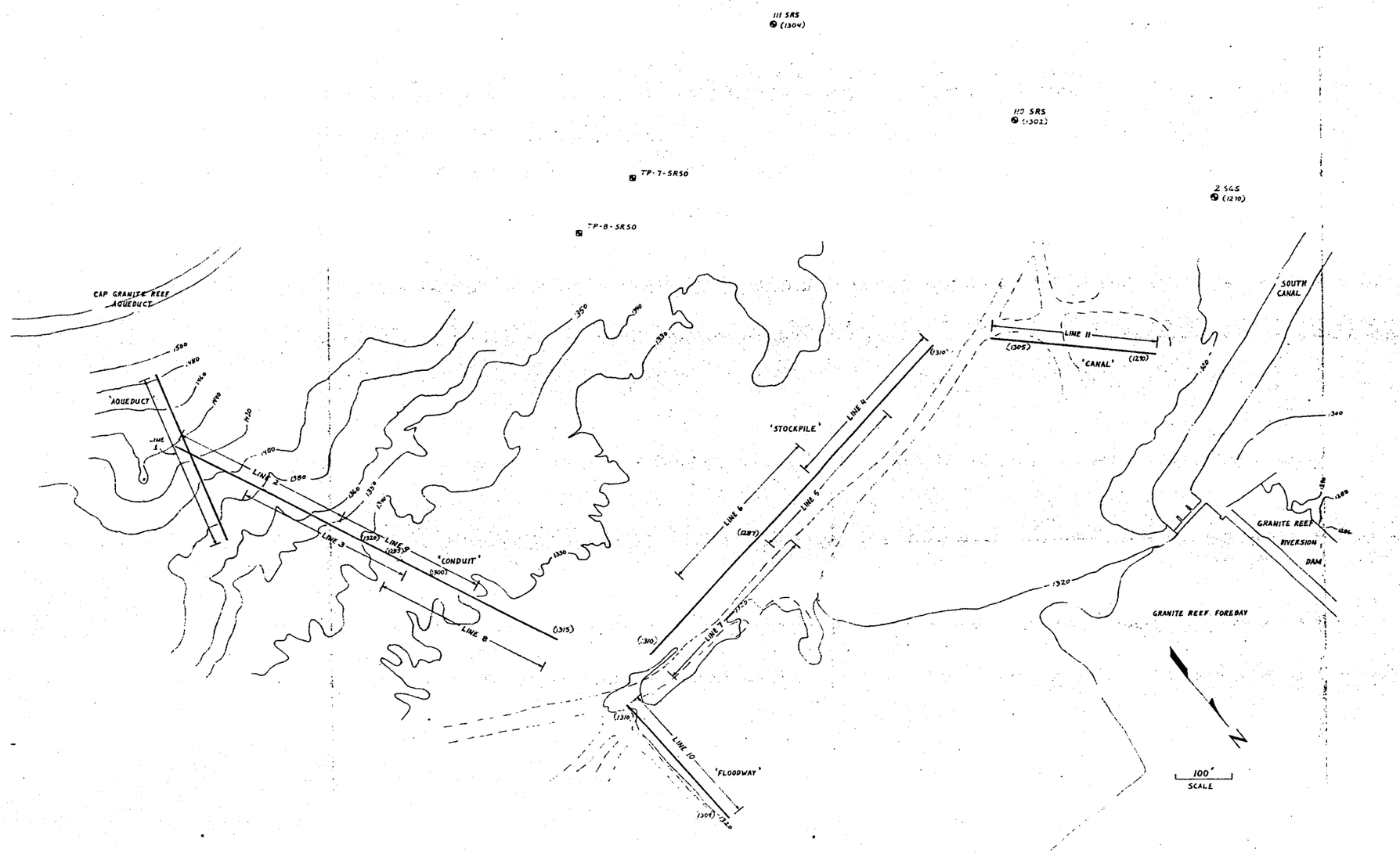

(ELEV) - APPROXIMATE ELEVATION OF UNRIPPABLE ROCK

- TEST PIT FROM PREVIOUS STUDY

- BORING FROM PREVIOUS STUDY

NO.	DESCRIPTION	DATE

REVISIONS

SERGENT, HAUSKINS & BECKWITH
CONSULTING GEOTECHNICAL ENGINEERS

CAP - SRP INTERCONNECTION SEISMIC REFRACTION SURVEY
FIGURE 1 SITE PLAN AND APPROXIMATE ELEVATION OF UNRIPPABLE ROCK

JOB NO.	DATE	DESIGNED BY	DRAWN BY	CHECKED BY	SHEET NO
E 83-124	9-26-83	MLR	MLR	LAH	

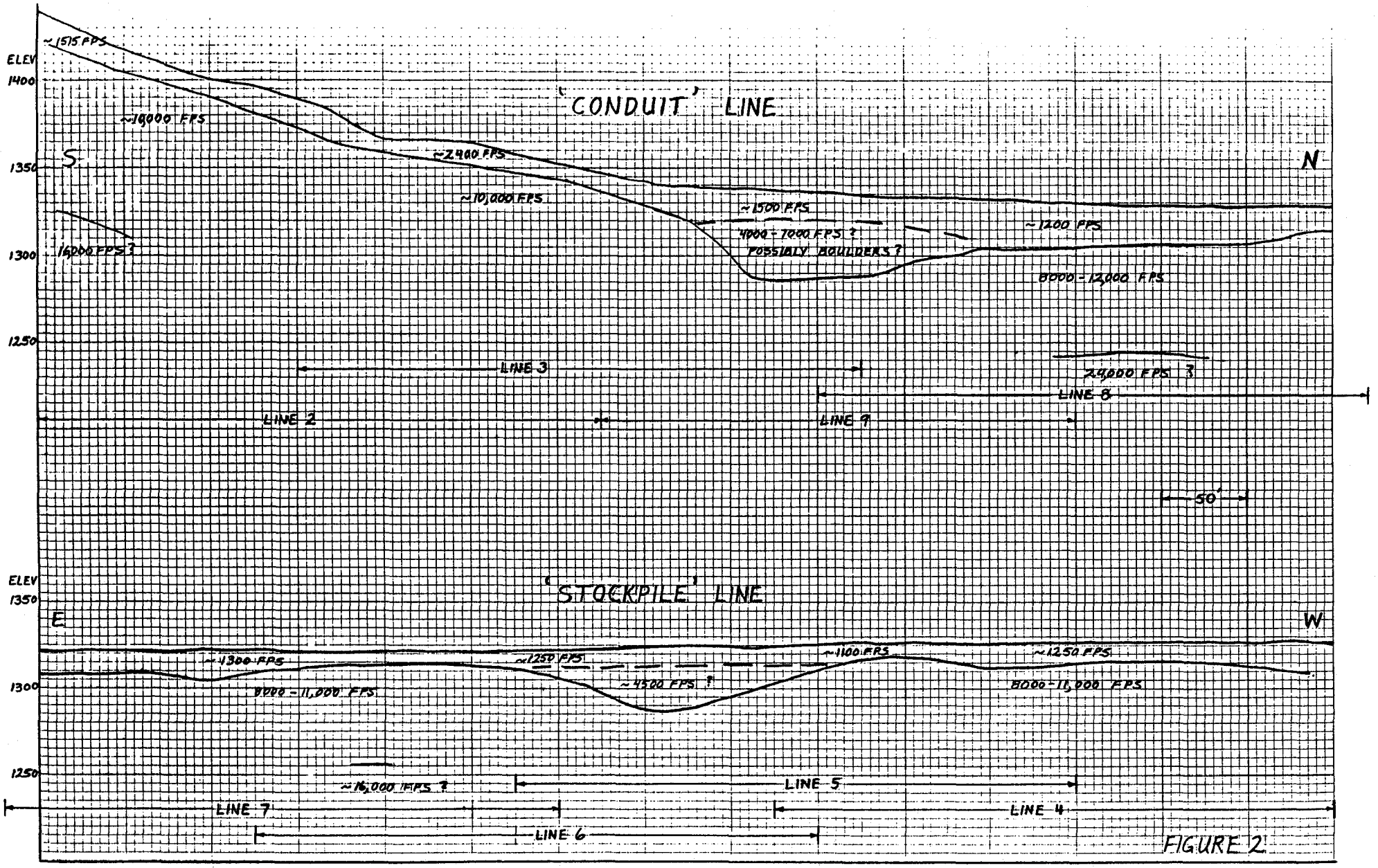

FIGURE 2

SERGENT, HAUSKINS & BECKWITH
CONSULTING SOIL AND FOUNDATION ENGINEERS
PHOENIX • ALBUQUERQUE • SANTA FE

Project
Job No: E83-124
Computed by: MLR Ckd. by:
Date 9-83 Page of

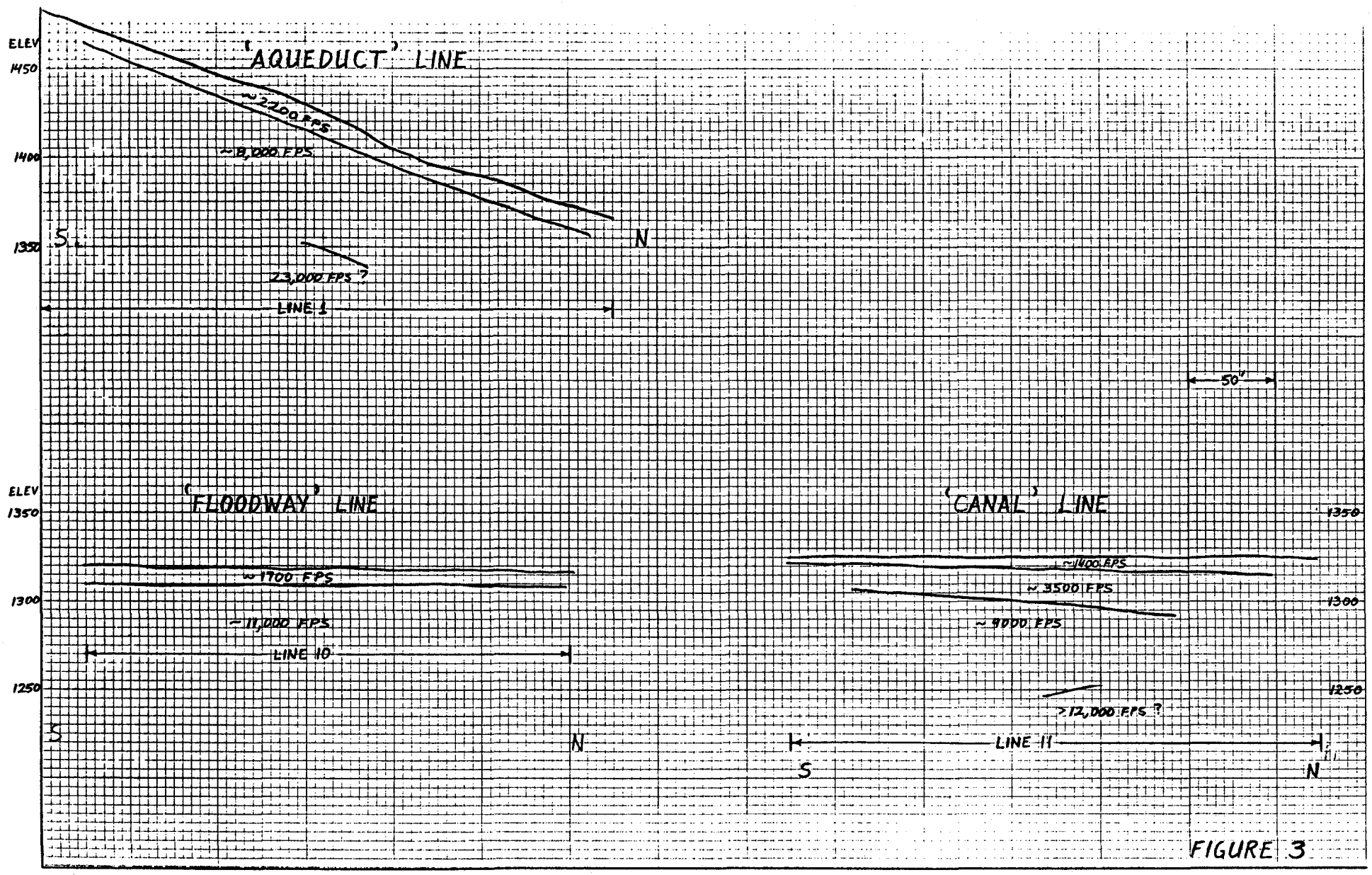

FIGURE 3

SERGENT, HAUSKINS & BECKWITH
CONSULTING SOIL AND FOUNDATION ENGINEERS
PHOENIX • ALBUQUERQUE • SANTA FE

Project
Job No: E83-124
Computed by: MLR Ckd. by:
Date 9-83 Page of