INITIAL DRAINAGE REPORT

SANTAN FREEWAY

56th STREET TO PRICE ROAD AND GILA DRAIN FLOODWAY TO BASIN B

Prepared for:

ARIZONA DEPARTMENT OF TRANSPORTATION

September 12, 1996

DMJM
300 West Clarendon Avenue, Suite 400
Phoenix, Arizona 85013

Prepared by:

WOOD, PATEL & ASSOCIATES, INC.
1550 East Missouri, Suite 203
Phoenix, Arizona 85014
WP #95271.04

INITIAL DRAINAGE REPORT

SANTAN FREEWAY

Property of
Flood Control District of MC Library
Please Return to
2801 W. Durango
Phoenix, AZ 85009

56th STREET TO PRICE ROAD AND GILA DRAIN FLOODWAY TO BASIN B

Prepared for:

ARIZONA DEPARTMENT OF TRANSPORTATION

September 12, 1996

DMJM
300 West Clarendon Avenue, Suite 400
Phoenix, Arizona 85013

Registered Professional Engineer (Civil)
CERTIFICATE NO.
23170
JEFFREY J.
HOLZMEISTER
Date Signed 9/12/96
ARIZONA, U.S.A.

Prepared by:

WOOD, PATEL & ASSOCIATES, INC.
1550 East Missouri, Suite 203
Phoenix, Arizona 85014
WP #95271.04

TABLE OF CONTENTS

1.0 INTRODUCTION 1

2.0 OBJECTIVES AND APPROACH 3
- 2.1 Background 3
- 2.2 Description of Proposed Drainage Facilities 5

3.0 HYDROLOGY 6
- 3.1 Existing Hydrologic Studies 6
- 3.2 Watershed Description 6
- 3.3 Wood/Patel Modifications to the HDR Hydrologic Model 7
- 3.4 First Flush Basin Hydrologic Analysis 8
- 3.5 Results of the Hydrologic Analysis 9

4.0 HYDRAULIC ANALYSIS 11
- 4.1 Santan Channel Description 11
- 4.2 Channel Design Assumptions 11
  - 4.2.1 Design Discharge 11
- 4.3 Geometry 12
- 4.4 Channel Slope 12
- 4.5 Freeboard 12
- 4.6 Hydrologic Computer Model 18
- 4.7 Bank Lining 18
- 4.8 Maintenance Access 18
- 4.9 Detention Basin Hydraulics 20

5.0 RIGHT-OF-WAY AND UTILITIES 22
- 5.1 A-1 Channel 22
- 5.2 A-2 Channel 22
- 5.3 A-3 Channel 23

6.0 REFERENCES 24

Registered Professional Engineer (Civil)
CERTIFICATE NO. 23170
JEFFREY J. HOLZMEISTER
Date Signed 9/13/96
ARIZONA, U.S.A.

TABLES

Table 1 Peak Discharge Values for Santan Freeway Offsite Drainage Areas 10
Table 2 Channel Stationing and Geometry 15-16
Table 3 Approximate Channel Access Ramp Locations 19

FIGURES

Figure 1	Location Map and Drainage Facilities	2
Figure 2	Drainage Facilities	4
Figure 3	HEC-1 Schematic Diagram and Summary of Flows	(Back Pocket)
Figure 4a	Channel Alignment, Segment A-1	13
Figure 4b	Channel Alignment, Segments A-2 and A-3	14
Figure 5	Typical Channel Cross Sections	17

APPENDICES

Appendix 1	Hydrologic Analysis Using HEC-1
Appendix 2	Channel Hydraulic Analysis Using HEC-RAS
Appendix 3	Basin B Side Weir Analyses Using HEC-2
Appendix 4	Hydrologic Analysis of First Flush Flow Using HEC-1
Appendix 5	HEC-1, HEC-RAS, and HEC-2 Input and Output on Diskette

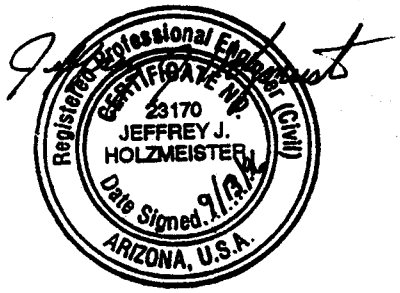

1.0 INTRODUCTION

The purpose of the Initial Drainage Report (30% submittal) was to document the engineering assumptions, procedures, and methodologies utilized in the design of the offsite drainage system for the Santan Freeway from Price Road to the Gila Drain Floodway. The project limits are illustrated in Figure 1. Quantities, cost estimates, and 30% construction plans were produced for this section of the Santan Freeway.

Hydrologic studies and Concept Drainage Designs were originally performed by HDR Engineering, Inc., as documented in the reports *Gila Drain Alternative Concept Drainage Report*, February 1993 and *Gila Drain Floodway Master Plan Report*, February 1993. Hydrologic models presented in those reports were developed to determine the 100-year rainfall/runoff response of the contributing watershed. The HDR hydrologic models were used to determine peak discharge values at specific points along the drainage system. Wood, Patel & Associates, Inc. (Wood/Patel) modified the hydrologic model to simulate the operation of the detention basins.

HDR performed additional analyses in the report *Alternative Study, Southeast Valley Regional Drainage System (SEVRDS), Price and Santan Freeways*, June 1995, to develop a conceptual drainage plan to outfall stormwater runoff from the Santan and Price Freeways to the Gila Drain Floodway. Alternative "C" (1995 report) was used as the basis for the conceptual design of the Santan Freeway offsite drainage system.

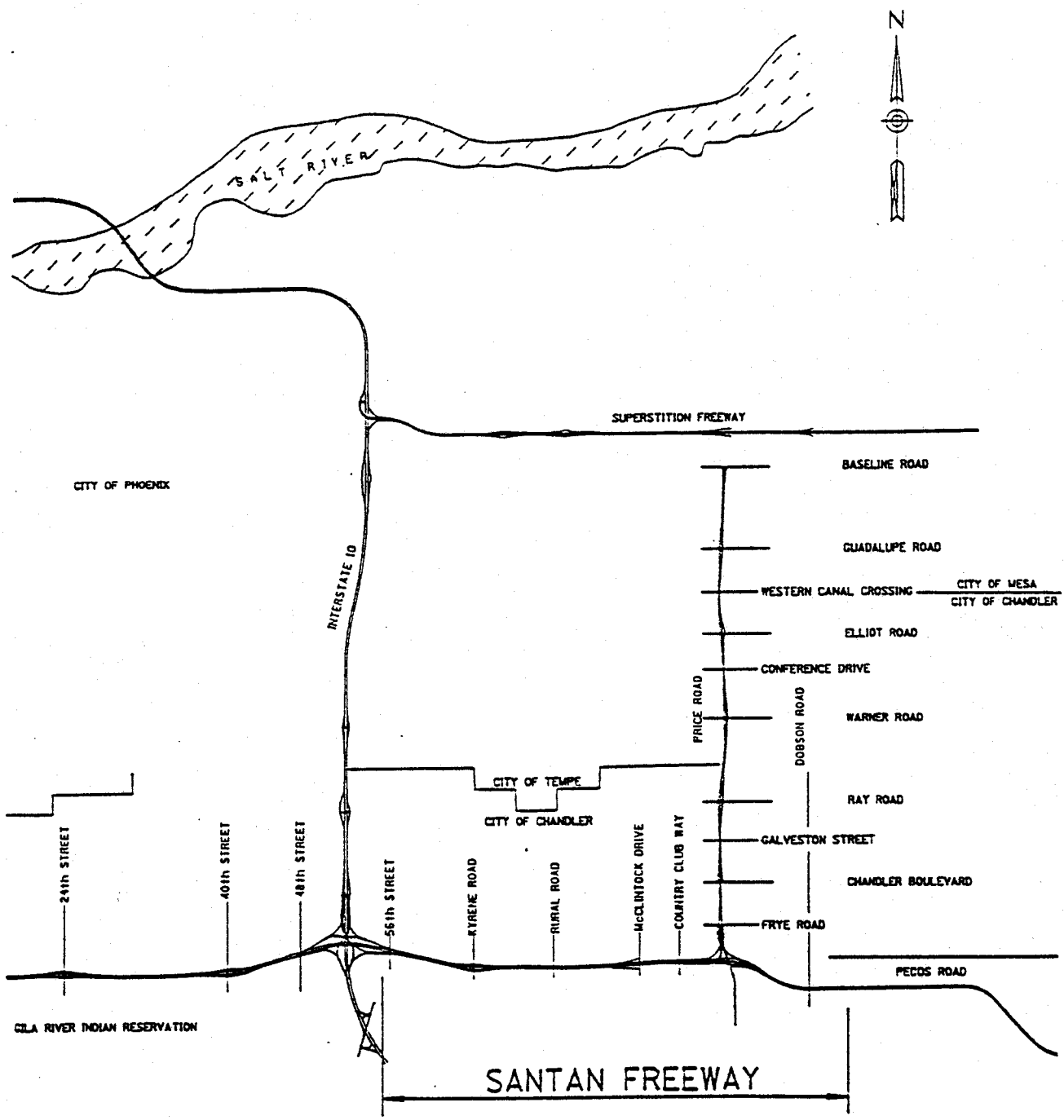

Source: HDR Engineering, Inc.,
February 1993

NO SCALE

WOOD/PATEL
ASSOCIATES
Civil Engineers
Hydrologists
Land Surveyors
(602) 234-1344

SANTAN FREEWAY
LOCATION MAP
FIGURE 1

2.0 OBJECTIVES AND APPROACH

2.1 Background

The proposed Santan Freeway drainage system will collect SEVRDS and offsite runoff approaching the Freeway from the north and east as well as onsite runoff from the Santan and Price Freeways. The offsite drainage facilities include two collector channels along the north side of the Santan Freeway. The first begins at the Santan/Price Freeway Traffic Interchange (T.I.) and extends west to the detention basins and the second begins immediately east of the Santan/Interstate 10 (I-10) Freeway T.I. and extends east to the detention basins. The detention basins (Water Quality Basin, Equalization Basin, and Detention Basin "B") are located north of Pecos Road between Kyrene Road and the Gila Drain. The outfall channel begins at the Gila Drain and extends west to I-10, then south to the Gila Drain Floodway. Figure 2 illustrates the freeway locations and their associated drainage facilities.

The Gila Drain is an Salt River Project (SRP) irrigation return flow channel that ultimately discharges to the Gila River. It is the subject of an early 1900's agreement between the Gila River Indian Community (GRIC) and the SRP. The Gila Drain is located immediately west of the detention basins. Water from the Gila Drain may be utilized to maintain plant life within the water quality basin between rainfall events. The Gila Drain will pass under the Santan Freeway and will be siphoned under the outfall channel north of Pecos Road. Stormwater runoff will not outfall into the Gila Drain, but will be carried to the Gila Floodway by the outfall channel. Water quality of the stormwater runoff is of primary concern to the GRIC. The General Consultant (GC) design team has developed a drainage design concept that addresses both water quality and quantity issues.

Stormwater runoff may contain non-point-source pollutants such as sand, oil, and debris from street surfaces and nutrients (nitrogen and phosphorous) and natural organic matter (leaves and wood litter) from urban and residential areas. The pollutant concentration tends to be highest during initial flows (i.e., first flush). As stormwater runoff increases the pollutant concentration tends to decrease. Therefore, the drainage system was designed to provide water quality treatment for small runoff events and for the "first flush" volume of large runoff events.

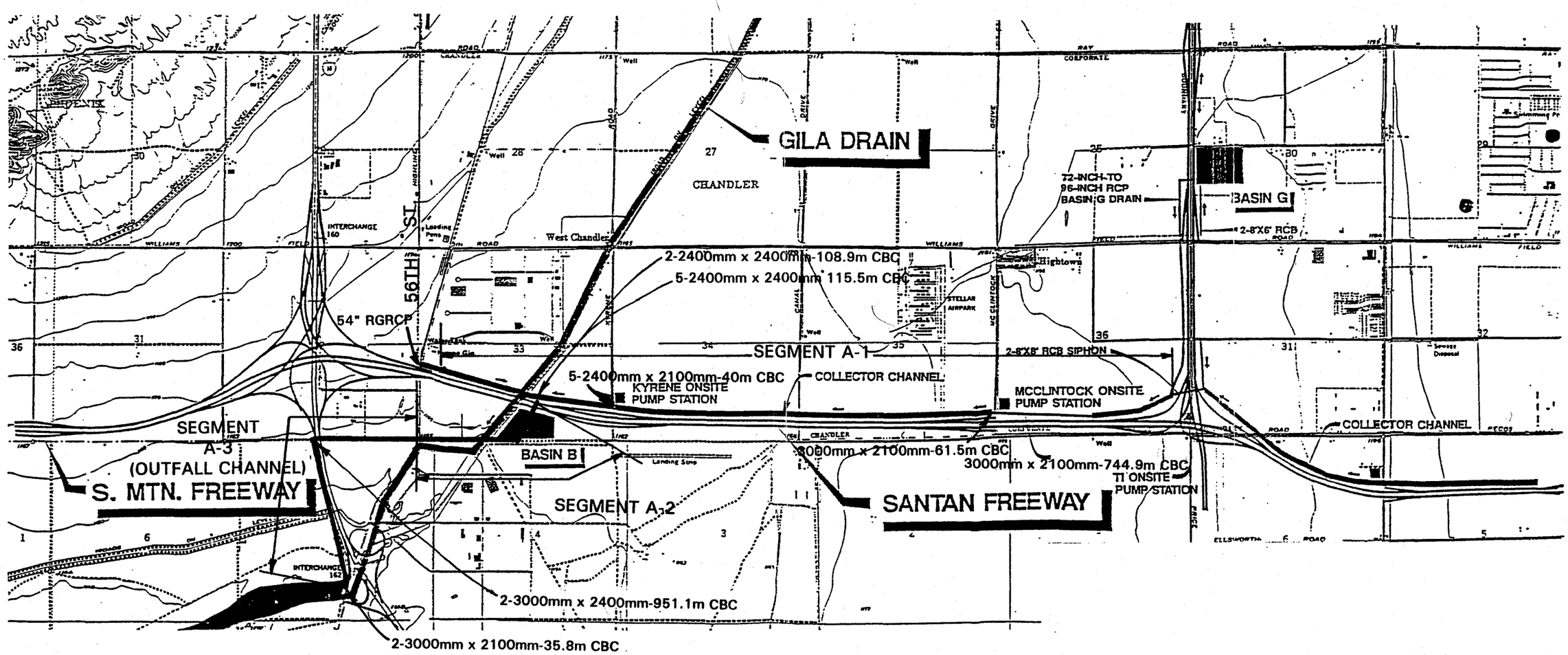

Base Map Source: HDR Engineering, Inc., *Concept Drainage Report, Price Expressway Santan Freeway - 56th Street to Dobson Road, Gila Drain Alternative Final Report*, February 1993.

SANTAN FREEWAY
DRAINAGE FACILITIES
FIGURE 2

WOOD/PATEL ASSOCIATES Civil Engineers Hydrologists Land Surveyors (602) 234-1344	SCALE 1:34248 ±	SHEET 1 OF 1
	DATE 9/12/96	JOB NO. 95271.04
	DESIGN	CHECK
	DRAWN	FILE

The detention basins are configured so that the "first flush" storm flows will be directed to the equalization/water quality basins. Events that exceed the first flush volume will be routed to the Gila Drain Floodway at a maximum flow of 22.65 m^3/s. Events with peak discharges that exceed the capacity of the outfall channel (22.65 m^3/s) will flow into Detention Basin "B".

2.2 Description of Proposed Drainage Facilities

Stormwater runoff will be collected in the concrete-lined Santan Channel. Several City of Chandler storm drains will also ultimately outfall into this channel. The first 30,800 m^3 of runoff (referred to as the "first flush") will discharge into the Equalization Basin located near the Gila Drain crossing under the Santan Freeway. This basin will capture the majority of the potential non-point-source pollutants in the stormwater runoff. Flow from the equalization basin will be slowly metered (1700 m^3/day) into a second basin, the Water Quality Basin, containing various aquatic plants that will assist in the polishing of the stormwater. The depth of water in the Water Quality Basin will be maintained at approximately 0.6 meters in order to provide a suitable environment for the aquatic plants. A small, constant flow will be maintained in the Water Quality Basin during dry periods by diverting flow from the Gila Drain irrigation return flow channel.

Following a storm event, "polished" first flush flow from the Water Quality Basin will be discharged into the downstream Outfall Channel. During dry weather periods, small irrigation return flows, used to maintain Water Quality Basin vegetation, may be directed to Detention Basin "B" to minimize requirements for water quality monitoring.

Once the 30,800 m^3 Equalization Basin is full, additional stormwater flow will continue downstream in the Gila Drain Outfall Channel up to a maximum of 22.65 m^3/sec; flows higher than 22.65 m^3/sec will weir flow into the large offline Detention Basin "B". This basin will be drained by the Kyrene Pump station after the storm has passed.

Details of the hydraulic analyses and operation of the Santan Freeway drainage system are discussed in section 4.0 of this report.

3.0 HYDROLOGY

3.1 Existing Hydrologic Studies

Santan Freeway offsite hydrologic analyses (HEC-1) were originally performed by HDR Engineering, Inc. as part of a General Engineering Consultant agreement with the Arizona Department of Transportation (ADOT) for the Price Expressway and the portion of the Santan Freeway from Dobson Road to the vicinity of 56th Street and I-10. The hydrologic analyses are documented in the HDR reports *Gila Drain Alternative Concept Drainage Report*, February 1993 and *Gila Drain Floodway Master Plan Report*, February 1993. In 1995, HDR performed a study to determine conceptual drainage designs for a regional drainage system that outfall through the GRIC to the Gila River. This report is entitled *Alternative Study, Southeast Valley Regional Drainage System, Price and Santan Freeways*, June 1995. The HDR hydrologic models (HEC-1) were utilized by the project team as a baseline for design of the offsite drainage system. The models were modified as described in section 3.3.

The Flood Control District of Maricopa County (FCDMC) prepared an hydrologic analyses that includes the project watershed entitled *Southeast Valley Regional Drainage System (SEVRDS)*.

3.2 Watershed Description

The contributing watershed is located in eastern Maricopa County between the Salt and Gila Rivers. The watershed's historic drainage pattern is westerly toward the Gila Drain. Near the Gila Drain, flows turn southwesterly and converge at the I-10/Maricopa Road interchange. The Gila Drain Floodway routes stormwater runoff from near the I-10/Maricopa Road T.I. to the Gila River.

The SEVRDS drainage area contributing to this portion of the Santan Freeway drainage system is approximately 93 square kilometers. The area is bounded on the west by I-10, on the east by the Southern Pacific Railroad embankment, on the north by the Western Canal, and on the south by the Santan Freeway. The eastern surface flow boundary was assumed to be the Price Freeway. It should be noted that stormwater from detention basins east the Price Freeway contribute

to the study watershed via pump stations. Figure 3 (back pocket) is schematic diagram boundary map showing the flow patterns.

The majority of the watershed is urbanized. However, substantial tracts of agricultural land are present within the watershed. Due to agricultural land leveling and the development of street networks, the drainage area has lost the majority of its natural drainage corridors. Consequently, surface flooding is a significant problem for portions of the City of Chandler.

3.3 Wood/Patel Modifications to the HDR Hydrologic Model

The HEC-1 model developed by Wood/Patel is based on the HDR model for Alternative "C" prepared as part of the report cited in Section I, *Alternative Study, Southeast Valley Regional Drainage System, Price and Santan Freeways*, June 1995.

Design assumptions made by Wood/Patel in adopting the original HDR model are discussed in the following paragraphs.

The original HDR model included several imported hydrographs from areas in Chandler and Tempe, including pumped flows from detention basins. Two of the pumped flow hydrographs from Tempe were developed for the 50-year, 24-hour storm. HDR incorporated these hydrographs into their 100-year, 24-hour storm model, and ADOT has adopted the entire HDR model as a 100-year 24-hour storm model even though it includes the two 50-year storm hydrographs. Wood/Patel has also adopted this assumption for sizing of the detention facilities.

Wood/Patel compared the HDR HEC-1 models from the December 1989 *Hydrology Study, Final Report* with those used to develop the results of the June 1995 report *Southeast Valley Regional Drainage System*. The comparison showed that no changes have been made to the 1995 models to reflect any recent development that may have occurred since 1989. According to HDR, the existing (1989) condition models were used for subsequent analyses because they produced higher flows than the future (1995) condition models. This is due to the fact that the Cities of Tempe and Chandler require new development to retain/detain the 100-year, 2-hour event. Therefore, Hydrologic models utilized for this project

appear to be conservative. This may allow ADOT, MCFCD, Tempe, and Chandler some flexibility in the design of future adjacent drainage systems.

The detention basin subroutine in the HDR model was modified to simulate the following operations:

1) a divert operation to remove the first 30,800 m^3 of flow arriving at Basin "B";

2) a second divert operation to remove any remaining flow from item 1 that exceeds 22.65 m^3/s.

3) A design flow for the outfall channel of 22.65 m^3/s. = 800 cfs

3.4 First Flush Basin Hydrologic Analyses

The design of the water quality basin required estimation of the volume of the "first flush", or the initial runoff from the watershed carrying non-point-source pollutants. The design team could not determine an official regulatory definition of the first flush volume. The most reasonable definition of the first flush volume was the following: "The first 6.35 mm of runoff generated by the effective watershed." The effective watershed was defined as the area that directly contributes to a point of interest (i.e., developments with detention/retention, areas behind canal and railroad embankments, areas behind depressed freeways, bermed agricultural fields, etc. were eliminated). Once the effective area was identified, the following formula was utilized to determine the first flush volume:

$$V = 0.00635 * A * 10{,}000$$

where V = volume (m^3);
A = area (hectares).

The contributing area from undeveloped land directly contributing to the water quality basin was estimated to be 4.72 square kilometers, giving a first flush volume of approximately 30,800 m^3.

It should be noted that as the watershed becomes urbanized the first flush volume will decrease. The majority of the long term first flush volume will consist of the flows from Santan Freeway onsite drainage system and major streets within the Cities of Chandler and Tempe.

The project team attempted to quantify the peak discharge associated with the first flush volume. Since the geometry of the hydrograph may vary greatly (based on numerous hydrologic parameters), determination of peak discharge value from volummetric data is difficult. For example, the discharge hydrograph from a small gentle storm may have a low peak discharge value and the entire volume of runoff may not exceed 30,800 m^3. In contrast, the discharge hydrograph from a large intense storm will have a high peak discharge and the 30,800 m^3 volume may be included in a small portion of the rising limb of the hydrograph.

The project team selected a representative storm based on ADOT design criteria that would create 30,800 m^3 of runoff for a watershed area of 4.72 square kilometers. The 2-year event was utilized as the representative storm. The peak discharge value for this event was estimated to be approximately 88 cfs 2.5 m^3/s. The side weir entrance to the equalization basin was designed in accordance with this flow rate. If required, the capacity of this structure may be easily adjusted during the final design process.

3.5 Results of the Hydrologic Analyses

The summary output from the HEC-1 computer program for the Santan Freeway offsite hydrology is presented in Appendix A. The offsite peak discharges are summarized in Table 1.

TABLE 1

Peak Discharge Values for Santan Freeway Offsite Drainage Areas

Concentration Point (See Figure 3)	Q_{100} (cfs)	Q_{100} (m^3/s)
cinter	938	26.6
cbasn	975	27.6
COMB1 (1)	1011	28.6
cmcln	1332	37.7
COMB1 (2)	1338	37.9
SW34	1365	38.7
COMBB (1)	2179	61.7
COMBB (2)	2231	63.2
outltc	719	20.4
basinB (1)	749	21.2
basinB (2)	2895	82.0
DIVBB	800	22.7

4.0 HYDRAULIC ANALYSIS

4.1 Santan Channel Description

The Santan Freeway offsite drainage system collects surface runoff from the north of the Santan Freeway, pump station discharges from east of the Price Freeway, and onsite flows from the Santan Freeway. Stormwater is routed through a network of detention basins to the Gila Drain Floodway. The Santan offsite drainage system was divided into the following three segments: 1) A-1 collector channel/Reinforced Concrete Box Culvert (RCBC) along north side of Santan Freeway from Price Road to I-10; 2) A-2 channel from south of the Santan Freeway to I-10 RCBC (includes detention basins); and 3) A-3 outfall channel from I-10 RCBC to Gila Floodway.

Type?

Type?

Hydraulic analyses for the channel were performed using the U.S. Army Corps of Engineers' computer programs HEC-RAS (1996) and HEC-2. Figure 3 shows the HEC-RAS cross section locations.

?

8' x 10'

The transition from the I-10 RCBC (2 - 2400 mm X 3050 mm) to the open channel was designed to accommodate a future RCBC (2400mm X 3050 mm) outfall from Basin 15. The design capacity of the channel downstream of the RCBC remained 22.65 m^3/s. Preliminary analyses from HDR indicated that the time of concentration of the watershed is substantially different. Therefore, the channel may not need to be upsized. The final designer should contact the City of Phoenix to determine their schedule for design of Basin 15.

4.2 Channel Design Assumptions

4.2.1 Design Discharge

Design discharges used for the channel analyses were taken from the HEC-1 models discussed in Section 3 of this report. These discharges are based on the 100-year, 24-hour storm, with existing land-use conditions (1989) in place. The HEC-1 models are considered suitable for final design of the proposed regional channelization system. However, during the final design, slight revisions to the HEC-1 models may be required in order to obtain discharge values at a desired locations.

Table 1 lists the design discharge for each channel. The variation in discharge, along each channel, is referenced to channel stations. Channel stationing and HEC-RAS stationing are shown in Figures 4a and 4b and in Table 2.

4.3 Geometry

All channel analyses presented in this report utilize a 4-point trapezoidal cross-section (with the exception of the RCBC structures). Typical channel sections are shown in Figure 5 and are included in the Stage II (30%) plan set.

4.4 Channel Slope

Aerial mapping for the northern portion of the Santan Freeway alignment and the western portion of I-10 was performed as part of this project (C.I. = 0.2 m). The outfall elevation at the Gila Floodway was established at 346.7 m. Channel slopes for segment A-3 were established to minimize earthwork, effectively utilize available right-of-way, provide flow velocities between 1 m/s and 3 m/s, provide required freeboard, and provide a gravity outfall for the Water Quality Basin.

Channel slopes for segment A-2 were established to optimize operation of the basin network, connect segment A-1 to segment A-3, and provide required freeboard.

Channel slopes for segment A-1 were established to minimize earthwork, effectively utilize existing rights-of-way, provide flow velocities between 1 m/s and 3 m/s, provide required freeboard, and provide an outfall for future City of Chandler storm drains.

Manning's "n" values of 0.013 and 0.016 were assumed for RCBC's and concrete lined channels, respectively.

4.5 Freeboard

Channel freeboard is defined as the additional channel depth extending from the design water surface elevation to the top of the channel bank. Freeboard provides a safety factor for variations in the assumed hydrologic and hydraulic design conditions, as well as for containment of wave action associated with flowing water.

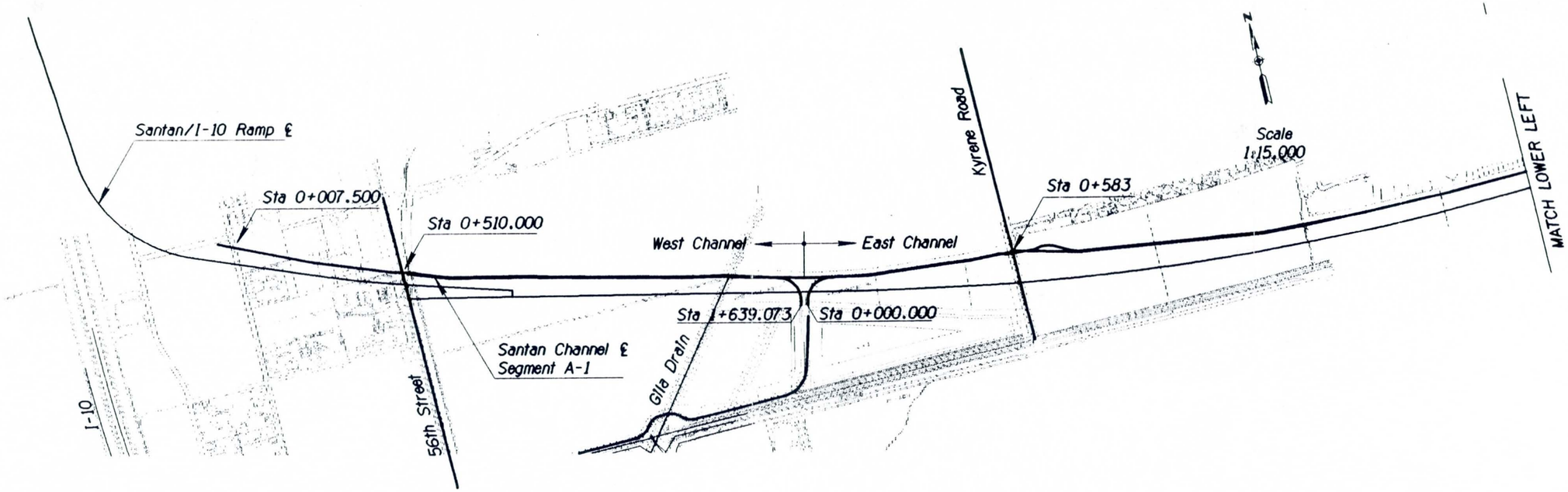

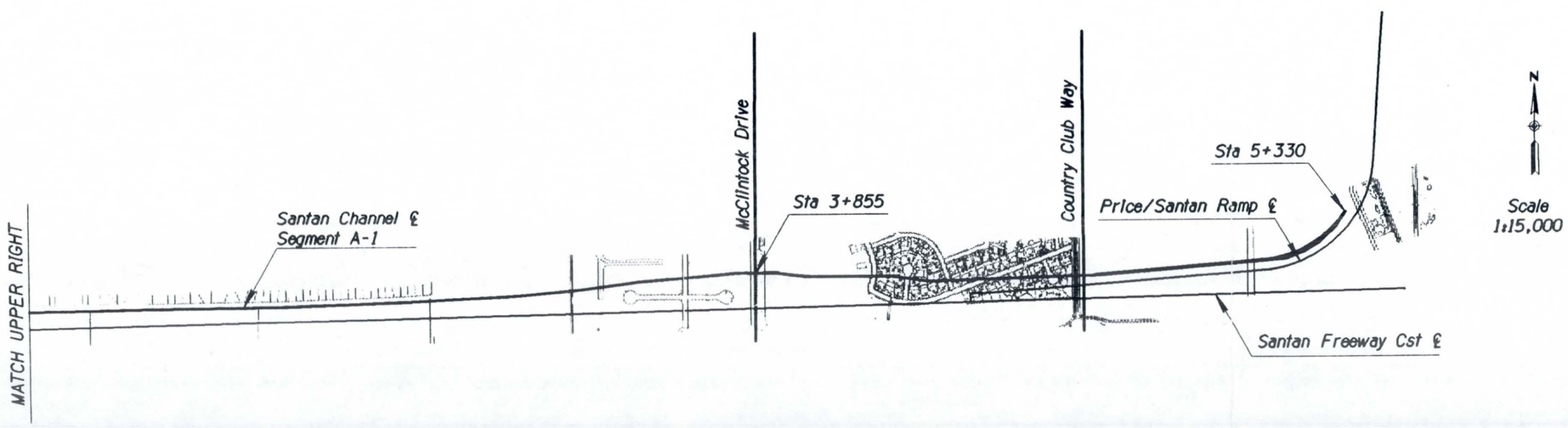

NOTE: Refer to Table 2 for HEC-RAS Stationing and Channel Geometry.

FIGURE 4A
CHANNEL STATIONING
SEGMENT A-1

SANTAN FREEWAY

WOOD/PATEL
ASSOCIATES
Civil Engineers
Hydrologists
Land Surveyors
(602) 234-1344

60214\ex15k01.dgn Sep. 12, 1996 13:43:16

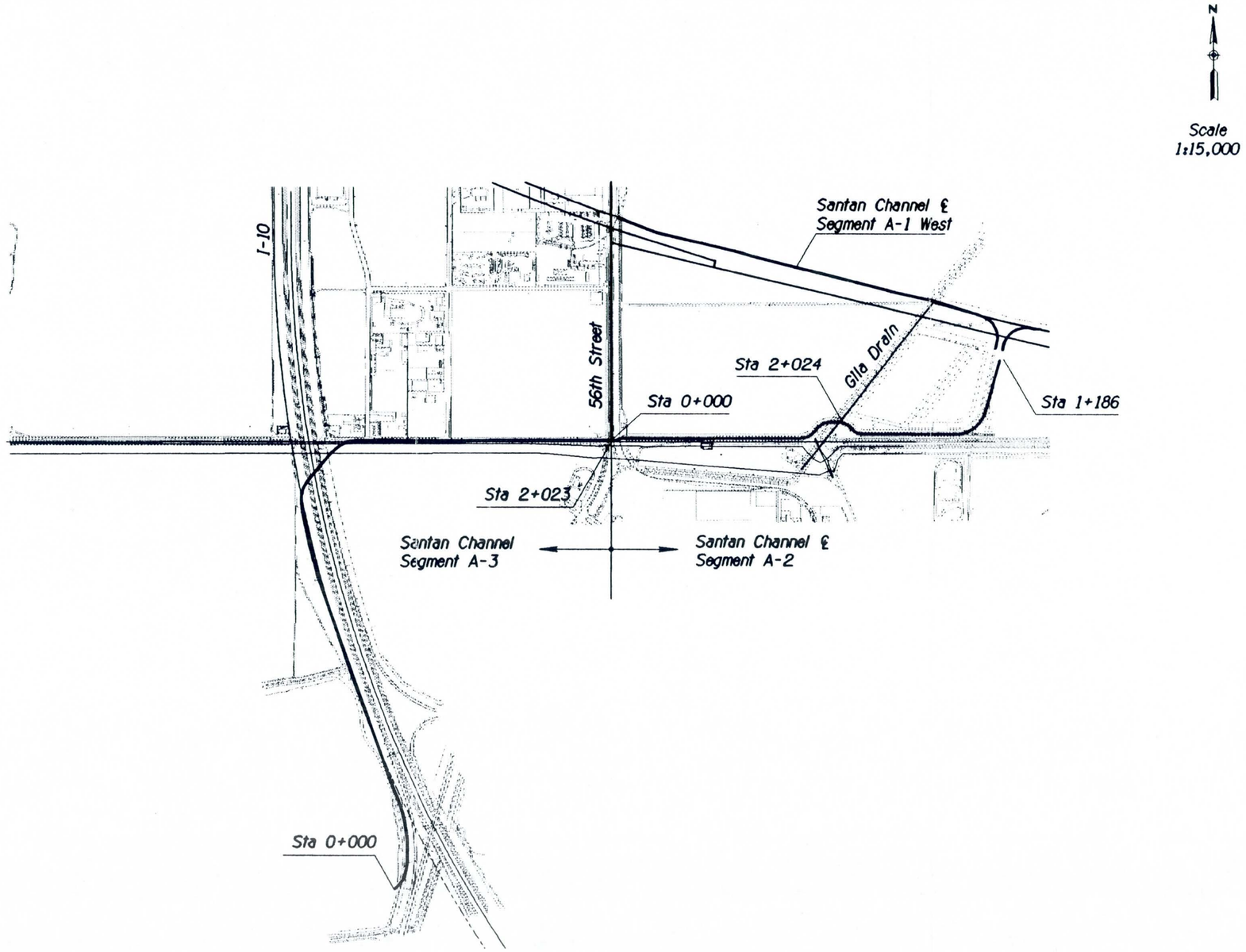

NOTE: REFER TO TABLE 2 FOR HEC-RAS STATIONING AND CHANNEL GEOMETRY

FIGURE 4B
CHANNEL STATIONING
SEGMENTS A-2 & A-3

SANTAN FREEWAY

WOOD/PATEL
ASSOCIATES
Civil Engineers
Hydrologists
Land Surveyors
(602) 234-1344

V:\960214\EX15K02.dgn

\960214\ex15k02.dgn Sep. 12, 1996 13:44:55

TABLE 2
CHANNEL STATIONING AND GEOMETRY

Project #: 95271.04
SANTAN FREEWAY
Metric

9/12/96
1:29 PM

Santan "A-1" East

HEC-2 Section #	Reach Length (m)	Station (m)	CP P1 Elev (m)	Access L1 P1-P2 (m)	Top Bank P2 Elev (m)	SS Width L2 P2-P3 (m)	PGL El. P3 Elev (m)	BW Chan L3 P3-P4 (m)	Toe Slope P4 Elev (m)	Ramp L4 P4-P5 (m)	Ramp P5 Elev (m)	Ramp L5 P5-P6 (m)	Ramp P6 Elev (m)	SS Width L6 P6-P7 (m)	Top Bank P7 Elev (m)	Sx b/w P7 & P8 (m/m)	Rd Width L7 P7-P8 (m)	Exst Gnd P8 Elev (m)	
1900	46.000	5359.555	358.030	2.40	358.018	5.00	355.518	3.70	355.592	8.60	359.892	4.00	359.892		359.892	1.77%	6.10	360.00	Ramp In, **Price Road**
1890	10.000	5313.555	357.984	2.40	357.972	5.00	355.472	3.70	355.546			4.00	355.546	8.60	359.846	2.52%	6.10	360.00	Ramp In
1880	75.000	5303.555	357.974	2.40	357.962	5.00	355.462	3.70	355.536					8.60	359.836	2.36%	6.10	359.98	
1870	75.000	5228.555	357.899	2.40	357.887	5.00	355.387	3.70	355.461					8.60	359.761	3.26%	6.10	359.96	
1860	75.000	5153.555	357.824	2.40	357.812	5.00	355.312	3.70	355.386					8.60	359.686	3.51%	6.10	359.90	
1850	75.000	5078.555	357.749	2.40	357.737	5.00	355.237	3.70	355.311					8.60	359.611	3.91%	6.10	359.85	
1840	75.000	5003.555	357.674	2.40	357.662	5.00	355.162	3.70	355.236					8.60	359.536	4.65%	6.10	359.82	
1830	75.000	4928.555	357.599	2.40	357.587	5.00	355.087	3.70	355.161					8.60	359.461	5.55%	6.10	359.80	
1820	36.440	4853.555	357.524	2.40	357.512	5.00	355.012	3.70	355.086					8.60	359.386	3.34%	6.10	359.59	
1810	36.438	4817.115	357.488	2.40	357.476	5.00	354.976	3.70	355.050					8.60	359.35	1.15%	6.10	359.42	
1800	20.000	4780.677	357.451	2.40	357.439	5.00	354.939	3.70	355.013					8.00	359.013	4.04%	6.10	359.26	
1790	20.000	4760.677	357.431	2.40	357.419	5.00	354.919	3.70	354.993					8.00	358.993	3.06%	6.10	359.18	
1780	41.000	4740.677	357.411	2.40	357.399	5.00	354.899	3.70	354.973			4.00	354.973	8.00	358.973	3.22%	6.10	359.17	Ramp Out
1770	15.130	4699.677	357.370	2.40	357.358	5.00	354.858	3.70	354.932	8.00	358.932	4.00	358.932		358.932	3.57%	6.10	359.15	Ramp Out, Begin Transition
1760	20.743	4684.547					354.843							8.00	358.843	4.70%	6.10	359.13	Vert Walls, End Transition, Begin CBC,
1750	75.000	4663.804					354.822								0.000	#VALUE!	0.00	CBC	3 - 3.0m x 2.4m, **C. C. Way**
1740	75.000	4588.804					354.747								0.000	#VALUE!	0.00	CBC	
1730	75.000	4513.804					354.672								0.000	#VALUE!	0.00	CBC	
1720	75.000	4438.804					354.597								0.000	#VALUE!	0.00	CBC	
1710	75.000	4363.804					354.522								0.000	#VALUE!	0.00	CBC	
1700	75.000	4288.804					354.447								0.000	#VALUE!	0.00	CBC	
1690	75.000	4213.804					354.372								0.000	#VALUE!	0.00	CBC	
1680	75.000	4138.804					354.297								0.000	#VALUE!	0.00	CBC	
1670	75.000	4063.804					354.222								0.000	#VALUE!	0.00	CBC	
1660	51.659	3988.804					354.147								0.000	#VALUE!	0.00	CBC	3 - 3.0m x 2.4m
1650	37.373	3937.145					354.096							8.50	358.346	4.17%	6.10	358.60	Begin U Chann/End CBC, 3 - 3.0m x 2.4m
1640	91.508	3899.772					354.058							7.50	357.808	3.14%	6.10	358.00	End U Chann/Beg CBC,3 - 3.0m x 2.1m, **McClintock**
1630	15.000	3808.264					353.967							7.00	357.467	8.25%	6.10	357.97	Begin Transition/End CBC, 3 - 3.0m x 2.1m
1620	40.000	3793.264	356.464	2.40	356.452	5.00	353.952	3.70	354.026	7.00	357.526	4.00	357.526		357.526	6.30%	6.10	357.91	Ramp In, End Transition
1610	20.000	3753.264	356.424	2.40	356.412	5.00	353.912	3.70	353.986			4.00	353.986	7.00	357.486	5.76%	5.80	357.82	Ramp In
1600	75.000	3733.264	356.404	2.40	356.392	5.00	353.892	3.70	353.966					7.00	357.466	6.07%	5.50	357.80	
1590	75.000	3658.264	356.329	2.40	356.317	5.00	353.817	3.70	353.891					6.80	357.291	9.26%	5.50	357.80	
1580	75.000	3583.264	356.254	2.40	356.242	5.00	353.742	3.70	353.816					6.80	357.216	8.64%	5.60	357.70	
1570	75.000	3508.264	356.179	2.40	356.167	5.00	353.667	3.70	353.741					6.80	357.141	8.71%	5.50	357.62	
1560	75.000	3433.264	356.104	2.40	356.092	5.00	353.592	3.70	353.666					6.80	357.066	6.31%	5.45	357.41	
1550	75.000	3358.264	356.029	2.40	356.017	5.00	353.517	3.70	353.591					6.70	356.941	7.80%	5.50	357.37	
1540	75.000	3283.264	355.954	2.40	355.942	5.00	353.442	3.70	353.516					6.70	356.866	4.07%	5.50	357.09	
1530	75.000	3208.264	355.879	2.40	355.867	5.00	353.367	3.70	353.441					6.70	356.791	3.62%	5.50	356.99	
1520	75.000	3133.264	355.804	2.40	355.792	5.00	353.292	3.70	353.366					6.70	356.716	2.26%	5.50	356.84	
1510	75.000	3058.264	355.729	2.40	355.717	5.00	353.217	3.70	353.291					6.70	356.641	1.26%	5.50	356.71	Beg Residential Wall
1500	75.000	2983.264	355.654	2.40	355.642	5.00	353.142	3.70	353.216					6.70	356.566	7.89%	5.50	357.00	
1490	75.000	2908.264	355.579	2.40	355.567	5.00	353.067	3.70	353.141					6.70	356.491	5.62%	5.50	356.80	
1480	75.000	2833.264	355.504	2.40	355.492	5.00	352.992	3.70	353.066					6.70	356.416	6.07%	5.50	356.75	
1470	75.000	2758.264	355.429	2.40	355.417	5.00	352.917	3.70	352.991					6.70	356.341	5.98%	5.50	356.67	
1460	75.000	2683.264	355.354	2.40	355.342	5.00	352.842	3.70	352.916					6.70	356.266	6.07%	5.50	356.60	
1450	75.000	2608.264	355.279	2.40	355.267	5.00	352.767	3.70	352.841					6.70	356.191	5.44%	5.50	356.49	
1440	75.000	2533.264	355.204	2.40	355.192	5.00	352.692	3.70	352.766					6.70	356.116	5.35%	5.50	356.41	
1430	75.000	2458.264	355.129	2.40	355.117	5.00	352.617	3.70	352.691					6.70	356.041	6.35%	5.50	356.39	Small Retaining Wall Req.
1420	75.000	2383.264	355.054	2.40	355.042	5.00	352.542	3.70	352.616					6.70	355.966	7.89%	5.50	356.40	Small Retaining Wall Req.
1410	75.000	2308.264	354.979	2.40	354.967	5.00	352.467	3.70	352.541					6.70	355.891	7.44%	5.50	356.30	Small Retaining Wall Req.
1400	75.000	2233.264	354.904	2.40	354.892	5.00	352.392	3.70	352.466					6.70	355.816	7.17%	5.50	356.21	Small Retaining Wall Req.
1390	75.000	2158.264	354.829	2.40	354.817	5.00	352.317	3.70	352.391					6.70	355.741	7.44%	5.50	356.15	Small Retaining Wall Req.
1380	75.000	2083.264	354.754	2.40	354.742	5.00	352.242	3.70	352.316					6.70	355.666	13.35%	5.50	356.40	Small Retaining Wall Req.
1370	75.000	2008.264	354.679	2.40	354.667	5.00	352.167	3.70	352.241					6.70	355.591	18.35%	5.50	356.60	Small Retaining Wall Req.
1360	75.000	1933.264	354.604	2.40	354.592	5.00	352.092	3.70	352.166					6.70	355.516	19.89%	5.50	356.61	Small Retaining Wall Req.
1350	75.000	1858.264	354.529	2.40	354.517	5.00	352.017	3.70	352.091					6.70	355.441	21.62%	5.50	356.63	Small Retaining Wall Req.
1340	75.000	1783.264	354.454	2.40	354.442	5.00	351.942	3.70	352.016					6.70	355.366	11.51%	5.51	356.00	Small Retaining Wall Req.
1330	75.000	1708.264	354.379	2.40	354.367	5.00	351.867	3.70	351.941					6.70	355.291	9.22%	5.52	355.80	Small Retaining Wall Req.
1320	75.000	1633.264	354.304	2.40	354.292	5.00	351.792	3.70	351.866					6.70	355.216	7.85%	5.53	355.65	End Residential Wall, Small Retaining Wall Req.
1310	75.000	1558.264	354.229	2.40	354.217	5.00	351.717	3.70	351.791					6.70	355.141	8.30%	5.53	355.60	Exist Det Basin, Small Retaining Wall Req.
1300	75.000	1483.264	354.154	2.40	354.142	5.00	351.642	3.70	351.716					6.70	355.066	9.64%	5.54	355.60	Exist Det Basin, Small Retaining Wall Req.
1290	75.000	1408.264	354.079	2.40	354.067	5.00	351.567	3.70	351.641					7.00	355.141	4.47%	5.80	355.40	Increased R/W Avail
1280	75.000	1333.264	354.004	2.40	353.992	5.00	351.492	3.70	351.566					7.00	355.066	5.59%	5.80	355.39	
1270	41.490	1258.264	353.929	2.40	353.917	5.00	351.417	3.70	351.491					7.00	354.991	5.16%	5.80	355.29	
1260	40.000	1216.774	353.887	2.40	353.875	5.00	351.375	3.70	351.449					7.00	354.949	4.15%	5.80	355.19	
1250	30.937	1176.774	353.847	2.40	353.835	5.00	351.335	3.70	351.409					7.00	354.909	3.80%	5.80	355.13	Begin Bottom Width Transition
1240	75.000	1145.837	353.816	2.40	353.804	5.00	351.304	7.80	351.460					7.00	354.960	-0.17%	6.10	354.95	End Bottom Width Transition
1230	75.000	1070.837	353.741	2.40	353.729	5.00	351.229	7.80	351.385					7.00	354.885	1.06%	6.10	354.95	
1220	75.000	995.837	353.916	2.40	353.904	5.50	351.154	7.80	351.310					6.40	354.510	1.47%	6.10	354.60	
1210	75.000	920.837	353.841	2.40	353.829	5.50	351.079	7.80	351.235					6.40	354.435	0.73%	6.10	354.48	
1200	75.000	845.837	353.766	2.40	353.754	5.50	351.004	7.80	351.160					6.40	354.360	0.32%	6.10	354.38	
1190	60.297	770.837	353.691	2.40	353.679	5.50	350.929	7.80	351.085					6.40	354.285	1.88%	6.10	354.40	
1180	23.000	710.540	353.631	2.40	353.619	5.50	350.869	7.80	351.025					6.40	354.225	2.87%	6.10	354.40	
1170	40.000	687.540	353.608	2.40	353.596	5.50	350.846	7.80	351.002			4.00	351.002	6.40	354.202	3.24%	6.10	354.40	Ramp Out
1160	16.287	647.540	353.568	2.40	353.556	5.50	350.806	7.80	350.962	6.40	354.162	4.00	354.242		354.242	2.75%	6.10	354.41	Ramp Out, Begin Transition
1150	40.077	631.253					350.790							6.40	353.990	6.72%	6.10	354.40	Begin CBC, 5 - 3.0m x 2.1m, **Kyrene**, End Increased R/W,
1140	16.018	591.176					350.750							5.40	353.450	6.04%	5.80	353.80	End CBC, 5 - 3.0m x 2.1m, Begin Transition
1130	31.000	575.158	353.496	2.40	353.484	5.50	350.734	7.80	350.890	5.40	353.590	4.00	353.590		353.590	3.45%	5.80	353.79	Ramp In, End Transition
1120	23.000	544.158	353.465	2.40	353.453	5.50	350.703	7.80	350.859			4.00	350.859	5.40	353.559	3.12%	5.80	353.74	Ramp In
1110	75.000	521.158	353.192	2.40	353.180	5.00	350.680	7.80	350.836					5.40	353.536	2.09%	8.80	353.72	
1100	75.000	446.158	353.117	2.40	353.105	5.00	350.605	7.80	350.761					5.40	353.461	1.01%	8.80	353.55	
1090	75.000	371.158	353.042	2.40	353.030	5.00	350.530	7.80	350.686					4.80	353.086	1.84%	8.91	353.25	
1080	75.000	296.158	352.967	2.40	352.955	5.00	350.455	7.80	350.611					4.80	353.011	0.45%	8.71	353.05	
1070	54.199	221.158	352.892	2.40	352.880	5.00	350.380	7.80	350.536					4.80	352.936	0.52%	8.51	352.98	
1065	17.000	166.959	352.838	2.40	352.826	5.00	350.326	7.80	350.482					4.80	352.882	0.21%	8.75	352.90	
1060	21.000	149.959	352.826	3.40	352.809	5.00	350.309	7.80	350.465			4.00	350.465	4.80	352.865	0.40%	8.75	352.90	Ramp Out
1058	15.216	128.959	352.800	2.40	352.788	5.00	350.288	7.80	350.444	4.70	352.794	4.00	352.794		352.794	0.10%	6.20	352.80	Ramp Out, Begin Transition
1055	8.304	113.743	352.784	2.40	352.772	5.00	350.272	7.80	350.428					4.70	352.778	0.24%	8.90	352.80	End Transition, Begin 10:1 Sloping Bottom
1050.1	0.100	105.439					349.442											352.74	End 10:1 Sloping Bottom, U Chann
1050	105.239	105.339					349.442											352.74	Begin 5 - 2.4m x 2.4m CBC
1040	0.100	0.100					349.268											352.60	End 5 - 2.4m x 2.4m CBC
1039.9	0.000	0.000					349.268											352.60	Oulet to "A-2" Channel

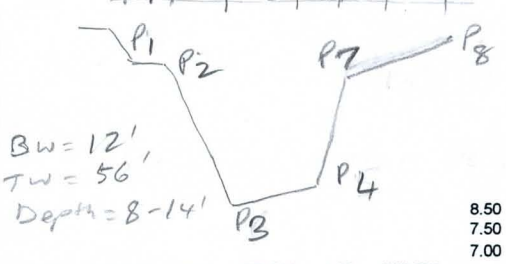

Santan "A-1" West

HEC-2 Section #		Station (m)	Existing P1 Elev (m)	M. Road L1 P1-P2 (m)	Sx b/w P1 & P2 (m/m)	Top Ban P2 Elev (m)	SS Width L2 P2-P3 (m)	Toe Bank P3 Elev (m)	Ramp L3 P3-P4 (m)	Ramp P4 Elev (m)	Ramp L4 P4-P5 (m)	Ramp P5 Elev (m)	W Cha L5 P5-P6 (m)	PGL El. P6 Elev (m)	SS Width L6 P6-P7 (m)	Top Ban P7 Elev (m)	Access L7 P7-P8 (m)	CP P8 Elev (m)	
1959.9	0.000	1635.169	352.600	6.00	7.16%	352.171	0.00					349.321	2.63	349.268	0.00	351.968	2.40	351.980	Outlet
1960	0.100	1635.069	352.600	6.00	7.16%	352.171	0.00					349.321	2.63	349.268	0.00	351.968	2.40	351.980	End 2 - 2.4m x 2.4m CBC
1970	104.717	1530.352	352.340	6.00	1.15%	352.271	0.00					349.421	2.63	349.368	0.00	352.068	2.40	352.080	Begin 2 - 2.4m x 2.4m CBC
1970.1	0.100	1530.252	352.340	6.00	1.15%	352.271	0.00					349.421	2.63	349.368	0.00	352.068	2.40	352.080	End Transition
1975	15.041	1515.211	352.280	6.00	5.69%	351.939		351.9387	4.00	351.939	5.00	349.439	2.80	349.383	4.90	351.833	2.40	351.845	Ramp Out, Begin Transition
1977	25.000	1490.211	352.200	6.00	3.96%	351.963	5.00			349.463	4.00	349.463	2.80	349.407	4.90	351.857	3.40	351.874	Ramp Out
1980	12.000	1478.211	352.170	6.00	3.27%	351.974	5.00					349.474	2.80	349.418	4.90	351.868	2.40	351.880	
1990	50.000	1428.211	352.170	6.00	2.47%	352.022	5.00					349.522	2.80	349.466	4.90	351.916	2.40	351.928	
2000	50.000	1378.211	352.490	6.00	7.01%	352.070	5.00					349.570	2.80	349.514	4.90	351.964	2.40	351.976	**Gila Drain**
2010	75.000	1303.211	352.430	6.00	4.76%	352.145	5.00					349.645	2.80	349.589	4.90	352.039	2.40	352.051	
2020	75.000	1228.211	352.480	6.02	4.32%	352.220	5.00					349.720	2.80	349.664	4.90	352.114	2.40	352.126	
2030	75.000	1153.211	352.520	6.04	3.73%	352.295	5.00					349.795	2.80	349.739	4.90	352.189	2.40	352.201	
2040	75.000	1078.211	352.460	6.36	3.78%	352.220	4.70					349.870	2.80	349.814	4.90	352.264	2.40	352.276	
2050	75.000	1003.211	352.370	6.38	1.18%	352.295	4.70					349.945	2.80	349.889	4.90	352.339	2.40	352.351	
2060	75.000	928.211	352.350	6.40	-0.31%	352.370	4.70					350.020	2.80	349.964	4.90	352.414	2.40	352.426	
2070	75.000	853.211	352.420	6.60	0.99%	352.355	4.40					350.155	2.80	350.099	4.90	352.549	2.40	352.561	
2080	75.000	778.211	352.510	6.44	0.32%	352.490	4.40					350.290	2.80	350.234	4.90	352.684	2.40	352.696	
2090	75.000	703.211	352.810	6.28	2.95%	352.625	4.40					350.425	2.80	350.369	4.90	352.819	2.40	352.831	
2100	102.787	600.424	352.870	6.13	0.98%	352.810	4.40					350.610	2.80	350.554	4.90	353.004	2.40	353.016	
2110	23.000	577.424	352.930	6.10	1.29%	352.851	4.40			350.651	4.00	350.651	2.80	350.595	4.90	353.045	2.40	353.057	Ramp In
2120	25.000	552.424	352.990	6.10	1.54%	352.896		352.8961	4.00	352.896	4.40	350.696	2.80	350.640	4.90	353.090	2.40	353.102	Ramp In, End Transition
2130	15.197	537.227	353.200	6.10	2.08%	353.073	4.70					350.723	2.80	350.667	4.90	353.117	2.40	353.129	End RCP, Begin Transition
2140	52.279	484.948	353.800	6.10	10.37%	353.168	4.70					350.818	2.80	350.762	4.90	353.212	2.40	353.224	Begin RCP, **56th St**, End Transition
2150	15.000	469.948	354.000	6.10	3.72%	353.773		353.773	4.00	353.773	2.60	352.473	2.40	352.425	2.50	353.675	2.40	353.687	Ramp Out, Begin New R/W, Begin Transition (Vert Drop)
2160	15.000	454.948	354.000	6.10	3.23%	353.803	2.60			352.503	4.00	352.503	2.40	352.455	2.50	353.705	2.40	353.717	Ramp Out
2170	19.000	435.948	354.110	6.10	4.41%	353.841	2.60					352.541	2.40	352.493	2.50	353.743	2.40	353.755	
2180	75.000	360.948	354.230	6.10	3.92%	353.991	2.60					352.691	2.40	352.643	2.50	353.893	2.40	353.905	
2190	86.000	274.948	354.400	6.10	3.89%	354.163	2.60					352.863	2.40	352.815	2.50	354.065	2.40	354.077	
2195	5.000	269.948	354.400	6.10	1.26%	354.323	2.90					352.873	2.40	352.825	2.50	354.075	2.40	354.087	
2200	75.000	194.948	354.730	6.10	1.75%	354.623	3.20					353.023	2.40	352.975	2.50	354.225	2.40	354.237	
2210	75.000	119.948	354.960	6.10	3.07%	354.773	3.20					353.173	2.40	353.125	2.50	354.375	2.40	354.387	
2220	44.000	75.948	355.140	6.10	4.57%	354.861	3.20					353.261	2.40	353.213	2.50	354.463	2.40	354.475	Begin New R/W, **54th St,** Bottom of Ramp

TABLE 2
CHANNEL STATIONING AND GEOMETRY

Project #: 95271.04
SANTAN FREEWAY

9/12/96

Santan "A-3" South

HEC-2 Section #		Station (m)	Existing P1 Elev (m)	M. Road L1 P1-P2 (m)	Sx b/w P1 & P2 (m/m)	Top Ban P2 Elev (m)	SS Width L2 P2-P3 (m)	Ramp P3 Elev (m)	Ramp L3 P3-P4 (m)	Ramp P4 Elev (m)	Ramp L4 P4-P5 (m)	Toe Ban P5 Elev (m)	W Cha L5 P5-P6 (m)	PGL El. P6 Elev (m)	SS Width L6 P6-P7 (m)	Top Ban P7 Elev (m)	Access L7 P7-P8 (m)	CP P8 Elev (m)	
1000	0.000	0.000	349.987	6.00	8.15%	349.498	5.50					346.748	2.40	346.700	5.60	349.500	2.40	349.512	End CBC, 2 - 3.0m x 2.1m, **Gila Floodway**
1010	35.823	35.823	349.761	6.00	3.91%	349.527	5.50					346.777	2.40	346.729	5.60	349.529	2.40	349.541	Begin CBC, 2 - 3.0m x 2.1m, End Transition
1015	15.283	51.106	349.041	6.00	0.04%	349.039		349.0389	4.00	349.039	4.50	346.789	2.40	346.741	4.60	349.041	2.40	349.053	Ramp In, Begin Transition
1020	25.000	76.106	349.110	6.00	0.85%	349.059	4.50			346.809	4.00	346.809	2.40	346.761	4.60	349.061	2.40	349.073	Ramp In
1025	12.000	88.106	349.120	6.00	0.86%	349.068	4.50					346.818	2.40	346.770	4.60	349.070	2.40	349.082	
1100	517.497	605.603	349.535	6.00	0.88%	349.482	4.50					347.232	2.40	347.184	4.60	349.484	2.40	349.496	
1140	390.000	995.603	351.447	6.00	6.71%	351.044	7.00					347.544	2.40	347.496	7.10	351.046	2.40	351.058	
1145	20.000	1015.603	351.463	6.00	6.71%	351.060	7.00			347.560	4.00	347.560	2.40	347.512	7.10	351.062	2.40	351.074	Ramp Out
1150	40.000	1055.603	351.495	6.00	6.71%	351.092		351.0925	4.00	351.092	7.00	347.592	2.40	347.544	7.10	351.094	2.40	351.106	Ramp Out, End Transition
1159	15.334	1070.937	351.458	6.02	5.87%	351.105	7.00					347.605	2.40	347.557	7.10	351.107	2.40	351.119	Begin Transition
1160	1.000	1071.937	351.458	6.04	12.85%	350.682	0.00					347.682	6.23	347.558	0.00	350.558	2.40	350.570	End 2 - 3.0m x 2.4m CBC's, **I-10**
1200	251.358	1323.295	350.785	6.36	3.17%	350.583	0.00					347.883	6.23	347.759	0.00	350.459	2.40	350.471	
1290	699.400	2022.695	351.344	6.60	3.05%	351.143	0.00					348.443	6.23	348.318	0.00	351.018	2.40	351.030	Begin 2 - 3.0m x 2.4m CBC's, **56th St**, End "A-2" Channel

Santan "A-2" South

HEC-2 Section #	Reach Length (m)	Station (m)	CP P1 Elev (m)	Access L1 P1-P2 (m)	Top Bank P2 Elev (m)	SS Width L2 P2-P3 (m)	PGL El. P3 Elev (m)	BW Chan L3 P3-P4 (m)	Toe Slope P4 Elev (m)	Ramp L4 P4-P5 (m)	Ramp P5 Elev (m)	Ramp L5 P5-P6 (m)	Ramp P6 Elev (m)	SS Width L6 P6-P7 (m)	Top Bank P7 Elev (m)	Sx b/w P7 & P8 (m/m)	Rd Width L7 P7-P8 (m)	Exst Gnd P8 Elev (m)	
1291	0.100	0.100	350.830	2.40	350.818	5.00	348.318	6.23	348.443					5.50	351.193	6.32%	6.44	351.600	Begin Transition, Begin "A-2" Channel
1300	15.600	15.700	350.843	2.40	350.831	5.00	348.331	6.00	348.451	5.50	351.201	4.00	351.201		351.201	6.36%	6.28	351.600	Ramp Out
1310	28.000	43.700	350.865	2.40	350.853	5.00	348.353	6.00	348.473			4.00	348.473	5.50	351.223	6.15%	6.13	351.600	Ramp Out
1320	18.000	61.700	350.880	2.40	350.868	5.00	348.368	6.00	348.488					5.50	351.238	4.30%	6.10	351.500	
1420	63.385	125.085	350.931	2.40	350.919	5.00	348.419	6.00	348.539					5.00	351.039	4.29%	6.10	351.300	
1995	895.268	1020.353	352.599	2.40	352.587	6.90	349.137	6.00	349.257					6.00	352.257	8.58%	4.00	352.600	End Transition, Return to Normal Section
1999.9	12.498	1032.851	352.599	2.40	352.587	6.88	349.147	7.15	349.290					0.00	352.6	0.00%	4.00	352.600	Begin Side Transition, Vert Wall
2000	0.100	1032.951	352.599	2.40	352.587	6.88	349.147	7.15	349.290					0.00	350.74	0.00%	4.00	350.740	End Side Weir, End Bottom Width Transition
2090	119.706	1152.657	352.600	2.40	352.588	6.69	349.243	14.00	349.523					0.00	350.847	0.00%	4.00	350.847	Begin Side Weir, Begin Bottom Width Transition
2090.1	0.100	1152.757	352.600	2.40	352.588	6.69	349.243	14.00	349.523					0.00	352.6	0.00%	4.00	352.600	End Transition
2110	31.124	1183.881	352.600	2.40	352.588	0.00	349.268	18.41	349.268					0.00	352.598	0.03%	6.10	352.600	Outlet of 7 - 2.4m x 2.4m CBC's, Begin Transition

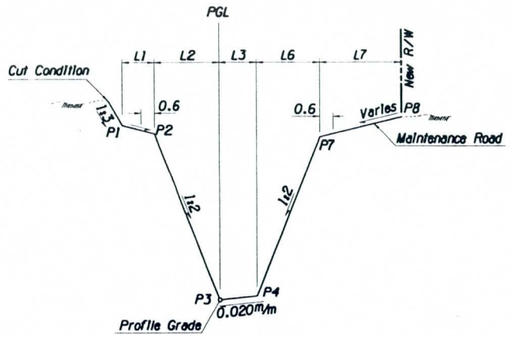

TYPICAL SECTION
Channel A-1 East
No Ramp

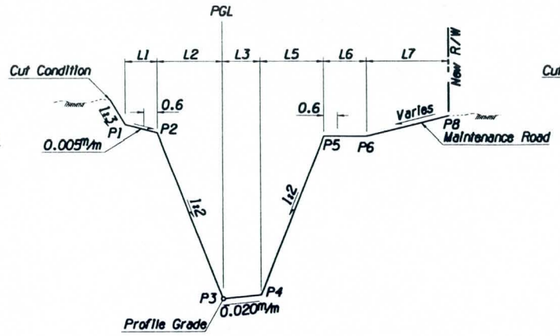

TYPICAL SECTION
Channel A-1 East
Ramp at Top of Bank

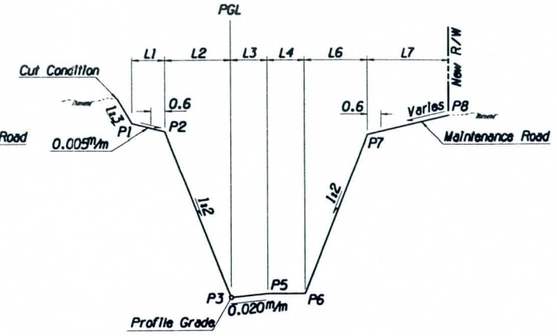

TYPICAL SECTION
Channel A-1 East
Ramp at Bottom of Bank

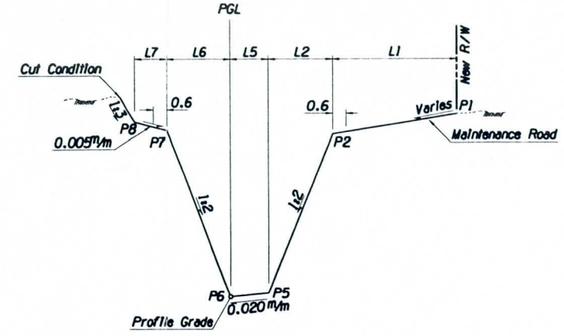

TYPICAL SECTION
Channel A-1 West
No Ramp

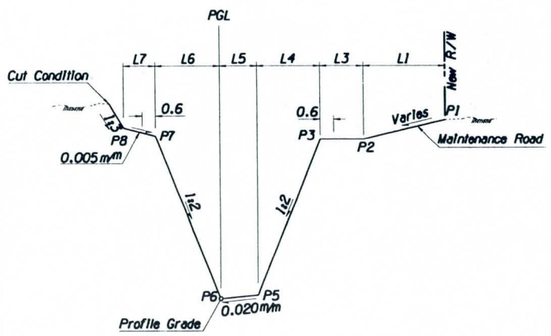

TYPICAL SECTION
Channel A-1 West
Ramp at Top of Bank

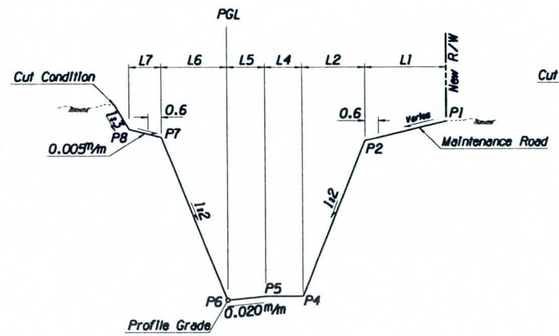

TYPICAL SECTION
Channel A-1 West
Ramp at Bottom of Bank

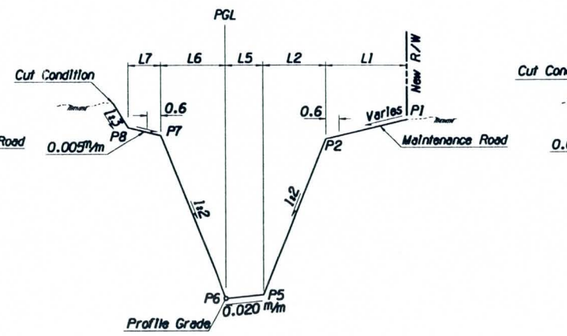

TYPICAL SECTION
Channel A-3
No Ramp

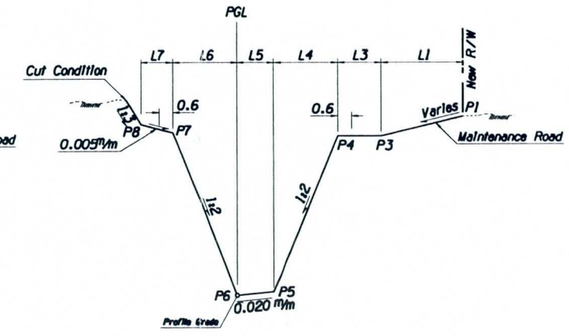

TYPICAL SECTION
Channel A-3
Ramp at Top of Bank

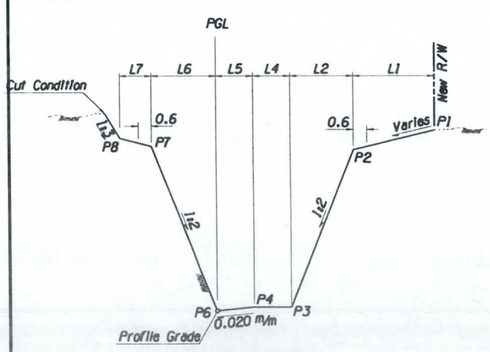

TYPICAL SECTION
Channel A-3
Ramp at Bottom of Bank

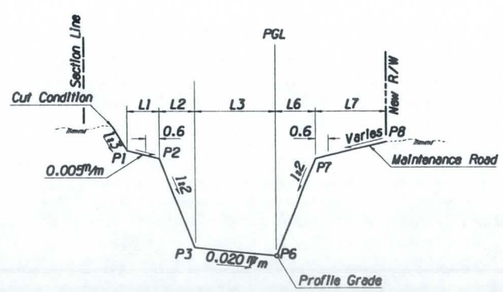

TYPICAL SECTION
Channel A-2
No Ramp

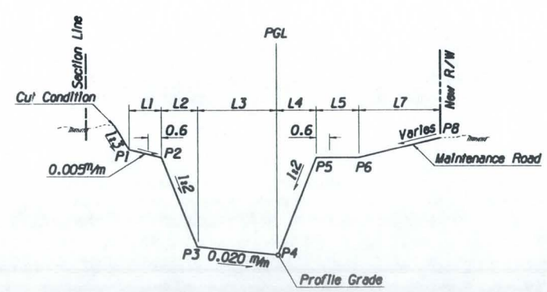

TYPICAL SECTION
Channel A-2
Ramp at Top of Bank

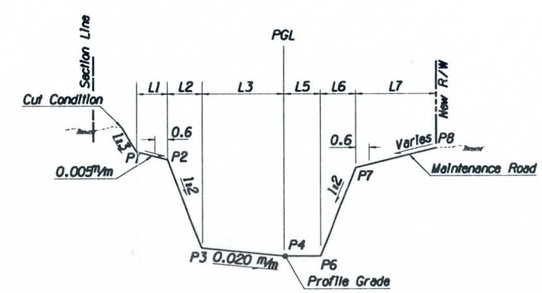

TYPICAL SECTION
Channel A-2
Ramp at Bottom of Bank

NOTES: REFER TO TABLE 2 FOR DIMENSIONS. ALL CROSS SECTIONS LOOKING DOWNSTREAM.

FIGURE 5
TYPICAL CHANNEL CROSS SECTIONS

SANTAN FREEWAY

WOOD/PATEL
ASSOCIATES
Civil Engineers
Hydrologists
Land Surveyors
(602) 234-1344

v:\960214\SA12DS01.DGN

1.5 ft

For the purpose of this study, 0.46 m of freeboard was included in the channel analyses. During final design, there may be localized areas may warrant additional freeboard above 0.46 m. However, for the purpose of this study, a 0.46 m freeboard allowance is considered satisfactory for below-ground channel with no above-grade levee embankments.

4.6 Hydraulic Computer Model

An HEC-RAS computer model was developed for the drainage system. Currently, the HEC-RAS program does not contain an split-flow subroutine. Therefore, the HEC-2 program was utilized to analyze side weir flow for the detention basins. Output files for the models are contained in the Appendix. Floppy disks containing input and output files are contained in the back pocket.

4.7 Bank Lining

The conceptual drainage plan assumed that the offsite drainage system would be concrete lined throughout its entire length. If feasible, the final designer may investigate alternative linings for interim sections of the channel in order to maintain the current fee schedule. For example, the proposed RCBC crossing the Santan Freeway near Detention Basin "B" could be initially be constructed as an open channel. The RCBC crossing is not required until the freeway is constructed. The final designer will have to monitor capital cost throughout the design process in order to determine if interim channel sections are required (or if they are cost effective).

4.8 Maintenance Access

5-meter maintenance roads were included along one side of each channel segment. In order to provide access to the channels for periodic maintenance work, access ramps are located at regular intervals throughout the project. Table 2 lists the approximate channel station of each access ramp location.

Table 3 APPROXIMATE CHANNEL ACCESS RAMP LOCATIONS	
CHANNEL REACH	**RAMP STATION**
"A-1" West	0 + 460
"A-1" West	0 + 560
"A-1" West	1 + 500
"A-1" East	0 + 140
"A-1" East	0 + 550
"A-1" East	0 +675
"A-1" East	3 + 775
"A-1" East	4 + 725
"A-1" East	5 + 325
"A-2"	0 + 030
"A-3"	0 + 060
"A-3"	1 + 040

4.9 Detention Basin Hydraulics

The following section describes the hydraulic operation of the detention basin network.

Low Flow (Flow volume less than 30,800 m^3)

Offsite runoff from a small event or the initial runoff from a large event flows through the RCBC's under the Santan Freeway to the detention basin network. These flows will be routed into the Equalization Basin. Channel A-2 was designed with a 2% cross slope to contain low flow along the north/west side of the channel. A side spillway (elevation equal to the channel invert) approximately 10 meters in length serves as the inlet to the Equalization Basin. The equalization basin was designed to hold the first flush volume of 30,800 m^3 below the invert elevation of spillway (elevation = 348.895 m). The "storage" depth of the basin was designed to be approximately 2 meters. The top of the equalization basin was designed to conform with the natural ground elevation.

Stormwater runoff collected in the equalization basin will be pumped into the Water Quality Basin at a rate of approximately 1700 m^3/day. Design team members evaluated several pump alternatives. It was determined that a screw type (wastewater) pump may serve this application best. It is anticipated that the equalization basin will drain within a 1 - 2 week period. Stormwater is then routed through the water quality basin (biological treatment), outlets into the channel A-2 and is routed to the Gila Drain Floodway.

Onsite Flow (Flow from the Kyrene Road Depressed Section)

Onsite stormwater collected in the Kyrene Road Depressed Section is routed to the pump station (capacity 22.65 m^3/s) located near the intersection of Pecos Road and Kyrene Road. The proposed pump station serves both the depressed section and the detention basin. ADOT representatives requested that the operation of the pump station be manually controlled. The pump station discharges into a channel located along the southern boundary of the detention basin and outfalls into channel A-2. Initial flows enter into the equalization basin, are routed through the water quality basin, and discharge to the Gila Floodway.

Medium Flow (Flow volume greater than 30,800 m^3 and peak discharge less than 22.65 m^3/s)

Offsite runoff (peak discharge less than 22.65 m^3/s) is routed through the RCBC's under the Santan Freeway to the detention basin network. The initial portion of this flow is routed to the Equalization Basin. Once the capacity of the Equalization Basin is exceeded, runoff begins to bypass the Equalization Basin and flow directly to the Gila Drain Floodway. The Equalization Basin will surcharge (i.e. fill to a level equal to the water surface elevation in channel A-2). Once the event is over, the Equalization Basin will drain via gravity to the elevation of the invert of channel A-2. The remaining 30,800 m^3 of storage will be pumped through the Water Quality Basin.

Large Flow (Flows in excess of 22.65 m^3/s)

Pay attention to side weir design

Offsite runoff (peak discharge greater than 22.65 m^3/s) is routed through the RCBC's under the Santan Freeway to the detention basin network. Flows in excess of 22.65 m^3/s are diverted via a side weir to a large detention basin (approximately 474,900 m^3) and held until the event is over. Flows less than 22.65 m^3/s flow past the side weir structure and operate as described in the above paragraph. Once the event is over, ADOT maintenance personnel will manually close the valve to the Kyrene Road depressed section of the Santan Freeway and open the valve to the detention basin. The pump station will evacuate the detention basin at a rate of 5.66 m^3/s. Once the detention basin has been drained, the valves will be set to their original position (depressed section open - detention basin closed). The pump station discharges to an open channel along the southern boundary of the detention basin. The channel outfalls into channel A-2 between the side weir and the equalization basin.

not a good idea to depend on manual op. of valve

5.0 RIGHT-OF-WAY AND UTILITIES

5.1 A-1 Channel

The majority of the right-of-way required for construction of the A-1 channel has been acquired by ADOT. However, several parcels remain to be acquired in the reach from County Club Way to Price Road and in the reach west of 56th Street. The General Consultant (DMJM) is coordinating the right-of-way acquisition. Parcel maps for the design section are available at DMJM.

Because the Santan Freeway is adjacent to the GRIC there are relatively few utility crossings. The key utilities in this reach are the Salt River Project's Gila Drain and the Southern Pacific Railroad. The conceptual design requires the Gila Drain to be contained in a closed conduit system through the freeway corridor and siphoned under the outfall channel. It is anticipated that SRP will design the Gila Drain facilities.

The concept design also requires coordination with the railroad in two areas. First, the drainage channel must pass under the railroad with minimum impact to service. Second, the maintenance road must cross the railroad. The remaining utility location of concern are the major street crossings (i.e., Kyrene Road, McClintock Road). These locations contain typical urban utilities.

5.2 A-2 Channel

Since the right-of-way for the detention basin has already been purchased; utility conflicts for the A-2 channel occur west of the basin. It should be noted that there are existing easements along the southern boundary of the detention basin parcel. The final designer should contact the appropriate utility to determine if the easement will impact the proposed design.

Coordination with SRP will be important in the final design of the A-2 channel. The A-2 channel crosses the Gila Drain and is located adjacent to an existing drainage channel that routes tailwater under I-10 to the Gila Drain. Because this reach is narrow, the final designer may want to look at several design options to optimize the drainage channel in this section.

5.3 A-3 Channel

There is an existing 12.2 meter easement along the Pecos Road alignment. The proposed drainage facilities are limited to this area. Therefore, a RCBC is proposed for this reach (the natural ground slope is adverse to the channel slope).

The channel section west of I-10 should be optimized to balance lining cost with right-of-way acquisition cost. Additional right-of-way will required from the GRIC for the outfall channel. Field surveys have not been performed at the current time. These surveys will be performed by the final designer. Once this survey information is available it is anticipated that the channel alignment will need to be adjusted.

Preliminary review of existing utilities in this reach does not indicate any major conflicts. However, the final designer should review utility location data during to initial stages of the project. If utility conflicts are identified they will need to be addressed in an expedient manner.

The proposed channel (RCBC) will cross two major utilities south of Pecos Road - a high pressure gas line and a fuel oil line. The final designer needs to coordinate design of the drainage system with these utilities.

6.0 REFERENCES

Arizona Department of Transportation, "Highway Drainage Design Manual, Hydrology," March 1993.

Bedient, Philip B. and Wayne C. Huber, *Hydrology and Floodplain Analysis*, Addison-Wesley Publishing Company, 1988.

Chow, Ven Te, Ph.D., *Open Channel Hydraulics*, McGraw-Hill Book Company, New York-Toronto-London, 1959.

Chow, Ven Te, Ph.D., Editor-in-Chief, *Handbook of Applied Hydrology*, McGraw-Hill Book Company, 1964.

Chow, Ven Te, David R. Maidment, and Larry W. Mays, *Applied Hydrology*, McGraw Hill Series in Water Resources and Environmental Engineering, McGraw Hill Publishing Company, 1988.

HDR Engineering, Inc. for Arizona Department of Transportation, *Gila Drain Alternative Concept Drainage Report*, February 1993.

HDR Engineering, Inc. for Arizona Department of Transportation, *Gila Drain Floodway Master Plan Report*, February 1993.

HDR Engineering, Inc. for Arizona Department of Transportation, *Alternative Study, Southeast Valley Regional Drainage System, Price and Santan Freeways*, June 1995.

U.S. Army Corps of Engineers, Hydrologic Engineering Center, *HEC-1 Flood Hydrograph Package User's Manual,* September 1990.

U.S. Army Corps of Engineers, Hydrologic Engineering Center, *HEC-2 Water Surface Profiles User's Manual,* September 1990.

U.S. Army Corps of Engineers, Hydrologic Engineering Center, *HEC-RAS River Analysis System User's Manual, Version 1.0,* July 1995.

APPENDIX

APPENDIX 1

Hydrologic Analysis Using the HEC-1 Computer Model

```
****************************************
*                                      *
*   FLOOD HYDROGRAPH PACKAGE  (HEC-1)  *
*             MAY   1991               *
*          VERSION 4.0.1E              *
*   Lahey F77L-EM/32 version 5.01      *
*      Dodson & Associates, Inc.       *
* RUN DATE  08/27/96  TIME  11:09:21   *
****************************************
```

```
****************************************
*                                      *
*    U.S. ARMY CORPS OF ENGINEERS      *
*    HYDROLOGIC ENGINEERING CENTER     *
*          609 SECOND STREET           *
*       DAVIS, CALIFORNIA 95616        *
*           (916) 551-1748             *
*                                      *
****************************************
```

```
X     X  XXXXXXX   XXXXX        X
X     X  X        X     X      XX
X     X  X        X            X
XXXXXXX  XXXX     X        XXXXX  X
X     X  X        X            X
X     X  X        X     X      X
X     X  XXXXXXX   XXXXX       XXX
```

THIS PROGRAM REPLACES ALL PREVIOUS VERSIONS OF HEC-1 KNOWN AS HEC1 (JAN 73), HEC1GS, HEC1DB, AND HEC1KW.

THE DEFINITIONS OF VARIABLES -RTIMP- AND -RTIOR- HAVE CHANGED FROM THOSE USED WITH THE 1973-STYLE INPUT STRUCTURE.
THE DEFINITION OF -AMSKK- ON RM-CARD WAS CHANGED WITH REVISIONS DATED 28 SEP 81. THIS IS THE FORTRAN77 VERSION
NEW OPTIONS: DAMBREAK OUTFLOW SUBMERGENCE , SINGLE EVENT DAMAGE CALCULATION, DSS:WRITE STAGE FREQUENCY,
DSS:READ TIME SERIES AT DESIRED CALCULATION INTERVAL LOSS RATE:GREEN AND AMPT INFILTRATION
KINEMATIC WAVE: NEW FINITE DIFFERENCE ALGORITHM

```
LINE          ID.......1.......2.......3.......4.......5.......6.......7.......8.......9......10

  1           ID        SANTAN/GILA DRAIN INTERIM STUDY  RN=ALT2c.DAT  SMF48TH.DAT(PRICE5) APPEN
  2           ID        GILA DRAIN FLOODWAY ROUTING GILA1B.DAT ALSO APPENDED
  3           ID        ************************************************************************
  4           ID        HDR MODEL ALT2C.DAT (ALTERNATIVE C) MODIFIED BY WOOD/PATEL 8/27/96:
  5           ID        Basin B depth consists of in-line upper basin and off-line lower basin.
  6           ID        Upper basin stores first 25 ac-ft of inflow into system.  Flow beyond
  7           ID        the first 25 ac-ft continues downstream in the outfall channel, up to
  8           ID        a maximum of 800 cfs.  All flows higher than 800 cfs after the first
  9           ID        25 ac-ft is stored spills into a second retention basin.
 10           ID
 11           ID        ALT2c includes downsized Basin 15 at 48th and SMF.
 12           ID        V=220 Af at 1164 and DHW 1166
 13           ID        Basin bottom at 1140  100' spillway at 1162
 14           ID        Basin converted to retention and interchange pump station used to
 15           ID        dewater.  Spillway peak discharge 859 cfs.  Channel to I-10W.
 16           ID        Alternate dewater 24" to 36" pipe to Gila Drain Floodway
 17           ID
 18           ID        Channel capacity for segment from I-10 cross. to Gila Drain Flwy 1000cfs
 19           ID        ************************************************************************
 20           ID
 21           ID
 22           ID        INITIAL ABSTRACTION USED TO REPRESENT DEVELOPMENT RETENTION PROVIDED
 23           ID        100 YEAR - 24 HOUR STORM  (PHOENIX DISTRIBUTION)
 24           ID        HDR - PHOENIX
 25           ID        FILENAME: ~~WPMODC10.DAT~~ WPSANTAN.DAT
 26           IT       5                    1000
 27           IO       5       0       0
 28           IN      12                     310
              *DIAGRAM

 29           KK    bash
 30           KM        OFFSITE INFLOW INTO BASIN H AT PRICE AND PECOS INTERCHANGE FROM E
 31           BA    6.76
 32           QI    0.00    0.00    0.00    0.00    0.00    0.00    0.00    0.00    0.00
 33           QI    0.00    0.00    0.00    0.00    0.00    0.00    0.00    0.00    0.00
 34           QI    0.00    0.00    0.00    0.00    0.00    0.00    0.00    0.00    0.00
 35           QI    0.00    0.00    0.00    0.00    0.00    0.00    0.00    0.00    0.00
 36           QI    0.00    0.00    0.00    0.00    0.00    0.00    0.01    0.04    0.10
 37           QI    0.39    0.64    0.98    1.43    2.00    2.72    3.65    4.88    6.57
 38           QI   17.35   40.17   84.15  157.71  255.02  413.77  498.78  738.94  766.73
 39           QI  651.16  578.19  513.98  461.77  419.16  385.17  357.03  332.76  310.86
 40           QI  273.04  257.39  243.47  230.94  219.41  208.60  198.28  188.77  180.16
 41           QI  266.57  267.73  269.41  275.07  284.98  292.73  296.44  298.71  300.62
 42           QI  305.48  308.84  312.78  317.34  322.46  327.76  332.81  337.94  343.13
 43           QI  352.29  356.32  360.03  363.42  366.42  368.99  371.12  372.80  374.07
 44           QI  375.45  375.48  374.63  372.22  368.09  362.92  357.28  351.35  345.22
 45           QI  333.55  328.09  322.75  317.35  311.81  306.05  300.07  293.86  287.41
 46           QI  273.87  266.79  259.39  251.92  244.89  238.17  231.52  225.00  218.58
 47           QI  206.10  200.05  194.15  188.41  182.85  177.47  172.30  167.36  162.81
 48           QI  156.68  155.31  154.12  152.82  151.49  150.11  148.70  147.25  145.78
 49           QI  142.82  141.38  139.94  138.43  136.93  135.42  133.94  132.46  131.00
 50           QI  128.13  126.72  125.34  123.98  122.65  121.34  120.07  118.96  118.33
 51           QI  118.07  118.01  117.94  117.88  117.82  117.76  117.70  117.64  117.57
 52           QI  117.44  117.38  117.32  117.25  117.19  117.12  117.05  116.99  116.92
 53           QI  116.79  116.72  116.65  116.58  116.51  116.44  116.37  116.30  116.23
```

```
LINE          ID.......1.......2.......3.......4.......5.......6.......7.......8.......9......10

  54          QI  117.44  117.38  117.32  117.25  117.19  117.12  117.05  116.99  116.92
  55          QI  116.79  116.72  116.65  116.58  116.51  116.44  116.37  116.30  116.23
  56          QI  116.09  116.02  115.95  115.88  115.81  115.74  115.67  115.60  115.53
  57          QI  115.38  115.31  115.24  115.17  115.09  114.99  114.83  114.61  114.38
  58          QI  113.91  113.68  113.45  113.22  112.99   57.77   57.54   57.32   57.09
  59          QI   56.65   56.43   56.21   55.99   55.77   55.56   55.34   55.12   54.91
  60          QI   54.49   54.28   54.07   53.86   53.65   53.44   53.24   53.03   52.83
  61          QI   52.43   52.23   52.03   51.83   51.63   51.43   51.24   51.04   50.85
  62          QI   50.45   50.24   50.02   49.79   49.55   49.31   49.06   48.80   48.54
  63          QI   48.00   47.72   47.44   47.16   46.88   46.59   46.30   46.01   45.73
              *
              *
  64          IN      12                      310

  65          KK  CHNDLR
  66          KM        Pumped outflow from Chandler Basins (Galveston, Arrowhead and Denv
  67          BA   0.001
  68          QI    0.00    0.00    0.00    0.00    0.00    0.00    0.00    0.00    0.00
  69          QI    0.00    0.00    0.00    0.00    0.00    0.00    0.00    0.00    0.00
  70          QI    0.00    0.00    0.00    0.00    0.00    0.00    0.00    0.00    0.00
  71          QI    0.00    0.00    0.00    0.00    0.00    0.00    0.00    0.00    0.00
  72          QI    0.00    0.00    0.00    0.00    0.00    0.00    0.00    0.00    0.00
  73          QI    0.00    0.00    0.00    0.00    0.00    0.00    0.00    0.00    0.00
  74          QI    0.00    0.00    0.00    0.00    0.00   100.0   100.0   100.0   100.0
  75          QI   100.0   100.0   100.0   100.0   100.0   100.0   100.0   100.0   100.
  76          QI   100.0   100.0   100.0   100.0   100.0   100.0   100.0   100.0   100.0
  77          QI   100.0   100.0   100.0   100.0   100.0   100.0   100.0   100.0   100.0
  78          QI   100.0   100.0   100.0   100.0   100.0   100.0   100.0   100.0   100.0
  79          QI   100.0   100.0   100.0   100.0   100.0   100.0   100.0   100.0   100.0
  80          QI   100.0   100.0   100.0   100.0   100.0   100.0   100.0   100.0   100.0
  81          QI   100.0   100.0   100.0   100.0   100.0   100.0   100.0   100.0   100.0
  82          QI   100.0   100.0   100.0   100.0   100.0   100.0   100.0   100.0   100.0
  83          QI   100.0   100.0   100.0   100.0   100.0   100.0   100.0   100.0   100.0
  84          QI   100.0   100.0   100.0   100.0   100.0   100.0   100.0   100.0   100.0
  85          QI   100.0   100.0   100.0   100.0   100.0   100.0   100.0   100.0   100.0
  86          QI   100.0   100.0   100.0   100.0   100.0   100.0   100.0   100.0   100.0
  87          QI   100.0   100.0   100.0   100.0   100.0   100.0   100.0   100.0   100.0
  88          QI   100.0   100.0   100.0   100.0   100.0   100.0   100.0   100.0   100.0
  89          QI   100.0   100.0   100.0   100.0   100.0   100.0   100.0   100.0   100.0
  90          QI   100.0   100.0   100.0   100.0   100.0   100.0   100.0   100.0   100.0
  91          QI   100.0   100.0   100.0   100.0   100.0   100.0   100.0   100.0   100.0
  92          QI   100.0   100.0   100.0   100.0   100.0    0.00    0.00    0.00    0.00
  93          QI    0.00    0.00    0.00    0.00    0.00    0.00    0.00    0.00    0.00
  94          QI    0.00    0.00    0.00    0.00    0.00    0.00    0.00    0.00    0.00
  95          QI    0.00    0.00    0.00    0.00    0.00    0.00    0.00    0.00    0.00
  96          QI    0.00    0.00    0.00    0.00    0.00    0.00    0.00    0.00    0.00
  97          QI    0.00    0.00    0.00    0.00    0.00    0.00    0.00    0.00    0.00
  98          QI    0.00    0.00    0.00    0.00    0.00    0.00    0.00    0.00    0.00
              *
```

```
LINE          ID.......1.......2.......3.......4.......5.......6.......7.......8.......9......10

 99           KK  cchand
100           KM        Combine flow from regional basins with offsite flows at old basin
101           HC       2
              *
102           IN       5                    300

103           KK  interchange inflow
104           KM        ONSITE DRAINAGE/STORAGE ANALYSIS -50 YEAR 24 HOUR STORM
105           KM        USE OUTFLOW HYDROGRAPH FROM THE PRICE/SANTAN INTERCHANGE
106           BA    0.16
107           QI    0.00    0.00    0.00    0.00    0.00    0.00    0.00    0.00    0.00
108           QI    0.00    0.00    0.00    0.00    0.00    0.00    0.00    0.00    0.00
109           QI    0.00    0.00    0.00    0.00    0.00    0.00    0.00    0.00    0.00
110           QI    0.00    0.00    0.00    0.00    0.00    0.00    0.00    0.00    0.00
111           QI    0.00    0.00    0.00    0.00    0.00    0.00    0.00    0.00    0.00
112           QI    0.00    0.00    0.00    0.00    0.00    0.00    0.00    0.00    0.00
113           QI    0.00    0.00    0.00    0.00    0.00    0.00    0.00    0.00    0.00
114           QI    0.00    0.00    0.00    0.00    0.00    0.00    0.00    0.00    0.00
115           QI    0.00    0.00    0.00    0.00    0.00    0.00    0.00    0.00    0.00
116           QI    0.00    0.00    0.00    0.00    0.00    0.00    0.00    0.00    0.00    0.
117           QI    0.00    0.00    0.00    0.00    0.00    0.00    0.00    0.00    0.00    0.
118           QI    0.00    0.00    0.00    0.00    0.00    0.00    0.00    0.00    0.00    0.
119           QI    0.00    0.00    0.00    0.00    0.00    0.00    0.00    0.00    0.00    0.
120           QI    0.00    0.00    0.00    0.00    0.00    0.00   40.00   40.00   40.00    0.
121           QI    0.00    0.00    0.00   40.00  120.00  120.00  200.00  200.00  200.00  200.
122           QI  200.00  200.00  200.00  200.00  200.00  200.00    0.00    0.00    0.00    0.
123           QI    0.00    0.00   40.00   40.00   40.00    0.00    0.00    0.00    0.00    0.
124           QI    0.00    0.00    0.00    0.00   40.00   40.00   40.00    0.00    0.00    0.
125           QI    0.00    0.00    0.00    0.00    0.00    0.00    0.00    0.00    0.00    0.
126           QI   40.00   40.00    0.00    0.00    0.00    0.00    0.00    0.00    0.00    0.
127           QI    0.00    0.00    0.00    0.00    0.00    0.00    0.00    0.00    0.00    0.
128           QI    0.00   40.00   40.00    0.00    0.00    0.00    0.00    0.00    0.00    0.
129           QI    0.00    0.00    0.00    0.00    0.00    0.00    0.00    0.00    0.00    0.
130           QI    0.00    0.00    0.00    0.00    0.00    0.00    0.00    0.00    0.00    0.
131           QI    0.00    0.00    0.00    0.00    0.00    0.00    0.00    0.00    0.00    0.
132           QI    0.00    0.00    0.00    0.00    0.00    0.00    0.00    0.00    0.00    0.
133           QI    0.00    0.00    0.00    0.00    0.00    0.00    0.00    0.00    0.00    0.
134           QI    0.00    0.00    0.00    0.00    0.00    0.00    0.00    0.00    0.00    0.
135           QI    0.00    0.00    0.00   40.00   40.00    0.00    0.00    0.00    0.00    0.
136           QI    0.00    0.00    0.00    0.00    0.00    0.00    0.00    0.00    0.00    0.
              *

137           KK   addTI
138           KM        Combine onsite p.s. outflow to offsite runoff from east
139           HC       2
140           IN      12                    310

141           KK    basg
142           KM        INFLOW INTO PRICE BASIN G FROM EAST
143           BA    4.37
144           QI    0.00    0.00    0.00    0.00    0.00    0.00    0.00    0.00    0.00    0.
145           QI    0.00    0.00    0.00    0.00    0.00    0.00    0.00    0.00    0.00    0.
146           QI    0.00    0.00    0.00    0.00    0.00    0.00    0.00    0.00    0.00    0.
147           QI    0.00    0.00    0.00    0.00    0.00    0.00    0.00    0.00    0.00    0.
```

```
LINE          ID.......1.......2.......3.......4.......5.......6.......7.......8.......9......10

 148          QI    0.00    0.00    0.00    0.00    0.00    0.00    0.00    0.00    0.00     0.
 149          QI    0.00    0.00    0.00    0.00    0.00    0.00    0.01    0.04    0.17     0.
 150          QI    4.27   23.63   65.05  129.91  189.65  223.82  228.38  209.70  175.27   397.
 151          QI  954.28  905.32  843.40  750.42  650.70  561.76  486.59  424.50  372.86   329.
 152          QI  293.55  262.86  236.31  213.14  192.75  174.77  159.23  145.96  134.73   125.
 153          QI  116.85  109.70  103.63   98.58   94.39   90.95   88.07   85.64   83.62    82.
 154          QI   80.98   80.17   79.47   78.77   78.01   77.18   76.25   75.24   74.12    72.
 155          QI   71.75   70.55   69.36   68.18   67.03   65.90   64.80   63.73   62.69    61.
 156          QI   60.70   59.62   58.31   56.55   54.32   51.67   48.71   45.61   42.47    39.
 157          QI   35.68   32.14   28.66   25.32   22.21   19.38   16.87   14.65   12.72    11.
 158          QI    9.58    8.32    7.25    6.33    5.55    4.90    4.32    3.81    3.37     2.
 159          QI    2.60    2.32    2.07    1.85    1.66    1.48    1.33    1.20    1.08     0.
 160          QI    0.88    0.80    0.72    0.65    0.59    0.54    0.49    0.45    0.41     0.
 161          QI    0.34    0.31    0.28    0.26    0.24    0.22    0.20    0.19    0.17     0.
 162          QI    0.14    0.13    0.12    0.11    0.11    0.10    0.09    0.08    0.08     0.
 163          QI    0.07    0.06    0.06    0.05    0.05    0.05    0.04    0.04    0.04     0.
 164          QI    0.03    0.03    0.03    0.03    0.02    0.02    0.02    0.02    0.02     0.
 165          QI    0.02    0.02    0.01    0.01    0.01    0.01    0.01    0.01    0.01     0.
 166          QI    0.01    0.01    0.01    0.01    0.01    0.01    0.01    0.01    0.01     0.
 167          QI    0.01    0.01    0.01    0.00    0.00    0.00    0.00    0.00    0.00     0.
 168          QI    0.00    0.00    0.00    0.00    0.00    0.00    0.00    0.00    0.00     0.
 169          QI    0.00    0.00    0.00    0.00    0.00    0.00    0.00    0.00    0.00     0.
 170          QI    0.00    0.00    0.00    0.00    0.00    0.00    0.00    0.00    0.00     0.
 171          QI    0.00    0.00    0.00    0.00    0.00    0.00    0.00    0.00    0.00     0.
 172          QI    0.00    0.00    0.00    0.00    0.00    0.00    0.00    0.00    0.00     0.
 173          QI    0.00    0.00    0.00    0.00    0.00    0.00    0.00    0.00    0.00     0.
 174          QI    0.00    0.00    0.00    0.00    0.00    0.00    0.00    0.00    0.00     0.
              *

 175          KK   rbasg
 176          KM        ROUTE OFFSITE FLOW INTO FROM EAST OF REGIONAL BASIN G
 177          KM        72 INCH GRAVITY LINE OUTFLOW TO Price/Pecos TI down WFR
 178          RS       1    ELEV     0.0
 179          SV     0.0    19.1    75.2    98.2   161.2
 180          SE    1174    1176    1179    1180    1183
 181          SQ     0.0      45     155     180     245
              *
              *

 182          KK  rtbasg  90-inch to 96-inch basin G drain
 183          RK    6301  .00060    .012            circ     7.5
              *

 184          KK  cinterchange
 185          KM        COMBINE ONSITE and offsite FLOWS TO TI and from Basin G.
 186          KM        Combined discharge to outfall to Santan collector channel to west.
 187          HC       2

 188          KK  MCSWL2
 189          KM        CHANDLER - AGRICULTURAL (PART SECTION 36)
 190          KM        COMPUTE RUNOFF HYDROGRAPH FOR AGRICULTURAL AREA
 191          PH       1   18.38    0.71    1.39    2.44    2.66    2.81    3.11    3.33    3.70
 192          BA  0.1550
 193          LS     1.5      83
 194          UD    0.88
```

```
LINE          ID.......1.......2.......3.......4.......5.......6.......7.......8.......9......10

 195          KK   cbash
 196          KM        COMBINE BASIN H OUTFLOW WITH LOCAL DRAINAGE AREA
 197          HC       2

 198          KK     RT1
 199          KM        ROUTE MCSWL2 HYDROGRAPH TO MCSWL3 CONFLUENCE
 200          RK    1600  .00200   0.016            TRAP     0.0    25.0

 201          KK  MCSWL3
 202          KM        CHANDLER - AGRICULTURAL  (PART SECTION 36)
 203          KM        COMPUTE RUNOFF HYDROGRAPH FOR AGRICULTURAL AREA
 204          BA  0.1700
 205          LS     1.5      83
 206          UD    0.91

 207          KK   COMB1
 208          KM        COMBINE MCSWL3 - AT HALF-MILE POINT OF SECTION 36
 209          KM        THIS COMBINE FOR INFO. ONLY, SHOULD BE XX CFS AT THIS POINT
 210          HC       2

 211          KK  SECT25
 212          KM       CHANDLER
 213          KM       COMPUTE RUNOFF FOR SECTION 25
 214          PH       1   18.38    0.71    1.39    2.44    2.66    2.81    3.11    3.33    3.70
 215          BA    1.00
 216          LS    1.81      84
 217          UD    0.91

 218          KK     RT1
 219          KM       ROUTE SECTION 25 HYDROGRAPH TO OUTLET-A(OLD) - SW CORNER SECT. 36
 220          RK    4400  0.0011   0.016            TRAP     0.0    25.0

 221          KK  SECT36
 222          KM       CHANDLER
 223          KM       COMPUTE RUNOFF HYDROGRAPH FOR remainder of SECTION 36
 224          KM       This area reduced 0.32 to account for areas MCSLW2 and MCSLW3, areas
 225          KM       calculated separately in original analysis - now included in flow logic.
 226          BA    0.51
 227          LS    1.95      84
 228          UD    0.94

 229          KK  SECT36
 230          KM       COMBINE RT1 - SECT36 HYDROGRAPHS TO GIVE HYDROGRAPH AT SW COR SECT. 36
 231          HC       3
 232          IN       5                     300

 233          KK  mcclintock
 234          KM        ONSITE DRAINAGE/STORAGE ANALYSIS 50 YEAR 24 HOUR STORM
 235          KM        USE PUMP STATION 'OUTFLOW' HYDROGRAPH FROM MCCLIN4.DAT ONSITE FILE
 236          KM        PUMP STATION DESIGN Q IS 200 CFS.
 237          BA    0.11
 238          QI    0.00    0.00    0.00    0.00    0.00    0.00    0.00    0.00    0.00    0.00
 239          QI    0.00    0.00    0.00    0.00    0.00    0.00    0.00    0.00    0.00    0.00
 240          QI    0.00    0.00    0.00    0.00    0.00    0.00    0.00    0.00    0.00    0.00
```

```
LINE          ID.......1.......2.......3.......4.......5.......6.......7.......8.......9......10

 241          QI    0.00    0.00    0.00    0.00    0.00    0.00    0.00    0.00    0.00    0.00
 242          QI    0.00    0.00    0.00    0.00    0.00    0.00    0.00    0.00    0.00    0.00
 243          QI    0.00    0.00    0.00    0.00    0.00    0.00    0.00    0.00    0.00    0.00
 244          QI    0.00    0.00    0.00    0.00    0.00    0.00    0.00    0.00    0.00    0.00
 245          QI    0.00    0.00    0.00    0.00    0.00    0.00    0.00    0.00    0.00    0.00
 246          QI    0.00    0.00    0.00    0.00    0.00    0.00    0.00    0.00    0.00    0.00
 247          QI    0.00    0.00    0.00    0.00    0.00    0.00    0.00    0.00    0.00    0.00
 248          QI    0.00    0.00    0.00    0.00    0.00    0.00    0.00    0.00    0.00    0.00
 249          QI    0.00    0.00    0.00    0.00    0.00    0.00    0.00    0.00    0.00    0.00
 250          QI    0.00    0.00    0.00    0.00    0.00    0.00   40.00    0.00    0.00    0.00
 251          QI    0.00    0.00    0.00    0.00   40.00    0.00    0.00    0.00    0.00    0.00
 252          QI   40.00   40.00    0.00  120.00    0.00  200.00  200.00  200.00  200.00  200.00
 253          QI  200.00  200.00    0.00    0.00  120.00    0.00    0.00    0.00   40.00    0.00
 254          QI    0.00    0.00   40.00    0.00    0.00    0.00    0.00   40.00    0.00    0.00
 255          QI    0.00    0.00   40.00    0.00    0.00    0.00    0.00    0.00    0.00   40.00
 256          QI    0.00    0.00    0.00    0.00    0.00   40.00    0.00    0.00    0.00    0.00
 257          QI    0.00    0.00    0.00   40.00    0.00    0.00    0.00    0.00    0.00    0.00
 258          QI    0.00    0.00   40.00    0.00    0.00    0.00    0.00    0.00    0.00    0.00
 259          QI    0.00    0.00   40.00    0.00    0.00    0.00    0.00    0.00    0.00    0.00
 260          QI    0.00    0.00    0.00    0.00    0.00    0.00    0.00    0.00    0.00    0.00
 261          QI   40.00    0.00    0.00    0.00    0.00    0.00    0.00    0.00    0.00    0.00
 262          QI    0.00    0.00    0.00    0.00    0.00    0.00    0.00    0.00    0.00    0.00
 263          QI    0.00    0.00    0.00    0.00    0.00    0.00    0.00    0.00    0.00    0.00
 264          QI    0.00    0.00    0.00    0.00    0.00    0.00    0.00    0.00   40.00    0.00
 265          QI    0.00    0.00    0.00    0.00    0.00    0.00    0.00    0.00    0.00    0.00
 266          QI    0.00    0.00    0.00    0.00    0.00    0.00    0.00    0.00    0.00    0.00
 267          QI    0.00    0.00    0.00    0.00    0.00    0.00    0.00    0.00    0.00    0.00

 268          KK   cmcln
 269          HC       2

 270          KK  RT2536
 271          KM       ROUTE TO MID-SECTION POINT OF SECT. 35
 272          RK    2600    .008    .016            TRAP     9.5       2

 273          KK  RUSWL1
 274          KM        CHANDLER - COMMERCIAL (PART SECTION 35)
 275          KM        COMPUTE RUNOFF HYDROGRAPH FOR COMMERCIAL AREA
 276          BA  0.2145
 277          LS     3.0      92
 278          UD    0.45

 279          KK     RT1
 280          KM        ROUTE RUSWL1 HYDROGRAPH TO RUSWL3 CONFLUENCE
 281          RK    1200  .00330   0.016            TRAP     0.0    25.0

 282          KK  RUSWL2
 283          KM        CHANDLER - RESIDENTIAL - 0.16 (OLD) PART SECTION 35
 284          KM        COMPUTE RUNOFF HYDROGRAPH FOR RESIDENTIAL AREA
 285          BA  0.0933
 286          LS     2.9      84
 287          UD    0.51
```

```
LINE          ID.......1.......2.......3.......4.......5.......6.......7.......8.......9......10

 288          KK     RT2
 289          KM        ROUTE RUSWL2 HYDROGRAPH TO RUSWL3 CONFLUENCE
 290          RK    1800  .00330   0.016            TRAP     0.0    25.0

 291          KK  RUSWL3
 292          KM        CHANDLER - AGRICULTURAL  (PART SECTION 35)
 293          KM        COMPUTE RUNOFF HYDROGRAPH FOR AGRICULTURAL AREA
 294          BA  0.0990
 295          LS     1.5      83
 296          UD    0.57

 297          KK   COMB1
 298          HC       4

 299          KK     RT3
 300          KM        ROUTE COMB1 HYDROGRAPH TO SW COR. SECT. 35 (PLUS 1000 FT. WEST)
 301          RK    3600  .00800   0.016            TRAP     9.5     2.0

 302          KK  RUSWL4
 303          KM        CHANDLER - RESIDENTIAL - 0.16 (PART SECTION 34 AND 35)
 304          KM        COMPUTE RUNOFF HYDROGRAPH FOR RESIDENTIAL AREA
 305          BA   .1638
 306          LS    2.90      84
 307          UD    0.48

 308          KK  RUSWL5
 309          KM        CHANDLER - OPEN FIELD  (PART SECTION 34 AND 35)
 310          KM        COMPUTE RUNOFF HYDROGRAPH FOR OPEN FIELD
 311          BA  0.0890
 312          LS    1.00      83
 313          UD    0.39

 314          KK     RT4
 315          KM        ROUTE RUSWL5 HYDROGRAPH TO OUTLET
 316          RK    1000  .00330   0.016            TRAP     0.0    25.0

 317          KK  RUSWL6
 318          KM        CHANDLER - RESIDENTIAL - 0.16  (PART SECTION 34 AND 35)
 319          KM        COMPUTE RUNOFF HYDROGRAPH FOR RESIDENTIAL AREA
 320          BA  0.1464
 321          LS     2.9      84
 322          UD    0.34

 323          KK   COMB2
 324          HC       3

 325          KK     RT5
 326          KM        ROUTE COMB2 HYDROGRAPH TO OUTLET
 327          RK    1400  .00330   0.016            TRAP     0.0    25.0
```

```
LINE          ID.......1.......2.......3.......4.......5.......6.......7.......8.......9......10

 328          KK  RUSWL7
 329          KM        CHANDLER - RESIDENTIAL - 0.16  (PART SECTION 34 AND 35)
 330          KM        COMPUTE RUNOFF HYDROGRAPH FOR RESIDENTIAL AREA
 331          BA   .1281
 332          LS    2.90      84
 333          UD    0.34

 334          KK  RUSWL8
 335          KM        CHANDLER - PARK/SCHOOL (PART SECTION 34 AND 35)
 336          KM        COMPUTE RUNOFF HYDROGRAPH FOR PARK/SCHOOL
 337          BA  0.0628
 338          LS       0      64
 339          UD    0.22

 340          KK  RUSWL9
 341          KM        CHANDLER - AGRICULTURAL  (PART SECTION 34 AND 35)
 342          KM        COMPUTE RUNOFF HYDROGRAPH FOR AGRICULTURAL AREA
 343          BA  0.0961
 344          LS     1.5      83
 345          UD    0.23

 346          KK    SW34
 347          HC       5

 348          KK    RT35
 349          KM        ROUTE TO BOTTOM OF SECTION 34
 350          RK    4000   .0013    .016            TRAP      10     2.0

 351          KK   SECT9
 352          KM       TEMPE (TO OLD OUTLET B)
 353          KM       COMPUTE RUNOFF FOR SECTION 9
 354          BA    0.33
 355          LS    1.94      83
 356          UD    0.44

 357          KK  SECT10   OUTLET 3
 358          KM       TEMPE
 359          KM       COMPUTE RUNOFF HYDROGRAPH FOR SECTION 10 - OUTLET 3
 360          BA    0.03
 361          LS    1.50      83
 362          UD    0.92

 363          KK  SECT10   OUTLET 2
 364          KM       TEMPE
 365          KM       COMPUTE RUNOFF HYDROGRAPH FOR SECTION 10 - OUTLET 2
 366          BA    0.19
 367          LS    2.25      88
 368          UD    0.53
```

```
LINE          ID.......1.......2.......3.......4.......5.......6.......7.......8.......9......10

 369          KK     RT1
 370          KM       ROUTE SECTION 10 OUTLET 2 HYDROGRAPH TO KYRENE/ELLIOT INTERSECTION
 371          RK    2100  0.0010   0.016            TRAP     0.0    25.0

 372          KK   COMB1
 373          KM       COMBINE SECT9 * SECT10-3 * RT1 TO GIVE HYDROGRAPH AT KYRENE/ELLIOT
 374          HC       3

 375          KK     RT2
 376          KM       ROUTE COMB1 HYDROGRAPH TO KYRENE/WARNER INTERSECTION
 377          RK    5280  0.0004   0.016            TRAP     0.0    25.0

 378          KK  SECT16   OUTLET 1
 379          KM       TEMPE
 380          KM       COMPUTE RUNOFF HYDROGRAPH FOR SECTION 16 - OUTLET 1
 381          BA    0.14
 382          LS    1.54      83
 383          UD    0.41

 384          KK  SECT15   OUTLET 2
 385          KM       TEMPE
 386          KM       COMPUTE RUNOFF HYDROGRAPH FOR SECTION 15 - OUTLET 2
 387          BA    0.31
 388          LS    1.45      83
 389          UD    0.98

 390          KK   COMB2
 391          KM       COMBINE RT2 * SECT16-1 * SECT15-2 TO GIVE HYDROGRAPH AT KYRENE/WARNER
 392          HC       3

 393          KK     RT3
 394          KM       ROUTE COMB2 HYDROGRAPH TO KYRENE/RAY INTERSECTION
 395          RK    5280  0.0020   0.016            TRAP     0.0    25.0

 396          KK  SECT21   OUTLET 1
 397          KM       TEMPE
 398          KM       COMPUTE RUNOFF HYDROGRAPH FOR SECTION 21 - OUTLET 1
 399          BA    0.42
 400          LS    1.41      83
 401          UD    0.61

 402          KK  SECT22   OUTLET 1
 403          KM       TEMPE
 404          KM       COMPUTE RUNOFF HYDROGRAPH FOR SECTION 22 - OUTLET 1
 405          BA    0.82
 406          LS    2.26      83
 407          UD    0.38

 408          KK   COMB3
 409          KM       COMBINE RT3 * SECT21-1 * SECT22-1 TO GIVE HYDROGRAPH AT KYRENE/RAY
 410          HC       3
```

```
LINE          ID.......1.......2.......3.......4.......5.......6.......7.......8.......9......10

 411          KK     RT4
 412          KM       ROUTE COMB3 HYDROGRAPH TO KYRENE/CHANDLER INTERSECTION
 413          RK    5280  0.0019   0.016            TRAP     0.0    25.0

 414          KK  SECT12
 415          KM       TEMPE
 416          KM       COMPUTE RUNOFF HYDROGRAPH FOR SECTION 12
 417          BA    0.50
 418          LS    3.00      83
 419          UD    0.58

 420          KK     RT5
 421          KM       ROUTE SECT12 HYDROGRAPH TO SECT11 CONFLUENCE
 422          RK    2600  0.0006   0.016            TRAP     0.0    25.0

 423          KK  SECT11
 424          KM       TEMPE
 425          KM       COMPUTE RUNOFF HYDROGRAPH FOR SECTION 11
 426          BA    0.51
 427          LS    2.41      86
 428          UD    0.71

 429          KK   COMB4
 430          KM       COMBINE SECT12 * SECT11 HYDROGRAPHS
 431          HC       2

 432          KK     RT6
 433          KM       ROUTE COMB4 HYDROGRAPH TO RURAL/ELLIOT INTERSECTION
 434          RK    2600  0.0006   0.016            TRAP     0.0    25.0

 435          KK  SECT10   OUTLET 1
 436          KM       TEMPE
 437          KM       COMPUTE RUNOFF HYDROGRAPH FOR SECTION 10 - OUTLET 1
 438          BA    0.50
 439          LS    2.41      84
 440          UD    0.36

 441          KK   COMB5
 442          KM       COMBINE SECT10-1 * RT6 HYDROGRAPHS
 443          HC       2

 444          KK     RT7
 445          KM       ROUTE COMB5 HYDROGRAPH TO RURAL/WARNER INTERSECTION
 446          RK    5280  0.0006   0.016            TRAP     0.0    25.0

 447          KK  SECT13
 448          KM       TEMPE
 449          KM       COMPUTE RUNOFF HYDROGRAPH FOR SECTION 13
 450          BA    1.00
 451          LS    2.72      88
 452          UD    0.32
```

```
LINE          ID.......1.......2.......3.......4.......5.......6.......7.......8.......9......10

  453         KK     RT8
  454         KM       ROUTE SECT13 HYDROGRAPH TO RURAL/WARNER INTERSECTION
  455         RK    5280  0.0009   0.016            TRAP     0.0    25.0

  456         KK  SECT14
  457         KM       TEMPE
  458         KM       COMPUTE RUNOFF HYDROGRAPH FOR SECTION 14
  459         BA    1.00
  460         LS    2.83    75.7
  461         UD    0.75

  462         KK  SECT15   OUTLET 1
  463         KM       TEMPE
  464         KM       COMPUTE RUNOFF HYDROGRAPH FOR SECTION 15 - OUTLET 1
  465         BA    0.69
  466         LS    2.18      81
  467         UD    0.82

  468         KK   COMB6
  469         KM       COMBINE RT7 * RT8 * SECT14 * SECT15-1 TO GIVE HYDROGRAPH AT
  470         KM       RURAL/CHANDLER INTERSECTION
  471         HC       4

  472         KK     RT9
  473         KM       ROUTE COMB6 HYDROGRAPH TO RURAL/CHANDLER INTERSECTION
  474         RK    5280  0.0006   0.016            TRAP     0.0    25.0

  475         KK  SECT24
  476         KM       TEMPE
  477         KM       COMPUTE RUNOFF HYDROGRAPH FOR SECTION 24
  478         BA    1.00
  479         LS    2.77      83
  480         UD    0.60

  481         KK    RT10
  482         KM       ROUTE SECT24 HYDROGRAPH TO SECT23 CONFLUENCE
  483         RK    5280  0.0011   0.016            TRAP     0.0    25.0

  484         KK  SECT23
  485         KM       TEMPE
  486         KM       COMPUTE RUNOFF HYDROGRAPH FOR SECTION 23
  487         BA    1.00
  488         LS    2.97      83
  489         UD    0.78

  490         KK  SECT22   OUTLET 2
  491         KM       TEMPE
  492         KM       COMPUTE RUNOFF HYDROGRAPH FOR SECTION 22 - OUTLET 2
  493         BA    0.13
  494         LS    1.45      83
  495         UD    0.33
```

```
LINE          ID.......1.......2.......3.......4.......5.......6.......7.......8.......9......10

 496          KK   COMB7
 497          KM       COMBINE RT9 * RT10 * SECT22-2 * SECT23 TO GIVE HYDROGRAPH AT
 498          KM       RURAL/RAY INTERSECTION
 499          HC       4

 500          KK    RT11
 501          KM       ROUTE COMB7 HYDROGRAPH TO RURAL/CHANDLER INTERSECTION
 502          RK    5280  0.0009   0.016            TRAP     0.0    25.0

 503          KK  SECT26
 504          KM       CHANDLER
 505          KM       COMPUTE RUNOFF HYDROGRAPH FOR SECTION 26
 506          BA    1.00
 507          LS    1.82      85
 508          UD    0.96

 509          KK   COMB8
 510          KM       COMBINE RT11 * SECT26
 511          HC       2

 512          KK    RT12
 513          KM       ROUTE COMB8 HYDROGRAPH TO KYRENE/CHANDLER INTERSECTION
 514          RK    5280  0.0009   0.016            TRAP     0.0    25.0

 515          KK  SECT28   OUTLET 1
 516          KM       CHANDLER
 517          KM       COMPUTE RUNOFF HYDROGRAPH FOR SECTION 28 - OUTLET 1
 518          BA    0.69
 519          LS    2.51      85
 520          UD    0.35

 521          KK  SECT27
 522          KM       CHANDLER
 523          KM       COMPUTE RUNOFF HYDROGRAPH FOR SECTION 27
 524          BA    1.00
 525          LS    2.18      88
 526          UD    1.38

 527          KK   COMB9
 528          KM       COMBINE SECT27 * RT13 * RT12 * RT4 TO GIVE HYDROGRAPH AT
 529          KM       KYRENE/CHANDLER INTERSECTION
 530          HC       4

 531          KK    RT13
 532          KM       ROUTE COMB9 HYDROGRAPH TO KYRENE/SOUTHWEST LOOP INTERSECTION
 533          RK    4000  0.0006   0.016            TRAP     0.0    25.0

 534          KK  SECT34
 535          KM       CHANDLER
 536          KM       COMPUTE RUNOFF HYDROGRAPH FOR SECTION 34
 537          BA    0.67
 538          LS    2.04      83
 539          UD    1.05
```

```
LINE          ID.......1.......2.......3.......4.......5.......6.......7.......8.......9......10

540           KK   COMBB
541           KM        COMBINE HYDROGRAPHS AT SW CORNER SECTION 34 (INCL. 35,36,25)
542           HC       3

543           KK  SECT33   OUTLET 2
544           KM       CHANDLER
545           KM       COMPUTE RUNOFF HYDROGRAPH FOR SECTION 33 - OUTLET 2
546           BA    0.26
547           LS    1.53      86
548           UD    0.54
549           IN       5                    300

550           KK  kyrene
551           KM        ONSITE DRAINAGE/STORAGE ANALYSIS 50 YEAR 24 HOUR STORM
552           KM        USE PUMP STATION 'INFLOW' HYDROGRAPH FROM KYRENE2.DAT ONSITE FILE
553           KM        PUMP STATION DESIGN Q IS 200 CFS.
554           BA    0.11
555           QI    0.00    0.00    0.00    0.00    0.00    0.00    0.00    0.00    0.00    0.00
556           QI    0.00    0.00    0.00    0.00    0.00    0.00    0.00    0.00    0.00    0.00
557           QI    0.00    0.00    0.00    0.00    0.00    0.00    0.00    0.00    0.00    0.00
558           QI    0.00    0.00    0.00    0.00    0.00    0.00    0.00    0.00    0.00    0.00
559           QI    0.00    0.00    0.00    0.00    0.00    0.00    0.00    0.00    0.00    0.00
560           QI    0.00    0.00    0.00    0.00    0.00    0.00    0.00    0.00    0.00    0.00
561           QI    0.00    0.00    0.00    0.00    0.00    0.00    0.00    0.00    0.00    0.00
562           QI    0.00    0.00    0.00    0.00    0.00    0.00    0.00    0.00    0.00    0.00
563           QI    0.00    0.00    0.00    0.00    0.00    0.00    0.00    0.00    0.00    0.00
564           QI    0.00    0.00    0.00    0.00    0.00    0.00    0.00    0.00    0.00    0.00
565           QI    0.00    0.00    0.00    0.00    0.00    0.00    0.00    0.00    0.00    0.00
566           QI    0.00    0.00    0.00    0.00    0.00    0.00    0.00     1.0     1.0     1.0
567           QI    1.00    1.00    1.00    1.00    1.00    1.00    2.00    2.00    2.00    2.00
568           QI    2.00    3.00    3.00    3.00    4.00    4.00    4.00    5.00    5.00    6.00
569           QI    9.00   14.00   22.00   34.00   54.00   94.00  159.00  209.00  216.00  188.00
570           QI  150.00  116.00   88.00   65.00   47.00   35.00   26.00   20.00   17.00   14.00
571           QI   12.00   11.00   11.00   10.00    9.00    9.00    8.00    8.00    8.00    7.00
572           QI    7.00    7.00    6.00    6.00    6.00    6.00    6.00    5.00    5.00    5.00
573           QI    5.00    5.00    5.00    5.00    4.00    4.00    4.00    4.00    4.00    4.00
574           QI    3.00    3.00    3.00    3.00    3.00    3.00    3.00    3.00    3.00    3.00
575           QI    3.00    3.00    3.00    3.00    3.00    3.00    3.00    3.00    3.00    2.00
576           QI    2.00    2.00    2.00    2.00    2.00    2.00    2.00    2.00    2.00    2.00
577           QI    2.00    1.00    1.00    1.00    1.00    1.00    1.00    1.00    1.00    1.00
578           QI    1.00    1.00    1.00    1.00    1.00    1.00    1.00    1.00    1.00    1.00
579           QI    1.00    1.00    1.00    1.00    1.00    1.00    1.00    1.00    1.00    1.00
580           QI    1.00    1.00    1.00    1.00    1.00    1.00    1.00    1.00    1.00    1.00
581           QI    1.00    1.00    1.00    1.00    1.00    1.00    1.00    1.00    0.00    0.00
582           QI    0.00    0.00    0.00    0.00    0.00    0.00    0.00    0.00    0.00    0.00
583           QI    0.00    0.00    0.00    0.00    0.00    0.00    0.00    0.00    0.00    0.00
584           QI    0.00    0.00    0.00    0.00    0.00    0.00    0.00    0.00    0.00    0.00

585           KK   ckyre
586           HC       2
```

```
LINE          ID.......1.......2.......3.......4.......5.......6.......7.......8.......9......10

 587          KK   COMBB
 588          KM        COMBINE HYDROGRAPHS AT BASIN B FROM AREAS TO THE EAST
 589          HC       2

 590          KK  SECT16   OUTLET 3
 591          KM       TEMPE
 592          KM       COMPUTE RUNOFF HYDROGRAPH FOR SECTION 16 - OUTLET 3
 593          BA    0.23
 594          LS    3.00      88
 595          UD    0.39

 596          KK     RT1
 597          KM       ROUTE SECTION 16 OUTLET 3 HYDROGRAPH TO 56TH/RAY INTERSECTION
 598          RK    5280  0.0010   0.016            TRAP     0.0    25.0

 599          KK  SECT20
 600          KM       TEMPE
 601          KM       COMPUTE RUNOFF HYDROGRAPH FOR SECTION 20
 602          BA    0.29
 603          LS    1.10      83
 604          UD    0.28

 605          KK   COMB1
 606          KM       COMBINE SECT10 * RT1 TO GIVE HYDROGRAPH AT 56TH/RAY INTERSECTION
 607          HC       2

 608          KK     RT2
 609          KM       ROUTE COMB1 HYDROGRAPH TO 56TH/CHANDLER INTERSECTION
 610          RK    5280  0.0010   0.016            TRAP     0.0    25.0

 611          KK  SECT29
 612          KM       CHANDLER
 613          KM       COMPUTE RUNOFF HYDROGRAPH FOR SECTION 29
 614          BA    0.50
 615          LS    2.12      85
 616          UD    0.62

 617          KK   COMB2
 618          KM       COMBINE SECT29 * RT2 TO GIVE HYDROGRAPH AT 56TH/CHANDLER INTERSECTION
 619          HC       2

 620          KK     RT3
 621          KM       ROUTE COMB2 HYDROGRAPH TO OUTLET-C AT 56TH/SOUTHWEST LOOP INTERSECTION
 622          RK    3600  0.0010   0.016            TRAP     0.0    25.0

 623          KK  SECT16   OUTLET 2
 624          KM       TEMPE
 625          KM       COMPUTE RUNOFF HYDROGRAPH FOR SECTION 16 - OUTLET 2
 626          BA    0.50
 627          LS    1.52      83
 628          UD    0.54
```

```
LINE          ID.......1.......2.......3.......4.......5.......6.......7.......8.......9......10

 629          KK     RT4
 630          KM       ROUTE SECT16 - OUTLET 2 HYDROGRAPH TO RAY/SO.PAC RR INTERSECTION
 631          RK    5400  0.0010   0.016            TRAP     0.0    25.0

 632          KK  SECT21   OUTLET 2
 633          KM       TEMPE
 634          KM       COMPUTE RUNOFF HYDROGRAPH FOR SECTION 21 - OUTLET 2
 635          BA    0.59
 636          LS    1.60      83
 637          UD    0.60

 638          KK   COMB3
 639          KM       COMBINE SECT21-2 * RT4 * HYDROGRAPHS AT RAY/SO.PAC. RR INTERSECTION
 640          HC       2

 641          KK     RT5
 642          KM       ROUTE COMB3 HYDROGRAPH TO CHANDLER/SO.PAC. RR INTERSECTION
 643          RK    5500  0.0010   0.016            TRAP     0.0    25.0

 644          KK  SECT28   OUTLET 2
 645          KM       CHANDLER
 646          KM       COMPUTE RUNOFF HYDROGRAPH FOR SECTION 28 - OUTLET 2
 647          BA    0.30
 648          LS    1.97      85
 649          UD    0.58

 650          KK   COMB4
 651          KM       COMBINE SECT28-2 * RT5 HYDROGRAPHS AT CHANDLER/SO.PAC. RR INTERSECTION
 652          HC       2

 653          KK     RT6
 654          KM       ROUTE COMB4 HYDROGRAPH TO SOUTHWEST LOOP/SO.PAC. RR INTERSECTION
 655          RK    3700  0.0010   0.016            TRAP     0.0    25.0

 656          KK  SECT32
 657          KM       CHANDLER
 658          KM       COMPUTE RUNOFF HYDROGRAPH FOR SECTION 32
 659          BA    0.33
 660          LS    1.50      83
 661          UD    0.60

 662          KK  OUTLTC
 663          KM       COMBINE RT6 * SECT32 * RT3 TO GIVE HYDOGRAPH AT OUTLET-C AT
 664          KM       SOUTHWEST LOOP/SO.PAC. RR INTERSECTION
 665          HC       3

 666          KK  SECT33   OUTLET 1
 667          KM       CHANDLER
 668          KM       COMPUTE RUNOFF HYDROGRAPH FOR SECTION 33 - OUTLET 1
 669          BA    0.53
 670          LS    2.22      82
 671          UD    0.18
```

```
LINE          ID.......1.......2.......3.......4.......5.......6.......7.......8.......9......10

 672          KK  BASINB
 673          KM       COMBINE SECT33-1 AND OLD OUTLET C AREA
 674          HC       2

 675          KK  BASINB
 676          KM       COMBINE ALL HYDROGRAPHS AT old BASIN B (Santan and Gila Drain)
 677          HC       2
              *
              *      WOOD/PATEL
              *      REVISION DATE 08/27/96.
              *

 678          KK  Divert
 679          KM       Divert first 25 ac-ft into first flush basin
 680          DT      BB      25
 681          DI       0   10000
 682          DQ       0   10000
              *

 683          KK   DIVBB
 684          KM       Divert basin outflow in excess of 800 cfs outlet channel capacity into
 685          KM       Basin B
 686          KO       1
 687          DT     BB2
 688          DI       0     800   10000
 689          DQ       0       0    9200
              *
              * KK addBB
              * KM     Add basin outflow back into main channel (0 cfs)
              * HC     2
              *

 690          KK  Rtgila
 691          KM       Route thru improved Gila Drain to 56th St.
 692          RK    2000  .00140    .018           trap      26     2.0
              *

 693          KK   GilaA
 694          KM       Drainage area just below Santan Alignment
 695          BA    0.83
 696          LS            67.2
 697          UD    1.85

 698          KK  CGilaA
 699          KM       Add hydrograph to Santan discharge - above I-10 structures
 700          HC       2
              *

 701          KK   RBI10
 702          KM       Route new channel from 56th St.to West of I-10 at SMF/I10/Santan TI
 703          RS       1    FLOW      -1
 704          RC   0.035   0.018   0.035    3000   0.001
 705          RX       0       2      12      24      34      47      57      59
 706          RY    1153    1154    1153    1147  1146.5    1153    1154    1153
              *
              * ***********The following areas(2) not included in West Channel Alts.***
              * KK GilaB
              * KM     Small drainage area near Maricopa Rd. Interchange
              * BA  0.13
```

```
* LS          62.3
* UD  0.74
*
* KKCGilaB
* KM     Add all hydrographs at Maricopa Road (above structure)
* HC     2
* KO     1                              22
* ****************************************************************
*       PRICE ROAD PHASE III HYDROLOGY CHECK                <PRICE5>
*       SOUTH MOUNTAIN FREEWAY (40TH ST TO I-10 MARICOPA AREA)
*       100-YEAR 24-HOUR STORM EVENT
*       This file is a translation of Coe & Van-Loo's TR-20 model in
*       "48th St & Chandler Blvd" report to HEC-1 format. i.e. Their
*       basin areas, curve numbers, times, were used (as noted).Channel data
*       was estimated by HDR from site visits & photographs and from asbuilts
*       of development in the area.
*       Areas not covered by their report were also added to this file
*
*                                                   05-06-92 SMc.
* DIAGRAM
* IT     1                    1440
* IO     3
```

```
LINE          ID.......1.......2.......3.......4.......5.......6.......7.......8.......9......10

 707          KK   DA501  (CVL1)  CVL data, HDR storm data.
 708          PH               0    0.77    1.50    2.64    2.89    3.06    3.37    3.68    4.00
 709          BA    0.38
 710          LS              90
 711          UD   0.144

 712          KK  DIV501
 713          KM          Ahwatukee Drainage Report shows 25-75 split. 25% to Study area.
 714          KM          Based on HDR site visit assume 50-50 split.
 715          DT  DIVOUT
 716          DI       0    1000
 717          DQ       0     500

 718          KK   RT501  Channel size approx.
 719          RS       1    FLOW      -1
 720          RC   0.035   0.025   0.035    2500   0.016
 721          RX      98      99     100     108     133     141     142     143
 722          RY    10.2    10.1      10       2       2      10    10.1    10.2

 723          KK   DA502  (CVL120) CVL data
 724          BA    0.42
 725          LS              86
 726          UD   0.246

 727          KK   AD502  Combine 502 and diverted flow from 501
 728          HC       2

 729          KK  DIV502  70% East to study area, other 30% South to MPR east watershed.
 730          KM          According to Ahwatukee report there should be another diversion
 731          KM          out of study area and back to Ahwatukee PhIV. This diversion was
 732          KM          not found on HDR site visit and is not coded.
 733          DT  DIVOUT
 734          DI       0    1000
 735          DQ       0     300

 736          KK   RT502  Channel size approx.
 737          RS       1    FLOW      -1
 738          RC   0.035   0.025   0.035    2700   0.011
 739          RX      98      99     100     106     131     137     138     139
 740          RY    10.2    10.1      10       4       4      10    10.1    10.2

 741          KK   DA503  (CVL201) CVL data
 742          BA   0.086
 743          LS              82
 744          UD    0.21

 745          KK   AD503  Combine 503 and flow from 501 & 502
 746          HC       2
```

```
LINE          ID.......1.......2.......3.......4.......5.......6.......7.......8.......9......10

 747          KK   RT503  Channel size approx.
 748          RS       1    FLOW      -1
 749          RC   0.040   0.035   0.040    1200  0.0125
 750          RX      80      90     100     105     125     130     140     150
 751          RY    10.2    10.1      10       5       5      10    10.1    10.2

 752          KK   DA504 (CVL130) CVL data
 753          BA   0.066
 754          LS              84
 755          UD   0.186

 756          KK   AD504  Combine 504 and flow from north
 757          HC       2

 758          KK   RT504  Channel size approx.
 759          RS       1    FLOW      -1
 760          RC   0.040   0.035   0.040     850    0.01
 761          RX      80      90     100     105     125     130     140     150
 762          RY    10.3    10.1      10       5       5      10    10.1    10.2

 763          KK   DA505  (CVL132) CVL data
 764          BA  0.0357
 765          LS              84
 766          UD    0.16

 767          KK   AD505  Combine 505 and flow from north
 768          HC       2

 769          KK   RT505  Channel size approx.
 770          RS       1    FLOW      -1
 771          RC   0.040   0.035   0.040     400    0.01
 772          RX    79.9      80     100     105     120     125     145   145.1
 773          RY      12    10.4      10       5       5      10    10.4      12

 774          KK  DIV505  85% East to study area.
 775          DT  DIVOUT
 776          DI       0    1000
 777          DQ       0     150

 778          KK   RT505  Channel size approx.
 779          RS       1    FLOW      -1
 780          RC   0.040   0.035   0.040    1200    0.01
 781          RX      80      90     100     105     120     125     135     145
 782          RY    10.4    10.2      10       5       5      10    10.2    10.4

 783          KK   DA506  (CVL207) CVL data
 784          BA  0.0431
 785          LS              85
 786          UD   0.198
```

```
LINE          ID.......1.......2.......3.......4.......5.......6.......7.......8.......9......10

 787          KK   AD506  Combine 506 and flow from 85% diversion
 788          HC       2

 789          KK   DA507  (CVL205) CVL data
 790          BA  0.0406
 791          LS              84
 792          UD    0.18

 793          KK   RT507  Assumed pipe size.
 794          RK    1400    0.01   0.020            CIRC     4.5

 795          KK   AD506  Combine routed flow from 507 with 506 and flow from diversion.
 796          HC       2

 797          KK   RT506  Assumed channel size.
 798          RS       1    FLOW      -1
 799          RC   0.040   0.035   0.040     900    0.01
 800          RX      50      90     100     105     120     125     135     175
 801          RY      11    10.2      10       5       5      10    10.2      11

 802          KK   DA508  (CVL210) CVL data
 803          BA  0.0204
 804          LS              85
 805          UD   0.168

 806          KK   DA509  (CVL212) CVL data
 807          BA  0.0131
 808          LS              88
 809          UD    0.12

 810          KK   AD509  Combine 509, 508 & flow from east along Ray Rd, at Ray Rd and 44th St.
 811          HC       3

 812          KK   DA510  (CVL214) CVL data
 813          BA  0.0449
 814          LS              85
 815          UD   0.162

 816          KK   AD510  Add in 510
 817          HC       2

 818          KK   RT510  Route flows moving east along North side of Ray Rd.
 819          KM           Channel size from Brooks-Hersey Ray Rd, 44th to 48th St, plans.
 820          RS       1    FLOW      -1
 821          RC   0.040   0.025   0.030     900  0.0085
 822          RX       0      50     100     112   130.5   142.5   178.5  178.51
 823          RY      12      11      10       7       7      10   10.72   11.32

 824          KK   PIPES  Diversion due to overtopping of 3-48" CMPs.
 825          DT  45THST
 826          DI       0     128    2000
 827          DQ       0       0    1872
```

```
LINE          ID.......1.......2.......3.......4.......5.......6.......7.......8.......9......10

 828          KK  RTPIPE  Route pipe flow to cnr 48th St & Ray.
 829          KM          78" CMP gives approx same velocity for routing as 3-48" CMPs.
 830          RK    1680  0.0078   0.024            CIRC     6.5

 831          KK   DA511  (CVL304) HDR data
 832          KM          Initial abstraction to allow for High School 100yr-2hr retention.
 833          BA   0.356
 834          LS   0.894      80
 835          UD    0.80

 836          KK   AD511  Combine 511 and 3-48" CMPs at cnr of 48th St and Ray Rd.
 837          HC       2

 838          KK   RT511  Channel for first 650 ft south of Ray Rd -- West side of 48th.
 839          RS       1    FLOW      -1
 840          RC   0.040   0.025   0.040     650  0.0037
 841          RX      80      90     100     116     123     135     145     155
 842          RY    10.2    10.1      10       2       2      10    10.1    10.2

 843          KK  45THST  Retrieve diversion due to overtopping of pipes at 45th St & Ray.
 844          DR  45THST

 845          KK  RT45ST  Flow that overtops 3-48" CMPs is routed over land to 48th St.
 846          RS       2    FLOW      -1
 847          RC   0.035   0.035   0.035    2000    0.01
 848          RX      80      90     100     110     610     620     630     640
 849          RY      10      10      10       9       9      10      10      10

 850          KK   AD511  Combine at S end of improved channel W side 48th St. 650ft S of Ray.
 851          HC       2

 852          KK   RT511  Channel size estimated using CVL's 48th & Chandler report.
 853          RS       1    FLOW      -1
 854          RC   0.040   0.035   0.040    1950   0.004
 855          RX       0      25      60      65      75      78     115     120
 856          RY      22    18.5      18      17      17      18      18      22

 857          KK   DA512  (CVL310) HDR data
 858          BA  0.1250
 859          LS              77
 860          UD    0.30

 861          KK   AD512  Combine at 48th St and Highline canal.
 862          HC       2

 863          KK  DIV512  As per CVL report 60 cfs goes south, the balance south-east.
 864          DT   CANAL
 865          DI       0      60      60    1000    1500
 866          DQ       0       0       1     940    1440
```

```
LINE          ID.......1.......2.......3.......4.......5.......6.......7.......8.......9......10

 867          KK   DA513  (CVL195) CVL data
 868          BA  0.0879
 869          LS              85
 870          UD   0.204

 871          KK   DA514  (CVL197) CVL data
 872          BA  0.0564
 873          LS            84.1
 874          UD   0.144

 875          KK   DA515  (CVL199) CVL data
 876          BA  0.0466
 877          LS              84
 878          UD   0.186

 879          KK   AD515  Combine 515, 514 and 513
 880          HC       3

 881          KK   RT515  Channel info from Clouse plans.
 882          RS       1    FLOW      -1
 883          RC   0.040   0.020   0.040    2600  0.0059
 884          RX      80      90     100     106     116     122     132     142
 885          RY      10      10      10       6       6      10      10      10

 886          KK   DA516  (CVL311) HDR data
 887          BA   0.149
 888          LS              77
 889          UD    0.34

 890          KK   AD516  Combine flows from west, 60 cfs from north and DA516 at 48th
 891          KM          and Highline canal.
 892          HC       3

 893          KK   RT516  Channel info from Clouse plans.
 894          RS       1    FLOW      -1
 895          RC   0.040   0.020   0.040    1800   0.003
 896          RX      80      90     100     106     116     122     132     142
 897          RY      10      10      10       6       6      10      10      10

 898          KK   DA517  (CVL320) CVL data
 899          BA  0.1700
 900          LS              77
 901          UD   0.258

 902          KK   AD517  Add in 517
 903          HC       2

 904          KK   RT517  Assumed channel shape based on estimated 48th St. cross-section.
 905          RS       1    FLOW      -1
 906          RC   0.020   0.025   0.040     850   0.005
 907          RX      78      80     100     112     116     118     122     222
 908          RY      12     9.6      10    9.76    7.76    7.76      10      12
```

```
LINE          ID.......1.......2.......3.......4.......5.......6.......7.......8.......9......10

 909          KK   DA518
 910          BA   0.099
 911          LS              81
 912          UD    0.58

 913          KK   AD518  Combine 518 with flow moving south in 48th St.
 914          HC       2

 915          KK  DIV518 Assume 50-50 split at 48th & Chandler IC.
 916          DT   DIVSE
 917          DI       0    2000
 918          DQ       0    1000

 919          KK   RT518  Assume channel size based on existing tail-water ditch.
 920          RS       1    FLOW      -1
 921          RC   0.035   0.025   0.035    3600  0.0061
 922          RX      80      90     100     105     110     115     125     135
 923          RY    10.4    10.2      10       5       5      10    10.2    10.4

 924          KK  DA519a
 925          BA    0.22
 926          LS              81
 927          UD    0.62

 928          KK  AD519a  Combine 519a and flow from N. at 48th & SMF.
 929          HC       2

 930          KK  DA520a
 931          BA   0.127
 932          LS              80
 933          UD    0.41

 934          KK  RT520a  Channel info from K-Mart Drainage report.
 935          RS       1    FLOW      -1
 936          RC   0.040   0.025   0.040    2100  0.0016
 937          RX      80      90     100     112     114     126     136     146
 938          RY      10      10      10       4       4      10      10      10

 939          KK  DA520b
 940          KM          Initial abstraction to allow for "K-mart development" 100yr-2hr Ret.
 941          BA   0.224
 942          LS   0.473    87.5
 943          UD    0.35

 944          KK  AD520b  Combine 520b and routed 520a at NW cnr of 48th & Ray Rd.
 945          HC       2

 946          KK  DIV520  Divert weir flow thru Equip. crossing under EB off-ramp
 947          DT  DIVBOX
 948          DI       0     100     200     300     400     500
 949          DQ       0       0      60     143     230     320
```

```
LINE          ID.......1.......2.......3.......4.......5.......6.......7.......8.......9......10

 950          KK  RT520b  Channel info from ADOT Ray Rd. TI Drainage report.
 951          RS       1    FLOW      -1
 952          RC   0.035   0.035   0.040    1000  0.0099
 953          RX      80      90     100     108     118     122     132     222
 954          RY    15.0    12.5      10       8       8      10    10.1      11

 955          KK  DIVBOX  Retreive flow thru equipment crossing.
 956          DR  DIVBOX

 957          KK  AD520b  Re-combine flow diverted thru equip. crossing.
 958          HC       2

 959          KK  RT520b  Channel info from ADOT Ray Rd. TI Drainage report.
 960          RS       1    FLOW      -1
 961          RC   0.035   0.035   0.040    4200  0.0099
 962          RX      80      90     100     108     118     122     132     222
 963          RY    15.0    12.5      10       8       8      10    10.1      11

 964          KK  DA521a
 965          BA   0.094
 966          LS              77
 967          UD    0.53

 968          KK   CANAL  Retrieve SE diversion from 48th St and Highline canal.
 969          DR   CANAL

 970          KK  ADHIGH  Combine retrieved diversion & 521a at Highline Canal.
 971          HC       2

 972          KK  RTHIGH  Route to I-10 & Chandler thru assumed channel overland flow
 973          RS       5    FLOW      -1
 974          RC   0.035   0.035   0.035    3500   0.008
 975          RX      80      90     100     110    1110    1120    1130    1140
 976          RY      10      10      10       9       9      10      10      10

 977          KK  DA521b
 978          BA   0.391
 979          LS              81
 980          UD    0.51

 981          KK  AD521b  Combine overland flow, 521b and flow parallel to I-10
 982          KM          at I-10 and Chandler Blvd.
 983          HC       3

 984          KK  CHNDLR  Route thru 24" RCP under, and weir flow over, Chandler Blvd
 985          RS       1    STOR       0
 986          SV       0    42.3    47.1    50.9    54.2    56.9    59.4    62.0    64.1    66.3
 987          SV    68.2
 988          SE    1189 1193.33 1193.57 1193.75 1193.90 1194.02 1194.13 1194.24 1194.33 1194.42
 989          SE  1194.5
 990          SQ       0     200     400     600     800    1000    1200    1400    1600    1800
 991          SQ    2000
```

```
LINE          ID.......1.......2.......3.......4.......5.......6.......7.......8.......9......10

 992          KK  CHNDLR  Divert flow thru 24" RCP out of study area.
 993          DT  DIVOUT
 994          DI       0     200     400     600    1200    2000
 995          DQ       0      24      25      26      27      28

 996          KK  RTCHLR  Assumed channel size. Route weir flow over Chandler overland to
 997          KM          collector channel N. side of SMF.
 998          RS       3    FLOW      -1
 999          RC   0.035   0.035   0.035    1800   0.005
1000          RX      80      90     100     110    1110    1120    1130    1140
1001          RY      10      10      10       9       9      10      10      10

1002          KK     ONS  On-site hydrograph from a portion of I-10 N. of TI.
1003          BA    0.04
1004          IN      10                     145
1005          QI       0       0       0       0       0       0       0       0       0       0
1006          QI       0       0       0       0       0       0       0       0       0       0
1007          QI       0       0       0       0       0       0       0       0       0       0
1008          QI       0       0       0       0       0       0       0       0       0       0
1009          QI       0       0       0       0       0       0       0       0       0       0
1010          QI       0       0       0       0       0       0       1       1       1       1
1011          QI       1       1       1       1       1       2       2       2       3       3
1012          QI       8      19      47     125      63      32      16       7       5       4
1013          QI       4       4       3       3       3       3       2       2       2       2
1014          QI       2       2       2       1       1       1       1       1       1       1
1015          QI       1       1       1       1       1       1       1       1       1       1
1016          QI       1       1       1       1       1       1       1       1       1       1
1017          QI       1       1       1       1       1       1       1       1       1       1
1018          QI       1       1       1       1       1       1       1       0       0       0
1019          QI       0       0       0       0       0

1020          KK   ADONS  Combine onsite from I-10 with routed overland flow from Chandler Blvd.
1021          HC       2

1022          KK  RTCHLR  Proposed channel north of SMF to approx
1023          KM          50th St alignment location.
1024          RS       1    FLOW      -1
1025          RC   0.035   0.018   0.035    1000   0.002
1026          RX      80      90     100     112     140     155     162     172
1027          RY      10      10      10       4       4      10      10      10

1028          KK   DIVSE   Retrieve SE part of diversion from 48th St and Chandler Blvd IC.
1029          DR   DIVSE

1030          KK    RTSE  Route to approx 50th St. thru assumed channel overland
1031          RS       5    FLOW      -1
1032          RC   0.035   0.035   0.035    3100   0.005
1033          RX      80      90     100     110     610     620     630     640
1034          RY      10      10      10       9       9      10      10      10
```

```
LINE          ID.......1.......2.......3.......4.......5.......6.......7.......8.......9......10

1035          KK  DA522a
1036          BA   0.174
1037          LS              81
1038          UD    0.47

1039          KK  AD522a  Combine 522a with flow in channel N. side SMF.
1040          HC       3

1041          KK  RT522a  Route to 48th St thru assumed channel.
1042          RS       1    FLOW      -1
1043          RC   0.035   0.018   0.035    1600   0.002
1044          RX      80      90     100     112     140     152     162     172
1045          RY      10      10      10       4       4      10      10      10

1046          KK  DA522b
1047          BA   0.091
1048          LS              81
1049          UD    0.50

1050          KK  AD522b  Combine 522b and flow in channel from E. at 48th St.
1051          HC       2

1052          KK  AD522b  Add in DA519a and flow moving S. down 48th St.
1053          HC       2

1054          KK  DA519b
1055          BA   0.322
1056          LS              85
1057          UD    0.43

1058          KK  RT519b  Assume channel size and route 519b back to 48th St.
1059          RS       1    FLOW      -1
1060          RC   0.035   0.018   0.035    2800  0.0011
1061          RX      80      90     100     112     124     136     146     156
1062          RY      10      10      10       4       4      10      10      10

1063          KK  AD519b  Combine all flows approx. 400ft West of 48th St. Design Q - C219.
1064          HC       2

1065          KK     PMP  TI on-site pumpstation hydrograph.
1066          BA    0.16
1067          IN      10                     145
1068          QI       0       0       0       0       0       0       0       0       0       0
1069          QI       0       0       0       0       0       0       0       0       0       0
1070          QI       0       0       0       0       0       0       0       0       0       0
1071          QI       0       0       0       0       0       0       0       0       0       0
1072          QI       0       0       0       0       0       0       0       0       0       0
1073          QI       0       0       0       0       0       0       0       0       0       0
1074          QI       0       0       0       0       0      40       0      40       0       0
1075          QI      41      41      83     209     210     211      51      51      11      11
1076          QI      11      11      51      11      11      11      11      11      11      11
1077          QI      51      11      11      10      10      10      10      50      10      10
1078          QI      10      10      50      10      10      10      10      10      10      10
1079          QI      10      10      10      10      10      10       9       9       9       9
```

```
LINE          ID.......1.......2.......3.......4.......5.......6.......7.......8.......9......10

1080          QI      49       9       9       9       9       9       9       9       9       9
1081          QI       9       9       9       9       9       9       9       9       9       9
1082          QI       9       9       9       9       9

1083          KK   ADPMP  combine flows from IC onsite pumpstation and route thru basin.
1084          HC       2

1085          KK   BAS15
1086          KM          Route thru detention basin S. side of SMF, outlet to Santan Channel
1087          KM          thru 100' Spillway at 1162
1088          RS       1    STOR       0
1089          SV       0     220     270
1090          SE    1140    1164    1168
1091          SS    1162     100     3.1     1.5
              *
              * *************END SMF 48TH ST FILE*************************************
              *

1092          KK   I10W
1093          KM         Combine SMF/I10/S.48th flow from Basin 15 with Santan Channel Flow
1094          HC       2
              *

1095          KK   RI10W
1096          KM       Route from SMF/I10/Santan TI to Gila Drain Floodway
1097          RS       1    FLOW      -1
1098          RC    .035   0.018   0.035    4000    .002
1099          RX       0       2      14      26      36      49      61      63
1100          RY    1153    1154    1153    1147  1146.5    1153    1154    1153
              *
              * ID      Gila Floodway offsite Hydrology                          <GILA1b>
              * ID      Proposed Floodway using detention basins
              * ID      HYDROLOGY FOR SEGMENT 1 of GILA FLOODWAY
              * ID      I-10 TO 44th STREET
              * ID      Inflow hydrographs from other analyses
              * ID      Cells for detention - I10 to the Treatment Plant
              * ID      100 year 24-Hour Storm - Aug 18, 1992   HDR - PHX
              * IT    10                    2000
              * IO     4       0       0
              * DIAGRAM
              *
              * KKCGilaB
              * KM      Outflow hydrograph from Santan Freeway drainage system
              * KM      Outflow Hydrograph at Maricopa Road and I-10
              * BA30.859
              * IN     5
              *
              *  ***************QI LINES DELETED***********************
              *  ****************************************************
              *
              *
              * KKDETI10
              * KM      Outflow hydrograph from South Mountain Freeway
              * KM      Detention Basin @ interchange
              * BA 4.083
              * IN     5
              * *****************QI LINES DELETED********************
              * ****************************************************
              *
              * KK CGila
```

```
* KM      Combine Santan & east So. Mt. Frwy Q's @ U/S end of Gila Floodway
* HC     2
*
```

```
LINE          ID.......1.......2.......3.......4.......5.......6.......7.......8.......9......10

1101          KK  R1Gila
1102          KM       Route inflow through first cell of Gila Floodway
1103          KM        Revised embankment of cell 1
1104          RS       1    STOR       0
1105          SV     0.0     1.8    9.25    14.8    29.8    37.5    45.2    61.0
1106          SE    34.5    35.5    36.5    37.0    38.0    38.5    39.0    40.0
1107          SQ     0.0     7.4    23.0    30.0    40.0   281.6   720.0  1954.7
              *

1108          KK  R2Gila
1109          KM       Route inflow through second cell of Gila Floodway
1110          KM        Revised embankment of cell 2
1111          RS       1    STOR       0
1112          SV     0.0     4.2    15.6    24.9    49.5    62.4    75.2   101.4
1113          SE    30.5    31.5    32.5    33.0    34.0    34.5    35.0    36.0
1114          SQ     0.0     7.4    23.0    30.0    40.0   281.6   720.0  1954.7
              *

1115          KK  R3Gila
1116          KM       Route inflow through third cell of Gila Floodway
1117          KM        Revised grading of cell 3
1118          RS       1    STOR       0
1119          SV     0.0     0.2    10.9    43.5    55.0    67.3    94.9
1120          SE    21.9    22.0    24.0    26.0    26.5    27.0    28.0
1121          SQ     0.0     1.0    23.2    44.2   376.7   981.6  2687.3
              *

1122          KK  GIL44N
1123          KM        Runoff from area between Old Maricopa Rd & Gila Drain, So of South Mount
1124          PH       1     130    0.71    1.38    2.42    2.63    2.83    3.07    3.33    3.67
1125          BA    0.42
1126          LS              77
1127          UD    0.88
              *

1128          KK  CGIL44N
1129          KM        Combine flows in Gila Floodway at 44th Street.
1130          HC       2
              *

1131          KK    C218
1132          KM        Runoff from Lakewood development.  Hydrograph matches peak discharge
1133          KM        and volume from TR-20 program from development report.
1134          BA    2.17
1135          LS              92
1136          UD    1.72
              *

1137          KK   RC218
1138          KM        Route flows from culvert C218 to Gila Floodway (no level spreader).
1139          KM        Routing is based on 99% cover of 3' high grass, flow depth 0.5-1.0',Ref
1140          RD    7000  0.0050    0.20            TRAP    1000    1000
              *
```

```
LINE          ID.......1.......2.......3.......4.......5.......6.......7.......8.......9......10

1141          KK  CRC218
1142          KM        Combine flows in Floodway
1143          HC       2
              *

1144          KK  GIL40N
1145          KM        Runoff from 1.2 of area formerly GILA32N entering floodway near 40th St.
1146          BA    0.97
1147          LS            80.4
1148          UD    2.22
              *

1149          KK  CGIL40
1150          KM        Combine flow from north @ 40th Street in Gila Floodway
1151          HC       2
              *

1152          KK  RGIL44
1153          KM        Route flows along Gila Floodway to 32th Street
1154          KM        Detention basin Routing Parameters Cell 4
1155          RS       1    STOR       0
1156          SV     0.0     8.2    52.0    68.9    87.4   107.6   129.4
1157          SE    16.6    18.0    20.0    20.5    21.0    21.5    22.0
1158          SQ     0.0    13.4    39.0    43.0   469.7  1243.8  2245.3
              *

1159          KK  RGIL44
1160          KM        Route flows along Gila Floodway to 32th Street
1161          KM        Detention basin Routing Parameters Cell 5
1162          RS       1    STOR       0
1163          SV     0.0     1.5    13.3    48.6    66.1    86.5   106.9
1164          SE    12.5    13.0    14.0    15.5    16.0    16.5    17.0
1165          SQ     0.0     0.0     0.0     0.0  1187.9  3360.0  6172.7
              *
1166          ZZ
```

SCHEMATIC DIAGRAM OF STREAM NETWORK

```
INPUT
 LINE      (V) ROUTING          (--->) DIVERSION OR PUMP FLOW

  NO.      (.) CONNECTOR        (<---) RETURN OF DIVERTED OR PUMPED FLOW

   31        bash
                .
                .
   65           .      CHNDLR
                .           .
                .           .
   99      cchand.............
                .
                .
  103           .      interc
                .           .
                .           .
  137       addTI............
                .
                .
  141           .        basg
                .           V
                .           V
  175           .       rbasg
                .           V
                .           V
  182           .      rtbasg
                .           .
                .           .
  184      cinter............
                .
                .
  188           .      MCSWL2
                .           .
                .           .
  195       cbash............
                V
                V
  198         RT1
                .
                .
  201           .      MCSWL3
                .           .
                .           .
  207       COMB1............
                .
                .
  211           .      SECT25
                .           V
                .           V
  218           .         RT1
                .           .
                .           .
  221           .           .      SECT36
                .           .           .
                .           .           .
  229      SECT36........................
                .
                .
  233           .      mcclin
                .           .
                .           .
```

```
268     cmcln............
            V
            V
270    RT2536
            .
            .
273         .      RUSWL1
            .          V
            .          V
279         .        RT1
            .          .
            .          .
282         .          .     RUSWL2
            .          .         V
            .          .         V
288         .          .       RT2
            .          .         .
            .          .         .
291         .          .         .      RUSWL3
            .          .         .          .
            .          .         .          .
297     COMB1...................................
            V
            V
299       RT3
            .
            .
302         .      RUSWL4
            .          .
            .          .
308         .          .     RUSWL5
            .          .         V
            .          .         V
314         .          .       RT4
            .          .         .
            .          .         .
317         .          .         .      RUSWL6
            .          .         .          .
            .          .         .          .
323         .       COMB2......................
            .          V
            .          V
325         .        RT5
            .          .
            .          .
328         .          .     RUSWL7
            .          .         .
            .          .         .
334         .          .         .      RUSWL8
            .          .         .          .
            .          .         .          .
340         .          .         .          .      RUSWL9
            .          .         .          .          .
            .          .         .          .          .
346       SW34.............................................
            V
            V
348       RT35
            .
            .
351         .       SECT9
            .          .
            .          .
357         .          .     SECT10
```

```
                .          .          .
                .          .          .
363             .          .          .      SECT10
                .          .          .          V
                .          .          .          V
369             .          .          .        RT1
                .          .          .          .
                .          .          .          .
372             .      COMB1.......................
                .        V
                .        V
375             .       RT2
                .        .
                .        .
378             .        .      SECT16
                .        .          .
                .        .          .
384             .        .          .      SECT15
                .        .          .          .
                .        .          .          .
390             .      COMB2.......................
                .        V
                .        V
393             .       RT3
                .        .
                .        .
396             .        .      SECT21
                .        .          .
                .        .          .
402             .        .          .      SECT22
                .        .          .          .
                .        .          .          .
408             .      COMB3.......................
                .        V
                .        V
411             .       RT4
                .        .
                .        .
414             .        .      SECT12
                .        .          V
                .        .          V
420             .        .        RT5
                .        .          .
                .        .          .
423             .        .          .      SECT11
                .        .          .          .
                .        .          .          .
429             .        .      COMB4............
                .        .          V
                .        .          V
432             .        .        RT6
                .        .          .
                .        .          .
435             .        .          .      SECT10
                .        .          .          .
                .        .          .          .
441             .        .      COMB5............
                .        .          V
                .        .          V
444             .        .        RT7
                .        .          .
                .        .          .
447             .        .          .      SECT13
                .        .          .          V
```

```
                 .         .         .         V
453              .         .         .       RT8
                 .         .         .         .
                 .         .         .         .
456              .         .         .         .      SECT14
                 .         .         .         .         .
                 .         .         .         .         .
462              .         .         .         .         .      SECT15
                 .         .         .         .         .         .
                 .         .         .         .         .         .
468              .         .      COMB6.......................................
                 .         .         V
                 .         .         V
472              .         .       RT9
                 .         .         .
                 .         .         .
475              .         .         .     SECT24
                 .         .         .         V
                 .         .         .         V
481              .         .         .      RT10
                 .         .         .         .
                 .         .         .         .
484              .         .         .         .      SECT23
                 .         .         .         .         .
                 .         .         .         .         .
490              .         .         .         .         .      SECT22
                 .         .         .         .         .         .
                 .         .         .         .         .         .
496              .         .      COMB7.......................................
                 .         .         V
                 .         .         V
500              .         .      RT11
                 .         .         .
                 .         .         .
503              .         .         .     SECT26
                 .         .         .         .
                 .         .         .         .
509              .         .      COMB8............
                 .         .         V
                 .         .         V
512              .         .      RT12
                 .         .         .
                 .         .         .
515              .         .         .     SECT28
                 .         .         .         .
                 .         .         .         .
521              .         .         .         .      SECT27
                 .         .         .         .         .
                 .         .         .         .         .
527              .      COMB9.......................................
                 .         V
                 .         V
531              .      RT13
                 .         .
                 .         .
534              .         .     SECT34
                 .         .         .
                 .         .         .
540           COMBB........................
                 .
                 .
543              .     SECT33
                 .         .
                 .         .
```

```
550          .          .      kyrene
             .          .          .
             .          .          .
585          .     ckyre............
             .          .
             .          .
587     COMBB............
             .
             .
590          .    SECT16
             .         V
             .         V
596          .       RT1
             .          .
             .          .
599          .          .      SECT20
             .          .          .
             .          .          .
605          .     COMB1............
             .         V
             .         V
608          .       RT2
             .          .
             .          .
611          .          .      SECT29
             .          .          .
             .          .          .
617          .     COMB2............
             .         V
             .         V
620          .       RT3
             .          .
             .          .
623          .          .      SECT16
             .          .           V
             .          .           V
629          .          .         RT4
             .          .           .
             .          .           .
632          .          .           .      SECT21
             .          .           .           .
             .          .           .           .
638          .          .      COMB3............
             .          .           V
             .          .           V
641          .          .         RT5
             .          .           .
             .          .           .
644          .          .           .      SECT28
             .          .           .           .
             .          .           .           .
650          .          .      COMB4............
             .          .           V
             .          .           V
653          .          .         RT6
             .          .           .
             .          .           .
656          .          .           .      SECT32
             .          .           .           .
             .          .           .           .
662          .    OUTLTC........................
             .          .
             .          .
666          .          .      SECT33
```

```
            .           .           .
            .           .           .
672         .       BASINB...........
            .           .
            .           .
675     BASINB...........
            .
            .
680         .------->      BB
678     Divert
            .
            .
687         .------->     BB2
683      DIVBB
            V
            V
690     Rtgila
            .
            .
693         .       GilaA
            .           .
            .           .
698     CGilaA...........
            V
            V
701      RBI10
            .
            .
707         .       DA501
            .           .
            .           .
715         .           .------->  DIVOUT
712         .      DIV501
            .           V
            .           V
718         .       RT501
            .           .
            .           .
723         .           .       DA502
            .           .           .
            .           .           .
727         .       AD502...........
            .           .
            .           .
733         .           .------->  DIVOUT
729         .      DIV502
            .           V
            .           V
736         .       RT502
            .           .
            .           .
741         .           .       DA503
            .           .           .
            .           .           .
745         .       AD503...........
            .           V
            .           V
747         .       RT503
            .           .
            .           .
752         .           .       DA504
            .           .           .
            .           .           .
756         .       AD504...........
```

```
                V
                V
758          RT504
                .
                .
763             .       DA505
                .           .
                .           .
767          AD505............
                V
                V
769          RT505
                .
                .
775             .-------->  DIVOUT
774         DIV505
                V
                V
778          RT505
                .
                .
783             .       DA506
                .           .
                .           .
787          AD506............
                .
                .
789             .       DA507
                .           V
                .           V
793             .       RT507
                .           .
                .           .
795          AD506............
                V
                V
797          RT506
                .
                .
802             .       DA508
                .           .
                .           .
806             .           ..      DA509
                .           .           ..
                .           .           .
810          AD509........................
                .
                .
812             .       DA510
                .           .
                .           .
816          AD510............
                V
                V
818          RT510
                .
                .
825             .-------->  45THST
824          PIPES
                V
                V
828         RTPIPE
                .
                .
```

```
831          .          .       DA511
             .          .          .
             .          .          .
836          .      AD511............
             .          V
             .          V
838          .      RT511
             .          .
             .          .
844          .          .          .<-------  45THST
843          .          .     45THST
             .          .          V
             .          .          V
845          .          .     RT45ST
             .          .          .
             .          .          .
850          .      AD511............
             .          V
             .          V
852          .      RT511
             .          .
             .          .
857          .          .       DA512
             .          .          .
             .          .          .
861          .      AD512............
             .          .
             .          .
864          .          .------->   CANAL
863          .     DIV512
             .          .
             .          .
867          .          .       DA513
             .          .          .
             .          .          .
871          .          .          .      DA514
             .          .          .          .
             .          .          .          .
875          .          .          .          .      DA515
             .          .          .          .          .
             .          .          .          .          .
879          .          .       AD515.........................
             .          .          V
             .          .          V
881          .          .       RT515
             .          .          .
             .          .          .
886          .          .          .      DA516
             .          .          .          .
             .          .          .          .
890          .      AD516........................
             .          V
             .          V
893          .      RT516
             .          .
             .          .
898          .          .       DA517
             .          .          .
             .          .          .
902          .      AD517............
             .          V
             .          V
904          .      RT517
             .          .
```

```
909          .           .       DA518
             .           .           .
             .           .           .
913          .       AD518............
             .           .
             .           .
916          .           .-------->   DIVSE
915          .      DIV518
             .           V
             .           V
919          .       RT518
             .           .
             .           .
924          .           .      DA519a
             .           .           .
             .           .           .
928          .      AD519a............
             .           .
             .           .
930          .           .      DA520a
             .           .           V
             .           .           V
934          .           .      RT520a
             .           .           .
             .           .           .
939          .           .           .      DA520b
             .           .           .           .
             .           .           .           .
944          .           .      AD520b............
             .           .           .
             .           .           .
947          .           .           .-------->  DIVBOX
946          .           .      DIV520
             .           .           V
             .           .           V
950          .           .      RT520b
             .           .           .
             .           .           .
956          .           .           .           .<--------  DIVBOX
955          .           .           .      DIVBOX
             .           .           .           .
             .           .           .           .
957          .           .      AD520b............
             .           .           V
             .           .           V
959          .           .      RT520b
             .           .           .
             .           .           .
964          .           .           .      DA521a
             .           .           .           .
             .           .           .           .
969          .           .           .           .           .<--------   CANAL
968          .           .           .           .       CANAL
             .           .           .           .           .
             .           .           .           .           .
970          .           .           .      ADHIGH............
             .           .           .           V
             .           .           .           V
972          .           .           .      RTHIGH
             .           .           .           .
             .           .           .           .
977          .           .           .           .      DA521b
             .           .           .           .           .
```

```
                .           .           .           .
981             .           .     AD521b.......................
                .           .         V
                .           .         V
984             .           .     CHNDLR
                .           .         .
                .           .         .
993             .           .         .-------> DIVOUT
992             .           .     CHNDLR
                .           .         V
                .           .         V
996             .           .     RTCHLR
                .           .         .
                .           .         .
1002            .           .         .        . ONS
                .           .         .           .
                .           .         .           .
1020            .           .      ADONS............
                .           .         V
                .           .         V
1022            .           .     RTCHLR
                .           .         .
                .           .         .
1029            .           .         .           .<-------   DIVSE
1028            .           .         .       DIVSE
                .           .         .           V
                .           .         .           V
1030            .           .         .        RTSE
                .           .         .           .
                .           .         .           .
1035            .           .         .           .      DA522a
                .           .         .           .           .
                .           .         .           .           .
1039            .           .     AD522a.......................
                .           .         V
                .           .         V
1041            .           .     RT522a
                .           .         .
                .           .         .
1046            .           .         .      DA522b
                .           .         .           .
                .           .         .           .
1050            .           .     AD522b...........
                .           .         .
                .           .         .
1052            .       AD522b............
                .           .
                .           .
1054            .           .     DA519b
                .           .         V
                .           .         V
1058            .           .     RT519b
                .           .         .
                .           .         .
1063            .       AD519b............
                .           .
                .           .
1065            .           .        PMP
                .           .         .
                .           .         .
1083            .       ADPMP............
                .           V
                .           V
1085            .       BAS15
```

```
                .           .
                .           .
1092        I10W ............
                V
                V
1095        RI10W
                V
                V
1101       R1Gila
                V
                V
1108       R2Gila
                V
                V
1115       R3Gila
                .
                .
1122            .       GIL44N
                .           .
                .           .
1128       CGIL44............
                .
                .
1131            .         C218
                .            V
                .            V
1137            .        RC218
                .           .
                .           .
1141       CRC218............
                .
                .
1144            .       GIL40N
                .           .
                .           .
1149       CGIL40............
                V
                V
1152       RGIL44
                V
                V
1159       RGIL44
```

***) RUNOFF ALSO COMPUTED AT THIS LOCATION

RUNOFF SUMMARY
FLOW IN CUBIC FEET PER SECOND
TIME IN HOURS, AREA IN SQUARE MILES

OPERATION	STATION	PEAK FLOW	TIME OF PEAK	AVERAGE FLOW FOR MAXIMUM PERIOD 6-HOUR	24-HOUR	72-HOUR	BASIN AREA	MAXIMUM STAGE	TIME OF MAX STAGE
HYDROGRAPH AT	bash	764.	13.58	327.	255.	126.	6.76		
HYDROGRAPH AT	CHNDLR	100.	13.00	90.	90.	45.	0.00		
2 COMBINED AT	cchand	864.	13.58	417.	344.	171.	6.76		
HYDROGRAPH AT	interc	200.	12.17	38.	10.	3.	0.16		
2 COMBINED AT	addTI	904.	13.58	428.	350.	174.	6.92		
HYDROGRAPH AT	basg	954.	14.00	337.	109.	36.	4.37		
ROUTED TO	rbasg	190.	16.83	180.	105.	36.	4.37	1180.46	16.83
ROUTED TO	rtbasg	190.	16.92	180.	105.	36.	4.37		
2 COMBINED AT	cinter	938.	13.58	569.	454.	211.	11.29		
HYDROGRAPH AT	MCSWL2	48.	13.17	15.	4.	1.	0.16		
2 COMBINED AT	cbash	975.	13.58	581.	459.	212.	11.45		
ROUTED TO	RT1	969.	13.58	581.	458.	212.	11.45		
HYDROGRAPH AT	MCSWL3	52.	13.17	17.	5.	2.	0.17		
2 COMBINED AT	COMB1	1011.	13.58	595.	463.	214.	11.62		
HYDROGRAPH AT	SECT25	222.	13.25	77.	24.	8.	1.00		
ROUTED TO	RT1	222.	13.50	77.	24.	8.	1.00		
HYDROGRAPH AT	SECT36	92.	13.33	34.	11.	4.	0.51		
3 COMBINED AT	SECT36	1315.	13.58	704.	498.	225.	13.13		
HYDROGRAPH AT	mcclin	200.	12.08	29.	8.	3.	0.11		
2 COMBINED AT	cmcln	1332.	13.50	711.	504.	228.	13.24		
ROUTED TO	RT2536	1319.	13.58	711.	504.	228.	13.24		
HYDROGRAPH AT	RUSWL1	5.	14.75	4.	1.	0.	0.21		
ROUTED TO	RT1	5.	14.83	4.	1.	0.	0.21		
HYDROGRAPH AT	RUSWL2	2.	14.33	1.	0.	0.	0.09		
ROUTED TO	RT2	2.	14.58	1.	0.	0.	0.09		
HYDROGRAPH AT	RUSWL3	42.	12.83	10.	3.	1.	0.10		
4 COMBINED AT	COMB1	1338.	13.58	722.	509.	229.	13.64		
ROUTED TO	RT3	1334.	13.58	722.	509.	229.	13.64		

HYDROGRAPH AT	RUSWL4	3.	14.33	2.	1.	0.	0.16
HYDROGRAPH AT	RUSWL5	74.	12.50	12.	4.	1.	0.09
ROUTED TO	RT4	73.	12.58	12.	4.	1.	0.09
HYDROGRAPH AT	RUSWL6	3.	14.00	2.	1.	0.	0.15
3 COMBINED AT	COMB2	73.	12.58	16.	5.	2.	0.40
ROUTED TO	RT5	72.	12.67	16.	5.	2.	0.40
HYDROGRAPH AT	RUSWL7	2.	14.00	2.	1.	0.	0.13
HYDROGRAPH AT	RUSWL8	32.	12.33	4.	1.	0.	0.06
HYDROGRAPH AT	RUSWL9	64.	12.42	10.	3.	1.	0.10
5 COMBINED AT	SW34	1365.	13.58	748.	519.	233.	14.33
ROUTED TO	RT35	1345.	13.67	748.	519.	233.	14.33
HYDROGRAPH AT	SECT9	94.	12.75	22.	7.	2.	0.33
HYDROGRAPH AT	SECT10	9.	13.17	3.	1.	0.	0.03
HYDROGRAPH AT	SECT10	37.	12.92	11.	4.	1.	0.19
ROUTED TO	RT1	37.	13.08	11.	4.	1.	0.19
3 COMBINED AT	COMB1	122.	12.83	35.	11.	4.	0.55
ROUTED TO	RT2	121.	13.42	35.	11.	4.	0.55
HYDROGRAPH AT	SECT16	69.	12.67	13.	4.	1.	0.14
HYDROGRAPH AT	SECT15	94.	13.25	31.	9.	3.	0.31
3 COMBINED AT	COMB2	231.	13.42	78.	24.	8.	1.00
ROUTED TO	RT3	229.	13.67	77.	24.	8.	1.00
HYDROGRAPH AT	SECT21	186.	12.83	44.	13.	4.	0.42
HYDROGRAPH AT	SECT22	143.	12.75	37.	12.	4.	0.82
3 COMBINED AT	COMB3	421.	12.92	157.	49.	16.	2.24
ROUTED TO	RT4	417.	13.08	156.	49.	16.	2.24
HYDROGRAPH AT	SECT12	6.	15.08	5.	2.	1.	0.50
ROUTED TO	RT5	6.	15.58	4.	2.	1.	0.50
HYDROGRAPH AT	SECT11	51.	13.25	21.	7.	2.	0.51
2 COMBINED AT	COMB4	51.	13.25	24.	9.	3.	1.01
ROUTED TO	RT6	51.	13.50	24.	9.	3.	1.01
HYDROGRAPH AT	SECT10	65.	12.75	19.	6.	2.	0.50
2 COMBINED AT	COMB5	84.	13.33	42.	15.	5.	1.51

ROUTED TO	RT7	84.	13.92	41.	15.	5.	1.51
HYDROGRAPH AT	SECT13	54.	12.92	26.	10.	3.	1.00
ROUTED TO	RT8	54.	13.42	26.	10.	3.	1.00
HYDROGRAPH AT	SECT14	15.	14.50	10.	4.	1.	1.00
HYDROGRAPH AT	SECT15	81.	13.25	31.	10.	3.	0.69
4 COMBINED AT	COMB6	207.	13.67	104.	39.	13.	4.20
ROUTED TO	RT9	207.	14.08	104.	39.	13.	4.20
HYDROGRAPH AT	SECT24	27.	13.75	17.	7.	2.	1.00
ROUTED TO	RT10	27.	14.33	17.	7.	2.	1.00
HYDROGRAPH AT	SECT23	14.	15.17	10.	4.	1.	1.00
HYDROGRAPH AT	SECT22	79.	12.50	13.	4.	1.	0.13
4 COMBINED AT	COMB7	251.	14.17	134.	54.	18.	6.33
ROUTED TO	RT11	251.	14.42	134.	54.	18.	6.33
HYDROGRAPH AT	SECT26	221.	13.33	79.	24.	8.	1.00
2 COMBINED AT	COMB8	365.	14.25	207.	79.	26.	7.33
ROUTED TO	RT12	364.	14.50	206.	79.	26.	7.33
HYDROGRAPH AT	SECT28	71.	12.83	23.	8.	3.	0.69
HYDROGRAPH AT	SECT27	119.	13.92	60.	20.	7.	1.00
4 COMBINED AT	COMB9	760.	13.33	439.	156.	52.	11.26
ROUTED TO	RT13	757.	13.50	437.	155.	52.	11.26
HYDROGRAPH AT	SECT34	93.	13.50	39.	12.	4.	0.67
3 COMBINED AT	COMBB	2179.	13.58	1217.	687.	289.	26.26
HYDROGRAPH AT	SECT33	126.	12.75	28.	8.	3.	0.26
HYDROGRAPH AT	kyrene	216.	12.33	26.	7.	2.	0.11
2 COMBINED AT	ckyre	260.	12.33	53.	15.	5.	0.37
2 COMBINED AT	COMBB	2231.	13.58	1252.	701.	294.	26.63
HYDROGRAPH AT	SECT16	4.	14.83	3.	1.	0.	0.23
ROUTED TO	RT1	4.	15.83	3.	1.	0.	0.23
HYDROGRAPH AT	SECT20	267.	12.42	38.	11.	4.	0.29
2 COMBINED AT	COMB1	267.	12.42	40.	12.	4.	0.52
ROUTED TO	RT2	264.	12.75	39.	12.	4.	0.52
HYDROGRAPH AT	SECT29	95.	13.00	29.	9.	3.	0.50

2 COMBINED AT	COMB2	342.	12.75	68.	21.	7.	1.02		
ROUTED TO	RT3	332.	13.00	68.	21.	7.	1.02		
HYDROGRAPH AT	SECT16	215.	12.75	49.	14.	5.	0.50		
ROUTED TO	RT4	212.	13.08	48.	14.	5.	0.50		
HYDROGRAPH AT	SECT21	217.	12.83	53.	16.	5.	0.59		
2 COMBINED AT	COMB3	405.	13.00	101.	30.	10.	1.09		
ROUTED TO	RT5	397.	13.33	100.	30.	10.	1.09		
HYDROGRAPH AT	SECT28	76.	12.92	21.	6.	2.	0.30		
2 COMBINED AT	COMB4	452.	13.25	120.	37.	12.	1.39		
ROUTED TO	RT6	443.	13.42	119.	37.	12.	1.39		
HYDROGRAPH AT	SECT32	135.	12.83	32.	10.	3.	0.33		
3 COMBINED AT	OUTLTC	719.	13.42	217.	68.	23.	2.74		
HYDROGRAPH AT	SECT33	126.	12.50	24.	8.	3.	0.53		
2 COMBINED AT	BASINB	749.	13.42	241.	75.	25.	3.27		
2 COMBINED AT	BASINB	2895.	13.58	1492.	776.	319.	29.90		
DIVERSION TO	BB	1018.	13.58	50.	13.	4.	29.90		
HYDROGRAPH AT	Divert	2895.	13.58	1486.	768.	315.	29.90		
DIVERSION TO	BB2	2095.	12.58	692.	182.	61.	29.90		
HYDROGRAPH AT	DIVBB	800.	12.58	794.	586.	254.	29.90		
ROUTED TO	Rtgila	800.	12.75	794.	586.	254.	29.90		
HYDROGRAPH AT	GilaA	133.	14.17	68.	21.	7.	0.83		
2 COMBINED AT	CGilaA	933.	14.17	861.	607.	261.	30.73		
ROUTED TO	RBI10	932.	14.25	861.	606.	261.	30.73	1153.12	14.25
HYDROGRAPH AT	DA501	1122.	12.17	109.	30.	10.	0.38		
DIVERSION TO	DIVOUT	561.	12.17	54.	15.	5.	0.38		
HYDROGRAPH AT	DIV501	561.	12.17	54.	15.	5.	0.38		
ROUTED TO	RT501	542.	12.25	54.	15.	5.	0.38	3.89	12.25
HYDROGRAPH AT	DA502	864.	12.33	105.	29.	10.	0.42		
2 COMBINED AT	AD502	1378.	12.25	160.	44.	15.	0.80		
DIVERSION TO	DIVOUT	413.	12.25	48.	13.	4.	0.80		
HYDROGRAPH AT	DIV502	964.	12.25	112.	31.	10.	0.80		
ROUTED TO	RT502	941.	12.33	112.	31.	10.	0.80	6.95	12.33

HYDROGRAPH AT	DA503	166.	12.25	19.	5.	2.	0.09		
2 COMBINED AT	AD503	1100.	12.33	130.	36.	12.	0.89		
ROUTED TO	RT503	1095.	12.33	130.	36.	12.	0.89	9.31	12.33
HYDROGRAPH AT	DA504	147.	12.25	15.	4.	1.	0.07		
2 COMBINED AT	AD504	1224.	12.33	146.	40.	13.	0.95		
ROUTED TO	RT504	1213.	12.33	146.	40.	13.	0.95	9.88	12.33
HYDROGRAPH AT	DA505	82.	12.25	8.	2.	1.	0.04		
2 COMBINED AT	AD505	1279.	12.33	154.	42.	14.	0.99		
ROUTED TO	RT505	1253.	12.33	154.	42.	14.	0.99	10.59	12.33
DIVERSION TO	DIVOUT	188.	12.33	23.	6.	2.	0.99		
HYDROGRAPH AT	DIV505	1065.	12.33	131.	36.	12.	0.99		
ROUTED TO	RT505	1059.	12.42	131.	36.	12.	0.99	10.21	12.42
HYDROGRAPH AT	DA506	96.	12.25	10.	3.	1.	0.04		
2 COMBINED AT	AD506	1128.	12.42	141.	39.	13.	1.03		
HYDROGRAPH AT	DA507	91.	12.25	10.	3.	1.	0.04		
ROUTED TO	RT507	89.	12.25	10.	3.	1.	0.04		
2 COMBINED AT	AD506	1195.	12.33	151.	41.	14.	1.07		
ROUTED TO	RT506	1198.	12.42	151.	41.	14.	1.07	10.49	12.42
HYDROGRAPH AT	DA508	48.	12.25	5.	1.	0.	0.02		
HYDROGRAPH AT	DA509	40.	12.17	4.	1.	0.	0.01		
3 COMBINED AT	AD509	1244.	12.42	159.	44.	15.	1.10		
HYDROGRAPH AT	DA510	107.	12.25	11.	3.	1.	0.04		
2 COMBINED AT	AD510	1307.	12.42	170.	47.	16.	1.15		
ROUTED TO	RT510	1311.	12.42	170.	47.	16.	1.15	10.63	12.42
DIVERSION TO	45THST	1183.	12.00	109.	27.	9.	1.15		
HYDROGRAPH AT	PIPES	128.	12.00	61.	19.	6.	1.15		
ROUTED TO	RTPIPE	128.	12.08	61.	19.	6.	1.15		
HYDROGRAPH AT	DA511	233.	12.92	60.	16.	5.	0.36		
2 COMBINED AT	AD511	361.	12.92	120.	36.	12.	1.51		
ROUTED TO	RT511	361.	13.00	120.	36.	12.	1.51	5.97	13.00
HYDROGRAPH AT	45THST	1183.	12.42	109.	27.	9.	0.00		
ROUTED TO	RT45ST	1093.	12.50	109.	27.	9.	0.00	9.67	12.50

2 COMBINED AT	AD511	1363.	12.58	229.	63.	21.	1.51		
ROUTED TO	RT511	1284.	12.67	229.	63.	21.	1.51	20.77	12.67
HYDROGRAPH AT	DA512	164.	12.42	22.	6.	2.	0.13		
2 COMBINED AT	AD512	1386.	12.67	251.	69.	23.	1.63		
DIVERSION TO	CANAL	1326.	12.50	199.	50.	17.	1.63		
HYDROGRAPH AT	DIV512	60.	12.50	53.	19.	6.	1.63		
HYDROGRAPH AT	DA513	193.	12.25	21.	6.	2.	0.09		
HYDROGRAPH AT	DA514	137.	12.17	13.	4.	1.	0.06		
HYDROGRAPH AT	DA515	103.	12.25	11.	3.	1.	0.05		
3 COMBINED AT	AD515	428.	12.25	46.	12.	4.	0.19		
ROUTED TO	RT515	389.	12.33	45.	12.	4.	0.19	7.15	12.33
HYDROGRAPH AT	DA516	184.	12.42	27.	7.	2.	0.15		
3 COMBINED AT	AD516	617.	12.33	124.	39.	13.	1.97		
ROUTED TO	RT516	597.	12.42	124.	39.	13.	1.97	8.50	12.42
HYDROGRAPH AT	DA517	244.	12.33	30.	8.	3.	0.17		
2 COMBINED AT	AD517	825.	12.42	155.	47.	16.	2.14		
ROUTED TO	RT517	819.	12.42	155.	47.	16.	2.14	11.70	12.42
HYDROGRAPH AT	DA518	104.	12.67	21.	6.	2.	0.10		
2 COMBINED AT	AD518	895.	12.42	175.	53.	18.	2.24		
DIVERSION TO	DIVSE	447.	12.42	88.	26.	9.	2.24		
HYDROGRAPH AT	DIV518	447.	12.42	88.	26.	9.	2.24		
ROUTED TO	RT518	414.	12.58	87.	26.	9.	2.24	9.84	12.58
HYDROGRAPH AT	DA519a	219.	12.75	46.	13.	4.	0.22		
2 COMBINED AT	AD519a	620.	12.58	133.	39.	13.	2.46		
HYDROGRAPH AT	DA520a	160.	12.50	26.	7.	2.	0.13		
ROUTED TO	RT520a	146.	12.67	26.	7.	2.	0.13	7.93	12.67
HYDROGRAPH AT	DA520b	387.	12.42	56.	15.	5.	0.22		
2 COMBINED AT	AD520b	504.	12.50	81.	22.	7.	0.35		
DIVERSION TO	DIVBOX	323.	12.50	32.	8.	3.	0.35		
HYDROGRAPH AT	DIV520	180.	12.50	50.	14.	5.	0.35		
ROUTED TO	RT520b	180.	12.50	50.	14.	5.	0.35	10.02	12.50
HYDROGRAPH AT	DIVBOX	323.	12.50	32.	8.	3.	0.00		

2 COMBINED AT	AD520b	503.	12.50	81.	22.	7.	0.35		
ROUTED TO	RT520b	409.	12.67	81.	22.	7.	0.35	10.76	12.67
HYDROGRAPH AT	DA521a	88.	12.67	17.	5.	2.	0.09		
HYDROGRAPH AT	CANAL	1326.	12.67	199.	50.	17.	0.00		
2 COMBINED AT	ADHIGH	1414.	12.67	215.	54.	18.	0.09		
ROUTED TO	RTHIGH	1278.	12.92	215.	54.	18.	0.09	9.52	12.92
HYDROGRAPH AT	DA521b	444.	12.58	82.	22.	7.	0.39		
3 COMBINED AT	AD521b	1946.	12.92	377.	99.	33.	0.84		
ROUTED TO	CHNDLR	1492.	13.17	342.	99.	33.	0.84	1194.28	13.17
DIVERSION TO	DIVOUT	27.	13.17	20.	7.	2.	0.84		
HYDROGRAPH AT	CHNDLR	1465.	13.17	322.	92.	31.	0.84		
ROUTED TO	RTCHLR	1403.	13.33	319.	92.	31.	0.84	9.63	13.33
HYDROGRAPH AT	ONS	125.	12.17	11.	3.	1.	0.04		
2 COMBINED AT	ADONS	1407.	13.33	321.	95.	32.	0.88		
ROUTED TO	RTCHLR	1406.	13.33	321.	95.	32.	0.88	8.44	13.33
HYDROGRAPH AT	DIVSE	447.	12.42	88.	26.	9.	0.00		
ROUTED TO	RTSE	376.	12.83	85.	26.	9.	0.00	9.43	12.83
HYDROGRAPH AT	DA522a	209.	12.58	36.	10.	3.	0.17		
3 COMBINED AT	AD522a	1656.	13.33	435.	131.	44.	1.05		
ROUTED TO	RT522a	1625.	13.33	435.	131.	44.	1.05	8.87	13.33
HYDROGRAPH AT	DA522b	105.	12.58	19.	5.	2.	0.09		
2 COMBINED AT	AD522b	1655.	13.33	453.	137.	46.	1.14		
2 COMBINED AT	AD522b	1869.	13.33	586.	176.	59.	3.60		
HYDROGRAPH AT	DA519b	474.	12.50	78.	21.	7.	0.32		
ROUTED TO	RT519b	441.	12.67	78.	21.	7.	0.32	8.08	12.67
2 COMBINED AT	AD519b	2000.	13.33	663.	197.	66.	3.92		
HYDROGRAPH AT	PMP	211.	12.50	38.	17.	12.	0.16		
2 COMBINED AT	ADPMP	2011.	13.33	697.	213.	77.	4.08		
ROUTED TO	BAS15	879.	14.17	333.	113.	43.	4.08	1164.00	14.17
2 COMBINED AT	I10W	1811.	14.17	1185.	718.	304.	34.81		
ROUTED TO	RI10W	1781.	14.25	1185.	717.	304.	34.81	1153.93	14.25
ROUTED TO	R1Gila	1719.	14.50	1182.	705.	299.	34.81	39.81	14.50

ROUTED TO	R2Gila	1535.	14.92	1137.	683.	290.	34.81	35.66	14.92
ROUTED TO	R3Gila	1415.	15.50	1091.	664.	283.	34.81	27.25	15.50
HYDROGRAPH AT	GIL44N	158.	13.08	52.	15.	5.	0.42		
2 COMBINED AT	CGIL44	1438.	15.42	1104.	668.	288.	35.23		
HYDROGRAPH AT	C218	991.	13.83	488.	148.	49.	2.17		
ROUTED TO	RC218	898.	17.67	455.	145.	48.	2.17		
2 COMBINED AT	CRC218	2007.	17.58	1489.	813.	336.	37.40		
HYDROGRAPH AT	GIL40N	224.	14.50	131.	41.	14.	0.97		
2 COMBINED AT	CGIL40	2077.	17.58	1568.	843.	350.	38.37		
ROUTED TO	RGIL44	1993.	18.00	1536.	827.	338.	38.37	21.87	18.00
ROUTED TO	RGIL44	1983.	18.08	1522.	809.	330.	38.37	16.18	18.08

APPENDIX 2

Channel Hydraulic Analysis Using HEC-RAS

HEC-RAS Plan: Basin "B" 9/12/96

Reach	River Sta.	Q Total	Min Ch El	W.S. Elev	Crit W.S.	E.G. Elev	E.G. Slope	Vel Chnl	Flow Area	Top Width	Froude # Chl
		(m3/s)	(m)	(m)	(m)	(m)	(m/m)	(m/s)	(m2)	(m)	
Santan East	1900	26.56	355.52	357.31	356.90	357.53	0.000654	2.09	12.69	10.73	0.61
Santan East	1898.*	26.56	355.51	357.31	356.90	357.53	0.000649	2.09	12.73	10.75	0.61
Santan East	1896.*	26.56	355.50	357.30	356.88	357.52	0.000641	2.08	12.79	10.79	0.61
Santan East	1894.*	26.56	355.49	357.29	356.88	357.51	0.000688	2.08	12.76	11.33	0.63
Santan East	1892.*	26.56	355.48	357.36	356.82	357.48	0.000369	1.56	17.04	14.89	0.46
Santan East	1890	26.56	355.47	357.38	356.52	357.46	0.000190	1.27	20.88	15.04	0.34
Santan East	1888.*	26.56	355.47	357.37	356.57	357.46	0.000230	1.38	19.29	14.20	0.38
Santan East	1886.*	26.56	355.47	357.34	356.62	357.46	0.000286	1.50	17.66	13.36	0.42
Santan East	1884.*	26.56	355.46	357.32	356.68	357.46	0.000364	1.66	16.02	12.50	0.47
Santan East	1882.*	26.56	355.46	357.27	356.76	357.45	0.000500	1.88	14.13	11.55	0.54
Santan East	1880	26.56	355.46	357.18	356.85	357.43	0.000781	2.23	11.89	10.43	0.67
Santan East	1870	26.56	355.38	357.13	356.77	357.37	0.000740	2.19	12.13	10.52	0.65
Santan East	1860	26.56	355.31	357.08	356.70	357.31	0.000690	2.13	12.44	10.64	0.63
Santan East	1850	26.56	355.23	357.04	356.62	357.26	0.000637	2.07	12.81	10.78	0.61
Santan East	1840	27.61	355.16	356.97	356.58	357.21	0.000677	2.14	12.89	10.81	0.63
Santan East	1830	27.61	355.09	356.93	356.50	357.15	0.000625	2.08	13.28	10.95	0.60
Santan East	1820	27.61	355.01	356.90	356.43	357.11	0.000572	2.01	13.72	11.11	0.58
Santan East	1810	27.61	354.97	356.88	356.39	357.08	0.000548	1.98	13.93	11.19	0.57
Santan East	1800	27.61	354.94	356.86	356.36	357.06	0.000526	1.95	14.15	11.26	0.56
Santan East	1790	28.63	354.92	356.84	356.36	357.05	0.000574	2.04	14.06	11.23	0.58
Santan East	1787.5*	28.63	354.91	356.87	356.24	357.03	0.000395	1.76	16.31	12.35	0.49
Santan East	1785.*	28.63	354.91	356.89	356.14	357.02	0.000291	1.55	18.44	13.42	0.42
Santan East	1782.5*	28.63	354.90	356.91	356.06	357.01	0.000225	1.40	20.49	14.45	0.37
Santan East	1780	28.63	354.90	356.92	355.99	357.00	0.000178	1.27	22.55	15.48	0.34
Santan East	1778.*	28.63	354.89	356.88	356.26	357.00	0.000310	1.50	19.03	15.36	0.43
Santan East	1776.*	28.63	354.88	356.79	356.32	356.98	0.000699	1.94	14.79	15.05	0.62
Santan East	1774.*	28.63	354.87	356.75	356.32	356.97	0.000635	2.11	13.55	11.05	0.61
Santan East	1772.*	28.63	354.86	356.74	356.31	356.97	0.000629	2.10	13.61	11.07	0.61
Santan East	1770	28.63	354.86	356.74	356.30	356.96	0.000625	2.10	13.63	11.08	0.60
Santan East	1766.66*	28.63	354.85	356.77	356.11	356.94	0.000402	1.84	15.60	10.74	0.49
Santan East	1763.33*	28.63	354.85	356.79	355.94	356.93	0.000293	1.65	17.33	10.24	0.41
Santan East	1760	28.63	354.84	356.81	355.80	356.92	0.000246	1.51	18.98	9.66	0.34
Santan East	1750	30.45	354.80	356.75	355.85	356.90	0.000540	1.73	17.55	9.00	0.40
Santan East	1740	30.45	354.73	356.72	355.77	356.86	0.000512	1.70	17.91	9.00	0.38
Santan East	1730	32.27	354.65	356.66	355.74	356.82	0.000563	1.79	18.07	9.00	0.40
Santan East	1720	32.27	354.58	356.62	355.67	356.78	0.000537	1.75	18.41	9.00	0.39
Santan East	1710	34.09	354.50	356.56	355.63	356.73	0.000588	1.84	18.54	9.00	0.41
Santan East	1700	34.09	354.43	356.52	355.56	356.69	0.000563	1.81	18.86	9.00	0.40
Santan East	1690	34.09	354.35	356.48	355.48	356.65	0.000537	1.78	19.20	9.00	0.39
Santan East	1680	35.91	354.28	356.43	355.45	356.60	0.000585	1.86	19.34	9.00	0.40
Santan East	1670	35.91	354.20	356.39	355.37	356.56	0.000561	1.83	19.67	9.00	0.39
Santan East	1660	35.91	354.13	356.35	355.30	356.51	0.000537	1.79	20.01	9.00	0.38
Santan East	1650	35.91	354.06	356.32	355.23	356.48	0.000515	1.77	20.34	9.00	0.37
Santan East	1640	37.72	354.03	356.31	355.18	356.46	0.000275	1.71	22.08	9.66	0.39
Santan East	1635	Culvert									
Santan East	1630	37.72	353.96	356.15	355.12	356.31	0.000313	1.79	21.10	9.66	0.39
Santan East	1628.*	37.72	353.96	356.14	355.20	356.31	0.000328	1.86	20.30	10.25	0.42
Santan East	1626.*	37.72	353.96	356.12	355.30	356.31	0.000372	1.95	19.32	10.75	0.46
Santan East	1624.*	37.72	353.96	356.09	355.40	356.31	0.000448	2.07	18.21	11.18	0.52
Santan East	1622.*	37.72	353.95	356.06	355.50	356.30	0.000557	2.21	17.08	11.55	0.58
Santan East	1620	37.72	353.95	356.00	355.62	356.30	0.000766	2.43	15.50	11.73	0.68
Santan East	1617.5*	37.72	353.94	355.99	355.60	356.29	0.000754	2.42	15.60	11.79	0.67
Santan East	1615.*	37.72	353.93	356.00	355.60	356.27	0.000880	2.28	16.52	15.58	0.71
Santan East	1612.5*	37.72	353.92	356.07	355.49	356.23	0.000400	1.78	21.15	15.96	0.49
Santan East	1610	37.72	353.91	356.10	355.19	356.21	0.000227	1.50	25.18	16.14	0.38
Santan East	1607.5*	37.72	353.90	356.07	355.25	356.21	0.000286	1.65	22.91	15.11	0.43
Santan East	1605.*	37.72	353.90	356.03	355.34	356.20	0.000379	1.84	20.47	14.01	0.49
Santan East	1602.5*	37.72	353.90	355.96	355.44	356.20	0.000554	2.14	17.63	12.77	0.58
Santan East	1600	37.72	353.89	355.81	355.56	356.18	0.000996	2.68	14.07	11.23	0.76
Santan East	1590	37.72	353.81	355.74	355.48	356.10	0.000996	2.68	14.07	11.24	0.76
Santan East	1580	37.72	353.74	355.66	355.41	356.03	0.000995	2.68	14.08	11.24	0.76
Santan East	1570	37.72	353.66	355.59	355.33	355.95	0.000994	2.68	14.08	11.24	0.76
Santan East	1560	37.72	353.59	355.51	355.26	355.88	0.000993	2.68	14.09	11.24	0.76
Santan East	1550	37.72	353.51	355.44	355.18	355.80	0.000992	2.68	14.09	11.24	0.76
Santan East	1540	37.72	353.44	355.36	355.11	355.73	0.000990	2.67	14.10	11.25	0.76
Santan East	1530	37.72	353.36	355.29	355.03	355.65	0.000988	2.67	14.11	11.25	0.76
Santan East	1520	37.72	353.29	355.22	354.96	355.58	0.000986	2.67	14.12	11.25	0.76
Santan East	1510	37.72	353.22	355.14	354.88	355.50	0.000983	2.67	14.14	11.26	0.76
Santan East	1500	37.72	353.14	355.07	354.81	355.43	0.000980	2.66	14.16	11.27	0.76
Santan East	1490	37.72	353.07	355.00	354.73	355.36	0.000976	2.66	14.18	11.27	0.76
Santan East	1480	37.72	352.99	354.92	354.66	355.28	0.000971	2.66	14.20	11.28	0.76
Santan East	1470	37.72	352.92	354.85	354.58	355.21	0.000966	2.65	14.23	11.29	0.75
Santan East	1460	37.72	352.84	354.78	354.51	355.13	0.000960	2.64	14.27	11.30	0.75
Santan East	1450	37.72	352.77	354.71	354.43	355.06	0.000952	2.64	14.31	11.32	0.75
Santan East	1440	37.72	352.69	354.64	354.36	354.99	0.000944	2.63	14.35	11.34	0.75
Santan East	1430	37.72	352.61	354.57	354.28	354.91	0.000934	2.62	14.41	11.36	0.74
Santan East	1420	37.72	352.54	354.50	354.21	354.84	0.000922	2.61	14.48	11.38	0.74
Santan East	1410	37.72	352.46	354.43	354.13	354.77	0.000909	2.59	14.55	11.41	0.73
Santan East	1400	37.72	352.39	354.36	354.06	354.70	0.000893	2.58	14.64	11.44	0.73
Santan East	1390	37.72	352.31	354.30	353.98	354.63	0.000876	2.56	14.75	11.48	0.72
Santan East	1380	37.72	352.24	354.23	353.91	354.56	0.000852	2.53	14.91	11.53	0.71
Santan East	1370	37.72	352.17	354.18	353.83	354.49	0.000824	2.50	15.09	11.59	0.70
Santan East	1360	37.72	352.09	354.12	353.76	354.43	0.000793	2.46	15.30	11.67	0.69
Santan East	1350	37.72	352.02	354.06	353.68	354.36	0.000759	2.43	15.55	11.75	0.67
Santan East	1340	37.72	351.94	354.01	353.61	354.30	0.000722	2.38	15.84	11.85	0.66
Santan East	1330	37.72	351.87	353.97	353.53	354.25	0.000677	2.33	16.22	11.98	0.64
Santan East	1320	37.72	351.79	353.93	353.46	354.19	0.000630	2.26	16.65	12.12	0.62
Santan East	1310	37.72	351.72	353.90	353.38	354.14	0.000583	2.20	17.14	12.28	0.59
Santan East	1300	37.72	351.64	353.87	353.31	354.10	0.000537	2.13	17.68	12.45	0.57
Santan East	1290	39.64	351.56	353.80	353.28	354.05	0.000585	2.23	17.76	12.48	0.60
Santan East	1280	41.65	351.49	353.72	353.24	354.00	0.000646	2.35	17.76	12.48	0.63
Santan East	1270	43.66	351.41	353.64	353.21	353.95	0.000720	2.47	17.67	12.45	0.66
Santan East	1260	45.67	351.37	353.54	353.21	353.91	0.000876	2.69	16.99	12.23	0.73

HEC-RAS Plan: Basin "B" 9/12/96 (continued)

Reach	River Sta.	Q Total	Min Ch El	W.S. Elev	Crit W.S.	E.G. Elev	E.G. Slope	Vel Chnl	Flow Area	Top Width	Froude # Chl
		(m3/s)	(m)	(m)	(m)	(m)	(m/m)	(m/s)	(m2)	(m)	
Santan East	1250	47.68	351.33	353.21	353.21	353.84	0.001740	3.50	13.62	11.07	1.01
Santan East	1247.5*	47.68	351.33	352.82	353.08	353.78	0.003274	4.35	10.96	10.48	1.36
Santan East	1245.*	47.68	351.32	353.41	352.94	353.70	0.000635	2.37	20.14	13.95	0.63
Santan East	1242.5*	47.68	351.31	353.45	352.84	353.68	0.000472	2.10	22.68	15.09	0.55
Santan East	1240	49.96	351.30	353.46	352.79	353.67	0.000413	2.01	24.88	16.12	0.52
Santan East	1230	51.70	351.23	353.43	352.75	353.63	0.000412	2.02	25.54	16.28	0.52
Santan East	1220	53.71	351.15	353.39	352.70	353.60	0.000416	2.05	26.14	16.43	0.52
Santan East	1210	55.72	351.08	353.35	352.66	353.57	0.000420	2.08	26.75	16.58	0.52
Santan East	1200	57.73	351.00	353.31	352.62	353.54	0.000423	2.11	27.37	16.73	0.53
Santan East	1190	59.74	350.93	353.27	352.58	353.51	0.000425	2.13	28.00	16.87	0.53
Santan East	1180	61.71	350.87	353.24	352.54	353.48	0.000437	2.17	28.38	16.96	0.54
Santan East	1176.66*	61.71	350.86	353.27	352.44	353.46	0.000330	1.94	31.83	18.37	0.47
Santan East	1173.33*	61.71	350.85	353.29	352.33	353.45	0.000254	1.74	35.45	19.85	0.42
Santan East	1170	61.71	350.84	353.31	352.26	353.44	0.000206	1.60	38.68	21.18	0.38
Santan East	1167.5*	61.71	350.83	353.27	352.45	353.43	0.000291	1.77	34.87	21.09	0.44
Santan East	1165.*	61.71	350.82	353.20	352.53	353.42	0.000485	2.07	29.84	20.86	0.55
Santan East	1162.5*	61.71	350.81	353.11	352.52	353.41	0.000551	2.42	25.45	15.07	0.60
Santan East	1160	61.71	350.80	353.10	352.51	353.40	0.000549	2.42	25.49	15.08	0.59
Santan East	1156.66*	61.71	350.80	353.16	352.28	353.37	0.000335	2.04	30.32	15.59	0.47
Santan East	1153.33*	61.71	350.79	353.20	352.09	353.36	0.000231	1.77	34.93	15.97	0.38
Santan East	1150	63.17	350.79	353.22	351.94	353.35	0.000189	1.61	39.36	16.22	0.35
Santan East	1145	Culvert									
Santan East	1140	63.17	350.75	353.07	351.90	353.21	0.000217	1.68	37.61	16.22	0.35
Santan East	1136.66*	63.17	350.74	353.03	352.05	353.21	0.000274	1.88	33.64	16.36	0.42
Santan East	1133.33*	63.17	350.74	352.96	352.23	353.20	0.000406	2.16	29.25	16.35	0.52
Santan East	1130	63.17	350.73	352.83	352.43	353.18	0.000741	2.64	23.90	15.90	0.69
Santan East	1128.33*	63.17	350.73	352.82	352.42	353.18	0.000736	2.64	23.95	15.91	0.69
Santan East	1126.66*	63.17	350.72	352.83	352.42	353.17	0.000884	2.56	24.64	19.82	0.73
Santan East	1125.*	63.17	350.72	352.87	352.47	353.14	0.000640	2.32	27.26	20.01	0.63
Santan East	1123.33*	63.17	350.71	352.90	352.35	353.13	0.000488	2.13	29.66	20.15	0.56
Santan East	1121.66*	63.17	350.71	352.92	352.24	353.12	0.000386	1.98	31.87	20.25	0.50
Santan East	1120	63.17	350.70	352.93	352.13	353.10	0.000312	1.85	34.06	20.35	0.46
Santan East	1117.5*	63.17	350.70	352.90	352.18	353.10	0.000376	2.00	31.55	19.28	0.50
Santan East	1115.*	63.17	350.69	352.85	352.23	353.09	0.000467	2.19	28.89	18.17	0.55
Santan East	1112.5*	63.17	350.68	352.78	352.30	353.08	0.000608	2.43	26.00	16.98	0.63
Santan East	1110	63.17	350 68	352.65	352.38	353.07	0.000939	2.87	22.00	15.48	0.77
Santan East	1100	63.71	350.60	352.56	352.31	353.00	0.000973	2.92	21.83	15.39	0.78
Santan East	1090	63.71	350.53	352.51	352.22	352.92	0.000910	2.83	22.51	15.85	0.76
Santan East	1080	63.71	350.45	352.45	352.15	352.84	0.000875	2.78	22.90	16.09	0.74
Santan East	1070	63.71	350.38	352.39	352.07	352.77	0.000831	2.72	23.39	16.35	0.73
Santan East	1065	63.71	350.34	352.37	352.02	352.73	0.000802	2.68	23.77	16.58	0.71
Santan East	1063.33*	63.71	350.34	352.43	351.92	352.70	0.000567	2.33	27.31	18.14	0.61
Santan East	1061.66*	63.71	350.33	352.47	351.82	352.68	0.000420	2.07	30.85	19.72	0.53
Santan East	1060	63.71	350.32	352.49	351.73	352.67	0.000329	1.87	34.10	21.14	0.47
Santan East	1059.5*	63.71	350.32	352.45	351.85	352.66	0.000434	2.04	31.30	21.01	0.53
Santan East	1059.*	63.71	350.31	352.40	351.97	352.66	0.000604	2.26	28.24	20.82	0.62
Santan East	1058.5*	63.71	350.31	352.26	352.08	352.64	0.001097	2.73	23.33	20.24	0.81
Santan East	1058	63.71	350.30	351.99	351.99	352.60	0.001671	3.48	18.31	15.05	1.01
Santan East	1057.*	63.71	350.30	351.74	351.87	352.54	0.002325	3.97	16.05	13.67	1.17
Santan East	1056.*	63.71	350.29	351.53	351.75	352.50	0.003089	4.36	14.62	13.01	1.31
Santan East	1055	63.71	350.29	351.36	351.64	352.44	0.004016	4.61	13.83	12.92	1.42
Santan East	1052.55*	63.71	349.87	350.77	351.22	352.31	0.007050	5.51	11.57	12.90	1.86
Santan East	1050.1	63.71	349.46	351.66	350.81	351.92	0.000439	2.24	28.41	12.92	0.48
Santan East	1050	63.71	349.46	351.57	350.88	351.90	0.001520	2.51	25.38	12.00	0.55
Santan East	1048.33*	63.71	349.43	351.55	350.85	351.87	0.001520	2.51	25.38	12.00	0.55
Santan East	1046.66*	63.71	349.40	351.52	350.82	351.84	0.001519	2.51	25.39	12.00	0.55
Santan East	1045.*	63.71	349.36	351.49	350.78	351.81	0.001496	2.49	25.54	12.00	0.55
Santan East	1043.33*	63.71	349.33	351.46	350.75	351.78	0.001494	2.49	25.56	12.00	0.55
Santan East	1041.66*	63.71	349.30	351.43	350.72	351.75	0.001492	2.49	25.57	12.00	0.54
Santan East	1040	63.71	349.27	351.40	350.68	351.72	0.001486	2.49	25.61	12.00	0.54
Santan East	1039.9	63.71	349.27	351.44	350.62	351.70	0.000456	2.27	28.05	12.92	0.49
Santan West	2220	4.25	353.21	353.86	353.81	354.04	0.001828	1.89	2.25	4.87	0.89
Santan West	2210	4.25	353.13	353.75	353.72	353.95	0.002002	1.95	2.18	4.81	0.93
Santan West	2200	4.25	352.97	353.60	353.57	353.80	0.001978	1.94	2.19	4.82	0.92
Santan West	2195	4.25	352.82	353.49	353.42	353.66	0.001553	1.78	2.38	4.98	0.82
Santan West	2190	4.25	352.82	353.49	353.41	353.65	0.001532	1.77	2.40	4.99	0.82
Santan West	2180	4.25	352.64	353.46	353.24	353.55	0.000721	1.35	3.14	5.56	0.57
Santan West	2170	5.66	352.49	353.30	353.20	353.47	0.001326	1.82	3.10	5.53	0.78
Santan West	2167.5*	5.66	352.48	353.35	353.09	353.44	0.000608	1.34	4.23	6.74	0.54
Santan West	2165.*	5.66	352.47	353.37	353.02	353.43	0.000365	1.09	5.22	7.81	0.42
Santan West	2162.5*	5.66	352.46	353.38	352.97	353.42	0.000246	0.92	6.16	8.85	0.35
Santan West	2160	5.66	352.45	353.38	352.93	353.42	0.000180	0.80	7.04	9.86	0.30
Santan West	2158.*	5.66	352.45	353.37	353.05	353.42	0.000319	0.96	5.92	9.81	0.39
Santan West	2156.*	5.66	352.44	353.34	353.16	353.41	0.000669	1.20	4.73	9.71	0.55
Santan West	2154.*	5.66	352.44	353.21	353.14	353.40	0.001574	1.94	2.92	5.41	0.84
Santan West	2152.*	5.66	352.43	353.20	353.13	353.39	0.001606	1.95	2.90	5.39	0.85
Santan West	2150	5.66	352.43	353.13	353.13	353.38	0.002311	2.23	2.54	5.11	1.01
Santan West	2148.*	5.66	352.09	352.54	352.77	353.30	0.010483	3.87	1.46	3.97	2.03
Santan West	2146.*	5.66	351.76	352.11	352.42	353.29	0.020619	4.81	1.18	3.78	2.75
Santan West	2144.*	5.66	351.43	352.70	352.06	352.76	0.000255	1.08	5.24	4.83	0.33
Santan West	2142.*	5.66	351.10	352.71	351.69	352.75	0.000123	0.83	6.86	4.63	0.22
Santan West	2140	5.66	350.77	352.72	351.33	352.74	0.000073	0.67	8.47	4.34	0.17
Santan West	2135	Culvert									
Santan West	2130	5.66	350.68	352.47	351.23	352.50	0.000092	0.73	7.78	4.34	0.17
Santan West	2126.66*	5.66	350.67	352.47	351.26	352.49	0.000061	0.64	8.84	6.04	0.17
Santan West	2123.33*	5.66	350.65	352.47	351.28	352.49	0.000047	0.57	10.01	7.78	0.16
Santan West	2120	20.36	350.64	352.17	351.97	352.46	0.001079	2.39	8.52	8.53	0.76
Santan West	2118.*	20.36	350.63	352.16	351.96	352.45	0.001075	2.39	8.54	8.54	0.76
Santan West	2116.*	20.36	350.62	352.21	352.06	352.43	0.001101	2.05	9.92	12.99	0.75
Santan West	2114.*	20.36	350.61	352.26	351.88	352.40	0.000508	1.61	12.61	13.25	0.53
Santan West	2112.*	20.36	350.60	352.29	351.70	352.38	0.000299	1.37	14.84	13.34	0.42
Santan West	2110	20.36	350.59	352.30	351.52	352.38	0.000197	1.21	16.82	13.37	0.34

HEC-RAS Plan: Basin "B" 9/12/96 (continued)

Reach	River Sta.	Q Total	Min Ch El	W.S. Elev	Crit W.S.	E.G. Elev	E.G. Slope	Vel Chnl	Flow Area	Top Width	Froude # Chl
		(m3/s)	(m)	(m)	(m)	(m)	(m/m)	(m/s)	(m2)	(m)	
Santan West	2108.*	20.36	350.59	352.29	351.57	352.37	0.000243	1.32	15.42	12.55	0.38
Santan West	2106.*	20.36	350.58	352.26	351.63	352.37	0.000314	1.46	13.92	11.72	0.43
Santan West	2104.*	20.36	350.58	352.23	351.70	352.37	0.000426	1.65	12.33	10.84	0.49
Santan West	2102.*	20.36	350.57	352.17	351.78	352.36	0.000635	1.93	10.55	9.86	0.60
Santan West	2100	20.36	350.57	352.01	351.88	352.34	0.001301	2.54	8.02	8.49	0.83
Santan West	2090	20.36	350.37	351.96	351.68	352.21	0.000873	2.19	9.29	9.07	0.69
Santan West	2080	20.36	350.23	351.94	351.55	352.14	0.000657	1.97	10.31	9.51	0.61
Santan West	2070	20.36	350.10	351.92	351.41	352.08	0.000493	1.77	11.47	9.98	0.53
Santan West	2060	21.24	349.96	351.90	351.31	352.04	0.000414	1.68	12.63	10.44	0.49
Santan West	2050	21.24	349.89	351.88	351.23	352.01	0.000368	1.61	13.20	10.65	0.46
Santan West	2040	21.24	349.81	351.86	351.16	351.98	0.000325	1.54	13.81	10.88	0.44
Santan West	2030	21.24	349.74	351.85	351.08	351.96	0.000287	1.47	14.47	11.12	0.41
Santan West	2020	21.24	349.66	351.83	351.01	351.93	0.000253	1.40	15.16	11.37	0.39
Santan West	2010	21.24	349.59	351.82	350.93	351.91	0.000223	1.34	15.89	11.62	0.36
Santan West	2000	21.24	349.51	351.80	350.88	351.90	0.000217	1.34	15.87	11.24	0.36
Santan West	1990	21.24	349.49	351.80	350.83	351.88	0.000191	1.26	16.80	11.83	0.34
Santan West	1980	21.24	349.42	351.79	350.77	351.87	0.000178	1.24	17.17	11.83	0.33
Santan West	1979.25*	21.24	349.42	351.80	350.64	351.87	0.000129	1.10	19.39	12.66	0.28
Santan West	1978.5*	21.24	349.41	351.81	350.53	351.86	0.000098	0.98	21.60	13.46	0.25
Santan West	1977.75*	21.24	349.41	351.82	350.44	351.86	0.000076	0.89	23.79	14.30	0.22
Santan West	1977	21.24	349.41	351.82	350.36	351.86	0.000061	0.82	26.02	15.10	0.20
Santan West	1976.6*	21.24	349.40	351.81	350.59	351.85	0.000083	0.90	23.64	15.07	0.23
Santan West	1976.2*	21.24	349.40	351.80	350.80	351.85	0.000119	1.00	21.23	15.03	0.27
Santan West	1975.8*	21.24	349.39	351.78	350.78	351.85	0.000178	1.13	18.77	14.97	0.32
Santan West	1975.4*	21.24	349.39	351.75	350.77	351.84	0.000299	1.33	16.03	14.85	0.41
Santan West	1975	21.24	349.38	351.74	350.77	351.83	0.000209	1.33	15.92	10.85	0.35
Santan West	1973.36*	21.24	349.38	351.72	350.71	351.83	0.000241	1.47	14.49	8.89	0.37
Santan West	1971.73*	21.24	349.37	351.69	350.65	351.82	0.000303	1.64	12.99	6.97	0.38
Santan West	1970.1	21.24	349.37	351.63	350.58	351.81	0.000467	1.87	11.38	5.03	0.40
Santan West	1970	21.24	349.37	351.60	350.62	351.80	0.000924	1.98	10.71	4.80	0.42
Santan West	1968.*	21.24	349.35	351.58	350.61	351.78	0.000925	1.98	10.71	4.80	0.42
Santan West	1966.*	21.24	349.33	351.56	350.59	351.76	0.000925	1.98	10.71	4.80	0.42
Santan West	1964.*	21.24	349.31	351.54	350.57	351.74	0.000924	1.98	10.71	4.80	0.42
Santan West	1962.*	21.24	349.29	351.52	350.55	351.72	0.000924	1.98	10.72	4.80	0.42
Santan West	1960	21.24	349.27	351.50	350.52	351.70	0.000921	1.98	10.73	4.80	0.42
Santan West	1959.9	21.24	349.27	351.52	350.48	351.70	0.000474	1.88	11.31	5.03	0.40
Santan South	2110	84.96	349.27	351.46	350.57	351.69	0.000360	2.13	39.84	18.18	0.46
Santan South	2105.02*	84.96	349.26	351.42	350.64	351.68	0.000417	2.27	37.47	18.20	0.50
Santan South	2100.05*	84.96	349.25	351.37	350.71	351.66	0.000502	2.42	35.17	18.71	0.56
Santan South	2095.07*	84.96	349.25	351.31	350.79	351.65	0.000615	2.59	33.44	19.60	0.62
Santan South	2090.1	84.96	349.24	350.86	350.86	351.54	0.001703	3.64	23.31	19.16	1.00
Santan South	2090	84.96	349.24	350.86	350.86	351.54	0.001702	3.64	23.31	25.23	1.04
Santan South	2082.5*	79.76	349.24	350.74	350.82	351.50	0.002095	3.86	20.66	20.16	1.10
Santan South	2075.*	74.57	349.23	350.77	350.78	351.44	0.001786	3.61	20.64	19.82	1.01
Santan South	2067.5*	69.38	349.22	350.65	350.74	351.40	0.002225	3.83	18.09	18.70	1.12
Santan South	2060.*	64.19	349.21	350.66	350.70	351.33	0.001998	3.64	17.62	18.22	1.06
Santan South	2052.5*	58.99	349.20	350.55	350.66	351.28	0.002354	3.79	15.58	17.19	1.14
Santan South	2045.*	53.80	349.20	350.63	350.61	351.20	0.001745	3.36	16.03	17.04	0.98
Santan South	2037.5*	48.61	349.19	350.65	350.55	351.14	0.001436	3.08	15.79	16.61	0.89
Santan South	2030.*	43.42	349.18	350.68	350.49	351.08	0.001163	2.80	15.52	16.19	0.80
Santan South	2022.5*	38.22	349.17	350.71	350.42	351.03	0.000909	2.50	15.30	15.82	0.70
Santan South	2015.*	33.03	349.16	350.74	350.35	350.99	0.000709	2.22	14.91	15.42	0.62
Santan South	2007.5*	27.84	349.15	350.76	350.26	350.95	0.000536	1.93	14.41	18.93	0.54
Santan South	2000	22.65	349.15	350.79	350.17	350.92	0.000380	1.63	13.89	18.43	0.45
Santan South	1999.9	22.65	349.15	350.79	350.16	350.92	0.000382	1.63	13.89	12.33	0.45
Santan South	1998.67*	22.65	349.14	350.79	350.17	350.92	0.000410	1.59	14.48	11.79	0.45
Santan South	1997.45*	22.65	349.14	350.79	350.18	350.92	0.000473	1.59	14.23	11.32	0.45
Santan South	1996.22*	22.65	349.14	350.79	350.20	350.91	0.000475	1.58	14.34	11.80	0.46
Santan South	1995	22.65	349.14	350.79	350.20	350.91	0.000535	1.55	14.59	12.35	0.46
Santan South	1963.05*	22.65	349.10	350.76	350.16	350.88	0.000522	1.54	14.71	12.37	0.45
Santan South	1931.11*	22.65	349.06	350.74	350.12	350.85	0.000501	1.52	14.94	12.48	0.44
Santan South	1899.16*	22.65	349.02	350.71	350.08	350.83	0.000483	1.50	15.13	12.52	0.43
Santan South	1867.22*	22.65	348.98	350.69	350.04	350.80	0.000462	1.47	15.38	12.62	0.43
Santan South	1835.27*	22.65	348.94	350.67	350.00	350.78	0.000443	1.45	15.60	12.68	0.42
Santan South	1803.33*	22.65	348.90	350.65	349.96	350.75	0.000425	1.43	15.83	12.74	0.41
Santan South	1771.38*	22.65	348.86	350.63	349.92	350.73	0.000405	1.40	16.13	12.85	0.40
Santan South	1739.44*	22.65	348.82	350.61	349.88	350.71	0.000387	1.38	16.39	12.91	0.39
Santan South	1707.5*	22.65	348.78	350.59	349.85	350.69	0.000377	1.37	16.52	12.94	0.39
Santan South	1675.55*	22.65	348.74	350.58	349.80	350.67	0.000350	1.33	16.99	13.11	0.37
Santan South	1643.61*	22.65	348.70	350.56	349.76	350.65	0.000331	1.30	17.36	13.26	0.36
Santan South	1611.66*	22.65	348.66	350.55	349.72	350.63	0.000315	1.28	17.66	13.32	0.36
Santan South	1579.72*	22.65	348.62	350.53	349.68	350.61	0.000299	1.26	17.97	13.40	0.35
Santan South	1547.77*	22.65	348.58	350.52	349.64	350.60	0.000283	1.24	18.32	13.49	0.34
Santan South	1515.83*	22.65	348.54	350.51	349.60	350.58	0.000267	1.21	18.73	13.64	0.33
Santan South	1483.88*	22.65	348.50	350.50	349.56	350.57	0.000251	1.18	19.17	13.80	0.32
Santan South	1451.94*	22.65	348.46	350.48	349.52	350.55	0.000238	1.16	19.54	13.89	0.31
Santan South	1420	22.65	348.42	350.47	349.48	350.54	0.000225	1.14	19.93	13.98	0.30
Santan South	1320	22.65	348.37	350.46	349.43	350.52	0.000208	1.11	20.49	14.14	0.29
Santan South	1317.5*	22.65	348.36	350.47	349.35	350.52	0.000162	1.00	22.69	15.20	0.26
Santan South	1315.*	22.65	348.36	350.47	349.29	350.52	0.000131	0.91	24.77	16.22	0.24
Santan South	1312.5*	22.65	348.36	350.48	349.24	350.51	0.000108	0.84	26.88	17.23	0.22
Santan South	1310	22.65	348.35	350.48	349.19	350.51	0.000090	0.78	29.00	18.27	0.20
Santan South	1308.33*	22.65	348.35	350.48	349.33	350.51	0.000112	0.83	27.22	18.29	0.22
Santan South	1306.66*	22.65	348.35	350.47	349.47	350.51	0.000142	0.90	25.30	18.27	0.24
Santan South	1305.*	22.65	348.34	350.46	349.40	350.51	0.000187	0.97	23.27	18.21	0.27
Santan South	1303.33*	22.65	348.34	350.45	349.40	350.51	0.000252	1.06	21.28	18.15	0.31
Santan South	1301.66*	22.65	348.33	350.44	349.39	350.51	0.000200	1.09	20.78	14.22	0.29
Santan South	1300	22.65	348.33	350.44	349.39	350.50	0.000201	1.09	20.75	14.21	0.29
Santan South	1297.75*	22.65	348.33	350.43	349.40	350.50	0.000209	1.20	18.83	12.25	0.31
Santan South	1295.5*	22.65	348.32	350.40	349.40	350.49	0.000266	1.36	16.61	10.11	0.34
Santan South	1293.25*	22.65	348.32	350.36	349.42	350.48	0.000323	1.57	14.41	8.15	0.38
Santan South	1291	22.65	348.32	350.30	349.42	350.47	0.000443	1.84	12.32	6.23	0.42

HEC-RAS Plan: Basin "B" 9/12/96 (continued)

Reach	River Sta.	Q Total	Min Ch El	W.S. Elev	Crit W.S.	E.G. Elev	E.G. Slope	Vel Chnl	Flow Area	Top Width	Froude # Chl
		(m3/s)	(m)	(m)	(m)	(m)	(m/m)	(m/s)	(m2)	(m)	
Santan South	1290	22.65	348.32	350.27	349.45	350.46	0.000782	1.93	11.74	6.00	0.44
Santan South	1283.57*	22.65	348.28	350.24	349.41	350.43	0.000783	1.93	11.74	6.00	0.44
Santan South	1277.14*	22.65	348.24	350.20	349.37	350.39	0.000782	1.93	11.74	6.00	0.44
Santan South	1270.71*	22.65	348.20	350.16	349.33	350.35	0.000781	1.93	11.75	6.00	0.44
Santan South	1264.28*	22.65	348.16	350.12	349.29	350.31	0.000780	1.93	11.75	6.00	0.44
Santan South	1257.85*	22.65	348.12	350.08	349.25	350.27	0.000779	1.93	11.76	6.00	0.44
Santan South	1251.42*	22.65	348.08	350.04	349.21	350.23	0.000778	1.93	11.77	6.00	0.44
Santan South	1245.*	22.65	348.04	350.00	349.17	350.19	0.000777	1.92	11.77	6.00	0.44
Santan South	1238.57*	22.65	348.00	349.96	349.13	350.15	0.000775	1.92	11.78	6.00	0.44
Santan South	1232.14*	22.65	347.96	349.92	349.09	350.11	0.000774	1.92	11.79	6.00	0.44
Santan South	1225.71*	22.65	347.92	349.89	349.05	350.07	0.000773	1.92	11.80	6.00	0.44
Santan South	1219.28*	22.65	347.88	349.85	349.01	350.04	0.000771	1.92	11.81	6.00	0.44
Santan South	1212.85*	22.65	347.84	349.81	348.97	350.00	0.000769	1.92	11.82	6.00	0.44
Santan South	1206.42*	22.65	347.80	349.77	348.93	349.96	0.000768	1.92	11.83	6.00	0.44
Santan South	1200	22.65	347.76	349.73	348.89	349.92	0.000765	1.91	11.84	6.00	0.43
Santan South	1193.33*	22.65	347.72	349.70	348.86	349.89	0.000767	1.91	11.83	6.00	0.44
Santan South	1186.66*	22.65	347.69	349.67	348.82	349.85	0.000761	1.91	11.87	6.00	0.43
Santan South	1180.*	22.65	347.66	349.64	348.79	349.82	0.000763	1.91	11.86	6.00	0.43
Santan South	1173.33*	22.65	347.62	349.60	348.76	349.79	0.000760	1.91	11.87	6.00	0.43
Santan South	1166.66*	22.65	347.59	349.57	348.72	349.76	0.000757	1.90	11.89	6.00	0.43
Santan South	1160	22.65	347.56	349.54	348.69	349.73	0.000757	1.90	11.89	6.00	0.43
Santan South	1159	22.65	347.56	349.55	348.66	349.72	0.000660	1.83	12.39	6.23	0.41
Santan South	1156.75*	22.65	347.55	349.53	348.76	349.71	0.000654	1.87	12.11	7.07	0.46
Santan South	1154.5*	22.65	347.55	349.53	348.83	349.71	0.000655	1.86	12.20	8.07	0.48
Santan South	1152.25*	22.65	347.55	349.53	348.91	349.70	0.000686	1.84	12.31	9.12	0.51
Santan South	1150	22.65	347.54	349.53	348.99	349.70	0.000741	1.82	12.42	10.25	0.53
Santan South	1149.16*	22.65	347.54	349.53	348.99	349.70	0.000746	1.83	12.38	10.23	0.53
Santan South	1148.33*	22.65	347.53	349.52	348.98	349.69	0.000731	1.81	12.48	10.30	0.53
Santan South	1147.5*	22.65	347.53	349.53	348.98	349.68	0.000884	1.70	13.32	14.29	0.56
Santan South	1146.66*	22.65	347.52	349.56	348.99	349.66	0.000472	1.40	16.15	14.42	0.42
Santan South	1145.83*	22.65	347.52	349.57	348.76	349.65	0.000285	1.20	18.84	14.53	0.34
Santan South	1145	22.65	347.51	349.58	348.52	349.64	0.000188	1.06	21.38	14.59	0.28
Santan South	1143.75*	22.65	347.51	349.57	348.60	349.64	0.000247	1.18	19.14	13.52	0.32
Santan South	1142.5*	22.65	347.50	349.54	348.69	349.63	0.000333	1.33	16.99	12.48	0.36
Santan South	1141.25*	22.65	347.50	349.51	348.80	349.63	0.000493	1.56	14.56	11.32	0.44
Santan South	1140	22.65	347.50	349.44	348.94	349.62	0.000820	1.89	11.95	10.07	0.56
Santan South	1135.*	22.65	347.46	349.40	348.91	349.58	0.000827	1.90	11.92	10.07	0.56
Santan South	1130.*	22.65	347.42	349.35	348.87	349.54	0.000837	1.91	11.86	10.02	0.56
Santan South	1125.*	22.65	347.38	349.31	348.83	349.50	0.000836	1.91	11.86	10.03	0.56
Santan South	1120.*	22.65	347.34	349.27	348.80	349.46	0.000870	1.94	11.70	9.99	0.57
Santan South	1115.*	22.65	347.30	349.23	348.75	349.42	0.000842	1.91	11.84	10.03	0.56
Santan South	1110.*	22.65	347.26	349.19	348.71	349.38	0.000853	1.92	11.77	9.98	0.57
Santan South	1105.*	22.65	347.22	349.15	348.67	349.33	0.000856	1.93	11.75	9.97	0.57
Santan South	1100	22.65	347.18	349.10	348.63	349.29	0.000861	1.93	11.74	9.98	0.57
Santan South	1093.18*	22.65	347.15	349.06	348.59	349.25	0.000865	1.93	11.72	9.98	0.57
Santan South	1086.36*	22.65	347.11	349.02	348.56	349.21	0.000881	1.95	11.64	9.94	0.57
Santan South	1079.54*	22.65	347.07	348.98	348.52	349.17	0.000884	1.95	11.62	9.94	0.58
Santan South	1072.72*	22.65	347.03	348.94	348.48	349.13	0.000888	1.95	11.61	9.93	0.58
Santan South	1065.90*	22.65	347.00	348.89	348.44	349.09	0.000906	1.97	11.52	9.89	0.58
Santan South	1059.09*	22.65	346.96	348.85	348.41	349.05	0.000928	1.98	11.42	9.85	0.59
Santan South	1052.27*	22.65	346.92	348.80	348.37	349.01	0.000937	1.99	11.38	9.84	0.59
Santan South	1045.45*	22.65	346.88	348.76	348.33	348.96	0.000947	2.00	11.33	9.82	0.59
Santan South	1038.63*	22.65	346.85	348.71	348.29	348.92	0.000976	2.02	11.20	9.77	0.60
Santan South	1031.81*	22.65	346.81	348.66	348.26	348.88	0.001010	2.05	11.06	9.71	0.61
Santan South	1025	22.65	346.77	348.61	348.22	348.83	0.001027	2.06	11.00	9.68	0.62
Santan South	1023.33*	22.65	346.77	348.67	348.04	348.80	0.000562	1.63	13.91	11.19	0.47
Santan South	1021.66*	22.65	346.76	348.70	347.88	348.79	0.000339	1.33	17.00	12.75	0.37
Santan South	1020	22.65	346.76	348.71	347.77	348.78	0.000237	1.15	19.66	14.11	0.31
Santan South	1019.*	22.65	346.76	348.69	347.95	348.78	0.000340	1.29	17.62	14.05	0.37
Santan South	1018.*	22.65	346.75	348.67	348.12	348.77	0.000511	1.46	15.55	13.96	0.44
Santan South	1017.*	22.65	346.75	348.61	348.28	348.77	0.000911	1.74	12.98	13.74	0.57
Santan South	1016.*	22.65	346.74	348.49	348.19	348.75	0.001283	2.24	10.12	9.31	0.68
Santan South	1015	22.65	346.74	348.49	348.19	348.75	0.001303	2.25	10.06	9.29	0.69
Santan South	1010	22.65	346.73	348.50	347.82	348.71	0.000599	2.04	11.09	6.28	0.56
Santan South	1005	Culvert									
Santan South	1000	22.65	346.70	348.31	347.79	348.57	0.000780	2.24	10.11	6.28	0.56

APPENDIX 3

Basin B Side Weir Analyses Using HEC-2

```
*****************************************
*  HEC-2 WATER SURFACE PROFILES          *
                                         *
   Version   4.6.2;  May 1991            *
                                         *
*  RUN DATE    13SEP96    TIME   06:39:42 *
*****************************************
```

```
****************************************
*  U.S. ARMY CORPS OF ENGINEERS        *
*  HYDROLOGIC ENGINEERING CENTER       *
*  609 SECOND STREET, SUITE D          *
*  DAVIS, CALIFORNIA 95616-4687        *
*          (916) 756-1104              *
****************************************
```

```
X     X  XXXXXXX   XXXXX              XXXXX
X     X  X        X    X             X     X
X     X  X        X                        X
XXXXXXX  XXXX     X          XXXXX    XXXXX
X     X  X        X                   X
X     X  X        X    X              X
X     X  XXXXXXX   XXXXX              XXXXXXX
```

THIS RUN EXECUTED 13SEP96 06:39:42

```
************************************
HEC-2 WATER SURFACE PROFILES

Version   4.6.2;  May 1991
************************************


SPLIT FLOW BEING PERFORMED


SF      SPLIT-FLOW DATA


JC      SPLIT-FLOW FROM SECTIONS 7 TO 14
JP      1

TW      LEVEE BETWEEN SECTIONS 1 AND 6
WS      6       1       6      -1    3.08
WC      0   352.3      75   352.3     150   352.3     225   352.3     285   352.3
WC    300   352.3

TW      WEIR BETWEEN SECTIONS 6 AND 15
WS     10       6      15      -1    3.08
WC      0   352.3     .01  350.44   20.01  350.46   40.01  350.48   60.01  350.49
WC  80.01  350.51  100.01  350.53  120.01  350.55  134.01  350.55  134.02   352.6

TW      LEVEE BETWEEN SECTIONS 15 AND 18
WS      4      15      18      -1    3.08
WC      0   352.6      10   352.6   30.48   352.6   50.48   352.6
```

T1 SANTAN CHANNEL SIDE WEIR ANALYSES FOR BASIN "B"
T2 WOOD, PATEL & ASSOCIATES, INC. 9/4/96
T3 DMJM GENERAL CONSULTANT FOR ADOT
SIDE WEIR ANALYSES WILL NEED TO BE REFINED BY FINAL DESIGNER

J1	ICHECK	INQ	NINV	IDIR	STRT	METRIC	HVINS	Q	WSEL	FQ
	0	2	0	0	-1	1	0	84.96	351	

J2	NPROF	IPLOT	PRFVS	XSECV	XSECH	FN	ALLDC	IBW	CHNIM	ITRACE
	-1	0	-1	0	0	0	-1			

J3 VARIABLE CODES FOR SUMMARY PRINTOUT

150

NC	.02	.02	.02	.1	.3					
X1	1	5	90.432	109.808	0	0	0			
GR	352.3	90.432	349.016	97	348.956	100	348.896	103	352.3	109.808
X1	2	5	90.552	109.688	75	75	75			
GR	352.3	90.552	349.076	97	349.016	100	348.956	103	352.3	109.688
X1	3	5	90.672	109.568	75	75	75			
GR	352.3	90.672	349.136	97	349.076	100	349.016	103	352.3	109.568
X1	4	5	90.792	109.448	75	75	75			
GR	352.3	90.792	349.196	97	349.136	100	349.076	103	352.3	109.448
X1	5	5	90.888	109.352	60	60	60			
GR	352.3	90.888	349.244	97	349.184	100	349.124	103	352.3	109.352
X1	6	5	96.425	109.350	15	15	15			
GR	352.3	96.425	349.268	96.425	349.202	100	349.136	103.575	352.3	109.350
X1	7	5	96.425	109.350	.01	.01	.01			
GR	350.44	96.425	349.268	96.425	349.202	100	349.136	103.575	352.3	109.350
X1	8	5	96.425	110.901	20	20	20			
GR	350.46	96.425	349.268	96.425	349.215	100	349.152	104.299	352.4	110.901
X1	9	5	96.425	111.678	20	20	20			
GR	350.48	96.425	349.268	96.425	349.226	100	349.168	105.023	352.4	111.678
X1	10	5	96.425	112.654	20	20	20			
GR	350.49	96.425	349.268	96.425	349.236	100	349.184	105.747	352.5	112.654
X1	11	5	96.425	113.43	20	20	20			
GR	350.51	96.425	349.268	96.425	349.244	100	349.200	106.471	352.5	113.43

X1	12	5	96.425	114.407	20	20	20			
GR	350.53	96.425	349.268	96.425	349.251	100	349.216	107.195	352.6	114.407
X1	13	5	96.425	115.183	20	20	20			
GR	350.55	96.425	349.268	96.425	349.257	100	349.232	107.919	352.6	115.183
X1	14	5	96.425	115.2	14	14	14			
GR	350.55	96.425	349.268	96.425	349.261	100	349.243	108.425	352.6	115.2
X1	15	5	96.425	115.183	.01	.01	.01			
GR	352.6	96.425	349.268	96.425	349.261	100	349.243	108.425	352.6	115.183
X1	16	5	96.425	115.18	10	10	10			
GR	352.6	96.425	349.268	96.425	349.264	100	349.251	110.673	352.6	115.18
X1	17	5	96.425	115.170	20.48	20.48	20.48			
GR	352.6	96.425	349.268	96.425	349.268	100	349.268	115.170	352.6	115.170
X1	18	5	96.425	115.170	20	20	20			
GR	352.6	96.425	349.284	96.425	349.284	100	349.284	115.170	352.6	115.170

TW LEVEE BETWEEN SECTIONS 1 AND 6

ASQ	QCOMP	ERRAC	TASQ	TCQ	TABER	NITER	DSWS	USWS	DSSNO	USSNO
.00	.00	.00	.00	.00	.00	1	351.089	351.931	1.000	6.000

TW WEIR BETWEEN SECTIONS 6 AND 15

ASQ	QCOMP	ERRAC	TASQ	TCQ	TABER	NITER	DSWS	USWS	DSSNO	USSNO
.00	904.43	200.00	.00	904.43	200.00	1	351.931	352.440	6.000	15.000

TW LEVEE BETWEEN SECTIONS 15 AND 18

ASQ	QCOMP	ERRAC	TASQ	TCQ	TABER	NITER	DSWS	USWS	DSSNO	USSNO
.00	.00	.00	.00	904.43	200.00	1	352.440	352.516	15.000	18.000

TW LEVEE BETWEEN SECTIONS 1 AND 6

ASQ	QCOMP	ERRAC	TASQ	TCQ	TABER	NITER	DSWS	USWS	DSSNO	USSNO
.00	.00	.00	.00	.00	.00	2	349.079	349.444	1.000	6.000

TW WEIR BETWEEN SECTIONS 6 AND 15

ASQ	QCOMP	ERRAC	TASQ	TCQ	TABER	NITER	DSWS	USWS	DSSNO	USSNO
452.22	7.88	193.15	452.22	7.88	193.15	2	349.444	350.890	6.000	15.000

TW LEVEE BETWEEN SECTIONS 15 AND 18

ASQ	QCOMP	ERRAC	TASQ	TCQ	TABER	NITER	DSWS	USWS	DSSNO	USSNO
.00	.00	.00	452.22	7.88	193.15	2	350.890	351.530	15.000	18.000

TW LEVEE BETWEEN SECTIONS 1 AND 6

ASQ	QCOMP	ERRAC	TASQ	TCQ	TABER	NITER	DSWS	USWS	DSSNO	USSNO
.00	.00	.00	.00	.00	.00	3	349.079	349.444	1.000	6.000

TW WEIR BETWEEN SECTIONS 6 AND 15

ASQ	QCOMP	ERRAC	TASQ	TCQ	TABER	NITER	DSWS	USWS	DSSNO	USSNO
230.05	7.88	186.75	230.05	7.88	186.75	3	349.444	350.890	6.000	15.000

TW LEVEE BETWEEN SECTIONS 15 AND 18

ASQ	QCOMP	ERRAC	TASQ	TCQ	TABER	NITER	DSWS	USWS	DSSNO	USSNO
.00	.00	.00	230.05	7.88	186.75	3	350.890	351.530	15.000	18.000

TW LEVEE BETWEEN SECTIONS 1 AND 6

ASQ	QCOMP	ERRAC	TASQ	TCQ	TABER	NITER	DSWS	USWS	DSSNO	USSNO
.00	.00	.00	.00	.00	.00	4	349.079	349.444	1.000	6.000

TW WEIR BETWEEN SECTIONS 6 AND 15

ASQ	QCOMP	ERRAC	TASQ	TCQ	TABER	NITER	DSWS	USWS	DSSNO	USSNO
118.97	7.88	175.15	118.97	7.88	175.15	4	349.444	350.890	6.000	15.000

TW LEVEE BETWEEN SECTIONS 15 AND 18

ASQ	QCOMP	ERRAC	TASQ	TCQ	TABER	NITER	DSWS	USWS	DSSNO	USSNO
.00	.00	.00	118.97	7.88	175.15	4	350.890	351.530	15.000	18.000

TW LEVEE BETWEEN SECTIONS 1 AND 6

ASQ	QCOMP	ERRAC	TASQ	TCQ	TABER	NITER	DSWS	USWS	DSSNO	USSNO
.00	.00	.00	.00	.00	.00	5	349.923	350.650	1.000	6.000

TW WEIR BETWEEN SECTIONS 6 AND 15

ASQ	QCOMP	ERRAC	TASQ	TCQ	TABER	NITER	DSWS	USWS	DSSNO	USSNO
63.42	58.02	8.90	63.42	58.02	8.90	5	350.650	350.888	6.000	15.000

TW LEVEE BETWEEN SECTIONS 15 AND 18

ASQ	QCOMP	ERRAC	TASQ	TCQ	TABER	NITER	DSWS	USWS	DSSNO	USSNO
.00	.00	.00	63.42	58.02	8.90	5	350.888	351.530	15.000	18.000

TW LEVEE BETWEEN SECTIONS 1 AND 6

ASQ	QCOMP	ERRAC	TASQ	TCQ	TABER	NITER	DSWS	USWS	DSSNO	USSNO
.00	.00	.00	.00	.00	.00	6	350.002	350.741	1.000	6.000

TW WEIR BETWEEN SECTIONS 6 AND 15

ASQ	QCOMP	ERRAC	TASQ	TCQ	TABER	NITER	DSWS	USWS	DSSNO	USSNO
60.58	73.70	19.54	60.58	73.70	19.54	6	350.741	350.893	6.000	15.000

TW LEVEE BETWEEN SECTIONS 15 AND 18

ASQ	QCOMP	ERRAC	TASQ	TCQ	TABER	NITER	DSWS	USWS	DSSNO	USSNO
.00	.00	.00	60.58	73.70	19.54	6	350.893	351.529	15.000	18.000

TW LEVEE BETWEEN SECTIONS 1 AND 6

ASQ	QCOMP	ERRAC	TASQ	TCQ	TABER	NITER	DSWS	USWS	DSSNO	USSNO
.00	.00	.00	.00	.00	.00	7	349.951	350.677	1.000	6.000

TW WEIR BETWEEN SECTIONS 6 AND 15

ASQ	QCOMP	ERRAC	TASQ	TCQ	TABER	NITER	DSWS	USWS	DSSNO	USSNO
62.59	63.30	1.12	62.59	63.30	1.12	7	350.677	350.895	6.000	15.000

TW LEVEE BETWEEN SECTIONS 15 AND 18

ASQ	QCOMP	ERRAC	TASQ	TCQ	TABER	NITER	DSWS	USWS	DSSNO	USSNO
.00	.00	.00	62.59	63.30	1.12	7	350.895	351.529	15.000	18.000

SECNO	DEPTH	CWSEL	CRIWS	WSELK	EG	HV	HL	OLOSS	L-BANK ELEV
Q	QLOB	QCH	QROB	ALOB	ACH	AROB	VOL	TWA	R-BANK ELEV
TIME	VLOB	VCH	VROB	XNL	XNCH	XNR	WTN	ELMIN	SSTA
SLOPE	XLOBL	XLCH	XLOBR	ITRIAL	IDC	ICONT	CORAR	TOPWID	ENDST

PROF 1

CRITICAL DEPTH TO BE CALCULATED AT ALL CROSS SECTIONS

CCHV= .100 CEHV= .300

SECNO 1.000

720 CRITICAL DEPTH ASSUMED

1.000	1.05	349.95	349.95	351.00	350.35	.40	.00	.00	352.30
22.3	.0	22.3	.0	.0	7.9	.0	.0	.0	352.30
.00	.00	2.81	.00	.000	.020	.000	.000	348.90	95.14
.004560	0.	0.	0.	0	7	0	.00	9.97	105.10

SECNO 2.000

3302 WARNING: CONVEYANCE CHANGE OUTSIDE OF ACCEPTABLE RANGE, KRATIO = 1.75

2.000	1.41	350.37	350.01	.00	350.55	.18	.18	.02	352.30
22.3	.0	22.3	.0	.0	11.7	.0	.7	.8	352.30
.01	.00	1.90	.00	.000	.020	.000	.000	348.96	94.42
.001485	75.	75.	75.	3	5	0	.00	11.40	105.82

SECNO 3.000

3.000	1.48	350.50	350.07	.00	350.65	.16	.10	.00	352.30
22.3	.0	22.3	.0	.0	12.6	.0	1.6	1.7	352.30
.02	.00	1.77	.00	.000	.020	.000	.000	349.02	94.28
.001227	75.	75.	75.	2	15	0	.00	11.68	105.96

SECNO 4.000

4.000	1.52	350.59	350.13	.00	350.74	.15	.09	.00	352.30
22.3	.0	22.3	.0	.0	13.0	.0	2.6	2.5	352.30
.03	.00	1.71	.00	.000	.020	.000	.000	349.08	94.20
.001111	75.	75.	75.	2	19	0	.00	11.84	106.04

SECNO 5.000

5.000	1.54	350.67	350.17	.00	350.81	.14	.06	.00	352.30
22.3	.0	22.3	.0	.0	13.3	.0	3.4	3.3	352.30
.04	.00	1.67	.00	.000	.020	.000	.000	349.12	94.16
.001046	60.	60.	60.	2	19	0	.00	11.93	106.08

SECNO	DEPTH	CWSEL	CRIWS	WSELK	EG	HV	HL	OLOSS	L-BANK ELEV
Q	QLOB	QCH	QROB	ALOB	ACH	AROB	VOL	TWA	R-BANK ELEV
TIME	VLOB	VCH	VROB	XNL	XNCH	XNR	WTN	ELMIN	SSTA
SLOPE	XLOBL	XLCH	XLOBR	ITRIAL	IDC	ICONT	CORAR	TOPWID	ENDST

*SECNO 6.000

6.000	1.54	350.67	350.14	.00	350.83	.16	.02	.00	352.30
22.3	.0	22.3	.0	.0	12.7	.0	3.6	3.4	352.30
.05	.00	1.75	.00	.000	.020	.000	.000	349.14	96.43
.001102	15.	15.	15.	0	14	0	.00	9.96	106.39

*SECNO 7.000
3280 CROSS SECTION 7.00 EXTENDED .23 METERS

7.000	1.54	350.67	350.14	.00	350.83	.16	.00	.00	350.44
22.3	.0	22.3	.0	.0	12.7	.0	3.6	3.4	352.30
.05	.00	1.76	.00	.000	.020	.000	.000	349.14	96.43
.001115	0.	0.	0.	0	14	0	.00	9.96	106.38

*SECNO 8.000
3280 CROSS SECTION 8.00 EXTENDED .27 METERS

8.000	1.58	350.73	350.09	.00	350.85	.12	.02	.00	350.46
22.3	.0	22.3	.0	.0	14.5	.0	3.9	3.6	352.40
.05	.00	1.53	.00	.000	.020	.000	.000	349.15	96.43
.000802	20.	20.	20.	2	14	0	.00	11.09	107.51

*SECNO 9.000
3280 CROSS SECTION 9.00 EXTENDED .29 METERS

9.000	1.60	350.77	350.06	.00	350.87	.10	.01	.00	350.48
22.3	.0	22.3	.0	.0	16.0	.0	4.2	3.9	352.40
.05	.00	1.39	.00	.000	.020	.000	.000	349.17	96.43
.000636	20.	20.	20.	2	11	0	.00	11.90	108.32

*SECNO 10.000
3280 CROSS SECTION 10.00 EXTENDED .30 METERS

10.000	1.61	350.80	350.03	.00	350.88	.08	.01	.00	350.49
22.3	.0	22.3	.0	.0	17.3	.0	4.5	4.1	352.50
.06	.00	1.29	.00	.000	.020	.000	.000	349.18	96.43
.000529	20.	20.	20.	1	11	0	.00	12.67	109.09

SECNO	DEPTH	CWSEL	CRIWS	WSELK	EG	HV	HL	OLOSS	L-BANK ELEV
Q	QLOB	QCH	QROB	ALOB	ACH	AROB	VOL	TWA	R-BANK ELEV
TIME	VLOB	VCH	VROB	XNL	XNCH	XNR	WTN	ELMIN	SSTA
SLOPE	XLOBL	XLCH	XLOBR	ITRIAL	IDC	ICONT	CORAR	TOPWID	ENDST

*SECNO 11.000

3280 CROSS SECTION 11.00 EXTENDED .30 METERS

11.000	1.62	350.82	350.00	.00	350.89	.07	.01	.00	350.51
22.3	.0	22.3	.0	.0	18.6	.0	4.9	4.4	352.50
.06	.00	1.20	.00	.000	.020	.000	.000	349.20	96.43
.000443	20.	20.	20.	0	8	0	.00	13.45	109.87

*SECNO 12.000

3280 CROSS SECTION 12.00 EXTENDED .31 METERS

12.000	1.62	350.84	349.98	.00	350.90	.06	.01	.00	350.53
22.3	.0	22.3	.0	.0	19.9	.0	5.2	4.6	352.60
.07	.00	1.12	.00	.000	.020	.000	.000	349.22	96.43
.000376	20.	20.	20.	0	14	0	.00	14.22	110.65

*SECNO 13.000

3280 CROSS SECTION 13.00 EXTENDED .30 METERS

13.000	1.62	350.85	349.95	.00	350.91	.06	.01	.00	350.55
22.3	.0	22.3	.0	.0	21.3	.0	5.7	4.9	352.60
.07	.00	1.05	.00	.000	.020	.000	.000	349.23	96.43
.000323	20.	20.	20.	0	14	0	.00	14.99	111.42

*SECNO 14.000

3280 CROSS SECTION 14.00 EXTENDED .31 METERS

14.000	1.62	350.86	349.94	.00	350.91	.05	.00	.00	350.55
22.3	.0	22.3	.0	.0	22.0	.0	6.0	5.2	352.60
.08	.00	1.01	.00	.000	.020	.000	.000	349.24	96.43
.000298	14.	14.	14.	0	14	0	.00	15.27	111.70

*SECNO 15.000

3301 HV CHANGED MORE THAN HVINS

7185 MINIMUM SPECIFIC ENERGY

3720 CRITICAL DEPTH ASSUMED

15.000	1.65	350.89	350.89	.00	351.63	.73	.00	.20	352.60
85.0	.0	85.0	.0	.0	22.4	.0	6.0	5.2	352.60
.08	.00	3.79	.00	.000	.020	.000	.000	349.24	96.43
.004080	0.	0.	0.	0	5	0	.00	15.33	111.75

SECNO	DEPTH	CWSEL	CRIWS	WSELK	EG	HV	HL	OLOSS	L-BANK ELEV
Q	QLOB	QCH	QROB	ALOB	ACH	AROB	VOL	TWA	R-BANK ELEV
TIME	VLOB	VCH	VROB	XNL	XNCH	XNR	WTN	ELMIN	SSTA
SLOPE	XLOBL	XLCH	XLOBR	ITRIAL	IDC	ICONT	CORAR	TOPWID	ENDST

*SECNO 16.000

3302 WARNING: CONVEYANCE CHANGE OUTSIDE OF ACCEPTABLE RANGE, KRATIO = 1.70

16.000	2.09	351.34	350.75	.00	351.69	.35	.02	.04	352.60
85.0	.0	85.0	.0	.0	32.5	.0	6.2	5.3	352.60
.08	.00	2.61	.00	.000	.020	.000	.000	349.25	96.43
.001411	10.	10.	10.	4	11	0	.00	17.05	113.48

*SECNO 17.000

17.000	2.25	351.51	350.54	.00	351.72	.21	.02	.01	352.60
85.0	.0	85.0	.0	.0	42.2	.0	7.0	5.7	352.60
.08	.00	2.02	.00	.000	.020	.000	.000	349.27	96.43
.000734	20.	20.	20.	2	14	0	.00	18.74	115.17

*SECNO 18.000

18.000	2.25	351.53	350.56	.00	351.74	.21	.01	.00	352.60
85.0	.0	85.0	.0	.0	42.1	.0	7.8	6.1	352.60
.08	.00	2.02	.00	.000	.020	.000	.000	349.28	96.43
.000737	20.	20.	20.	0	11	0	.00	18.74	115.17

TW LEVEE BETWEEN SECTIONS 1 AND 6

ASQ	QCOMP	ERRAC	TASQ	TCQ	TABER	NITER	DSWS	USWS	DSSNO	USSNO
.00	.00	.00	.00	.00	.00	8	349.947	350.673	1.000	6.000

TW WEIR BETWEEN SECTIONS 6 AND 15

ASQ	QCOMP	ERRAC	TASQ	TCQ	TABER	NITER	DSWS	USWS	DSSNO	USSNO
62.71	62.74	.05	62.71	62.74	.05	8	350.673	350.895	6.000	15.000

TW LEVEE BETWEEN SECTIONS 15 AND 18

ASQ	QCOMP	ERRAC	TASQ	TCQ	TABER	NITER	DSWS	USWS	DSSNO	USSNO
.00	.00	.00	62.71	62.74	.05	8	350.895	351.529	15.000	18.000

THIS RUN EXECUTED 13SEP96 06:39:51

****
HEC-2 WATER SURFACE PROFILES

Version 4.6.2; May 1991
****

NOTE- ASTERISK (*) AT LEFT OF CROSS-SECTION NUMBER INDICATES MESSAGE IN SUMMARY OF ERRORS LIST

MJM GENERAL CONSULTANT F

SUMMARY PRINTOUT TABLE 150

	SECNO	XLCH	ELTRD	ELLC	ELMIN	Q	CWSEL	CRIWS	EG	10*KS	VCH	AREA	.01K
*	1.000	.00	.00	.00	348.90	22.25	349.95	349.95	350.35	45.60	2.81	7.92	3.30
*	2.000	75.00	.00	.00	348.96	22.25	350.37	350.01	350.55	14.85	1.90	11.74	5.78
	3.000	75.00	.00	.00	349.02	22.25	350.50	350.07	350.65	12.27	1.77	12.56	6.35
	4.000	75.00	.00	.00	349.08	22.25	350.59	350.13	350.74	11.11	1.71	13.02	6.68
	5.000	60.00	.00	.00	349.12	22.25	350.67	350.17	350.81	10.46	1.67	13.30	6.88
	6.000	15.00	.00	.00	349.14	22.25	350.67	350.14	350.83	11.02	1.75	12.73	6.70
	7.000	.01	.00	.00	349.14	22.25	350.67	350.14	350.83	11.15	1.76	12.67	6.66
	8.000	20.00	.00	.00	349.15	22.25	350.73	350.09	350.85	8.02	1.53	14.53	7.86
	9.000	20.00	.00	.00	349.17	22.25	350.77	350.06	350.87	6.36	1.39	15.98	8.83
	10.000	20.00	.00	.00	349.18	22.25	350.80	350.03	350.88	5.29	1.29	17.27	9.68
	11.000	20.00	.00	.00	349.20	22.25	350.82	350.00	350.89	4.43	1.20	18.60	10.57
	12.000	20.00	.00	.00	349.22	22.25	350.84	349.98	350.90	3.76	1.12	19.95	11.48
	13.000	20.00	.00	.00	349.23	22.25	350.85	349.95	350.91	3.23	1.05	21.27	12.38
	14.000	14.00	.00	.00	349.24	22.25	350.86	349.94	350.91	2.98	1.01	21.95	12.89
*	15.000	.01	.00	.00	349.24	84.96	350.89	350.89	351.63	40.80	3.79	22.42	13.30
*	16.000	10.00	.00	.00	349.25	84.96	351.34	350.75	351.69	14.11	2.61	32.52	22.62
	17.000	20.48	.00	.00	349.27	84.96	351.51	350.54	351.72	7.34	2.02	42.16	31.35

SECNO	XLCH	ELTRD	ELLC	ELMIN	Q	CWSEL	CRIWS	EG	10*KS	VCH	AREA	.01K
18.000	20.00	.00	.00	349.28	84.96	351.53	350.56	351.74	7.37	2.02	42.11	31.30

MJM GENERAL CONSULTANT F

SUMMARY PRINTOUT TABLE 150

SECNO	Q	CWSEL	DIFWSP	DIFWSX	DIFKWS	TOPWID	XLCH
1.000	22.25	349.95	.00	.00	-1.05	9.97	.00
2.000	22.25	350.37	.00	.42	.00	11.40	75.00
3.000	22.25	350.50	.00	.13	.00	11.68	75.00
4.000	22.25	350.59	.00	.10	.00	11.84	75.00
5.000	22.25	350.67	.00	.07	.00	11.93	60.00
6.000	22.25	350.67	.00	.01	.00	9.96	15.00
7.000	22.25	350.67	.00	.00	.00	9.96	.01
8.000	22.25	350.73	.00	.06	.00	11.09	20.00
9.000	22.25	350.77	.00	.04	.00	11.90	20.00
10.000	22.25	350.80	.00	.03	.00	12.67	20.00
11.000	22.25	350.82	.00	.02	.00	13.45	20.00
12.000	22.25	350.84	.00	.02	.00	14.22	20.00
13.000	22.25	350.85	.00	.02	.00	14.99	20.00
14.000	22.25	350.86	.00	.01	.00	15.27	14.00
15.000	84.96	350.89	.00	.03	.00	15.33	.01
* 16.000	84.96	351.34	.00	.44	.00	17.05	10.00
17.000	84.96	351.51	.00	.18	.00	18.74	20.48
18.000	84.96	351.53	.00	.01	.00	18.74	20.00

SUMMARY OF ERRORS AND SPECIAL NOTES

```
CAUTION SECNO=      1.000  PROFILE=  1  CRITICAL DEPTH ASSUMED

WARNING SECNO=      2.000  PROFILE=  1  CONVEYANCE CHANGE OUTSIDE ACCEPTABLE RANGE

CAUTION SECNO=     15.000  PROFILE=  1  CRITICAL DEPTH ASSUMED
CAUTION SECNO=     15.000  PROFILE=  1  MINIMUM SPECIFIC ENERGY

WARNING SECNO=     16.000  PROFILE=  1  CONVEYANCE CHANGE OUTSIDE ACCEPTABLE RANGE
```

APPENDIX 4

Hydrologic Analyses of First Flush Flow Using HEC-1

```
****************************************
*                                      *
*   FLOOD HYDROGRAPH PACKAGE  (HEC-1)  *
*            JUN 09 1992               *
*          VERSION 4.0.3E              *
*                                      *
*  RUN DATE  09/13/96  TIME  08:39:36  *
*                                      *
****************************************
```

```
****************************************
*                                      *
*    U.S. ARMY CORPS OF ENGINEERS      *
*    HYDROLOGIC ENGINEERING CENTER     *
*          609 SECOND STREET           *
*       DAVIS, CALIFORNIA 95616        *
*          (916) 551-1748              *
*                                      *
****************************************
```

```
X     X  XXXXXXX   XXXXX          X
X     X  X        X     X        XX
X     X  X        X              X
XXXXXXX  XXXX     X        XXXXX X
X     X  X        X              X
X     X  X        X     X        X
X     X  XXXXXXX   XXXXX         XXX
```

THIS PROGRAM REPLACES ALL PREVIOUS VERSIONS OF HEC-1 KNOWN AS HEC1 (JAN 73), HEC1GS, HEC1DB, AND HEC1KW.

THE DEFINITIONS OF VARIABLES -RTIMP- AND -RTIOR- HAVE CHANGED FROM THOSE USED WITH THE 1973-STYLE INPUT STRUCTURE.
THE DEFINITION OF -AMSKK- ON RM-CARD WAS CHANGED WITH REVISIONS DATED 28 SEP 81. THIS IS THE FORTRAN77 VERSION
NEW OPTIONS: DAMBREAK OUTFLOW SUBMERGENCE , SINGLE EVENT DAMAGE CALCULATION, DSS:WRITE STAGE FREQUENCY,
DSS:READ TIME SERIES AT DESIRED CALCULATION INTERVAL LOSS RATE:GREEN AND AMPT INFILTRATION
KINEMATIC WAVE: NEW FINITE DIFFERENCE ALGORITHM

```
LINE          ID.......1.......2.......3.......4.......5.......6.......7.......8.......9......10

  1           ID        SANTAN CHANNEL DESIGN
  2           ID        DMJM-WOOD PATEL -- 9/12/96
  3           ID        HYPOTHETICAL ANALYSIS TO DETERMINE FIRST FLUSH VOLUME CREATED
  4           ID        BY THE EFFECTIVE WATERSHED
  5           ID        FILENAME: FRSTFLSH.DAT
  6           IT       5                    289
  7           IO       1       0       0
              *DIAGRAM

  8           KK   FIRST FLUSH
  9           KM    SUB1
 10           BA   1.825
 11           PH       1   1.825    0.29    0.53    0.86    0.94    1.00    1.11    1.23    1.34
 12           LG    0.35    0.30    10.8    0.04    0.00
 13           UC    3.50    2.54
 14           ZZ
```

SCHEMATIC DIAGRAM OF STREAM NETWORK

INPUT
LINE (V) ROUTING (--->) DIVERSION OR PUMP FLOW

NO. (.) CONNECTOR (<---) RETURN OF DIVERTED OR PUMPED FLOW

8 FIRST

(***) RUNOFF ALSO COMPUTED AT THIS LOCATION

```
****************************************
*                                      *
*  FLOOD HYDROGRAPH PACKAGE  (HEC-1)   *
*            JUN 09 1992               *
*          VERSION 4.0.3E              *
*                                      *
*  RUN DATE  09/13/96  TIME  08:39:36  *
*                                      *
****************************************
```

```
****************************************
*                                      *
*    U.S. ARMY CORPS OF ENGINEERS      *
*    HYDROLOGIC ENGINEERING CENTER     *
*          609 SECOND STREET           *
*       DAVIS, CALIFORNIA 95616        *
*           (916) 551-1748             *
*                                      *
****************************************
```

```
                    SANTAN CHANNEL DESIGN
                    DMJM-WOOD PATEL -- 9/12/96
                    HYPOTHETICAL ANALYSIS TO DETERMINE FIRST FLUSH VOLUME CREATED
                    BY THE EFFECTIVE WATERSHED
                    FILENAME: FRSTFLSH.DAT

  7 IO        OUTPUT CONTROL VARIABLES
                  IPRNT          1  PRINT CONTROL
                  IPLOT          0  PLOT CONTROL
                  QSCAL         0.  HYDROGRAPH PLOT SCALE

    IT        HYDROGRAPH TIME DATA
                   NMIN          5  MINUTES IN COMPUTATION INTERVAL
                  IDATE     1    0  STARTING DATE
                  ITIME        0000  STARTING TIME
                     NQ         289  NUMBER OF HYDROGRAPH ORDINATES
                 NDDATE     2    0  ENDING DATE
                 NDTIME        0000  ENDING TIME
                  ICENT          19  CENTURY MARK

            COMPUTATION INTERVAL    0.08 HOURS
                 TOTAL TIME BASE   24.00 HOURS

        ENGLISH UNITS
            DRAINAGE AREA          SQUARE MILES
            PRECIPITATION DEPTH    INCHES
            LENGTH, ELEVATION      FEET
            FLOW                   CUBIC FEET PER SECOND
            STORAGE VOLUME         ACRE-FEET
            SURFACE AREA           ACRES
            TEMPERATURE            DEGREES FAHRENHEIT


*** *** *** *** *** *** *** *** *** *** *** *** *** *** *** *** *** *** *** *** *** *** *** *** *** *** *** *** *** *** *** *** *** ***


          **************
          *            *
  8 KK    *     FIRST  *      FLUSH
          *            *
          **************
                         SUB1

            SUBBASIN RUNOFF DATA

 10 BA        SUBBASIN CHARACTERISTICS
                  TAREA        1.83  SUBBASIN AREA

              PRECIPITATION DATA
```

11 PH DEPTHS FOR 1-PERCENT HYPOTHETICAL STORM

..... HYDRO-35			..... TP-40					..... TP-49			
5-MIN	15-MIN	60-MIN	2-HR	3-HR	6-HR	12-HR	24-HR	2-DAY	4-DAY	7-DAY	10-DAY
0.29	0.53	0.86	0.94	1.00	1.11	1.23	1.34	0.00	0.00	0.00	0.00

STORM AREA = 1.83

12 LG GREEN AND AMPT LOSS RATE

STRTL	0.35	STARTING LOSS
DTH	0.30	MOISTURE DEFICIT
PSIF	10.80	WETTING FRONT SUCTION
XKSAT	0.04	HYDRAULIC CONDUCTIVITY
RTIMP	0.00	PERCENT IMPERVIOUS AREA

13 UC CLARK UNITGRAPH

TC	3.50	TIME OF CONCENTRATION
R	2.54	STORAGE COEFFICIENT

SYNTHETIC ACCUMULATED-AREA VS. TIME CURVE WILL BE USED

***

1.82500	1.82500
1.82500	1.82500
1.82500	1.82500
1.82500	1.82500
1.82500	1.82500
1.82500	1.82500
1.82500	1.82500

UNIT HYDROGRAPH PARAMETERS

CLARK TC= 3.50 HR, R= 2.54 HR

SNYDER TP= 3.15 HR, CP= 0.67

UNIT HYDROGRAPH

185 END-OF-PERIOD ORDINATES

1.	4.	9.	15.	22.	29.	37.	45.	54.	62.
72.	81.	91.	101.	111.	121.	131.	142.	152.	163.
173.	184.	194.	203.	212.	220.	227.	233.	239.	244.
248.	252.	255.	258.	259.	260.	261.	260.	259.	257.
253.	249.	242.	234.	226.	219.	212.	205.	199.	192.
186.	180.	174.	169.	163.	158.	153.	148.	143.	138.
134.	130.	125.	121.	117.	114.	110.	106.	103.	100.
96.	93.	90.	87.	85.	82.	79.	77.	74.	72.
69.	67.	65.	63.	61.	59.	57.	55.	53.	52.
50.	48.	47.	45.	44.	42.	41.	40.	38.	37.
36.	35.	34.	33.	32.	31.	30.	29.	28.	27.
26.	25.	24.	24.	23.	22.	21.	21.	20.	19.
19.	18.	18.	17.	16.	16.	15.	15.	14.	14.
13.	13.	13.	12.	12.	11.	11.	11.	10.	10.
10.	9.	9.	9.	9.	8.	8.	8.	7.	7.
7.	7.	7.	6.	6.	6.	6.	6.	5.	5.
5.	5.	5.	5.	4.	4.	4.	4.	4.	4.
4.	4.	3.	3.	3.	3.	3.	3.	3.	3.
3.	3.	2.	2.	2.					

****

HYDROGRAPH AT STATION FIRST

****

DA MON HRMN	ORD	RAIN	LOSS	EXCESS	COMP Q	*	DA MON HRMN	ORD	RAIN	LOSS	EXCESS	COMP Q

1	0000	1	0.00	0.00	0.00	0.	*	1	1205	146	0.29	0.06	0.23	0.
1	0005	2	0.00	0.00	0.00	0.	*	1	1210	147	0.10	0.05	0.05	2.
1	0010	3	0.00	0.00	0.00	0.	*	1	1215	148	0.05	0.04	0.01	3.
1	0015	4	0.00	0.00	0.00	0.	*	1	1220	149	0.03	0.03	0.00	5.
1	0020	5	0.00	0.00	0.00	0.	*	1	1225	150	0.03	0.03	0.00	7.
1	0025	6	0.00	0.00	0.00	0.	*	1	1230	151	0.02	0.02	0.00	10.
1	0030	7	0.00	0.00	0.00	0.	*	1	1235	152	0.01	0.01	0.00	12.
1	0035	8	0.00	0.00	0.00	0.	*	1	1240	153	0.01	0.01	0.00	15.
1	0040	9	0.00	0.00	0.00	0.	*	1	1245	154	0.01	0.01	0.00	18.
1	0045	10	0.00	0.00	0.00	0.	*	1	1250	155	0.01	0.01	0.00	21.
1	0050	11	0.00	0.00	0.00	0.	*	1	1255	156	0.01	0.01	0.00	24.
1	0055	12	0.00	0.00	0.00	0.	*	1	1300	157	0.01	0.01	0.00	27.
1	0100	13	0.00	0.00	0.00	0.	*	1	1305	158	0.01	0.01	0.00	31.
1	0105	14	0.00	0.00	0.00	0.	*	1	1310	159	0.01	0.01	0.00	34.
1	0110	15	0.00	0.00	0.00	0.	*	1	1315	160	0.01	0.01	0.00	37.
1	0115	16	0.00	0.00	0.00	0.	*	1	1320	161	0.00	0.00	0.00	41.
1	0120	17	0.00	0.00	0.00	0.	*	1	1325	162	0.00	0.00	0.00	44.
1	0125	18	0.00	0.00	0.00	0.	*	1	1330	163	0.00	0.00	0.00	48.
1	0130	19	0.00	0.00	0.00	0.	*	1	1335	164	0.00	0.00	0.00	52.
1	0135	20	0.00	0.00	0.00	0.	*	1	1340	165	0.00	0.00	0.00	55.
1	0140	21	0.00	0.00	0.00	0.	*	1	1345	166	0.00	0.00	0.00	59.
1	0145	22	0.00	0.00	0.00	0.	*	1	1350	167	0.00	0.00	0.00	62.
1	0150	23	0.00	0.00	0.00	0.	*	1	1355	168	0.00	0.00	0.00	66.
1	0155	24	0.00	0.00	0.00	0.	*	1	1400	169	0.00	0.00	0.00	69.
1	0200	25	0.00	0.00	0.00	0.	*	1	1405	170	0.00	0.00	0.00	72.
1	0205	26	0.00	0.00	0.00	0.	*	1	1410	171	0.00	0.00	0.00	74.
1	0210	27	0.00	0.00	0.00	0.	*	1	1415	172	0.00	0.00	0.00	77.
1	0215	28	0.00	0.00	0.00	0.	*	1	1420	173	0.00	0.00	0.00	79.
1	0220	29	0.00	0.00	0.00	0.	*	1	1425	174	0.00	0.00	0.00	81.
1	0225	30	0.00	0.00	0.00	0.	*	1	1430	175	0.00	0.00	0.00	83.
1	0230	31	0.00	0.00	0.00	0.	*	1	1435	176	0.00	0.00	0.00	84.
1	0235	32	0.00	0.00	0.00	0.	*	1	1440	177	0.00	0.00	0.00	86.
1	0240	33	0.00	0.00	0.00	0.	*	1	1445	178	0.00	0.00	0.00	87.
1	0245	34	0.00	0.00	0.00	0.	*	1	1450	179	0.00	0.00	0.00	88.
1	0250	35	0.00	0.00	0.00	0.	*	1	1455	180	0.00	0.00	0.00	88.
1	0255	36	0.00	0.00	0.00	0.	*	1	1500	181	0.00	0.00	0.00	89.
1	0300	37	0.00	0.00	0.00	0.	*	1	1505	182	0.00	0.00	0.00	89.
1	0305	38	0.00	0.00	0.00	0.	*	1	1510	183	0.00	0.00	0.00	89.
1	0310	39	0.00	0.00	0.00	0.	*	1	1515	184	0.00	0.00	0.00	88.
1	0315	40	0.00	0.00	0.00	0.	*	1	1520	185	0.00	0.00	0.00	87.
1	0320	41	0.00	0.00	0.00	0.	*	1	1525	186	0.00	0.00	0.00	86.
1	0325	42	0.00	0.00	0.00	0.	*	1	1530	187	0.00	0.00	0.00	85.
1	0330	43	0.00	0.00	0.00	0.	*	1	1535	188	0.00	0.00	0.00	82.
1	0335	44	0.00	0.00	0.00	0.	*	1	1540	189	0.00	0.00	0.00	80.
1	0340	45	0.00	0.00	0.00	0.	*	1	1545	190	0.00	0.00	0.00	77.
1	0345	46	0.00	0.00	0.00	0.	*	1	1550	191	0.00	0.00	0.00	75.
1	0350	47	0.00	0.00	0.00	0.	*	1	1555	192	0.00	0.00	0.00	72.
1	0355	48	0.00	0.00	0.00	0.	*	1	1600	193	0.00	0.00	0.00	70.
1	0400	49	0.00	0.00	0.00	0.	*	1	1605	194	0.00	0.00	0.00	68.
1	0405	50	0.00	0.00	0.00	0.	*	1	1610	195	0.00	0.00	0.00	66.
1	0410	51	0.00	0.00	0.00	0.	*	1	1615	196	0.00	0.00	0.00	63.
1	0415	52	0.00	0.00	0.00	0.	*	1	1620	197	0.00	0.00	0.00	61.
1	0420	53	0.00	0.00	0.00	0.	*	1	1625	198	0.00	0.00	0.00	59.
1	0425	54	0.00	0.00	0.00	0.	*	1	1630	199	0.00	0.00	0.00	58.
1	0430	55	0.00	0.00	0.00	0.	*	1	1635	200	0.00	0.00	0.00	56.
1	0435	56	0.00	0.00	0.00	0.	*	1	1640	201	0.00	0.00	0.00	54.
1	0440	57	0.00	0.00	0.00	0.	*	1	1645	202	0.00	0.00	0.00	52.
1	0445	58	0.00	0.00	0.00	0.	*	1	1650	203	0.00	0.00	0.00	50.
1	0450	59	0.00	0.00	0.00	0.	*	1	1655	204	0.00	0.00	0.00	49.
1	0455	60	0.00	0.00	0.00	0.	*	1	1700	205	0.00	0.00	0.00	47.
1	0500	61	0.00	0.00	0.00	0.	*	1	1705	206	0.00	0.00	0.00	46.
1	0505	62	0.00	0.00	0.00	0.	*	1	1710	207	0.00	0.00	0.00	44.
1	0510	63	0.00	0.00	0.00	0.	*	1	1715	208	0.00	0.00	0.00	43.
1	0515	64	0.00	0.00	0.00	0.	*	1	1720	209	0.00	0.00	0.00	41.

1	0520	65	0.00	0.00	0.00	0.	*	1	1725	210	0.00	0.00	0.00	40.
1	0525	66	0.00	0.00	0.00	0.	*	1	1730	211	0.00	0.00	0.00	39.
1	0530	67	0.00	0.00	0.00	0.	*	1	1735	212	0.00	0.00	0.00	38.
1	0535	68	0.00	0.00	0.00	0.	*	1	1740	213	0.00	0.00	0.00	36.
1	0540	69	0.00	0.00	0.00	0.	*	1	1745	214	0.00	0.00	0.00	35.
1	0545	70	0.00	0.00	0.00	0.	*	1	1750	215	0.00	0.00	0.00	34.
1	0550	71	0.00	0.00	0.00	0.	*	1	1755	216	0.00	0.00	0.00	33.
1	0555	72	0.00	0.00	0.00	0.	*	1	1800	217	0.00	0.00	0.00	32.
1	0600	73	0.00	0.00	0.00	0.	*	1	1805	218	0.00	0.00	0.00	31.
1	0605	74	0.00	0.00	0.00	0.	*	1	1810	219	0.00	0.00	0.00	30.
1	0610	75	0.00	0.00	0.00	0.	*	1	1815	220	0.00	0.00	0.00	29.
1	0615	76	0.00	0.00	0.00	0.	*	1	1820	221	0.00	0.00	0.00	28.
1	0620	77	0.00	0.00	0.00	0.	*	1	1825	222	0.00	0.00	0.00	27.
1	0625	78	0.00	0.00	0.00	0.	*	1	1830	223	0.00	0.00	0.00	26.
1	0630	79	0.00	0.00	0.00	0.	*	1	1835	224	0.00	0.00	0.00	25.
1	0635	80	0.00	0.00	0.00	0.	*	1	1840	225	0.00	0.00	0.00	25.
1	0640	81	0.00	0.00	0.00	0.	*	1	1845	226	0.00	0.00	0.00	24.
1	0645	82	0.00	0.00	0.00	0.	*	1	1850	227	0.00	0.00	0.00	23.
1	0650	83	0.00	0.00	0.00	0.	*	1	1855	228	0.00	0.00	0.00	22.
1	0655	84	0.00	0.00	0.00	0.	*	1	1900	229	0.00	0.00	0.00	21.
1	0700	85	0.00	0.00	0.00	0.	*	1	1905	230	0.00	0.00	0.00	21.
1	0705	86	0.00	0.00	0.00	0.	*	1	1910	231	0.00	0.00	0.00	20.
1	0710	87	0.00	0.00	0.00	0.	*	1	1915	232	0.00	0.00	0.00	19.
1	0715	88	0.00	0.00	0.00	0.	*	1	1920	233	0.00	0.00	0.00	19.
1	0720	89	0.00	0.00	0.00	0.	*	1	1925	234	0.00	0.00	0.00	18.
1	0725	90	0.00	0.00	0.00	0.	*	1	1930	235	0.00	0.00	0.00	18.
1	0730	91	0.00	0.00	0.00	0.	*	1	1935	236	0.00	0.00	0.00	17.
1	0735	92	0.00	0.00	0.00	0.	*	1	1940	237	0.00	0.00	0.00	17.
1	0740	93	0.00	0.00	0.00	0.	*	1	1945	238	0.00	0.00	0.00	16.
1	0745	94	0.00	0.00	0.00	0.	*	1	1950	239	0.00	0.00	0.00	15.
1	0750	95	0.00	0.00	0.00	0.	*	1	1955	240	0.00	0.00	0.00	15.
1	0755	96	0.00	0.00	0.00	0.	*	1	2000	241	0.00	0.00	0.00	14.
1	0800	97	0.00	0.00	0.00	0.	*	1	2005	242	0.00	0.00	0.00	14.
1	0805	98	0.00	0.00	0.00	0.	*	1	2010	243	0.00	0.00	0.00	14.
1	0810	99	0.00	0.00	0.00	0.	*	1	2015	244	0.00	0.00	0.00	13.
1	0815	100	0.00	0.00	0.00	0.	*	1	2020	245	0.00	0.00	0.00	13.
1	0820	101	0.00	0.00	0.00	0.	*	1	2025	246	0.00	0.00	0.00	12.
1	0825	102	0.00	0.00	0.00	0.	*	1	2030	247	0.00	0.00	0.00	12.
1	0830	103	0.00	0.00	0.00	0.	*	1	2035	248	0.00	0.00	0.00	12.
1	0835	104	0.00	0.00	0.00	0.	*	1	2040	249	0.00	0.00	0.00	11.
1	0840	105	0.00	0.00	0.00	0.	*	1	2045	250	0.00	0.00	0.00	11.
1	0845	106	0.00	0.00	0.00	0.	*	1	2050	251	0.00	0.00	0.00	10.
1	0850	107	0.00	0.00	0.00	0.	*	1	2055	252	0.00	0.00	0.00	10.
1	0855	108	0.00	0.00	0.00	0.	*	1	2100	253	0.00	0.00	0.00	10.
1	0900	109	0.00	0.00	0.00	0.	*	1	2105	254	0.00	0.00	0.00	9.
1	0905	110	0.00	0.00	0.00	0.	*	1	2110	255	0.00	0.00	0.00	9.
1	0910	111	0.00	0.00	0.00	0.	*	1	2115	256	0.00	0.00	0.00	9.
1	0915	112	0.00	0.00	0.00	0.	*	1	2120	257	0.00	0.00	0.00	9.
1	0920	113	0.00	0.00	0.00	0.	*	1	2125	258	0.00	0.00	0.00	8.
1	0925	114	0.00	0.00	0.00	0.	*	1	2130	259	0.00	0.00	0.00	8.
1	0930	115	0.00	0.00	0.00	0.	*	1	2135	260	0.00	0.00	0.00	8.
1	0935	116	0.00	0.00	0.00	0.	*	1	2140	261	0.00	0.00	0.00	8.
1	0940	117	0.00	0.00	0.00	0.	*	1	2145	262	0.00	0.00	0.00	7.
1	0945	118	0.00	0.00	0.00	0.	*	1	2150	263	0.00	0.00	0.00	7.
1	0950	119	0.00	0.00	0.00	0.	*	1	2155	264	0.00	0.00	0.00	7.
1	0955	120	0.00	0.00	0.00	0.	*	1	2200	265	0.00	0.00	0.00	7.
1	1000	121	0.00	0.00	0.00	0.	*	1	2205	266	0.00	0.00	0.00	6.
1	1005	122	0.00	0.00	0.00	0.	*	1	2210	267	0.00	0.00	0.00	6.
1	1010	123	0.00	0.00	0.00	0.	*	1	2215	268	0.00	0.00	0.00	6.
1	1015	124	0.00	0.00	0.00	0.	*	1	2220	269	0.00	0.00	0.00	6.
1	1020	125	0.00	0.00	0.00	0.	*	1	2225	270	0.00	0.00	0.00	6.
1	1025	126	0.00	0.00	0.00	0.	*	1	2230	271	0.00	0.00	0.00	5.
1	1030	127	0.00	0.00	0.00	0.	*	1	2235	272	0.00	0.00	0.00	5.
1	1035	128	0.00	0.00	0.00	0.	*	1	2240	273	0.00	0.00	0.00	5.

1	1040	129	0.00	0.00	0.00	0.	*	1	2245	274	0.00	0.00	0.00	5.
1	1045	130	0.00	0.00	0.00	0.	*	1	2250	275	0.00	0.00	0.00	5.
1	1050	131	0.01	0.01	0.00	0.	*	1	2255	276	0.00	0.00	0.00	5.
1	1055	132	0.01	0.01	0.00	0.	*	1	2300	277	0.00	0.00	0.00	4.
1	1100	133	0.01	0.01	0.00	0.	*	1	2305	278	0.00	0.00	0.00	4.
1	1105	134	0.01	0.01	0.00	0.	*	1	2310	279	0.00	0.00	0.00	4.
1	1110	135	0.01	0.01	0.00	0.	*	1	2315	280	0.00	0.00	0.00	4.
1	1115	136	0.01	0.01	0.00	0.	*	1	2320	281	0.00	0.00	0.00	4.
1	1120	137	0.01	0.01	0.00	0.	*	1	2325	282	0.00	0.00	0.00	4.
1	1125	138	0.01	0.01	0.00	0.	*	1	2330	283	0.00	0.00	0.00	4.
1	1130	139	0.01	0.01	0.00	0.	*	1	2335	284	0.00	0.00	0.00	4.
1	1135	140	0.02	0.02	0.00	0.	*	1	2340	285	0.00	0.00	0.00	3.
1	1140	141	0.03	0.03	0.00	0.	*	1	2345	286	0.00	0.00	0.00	3.
1	1145	142	0.03	0.03	0.00	0.	*	1	2350	287	0.00	0.00	0.00	3.
1	1150	143	0.05	0.05	0.00	0.	*	1	2355	288	0.00	0.00	0.00	3.
1	1155	144	0.06	0.06	0.00	0.	*	2	0000	289	0.00	0.00	0.00	3.
1	1200	145	0.14	0.09	0.05	0.	*							
							*							

****

TOTAL RAINFALL = 1.34, TOTAL LOSS = 1.00, TOTAL EXCESS = 0.34

PEAK FLOW (CFS)	TIME (HR)		MAXIMUM AVERAGE FLOW 6-HR	24-HR	72-HR	24.00-HR
89.	15.08	(CFS)	56.	16.	16.	16.
		(INCHES)	0.285	0.334	0.334	0.334
		(AC-FT)	28.	32.	32.	32.

CUMULATIVE AREA = 1.83 SQ MI

RUNOFF SUMMARY
FLOW IN CUBIC FEET PER SECOND
TIME IN HOURS, AREA IN SQUARE MILES

OPERATION	STATION	PEAK FLOW	TIME OF PEAK	AVERAGE FLOW FOR MAXIMUM PERIOD 6-HOUR	24-HOUR	72-HOUR	BASIN AREA	MAXIMUM STAGE	TIME OF MAX STAGE
HYDROGRAPH AT	FIRST	89.	15.08	56.	16.	16.	1.83		

*** NORMAL END OF HEC-1 ***

APPENDIX 5
HEC-1, HEC-RAS, and HEC-2
Input and Output
on Diskette

HEC-RAS Plan: Basin "B" 9/13/96

Reach	River Sta.	Q Total	Min Ch El	W.S. Elev	Crit W.S.	E.G. Elev	Max Chl Dpth	Vel Chnl	Flow Area	Top Width	Froude # Chl	Length Chnl
		(m3/s)	(m)	(m)	(m)	(m)	(m)	(m/s)	(m2)	(m)		(m)
Santan East	1900	26.56	355.52	357.30	356.90	357.53	1.78	2.11	12.56	10.68	0.62	7.67
Santan East	1898.33*	26.56	355.51	357.29	356.90	357.52	1.78	2.11	12.61	10.71	0.62	7.67
Santan East	1896.66*	26.56	355.50	357.29	356.88	357.51	1.79	2.10	12.62	10.69	0.62	7.67
Santan East	1895.*	26.56	355.49	357.28	356.88	357.51	1.79	2.10	12.63	10.71	0.62	7.67
Santan East	1893.33*	26.56	355.49	357.30	356.88	357.49	1.81	1.90	14.01	14.69	0.62	7.67
Santan East	1891.66*	26.56	355.48	357.35	356.77	357.46	1.87	1.53	17.40	14.83	0.45	7.67
Santan East	1890	26.56	355.47	357.37	356.52	357.45	1.90	1.29	20.67	14.98	0.35	3.33
Santan East	1886.66*	26.56	355.47	357.34	356.60	357.45	1.87	1.46	18.16	13.64	0.40	3.33
Santan East	1883.33*	26.56	355.46	357.29	356.71	357.44	1.83	1.75	15.22	12.12	0.50	3.33
Santan East	1880	26.56	355.46	357.18	356.85	357.43	1.72	2.24	11.86	10.42	0.67	75.00
Santan East	1870	26.56	355.38	357.12	356.77	357.37	1.74	2.20	12.09	10.51	0.65	75.00
Santan East	1860	26.56	355.31	357.08	356.70	357.31	1.77	2.14	12.40	10.62	0.63	75.00
Santan East	1850	26.56	355.23	357.04	356.62	357.26	1.80	2.08	12.76	10.76	0.61	75.00
Santan East	1840	27.61	355.16	356.97	356.58	357.20	1.81	2.15	12.83	10.78	0.63	75.00
Santan East	1830	27.61	355.09	356.93	356.50	357.15	1.84	2.09	13.20	10.92	0.61	75.00
Santan East	1820	27.61	355.01	356.89	356.43	357.10	1.88	2.03	13.63	11.08	0.58	36.44
Santan East	1810	27.61	354.97	356.87	356.39	357.08	1.90	1.99	13.85	11.15	0.57	36.44
Santan East	1800	27.61	354.94	356.86	356.35	357.05	1.92	1.96	14.06	11.23	0.56	20.00
Santan East	1790	28.63	354.92	356.83	356.36	357.04	1.91	2.05	13.97	11.20	0.59	5.00
Santan East	1787.5*	28.63	354.91	356.86	356.24	357.02	1.95	1.77	16.21	12.32	0.49	5.00
Santan East	1785.*	28.63	354.91	356.89	356.14	357.01	1.98	1.56	18.34	13.38	0.43	5.00
Santan East	1782.5*	28.63	354.90	356.90	356.06	357.00	2.00	1.40	20.39	14.42	0.38	5.00
Santan East	1780	28.63	354.90	356.91	355.99	356.99	2.01	1.28	22.43	15.45	0.34	6.83
Santan East	1778.33*	28.63	354.89	356.88	356.22	356.99	1.99	1.47	19.48	15.34	0.42	6.83
Santan East	1776.66*	28.63	354.88	356.83	356.41	356.98	1.95	1.76	16.27	15.20	0.54	6.83
Santan East	1775.*	28.63	354.88	356.74	356.32	356.97	1.86	2.14	13.41	11.00	0.62	6.83
Santan East	1773.33*	28.63	354.87	356.73	356.31	356.97	1.86	2.13	13.43	10.99	0.62	6.83
Santan East	1771.66*	28.63	354.86	356.73	356.31	356.96	1.87	2.12	13.48	11.04	0.61	6.83
Santan East	1770	28.63	354.86	356.72	356.30	356.95	1.87	2.12	13.49	11.03	0.61	5.04
Santan East	1766.66*	28.63	354.85	356.76	356.11	356.94	1.91	1.85	15.47	10.71	0.49	5.04
Santan East	1763.33*	28.63	354.85	356.78	355.94	356.92	1.93	1.66	17.22	10.22	0.41	5.04
Santan East	1760	28.63	354.84	356.80	355.80	356.91	1.95	1.52	18.88	9.66	0.35	20.74
Santan East	1750	30.45	354.80	356.75	355.85	356.90	1.95	1.74	17.53	9.00	0.40	75.00
Santan East	1740	30.45	354.73	356.71	355.78	356.86	1.99	1.70	17.89	9.00	0.39	75.00
Santan East	1730	32.27	354.65	356.66	355.74	356.82	2.00	1.79	18.04	9.00	0.40	75.00
Santan East	1720	32.27	354.58	356.62	355.67	356.78	2.04	1.76	18.38	9.00	0.39	75.00
Santan East	1710	34.09	354.50	356.56	355.63	356.73	2.06	1.84	18.51	9.00	0.41	75.00
Santan East	1700	34.09	354.43	356.52	355.56	356.69	2.09	1.81	18.83	9.00	0.40	75.00
Santan East	1690	34.09	354.35	356.48	355.48	356.64	2.13	1.78	19.17	9.00	0.39	75.00
Santan East	1680	35.91	354.28	356.42	355.45	356.60	2.15	1.86	19.31	9.00	0.41	75.00
Santan East	1670	35.91	354.20	356.38	355.37	356.55	2.18	1.83	19.63	9.00	0.40	75.00
Santan East	1660	35.91	354.13	356.34	355.30	356.51	2.22	1.80	19.97	9.00	0.39	51.66
Santan East	1650	35.91	354.06	356.32	355.23	356.48	2.27	1.76	20.40	9.00	0.37	37.37
Santan East	1640	37.72	354.03	356.31	355.18	356.46	2.29	1.71	22.11	9.66	0.39	91.51
Santan East	1635	37.72										
Santan East	1630	37.72	353.96	356.15	355.12	356.31	2.19	1.78	21.13	9.66	0.39	5.00
Santan East	1626.66*	37.72	353.96	356.12	355.26	356.31	2.16	1.93	19.51	10.44	0.45	5.00
Santan East	1623.33*	37.72	353.96	356.07	355.44	356.31	2.11	2.13	17.68	11.19	0.54	5.00
Santan East	1620	37.72	353.95	355.99	355.62	356.30	2.04	2.44	15.46	11.72	0.68	8.00
Santan East	1618.*	37.72	353.94	355.98	355.61	356.29	2.04	2.44	15.46	11.72	0.68	8.00
Santan East	1616.*	37.72	353.93	355.98	355.60	356.28	2.05	2.43	15.50	11.73	0.68	8.00
Santan East	1614.*	37.72	353.93	356.03	355.65	356.25	2.10	2.05	18.37	15.73	0.61	8.00
Santan East	1612.*	37.72	353.92	356.07	355.43	356.23	2.15	1.72	21.90	15.98	0.47	8.00
Santan East	1610	37.72	353.91	356.10	355.19	356.21	2.19	1.50	25.18	16.14	0.38	5.00
Santan East	1607.5*	37.72	353.90	356.07	355.25	356.21	2.17	1.65	22.91	15.11	0.43	5.00
Santan East	1605.*	37.72	353.90	356.03	355.34	356.20	2.13	1.84	20.47	14.01	0.49	5.00
Santan East	1602.5*	37.72	353.90	355.96	355.44	356.20	2.06	2.14	17.63	12.77	0.58	5.00
Santan East	1600	37.72	353.89	355.81	355.56	356.18	1.92	2.68	14.07	11.23	0.76	75.00
Santan East	1590	37.72	353.81	355.74	355.48	356.10	1.92	2.68	14.07	11.24	0.76	75.00
Santan East	1580	37.72	353.74	355.66	355.41	356.03	1.92	2.68	14.08	11.24	0.76	75.00
Santan East	1570	37.72	353.66	355.59	355.33	355.95	1.92	2.68	14.08	11.24	0.76	75.00
Santan East	1560	37.72	353.59	355.51	355.26	355.88	1.92	2.68	14.09	11.24	0.76	75.00
Santan East	1550	37.72	353.51	355.44	355.18	355.80	1.92	2.68	14.09	11.24	0.76	75.00
Santan East	1540	37.72	353.44	355.36	355.11	355.73	1.92	2.67	14.10	11.25	0.76	75.00
Santan East	1530	37.72	353.36	355.29	355.03	355.65	1.92	2.67	14.11	11.25	0.76	75.00
Santan East	1520	37.72	353.29	355.22	354.96	355.58	1.93	2.67	14.12	11.25	0.76	75.00
Santan East	1510	37.72	353.22	355.14	354.88	355.50	1.93	2.67	14.14	11.26	0.76	75.00
Santan East	1500	37.72	353.14	355.07	354.81	355.43	1.93	2.66	14.16	11.27	0.76	75.00
Santan East	1490	37.72	353.07	355.00	354.73	355.36	1.93	2.66	14.18	11.27	0.76	75.00
Santan East	1480	37.72	352.99	354.92	354.66	355.28	1.93	2.66	14.20	11.28	0.76	75.00
Santan East	1470	37.72	352.92	354.85	354.58	355.21	1.93	2.65	14.23	11.29	0.75	75.00
Santan East	1460	37.72	352.84	354.78	354.51	355.13	1.94	2.64	14.27	11.30	0.75	75.00
Santan East	1450	37.72	352.77	354.71	354.43	355.06	1.94	2.64	14.31	11.32	0.75	75.00
Santan East	1440	37.72	352.69	354.64	354.36	354.99	1.95	2.63	14.35	11.34	0.75	75.00
Santan East	1430	37.72	352.61	354.57	354.28	354.91	1.95	2.62	14.41	11.36	0.74	75.00
Santan East	1420	37.72	352.54	354.50	354.21	354.84	1.96	2.61	14.48	11.38	0.74	75.00
Santan East	1410	37.72	352.46	354.43	354.13	354.77	1.96	2.59	14.55	11.41	0.73	75.00
Santan East	1400	37.72	352.39	354.36	354.06	354.70	1.97	2.58	14.64	11.44	0.73	75.00
Santan East	1390	37.72	352.31	354.30	353.98	354.63	1.98	2.56	14.75	11.48	0.72	75.00
Santan East	1380	37.72	352.24	354.23	353.91	354.56	1.99	2.53	14.91	11.53	0.71	75.00
Santan East	1370	37.72	352.17	354.18	353.83	354.49	2.01	2.50	15.09	11.59	0.70	75.00
Santan East	1360	37.72	352.09	354.12	353.76	354.43	2.03	2.46	15.30	11.67	0.69	75.00
Santan East	1350	37.72	352.02	354.06	353.68	354.36	2.05	2.43	15.55	11.75	0.67	75.00
Santan East	1340	37.72	351.94	354.01	353.61	354.30	2.07	2.38	15.84	11.85	0.66	75.00
Santan East	1330	37.72	351.87	353.97	353.53	354.25	2.11	2.33	16.22	11.98	0.64	75.00
Santan East	1320	37.72	351.79	353.93	353.46	354.19	2.14	2.26	16.66	12.12	0.62	75.00
Santan East	1310	37.72	351.72	353.90	353.38	354.14	2.18	2.20	17.14	12.28	0.59	75.00
Santan East	1300	37.72	351.64	353.87	353.31	354.10	2.23	2.13	17.68	12.45	0.57	75.00
Santan East	1290	39.64	351.56	353.80	353.28	354.05	2.23	2.23	17.76	12.48	0.60	75.00
Santan East	1280	41.65	351.49	353.72	353.24	354.00	2.23	2.34	17.76	12.48	0.63	75.00
Santan East	1270	43.66	351.41	353.64	353.21	353.95	2.22	2.47	17.67	12.45	0.66	41.49
Santan East	1260	45.67	351.37	353.54	353.21	353.91	2.17	2.69	16.99	12.23	0.73	40.00
Santan East	1250	47.68	351.33	353.21	353.21	353.84	1.88	3.50	13.62	11.07	1.01	7.73
Santan East	1247.5*	47.68	351.33	352.82	353.08	353.78	1.49	4.35	10.96	10.48	1.36	7.73
Santan East	1245.*	47.68	351.32	353.42	352.94	353.70	2.10	2.36	20.22	13.98	0.63	7.73
Santan East	1242.5*	47.68	351.31	353.46	352.84	353.68	2.15	2.09	22.76	15.11	0.54	7.73
Santan East	1240	49.96	351.30	353.47	352.79	353.67	2.16	2.00	24.97	16.14	0.51	75.00
Santan East	1230	51.70	351.23	353.43	352.75	353.64	2.20	2.02	25.63	16.30	0.51	75.00
Santan East	1220	53.71	351.15	353.39	352.70	353.61	2.24	2.05	26.25	16.45	0.52	75.00
Santan East	1210	55.72	351.08	353.36	352.66	353.58	2.28	2.07	26.87	16.60	0.52	75.00

HEC-RAS Plan: Basin "B" 9/13/96 (continued)

Reach	River Sta.	Q Total	Min Ch El	W.S. Elev	Crit W.S.	E.G. Elev	Max Chl Dpth	Vel Chnl	Flow Area	Top Width	Froude # Chl	Length Chnl
		(m3/s)	(m)	(m)	(m)	(m)	(m)	(m/s)	(m2)	(m)		(m)
Santan East	1200	57.73	351.00	353.32	352.62	353.54	2.32	2.10	27.50	16.76	0.52	75.00
Santan East	1190	59.74	350.93	353.28	352.58	353.51	2.35	2.12	28.14	16.91	0.53	60.30
Santan East	1180	61.71	350.87	353.24	352.54	353.48	2.38	2.16	28.53	17.00	0.53	5.75
Santan East	1177.5*	61.71	350.86	353.27	352.46	353.47	2.41	1.98	31.19	18.08	0.48	5.75
Santan East	1175.*	61.71	350.86	353.29	352.38	353.46	2.43	1.83	33.76	19.13	0.44	5.75
Santan East	1172.5*	61.71	350.85	353.30	352.32	353.45	2.45	1.70	36.26	20.16	0.41	5.75
Santan East	1170	61.71	350.84	353.31	352.26	353.44	2.47	1.59	38.80	21.20	0.38	8.00
Santan East	1168.*	61.71	350.84	353.29	352.41	353.44	2.45	1.72	35.82	21.13	0.42	8.00
Santan East	1166.*	61.71	350.83	353.24	352.59	353.43	2.41	1.92	32.22	21.02	0.49	8.00
Santan East	1164.*	61.71	350.82	353.16	352.53	353.42	2.34	2.27	27.22	20.64	0.63	8.00
Santan East	1162.*	61.71	350.81	353.11	352.52	353.41	2.30	2.42	25.53	15.09	0.59	8.00
Santan East	1160	61.71	350.80	353.11	352.51	353.41	2.31	2.41	25.59	15.10	0.59	4.07
Santan East	1157.5*	61.71	350.80	353.16	352.34	353.38	2.36	2.11	29.19	15.48	0.49	4.07
Santan East	1155.*	61.71	350.80	353.19	352.18	353.37	2.39	1.88	32.78	15.84	0.42	4.07
Santan East	1152.5*	61.71	350.79	353.21	352.04	353.36	2.42	1.71	36.18	16.05	0.36	4.07
Santan East	1150	63.17	350.79	353.22	351.94	353.35	2.43	1.60	39.44	16.22	0.35	40.08
Santan East	1145	63.17										
Santan East	1140	63.17	350.75	353.07	351.90	353.22	2.32	1.68	37.70	16.22	0.35	4.00
Santan East	1137.5*	63.17	350.74	353.04	352.01	353.21	2.30	1.82	34.77	16.34	0.40	4.00
Santan East	1135.*	63.17	350.74	353.00	352.13	353.21	2.26	2.00	31.58	16.39	0.46	4.00
Santan East	1132.5*	63.17	350.74	352.95	352.27	353.20	2.21	2.24	28.20	16.32	0.54	4.00
Santan East	1130	63.17	350.73	352.84	352.43	353.19	2.10	2.62	24.07	15.94	0.68	5.17
Santan East	1128.33*	63.17	350.73	352.84	352.42	353.18	2.11	2.62	24.12	15.95	0.68	5.17
Santan East	1126.66*	63.17	350.72	352.84	352.42	353.17	2.12	2.54	24.87	19.87	0.72	5.17
Santan East	1125.*	63.17	350.72	352.88	352.47	353.15	2.16	2.30	27.46	20.05	0.63	5.17
Santan East	1123.33*	63.17	350.71	352.91	352.35	353.13	2.20	2.12	29.85	20.19	0.56	5.17
Santan East	1121.66*	63.17	350.71	352.92	352.24	353.12	2.21	1.97	32.05	20.29	0.50	5.17
Santan East	1120	63.17	350.70	352.94	352.13	353.11	2.24	1.85	34.23	20.38	0.45	5.75
Santan East	1117.5*	63.17	350.70	352.90	352.18	353.11	2.20	1.99	31.73	19.32	0.50	5.75
Santan East	1115.*	63.17	350.69	352.86	352.23	353.10	2.17	2.17	29.07	18.21	0.55	5.75
Santan East	1112.5*	63.17	350.68	352.80	352.30	353.09	2.12	2.41	26.20	17.03	0.62	5.75
Santan East	1110	63.17	350.68	352.67	352.38	353.07	1.99	2.83	22.32	15.57	0.75	75.00
Santan East	1100	63.71	350.60	352.59	352.31	353.01	1.99	2.86	22.31	15.55	0.76	75.00
Santan East	1090	63.71	350.53	352.53	352.22	352.93	2.00	2.80	22.79	15.82	0.74	75.00
Santan East	1080	63.71	350.45	352.47	352.15	352.86	2.02	2.77	22.98	15.88	0.74	75.00
Santan East	1070	63.71	350.38	352.41	352.08	352.80	2.03	2.74	23.22	15.94	0.73	54.20
Santan East	1065	63.71	350.33	352.37	352.03	352.75	2.04	2.72	23.41	15.99	0.72	3.40
Santan East	1064.*	63.71	350.32	352.41	351.95	352.73	2.09	2.48	25.71	16.98	0.64	3.40
Santan East	1063.*	63.71	350.32	352.44	351.89	352.71	2.12	2.29	27.78	17.91	0.59	3.40
Santan East	1062.*	63.71	350.32	352.46	351.83	352.70	2.14	2.13	29.85	18.82	0.54	3.40
Santan East	1061.*	63.71	350.31	352.48	351.77	352.69	2.17	2.00	31.90	19.72	0.50	3.40
Santan East	1060	63.71	350.31	352.50	351.72	352.68	2.19	1.88	33.86	20.59	0.47	3.50
Santan East	1059.66*	63.71	350.31	352.47	351.82	352.67	2.16	2.00	31.83	20.50	0.51	3.50
Santan East	1059.33*	63.71	350.30	352.44	351.91	352.67	2.14	2.14	29.74	20.41	0.57	3.50
Santan East	1059.*	63.71	350.30	352.38	352.00	352.66	2.08	2.35	27.07	20.20	0.65	3.50
Santan East	1058.66*	63.71	350.29	352.27	352.08	352.65	1.98	2.72	23.45	19.79	0.80	3.50
Santan East	1058.33*	63.71	350.29	352.15	351.99	352.64	1.86	3.11	20.48	15.28	0.86	3.50
Santan East	1058	63.71	350.29	351.99	351.99	352.62	1.70	3.52	18.12	14.61	1.01	5.07
Santan East	1057.*	63.71	350.28	351.76	351.89	352.56	1.48	3.97	16.04	13.42	1.16	5.07
Santan East	1056.*	63.71	350.28	351.59	351.80	352.53	1.31	4.29	14.85	12.93	1.28	5.07
Santan East	1055	63.71	350.27	351.70	351.70	352.38	1.43	3.66	17.42	12.92	1.01	2.77
Santan East	1053.36*	63.71	350.00	351.10	351.40	352.22	1.10	4.68	13.60	12.90	1.46	2.77
Santan East	1051.73*	63.71	349.72	350.67	351.09	352.12	0.95	5.35	11.92	12.90	1.78	2.77
Santan East	1050.1	63.71	349.44	351.65	350.79	351.90	2.21	2.24	28.49	12.92	0.48	0.10
Santan East	1050	63.71	349.44	351.56	350.86	351.88	2.12	2.50	25.45	12.00	0.55	17.54
Santan East	1048.33*	63.71	349.43	351.53	350.85	351.86	2.10	2.52	25.23	12.00	0.56	17.54
Santan East	1046.66*	63.71	349.40	351.51	350.82	351.83	2.11	2.52	25.27	12.00	0.55	17.54
Santan East	1045.*	63.71	349.36	351.48	350.78	351.80	2.12	2.50	25.45	12.00	0.55	17.54
Santan East	1043.33*	63.71	349.33	351.45	350.75	351.77	2.12	2.50	25.50	12.00	0.55	17.54
Santan East	1041.66*	63.71	349.30	351.43	350.72	351.75	2.13	2.49	25.54	12.00	0.55	17.54
Santan East	1040	63.71	349.27	351.40	350.68	351.72	2.13	2.49	25.61	12.00	0.54	0.10
Santan East	1039.9	63.71	349.27	351.44	350.62	351.70	2.17	2.27	28.05	12.92	0.49	1.00
Santan West	2220	4.25	353.21	353.86	353.81	354.04	0.64	1.89	2.25	4.87	0.89	44.00
Santan West	2210	4.25	353.13	353.75	353.72	353.95	0.63	1.95	2.18	4.81	0.93	75.00
Santan West	2200	4.25	352.97	353.60	353.57	353.80	0.63	1.94	2.19	4.82	0.92	75.00
Santan West	2195	4.25	352.82	353.49	353.42	353.66	0.67	1.78	2.38	4.98	0.82	5.00
Santan West	2190	4.25	352.82	353.49	353.41	353.65	0.67	1.77	2.40	4.99	0.82	75.00
Santan West	2180	4.25	352.64	353.46	353.24	353.55	0.81	1.35	3.14	5.56	0.57	75.00
Santan West	2170	5.66	352.49	353.30	353.20	353.47	0.81	1.82	3.10	5.53	0.78	4.75
Santan West	2167.5*	5.66	352.48	353.35	353.09	353.44	0.87	1.34	4.23	6.74	0.54	4.75
Santan West	2165.*	5.66	352.47	353.37	353.02	353.43	0.90	1.09	5.22	7.81	0.42	4.75
Santan West	2162.5*	5.66	352.46	353.38	352.97	353.42	0.92	0.92	6.16	8.85	0.35	4.75
Santan West	2160	5.66	352.45	353.38	352.93	353.42	0.93	0.80	7.04	9.86	0.30	3.00
Santan West	2158.*	5.66	352.45	353.37	353.05	353.42	0.92	0.96	5.92	9.81	0.39	3.00
Santan West	2156.*	5.66	352.44	353.34	353.16	353.41	0.90	1.20	4.73	9.71	0.55	3.00
Santan West	2154.*	5.66	352.44	353.21	353.14	353.40	0.77	1.94	2.92	5.41	0.84	3.00
Santan West	2152.*	5.66	352.43	353.20	353.13	353.39	0.77	1.95	2.90	5.39	0.85	3.00
Santan West	2150	5.66	352.43	353.13	353.13	353.38	0.70	2.23	2.54	5.11	1.01	3.00
Santan West	2148.*	5.66	352.09	352.54	352.77	353.30	0.45	3.87	1.46	3.97	2.03	3.00
Santan West	2146.*	5.66	351.76	352.11	352.42	353.29	0.35	4.81	1.18	3.78	2.75	3.00
Santan West	2144.*	5.66	351.43	352.70	352.06	352.76	1.27	1.08	5.24	4.83	0.33	3.00
Santan West	2142.*	5.66	351.10	352.71	351.69	352.75	1.61	0.83	6.86	4.63	0.22	3.00
Santan West	2140	5.66	350.77	352.72	351.33	352.74	1.95	0.67	8.47	4.34	0.17	52.28
Santan West	2135	5.66										
Santan West	2130	5.66	350.68	352.47	351.23	352.50	1.79	0.73	7.78	4.34	0.17	5.07
Santan West	2126.66*	5.66	350.67	352.47	351.26	352.49	1.80	0.64	8.84	6.04	0.17	5.07
Santan West	2123.33*	5.66	350.65	352.47	351.28	352.49	1.82	0.57	10.01	7.78	0.16	5.07
Santan West	2120	20.36	350.64	352.17	351.97	352.46	1.53	2.39	8.52	8.53	0.76	5.00
Santan West	2118.*	20.36	350.63	352.16	351.96	352.45	1.53	2.39	8.54	8.54	0.76	5.00
Santan West	2116.*	20.36	350.62	352.21	352.06	352.43	1.59	2.05	9.92	12.99	0.75	5.00
Santan West	2114.*	20.36	350.61	352.26	351.88	352.40	1.65	1.61	12.61	13.25	0.53	5.00
Santan West	2112.*	20.36	350.60	352.29	351.70	352.38	1.69	1.37	14.84	13.34	0.42	5.00
Santan West	2110	20.36	350.59	352.30	351.52	352.38	1.71	1.21	16.82	13.37	0.34	4.60
Santan West	2108.*	20.36	350.59	352.29	351.57	352.37	1.70	1.32	15.42	12.55	0.38	4.60
Santan West	2106.*	20.36	350.58	352.26	351.63	352.37	1.68	1.46	13.92	11.72	0.43	4.60
Santan West	2104.*	20.36	350.58	352.23	351.70	352.37	1.65	1.65	12.33	10.84	0.49	4.60
Santan West	2102.*	20.36	350.57	352.17	351.78	352.36	1.60	1.93	10.55	9.86	0.60	4.60
Santan West	2100	20.36	350.57	352.01	351.88	352.34	1.45	2.54	8.02	8.49	0.83	102.79
Santan West	2090	20.36	350.37	351.96	351.68	352.21	1.59	2.19	9.29	9.07	0.69	75.00

HEC-RAS Plan: Basin "B" 9/13/96 (continued)

Reach	River Sta.	Q Total	Min Ch El	W.S. Elev	Crit W.S.	E.G. Elev	Max Chl Dpth	Vel Chnl	Flow Area	Top Width	Froude # Chl	Length Chnl
		(m3/s)	(m)	(m)	(m)	(m)	(m)	(m/s)	(m2)	(m)		(m)
Santan West	2080	20.36	350.23	351.94	351.55	352.14	1.70	1.97	10.31	9.51	0.61	75.00
Santan West	2070	20.36	350.10	351.92	351.41	352.08	1.82	1.77	11.47	9.98	0.53	75.00
Santan West	2060	21.24	349.96	351.90	351.31	352.04	1.94	1.68	12.63	10.44	0.49	75.00
Santan West	2050	21.24	349.89	351.88	351.23	352.01	1.99	1.61	13.20	10.65	0.46	75.00
Santan West	2040	21.24	349.81	351.86	351.16	351.98	2.05	1.54	13.81	10.88	0.44	75.00
Santan West	2030	21.24	349.74	351.85	351.08	351.96	2.11	1.47	14.47	11.12	0.41	75.00
Santan West	2020	21.24	349.66	351.83	351.01	351.93	2.17	1.40	15.16	11.37	0.39	75.00
Santan West	2010	21.24	349.59	351.82	350.93	351.91	2.23	1.34	15.89	11.62	0.36	75.00
Santan West	2000	21.24	349.51	351.80	350.88	351.90	2.29	1.34	15.87	11.24	0.36	50.00
Santan West	1990	21.24	349.49	351.80	350.83	351.88	2.31	1.26	16.80	11.83	0.34	50.00
Santan West	1980	21.24	349.42	351.79	350.77	351.87	2.38	1.24	17.17	11.83	0.33	3.00
Santan West	1979.25*	21.24	349.42	351.80	350.64	351.87	2.38	1.10	19.39	12.66	0.28	3.00
Santan West	1978.5*	21.24	349.41	351.81	350.53	351.86	2.40	0.98	21.60	13.46	0.25	3.00
Santan West	1977.75*	21.24	349.41	351.82	350.44	351.86	2.41	0.89	23.79	14.30	0.22	3.00
Santan West	1977	21.24	349.41	351.82	350.36	351.86	2.41	0.82	26.02	15.10	0.20	5.00
Santan West	1976.6*	21.24	349.40	351.81	350.59	351.85	2.41	0.90	23.64	15.07	0.23	5.00
Santan West	1976.2*	21.24	349.40	351.80	350.80	351.85	2.40	1.00	21.23	15.03	0.27	5.00
Santan West	1975.8*	21.24	349.39	351.78	350.78	351.85	2.39	1.13	18.77	14.97	0.32	5.00
Santan West	1975.4*	21.24	349.39	351.75	350.77	351.84	2.36	1.33	16.03	14.85	0.41	5.00
Santan West	1975	21.24	349.38	351.74	350.77	351.83	2.36	1.33	15.92	10.85	0.35	5.01
Santan West	1973.36*	21.24	349.38	351.72	350.71	351.83	2.34	1.47	14.49	8.89	0.37	5.01
Santan West	1971.73*	21.24	349.37	351.69	350.65	351.82	2.32	1.64	12.99	6.97	0.38	5.01
Santan West	1970.1	21.24	349.37	351.63	350.58	351.81	2.26	1.87	11.38	5.03	0.40	0.10
Santan West	1970	21.24	349.37	351.60	350.62	351.80	2.23	1.98	10.71	4.80	0.42	20.94
Santan West	1968.*	21.24	349.35	351.58	350.61	351.78	2.23	1.98	10.71	4.80	0.42	20.94
Santan West	1966.*	21.24	349.33	351.56	350.59	351.76	2.23	1.98	10.71	4.80	0.42	20.94
Santan West	1964.*	21.24	349.31	351.54	350.57	351.74	2.23	1.98	10.71	4.80	0.42	20.94
Santan West	1962.*	21.24	349.29	351.52	350.55	351.72	2.23	1.98	10.72	4.80	0.42	20.94
Santan West	1960	21.24	349.27	351.50	350.52	351.70	2.24	1.98	10.73	4.80	0.42	0.10
Santan West	1959.9	21.24	349.27	351.52	350.48	351.70	2.25	1.88	11.31	5.03	0.40	1.00
Santan South	2110	84.96	349.27	351.46	350.57	351.69	2.19	2.13	39.84	18.18	0.46	7.78
Santan South	2105.02*	84.96	349.26	351.42	350.64	351.68	2.16	2.27	37.47	18.20	0.50	7.78
Santan South	2100.05*	84.96	349.25	351.37	350.71	351.66	2.12	2.42	35.17	18.71	0.56	7.78
Santan South	2095.07*	84.96	349.25	351.31	350.79	351.65	2.06	2.59	33.44	19.60	0.62	7.78
Santan South	2090.1	84.96	349.24	350.86	350.86	351.54	1.62	3.64	23.31	19.16	1.00	0.10
Santan South	2090	84.96	349.24	350.86	350.86	351.54	1.62	3.64	23.31	25.23	1.04	9.98
Santan South	2082.5*	79.76	349.24	350.74	350.82	351.50	1.51	3.86	20.66	20.16	1.10	9.98
Santan South	2075.*	74.57	349.23	350.77	350.78	351.44	1.55	3.61	20.64	19.82	1.01	9.98
Santan South	2067.5*	69.38	349.22	350.65	350.74	351.40	1.44	3.83	18.09	18.70	1.12	9.98
Santan South	2060.*	64.19	349.21	350.66	350.70	351.33	1.45	3.64	17.62	18.22	1.06	9.98
Santan South	2052.5*	58.99	349.20	350.55	350.66	351.28	1.35	3.79	15.58	17.19	1.14	9.98
Santan South	2045.*	53.80	349.20	350.63	350.61	351.20	1.44	3.36	16.03	17.04	0.98	9.98
Santan South	2037.5*	48.61	349.19	350.65	350.55	351.14	1.47	3.08	15.79	16.61	0.89	9.98
Santan South	2030.*	43.42	349.18	350.68	350.49	351.08	1.51	2.80	15.52	16.19	0.80	9.98
Santan South	2022.5*	38.22	349.17	350.71	350.42	351.03	1.54	2.50	15.30	15.82	0.70	9.98
Santan South	2015.*	33.03	349.16	350.74	350.35	350.99	1.58	2.22	14.91	15.42	0.62	9.98
Santan South	2007.5*	27.84	349.15	350.76	350.26	350.95	1.61	1.93	14.41	18.93	0.54	9.98
Santan South	2000	22.65	349.15	350.79	350.17	350.92	1.65	1.63	13.89	18.43	0.45	0.10
Santan South	1999.9	22.65	349.15	350.79	350.16	350.92	1.65	1.63	13.89	12.33	0.45	3.12
Santan South	1998.67*	22.65	349.14	350.79	350.17	350.92	1.65	1.59	14.48	11.79	0.45	3.12
Santan South	1997.45*	22.65	349.14	350.79	350.18	350.92	1.65	1.59	14.23	11.32	0.45	3.12
Santan South	1996.22*	22.65	349.14	350.79	350.20	350.91	1.65	1.58	14.34	11.80	0.46	3.12
Santan South	1995	22.65	349.14	350.79	350.20	350.91	1.65	1.55	14.59	12.35	0.46	49.74
Santan South	1963.05*	22.65	349.10	350.76	350.16	350.88	1.66	1.54	14.71	12.37	0.45	49.74
Santan South	1931.11*	22.65	349.06	350.74	350.12	350.85	1.68	1.52	14.94	12.48	0.44	49.74
Santan South	1899.16*	22.65	349.02	350.71	350.08	350.83	1.69	1.50	15.13	12.52	0.43	49.74
Santan South	1867.22*	22.65	348.98	350.69	350.04	350.80	1.71	1.47	15.38	12.62	0.43	49.74
Santan South	1835.27*	22.65	348.94	350.67	350.00	350.78	1.73	1.45	15.60	12.68	0.42	49.74
Santan South	1803.33*	22.65	348.90	350.65	349.96	350.75	1.75	1.43	15.83	12.74	0.41	49.74
Santan South	1771.38*	22.65	348.86	350.63	349.92	350.73	1.77	1.40	16.13	12.85	0.40	49.74
Santan South	1739.44*	22.65	348.82	350.61	349.88	350.71	1.79	1.38	16.39	12.91	0.39	49.74
Santan South	1707.5*	22.65	348.78	350.59	349.85	350.69	1.81	1.37	16.52	12.94	0.39	49.74
Santan South	1675.55*	22.65	348.74	350.58	349.80	350.67	1.84	1.33	16.99	13.11	0.37	49.74
Santan South	1643.61*	22.65	348.70	350.56	349.76	350.65	1.86	1.30	17.36	13.26	0.36	49.74
Santan South	1611.66*	22.65	348.66	350.55	349.72	350.63	1.89	1.28	17.66	13.32	0.36	49.74
Santan South	1579.72*	22.65	348.62	350.53	349.68	350.61	1.91	1.26	17.97	13.40	0.35	49.74
Santan South	1547.77*	22.65	348.58	350.52	349.64	350.60	1.94	1.24	18.32	13.49	0.34	49.74
Santan South	1515.83*	22.65	348.54	350.51	349.60	350.58	1.97	1.21	18.73	13.64	0.33	49.74
Santan South	1483.88*	22.65	348.50	350.50	349.56	350.57	2.00	1.18	19.17	13.80	0.32	49.74
Santan South	1451.94*	22.65	348.46	350.48	349.52	350.55	2.02	1.16	19.54	13.89	0.31	49.74
Santan South	1420	22.65	348.42	350.47	349.48	350.54	2.05	1.14	19.93	13.98	0.30	63.38
Santan South	1320	22.65	348.37	350.46	349.43	350.52	2.09	1.11	20.49	14.14	0.29	4.50
Santan South	1317.5*	22.65	348.36	350.47	349.35	350.52	2.11	1.00	22.69	15.20	0.26	4.50
Santan South	1315.*	22.65	348.36	350.47	349.29	350.52	2.11	0.91	24.77	16.22	0.24	4.50
Santan South	1312.5*	22.65	348.36	350.48	349.24	350.51	2.12	0.84	26.88	17.23	0.22	4.50
Santan South	1310	22.65	348.35	350.48	349.19	350.51	2.13	0.78	29.00	18.27	0.20	4.67
Santan South	1308.33*	22.65	348.35	350.48	349.33	350.51	2.13	0.83	27.22	18.29	0.22	4.67
Santan South	1306.66*	22.65	348.35	350.47	349.47	350.51	2.12	0.90	25.30	18.27	0.24	4.67
Santan South	1305.*	22.65	348.34	350.46	349.40	350.51	2.12	0.97	23.27	18.21	0.27	4.67
Santan South	1303.33*	22.65	348.34	350.45	349.40	350.51	2.11	1.06	21.28	18.15	0.31	4.67
Santan South	1301.66*	22.65	348.33	350.44	349.39	350.51	2.11	1.09	20.78	14.22	0.29	4.67
Santan South	1300	22.65	348.33	350.44	349.39	350.50	2.11	1.09	20.75	14.21	0.29	3.90
Santan South	1297.75*	22.65	348.33	350.43	349.40	350.50	2.10	1.20	18.83	12.25	0.31	3.90
Santan South	1295.5*	22.65	348.32	350.40	349.40	350.49	2.08	1.36	16.61	10.11	0.34	3.90
Santan South	1293.25*	22.65	348.32	350.36	349.42	350.48	2.04	1.57	14.41	8.15	0.38	3.90
Santan South	1291	22.65	348.32	350.30	349.42	350.47	1.98	1.84	12.32	6.23	0.42	0.10
Santan South	1290	22.65	348.32	350.27	349.45	350.46	1.96	1.93	11.74	6.00	0.44	49.96
Santan South	1283.57*	22.65	348.28	350.24	349.41	350.43	1.96	1.93	11.74	6.00	0.44	49.96
Santan South	1277.14*	22.65	348.24	350.20	349.37	350.39	1.96	1.93	11.74	6.00	0.44	49.96
Santan South	1270.71*	22.65	348.20	350.16	349.33	350.35	1.96	1.93	11.75	6.00	0.44	49.96
Santan South	1264.28*	22.65	348.16	350.12	349.29	350.31	1.96	1.93	11.75	6.00	0.44	49.96
Santan South	1257.85*	22.65	348.12	350.08	349.25	350.27	1.96	1.93	11.76	6.00	0.44	49.96
Santan South	1251.42*	22.65	348.08	350.04	349.21	350.23	1.96	1.93	11.77	6.00	0.44	49.96
Santan South	1245.*	22.65	348.04	350.00	349.17	350.19	1.96	1.92	11.77	6.00	0.44	49.96
Santan South	1238.57*	22.65	348.00	349.96	349.13	350.15	1.96	1.92	11.78	6.00	0.44	49.96
Santan South	1232.14*	22.65	347.96	349.92	349.09	350.11	1.96	1.92	11.79	6.00	0.44	49.96
Santan South	1225.71*	22.65	347.92	349.89	349.05	350.07	1.97	1.92	11.80	6.00	0.44	49.96
Santan South	1219.28*	22.65	347.88	349.85	349.01	350.04	1.97	1.92	11.81	6.00	0.44	49.96
Santan South	1212.85*	22.65	347.84	349.81	348.97	350.00	1.97	1.92	11.82	6.00	0.44	49.96

HEC-RAS Plan: Basin "B" 9/13/96 (continued)

Reach	River Sta.	Q Total	Min Ch El	W.S. Elev	Crit W.S.	E.G. Elev	Max Chl Dpth	Vel Chnl	Flow Area	Top Width	Froude # Chl	Length Chnl
		(m3/s)	(m)	(m)	(m)	(m)	(m)	(m/s)	(m2)	(m)		(m)
Santan South	1206.42*	22.65	347.80	349.77	348.93	349.96	1.97	1.92	11.83	6.00	0.44	49.96
Santan South	1200	22.65	347.76	349.73	348.89	349.92	1.97	1.91	11.84	6.00	0.43	41.89
Santan South	1193.33*	22.65	347.72	349.70	348.86	349.89	1.98	1.91	11.83	6.00	0.44	41.89
Santan South	1186.66*	22.65	347.69	349.67	348.82	349.85	1.98	1.91	11.87	6.00	0.43	41.89
Santan South	1180.*	22.65	347.66	349.64	348.79	349.82	1.98	1.91	11.86	6.00	0.43	41.89
Santan South	1173.33*	22.65	347.62	349.60	348.76	349.79	1.98	1.91	11.87	6.00	0.43	41.89
Santan South	1166.66*	22.65	347.59	349.57	348.72	349.76	1.98	1.90	11.89	6.00	0.43	41.89
Santan South	1160	22.65	347.56	349.54	348.69	349.73	1.98	1.90	11.89	6.00	0.43	1.00
Santan South	1159	22.65	347.56	349.55	348.66	349.72	1.99	1.83	12.39	6.23	0.41	3.83
Santan South	1156.75*	22.65	347.55	349.53	348.76	349.71	1.98	1.87	12.11	7.07	0.46	3.83
Santan South	1154.5*	22.65	347.55	349.53	348.83	349.71	1.98	1.86	12.20	8.07	0.48	3.83
Santan South	1152.25*	22.65	347.55	349.53	348.91	349.70	1.98	1.84	12.31	9.12	0.51	3.83
Santan South	1150	22.65	347.54	349.53	348.99	349.70	1.99	1.82	12.42	10.25	0.53	6.67
Santan South	1149.16*	22.65	347.54	349.53	348.99	349.70	1.99	1.83	12.38	10.23	0.53	6.67
Santan South	1148.33*	22.65	347.53	349.52	348.98	349.69	1.99	1.81	12.48	10.30	0.53	6.67
Santan South	1147.5*	22.65	347.53	349.53	348.98	349.68	2.00	1.70	13.32	14.29	0.56	6.67
Santan South	1146.66*	22.65	347.52	349.56	348.99	349.66	2.04	1.40	16.15	14.42	0.42	6.67
Santan South	1145.83*	22.65	347.52	349.57	348.76	349.65	2.05	1.20	18.84	14.53	0.34	6.67
Santan South	1145	22.65	347.51	349.58	348.52	349.64	2.07	1.06	21.38	14.59	0.28	5.00
Santan South	1143.75*	22.65	347.51	349.57	348.60	349.64	2.06	1.18	19.14	13.52	0.32	5.00
Santan South	1142.5*	22.65	347.50	349.54	348.69	349.63	2.04	1.33	16.99	12.48	0.36	5.00
Santan South	1141.25*	22.65	347.50	349.51	348.80	349.63	2.01	1.56	14.56	11.32	0.44	5.00
Santan South	1140	22.65	347.50	349.44	348.94	349.62	1.94	1.89	11.95	10.07	0.56	48.75
Santan South	1135.*	22.65	347.46	349.40	348.91	349.58	1.94	1.90	11.92	10.07	0.56	48.75
Santan South	1130.*	22.65	347.42	349.35	348.87	349.54	1.93	1.91	11.86	10.02	0.56	48.75
Santan South	1125.*	22.65	347.38	349.31	348.83	349.50	1.93	1.91	11.86	10.03	0.56	48.75
Santan South	1120.*	22.65	347.34	349.27	348.80	349.46	1.93	1.94	11.70	9.99	0.57	48.75
Santan South	1115.*	22.65	347.30	349.23	348.75	349.42	1.93	1.91	11.84	10.03	0.56	48.75
Santan South	1110.*	22.65	347.26	349.19	348.71	349.38	1.93	1.92	11.77	9.98	0.57	48.75
Santan South	1105.*	22.65	347.22	349.15	348.67	349.33	1.93	1.93	11.75	9.97	0.57	48.75
Santan South	1100	22.65	347.18	349.10	348.63	349.29	1.92	1.93	11.74	9.98	0.57	47.14
Santan South	1093.18*	22.65	347.15	349.06	348.59	349.25	1.91	1.93	11.72	9.98	0.57	47.14
Santan South	1086.36*	22.65	347.11	349.02	348.56	349.21	1.91	1.95	11.64	9.94	0.57	47.14
Santan South	1079.54*	22.65	347.07	348.98	348.52	349.17	1.91	1.95	11.62	9.94	0.58	47.14
Santan South	1072.72*	22.65	347.03	348.94	348.48	349.13	1.91	1.95	11.61	9.93	0.58	47.14
Santan South	1065.90*	22.65	347.00	348.89	348.44	349.09	1.89	1.97	11.52	9.89	0.58	47.14
Santan South	1059.09*	22.65	346.96	348.85	348.41	349.05	1.89	1.98	11.42	9.85	0.59	47.14
Santan South	1052.27*	22.65	346.92	348.80	348.37	349.01	1.88	1.99	11.38	9.84	0.59	47.14
Santan South	1045.45*	22.65	346.88	348.76	348.33	348.96	1.88	2.00	11.33	9.82	0.59	47.14
Santan South	1038.63*	22.65	346.85	348.71	348.29	348.92	1.86	2.02	11.20	9.77	0.60	47.14
Santan South	1031.81*	22.65	346.81	348.66	348.26	348.88	1.85	2.05	11.06	9.71	0.61	47.14
Santan South	1025	22.65	346.77	348.61	348.22	348.83	1.84	2.06	11.00	9.68	0.62	4.00
Santan South	1023.33*	22.65	346.77	348.67	348.04	348.80	1.90	1.63	13.91	11.19	0.47	4.00
Santan South	1021.66*	22.65	346.76	348.70	347.88	348.79	1.94	1.33	17.00	12.75	0.37	4.00
Santan South	1020	22.65	346.76	348.71	347.77	348.78	1.95	1.15	19.66	14.11	0.31	5.00
Santan South	1019.*	22.65	346.76	348.69	347.95	348.78	1.93	1.29	17.62	14.05	0.37	5.00
Santan South	1018.*	22.65	346.75	348.67	348.12	348.77	1.92	1.46	15.55	13.96	0.44	5.00
Santan South	1017.*	22.65	346.75	348.61	348.28	348.77	1.86	1.74	12.98	13.74	0.57	5.00
Santan South	1016.*	22.65	346.74	348.49	348.19	348.75	1.75	2.24	10.12	9.31	0.68	5.00
Santan South	1015	22.65	346.74	348.49	348.19	348.75	1.75	2.25	10.06	9.29	0.69	15.30
Santan South	1010	22.65	346.73	348.50	347.82	348.71	1.77	2.04	11.09	6.28	0.56	35.80
Santan South	1005	22.65										
Santan South	1000	22.65	346.70	348.31	347.79	348.57	1.61	2.24	10.11	6.28	0.56	

Santan Channels (Basin "B") Plan: Final 3 Design - 9-13-1996 9/13/96

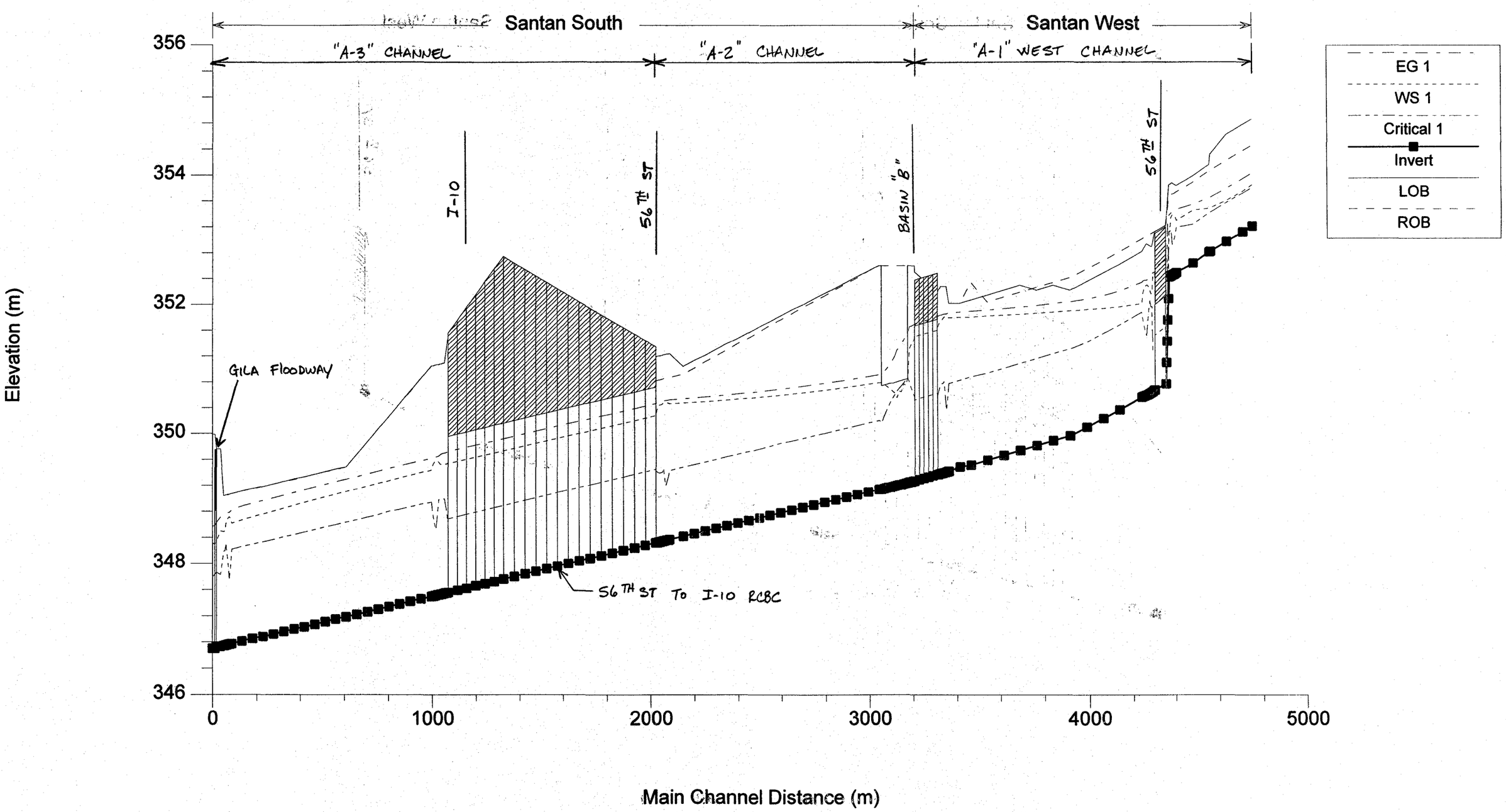

Santan Channels (Basin "B") Plan: Final 3 Design - 9-13-1996 9/13/96

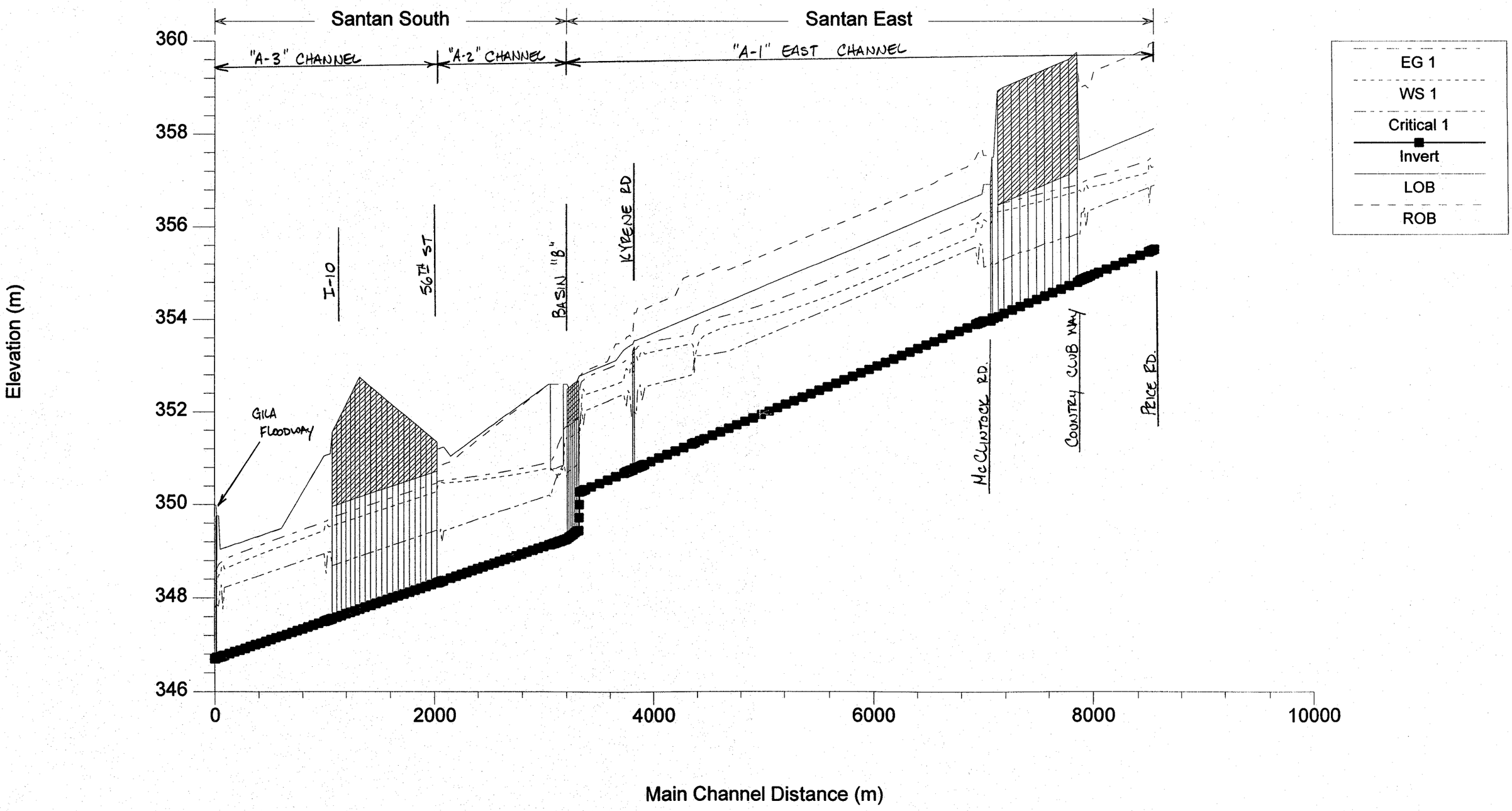

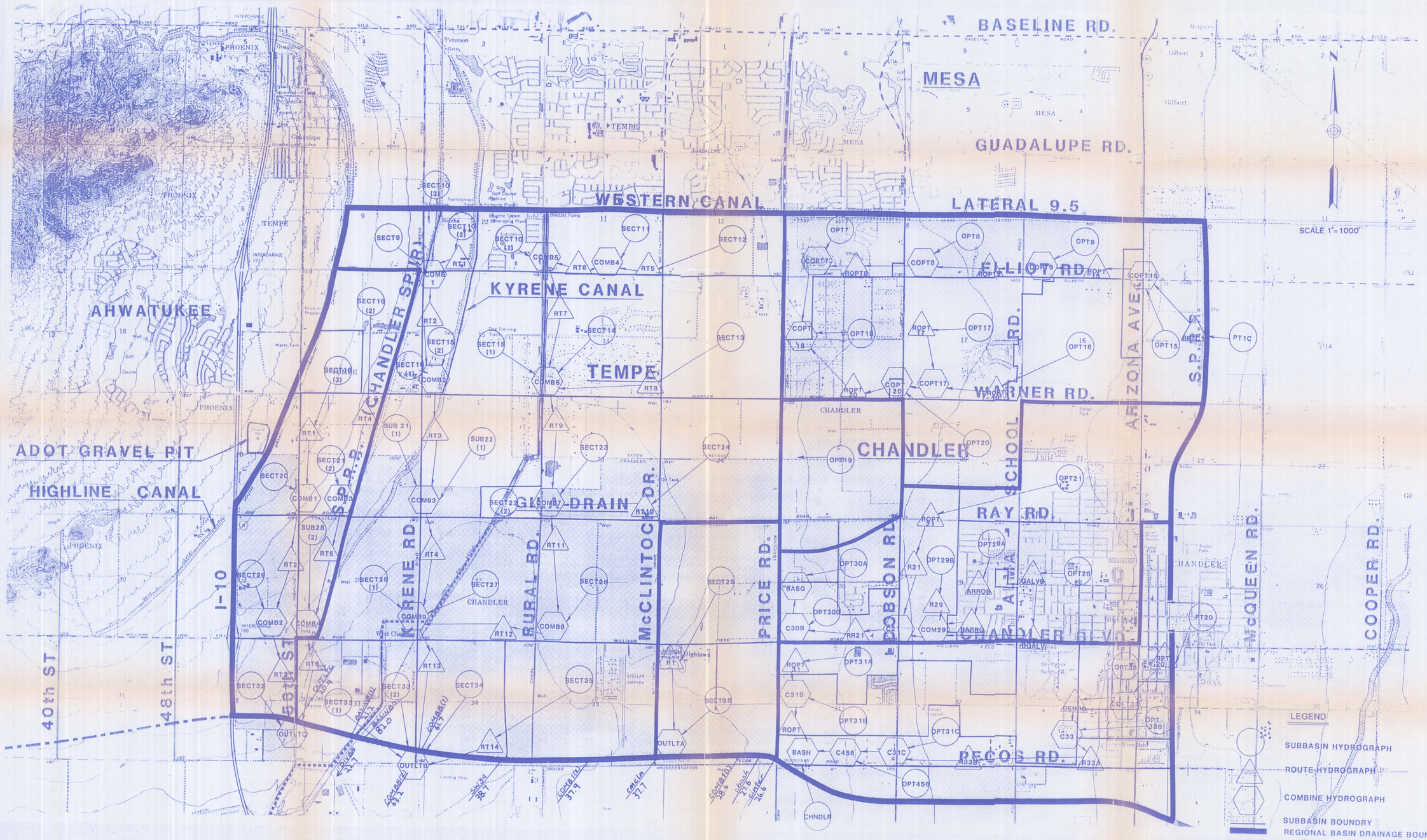

SEP 13 1996

Base Map Source: HDR Engineering, Inc., *Concept Drainage Report, Price Expressway Santan Freeway - 56th Street to Dobson Road, Gila Drain Alternative Final Report*, February 1993.

SANTAN FREEWAY
HEC-1 SCHEMATIC DIAGRAM
AND SUMMARY OF FLOWS
FIGURE 3

WOOD/PATEL ASSOCIATES Civil Engineers Hydrologists Land Surveyors (602) 234-1344	SCALE	SHEET OF
	DATE 9/12/96	JOB NO. 95271.04
	DESIGN	CHECK