FINAL DRAINAGE REPORT

SANTAN FREEWAY (SR 202L)

Elliot Road to Baseline Road

(Appendices E – H)

ADOT Contract No. 02-34

ADOT TRACS No. 202L MA 031 H5915 01 C

April 2003

Prepared for:

Arizona Department of Transportation

REGISTERED PROFESSIONAL ENGINEER (CIVIL)
CERTIFICATE NO.
26313
CHRISTOPHER
D'ARCANGELISO
Date Signed 4-29-03
ARIZONA, U.S.A.

Prepared by:

Stanley Consultants INC.

Property of
Flood Control District of MC Library
Please Return to
2801 W. Durango
Phoenix, AZ 85009

APPENDIX E INLET CALCULATIONS (HEC 22)

ARIZONA DEPARTMENT OF TRANSPORTATION
DRAINAGE DESIGN SECTION

09-26-2002

PROJECT NAME- Santan
HIGHWAY NAME- Elliot Rd
LOCATION - 10+00 LT
Ver 3.40: December 1995

TRACS NO.-
DESIGNER - MJB
CHECKER - (A)
PAGE

CURB OPENING INLET -- ON GRADE

GUTTER FLOW HYDRAULICS
GUTTER DESCRIPTION

Roadway Grade-% Per cent--G	=	0.500
Roadway Cross-Slope-Ft./Ft.--Sx	=	0.020
Shoulder Width-Ft.--	=	1.000
Shoulder Slope-Ft./Ft.--Ss	=	0.020
Gutter Width-Ft.--W	=	1.417
Gutter Slope-Ft./Ft.--Sw	=	0.059
Gutter Depression-Inches--	=	1.003
Manning's 'N	=	0.016
Flow-CFS--Q	=	4.600
SPREAD-Ft.--T	=	14.318
Average Velocity-V-fps	=	2.202
FLOW in Gutter-CFS--Q	=	1.261
% Flow in Gutter-CFS	=	27.406
Velocity of Flow in Gutter-fps	=	2.967
Depth at Curb Line-Inches--d	=	4.100

CURB OPENING--ADOT STD. C-15.20

Flow-CFS--Q	=	4.600
Gutter Velocity at INLET-fps	=	3.212
GUTTER FLOW at INLET-CFS--Q	=	1.519
Depth at INLET Curb Line-Inches--d	=	5.006
Local Gutter Depression-Inches	=	1.000
Length of opening: TOTAL Intercept--Ft.	=	20.396
Capture Ratio -- CURB OPENING	=	0.800

LENGTH	Efficiency	Q(Captured)	Q(By-Pass)
3.083	0.255	1.175	3.425
6.583	0.504	2.319	2.281
9.583	0.681	3.132	1.468
13.583	0.861	3.961	0.639
20.583	1.000	4.600	0.000

1-C15.20, L=19.5'

ARIZONA DEPARTMENT OF TRANSPORTATION
DRAINAGE DESIGN SECTION

09-26-2002

PROJECT NAME- Santan
HIGHWAY NAME- Ellio t Rd
LOCATION - 10+00 RT
Ver 3.40: December 1995

TRACS NO.-
DESIGNER - MRK
CHECKER - CA
PAGE

CURB OPENING INLET -- ON GRADE

GUTTER FLOW HYDRAULICS
GUTTER DESCRIPTION

Roadway Grade-% Per cent--G	=	0.500
Roadway Cross-Slope-Ft./Ft.--Sx	=	0.020
Shoulder Width-Ft.--	=	1.000
Shoulder Slope-Ft./Ft.--Ss	=	0.020
Gutter Width-Ft.--W	=	1.417
Gutter Slope-Ft./Ft.--Sw	=	0.059
Gutter Depression-Inches--	=	1.003
Manning's 'N	=	0.016
Flow-CFS--Q	=	4.080
SPREAD-Ft.--T	=	13.668
Average Velocity-V-fps	=	2.139
FLOW in Gutter-CFS--Q	=	1.171
% Flow in Gutter-CFS	=	28.705
Velocity of Flow in Gutter-fps	=	2.882
Depth at Curb Line-Inches--d	=	3.943

CURB OPENING--ADOT STD. C-15.20

Flow-CFS--Q	=	4.080
Gutter Velocity at INLET-fps	=	3.129
GUTTER FLOW at INLET-CFS--Q	=	1.420
Depth at INLET Curb Line-Inches--d	=	4.845
Local Gutter Depression-Inches	=	1.000
Length of opening: TOTAL Intercept--Ft.	=	19.016
Capture Ratio -- CURB OPENING	=	0.800

LENGTH	Efficiency	Q(Captured)	Q(By-Pass)
3.083	0.273	1.113	2.967
6.583	0.535	2.181	1.899
9.583	0.717	2.925	1.155
13.583	0.895	3.652	0.428
20.583	1.000	4.080	0.000

1-C15.20, L=19.5-1

ARIZONA DEPARTMENT OF TRANSPORTATION
DRAINAGE DESIGN SECTION

09-30-2002

PROJECT NAME- Santan
HIGHWAY NAME- Elliot RD
LOCATION - STH 19+37.6T
Ver 3.40: December 1995

TRACS NO.-
DESIGNER - MJG
CHECKER - (A)
PAGE

CURB OPENING INLET -- ON GRADE

GUTTER FLOW HYDRAULICS
GUTTER DESCRIPTION

Roadway Grade-% Per cent--G	=	0.400
Roadway Cross-Slope-Ft./Ft.--Sx	=	0.015
Shoulder Width-Ft.--	=	1.000
Shoulder Slope-Ft./Ft.--Ss	=	0.015
Gutter Width-Ft.--W	=	2.000
Gutter Slope-Ft./Ft.--Sw	=	0.068
Gutter Depression-Inches--	=	1.632
Manning's 'N	=	0.016
Flow-CFS--Q	=	0.810
SPREAD-Ft.--T	=	8.030
Average Velocity-V-fps	=	1.374
FLOW in Gutter-CFS--Q	=	0.567
% Flow in Gutter-CFS	=	69.943
Velocity of Flow in Gutter-fps	=	1.788
Depth at Curb Line-Inches--d	=	2.717

CURB OPENING--ADOT STD. C-15.20

Flow-CFS--Q	=	0.810
Gutter Velocity at INLET-fps	=	2.098
GUTTER FLOW at INLET-CFS--Q	=	0.767
Depth at INLET Curb Line-Inches--d	=	3.823
Local Gutter Depression-Inches	=	1.625
Length of opening: TOTAL Intercept--Ft.	=	5.342
Capture Ratio -- CURB OPENING	=	0.800

LENGTH	Efficiency	Q(Captured)	Q(By-Pass)
3.083	0.788	0.638	0.172
6.583	1.000	0.810	0.000
9.583	1.000	0.810	0.000
13.583	1.000	0.810	0.000
20.583	1.000	0.810	0.000

1-C15.20, L=3.5'

ARIZONA DEPARTMENT OF TRANSPORTATION
DRAINAGE DESIGN SECTION

09-30-2002

PROJECT NAME- Santan
HIGHWAY NAME- Elliot Rd
LOCATION - STA 19+372 RT
Ver 3.40: December 1995

TRACS NO.-
DESIGNER - MRG
CHECKER - A
PAGE

CURB OPENING INLET -- ON GRADE

GUTTER FLOW HYDRAULICS
GUTTER DESCRIPTION

Roadway Grade-% Per cent--G	=	0.400
Roadway Cross-Slope-Ft./Ft.--Sx	=	0.015
Shoulder Width-Ft.--	=	1.000
Shoulder Slope-Ft./Ft.--Ss	=	0.015
Gutter Width-Ft.--W	=	2.000
Gutter Slope-Ft./Ft.--Sw	=	0.068
Gutter Depression-Inches--	=	1.632
Manning's 'N	=	0.016
Flow-CFS--Q	=	0.810
SPREAD-Ft.--T	=	8.030
Average Velocity-V-fps	=	1.374
FLOW in Gutter-CFS--Q	=	0.567
% Flow in Gutter-CFS	=	69.943
Velocity of Flow in Gutter-fps	=	1.788
Depth at Curb Line-Inches--d	=	2.717

CURB OPENING--ADOT STD. C-15.20

Flow-CFS--Q	=	0.810
Gutter Velocity at INLET-fps	=	2.098
GUTTER FLOW at INLET-CFS--Q	=	0.767
Depth at INLET Curb Line-Inches--d	=	3.823
Local Gutter Depression-Inches	=	1.625
Length of opening: TOTAL Intercept--Ft.	=	5.342
Capture Ratio -- CURB OPENING	=	0.800

LENGTH	Efficiency	Q(Captured)	Q(By-Pass)
3.083	0.788	0.638	0.172
6.583	1.000	0.810	0.000
9.583	1.000	0.810	0.000
13.583	1.000	0.810	0.000
20.583	1.000	0.810	0.000

1-C15.20, L=3.5'

ARIZONA DEPARTMENT OF TRANSPORTATION
DRAINAGE DESIGN SECTION

10-01-2002

PROJECT NAME- Santan
HIGHWAY NAME- Elliot Rd
LOCATION - STA 20+19.72, LT
Ver 3.40: December 1995

TRACS NO.-
DESIGNER - MJG
CHECKER - (A)
PAGE

CURB OPENING INLET--IN SUMP

GUTTER FLOW HYDRAULICS

GUTTER DESCRIPTION

Roadway Cross-Slope-Ft./Ft.--Sx	=	0.015
Shoulder Width-Ft.--	=	1.000
Shoulder Slope-Ft./Ft.--Ss	=	0.015
Gutter Width-Ft.--W	=	2.000
Gutter Slope-Ft./Ft.--Sw	=	0.068
Gutter Depression-Inches--	=	1.632
Flow-CFS--Q	=	1.130
Local Gutter Depression-Inches	=	1.625
Capture Ratio -- CURB OPENING	=	0.800

LENGTH	d(weir)	d(orifice)	d(INLET)	SPREAD
3.083	2.447	0.607	2.447	1.503
6.583	1.847	0.133	1.847	1.134
9.583	1.555	0.063	1.555	0.955
13.583	1.303	0.031	1.303	0.800
20.583	1.037	0.014	1.037	0.637

*** d(INLET) is Greater of WEIR or ORIFICE Depth.! ***

Y-C15.20, $L_1 = L_2 = 3.5'$

ARIZONA DEPARTMENT OF TRANSPORTATION
DRAINAGE DESIGN SECTION

09-30-2002

PROJECT NAME- Santan
HIGHWAY NAME- Elliot Rd
LOCATION - SPA 2 of 14.22 LT, W
Ver 3.40: December 1995

TRACS NO.-
DESIGNER - MRG
CHECKER - AJ
PAGE

Spread @ upstream end of 3.5' wing

GUTTER FLOW HYDRAULICS
GUTTER DESCRIPTION

Roadway Grade-% Per cent--G	=	0.032
Roadway Cross-Slope-Ft./Ft.--Sx	=	0.015
Shoulder Width-Ft.--	=	1.000
Shoulder Slope-Ft./Ft.--Ss	=	0.015
Gutter Width-Ft.--W	=	2.000
Gutter Slope-Ft./Ft.--Sw	=	0.068
Gutter Depression-Inches--	=	1.632
Manning's 'N	=	0.016
Flow-CFS--Q	=	0.540
SPREAD-Ft.--T	=	12.098 L/3.5'
Average Velocity-V-fps	=	0.449
FLOW in Gutter-CFS--Q	=	0.270
% Flow in Gutter-CFS	=	49.948
Velocity of Flow in Gutter-fps	=	0.614
Depth at Curb Line-Inches--d	=	3.450

ARIZONA DEPARTMENT OF TRANSPORTATION
DRAINAGE DESIGN SECTION

10-01-2002

PROJECT NAME- Santan
HIGHWAY NAME- Elliot Rd
LOCATION - STA 20+25.22, LT, E
Ver 3.40: December 1995

TRACS NO.-
DESIGNER - MPL
CHECKER - AD
PAGE

Spread @ upstream end of 3.5' wing

GUTTER FLOW HYDRAULICS
GUTTER DESCRIPTION

Roadway Grade-% Per cent--G	=	0.032
Roadway Cross-Slope-Ft./Ft.--Sx	=	0.015
Shoulder Width-Ft.--	=	1.000
Shoulder Slope-Ft./Ft.--Ss	=	0.015
Gutter Width-Ft.--W	=	2.000
Gutter Slope-Ft./Ft.--Sw	=	0.068
Gutter Depression-Inches--	=	1.632
Manning's 'N	=	0.016
Flow-CFS--Q	=	0.590
SPREAD-Ft.--T	=	12.541 L/3.5
Average Velocity-V-fps	=	0.459
FLOW in Gutter-CFS--Q	=	0.285
% Flow in Gutter-CFS	=	48.301
Velocity of Flow in Gutter-fps	=	0.630
Depth at Curb Line-Inches--d	=	3.529

ARIZONA DEPARTMENT OF TRANSPORTATION
DRAINAGE DESIGN SECTION

10-01-2002

PROJECT NAME- Santan
HIGHWAY NAME- Elliot Rd
LOCATION - STA 20+19.72 RT
Ver 3.40: December 1995

TRACS NO.-
DESIGNER - MRL
CHECKER - AN
PAGE

CURB OPENING INLET--IN SUMP

GUTTER FLOW HYDRAULICS

GUTTER DESCRIPTION

Roadway Cross-Slope-Ft./Ft.--Sx	=	0.015
Shoulder Width-Ft.--	=	1.000
Shoulder Slope-Ft./Ft.--Ss	=	0.015
Gutter Width-Ft.--W	=	2.000
Gutter Slope-Ft./Ft.--Sw	=	0.068
Gutter Depression-Inches--	=	1.632
Flow-CFS--Q	=	1.120
Local Gutter Depression-Inches	=	1.625
Capture Ratio -- CURB OPENING	=	0.800

LENGTH	d(weir)	d(orifice)	d(INLET)	SPREAD
3.083	2.433	0.596	2.433	1.494
6.583	1.836	0.131	1.836	1.128
9.583	1.546	0.062	1.546	0.949
13.583	1.295	0.031	1.295	0.795
20.583	1.031	0.013	1.031	0.633

*** d(INLET) is Greater of WEIR or ORIFICE Depth.! ***

$1 - C(15,20)$, $L_1 = L_2 = 3.5'$

ARIZONA DEPARTMENT OF TRANSPORTATION
DRAINAGE DESIGN SECTION

10-01-2002

PROJECT NAME- Santan
HIGHWAY NAME- Elliot Rd
LOCATION - STA 20+14.22 RT, W
Ver 3.40: December 1995

TRACS NO.-
DESIGNER - MRG
CHECKER - AD
PAGE

Spread @ upstream end of 3.5' wing

GUTTER FLOW HYDRAULICS
GUTTER DESCRIPTION

Roadway Grade-% Per cent--G	=	0.032
Roadway Cross-Slope-Ft./Ft.--Sx	=	0.015
Shoulder Width-Ft.--	=	1.000
Shoulder Slope-Ft./Ft.--Ss	=	0.015
Gutter Width-Ft.--W	=	2.000
Gutter Slope-Ft./Ft.--Sw	=	0.068
Gutter Depression-Inches--	=	1.632
Manning's 'N	=	0.016
Flow-CFS--Q	=	0.540
SPREAD-Ft.--T	=	12.065 < 13.5'
Average Velocity-V-fps	=	0.451
FLOW in Gutter-CFS--Q	=	0.270
% Flow in Gutter-CFS	=	50.076
Velocity of Flow in Gutter-fps	=	0.617
Depth at Curb Line-Inches--d	=	3.444

ARIZONA DEPARTMENT OF TRANSPORTATION
DRAINAGE DESIGN SECTION

10-01-2002

PROJECT NAME- Santan
HIGHWAY NAME- Elliot Rd
LOCATION - STA 20+25.72, RT, E
Ver 3.40: December 1995

TRACS NO.-
DESIGNER - MRL
CHECKER - AD
PAGE

Spread @ upstream end of 3.5' wing

GUTTER FLOW HYDRAULICS
GUTTER DESCRIPTION

Roadway Grade-% Per cent--G	=	0.032
Roadway Cross-Slope-Ft./Ft.--Sx	=	0.015
Shoulder Width-Ft.--	=	1.000
Shoulder Slope-Ft./Ft.--Ss	=	0.015
Gutter Width-Ft.--W	=	2.000
Gutter Slope-Ft./Ft.--Sw	=	0.068
Gutter Depression-Inches--	=	1.632
Manning's 'N	=	0.016
Flow-CFS--Q	=	0.580
SPREAD-Ft.--T	=	12.448 L13.5'
Average Velocity-V-fps	=	0.457
FLOW in Gutter-CFS--Q	=	0.282
% Flow in Gutter-CFS	=	48.639
Velocity of Flow in Gutter-fps	=	0.628
Depth at Curb Line-Inches--d	=	3.513

ARIZONA DEPARTMENT OF TRANSPORTATION
DRAINAGE DESIGN SECTION

10-01-2002

PROJECT NAME- Santan
HIGHWAY NAME- Elliot Rd
LOCATION - STA 21+01 LT
Ver 3.40: December 1995

TRACS NO.-
DESIGNER - MRL
CHECKER - AV
PAGE

CURB OPENING INLET -- ON GRADE

GUTTER FLOW HYDRAULICS
GUTTER DESCRIPTION

Roadway Grade-% Per cent--G	=	0.470
Roadway Cross-Slope-Ft./Ft.--Sx	=	0.015
Shoulder Width-Ft.--	=	1.000
Shoulder Slope-Ft./Ft.--Ss	=	0.015
Gutter Width-Ft.--W	=	2.000
Gutter Slope-Ft./Ft.--Sw	=	0.068
Gutter Depression-Inches--	=	1.632
Manning's 'N	=	0.016
Flow-CFS--Q	=	0.480
SPREAD-Ft.--T	=	5.651
Average Velocity-V-fps	=	1.389
FLOW in Gutter-CFS--Q	=	0.410
% Flow in Gutter-CFS	=	85.491
Velocity of Flow in Gutter-fps	=	1.671
Depth at Curb Line-Inches--d	=	2.289

CURB OPENING--ADOT STD. C-15.20

Flow-CFS--Q	=	0.480
Gutter Velocity at INLET-fps	=	1.948
GUTTER FLOW at INLET-CFS--Q	=	0.480
Depth at INLET Curb Line-Inches--d	=	3.103
Local Gutter Depression-Inches	=	1.625
Length of opening: TOTAL Intercept--Ft.	=	4.373
Capture Ratio -- CURB OPENING	=	0.800

LENGTH	Efficiency	Q(Captured)	Q(By-Pass)
3.083	0.889	0.427	0.053
6.583	1.000	0.480	0.000
9.583	1.000	0.480	0.000
13.583	1.000	0.480	0.000
20.583	1.000	0.480	0.000

1-C15.20 $L_1 = L_2 = 3.5'$
* wing length sized based on street capacity

ARIZONA DEPARTMENT OF TRANSPORTATION
DRAINAGE DESIGN SECTION

10-01-2002

PROJECT NAME- Santan
HIGHWAY NAME- ELLiot Rd
LOCATION - STA 21+01.00 RT
Ver 3.40: December 1995

TRACS NO.-
DESIGNER - MRG
CHECKER - CA
PAGE

CURB OPENING INLET -- ON GRADE

GUTTER FLOW HYDRAULICS
GUTTER DESCRIPTION

Roadway Grade-% Per cent--G	=	0.470
Roadway Cross-Slope-Ft./Ft.--Sx	=	0.015
Shoulder Width-Ft.--	=	1.000
Shoulder Slope-Ft./Ft.--Ss	=	0.015
Gutter Width-Ft.--W	=	2.000
Gutter Slope-Ft./Ft.--Sw	=	0.068
Gutter Depression-Inches--	=	1.632
Manning's 'N	=	0.016
Flow-CFS--Q	=	0.460
SPREAD-Ft.--T	=	5.494
Average Velocity-V-fps	=	1.384
FLOW in Gutter-CFS--Q	=	0.398
% Flow in Gutter-CFS	=	86.546
Velocity of Flow in Gutter-fps	=	1.653
Depth at Curb Line-Inches--d	=	2.261

CURB OPENING--ADOT STD. C-15.20

Flow-CFS--Q	=	0.460
Gutter Velocity at INLET-fps	=	1.928
GUTTER FLOW at INLET-CFS--Q	=	0.460
Depth at INLET Curb Line-Inches--d	=	3.054
Local Gutter Depression-Inches	=	1.625
Length of opening: TOTAL Intercept--Ft.	=	4.295
Capture Ratio -- CURB OPENING	=	0.800

LENGTH	Efficiency	Q(Captured)	Q(By-Pass)
3.083	0.897	0.413	0.047
6.583	1.000	0.460	0.000
9.583	1.000	0.460	0.000
13.583	1.000	0.460	0.000
20.583	1.000	0.460	0.000

1-C15.20 $L_1 = L_2 = 3.5'$
* Winglength Based on street capacity

ARIZONA DEPARTMENT OF TRANSPORTATION
DRAINAGE DESIGN SECTION

10-01-2002

PROJECT NAME- Santan
HIGHWAY NAME- Elliot Rd
LOCATION - STA 23+14 LT
Ver 3.40: December 1995

TRACS NO.-
DESIGNER - MRG
CHECKER - (A) PAGE

CURB OPENING INLET -- ON GRADE

GUTTER FLOW HYDRAULICS
GUTTER DESCRIPTION

Roadway Grade-% Per cent--G	=	0.750
Roadway Cross-Slope-Ft./Ft.--Sx	=	0.016
Shoulder Width-Ft.--	=	1.000
Shoulder Slope-Ft./Ft.--Ss	=	0.016
Gutter Width-Ft.--W	=	2.000
Gutter Slope-Ft./Ft.--Sw	=	0.068
Gutter Depression-Inches--	=	1.632
Manning's 'N	=	0.016
Flow-CFS--Q	=	4.740
SPREAD-Ft.--T	=	14.935
Average Velocity-V-fps	=	2.510
FLOW in Gutter-CFS--Q	=	1.901
% Flow in Gutter-CFS	=	40.105
Velocity of Flow in Gutter-fps	=	3.457
Depth at Curb Line-Inches--d	=	4.116

CURB OPENING--ADOT STD. C-15.20

Flow-CFS--Q	=	4.740
Gutter Velocity at INLET-fps	=	3.934
GUTTER FLOW at INLET-CFS--Q	=	2.545
Depth at INLET Curb Line-Inches--d	=	5.511
Local Gutter Depression-Inches	=	1.625
Length of opening: TOTAL Intercept--Ft.	=	18.037
Capture Ratio -- CURB OPENING	=	0.800

LENGTH	Efficiency	Q(Captured)	Q(By-Pass)
3.083	0.286	1.357	3.383
6.583	0.558	2.647	2.093
9.583	0.744	3.528	1.212
13.583	0.919	4.358	0.382
20.583	1.000	4.740	0.000

1-C15.20, M, L=19.5'

ARIZONA DEPARTMENT OF TRANSPORTATION
DRAINAGE DESIGN SECTION

10-01-2002

PROJECT NAME- Santan
HIGHWAY NAME- Elliot RD
LOCATION - STA 23+18 RT
Ver 3.40: December 1995

TRACS NO.-
DESIGNER - MRL
CHECKER - AJ
PAGE

CURB OPENING INLET -- ON GRADE

GUTTER FLOW HYDRAULICS
GUTTER DESCRIPTION

Roadway Grade-% Per cent--G	=	0.750
Roadway Cross-Slope-Ft./Ft.--Sx	=	0.016
Shoulder Width-Ft.--	=	1.000
Shoulder Slope-Ft./Ft.--Ss	=	0.016
Gutter Width-Ft.--W	=	2.000
Gutter Slope-Ft./Ft.--Sw	=	0.068
Gutter Depression-Inches--	=	1.632
Manning's 'N	=	0.016
Flow-CFS--Q	=	3.920
SPREAD-Ft.--T	=	13.798
Average Velocity-V-fps	=	2.409
FLOW in Gutter-CFS--Q	=	1.699
% Flow in Gutter-CFS	=	43.337
Velocity of Flow in Gutter-fps	=	3.308
Depth at Curb Line-Inches--d	=	3.897

CURB OPENING--ADOT STD. C-15.20

Flow-CFS--Q	=	3.920
Gutter Velocity at INLET-fps	=	3.786
GUTTER FLOW at INLET-CFS--Q	=	2.297
Depth at INLET Curb Line-Inches--d	=	5.269
Local Gutter Depression-Inches	=	1.625
Length of opening: TOTAL Intercept--Ft.	=	15.964
Capture Ratio -- CURB OPENING	=	0.800

LENGTH	Efficiency	Q(Captured)	Q(By-Pass)
3.083	0.320	1.256	2.664
6.583	0.616	2.415	1.505
9.583	0.808	3.168	0.752
13.583	0.967	3.792	0.128
20.583	1.000	3.920	0.000

1-CB120, MIN L=19.5'

ARIZONA DEPARTMENT OF TRANSPORTATION
DRAINAGE DESIGN SECTION

10-02-2002

PROJECT NAME- Santan
HIGHWAY NAME- Guadalupe
LOCATION - STA 10+63 LT
Ver 3.40: December 1995

TRACS NO.-
DESIGNER - MRL
CHECKER - [illegible] PAGE

CURB OPENING INLET -- ON GRADE

GUTTER FLOW HYDRAULICS
GUTTER DESCRIPTION

Roadway Grade-% Per cent--G	=	0.590
Roadway Cross-Slope-Ft./Ft.--Sx	=	0.020
Shoulder Width-Ft.--	=	1.000
Shoulder Slope-Ft./Ft.--Ss	=	0.020
Gutter Width-Ft.--W	=	1.417
Gutter Slope-Ft./Ft.--Sw	=	0.059
Gutter Depression-Inches--	=	1.003
Manning's 'N	=	0.016
Flow-CFS--Q	=	4.190
SPREAD-Ft.--T	=	13.373
Average Velocity-V-fps	=	2.293
FLOW in Gutter-CFS--Q	=	1.229
% Flow in Gutter-CFS	=	29.334
Velocity of Flow in Gutter-fps	=	3.088
Depth at Curb Line-Inches--d	=	3.873

CURB OPENING--ADOT STD. C-15.20

Flow-CFS--Q	=	4.190
Gutter Velocity at INLET-fps	=	3.357
GUTTER FLOW at INLET-CFS--Q	=	1.495
Depth at INLET Curb Line-Inches--d	=	4.772
Local Gutter Depression-Inches	=	1.000
Length of opening: TOTAL Intercept--Ft.	=	20.020
Capture Ratio -- CURB OPENING	=	0.800

LENGTH	Efficiency	Q(Captured)	Q(By-Pass)
3.083	0.260	1.089	3.101
6.583	0.512	2.146	2.044
9.583	0.690	2.893	1.297
13.583	0.870	3.646	0.544
20.583	1.000	4.190	0.000

1-C15.20, M, L=19.5'

ARIZONA DEPARTMENT OF TRANSPORTATION
DRAINAGE DESIGN SECTION

10-02-2002

PROJECT NAME- Santan
HIGHWAY NAME- Guadalupe
LOCATION - STA 11+23 RT
Ver 3.40: December 1995

TRACS NO.-
DESIGNER - MKL
CHECKER - AD
PAGE

CURB OPENING INLET -- ON GRADE

GUTTER FLOW HYDRAULICS
GUTTER DESCRIPTION

Roadway Grade-% Per cent--G	=	0.590
Roadway Cross-Slope-Ft./Ft.--Sx	=	0.020
Shoulder Width-Ft.--	=	1.000
Shoulder Slope-Ft./Ft.--Ss	=	0.020
Gutter Width-Ft.--W	=	1.417
Gutter Slope-Ft./Ft.--Sw	=	0.059
Gutter Depression-Inches--	=	1.003
Manning's 'N	=	0.016
Flow-CFS--Q	=	4.180
SPREAD-Ft.--T	=	13.360
Average Velocity-V-fps	=	2.292
FLOW in Gutter-CFS--Q	=	1.227
% Flow in Gutter-CFS	=	29.361
Velocity of Flow in Gutter-fps	=	3.086
Depth at Curb Line-Inches--d	=	3.870

CURB OPENING--ADOT STD. C-15.20

Flow-CFS--Q	=	4.180
Gutter Velocity at INLET-fps	=	3.355
GUTTER FLOW at INLET-CFS--Q	=	1.493
Depth at INLET Curb Line-Inches--d	=	4.769
Local Gutter Depression-Inches	=	1.000
Length of opening: TOTAL Intercept--Ft.	=	19.992
Capture Ratio -- CURB OPENING	=	0.800

LENGTH	Efficiency	Q(Captured)	Q(By-Pass)
3.083	0.260	1.088	3.092
6.583	0.513	2.143	2.037
9.583	0.691	2.889	1.291
13.583	0.871	3.641	0.539
20.583	1.000	4.180	0.000

1-C15.20, M11, L = 19.5'

ARIZONA DEPARTMENT OF TRANSPORTATION
DRAINAGE DESIGN SECTION

10-02-2002

PROJECT NAME- Santan
HIGHWAY NAME- Guadalupe
LOCATION - STA 18+30.18 LT
Ver 3.40: December 1995

TRACS NO.-
DESIGNER - MRG
CHECKER - A
PAGE

CURB OPENING INLET -- ON GRADE

GUTTER FLOW HYDRAULICS
GUTTER DESCRIPTION

Roadway Grade-% Per cent--G	=	1.140
Roadway Cross-Slope-Ft./Ft.--Sx	=	0.015
Shoulder Width-Ft.--	=	1.000
Shoulder Slope-Ft./Ft.--Ss	=	0.015
Gutter Width-Ft.--W	=	2.000
Gutter Slope-Ft./Ft.--Sw	=	0.068
Gutter Depression-Inches--	=	1.632
Manning's 'N	=	0.016
Flow-CFS--Q	=	2.170
SPREAD-Ft.--T	=	10.081
Average Velocity-V-fps	=	2.499
FLOW in Gutter-CFS--Q	=	1.273
% Flow in Gutter-CFS	=	58.657
Velocity of Flow in Gutter-fps	=	3.364
Depth at Curb Line-Inches--d	=	3.087

CURB OPENING--ADOT STD. C-15.20

Flow-CFS--Q	=	2.170
Gutter Velocity at INLET-fps	=	3.938
GUTTER FLOW at INLET-CFS--Q	=	1.772
Depth at INLET Curb Line-Inches--d	=	4.329
Local Gutter Depression-Inches	=	1.625
Length of opening: TOTAL Intercept--Ft.	=	11.962
Capture Ratio -- CURB OPENING	=	0.800

LENGTH	Efficiency	Q(Captured)	Q(By-Pass)
3.083	0.415	0.901	1.269
6.583	0.763	1.655	0.515
9.583	0.945	2.051	0.119
13.583	1.000	2.170	0.000
20.583	1.000	2.170	0.000

1-C15.20, M, L = 7.5'

ARIZONA DEPARTMENT OF TRANSPORTATION
DRAINAGE DESIGN SECTION

10-02-2002

PROJECT NAME- Santan
HIGHWAY NAME- Guadalupe
LOCATION - STA 18+28.25 RT
Ver 3.40: December 1995

TRACS NO.-
DESIGNER - MR
CHECKER - AD
PAGE

CURB OPENING INLET -- ON GRADE

GUTTER FLOW HYDRAULICS
GUTTER DESCRIPTION

Roadway Grade-% Per cent--G	=	1.140
Roadway Cross-Slope-Ft./Ft.--Sx	=	0.015
Shoulder Width-Ft.--	=	1.000
Shoulder Slope-Ft./Ft.--Ss	=	0.015
Gutter Width-Ft.--W	=	2.000
Gutter Slope-Ft./Ft.--Sw	=	0.068
Gutter Depression-Inches--	=	1.632
Manning's 'N	=	0.016
Flow-CFS--Q	=	2.160
SPREAD-Ft.--T	=	10.059
Average Velocity-V-fps	=	2.497
FLOW in Gutter-CFS--Q	=	1.269
% Flow in Gutter-CFS	=	58.764
Velocity of Flow in Gutter-fps	=	3.360
Depth at Curb Line-Inches--d	=	3.083

CURB OPENING--ADOT STD. C-15.20

Flow-CFS--Q	=	2.160
Gutter Velocity at INLET-fps	=	3.933
GUTTER FLOW at INLET-CFS--Q	=	1.767
Depth at INLET Curb Line-Inches--d	=	4.324
Local Gutter Depression-Inches	=	1.625
Length of opening: TOTAL Intercept--Ft.	=	11.929
Capture Ratio -- CURB OPENING	=	0.800

LENGTH	Efficiency	Q(Captured)	Q(By-Pass)
3.083	0.416	0.899	1.261
6.583	0.764	1.651	0.509
9.583	0.946	2.044	0.116
13.583	1.000	2.160	0.000
20.583	1.000	2.160	0.000

1-C15.20, M, L= 17.5'

ARIZONA DEPARTMENT OF TRANSPORTATION
DRAINAGE DESIGN SECTION

10-02-2002

PROJECT NAME- Santan
HIGHWAY NAME- Guadalupe
LOCATION - STA 23+60 LT
Ver 3.40: December 1995

TRACS NO.-
DESIGNER - MRL
CHECKER - A
PAGE

CURB OPENING INLET -- ON GRADE

GUTTER FLOW HYDRAULICS
GUTTER DESCRIPTION

Roadway Grade-% Per cent--G	=	0.500
Roadway Cross-Slope-Ft./Ft.--Sx	=	0.018
Shoulder Width-Ft.--	=	1.000
Shoulder Slope-Ft./Ft.--Ss	=	0.018
Gutter Width-Ft.--W	=	2.000
Gutter Slope-Ft./Ft.--Sw	=	0.068
Gutter Depression-Inches--	=	1.632
Manning's 'N	=	0.016
Flow-CFS--Q	=	0.800
SPREAD-Ft.--T	=	6.676
Average Velocity-V-fps	=	1.571
FLOW in Gutter-CFS--Q	=	0.605
% Flow in Gutter-CFS	=	75.683
Velocity of Flow in Gutter-fps	=	1.965
Depth at Curb Line-Inches--d	=	2.664

CURB OPENING--ADOT STD. C-15.20

Flow-CFS--Q	=	0.800
Gutter Velocity at INLET-fps	=	2.278
GUTTER FLOW at INLET-CFS--Q	=	0.782
Depth at INLET Curb Line-Inches--d	=	3.687
Local Gutter Depression-Inches	=	1.625
Length of opening: TOTAL Intercept--Ft.	=	5.588
Capture Ratio -- CURB OPENING	=	0.800

LENGTH	Efficiency	Q(Captured)	Q(By-Pass)
3.083	0.764	0.611	0.189
6.583	1.000	0.800	0.000
9.583	1.000	0.800	0.000
13.583	1.000	0.800	0.000
20.583	1.000	0.800	0.000

1-615.20

ARIZONA DEPARTMENT OF TRANSPORTATION
DRAINAGE DESIGN SECTION

10-02-2002

PROJECT NAME- Santan
HIGHWAY NAME- Guadalupe
LOCATION - STA 24+62.19 LT
Ver 3.40: December 1995

TRACS NO.-
DESIGNER - MRL
CHECKER - AD
PAGE

CURB OPENING INLET--IN SUMP

GUTTER FLOW HYDRAULICS

GUTTER DESCRIPTION

Roadway Cross-Slope-Ft./Ft.--Sx	=	0.020
Shoulder Width-Ft.--	=	1.000
Shoulder Slope-Ft./Ft.--Ss	=	0.020
Gutter Width-Ft.--W	=	1.417
Gutter Slope-Ft./Ft.--Sw	=	0.059
Gutter Depression-Inches--	=	1.003
Flow-CFS--Q	=	3.150
Local Gutter Depression-Inches	=	1.000
Capture Ratio -- CURB OPENING	=	0.800

LENGTH	d(weir)	d(orifice)	d(INLET)	SPREAD
3.083	5.429	5.620	5.620	16.485
6.583	3.933	1.252	3.933	9.456
9.583	3.254	0.591	3.254	6.627
13.583	2.691	0.294	2.691	4.281
20.583	2.116	0.128	2.116	1.886

*** d(INLET) is Greater of WEIR or ORIFICE Depth.! ***

1-C1520, L = 11.5
* wing size Based on street capacity

ARIZONA DEPARTMENT OF TRANSPORTATION
DRAINAGE DESIGN SECTION

10-02-2002

PROJECT NAME- Santan
HIGHWAY NAME- Guadalupe
LOCATION - STA 24+64.18 LT, E
Ver 3.40: December 1995

TRACS NO.-
DESIGNER - MRG
CHECKER - AJ
PAGE

Spread @ upstream end of inlet

GUTTER FLOW HYDRAULICS
GUTTER DESCRIPTION

Roadway Grade-% Per cent--G	=	0.011
Roadway Cross-Slope-Ft./Ft.--Sx	=	0.020
Shoulder Width-Ft.--	=	1.000
Shoulder Slope-Ft./Ft.--Ss	=	0.020
Gutter Width-Ft.--W	=	1.417
Gutter Slope-Ft./Ft.--Sw	=	0.059
Gutter Depression-Inches--	=	1.003
Manning's 'N	=	0.016
Flow-CFS--Q	=	2.170
SPREAD-Ft.--T	=	22.305 < 22.5'
Average Velocity-V-fps	=	0.433
FLOW in Gutter-CFS--Q	=	0.380
% Flow in Gutter-CFS	=	17.521
Velocity of Flow in Gutter-fps	=	0.584
Depth at Curb Line-Inches--d	=	6.016

ARIZONA DEPARTMENT OF TRANSPORTATION
DRAINAGE DESIGN SECTION

10-02-2002

PROJECT NAME- Santan
HIGHWAY NAME- Guadalupe
LOCATION - STA 24+60.18 LT, W
Ver 3.40: December 1995

TRACS NO.-
DESIGNER - MRG
CHECKER - AD
PAGE

Spread @ upstream end of inlet

GUTTER FLOW HYDRAULICS
GUTTER DESCRIPTION

Roadway Grade-% Per cent--G	=	0.011
Roadway Cross-Slope-Ft./Ft.--Sx	=	0.020
Shoulder Width-Ft.--	=	1.000
Shoulder Slope-Ft./Ft.--Ss	=	0.020
Gutter Width-Ft.--W	=	1.417
Gutter Slope-Ft./Ft.--Sw	=	0.059
Gutter Depression-Inches--	=	1.003
Manning's 'N	=	0.016
Flow-CFS--Q	=	0.980
SPREAD-Ft.--T	=	16.492 22.5
Average Velocity-V-fps	=	0.355
FLOW in Gutter-CFS--Q	=	0.233
% Flow in Gutter-CFS	=	23.782
Velocity of Flow in Gutter-fps	=	0.479
Depth at Curb Line-Inches--d	=	4.621

ARIZONA DEPARTMENT OF TRANSPORTATION
DRAINAGE DESIGN SECTION

10-02-2002

PROJECT NAME- Santan
HIGHWAY NAME- Guadalupe
LOCATION - STA 25+64 LT
Ver 3.40: December 1995

TRACS NO.-
DESIGNER - MRG
CHECKER - (A) PAGE

CURB OPENING INLET -- ON GRADE

GUTTER FLOW HYDRAULICS
GUTTER DESCRIPTION

Roadway Grade-% Per cent--G	=	0.550
Roadway Cross-Slope-Ft./Ft.--Sx	=	0.020
Shoulder Width-Ft.--	=	1.000
Shoulder Slope-Ft./Ft.--Ss	=	0.020
Gutter Width-Ft.--W	=	1.417
Gutter Slope-Ft./Ft.--Sw	=	0.058
Gutter Depression-Inches--	=	0.986
Manning's 'N	=	0.016
Flow-CFS--Q	=	2.420
SPREAD-Ft.--T	=	10.940
Average Velocity-V-fps	=	1.959
FLOW in Gutter-CFS--Q	=	0.861
% Flow in Gutter-CFS	=	35.598
Velocity of Flow in Gutter-fps	=	2.626
Depth at Curb Line-Inches--d	=	3.272

CURB OPENING--ADOT STD. C-15.20

Flow-CFS--Q	=	2.420
Gutter Velocity at INLET-fps	=	3.056
GUTTER FLOW at INLET-CFS--Q	=	1.219
Depth at INLET Curb Line-Inches--d	=	4.683
Local Gutter Depression-Inches	=	1.625
Length of opening: TOTAL Intercept--Ft.	=	11.787
Capture Ratio -- CURB OPENING	=	0.800

LENGTH	Efficiency	Q(Captured)	Q(By-Pass)
3.083	0.421	1.018	1.402
6.583	0.770	1.865	0.555
9.583	0.951	2.302	0.118
13.583	1.000	2.420	0.000
20.583	1.000	2.420	0.000

1-C-1520, L=19.57
* Wing length sized based on street capacity

ARIZONA DEPARTMENT OF TRANSPORTATION
DRAINAGE DESIGN SECTION

11-04-2002

PROJECT NAME- Santan
HIGHWAY NAME- Guadalupe
LOCATION - STA 23+69.5 RT
Ver 3.40: December 1995

TRACS NO.-
DESIGNER - MRG
CHECKER - AD
PAGE

CURB OPENING INLET -- ON GRADE

GUTTER FLOW HYDRAULICS
GUTTER DESCRIPTION

Roadway Grade-% Per cent--G	=	0.500
Roadway Cross-Slope-Ft./Ft.--Sx	=	0.018
Shoulder Width-Ft.--	=	1.000
Shoulder Slope-Ft./Ft.--Ss	=	0.018
Gutter Width-Ft.--W	=	1.417
Gutter Slope-Ft./Ft.--Sw	=	0.058
Gutter Depression-Inches--	=	0.986
Manning's 'N	=	0.016
Flow-CFS--Q	=	0.670
SPREAD-Ft.--T	=	6.930
Average Velocity-V-fps	=	1.391
FLOW in Gutter-CFS--Q	=	0.369
% Flow in Gutter-CFS	=	55.126
Velocity of Flow in Gutter-fps	=	1.829
Depth at Curb Line-Inches--d	=	2.203

CURB OPENING--ADOT STD. C-15.20

Flow-CFS--Q	=	0.670
Gutter Velocity at INLET-fps	=	2.232
GUTTER FLOW at INLET-CFS--Q	=	0.562
Depth at INLET Curb Line-Inches--d	=	3.438
Local Gutter Depression-Inches	=	1.625
Length of opening: TOTAL Intercept--Ft.	=	5.215
Capture Ratio -- CURB OPENING	=	0.800

LENGTH	Efficiency	Q(Captured)	Q(By-Pass)
3.083	0.800	0.536	0.134
6.583	1.000	0.670	0.000
9.583	1.000	0.670	0.000
13.583	1.000	0.670	0.000
20.583	1.000	0.670	0.000

1-C-15.20

ARIZONA DEPARTMENT OF TRANSPORTATION
DRAINAGE DESIGN SECTION

11-04-2002

PROJECT NAME- Santan
HIGHWAY NAME- Guadalupe
LOCATION - STA 24+62.18
Ver 3.40: December 1995

TRACS NO.-
DESIGNER - MRL
CHECKER - AV
PAGE

CURB OPENING INLET--IN SUMP

GUTTER FLOW HYDRAULICS

GUTTER DESCRIPTION

Roadway Cross-Slope-Ft./Ft.--Sx	=	0.020
Shoulder Width-Ft.--	=	1.000
Shoulder Slope-Ft./Ft.--Ss	=	0.020
Gutter Width-Ft.--W	=	1.417
Gutter Slope-Ft./Ft.--Sw	=	0.058
Gutter Depression-Inches--	=	0.986
Flow-CFS--Q	=	2.760
Local Gutter Depression-Inches	=	1.625
Capture Ratio -- CURB OPENING	=	0.800

LENGTH	d(weir)	d(orifice)	d(INLET)	SPREAD
3.083	4.967	3.619	4.967	11.231
6.583	3.599	0.794	3.599	5.532
9.583	2.978	0.375	2.978	2.945
13.583	2.463	0.186	2.463	1.336
20.583	1.937	0.081	1.937	1.051

*** d(INLET) is Greater of WEIR or ORIFICE Depth.! ***

1-C15.20, L=11.5
* Wing Length Based on Street capacity

ARIZONA DEPARTMENT OF TRANSPORTATION
DRAINAGE DESIGN SECTION

11-04-2002

PROJECT NAME- Santan
HIGHWAY NAME- Guadalupe
LOCATION - Sta 24+60.18 RT, n
Ver 3.40: December 1995

TRACS NO.-
DESIGNER - MRG
CHECKER - AD
PAGE

Spread @ LLP stream End of LB

GUTTER FLOW HYDRAULICS
GUTTER DESCRIPTION

Roadway Grade-% Per cent--G	=	0.011
Roadway Cross-Slope-Ft./Ft.--Sx	=	0.020
Shoulder Width-Ft.--	=	1.000
Shoulder Slope-Ft./Ft.--Ss	=	0.020
Gutter Width-Ft.--W	=	1.417
Gutter Slope-Ft./Ft.--Sw	=	0.058
Gutter Depression-Inches--	=	0.986
Manning's 'N	=	0.016
Flow-CFS--Q	=	0.770
SPREAD-Ft.--T	=	15.035 <22.5
Average Velocity-V-fps	=	0.335
FLOW in Gutter-CFS--Q	=	0.200
% Flow in Gutter-CFS	=	26.022
Velocity of Flow in Gutter-fps	=	0.451
Depth at Curb Line-Inches--d	=	4.255

ARIZONA DEPARTMENT OF TRANSPORTATION
DRAINAGE DESIGN SECTION

11-04-2002

PROJECT NAME- Santan
HIGHWAY NAME- Guadalupe
LOCATION - STA 24+64.18 RT, E
Ver 3.40: December 1995

TRACS NO.-
DESIGNER - MNG
CHECKER - A
PAGE

SPread @ upstream End of CB

GUTTER FLOW HYDRAULICS
GUTTER DESCRIPTION

Roadway Grade-% Per cent--G	=	0.011
Roadway Cross-Slope-Ft./Ft.--Sx	=	0.020
Shoulder Width-Ft.--	=	1.000
Shoulder Slope-Ft./Ft.--Ss	=	0.020
Gutter Width-Ft.--W	=	1.417
Gutter Slope-Ft./Ft.--Sw	=	0.058
Gutter Depression-Inches--	=	0.986
Manning's 'N	=	0.016
Flow-CFS--Q	=	1.990
SPREAD-Ft.--T	=	21.624 L22.5'
Average Velocity-V-fps	=	0.422
FLOW in Gutter-CFS--Q	=	0.359
% Flow in Gutter-CFS	=	18.042
Velocity of Flow in Gutter-fps	=	0.569
Depth at Curb Line-Inches--d	=	5.836

ARIZONA DEPARTMENT OF TRANSPORTATION
DRAINAGE DESIGN SECTION

11-04-2002

PROJECT NAME- Santan
HIGHWAY NAME- Guadalupe
LOCATION - STA 25+64 RT
Ver 3.40: December 1995

TRACS NO.-
DESIGNER - MHL
CHECKER - AJ
PAGE

CURB OPENING INLET -- ON GRADE

GUTTER FLOW HYDRAULICS
GUTTER DESCRIPTION

Roadway Grade-% Per cent--G	=	0.550
Roadway Cross-Slope-Ft./Ft.--Sx	=	0.020
Shoulder Width-Ft.--	=	1.000
Shoulder Slope-Ft./Ft.--Ss	=	0.020
Gutter Width-Ft.--W	=	1.417
Gutter Slope-Ft./Ft.--Sw	=	0.058
Gutter Depression-Inches--	=	0.986
Manning's 'N	=	0.016
Flow-CFS--Q	=	2.330
SPREAD-Ft.--T	=	10.777
Average Velocity-V-fps	=	1.942
FLOW in Gutter-CFS--Q	=	0.842
% Flow in Gutter-CFS	=	36.117
Velocity of Flow in Gutter-fps	=	2.601
Depth at Curb Line-Inches--d	=	3.233

CURB OPENING--ADOT STD. C-15.20

Flow-CFS--Q	=	2.330
Gutter Velocity at INLET-fps	=	3.032
GUTTER FLOW at INLET-CFS--Q	=	1.194
Depth at INLET Curb Line-Inches--d	=	4.641
Local Gutter Depression-Inches	=	1.625
Length of opening: TOTAL Intercept--Ft.	=	11.508
Capture Ratio -- CURB OPENING	=	0.800

LENGTH	Efficiency	Q(Captured)	Q(By-Pass)
3.083	0.430	1.001	1.329
6.583	0.783	1.824	0.506
9.583	0.960	2.237	0.093
13.583	1.000	2.330	0.000
20.583	1.000	2.330	0.000

1-C15.20, L=19.5'
*wing length Based on street capacity

ARIZONA DEPARTMENT OF TRANSPORTATION
DRAINAGE DESIGN SECTION

04-10-2003

PROJECT NAME- Santan
HIGHWAY NAME- Baseline RD
LOCATION - STA 12+67.89 LT
Ver 3.40: December 1995

TRACS NO.-
DESIGNER - MRL
CHECKER - A
PAGE

CURB OPENING INLET -- ON GRADE

GUTTER FLOW HYDRAULICS
GUTTER DESCRIPTION

Roadway Grade-% Per cent--G	=	0.500
Roadway Cross-Slope-Ft./Ft.--Sx	=	0.020
Shoulder Width-Ft.--	=	1.000
Shoulder Slope-Ft./Ft.--Ss	=	0.020
Gutter Width-Ft.--W	=	1.417
Gutter Slope-Ft./Ft.--Sw	=	0.059
Gutter Depression-Inches--	=	1.003
Manning's 'N	=	0.016
Flow-CFS--Q	=	2.980
SPREAD-Ft.--T	=	12.091
Average Velocity-V-fps	=	1.985
FLOW in Gutter-CFS--Q	=	0.966
% Flow in Gutter-CFS	=	32.401
Velocity of Flow in Gutter-fps	=	2.669
Depth at Curb Line-Inches--d	=	3.565

CURB OPENING--ADOT STD. C-15.20

Flow-CFS--Q	=	2.980
Gutter Velocity at INLET-fps	=	2.921
GUTTER FLOW at INLET-CFS--Q	=	1.190
Depth at INLET Curb Line-Inches--d	=	4.453
Local Gutter Depression-Inches	=	1.000
Length of opening: TOTAL Intercept--Ft.	=	15.799
Capture Ratio -- CURB OPENING	=	0.800

LENGTH	Efficiency	Q(Captured)	Q(By-Pass)
3.083	0.323	0.964	2.016
6.583	0.621	1.851	1.129
9.583	0.813	2.424	0.556
13.583	0.971	2.893	0.087
20.583	1.000	2.980	0.000

1-C15.20, L = 11.5'

ARIZONA DEPARTMENT OF TRANSPORTATION
DRAINAGE DESIGN SECTION

04-10-2003

PROJECT NAME- Santan
HIGHWAY NAME- Baseline RD
LOCATION - STA 12+68.18 RT
Ver 3.40: December 1995

TRACS NO.-
DESIGNER - MRG
CHECKER - A
PAGE

CURB OPENING INLET -- ON GRADE

GUTTER FLOW HYDRAULICS
GUTTER DESCRIPTION

Roadway Grade-% Per cent--G	=	0.500
Roadway Cross-Slope-Ft./Ft.--Sx	=	0.020
Shoulder Width-Ft.--	=	1.000
Shoulder Slope-Ft./Ft.--Ss	=	0.020
Gutter Width-Ft.--W	=	1.417
Gutter Slope-Ft./Ft.--Sw	=	0.059
Gutter Depression-Inches--	=	1.003
Manning's 'N	=	0.016
Flow-CFS--Q	=	2.680
SPREAD-Ft.--T	=	11.597
Average Velocity-V-fps	=	1.936
FLOW in Gutter-CFS--Q	=	0.904
% Flow in Gutter-CFS	=	33.750
Velocity of Flow in Gutter-fps	=	2.601
Depth at Curb Line-Inches--d	=	3.447

CURB OPENING--ADOT STD. C-15.20

Flow-CFS--Q	=	2.680
Gutter Velocity at INLET-fps	=	2.854
GUTTER FLOW at INLET-CFS--Q	=	1.121
Depth at INLET Curb Line-Inches--d	=	4.329
Local Gutter Depression-Inches	=	1.000
Length of opening: TOTAL Intercept--Ft.	=	14.833
Capture Ratio -- CURB OPENING	=	0.800

LENGTH	Efficiency	Q(Captured)	Q(By-Pass)
3.083	0.343	0.918	1.762
6.583	0.652	1.748	0.932
9.583	0.846	2.267	0.413
13.583	0.988	2.649	0.031
20.583	1.000	2.680	0.000

1-C15.20, L = 11.5'

ARIZONA DEPARTMENT OF TRANSPORTATION
DRAINAGE DESIGN SECTION

04-10-2003

PROJECT NAME- Santan
HIGHWAY NAME- Baseline RD
LOCATION - STA 18+06 LT
Ver 3.40: December 1995

TRACS NO.-
DESIGNER - MRG
CHECKER - CA
PAGE

CURB OPENING INLET -- ON GRADE

GUTTER FLOW HYDRAULICS
GUTTER DESCRIPTION

Roadway Grade-% Per cent--G	=	0.520
Roadway Cross-Slope-Ft./Ft.--Sx	=	0.015
Shoulder Width-Ft.--	=	1.000
Shoulder Slope-Ft./Ft.--Ss	=	0.015
Gutter Width-Ft.--W	=	1.417
Gutter Slope-Ft./Ft.--Sw	=	0.059
Gutter Depression-Inches--	=	1.003
Manning's 'N	=	0.016
Flow-CFS--Q	=	3.270
SPREAD-Ft.--T	=	14.873
Average Velocity-V-fps	=	1.920
FLOW in Gutter-CFS--Q	=	0.911
% Flow in Gutter-CFS	=	27.873
Velocity of Flow in Gutter-fps	=	2.640
Depth at Curb Line-Inches--d	=	3.425

CURB OPENING--ADOT STD. C-15.20

Flow-CFS--Q	=	3.270
Gutter Velocity at INLET-fps	=	2.912
GUTTER FLOW at INLET-CFS--Q	=	1.145
Depth at INLET Curb Line-Inches--d	=	4.332
Local Gutter Depression-Inches	=	1.000
Length of opening: TOTAL Intercept--Ft.	=	18.154
Capture Ratio -- CURB OPENING	=	0.800

LENGTH	Efficiency	Q(Captured)	Q(By-Pass)
3.083	0.285	0.931	2.339
6.583	0.555	1.816	1.454
9.583	0.741	2.423	0.847
13.583	0.916	2.997	0.273
20.583	1.000	3.270	0.000

1-C15.20, L = 19.5'

ARIZONA DEPARTMENT OF TRANSPORTATION
DRAINAGE DESIGN SECTION

04-10-2003

PROJECT NAME- Santan
HIGHWAY NAME- Baseline RD.
LOCATION - STA 18+07 RT
Ver 3.40: December 1995

TRACS NO.-
DESIGNER - MRG
CHECKER - (A) PAGE

CURB OPENING INLET -- ON GRADE

GUTTER FLOW HYDRAULICS
GUTTER DESCRIPTION

Roadway Grade-% Per cent--G	=	0.520
Roadway Cross-Slope-Ft./Ft.--Sx	=	0.015
Shoulder Width-Ft.--	=	1.000
Shoulder Slope-Ft./Ft.--Ss	=	0.015
Gutter Width-Ft.--W	=	1.417
Gutter Slope-Ft./Ft.--Sw	=	0.059
Gutter Depression-Inches--	=	1.003
Manning's 'N	=	0.016
Flow-CFS--Q	=	2.300
SPREAD-Ft.--T	=	12.942
Average Velocity-V-fps	=	1.769
FLOW in Gutter-CFS--Q	=	0.739
% Flow in Gutter-CFS	=	32.141
Velocity of Flow in Gutter-fps	=	2.430
Depth at Curb Line-Inches--d	=	3.078

CURB OPENING--ADOT STD. C-15.20

Flow-CFS--Q	=	2.300
Gutter Velocity at INLET-fps	=	2.707
GUTTER FLOW at INLET-CFS--Q	=	0.948
Depth at INLET Curb Line-Inches--d	=	3.968
Local Gutter Depression-Inches	=	1.000
Length of opening: TOTAL Intercept--Ft.	=	14.589
Capture Ratio -- CURB OPENING	=	0.800

LENGTH	Efficiency	Q(Captured)	Q(By-Pass)
3.083	0.348	0.800	1.500
6.583	0.660	1.519	0.781
9.583	0.854	1.965	0.335
13.583	0.992	2.281	0.019
20.583	1.000	2.300	0.000

1-C15.20, L = 11.5'

ARIZONA DEPARTMENT OF TRANSPORTATION
DRAINAGE DESIGN SECTION

04-10-2003

PROJECT NAME- Santan
HIGHWAY NAME- Baseline RD
LOCATION - STA 23+40 RT
Ver 3.40: December 1995

TRACS NO.-
DESIGNER - MRL
CHECKER - (A)
PAGE

CURB OPENING INLET -- ON GRADE

GUTTER FLOW HYDRAULICS
GUTTER DESCRIPTION

Roadway Grade-% Per cent--G	=	0.530
Roadway Cross-Slope-Ft./Ft.--Sx	=	0.016
Shoulder Width-Ft.--	=	1.000
Shoulder Slope-Ft./Ft.--Ss	=	0.016
Gutter Width-Ft.--W	=	1.417
Gutter Slope-Ft./Ft.--Sw	=	0.059
Gutter Depression-Inches--	=	1.003
Manning's 'N	=	0.016
Flow-CFS--Q	=	1.580
SPREAD-Ft.--T	=	10.652
Average Velocity-V-fps	=	1.661
FLOW in Gutter-CFS--Q	=	0.608
% Flow in Gutter-CFS	=	38.468
Velocity of Flow in Gutter-fps	=	2.263
Depth at Curb Line-Inches--d	=	2.776

CURB OPENING--ADOT STD. C-15.20

Flow-CFS--Q	=	1.580
Gutter Velocity at INLET-fps	=	2.542
GUTTER FLOW at INLET-CFS--Q	=	0.792
Depth at INLET Curb Line-Inches--d	=	3.641
Local Gutter Depression-Inches	=	1.000
Length of opening: TOTAL Intercept--Ft.	=	11.414
Capture Ratio -- CURB OPENING	=	0.800

LENGTH	Efficiency	Q(Captured)	Q(By-Pass)
3.083	0.433	0.684	0.896
6.583	0.787	1.244	0.336
9.583	0.963	1.521	0.059
13.583	1.000	1.580	0.000
20.583	1.000	1.580	0.000

1-C15.20, L=11.5'

ARIZONA DEPARTMENT OF TRANSPORTATION
DRAINAGE DESIGN SECTION

04-10-2003

PROJECT NAME- Santan
HIGHWAY NAME- Baseline Rd
LOCATION - STA 23+13 LT
Ver 3.40: December 1995

TRACS NO.-
DESIGNER - MRG
CHECKER - (A)
PAGE

CURB OPENING INLET -- ON GRADE

GUTTER FLOW HYDRAULICS
GUTTER DESCRIPTION

Roadway Grade-% Per cent--G	=	0.530
Roadway Cross-Slope-Ft./Ft.--Sx	=	0.015
Shoulder Width-Ft.--	=	1.000
Shoulder Slope-Ft./Ft.--Ss	=	0.015
Gutter Width-Ft.--W	=	1.417
Gutter Slope-Ft./Ft.--Sw	=	0.059
Gutter Depression-Inches--	=	1.003
Manning's 'N	=	0.016
Flow-CFS--Q	=	1.980
SPREAD-Ft.--T	=	12.143
Average Velocity-V-fps	=	1.722
FLOW in Gutter-CFS--Q	=	0.679
% Flow in Gutter-CFS	=	34.282
Velocity of Flow in Gutter-fps	=	2.363
Depth at Curb Line-Inches--d	=	2.934

CURB OPENING--ADOT STD. C-15.20

Flow-CFS--Q	=	1.980
Gutter Velocity at INLET-fps	=	2.645
GUTTER FLOW at INLET-CFS--Q	=	0.879
Depth at INLET Curb Line-Inches--d	=	3.816
Local Gutter Depression-Inches	=	1.000
Length of opening: TOTAL Intercept--Ft.	=	13.330
Capture Ratio -- CURB OPENING	=	0.800

LENGTH	Efficiency	Q(Captured)	Q(By-Pass)
3.083	0.377	0.747	1.233
6.583	0.706	1.399	0.581
9.583	0.898	1.778	0.202
13.583	1.000	1.980	0.000
20.583	1.000	1.980	0.000

1-C15.20, L=11.5'

ARIZONA DEPARTMENT OF TRANSPORTATION
DRAINAGE DESIGN SECTION

04-10-2003

PROJECT NAME- Santan
HIGHWAY NAME- Baseline RD
LOCATION - STA 26+35 RT
Ver 3.40: December 1995

TRACS NO.-
DESIGNER - MHr
CHECKER - (A)
PAGE

CURB OPENING INLET -- ON GRADE

GUTTER FLOW HYDRAULICS
GUTTER DESCRIPTION

Roadway Grade-% Per cent--G	=	0.540
Roadway Cross-Slope-Ft./Ft.--Sx	=	0.020
Shoulder Width-Ft.--	=	1.000
Shoulder Slope-Ft./Ft.--Ss	=	0.020
Gutter Width-Ft.--W	=	1.417
Gutter Slope-Ft./Ft.--Sw	=	0.059
Gutter Depression-Inches--	=	1.003
Manning's 'N	=	0.016
Flow-CFS--Q	=	1.780
SPREAD-Ft.--T	=	9.708
Average Velocity-V-fps	=	1.813
FLOW in Gutter-CFS--Q	=	0.713
% Flow in Gutter-CFS	=	40.049
Velocity of Flow in Gutter-fps	=	2.423
Depth at Curb Line-Inches--d	=	2.993

CURB OPENING--ADOT STD. C-15.20

Flow-CFS--Q	=	1.780
Gutter Velocity at INLET-fps	=	2.690
GUTTER FLOW at INLET-CFS--Q	=	0.904
Depth at INLET Curb Line-Inches--d	=	3.850
Local Gutter Depression-Inches	=	1.000
Length of opening: TOTAL Intercept--Ft.	=	11.791
Capture Ratio -- CURB OPENING	=	0.800

LENGTH	Efficiency	Q(Captured)	Q(By-Pass)
3.083	0.420	0.748	1.032
6.583	0.770	1.371	0.409
9.583	0.951	1.693	0.087
13.583	1.000	1.780	0.000
20.583	1.000	1.780	0.000

1-C15.20, L=11.5' 11.5'

ARIZONA DEPARTMENT OF TRANSPORTATION
DRAINAGE DESIGN SECTION

04-10-2003

PROJECT NAME- Santan
HIGHWAY NAME- Baseline
LOCATION - STA 26+35.62 LT
Ver 3.40: December 1995

TRACS NO.-
DESIGNER - MRG
CHECKER - AJ
PAGE

CURB OPENING INLET -- ON GRADE

GUTTER FLOW HYDRAULICS
GUTTER DESCRIPTION

Roadway Grade-% Per cent--G	=	0.540
Roadway Cross-Slope-Ft./Ft.--Sx	=	0.020
Shoulder Width-Ft.--	=	1.000
Shoulder Slope-Ft./Ft.--Ss	=	0.020
Gutter Width-Ft.--W	=	1.417
Gutter Slope-Ft./Ft.--Sw	=	0.059
Gutter Depression-Inches--	=	1.003
Manning's 'N	=	0.016
Flow-CFS--Q	=	1.940
SPREAD-Ft.--T	=	10.049
Average Velocity-V-fps	=	1.850
FLOW in Gutter-CFS--Q	=	0.752
% Flow in Gutter-CFS	=	38.758
Velocity of Flow in Gutter-fps	=	2.475
Depth at Curb Line-Inches--d	=	3.075

CURB OPENING--ADOT STD. C-15.20

Flow-CFS--Q	=	1.940
Gutter Velocity at INLET-fps	=	2.741
GUTTER FLOW at INLET-CFS--Q	=	0.950
Depth at INLET Curb Line-Inches--d	=	3.937
Local Gutter Depression-Inches	=	1.000
Length of opening: TOTAL Intercept--Ft.	=	12.419
Capture Ratio -- CURB OPENING	=	0.800

LENGTH	Efficiency	Q(Captured)	Q(By-Pass)
3.083	0.402	0.779	1.161
6.583	0.743	1.442	0.498
9.583	0.930	1.804	0.136
13.583	1.000	1.940	0.000
20.583	1.000	1.940	0.000

1-C15.20, L = 12.5'

ARIZONA DEPARTMENT OF TRANSPORTATION
DRAINAGE DESIGN SECTION

04-07-2003

PROJECT NAME- _____ TRACS NO.- _____
HIGHWAY NAME- _____ DESIGNER - RSR
LOCATION - MeO EB 318+69 CHECKER - (A) PAGE _____
Ver 3.40: December 1995

SLOTTED DRAIN W/ GRATE--ON GRADE

GUTTER FLOW HYDRAULICS
GUTTER DESCRIPTION

Roadway Grade-% Per cent--G	=	1.800
Roadway Cross-Slope-Ft./Ft.--Sx	=	0.020
Shoulder Width-Ft.--	=	10.000
Shoulder Slope-Ft./Ft.--Ss	=	0.020
Gutter Width-Ft.--W	=	4.500
Gutter Slope-Ft./Ft.--Sw	=	0.037
Gutter Depression-Inches--	=	1.998
Manning's 'N	=	0.016
Flow-CFS--Q	=	8.210 - 10 yr
SPREAD-Ft.--T	=	13.212 - 16' max
Average Velocity-V-fps	=	4.281
FLOW in Gutter-CFS--Q	=	5.987
% Flow in Gutter-CFS	=	72.918
Velocity of Flow in Gutter-fps	=	5.167
Depth at Curb Line-Inches--d	=	4.089

SLOTTED DRAIN--ADOT STD.--C13.60
GRATE TYPE: ADOT STD.--C15.92

Grate Length--Ft.	=	3.350
Grate Width---Ft.	=	2.000
Grate Area--Sq. Ft.	=	5.590
Splash-Over Velocity--FPS	=	7.350
Depth at INLET Curb Line-Inches--d	=	2.539
Local Gutter Depression-Inches	=	0.000
Length of opening: TOTAL Intercept--Ft.	=	60.802
Capture Ratio -- SLOTTED DRAIN	=	0.670
Capture Ratio -- GRATE	=	0.500

LENGTH	Efficiency	Q(S.D.)	Q(GRATE)	Q(INT.)	Q(By-Pass)	% CAPT.
5.000	0.143	1.175	3.380	4.555	3.655	55.49
10.000	0.276	2.269	3.036	5.304	2.906	64.61
15.000	0.399	3.280	2.691	5.971	2.239	72.73
20.000	0.512	4.206	2.347	6.553	1.657	79.81
25.000	0.615	5.045	2.002	7.047	1.163	85.84
30.000	0.706	5.796	1.657	7.453	0.757	90.78

ARIZONA DEPARTMENT OF TRANSPORTATION
DRAINAGE DESIGN SECTION

04-07-2003

PROJECT NAME- _____ TRACS NO.- _____
HIGHWAY NAME- _____ DESIGNER - RSR
LOCATION - Mod EB 3186+27 CHECKER - A PAGE _____
Ver 3.40: December 1995

SLOTTED DRAIN W/ GRATE--ON GRADE

GUTTER FLOW HYDRAULICS
GUTTER DESCRIPTION

Roadway Grade-% Per cent--G	=	0.771
Roadway Cross-Slope-Ft./Ft.--Sx	=	0.020
Shoulder Width-Ft.--	=	10.000
Shoulder Slope-Ft./Ft.--Ss	=	0.020
Gutter Width-Ft.--W	=	2.500
Gutter Slope-Ft./Ft.--Sw	=	0.021
Gutter Depression-Inches--	=	0.624
Manning's 'N	=	0.016
Flow-CFS--Q	=	4.370 - 10yr
SPREAD-Ft.--T	=	13.142 - 16' max
Average Velocity-V-fps	=	2.526
FLOW in Gutter-CFS--Q	=	1.888
% Flow in Gutter-CFS	=	43.205
Velocity of Flow in Gutter-fps	=	3.162
Depth at Curb Line-Inches--d	=	3.178

SLOTTED DRAIN--ADOT STD.--C13.60
GRATE TYPE: ADOT STD.--C15.91

Grate Length--Ft.	=	3.354
Grate Width---Ft.	=	2.000
Grate Area--Sq. Ft.	=	5.171
Splash-Over Velocity--FPS	=	10.531
Depth at INLET Curb Line-Inches--d	=	4.013
Local Gutter Depression-Inches	=	1.000
Length of opening: TOTAL Intercept--Ft.	=	32.924
Capture Ratio -- SLOTTED DRAIN	=	0.670
Capture Ratio -- GRATE	=	1.000

LENGTH	Efficiency	Q(S.D.)	Q(GRATE)	Q(INT.)	Q(By-Pass)	% CAPT.
5.000	0.257	1.121	2.361	3.482	0.888	79.68
10.000	0.479	2.092	1.811	3.903	0.467	89.32
15.000	0.665	2.907	1.277	4.185	0.185	95.76
20.000	0.814	3.558	0.774	4.332	0.038	99.13
25.000	0.923	4.033	0.336	4.369	0.001	99.98
30.000	0.987	4.314	0.056	4.370	0.000	100.00

ARIZONA DEPARTMENT OF TRANSPORTATION
DRAINAGE DESIGN SECTION

04-07-2003

PROJECT NAME- _____ TRACS NO.- _____
HIGHWAY NAME- _____ DESIGNER - RSR
LOCATION - Mad EB 3187+67 CHECKER - (A) PAGE _____
Ver 3.40: December 1995

SLOTTED DRAIN W/ GRATE--ON GRADE

GUTTER FLOW HYDRAULICS
GUTTER DESCRIPTION

Roadway Grade-% Per cent--G	=	0.197
Roadway Cross-Slope-Ft./Ft.--Sx	=	0.020
Shoulder Width-Ft.--	=	10.000
Shoulder Slope-Ft./Ft.--Ss	=	0.020
Gutter Width-Ft.--W	=	2.500
Gutter Slope-Ft./Ft.--Sw	=	0.021
Gutter Depression-Inches--	=	0.624
Manning's 'N	=	0.016
Flow-CFS--Q	=	1.570 - 10 yr
SPREAD-Ft.--T	=	11.559 - 12.4' max
Average Velocity-V-fps	=	1.173
FLOW in Gutter-CFS--Q	=	0.754
% Flow in Gutter-CFS	=	47.994
Velocity of Flow in Gutter-fps	=	1.455
Depth at Curb Line-Inches--d	=	2.798

SLOTTED DRAIN--ADOT STD.--C13.60
GRATE TYPE: ADOT STD.--C15.91

Grate Length--Ft.	=	3.354
Grate Width---Ft.	=	2.000
Grate Area--Sq. Ft.	=	5.171
Splash-Over Velocity--FPS	=	7.354
Depth at INLET Curb Line-Inches--d	=	3.610
Local Gutter Depression-Inches	=	1.000
Length of opening: TOTAL Intercept--Ft.	=	13.731
Capture Ratio -- SLOTTED DRAIN	=	0.670
Capture Ratio -- GRATE	=	0.500

LENGTH	Efficiency	Q(S.D.)	Q(GRATE)	Q(INT.)	Q(By-Pass)	% CAPT.
5.000	0.557	0.875	0.595	1.470	0.100	93.64
10.000	0.904	1.420	0.150	1.570	0.000	99.98
15.000	1.000	1.570	0.000	1.570	0.000	100.00
20.000	1.000	1.570	0.000	1.570	0.000	100.00
25.000	1.000	1.570	0.000	1.570	0.000	100.00
30.000	1.000	1.570	0.000	1.570	0.000	100.00

ARIZONA DEPARTMENT OF TRANSPORTATION
DRAINAGE DESIGN SECTION

04-07-2003

PROJECT NAME- _____ TRACS NO.- _____
HIGHWAY NAME- _____ DESIGNER - RSR
LOCATION - Mod EB 3188+42 CHECKER - (A) PAGE _____
Ver 3.40: December 1995

SLOTTED DRAIN W/ GRATE--IN SUMP

GUTTER FLOW HYDRAULICS

GUTTER DESCRIPTION

Roadway Cross-Slope-Ft./Ft.--Sx	=	0.020
Shoulder Width-Ft.--	=	10.000
Shoulder Slope-Ft./Ft.--Ss	=	0.020
Gutter Width-Ft.--W	=	2.500
Gutter Slope-Ft./Ft.--Sw	=	0.021
Gutter Depression-Inches--	=	0.624

GRATE TYPE: ADOT STD.--C15.91

Grate Length--Ft.	=	3.354
Grate Width---Ft.	=	2.000
Grate Area--Sq. Ft.	=	5.171
Effective Perimeter--Ft.	=	7.354
Capture Ratio -- GRATE	=	0.500
Capture Ratio -- SLOTTED DRAIN	=	0.670
Local Gutter Depression-Inches	=	1.000
Flow-CFS--Q	=	1.560 - 10yr

LENGTH	Q(Slot. Dn)	Q(Grate)	d(inches)	SPREAD,Ft.
5.000	0.866	0.696	1.795	7.377
10.000	1.173	0.388	1.155	4.711
15.000	1.317	0.242	0.776	3.135
20.000	1.395	0.165	0.524	2.100
25.000	1.438	0.123	0.340	1.363

Use 10' of slotted drain on North side of CB.
Use 15' of slotted drain on South side of CB.

ARIZONA DEPARTMENT OF TRANSPORTATION
DRAINAGE DESIGN SECTION

04-07-2003

PROJECT NAME- _____ TRACS NO.- _____
HIGHWAY NAME- _____ DESIGNER - RSR
LOCATION - Med EB 3188+42 CHECKER - (A) PAGE _____
Ver 3.40: December 1995

GUTTER FLOW HYDRAULICS
GUTTER DESCRIPTION

Roadway Grade-% Per cent--G	=	0.046
Roadway Cross-Slope-Ft./Ft.--Sx	=	0.020
Shoulder Width-Ft.--	=	10.000
Shoulder Slope-Ft./Ft.--Ss	=	0.020
Gutter Width-Ft.--W	=	2.500
Gutter Slope-Ft./Ft.--Sw	=	0.021
Gutter Depression-Inches--	=	0.624
Manning's 'N	=	0.016
Flow-CFS--Q	=	0.860 - 10yr
SPREAD-Ft.--T	=	12.127 - 12.4' Max
Average Velocity-V-fps	=	0.584
FLOW in Gutter-CFS--Q	=	0.397
% Flow in Gutter-CFS	=	46.163
Velocity of Flow in Gutter-fps	=	0.727
Depth at Curb Line-Inches--d	=	2.934

Calc used to check spread @ upstream end of slotted drain sta 3188+25 - 15' slotted drain

ARIZONA DEPARTMENT OF TRANSPORTATION
DRAINAGE DESIGN SECTION

04-07-2003

PROJECT NAME- _____ TRACS NO.- _____
HIGHWAY NAME- _____ DESIGNER - RSR
LOCATION - Med EB 3188+42 CHECKER - _____ PAGE _____
Ver 3.40: December 1995

GUTTER FLOW HYDRAULICS
GUTTER DESCRIPTION

Roadway Grade-% Per cent--G	=	0.033
Roadway Cross-Slope-Ft./Ft.--Sx	=	0.020
Shoulder Width-Ft.--	=	10.000
Shoulder Slope-Ft./Ft.--Ss	=	0.020
Gutter Width-Ft.--W	=	2.500
Gutter Slope-Ft./Ft.--Sw	=	0.021
Gutter Depression-Inches--	=	0.624
Manning's 'N	=	0.016
Flow-CFS--Q	=	0.700 - 10yr
SPREAD-Ft.--T	=	11.964 - 12.4 max
Average Velocity-V-fps	=	0.488
FLOW in Gutter-CFS--Q	=	0.327
% Flow in Gutter-CFS	=	46.673
Velocity of Flow in Gutter-fps	=	0.607
Depth at Curb Line-Inches--d	=	2.895

Calc. used to check spread @ upstream end of slotted drain sta 3188+54 ~10' s/o slotted drain

ARIZONA DEPARTMENT OF TRANSPORTATION
DRAINAGE DESIGN SECTION

04-07-2003

PROJECT NAME- _____ TRACS NO.- _____
HIGHWAY NAME- _____ DESIGNER - RSR
LOCATION - Med EB 3189+04 CHECKER - (A) PAGE _____
Ver 3.40: December 1995

SLOTTED DRAIN W/ GRATE--ON GRADE

GUTTER FLOW HYDRAULICS
GUTTER DESCRIPTION

Roadway Grade-% Per cent--G	=	0.165
Roadway Cross-Slope-Ft./Ft.--Sx	=	0.020
Shoulder Width-Ft.--	=	10.000
Shoulder Slope-Ft./Ft.--Ss	=	0.020
Gutter Width-Ft.--W	=	2.500
Gutter Slope-Ft./Ft.--Sw	=	0.021
Gutter Depression-Inches--	=	0.624
Manning's 'N	=	0.016
Flow-CFS--Q	=	1.620 - 10 yr
SPREAD-Ft.--T	=	12.097 - 12.4' max
Average Velocity-V-fps	=	1.105
FLOW in Gutter-CFS--Q	=	0.749
% Flow in Gutter-CFS	=	46.257
Velocity of Flow in Gutter-fps	=	1.375
Depth at Curb Line-Inches--d	=	2.927

SLOTTED DRAIN--ADOT STD.--C13.60
GRATE TYPE: ADOT STD.--C15.91

Grate Length--Ft.	=	3.354
Grate Width---Ft.	=	2.000
Grate Area--Sq. Ft.	=	5.171
Splash-Over Velocity--FPS	=	7.354
Depth at INLET Curb Line-Inches--d	=	3.748
Local Gutter Depression-Inches	=	1.000
Length of opening: TOTAL Intercept--Ft.	=	13.352
Capture Ratio -- SLOTTED DRAIN	=	0.670
Capture Ratio -- GRATE	=	0.500

LENGTH	Efficiency	Q(S.D.)	Q(GRATE)	Q(INT.)	Q(By-Pass)	% CAPT.
5.000	0.570	0.924	0.593	1.517	0.103	93.66
10.000	0.917	1.485	0.134	1.620	0.000	99.99
15.000	1.000	1.620	0.000	1.620	0.000	100.00
20.000	1.000	1.620	0.000	1.620	0.000	100.00
25.000	1.000	1.620	0.000	1.620	0.000	100.00
30.000	1.000	1.620	0.000	1.620	0.000	100.00

ARIZONA DEPARTMENT OF TRANSPORTATION
DRAINAGE DESIGN SECTION

04-07-2003

PROJECT NAME- _____ TRACS NO.- _____
HIGHWAY NAME- _____ DESIGNER - RSR
LOCATION - Med EB 3190+27 CHECKER - (A) PAGE _____
Ver 3.40: December 1995

SLOTTED DRAIN W/ GRATE--ON GRADE

GUTTER FLOW HYDRAULICS
GUTTER DESCRIPTION

Roadway Grade-% Per cent--G	=	0.443
Roadway Cross-Slope-Ft./Ft.--Sx	=	0.020
Shoulder Width-Ft.--	=	10.000
Shoulder Slope-Ft./Ft.--Ss	=	0.020
Gutter Width-Ft.--W	=	2.500
Gutter Slope-Ft./Ft.--Sw	=	0.021
Gutter Depression-Inches--	=	0.624
Manning's 'N	=	0.016
Flow-CFS--Q	=	2.620 -10yr
SPREAD-Ft.--T	=	12.032 -12.4' max
Average Velocity-V-fps	=	1.807
FLOW in Gutter-CFS--Q	=	1.217
% Flow in Gutter-CFS	=	46.459
Velocity of Flow in Gutter-fps	=	2.247
Depth at Curb Line-Inches--d	=	2.912

SLOTTED DRAIN--ADOT STD.--C13.60
GRATE TYPE: ADOT STD.--C15.91

Grate Length--Ft.	=	3.354
Grate Width---Ft.	=	2.000
Grate Area--Sq. Ft.	=	5.171
Splash-Over Velocity--FPS	=	7.354
Depth at INLET Curb Line-Inches--d	=	3.731
Local Gutter Depression-Inches	=	1.000
Length of opening: TOTAL Intercept--Ft.	=	21.958
Capture Ratio -- SLOTTED DRAIN	=	0.670
Capture Ratio -- GRATE	=	0.500

LENGTH	Efficiency	Q(S.D.)	Q(GRATE)	Q(INT.)	Q(By-Pass)	% CAPT.
5.000	0.372	0.974	1.151	2.126	0.494	81.13
10.000	0.665	1.743	0.736	2.478	0.142	94.59
15.000	0.874	2.289	0.325	2.614	0.006	99.78
20.000	0.987	2.586	0.034	2.620	0.000	100.00
25.000	1.000	2.620	0.000	2.620	0.000	100.00
30.000	1.000	2.620	0.000	2.620	0.000	100.00

ARIZONA DEPARTMENT OF TRANSPORTATION
DRAINAGE DESIGN SECTION

04-07-2003

PROJECT NAME- _____ TRACS NO.- _____
HIGHWAY NAME- _____ DESIGNER - RSR
LOCATION - Med EB 3192+95 CHECKER - (A) PAGE _____
Ver 3.40: December 1995

SLOTTED DRAIN W/ GRATE--ON GRADE

GUTTER FLOW HYDRAULICS
GUTTER DESCRIPTION

Roadway Grade-% Per cent--G	=	0.506
Roadway Cross-Slope-Ft./Ft.--Sx	=	0.020
Shoulder Width-Ft.--	=	10.000
Shoulder Slope-Ft./Ft.--Ss	=	0.020
Gutter Width-Ft.--W	=	2.500
Gutter Slope-Ft./Ft.--Sw	=	0.021
Gutter Depression-Inches--	=	0.624
Manning's 'N	=	0.016
Flow-CFS--Q	=	3.000 - 10 yr
SPREAD-Ft.--T	=	12.351 - 12.4' max
Average Velocity-V-fps	=	1.964
FLOW in Gutter-CFS--Q	=	1.364
% Flow in Gutter-CFS	=	45.478
Velocity of Flow in Gutter-fps	=	2.447
Depth at Curb Line-Inches--d	=	2.988

SLOTTED DRAIN--ADOT STD.--C13.60
GRATE TYPE: ADOT STD.--C15.91

Grate Length--Ft.	=	3.354
Grate Width---Ft.	=	2.000
Grate Area--Sq. Ft.	=	5.171
Splash-Over Velocity--FPS	=	7.354
Depth at INLET Curb Line-Inches--d	=	3.812
Local Gutter Depression-Inches	=	1.000
Length of opening: TOTAL Intercept--Ft.	=	24.356
Capture Ratio -- SLOTTED DRAIN	=	0.670
Capture Ratio -- GRATE	=	0.500

LENGTH	Efficiency	Q(S.D.)	Q(GRATE)	Q(INT.)	Q(By-Pass)	% CAPT.
5.000	0.339	1.016	1.316	2.332	0.668	77.74
10.000	0.614	1.842	0.908	2.750	0.250	91.66
15.000	0.821	2.464	0.501	2.965	0.035	98.84
20.000	0.955	2.865	0.135	3.000	0.000	100.00
25.000	1.000	3.000	0.000	3.000	0.000	100.00
30.000	1.000	3.000	0.000	3.000	0.000	100.00

ARIZONA DEPARTMENT OF TRANSPORTATION
DRAINAGE DESIGN SECTION

04-07-2003

PROJECT NAME- _____ TRACS NO.- _____
HIGHWAY NAME- _____ DESIGNER - RSR
LOCATION - Ave EB 3195+95 CHECKER - A PAGE _____
Ver 3.40: December 1995

SLOTTED DRAIN W/ GRATE--ON GRADE

GUTTER FLOW HYDRAULICS
GUTTER DESCRIPTION

Roadway Grade-% Per cent--G	=	0.359
Roadway Cross-Slope-Ft./Ft.--Sx	=	0.020
Shoulder Width-Ft.--	=	10.000
Shoulder Slope-Ft./Ft.--Ss	=	0.020
Gutter Width-Ft.--W	=	2.500
Gutter Slope-Ft./Ft.--Sw	=	0.021
Gutter Depression-Inches--	=	0.624
Manning's 'N	=	0.016
Flow-CFS--Q	=	2.270 -10yr
SPREAD-Ft.--T	=	11.862 -12.4' max
Average Velocity-V-fps	=	1.610
FLOW in Gutter-CFS--Q	=	1.067
% Flow in Gutter-CFS	=	46.998
Velocity of Flow in Gutter-fps	=	2.001
Depth at Curb Line-Inches--d	=	2.871

SLOTTED DRAIN--ADOT STD.--C13.60
GRATE TYPE: ADOT STD.--C15.91

Grate Length--Ft.	=	3.354
Grate Width---Ft.	=	2.000
Grate Area--Sq. Ft.	=	5.171
Splash-Over Velocity--FPS	=	7.354
Depth at INLET Curb Line-Inches--d	=	3.687
Local Gutter Depression-Inches	=	1.000
Length of opening: TOTAL Intercept--Ft.	=	19.329
Capture Ratio -- SLOTTED DRAIN	=	0.670
Capture Ratio -- GRATE	=	0.500

LENGTH	Efficiency	Q(S.D.)	Q(GRATE)	Q(INT.)	Q(By-Pass)	% CAPT.
5.000	0.417	0.946	0.980	1.926	0.344	84.83
10.000	0.731	1.658	0.550	2.208	0.062	97.28
15.000	0.932	2.116	0.154	2.270	0.000	100.00
20.000	1.000	2.270	0.000	2.270	0.000	100.00
25.000	1.000	2.270	0.000	2.270	0.000	100.00
30.000	1.000	2.270	0.000	2.270	0.000	100.00

ARIZONA DEPARTMENT OF TRANSPORTATION
DRAINAGE DESIGN SECTION

04-07-2003

PROJECT NAME- _____ TRACS NO.- _____
HIGHWAY NAME- _____ DESIGNER - RSR
LOCATION - Med EB 3203+65 CHECKER - (A) PAGE _____
Ver 3.40: December 1995

SLOTTED DRAIN W/ GRATE--ON GRADE

GUTTER FLOW HYDRAULICS
GUTTER DESCRIPTION

Roadway Grade-% Per cent--G	=	0.614
Roadway Cross-Slope-Ft./Ft.--Sx	=	0.020
Shoulder Width-Ft.--	=	10.000
Shoulder Slope-Ft./Ft.--Ss	=	0.020
Gutter Width-Ft.--W	=	2.500
Gutter Slope-Ft./Ft.--Sw	=	0.021
Gutter Depression-Inches--	=	0.624
Manning's 'N	=	0.016
Flow-CFS--Q	=	4.970 -10yr
SPREAD-Ft.--T	=	14.396 -16' max
Average Velocity-V-fps	=	2.395
FLOW in Gutter-CFS--Q	=	1.989
% Flow in Gutter-CFS	=	40.024
Velocity of Flow in Gutter-fps	=	3.015
Depth at Curb Line-Inches--d	=	3.479

SLOTTED DRAIN--ADOT STD.--C13.60
GRATE TYPE: ADOT STD.--C15.91

Grate Length--Ft.	=	3.354
Grate Width---Ft.	=	2.000
Grate Area--Sq. Ft.	=	5.171
Splash-Over Velocity--FPS	=	7.354
Depth at INLET Curb Line-Inches--d	=	4.329
Local Gutter Depression-Inches	=	1.000
Length of opening: TOTAL Intercept--Ft.	=	33.256
Capture Ratio -- SLOTTED DRAIN	=	0.670
Capture Ratio -- GRATE	=	0.500

LENGTH	Efficiency	Q(S.D.)	Q(GRATE)	Q(INT.)	Q(By-Pass)	% CAPT.
5.000	0.254	1.263	2.000	3.264	1.706	65.67
10.000	0.475	2.359	1.598	3.957	1.013	79.62
15.000	0.660	3.281	1.197	4.478	0.492	90.10
20.000	0.809	4.021	0.796	4.817	0.153	96.92
25.000	0.919	4.565	0.395	4.960	0.010	99.80

ARIZONA DEPARTMENT OF TRANSPORTATION
DRAINAGE DESIGN SECTION

04-07-2003

PROJECT NAME- _____ TRACS NO.- _____
HIGHWAY NAME- _____ DESIGNER - RSR
LOCATION - Med EB 3203+65 CHECKER - A PAGE _____
Ver 3.40: December 1995

SLOTTED DRAIN W/ GRATE--ON GRADE

GUTTER FLOW HYDRAULICS
GUTTER DESCRIPTION

Roadway Grade-% Per cent--G	=	0.614
Roadway Cross-Slope-Ft./Ft.--Sx	=	0.020
Shoulder Width-Ft.--	=	10.000
Shoulder Slope-Ft./Ft.--Ss	=	0.020
Gutter Width-Ft.--W	=	2.500
Gutter Slope-Ft./Ft.--Sw	=	0.021
Gutter Depression-Inches--	=	0.624
Manning's 'N	=	0.016
Flow-CFS--Q	=	6.870 - 50yr
SPREAD-Ft.--T	=	16.257 - 22' max
Average Velocity-V-fps	=	2.597
FLOW in Gutter-CFS--Q	=	2.478
% Flow in Gutter-CFS	=	36.063
Velocity of Flow in Gutter-fps	=	3.291
Depth at Curb Line-Inches--d	=	3.926

SLOTTED DRAIN--ADOT STD.--C13.60
GRATE TYPE: ADOT STD.--C15.91

Grate Length--Ft.	=	3.354
Grate Width---Ft.	=	2.000
Grate Area--Sq. Ft.	=	5.171
Splash-Over Velocity--FPS	=	7.354
Depth at INLET Curb Line-Inches--d	=	4.794
Local Gutter Depression-Inches	=	1.000
Length of opening: TOTAL Intercept--Ft.	=	39.306
Capture Ratio -- SLOTTED DRAIN	=	0.670
Capture Ratio -- GRATE	=	0.500

LENGTH	Efficiency	Q(S.D.)	Q(GRATE)	Q(INT.)	Q(By-Pass)	% CAPT.
5.000	0.217	1.492	2.526	4.018	2.852	58.49
10.000	0.410	2.820	2.115	4.935	1.935	71.84
15.000	0.579	3.978	1.707	5.685	1.185	82.75
20.000	0.722	4.959	1.301	6.260	0.610	91.12
25.000	0.838	5.756	0.895	6.651	0.219	96.81

ARIZONA DEPARTMENT OF TRANSPORTATION
DRAINAGE DESIGN SECTION

04-07-2003

PROJECT NAME- _____ TRACS NO.- _____
HIGHWAY NAME- _____ DESIGNER - RSR
LOCATION - Med EB 3207+60 CHECKER - (A) PAGE _____
Ver 3.40: December 1995

SLOTTED DRAIN W/ GRATE--ON GRADE

GUTTER FLOW HYDRAULICS
GUTTER DESCRIPTION

Roadway Grade-% Per cent--G	=	0.614
Roadway Cross-Slope-Ft./Ft.--Sx	=	0.020
Shoulder Width-Ft.--	=	10.000
Shoulder Slope-Ft./Ft.--Ss	=	0.020
Gutter Width-Ft.--W	=	2.500
Gutter Slope-Ft./Ft.--Sw	=	0.067
Gutter Depression-Inches--	=	2.001
Manning's 'N	=	0.016
Flow-CFS--Q	=	5.910
SPREAD-Ft.--T	=	14.540
Average Velocity-V-fps	=	2.615
FLOW in Gutter-CFS--Q	=	2.832
% Flow in Gutter-CFS	=	47.916
Velocity of Flow in Gutter-fps	=	3.494
Depth at Curb Line-Inches--d	=	4.891

SLOTTED DRAIN--ADOT STD.--C13.60
GRATE TYPE: ADOT STD.--C15.91

Grate Length--Ft.	=	3.354
Grate Width---Ft.	=	2.000
Grate Area--Sq. Ft.	=	5.171
Splash-Over Velocity--FPS	=	7.354
Depth at INLET Curb Line-Inches--d	=	5.724
Local Gutter Depression-Inches	=	1.000
Length of opening: TOTAL Intercept--Ft.	=	25.385
Capture Ratio -- SLOTTED DRAIN	=	0.670
Capture Ratio -- GRATE	=	0.500

LENGTH	Efficiency	Q(S.D.)	Q(GRATE)	Q(INT.)	Q(By-Pass)	% CAPT.
5.000	0.326	1.928	2.650	4.578	1.332	77.47
10.000	0.594	3.511	1.925	5.436	0.474	91.98
15.000	0.800	4.727	1.136	5.864	0.046	99.21
20.000	0.939	5.547	0.363	5.910	0.000	100.00
25.000	0.999	5.907	0.003	5.910	0.000	100.00

ARIZONA DEPARTMENT OF TRANSPORTATION
DRAINAGE DESIGN SECTION

04-07-2003

PROJECT NAME- _____ TRACS NO.- _____
HIGHWAY NAME- _____ DESIGNER - RSR
LOCATION - Med EB 3207+60 CHECKER - (A) PAGE _____
Ver 3.40: December 1995

SLOTTED DRAIN W/ GRATE--ON GRADE

GUTTER FLOW HYDRAULICS
GUTTER DESCRIPTION

Roadway Grade-% Per cent--G	=	0.614
Roadway Cross-Slope-Ft./Ft.--Sx	=	0.020
Shoulder Width-Ft.--	=	10.000
Shoulder Slope-Ft./Ft.--Ss	=	0.020
Gutter Width-Ft.--W	=	2.500
Gutter Slope-Ft./Ft.--Sw	=	0.067
Gutter Depression-Inches--	=	2.001
Manning's 'N	=	0.016
Flow-CFS--Q	=	8.640
SPREAD-Ft.--T	=	17.011
Average Velocity-V-fps	=	2.842
FLOW in Gutter-CFS--Q	=	3.576
% Flow in Gutter-CFS	=	41.393
Velocity of Flow in Gutter-fps	=	3.829
Depth at Curb Line-Inches--d	=	5.484

SLOTTED DRAIN--ADOT STD.--C13.60
GRATE TYPE: ADOT STD.--C15.91

Grate Length--Ft.	=	3.354
Grate Width---Ft.	=	2.000
Grate Area--Sq. Ft.	=	5.171
Splash-Over Velocity--FPS	=	7.354
Depth at INLET Curb Line-Inches--d	=	6.343
Local Gutter Depression-Inches	=	1.000
Length of opening: TOTAL Intercept--Ft.	=	31.723
Capture Ratio -- SLOTTED DRAIN	=	0.670
Capture Ratio -- GRATE	=	0.500

LENGTH	Efficiency	Q(S.D.)	Q(GRATE)	Q(INT.)	Q(By-Pass)	% CAPT.
5.000	0.266	2.295	3.488	5.783	2.857	66.94
10.000	0.494	4.270	2.803	7.073	1.567	81.86
15.000	0.684	5.911	2.095	8.006	0.634	92.66
20.000	0.833	7.200	1.334	8.535	0.105	98.78
25.000	0.939	8.111	0.529	8.640	0.000	100.00

ARIZONA DEPARTMENT OF TRANSPORTATION
DRAINAGE DESIGN SECTION

04-07-2003

PROJECT NAME- _____ TRACS NO.- _____
HIGHWAY NAME- _____ DESIGNER - RSR
LOCATION - Med EB 3209+25 CHECKER - (A) PAGE _____
Ver 3.40: December 1995

SLOTTED DRAIN W/ GRATE--ON GRADE

GUTTER FLOW HYDRAULICS
GUTTER DESCRIPTION

Roadway Grade-% Per cent--G	=	0.698
Roadway Cross-Slope-Ft./Ft.--Sx	=	0.020
Shoulder Width-Ft.--	=	10.000
Shoulder Slope-Ft./Ft.--Ss	=	0.020
Gutter Width-Ft.--W	=	2.500
Gutter Slope-Ft./Ft.--Sw	=	0.067
Gutter Depression-Inches--	=	2.001
Manning's 'N	=	0.016
Flow-CFS--Q	=	1.870 -10 yr
SPREAD-Ft.--T	=	8.374 -8.5 max
Average Velocity-V-fps	=	2.207
FLOW in Gutter-CFS--Q	=	1.386
% Flow in Gutter-CFS	=	74.122
Velocity of Flow in Gutter-fps	=	2.760
Depth at Curb Line-Inches--d	=	3.411

SLOTTED DRAIN--ADOT STD.--C13.60
GRATE TYPE: ADOT STD.--C15.91

Grate Length--Ft.	=	3.354
Grate Width---Ft.	=	2.000
Grate Area--Sq. Ft.	=	5.171
Splash-Over Velocity--FPS	=	7.354
Depth at INLET Curb Line-Inches--d	=	4.102
Local Gutter Depression-Inches	=	1.000
Length of opening: TOTAL Intercept--Ft.	=	13.378
Capture Ratio -- SLOTTED DRAIN	=	0.670
Capture Ratio -- GRATE	=	0.500

LENGTH	Efficiency	Q(S.D.)	Q(GRATE)	Q(INT.)	Q(By-Pass)	% CAPT.
5.000	0.569	1.065	0.801	1.866	0.004	99.77
10.000	0.916	1.713	0.157	1.870	0.000	100.00
15.000	1.000	1.870	0.000	1.870	0.000	100.00
20.000	1.000	1.870	0.000	1.870	0.000	100.00
25.000	1.000	1.870	0.000	1.870	0.000	100.00

ARIZONA DEPARTMENT OF TRANSPORTATION
DRAINAGE DESIGN SECTION

04-07-2003

PROJECT NAME- _____ TRACS NO.- _____
HIGHWAY NAME- _____ DESIGNER - RSR
LOCATION - Med EB 3209+25 CHECKER - (A) PAGE _____
Ver 3.40: December 1995

SLOTTED DRAIN W/ GRATE--ON GRADE

GUTTER FLOW HYDRAULICS
GUTTER DESCRIPTION

Roadway Grade-% Per cent--G	=	0.698
Roadway Cross-Slope-Ft./Ft.--Sx	=	0.020
Shoulder Width-Ft.--	=	10.000
Shoulder Slope-Ft./Ft.--Ss	=	0.020
Gutter Width-Ft.--W	=	2.500
Gutter Slope-Ft./Ft.--Sw	=	0.067
Gutter Depression-Inches--	=	2.001
Manning's 'N	=	0.016
Flow-CFS--Q	=	3.140 -50yr
SPREAD-Ft.--T	=	10.733
Average Velocity-V-fps	=	2.419
FLOW in Gutter-CFS--Q	=	1.949
% Flow in Gutter-CFS	=	62.074
Velocity of Flow in Gutter-fps	=	3.143
Depth at Curb Line-Inches--d	=	3.977

SLOTTED DRAIN--ADOT STD.--C13.60
GRATE TYPE: ADOT STD.--C15.91

Grate Length--Ft.	=	3.354
Grate Width---Ft.	=	2.000
Grate Area--Sq. Ft.	=	5.171
Splash-Over Velocity--FPS	=	7.354
Depth at INLET Curb Line-Inches--d	=	4.743
Local Gutter Depression-Inches	=	1.000
Length of opening: TOTAL Intercept--Ft.	=	17.991
Capture Ratio -- SLOTTED DRAIN	=	0.670
Capture Ratio -- GRATE	=	0.500

LENGTH	Efficiency	Q(S.D.)	Q(GRATE)	Q(INT.)	Q(By-Pass)	% CAPT.
5.000	0.444	1.393	1.563	2.955	0.185	94.11
10.000	0.768	2.411	0.726	3.138	0.002	99.92
15.000	0.960	3.016	0.124	3.140	0.000	100.00
20.000	1.000	3.140	0.000	3.140	0.000	100.00
25.000	1.000	3.140	0.000	3.140	0.000	100.00

ARIZONA DEPARTMENT OF TRANSPORTATION
DRAINAGE DESIGN SECTION

04-08-2003

PROJECT NAME- _____ TRACS NO.- _____
HIGHWAY NAME- _____ DESIGNER - RSR
LOCATION - Ned EB 3210+80 CHECKER - A PAGE _____
Ver 3.40: December 1995

SLOTTED DRAIN W/ GRATE--ON GRADE

GUTTER FLOW HYDRAULICS
GUTTER DESCRIPTION

Roadway Grade-% Per cent--G	=	0.742
Roadway Cross-Slope-Ft./Ft.--Sx	=	0.020
Shoulder Width-Ft.--	=	10.000
Shoulder Slope-Ft./Ft.--Ss	=	0.020
Gutter Width-Ft.--W	=	2.500
Gutter Slope-Ft./Ft.--Sw	=	0.067
Gutter Depression-Inches--	=	2.001
Manning's 'N	=	0.016
Flow-CFS--Q	=	1.830 -10yr
SPREAD-Ft.--T	=	8.154 - 8.5' max
Average Velocity-V-fps	=	2.257
FLOW in Gutter-CFS--Q	=	1.379
% Flow in Gutter-CFS	=	75.372
Velocity of Flow in Gutter-fps	=	2.808
Depth at Curb Line-Inches--d	=	3.358

SLOTTED DRAIN--ADOT STD.--C13.60
GRATE TYPE: ADOT STD.--C15.91

Grate Length--Ft.	=	3.354
Grate Width---Ft.	=	2.000
Grate Area--Sq. Ft.	=	5.171
Splash-Over Velocity--FPS	=	7.354
Depth at INLET Curb Line-Inches--d	=	4.040
Local Gutter Depression-Inches	=	1.000
Length of opening: TOTAL Intercept--Ft.	=	13.407
Capture Ratio -- SLOTTED DRAIN	=	0.670
Capture Ratio -- GRATE	=	0.500

LENGTH	Efficiency	Q(S.D.)	Q(GRATE)	Q(INT.)	Q(By-Pass)	% CAPT.
5.000	0.568	1.040	0.787	1.827	0.003	99.82
10.000	0.915	1.675	0.155	1.830	0.000	100.00
15.000	1.000	1.830	0.000	1.830	0.000	100.00
20.000	1.000	1.830	0.000	1.830	0.000	100.00
25.000	1.000	1.830	0.000	1.830	0.000	100.00

ARIZONA DEPARTMENT OF TRANSPORTATION
DRAINAGE DESIGN SECTION

04-08-2003

PROJECT NAME- _____ TRACS NO.- _____
HIGHWAY NAME- _____ DESIGNER - RSR
LOCATION - MeQ EB 3210+80 CHECKER - (A) PAGE _____
Ver 3.40: December 1995

SLOTTED DRAIN W/ GRATE--ON GRADE

GUTTER FLOW HYDRAULICS
GUTTER DESCRIPTION

Roadway Grade-% Per cent--G	=	0.742
Roadway Cross-Slope-Ft./Ft.--Sx	=	0.020
Shoulder Width-Ft.--	=	10.000
Shoulder Slope-Ft./Ft.--Ss	=	0.020
Gutter Width-Ft.--W	=	2.500
Gutter Slope-Ft./Ft.--Sw	=	0.067
Gutter Depression-Inches--	=	2.001
Manning's 'N	=	0.016
Flow-CFS--Q	=	2.720 50yr
SPREAD-Ft.--T	=	9.902
Average Velocity-V-fps	=	2.415
FLOW in Gutter-CFS--Q	=	1.796
% Flow in Gutter-CFS	=	66.016
Velocity of Flow in Gutter-fps	=	3.104
Depth at Curb Line-Inches--d	=	3.777

SLOTTED DRAIN--ADOT STD.--C13.60
GRATE TYPE: ADOT STD.--C15.91

Grate Length--Ft.	=	3.354
Grate Width---Ft.	=	2.000
Grate Area--Sq. Ft.	=	5.171
Splash-Over Velocity--FPS	=	7.354
Depth at INLET Curb Line-Inches--d	=	4.521
Local Gutter Depression-Inches	=	1.000
Length of opening: TOTAL Intercept--Ft.	=	16.777
Capture Ratio -- SLOTTED DRAIN	=	0.670
Capture Ratio -- GRATE	=	0.500

LENGTH	Efficiency	Q(S.D.)	Q(GRATE)	Q(INT.)	Q(By-Pass)	% CAPT.
5.000	0.471	1.281	1.351	2.633	0.087	96.80
10.000	0.804	2.188	0.532	2.720	0.000	100.00
15.000	0.982	2.672	0.048	2.720	0.000	100.00
20.000	1.000	2.720	0.000	2.720	0.000	100.00
25.000	1.000	2.720	0.000	2.720	0.000	100.00

ARIZONA DEPARTMENT OF TRANSPORTATION
DRAINAGE DESIGN SECTION

04-08-2003

PROJECT NAME- _____ TRACS NO.- _____
HIGHWAY NAME- _____ DESIGNER - RSR
LOCATION - Med EB 3211+57 CHECKER - GA PAGE _____
Ver 3.40: December 1995

GRATE INLET DESIGN -- ON GRADE

GUTTER FLOW HYDRAULICS
GUTTER DESCRIPTION

Roadway Grade-% Per cent--G	=	0.763
Roadway Cross-Slope-Ft./Ft.--Sx	=	0.020
Shoulder Width-Ft.--	=	10.000
Shoulder Slope-Ft./Ft.--Ss	=	0.020
Gutter Width-Ft.--W	=	2.500
Gutter Slope-Ft./Ft.--Sw	=	0.067
Gutter Depression-Inches--	=	2.001
Manning's 'N	=	0.016
Flow-CFS--Q	=	0.970 - 10yr
SPREAD-Ft.--T	=	5.631 - 8.5' max
Average Velocity-V-fps	=	2.095
FLOW in Gutter-CFS--Q	=	0.875
% Flow in Gutter-CFS	=	90.243
Velocity of Flow in Gutter-fps	=	2.398
Depth at Curb Line-Inches--d	=	2.752

GRATE TYPE: ADOT STD.--C15.91

Grate Length--Ft.	=	3.354
Grate Width---Ft.	=	2.000
Grate Area--Sq. Ft.	=	5.171
Capture Ratio -- GRATE	=	0.500
Effective Perimeter--Ft.	=	7.354
Splash-Over Velocity--FPS	=	7.354
Local Gutter Depression-Inches	=	1.000
Flow-CFS--Q	=	0.970
GUTTER FLOW at INLET-CFS--Q	=	0.963
Gutter Velocity at INLET-fps	=	2.593
Depth at INLET Curb Line-Inches--d	=	3.283
Frontal Flow Intercepted by GRATE--CFS	=	0.935
Lateral Flow Intercepted by GRATE--CFS	=	0.024
TOTAL Flow Intercepted by GRATE--CFS	=	0.959
% FLOW Intercepted	=	98.856
By-pass Flow--CFS	=	0.011

ARIZONA DEPARTMENT OF TRANSPORTATION
DRAINAGE DESIGN SECTION

04-08-2003

PROJECT NAME- _____ TRACS NO.- _____
HIGHWAY NAME- _____ DESIGNER - RSR
LOCATION - Med EB 321+57 CHECKER - A PAGE _____
Ver 3.40: December 1995

GRATE INLET DESIGN -- ON GRADE

GUTTER FLOW HYDRAULICS
GUTTER DESCRIPTION

Roadway Grade-% Per cent--G	=	0.763
Roadway Cross-Slope-Ft./Ft.--Sx	=	0.020
Shoulder Width-Ft.--	=	10.000
Shoulder Slope-Ft./Ft.--Ss	=	0.020
Gutter Width-Ft.--W	=	2.500
Gutter Slope-Ft./Ft.--Sw	=	0.067
Gutter Depression-Inches--	=	2.001
Manning's 'N	=	0.016
Flow-CFS--Q	=	1.440 - 50yr
SPREAD-Ft.--T	=	7.124
Average Velocity-V-fps	=	2.204
FLOW in Gutter-CFS--Q	=	1.172
% Flow in Gutter-CFS	=	81.404
Velocity of Flow in Gutter-fps	=	2.666
Depth at Curb Line-Inches--d	=	3.111

GRATE TYPE: ADOT STD.--C15.91

Grate Length--Ft.	=	3.354
Grate Width---Ft.	=	2.000
Grate Area--Sq. Ft.	=	5.171
Capture Ratio -- GRATE	=	0.500
Effective Perimeter--Ft.	=	7.354
Splash-Over Velocity--FPS	=	7.354
Local Gutter Depression-Inches	=	1.000
Flow-CFS--Q	=	1.440
GUTTER FLOW at INLET-CFS--Q	=	1.349
Gutter Velocity at INLET-fps	=	2.888
Depth at INLET Curb Line-Inches--d	=	3.742
Frontal Flow Intercepted by GRATE--CFS	=	1.278
Lateral Flow Intercepted by GRATE--CFS	=	0.077
TOTAL Flow Intercepted by GRATE--CFS	=	1.355
% FLOW Intercepted	=	94.113
By-pass Flow--CFS	=	0.085

ARIZONA DEPARTMENT OF TRANSPORTATION
DRAINAGE DESIGN SECTION

09-23-2002

PROJECT NAME- _____ TRACS NO.- _____
HIGHWAY NAME- _____ DESIGNER - RSR
LOCATION - Med EB 321+70 CHECKER - (A) PAGE _____
Ver 3.40: December 1995

SLOTTED DRAIN W/ GRATE--ON GRADE

GUTTER FLOW HYDRAULICS
GUTTER DESCRIPTION

Roadway Grade-% Per cent--G	=	0.614
Roadway Cross-Slope-Ft./Ft.--Sx	=	0.020
Shoulder Width-Ft.--	=	10.000
Shoulder Slope-Ft./Ft.--Ss	=	0.020
Gutter Width-Ft.--W	=	2.500
Gutter Slope-Ft./Ft.--Sw	=	0.067
Gutter Depression-Inches--	=	2.001
Manning's 'N	=	0.016
Flow-CFS--Q	=	5.500
SPREAD-Ft.--T	=	14.107
Average Velocity-V-fps	=	2.575
FLOW in Gutter-CFS--Q	=	2.709
% Flow in Gutter-CFS	=	49.246
Velocity of Flow in Gutter-fps	=	3.434
Depth at Curb Line-Inches--d	=	4.787

SLOTTED DRAIN--ADOT STD.--C13.60
GRATE TYPE: ADOT STD.--C15.91

Grate Length--Ft.	=	3.354
Grate Width---Ft.	=	2.000
Grate Area--Sq. Ft.	=	5.171
Splash-Over Velocity--FPS	=	7.354
Depth at INLET Curb Line-Inches--d	=	5.614
Local Gutter Depression-Inches	=	1.000
Length of opening: TOTAL Intercept--Ft.	=	24.332
Capture Ratio -- SLOTTED DRAIN	=	0.670
Capture Ratio -- GRATE	=	0.500

LENGTH	Efficiency	Q(S.D.)	Q(GRATE)	Q(INT.)	Q(By-Pass)	% CAPT.
5.000	0.339	1.865	2.508	4.372	1.128	79.49
10.000	0.614	3.379	1.771	5.150	0.350	93.63
15.000	0.822	4.520	0.963	5.483	0.017	99.69
20.000	0.955	5.254	0.246	5.500	0.000	100.00
25.000	1.000	5.500	0.000	5.500	0.000	100.00
30.000	1.000	5.500	0.000	5.500	0.000	100.00

ARIZONA DEPARTMENT OF TRANSPORTATION
DRAINAGE DESIGN SECTION

09-23-2002

PROJECT NAME- _____ TRACS NO.- _____
HIGHWAY NAME- _____ DESIGNER - RSR
LOCATION - McD EB 32 18+70 CHECKER - A PAGE _____
Ver 3.40: December 1995

SLOTTED DRAIN W/ GRATE--ON GRADE

GUTTER FLOW HYDRAULICS
GUTTER DESCRIPTION

Roadway Grade-% Per cent--G	=	0.614
Roadway Cross-Slope-Ft./Ft.--Sx	=	0.020
Shoulder Width-Ft.--	=	10.000
Shoulder Slope-Ft./Ft.--Ss	=	0.020
Gutter Width-Ft.--W	=	2.500
Gutter Slope-Ft./Ft.--Sw	=	0.067
Gutter Depression-Inches--	=	2.001
Manning's 'N	=	0.016
Flow-CFS--Q	=	7.590
SPREAD-Ft.--T	=	16.132
Average Velocity-V-fps	=	2.762
FLOW in Gutter-CFS--Q	=	3.303
% Flow in Gutter-CFS	=	43.524
Velocity of Flow in Gutter-fps	=	3.712
Depth at Curb Line-Inches--d	=	5.273

SLOTTED DRAIN--ADOT STD.--C13.60
GRATE TYPE: ADOT STD.--C15.91

Grate Length--Ft.	=	3.354
Grate Width---Ft.	=	2.000
Grate Area--Sq. Ft.	=	5.171
Splash-Over Velocity--FPS	=	7.354
Depth at INLET Curb Line-Inches--d	=	6.124
Local Gutter Depression-Inches	=	1.000
Length of opening: TOTAL Intercept--Ft.	=	29.406
Capture Ratio -- SLOTTED DRAIN	=	0.670
Capture Ratio -- GRATE	=	0.500

LENGTH	Efficiency	Q(S.D.)	Q(GRATE)	Q(INT.)	Q(By-Pass)	% CAPT.
5.000	0.285	2.163	3.186	5.349	2.241	70.47
10.000	0.527	3.998	2.489	6.487	1.103	85.47
15.000	0.723	5.489	1.760	7.248	0.342	95.50
20.000	0.871	6.615	0.959	7.573	0.017	99.78
25.000	0.967	7.341	0.249	7.590	0.000	100.00
30.000	1.000	7.590	0.000	7.590	0.000	100.00

ARIZONA DEPARTMENT OF TRANSPORTATION
DRAINAGE DESIGN SECTION

09-23-2002

PROJECT NAME- _____ TRACS NO.- _____
HIGHWAY NAME- _____ DESIGNER - RSR
LOCATION - Med EB 3222+04 CHECKER - (A) PAGE _____
Ver 3.40: December 1995

SLOTTED DRAIN W/ GRATE--ON GRADE

GUTTER FLOW HYDRAULICS
GUTTER DESCRIPTION

Roadway Grade-% Per cent--G	=	0.614
Roadway Cross-Slope-Ft./Ft.--Sx	=	0.020
Shoulder Width-Ft.--	=	10.000
Shoulder Slope-Ft./Ft.--Ss	=	0.020
Gutter Width-Ft.--W	=	2.500
Gutter Slope-Ft./Ft.--Sw	=	0.067
Gutter Depression-Inches--	=	2.001
Manning's 'N	=	0.016
Flow-CFS--Q	=	6.630
SPREAD-Ft.--T	=	15.255
Average Velocity-V-fps	=	2.681
FLOW in Gutter-CFS--Q	=	3.040
% Flow in Gutter-CFS	=	45.852
Velocity of Flow in Gutter-fps	=	3.592
Depth at Curb Line-Inches--d	=	5.062

SLOTTED DRAIN--ADOT STD.--C13.60
GRATE TYPE: ADOT STD.--C15.91

Grate Length--Ft.	=	3.354
Grate Width---Ft.	=	2.000
Grate Area--Sq. Ft.	=	5.171
Splash-Over Velocity--FPS	=	7.354
Depth at INLET Curb Line-Inches--d	=	5.904
Local Gutter Depression-Inches	=	1.000
Length of opening: TOTAL Intercept--Ft.	=	27.162
Capture Ratio -- SLOTTED DRAIN	=	0.670
Capture Ratio -- GRATE	=	0.500

LENGTH	Efficiency	Q(S.D.)	Q(GRATE)	Q(INT.)	Q(By-Pass)	% CAPT.
5.000	0.307	2.033	2.889	4.922	1.708	74.23
10.000	0.562	3.729	2.179	5.907	0.723	89.10
15.000	0.765	5.069	1.420	6.489	0.141	97.88
20.000	0.909	6.028	0.601	6.629	0.001	99.99
25.000	0.989	6.560	0.070	6.630	0.000	100.00
30.000	1.000	6.630	0.000	6.630	0.000	100.00

ARIZONA DEPARTMENT OF TRANSPORTATION
DRAINAGE DESIGN SECTION

09-23-2002

PROJECT NAME- _____ TRACS NO.- _____
HIGHWAY NAME- _____ DESIGNER - RSR
LOCATION - MeD EB 322+04 CHECKER - (A) PAGE _____
Ver 3.40: December 1995

SLOTTED DRAIN W/ GRATE--ON GRADE

GUTTER FLOW HYDRAULICS
GUTTER DESCRIPTION

Roadway Grade-% Per cent--G	=	0.614
Roadway Cross-Slope-Ft./Ft.--Sx	=	0.020
Shoulder Width-Ft.--	=	10.000
Shoulder Slope-Ft./Ft.--Ss	=	0.020
Gutter Width-Ft.--W	=	2.500
Gutter Slope-Ft./Ft.--Sw	=	0.067
Gutter Depression-Inches--	=	2.001
Manning's 'N	=	0.016
Flow-CFS--Q	=	9.830
SPREAD-Ft.--T	=	17.926
Average Velocity-V-fps	=	2.926
FLOW in Gutter-CFS--Q	=	3.870
% Flow in Gutter-CFS	=	39.367
Velocity of Flow in Gutter-fps	=	3.950
Depth at Curb Line-Inches--d	=	5.703

SLOTTED DRAIN--ADOT STD.--C13.60
GRATE TYPE: ADOT STD.--C15.91

Grate Length--Ft.	=	3.354
Grate Width---Ft.	=	2.000
Grate Area--Sq. Ft.	=	5.171
Splash-Over Velocity--FPS	=	7.354
Depth at INLET Curb Line-Inches--d	=	6.571
Local Gutter Depression-Inches	=	1.000
Length of opening: TOTAL Intercept--Ft.	=	34.203
Capture Ratio -- SLOTTED DRAIN	=	0.670
Capture Ratio -- GRATE	=	0.500

LENGTH	Efficiency	Q(S.D.)	Q(GRATE)	Q(INT.)	Q(By-Pass)	% CAPT.
5.000	0.248	2.434	3.810	6.244	3.586	63.52
10.000	0.463	4.555	3.133	7.688	2.142	78.21
15.000	0.646	6.352	2.438	8.791	1.039	89.43
20.000	0.794	7.809	1.713	9.522	0.308	96.87
25.000	0.906	8.905	0.913	9.818	0.012	99.87
30.000	0.977	9.604	0.226	9.830	0.000	100.00

ARIZONA DEPARTMENT OF TRANSPORTATION
DRAINAGE DESIGN SECTION

09-23-2002

PROJECT NAME- _____ TRACS NO.- _____
HIGHWAY NAME- _____ DESIGNER - RSR
LOCATION - Mc8 EB 322+50 CHECKER - (A) PAGE _____
Ver 3.40: December 1995

GRATE INLET--IN SUMP

GUTTER FLOW HYDRAULICS

GUTTER DESCRIPTION

Roadway Cross-Slope-Ft./Ft.--Sx	=	0.200
Shoulder Width-Ft.--	=	10.000
Shoulder Slope-Ft./Ft.--Ss	=	0.020
Gutter Width-Ft.--W	=	2.500
Gutter Slope-Ft./Ft.--Sw	=	0.067
Gutter Depression-Inches--	=	2.001

GRATE TYPE: ADOT STD.--C15.91

Grate Length--Ft.	=	3.354
Grate Width---Ft.	=	2.000
Grate Area--Sq. Ft.	=	5.171
Effective Perimeter--Ft.	=	7.354
Capture Ratio -- GRATE	=	0.500
Local Gutter Depression-Inches	=	1.000
Depth at INLET Curb Line-Inches--d	=	5.084
Depth at C.G. of Grate Flow--In.	=	4.982
SPREAD-Ft.--T	=	10.535 - 16' Max
Depth for WEIR FLOW, inches	=	6.084
Depth for ORIFICE FLOW, inches	=	0.075

Q(INLET) = 2.460 cfs is Based on WEIR flow - 10yr

ARIZONA DEPARTMENT OF TRANSPORTATION
DRAINAGE DESIGN SECTION

09-23-2002

PROJECT NAME- _____ TRACS NO.- _____
HIGHWAY NAME- _____ DESIGNER - RSR
LOCATION - Mc.D EB 3222+50 CHECKER - CA PAGE _____
Ver 3.40: December 1995

GRATE INLET--IN SUMP

GUTTER FLOW HYDRAULICS

GUTTER DESCRIPTION

Roadway Cross-Slope-Ft./Ft.--Sx	=	0.200
Shoulder Width-Ft.--	=	10.000
Shoulder Slope-Ft./Ft.--Ss	=	0.020
Gutter Width-Ft.--W	=	2.500
Gutter Slope-Ft./Ft.--Sw	=	0.067
Gutter Depression-Inches--	=	2.001

GRATE TYPE: ADOT STD.--C15.91

Grate Length--Ft.	=	3.354
Grate Width---Ft.	=	2.000
Grate Area--Sq. Ft.	=	5.171
Effective Perimeter--Ft.	=	7.354
Capture Ratio -- GRATE	=	0.500
Local Gutter Depression-Inches	=	1.000
Depth at INLET Curb Line-Inches--d	=	7.345
Depth at C.G. of Grate Flow--In.	=	7.212
SPREAD-Ft.--T	=	11.477 - 22' Max
Depth for WEIR FLOW, inches	=	8.345
Depth for ORIFICE FLOW, inches	=	0.256

Q(INLET) = 4.550 cfs is Based on WEIR flow - 50yr

ARIZONA DEPARTMENT OF TRANSPORTATION
DRAINAGE DESIGN SECTION

09-23-2002

PROJECT NAME- _____ TRACS NO.- _____
HIGHWAY NAME- _____ DESIGNER - RSR
LOCATION - Mad EB 3222+50 CHECKER - (A) PAGE _____
Ver 3.40: December 1995

GUTTER FLOW HYDRAULICS
GUTTER DESCRIPTION

Roadway Grade-% Per cent--G	=	0.153
Roadway Cross-Slope-Ft./Ft.--Sx	=	0.020
Shoulder Width-Ft.--	=	10.000
Shoulder Slope-Ft./Ft.--Ss	=	0.020
Gutter Width-Ft.--W	=	2.500
Gutter Slope-Ft./Ft.--Sw	=	0.067
Gutter Depression-Inches--	=	2.001
Manning's 'N	=	0.016
Flow-CFS--Q	=	0.900
SPREAD-Ft.--T	=	8.488 - 16' Max
Average Velocity-V-fps	=	1.039
FLOW in Gutter-CFS--Q	=	0.661
% Flow in Gutter-CFS	=	73.446
Velocity of Flow in Gutter-fps	=	1.302
Depth at Curb Line-Inches--d	=	3.438

Calc used to check spread at north side of sump catch Basin at Sta 3222+52

ARIZONA DEPARTMENT OF TRANSPORTATION
DRAINAGE DESIGN SECTION

09-23-2002

PROJECT NAME- _____ TRACS NO.- _____
HIGHWAY NAME- _____ DESIGNER - RSR
LOCATION - McD EB 3222+50 CHECKER - (A) PAGE _____
Ver 3.40: December 1995

GUTTER FLOW HYDRAULICS
GUTTER DESCRIPTION

Roadway Grade-% Per cent--G	=	0.614
Roadway Cross-Slope-Ft./Ft.--Sx	=	0.020
Shoulder Width-Ft.--	=	10.000
Shoulder Slope-Ft./Ft.--Ss	=	0.020
Gutter Width-Ft.--W	=	2.500
Gutter Slope-Ft./Ft.--Sw	=	0.067
Gutter Depression-Inches--	=	2.001
Manning's 'N	=	0.016
Flow-CFS--Q	=	1.340
SPREAD-Ft.--T	=	7.269 -16' Max
Average Velocity-V-fps	=	1.987
FLOW in Gutter-CFS--Q	=	1.079
% Flow in Gutter-CFS	=	80.537
Velocity of Flow in Gutter-fps	=	2.415
Depth at Curb Line-Inches--d	=	3.145

Calc used to check spread at south side of sump catch basin at Sta 3222+48

ARIZONA DEPARTMENT OF TRANSPORTATION
DRAINAGE DESIGN SECTION

09-27-2002

PROJECT NAME- _____ TRACS NO.- _____
HIGHWAY NAME- _____ DESIGNER - RSR
LOCATION - Med EB 3225+04 CHECKER - (A) PAGE _____
Ver 3.40: December 1995

GRATE INLET DESIGN -- ON GRADE

GUTTER FLOW HYDRAULICS
GUTTER DESCRIPTION

Roadway Grade-% Per cent--G	=	0.315
Roadway Cross-Slope-Ft./Ft.--Sx	=	0.024
Shoulder Width-Ft.--	=	10.000
Shoulder Slope-Ft./Ft.--Ss	=	0.024
Gutter Width-Ft.--W	=	2.500
Gutter Slope-Ft./Ft.--Sw	=	0.021
Gutter Depression-Inches--	=	0.624
Manning's 'N	=	0.016
Flow-CFS--Q	=	0.250 - 10 yr
SPREAD-Ft.--T	=	4.833 - 8' max
Average Velocity-V-fps	=	0.910 flanking catch basin
FLOW in Gutter-CFS--Q	=	0.211
% Flow in Gutter-CFS	=	84.452
Velocity of Flow in Gutter-fps	=	1.015
Depth at Curb Line-Inches--d	=	1.310

GRATE TYPE: ADOT STD.--C15.91

Grate Length--Ft.	=	3.354
Grate Width---Ft.	=	2.000
Grate Area--Sq. Ft.	=	5.171
Capture Ratio -- GRATE	=	0.500
Effective Perimeter--Ft.	=	7.354
Splash-Over Velocity--FPS	=	7.354
Local Gutter Depression-Inches	=	1.000
Flow-CFS--Q	=	0.250
GUTTER FLOW at INLET-CFS--Q	=	0.248
Gutter Velocity at INLET-fps	=	1.144
Depth at INLET Curb Line-Inches--d	=	1.854
Frontal Flow Intercepted by GRATE--CFS	=	0.239
Lateral Flow Intercepted by GRATE--CFS	=	0.009
TOTAL Flow Intercepted by GRATE--CFS	=	0.248
% FLOW Intercepted	=	99.203
By-pass Flow--CFS	=	0.002

ARIZONA DEPARTMENT OF TRANSPORTATION
DRAINAGE DESIGN SECTION

09-27-2002

PROJECT NAME- _____ TRACS NO.- _____
HIGHWAY NAME- _____ DESIGNER - RSR
LOCATION - MeQ EB 3225+04 CHECKER - A PAGE _____
Ver 3.40: December 1995

GRATE INLET DESIGN -- ON GRADE

GUTTER FLOW HYDRAULICS
GUTTER DESCRIPTION

Roadway Grade-% Per cent--G	=	0.315
Roadway Cross-Slope-Ft./Ft.--Sx	=	0.024
Shoulder Width-Ft.--	=	10.000
Shoulder Slope-Ft./Ft.--Ss	=	0.024
Gutter Width-Ft.--W	=	2.500
Gutter Slope-Ft./Ft.--Sw	=	0.021
Gutter Depression-Inches--	=	0.624
Manning's 'N	=	0.016
Flow-CFS--Q	=	0.340
SPREAD-Ft.--T	=	5.393
Average Velocity-V-fps	=	0.986
FLOW in Gutter-CFS--Q	=	0.271
% Flow in Gutter-CFS	=	79.715
Velocity of Flow in Gutter-fps	=	1.119
Depth at Curb Line-Inches--d	=	1.475

GRATE TYPE: ADOT STD.--C15.91

Grate Length--Ft.	=	3.354
Grate Width---Ft.	=	2.000
Grate Area--Sq. Ft.	=	5.171
Capture Ratio -- GRATE	=	0.500
Effective Perimeter--Ft.	=	7.354
Splash-Over Velocity--FPS	=	7.354
Local Gutter Depression-Inches	=	1.000
Flow-CFS--Q	=	0.340
GUTTER FLOW at INLET-CFS--Q	=	0.328
Gutter Velocity at INLET-fps	=	1.253
Depth at INLET Curb Line-Inches--d	=	2.067
Frontal Flow Intercepted by GRATE--CFS	=	0.309
Lateral Flow Intercepted by GRATE--CFS	=	0.022
TOTAL Flow Intercepted by GRATE--CFS	=	0.331
% FLOW Intercepted	=	97.444
By-pass Flow--CFS	=	0.009

ARIZONA DEPARTMENT OF TRANSPORTATION
DRAINAGE DESIGN SECTION

09-27-2002

PROJECT NAME- _____ TRACS NO.- _____
HIGHWAY NAME- _____ DESIGNER - RSR
LOCATION - MeD EB 3225+70 CHECKER - (A) PAGE _____
Ver 3.40: December 1995

SLOTTED DRAIN W/ GRATE--IN SUMP

GUTTER FLOW HYDRAULICS

GUTTER DESCRIPTION

Roadway Cross-Slope-Ft./Ft.--Sx	=	0.036
Shoulder Width-Ft.--	=	10.000
Shoulder Slope-Ft./Ft.--Ss	=	0.036
Gutter Width-Ft.--W	=	2.500
Gutter Slope-Ft./Ft.--Sw	=	0.021
Gutter Depression-Inches--	=	0.624

GRATE TYPE: ADOT STD.--C15.91

Grate Length--Ft.	=	3.354
Grate Width---Ft.	=	2.000
Grate Area--Sq. Ft.	=	5.171
Effective Perimeter--Ft.	=	7.354
Capture Ratio -- GRATE	=	0.500
Capture Ratio -- SLOTTED DRAIN	=	0.670
Local Gutter Depression-Inches	=	1.000
Flow-CFS--Q	=	1.050 -10 yr

LENGTH	Q(Slot. Dn)	Q(Grate)	d(inches)	SPREAD,Ft.
5.000	0.623	0.427	1.245	3.937
10.000	0.830	0.220	0.711	2.701
15.000	0.918	0.134	0.397	1.589
20.000	1.012	0.038	0.231	0.924
25.000	1.019	0.031	0.066	0.263

Use 5' of slotted drain on North and South sides of catch basin Total 10' of slotted drain

ARIZONA DEPARTMENT OF TRANSPORTATION
DRAINAGE DESIGN SECTION

09-27-2002

PROJECT NAME- _____ TRACS NO.- _____
HIGHWAY NAME- _____ DESIGNER - RSR
LOCATION -Mcd EB 3225+70 CHECKER - (A) PAGE _____
Ver 3.40: December 1995

SLOTTED DRAIN W/ GRATE--IN SUMP

GUTTER FLOW HYDRAULICS

GUTTER DESCRIPTION

Roadway Cross-Slope-Ft./Ft.--Sx	=	0.036
Shoulder Width-Ft.--	=	10.000
Shoulder Slope-Ft./Ft.--Ss	=	0.036
Gutter Width-Ft.--W	=	2.500
Gutter Slope-Ft./Ft.--Sw	=	0.021
Gutter Depression-Inches--	=	0.624

GRATE TYPE: ADOT STD.--C15.91

Grate Length--Ft.	=	3.354
Grate Width---Ft.	=	2.000
Grate Area--Sq. Ft.	=	5.171
Effective Perimeter--Ft.	=	7.354
Capture Ratio -- GRATE	=	0.500
Capture Ratio -- SLOTTED DRAIN	=	0.670
Local Gutter Depression-Inches	=	1.000
Flow-CFS--Q	=	1.490 - 50 yr

LENGTH	Q(Slot. Dn)	Q(Grate)	d(inches)	SPREAD,Ft.
5.000	0.833	0.658	1.724	5.046
10.000	1.126	0.364	1.098	3.597
15.000	1.263	0.226	0.728	2.740
20.000	1.336	0.154	0.481	1.925
25.000	1.402	0.119	0.318	1.273

ARIZONA DEPARTMENT OF TRANSPORTATION
DRAINAGE DESIGN SECTION

09-27-2002

PROJECT NAME- _____ TRACS NO.- _____
HIGHWAY NAME- _____ DESIGNER - RSR
LOCATION - Med EB 3225+70 CHECKER - (A) PAGE _____
Ver 3.40: December 1995

GUTTER FLOW HYDRAULICS
GUTTER DESCRIPTION

Roadway Grade-% Per cent--G	=	0.133
Roadway Cross-Slope-Ft./Ft.--Sx	=	0.035
Shoulder Width-Ft.--	=	10.000
Shoulder Slope-Ft./Ft.--Ss	=	0.035
Gutter Width-Ft.--W	=	2.500
Gutter Slope-Ft./Ft.--Sw	=	0.021
Gutter Depression-Inches--	=	0.624
Manning's 'N	=	0.016
Flow-CFS--Q	=	0.520
SPREAD-Ft.--T	=	6.132 - 8' max
Average Velocity-V-fps	=	0.852
FLOW in Gutter-CFS--Q	=	0.372
% Flow in Gutter-CFS	=	71.524
Velocity of Flow in Gutter-fps	=	0.976
Depth at Curb Line-Inches--d	=	2.141

Calc used to check spread at upstream end of slotted drain
sta 3225+63 - use 5' of slotted drain

ARIZONA DEPARTMENT OF TRANSPORTATION
DRAINAGE DESIGN SECTION

09-27-2002

PROJECT NAME- _____ TRACS NO.- _____
HIGHWAY NAME- _____ DESIGNER - RSR
LOCATION - Med EB 3225+70 CHECKER - (A) PAGE _____
Ver 3.40: December 1995

GUTTER FLOW HYDRAULICS
GUTTER DESCRIPTION

Roadway Grade-% Per cent--G	=	0.166
Roadway Cross-Slope-Ft./Ft.--Sx	=	0.036
Shoulder Width-Ft.--	=	10.000
Shoulder Slope-Ft./Ft.--Ss	=	0.036
Gutter Width-Ft.--W	=	2.500
Gutter Slope-Ft./Ft.--Sw	=	0.021
Gutter Depression-Inches--	=	0.624
Manning's 'N	=	0.016
Flow-CFS--Q	=	0.530
SPREAD-Ft.--T	=	5.846 - 8' max
Average Velocity-V-fps	=	0.934
FLOW in Gutter-CFS--Q	=	0.390
% Flow in Gutter-CFS	=	73.503
Velocity of Flow in Gutter-fps	=	1.064
Depth at Curb Line-Inches--d	=	2.070

Calc used to check spread at upstream end of s/o Med drain
sta 3225+77 - use 5' of s/o Med Drain

ARIZONA DEPARTMENT OF TRANSPORTATION
DRAINAGE DESIGN SECTION

09-27-2002

PROJECT NAME- _____ TRACS NO.- _____
HIGHWAY NAME- _____ DESIGNER - RSR
LOCATION - Mesa FB 3226+38 CHECKER - (A) PAGE _____
Ver 3.40: December 1995

SLOTTED DRAIN W/ GRATE--ON GRADE

GUTTER FLOW HYDRAULICS
GUTTER DESCRIPTION

Roadway Grade-% Per cent--G	=	0.312
Roadway Cross-Slope-Ft./Ft.--Sx	=	0.036
Shoulder Width-Ft.--	=	10.000
Shoulder Slope-Ft./Ft.--Ss	=	0.036
Gutter Width-Ft.--W	=	2.500
Gutter Slope-Ft./Ft.--Sw	=	0.021
Gutter Depression-Inches--	=	0.624
Manning's 'N	=	0.016
Flow-CFS--Q	=	1.680 -10yr
SPREAD-Ft.--T	=	7.804 -8' max
Average Velocity-V-fps	=	1.602 Flanking Catch basin
FLOW in Gutter-CFS--Q	=	1.023
% Flow in Gutter-CFS	=	60.920
Velocity of Flow in Gutter-fps	=	1.887
Depth at Curb Line-Inches--d	=	2.915 -3" max

SLOTTED DRAIN--ADOT STD.--C13.60
GRATE TYPE: ADOT STD.--C15.91

Grate Length--Ft.	=	3.354
Grate Width---Ft.	=	2.000
Grate Area--Sq. Ft.	=	5.171
Splash-Over Velocity--FPS	=	7.354
Depth at INLET Curb Line-Inches--d	=	3.658
Local Gutter Depression-Inches	=	1.000
Length of opening: TOTAL Intercept--Ft.	=	14.403
Capture Ratio -- SLOTTED DRAIN	=	0.670
Capture Ratio -- GRATE	=	0.500

LENGTH	Efficiency	Q(S.D.)	Q(GRATE)	Q(INT.)	Q(By-Pass)	% CAPT.
5.000	0.536	0.900	0.693	1.593	0.087	94.84
10.000	0.882	1.481	0.198	1.679	0.001	99.96
15.000	1.000	1.680	0.000	1.680	0.000	100.00
20.000	1.000	1.680	0.000	1.680	0.000	100.00
25.000	1.000	1.680	0.000	1.680	0.000	100.00
30.000	1.000	1.680	0.000	1.680	0.000	100.00

ARIZONA DEPARTMENT OF TRANSPORTATION
DRAINAGE DESIGN SECTION

09-27-2002

PROJECT NAME- _____ TRACS NO.- _____
HIGHWAY NAME- _____ DESIGNER - RSR
LOCATION - Med EB 3226+38 CHECKER - (A) PAGE _____
Ver 3.40: December 1995

SLOTTED DRAIN W/ GRATE--ON GRADE

GUTTER FLOW HYDRAULICS
GUTTER DESCRIPTION

Roadway Grade-% Per cent--G	=	0.312
Roadway Cross-Slope-Ft./Ft.--Sx	=	0.036
Shoulder Width-Ft.--	=	10.000
Shoulder Slope-Ft./Ft.--Ss	=	0.036
Gutter Width-Ft.--W	=	2.500
Gutter Slope-Ft./Ft.--Sw	=	0.021
Gutter Depression-Inches--	=	0.624
Manning's 'N	=	0.016
Flow-CFS--Q	=	2.420
SPREAD-Ft.--T	=	8.881
Average Velocity-V-fps	=	1.764
FLOW in Gutter-CFS--Q	=	1.345
% Flow in Gutter-CFS	=	55.585
Velocity of Flow in Gutter-fps	=	2.104
Depth at Curb Line-Inches--d	=	3.381

SLOTTED DRAIN--ADOT STD.--C13.60
GRATE TYPE: ADOT STD.--C15.91

Grate Length--Ft.	=	3.354
Grate Width---Ft.	=	2.000
Grate Area--Sq. Ft.	=	5.171
Splash-Over Velocity--FPS	=	7.354
Depth at INLET Curb Line-Inches--d	=	4.154
Local Gutter Depression-Inches	=	1.000
Length of opening: TOTAL Intercept--Ft.	=	17.051
Capture Ratio -- SLOTTED DRAIN	=	0.670
Capture Ratio -- GRATE	=	0.500

LENGTH	Efficiency	Q(S.D.)	Q(GRATE)	Q(INT.)	Q(By-Pass)	% CAPT.
5.000	0.465	1.124	1.044	2.168	0.252	89.60
10.000	0.796	1.926	0.468	2.394	0.026	98.92
15.000	0.978	2.366	0.054	2.420	0.000	100.00
20.000	1.000	2.420	0.000	2.420	0.000	100.00
25.000	1.000	2.420	0.000	2.420	0.000	100.00
30.000	1.000	2.420	0.000	2.420	0.000	100.00

ARIZONA DEPARTMENT OF TRANSPORTATION
DRAINAGE DESIGN SECTION

09-27-2002

PROJECT NAME- _____ TRACS NO.- _____
HIGHWAY NAME- _____ DESIGNER - RSR
LOCATION - Mc8 EB 3228+50 CHECKER - (A) PAGE _____
Ver 3.40: December 1995

SLOTTED DRAIN W/ GRATE--ON GRADE

GUTTER FLOW HYDRAULICS
GUTTER DESCRIPTION

Roadway Grade-% Per cent--G	=	0.818
Roadway Cross-Slope-Ft./Ft.--Sx	=	0.036
Shoulder Width-Ft.--	=	10.000
Shoulder Slope-Ft./Ft.--Ss	=	0.036
Gutter Width-Ft.--W	=	2.500
Gutter Slope-Ft./Ft.--Sw	=	0.021
Gutter Depression-Inches--	=	0.624
Manning's 'N	=	0.016
Flow-CFS--Q	=	2.920
SPREAD-Ft.--T	=	8.001
Average Velocity-V-fps	=	2.643
FLOW in Gutter-CFS--Q	=	1.748
% Flow in Gutter-CFS	=	59.873
Velocity of Flow in Gutter-fps	=	3.122
Depth at Curb Line-Inches--d	=	3.000

SLOTTED DRAIN--ADOT STD.--C13.60
GRATE TYPE: ADOT STD.--C15.91

Grate Length--Ft.	=	3.354
Grate Width---Ft.	=	2.000
Grate Area--Sq. Ft.	=	5.171
Splash-Over Velocity--FPS	=	7.354
Depth at INLET Curb Line-Inches--d	=	3.749
Local Gutter Depression-Inches	=	1.000
Length of opening: TOTAL Intercept--Ft.	=	24.333
Capture Ratio -- SLOTTED DRAIN	=	0.670
Capture Ratio -- GRATE	=	0.500

LENGTH	Efficiency	Q(S.D.)	Q(GRATE)	Q(INT.)	Q(By-Pass)	% CAPT.
5.000	0.339	0.990	1.471	2.461	0.459	84.29
10.000	0.614	1.794	0.971	2.765	0.155	94.68
15.000	0.822	2.400	0.503	2.903	0.017	99.41
20.000	0.955	2.789	0.131	2.920	0.000	100.00
25.000	1.000	2.920	0.000	2.920	0.000	100.00
30.000	1.000	2.920	0.000	2.920	0.000	100.00

ARIZONA DEPARTMENT OF TRANSPORTATION
DRAINAGE DESIGN SECTION

09-27-2002

PROJECT NAME- _____ TRACS NO.- _____
HIGHWAY NAME- _____ DESIGNER - RSR
LOCATION - MeQ EB 3228+50 CHECKER - AJ PAGE _____
Ver 3.40: December 1995

SLOTTED DRAIN W/ GRATE--ON GRADE

GUTTER FLOW HYDRAULICS
GUTTER DESCRIPTION

Roadway Grade-% Per cent--G	=	0.818
Roadway Cross-Slope-Ft./Ft.--Sx	=	0.036
Shoulder Width-Ft.--	=	10.000
Shoulder Slope-Ft./Ft.--Ss	=	0.036
Gutter Width-Ft.--W	=	2.500
Gutter Slope-Ft./Ft.--Sw	=	0.021
Gutter Depression-Inches--	=	0.624
Manning's 'N	=	0.016
Flow-CFS--Q	=	4.080
SPREAD-Ft.--T	=	9.010
Average Velocity-V-fps	=	2.886
FLOW in Gutter-CFS--Q	=	2.244
% Flow in Gutter-CFS	=	55.007
Velocity of Flow in Gutter-fps	=	3.448
Depth at Curb Line-Inches--d	=	3.436

SLOTTED DRAIN--ADOT STD.--C13.60
GRATE TYPE: ADOT STD.--C15.91

Grate Length--Ft.	=	3.354
Grate Width---Ft.	=	2.000
Grate Area--Sq. Ft.	=	5.171
Splash-Over Velocity--FPS	=	7.354
Depth at INLET Curb Line-Inches--d	=	4.213
Local Gutter Depression-Inches	=	1.000
Length of opening: TOTAL Intercept--Ft.	=	28.404
Capture Ratio -- SLOTTED DRAIN	=	0.670
Capture Ratio -- GRATE	=	0.500

LENGTH	Efficiency	Q(S.D.)	Q(GRATE)	Q(INT.)	Q(By-Pass)	% CAPT.
5.000	0.294	1.201	1.971	3.172	0.908	77.74
10.000	0.542	2.212	1.436	3.648	0.432	89.41
15.000	0.741	3.024	0.922	3.946	0.134	96.71
20.000	0.888	3.624	0.445	4.070	0.010	99.75
25.000	0.978	3.990	0.090	4.080	0.000	100.00
30.000	1.000	4.080	0.000	4.080	0.000	100.00

ARIZONA DEPARTMENT OF TRANSPORTATION
DRAINAGE DESIGN SECTION

09-27-2002

PROJECT NAME- _____ TRACS NO.- _____
HIGHWAY NAME- _____ DESIGNER - RSR
LOCATION - Med EB 3232+24 CHECKER - (A) PAGE _____
Ver 3.40: December 1995

SLOTTED DRAIN W/ GRATE--ON GRADE

GUTTER FLOW HYDRAULICS
GUTTER DESCRIPTION

Roadway Grade-% Per cent--G	=	1.295
Roadway Cross-Slope-Ft./Ft.--Sx	=	0.036
Shoulder Width-Ft.--	=	10.000
Shoulder Slope-Ft./Ft.--Ss	=	0.036
Gutter Width-Ft.--W	=	2.500
Gutter Slope-Ft./Ft.--Sw	=	0.021
Gutter Depression-Inches--	=	0.624
Manning's 'N	=	0.016
Flow-CFS--Q	=	3.680 -10yr
SPREAD-Ft.--T	=	8.005 - 8' Max
Average Velocity-V-fps	=	3.327
FLOW in Gutter-CFS--Q	=	2.203
% Flow in Gutter-CFS	=	59.851
Velocity of Flow in Gutter-fps	=	3.930
Depth at Curb Line-Inches--d	=	3.002 -3" Max

SLOTTED DRAIN--ADOT STD.--C13.60
GRATE TYPE: ADOT STD.--C15.91

Grate Length--Ft.	=	3.354
Grate Width---Ft.	=	2.000
Grate Area--Sq. Ft.	=	5.171
Splash-Over Velocity--FPS	=	7.354
Depth at INLET Curb Line-Inches--d	=	3.751
Local Gutter Depression-Inches	=	1.000
Length of opening: TOTAL Intercept--Ft.	=	30.783
Capture Ratio -- SLOTTED DRAIN	=	0.670
Capture Ratio -- GRATE	=	0.500

LENGTH	Efficiency	Q(S.D.)	Q(GRATE)	Q(INT.)	Q(By-Pass)	% CAPT.
5.000	0.273	1.005	1.934	2.939	0.741	79.86
10.000	0.507	1.865	1.449	3.315	0.365	90.07
15.000	0.700	2.574	0.982	3.556	0.124	96.63
20.000	0.849	3.123	0.542	3.665	0.015	99.60
25.000	0.951	3.499	0.181	3.680	0.000	100.00
30.000	0.999	3.675	0.005	3.680	0.000	100.00

ARIZONA DEPARTMENT OF TRANSPORTATION
DRAINAGE DESIGN SECTION

09-27-2002

PROJECT NAME- _____ TRACS NO.- _____
HIGHWAY NAME- _____ DESIGNER - RSR
LOCATION - Med EB 3232+24 CHECKER - (A) PAGE _____
Ver 3.40: December 1995

SLOTTED DRAIN W/ GRATE--ON GRADE

GUTTER FLOW HYDRAULICS
GUTTER DESCRIPTION

Roadway Grade-% Per cent--G	=	1.295
Roadway Cross-Slope-Ft./Ft.--Sx	=	0.036
Shoulder Width-Ft.--	=	10.000
Shoulder Slope-Ft./Ft.--Ss	=	0.036
Gutter Width-Ft.--W	=	2.500
Gutter Slope-Ft./Ft.--Sw	=	0.021
Gutter Depression-Inches--	=	0.624
Manning's 'N	=	0.016
Flow-CFS--Q	=	5.670 - 50yr
SPREAD-Ft.--T	=	9.335
Average Velocity-V-fps	=	3.727
FLOW in Gutter-CFS--Q	=	3.039
% Flow in Gutter-CFS	=	53.595
Velocity of Flow in Gutter-fps	=	4.468
Depth at Curb Line-Inches--d	=	3.577

SLOTTED DRAIN--ADOT STD.--C13.60
GRATE TYPE: ADOT STD.--C15.91

Grate Length--Ft.	=	3.354
Grate Width---Ft.	=	2.000
Grate Area--Sq. Ft.	=	5.171
Splash-Over Velocity--FPS	=	7.354
Depth at INLET Curb Line-Inches--d	=	4.361
Local Gutter Depression-Inches	=	1.000
Length of opening: TOTAL Intercept--Ft.	=	37.594
Capture Ratio -- SLOTTED DRAIN	=	0.670
Capture Ratio -- GRATE	=	0.500

LENGTH	Efficiency	Q(S.D.)	Q(GRATE)	Q(INT.)	Q(By-Pass)	% CAPT.
5.000	0.227	1.285	2.750	4.034	1.636	71.15
10.000	0.427	2.420	2.225	4.646	1.024	81.93
15.000	0.600	3.402	1.713	5.115	0.555	90.22
20.000	0.745	4.224	1.216	5.440	0.230	95.95
25.000	0.860	4.878	0.742	5.620	0.050	99.13
30.000	0.944	5.351	0.318	5.670	0.000	99.99

ARIZONA DEPARTMENT OF TRANSPORTATION
DRAINAGE DESIGN SECTION

09-27-2002

PROJECT NAME- _____ TRACS NO.- _____
HIGHWAY NAME- _____ DESIGNER - RSR
LOCATION - Med EB 3236+00 CHECKER - (A) PAGE _____
Ver 3.40: December 1995

SLOTTED DRAIN W/ GRATE--ON GRADE

GUTTER FLOW HYDRAULICS
GUTTER DESCRIPTION

Roadway Grade-% Per cent--G	=	1.295	
Roadway Cross-Slope-Ft./Ft.--Sx	=	0.036	
Shoulder Width-Ft.--	=	10.000	
Shoulder Slope-Ft./Ft.--Ss	=	0.036	
Gutter Width-Ft.--W	=	2.500	
Gutter Slope-Ft./Ft.--Sw	=	0.021	
Gutter Depression-Inches--	=	0.624	
Manning's 'N	=	0.016	
Flow-CFS--Q	=	3.680	-10yr
SPREAD-Ft.--T	=	8.005	-8' max
Average Velocity-V-fps	=	3.327	
FLOW in Gutter-CFS--Q	=	2.203	
% Flow in Gutter-CFS	=	59.851	
Velocity of Flow in Gutter-fps	=	3.930	
Depth at Curb Line-Inches--d	=	3.002	-3" may

SLOTTED DRAIN--ADOT STD.--C13.60
GRATE TYPE: ADOT STD.--C15.91

Grate Length--Ft.	=	3.354
Grate Width---Ft.	=	2.000
Grate Area--Sq. Ft.	=	5.171
Splash-Over Velocity--FPS	=	7.354
Depth at INLET Curb Line-Inches--d	=	3.751
Local Gutter Depression-Inches	=	1.000
Length of opening: TOTAL Intercept--Ft.	=	30.783
Capture Ratio -- SLOTTED DRAIN	=	0.670
Capture Ratio -- GRATE	=	0.500

LENGTH	Efficiency	Q(S.D.)	Q(GRATE)	Q(INT.)	Q(By-Pass)	% CAPT.
5.000	0.273	1.005	1.934	2.939	0.741	79.86
10.000	0.507	1.865	1.449	3.315	0.365	90.07
15.000	0.700	2.574	0.982	3.556	0.124	96.63
20.000	0.849	3.123	0.542	3.665	0.015	99.60
25.000	0.951	3.499	0.181	3.680	0.000	100.00
30.000	0.999	3.675	0.005	3.680	0.000	100.00

ARIZONA DEPARTMENT OF TRANSPORTATION
DRAINAGE DESIGN SECTION

09-27-2002

PROJECT NAME- _____ TRACS NO.- _____
HIGHWAY NAME- _____ DESIGNER - RSR
LOCATION - Med EB 3236+00 CHECKER - (A) PAGE _____
Ver 3.40: December 1995

SLOTTED DRAIN W/ GRATE--ON GRADE

GUTTER FLOW HYDRAULICS
GUTTER DESCRIPTION

Roadway Grade-% Per cent--G	=	1.295
Roadway Cross-Slope-Ft./Ft.--Sx	=	0.036
Shoulder Width-Ft.--	=	10.000
Shoulder Slope-Ft./Ft.--Ss	=	0.036
Gutter Width-Ft.--W	=	2.500
Gutter Slope-Ft./Ft.--Sw	=	0.021
Gutter Depression-Inches--	=	0.624
Manning's 'N	=	0.016
Flow-CFS--Q	=	5.620 -50yr
SPREAD-Ft.--T	=	9.306
Average Velocity-V-fps	=	3.719
FLOW in Gutter-CFS--Q	=	3.019
% Flow in Gutter-CFS	=	53.720
Velocity of Flow in Gutter-fps	=	4.456
Depth at Curb Line-Inches--d	=	3.564

SLOTTED DRAIN--ADOT STD.--C13.60
GRATE TYPE: ADOT STD.--C15.91

Grate Length--Ft.	=	3.354
Grate Width---Ft.	=	2.000
Grate Area--Sq. Ft.	=	5.171
Splash-Over Velocity--FPS	=	7.354
Depth at INLET Curb Line-Inches--d	=	4.348
Local Gutter Depression-Inches	=	1.000
Length of opening: TOTAL Intercept--Ft.	=	37.441
Capture Ratio -- SLOTTED DRAIN	=	0.670
Capture Ratio -- GRATE	=	0.500

LENGTH	Efficiency	Q(S.D.)	Q(GRATE)	Q(INT.)	Q(By-Pass)	% CAPT.
5.000	0.227	1.278	2.731	4.009	1.611	71.33
10.000	0.428	2.408	2.207	4.615	1.005	82.11
15.000	0.602	3.383	1.695	5.079	0.541	90.37
20.000	0.747	4.199	1.200	5.399	0.221	96.06
25.000	0.862	4.847	0.727	5.574	0.046	99.18
30.000	0.945	5.313	0.306	5.620	0.000	99.99

ARIZONA DEPARTMENT OF TRANSPORTATION
DRAINAGE DESIGN SECTION

09-27-2002

PROJECT NAME- _____ TRACS NO.- _____
HIGHWAY NAME- _____ DESIGNER - RSR
LOCATION - Med EB 3239 +03 CHECKER - AD PAGE _____
Ver 3.40: December 1995

SLOTTED DRAIN W/ GRATE--ON GRADE

GUTTER FLOW HYDRAULICS
GUTTER DESCRIPTION

Roadway Grade-% Per cent--G	=	1.295
Roadway Cross-Slope-Ft./Ft.--Sx	=	0.036
Shoulder Width-Ft.--	=	10.000
Shoulder Slope-Ft./Ft.--Ss	=	0.036
Gutter Width-Ft.--W	=	2.500
Gutter Slope-Ft./Ft.--Sw	=	0.021
Gutter Depression-Inches--	=	0.624
Manning's 'N	=	0.016
Flow-CFS--Q	=	3.680
SPREAD-Ft.--T	=	8.005
Average Velocity-V-fps	=	3.327
FLOW in Gutter-CFS--Q	=	2.203
% Flow in Gutter-CFS	=	59.851
Velocity of Flow in Gutter-fps	=	3.930
Depth at Curb Line-Inches--d	=	3.002

SLOTTED DRAIN--ADOT STD.--C13.60
GRATE TYPE: ADOT STD.--C15.91

Grate Length--Ft.	=	3.354
Grate Width---Ft.	=	2.000
Grate Area--Sq. Ft.	=	5.171
Splash-Over Velocity--FPS	=	7.354
Depth at INLET Curb Line-Inches--d	=	3.751
Local Gutter Depression-Inches	=	1.000
Length of opening: TOTAL Intercept--Ft.	=	30.783
Capture Ratio -- SLOTTED DRAIN	=	0.670
Capture Ratio -- GRATE	=	0.500

LENGTH	Efficiency	Q(S.D.)	Q(GRATE)	Q(INT.)	Q(By-Pass)	% CAPT.
5.000	0.273	1.005	1.934	2.939	0.741	79.86
10.000	0.507	1.865	1.449	3.315	0.365	90.07
15.000	0.700	2.574	0.982	3.556	0.124	96.63
20.000	0.849	3.123	0.542	3.665	0.015	99.60
25.000	0.951	3.499	0.181	3.680	0.000	100.00
30.000	0.999	3.675	0.005	3.680	0.000	100.00

ARIZONA DEPARTMENT OF TRANSPORTATION
DRAINAGE DESIGN SECTION

09-27-2002

PROJECT NAME- _____ TRACS NO.- _____
HIGHWAY NAME- _____ DESIGNER - RSR
LOCATION - McD EB 3239 +03 CHECKER - _____ PAGE _____
Ver 3.40: December 1995

SLOTTED DRAIN W/ GRATE--ON GRADE

GUTTER FLOW HYDRAULICS
GUTTER DESCRIPTION

Roadway Grade-% Per cent--G	=	1.295
Roadway Cross-Slope-Ft./Ft.--Sx	=	0.036
Shoulder Width-Ft.--	=	10.000
Shoulder Slope-Ft./Ft.--Ss	=	0.036
Gutter Width-Ft.--W	=	2.500
Gutter Slope-Ft./Ft.--Sw	=	0.021
Gutter Depression-Inches--	=	0.624
Manning's 'N	=	0.016
Flow-CFS--Q	=	5.510
SPREAD-Ft.--T	=	9.240
Average Velocity-V-fps	=	3.700
FLOW in Gutter-CFS--Q	=	2.975
% Flow in Gutter-CFS	=	54.000
Velocity of Flow in Gutter-fps	=	4.430
Depth at Curb Line-Inches--d	=	3.536

SLOTTED DRAIN--ADOT STD.--C13.60
GRATE TYPE: ADOT STD.--C15.91

Grate Length--Ft.	=	3.354
Grate Width---Ft.	=	2.000
Grate Area--Sq. Ft.	=	5.171
Splash-Over Velocity--FPS	=	7.354
Depth at INLET Curb Line-Inches--d	=	4.318
Local Gutter Depression-Inches	=	1.000
Length of opening: TOTAL Intercept--Ft.	=	37.100
Capture Ratio -- SLOTTED DRAIN	=	0.670
Capture Ratio -- GRATE	=	0.500

LENGTH	Efficiency	Q(S.D.)	Q(GRATE)	Q(INT.)	Q(By-Pass)	% CAPT.
5.000	0.229	1.264	2.688	3.952	1.558	71.73
10.000	0.432	2.379	2.166	4.546	0.964	82.50
15.000	0.606	3.341	1.657	4.998	0.512	90.71
20.000	0.752	4.143	1.164	5.307	0.203	96.31
25.000	0.867	4.777	0.694	5.471	0.039	99.29
30.000	0.949	5.229	0.281	5.510	0.000	100.00

ARIZONA DEPARTMENT OF TRANSPORTATION
DRAINAGE DESIGN SECTION

09-27-2002

PROJECT NAME- _____ TRACS NO.- _____
HIGHWAY NAME- _____ DESIGNER - RSR
LOCATION - MeQ EB 3242+30 CHECKER - _____ PAGE _____
Ver 3.40: December 1995

SLOTTED DRAIN W/ GRATE--ON GRADE

GUTTER FLOW HYDRAULICS
GUTTER DESCRIPTION

Roadway Grade-% Per cent--G	=	1.295
Roadway Cross-Slope-Ft./Ft.--Sx	=	0.036
Shoulder Width-Ft.--	=	10.000
Shoulder Slope-Ft./Ft.--Ss	=	0.036
Gutter Width-Ft.--W	=	2.500
Gutter Slope-Ft./Ft.--Sw	=	0.021
Gutter Depression-Inches--	=	0.624
Manning's 'N	=	0.016
Flow-CFS--Q	=	3.630 - 10yr
SPREAD-Ft.--T	=	7.966 - 8' Max
Average Velocity-V-fps	=	3.315
FLOW in Gutter-CFS--Q	=	2.180
% Flow in Gutter-CFS	=	60.053
Velocity of Flow in Gutter-fps	=	3.914
Depth at Curb Line-Inches--d	=	2.986

SLOTTED DRAIN--ADOT STD.--C13.60
GRATE TYPE: ADOT STD.--C15.91

Grate Length--Ft.	=	3.354
Grate Width---Ft.	=	2.000
Grate Area--Sq. Ft.	=	5.171
Splash-Over Velocity--FPS	=	7.354
Depth at INLET Curb Line-Inches--d	=	3.733
Local Gutter Depression-Inches	=	1.000
Length of opening: TOTAL Intercept--Ft.	=	30.589
Capture Ratio -- SLOTTED DRAIN	=	0.670
Capture Ratio -- GRATE	=	0.500

LENGTH	Efficiency	Q(S.D.)	Q(GRATE)	Q(INT.)	Q(By-Pass)	% CAPT.
5.000	0.275	0.997	1.911	2.909	0.721	80.13
10.000	0.510	1.850	1.428	3.278	0.352	90.30
15.000	0.703	2.551	0.962	3.513	0.117	96.78
20.000	0.852	3.092	0.525	3.617	0.013	99.65
25.000	0.953	3.460	0.170	3.630	0.000	100.00
30.000	0.999	3.627	0.003	3.630	0.000	100.00

ARIZONA DEPARTMENT OF TRANSPORTATION
DRAINAGE DESIGN SECTION

09-27-2002

PROJECT NAME- _____ TRACS NO.- _____
HIGHWAY NAME- _____ DESIGNER - RSR
LOCATION - McD EB 3242+30 CHECKER - _____ PAGE _____
Ver 3.40: December 1995

SLOTTED DRAIN W/ GRATE--ON GRADE

GUTTER FLOW HYDRAULICS
GUTTER DESCRIPTION

Roadway Grade-% Per cent--G	=	1.295
Roadway Cross-Slope-Ft./Ft.--Sx	=	0.036
Shoulder Width-Ft.--	=	10.000
Shoulder Slope-Ft./Ft.--Ss	=	0.036
Gutter Width-Ft.--W	=	2.500
Gutter Slope-Ft./Ft.--Sw	=	0.021
Gutter Depression-Inches--	=	0.624
Manning's 'N	=	0.016
Flow-CFS--Q	=	5.250 - 50%
SPREAD-Ft.--T	=	9.082
Average Velocity-V-fps	=	3.653
FLOW in Gutter-CFS--Q	=	2.871
% Flow in Gutter-CFS	=	54.688
Velocity of Flow in Gutter-fps	=	4.368
Depth at Curb Line-Inches--d	=	3.467

SLOTTED DRAIN--ADOT STD.--C13.60
GRATE TYPE: ADOT STD.--C15.91

Grate Length--Ft.	=	3.354
Grate Width---Ft.	=	2.000
Grate Area--Sq. Ft.	=	5.171
Splash-Over Velocity--FPS	=	7.354
Depth at INLET Curb Line-Inches--d	=	4.246
Local Gutter Depression-Inches	=	1.000
Length of opening: TOTAL Intercept--Ft.	=	36.280
Capture Ratio -- SLOTTED DRAIN	=	0.670
Capture Ratio -- GRATE	=	0.500

LENGTH	Efficiency	Q(S.D.)	Q(GRATE)	Q(INT.)	Q(By-Pass)	% CAPT.
5.000	0.234	1.230	2.587	3.817	1.433	72.71
10.000	0.440	2.312	2.070	4.382	0.868	83.46
15.000	0.617	3.240	1.565	4.806	0.444	91.54
20.000	0.764	4.009	1.078	5.087	0.163	96.89
25.000	0.878	4.609	0.616	5.225	0.025	99.53
30.000	0.957	5.027	0.223	5.250	0.000	100.00

ARIZONA DEPARTMENT OF TRANSPORTATION
DRAINAGE DESIGN SECTION

09-27-2002

PROJECT NAME- _____ TRACS NO.- _____
HIGHWAY NAME- _____ DESIGNER - RSR
LOCATION - Med EB 3246+38 CHECKER - (A) PAGE _____
Ver 3.40: December 1995

SLOTTED DRAIN W/ GRATE--ON GRADE

GUTTER FLOW HYDRAULICS
GUTTER DESCRIPTION

Roadway Grade-% Per cent--G	=	1.295
Roadway Cross-Slope-Ft./Ft.--Sx	=	0.004
Shoulder Width-Ft.--	=	10.000
Shoulder Slope-Ft./Ft.--Ss	=	0.004
Gutter Width-Ft.--W	=	2.500
Gutter Slope-Ft./Ft.--Sw	=	0.021
Gutter Depression-Inches--	=	0.624
Manning's 'N	=	0.016
Flow-CFS--Q	=	0.670 - 10 yr
SPREAD-Ft.--T	=	15.604 - 16' Max
Average Velocity-V-fps	=	1.362
FLOW in Gutter-CFS--Q	=	0.348
% Flow in Gutter-CFS	=	51.937
Velocity of Flow in Gutter-fps	=	1.902
Depth at Curb Line-Inches--d	=	1.190

SLOTTED DRAIN--ADOT STD.--C13.60
GRATE TYPE: ADOT STD.--C15.91

Grate Length--Ft.	=	3.354
Grate Width---Ft.	=	2.000
Grate Area--Sq. Ft.	=	5.171
Splash-Over Velocity--FPS	=	7.354
Depth at INLET Curb Line-Inches--d	=	1.966
Local Gutter Depression-Inches	=	1.000
Length of opening: TOTAL Intercept--Ft.	=	15.225
Capture Ratio -- SLOTTED DRAIN	=	0.670
Capture Ratio -- GRATE	=	0.500

LENGTH	Efficiency	Q(S.D.)	Q(GRATE)	Q(INT.)	Q(By-Pass)	% CAPT.
5.000	0.512	0.343	0.327	0.669	0.001	99.90
10.000	0.854	0.572	0.098	0.670	0.000	100.00
15.000	0.999	0.670	0.000	0.670	0.000	100.00
20.000	1.000	0.670	0.000	0.670	0.000	100.00
25.000	1.000	0.670	0.000	0.670	0.000	100.00
30.000	1.000	0.670	0.000	0.670	0.000	100.00

ARIZONA DEPARTMENT OF TRANSPORTATION
DRAINAGE DESIGN SECTION

09-27-2002

PROJECT NAME- _____ TRACS NO.- _____
HIGHWAY NAME- _____ DESIGNER - RSR
LOCATION - McD EB 3246+38 CHECKER - (A) PAGE _____
Ver 3.40: December 1995

SLOTTED DRAIN W/ GRATE--ON GRADE

GUTTER FLOW HYDRAULICS
GUTTER DESCRIPTION

Roadway Grade-% Per cent--G	=	1.295
Roadway Cross-Slope-Ft./Ft.--Sx	=	0.004
Shoulder Width-Ft.--	=	10.000
Shoulder Slope-Ft./Ft.--Ss	=	0.004
Gutter Width-Ft.--W	=	2.500
Gutter Slope-Ft./Ft.--Sw	=	0.021
Gutter Depression-Inches--	=	0.624
Manning's 'N	=	0.016
Flow-CFS--Q	=	1.440 -50yr
SPREAD-Ft.--T	=	21.799 -22' max
Average Velocity-V-fps	=	1.584
FLOW in Gutter-CFS--Q	=	0.537
% Flow in Gutter-CFS	=	37.291
Velocity of Flow in Gutter-fps	=	2.250
Depth at Curb Line-Inches--d	=	1.458

SLOTTED DRAIN--ADOT STD.--C13.60
GRATE TYPE: ADOT STD.--C15.91

Grate Length--Ft.	=	3.354
Grate Width---Ft.	=	2.000
Grate Area--Sq. Ft.	=	5.171
Splash-Over Velocity--FPS	=	7.354
Depth at INLET Curb Line-Inches--d	=	2.320
Local Gutter Depression-Inches	=	1.000
Length of opening: TOTAL Intercept--Ft.	=	25.503
Capture Ratio -- SLOTTED DRAIN	=	0.670
Capture Ratio -- GRATE	=	0.500

LENGTH	Efficiency	Q(S.D.)	Q(GRATE)	Q(INT.)	Q(By-Pass)	% CAPT.
5.000	0.325	0.468	0.734	1.202	0.238	83.44
10.000	0.592	0.852	0.546	1.398	0.042	97.08
15.000	0.797	1.148	0.292	1.440	0.000	99.99
20.000	0.937	1.349	0.091	1.440	0.000	100.00
25.000	0.999	1.439	0.001	1.440	0.000	100.00
30.000	1.000	1.440	0.000	1.440	0.000	100.00

ARIZONA DEPARTMENT OF TRANSPORTATION
DRAINAGE DESIGN SECTION

09-27-2002

PROJECT NAME- _____ TRACS NO.- _____
HIGHWAY NAME- _____ DESIGNER - RSR
LOCATION - MeD EB 3247+11 CHECKER - (A) PAGE _____
Ver 3.40: December 1995

SLOTTED DRAIN W/ GRATE--ON GRADE

GUTTER FLOW HYDRAULICS
GUTTER DESCRIPTION

Roadway Grade-% Per cent--G	=	1.295
Roadway Cross-Slope-Ft./Ft.--Sx	=	0.013
Shoulder Width-Ft.--	=	10.000
Shoulder Slope-Ft./Ft.--Ss	=	0.013
Gutter Width-Ft.--W	=	2.500
Gutter Slope-Ft./Ft.--Sw	=	0.021
Gutter Depression-Inches--	=	0.624
Manning's 'N	=	0.016
Flow-CFS--Q	=	4.660 - 10 yr
SPREAD-Ft.--T	=	16.040 - 16 max
Average Velocity-V-fps	=	2.809
FLOW in Gutter-CFS--Q	=	1.791
% Flow in Gutter-CFS	=	38.444
Velocity of Flow in Gutter-fps	=	3.620
Depth at Curb Line-Inches--d	=	2.688

SLOTTED DRAIN--ADOT STD.--C13.60
GRATE TYPE: ADOT STD.--C15.91

Grate Length--Ft.	=	3.354
Grate Width---Ft.	=	2.000
Grate Area--Sq. Ft.	=	5.171
Splash-Over Velocity--FPS	=	7.354
Depth at INLET Curb Line-Inches--d	=	3.544
Local Gutter Depression-Inches	=	1.000
Length of opening: TOTAL Intercept--Ft.	=	42.887
Capture Ratio -- SLOTTED DRAIN	=	0.670
Capture Ratio -- GRATE	=	0.500

LENGTH	Efficiency	Q(S.D.)	Q(GRATE)	Q(INT.)	Q(By-Pass)	% CAPT.
5.000	0.200	0.932	1.927	2.859	1.801	61.36
10.000	0.380	1.770	1.660	3.430	1.230	73.61
15.000	0.539	2.513	1.389	3.902	0.758	83.73
20.000	0.677	3.155	1.114	4.269	0.391	91.60
25.000	0.793	3.694	0.827	4.522	0.138	97.03
30.000	0.885	4.125	0.520	4.645	0.015	99.67

ARIZONA DEPARTMENT OF TRANSPORTATION
DRAINAGE DESIGN SECTION

09-27-2002

PROJECT NAME- _____ TRACS NO.- _____
HIGHWAY NAME- _____ DESIGNER - RSR
LOCATION - Mcd EB 3247+11 CHECKER - A PAGE _____
Ver 3.40: December 1995

SLOTTED DRAIN W/ GRATE--ON GRADE

GUTTER FLOW HYDRAULICS
GUTTER DESCRIPTION

Roadway Grade-% Per cent--G	=	1.295
Roadway Cross-Slope-Ft./Ft.--Sx	=	0.013
Shoulder Width-Ft.--	=	10.000
Shoulder Slope-Ft./Ft.--Ss	=	0.013
Gutter Width-Ft.--W	=	2.500
Gutter Slope-Ft./Ft.--Sw	=	0.021
Gutter Depression-Inches--	=	0.624
Manning's 'N	=	0.016
Flow-CFS--Q	=	7.320 - 50yr
SPREAD-Ft.--T	=	19.069
Average Velocity-V-fps	=	3.136
FLOW in Gutter-CFS--Q	=	2.406
% Flow in Gutter-CFS	=	32.870
Velocity of Flow in Gutter-fps	=	4.071
Depth at Curb Line-Inches--d	=	3.149

SLOTTED DRAIN--ADOT STD.--C13.60
GRATE TYPE: ADOT STD.--C15.91

Grate Length--Ft.	=	3.354
Grate Width---Ft.	=	2.000
Grate Area--Sq. Ft.	=	5.171
Splash-Over Velocity--FPS	=	7.354
Depth at INLET Curb Line-Inches--d	=	4.030
Local Gutter Depression-Inches	=	1.000
Length of opening: TOTAL Intercept--Ft.	=	55.342
Capture Ratio -- SLOTTED DRAIN	=	0.670
Capture Ratio -- GRATE	=	0.500

LENGTH	Efficiency	Q(S.D.)	Q(GRATE)	Q(INT.)	Q(By-Pass)	% CAPT.
5.000	0.157	1.147	2.577	3.724	3.596	50.88
10.000	0.301	2.207	2.313	4.520	2.800	61.75
15.000	0.434	3.176	2.049	5.226	2.094	71.39
20.000	0.554	4.055	1.784	5.838	1.482	79.76
25.000	0.661	4.839	1.516	6.355	0.965	86.81
30.000	0.755	5.526	1.244	6.770	0.550	92.48

ARIZONA DEPARTMENT OF TRANSPORTATION
DRAINAGE DESIGN SECTION

09-27-2002

PROJECT NAME- _____ TRACS NO.- _____
HIGHWAY NAME- _____ DESIGNER - RSR
LOCATION - ML EB 251+68 CHECKER - A PAGE _____
Ver 3.40: December 1995

SLOTTED DRAIN W/ GRATE--ON GRADE

GUTTER FLOW HYDRAULICS
GUTTER DESCRIPTION

Roadway Grade-% Per cent--G	=	1.297
Roadway Cross-Slope-Ft./Ft.--Sx	=	0.020
Shoulder Width-Ft.--	=	10.000
Shoulder Slope-Ft./Ft.--Ss	=	0.020
Gutter Width-Ft.--W	=	2.500
Gutter Slope-Ft./Ft.--Sw	=	0.021
Gutter Depression-Inches--	=	0.624
Manning's 'N	=	0.016
Flow-CFS--Q	=	4.910 - 10yr
SPREAD-Ft.--T	=	12.453 12.4 max
Average Velocity-V-fps	=	3.161
FLOW in Gutter-CFS--Q	=	2.218
% Flow in Gutter-CFS	=	45.172
Velocity of Flow in Gutter-fps	=	3.942
Depth at Curb Line-Inches--d	=	3.013 3" Max

SLOTTED DRAIN--ADOT STD.--C13.60
GRATE TYPE: ADOT STD.--C15.91

Grate Length--Ft.	=	3.354
Grate Width---Ft.	=	2.000
Grate Area--Sq. Ft.	=	5.171
Splash-Over Velocity--FPS	=	7.354
Depth at INLET Curb Line-Inches--d	=	3.838
Local Gutter Depression-Inches	=	1.000
Length of opening: TOTAL Intercept--Ft.	=	39.821
Capture Ratio -- SLOTTED DRAIN	=	0.670
Capture Ratio -- GRATE	=	0.500

LENGTH	Efficiency	Q(S.D.)	Q(GRATE)	Q(INT.)	Q(By-Pass)	% CAPT.
5.000	0.215	1.053	2.205	3.258	1.652	66.36
10.000	0.406	1.992	1.844	3.836	1.074	78.13
15.000	0.573	2.813	1.483	4.297	0.613	87.51
20.000	0.715	3.511	1.122	4.633	0.277	94.36
25.000	0.831	4.081	0.757	4.838	0.072	98.53
30.000	0.920	4.515	0.392	4.907	0.003	99.94

ARIZONA DEPARTMENT OF TRANSPORTATION
DRAINAGE DESIGN SECTION

09-27-2002

PROJECT NAME- _____ TRACS NO.- _____
HIGHWAY NAME- _____ DESIGNER - RSR
LOCATION - ML EB 251+68 CHECKER - (A) PAGE _____
Ver 3.40: December 1995

SLOTTED DRAIN W/ GRATE--ON GRADE

GUTTER FLOW HYDRAULICS
GUTTER DESCRIPTION

Roadway Grade-% Per cent--G	=	1.297
Roadway Cross-Slope-Ft./Ft.--Sx	=	0.020
Shoulder Width-Ft.--	=	10.000
Shoulder Slope-Ft./Ft.--Ss	=	0.020
Gutter Width-Ft.--W	=	2.500
Gutter Slope-Ft./Ft.--Sw	=	0.021
Gutter Depression-Inches--	=	0.624
Manning's 'N	=	0.016
Flow-CFS--Q	=	7.570 - 50yr
SPREAD-Ft.--T	=	14.653
Average Velocity-V-fps	=	3.522
FLOW in Gutter-CFS--Q	=	2.985
% Flow in Gutter-CFS	=	39.427
Velocity of Flow in Gutter-fps	=	4.437
Depth at Curb Line-Inches--d	=	3.541

SLOTTED DRAIN--ADOT STD.--C13.60
GRATE TYPE: ADOT STD.--C15.91

Grate Length--Ft.	=	3.354
Grate Width---Ft.	=	2.000
Grate Area--Sq. Ft.	=	5.171
Splash-Over Velocity--FPS	=	7.354
Depth at INLET Curb Line-Inches--d	=	4.394
Local Gutter Depression-Inches	=	1.000
Length of opening: TOTAL Intercept--Ft.	=	49.889
Capture Ratio -- SLOTTED DRAIN	=	0.670
Capture Ratio -- GRATE	=	0.500

LENGTH	Efficiency	Q(S.D.)	Q(GRATE)	Q(INT.)	Q(By-Pass)	% CAPT.
5.000	0.173	1.311	2.985	4.295	3.275	56.74
10.000	0.331	2.509	2.615	5.125	2.445	67.70
15.000	0.475	3.593	2.248	5.841	1.729	77.16
20.000	0.602	4.560	1.881	6.441	1.129	85.09
25.000	0.714	5.405	1.516	6.920	0.650	91.42
30.000	0.809	6.124	1.149	7.273	0.297	96.07

ARIZONA DEPARTMENT OF TRANSPORTATION
DRAINAGE DESIGN SECTION

09-27-2002

PROJECT NAME- _____ TRACS NO.- _____
HIGHWAY NAME- _____ DESIGNER - RSR
LOCATION - ML EB 256+27 CHECKER - (A) PAGE _____
Ver 3.40: December 1995

SLOTTED DRAIN W/ GRATE--ON GRADE

GUTTER FLOW HYDRAULICS
GUTTER DESCRIPTION

Roadway Grade-% Per cent--G	=	1.297
Roadway Cross-Slope-Ft./Ft.--Sx	=	0.024
Shoulder Width-Ft.--	=	10.000
Shoulder Slope-Ft./Ft.--Ss	=	0.024
Gutter Width-Ft.--W	=	4.500
Gutter Slope-Ft./Ft.--Sw	=	0.037
Gutter Depression-Inches--	=	1.998
Manning's 'N	=	0.016
Flow-CFS--Q	=	5.320 - 10yr
SPREAD-Ft.--T	=	10.588 - 16' max
Average Velocity-V-fps	=	3.547 Located at end of barrier
FLOW in Gutter-CFS--Q	=	4.302
% Flow in Gutter-CFS	=	80.860
Velocity of Flow in Gutter-fps	=	4.113
Depth at Curb Line-Inches--d	=	3.788

SLOTTED DRAIN--ADOT STD.--C13.60
GRATE TYPE: ADOT STD.--C15.92

Grate Length--Ft.	=	3.350
Grate Width---Ft.	=	2.000
Grate Area--Sq. Ft.	=	5.590
Splash-Over Velocity--FPS	=	7.350
Depth at INLET Curb Line-Inches--d	=	1.531
Local Gutter Depression-Inches	=	0.000
Length of opening: TOTAL Intercept--Ft.	=	44.139
Capture Ratio -- SLOTTED DRAIN	=	0.670
Capture Ratio -- GRATE	=	0.500

LENGTH	Efficiency	Q(S.D.)	Q(GRATE)	Q(INT.)	Q(By-Pass)	% CAPT.
5.000	0.195	1.035	2.414	3.449	1.871	64.83
10.000	0.370	1.970	2.040	4.010	1.310	75.37
15.000	0.526	2.801	1.670	4.471	0.849	84.04
20.000	0.663	3.525	1.304	4.829	0.491	90.77
25.000	0.778	4.138	0.946	5.084	0.236	95.57
30.000	0.871	4.635	0.616	5.250	0.070	98.69

ARIZONA DEPARTMENT OF TRANSPORTATION
DRAINAGE DESIGN SECTION

09-27-2002

PROJECT NAME- _____ TRACS NO.- _____
HIGHWAY NAME- _____ DESIGNER - RSR
LOCATION - ML EB 256+27 CHECKER - A PAGE _____
Ver 3.40: December 1995

SLOTTED DRAIN W/ GRATE--ON GRADE

GUTTER FLOW HYDRAULICS
GUTTER DESCRIPTION

Roadway Grade-% Per cent--G	=	1.297
Roadway Cross-Slope-Ft./Ft.--Sx	=	0.024
Shoulder Width-Ft.--	=	10.000
Shoulder Slope-Ft./Ft.--Ss	=	0.024
Gutter Width-Ft.--W	=	4.500
Gutter Slope-Ft./Ft.--Sw	=	0.037
Gutter Depression-Inches--	=	1.998
Manning's 'N	=	0.016
Flow-CFS--Q	=	8.030 - 50yr
SPREAD-Ft.--T	=	12.578
Average Velocity-V-fps	=	3.889
FLOW in Gutter-CFS--Q	=	5.865
% Flow in Gutter-CFS	=	73.043
Velocity of Flow in Gutter-fps	=	4.636
Depth at Curb Line-Inches--d	=	4.373

SLOTTED DRAIN--ADOT STD.--C13.60
GRATE TYPE: ADOT STD.--C15.92

Grate Length--Ft.	=	3.350
Grate Width---Ft.	=	2.000
Grate Area--Sq. Ft.	=	5.590
Splash-Over Velocity--FPS	=	7.350
Depth at INLET Curb Line-Inches--d	=	1.801
Local Gutter Depression-Inches	=	0.000
Length of opening: TOTAL Intercept--Ft.	=	53.381
Capture Ratio -- SLOTTED DRAIN	=	0.670
Capture Ratio -- GRATE	=	0.500

LENGTH	Efficiency	Q(S.D.)	Q(GRATE)	Q(INT.)	Q(By-Pass)	% CAPT.
5.000	0.162	1.303	3.257	4.559	3.471	56.78
10.000	0.312	2.502	2.862	5.364	2.666	66.80
15.000	0.448	3.596	2.470	6.066	1.964	75.54
20.000	0.570	4.581	2.082	6.662	1.368	82.97
25.000	0.679	5.454	1.697	7.151	0.879	89.05
30.000	0.774	6.213	1.316	7.529	0.501	93.76

ARIZONA DEPARTMENT OF TRANSPORTATION
DRAINAGE DESIGN SECTION

09-27-2002

PROJECT NAME- _____ TRACS NO.- _____
HIGHWAY NAME- _____ DESIGNER - RSR
LOCATION - ML EB 260+50 CHECKER - AP PAGE _____
Ver 3.40: December 1995

SLOTTED DRAIN W/ GRATE--ON GRADE

GUTTER FLOW HYDRAULICS
GUTTER DESCRIPTION

Roadway Grade-% Per cent--G	=	1.297
Roadway Cross-Slope-Ft./Ft.--Sx	=	0.036
Shoulder Width-Ft.--	=	10.000
Shoulder Slope-Ft./Ft.--Ss	=	0.036
Gutter Width-Ft.--W	=	4.500
Gutter Slope-Ft./Ft.--Sw	=	0.037
Gutter Depression-Inches--	=	1.998
Manning's 'N	=	0.016
Flow-CFS--Q	=	6.900 -10 yr
SPREAD-Ft.--T	=	9.767 -10 max
Average Velocity-V-fps	=	3.994
FLOW in Gutter-CFS--Q	=	5.586
% Flow in Gutter-CFS	=	80.950
Velocity of Flow in Gutter-fps	=	4.549
Depth at Curb Line-Inches--d	=	4.274

SLOTTED DRAIN--ADOT STD.--C13.60
GRATE TYPE: ADOT STD.--C15.92

Grate Length--Ft.	=	3.350
Grate Width---Ft.	=	2.000
Grate Area--Sq. Ft.	=	5.590
Splash-Over Velocity--FPS	=	7.350
Depth at INLET Curb Line-Inches--d	=	1.016
Local Gutter Depression-Inches	=	0.000
Length of opening: TOTAL Intercept--Ft.	=	47.445
Capture Ratio -- SLOTTED DRAIN	=	0.670
Capture Ratio -- GRATE	=	0.500

LENGTH	Efficiency	Q(S.D.)	Q(GRATE)	Q(INT.)	Q(By-Pass)	% CAPT.
5.000	0.182	1.253	3.021	4.274	2.626	61.94
10.000	0.347	2.394	2.575	4.969	1.931	72.01
15.000	0.495	3.418	2.139	5.558	1.342	80.55
20.000	0.627	4.324	1.716	6.040	0.860	87.54
25.000	0.740	5.106	1.308	6.414	0.486	92.96
30.000	0.835	5.761	0.919	6.679	0.221	96.80

ARIZONA DEPARTMENT OF TRANSPORTATION
DRAINAGE DESIGN SECTION

09-27-2002

PROJECT NAME- _____ TRACS NO.- _____
HIGHWAY NAME- _____ DESIGNER - RSR
LOCATION - ML EB 260+50 CHECKER - [illegible] PAGE _____
Ver 3.40: December 1995

SLOTTED DRAIN W/ GRATE--ON GRADE

GUTTER FLOW HYDRAULICS
GUTTER DESCRIPTION

Roadway Grade-% Per cent--G	=	1.297
Roadway Cross-Slope-Ft./Ft.--Sx	=	0.036
Shoulder Width-Ft.--	=	10.000
Shoulder Slope-Ft./Ft.--Ss	=	0.036
Gutter Width-Ft.--W	=	4.500
Gutter Slope-Ft./Ft.--Sw	=	0.037
Gutter Depression-Inches--	=	1.998
Manning's 'N	=	0.016
Flow-CFS--Q	=	9.760 ·50yr
SPREAD-Ft.--T	=	11.135
Average Velocity-V-fps	=	4.354
FLOW in Gutter-CFS--Q	=	7.328
% Flow in Gutter-CFS	=	75.084
Velocity of Flow in Gutter-fps	=	5.056
Depth at Curb Line-Inches--d	=	4.864

SLOTTED DRAIN--ADOT STD.--C13.60
GRATE TYPE: ADOT STD.--C15.92

Grate Length--Ft.	=	3.350
Grate Width---Ft.	=	2.000
Grate Area--Sq. Ft.	=	5.590
Splash-Over Velocity--FPS	=	7.350
Depth at INLET Curb Line-Inches--d	=	2.179
Local Gutter Depression-Inches	=	0.000
Length of opening: TOTAL Intercept--Ft.	=	54.936
Capture Ratio -- SLOTTED DRAIN	=	0.670
Capture Ratio -- GRATE	=	0.500

LENGTH	Efficiency	Q(S.D.)	Q(GRATE)	Q(INT.)	Q(By-Pass)	% CAPT.
5.000	0.158	1.540	3.924	5.464	4.296	55.98
10.000	0.303	2.962	3.440	6.402	3.358	65.59
15.000	0.437	4.263	2.964	7.227	2.533	74.04
20.000	0.557	5.439	2.499	7.938	1.822	81.33
25.000	0.665	6.488	2.045	8.533	1.227	87.43
30.000	0.759	7.405	1.605	9.010	0.750	92.32

ARIZONA DEPARTMENT OF TRANSPORTATION
DRAINAGE DESIGN SECTION

09-27-2002

PROJECT NAME- _____ TRACS NO.- _____
HIGHWAY NAME- _____ DESIGNER - RSR
LOCATION - ML EB 265+57 CHECKER - (A) PAGE _____
Ver 3.40: December 1995

SLOTTED DRAIN W/ GRATE--ON GRADE

GUTTER FLOW HYDRAULICS
GUTTER DESCRIPTION

Roadway Grade-% Per cent--G	=	1.297
Roadway Cross-Slope-Ft./Ft.--Sx	=	0.036
Shoulder Width-Ft.--	=	10.000
Shoulder Slope-Ft./Ft.--Ss	=	0.036
Gutter Width-Ft.--W	=	2.500
Gutter Slope-Ft./Ft.--Sw	=	0.021
Gutter Depression-Inches--	=	0.624
Manning's 'N	=	0.016
Flow-CFS--Q	=	3.290 - 10 yr
SPREAD-Ft.--T	=	7.694 - 8' max
Average Velocity-V-fps	=	3.232
FLOW in Gutter-CFS--Q	=	2.024
% Flow in Gutter-CFS	=	61.519
Velocity of Flow in Gutter-fps	=	3.801
Depth at Curb Line-Inches--d	=	2.868 - 3" max

SLOTTED DRAIN--ADOT STD.--C13.60
GRATE TYPE: ADOT STD.--C15.91

Grate Length--Ft.	=	3.354
Grate Width---Ft.	=	2.000
Grate Area--Sq. Ft.	=	5.171
Splash-Over Velocity--FPS	=	7.354
Depth at INLET Curb Line-Inches--d	=	3.607
Local Gutter Depression-Inches	=	1.000
Length of opening: TOTAL Intercept--Ft.	=	29.238
Capture Ratio -- SLOTTED DRAIN	=	0.670
Capture Ratio -- GRATE	=	0.500

LENGTH	Efficiency	Q(S.D.)	Q(GRATE)	Q(INT.)	Q(By-Pass)	% CAPT.
5.000	0.287	0.943	1.757	2.700	0.590	82.06
10.000	0.529	1.741	1.283	3.024	0.266	91.93
15.000	0.726	2.389	0.828	3.217	0.073	97.79
20.000	0.874	2.876	0.410	3.286	0.004	99.89
25.000	0.969	3.188	0.102	3.290	0.000	100.00
30.000	1.000	3.290	0.000	3.290	0.000	100.00

ARIZONA DEPARTMENT OF TRANSPORTATION
DRAINAGE DESIGN SECTION

09-27-2002

PROJECT NAME- _____ TRACS NO.- _____
HIGHWAY NAME- _____ DESIGNER - RSR
LOCATION - ML EB 265+57 CHECKER - AD PAGE _____
Ver 3.40: December 1995

SLOTTED DRAIN W/ GRATE--ON GRADE

GUTTER FLOW HYDRAULICS
GUTTER DESCRIPTION

Roadway Grade-% Per cent--G	=	1.297
Roadway Cross-Slope-Ft./Ft.--Sx	=	0.036
Shoulder Width-Ft.--	=	10.000
Shoulder Slope-Ft./Ft.--Ss	=	0.036
Gutter Width-Ft.--W	=	2.500
Gutter Slope-Ft./Ft.--Sw	=	0.021
Gutter Depression-Inches--	=	0.624
Manning's 'N	=	0.016
Flow-CFS--Q	=	5.670 - 50yr
SPREAD-Ft.--T	=	9.333
Average Velocity-V-fps	=	3.729
FLOW in Gutter-CFS--Q	=	3.039
% Flow in Gutter-CFS	=	53.602
Velocity of Flow in Gutter-fps	=	4.469
Depth at Curb Line-Inches--d	=	3.576

SLOTTED DRAIN--ADOT STD.--C13.60
GRATE TYPE: ADOT STD.--C15.91

Grate Length--Ft.	=	3.354
Grate Width---Ft.	=	2.000
Grate Area--Sq. Ft.	=	5.171
Splash-Over Velocity--FPS	=	7.354
Depth at INLET Curb Line-Inches--d	=	4.360
Local Gutter Depression-Inches	=	1.000
Length of opening: TOTAL Intercept--Ft.	=	37.605
Capture Ratio -- SLOTTED DRAIN	=	0.670
Capture Ratio -- GRATE	=	0.500

LENGTH	Efficiency	Q(S.D.)	Q(GRATE)	Q(INT.)	Q(By-Pass)	% CAPT.
5.000	0.226	1.284	2.750	4.034	1.636	71.15
10.000	0.427	2.420	2.226	4.645	1.025	81.93
15.000	0.600	3.402	1.713	5.115	0.555	90.21
20.000	0.745	4.224	1.217	5.440	0.230	95.95
25.000	0.860	4.877	0.743	5.620	0.050	99.12
30.000	0.944	5.351	0.319	5.669	0.001	99.99

ARIZONA DEPARTMENT OF TRANSPORTATION
DRAINAGE DESIGN SECTION

09-27-2002

PROJECT NAME- _____ TRACS NO.- _____
HIGHWAY NAME- _____ DESIGNER - RSR
LOCATION - ML EB 268+00 CHECKER - AD PAGE _____
Ver 3.40: December 1995

SLOTTED DRAIN W/ GRATE--ON GRADE

GUTTER FLOW HYDRAULICS
GUTTER DESCRIPTION

Roadway Grade-% Per cent--G	=	1.297
Roadway Cross-Slope-Ft./Ft.--Sx	=	0.036
Shoulder Width-Ft.--	=	10.000
Shoulder Slope-Ft./Ft.--Ss	=	0.036
Gutter Width-Ft.--W	=	4.500
Gutter Slope-Ft./Ft.--Sw	=	0.037
Gutter Depression-Inches--	=	1.998
Manning's 'N	=	0.016
Flow-CFS--Q	=	11.610-10 yr
SPREAD-Ft.--T	=	11.888
Average Velocity-V-fps	=	4.546
FLOW in Gutter-CFS--Q	=	8.370
% Flow in Gutter-CFS	=	72.095
Velocity of Flow in Gutter-fps	=	5.326
Depth at Curb Line-Inches--d	=	5.190-6" Max

SLOTTED DRAIN--ADOT STD.--C13.60
GRATE TYPE: ADOT STD.--C15.92

Grate Length--Ft.	=	3.350
Grate Width---Ft.	=	2.000
Grate Area--Sq. Ft.	=	5.590
Splash-Over Velocity--FPS	=	7.350
Depth at INLET Curb Line-Inches--d	=	0.422
Local Gutter Depression-Inches	=	0.000
Length of opening: TOTAL Intercept--Ft.	=	59.119
Capture Ratio -- SLOTTED DRAIN	=	0.670
Capture Ratio -- GRATE	=	0.500

LENGTH	Efficiency	Q(S.D.)	Q(GRATE)	Q(INT.)	Q(By-Pass)	% CAPT.
10.000	0.284	3.293	3.956	7.249	4.361	62.43
15.000	0.410	4.754	3.460	8.214	3.396	70.75
20.000	0.524	6.089	2.973	9.062	2.548	78.05
25.000	0.628	7.294	2.497	9.791	1.819	84.33
30.000	0.720	8.365	2.033	10.398	1.212	89.56
35.000	0.801	9.298	1.584	10.882	0.728	93.73

ARIZONA DEPARTMENT OF TRANSPORTATION
DRAINAGE DESIGN SECTION

09-27-2002

PROJECT NAME- _____ TRACS NO.- _____
HIGHWAY NAME- _____ DESIGNER - BSR
LOCATION - ML EB 268+00 CHECKER - A PAGE _____
Ver 3.40: December 1995

SLOTTED DRAIN W/ GRATE--ON GRADE

GUTTER FLOW HYDRAULICS
GUTTER DESCRIPTION

Roadway Grade-% Per cent--G	=	1.297
Roadway Cross-Slope-Ft./Ft.--Sx	=	0.036
Shoulder Width-Ft.--	=	10.000
Shoulder Slope-Ft./Ft.--Ss	=	0.036
Gutter Width-Ft.--W	=	4.500
Gutter Slope-Ft./Ft.--Sw	=	0.037
Gutter Depression-Inches--	=	1.998
Manning's 'N	=	0.016
Flow-CFS--Q	=	17.030 50 yr
SPREAD-Ft.--T	=	13.735
Average Velocity-V-fps	=	5.000
FLOW in Gutter-CFS--Q	=	11.157
% Flow in Gutter-CFS	=	65.512
Velocity of Flow in Gutter-fps	=	5.964
Depth at Curb Line-Inches--d	=	5.988

SLOTTED DRAIN--ADOT STD.--C13.60
GRATE TYPE: ADOT STD.--C15.92

Grate Length--Ft.	=	3.350
Grate Width---Ft.	=	2.000
Grate Area--Sq. Ft.	=	5.590
Splash-Over Velocity--FPS	=	7.350
Depth at INLET Curb Line-Inches--d	=	3.740
Local Gutter Depression-Inches	=	0.000
Length of opening: TOTAL Intercept--Ft.	=	69.515
Capture Ratio -- SLOTTED DRAIN	=	0.670
Capture Ratio -- GRATE	=	0.500

LENGTH	Efficiency	Q(S.D.)	Q(GRATE)	Q(INT.)	Q(By-Pass)	% CAPT.
10.000	0.244	4.153	5.333	9.486	7.544	55.70
15.000	0.354	6.035	4.790	10.825	6.205	63.56
20.000	0.457	7.783	4.255	12.038	4.992	70.69
25.000	0.552	9.395	3.728	13.124	3.906	77.06
30.000	0.638	10.869	3.211	14.080	2.950	82.68
35.000	0.716	12.201	2.705	14.905	2.125	87.52

ARIZONA DEPARTMENT OF TRANSPORTATION
DRAINAGE DESIGN SECTION

10-02-2002

PROJECT NAME- _____ TRACS NO.- _____
HIGHWAY NAME- _____ DESIGNER - RSR
LOCATION - McD WB 3181+69 CHECKER - CA PAGE _____
Ver 3.40: December 1995

SLOTTED DRAIN W/ GRATE--ON GRADE

GUTTER FLOW HYDRAULICS
GUTTER DESCRIPTION

Roadway Grade-% Per cent--G	=	1.800
Roadway Cross-Slope-Ft./Ft.--Sx	=	0.020
Shoulder Width-Ft.--	=	10.000
Shoulder Slope-Ft./Ft.--Ss	=	0.020
Gutter Width-Ft.--W	=	4.500
Gutter Slope-Ft./Ft.--Sw	=	0.037
Gutter Depression-Inches--	=	1.998
Manning's 'N	=	0.016
Flow-CFS--Q	=	9.370 - 10yr
SPREAD-Ft.--T	=	13.983 - 16' max
Average Velocity-V-fps	=	4.405
FLOW in Gutter-CFS--Q	=	6.582
% Flow in Gutter-CFS	=	70.248
Velocity of Flow in Gutter-fps	=	5.360
Depth at Curb Line-Inches--d	=	4.274

SLOTTED DRAIN--ADOT STD.--C13.60
GRATE TYPE: ADOT STD.--C15.92

Grate Length--Ft.	=	3.350
Grate Width---Ft.	=	2.000
Grate Area--Sq. Ft.	=	5.590
Splash-Over Velocity--FPS	=	7.350
Depth at INLET Curb Line-Inches--d	=	4.811
Local Gutter Depression-Inches	=	0.000
Length of opening: TOTAL Intercept--Ft.	=	64.818
Capture Ratio -- SLOTTED DRAIN	=	0.670
Capture Ratio -- GRATE	=	0.500

LENGTH	Efficiency	Q(S.D.)	Q(GRATE)	Q(INT.)	Q(By-Pass)	% CAPT.
5.000	0.135	1.261	3.697	4.957	4.413	52.91
10.000	0.260	2.440	3.348	5.788	3.582	61.77
15.000	0.377	3.536	3.000	6.536	2.834	69.76
20.000	0.485	4.547	2.653	7.200	2.170	76.84
25.000	0.584	5.472	2.305	7.777	1.593	83.00
30.000	0.673	6.308	1.957	8.266	1.104	88.21

ARIZONA DEPARTMENT OF TRANSPORTATION
DRAINAGE DESIGN SECTION

10-02-2002

PROJECT NAME- _____ TRACS NO.- _____
HIGHWAY NAME- _____ DESIGNER - RSR
LOCATION - Mad WB 318+63 CHECKER - CA PAGE _____
Ver 3.40: December 1995

SLOTTED DRAIN W/ GRATE--ON GRADE

GUTTER FLOW HYDRAULICS
GUTTER DESCRIPTION

Roadway Grade-% Per cent--G	=	1.532
Roadway Cross-Slope-Ft./Ft.--Sx	=	0.020
Shoulder Width-Ft.--	=	10.000
Shoulder Slope-Ft./Ft.--Ss	=	0.020
Gutter Width-Ft.--W	=	2.500
Gutter Slope-Ft./Ft.--Sw	=	0.021
Gutter Depression-Inches--	=	0.624
Manning's 'N	=	0.016
Flow-CFS--Q	=	3.340 - 10yr
SPREAD-Ft.--T	=	10.440 - 16' max
Average Velocity-V-fps	=	3.057
FLOW in Gutter-CFS--Q	=	1.738
% Flow in Gutter-CFS	=	52.037
Velocity of Flow in Gutter-fps	=	3.762
Depth at Curb Line-Inches--d	=	2.530

SLOTTED DRAIN--ADOT STD.--C13.60
GRATE TYPE: ADOT STD.--C15.91

Grate Length--Ft.	=	3.354
Grate Width---Ft.	=	2.000
Grate Area--Sq. Ft.	=	5.171
Splash-Over Velocity--FPS	=	7.354
Depth at INLET Curb Line-Inches--d	=	3.319
Local Gutter Depression-Inches	=	1.000
Length of opening: TOTAL Intercept--Ft.	=	33.910
Capture Ratio -- SLOTTED DRAIN	=	0.670
Capture Ratio -- GRATE	=	0.500

LENGTH	Efficiency	Q(S.D.)	Q(GRATE)	Q(INT.)	Q(By-Pass)	% CAPT.
5.000	0.250	0.834	1.702	2.536	0.804	75.92
10.000	0.467	1.559	1.352	2.911	0.429	87.15
15.000	0.650	2.173	0.999	3.172	0.168	94.97
20.000	0.799	2.668	0.642	3.310	0.030	99.11
25.000	0.910	3.039	0.301	3.340	0.000	100.00
30.000	0.980	3.272	0.068	3.340	0.000	100.00

ARIZONA DEPARTMENT OF TRANSPORTATION
DRAINAGE DESIGN SECTION

09-13-2002

PROJECT NAME- _____ TRACS NO.- _____
HIGHWAY NAME- _____ DESIGNER - RSR
LOCATION - MD WB 3185+96 CHECKER - (A) PAGE _____
Ver 3.40: December 1995

SLOTTED DRAIN W/ GRATE--ON GRADE

GUTTER FLOW HYDRAULICS
GUTTER DESCRIPTION

Roadway Grade-% Per cent--G	=	0.730
Roadway Cross-Slope-Ft./Ft.--Sx	=	0.020
Shoulder Width-Ft.--	=	10.000
Shoulder Slope-Ft./Ft.--Ss	=	0.020
Gutter Width-Ft.--W	=	2.500
Gutter Slope-Ft./Ft.--Sw	=	0.021
Gutter Depression-Inches--	=	0.624
Manning's 'N	=	0.016
Flow-CFS--Q	=	3.610 - 10yr
SPREAD-Ft.--T	=	12.357 - 12.4' Max
Average Velocity-V-fps	=	2.360
FLOW in Gutter-CFS--Q	=	1.641
% Flow in Gutter-CFS	=	45.459
Velocity of Flow in Gutter-fps	=	2.942
Depth at Curb Line-Inches--d	=	2.990

SLOTTED DRAIN--ADOT STD.--C13.60
GRATE TYPE: ADOT STD.--C15.91

Grate Length--Ft.	=	3.354
Grate Width---Ft.	=	2.000
Grate Area--Sq. Ft.	=	5.171
Splash-Over Velocity--FPS	=	7.354
Depth at INLET Curb Line-Inches--d	=	3.814
Local Gutter Depression-Inches	=	1.000
Length of opening: TOTAL Intercept--Ft.	=	29.396
Capture Ratio -- SLOTTED DRAIN	=	0.670
Capture Ratio -- GRATE	=	0.500

LENGTH	Efficiency	Q(S.D.)	Q(GRATE)	Q(INT.)	Q(By-Pass)	% CAPT.
5.000	0.285	1.029	1.604	2.633	0.977	72.94
10.000	0.527	1.902	1.223	3.125	0.485	86.55
15.000	0.723	2.611	0.837	3.448	0.162	95.52
20.000	0.872	3.147	0.449	3.595	0.015	99.59
25.000	0.967	3.492	0.118	3.610	0.000	100.00
30.000	1.000	3.610	0.000	3.610	0.000	100.00

ARIZONA DEPARTMENT OF TRANSPORTATION
DRAINAGE DESIGN SECTION

09-16-2002

PROJECT NAME- _____ TRACS NO.- _____
HIGHWAY NAME- _____ DESIGNER - RSR
LOCATION - MeO WB 3187+67 CHECKER - (A) PAGE _____
Ver 3.40: December 1995

SLOTTED DRAIN W/ GRATE--ON GRADE

GUTTER FLOW HYDRAULICS
GUTTER DESCRIPTION

Roadway Grade-% Per cent--G	=	0.237
Roadway Cross-Slope-Ft./Ft.--Sx	=	0.020
Shoulder Width-Ft.--	=	10.000
Shoulder Slope-Ft./Ft.--Ss	=	0.020
Gutter Width-Ft.--W	=	2.500
Gutter Slope-Ft./Ft.--Sw	=	0.021
Gutter Depression-Inches--	=	0.624
Manning's 'N	=	0.016
Flow-CFS--Q	=	2.060 - 10yr
SPREAD-Ft.--T	=	12.361 - 12.4' Max
Average Velocity-V-fps	=	1.346
FLOW in Gutter-CFS--Q	=	0.936
% Flow in Gutter-CFS	=	45.448
Velocity of Flow in Gutter-fps	=	1.678
Depth at Curb Line-Inches--d	=	2.991

SLOTTED DRAIN--ADOT STD.--C13.60
GRATE TYPE: ADOT STD.--C15.91

Grate Length--Ft.	=	3.354
Grate Width---Ft.	=	2.000
Grate Area--Sq. Ft.	=	5.171
Splash-Over Velocity--FPS	=	7.354
Depth at INLET Curb Line-Inches--d	=	3.815
Local Gutter Depression-Inches	=	1.000
Length of opening: TOTAL Intercept--Ft.	=	16.581
Capture Ratio -- SLOTTED DRAIN	=	0.670
Capture Ratio -- GRATE	=	0.500

LENGTH	Efficiency	Q(S.D.)	Q(GRATE)	Q(INT.)	Q(By-Pass)	% CAPT.
5.000	0.476	0.980	0.835	1.815	0.245	88.11
10.000	0.810	1.670	0.371	2.041	0.019	99.06
15.000	0.985	2.030	0.030	2.060	0.000	100.00
20.000	1.000	2.060	0.000	2.060	0.000	100.00
25.000	1.000	2.060	0.000	2.060	0.000	100.00
30.000	1.000	2.060	0.000	2.060	0.000	100.00

ARIZONA DEPARTMENT OF TRANSPORTATION
DRAINAGE DESIGN SECTION

09-16-2002

PROJECT NAME- _____ TRACS NO.- _____
HIGHWAY NAME- _____ DESIGNER - RSR
LOCATION - McD WB 318B+53 CHECKER - (A) PAGE _____
Ver 3.40: December 1995

SLOTTED DRAIN W/ GRATE--IN SUMP

GUTTER FLOW HYDRAULICS

GUTTER DESCRIPTION

Roadway Cross-Slope-Ft./Ft.--Sx	=	0.020
Shoulder Width-Ft.--	=	10.000
Shoulder Slope-Ft./Ft.--Ss	=	0.020
Gutter Width-Ft.--W	=	2.500
Gutter Slope-Ft./Ft.--Sw	=	0.021
Gutter Depression-Inches--	=	0.624

GRATE TYPE: ADOT STD.--C15.91

Grate Length--Ft.	=	3.354
Grate Width---Ft.	=	2.000
Grate Area--Sq. Ft.	=	5.171
Effective Perimeter--Ft.	=	7.354
Capture Ratio -- GRATE	=	0.500
Capture Ratio -- SLOTTED DRAIN	=	0.670
Local Gutter Depression-Inches	=	1.000
Flow-CFS--Q	=	1.520 -10 yr

LENGTH	Q(Slot. Dn)	Q(Grate)	d(inches)	SPREAD,Ft.
5.000	0.847	0.674	1.754	7.210
10.000	1.146	0.374	1.122	4.577
15.000	1.286	0.233	0.749	3.020
20.000	1.361	0.158	0.499	2.000
25.000	1.430	0.122	0.335	1.344

Use; 20' Slotted Drain on South side of CB
5' Slotted Drain on North side of CB

ARIZONA DEPARTMENT OF TRANSPORTATION
DRAINAGE DESIGN SECTION

09-16-2002

PROJECT NAME- _____ TRACS NO.- _____
HIGHWAY NAME- _____ DESIGNER - RSR
LOCATION - Med WB 3188+53 CHECKER - _____ PAGE _____
Ver 3.40: December 1995

GUTTER FLOW HYDRAULICS
GUTTER DESCRIPTION

Roadway Grade-% Per cent--G	=	0.064	
Roadway Cross-Slope-Ft./Ft.--Sx	=	0.020	
Shoulder Width-Ft.--	=	10.000	
Shoulder Slope-Ft./Ft.--Ss	=	0.020	
Gutter Width-Ft.--W	=	2.500	
Gutter Slope-Ft./Ft.--Sw	=	0.021	
Gutter Depression-Inches--	=	0.624	
Manning's 'N	=	0.016	
Flow-CFS--Q	=	0.970	- Q from South
SPREAD-Ft.--T	=	11.897	- 12.4' Max
Average Velocity-V-fps	=	0.684	
FLOW in Gutter-CFS--Q	=	0.455	
% Flow in Gutter-CFS	=	46.887	
Velocity of Flow in Gutter-fps	=	0.850	
Depth at Curb Line-Inches--d	=	2.879	

Calc used To check spread at upstream end of slotted Drn.
Sta 3188+31 - 20' of slotted Drain

ARIZONA DEPARTMENT OF TRANSPORTATION
DRAINAGE DESIGN SECTION

09-16-2002

PROJECT NAME- _____ TRACS NO.- _____
HIGHWAY NAME- _____ DESIGNER - RGR
LOCATION - Mcd WB 3188+53 CHECKER - AJ PAGE _____
Ver 3.40: December 1995

GUTTER FLOW HYDRAULICS
GUTTER DESCRIPTION

Roadway Grade-% Per cent--G	=	0.018	
Roadway Cross-Slope-Ft./Ft.--Sx	=	0.020	
Shoulder Width-Ft.--	=	10.000	
Shoulder Slope-Ft./Ft.--Ss	=	0.020	
Gutter Width-Ft.--W	=	2.500	
Gutter Slope-Ft./Ft.--Sw	=	0.021	
Gutter Depression-Inches--	=	0.624	
Manning's 'N	=	0.016	
Flow-CFS--Q	=	0.550	- Q from North
SPREAD-Ft.--T	=	12.231	- 12.4' Max
Average Velocity-V-fps	=	0.367	
FLOW in Gutter-CFS--Q	=	0.252	
% Flow in Gutter-CFS	=	45.842	
Velocity of Flow in Gutter-fps	=	0.457	
Depth at Curb Line-Inches--d	=	2.959	

Calc used to check spread at upstream end of slotted Drain
Sta 3188+60 - 5' of slotted Drain

ARIZONA DEPARTMENT OF TRANSPORTATION
DRAINAGE DESIGN SECTION

09-13-2002

PROJECT NAME- _____ TRACS NO.- _____
HIGHWAY NAME- _____ DESIGNER - RSR
LOCATION - Mc8 WB 3190+27 CHECKER - _____ PAGE _____
Ver 3.40: December 1995

SLOTTED DRAIN W/ GRATE--ON GRADE

GUTTER FLOW HYDRAULICS
GUTTER DESCRIPTION

Roadway Grade-% Per cent--G	=	0.398
Roadway Cross-Slope-Ft./Ft.--Sx	=	0.020
Shoulder Width-Ft.--	=	10.000
Shoulder Slope-Ft./Ft.--Ss	=	0.020
Gutter Width-Ft.--W	=	2.500
Gutter Slope-Ft./Ft.--Sw	=	0.021
Gutter Depression-Inches--	=	0.624
Manning's 'N	=	0.016
Flow-CFS--Q	=	2.680 -10yr
SPREAD-Ft.--T	=	12.386 -12.4' max
Average Velocity-V-fps	=	1.744
FLOW in Gutter-CFS--Q	=	1.216
% Flow in Gutter-CFS	=	45.372
Velocity of Flow in Gutter-fps	=	2.174
Depth at Curb Line-Inches--d	=	2.997

SLOTTED DRAIN--ADOT STD.--C13.60
GRATE TYPE: ADOT STD.--C15.91

Grate Length--Ft.	=	3.354
Grate Width---Ft.	=	2.000
Grate Area--Sq. Ft.	=	5.171
Splash-Over Velocity--FPS	=	7.354
Depth at INLET Curb Line-Inches--d	=	3.821
Local Gutter Depression-Inches	=	1.000
Length of opening: TOTAL Intercept--Ft.	=	21.627
Capture Ratio -- SLOTTED DRAIN	=	0.670
Capture Ratio -- GRATE	=	0.500

LENGTH	Efficiency	Q(S.D.)	Q(GRATE)	Q(INT.)	Q(By-Pass)	% CAPT.
5.000	0.377	1.010	1.156	2.166	0.514	80.84
10.000	0.673	1.803	0.731	2.534	0.146	94.55
15.000	0.881	2.361	0.313	2.674	0.006	99.79
20.000	0.991	2.655	0.025	2.680	0.000	100.00
25.000	1.000	2.680	0.000	2.680	0.000	100.00
30.000	1.000	2.680	0.000	2.680	0.000	100.00

ARIZONA DEPARTMENT OF TRANSPORTATION
DRAINAGE DESIGN SECTION

09-12-2002

PROJECT NAME- _____ TRACS NO.- _____
HIGHWAY NAME- _____ DESIGNER - RSR
LOCATION - McD WB 3192+95 CHECKER - AJ PAGE _____
Ver 3.40: December 1995

SLOTTED DRAIN W/ GRATE--ON GRADE

GUTTER FLOW HYDRAULICS
GUTTER DESCRIPTION

Roadway Grade-% Per cent--G	=	0.506
Roadway Cross-Slope-Ft./Ft.--Sx	=	0.020
Shoulder Width-Ft.--	=	10.000
Shoulder Slope-Ft./Ft.--Ss	=	0.020
Gutter Width-Ft.--W	=	2.500
Gutter Slope-Ft./Ft.--Sw	=	0.021
Gutter Depression-Inches--	=	0.624
Manning's 'N	=	0.016
Flow-CFS--Q	=	2.990 - 10yr
SPREAD-Ft.--T	=	12.335 - 12.4' Max
Average Velocity-V-fps	=	1.962
FLOW in Gutter-CFS--Q	=	1.361
% Flow in Gutter-CFS	=	45.525
Velocity of Flow in Gutter-fps	=	2.445
Depth at Curb Line-Inches--d	=	2.984

SLOTTED DRAIN--ADOT STD.--C13.60
GRATE TYPE: ADOT STD.--C15.91

Grate Length--Ft.	=	3.354
Grate Width---Ft.	=	2.000
Grate Area--Sq. Ft.	=	5.171
Splash-Over Velocity--FPS	=	7.354
Depth at INLET Curb Line-Inches--d	=	3.808
Local Gutter Depression-Inches	=	1.000
Length of opening: TOTAL Intercept--Ft.	=	24.313
Capture Ratio -- SLOTTED DRAIN	=	0.670
Capture Ratio -- GRATE	=	0.500

LENGTH	Efficiency	Q(S.D.)	Q(GRATE)	Q(INT.)	Q(By-Pass)	% CAPT.
5.000	0.339	1.014	1.312	2.327	0.663	77.82
10.000	0.615	1.838	0.905	2.743	0.247	91.73
15.000	0.822	2.458	0.498	2.956	0.034	98.87
20.000	0.956	2.857	0.133	2.990	0.000	100.00
25.000	1.000	2.990	0.000	2.990	0.000	100.00
30.000	1.000	2.990	0.000	2.990	0.000	100.00

ARIZONA DEPARTMENT OF TRANSPORTATION
DRAINAGE DESIGN SECTION

09-12-2002

PROJECT NAME- _____ TRACS NO.- _____
HIGHWAY NAME- _____ DESIGNER - RSR
LOCATION - Mcd WB 3195+95 CHECKER - _____ PAGE _____
Ver 3.40: December 1995

SLOTTED DRAIN W/ GRATE--ON GRADE

GUTTER FLOW HYDRAULICS
GUTTER DESCRIPTION

Roadway Grade-% Per cent--G	=	0.359
Roadway Cross-Slope-Ft./Ft.--Sx	=	0.020
Shoulder Width-Ft.--	=	10.000
Shoulder Slope-Ft./Ft.--Ss	=	0.020
Gutter Width-Ft.--W	=	2.500
Gutter Slope-Ft./Ft.--Sw	=	0.021
Gutter Depression-Inches--	=	0.624
Manning's 'N	=	0.016
Flow-CFS--Q	=	2.550 - 10yr
SPREAD-Ft.--T	=	12.392 - 12.4
Average Velocity-V-fps	=	1.658
FLOW in Gutter-CFS--Q	=	1.157
% Flow in Gutter-CFS	=	45.353
Velocity of Flow in Gutter-fps	=	2.067
Depth at Curb Line-Inches--d	=	2.998

SLOTTED DRAIN--ADOT STD.--C13.60
GRATE TYPE: ADOT STD.--C15.91

Grate Length--Ft.	=	3.354
Grate Width---Ft.	=	2.000
Grate Area--Sq. Ft.	=	5.171
Splash-Over Velocity--FPS	=	7.354
Depth at INLET Curb Line-Inches--d	=	3.823
Local Gutter Depression-Inches	=	1.000
Length of opening: TOTAL Intercept--Ft.	=	20.544
Capture Ratio -- SLOTTED DRAIN	=	0.670
Capture Ratio -- GRATE	=	0.500

LENGTH	Efficiency	Q(S.D.)	Q(GRATE)	Q(INT.)	Q(By-Pass)	% CAPT.
5.000	0.395	1.006	1.090	2.097	0.453	82.23
10.000	0.699	1.782	0.657	2.440	0.110	95.68
15.000	0.905	2.309	0.240	2.549	0.001	99.95
20.000	0.999	2.546	0.004	2.550	0.000	100.00
25.000	1.000	2.550	0.000	2.550	0.000	100.00
30.000	1.000	2.550	0.000	2.550	0.000	100.00

ARIZONA DEPARTMENT OF TRANSPORTATION
DRAINAGE DESIGN SECTION

09-18-2002

PROJECT NAME- _____ TRACS NO.- _____
HIGHWAY NAME- _____ DESIGNER - RSR
LOCATION - Md WB 3203+65 CHECKER - (A) PAGE _____
Ver 3.40: December 1995

SLOTTED DRAIN W/ GRATE--ON GRADE

GUTTER FLOW HYDRAULICS
GUTTER DESCRIPTION

Roadway Grade-% Per cent--G	=	0.613
Roadway Cross-Slope-Ft./Ft.--Sx	=	0.020
Shoulder Width-Ft.--	=	10.000
Shoulder Slope-Ft./Ft.--Ss	=	0.020
Gutter Width-Ft.--W	=	2.500
Gutter Slope-Ft./Ft.--Sw	=	0.021
Gutter Depression-Inches--	=	0.624
Manning's 'N	=	0.016
Flow-CFS--Q	=	6.480 -10yr
SPREAD-Ft.--T	=	15.908 -16' Max
Average Velocity-V-fps	=	2.558
FLOW in Gutter-CFS--Q	=	2.381
% Flow in Gutter-CFS	=	36.747
Velocity of Flow in Gutter-fps	=	3.238
Depth at Curb Line-Inches--d	=	3.842

SLOTTED DRAIN--ADOT STD.--C13.60
GRATE TYPE: ADOT STD.--C15.91

Grate Length--Ft.	=	3.354
Grate Width---Ft.	=	2.000
Grate Area--Sq. Ft.	=	5.171
Splash-Over Velocity--FPS	=	7.354
Depth at INLET Curb Line-Inches--d	=	4.707
Local Gutter Depression-Inches	=	1.000
Length of opening: TOTAL Intercept--Ft.	=	38.131
Capture Ratio -- SLOTTED DRAIN	=	0.670
Capture Ratio -- GRATE	=	0.500

LENGTH	Efficiency	Q(S.D.)	Q(GRATE)	Q(INT.)	Q(By-Pass)	% CAPT.
5.000	0.224	1.448	2.423	3.872	2.608	59.75
10.000	0.422	2.732	2.014	4.746	1.734	73.24
15.000	0.593	3.845	1.607	5.452	1.028	84.14
20.000	0.738	4.780	1.202	5.982	0.498	92.32
25.000	0.853	5.529	0.797	6.326	0.154	97.63

ARIZONA DEPARTMENT OF TRANSPORTATION
DRAINAGE DESIGN SECTION

09-18-2002

PROJECT NAME- _____ TRACS NO.- _____
HIGHWAY NAME- _____ DESIGNER - RSR
LOCATION - Med WB 3203+65 CHECKER - _____ PAGE _____
Ver 3.40: December 1995

SLOTTED DRAIN W/ GRATE--ON GRADE

GUTTER FLOW HYDRAULICS
GUTTER DESCRIPTION

Roadway Grade-% Per cent--G	=	0.613
Roadway Cross-Slope-Ft./Ft.--Sx	=	0.020
Shoulder Width-Ft.--	=	10.000
Shoulder Slope-Ft./Ft.--Ss	=	0.020
Gutter Width-Ft.--W	=	2.500
Gutter Slope-Ft./Ft.--Sw	=	0.021
Gutter Depression-Inches--	=	0.624
Manning's 'N	=	0.016
Flow-CFS--Q	=	8.950 - 50yr
SPREAD-Ft.--T	=	17.959 - 21' Max
Average Velocity-V-fps	=	2.773
FLOW in Gutter-CFS--Q	=	2.959
% Flow in Gutter-CFS	=	33.061
Velocity of Flow in Gutter-fps	=	3.531
Depth at Curb Line-Inches--d	=	4.334

SLOTTED DRAIN--ADOT STD.--C13.60
GRATE TYPE: ADOT STD.--C15.91

Grate Length--Ft.	=	3.354
Grate Width---Ft.	=	2.000
Grate Area--Sq. Ft.	=	5.171
Splash-Over Velocity--FPS	=	7.354
Depth at INLET Curb Line-Inches--d	=	5.215
Local Gutter Depression-Inches	=	1.000
Length of opening: TOTAL Intercept--Ft.	=	44.988
Capture Ratio -- SLOTTED DRAIN	=	0.670
Capture Ratio -- GRATE	=	0.500

LENGTH	Efficiency	Q(S.D.)	Q(GRATE)	Q(INT.)	Q(By-Pass)	% CAPT.
5.000	0.191	1.710	3.036	4.746	4.204	53.03
10.000	0.364	3.257	2.617	5.874	3.076	65.63
15.000	0.518	4.637	2.201	6.838	2.112	76.40
20.000	0.653	5.844	1.787	7.631	1.319	85.26
25.000	0.768	6.872	1.375	8.247	0.703	92.15

ARIZONA DEPARTMENT OF TRANSPORTATION
DRAINAGE DESIGN SECTION

09-19-2002

PROJECT NAME- _____ TRACS NO.- _____
HIGHWAY NAME- _____ DESIGNER - RSR
LOCATION - Mod W/B 3207+60 CHECKER - _____ PAGE _____
Ver 3.40: December 1995

SLOTTED DRAIN W/ GRATE--ON GRADE

GUTTER FLOW HYDRAULICS
GUTTER DESCRIPTION

Roadway Grade-% Per cent--G	=	0.613
Roadway Cross-Slope-Ft./Ft.--Sx	=	0.020
Shoulder Width-Ft.--	=	10.000
Shoulder Slope-Ft./Ft.--Ss	=	0.020
Gutter Width-Ft.--W	=	2.500
Gutter Slope-Ft./Ft.--Sw	=	0.067
Gutter Depression-Inches--	=	2.001
Manning's 'N	=	0.016
Flow-CFS--Q	=	6.570 - 10 yr
SPREAD-Ft.--T	=	15.201 - 16' max
Average Velocity-V-fps	=	2.674
FLOW in Gutter-CFS--Q	=	3.022
% Flow in Gutter-CFS	=	46.002
Velocity of Flow in Gutter-fps	=	3.583
Depth at Curb Line-Inches--d	=	5.049

SLOTTED DRAIN--ADOT STD.--C13.60
GRATE TYPE: ADOT STD.--C15.91

Grate Length--Ft.	=	3.354
Grate Width---Ft.	=	2.000
Grate Area--Sq. Ft.	=	5.171
Splash-Over Velocity--FPS	=	10.531
Depth at INLET Curb Line-Inches--d	=	5.890
Local Gutter Depression-Inches	=	1.000
Length of opening: TOTAL Intercept--Ft.	=	27.010
Capture Ratio -- SLOTTED DRAIN	=	0.670
Capture Ratio -- GRATE	=	1.000

LENGTH	Efficiency	Q(S.D.)	Q(GRATE)	Q(INT.)	Q(By-Pass)	% CAPT.
5.000	0.308	2.025	3.551	5.576	0.994	84.87
10.000	0.565	3.712	2.507	6.218	0.352	94.65
15.000	0.767	5.042	1.480	6.523	0.047	99.28
20.000	0.912	5.990	0.580	6.570	0.000	100.00
25.000	0.991	6.509	0.061	6.570	0.000	100.00
30.000	1.000	6.570	0.000	6.570	0.000	100.00

ARIZONA DEPARTMENT OF TRANSPORTATION
DRAINAGE DESIGN SECTION

09-19-2002

PROJECT NAME- _____ TRACS NO.- _____
HIGHWAY NAME- _____ DESIGNER - RSR
LOCATION - MP WB 3207+60 CHECKER - (A) PAGE _____
Ver 3.40: December 1995

SLOTTED DRAIN W/ GRATE--ON GRADE

GUTTER FLOW HYDRAULICS
GUTTER DESCRIPTION

Roadway Grade-% Per cent--G	=	0.613
Roadway Cross-Slope-Ft./Ft.--Sx	=	0.020
Shoulder Width-Ft.--	=	10.000
Shoulder Slope-Ft./Ft.--Ss	=	0.020
Gutter Width-Ft.--W	=	2.500
Gutter Slope-Ft./Ft.--Sw	=	0.067
Gutter Depression-Inches--	=	2.001
Manning's 'N	=	0.016
Flow-CFS--Q	=	9.760
SPREAD-Ft.--T	=	17.878
Average Velocity-V-fps	=	2.920
FLOW in Gutter-CFS--Q	=	3.852
% Flow in Gutter-CFS	=	39.468
Velocity of Flow in Gutter-fps	=	3.941
Depth at Curb Line-Inches--d	=	5.692

SLOTTED DRAIN--ADOT STD.--C13.60
GRATE TYPE: ADOT STD.--C15.91

Grate Length--Ft.	=	3.354
Grate Width---Ft.	=	2.000
Grate Area--Sq. Ft.	=	5.171
Splash-Over Velocity--FPS	=	10.531
Depth at INLET Curb Line-Inches--d	=	6.559
Local Gutter Depression-Inches	=	1.000
Length of opening: TOTAL Intercept--Ft.	=	34.053
Capture Ratio -- SLOTTED DRAIN	=	0.670
Capture Ratio -- GRATE	=	1.000

LENGTH	Efficiency	Q(S.D.)	Q(GRATE)	Q(INT.)	Q(By-Pass)	% CAPT.
5.000	0.249	2.426	4.954	7.381	2.379	75.62
10.000	0.465	4.540	3.920	8.460	1.300	86.68
15.000	0.648	6.328	2.879	9.207	0.553	94.33
20.000	0.797	7.776	1.860	9.636	0.124	98.73
25.000	0.908	8.861	0.896	9.757	0.003	99.97
30.000	0.978	9.548	0.212	9.760	0.000	100.00

ARIZONA DEPARTMENT OF TRANSPORTATION
DRAINAGE DESIGN SECTION

09-19-2002

PROJECT NAME- _____ TRACS NO.- _____
HIGHWAY NAME- _____ DESIGNER - RSR
LOCATION - Mid WB 3208180 CHECKER - AV PAGE _____
Ver 3.40: December 1995

SLOTTED DRAIN W/ GRATE--ON GRADE

GUTTER FLOW HYDRAULICS
GUTTER DESCRIPTION

Roadway Grade-% Per cent--G	=	0.685
Roadway Cross-Slope-Ft./Ft.--Sx	=	0.020
Shoulder Width-Ft.--	=	10.000
Shoulder Slope-Ft./Ft.--Ss	=	0.020
Gutter Width-Ft.--W	=	2.500
Gutter Slope-Ft./Ft.--Sw	=	0.067
Gutter Depression-Inches--	=	2.001
Manning's 'N	=	0.016
Flow-CFS--Q	=	1.690 - 10yr
SPREAD-Ft.--T	=	7.988 - 8' Max
Average Velocity-V-fps	=	2.155
FLOW in Gutter-CFS--Q	=	1.290
% Flow in Gutter-CFS	=	76.327
Velocity of Flow in Gutter-fps	=	2.671
Depth at Curb Line-Inches--d	=	3.318

SLOTTED DRAIN--ADOT STD.--C13.60
GRATE TYPE: ADOT STD.--C15.91

Grate Length--Ft.	=	3.354
Grate Width---Ft.	=	2.000
Grate Area--Sq. Ft.	=	5.171
Splash-Over Velocity--FPS	=	10.531
Depth at INLET Curb Line-Inches--d	=	3.993
Local Gutter Depression-Inches	=	1.000
Length of opening: TOTAL Intercept--Ft.	=	12.596
Capture Ratio -- SLOTTED DRAIN	=	0.670
Capture Ratio -- GRATE	=	1.000

LENGTH	Efficiency	Q(S.D.)	Q(GRATE)	Q(INT.)	Q(By-Pass)	% CAPT.
5.000	0.598	1.010	0.680	1.690	0.000	99.98
10.000	0.942	1.592	0.098	1.690	0.000	100.00
15.000	1.000	1.690	0.000	1.690	0.000	100.00
20.000	1.000	1.690	0.000	1.690	0.000	100.00
25.000	1.000	1.690	0.000	1.690	0.000	100.00
30.000	1.000	1.690	0.000	1.690	0.000	100.00

ARIZONA DEPARTMENT OF TRANSPORTATION
DRAINAGE DESIGN SECTION

09-19-2002

PROJECT NAME- _____ TRACS NO.- _____
HIGHWAY NAME- _____ DESIGNER - RSR
LOCATION - Mad WB 32087+80 CHECKER - (A) PAGE _____
Ver 3.40: December 1995

SLOTTED DRAIN W/ GRATE--ON GRADE

GUTTER FLOW HYDRAULICS
GUTTER DESCRIPTION

Roadway Grade-% Per cent--G	=	0.685
Roadway Cross-Slope-Ft./Ft.--Sx	=	0.020
Shoulder Width-Ft.--	=	10.000
Shoulder Slope-Ft./Ft.--Ss	=	0.020
Gutter Width-Ft.--W	=	2.500
Gutter Slope-Ft./Ft.--Sw	=	0.067
Gutter Depression-Inches--	=	2.001
Manning's 'N	=	0.016
Flow-CFS--Q	=	2.450 - 50 yr
SPREAD-Ft.--T	=	9.603 -
Average Velocity-V-fps	=	2.294
FLOW in Gutter-CFS--Q	=	1.654
% Flow in Gutter-CFS	=	67.516
Velocity of Flow in Gutter-fps	=	2.935
Depth at Curb Line-Inches--d	=	3.706

SLOTTED DRAIN--ADOT STD.--C13.60
GRATE TYPE: ADOT STD.--C15.91

Grate Length--Ft.	=	3.354
Grate Width---Ft.	=	2.000
Grate Area--Sq. Ft.	=	5.171
Splash-Over Velocity--FPS	=	10.531
Depth at INLET Curb Line-Inches--d	=	4.440
Local Gutter Depression-Inches	=	1.000
Length of opening: TOTAL Intercept--Ft.	=	15.521
Capture Ratio -- SLOTTED DRAIN	=	0.670
Capture Ratio -- GRATE	=	1.000

LENGTH	Efficiency	Q(S.D.)	Q(GRATE)	Q(INT.)	Q(By-Pass)	% CAPT.
5.000	0.503	1.233	1.202	2.436	0.014	99.42
10.000	0.844	2.069	0.381	2.450	0.000	100.00
15.000	0.998	2.445	0.005	2.450	0.000	100.00
20.000	1.000	2.450	0.000	2.450	0.000	100.00
25.000	1.000	2.450	0.000	2.450	0.000	100.00
30.000	1.000	2.450	0.000	2.450	0.000	100.00

ARIZONA DEPARTMENT OF TRANSPORTATION
DRAINAGE DESIGN SECTION

09-19-2002

PROJECT NAME- _____ TRACS NO.- _____
HIGHWAY NAME- _____ DESIGNER - RSR
LOCATION - Mcd WB 3210+10 CHECKER - (A) PAGE _____
Ver 3.40: December 1995

SLOTTED DRAIN W/ GRATE--ON GRADE

GUTTER FLOW HYDRAULICS
GUTTER DESCRIPTION

Roadway Grade-% Per cent--G	=	0.749
Roadway Cross-Slope-Ft./Ft.--Sx	=	0.020
Shoulder Width-Ft.--	=	10.000
Shoulder Slope-Ft./Ft.--Ss	=	0.020
Gutter Width-Ft.--W	=	2.500
Gutter Slope-Ft./Ft.--Sw	=	0.067
Gutter Depression-Inches--	=	2.001
Manning's 'N	=	0.016
Flow-CFS--Q	=	1.850 10 yr
SPREAD-Ft.--T	=	8.179 - 8.8 max
Average Velocity-V-fps	=	2.270
FLOW in Gutter-CFS--Q	=	1.392
% Flow in Gutter-CFS	=	75.229
Velocity of Flow in Gutter-fps	=	2.826
Depth at Curb Line-Inches--d	=	3.364

SLOTTED DRAIN--ADOT STD.--C13.60
GRATE TYPE: ADOT STD.--C15.91

Grate Length--Ft.	=	3.354
Grate Width---Ft.	=	2.000
Grate Area--Sq. Ft.	=	5.171
Splash-Over Velocity--FPS	=	10.531
Depth at INLET Curb Line-Inches--d	=	4.047
Local Gutter Depression-Inches	=	1.000
Length of opening: TOTAL Intercept--Ft.	=	13.520
Capture Ratio -- SLOTTED DRAIN	=	0.670
Capture Ratio -- GRATE	=	1.000

LENGTH	Efficiency	Q(S.D.)	Q(GRATE)	Q(INT.)	Q(By-Pass)	% CAPT.
5.000	0.564	1.044	0.805	1.849	0.001	99.95
10.000	0.911	1.686	0.164	1.850	0.000	100.00
15.000	1.000	1.850	0.000	1.850	0.000	100.00
20.000	1.000	1.850	0.000	1.850	0.000	100.00
25.000	1.000	1.850	0.000	1.850	0.000	100.00
30.000	1.000	1.850	0.000	1.850	0.000	100.00

ARIZONA DEPARTMENT OF TRANSPORTATION
DRAINAGE DESIGN SECTION

09-19-2002

PROJECT NAME- _____ TRACS NO.- _____
HIGHWAY NAME- _____ DESIGNER - RSR
LOCATION - Mid WB 32 10+10 CHECKER - _____ PAGE _____
Ver 3.40: December 1995

SLOTTED DRAIN W/ GRATE--ON GRADE

GUTTER FLOW HYDRAULICS
GUTTER DESCRIPTION

Roadway Grade-% Per cent--G	=	0.749
Roadway Cross-Slope-Ft./Ft.--Sx	=	0.020
Shoulder Width-Ft.--	=	10.000
Shoulder Slope-Ft./Ft.--Ss	=	0.020
Gutter Width-Ft.--W	=	2.500
Gutter Slope-Ft./Ft.--Sw	=	0.067
Gutter Depression-Inches--	=	2.001
Manning's 'N	=	0.016
Flow-CFS--Q	=	2.560 50%
SPREAD-Ft.--T	=	9.600
Average Velocity-V-fps	=	2.398
FLOW in Gutter-CFS--Q	=	1.729
% Flow in Gutter-CFS	=	67.532
Velocity of Flow in Gutter-fps	=	3.068
Depth at Curb Line-Inches--d	=	3.705

SLOTTED DRAIN--ADOT STD.--C13.60
GRATE TYPE: ADOT STD.--C15.91

Grate Length--Ft.	=	3.354
Grate Width---Ft.	=	2.000
Grate Area--Sq. Ft.	=	5.171
Splash-Over Velocity--FPS	=	10.531
Depth at INLET Curb Line-Inches--d	=	4.440
Local Gutter Depression-Inches	=	1.000
Length of opening: TOTAL Intercept--Ft.	=	16.237
Capture Ratio -- SLOTTED DRAIN	=	0.670
Capture Ratio -- GRATE	=	1.000

LENGTH	Efficiency	Q(S.D.)	Q(GRATE)	Q(INT.)	Q(By-Pass)	% CAPT.
5.000	0.484	1.240	1.300	2.541	0.019	99.24
10.000	0.821	2.103	0.457	2.560	0.000	100.00
15.000	0.990	2.535	0.025	2.560	0.000	100.00
20.000	1.000	2.560	0.000	2.560	0.000	100.00
25.000	1.000	2.560	0.000	2.560	0.000	100.00
30.000	1.000	2.560	0.000	2.560	0.000	100.00

ARIZONA DEPARTMENT OF TRANSPORTATION
DRAINAGE DESIGN SECTION

09-23-2002

PROJECT NAME- _____ TRACS NO.- _____
HIGHWAY NAME- _____ DESIGNER - RSR
LOCATION - Med WB 3218+70 CHECKER - (A) PAGE _____
Ver 3.40: December 1995

SLOTTED DRAIN W/ GRATE--ON GRADE

GUTTER FLOW HYDRAULICS
GUTTER DESCRIPTION

Roadway Grade-% Per cent--G	=	0.613
Roadway Cross-Slope-Ft./Ft.--Sx	=	0.020
Shoulder Width-Ft.--	=	10.000
Shoulder Slope-Ft./Ft.--Ss	=	0.020
Gutter Width-Ft.--W	=	2.500
Gutter Slope-Ft./Ft.--Sw	=	0.067
Gutter Depression-Inches--	=	2.001
Manning's 'N	=	0.016
Flow-CFS--Q	=	7.400 -10yr
SPREAD-Ft.--T	=	15.969 -16' Max
Average Velocity-V-fps	=	2.745
FLOW in Gutter-CFS--Q	=	3.252
% Flow in Gutter-CFS	=	43.942
Velocity of Flow in Gutter-fps	=	3.687
Depth at Curb Line-Inches--d	=	5.233

SLOTTED DRAIN--ADOT STD.--C13.60
GRATE TYPE: ADOT STD.--C15.91

Grate Length--Ft.	=	3.354
Grate Width---Ft.	=	2.000
Grate Area--Sq. Ft.	=	5.171
Splash-Over Velocity--FPS	=	7.354
Depth at INLET Curb Line-Inches--d	=	6.083
Local Gutter Depression-Inches	=	1.000
Length of opening: TOTAL Intercept--Ft.	=	28.965
Capture Ratio -- SLOTTED DRAIN	=	0.670
Capture Ratio -- GRATE	=	0.500

LENGTH	Efficiency	Q(S.D.)	Q(GRATE)	Q(INT.)	Q(By-Pass)	% CAPT.
5.000	0.289	2.139	3.128	5.267	2.133	71.17
10.000	0.533	3.947	2.426	6.373	1.027	86.12
15.000	0.731	5.410	1.695	7.104	0.296	96.00
20.000	0.879	6.504	0.886	7.389	0.011	99.86
25.000	0.972	7.194	0.206	7.400	0.000	100.00
30.000	1.000	7.400	0.000	7.400	0.000	100.00

ARIZONA DEPARTMENT OF TRANSPORTATION
DRAINAGE DESIGN SECTION

09-23-2002

PROJECT NAME- _____ TRACS NO.- _____
HIGHWAY NAME- _____ DESIGNER - RSR
LOCATION - Med WB 3218+70 CHECKER - AJ PAGE _____
Ver 3.40: December 1995

SLOTTED DRAIN W/ GRATE--ON GRADE

GUTTER FLOW HYDRAULICS
GUTTER DESCRIPTION

Roadway Grade-% Per cent--G	=	0.613
Roadway Cross-Slope-Ft./Ft.--Sx	=	0.020
Shoulder Width-Ft.--	=	10.000
Shoulder Slope-Ft./Ft.--Ss	=	0.020
Gutter Width-Ft.--W	=	2.500
Gutter Slope-Ft./Ft.--Sw	=	0.067
Gutter Depression-Inches--	=	2.001
Manning's 'N	=	0.016
Flow-CFS--Q	=	10.220 - 50yr
SPREAD-Ft.--T	=	18.214
Average Velocity-V-fps	=	2.951
FLOW in Gutter-CFS--Q	=	3.962
% Flow in Gutter-CFS	=	38.766
Velocity of Flow in Gutter-fps	=	3.985
Depth at Curb Line-Inches--d	=	5.772

SLOTTED DRAIN--ADOT STD.--C13.60
GRATE TYPE: ADOT STD.--C15.91

Grate Length--Ft.	=	3.354
Grate Width---Ft.	=	2.000
Grate Area--Sq. Ft.	=	5.171
Splash-Over Velocity--FPS	=	7.354
Depth at INLET Curb Line-Inches--d	=	6.642
Local Gutter Depression-Inches	=	1.000
Length of opening: TOTAL Intercept--Ft.	=	34.977
Capture Ratio -- SLOTTED DRAIN	=	0.670
Capture Ratio -- GRATE	=	0.500

LENGTH	Efficiency	Q(S.D.)	Q(GRATE)	Q(INT.)	Q(By-Pass)	% CAPT.
5.000	0.242	2.478	3.910	6.388	3.832	62.50
10.000	0.455	4.645	3.236	7.881	2.339	77.11
15.000	0.635	6.491	2.547	9.037	1.183	88.43
20.000	0.783	8.000	1.827	9.827	0.393	96.16
25.000	0.895	9.151	1.041	10.192	0.028	99.73
30.000	0.970	9.914	0.306	10.220	0.000	100.00

ARIZONA DEPARTMENT OF TRANSPORTATION
DRAINAGE DESIGN SECTION

09-23-2002

PROJECT NAME- _____ TRACS NO.- _____
HIGHWAY NAME- _____ DESIGNER - RSR
LOCATION - McD WB 3223+60 CHECKER - AP PAGE _____
Ver 3.40: December 1995

SLOTTED DRAIN W/ GRATE--ON GRADE

GUTTER FLOW HYDRAULICS
GUTTER DESCRIPTION

Roadway Grade-% Per cent--G	=	0.530
Roadway Cross-Slope-Ft./Ft.--Sx	=	0.020
Shoulder Width-Ft.--	=	10.000
Shoulder Slope-Ft./Ft.--Ss	=	0.020
Gutter Width-Ft.--W	=	2.500
Gutter Slope-Ft./Ft.--Sw	=	0.067
Gutter Depression-Inches--	=	2.001
Manning's 'N	=	0.016
Flow-CFS--Q	=	6.810 - 10yr
SPREAD-Ft.--T	=	15.904 - 16' Max
Average Velocity-V-fps	=	2.545
FLOW in Gutter-CFS--Q	=	3.004
% Flow in Gutter-CFS	=	44.109
Velocity of Flow in Gutter-fps	=	3.419
Depth at Curb Line-Inches--d	=	5.218

SLOTTED DRAIN--ADOT STD.--C13.60
GRATE TYPE: ADOT STD.--C15.91

Grate Length--Ft.	=	3.354
Grate Width---Ft.	=	2.000
Grate Area--Sq. Ft.	=	5.171
Splash-Over Velocity--FPS	=	7.354
Depth at INLET Curb Line-Inches--d	=	6.067
Local Gutter Depression-Inches	=	1.000
Length of opening: TOTAL Intercept--Ft.	=	26.725
Capture Ratio -- SLOTTED DRAIN	=	0.670
Capture Ratio -- GRATE	=	0.500

LENGTH	Efficiency	Q(S.D.)	Q(GRATE)	Q(INT.)	Q(By-Pass)	% CAPT.
5.000	0.311	2.119	2.878	4.998	1.812	73.39
10.000	0.570	3.881	2.134	6.015	0.795	88.32
15.000	0.773	5.264	1.393	6.658	0.152	97.76
20.000	0.917	6.242	0.568	6.809	0.001	99.99
25.000	0.993	6.761	0.049	6.810	0.000	100.00
30.000	1.000	6.810	0.000	6.810	0.000	100.00

ARIZONA DEPARTMENT OF TRANSPORTATION
DRAINAGE DESIGN SECTION

09-23-2002

PROJECT NAME- _____ TRACS NO.- _____
HIGHWAY NAME- _____ DESIGNER - RSR
LOCATION - McQ WB 3223+60 CHECKER - A PAGE _____
Ver 3.40: December 1995

SLOTTED DRAIN W/ GRATE--ON GRADE

GUTTER FLOW HYDRAULICS
GUTTER DESCRIPTION

Roadway Grade-% Per cent--G	=	0.530
Roadway Cross-Slope-Ft./Ft.--Sx	=	0.020
Shoulder Width-Ft.--	=	10.000
Shoulder Slope-Ft./Ft.--Ss	=	0.020
Gutter Width-Ft.--W	=	2.500
Gutter Slope-Ft./Ft.--Sw	=	0.067
Gutter Depression-Inches--	=	2.001
Manning's 'N	=	0.016
Flow-CFS--Q	=	10.170 -50yr
SPREAD-Ft.--T	=	18.722 -22' max
Average Velocity-V-fps	=	2.786
FLOW in Gutter-CFS--Q	=	3.839
% Flow in Gutter-CFS	=	37.744
Velocity of Flow in Gutter-fps	=	3.765
Depth at Curb Line-Inches--d	=	5.894

SLOTTED DRAIN--ADOT STD.--C13.60
GRATE TYPE: ADOT STD.--C15.91

Grate Length--Ft.	=	3.354
Grate Width---Ft.	=	2.000
Grate Area--Sq. Ft.	=	5.171
Splash-Over Velocity--FPS	=	7.354
Depth at INLET Curb Line-Inches--d	=	6.768
Local Gutter Depression-Inches	=	1.000
Length of opening: TOTAL Intercept--Ft.	=	33.773
Capture Ratio -- SLOTTED DRAIN	=	0.670
Capture Ratio -- GRATE	=	0.500

LENGTH	Efficiency	Q(S.D.)	Q(GRATE)	Q(INT.)	Q(By-Pass)	% CAPT.
5.000	0.251	2.548	3.817	6.365	3.805	62.59
10.000	0.468	4.764	3.129	7.894	2.276	77.62
15.000	0.653	6.636	2.426	9.062	1.108	89.11
20.000	0.801	8.146	1.691	9.837	0.333	96.72
25.000	0.912	9.271	0.885	10.156	0.014	99.87
30.000	0.981	9.973	0.197	10.170	0.000	100.00

ARIZONA DEPARTMENT OF TRANSPORTATION
DRAINAGE DESIGN SECTION

09-24-2002

PROJECT NAME- _____ TRACS NO.- _____
HIGHWAY NAME- _____ DESIGNER - RSR
LOCATION - Mel WB 3225+39 CHECKER - AD PAGE _____
Ver 3.40: December 1995

GRATE INLET DESIGN -- ON GRADE

GUTTER FLOW HYDRAULICS
GUTTER DESCRIPTION

Roadway Grade-% Per cent--G	=	0.844
Roadway Cross-Slope-Ft./Ft.--Sx	=	0.031
Shoulder Width-Ft.--	=	10.000
Shoulder Slope-Ft./Ft.--Ss	=	0.031
Gutter Width-Ft.--W	=	2.500
Gutter Slope-Ft./Ft.--Sw	=	0.067
Gutter Depression-Inches--	=	2.001
Manning's 'N	=	0.016
Flow-CFS--Q	=	1.740 -10yr ,
SPREAD-Ft.--T	=	6.130 -11.75 max
Average Velocity-V-fps	=	2.536 Flanking Inlet
FLOW in Gutter-CFS--Q	=	1.442
% Flow in Gutter-CFS	=	82.892
Velocity of Flow in Gutter-fps	=	2.973
Depth at Curb Line-Inches--d	=	3.329

GRATE TYPE: ADOT STD.--C15.91

Grate Length--Ft.	=	3.354
Grate Width---Ft.	=	2.000
Grate Area--Sq. Ft.	=	5.171
Capture Ratio -- GRATE	=	0.500
Effective Perimeter--Ft.	=	7.354
Splash-Over Velocity--FPS	=	7.354
Local Gutter Depression-Inches	=	1.000
Flow-CFS--Q	=	1.740
GUTTER FLOW at INLET-CFS--Q	=	1.620
Gutter Velocity at INLET-fps	=	3.178
Depth at INLET Curb Line-Inches--d	=	3.947
Frontal Flow Intercepted by GRATE--CFS	=	1.520
Lateral Flow Intercepted by GRATE--CFS	=	0.091
TOTAL Flow Intercepted by GRATE--CFS	=	1.612
% FLOW Intercepted	=	92.626
By-pass Flow--CFS	=	0.128

ARIZONA DEPARTMENT OF TRANSPORTATION
DRAINAGE DESIGN SECTION

09-24-2002

PROJECT NAME- _____ TRACS NO.- _____
HIGHWAY NAME- _____ DESIGNER - RSR
LOCATION - MeD WB 3225+39 CHECKER - (A) PAGE _____
Ver 3.40: December 1995

GRATE INLET DESIGN -- ON GRADE

GUTTER FLOW HYDRAULICS
GUTTER DESCRIPTION

Roadway Grade-% Per cent--G	=	0.844
Roadway Cross-Slope-Ft./Ft.--Sx	=	0.031
Shoulder Width-Ft.--	=	10.000
Shoulder Slope-Ft./Ft.--Ss	=	0.031
Gutter Width-Ft.--W	=	2.500
Gutter Slope-Ft./Ft.--Sw	=	0.067
Gutter Depression-Inches--	=	2.001
Manning's 'N	=	0.016
Flow-CFS--Q	=	3.580 - 50 yr
SPREAD-Ft.--T	=	8.537
Average Velocity-V-fps	=	2.923
FLOW in Gutter-CFS--Q	=	2.423
% Flow in Gutter-CFS	=	67.695
Velocity of Flow in Gutter-fps	=	3.624
Depth at Curb Line-Inches--d	=	4.211

GRATE TYPE: ADOT STD.--C15.91

Grate Length--Ft.	=	3.354
Grate Width---Ft.	=	2.000
Grate Area--Sq. Ft.	=	5.171
Capture Ratio -- GRATE	=	0.500
Effective Perimeter--Ft.	=	7.354
Splash-Over Velocity--FPS	=	7.354
Local Gutter Depression-Inches	=	1.000
Flow-CFS--Q	=	3.580
GUTTER FLOW at INLET-CFS--Q	=	2.764
Gutter Velocity at INLET-fps	=	3.859
Depth at INLET Curb Line-Inches--d	=	4.939
Frontal Flow Intercepted by GRATE--CFS	=	2.502
Lateral Flow Intercepted by GRATE--CFS	=	0.236
TOTAL Flow Intercepted by GRATE--CFS	=	2.739
% FLOW Intercepted	=	76.497
By-pass Flow--CFS	=	0.841

ARIZONA DEPARTMENT OF TRANSPORTATION
DRAINAGE DESIGN SECTION

09-24-2002

PROJECT NAME- _____ TRACS NO.- _____
HIGHWAY NAME- _____ DESIGNER - RSR
LOCATION - Med WB 3225+81.92 CHECKER - (A) PAGE _____
Ver 3.40: December 1995

SLOTTED DRAIN W/ GRATE--IN SUMP

GUTTER FLOW HYDRAULICS

GUTTER DESCRIPTION

Roadway Cross-Slope-Ft./Ft.--Sx	=	0.036
Shoulder Width-Ft.--	=	10.000
Shoulder Slope-Ft./Ft.--Ss	=	0.036
Gutter Width-Ft.--W	=	2.500
Gutter Slope-Ft./Ft.--Sw	=	0.067
Gutter Depression-Inches--	=	2.001

GRATE TYPE: ADOT STD.--C15.91

Grate Length--Ft.	=	3.354
Grate Width---Ft.	=	2.000
Grate Area--Sq. Ft.	=	5.171
Effective Perimeter--Ft.	=	7.354
Capture Ratio -- GRATE	=	0.500
Capture Ratio -- SLOTTED DRAIN	=	0.670
Local Gutter Depression-Inches	=	1.000
Flow-CFS--Q	=	3.340 -10yr

LENGTH	Q(Slot. Dn)	Q(Grate)	d(inches)	SPREAD,Ft.
5.000	1.901	1.437	3.721	6.481
10.000	2.562	0.779	2.628	3.951
15.000	2.864	0.478	1.982	2.477
20.000	3.013	0.328	1.547	1.932
25.000	3.243	0.097	1.305	1.630

Use 25' of slotted drain on North side of catch basin
Use 5' of slotted drain on South side of catch basin
Total of 30' slotted Drain

ARIZONA DEPARTMENT OF TRANSPORTATION
DRAINAGE DESIGN SECTION

09-24-2002

PROJECT NAME- _____ TRACS NO.- _____
HIGHWAY NAME- _____ DESIGNER - RSR
LOCATION - Mcd WB 3225+81.92 CHECKER - (A) PAGE _____
Ver 3.40: December 1995

SLOTTED DRAIN W/ GRATE--IN SUMP

GUTTER FLOW HYDRAULICS

GUTTER DESCRIPTION

Roadway Cross-Slope-Ft./Ft.--Sx	=	0.036
Shoulder Width-Ft.--	=	10.000
Shoulder Slope-Ft./Ft.--Ss	=	0.036
Gutter Width-Ft.--W	=	2.500
Gutter Slope-Ft./Ft.--Sw	=	0.067
Gutter Depression-Inches--	=	2.001

GRATE TYPE: ADOT STD.--C15.91

Grate Length--Ft.	=	3.354
Grate Width---Ft.	=	2.000
Grate Area--Sq. Ft.	=	5.171
Effective Perimeter--Ft.	=	7.354
Capture Ratio -- GRATE	=	0.500
Capture Ratio -- SLOTTED DRAIN	=	0.670
Local Gutter Depression-Inches	=	1.000
Flow-CFS--Q	=	5.880 50 yr

LENGTH	Q(Slot. Dn)	Q(Grate)	d(inches)	SPREAD,Ft.
5.000	2.432	3.448	6.213	12.249
10.000	4.121	1.758	4.178	7.540
15.000	4.781	1.101	3.197	5.268
20.000	5.107	0.774	2.620	3.933
25.000	5.309	0.571	2.202	2.964

ARIZONA DEPARTMENT OF TRANSPORTATION
DRAINAGE DESIGN SECTION

09-24-2002

PROJECT NAME- _____ TRACS NO.- _____
HIGHWAY NAME- _____ DESIGNER - RSR
LOCATION - Mel WB 3225 +81.92 CHECKER - (A) PAGE _____
Ver 3.40: December 1995

GUTTER FLOW HYDRAULICS
GUTTER DESCRIPTION

Roadway Grade-% Per cent--G	=	0.758
Roadway Cross-Slope-Ft./Ft.--Sx	=	0.035
Shoulder Width-Ft.--	=	10.000
Shoulder Slope-Ft./Ft.--Ss	=	0.035
Gutter Width-Ft.--W	=	2.500
Gutter Slope-Ft./Ft.--Sw	=	0.067
Gutter Depression-Inches--	=	2.001
Manning's 'N	=	0.016
Flow-CFS--Q	=	0.760 - 10yr
SPREAD-Ft.--T	=	3.837 - 11.75 max
Average Velocity-V-fps	=	2.123
FLOW in Gutter-CFS--Q	=	0.735
% Flow in Gutter-CFS	=	96.686
Velocity of Flow in Gutter-fps	=	2.251
Depth at Curb Line-Inches--d	=	2.567

Calc used to check spread at upstream end of slotted drain sta 3225+74.92

Use 5' slotted drain on south side of catch Basin

ARIZONA DEPARTMENT OF TRANSPORTATION
DRAINAGE DESIGN SECTION

09-24-2002

PROJECT NAME- _____ TRACS NO.- _____
HIGHWAY NAME- _____ DESIGNER - RSR
LOCATION - Med WB 3225+81.92 CHECKER - (A) PAGE _____
Ver 3.40: December 1995

GUTTER FLOW HYDRAULICS
GUTTER DESCRIPTION

Roadway Grade-% Per cent--G	=	0.064
Roadway Cross-Slope-Ft./Ft.--Sx	=	0.036
Shoulder Width-Ft.--	=	10.000
Shoulder Slope-Ft./Ft.--Ss	=	0.036
Gutter Width-Ft.--W	=	2.500
Gutter Slope-Ft./Ft.--Sw	=	0.067
Gutter Depression-Inches--	=	2.001
Manning's 'N	=	0.016
Flow-CFS--Q	=	2.580 -10yr
SPREAD-Ft.--T	=	11.536- 11.75' Max
Average Velocity-V-fps	=	1.036
FLOW in Gutter-CFS--Q	=	1.344
% Flow in Gutter-CFS	=	52.090
Velocity of Flow in Gutter-fps	=	1.315
Depth at Curb Line-Inches--d	=	5.904 -6" Max

Calc used to check gutter spread at upstream end of slotted drain sta 3226+08.92
Use 25' slotted drain on north side of catch basin

ARIZONA DEPARTMENT OF TRANSPORTATION
DRAINAGE DESIGN SECTION

09-24-2002

PROJECT NAME- _____ TRACS NO.- _____
HIGHWAY NAME- _____ DESIGNER - RSR
LOCATION - Mad WB 3227+46 CHECKER - _____ PAGE _____
Ver 3.40: December 1995

SLOTTED DRAIN W/ GRATE--ON GRADE

GUTTER FLOW HYDRAULICS
GUTTER DESCRIPTION

Roadway Grade-% Per cent--G	=	0.392
Roadway Cross-Slope-Ft./Ft.--Sx	=	0.036
Shoulder Width-Ft.--	=	10.000
Shoulder Slope-Ft./Ft.--Ss	=	0.036
Gutter Width-Ft.--W	=	2.500
Gutter Slope-Ft./Ft.--Sw	=	0.067
Gutter Depression-Inches--	=	2.001
Manning's 'N	=	0.016
Flow-CFS--Q	=	3.510
SPREAD-Ft.--T	=	9.065
Average Velocity-V-fps	=	2.228
FLOW in Gutter-CFS--Q	=	2.211
% Flow in Gutter-CFS	=	62.983
Velocity of Flow in Gutter-fps	=	2.766
Depth at Curb Line-Inches--d	=	4.837

SLOTTED DRAIN--ADOT STD.--C13.60
GRATE TYPE: ADOT STD.--C15.91

Grate Length--Ft.	=	3.354
Grate Width---Ft.	=	2.000
Grate Area--Sq. Ft.	=	5.171
Splash-Over Velocity--FPS	=	7.354
Depth at INLET Curb Line-Inches--d	=	5.591
Local Gutter Depression-Inches	=	1.000
Length of opening: TOTAL Intercept--Ft.	=	15.491
Capture Ratio -- SLOTTED DRAIN	=	0.670
Capture Ratio -- GRATE	=	0.500

LENGTH	Efficiency	Q(S.D.)	Q(GRATE)	Q(INT.)	Q(By-Pass)	% CAPT.
5.000	0.504	1.770	1.550	3.320	0.190	94.58
10.000	0.845	2.967	0.542	3.509	0.001	99.97
15.000	0.998	3.503	0.007	3.510	0.000	100.00
20.000	1.000	3.510	0.000	3.510	0.000	100.00
25.000	1.000	3.510	0.000	3.510	0.000	100.00
30.000	1.000	3.510	0.000	3.510	0.000	100.00

ARIZONA DEPARTMENT OF TRANSPORTATION
DRAINAGE DESIGN SECTION

09-24-2002

PROJECT NAME- _____ TRACS NO.- _____
HIGHWAY NAME- _____ DESIGNER - _____
LOCATION - McD WB 3227+96 CHECKER - (A) PAGE _____
Ver 3.40: December 1995

SLOTTED DRAIN W/ GRATE--ON GRADE

GUTTER FLOW HYDRAULICS
GUTTER DESCRIPTION

Roadway Grade-% Per cent--G	=	0.392
Roadway Cross-Slope-Ft./Ft.--Sx	=	0.036
Shoulder Width-Ft.--	=	10.000
Shoulder Slope-Ft./Ft.--Ss	=	0.036
Gutter Width-Ft.--W	=	2.500
Gutter Slope-Ft./Ft.--Sw	=	0.067
Gutter Depression-Inches--	=	2.001
Manning's 'N	=	0.016
Flow-CFS--Q	=	5.740
SPREAD-Ft.--T	=	11.074
Average Velocity-V-fps	=	2.492
FLOW in Gutter-CFS--Q	=	3.092
% Flow in Gutter-CFS	=	53.874
Velocity of Flow in Gutter-fps	=	3.155
Depth at Curb Line-Inches--d	=	5.705

SLOTTED DRAIN--ADOT STD.--C13.60
GRATE TYPE: ADOT STD.--C15.91

Grate Length--Ft.	=	3.354
Grate Width---Ft.	=	2.000
Grate Area--Sq. Ft.	=	5.171
Splash-Over Velocity--FPS	=	7.354
Depth at INLET Curb Line-Inches--d	=	6.505
Local Gutter Depression-Inches	=	1.000
Length of opening: TOTAL Intercept--Ft.	=	20.079
Capture Ratio -- SLOTTED DRAIN	=	0.670
Capture Ratio -- GRATE	=	0.500

LENGTH	Efficiency	Q(S.D.)	Q(GRATE)	Q(INT.)	Q(By-Pass)	% CAPT.
5.000	0.403	2.312	2.559	4.871	0.869	84.86
10.000	0.711	4.080	1.493	5.573	0.167	97.09
15.000	0.916	5.257	0.483	5.740	0.000	99.99
20.000	1.000	5.740	0.000	5.740	0.000	100.00
25.000	1.000	5.740	0.000	5.740	0.000	100.00
30.000	1.000	5.740	0.000	5.740	0.000	100.00

ARIZONA DEPARTMENT OF TRANSPORTATION
DRAINAGE DESIGN SECTION

09-24-2002

PROJECT NAME- _____ TRACS NO.- _____
HIGHWAY NAME- _____ DESIGNER - RSR
LOCATION - Med WB 3228+50 CHECKER - (A) PAGE _____
Ver 3.40: December 1995

SLOTTED DRAIN W/ GRATE--ON GRADE

GUTTER FLOW HYDRAULICS
GUTTER DESCRIPTION

Roadway Grade-% Per cent--G	=	0.640
Roadway Cross-Slope-Ft./Ft.--Sx	=	0.036
Shoulder Width-Ft.--	=	10.000
Shoulder Slope-Ft./Ft.--Ss	=	0.036
Gutter Width-Ft.--W	=	2.500
Gutter Slope-Ft./Ft.--Sw	=	0.067
Gutter Depression-Inches--	=	2.001
Manning's 'N	=	0.016
Flow-CFS--Q	=	8.340 - 10yr
SPREAD-Ft.--T	=	11.656 - 11.75' max
Average Velocity-V-fps	=	3.282
FLOW in Gutter-CFS--Q	=	4.308
% Flow in Gutter-CFS	=	51.651
Velocity of Flow in Gutter-fps	=	4.172
Depth at Curb Line-Inches--d	=	5.956 - 6" max

SLOTTED DRAIN--ADOT STD.--C13.60
GRATE TYPE: ADOT STD.--C15.91

Grate Length--Ft.	=	3.354
Grate Width---Ft.	=	2.000
Grate Area--Sq. Ft.	=	5.171
Splash-Over Velocity--FPS	=	7.354
Depth at INLET Curb Line-Inches--d	=	6.767
Local Gutter Depression-Inches	=	1.000
Length of opening: TOTAL Intercept--Ft.	=	27.594
Capture Ratio -- SLOTTED DRAIN	=	0.670
Capture Ratio -- GRATE	=	0.500

LENGTH	Efficiency	Q(S.D.)	Q(GRATE)	Q(INT.)	Q(By-Pass)	% CAPT.
5.000	0.302	2.520	3.790	6.310	2.030	75.66
10.000	0.555	4.630	2.799	7.429	0.911	89.08
15.000	0.756	6.308	1.803	8.111	0.229	97.25
20.000	0.902	7.522	0.812	8.335	0.005	99.94
25.000	0.986	8.222	0.118	8.340	0.000	100.00
30.000	1.000	8.340	0.000	8.340	0.000	100.00

ARIZONA DEPARTMENT OF TRANSPORTATION
DRAINAGE DESIGN SECTION

09-24-2002

PROJECT NAME- _____ TRACS NO.- _____
HIGHWAY NAME- _____ DESIGNER - RSR
LOCATION -MoD WB 3228+50 CHECKER - A PAGE _____
Ver 3.40: December 1995

SLOTTED DRAIN W/ GRATE--ON GRADE

GUTTER FLOW HYDRAULICS
GUTTER DESCRIPTION

Roadway Grade-% Per cent--G	=	0.640
Roadway Cross-Slope-Ft./Ft.--Sx	=	0.036
Shoulder Width-Ft.--	=	10.000
Shoulder Slope-Ft./Ft.--Ss	=	0.036
Gutter Width-Ft.--W	=	2.500
Gutter Slope-Ft./Ft.--Sw	=	0.067
Gutter Depression-Inches--	=	2.001
Manning's 'N	=	0.016
Flow-CFS--Q	=	11.520 -50yr
SPREAD-Ft.--T	=	13.246
Average Velocity-V-fps	=	3.540
FLOW in Gutter-CFS--Q	=	5.339
% Flow in Gutter-CFS	=	46.347
Velocity of Flow in Gutter-fps	=	4.542
Depth at Curb Line-Inches--d	=	6.643

SLOTTED DRAIN--ADOT STD.--C13.60
GRATE TYPE: ADOT STD.--C15.91

Grate Length--Ft.	=	3.354
Grate Width---Ft.	=	2.000
Grate Area--Sq. Ft.	=	5.171
Splash-Over Velocity--FPS	=	7.354
Depth at INLET Curb Line-Inches--d	=	7.478
Local Gutter Depression-Inches	=	1.000
Length of opening: TOTAL Intercept--Ft.	=	32.697
Capture Ratio -- SLOTTED DRAIN	=	0.670
Capture Ratio -- GRATE	=	0.500

LENGTH	Efficiency	Q(S.D.)	Q(GRATE)	Q(INT.)	Q(By-Pass)	% CAPT.
5.000	0.258	2.975	4.854	7.829	3.691	67.96
10.000	0.482	5.548	3.854	9.403	2.117	81.62
15.000	0.669	7.704	2.854	10.559	0.961	91.65
20.000	0.818	9.421	1.849	11.270	0.250	97.83
25.000	0.926	10.667	0.846	11.513	0.007	99.94
30.000	0.989	11.391	0.129	11.520	0.000	100.00

ARIZONA DEPARTMENT OF TRANSPORTATION
DRAINAGE DESIGN SECTION

10-01-2002

PROJECT NAME- _____ TRACS NO.- _____
HIGHWAY NAME- _____ DESIGNER - RSR
LOCATION - Ned WB 3242+30 CHECKER - _____ PAGE _____
Ver 3.40: December 1995

SLOTTED DRAIN W/ GRATE--ON GRADE

GUTTER FLOW HYDRAULICS
GUTTER DESCRIPTION

Roadway Grade-% Per cent--G	=	1.480
Roadway Cross-Slope-Ft./Ft.--Sx	=	0.036
Shoulder Width-Ft.--	=	10.000
Shoulder Slope-Ft./Ft.--Ss	=	0.036
Gutter Width-Ft.--W	=	2.500
Gutter Slope-Ft./Ft.--Sw	=	0.067
Gutter Depression-Inches--	=	2.001
Manning's 'N	=	0.016
Flow-CFS--Q	=	12.960 - 10 yr
SPREAD-Ft.--T	=	11.757 - 11.75' max
Average Velocity-V-fps	=	5.015
FLOW in Gutter-CFS--Q	=	6.646
% Flow in Gutter-CFS	=	51.280
Velocity of Flow in Gutter-fps	=	6.381
Depth at Curb Line-Inches--d	=	6.000 - 6" max

SLOTTED DRAIN--ADOT STD.--C13.60
GRATE TYPE: ADOT STD.--C15.91

Grate Length--Ft.	=	3.354
Grate Width---Ft.	=	2.000
Grate Area--Sq. Ft.	=	5.171
Splash-Over Velocity--FPS	=	7.354
Depth at INLET Curb Line-Inches--d	=	6.812
Local Gutter Depression-Inches	=	1.000
Length of opening: TOTAL Intercept--Ft.	=	42.798
Capture Ratio -- SLOTTED DRAIN	=	0.670
Capture Ratio -- GRATE	=	0.500

LENGTH	Efficiency	Q(S.D.)	Q(GRATE)	Q(INT.)	Q(By-Pass)	% CAPT.
5.000	0.200	2.597	6.012	8.609	4.351	66.43
10.000	0.381	4.933	5.108	10.040	2.920	77.47
15.000	0.540	7.000	4.203	11.202	1.758	86.44
20.000	0.678	8.789	3.293	12.082	0.878	93.23
25.000	0.794	10.289	2.375	12.664	0.296	97.71
30.000	0.886	11.485	1.443	12.928	0.032	99.75

ARIZONA DEPARTMENT OF TRANSPORTATION
DRAINAGE DESIGN SECTION

10-01-2002

PROJECT NAME- _____ TRACS NO.- _____
HIGHWAY NAME- McD WB 3242+30 DESIGNER - RSR
LOCATION - _____ CHECKER - _____ PAGE _____
Ver 3.40: December 1995

SLOTTED DRAIN W/ GRATE--ON GRADE

GUTTER FLOW HYDRAULICS
GUTTER DESCRIPTION

Roadway Grade-% Per cent--G	=	1.480
Roadway Cross-Slope-Ft./Ft.--Sx	=	0.036
Shoulder Width-Ft.--	=	10.000
Shoulder Slope-Ft./Ft.--Ss	=	0.036
Gutter Width-Ft.--W	=	2.500
Gutter Slope-Ft./Ft.--Sw	=	0.067
Gutter Depression-Inches--	=	2.001
Manning's 'N	=	0.016
Flow-CFS--Q	=	18.290 - 50 yr
SPREAD-Ft.--T	=	13.473
Average Velocity-V-fps	=	5.438
FLOW in Gutter-CFS--Q	=	8.353
% Flow in Gutter-CFS	=	45.671
Velocity of Flow in Gutter-fps	=	6.984
Depth at Curb Line-Inches--d	=	6.741

SLOTTED DRAIN--ADOT STD.--C13.60
GRATE TYPE: ADOT STD.--C15.91

Grate Length--Ft.	=	3.354
Grate Width---Ft.	=	2.000
Grate Area--Sq. Ft.	=	5.171
Splash-Over Velocity--FPS	=	7.354
Depth at INLET Curb Line-Inches--d	=	7.578
Local Gutter Depression-Inches	=	1.000
Length of opening: TOTAL Intercept--Ft.	=	51.283
Capture Ratio -- SLOTTED DRAIN	=	0.670
Capture Ratio -- GRATE	=	0.500

LENGTH	Efficiency	Q(S.D.)	Q(GRATE)	Q(INT.)	Q(By-Pass)	% CAPT.
5.000	0.169	3.084	7.640	10.724	7.566	58.63
10.000	0.323	5.912	6.722	12.635	5.655	69.08
15.000	0.464	8.479	5.796	14.274	4.016	78.04
20.000	0.589	10.777	4.893	15.670	2.620	85.68
25.000	0.700	12.799	3.978	16.777	1.513	91.73
30.000	0.795	14.534	3.058	17.592	0.698	96.18

ARIZONA DEPARTMENT OF TRANSPORTATION
DRAINAGE DESIGN SECTION

10-01-2002

PROJECT NAME- _____ TRACS NO.- _____
HIGHWAY NAME- _____ DESIGNER - RSR
LOCATION - Med WB 3251+58 CHECKER - CA PAGE _____
Ver 3.40: December 1995

SLOTTED DRAIN W/ GRATE--ON GRADE

GUTTER FLOW HYDRAULICS
GUTTER DESCRIPTION

Roadway Grade-% Per cent--G	=	1.511	
Roadway Cross-Slope-Ft./Ft.--Sx	=	0.020	
Shoulder Width-Ft.--	=	10.000	
Shoulder Slope-Ft./Ft.--Ss	=	0.020	
Gutter Width-Ft.--W	=	4.500	
Gutter Slope-Ft./Ft.--Sw	=	0.037	
Gutter Depression-Inches--	=	1.998	
Manning's 'N	=	0.016	
Flow-CFS--Q	=	5.200	-10 yr
SPREAD-Ft.--T	=	11.224	
Average Velocity-V-fps	=	3.631	-6" max
FLOW in Gutter-CFS--Q	=	4.179	Located adjacent
% Flow in Gutter-CFS	=	80.363	To EB catch basin
Velocity of Flow in Gutter-fps	=	4.265	
Depth at Curb Line-Inches--d	=	3.612	

SLOTTED DRAIN--ADOT STD.--C13.60
GRATE TYPE: ADOT STD.--C15.92

Grate Length--Ft.	=	3.350
Grate Width---Ft.	=	2.000
Grate Area--Sq. Ft.	=	5.590
Splash-Over Velocity--FPS	=	7.350
Depth at INLET Curb Line-Inches--d	=	3.290
Local Gutter Depression-Inches	=	0.000
Length of opening: TOTAL Intercept--Ft.	=	46.537
Capture Ratio -- SLOTTED DRAIN	=	0.670
Capture Ratio -- GRATE	=	0.500

LENGTH	Efficiency	Q(S.D.)	Q(GRATE)	Q(INT.)	Q(By-Pass)	% CAPT.
15.000	0.504	2.619	1.710	4.328	0.872	83.23
20.000	0.636	3.308	1.368	4.676	0.524	89.93
25.000	0.750	3.901	1.029	4.930	0.270	94.80
30.000	0.845	4.392	0.708	5.100	0.100	98.08
35.000	0.919	4.778	0.411	5.189	0.011	99.79
40.000	0.971	5.048	0.152	5.200	0.000	100.00

ARIZONA DEPARTMENT OF TRANSPORTATION
DRAINAGE DESIGN SECTION

10-01-2002

PROJECT NAME- _____ TRACS NO.- _____
HIGHWAY NAME- _____ DESIGNER - RSR
LOCATION - McD VB 3251+58 CHECKER - (A) PAGE _____
Ver 3.40: December 1995

SLOTTED DRAIN W/ GRATE--ON GRADE

GUTTER FLOW HYDRAULICS
GUTTER DESCRIPTION

Roadway Grade-% Per cent--G	=	1.511
Roadway Cross-Slope-Ft./Ft.--Sx	=	0.020
Shoulder Width-Ft.--	=	10.000
Shoulder Slope-Ft./Ft.--Ss	=	0.020
Gutter Width-Ft.--W	=	4.500
Gutter Slope-Ft./Ft.--Sw	=	0.037
Gutter Depression-Inches--	=	1.998
Manning's 'N	=	0.016
Flow-CFS--Q	=	7.190 - 50yr
SPREAD-Ft.--T	=	12.956
Average Velocity-V-fps	=	3.885
FLOW in Gutter-CFS--Q	=	5.308
% Flow in Gutter-CFS	=	73.831
Velocity of Flow in Gutter-fps	=	4.674
Depth at Curb Line-Inches--d	=	4.028

SLOTTED DRAIN--ADOT STD.--C13.60
GRATE TYPE: ADOT STD.--C15.92

Grate Length--Ft.	=	3.350
Grate Width---Ft.	=	2.000
Grate Area--Sq. Ft.	=	5.590
Splash-Over Velocity--FPS	=	7.350
Depth at INLET Curb Line-Inches--d	=	0.995
Local Gutter Depression-Inches	=	0.000
Length of opening: TOTAL Intercept--Ft.	=	54.406
Capture Ratio -- SLOTTED DRAIN	=	0.670
Capture Ratio -- GRATE	=	0.500

LENGTH	Efficiency	Q(S.D.)	Q(GRATE)	Q(INT.)	Q(By-Pass)	% CAPT.
15.000	0.440	3.167	2.311	5.478	1.712	76.18
20.000	0.562	4.039	1.962	6.001	1.189	83.46
25.000	0.670	4.815	1.612	6.427	0.763	89.39
30.000	0.764	5.492	1.263	6.755	0.435	93.95
35.000	0.844	6.066	0.917	6.983	0.207	97.12
40.000	0.909	6.532	0.601	7.134	0.056	99.21

ARIZONA DEPARTMENT OF TRANSPORTATION
DRAINAGE DESIGN SECTION

09-30-2002

PROJECT NAME- _____ TRACS NO.- _____
HIGHWAY NAME- _____ DESIGNER - BSR
LOCATION - ML WB 256+20 CHECKER - (A) PAGE _____
Ver 3.40: December 1995

SLOTTED DRAIN W/ GRATE--ON GRADE

GUTTER FLOW HYDRAULICS
GUTTER DESCRIPTION

Roadway Grade-% Per cent--G	=	1.418
Roadway Cross-Slope-Ft./Ft.--Sx	=	0.008
Shoulder Width-Ft.--	=	10.000
Shoulder Slope-Ft./Ft.--Ss	=	0.008
Gutter Width-Ft.--W	=	2.500
Gutter Slope-Ft./Ft.--Sw	=	0.021
Gutter Depression-Inches--	=	0.624
Manning's 'N	=	0.016
Flow-CFS--Q	=	0.460 -100%
SPREAD-Ft.--T	=	7.854 -8' max
Average Velocity-V-fps	=	1.574
FLOW in Gutter-CFS--Q	=	0.338
% Flow in Gutter-CFS	=	73.516
Velocity of Flow in Gutter-fps	=	1.935
Depth at Curb Line-Inches--d	=	1.151

SLOTTED DRAIN--ADOT STD.--C13.60
GRATE TYPE: ADOT STD.--C15.91

Grate Length--Ft.	=	3.354
Grate Width---Ft.	=	2.000
Grate Area--Sq. Ft.	=	5.171
Splash-Over Velocity--FPS	=	7.354
Depth at INLET Curb Line-Inches--d	=	1.755
Local Gutter Depression-Inches	=	1.000
Length of opening: TOTAL Intercept--Ft.	=	12.444
Capture Ratio -- SLOTTED DRAIN	=	0.670
Capture Ratio -- GRATE	=	0.500

LENGTH	Efficiency	Q(S.D.)	Q(GRATE)	Q(INT.)	Q(By-Pass)	% CAPT.
5.000	0.603	0.278	0.182	0.460	0.000	100.00
10.000	0.947	0.435	0.025	0.460	0.000	100.00
15.000	1.000	0.460	0.000	0.460	0.000	100.00
20.000	1.000	0.460	0.000	0.460	0.000	100.00
25.000	1.000	0.460	0.000	0.460	0.000	100.00
30.000	1.000	0.460	0.000	0.460	0.000	100.00

ARIZONA DEPARTMENT OF TRANSPORTATION
DRAINAGE DESIGN SECTION

09-30-2002

PROJECT NAME- _____ TRACS NO.- _____
HIGHWAY NAME- _____ DESIGNER - RSR
LOCATION - ML WB 256+20 CHECKER - A PAGE _____
Ver 3.40: December 1995

SLOTTED DRAIN W/ GRATE--ON GRADE

GUTTER FLOW HYDRAULICS
GUTTER DESCRIPTION

Roadway Grade-% Per cent--G	=	1.418
Roadway Cross-Slope-Ft./Ft.--Sx	=	0.008
Shoulder Width-Ft.--	=	10.000
Shoulder Slope-Ft./Ft.--Ss	=	0.008
Gutter Width-Ft.--W	=	2.500
Gutter Slope-Ft./Ft.--Sw	=	0.021
Gutter Depression-Inches--	=	0.624
Manning's 'N	=	0.016
Flow-CFS--Q	=	0.700
SPREAD-Ft.--T	=	9.503
Average Velocity-V-fps	=	1.709
FLOW in Gutter-CFS--Q	=	0.451
% Flow in Gutter-CFS	=	64.379
Velocity of Flow in Gutter-fps	=	2.161
Depth at Curb Line-Inches--d	=	1.313

SLOTTED DRAIN--ADOT STD.--C13.60
GRATE TYPE: ADOT STD.--C15.91

Grate Length--Ft.	=	3.354
Grate Width---Ft.	=	2.000
Grate Area--Sq. Ft.	=	5.171
Splash-Over Velocity--FPS	=	7.354
Depth at INLET Curb Line-Inches--d	=	2.009
Local Gutter Depression-Inches	=	1.000
Length of opening: TOTAL Intercept--Ft.	=	15.387
Capture Ratio -- SLOTTED DRAIN	=	0.670
Capture Ratio -- GRATE	=	0.500

LENGTH	Efficiency	Q(S.D.)	Q(GRATE)	Q(INT.)	Q(By-Pass)	% CAPT.
5.000	0.507	0.355	0.344	0.699	0.001	99.89
10.000	0.849	0.594	0.106	0.700	0.000	100.00
15.000	0.999	0.699	0.001	0.700	0.000	100.00
20.000	1.000	0.700	0.000	0.700	0.000	100.00
25.000	1.000	0.700	0.000	0.700	0.000	100.00
30.000	1.000	0.700	0.000	0.700	0.000	100.00

ARIZONA DEPARTMENT OF TRANSPORTATION
DRAINAGE DESIGN SECTION

09-30-2002

PROJECT NAME- _____ TRACS NO.- _____
HIGHWAY NAME- _____ DESIGNER - RSR
LOCATION - ML WB 256+61 CHECKER - AJ PAGE _____
Ver 3.40: December 1995

SLOTTED DRAIN W/ GRATE--ON GRADE

GUTTER FLOW HYDRAULICS
GUTTER DESCRIPTION

Roadway Grade-% Per cent--G	=	1.407
Roadway Cross-Slope-Ft./Ft.--Sx	=	0.012
Shoulder Width-Ft.--	=	10.000
Shoulder Slope-Ft./Ft.--Ss	=	0.012
Gutter Width-Ft.--W	=	2.500
Gutter Slope-Ft./Ft.--Sw	=	0.021
Gutter Depression-Inches--	=	0.624
Manning's 'N	=	0.016
Flow-CFS--Q	=	0.790 - 10yr
SPREAD-Ft.--T	=	7.963 - 8' max
Average Velocity-V-fps	=	1.897
FLOW in Gutter-CFS--Q	=	0.538
% Flow in Gutter-CFS	=	68.097
Velocity of Flow in Gutter-fps	=	2.309
Depth at Curb Line-Inches--d	=	1.430

SLOTTED DRAIN--ADOT STD.--C13.60
GRATE TYPE: ADOT STD.--C15.91

Grate Length--Ft.	=	3.354
Grate Width---Ft.	=	2.000
Grate Area--Sq. Ft.	=	5.171
Splash-Over Velocity--FPS	=	7.354
Depth at INLET Curb Line-Inches--d	=	2.106
Local Gutter Depression-Inches	=	1.000
Length of opening: TOTAL Intercept--Ft.	=	16.140
Capture Ratio -- SLOTTED DRAIN	=	0.670
Capture Ratio -- GRATE	=	0.500

LENGTH	Efficiency	Q(S.D.)	Q(GRATE)	Q(INT.)	Q(By-Pass)	% CAPT.
5.000	0.487	0.385	0.403	0.787	0.003	99.66
10.000	0.824	0.651	0.139	0.790	0.000	100.00
15.000	0.992	0.783	0.007	0.790	0.000	100.00
20.000	1.000	0.790	0.000	0.790	0.000	100.00
25.000	1.000	0.790	0.000	0.790	0.000	100.00
30.000	1.000	0.790	0.000	0.790	0.000	100.00

ARIZONA DEPARTMENT OF TRANSPORTATION
DRAINAGE DESIGN SECTION

09-30-2002

PROJECT NAME- _____ TRACS NO.- _____
HIGHWAY NAME- _____ DESIGNER - RSR
LOCATION - ML WB 256+61 CHECKER - (A) PAGE _____
Ver 3.40: December 1995

SLOTTED DRAIN W/ GRATE--ON GRADE

GUTTER FLOW HYDRAULICS
GUTTER DESCRIPTION

Roadway Grade-% Per cent--G	=	1.407
Roadway Cross-Slope-Ft./Ft.--Sx	=	0.012
Shoulder Width-Ft.--	=	10.000
Shoulder Slope-Ft./Ft.--Ss	=	0.012
Gutter Width-Ft.--W	=	2.500
Gutter Slope-Ft./Ft.--Sw	=	0.021
Gutter Depression-Inches--	=	0.624
Manning's 'N	=	0.016
Flow-CFS--Q	=	1.230 - 50yr
SPREAD-Ft.--T	=	9.541
Average Velocity-V-fps	=	2.097
FLOW in Gutter-CFS--Q	=	0.734
% Flow in Gutter-CFS	=	59.686
Velocity of Flow in Gutter-fps	=	2.608
Depth at Curb Line-Inches--d	=	1.663

SLOTTED DRAIN--ADOT STD.--C13.60
GRATE TYPE: ADOT STD.--C15.91

Grate Length--Ft.	=	3.354
Grate Width---Ft.	=	2.000
Grate Area--Sq. Ft.	=	5.171
Splash-Over Velocity--FPS	=	7.354
Depth at INLET Curb Line-Inches--d	=	2.403
Local Gutter Depression-Inches	=	1.000
Length of opening: TOTAL Intercept--Ft.	=	20.528
Capture Ratio -- SLOTTED DRAIN	=	0.670
Capture Ratio -- GRATE	=	0.500

LENGTH	Efficiency	Q(S.D.)	Q(GRATE)	Q(INT.)	Q(By-Pass)	% CAPT.
5.000	0.395	0.486	0.686	1.172	0.058	95.28
10.000	0.699	0.860	0.368	1.228	0.002	99.87
15.000	0.906	1.114	0.116	1.230	0.000	100.00
20.000	0.999	1.228	0.002	1.230	0.000	100.00
25.000	1.000	1.230	0.000	1.230	0.000	100.00
30.000	1.000	1.230	0.000	1.230	0.000	100.00

ARIZONA DEPARTMENT OF TRANSPORTATION
DRAINAGE DESIGN SECTION

09-30-2002

PROJECT NAME- _____ TRACS NO.- _____
HIGHWAY NAME- _____ DESIGNER - BSR
LOCATION - ML WB 257+30 CHECKER - (A) PAGE _____
Ver 3.40: December 1995

SLOTTED DRAIN W/ GRATE--ON GRADE

GUTTER FLOW HYDRAULICS
GUTTER DESCRIPTION

Roadway Grade-% Per cent--G	=	1.387
Roadway Cross-Slope-Ft./Ft.--Sx	=	0.019
Shoulder Width-Ft.--	=	10.000
Shoulder Slope-Ft./Ft.--Ss	=	0.019
Gutter Width-Ft.--W	=	2.500
Gutter Slope-Ft./Ft.--Sw	=	0.021
Gutter Depression-Inches--	=	0.624
Manning's 'N	=	0.016
Flow-CFS--Q	=	1.480 - 10 yr
SPREAD-Ft.--T	=	8.005 - 8' max
Average Velocity-V-fps	=	2.386
FLOW in Gutter-CFS--Q	=	0.944
% Flow in Gutter-CFS	=	63.750
Velocity of Flow in Gutter-fps	=	2.866
Depth at Curb Line-Inches--d	=	1.892

SLOTTED DRAIN--ADOT STD.--C13.60
GRATE TYPE: ADOT STD.--C15.91

Grate Length--Ft.	=	3.354
Grate Width---Ft.	=	2.000
Grate Area--Sq. Ft.	=	5.171
Splash-Over Velocity--FPS	=	7.354
Depth at INLET Curb Line-Inches--d	=	2.610
Local Gutter Depression-Inches	=	1.000
Length of opening: TOTAL Intercept--Ft.	=	21.717
Capture Ratio -- SLOTTED DRAIN	=	0.670
Capture Ratio -- GRATE	=	0.500

LENGTH	Efficiency	Q(S.D.)	Q(GRATE)	Q(INT.)	Q(By-Pass)	% CAPT.
5.000	0.376	0.556	0.827	1.383	0.097	93.46
10.000	0.671	0.993	0.479	1.472	0.008	99.46
15.000	0.879	1.301	0.179	1.480	0.000	100.00
20.000	0.990	1.465	0.015	1.480	0.000	100.00
25.000	1.000	1.480	0.000	1.480	0.000	100.00
30.000	1.000	1.480	0.000	1.480	0.000	100.00

ARIZONA DEPARTMENT OF TRANSPORTATION
DRAINAGE DESIGN SECTION

09-30-2002

PROJECT NAME- _____ TRACS NO.- _____
HIGHWAY NAME- _____ DESIGNER - RSR
LOCATION - ML WB 257+30 CHECKER - AJ PAGE _____
Ver 3.40: December 1995

SLOTTED DRAIN W/ GRATE--ON GRADE

GUTTER FLOW HYDRAULICS
GUTTER DESCRIPTION

Roadway Grade-% Per cent--G	=	1.387
Roadway Cross-Slope-Ft./Ft.--Sx	=	0.019
Shoulder Width-Ft.--	=	10.000
Shoulder Slope-Ft./Ft.--Ss	=	0.019
Gutter Width-Ft.--W	=	2.500
Gutter Slope-Ft./Ft.--Sw	=	0.021
Gutter Depression-Inches--	=	0.624
Manning's 'N	=	0.016
Flow-CFS--Q	=	2.420 - 50yr
SPREAD-Ft.--T	=	9.644
Average Velocity-V-fps	=	2.695
FLOW in Gutter-CFS--Q	=	1.345
% Flow in Gutter-CFS	=	55.586
Velocity of Flow in Gutter-fps	=	3.298
Depth at Curb Line-Inches--d	=	2.270

SLOTTED DRAIN--ADOT STD.--C13.60
GRATE TYPE: ADOT STD.--C15.91

Grate Length--Ft.	=	3.354
Grate Width---Ft.	=	2.000
Grate Area--Sq. Ft.	=	5.171
Splash-Over Velocity--FPS	=	7.354
Depth at INLET Curb Line-Inches--d	=	3.040
Local Gutter Depression-Inches	=	1.000
Length of opening: TOTAL Intercept--Ft.	=	28.105
Capture Ratio -- SLOTTED DRAIN	=	0.670
Capture Ratio -- GRATE	=	0.500

LENGTH	Efficiency	Q(S.D.)	Q(GRATE)	Q(INT.)	Q(By-Pass)	% CAPT.
5.000	0.297	0.719	1.289	2.008	0.412	82.96
10.000	0.547	1.323	0.943	2.266	0.154	93.63
15.000	0.747	1.807	0.590	2.397	0.023	99.04
20.000	0.893	2.162	0.258	2.420	0.000	100.00
25.000	0.981	2.374	0.046	2.420	0.000	100.00
30.000	1.000	2.420	0.000	2.420	0.000	100.00

ARIZONA DEPARTMENT OF TRANSPORTATION
DRAINAGE DESIGN SECTION

09-30-2002

PROJECT NAME- _____ TRACS NO.- _____
HIGHWAY NAME- _____ DESIGNER - RSR
LOCATION - ML WB 258+43 CHECKER - (A) PAGE _____
Ver 3.40: December 1995

SLOTTED DRAIN W/ GRATE--ON GRADE

GUTTER FLOW HYDRAULICS
GUTTER DESCRIPTION

Roadway Grade-% Per cent--G	=	1.358
Roadway Cross-Slope-Ft./Ft.--Sx	=	0.031
Shoulder Width-Ft.--	=	10.000
Shoulder Slope-Ft./Ft.--Ss	=	0.031
Gutter Width-Ft.--W	=	2.500
Gutter Slope-Ft./Ft.--Sw	=	0.021
Gutter Depression-Inches--	=	0.624
Manning's 'N	=	0.016
Flow-CFS--Q	=	2.850 - 10 yr
SPREAD-Ft.--T	=	7.922 - 8' max
Average Velocity-V-fps	=	3.066
FLOW in Gutter-CFS--Q	=	1.742
% Flow in Gutter-CFS	=	61.127
Velocity of Flow in Gutter-fps	=	3.631
Depth at Curb Line-Inches--d	=	2.615

SLOTTED DRAIN--ADOT STD.--C13.60
GRATE TYPE: ADOT STD.--C15.91

Grate Length--Ft.	=	3.354
Grate Width---Ft.	=	2.000
Grate Area--Sq. Ft.	=	5.171
Splash-Over Velocity--FPS	=	7.354
Depth at INLET Curb Line-Inches--d	=	3.355
Local Gutter Depression-Inches	=	1.000
Length of opening: TOTAL Intercept--Ft.	=	28.357
Capture Ratio -- SLOTTED DRAIN	=	0.670
Capture Ratio -- GRATE	=	0.500

LENGTH	Efficiency	Q(S.D.)	Q(GRATE)	Q(INT.)	Q(By-Pass)	% CAPT.
5.000	0.295	0.840	1.539	2.379	0.471	83.49
10.000	0.543	1.547	1.111	2.658	0.192	93.25
15.000	0.742	2.115	0.695	2.810	0.040	98.59
20.000	0.889	2.534	0.316	2.850	0.000	99.99
25.000	0.979	2.789	0.061	2.850	0.000	100.00
30.000	1.000	2.850	0.000	2.850	0.000	100.00

ARIZONA DEPARTMENT OF TRANSPORTATION
DRAINAGE DESIGN SECTION

09-30-2002

PROJECT NAME- _____ TRACS NO.- _____
HIGHWAY NAME- _____ DESIGNER - RSR
LOCATION - ML WB 258+43 CHECKER - (A) PAGE _____
Ver 3.40: December 1995

SLOTTED DRAIN W/ GRATE--ON GRADE

GUTTER FLOW HYDRAULICS
GUTTER DESCRIPTION

Roadway Grade-% Per cent--G	=	1.358
Roadway Cross-Slope-Ft./Ft.--Sx	=	0.031
Shoulder Width-Ft.--	=	10.000
Shoulder Slope-Ft./Ft.--Ss	=	0.031
Gutter Width-Ft.--W	=	2.500
Gutter Slope-Ft./Ft.--Sw	=	0.021
Gutter Depression-Inches--	=	0.624
Manning's 'N	=	0.016
Flow-CFS--Q	=	4.380 - 50yr
SPREAD-Ft.--T	=	9.247
Average Velocity-V-fps	=	3.428
FLOW in Gutter-CFS--Q	=	2.395
% Flow in Gutter-CFS	=	54.686
Velocity of Flow in Gutter-fps	=	4.122
Depth at Curb Line-Inches--d	=	3.101

SLOTTED DRAIN--ADOT STD.--C13.60
GRATE TYPE: ADOT STD.--C15.91

Grate Length--Ft.	=	3.354
Grate Width---Ft.	=	2.000
Grate Area--Sq. Ft.	=	5.171
Splash-Over Velocity--FPS	=	7.354
Depth at INLET Curb Line-Inches--d	=	3.879
Local Gutter Depression-Inches	=	1.000
Length of opening: TOTAL Intercept--Ft.	=	34.848
Capture Ratio -- SLOTTED DRAIN	=	0.670
Capture Ratio -- GRATE	=	0.500

LENGTH	Efficiency	Q(S.D.)	Q(GRATE)	Q(INT.)	Q(By-Pass)	% CAPT.
5.000	0.243	1.066	2.198	3.264	1.116	74.51
10.000	0.456	1.997	1.742	3.739	0.641	85.36
15.000	0.637	2.790	1.294	4.083	0.297	93.23
20.000	0.785	3.437	0.858	4.294	0.086	98.05
25.000	0.897	3.930	0.445	4.375	0.005	99.88
30.000	0.971	4.254	0.126	4.380	0.000	100.00

ARIZONA DEPARTMENT OF TRANSPORTATION
DRAINAGE DESIGN SECTION

09-30-2002

PROJECT NAME- _____ TRACS NO.- _____
HIGHWAY NAME- _____ DESIGNER - RSR
LOCATION - ML WB 260+58 CHECKER - (A) PAGE _____
Ver 3.40: December 1995

SLOTTED DRAIN W/ GRATE--ON GRADE

GUTTER FLOW HYDRAULICS
GUTTER DESCRIPTION

Roadway Grade-% Per cent--G	=	1.300
Roadway Cross-Slope-Ft./Ft.--Sx	=	0.036
Shoulder Width-Ft.--	=	10.000
Shoulder Slope-Ft./Ft.--Ss	=	0.036
Gutter Width-Ft.--W	=	2.500
Gutter Slope-Ft./Ft.--Sw	=	0.021
Gutter Depression-Inches--	=	0.624
Manning's 'N	=	0.016
Flow-CFS--Q	=	3.580-10yr
SPREAD-Ft.--T	=	7.923-8' max
Average Velocity-V-fps	=	3.308
FLOW in Gutter-CFS--Q	=	2.158
% Flow in Gutter-CFS	=	60.284
Velocity of Flow in Gutter-fps	=	3.902
Depth at Curb Line-Inches--d	=	2.967-3" max

SLOTTED DRAIN--ADOT STD.--C13.60
GRATE TYPE: ADOT STD.--C15.91

Grate Length--Ft.	=	3.354
Grate Width---Ft.	=	2.000
Grate Area--Sq. Ft.	=	5.171
Splash-Over Velocity--FPS	=	7.354
Depth at INLET Curb Line-Inches--d	=	3.713
Local Gutter Depression-Inches	=	1.000
Length of opening: TOTAL Intercept--Ft.	=	30.423
Capture Ratio -- SLOTTED DRAIN	=	0.670
Capture Ratio -- GRATE	=	0.500

LENGTH	Efficiency	Q(S.D.)	Q(GRATE)	Q(INT.)	Q(By-Pass)	% CAPT.
5.000	0.276	0.989	1.890	2.879	0.701	80.41
10.000	0.512	1.833	1.408	3.241	0.339	90.53
15.000	0.706	2.526	0.944	3.470	0.110	96.93
20.000	0.855	3.059	0.510	3.569	0.011	99.69
25.000	0.955	3.419	0.161	3.580	0.000	100.00
30.000	1.000	3.578	0.002	3.580	0.000	100.00

ARIZONA DEPARTMENT OF TRANSPORTATION
DRAINAGE DESIGN SECTION

09-30-2002

PROJECT NAME- _____ TRACS NO.- _____
HIGHWAY NAME- _____ DESIGNER - RSR
LOCATION - ML WB 260+58 CHECKER - (A) PAGE _____
Ver 3.40: December 1995

SLOTTED DRAIN W/ GRATE--ON GRADE

GUTTER FLOW HYDRAULICS
GUTTER DESCRIPTION

Roadway Grade-% Per cent--G	=	1.300
Roadway Cross-Slope-Ft./Ft.--Sx	=	0.036
Shoulder Width-Ft.--	=	10.000
Shoulder Slope-Ft./Ft.--Ss	=	0.036
Gutter Width-Ft.--W	=	2.500
Gutter Slope-Ft./Ft.--Sw	=	0.021
Gutter Depression-Inches--	=	0.624
Manning's 'N	=	0.016
Flow-CFS--Q	=	5.350 - 50yr
SPREAD-Ft.--T	=	9.137
Average Velocity-V-fps	=	3.676
FLOW in Gutter-CFS--Q	=	2.913
% Flow in Gutter-CFS	=	54.444
Velocity of Flow in Gutter-fps	=	4.398
Depth at Curb Line-Inches--d	=	3.491

SLOTTED DRAIN--ADOT STD.--C13.60
GRATE TYPE: ADOT STD.--C15.91

Grate Length--Ft.	=	3.354
Grate Width---Ft.	=	2.000
Grate Area--Sq. Ft.	=	5.171
Splash-Over Velocity--FPS	=	7.354
Depth at INLET Curb Line-Inches--d	=	4.271
Local Gutter Depression-Inches	=	1.000
Length of opening: TOTAL Intercept--Ft.	=	36.635
Capture Ratio -- SLOTTED DRAIN	=	0.670
Capture Ratio -- GRATE	=	0.500

LENGTH	Efficiency	Q(S.D.)	Q(GRATE)	Q(INT.)	Q(By-Pass)	% CAPT.
5.000	0.232	1.242	2.628	3.870	1.480	72.33
10.000	0.437	2.336	2.109	4.445	0.905	83.08
15.000	0.613	3.277	1.603	4.880	0.470	91.21
20.000	0.759	4.058	1.113	5.171	0.179	96.66
25.000	0.873	4.671	0.649	5.320	0.030	99.44
30.000	0.954	5.103	0.247	5.350	0.000	100.00

ARIZONA DEPARTMENT OF TRANSPORTATION
DRAINAGE DESIGN SECTION

09-30-2002

PROJECT NAME- _____ TRACS NO.- _____
HIGHWAY NAME- _____ DESIGNER - RSR
LOCATION - ML WB 263+11 CHECKER - (A) PAGE _____
Ver 3.40: December 1995

SLOTTED DRAIN W/ GRATE--ON GRADE

GUTTER FLOW HYDRAULICS
GUTTER DESCRIPTION

Roadway Grade-% Per cent--G	=	1.294
Roadway Cross-Slope-Ft./Ft.--Sx	=	0.036
Shoulder Width-Ft.--	=	10.000
Shoulder Slope-Ft./Ft.--Ss	=	0.036
Gutter Width-Ft.--W	=	2.500
Gutter Slope-Ft./Ft.--Sw	=	0.021
Gutter Depression-Inches--	=	0.624
Manning's 'N	=	0.016
Flow-CFS--Q	=	3.360 - 10 yr
SPREAD-Ft.--T	=	7.754 - 8' max
Average Velocity-V-fps	=	3.247
FLOW in Gutter-CFS--Q	=	2.056
% Flow in Gutter-CFS	=	61.192
Velocity of Flow in Gutter-fps	=	3.823
Depth at Curb Line-Inches--d	=	2.894 - 3" max

SLOTTED DRAIN--ADOT STD.--C13.60
GRATE TYPE: ADOT STD.--C15.91

Grate Length--Ft.	=	3.354
Grate Width---Ft.	=	2.000
Grate Area--Sq. Ft.	=	5.171
Splash-Over Velocity--FPS	=	7.354
Depth at INLET Curb Line-Inches--d	=	3.635
Local Gutter Depression-Inches	=	1.000
Length of opening: TOTAL Intercept--Ft.	=	29.508
Capture Ratio -- SLOTTED DRAIN	=	0.670
Capture Ratio -- GRATE	=	0.500

LENGTH	Efficiency	Q(S.D.)	Q(GRATE)	Q(INT.)	Q(By-Pass)	% CAPT.
5.000	0.284	0.955	1.789	2.743	0.617	81.65
10.000	0.525	1.765	1.313	3.078	0.282	91.59
15.000	0.721	2.424	0.855	3.279	0.081	97.60
20.000	0.870	2.922	0.433	3.355	0.005	99.85
25.000	0.966	3.246	0.114	3.360	0.000	100.00
30.000	1.000	3.360	0.000	3.360	0.000	100.00

ARIZONA DEPARTMENT OF TRANSPORTATION
DRAINAGE DESIGN SECTION

09-30-2002

PROJECT NAME- _____ TRACS NO.- _____
HIGHWAY NAME- _____ DESIGNER - BSR
LOCATION - ML WB 263+11 CHECKER - (A) PAGE _____
Ver 3.40: December 1995

SLOTTED DRAIN W/ GRATE--ON GRADE

GUTTER FLOW HYDRAULICS
GUTTER DESCRIPTION

Roadway Grade-% Per cent--G	=	1.294
Roadway Cross-Slope-Ft./Ft.--Sx	=	0.036
Shoulder Width-Ft.--	=	10.000
Shoulder Slope-Ft./Ft.--Ss	=	0.036
Gutter Width-Ft.--W	=	2.500
Gutter Slope-Ft./Ft.--Sw	=	0.021
Gutter Depression-Inches--	=	0.624
Manning's 'N	=	0.016
Flow-CFS--Q	=	5.060 -50yr
SPREAD-Ft.--T	=	8.964
Average Velocity-V-fps	=	3.617
FLOW in Gutter-CFS--Q	=	2.794
% Flow in Gutter-CFS	=	55.209
Velocity of Flow in Gutter-fps	=	4.319
Depth at Curb Line-Inches--d	=	3.417

SLOTTED DRAIN--ADOT STD.--C13.60
GRATE TYPE: ADOT STD.--C15.91

Grate Length--Ft.	=	3.354
Grate Width---Ft.	=	2.000
Grate Area--Sq. Ft.	=	5.171
Splash-Over Velocity--FPS	=	7.354
Depth at INLET Curb Line-Inches--d	=	4.192
Local Gutter Depression-Inches	=	1.000
Length of opening: TOTAL Intercept--Ft.	=	35.659
Capture Ratio -- SLOTTED DRAIN	=	0.670
Capture Ratio -- GRATE	=	0.500

LENGTH	Efficiency	Q(S.D.)	Q(GRATE)	Q(INT.)	Q(By-Pass)	% CAPT.
5.000	0.238	1.205	2.512	3.717	1.343	73.45
10.000	0.447	2.262	1.998	4.260	0.800	84.18
15.000	0.626	3.166	1.497	4.663	0.397	92.15
20.000	0.773	3.910	1.014	4.923	0.137	97.30
25.000	0.886	4.484	0.559	5.043	0.017	99.67
30.000	0.964	4.876	0.184	5.060	0.000	100.00

ARIZONA DEPARTMENT OF TRANSPORTATION
DRAINAGE DESIGN SECTION

09-30-2002

PROJECT NAME- _____ TRACS NO.- _____
HIGHWAY NAME- _____ DESIGNER - RSR
LOCATION - ML WB 265+60 CHECKER - A PAGE _____
Ver 3.40: December 1995

SLOTTED DRAIN W/ GRATE--ON GRADE

GUTTER FLOW HYDRAULICS
GUTTER DESCRIPTION

Roadway Grade-% Per cent--G	=	1.294	
Roadway Cross-Slope-Ft./Ft.--Sx	=	0.036	
Shoulder Width-Ft.--	=	10.000	
Shoulder Slope-Ft./Ft.--Ss	=	0.036	
Gutter Width-Ft.--W	=	2.500	
Gutter Slope-Ft./Ft.--Sw	=	0.021	
Gutter Depression-Inches--	=	0.624	
Manning's 'N	=	0.016	
Flow-CFS--Q	=	3.550	-10yr
SPREAD-Ft.--T	=	7.905	-8' max
Average Velocity-V-fps	=	3.295	
FLOW in Gutter-CFS--Q	=	2.143	
% Flow in Gutter-CFS	=	60.376	
Velocity of Flow in Gutter-fps	=	3.887	
Depth at Curb Line-Inches--d	=	2.959	-3" max

SLOTTED DRAIN--ADOT STD.--C13.60
GRATE TYPE: ADOT STD.--C15.91

Grate Length--Ft.	=	3.354
Grate Width---Ft.	=	2.000
Grate Area--Sq. Ft.	=	5.171
Splash-Over Velocity--FPS	=	7.354
Depth at INLET Curb Line-Inches--d	=	3.705
Local Gutter Depression-Inches	=	1.000
Length of opening: TOTAL Intercept--Ft.	=	30.268
Capture Ratio -- SLOTTED DRAIN	=	0.670
Capture Ratio -- GRATE	=	0.500

LENGTH	Efficiency	Q(S.D.)	Q(GRATE)	Q(INT.)	Q(By-Pass)	% CAPT.
5.000	0.277	0.985	1.875	2.860	0.690	80.57
10.000	0.514	1.825	1.394	3.219	0.331	90.68
15.000	0.708	2.514	0.930	3.445	0.105	97.03
20.000	0.857	3.043	0.497	3.540	0.010	99.72
25.000	0.957	3.397	0.153	3.550	0.000	100.00
30.000	1.000	3.549	0.001	3.550	0.000	100.00

ARIZONA DEPARTMENT OF TRANSPORTATION
DRAINAGE DESIGN SECTION

09-30-2002

PROJECT NAME- _____ TRACS NO.- _____
HIGHWAY NAME- _____ DESIGNER - RSR
LOCATION - ML WB 265+60 CHECKER - (A) PAGE _____
Ver 3.40: December 1995

SLOTTED DRAIN W/ GRATE--ON GRADE

GUTTER FLOW HYDRAULICS
GUTTER DESCRIPTION

Roadway Grade-% Per cent--G	=	1.294
Roadway Cross-Slope-Ft./Ft.--Sx	=	0.036
Shoulder Width-Ft.--	=	10.000
Shoulder Slope-Ft./Ft.--Ss	=	0.036
Gutter Width-Ft.--W	=	2.500
Gutter Slope-Ft./Ft.--Sw	=	0.021
Gutter Depression-Inches--	=	0.624
Manning's 'N	=	0.016
Flow-CFS--Q	=	5.260-50yr
SPREAD-Ft.--T	=	9.089
Average Velocity-V-fps	=	3.654
FLOW in Gutter-CFS--Q	=	2.875
% Flow in Gutter-CFS	=	54.655
Velocity of Flow in Gutter-fps	=	4.369
Depth at Curb Line-Inches--d	=	3.471

SLOTTED DRAIN--ADOT STD.--C13.60
GRATE TYPE: ADOT STD.--C15.91

Grate Length--Ft.	=	3.354
Grate Width---Ft.	=	2.000
Grate Area--Sq. Ft.	=	5.171
Splash-Over Velocity--FPS	=	7.354
Depth at INLET Curb Line-Inches--d	=	4.249
Local Gutter Depression-Inches	=	1.000
Length of opening: TOTAL Intercept--Ft.	=	36.304
Capture Ratio -- SLOTTED DRAIN	=	0.670
Capture Ratio -- GRATE	=	0.500

LENGTH	Efficiency	Q(S.D.)	Q(GRATE)	Q(INT.)	Q(By-Pass)	% CAPT.
5.000	0.234	1.231	2.591	3.822	1.438	72.67
10.000	0.440	2.315	2.073	4.388	0.872	83.42
15.000	0.617	3.245	1.568	4.813	0.447	91.51
20.000	0.763	4.015	1.080	5.095	0.165	96.87
25.000	0.878	4.616	0.619	5.235	0.025	99.52
30.000	0.957	5.035	0.225	5.260	0.000	100.00

ARIZONA DEPARTMENT OF TRANSPORTATION
DRAINAGE DESIGN SECTION

09-30-2002

PROJECT NAME- _____ TRACS NO.- _____
HIGHWAY NAME- _____ DESIGNER - RSR
LOCATION - NL WB 268+25 CHECKER - (A) PAGE _____
Ver 3.40: December 1995

SLOTTED DRAIN W/ GRATE--ON GRADE

GUTTER FLOW HYDRAULICS
GUTTER DESCRIPTION

Roadway Grade-% Per cent--G	=	1.294
Roadway Cross-Slope-Ft./Ft.--Sx	=	0.036
Shoulder Width-Ft.--	=	10.000
Shoulder Slope-Ft./Ft.--Ss	=	0.036
Gutter Width-Ft.--W	=	2.500
Gutter Slope-Ft./Ft.--Sw	=	0.021
Gutter Depression-Inches--	=	0.624
Manning's 'N	=	0.016
Flow-CFS--Q	=	3.590 - 10yr
SPREAD-Ft.--T	=	7.937 - 8' max
Average Velocity-V-fps	=	3.305
FLOW in Gutter-CFS--Q	=	2.162
% Flow in Gutter-CFS	=	60.211
Velocity of Flow in Gutter-fps	=	3.900
Depth at Curb Line-Inches--d	=	2.973 - 3" max

SLOTTED DRAIN--ADOT STD.--C13.60
GRATE TYPE: ADOT STD.--C15.91

Grate Length--Ft.	=	3.354
Grate Width---Ft.	=	2.000
Grate Area--Sq. Ft.	=	5.171
Splash-Over Velocity--FPS	=	7.354
Depth at INLET Curb Line-Inches--d	=	3.720
Local Gutter Depression-Inches	=	1.000
Length of opening: TOTAL Intercept--Ft.	=	30.425
Capture Ratio -- SLOTTED DRAIN	=	0.670
Capture Ratio -- GRATE	=	0.500

LENGTH	Efficiency	Q(S.D.)	Q(GRATE)	Q(INT.)	Q(By-Pass)	% CAPT.
5.000	0.276	0.991	1.893	2.885	0.705	80.35
10.000	0.512	1.838	1.411	3.249	0.341	90.49
15.000	0.706	2.533	0.946	3.479	0.111	96.91
20.000	0.855	3.068	0.511	3.579	0.011	99.69
25.000	0.955	3.429	0.161	3.590	0.000	100.00
30.000	1.000	3.588	0.002	3.590	0.000	100.00

ARIZONA DEPARTMENT OF TRANSPORTATION
DRAINAGE DESIGN SECTION

09-30-2002

PROJECT NAME- _____ TRACS NO.- _____
HIGHWAY NAME- _____ DESIGNER - RSR
LOCATION - ML WB 268+25 CHECKER - AD PAGE _____
Ver 3.40: December 1995

SLOTTED DRAIN W/ GRATE--ON GRADE

GUTTER FLOW HYDRAULICS
GUTTER DESCRIPTION

Roadway Grade-% Per cent--G	=	1.294
Roadway Cross-Slope-Ft./Ft.--Sx	=	0.036
Shoulder Width-Ft.--	=	10.000
Shoulder Slope-Ft./Ft.--Ss	=	0.036
Gutter Width-Ft.--W	=	2.500
Gutter Slope-Ft./Ft.--Sw	=	0.021
Gutter Depression-Inches--	=	0.624
Manning's 'N	=	0.016
Flow-CFS--Q	=	5.120 -50yr
SPREAD-Ft.--T	=	9.002
Average Velocity-V-fps	=	3.628
FLOW in Gutter-CFS--Q	=	2.818
% Flow in Gutter-CFS	=	55.040
Velocity of Flow in Gutter-fps	=	4.334
Depth at Curb Line-Inches--d	=	3.433

SLOTTED DRAIN--ADOT STD.--C13.60
GRATE TYPE: ADOT STD.--C15.91

Grate Length--Ft.	=	3.354
Grate Width---Ft.	=	2.000
Grate Area--Sq. Ft.	=	5.171
Splash-Over Velocity--FPS	=	7.354
Depth at INLET Curb Line-Inches--d	=	4.209
Local Gutter Depression-Inches	=	1.000
Length of opening: TOTAL Intercept--Ft.	=	35.854
Capture Ratio -- SLOTTED DRAIN	=	0.670
Capture Ratio -- GRATE	=	0.500

LENGTH	Efficiency	Q(S.D.)	Q(GRATE)	Q(INT.)	Q(By-Pass)	% CAPT.
5.000	0.237	1.213	2.536	3.749	1.371	73.22
10.000	0.445	2.278	2.021	4.298	0.822	83.95
15.000	0.623	3.190	1.519	4.708	0.412	91.96
20.000	0.770	3.941	1.034	4.975	0.145	97.17
25.000	0.884	4.524	0.577	5.101	0.019	99.63
30.000	0.962	4.924	0.196	5.120	0.000	100.00

ARIZONA DEPARTMENT OF TRANSPORTATION
DRAINAGE DESIGN SECTION

09-30-2002

PROJECT NAME- _____ TRACS NO.- _____
HIGHWAY NAME- _____ DESIGNER - RSR
LOCATION - ML WB 271+02 CHECKER - AJ PAGE _____
Ver 3.40: December 1995

SLOTTED DRAIN W/ GRATE--ON GRADE

GUTTER FLOW HYDRAULICS
GUTTER DESCRIPTION

Roadway Grade-% Per cent--G	=	1.294
Roadway Cross-Slope-Ft./Ft.--Sx	=	0.036
Shoulder Width-Ft.--	=	10.000
Shoulder Slope-Ft./Ft.--Ss	=	0.036
Gutter Width-Ft.--W	=	2.500
Gutter Slope-Ft./Ft.--Sw	=	0.021
Gutter Depression-Inches--	=	0.624
Manning's 'N	=	0.016
Flow-CFS--Q	=	3.640 - 10yr
SPREAD-Ft.--T	=	7.975 - 8' max
Average Velocity-V-fps	=	3.317
FLOW in Gutter-CFS--Q	=	2.184
% Flow in Gutter-CFS	=	60.006
Velocity of Flow in Gutter-fps	=	3.916
Depth at Curb Line-Inches--d	=	2.989 - 3" max

SLOTTED DRAIN--ADOT STD.--C13.60
GRATE TYPE: ADOT STD.--C15.91

Grate Length--Ft.	=	3.354
Grate Width---Ft.	=	2.000
Grate Area--Sq. Ft.	=	5.171
Splash-Over Velocity--FPS	=	7.354
Depth at INLET Curb Line-Inches--d	=	3.738
Local Gutter Depression-Inches	=	1.000
Length of opening: TOTAL Intercept--Ft.	=	30.620
Capture Ratio -- SLOTTED DRAIN	=	0.670
Capture Ratio -- GRATE	=	0.500

LENGTH	Efficiency	Q(S.D.)	Q(GRATE)	Q(INT.)	Q(By-Pass)	% CAPT.
5.000	0.275	0.999	1.916	2.915	0.725	80.08
10.000	0.509	1.853	1.432	3.285	0.355	90.26
15.000	0.702	2.556	0.966	3.522	0.118	96.75
20.000	0.851	3.099	0.528	3.627	0.013	99.64
25.000	0.953	3.468	0.172	3.640	0.000	100.00
30.000	0.999	3.637	0.003	3.640	0.000	100.00

ARIZONA DEPARTMENT OF TRANSPORTATION
DRAINAGE DESIGN SECTION

09-30-2002

PROJECT NAME- _____ TRACS NO.- _____
HIGHWAY NAME- _____ DESIGNER - RSR
LOCATION - ML WB 271+02 CHECKER - AP PAGE _____
Ver 3.40: December 1995

SLOTTED DRAIN W/ GRATE--ON GRADE

GUTTER FLOW HYDRAULICS
GUTTER DESCRIPTION

Roadway Grade-% Per cent--G	=	1.294
Roadway Cross-Slope-Ft./Ft.--Sx	=	0.036
Shoulder Width-Ft.--	=	10.000
Shoulder Slope-Ft./Ft.--Ss	=	0.036
Gutter Width-Ft.--W	=	2.500
Gutter Slope-Ft./Ft.--Sw	=	0.021
Gutter Depression-Inches--	=	0.624
Manning's 'N	=	0.016
Flow-CFS--Q	=	5.350 6.5
SPREAD-Ft.--T	=	9.145
Average Velocity-V-fps	=	3.670
FLOW in Gutter-CFS--Q	=	2.911
% Flow in Gutter-CFS	=	54.413
Velocity of Flow in Gutter-fps	=	4.391
Depth at Curb Line-Inches--d	=	3.494

SLOTTED DRAIN--ADOT STD.--C13.60
GRATE TYPE: ADOT STD.--C15.91

Grate Length--Ft.	=	3.354
Grate Width---Ft.	=	2.000
Grate Area--Sq. Ft.	=	5.171
Splash-Over Velocity--FPS	=	7.354
Depth at INLET Curb Line-Inches--d	=	4.274
Local Gutter Depression-Inches	=	1.000
Length of opening: TOTAL Intercept--Ft.	=	36.590
Capture Ratio -- SLOTTED DRAIN	=	0.670
Capture Ratio -- GRATE	=	0.500

LENGTH	Efficiency	Q(S.D.)	Q(GRATE)	Q(INT.)	Q(By-Pass)	% CAPT.
5.000	0.232	1.243	2.626	3.869	1.481	72.33
10.000	0.437	2.338	2.107	4.445	0.905	83.09
15.000	0.613	3.280	1.600	4.880	0.470	91.22
20.000	0.759	4.062	1.110	5.172	0.178	96.67
25.000	0.874	4.674	0.646	5.320	0.030	99.44
30.000	0.954	5.106	0.244	5.350	0.000	100.00

ARIZONA DEPARTMENT OF TRANSPORTATION
DRAINAGE DESIGN SECTION

09-30-2002

PROJECT NAME- _____ TRACS NO.- _____
HIGHWAY NAME- _____ DESIGNER - RSR
LOCATION - ML WB 273+52 CHECKER - (A) PAGE _____
Ver 3.40: December 1995

SLOTTED DRAIN W/ GRATE--ON GRADE

GUTTER FLOW HYDRAULICS
GUTTER DESCRIPTION

Roadway Grade-% Per cent--G	=	1.045
Roadway Cross-Slope-Ft./Ft.--Sx	=	0.036
Shoulder Width-Ft.--	=	10.000
Shoulder Slope-Ft./Ft.--Ss	=	0.036
Gutter Width-Ft.--W	=	2.500
Gutter Slope-Ft./Ft.--Sw	=	0.021
Gutter Depression-Inches--	=	0.624
Manning's 'N	=	0.016
Flow-CFS--Q	=	3.290 - 10yr
SPREAD-Ft.--T	=	7.992 - 8' max
Average Velocity-V-fps	=	2.985
FLOW in Gutter-CFS--Q	=	1.971
% Flow in Gutter-CFS	=	59.921
Velocity of Flow in Gutter-fps	=	3.525
Depth at Curb Line-Inches--d	=	2.996 - 3" max

SLOTTED DRAIN--ADOT STD.--C13.60
GRATE TYPE: ADOT STD.--C15.91

Grate Length--Ft.	=	3.354
Grate Width---Ft.	=	2.000
Grate Area--Sq. Ft.	=	5.171
Splash-Over Velocity--FPS	=	7.354
Depth at INLET Curb Line-Inches--d	=	3.745
Local Gutter Depression-Inches	=	1.000
Length of opening: TOTAL Intercept--Ft.	=	27.532
Capture Ratio -- SLOTTED DRAIN	=	0.670
Capture Ratio -- GRATE	=	0.500

LENGTH	Efficiency	Q(S.D.)	Q(GRATE)	Q(INT.)	Q(By-Pass)	% CAPT.
5.000	0.303	0.996	1.700	2.696	0.594	81.94
10.000	0.556	1.830	1.208	3.038	0.252	92.35
15.000	0.757	2.492	0.740	3.232	0.058	98.24
20.000	0.903	2.971	0.318	3.289	0.001	99.96
25.000	0.986	3.245	0.045	3.290	0.000	100.00
30.000	1.000	3.290	0.000	3.290	0.000	100.00

ARIZONA DEPARTMENT OF TRANSPORTATION
DRAINAGE DESIGN SECTION

09-30-2002

PROJECT NAME- _____ TRACS NO.- _____
HIGHWAY NAME- _____ DESIGNER - R&R
LOCATION - ML WB 273+52 CHECKER - AD PAGE _____
Ver 3.40: December 1995

SLOTTED DRAIN W/ GRATE--ON GRADE

GUTTER FLOW HYDRAULICS
GUTTER DESCRIPTION

Roadway Grade-% Per cent--G	=	1.045
Roadway Cross-Slope-Ft./Ft.--Sx	=	0.036
Shoulder Width-Ft.--	=	10.000
Shoulder Slope-Ft./Ft.--Ss	=	0.036
Gutter Width-Ft.--W	=	2.500
Gutter Slope-Ft./Ft.--Sw	=	0.021
Gutter Depression-Inches--	=	0.624
Manning's 'N	=	0.016
Flow-CFS--Q	=	4.750 -50yr
SPREAD-Ft.--T	=	9.105
Average Velocity-V-fps	=	3.288
FLOW in Gutter-CFS--Q	=	2.593
% Flow in Gutter-CFS	=	54.586
Velocity of Flow in Gutter-fps	=	3.932
Depth at Curb Line-Inches--d	=	3.477

SLOTTED DRAIN--ADOT STD.--C13.60
GRATE TYPE: ADOT STD.--C15.91

Grate Length--Ft.	=	3.354
Grate Width---Ft.	=	2.000
Grate Area--Sq. Ft.	=	5.171
Splash-Over Velocity--FPS	=	7.354
Depth at INLET Curb Line-Inches--d	=	4.256
Local Gutter Depression-Inches	=	1.000
Length of opening: TOTAL Intercept--Ft.	=	32.628
Capture Ratio -- SLOTTED DRAIN	=	0.670
Capture Ratio -- GRATE	=	0.500

LENGTH	Efficiency	Q(S.D.)	Q(GRATE)	Q(INT.)	Q(By-Pass)	% CAPT.
5.000	0.259	1.229	2.315	3.544	1.206	74.61
10.000	0.483	2.292	1.788	4.080	0.670	85.90
15.000	0.670	3.182	1.277	4.459	0.291	93.87
20.000	0.819	3.890	0.788	4.678	0.072	98.48
25.000	0.927	4.403	0.345	4.748	0.002	99.96
30.000	0.989	4.699	0.051	4.750	0.000	100.00

ARIZONA DEPARTMENT OF TRANSPORTATION
DRAINAGE DESIGN SECTION

09-30-2002

PROJECT NAME- _____ TRACS NO.- _____
HIGHWAY NAME- _____ DESIGNER - RSR
LOCATION - ML WB 275+80 CHECKER - A PAGE _____
Ver 3.40: December 1995

SLOTTED DRAIN W/ GRATE--ON GRADE

GUTTER FLOW HYDRAULICS
GUTTER DESCRIPTION

Roadway Grade-% Per cent--G	=	0.790
Roadway Cross-Slope-Ft./Ft.--Sx	=	0.036
Shoulder Width-Ft.--	=	10.000
Shoulder Slope-Ft./Ft.--Ss	=	0.036
Gutter Width-Ft.--W	=	2.500
Gutter Slope-Ft./Ft.--Sw	=	0.021
Gutter Depression-Inches--	=	0.624
Manning's 'N	=	0.016
Flow-CFS--Q	=	2.870 - 10 yr
SPREAD-Ft.--T	=	8.001 - 8' max
Average Velocity-V-fps	=	2.598
FLOW in Gutter-CFS--Q	=	1.718
% Flow in Gutter-CFS	=	59.875
Velocity of Flow in Gutter-fps	=	3.068
Depth at Curb Line-Inches--d	=	3.000 - 3" max

SLOTTED DRAIN--ADOT STD.--C13.60
GRATE TYPE: ADOT STD.--C15.91

Grate Length--Ft.	=	3.354
Grate Width---Ft.	=	2.000
Grate Area--Sq. Ft.	=	5.171
Splash-Over Velocity--FPS	=	7.354
Depth at INLET Curb Line-Inches--d	=	3.749
Local Gutter Depression-Inches	=	1.000
Length of opening: TOTAL Intercept--Ft.	=	23.910
Capture Ratio -- SLOTTED DRAIN	=	0.670
Capture Ratio -- GRATE	=	0.500

LENGTH	Efficiency	Q(S.D.)	Q(GRATE)	Q(INT.)	Q(By-Pass)	% CAPT.
5.000	0.344	0.989	1.441	2.429	0.441	84.64
10.000	0.623	1.788	0.939	2.726	0.144	94.99
15.000	0.831	2.384	0.472	2.856	0.014	99.52
20.000	0.962	2.760	0.110	2.870	0.000	100.00
25.000	1.000	2.870	0.000	2.870	0.000	100.00
30.000	1.000	2.870	0.000	2.870	0.000	100.00

ARIZONA DEPARTMENT OF TRANSPORTATION
DRAINAGE DESIGN SECTION

09-30-2002

PROJECT NAME- _____ TRACS NO.- _____
HIGHWAY NAME- _____ DESIGNER - RSR
LOCATION - ML WB 275+80 CHECKER - A PAGE _____
Ver 3.40: December 1995

SLOTTED DRAIN W/ GRATE--ON GRADE

GUTTER FLOW HYDRAULICS
GUTTER DESCRIPTION

Roadway Grade-% Per cent--G	=	0.790
Roadway Cross-Slope-Ft./Ft.--Sx	=	0.036
Shoulder Width-Ft.--	=	10.000
Shoulder Slope-Ft./Ft.--Ss	=	0.036
Gutter Width-Ft.--W	=	2.500
Gutter Slope-Ft./Ft.--Sw	=	0.021
Gutter Depression-Inches--	=	0.624
Manning's 'N	=	0.016
Flow-CFS--Q	=	3.960 - 50yr
SPREAD-Ft.--T	=	8.969
Average Velocity-V-fps	=	2.828
FLOW in Gutter-CFS--Q	=	2.185
% Flow in Gutter-CFS	=	55.188
Velocity of Flow in Gutter-fps	=	3.377
Depth at Curb Line-Inches--d	=	3.419

SLOTTED DRAIN--ADOT STD.--C13.60
GRATE TYPE: ADOT STD.--C15.91

Grate Length--Ft.	=	3.354
Grate Width---Ft.	=	2.000
Grate Area--Sq. Ft.	=	5.171
Splash-Over Velocity--FPS	=	7.354
Depth at INLET Curb Line-Inches--d	=	4.194
Local Gutter Depression-Inches	=	1.000
Length of opening: TOTAL Intercept--Ft.	=	27.748
Capture Ratio -- SLOTTED DRAIN	=	0.670
Capture Ratio -- GRATE	=	0.500

LENGTH	Efficiency	Q(S.D.)	Q(GRATE)	Q(INT.)	Q(By-Pass)	% CAPT.
5.000	0.301	1.191	1.913	3.103	0.857	78.37
10.000	0.553	2.188	1.377	3.565	0.395	90.04
15.000	0.753	2.983	0.864	3.847	0.113	97.15
20.000	0.899	3.562	0.392	3.954	0.006	99.85
25.000	0.984	3.898	0.062	3.960	0.000	100.00
30.000	1.000	3.960	0.000	3.960	0.000	100.00

ARIZONA DEPARTMENT OF TRANSPORTATION
DRAINAGE DESIGN SECTION

11-04-2002

PROJECT NAME- _____ TRACS NO.- _____
HIGHWAY NAME- _____ DESIGNER - MRL
LOCATION - WB ML STA 282+26 CHECKER - AJ PAGE _____
Ver 3.40: December 1995

GRATE INLET DESIGN -- ON GRADE

GUTTER FLOW HYDRAULICS
GUTTER DESCRIPTION

Roadway Grade-% Per cent--G	=	0.400
Roadway Cross-Slope-Ft./Ft.--Sx	=	0.012
Shoulder Width-Ft.--	=	10.000
Shoulder Slope-Ft./Ft.--Ss	=	0.012
Gutter Width-Ft.--W	=	2.500
Gutter Slope-Ft./Ft.--Sw	=	0.067
Gutter Depression-Inches--	=	2.010
Manning's 'N	=	0.016
Flow-CFS--Q	=	0.830
SPREAD-Ft.--T	=	8.221
Average Velocity-V-fps	=	1.430
FLOW in Gutter-CFS--Q	=	0.682
% Flow in Gutter-CFS	=	82.158
Velocity of Flow in Gutter-fps	=	1.783
Depth at Curb Line-Inches--d	=	2.841

GRATE TYPE: ADOT STD.--C15.91

Grate Length--Ft.	=	3.354
Grate Width---Ft.	=	2.000
Grate Area--Sq. Ft.	=	5.171
Capture Ratio -- GRATE	=	0.500
Effective Perimeter--Ft.	=	7.354
Splash-Over Velocity--FPS	=	7.354
Local Gutter Depression-Inches	=	1.000
Flow-CFS--Q	=	0.830
GUTTER FLOW at INLET-CFS--Q	=	0.800
Gutter Velocity at INLET-fps	=	1.960
Depth at INLET Curb Line-Inches--d	=	3.465
Frontal Flow Intercepted by GRATE--CFS	=	0.770
Lateral Flow Intercepted by GRATE--CFS	=	0.043
TOTAL Flow Intercepted by GRATE--CFS	=	0.813
% FLOW Intercepted	=	97.980
By-pass Flow--CFS	=	0.017

No Slotted drain required

ARIZONA DEPARTMENT OF TRANSPORTATION
DRAINAGE DESIGN SECTION

11-04-2002

PROJECT NAME- _____ TRACS NO.- _____
HIGHWAY NAME- _____ DESIGNER - MRG
LOCATION - WB ML STA 282+72 CHECKER - (A) PAGE _____
Ver 3.40: December 1995

GRATE INLET DESIGN -- ON GRADE

GUTTER FLOW HYDRAULICS
GUTTER DESCRIPTION

Roadway Grade-% Per cent--G	=	0.400
Roadway Cross-Slope-Ft./Ft.--Sx	=	0.020
Shoulder Width-Ft.--	=	10.000
Shoulder Slope-Ft./Ft.--Ss	=	0.020
Gutter Width-Ft.--W	=	2.500
Gutter Slope-Ft./Ft.--Sw	=	0.067
Gutter Depression-Inches--	=	2.010
Manning's 'N	=	0.016
Flow-CFS--Q	=	1.080
SPREAD-Ft.--T	=	7.251
Average Velocity-V-fps	=	1.606
FLOW in Gutter-CFS--Q	=	0.872
% Flow in Gutter-CFS	=	80.700
Velocity of Flow in Gutter-fps	=	1.950
Depth at Curb Line-Inches--d	=	3.150

GRATE TYPE: ADOT STD.--C15.91

Grate Length--Ft.	=	3.354
Grate Width---Ft.	=	2.000
Grate Area--Sq. Ft.	=	5.171
Capture Ratio -- GRATE	=	0.500
Effective Perimeter--Ft.	=	7.354
Splash-Over Velocity--FPS	=	7.354
Local Gutter Depression-Inches	=	1.000
Flow-CFS--Q	=	1.080
GUTTER FLOW at INLET-CFS--Q	=	1.005
Gutter Velocity at INLET-fps	=	2.112
Depth at INLET Curb Line-Inches--d	=	3.788
Frontal Flow Intercepted by GRATE--CFS	=	0.950
Lateral Flow Intercepted by GRATE--CFS	=	0.078
TOTAL Flow Intercepted by GRATE--CFS	=	1.029
% FLOW Intercepted	=	95.254
By-pass Flow--CFS	=	0.051

No Slotted Drain required

ARIZONA DEPARTMENT OF TRANSPORTATION
DRAINAGE DESIGN SECTION

09-17-2002

PROJECT NAME- _____ TRACS NO.- _____
HIGHWAY NAME- _____ DESIGNER - RSR
LOCATION - Ramp FC 1+64.26 CHECKER - (A) PAGE _____
Ver 3.40: December 1995

SLOTTED DRAIN W/ GRATE--IN SUMP

GUTTER FLOW HYDRAULICS

GUTTER DESCRIPTION

Roadway Cross-Slope-Ft./Ft.--Sx	=	0.020
Shoulder Width-Ft.--	=	10.000
Shoulder Slope-Ft./Ft.--Ss	=	0.020
Gutter Width-Ft.--W	=	2.500
Gutter Slope-Ft./Ft.--Sw	=	0.021
Gutter Depression-Inches--	=	0.624

GRATE TYPE: ADOT STD.--C15.91

Grate Length--Ft.	=	3.354
Grate Width---Ft.	=	2.000
Grate Area--Sq. Ft.	=	5.171
Effective Perimeter--Ft.	=	7.354
Capture Ratio -- GRATE	=	0.500
Capture Ratio -- SLOTTED DRAIN	=	0.670
Local Gutter Depression-Inches	=	1.000
Flow-CFS--Q	=	1.550

LENGTH	Q(Slot. Dn)	Q(Grate)	d(inches)	SPREAD,Ft.
5.000	0.861	0.690	1.785	7.336
10.000	1.166	0.384	1.147	4.678
15.000	1.309	0.240	0.770	3.106
20.000	1.387	0.163	0.518	2.075
25.000	1.429	0.122	0.334	1.340

Use 20' of slotted drain on south side of basin to act as flanking inlet in curb transition.

ARIZONA DEPARTMENT OF TRANSPORTATION
DRAINAGE DESIGN SECTION

09-17-2002

PROJECT NAME- _____ TRACS NO.- _____
HIGHWAY NAME- _____ DESIGNER - RSR
LOCATION - Ramp EC 1+64.26 CHECKER - A PAGE _____
Ver 3.40: December 1995

GUTTER FLOW HYDRAULICS
GUTTER DESCRIPTION

Roadway Grade-% Per cent--G	=	0.352	
Roadway Cross-Slope-Ft./Ft.--Sx	=	0.020	
Shoulder Width-Ft.--	=	10.000	
Shoulder Slope-Ft./Ft.--Ss	=	0.020	
Gutter Width-Ft.--W	=	2.500	
Gutter Slope-Ft./Ft.--Sw	=	0.021	
Gutter Depression-Inches--	=	0.624	
Manning's 'N	=	0.016	
Flow-CFS--Q	=	1.140	- 10yr
SPREAD-Ft.--T	=	9.187	- 12.4' Max
Average Velocity-V-fps	=	1.347	
FLOW in Gutter-CFS--Q	=	0.654	
% Flow in Gutter-CFS	=	57.392	
Velocity of Flow in Gutter-fps	=	1.638	
Depth at Curb Line-Inches--d	=	2.229	

Calc used to check spread at upstream end of slotted drain
sta 1+42.26

ARIZONA DEPARTMENT OF TRANSPORTATION
DRAINAGE DESIGN SECTION

09-17-2002

PROJECT NAME- _____ TRACS NO.- _____
HIGHWAY NAME- _____ DESIGNER - RSR
LOCATION - Ramp EC 1+64.26 CHECKER - (A) PAGE _____
Ver 3.40: December 1995

GUTTER FLOW HYDRAULICS
GUTTER DESCRIPTION

Roadway Grade-% Per cent--G	=	0.032
Roadway Cross-Slope-Ft./Ft.--Sx	=	0.020
Shoulder Width-Ft.--	=	10.000
Shoulder Slope-Ft./Ft.--Ss	=	0.020
Gutter Width-Ft.--W	=	2.500
Gutter Slope-Ft./Ft.--Sw	=	0.021
Gutter Depression-Inches--	=	0.624
Manning's 'N	=	0.016
Flow-CFS--Q	=	0.630 - 10yr
SPREAD-Ft.--T	=	11.533 - 12ft max
Average Velocity-V-fps	=	0.473
FLOW in Gutter-CFS--Q	=	0.303
% Flow in Gutter-CFS	=	48.080
Velocity of Flow in Gutter-fps	=	0.586
Depth at Curb Line-Inches--d	=	2.792

Calc used to check spread at North side of CB sump sta 1+66.26

ARIZONA DEPARTMENT OF TRANSPORTATION
DRAINAGE DESIGN SECTION

09-17-2002

PROJECT NAME- _____ TRACS NO.- _____
HIGHWAY NAME- _____ DESIGNER - BSR
LOCATION - Ramp EC 2+26 CHECKER - (A) PAGE _____
Ver 3.40: December 1995

SLOTTED DRAIN W/ GRATE--ON GRADE

GUTTER FLOW HYDRAULICS
GUTTER DESCRIPTION

Roadway Grade-% Per cent--G	=	0.988
Roadway Cross-Slope-Ft./Ft.--Sx	=	0.020
Shoulder Width-Ft.--	=	10.000
Shoulder Slope-Ft./Ft.--Ss	=	0.020
Gutter Width-Ft.--W	=	2.500
Gutter Slope-Ft./Ft.--Sw	=	0.021
Gutter Depression-Inches--	=	0.624
Manning's 'N	=	0.016
Flow-CFS--Q	=	3.100
SPREAD-Ft.--T	=	11.024
Average Velocity-V-fps	=	2.546
FLOW in Gutter-CFS--Q	=	1.545
% Flow in Gutter-CFS	=	49.848
Velocity of Flow in Gutter-fps	=	3.146
Depth at Curb Line-Inches--d	=	2.670

SLOTTED DRAIN--ADOT STD.--C13.60
GRATE TYPE: ADOT STD.--C15.91

Grate Length--Ft.	=	3.354
Grate Width---Ft.	=	2.000
Grate Area--Sq. Ft.	=	5.171
Splash-Over Velocity--FPS	=	7.354
Depth at INLET Curb Line-Inches--d	=	3.472
Local Gutter Depression-Inches	=	1.000
Length of opening: TOTAL Intercept--Ft.	=	29.253
Capture Ratio -- SLOTTED DRAIN	=	0.670
Capture Ratio -- GRATE	=	0.500

LENGTH	Efficiency	Q(S.D.)	Q(GRATE)	Q(INT.)	Q(By-Pass)	% CAPT.
5.000	0.286	0.888	1.494	2.382	0.718	76.84
10.000	0.529	1.640	1.127	2.767	0.333	89.25
15.000	0.726	2.250	0.757	3.007	0.093	97.01
20.000	0.874	2.710	0.387	3.096	0.004	99.88
25.000	0.969	3.004	0.096	3.100	0.000	100.00

ARIZONA DEPARTMENT OF TRANSPORTATION
DRAINAGE DESIGN SECTION

09-17-2002

PROJECT NAME- _____ TRACS NO.- _____
HIGHWAY NAME- _____ DESIGNER - RSR
LOCATION - Ramp ED I+70 RT CHECKER - A PAGE _____
Ver 3.40: December 1995

SLOTTED DRAIN W/ GRATE--ON GRADE

GUTTER FLOW HYDRAULICS
GUTTER DESCRIPTION

Roadway Grade-% Per cent--G	=	0.574
Roadway Cross-Slope-Ft./Ft.--Sx	=	0.020
Shoulder Width-Ft.--	=	10.000
Shoulder Slope-Ft./Ft.--Ss	=	0.020
Gutter Width-Ft.--W	=	2.500
Gutter Slope-Ft./Ft.--Sw	=	0.021
Gutter Depression-Inches--	=	0.624
Manning's 'N	=	0.016
Flow-CFS--Q	=	1.300 -10yr
SPREAD-Ft.--T	=	8.802 -13.5' max
Average Velocity-V-fps	=	1.672
FLOW in Gutter-CFS--Q	=	0.770
% Flow in Gutter-CFS	=	59.244
Velocity of Flow in Gutter-fps	=	2.026
Depth at Curb Line-Inches--d	=	2.137

SLOTTED DRAIN--ADOT STD.--C13.60
GRATE TYPE: ADOT STD.--C15.91

Grate Length--Ft.	=	3.354
Grate Width---Ft.	=	2.000
Grate Area--Sq. Ft.	=	5.171
Splash-Over Velocity--FPS	=	7.354
Depth at INLET Curb Line-Inches--d	=	2.884
Local Gutter Depression-Inches	=	1.000
Length of opening: TOTAL Intercept--Ft.	=	16.217
Capture Ratio -- SLOTTED DRAIN	=	0.670
Capture Ratio -- GRATE	=	0.500

LENGTH	Efficiency	Q(S.D.)	Q(GRATE)	Q(INT.)	Q(By-Pass)	% CAPT.
5.000	0.485	0.630	0.606	1.236	0.064	95.08
10.000	0.822	1.069	0.231	1.300	0.000	99.96
15.000	0.991	1.288	0.012	1.300	0.000	100.00
20.000	1.000	1.300	0.000	1.300	0.000	100.00
25.000	1.000	1.300	0.000	1.300	0.000	100.00

ARIZONA DEPARTMENT OF TRANSPORTATION
DRAINAGE DESIGN SECTION

09-17-2002

PROJECT NAME- _____ TRACS NO.- _____
HIGHWAY NAME- _____ DESIGNER - RSR
LOCATION - Ramp ED 2+17.67 CHECKER - (A) PAGE _____
Ver 3.40: December 1995

GRATE INLET--IN SUMP

GUTTER FLOW HYDRAULICS

GUTTER DESCRIPTION

Roadway Cross-Slope-Ft./Ft.--Sx	=	0.020
Shoulder Width-Ft.--	=	10.000
Shoulder Slope-Ft./Ft.--Ss	=	0.020
Gutter Width-Ft.--W	=	2.500
Gutter Slope-Ft./Ft.--Sw	=	0.021
Gutter Depression-Inches--	=	0.624

GRATE TYPE: ADOT STD.--C15.91

Grate Length--Ft.	=	3.354
Grate Width---Ft.	=	2.000
Grate Area--Sq. Ft.	=	5.171
Effective Perimeter--Ft.	=	7.354
Capture Ratio -- GRATE	=	0.500
Local Gutter Depression-Inches	=	1.000
Depth at INLET Curb Line-Inches--d	=	1.724
Depth at C.G. of Grate Flow--In.	=	2.142
SPREAD-Ft.--T	=	7.083 - 13.5' Max
Depth for WEIR FLOW, inches	=	2.724
Depth for ORIFICE FLOW, inches	=	0.005

Q(INLET) = 0.660 cfs is Based on WEIR flow - 10 yr

ARIZONA DEPARTMENT OF TRANSPORTATION
DRAINAGE DESIGN SECTION

09-17-2002

PROJECT NAME- _____ TRACS NO.- _____
HIGHWAY NAME- _____ DESIGNER - RSR
LOCATION - Ramp ED 2+17.16 CHECKER - AD PAGE _____
Ver 3.40: December 1995

GUTTER FLOW HYDRAULICS
GUTTER DESCRIPTION

Roadway Grade-% Per cent--G	=	0.024	
Roadway Cross-Slope-Ft./Ft.--Sx	=	0.020	
Shoulder Width-Ft.--	=	10.000	
Shoulder Slope-Ft./Ft.--Ss	=	0.020	
Gutter Width-Ft.--W	=	2.500	
Gutter Slope-Ft./Ft.--Sw	=	0.021	
Gutter Depression-Inches--	=	0.624	
Manning's 'N	=	0.016	
Flow-CFS--Q	=	0.270	- Q_{10} from South
SPREAD-Ft.--T	=	8.841	- 13.5' Max
Average Velocity-V-fps	=	0.344	
FLOW in Gutter-CFS--Q	=	0.159	
% Flow in Gutter-CFS	=	59.050	
Velocity of Flow in Gutter-fps	=	0.417	
Depth at Curb Line-Inches--d	=	2.146	

Calc used to check spread at south side of CB sump
Sta 2+15.67

ARIZONA DEPARTMENT OF TRANSPORTATION
DRAINAGE DESIGN SECTION

09-17-2002

PROJECT NAME- _____ TRACS NO.- _____
HIGHWAY NAME- _____ DESIGNER - RSR
LOCATION - Ramp ED 2+17.16 CHECKER - A PAGE _____
Ver 3.40: December 1995

GUTTER FLOW HYDRAULICS
GUTTER DESCRIPTION

Roadway Grade-% Per cent--G	=	0.024	
Roadway Cross-Slope-Ft./Ft.--Sx	=	0.020	
Shoulder Width-Ft.--	=	10.000	
Shoulder Slope-Ft./Ft.--Ss	=	0.020	
Gutter Width-Ft.--W	=	2.500	
Gutter Slope-Ft./Ft.--Sw	=	0.021	
Gutter Depression-Inches--	=	0.624	
Manning's 'N	=	0.016	
Flow-CFS--Q	=	0.390	- Q_{10} from North
SPREAD-Ft.--T	=	10.170	13.5 Max
Average Velocity-V-fps	=	0.376	
FLOW in Gutter-CFS--Q	=	0.207	
% Flow in Gutter-CFS	=	53.107	
Velocity of Flow in Gutter-fps	=	0.462	
Depth at Curb Line-Inches--d	=	2.465	

Calc used to check spread at north side of sump
sta 2+19.67

ARIZONA DEPARTMENT OF TRANSPORTATION
DRAINAGE DESIGN SECTION

04-08-2003

PROJECT NAME- _____ TRACS NO.- _____
HIGHWAY NAME- _____ DESIGNER - RSR
LOCATION - Ramp ED 2+65 CHECKER - AD PAGE _____
Ver 3.40: December 1995

SLOTTED DRAIN W/ GRATE--ON GRADE

GUTTER FLOW HYDRAULICS
GUTTER DESCRIPTION

Roadway Grade-% Per cent--G	=	0.570
Roadway Cross-Slope-Ft./Ft.--Sx	=	0.020
Shoulder Width-Ft.--	=	10.000
Shoulder Slope-Ft./Ft.--Ss	=	0.020
Gutter Width-Ft.--W	=	2.500
Gutter Slope-Ft./Ft.--Sw	=	0.021
Gutter Depression-Inches--	=	0.624
Manning's 'N	=	0.016
Flow-CFS--Q	=	1.700 - 10 yr
SPREAD-Ft.--T	=	9.751 - 13.5' max
Average Velocity-V-fps	=	1.783
FLOW in Gutter-CFS--Q	=	0.933
% Flow in Gutter-CFS	=	54.860
Velocity of Flow in Gutter-fps	=	2.181
Depth at Curb Line-Inches--d	=	2.364

SLOTTED DRAIN--ADOT STD.--C13.60
GRATE TYPE: ADOT STD.--C15.91

Grate Length--Ft.	=	3.354
Grate Width---Ft.	=	2.000
Grate Area--Sq. Ft.	=	5.171
Splash-Over Velocity--FPS	=	7.354
Depth at INLET Curb Line-Inches--d	=	3.138
Local Gutter Depression-Inches	=	1.000
Length of opening: TOTAL Intercept--Ft.	=	18.628
Capture Ratio -- SLOTTED DRAIN	=	0.670
Capture Ratio -- GRATE	=	0.500

LENGTH	Efficiency	Q(S.D.)	Q(GRATE)	Q(INT.)	Q(By-Pass)	% CAPT.
5.000	0.430	0.731	0.804	1.536	0.164	90.33
10.000	0.750	1.275	0.412	1.687	0.013	99.21
15.000	0.947	1.611	0.089	1.700	0.000	100.00
20.000	1.000	1.700	0.000	1.700	0.000	100.00
25.000	1.000	1.700	0.000	1.700	0.000	100.00
30.000	1.000	1.700	0.000	1.700	0.000	100.00

ARIZONA DEPARTMENT OF TRANSPORTATION
DRAINAGE DESIGN SECTION

04-08-2003

PROJECT NAME- _____ TRACS NO.- _____
HIGHWAY NAME- _____ DESIGNER - RSR
LOCATION - Ramp ED 5+25 CHECKER - (A) PAGE _____
Ver 3.40: December 1995

SLOTTED DRAIN W/ GRATE--ON GRADE

GUTTER FLOW HYDRAULICS
GUTTER DESCRIPTION

Roadway Grade-% Per cent--G	=	0.992
Roadway Cross-Slope-Ft./Ft.--Sx	=	0.020
Shoulder Width-Ft.--	=	10.000
Shoulder Slope-Ft./Ft.--Ss	=	0.020
Gutter Width-Ft.--W	=	2.500
Gutter Slope-Ft./Ft.--Sw	=	0.021
Gutter Depression-Inches--	=	0.624
Manning's 'N	=	0.016
Flow-CFS--Q	=	3.770 -10 yr
SPREAD-Ft.--T	=	11.857 13.5' max
Average Velocity-V-fps	=	2.677
FLOW in Gutter-CFS--Q	=	1.773
% Flow in Gutter-CFS	=	47.017
Velocity of Flow in Gutter-fps	=	3.327
Depth at Curb Line-Inches--d	=	2.870

SLOTTED DRAIN--ADOT STD.--C13.60
GRATE TYPE: ADOT STD.--C15.91

Grate Length--Ft.	=	3.354
Grate Width---Ft.	=	2.000
Grate Area--Sq. Ft.	=	5.171
Splash-Over Velocity--FPS	=	7.354
Depth at INLET Curb Line-Inches--d	=	3.686
Local Gutter Depression-Inches	=	1.000
Length of opening: TOTAL Intercept--Ft.	=	32.449
Capture Ratio -- SLOTTED DRAIN	=	0.670
Capture Ratio -- GRATE	=	0.500

LENGTH	Efficiency	Q(S.D.)	Q(GRATE)	Q(INT.)	Q(By-Pass)	% CAPT.
5.000	0.260	0.980	1.740	2.721	1.049	72.16
10.000	0.485	1.828	1.371	3.198	0.572	84.84
15.000	0.673	2.536	1.001	3.537	0.233	93.81
20.000	0.822	3.098	0.627	3.725	0.045	98.81
25.000	0.929	3.503	0.266	3.770	0.000	99.99
30.000	0.990	3.734	0.036	3.770	0.000	100.00

ARIZONA DEPARTMENT OF TRANSPORTATION
DRAINAGE DESIGN SECTION

09-19-2002

PROJECT NAME- _____ TRACS NO.- _____
HIGHWAY NAME- _____ DESIGNER - RSR
LOCATION - Ramp GA 5+83 CHECKER - (A) PAGE _____
Ver 3.40: December 1995

SLOTTED DRAIN W/ GRATE--ON GRADE

GUTTER FLOW HYDRAULICS
GUTTER DESCRIPTION

Roadway Grade-% Per cent--G	=	0.476
Roadway Cross-Slope-Ft./Ft.--Sx	=	0.020
Shoulder Width-Ft.--	=	10.000
Shoulder Slope-Ft./Ft.--Ss	=	0.020
Gutter Width-Ft.--W	=	2.500
Gutter Slope-Ft./Ft.--Sw	=	0.067
Gutter Depression-Inches--	=	2.001
Manning's 'N	=	0.016
Flow-CFS--Q	=	2.600 ✓ -10 yr
SPREAD-Ft.--T	=	10.748 -13.5' max
Average Velocity-V-fps	=	1.998
FLOW in Gutter-CFS--Q	=	1.612
% Flow in Gutter-CFS	=	62.008
Velocity of Flow in Gutter-fps	=	2.597
Depth at Curb Line-Inches--d	=	3.980

Flanking Inlet

SLOTTED DRAIN--ADOT STD.--C13.60
GRATE TYPE: ADOT STD.--C15.91

Grate Length--Ft.	=	3.354
Grate Width---Ft.	=	2.000
Grate Area--Sq. Ft.	=	5.171
Splash-Over Velocity--FPS	=	10.531
Depth at INLET Curb Line-Inches--d	=	4.747
Local Gutter Depression-Inches	=	1.000
Length of opening: TOTAL Intercept--Ft.	=	14.822
Capture Ratio -- SLOTTED DRAIN	=	0.670
Capture Ratio -- GRATE	=	1.000

LENGTH	Efficiency	Q(S.D.)	Q(GRATE)	Q(INT.)	Q(By-Pass)	% CAPT.
5.000	0.523	1.360	1.215	2.576	0.024	99.07
10.000	0.868	2.256	0.344	2.600	0.000	100.00
15.000	1.000	2.600	0.000	2.600	0.000	100.00
20.000	1.000	2.600	0.000	2.600	0.000	100.00
25.000	1.000	2.600	0.000	2.600	0.000	100.00
30.000	1.000	2.600	0.000	2.600	0.000	100.00

ARIZONA DEPARTMENT OF TRANSPORTATION
DRAINAGE DESIGN SECTION

09-19-2002

PROJECT NAME- _____ TRACS NO.- _____
HIGHWAY NAME- _____ DESIGNER - RSR
LOCATION - Ramp GA 5+83 CHECKER - _____ PAGE _____
Ver 3.40: December 1995

SLOTTED DRAIN W/ GRATE--ON GRADE

GUTTER FLOW HYDRAULICS
GUTTER DESCRIPTION

Roadway Grade-% Per cent--G	=	0.476
Roadway Cross-Slope-Ft./Ft.--Sx	=	0.020
Shoulder Width-Ft.--	=	10.000
Shoulder Slope-Ft./Ft.--Ss	=	0.020
Gutter Width-Ft.--W	=	2.500
Gutter Slope-Ft./Ft.--Sw	=	0.067
Gutter Depression-Inches--	=	2.001
Manning's 'N	=	0.016
Flow-CFS--Q	=	3.610 >50yr
SPREAD-Ft.--T	=	12.439
Average Velocity-V-fps	=	2.132
FLOW in Gutter-CFS--Q	=	1.985
% Flow in Gutter-CFS	=	54.997
Velocity of Flow in Gutter-fps	=	2.815
Depth at Curb Line-Inches--d	=	4.386

SLOTTED DRAIN--ADOT STD.--C13.60
GRATE TYPE: ADOT STD.--C15.91

Grate Length--Ft.	=	3.354
Grate Width---Ft.	=	2.000
Grate Area--Sq. Ft.	=	5.171
Splash-Over Velocity--FPS	=	7.354
Depth at INLET Curb Line-Inches--d	=	5.188
Local Gutter Depression-Inches	=	1.000
Length of opening: TOTAL Intercept--Ft.	=	17.970
Capture Ratio -- SLOTTED DRAIN	=	0.670
Capture Ratio -- GRATE	=	0.500

LENGTH	Efficiency	Q(S.D.)	Q(GRATE)	Q(INT.)	Q(By-Pass)	% CAPT.
5.000	0.444	1.603	1.665	3.267	0.343	90.51
10.000	0.769	2.775	0.825	3.599	0.011	99.70
15.000	0.961	3.469	0.141	3.610	0.000	100.00
20.000	1.000	3.610	0.000	3.610	0.000	100.00
25.000	1.000	3.610	0.000	3.610	0.000	100.00
30.000	1.000	3.610	0.000	3.610	0.000	100.00

ARIZONA DEPARTMENT OF TRANSPORTATION
DRAINAGE DESIGN SECTION

09-23-2002

PROJECT NAME- _____ TRACS NO.- _____
HIGHWAY NAME- _____ DESIGNER - RSR
LOCATION - Ramp GA 6+48.09 CHECKER - AJ PAGE _____
Ver 3.40: December 1995

SLOTTED DRAIN W/ GRATE--IN SUMP

GUTTER FLOW HYDRAULICS

GUTTER DESCRIPTION

Roadway Cross-Slope-Ft./Ft.--Sx	=	0.020
Shoulder Width-Ft.--	=	10.000
Shoulder Slope-Ft./Ft.--Ss	=	0.020
Gutter Width-Ft.--W	=	2.500
Gutter Slope-Ft./Ft.--Sw	=	0.067
Gutter Depression-Inches--	=	2.001

GRATE TYPE: ADOT STD.--C15.91

Grate Length--Ft.	=	3.354
Grate Width---Ft.	=	2.000
Grate Area--Sq. Ft.	=	5.171
Effective Perimeter--Ft.	=	7.354
Capture Ratio -- GRATE	=	0.500
Capture Ratio -- SLOTTED DRAIN	=	0.670
Local Gutter Depression-Inches	=	1.000
Flow-CFS--Q	=	1.070 - 10 yr

LENGTH	Q(Slot. Dn)	Q(Grate)	d(inches)	SPREAD,Ft.
5.000	0.772	0.339	1.588	1.984
10.000	0.995	0.075	0.932	1.164
15.000	1.019	0.051	0.498	0.622
20.000	1.031	0.039	0.246	0.308
25.000	1.039	0.031	0.079	0.099

Use 5' of slotted drain on south side of basin

Use 5' of slotted drain on north side of basin

Total of 10' slotted drain

ARIZONA DEPARTMENT OF TRANSPORTATION
DRAINAGE DESIGN SECTION

09-23-2002

PROJECT NAME- _____ TRACS NO.- _____
HIGHWAY NAME- _____ DESIGNER - RSR
LOCATION - Ramp GA 6+48.09 CHECKER - AJ PAGE _____
Ver 3.40: December 1995

SLOTTED DRAIN W/ GRATE--IN SUMP

GUTTER FLOW HYDRAULICS

GUTTER DESCRIPTION

Roadway Cross-Slope-Ft./Ft.--Sx	=	0.020
Shoulder Width-Ft.--	=	10.000
Shoulder Slope-Ft./Ft.--Ss	=	0.020
Gutter Width-Ft.--W	=	2.500
Gutter Slope-Ft./Ft.--Sw	=	0.067
Gutter Depression-Inches--	=	2.001

GRATE TYPE: ADOT STD.--C15.91

Grate Length--Ft.	=	3.354
Grate Width---Ft.	=	2.000
Grate Area--Sq. Ft.	=	5.171
Effective Perimeter--Ft.	=	7.354
Capture Ratio -- GRATE	=	0.500
Capture Ratio -- SLOTTED DRAIN	=	0.670
Local Gutter Depression-Inches	=	1.000
Flow-CFS--Q	=	2.120 - 50yr

LENGTH	Q(Slot. Dn)	Q(Grate)	d(inches)	SPREAD,Ft.
5.000	1.311	0.809	2.685	5.351
10.000	1.718	0.401	1.779	2.223
15.000	2.019	0.101	1.362	1.702
20.000	2.043	0.077	0.966	1.207
25.000	2.058	0.062	0.702	0.877

ARIZONA DEPARTMENT OF TRANSPORTATION
DRAINAGE DESIGN SECTION

09-19-2002

PROJECT NAME- _____ TRACS NO.- _____
HIGHWAY NAME- _____ DESIGNER - RSR
LOCATION - Ramp GA 6+48.09 CHECKER - (A) PAGE _____
Ver 3.40: December 1995

GUTTER FLOW HYDRAULICS
GUTTER DESCRIPTION

Roadway Grade-% Per cent--G	=	0.042	
Roadway Cross-Slope-Ft./Ft.--Sx	=	0.020	
Shoulder Width-Ft.--	=	10.000	
Shoulder Slope-Ft./Ft.--Ss	=	0.020	
Gutter Width-Ft.--W	=	2.500	
Gutter Slope-Ft./Ft.--Sw	=	0.067	
Gutter Depression-Inches--	=	2.001	
Manning's 'N	=	0.016	
Flow-CFS--Q	=	0.640	-10 yr Q From South
SPREAD-Ft.--T	=	9.849	-13.5' Max
Average Velocity-V-fps	=	0.574	
FLOW in Gutter-CFS--Q	=	0.424	
% Flow in Gutter-CFS	=	66.251	
Velocity of Flow in Gutter-fps	=	0.736	
Depth at Curb Line-Inches--d	=	3.765	

Calc used to check spread at upstream end of slotted Drain
Sta 6+41.09 - use 5' slotted drain

ARIZONA DEPARTMENT OF TRANSPORTATION
DRAINAGE DESIGN SECTION

09-23-2002

PROJECT NAME- _____ TRACS NO.- _____
HIGHWAY NAME- _____ DESIGNER - RSR
LOCATION - Ramp GA 6+48.09 CHECKER - _____ PAGE _____
Ver 3.40: December 1995

GUTTER FLOW HYDRAULICS
GUTTER DESCRIPTION

Roadway Grade-% Per cent--G	=	0.042
Roadway Cross-Slope-Ft./Ft.--Sx	=	0.020
Shoulder Width-Ft.--	=	10.000
Shoulder Slope-Ft./Ft.--Ss	=	0.020
Gutter Width-Ft.--W	=	2.500
Gutter Slope-Ft./Ft.--Sw	=	0.067
Gutter Depression-Inches--	=	2.010
Manning's 'N	=	0.016
Flow-CFS--Q	=	0.430
SPREAD-Ft.--T	=	8.085
Average Velocity-V-fps	=	0.537
FLOW in Gutter-CFS--Q	=	0.326
% Flow in Gutter-CFS	=	75.797
Velocity of Flow in Gutter-fps	=	0.667
Depth at Curb Line-Inches--d	=	3.350

Calc used to check spread at upstream end of slotted drain
Sta 6+55.09 - use 5' slotted drain

ARIZONA DEPARTMENT OF TRANSPORTATION
DRAINAGE DESIGN SECTION

04-10-2003

PROJECT NAME- _____ TRACS NO.- _____
HIGHWAY NAME- _____ DESIGNER - RSR
LOCATION - Ramp GA 7+15 CHECKER - (A) PAGE _____
Ver 3.40: December 1995

SLOTTED DRAIN W/ GRATE--ON GRADE

GUTTER FLOW HYDRAULICS
GUTTER DESCRIPTION

Roadway Grade-% Per cent--G	=	0.402
Roadway Cross-Slope-Ft./Ft.--Sx	=	0.020
Shoulder Width-Ft.--	=	10.000
Shoulder Slope-Ft./Ft.--Ss	=	0.020
Gutter Width-Ft.--W	=	2.500
Gutter Slope-Ft./Ft.--Sw	=	0.067
Gutter Depression-Inches--	=	2.001
Manning's 'N	=	0.016
Flow-CFS--Q	=	2.100 -10yr
SPREAD-Ft.--T	=	10.125 -13.5' max
Average Velocity-V-fps	=	1.793
FLOW in Gutter-CFS--Q	=	1.363
% Flow in Gutter-CFS	=	64.926
Velocity of Flow in Gutter-fps	=	2.312
Depth at Curb Line-Inches--d	=	3.831

SLOTTED DRAIN--ADOT STD.--C13.60
GRATE TYPE: ADOT STD.--C15.91

Grate Length--Ft.	=	3.354
Grate Width---Ft.	=	2.000
Grate Area--Sq. Ft.	=	5.171
Splash-Over Velocity--FPS	=	7.354
Depth at INLET Curb Line-Inches--d	=	4.581
Local Gutter Depression-Inches	=	1.000
Length of opening: TOTAL Intercept--Ft.	=	12.618
Capture Ratio -- SLOTTED DRAIN	=	0.670
Capture Ratio -- GRATE	=	0.500

LENGTH	Efficiency	Q(S.D.)	Q(GRATE)	Q(INT.)	Q(By-Pass)	% CAPT.
5.000	0.597	1.253	0.831	2.085	0.015	99.26
10.000	0.941	1.976	0.124	2.100	0.000	100.00
15.000	1.000	2.100	0.000	2.100	0.000	100.00
20.000	1.000	2.100	0.000	2.100	0.000	100.00
25.000	1.000	2.100	0.000	2.100	0.000	100.00

ARIZONA DEPARTMENT OF TRANSPORTATION
DRAINAGE DESIGN SECTION

04-10-2003

PROJECT NAME- _____ TRACS NO.- _____
HIGHWAY NAME- _____ DESIGNER - RSR
LOCATION - Ramp GA 7+15 CHECKER - (A) PAGE _____
Ver 3.40: December 1995

SLOTTED DRAIN W/ GRATE--ON GRADE

GUTTER FLOW HYDRAULICS
GUTTER DESCRIPTION

Roadway Grade-% Per cent--G	=	0.402
Roadway Cross-Slope-Ft./Ft.--Sx	=	0.020
Shoulder Width-Ft.--	=	10.000
Shoulder Slope-Ft./Ft.--Ss	=	0.020
Gutter Width-Ft.--W	=	2.500
Gutter Slope-Ft./Ft.--Sw	=	0.067
Gutter Depression-Inches--	=	2.001
Manning's 'N	=	0.016
Flow-CFS--Q	=	3.660
SPREAD-Ft.--T	=	12.977
Average Velocity-V-fps	=	2.000
FLOW in Gutter-CFS--Q	=	1.941
% Flow in Gutter-CFS	=	53.025
Velocity of Flow in Gutter-fps	=	2.650
Depth at Curb Line-Inches--d	=	4.516

SLOTTED DRAIN--ADOT STD.--C13.60
GRATE TYPE: ADOT STD.--C15.91

Grate Length--Ft.	=	3.354
Grate Width---Ft.	=	2.000
Grate Area--Sq. Ft.	=	5.171
Splash-Over Velocity--FPS	=	7.354
Depth at INLET Curb Line-Inches--d	=	5.326
Local Gutter Depression-Inches	=	1.000
Length of opening: TOTAL Intercept--Ft.	=	17.472
Capture Ratio -- SLOTTED DRAIN	=	0.670
Capture Ratio -- GRATE	=	0.500

LENGTH	Efficiency	Q(S.D.)	Q(GRATE)	Q(INT.)	Q(By-Pass)	% CAPT.
5.000	0.455	1.665	1.634	3.299	0.361	90.15
10.000	0.783	2.867	0.783	3.649	0.011	99.71
15.000	0.970	3.552	0.108	3.660	0.000	100.00
20.000	1.000	3.660	0.000	3.660	0.000	100.00
25.000	1.000	3.660	0.000	3.660	0.000	100.00

ARIZONA DEPARTMENT OF TRANSPORTATION
DRAINAGE DESIGN SECTION

04-10-2003

PROJECT NAME- _____ TRACS NO.- _____
HIGHWAY NAME- _____ DESIGNER - RSR
LOCATION - Ramp GA 8+30 CHECKER - _____ PAGE _____
Ver 3.40: December 1995

SLOTTED DRAIN W/ GRATE--ON GRADE

GUTTER FLOW HYDRAULICS
GUTTER DESCRIPTION

Roadway Grade-% Per cent--G	=	1.093
Roadway Cross-Slope-Ft./Ft.--Sx	=	0.020
Shoulder Width-Ft.--	=	10.000
Shoulder Slope-Ft./Ft.--Ss	=	0.020
Gutter Width-Ft.--W	=	2.500
Gutter Slope-Ft./Ft.--Sw	=	0.067
Gutter Depression-Inches--	=	2.001
Manning's 'N	=	0.016
Flow-CFS--Q	=	6.190 -10 yr
SPREAD-Ft.--T	=	13.120 -13.5' max
Average Velocity-V-fps	=	3.315
FLOW in Gutter-CFS--Q	=	3.251
% Flow in Gutter-CFS	=	52.520
Velocity of Flow in Gutter-fps	=	4.396
Depth at Curb Line-Inches--d	=	4.550

SLOTTED DRAIN--ADOT STD.--C13.60
GRATE TYPE: ADOT STD.--C15.91

Grate Length--Ft.	=	3.354
Grate Width---Ft.	=	2.000
Grate Area--Sq. Ft.	=	5.171
Splash-Over Velocity--FPS	=	7.354
Depth at INLET Curb Line-Inches--d	=	5.363
Local Gutter Depression-Inches	=	1.000
Length of opening: TOTAL Intercept--Ft.	=	29.536
Capture Ratio -- SLOTTED DRAIN	=	0.670
Capture Ratio -- GRATE	=	0.500

LENGTH	Efficiency	Q(S.D.)	Q(GRATE)	Q(INT.)	Q(By-Pass)	% CAPT.
5.000	0.284	1.757	3.027	4.784	1.406	77.28
10.000	0.525	3.249	2.351	5.600	0.590	90.46
15.000	0.721	4.462	1.610	6.072	0.118	98.09
20.000	0.869	5.381	0.808	6.189	0.001	99.98
25.000	0.966	5.978	0.212	6.190	0.000	100.00

ARIZONA DEPARTMENT OF TRANSPORTATION
DRAINAGE DESIGN SECTION

04-10-2003

PROJECT NAME- _____ TRACS NO.- _____
HIGHWAY NAME- _____ DESIGNER - RSR
LOCATION - Ramp GA 8+30 CHECKER - AJ PAGE _____
Ver 3.40: December 1995

SLOTTED DRAIN W/ GRATE--ON GRADE

GUTTER FLOW HYDRAULICS
GUTTER DESCRIPTION

Roadway Grade-% Per cent--G	=	1.093
Roadway Cross-Slope-Ft./Ft.--Sx	=	0.020
Shoulder Width-Ft.--	=	10.000
Shoulder Slope-Ft./Ft.--Ss	=	0.020
Gutter Width-Ft.--W	=	2.500
Gutter Slope-Ft./Ft.--Sw	=	0.067
Gutter Depression-Inches--	=	2.001
Manning's 'N	=	0.016
Flow-CFS--Q	=	8.550 - 50yr
SPREAD-Ft.--T	=	15.041
Average Velocity-V-fps	=	3.550
FLOW in Gutter-CFS--Q	=	3.972
% Flow in Gutter-CFS	=	46.455
Velocity of Flow in Gutter-fps	=	4.754
Depth at Curb Line-Inches--d	=	5.011

SLOTTED DRAIN--ADOT STD.--C13.60
GRATE TYPE: ADOT STD.--C15.91

Grate Length--Ft.	=	3.354
Grate Width---Ft.	=	2.000
Grate Area--Sq. Ft.	=	5.171
Splash-Over Velocity--FPS	=	7.354
Depth at INLET Curb Line-Inches--d	=	5.850
Local Gutter Depression-Inches	=	1.000
Length of opening: TOTAL Intercept--Ft.	=	35.728
Capture Ratio -- SLOTTED DRAIN	=	0.670
Capture Ratio -- GRATE	=	0.500

LENGTH	Efficiency	Q(S.D.)	Q(GRATE)	Q(INT.)	Q(By-Pass)	% CAPT.
5.000	0.238	2.032	3.814	5.846	2.704	68.38
10.000	0.446	3.815	3.162	6.977	1.573	81.60
15.000	0.625	5.341	2.487	7.828	0.722	91.56
20.000	0.772	6.598	1.768	8.366	0.184	97.85
25.000	0.885	7.569	0.975	8.544	0.006	99.93

ARIZONA DEPARTMENT OF TRANSPORTATION
DRAINAGE DESIGN SECTION

04-08-2003

PROJECT NAME- _____ TRACS NO.- _____
HIGHWAY NAME- _____ DESIGNER - _____
LOCATION - Ramp GB 6+13 CHECKER - AJ PAGE _____
Ver 3.40: December 1995

GRATE INLET DESIGN -- ON GRADE

GUTTER FLOW HYDRAULICS
GUTTER DESCRIPTION

Roadway Grade-% Per cent--G	=	0.429
Roadway Cross-Slope-Ft./Ft.--Sx	=	0.020
Shoulder Width-Ft.--	=	10.000
Shoulder Slope-Ft./Ft.--Ss	=	0.020
Gutter Width-Ft.--W	=	2.500
Gutter Slope-Ft./Ft.--Sw	=	0.067
Gutter Depression-Inches--	=	2.001
Manning's 'N	=	0.016
Flow-CFS--Q	=	0.750 -10yr
SPREAD-Ft.--T	=	5.748 -8.5' max
Average Velocity-V-fps	=	1.575
FLOW in Gutter-CFS--Q	=	0.672
% Flow in Gutter-CFS	=	89.650
Velocity of Flow in Gutter-fps	=	1.813
Depth at Curb Line-Inches--d	=	2.780

GRATE TYPE: ADOT STD.--C15.91

Grate Length--Ft.	=	3.354
Grate Width---Ft.	=	2.000
Grate Area--Sq. Ft.	=	5.171
Capture Ratio -- GRATE	=	0.500
Effective Perimeter--Ft.	=	7.354
Splash-Over Velocity--FPS	=	7.354
Local Gutter Depression-Inches	=	1.000
Flow-CFS--Q	=	0.750
GUTTER FLOW at INLET-CFS--Q	=	0.742
Gutter Velocity at INLET-fps	=	1.960
Depth at INLET Curb Line-Inches--d	=	3.319
Frontal Flow Intercepted by GRATE--CFS	=	0.720
Lateral Flow Intercepted by GRATE--CFS	=	0.023
TOTAL Flow Intercepted by GRATE--CFS	=	0.743
% FLOW Intercepted	=	99.071
By-pass Flow--CFS	=	0.007

ARIZONA DEPARTMENT OF TRANSPORTATION
DRAINAGE DESIGN SECTION

04-08-2003

PROJECT NAME- _____ TRACS NO.- _____
HIGHWAY NAME- _____ DESIGNER - RSR
LOCATION - Ramp GB 6+13 CHECKER - AD PAGE _____
Ver 3.40: December 1995

GRATE INLET DESIGN -- ON GRADE

GUTTER FLOW HYDRAULICS
GUTTER DESCRIPTION

Roadway Grade-% Per cent--G	=	0.429
Roadway Cross-Slope-Ft./Ft.--Sx	=	0.020
Shoulder Width-Ft.--	=	10.000
Shoulder Slope-Ft./Ft.--Ss	=	0.020
Gutter Width-Ft.--W	=	2.500
Gutter Slope-Ft./Ft.--Sw	=	0.067
Gutter Depression-Inches--	=	2.001
Manning's 'N	=	0.016
Flow-CFS--Q	=	1.110
SPREAD-Ft.--T	=	7.235 -50yr
Average Velocity-V-fps	=	1.658
FLOW in Gutter-CFS--Q	=	0.896
% Flow in Gutter-CFS	=	80.738
Velocity of Flow in Gutter-fps	=	2.013
Depth at Curb Line-Inches--d	=	3.137

GRATE TYPE: ADOT STD.--C15.91

Grate Length--Ft.	=	3.354
Grate Width---Ft.	=	2.000
Grate Area--Sq. Ft.	=	5.171
Capture Ratio -- GRATE	=	0.500
Effective Perimeter--Ft.	=	7.354
Splash-Over Velocity--FPS	=	7.354
Local Gutter Depression-Inches	=	1.000
Flow-CFS--Q	=	1.110
GUTTER FLOW at INLET-CFS--Q	=	1.033
Gutter Velocity at INLET-fps	=	2.180
Depth at INLET Curb Line-Inches--d	=	3.775
Frontal Flow Intercepted by GRATE--CFS	=	0.978
Lateral Flow Intercepted by GRATE--CFS	=	0.078
TOTAL Flow Intercepted by GRATE--CFS	=	1.056
% FLOW Intercepted	=	95.117
By-pass Flow--CFS	=	0.054

ARIZONA DEPARTMENT OF TRANSPORTATION
DRAINAGE DESIGN SECTION

04-08-2003

PROJECT NAME- _____ TRACS NO.- _____
HIGHWAY NAME- _____ DESIGNER - RSR
LOCATION - Ramp GB 6+75.88 CHECKER - (4) PAGE _____
Ver 3.40: December 1995

SLOTTED DRAIN W/ GRATE--IN SUMP

GUTTER FLOW HYDRAULICS

GUTTER DESCRIPTION

Roadway Cross-Slope-Ft./Ft.--Sx	=	0.020
Shoulder Width-Ft.--	=	10.000
Shoulder Slope-Ft./Ft.--Ss	=	0.020
Gutter Width-Ft.--W	=	2.500
Gutter Slope-Ft./Ft.--Sw	=	0.067
Gutter Depression-Inches--	=	2.001

GRATE TYPE: ADOT STD.--C15.91

Grate Length--Ft.	=	3.354
Grate Width---Ft.	=	2.000
Grate Area--Sq. Ft.	=	5.171
Effective Perimeter--Ft.	=	7.354
Capture Ratio -- GRATE	=	0.500
Capture Ratio -- SLOTTED DRAIN	=	0.670
Local Gutter Depression-Inches	=	1.000
Flow-CFS--Q	=	1.450-10yr

LENGTH	Q(Slot. Dn)	Q(Grate)	d(inches)	SPREAD,Ft.
5.000	0.964	0.486	2.002	2.504
10.000	1.349	0.101	1.366	1.706
15.000	1.381	0.069	0.834	1.042
20.000	1.398	0.052	0.526	0.657
25.000	1.408	0.042	0.321	0.402

Use 25' of slotted drain on south side of CB

Use 15' of slotted drain on North side of CB

40' Total slotted drain

ARIZONA DEPARTMENT OF TRANSPORTATION
DRAINAGE DESIGN SECTION

04-08-2003

PROJECT NAME- _____ TRACS NO.- _____
HIGHWAY NAME- _____ DESIGNER - RSR
LOCATION - Ramp GB 6+75.88 CHECKER - _____ PAGE _____
Ver 3.40: December 1995

SLOTTED DRAIN W/ GRATE--IN SUMP

GUTTER FLOW HYDRAULICS

GUTTER DESCRIPTION

Roadway Cross-Slope-Ft./Ft.--Sx	=	0.020
Shoulder Width-Ft.--	=	10.000
Shoulder Slope-Ft./Ft.--Ss	=	0.020
Gutter Width-Ft.--W	=	2.500
Gutter Slope-Ft./Ft.--Sw	=	0.067
Gutter Depression-Inches--	=	2.001

GRATE TYPE: ADOT STD.--C15.91

Grate Length--Ft.	=	3.354
Grate Width---Ft.	=	2.000
Grate Area--Sq. Ft.	=	5.171
Effective Perimeter--Ft.	=	7.354
Capture Ratio -- GRATE	=	0.500
Capture Ratio -- SLOTTED DRAIN	=	0.670
Local Gutter Depression-Inches	=	1.000
Flow-CFS--Q	=	2.040 · 50yr

LENGTH	Q(Slot. Dn)	Q(Grate)	d(inches)	SPREAD,Ft.
5.000	1.271	0.769	2.610	5.036
10.000	1.659	0.379	1.716	2.144
15.000	1.943	0.097	1.303	1.627
20.000	1.966	0.074	0.916	1.144
25.000	1.981	0.059	0.659	0.824

ARIZONA DEPARTMENT OF TRANSPORTATION
DRAINAGE DESIGN SECTION

04-08-2003

PROJECT NAME- _____ TRACS NO.- _____
HIGHWAY NAME- _____ DESIGNER - RSR
LOCATION - Ramp GD 6+75.88 CHECKER - (A) PAGE _____
Ver 3.40: December 1995

GUTTER FLOW HYDRAULICS
GUTTER DESCRIPTION

Roadway Grade-% Per cent--G	=	0.183
Roadway Cross-Slope-Ft./Ft.--Sx	=	0.020
Shoulder Width-Ft.--	=	10.000
Shoulder Slope-Ft./Ft.--Ss	=	0.020
Gutter Width-Ft.--W	=	2.500
Gutter Slope-Ft./Ft.--Sw	=	0.067
Gutter Depression-Inches--	=	2.001
Manning's 'N	=	0.016
Flow-CFS--Q	=	0.880 -10 yr
SPREAD-Ft.--T	=	8.016 - 8 max
Average Velocity-V-fps	=	1.116
FLOW in Gutter-CFS--Q	=	0.670
% Flow in Gutter-CFS	=	76.133
Velocity of Flow in Gutter-fps	=	1.384
Depth at Curb Line-Inches--d	=	3.325

Calc used to check spread @ upstream end of s/o Ned drain
Sta 6+48.88 - 25' of s/o Ned drain

ARIZONA DEPARTMENT OF TRANSPORTATION
DRAINAGE DESIGN SECTION

04-08-2003

PROJECT NAME- _____ TRACS NO.- _____
HIGHWAY NAME- _____ DESIGNER - RSR
LOCATION - Ramp GB 6+75.88 CHECKER - (A) PAGE _____
Ver 3.40: December 1995

GUTTER FLOW HYDRAULICS
GUTTER DESCRIPTION

Roadway Grade-% Per cent--G	=	0.118
Roadway Cross-Slope-Ft./Ft.--Sx	=	0.020
Shoulder Width-Ft.--	=	10.000
Shoulder Slope-Ft./Ft.--Ss	=	0.020
Gutter Width-Ft.--W	=	2.500
Gutter Slope-Ft./Ft.--Sw	=	0.067
Gutter Depression-Inches--	=	2.001
Manning's 'N	=	0.016
Flow-CFS--Q	=	0.570
SPREAD-Ft.--T	=	7.155
Average Velocity-V-fps	=	0.866
FLOW in Gutter-CFS--Q	=	0.463
% Flow in Gutter-CFS	=	81.219
Velocity of Flow in Gutter-fps	=	1.049
Depth at Curb Line-Inches--d	=	3.118

Calc used to check spread @ upstream end of slotted drain
sta 6+92.88 - 15' of slotted drain

ARIZONA DEPARTMENT OF TRANSPORTATION
DRAINAGE DESIGN SECTION

04-08-2003

PROJECT NAME- _____ TRACS NO.- _____
HIGHWAY NAME- _____ DESIGNER - RSR
LOCATION - Ramp GB 7+39 CHECKER - (A) PAGE _____
Ver 3.40: December 1995

GRATE INLET DESIGN -- ON GRADE

GUTTER FLOW HYDRAULICS
GUTTER DESCRIPTION

Roadway Grade-% Per cent--G	=	0.433
Roadway Cross-Slope-Ft./Ft.--Sx	=	0.020
Shoulder Width-Ft.--	=	10.000
Shoulder Slope-Ft./Ft.--Ss	=	0.020
Gutter Width-Ft.--W	=	2.500
Gutter Slope-Ft./Ft.--Sw	=	0.067
Gutter Depression-Inches--	=	2.001
Manning's 'N	=	0.016
Flow-CFS--Q	=	0.490 - 10yr
SPREAD-Ft.--T	=	4.218 - 8' max
Average Velocity-V-fps	=	1.513
FLOW in Gutter-CFS--Q	=	0.475
% Flow in Gutter-CFS	=	96.980
Velocity of Flow in Gutter-fps	=	1.614
Depth at Curb Line-Inches--d	=	2.413

GRATE TYPE: ADOT STD.--C15.91

Grate Length--Ft.	=	3.354
Grate Width---Ft.	=	2.000
Grate Area--Sq. Ft.	=	5.171
Capture Ratio -- GRATE	=	0.500
Effective Perimeter--Ft.	=	7.354
Splash-Over Velocity--FPS	=	7.354
Local Gutter Depression-Inches	=	1.000
Flow-CFS--Q	=	0.490
GUTTER FLOW at INLET-CFS--Q	=	0.490
Gutter Velocity at INLET-fps	=	1.760
Depth at INLET Curb Line-Inches--d	=	2.832
Frontal Flow Intercepted by GRATE--CFS	=	0.487
Lateral Flow Intercepted by GRATE--CFS	=	0.003
TOTAL Flow Intercepted by GRATE--CFS	=	0.490
% FLOW Intercepted	=	99.955
By-pass Flow--CFS	=	0.000

ARIZONA DEPARTMENT OF TRANSPORTATION
DRAINAGE DESIGN SECTION

04-08-2003

PROJECT NAME- _____ TRACS NO.- _____
HIGHWAY NAME- _____ DESIGNER - RSR
LOCATION - Ramp GB 7+39 CHECKER - (A) PAGE _____
Ver 3.40: December 1995

GRATE INLET DESIGN -- ON GRADE

GUTTER FLOW HYDRAULICS
GUTTER DESCRIPTION

Roadway Grade-% Per cent--G	=	0.433
Roadway Cross-Slope-Ft./Ft.--Sx	=	0.020
Shoulder Width-Ft.--	=	10.000
Shoulder Slope-Ft./Ft.--Ss	=	0.020
Gutter Width-Ft.--W	=	2.500
Gutter Slope-Ft./Ft.--Sw	=	0.067
Gutter Depression-Inches--	=	2.001
Manning's 'N	=	0.016
Flow-CFS--Q	=	0.850 - 50yr
SPREAD-Ft.--T	=	6.188
Average Velocity-V-fps	=	1.607
FLOW in Gutter-CFS--Q	=	0.740
% Flow in Gutter-CFS	=	87.013
Velocity of Flow in Gutter-fps	=	1.883
Depth at Curb Line-Inches--d	=	2.886

GRATE TYPE: ADOT STD.--C15.91

Grate Length--Ft.	=	3.354
Grate Width---Ft.	=	2.000
Grate Area--Sq. Ft.	=	5.171
Capture Ratio -- GRATE	=	0.500
Effective Perimeter--Ft.	=	7.354
Splash-Over Velocity--FPS	=	7.354
Local Gutter Depression-Inches	=	1.000
Flow-CFS--Q	=	0.850
GUTTER FLOW at INLET-CFS--Q	=	0.831
Gutter Velocity at INLET-fps	=	2.037
Depth at INLET Curb Line-Inches--d	=	3.459
Frontal Flow Intercepted by GRATE--CFS	=	0.799
Lateral Flow Intercepted by GRATE--CFS	=	0.037
TOTAL Flow Intercepted by GRATE--CFS	=	0.836
% FLOW Intercepted	=	98.358
By-pass Flow--CFS	=	0.014

ARIZONA DEPARTMENT OF TRANSPORTATION
DRAINAGE DESIGN SECTION

04-08-2003

PROJECT NAME- _____ TRACS NO.- _____
HIGHWAY NAME- _____ DESIGNER - RSR
LOCATION - Ramp GB 8+20 CHECKER - A PAGE _____
Ver 3.40: December 1995

SLOTTED DRAIN W/ GRATE--ON GRADE

GUTTER FLOW HYDRAULICS
GUTTER DESCRIPTION

Roadway Grade-% Per cent--G	=	0.987
Roadway Cross-Slope-Ft./Ft.--Sx	=	0.020
Shoulder Width-Ft.--	=	10.000
Shoulder Slope-Ft./Ft.--Ss	=	0.020
Gutter Width-Ft.--W	=	2.500
Gutter Slope-Ft./Ft.--Sw	=	0.067
Gutter Depression-Inches--	=	2.001
Manning's 'N	=	0.016
Flow-CFS--Q	=	1.890 - 10 yr
SPREAD-Ft.--T	=	7.699 - 8' max
Average Velocity-V-fps	=	2.559
FLOW in Gutter-CFS--Q	=	1.474
% Flow in Gutter-CFS	=	78.015
Velocity of Flow in Gutter-fps	=	3.148
Depth at Curb Line-Inches--d	=	3.249

SLOTTED DRAIN--ADOT STD.--C13.60
GRATE TYPE: ADOT STD.--C15.91

Grate Length--Ft.	=	3.354
Grate Width---Ft.	=	2.000
Grate Area--Sq. Ft.	=	5.171
Splash-Over Velocity--FPS	=	7.354
Depth at INLET Curb Line-Inches--d	=	3.910
Local Gutter Depression-Inches	=	1.000
Length of opening: TOTAL Intercept--Ft.	=	14.601
Capture Ratio -- SLOTTED DRAIN	=	0.670
Capture Ratio -- GRATE	=	0.500

LENGTH	Efficiency	Q(S.D.)	Q(GRATE)	Q(INT.)	Q(By-Pass)	% CAPT.
5.000	0.530	1.001	0.885	1.886	0.004	99.78
10.000	0.875	1.654	0.236	1.890	0.000	100.00
15.000	1.000	1.890	0.000	1.890	0.000	100.00
20.000	1.000	1.890	0.000	1.890	0.000	100.00
25.000	1.000	1.890	0.000	1.890	0.000	100.00
30.000	1.000	1.890	0.000	1.890	0.000	100.00

ARIZONA DEPARTMENT OF TRANSPORTATION
DRAINAGE DESIGN SECTION

04-08-2003

PROJECT NAME- _____ TRACS NO.- _____
HIGHWAY NAME- _____ DESIGNER - RSR
LOCATION - Ramp GB 8+20 CHECKER - (A) PAGE _____
Ver 3.40: December 1995

SLOTTED DRAIN W/ GRATE--ON GRADE

GUTTER FLOW HYDRAULICS
GUTTER DESCRIPTION

Roadway Grade-% Per cent--G	=	0.987
Roadway Cross-Slope-Ft./Ft.--Sx	=	0.020
Shoulder Width-Ft.--	=	10.000
Shoulder Slope-Ft./Ft.--Ss	=	0.020
Gutter Width-Ft.--W	=	2.500
Gutter Slope-Ft./Ft.--Sw	=	0.067
Gutter Depression-Inches--	=	2.001
Manning's 'N	=	0.016
Flow-CFS--Q	=	3.160 - 50yr
SPREAD-Ft.--T	=	9.936
Average Velocity-V-fps	=	2.789
FLOW in Gutter-CFS--Q	=	2.081
% Flow in Gutter-CFS	=	65.847
Velocity of Flow in Gutter-fps	=	3.586
Depth at Curb Line-Inches--d	=	3.786

SLOTTED DRAIN--ADOT STD.--C13.60
GRATE TYPE: ADOT STD.--C15.91

Grate Length--Ft.	=	3.354
Grate Width---Ft.	=	2.000
Grate Area--Sq. Ft.	=	5.171
Splash-Over Velocity--FPS	=	7.354
Depth at INLET Curb Line-Inches--d	=	4.530
Local Gutter Depression-Inches	=	1.000
Length of opening: TOTAL Intercept--Ft.	=	19.486
Capture Ratio -- SLOTTED DRAIN	=	0.670
Capture Ratio -- GRATE	=	0.500

LENGTH	Efficiency	Q(S.D.)	Q(GRATE)	Q(INT.)	Q(By-Pass)	% CAPT.
5.000	0.414	1.307	1.684	2.991	0.169	94.66
10.000	0.726	2.295	0.861	3.157	0.003	99.89
15.000	0.929	2.935	0.225	3.160	0.000	100.00
20.000	1.000	3.160	0.000	3.160	0.000	100.00
25.000	1.000	3.160	0.000	3.160	0.000	100.00
30.000	1.000	3.160	0.000	3.160	0.000	100.00

ARIZONA DEPARTMENT OF TRANSPORTATION
DRAINAGE DESIGN SECTION

04-08-2003

PROJECT NAME- _____ TRACS NO.- _____
HIGHWAY NAME- _____ DESIGNER - RSR
LOCATION - Ramp GB 10+50 CHECKER - AD PAGE _____
Ver 3.40: December 1995

SLOTTED DRAIN W/ GRATE--ON GRADE

GUTTER FLOW HYDRAULICS
GUTTER DESCRIPTION

Roadway Grade-% Per cent--G	=	1.979
Roadway Cross-Slope-Ft./Ft.--Sx	=	0.020
Shoulder Width-Ft.--	=	10.000
Shoulder Slope-Ft./Ft.--Ss	=	0.020
Gutter Width-Ft.--W	=	2.500
Gutter Slope-Ft./Ft.--Sw	=	0.067
Gutter Depression-Inches--	=	2.001
Manning's 'N	=	0.016
Flow-CFS--Q	=	4.460 -10yr
SPREAD-Ft.--T	=	9.921 10.5' max
Average Velocity-V-fps	=	3.946
FLOW in Gutter-CFS--Q	=	2.940
% Flow in Gutter-CFS	=	65.920
Velocity of Flow in Gutter-fps	=	5.073
Depth at Curb Line-Inches--d	=	3.782

SLOTTED DRAIN--ADOT STD.--C13.60
GRATE TYPE: ADOT STD.--C15.91

Grate Length--Ft.	=	3.354
Grate Width---Ft.	=	2.000
Grate Area--Sq. Ft.	=	5.171
Splash-Over Velocity--FPS	=	7.354
Depth at INLET Curb Line-Inches--d	=	4.526
Local Gutter Depression-Inches	=	1.000
Length of opening: TOTAL Intercept--Ft.	=	27.731
Capture Ratio -- SLOTTED DRAIN	=	0.670
Capture Ratio -- GRATE	=	0.500

LENGTH	Efficiency	Q(S.D.)	Q(GRATE)	Q(INT.)	Q(By-Pass)	% CAPT.
5.000	0.301	1.342	2.636	3.978	0.482	89.19
10.000	0.553	2.466	1.893	4.359	0.101	97.73
15.000	0.754	3.362	1.096	4.457	0.003	99.94
20.000	0.900	4.012	0.448	4.460	0.000	100.00
25.000	0.985	4.391	0.069	4.460	0.000	100.00
30.000	1.000	4.460	0.000	4.460	0.000	100.00

ARIZONA DEPARTMENT OF TRANSPORTATION
DRAINAGE DESIGN SECTION

04-08-2003

PROJECT NAME- _____ TRACS NO.- _____
HIGHWAY NAME- _____ DESIGNER - RSR
LOCATION - Ramp GB 10+50 CHECKER - (A) PAGE _____
Ver 3.40: December 1995

SLOTTED DRAIN W/ GRATE--ON GRADE

GUTTER FLOW HYDRAULICS
GUTTER DESCRIPTION

Roadway Grade-% Per cent--G	=	1.979
Roadway Cross-Slope-Ft./Ft.--Sx	=	0.020
Shoulder Width-Ft.--	=	10.000
Shoulder Slope-Ft./Ft.--Ss	=	0.020
Gutter Width-Ft.--W	=	2.500
Gutter Slope-Ft./Ft.--Sw	=	0.067
Gutter Depression-Inches--	=	2.001
Manning's 'N	=	0.016
Flow-CFS--Q	=	6.160 - 50yr
SPREAD-Ft.--T	=	11.500
Average Velocity-V-fps	=	4.195
FLOW in Gutter-CFS--Q	=	3.618
% Flow in Gutter-CFS	=	58.732
Velocity of Flow in Gutter-fps	=	5.495
Depth at Curb Line-Inches--d	=	4.161

SLOTTED DRAIN--ADOT STD.--C13.60
GRATE TYPE: ADOT STD.--C15.91

Grate Length--Ft.	=	3.354
Grate Width---Ft.	=	2.000
Grate Area--Sq. Ft.	=	5.171
Splash-Over Velocity--FPS	=	7.354
Depth at INLET Curb Line-Inches--d	=	4.944
Local Gutter Depression-Inches	=	1.000
Length of opening: TOTAL Intercept--Ft.	=	33.472
Capture Ratio -- SLOTTED DRAIN	=	0.670
Capture Ratio -- GRATE	=	0.500

LENGTH	Efficiency	Q(S.D.)	Q(GRATE)	Q(INT.)	Q(By-Pass)	% CAPT.
5.000	0.253	1.556	3.392	4.949	1.211	80.33
10.000	0.472	2.908	2.712	5.620	0.540	91.24
15.000	0.657	4.047	1.983	6.030	0.130	97.89
20.000	0.806	4.963	1.191	6.154	0.006	99.90
25.000	0.916	5.641	0.519	6.160	0.000	100.00
30.000	0.983	6.056	0.104	6.160	0.000	100.00

ARIZONA DEPARTMENT OF TRANSPORTATION
DRAINAGE DESIGN SECTION

09-24-2002

PROJECT NAME- _____ TRACS NO.- _____
HIGHWAY NAME- _____ DESIGNER - RSR
LOCATION - Ramp GC 8+76 CHECKER - A PAGE _____
Ver 3.40: December 1995

SLOTTED DRAIN W/ GRATE--ON GRADE

GUTTER FLOW HYDRAULICS
GUTTER DESCRIPTION

Roadway Grade-% Per cent--G	=	0.637	
Roadway Cross-Slope-Ft./Ft.--Sx	=	0.036	
Shoulder Width-Ft.--	=	10.000	
Shoulder Slope-Ft./Ft.--Ss	=	0.036	
Gutter Width-Ft.--W	=	2.500	
Gutter Slope-Ft./Ft.--Sw	=	0.067	
Gutter Depression-Inches--	=	2.001	
Manning's 'N	=	0.016	
Flow-CFS--Q	=	6.120	-10 yr
SPREAD-Ft.--T	=	10.301	-11.75' Max
Average Velocity-V-fps	=	3.051	
FLOW in Gutter-CFS--Q	=	3.494	
% Flow in Gutter-CFS	=	57.095	
Velocity of Flow in Gutter-fps	=	3.837	
Depth at Curb Line-Inches--d	=	5.371	

SLOTTED DRAIN--ADOT STD.--C13.60
GRATE TYPE: ADOT STD.--C15.91

Grate Length--Ft.	=	3.354
Grate Width---Ft.	=	2.000
Grate Area--Sq. Ft.	=	5.171
Splash-Over Velocity--FPS	=	7.354
Depth at INLET Curb Line-Inches--d	=	6.156
Local Gutter Depression-Inches	=	1.000
Length of opening: TOTAL Intercept--Ft.	=	23.414
Capture Ratio -- SLOTTED DRAIN	=	0.670
Capture Ratio -- GRATE	=	0.500

LENGTH	Efficiency	Q(S.D.)	Q(GRATE)	Q(INT.)	Q(By-Pass)	% CAPT.
5.000	0.351	2.148	2.933	5.081	1.039	83.03
10.000	0.633	3.875	1.946	5.821	0.299	95.11
15.000	0.842	5.150	0.956	6.106	0.014	99.77
20.000	0.969	5.929	0.191	6.120	0.000	100.00
25.000	1.000	6.120	0.000	6.120	0.000	100.00
30.000	1.000	6.120	0.000	6.120	0.000	100.00

ARIZONA DEPARTMENT OF TRANSPORTATION
DRAINAGE DESIGN SECTION

09-24-2002

PROJECT NAME- _____ TRACS NO.- _____
HIGHWAY NAME- _____ DESIGNER - RsR
LOCATION - Ramp GC 8+76 CHECKER - A PAGE _____
Ver 3.40: December 1995

SLOTTED DRAIN W/ GRATE--ON GRADE

GUTTER FLOW HYDRAULICS
GUTTER DESCRIPTION

Roadway Grade-% Per cent--G	=	0.637
Roadway Cross-Slope-Ft./Ft.--Sx	=	0.036
Shoulder Width-Ft.--	=	10.000
Shoulder Slope-Ft./Ft.--Ss	=	0.036
Gutter Width-Ft.--W	=	2.500
Gutter Slope-Ft./Ft.--Sw	=	0.067
Gutter Depression-Inches--	=	2.001
Manning's 'N	=	0.016
Flow-CFS--Q	=	8.450 - 50yr
SPREAD-Ft.--T	=	11.726
Average Velocity-V-fps	=	3.287
FLOW in Gutter-CFS--Q	=	4.343
% Flow in Gutter-CFS	=	51.393
Velocity of Flow in Gutter-fps	=	4.180
Depth at Curb Line-Inches--d	=	5.987

SLOTTED DRAIN--ADOT STD.--C13.60
GRATE TYPE: ADOT STD.--C15.91

Grate Length--Ft.	=	3.354
Grate Width---Ft.	=	2.000
Grate Area--Sq. Ft.	=	5.171
Splash-Over Velocity--FPS	=	7.354
Depth at INLET Curb Line-Inches--d	=	6.799
Local Gutter Depression-Inches	=	1.000
Length of opening: TOTAL Intercept--Ft.	=	27.757
Capture Ratio -- SLOTTED DRAIN	=	0.670
Capture Ratio -- GRATE	=	0.500

LENGTH	Efficiency	Q(S.D.)	Q(GRATE)	Q(INT.)	Q(By-Pass)	% CAPT.
5.000	0.301	2.540	3.827	6.367	2.083	75.35
10.000	0.552	4.669	2.836	7.504	0.946	88.81
15.000	0.753	6.365	1.839	8.204	0.246	97.08
20.000	0.899	7.598	0.845	8.443	0.007	99.92
25.000	0.984	8.318	0.132	8.450	0.000	100.00
30.000	1.000	8.450	0.000	8.450	0.000	100.00

ARIZONA DEPARTMENT OF TRANSPORTATION
DRAINAGE DESIGN SECTION

10-01-2002

PROJECT NAME- _____ TRACS NO.- _____
HIGHWAY NAME- _____ DESIGNER - RSR
LOCATION - Ramp GC 9+75.74 CHECKER - AD PAGE _____
Ver 3.40: December 1995

GRATE INLET--IN SUMP

GUTTER FLOW HYDRAULICS

GUTTER DESCRIPTION

Roadway Cross-Slope-Ft./Ft.--Sx	=	0.036
Shoulder Width-Ft.--	=	10.000
Shoulder Slope-Ft./Ft.--Ss	=	0.036
Gutter Width-Ft.--W	=	2.500
Gutter Slope-Ft./Ft.--Sw	=	0.067
Gutter Depression-Inches--	=	2.001

GRATE TYPE: ADOT STD.--C15.91

Grate Length--Ft.	=	3.354
Grate Width---Ft.	=	2.000
Grate Area--Sq. Ft.	=	5.171
Effective Perimeter--Ft.	=	7.354
Capture Ratio -- GRATE	=	0.500
Local Gutter Depression-Inches	=	1.000
Depth at INLET Curb Line-Inches--d	=	4.647
Depth at C.G. of Grate Flow--In.	=	4.555
SPREAD-Ft.--T	=	8.626
Depth for WEIR FLOW, inches	=	5.647
Depth for ORIFICE FLOW, inches	=	0.055

Q(INLET) = 2.110 cfs is Based on WEIR flow - 10yr

No slotted drain required

ARIZONA DEPARTMENT OF TRANSPORTATION
DRAINAGE DESIGN SECTION

10-01-2002

PROJECT NAME- _____ TRACS NO.- _____
HIGHWAY NAME- _____ DESIGNER - RSR
LOCATION - Ramp GL 9+75.74 CHECKER - AJ PAGE _____
Ver 3.40: December 1995

GRATE INLET--IN SUMP

GUTTER FLOW HYDRAULICS

GUTTER DESCRIPTION

Roadway Cross-Slope-Ft./Ft.--Sx	=	0.036
Shoulder Width-Ft.--	=	10.000
Shoulder Slope-Ft./Ft.--Ss	=	0.036
Gutter Width-Ft.--W	=	2.500
Gutter Slope-Ft./Ft.--Sw	=	0.067
Gutter Depression-Inches--	=	2.001

GRATE TYPE: ADOT STD.--C15.91

Grate Length--Ft.	=	3.354
Grate Width---Ft.	=	2.000
Grate Area--Sq. Ft.	=	5.171
Effective Perimeter--Ft.	=	7.354
Capture Ratio -- GRATE	=	0.500
Local Gutter Depression-Inches	=	1.000
Depth at INLET Curb Line-Inches--d	=	7.433
Depth at C.G. of Grate Flow--In.	=	7.299
SPREAD-Ft.--T	=	15.074
Depth for WEIR FLOW, inches	=	8.433
Depth for ORIFICE FLOW, inches	=	0.267

Q(INLET) = 4.640 cfs is Based on WEIR flow - 50yr

ARIZONA DEPARTMENT OF TRANSPORTATION
DRAINAGE DESIGN SECTION

10-01-2002

PROJECT NAME- _____ TRACS NO.- _____
HIGHWAY NAME- _____ DESIGNER - RSR
LOCATION - Ramp GC 9+75.74 CHECKER - [illegible] PAGE _____
Ver 3.40: December 1995

GUTTER FLOW HYDRAULICS
GUTTER DESCRIPTION

Roadway Grade-% Per cent--G	=	0.013
Roadway Cross-Slope-Ft./Ft.--Sx	=	0.036
Shoulder Width-Ft.--	=	10.000
Shoulder Slope-Ft./Ft.--Ss	=	0.036
Gutter Width-Ft.--W	=	2.500
Gutter Slope-Ft./Ft.--Sw	=	0.067
Gutter Depression-Inches--	=	2.001
Manning's 'N	=	0.016
Flow-CFS--Q	=	1.040 -10yr
SPREAD-Ft.--T	=	11.083
Average Velocity-V-fps	=	0.451
FLOW in Gutter-CFS--Q	=	0.560
% Flow in Gutter-CFS	=	53.829
Velocity of Flow in Gutter-fps	=	0.571
Depth at Curb Line-Inches--d	=	5.709

Calc used to check spread at upstream end of catch basin @ Sta 9+73.74 - No sloped drain required

ARIZONA DEPARTMENT OF TRANSPORTATION
DRAINAGE DESIGN SECTION

10-01-2002

PROJECT NAME- _____ TRACS NO.- _____
HIGHWAY NAME- _____ DESIGNER - RSR
LOCATION - Ramp GC 9+75.79 CHECKER - A PAGE _____
Ver 3.40: December 1995

GUTTER FLOW HYDRAULICS
GUTTER DESCRIPTION

Roadway Grade-% Per cent--G	=	0.013
Roadway Cross-Slope-Ft./Ft.--Sx	=	0.036
Shoulder Width-Ft.--	=	10.000
Shoulder Slope-Ft./Ft.--Ss	=	0.036
Gutter Width-Ft.--W	=	2.500
Gutter Slope-Ft./Ft.--Sw	=	0.067
Gutter Depression-Inches--	=	2.001
Manning's 'N	=	0.016
Flow-CFS--Q	=	1.060 -10yr
SPREAD-Ft.--T	=	11.168
Average Velocity-V-fps	=	0.453
FLOW in Gutter-CFS--Q	=	0.567
% Flow in Gutter-CFS	=	53.494
Velocity of Flow in Gutter-fps	=	0.574
Depth at Curb Line-Inches--d	=	5.746

Calc used to check spread at upstream end of catch basin @ sta 9+77.74 - No slotted drain required

ARIZONA DEPARTMENT OF TRANSPORTATION
DRAINAGE DESIGN SECTION

10-01-2002

PROJECT NAME- _____ TRACS NO.- _____
HIGHWAY NAME- _____ DESIGNER - RSR
LOCATION - Ramp GC 10+75 CHECKER - A1 PAGE _____
Ver 3.40: December 1995

SLOTTED DRAIN W/ GRATE--ON GRADE

GUTTER FLOW HYDRAULICS
GUTTER DESCRIPTION

Roadway Grade-% Per cent--G	=	0.634
Roadway Cross-Slope-Ft./Ft.--Sx	=	0.036
Shoulder Width-Ft.--	=	10.000
Shoulder Slope-Ft./Ft.--Ss	=	0.036
Gutter Width-Ft.--W	=	2.500
Gutter Slope-Ft./Ft.--Sw	=	0.067
Gutter Depression-Inches--	=	2.001
Manning's 'N	=	0.016
Flow-CFS--Q	=	3.820 -10 yr
SPREAD-Ft.--T	=	8.494 - 11.75' max
Average Velocity-V-fps	=	2.739 Flanking Inlet
FLOW in Gutter-CFS--Q	=	2.523
% Flow in Gutter-CFS	=	66.042
Velocity of Flow in Gutter-fps	=	3.373
Depth at Curb Line-Inches--d	=	4.590 — 6" max

SLOTTED DRAIN--ADOT STD.--C13.60
GRATE TYPE: ADOT STD.--C15.91

Grate Length--Ft.	=	3.354
Grate Width---Ft.	=	2.000
Grate Area--Sq. Ft.	=	5.171
Splash-Over Velocity--FPS	=	7.354
Depth at INLET Curb Line-Inches--d	=	5.327
Local Gutter Depression-Inches	=	1.000
Length of opening: TOTAL Intercept--Ft.	=	18.245
Capture Ratio -- SLOTTED DRAIN	=	0.670
Capture Ratio -- GRATE	=	0.500

LENGTH	Efficiency	Q(S.D.)	Q(GRATE)	Q(INT.)	Q(By-Pass)	% CAPT.
5.000	0.438	1.674	1.880	3.553	0.267	93.01
10.000	0.761	2.906	0.904	3.810	0.010	99.73
15.000	0.955	3.649	0.171	3.820	0.000	100.00
20.000	1.000	3.820	0.000	3.820	0.000	100.00
25.000	1.000	3.820	0.000	3.820	0.000	100.00
30.000	1.000	3.820	0.000	3.820	0.000	100.00

ARIZONA DEPARTMENT OF TRANSPORTATION
DRAINAGE DESIGN SECTION

10-01-2002

PROJECT NAME- _____ TRACS NO.- _____
HIGHWAY NAME- _____ DESIGNER - _____
LOCATION - Ramp GC 10+75 CHECKER - AD PAGE _____
Ver 3.40: December 1995

SLOTTED DRAIN W/ GRATE--ON GRADE

GUTTER FLOW HYDRAULICS
GUTTER DESCRIPTION

Roadway Grade-% Per cent--G	=	0.634
Roadway Cross-Slope-Ft./Ft.--Sx	=	0.036
Shoulder Width-Ft.--	=	10.000
Shoulder Slope-Ft./Ft.--Ss	=	0.036
Gutter Width-Ft.--W	=	2.500
Gutter Slope-Ft./Ft.--Sw	=	0.067
Gutter Depression-Inches--	=	2.001
Manning's 'N	=	0.016
Flow-CFS--Q	=	7.350 -50yr
SPREAD-Ft.--T	=	11.101
Average Velocity-V-fps	=	3.176
FLOW in Gutter-CFS--Q	=	3.952
% Flow in Gutter-CFS	=	53.765
Velocity of Flow in Gutter-fps	=	4.022
Depth at Curb Line-Inches--d	=	5.717

SLOTTED DRAIN--ADOT STD.--C13.60
GRATE TYPE: ADOT STD.--C15.91

Grate Length--Ft.	=	3.354
Grate Width---Ft.	=	2.000
Grate Area--Sq. Ft.	=	5.171
Splash-Over Velocity--FPS	=	7.354
Depth at INLET Curb Line-Inches--d	=	6.518
Local Gutter Depression-Inches	=	1.000
Length of opening: TOTAL Intercept--Ft.	=	25.759
Capture Ratio -- SLOTTED DRAIN	=	0.670
Capture Ratio -- GRATE	=	0.500

LENGTH	Efficiency	Q(S.D.)	Q(GRATE)	Q(INT.)	Q(By-Pass)	% CAPT.
5.000	0.322	2.366	3.418	5.784	1.566	78.70
10.000	0.587	4.315	2.429	6.744	0.606	91.75
15.000	0.792	5.823	1.431	7.254	0.096	98.70
20.000	0.933	6.854	0.496	7.350	0.000	100.00
25.000	0.998	7.337	0.013	7.350	0.000	100.00
30.000	1.000	7.350	0.000	7.350	0.000	100.00

ARIZONA DEPARTMENT OF TRANSPORTATION
DRAINAGE DESIGN SECTION

10-01-2002

PROJECT NAME- _____ TRACS NO.- _____
HIGHWAY NAME- _____ DESIGNER - RSR
LOCATION - Ramp GC 11+75 CHECKER - (A) PAGE _____
Ver 3.40: December 1995

SLOTTED DRAIN W/ GRATE--ON GRADE

GUTTER FLOW HYDRAULICS
GUTTER DESCRIPTION

Roadway Grade-% Per cent--G	=	1.273
Roadway Cross-Slope-Ft./Ft.--Sx	=	0.036
Shoulder Width-Ft.--	=	10.000
Shoulder Slope-Ft./Ft.--Ss	=	0.036
Gutter Width-Ft.--W	=	2.500
Gutter Slope-Ft./Ft.--Sw	=	0.067
Gutter Depression-Inches--	=	2.001
Manning's 'N	=	0.016
Flow-CFS--Q	=	11.340
SPREAD-Ft.--T	=	11.486
Average Velocity-V-fps	=	4.590
FLOW in Gutter-CFS--Q	=	5.929
% Flow in Gutter-CFS	=	52.281
Velocity of Flow in Gutter-fps	=	5.828
Depth at Curb Line-Inches--d	=	5.883

SLOTTED DRAIN--ADOT STD.--C13.60
GRATE TYPE: ADOT STD.--C15.91

Grate Length--Ft.	=	3.354
Grate Width---Ft.	=	2.000
Grate Area--Sq. Ft.	=	5.171
Splash-Over Velocity--FPS	=	7.354
Depth at INLET Curb Line-Inches--d	=	6.691
Local Gutter Depression-Inches	=	1.000
Length of opening: TOTAL Intercept--Ft.	=	38.441
Capture Ratio -- SLOTTED DRAIN	=	0.670
Capture Ratio -- GRATE	=	0.500

LENGTH	Efficiency	Q(S.D.)	Q(GRATE)	Q(INT.)	Q(By-Pass)	% CAPT.
5.000	0.222	2.516	5.327	7.843	3.497	69.16
10.000	0.419	4.747	4.413	9.160	2.180	80.77
15.000	0.589	6.685	3.497	10.181	1.159	89.78
20.000	0.733	8.317	2.573	10.890	0.450	96.03
25.000	0.849	9.629	1.635	11.265	0.075	99.34
30.000	0.935	10.600	0.740	11.340	0.000	100.00

ARIZONA DEPARTMENT OF TRANSPORTATION
DRAINAGE DESIGN SECTION

10-01-2002

PROJECT NAME- _____ TRACS NO.- _____
HIGHWAY NAME- _____ DESIGNER - RSG
LOCATION - Ramp G6 11+75 CHECKER - (A) PAGE _____
Ver 3.40: December 1995

SLOTTED DRAIN W/ GRATE--ON GRADE

GUTTER FLOW HYDRAULICS
GUTTER DESCRIPTION

Roadway Grade-% Per cent--G	=	1.273
Roadway Cross-Slope-Ft./Ft.--Sx	=	0.036
Shoulder Width-Ft.--	=	10.000
Shoulder Slope-Ft./Ft.--Ss	=	0.036
Gutter Width-Ft.--W	=	2.500
Gutter Slope-Ft./Ft.--Sw	=	0.067
Gutter Depression-Inches--	=	2.001
Manning's 'N	=	0.016
Flow-CFS--Q	=	17.250
SPREAD-Ft.--T	=	13.561
Average Velocity-V-fps	=	5.064
FLOW in Gutter-CFS--Q	=	7.834
% Flow in Gutter-CFS	=	45.414
Velocity of Flow in Gutter-fps	=	6.507
Depth at Curb Line-Inches--d	=	6.779

SLOTTED DRAIN--ADOT STD.--C13.60
GRATE TYPE: ADOT STD.--C15.91

Grate Length--Ft.	=	3.354
Grate Width---Ft.	=	2.000
Grate Area--Sq. Ft.	=	5.171
Splash-Over Velocity--FPS	=	7.354
Depth at INLET Curb Line-Inches--d	=	7.617
Local Gutter Depression-Inches	=	1.000
Length of opening: TOTAL Intercept--Ft.	=	47.915
Capture Ratio -- SLOTTED DRAIN	=	0.670
Capture Ratio -- GRATE	=	0.500

LENGTH	Efficiency	Q(S.D.)	Q(GRATE)	Q(INT.)	Q(By-Pass)	% CAPT.
5.000	0.180	3.104	7.165	10.269	6.981	59.53
10.000	0.344	5.931	6.235	12.166	5.084	70.53
15.000	0.491	8.475	5.308	13.783	3.467	79.90
20.000	0.622	10.727	4.382	15.109	2.141	87.59
25.000	0.735	12.677	3.453	16.131	1.119	93.51
30.000	0.830	14.314	2.518	16.832	0.418	97.58

ARIZONA DEPARTMENT OF TRANSPORTATION
DRAINAGE DESIGN SECTION

09-24-2002

PROJECT NAME- _____ TRACS NO.- _____
HIGHWAY NAME- _____ DESIGNER - RSR
LOCATION - Ramp GD 8+50 CHECKER - AD PAGE _____
Ver 3.40: December 1995

SLOTTED DRAIN W/ GRATE--ON GRADE

GUTTER FLOW HYDRAULICS
GUTTER DESCRIPTION

Roadway Grade-% Per cent--G	=	0.790	
Roadway Cross-Slope-Ft./Ft.--Sx	=	0.032	
Shoulder Width-Ft.--	=	10.000	
Shoulder Slope-Ft./Ft.--Ss	=	0.032	
Gutter Width-Ft.--W	=	2.500	
Gutter Slope-Ft./Ft.--Sw	=	0.021	
Gutter Depression-Inches--	=	0.624	
Manning's 'N	=	0.016	
Flow-CFS--Q	=	3.030	-10yr
SPREAD-Ft.--T	=	8.706	-8.7 max
Average Velocity-V-fps	=	2.573	
FLOW in Gutter-CFS--Q	=	1.725	
% Flow in Gutter-CFS	=	56.932	
Velocity of Flow in Gutter-fps	=	3.072	
Depth at Curb Line-Inches--d	=	3.007	-3" max

SLOTTED DRAIN--ADOT STD.--C13.60
GRATE TYPE: ADOT STD.--C15.91

Grate Length--Ft.	=	3.354
Grate Width---Ft.	=	2.000
Grate Area--Sq. Ft.	=	5.171
Splash-Over Velocity--FPS	=	7.354
Depth at INLET Curb Line-Inches--d	=	3.772
Local Gutter Depression-Inches	=	1.000
Length of opening: TOTAL Intercept--Ft.	=	25.023
Capture Ratio -- SLOTTED DRAIN	=	0.670
Capture Ratio -- GRATE	=	0.500

LENGTH	Efficiency	Q(S.D.)	Q(GRATE)	Q(INT.)	Q(By-Pass)	% CAPT.
5.000	0.331	1.001	1.497	2.498	0.532	82.45
10.000	0.601	1.821	1.015	2.836	0.194	93.59
15.000	0.807	2.446	0.556	3.002	0.028	99.08
20.000	0.944	2.862	0.168	3.030	0.000	100.00
25.000	1.000	3.030	0.000	3.030	0.000	100.00

ARIZONA DEPARTMENT OF TRANSPORTATION
DRAINAGE DESIGN SECTION

09-24-2002

PROJECT NAME- _____ TRACS NO.- _____
HIGHWAY NAME- _____ DESIGNER - RSR
LOCATION - Ramp GD 8+50 CHECKER - (A) PAGE _____
Ver 3.40: December 1995

SLOTTED DRAIN W/ GRATE--ON GRADE

GUTTER FLOW HYDRAULICS
GUTTER DESCRIPTION

Roadway Grade-% Per cent--G	=	0.790
Roadway Cross-Slope-Ft./Ft.--Sx	=	0.032
Shoulder Width-Ft.--	=	10.000
Shoulder Slope-Ft./Ft.--Ss	=	0.032
Gutter Width-Ft.--W	=	2.500
Gutter Slope-Ft./Ft.--Sw	=	0.021
Gutter Depression-Inches--	=	0.624
Manning's 'N	=	0.016
Flow-CFS--Q	=	4.180
SPREAD-Ft.--T	=	9.777
Average Velocity-V-fps	=	2.797
FLOW in Gutter-CFS--Q	=	2.185
% Flow in Gutter-CFS	=	52.263
Velocity of Flow in Gutter-fps	=	3.375
Depth at Curb Line-Inches--d	=	3.419

SLOTTED DRAIN--ADOT STD.--C13.60
GRATE TYPE: ADOT STD.--C15.91

Grate Length--Ft.	=	3.354
Grate Width---Ft.	=	2.000
Grate Area--Sq. Ft.	=	5.171
Splash-Over Velocity--FPS	=	7.354
Depth at INLET Curb Line-Inches--d	=	4.209
Local Gutter Depression-Inches	=	1.000
Length of opening: TOTAL Intercept--Ft.	=	29.152
Capture Ratio -- SLOTTED DRAIN	=	0.670
Capture Ratio -- GRATE	=	0.500

LENGTH	Efficiency	Q(S.D.)	Q(GRATE)	Q(INT.)	Q(By-Pass)	% CAPT.
5.000	0.287	1.201	1.969	3.169	1.011	75.83
10.000	0.531	2.218	1.461	3.679	0.501	88.01
15.000	0.728	3.042	0.968	4.010	0.170	95.93
20.000	0.876	3.661	0.501	4.162	0.018	99.57
25.000	0.970	4.055	0.125	4.180	0.000	100.00

ARIZONA DEPARTMENT OF TRANSPORTATION
DRAINAGE DESIGN SECTION

09-25-2002

PROJECT NAME- _____ TRACS NO.- _____
HIGHWAY NAME- _____ DESIGNER - RSR
LOCATION - Ramp GD 9+96 CHECKER - AP PAGE _____
Ver 3.40: December 1995

GRATE INLET DESIGN -- ON GRADE

GUTTER FLOW HYDRAULICS
GUTTER DESCRIPTION

Roadway Grade-% Per cent--G	=	0.322	
Roadway Cross-Slope-Ft./Ft.--Sx	=	0.032	
Shoulder Width-Ft.--	=	10.000	
Shoulder Slope-Ft./Ft.--Ss	=	0.032	
Gutter Width-Ft.--W	=	2.500	
Gutter Slope-Ft./Ft.--Sw	=	0.021	
Gutter Depression-Inches--	=	0.624	
Manning's 'N	=	0.016	
Flow-CFS--Q	=	0.950	-10yr
SPREAD-Ft.--T	=	6.763	8.7' Max
Average Velocity-V-fps	=	1.363	
FLOW in Gutter-CFS--Q	=	0.643	
% Flow in Gutter-CFS	=	67.722	
Velocity of Flow in Gutter-fps	=	1.584	
Depth at Curb Line-Inches--d	=	2.261	-3" Max

GRATE TYPE: ADOT STD.--C15.91

Grate Length--Ft.	=	3.354
Grate Width---Ft.	=	2.000
Grate Area--Sq. Ft.	=	5.171
Capture Ratio -- GRATE	=	0.500
Effective Perimeter--Ft.	=	7.354
Splash-Over Velocity--FPS	=	7.354
Local Gutter Depression-Inches	=	1.000
Flow-CFS--Q	=	0.950
GUTTER FLOW at INLET-CFS--Q	=	0.772
Gutter Velocity at INLET-fps	=	1.726
Depth at INLET Curb Line-Inches--d	=	2.959
Frontal Flow Intercepted by GRATE--CFS	=	0.689
Lateral Flow Intercepted by GRATE--CFS	=	0.118
TOTAL Flow Intercepted by GRATE--CFS	=	0.807
% FLOW Intercepted	=	84.985
By-pass Flow--CFS	=	0.143

ARIZONA DEPARTMENT OF TRANSPORTATION
DRAINAGE DESIGN SECTION

09-25-2002

PROJECT NAME- _____ TRACS NO.- _____
HIGHWAY NAME- _____ DESIGNER - RSR
LOCATION - Ramp GD 9196 CHECKER - CA PAGE _____
Ver 3.40: December 1995

GRATE INLET DESIGN -- ON GRADE

GUTTER FLOW HYDRAULICS
GUTTER DESCRIPTION

Roadway Grade-% Per cent--G	=	0.322
Roadway Cross-Slope-Ft./Ft.--Sx	=	0.032
Shoulder Width-Ft.--	=	10.000
Shoulder Slope-Ft./Ft.--Ss	=	0.032
Gutter Width-Ft.--W	=	2.500
Gutter Slope-Ft./Ft.--Sw	=	0.021
Gutter Depression-Inches--	=	0.624
Manning's 'N	=	0.016
Flow-CFS--Q	=	1.590 50yr
SPREAD-Ft.--T	=	8.114
Average Velocity-V-fps	=	1.561
FLOW in Gutter-CFS--Q	=	0.952
% Flow in Gutter-CFS	=	59.851
Velocity of Flow in Gutter-fps	=	1.851
Depth at Curb Line-Inches--d	=	2.780

GRATE TYPE: ADOT STD.--C15.91

Grate Length--Ft.	=	3.354
Grate Width---Ft.	=	2.000
Grate Area--Sq. Ft.	=	5.171
Capture Ratio -- GRATE	=	0.500
Effective Perimeter--Ft.	=	7.354
Splash-Over Velocity--FPS	=	7.354
Local Gutter Depression-Inches	=	1.000
Flow-CFS--Q	=	1.590
GUTTER FLOW at INLET-CFS--Q	=	1.132
Gutter Velocity at INLET-fps	=	2.000
Depth at INLET Curb Line-Inches--d	=	3.528
Frontal Flow Intercepted by GRATE--CFS	=	0.990
Lateral Flow Intercepted by GRATE--CFS	=	0.212
TOTAL Flow Intercepted by GRATE--CFS	=	1.202
% FLOW Intercepted	=	75.586
By-pass Flow--CFS	=	0.388

ARIZONA DEPARTMENT OF TRANSPORTATION
DRAINAGE DESIGN SECTION

09-25-2002

PROJECT NAME- _____ TRACS NO.- _____
HIGHWAY NAME- _____ DESIGNER - RSR
LOCATION - Ramp GD M196.52 CHECKER - A PAGE _____
Ver 3.40: December 1995

SLOTTED DRAIN W/ GRATE--IN SUMP

GUTTER FLOW HYDRAULICS

GUTTER DESCRIPTION

Roadway Cross-Slope-Ft./Ft.--Sx	=	0.032
Shoulder Width-Ft.--	=	10.000
Shoulder Slope-Ft./Ft.--Ss	=	0.032
Gutter Width-Ft.--W	=	2.500
Gutter Slope-Ft./Ft.--Sw	=	0.021
Gutter Depression-Inches--	=	0.624

GRATE TYPE: ADOT STD.--C15.91

Grate Length--Ft.	=	3.354
Grate Width---Ft.	=	2.000
Grate Area--Sq. Ft.	=	5.171
Effective Perimeter--Ft.	=	7.354
Capture Ratio -- GRATE	=	0.500
Capture Ratio -- SLOTTED DRAIN	=	0.670
Local Gutter Depression-Inches	=	1.000
Flow-CFS--Q	=	0.730 -10%

LENGTH	Q(Slot. Dn)	Q(Grate)	d(inches)	SPREAD,Ft.
5.000	0.464	0.266	0.845	3.075
10.000	0.598	0.130	0.376	1.505
15.000	0.695	0.035	0.161	0.643
20.000	0.704	0.026	-0.034	-0.137
25.000	0.709	0.021	-0.164	-0.656

Use 5' of slotted drain on North and South side of catch basin Total 10' of slotted drain

ARIZONA DEPARTMENT OF TRANSPORTATION
DRAINAGE DESIGN SECTION

09-25-2002

PROJECT NAME- _____ TRACS NO.- _____
HIGHWAY NAME- _____ DESIGNER - RSR
LOCATION - Ramp GD 10+96.52 CHECKER - (A) PAGE _____
Ver 3.40: December 1995

SLOTTED DRAIN W/ GRATE--IN SUMP

GUTTER FLOW HYDRAULICS

GUTTER DESCRIPTION

Roadway Cross-Slope-Ft./Ft.--Sx	=	0.032
Shoulder Width-Ft.--	=	10.000
Shoulder Slope-Ft./Ft.--Ss	=	0.032
Gutter Width-Ft.--W	=	2.500
Gutter Slope-Ft./Ft.--Sw	=	0.021
Gutter Depression-Inches--	=	0.624

GRATE TYPE: ADOT STD.--C15.91

Grate Length--Ft.	=	3.354
Grate Width---Ft.	=	2.000
Grate Area--Sq. Ft.	=	5.171
Effective Perimeter--Ft.	=	7.354
Capture Ratio -- GRATE	=	0.500
Capture Ratio -- SLOTTED DRAIN	=	0.670
Local Gutter Depression-Inches	=	1.000
Flow-CFS--Q	=	1.230 50yr

LENGTH	Q(Slot. Dn)	Q(Grate)	d(inches)	SPREAD,Ft.
5.000	0.710	0.520	1.447	4.645
10.000	0.953	0.277	0.876	3.157
15.000	1.060	0.168	0.537	2.152
20.000	1.142	0.122	0.334	1.338
25.000	1.194	0.036	0.184	0.738

Use 5' of slotted drain on north side of CB and 5' on south side of CB. 10' Total slotted drain

ARIZONA DEPARTMENT OF TRANSPORTATION
DRAINAGE DESIGN SECTION

09-25-2002

PROJECT NAME- _____ TRACS NO.- _____
HIGHWAY NAME- _____ DESIGNER - RSR
LOCATION - Ramp GD 10+96.52 CHECKER - CA PAGE _____
Ver 3.40: December 1995

GUTTER FLOW HYDRAULICS
GUTTER DESCRIPTION

Roadway Grade-% Per cent--G	=	0.022
Roadway Cross-Slope-Ft./Ft.--Sx	=	0.032
Shoulder Width-Ft.--	=	10.000
Shoulder Slope-Ft./Ft.--Ss	=	0.032
Gutter Width-Ft.--W	=	2.500
Gutter Slope-Ft./Ft.--Sw	=	0.021
Gutter Depression-Inches--	=	0.624
Manning's 'N	=	0.016
Flow-CFS--Q	=	0.430
SPREAD-Ft.--T	=	8.187
Average Velocity-V-fps	=	0.414
FLOW in Gutter-CFS--Q	=	0.256
% Flow in Gutter-CFS	=	59.475
Velocity of Flow in Gutter-fps	=	0.492
Depth at Curb Line-Inches--d	=	2.808

Calc used to check spread at upstream end of slotted drain sta 10+89.52 - 5' slotted drain

ARIZONA DEPARTMENT OF TRANSPORTATION
DRAINAGE DESIGN SECTION

09-25-2002

PROJECT NAME- _____ TRACS NO.- _____
HIGHWAY NAME- _____ DESIGNER - RSB
LOCATION - Ramp GD 10+96.52 CHECKER - CA PAGE _____
Ver 3.40: December 1995

GUTTER FLOW HYDRAULICS
GUTTER DESCRIPTION

Roadway Grade-% Per cent--G	=	0.022
Roadway Cross-Slope-Ft./Ft.--Sx	=	0.032
Shoulder Width-Ft.--	=	10.000
Shoulder Slope-Ft./Ft.--Ss	=	0.032
Gutter Width-Ft.--W	=	2.500
Gutter Slope-Ft./Ft.--Sw	=	0.021
Gutter Depression-Inches--	=	0.624
Manning's 'N	=	0.016
Flow-CFS--Q	=	0.300
SPREAD-Ft.--T	=	7.205
Average Velocity-V-fps	=	0.377
FLOW in Gutter-CFS--Q	=	0.195
% Flow in Gutter-CFS	=	64.950
Velocity of Flow in Gutter-fps	=	0.441
Depth at Curb Line-Inches--d	=	2.431

Calc used to check spread at upstream end of slotted drain sta 11+03.52 - 5' slotted drain

ARIZONA DEPARTMENT OF TRANSPORTATION
DRAINAGE DESIGN SECTION

09-25-2002

PROJECT NAME- _____ TRACS NO.- _____
HIGHWAY NAME- _____ DESIGNER - RSR
LOCATION - Ramp GD 91+97 CHECKER - (ST) PAGE _____
Ver 3.40: December 1995

GRATE INLET DESIGN -- ON GRADE

GUTTER FLOW HYDRAULICS
GUTTER DESCRIPTION

Roadway Grade-% Per cent--G	=	0.322
Roadway Cross-Slope-Ft./Ft.--Sx	=	0.032
Shoulder Width-Ft.--	=	10.000
Shoulder Slope-Ft./Ft.--Ss	=	0.032
Gutter Width-Ft.--W	=	2.500
Gutter Slope-Ft./Ft.--Sw	=	0.021
Gutter Depression-Inches--	=	0.624
Manning's 'N	=	0.016
Flow-CFS--Q	=	0.400 - 10yr
SPREAD-Ft.--T	=	5.034 - 8.7 max
Average Velocity-V-fps	=	1.080
FLOW in Gutter-CFS--Q	=	0.323
% Flow in Gutter-CFS	=	80.803
Velocity of Flow in Gutter-fps	=	1.207
Depth at Curb Line-Inches--d	=	1.597 - 3" max

GRATE TYPE: ADOT STD.--C15.91

Grate Length--Ft.	=	3.354
Grate Width---Ft.	=	2.000
Grate Area--Sq. Ft.	=	5.171
Capture Ratio -- GRATE	=	0.500
Effective Perimeter--Ft.	=	7.354
Splash-Over Velocity--FPS	=	7.354
Local Gutter Depression-Inches	=	1.000
Flow-CFS--Q	=	0.400
GUTTER FLOW at INLET-CFS--Q	=	0.382
Gutter Velocity at INLET-fps	=	1.332
Depth at INLET Curb Line-Inches--d	=	2.190
Frontal Flow Intercepted by GRATE--CFS	=	0.357
Lateral Flow Intercepted by GRATE--CFS	=	0.029
TOTAL Flow Intercepted by GRATE--CFS	=	0.386
% FLOW Intercepted	=	96.578
By-pass Flow--CFS	=	0.014

ARIZONA DEPARTMENT OF TRANSPORTATION
DRAINAGE DESIGN SECTION

09-25-2002

PROJECT NAME- _____ TRACS NO.- _____
HIGHWAY NAME- _____ DESIGNER - RSR
LOCATION - Ramp GD 11+97 CHECKER - (A) PAGE _____
Ver 3.40: December 1995

GRATE INLET DESIGN -- ON GRADE

GUTTER FLOW HYDRAULICS
GUTTER DESCRIPTION

Roadway Grade-% Per cent--G	=	0.322
Roadway Cross-Slope-Ft./Ft.--Sx	=	0.032
Shoulder Width-Ft.--	=	10.000
Shoulder Slope-Ft./Ft.--Ss	=	0.032
Gutter Width-Ft.--W	=	2.500
Gutter Slope-Ft./Ft.--Sw	=	0.021
Gutter Depression-Inches--	=	0.624
Manning's 'N	=	0.016
Flow-CFS--Q	=	0.560 50yr
SPREAD-Ft.--T	=	5.636
Average Velocity-V-fps	=	1.183
FLOW in Gutter-CFS--Q	=	0.425
% Flow in Gutter-CFS	=	75.820
Velocity of Flow in Gutter-fps	=	1.344
Depth at Curb Line-Inches--d	=	1.828

GRATE TYPE: ADOT STD.--C15.91

Grate Length--Ft.	=	3.354
Grate Width---Ft.	=	2.000
Grate Area--Sq. Ft.	=	5.171
Capture Ratio -- GRATE	=	0.500
Effective Perimeter--Ft.	=	7.354
Splash-Over Velocity--FPS	=	7.354
Local Gutter Depression-Inches	=	1.000
Flow-CFS--Q	=	0.560
GUTTER FLOW at INLET-CFS--Q	=	0.508
Gutter Velocity at INLET-fps	=	1.476
Depth at INLET Curb Line-Inches--d	=	2.465
Frontal Flow Intercepted by GRATE--CFS	=	0.466
Lateral Flow Intercepted by GRATE--CFS	=	0.055
TOTAL Flow Intercepted by GRATE--CFS	=	0.520
% FLOW Intercepted	=	92.933
By-pass Flow--CFS	=	0.040

ARIZONA DEPARTMENT OF TRANSPORTATION
DRAINAGE DESIGN SECTION

10-31-2002

PROJECT NAME- _____ TRACS NO.- _____
HIGHWAY NAME- _____ DESIGNER - MRG
LOCATION - Ramp BH 4+98 CHECKER - CA PAGE _____
Ver 3.40: December 1995

SLOTTED DRAIN W/ GRATE--ON GRADE

GUTTER FLOW HYDRAULICS
GUTTER DESCRIPTION

Roadway Grade-% Per cent--G	=	1.182
Roadway Cross-Slope-Ft./Ft.--Sx	=	0.032
Shoulder Width-Ft.--	=	10.000
Shoulder Slope-Ft./Ft.--Ss	=	0.032
Gutter Width-Ft.--W	=	2.500
Gutter Slope-Ft./Ft.--Sw	=	0.021
Gutter Depression-Inches--	=	0.630
Manning's 'N	=	0.016
Flow-CFS--Q	=	0.960
SPREAD-Ft.--T	=	5.424
Average Velocity-V-fps	=	2.200
FLOW in Gutter-CFS--Q	=	0.745
% Flow in Gutter-CFS	=	77.643
Velocity of Flow in Gutter-fps	=	2.488
Depth at Curb Line-Inches--d	=	1.753

SLOTTED DRAIN--ADOT STD.--C13.60
GRATE TYPE: ADOT STD.--C15.91

Grate Length--Ft.	=	3.354
Grate Width---Ft.	=	2.000
Grate Area--Sq. Ft.	=	5.171
Splash-Over Velocity--FPS	=	7.354
Depth at INLET Curb Line-Inches--d	=	2.374
Local Gutter Depression-Inches	=	1.000
Length of opening: TOTAL Intercept--Ft.	=	16.256
Capture Ratio -- SLOTTED DRAIN	=	0.670
Capture Ratio -- GRATE	=	0.500

LENGTH	Efficiency	Q(S.D.)	Q(GRATE)	Q(INT.)	Q(By-Pass)	% CAPT.
5.000	0.484	0.465	0.486	0.950	0.010	98.98
10.000	0.821	0.788	0.172	0.960	0.000	100.00
15.000	0.990	0.950	0.010	0.960	0.000	100.00
20.000	1.000	0.960	0.000	0.960	0.000	100.00

ARIZONA DEPARTMENT OF TRANSPORTATION
DRAINAGE DESIGN SECTION

10-02-2002

PROJECT NAME- _____ TRACS NO.- _____
HIGHWAY NAME- _____ DESIGNER - RSR
LOCATION - Ramp BA 18+21 CHECKER - AD PAGE _____
Ver 3.40: December 1995

SLOTTED DRAIN W/ GRATE--ON GRADE

GUTTER FLOW HYDRAULICS
GUTTER DESCRIPTION

Roadway Grade-% Per cent--G	=	0.830
Roadway Cross-Slope-Ft./Ft.--Sx	=	0.027
Shoulder Width-Ft.--	=	10.000
Shoulder Slope-Ft./Ft.--Ss	=	0.027
Gutter Width-Ft.--W	=	2.500
Gutter Slope-Ft./Ft.--Sw	=	0.067
Gutter Depression-Inches--	=	2.001
Manning's 'N	=	0.016
Flow-CFS--Q	=	6.590 - 10yr
SPREAD-Ft.--T	=	11.792 - 13.5' max
Average Velocity-V-fps	=	3.239
FLOW in Gutter-CFS--Q	=	3.541
% Flow in Gutter-CFS	=	53.736
Velocity of Flow in Gutter-fps	=	4.180
Depth at Curb Line-Inches--d	=	5.067

SLOTTED DRAIN--ADOT STD.--C13.60
GRATE TYPE: ADOT STD.--C15.91

Grate Length--Ft.	=	3.354
Grate Width---Ft.	=	2.000
Grate Area--Sq. Ft.	=	5.171
Splash-Over Velocity--FPS	=	7.354
Depth at INLET Curb Line-Inches--d	=	5.871
Local Gutter Depression-Inches	=	1.000
Length of opening: TOTAL Intercept--Ft.	=	27.239
Capture Ratio -- SLOTTED DRAIN	=	0.670
Capture Ratio -- GRATE	=	0.500

LENGTH	Efficiency	Q(S.D.)	Q(GRATE)	Q(INT.)	Q(By-Pass)	% CAPT.
5.000	0.306	2.015	3.162	5.177	1.413	78.56
10.000	0.561	3.698	2.334	6.031	0.559	91.52
15.000	0.763	5.029	1.469	6.498	0.092	98.60
20.000	0.908	5.983	0.607	6.590	0.000	100.00
25.000	0.989	6.517	0.073	6.590	0.000	100.00
30.000	1.000	6.590	0.000	6.590	0.000	100.00

ARIZONA DEPARTMENT OF TRANSPORTATION
DRAINAGE DESIGN SECTION

10-02-2002

PROJECT NAME- _____ TRACS NO.- _____
HIGHWAY NAME- _____ DESIGNER - RSR
LOCATION - Ramp BA 18+80 CHECKER - A PAGE _____
Ver 3.40: December 1995

GRATE INLET--IN SUMP

GUTTER FLOW HYDRAULICS

GUTTER DESCRIPTION

Roadway Cross-Slope-Ft./Ft.--Sx	=	0.019
Shoulder Width-Ft.--	=	10.000
Shoulder Slope-Ft./Ft.--Ss	=	0.019
Gutter Width-Ft.--W	=	2.500
Gutter Slope-Ft./Ft.--Sw	=	0.067
Gutter Depression-Inches--	=	2.001

GRATE TYPE: ADOT STD.--C15.91

Grate Length--Ft.	=	3.354
Grate Width---Ft.	=	2.000
Grate Area--Sq. Ft.	=	5.171
Effective Perimeter--Ft.	=	7.354
Capture Ratio -- GRATE	=	0.500
Local Gutter Depression-Inches	=	1.000
Depth at INLET Curb Line-Inches--d	=	3.783
Depth at C.G. of Grate Flow--In.	=	3.716
SPREAD-Ft.--T	=	10.397 -13.5' max
Depth for WEIR FLOW, inches	=	4.783
Depth for ORIFICE FLOW, inches	=	0.027

Q(INLET) = 1.480 cfs is Based on WEIR flow -10 yr

No slotted Drain required

ARIZONA DEPARTMENT OF TRANSPORTATION
DRAINAGE DESIGN SECTION

10-02-2002

PROJECT NAME- _____ TRACS NO.- _____
HIGHWAY NAME- _____ DESIGNER - RSR
LOCATION - Ramp BA 18+78 CHECKER - AD PAGE _____
Ver 3.40: December 1995

GUTTER FLOW HYDRAULICS
GUTTER DESCRIPTION

Roadway Grade-% Per cent--G	=	0.032
Roadway Cross-Slope-Ft./Ft.--Sx	=	0.019
Shoulder Width-Ft.--	=	10.000
Shoulder Slope-Ft./Ft.--Ss	=	0.019
Gutter Width-Ft.--W	=	2.500
Gutter Slope-Ft./Ft.--Sw	=	0.067
Gutter Depression-Inches--	=	2.001
Manning's 'N	=	0.016
Flow-CFS--Q	=	0.980
SPREAD-Ft.--T	=	13.036
Average Velocity-V-fps	=	0.553
FLOW in Gutter-CFS--Q	=	0.523
% Flow in Gutter-CFS	=	53.374
Velocity of Flow in Gutter-fps	=	0.735
Depth at Curb Line-Inches--d	=	4.416

Calc used to check spread at upstream end of catch basin sta 17+78 - No spread drain required

ARIZONA DEPARTMENT OF TRANSPORTATION
DRAINAGE DESIGN SECTION

10-02-2002

PROJECT NAME- _____ TRACS NO.- _____
HIGHWAY NAME- _____ DESIGNER - RSR
LOCATION - Ramp BA 18+80 CHECKER - A PAGE _____
Ver 3.40: December 1995

GUTTER FLOW HYDRAULICS
GUTTER DESCRIPTION

Roadway Grade-% Per cent--G	=	0.038
Roadway Cross-Slope-Ft./Ft.--Sx	=	0.019
Shoulder Width-Ft.--	=	10.000
Shoulder Slope-Ft./Ft.--Ss	=	0.019
Gutter Width-Ft.--W	=	2.500
Gutter Slope-Ft./Ft.--Sw	=	0.067
Gutter Depression-Inches--	=	2.001
Manning's 'N	=	0.016
Flow-CFS--Q	=	0.500 - 10yr,
SPREAD-Ft.--T	=	9.381 - 13.5 max
Average Velocity-V-fps	=	0.518
FLOW in Gutter-CFS--Q	=	0.349
% Flow in Gutter-CFS	=	69.739
Velocity of Flow in Gutter-fps	=	0.662
Depth at Curb Line-Inches--d	=	3.528

Calc used to check spread at upstream end of curb basin sta 18+82 - No shield Drain required

ARIZONA DEPARTMENT OF TRANSPORTATION
DRAINAGE DESIGN SECTION

10-02-2002

PROJECT NAME- _____ TRACS NO.- _____
HIGHWAY NAME- _____ DESIGNER - RSR
LOCATION - Ramp BA 19+39 CHECKER - (A) PAGE _____
Ver 3.40: December 1995

GRATE INLET DESIGN -- ON GRADE

GUTTER FLOW HYDRAULICS
GUTTER DESCRIPTION

Roadway Grade-% Per cent--G	=	0.660
Roadway Cross-Slope-Ft./Ft.--Sx	=	0.010
Shoulder Width-Ft.--	=	10.000
Shoulder Slope-Ft./Ft.--Ss	=	0.010
Gutter Width-Ft.--W	=	2.500
Gutter Slope-Ft./Ft.--Sw	=	0.067
Gutter Depression-Inches--	=	2.001
Manning's 'N	=	0.016
Flow-CFS--Q	=	1.240 -10yr
SPREAD-Ft.--T	=	10.097 -13.5' max
Average Velocity-V-fps	=	1.793
FLOW in Gutter-CFS--Q	=	0.940
% Flow in Gutter-CFS	=	75.827
Velocity of Flow in Gutter-fps	=	2.349
Depth at Curb Line-Inches--d	=	2.922

GRATE TYPE: ADOT STD.--C15.91

Grate Length--Ft.	=	3.354
Grate Width---Ft.	=	2.000
Grate Area--Sq. Ft.	=	5.171
Capture Ratio -- GRATE	=	0.500
Effective Perimeter--Ft.	=	7.354
Splash-Over Velocity--FPS	=	7.354
Local Gutter Depression-Inches	=	1.000
Flow-CFS--Q	=	1.240
GUTTER FLOW at INLET-CFS--Q	=	1.142
Gutter Velocity at INLET-fps	=	2.603
Depth at INLET Curb Line-Inches--d	=	3.607
Frontal Flow Intercepted by GRATE--CFS	=	1.090
Lateral Flow Intercepted by GRATE--CFS	=	0.077
TOTAL Flow Intercepted by GRATE--CFS	=	1.167
% FLOW Intercepted	=	94.142
By-pass Flow--CFS	=	0.073

ARIZONA DEPARTMENT OF TRANSPORTATION
DRAINAGE DESIGN SECTION

10-01-2002

PROJECT NAME- _____ TRACS NO.- _____
HIGHWAY NAME- _____ DESIGNER - RSR
LOCATION - Ramp BB 17+14 CHECKER - (A) PAGE _____
Ver 3.40: December 1995

SLOTTED DRAIN W/ GRATE--ON GRADE

GUTTER FLOW HYDRAULICS
GUTTER DESCRIPTION

Roadway Grade-% Per cent--G	=	0.980
Roadway Cross-Slope-Ft./Ft.--Sx	=	0.020
Shoulder Width-Ft.--	=	10.000
Shoulder Slope-Ft./Ft.--Ss	=	0.020
Gutter Width-Ft.--W	=	2.500
Gutter Slope-Ft./Ft.--Sw	=	0.021
Gutter Depression-Inches--	=	0.624
Manning's 'N	=	0.016
Flow-CFS--Q	=	2.520 - 10 yr
SPREAD-Ft.--T	=	10.214 - 12.4' max
Average Velocity-V-fps	=	2.410
FLOW in Gutter-CFS--Q	=	1.334
% Flow in Gutter-CFS	=	52.933
Velocity of Flow in Gutter-fps	=	2.960
Depth at Curb Line-Inches--d	=	2.475 - 3" max

SLOTTED DRAIN--ADOT STD.--C13.60
GRATE TYPE: ADOT STD.--C15.91

Grate Length--Ft.	=	3.354
Grate Width---Ft.	=	2.000
Grate Area--Sq. Ft.	=	5.171
Splash-Over Velocity--FPS	=	7.354
Depth at INLET Curb Line-Inches--d	=	3.260
Local Gutter Depression-Inches	=	1.000
Length of opening: TOTAL Intercept--Ft.	=	26.185
Capture Ratio -- SLOTTED DRAIN	=	0.670
Capture Ratio -- GRATE	=	0.500

LENGTH	Efficiency	Q(S.D.)	Q(GRATE)	Q(INT.)	Q(By-Pass)	% CAPT.
5.000	0.317	0.799	1.261	2.060	0.460	81.77
10.000	0.579	1.460	0.895	2.355	0.165	93.45
15.000	0.784	1.975	0.524	2.499	0.021	99.16
20.000	0.926	2.332	0.188	2.520	0.000	100.00
25.000	0.996	2.510	0.010	2.520	0.000	100.00
30.000	1.000	2.520	0.000	2.520	0.000	100.00

ARIZONA DEPARTMENT OF TRANSPORTATION
DRAINAGE DESIGN SECTION

10-01-2002

PROJECT NAME- _____ TRACS NO.- _____
HIGHWAY NAME- _____ DESIGNER - RSR
LOCATION - Ramp BB 17+62 CHECKER - (A) PAGE _____
Ver 3.40: December 1995

GRATE INLET--IN SUMP

GUTTER FLOW HYDRAULICS

GUTTER DESCRIPTION

Roadway Cross-Slope-Ft./Ft.--Sx	=	0.020
Shoulder Width-Ft.--	=	10.000
Shoulder Slope-Ft./Ft.--Ss	=	0.020
Gutter Width-Ft.--W	=	2.500
Gutter Slope-Ft./Ft.--Sw	=	0.021
Gutter Depression-Inches--	=	0.624

GRATE TYPE: ADOT STD.--C15.91

Grate Length--Ft.	=	3.354
Grate Width---Ft.	=	2.000
Grate Area--Sq. Ft.	=	5.171
Effective Perimeter--Ft.	=	7.354
Capture Ratio -- GRATE	=	0.500
Local Gutter Depression-Inches	=	1.000
Depth at INLET Curb Line-Inches--d	=	2.486 - 3" max
Depth at C.G. of Grate Flow--In.	=	2.886
SPREAD-Ft.--T	=	10.260 - 12.4' max
Depth for WEIR FLOW, inches	=	3.486
Depth for ORIFICE FLOW, inches	=	0.015

Q(INLET) = 1.100 cfs is Based on WEIR flow

ARIZONA DEPARTMENT OF TRANSPORTATION
DRAINAGE DESIGN SECTION

10-01-2002

PROJECT NAME- _____ TRACS NO.- _____
HIGHWAY NAME- _____ DESIGNER - RSR
LOCATION - Ramp BB 17+62 CHECKER - A PAGE _____
Ver 3.40: December 1995

GUTTER FLOW HYDRAULICS
GUTTER DESCRIPTION

Roadway Grade-% Per cent--G	=	0.209
Roadway Cross-Slope-Ft./Ft.--Sx	=	0.020
Shoulder Width-Ft.--	=	10.000
Shoulder Slope-Ft./Ft.--Ss	=	0.020
Gutter Width-Ft.--W	=	2.500
Gutter Slope-Ft./Ft.--Sw	=	0.021
Gutter Depression-Inches--	=	0.624
Manning's 'N	=	0.016
Flow-CFS--Q	=	0.450 -10yr
SPREAD-Ft.--T	=	7.212
Average Velocity-V-fps	=	0.876
FLOW in Gutter-CFS--Q	=	0.307
% Flow in Gutter-CFS	=	68.326
Velocity of Flow in Gutter-fps	=	1.039
Depth at Curb Line-Inches--d	=	1.732 -3" max

Calc used To check spread at upstream end of catch Basin @ Sta 17+64 - No slotted drain Required

ARIZONA DEPARTMENT OF TRANSPORTATION
DRAINAGE DESIGN SECTION

10-01-2002

PROJECT NAME- _____ TRACS NO.- _____
HIGHWAY NAME- _____ DESIGNER - RSR
LOCATION - Ramp BB 17+62 CHECKER - A PAGE _____
Ver 3.40: December 1995

GUTTER FLOW HYDRAULICS
GUTTER DESCRIPTION

Roadway Grade-% Per cent--G	=	0.271
Roadway Cross-Slope-Ft./Ft.--Sx	=	0.020
Shoulder Width-Ft.--	=	10.000
Shoulder Slope-Ft./Ft.--Ss	=	0.020
Gutter Width-Ft.--W	=	2.500
Gutter Slope-Ft./Ft.--Sw	=	0.021
Gutter Depression-Inches--	=	0.624
Manning's 'N	=	0.016
Flow-CFS--Q	=	0.650 - 10yr
SPREAD-Ft.--T	=	7.808
Average Velocity-V-fps	=	1.062
FLOW in Gutter-CFS--Q	=	0.420
% Flow in Gutter-CFS	=	64.566
Velocity of Flow in Gutter-fps	=	1.270
Depth at Curb Line-Inches--d	=	1.898

Calc used to check spread at upstream end of catch basin @ sta 17+60 - No solid drain required

ARIZONA DEPARTMENT OF TRANSPORTATION
DRAINAGE DESIGN SECTION

10-01-2002

PROJECT NAME- _____ TRACS NO.- _____
HIGHWAY NAME- _____ DESIGNER - RSR
LOCATION - Ramp BB 18+04 CHECKER - AD PAGE _____
Ver 3.40: December 1995

GRATE INLET DESIGN -- ON GRADE

GUTTER FLOW HYDRAULICS
GUTTER DESCRIPTION

Roadway Grade-% Per cent--G	=	0.407	
Roadway Cross-Slope-Ft./Ft.--Sx	=	0.012	
Shoulder Width-Ft.--	=	10.000	
Shoulder Slope-Ft./Ft.--Ss	=	0.012	
Gutter Width-Ft.--W	=	2.500	
Gutter Slope-Ft./Ft.--Sw	=	0.021	
Gutter Depression-Inches--	=	0.624	
Manning's 'N	=	0.016	
Flow-CFS--Q	=	1.070	-10 yr
SPREAD-Ft.--T	=	11.671	- 16' max
Average Velocity-V-fps	=	1.257	
FLOW in Gutter-CFS--Q	=	0.545	
% Flow in Gutter-CFS	=	50.959	
Velocity of Flow in Gutter-fps	=	1.592	
Depth at Curb Line-Inches--d	=	1.956	- 3" max

GRATE TYPE: ADOT STD.--C15.91

Grate Length--Ft.	=	3.354
Grate Width---Ft.	=	2.000
Grate Area--Sq. Ft.	=	5.171
Capture Ratio -- GRATE	=	0.500
Effective Perimeter--Ft.	=	7.354
Splash-Over Velocity--FPS	=	7.354
Local Gutter Depression-Inches	=	1.000
Flow-CFS--Q	=	1.070
GUTTER FLOW at INLET-CFS--Q	=	0.735
Gutter Velocity at INLET-fps	=	1.822
Depth at INLET Curb Line-Inches--d	=	2.749
Frontal Flow Intercepted by GRATE--CFS	=	0.663
Lateral Flow Intercepted by GRATE--CFS	=	0.126
TOTAL Flow Intercepted by GRATE--CFS	=	0.789
% FLOW Intercepted	=	73.712
By-pass Flow--CFS	=	0.281

ARIZONA DEPARTMENT OF TRANSPORTATION
DRAINAGE DESIGN SECTION

10-31-2002

PROJECT NAME- _____ TRACS NO.- _____
HIGHWAY NAME- _____ DESIGNER - MPG
LOCATION - Ramp NW STA 10+27 CHECKER - AD PAGE _____
Ver 3.40: December 1995

SLOTTED DRAIN W/ GRATE--ON GRADE

GUTTER FLOW HYDRAULICS
GUTTER DESCRIPTION

Roadway Grade-% Per cent--G	=	1.306
Roadway Cross-Slope-Ft./Ft.--Sx	=	0.036
Shoulder Width-Ft.--	=	10.000
Shoulder Slope-Ft./Ft.--Ss	=	0.036
Gutter Width-Ft.--W	=	4.500
Gutter Slope-Ft./Ft.--Sw	=	0.037
Gutter Depression-Inches--	=	1.998
Manning's 'N	=	0.016
Flow-CFS--Q	=	2.540
SPREAD-Ft.--T	=	6.699
Average Velocity-V-fps	=	3.124
FLOW in Gutter-CFS--Q	=	2.414
% Flow in Gutter-CFS	=	95.026
Velocity of Flow in Gutter-fps	=	3.320
Depth at Curb Line-Inches--d	=	2.937

SLOTTED DRAIN--ADOT STD.--C13.60
GRATE TYPE: ADOT STD.--C15.92

Grate Length--Ft.	=	3.350
Grate Width---Ft.	=	2.000
Grate Area--Sq. Ft.	=	5.590
Splash-Over Velocity--FPS	=	7.350
Depth at INLET Curb Line-Inches--d	=	0.000
Local Gutter Depression-Inches	=	0.000
Length of opening: TOTAL Intercept--Ft.	=	31.188
Capture Ratio -- SLOTTED DRAIN	=	0.670
Capture Ratio -- GRATE	=	0.500

LENGTH	Efficiency	Q(S.D.)	Q(GRATE)	Q(INT.)	Q(By-Pass)	% CAPT.
5.000	0.270	0.685	1.342	2.027	0.513	79.81
10.000	0.501	1.273	0.999	2.273	0.267	89.48
15.000	0.693	1.760	0.682	2.442	0.098	96.12
20.000	0.842	2.139	0.391	2.530	0.010	99.59

ARIZONA DEPARTMENT OF TRANSPORTATION
DRAINAGE DESIGN SECTION

11-04-2002

PROJECT NAME- _____ TRACS NO.- _____
HIGHWAY NAME- _____ DESIGNER - MRG
LOCATION - Ramp W5 5+26 CHECKER - A PAGE _____
Ver 3.40: December 1995

SLOTTED DRAIN W/ GRATE--ON GRADE

GUTTER FLOW HYDRAULICS
GUTTER DESCRIPTION

Roadway Grade-% Per cent--G	=	0.237
Roadway Cross-Slope-Ft./Ft.--Sx	=	0.020
Shoulder Width-Ft.--	=	10.000
Shoulder Slope-Ft./Ft.--Ss	=	0.020
Gutter Width-Ft.--W	=	2.500
Gutter Slope-Ft./Ft.--Sw	=	0.067
Gutter Depression-Inches--	=	0.000
Manning's 'N	=	0.016
Flow-CFS--Q	=	0.070
SPREAD-Ft.--T	=	1.636
Average Velocity-V-fps	=	0.781
FLOW in Gutter-CFS--Q	=	0.070
% Flow in Gutter-CFS	=	100.015
Velocity of Flow in Gutter-fps	=	0.781
Depth at Curb Line-Inches--d	=	1.315

SLOTTED DRAIN--ADOT STD.--C13.60
GRATE TYPE: ADOT STD.--C15.91

Grate Length--Ft.	=	3.354
Grate Width---Ft.	=	2.000
Grate Area--Sq. Ft.	=	5.171
Splash-Over Velocity--FPS	=	7.354
Depth at INLET Curb Line-Inches--d	=	1.530
Local Gutter Depression-Inches	=	1.000
Length of opening: TOTAL Intercept--Ft.	=	2.272
Capture Ratio -- SLOTTED DRAIN	=	0.670
Capture Ratio -- GRATE	=	0.500

LENGTH	Efficiency	Q(S.D.)	Q(GRATE)	Q(INT.)	Q(By-Pass)	% CAPT.
5.000	1.000	0.070	0.000	0.070	0.000	100.00
10.000	1.000	0.070	0.000	0.070	0.000	100.00
15.000	1.000	0.070	0.000	0.070	0.000	100.00
20.000	1.000	0.070	0.000	0.070	0.000	100.00

No Slotted Drain Required

ARIZONA DEPARTMENT OF TRANSPORTATION
DRAINAGE DESIGN SECTION

11-04-2002

PROJECT NAME- _____ TRACS NO.- _____
HIGHWAY NAME- _____ DESIGNER - MRG
LOCATION - Ramp WS 5+81.06 CHECKER - A PAGE _____
Ver 3.40: December 1995

GRATE INLET--IN SUMP

GUTTER FLOW HYDRAULICS

GUTTER DESCRIPTION

Roadway Cross-Slope-Ft./Ft.--Sx	=	0.020
Shoulder Width-Ft.--	=	10.000
Shoulder Slope-Ft./Ft.--Ss	=	0.020
Gutter Width-Ft.--W	=	2.500
Gutter Slope-Ft./Ft.--Sw	=	0.067
Gutter Depression-Inches--	=	2.010

GRATE TYPE: ADOT STD.--C15.91

Grate Length--Ft.	=	3.354
Grate Width---Ft.	=	2.000
Grate Area--Sq. Ft.	=	5.171
Effective Perimeter--Ft.	=	7.354
Capture Ratio -- GRATE	=	0.500
Local Gutter Depression-Inches	=	1.000
Depth at INLET Curb Line-Inches--d	=	1.920
Depth at C.G. of Grate Flow--In.	=	1.998
SPREAD-Ft.--T	=	2.389
Depth for WEIR FLOW, inches	=	2.920
Depth for ORIFICE FLOW, inches	=	0.003

Q(INLET) = 0.450 cfs is Based on WEIR flow

No slotted drain required

ARIZONA DEPARTMENT OF TRANSPORTATION
DRAINAGE DESIGN SECTION

11-04-2002

PROJECT NAME- _____ TRACS NO.- _____
HIGHWAY NAME- _____ DESIGNER - MRL
LOCATION - Ramp WS 6445 CHECKER - CA PAGE _____
Ver 3.40: December 1995

SLOTTED DRAIN W/ GRATE--ON GRADE

GUTTER FLOW HYDRAULICS
GUTTER DESCRIPTION

Roadway Grade-% Per cent--G	=	0.276
Roadway Cross-Slope-Ft./Ft.--Sx	=	0.020
Shoulder Width-Ft.--	=	10.000
Shoulder Slope-Ft./Ft.--Ss	=	0.020
Gutter Width-Ft.--W	=	2.500
Gutter Slope-Ft./Ft.--Sw	=	0.067
Gutter Depression-Inches--	=	2.010
Manning's 'N	=	0.016
Flow-CFS--Q	=	1.850
SPREAD-Ft.--T	=	10.411
Average Velocity-V-fps	=	1.503
FLOW in Gutter-CFS--Q	=	1.177
% Flow in Gutter-CFS	=	63.624
Velocity of Flow in Gutter-fps	=	1.946
Depth at Curb Line-Inches--d	=	3.909

SLOTTED DRAIN--ADOT STD.--C13.60
GRATE TYPE: ADOT STD.--C15.91

Grate Length--Ft.	=	3.354
Grate Width---Ft.	=	2.000
Grate Area--Sq. Ft.	=	5.171
Splash-Over Velocity--FPS	=	7.354
Depth at INLET Curb Line-Inches--d	=	4.666
Local Gutter Depression-Inches	=	1.000
Length of opening: TOTAL Intercept--Ft.	=	10.765
Capture Ratio -- SLOTTED DRAIN	=	0.670
Capture Ratio -- GRATE	=	0.500

LENGTH	Efficiency	Q(S.D.)	Q(GRATE)	Q(INT.)	Q(By-Pass)	% CAPT.
5.000	0.675	1.249	0.597	1.846	0.004	99.79
10.000	0.991	1.834	0.016	1.850	0.000	100.00
15.000	1.000	1.850	0.000	1.850	0.000	100.00
20.000	1.000	1.850	0.000	1.850	0.000	100.00

Stanley Consultants INC.

Project No. 16110 Page No. 1
Subject Cross Roads Inlet Design

Computed by MRG Date 3/11/03
Checked by (A) Date 4/21/03
Approved by Date

Sheet No. 1 of 1

Catch Basin Inlet Design

Assumptions

1.) All Flow within curb will be picked up By catch Basins.

2.) All Flow Above curbline will spill over into channel.

3.) Manning's N value of 0.016 will be used when determing street capacity by A Mannings crossection.

4.) Any bypass Flow will be picked up By Down stream catch Basins

Elliot Road

Mannings crossection Taken @ STA 3+18
Flow @ a Depth of 6" = 11.3 cfs
catch Basins (Left + RT) will pick up 10 cfs + Bypass 1.30 cfs
with a wing length of 19.5'

Bypass Flow will be picked up @ Down stream catch Basins, where bypass Flow @ that Point = 0.

Guadalupe Road

Mannings crossection Taken @ STA 25+64
Flow @ a Depth of 6" = 10.68 cfs
catch Basins (Left + Right) will pick up 10.7 cfs + Bypass 2.3
with a wing length of 19.5'

Bypass Flow will be picked up @ Downstream sump.

Baseline Road

Mannings Crossection Taken @ STA 23+50
Flow @ a Depth of 6" = 9.60 cfs
catch Basins (Left + Right) will pick up 9.2 cfs + Bypass .4 cfs
with a wing length of 19.5'

By Pass Flow will be picked up @ Down stream catch Basins, where bypass Flow @ that Point = 0.

ARIZONA DEPARTMENT OF TRANSPORTATION
DRAINAGE DESIGN SECTION

03-11-2003

PROJECT NAME- Santan
HIGHWAY NAME- Baseline
LOCATION - STA 17+94 LT
Ver 3.40: December 1995

TRACS NO.-
DESIGNER - MRG
CHECKER - (A) PAGE

CURB OPENING INLET -- ON GRADE

GUTTER FLOW HYDRAULICS
GUTTER DESCRIPTION

Roadway Grade-% Per cent--G	=	0.516
Roadway Cross-Slope-Ft./Ft.--Sx	=	0.015
Shoulder Width-Ft.--	=	1.000
Shoulder Slope-Ft./Ft.--Ss	=	0.015
Gutter Width-Ft.--W	=	2.000
Gutter Slope-Ft./Ft.--Sw	=	0.068
Gutter Depression-Inches--	=	1.625
Manning's 'N	=	0.016
Flow-CFS--Q	=	4.310
SPREAD-Ft.--T	=	16.148 20.50'
Average Velocity-V-fps	=	2.091
FLOW in Gutter-CFS--Q	=	1.624
% Flow in Gutter-CFS	=	37.678
Velocity of Flow in Gutter-fps	=	2.901
Depth at Curb Line-Inches--d	=	4.171

CURB OPENING--ADOT STD. C-15.20

Flow-CFS--Q	=	4.310
Gutter Velocity at INLET-fps	=	3.302
GUTTER FLOW at INLET-CFS--Q	=	2.179
Depth at INLET Curb Line-Inches--d	=	5.584
Local Gutter Depression-Inches	=	1.625
Length of opening: TOTAL Intercept--Ft.	=	16.028
Capture Ratio -- CURB OPENING	=	0.800

LENGTH	Efficiency	Q(Captured)	Q(By-Pass)
3.083	0.319	1.376	2.934
6.583	0.614	2.646	1.664
9.583	0.806	3.474	0.836
13.583	0.966	4.164	0.146
20.583	1.000	4.310	0.000

1-C15.20, L = 19.5'

ARIZONA DEPARTMENT OF TRANSPORTATION
DRAINAGE DESIGN SECTION

03-11-2003

PROJECT NAME- Sonton
HIGHWAY NAME- Baseline
LOCATION - STA 17+94 RT
Ver 3.40: December 1995

TRACS NO.-
DESIGNER - MRW
CHECKER - AD
PAGE

CURB OPENING INLET -- ON GRADE

GUTTER FLOW HYDRAULICS
GUTTER DESCRIPTION

Roadway Grade-% Per cent--G	=	0.516
Roadway Cross-Slope-Ft./Ft.--Sx	=	0.015
Shoulder Width-Ft.--	=	1.000
Shoulder Slope-Ft./Ft.--Ss	=	0.015
Gutter Width-Ft.--W	=	2.000
Gutter Slope-Ft./Ft.--Sw	=	0.068
Gutter Depression-Inches--	=	1.625
Manning's 'N	=	0.016
Flow-CFS--Q	=	2.623
SPREAD-Ft.--T	=	13.109 L 22.50'
Average Velocity-V-fps	=	1.881
FLOW in Gutter-CFS--Q	=	1.213
% Flow in Gutter-CFS	=	46.249
Velocity of Flow in Gutter-fps	=	2.588
Depth at Curb Line-Inches--d	=	3.624

CURB OPENING--ADOT STD. C-15.20

Flow-CFS--Q	=	2.623
Gutter Velocity at INLET-fps	=	2.990
GUTTER FLOW at INLET-CFS--Q	=	1.670
Depth at INLET Curb Line-Inches--d	=	4.976
Local Gutter Depression-Inches	=	1.625
Length of opening: TOTAL Intercept--Ft.	=	11.615
Capture Ratio -- CURB OPENING	=	0.800

LENGTH	Efficiency	Q(Captured)	Q(By-Pass)
3.083	0.426	1.118	1.505
6.583	0.778	2.041	0.582
9.583	0.957	2.509	0.114
13.583	1.000	2.623	0.000
20.583	1.000	2.623	0.000

1-C15.20, L=11.5'

ARIZONA DEPARTMENT OF TRANSPORTATION
DRAINAGE DESIGN SECTION

03-11-2003

PROJECT NAME- Santan
HIGHWAY NAME- Baseline RD
LOCATION - STA 23+13 LT
Ver 3.40: December 1995

TRACS NO.-
DESIGNER -
CHECKER - AD
PAGE

CURB OPENING INLET -- ON GRADE

GUTTER FLOW HYDRAULICS
GUTTER DESCRIPTION

Roadway Grade-% Per cent--G	=	0.536
Roadway Cross-Slope-Ft./Ft.--Sx	=	0.020
Shoulder Width-Ft.--	=	1.000
Shoulder Slope-Ft./Ft.--Ss	=	0.020
Gutter Width-Ft.--W	=	2.000
Gutter Slope-Ft./Ft.--Sw	=	0.068
Gutter Depression-Inches--	=	1.625
Manning's 'N	=	0.016
Flow-CFS--Q	=	9.600
SPREAD-Ft.--T	=	18.486
Average Velocity-V-fps	=	2.733
FLOW in Gutter-CFS--Q	=	2.952
% Flow in Gutter-CFS	=	30.747
Velocity of Flow in Gutter-fps	=	3.714
Depth at Curb Line-Inches--d	=	5.581

CURB OPENING--ADOT STD. C-15.20

Flow-CFS--Q	=	9.600
Gutter Velocity at INLET-fps	=	4.085
GUTTER FLOW at INLET-CFS--Q	=	3.684
Depth at INLET Curb Line-Inches--d	=	7.036
Local Gutter Depression-Inches	=	1.625
Length of opening: TOTAL Intercept--Ft.	=	25.061
Capture Ratio -- CURB OPENING	=	0.800

LENGTH	Efficiency	Q(Captured)	Q(By-Pass)
3.083	0.210	2.020	7.580
6.583	0.422	4.053	5.547
9.583	0.580	5.568	4.032
13.583	0.755	7.246	2.354
20.583	0.955	9.167	0.433

1-C15.20, L = 19.5'

ARIZONA DEPARTMENT OF TRANSPORTATION
DRAINAGE DESIGN SECTION

03-11-2003

PROJECT NAME- Santan
HIGHWAY NAME- Baseline RD
LOCATION - STA 23+40 RT
Ver 3.40: December 1995

TRACS NO.-
DESIGNER - MRL
CHECKER - AD
PAGE

CURB OPENING INLET -- ON GRADE

GUTTER FLOW HYDRAULICS
GUTTER DESCRIPTION

Roadway Grade-% Per cent--G	=	0.536
Roadway Cross-Slope-Ft./Ft.--Sx	=	0.020
Shoulder Width-Ft.--	=	1.000
Shoulder Slope-Ft./Ft.--Ss	=	0.020
Gutter Width-Ft.--W	=	2.000
Gutter Slope-Ft./Ft.--Sw	=	0.068
Gutter Depression-Inches--	=	1.625
Manning's 'N	=	0.016
Flow-CFS--Q	=	9.600
SPREAD-Ft.--T	=	18.486 < 22.30'
Average Velocity-V-fps	=	2.733
FLOW in Gutter-CFS--Q	=	2.952
% Flow in Gutter-CFS	=	30.747
Velocity of Flow in Gutter-fps	=	3.714
Depth at Curb Line-Inches--d	=	5.581

CURB OPENING--ADOT STD. C-15.20

Flow-CFS--Q	=	9.600
Gutter Velocity at INLET-fps	=	4.085
GUTTER FLOW at INLET-CFS--Q	=	3.684
Depth at INLET Curb Line-Inches--d	=	7.036
Local Gutter Depression-Inches	=	1.625
Length of opening: TOTAL Intercept--Ft.	=	25.061
Capture Ratio -- CURB OPENING	=	0.800

LENGTH	Efficiency	Q(Captured)	Q(By-Pass)
3.083	0.210	2.020	7.580
6.583	0.422	4.053	5.547
9.583	0.580	5.568	4.032
13.583	0.755	7.246	2.354
20.583	0.955	9.167	0.433

1-C15.20, L = 19.5'

Baseline Road Full Curb Capacity Cross-Section STA 23+50
Worksheet for Irregular Channel

Project Description	
Worksheet	Baseline Curb Capacity (ADOT)
Flow Element	Irregular Channel
Method	Manning's Formula
Solve For	Discharge

Input Data		
Slope	0.005360	ft/ft
Water Surface Elevation	0.50	ft

Options	
Current Roughness Method	Improved Lotter's Method
Open Channel Weighting Method	Improved Lotter's Method
Closed Channel Weighting Metho	Horton's Method

Results		
Mannings Coefficient	0.016	
Elevation Range	0.00 to 0.50	
Discharge	9.58	cfs
Flow Area	4.1	ft²
Wetted Perimeter	20.51	ft
Top Width	20.00	ft
Actual Depth	0.50	ft
Critical Elevation	0.48	ft
Critical Slope	0.006622	ft/ft
Velocity	2.33	ft/s
Velocity Head	0.08	ft
Specific Energy	0.58	ft
Froude Number	0.91	
Flow Type	Subcritical	

Roughness Segments

Start Station	End Station	Mannings Coefficient
0+00	0+20	0.016

Natural Channel Points

Station (ft)	Elevation (ft)
0+00	0.50
0+00	0.00
0+02	0.14
0+05	0.20
0+10	0.30
0+15	0.40
0+20	0.50

Baseline Road Cross Section With MAG Curb & Gutter
Cross Section for Irregular Channel

Project Description	
Worksheet	Baseline Curb Capacity (ADOT)
Flow Element	Irregular Channel
Method	Manning's Formula
Solve For	Discharge

Section Data		
Mannings Coefficient	0.016	
Slope	0.005360	ft/ft
Water Surface Elevation	0.50	ft
Elevation Range	0.00 to 0.50	
Discharge	9.58	cfs

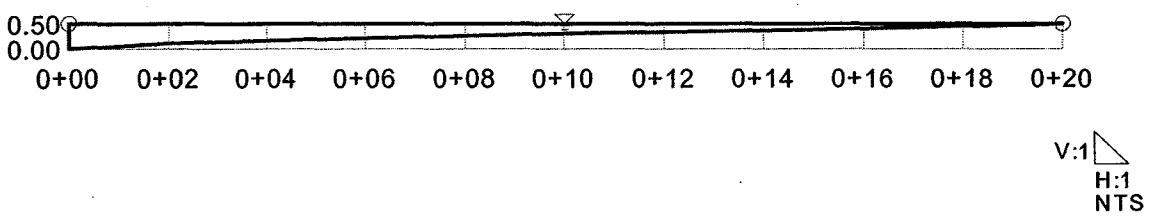

ARIZONA DEPARTMENT OF TRANSPORTATION
DRAINAGE DESIGN SECTION

03-10-2003

PROJECT NAME- Santan
HIGHWAY NAME- Guadalupe Rd
LOCATION - STA 24+62.10 RT
Ver 3.40: December 1995

TRACS NO.-
DESIGNER - MRL
CHECKER - AD
PAGE

CURB OPENING INLET--IN SUMP

GUTTER FLOW HYDRAULICS

GUTTER DESCRIPTION

Roadway Cross-Slope-Ft./Ft.--Sx	=	0.020
Shoulder Width-Ft.--	=	1.000
Shoulder Slope-Ft./Ft.--Ss	=	0.020
Gutter Width-Ft.--W	=	1.417
Gutter Slope-Ft./Ft.--Sw	=	0.059
Gutter Depression-Inches--	=	1.003
Flow-CFS--Q	=	5.060
Local Gutter Depression-Inches	=	1.000
Capture Ratio -- CURB OPENING	=	0.800

LENGTH	d(weir)	d(orifice)	d(INLET)	SPREAD
3.083	7.447	10.129	10.129	35.274
6.583	5.394	3.230	5.394	15.545
9.583	4.463	1.524	4.463	11.665
13.583	3.690	0.759	3.690	8.446
20.583	2.902	0.330	2.902	5.161

*** d(INLET) is Greater of WEIR or ORIFICE Depth.! ***

1-C15.20, L = 11.5'

ARIZONA DEPARTMENT OF TRANSPORTATION
DRAINAGE DESIGN SECTION

03-11-2003

PROJECT NAME- Santan
HIGHWAY NAME- Guadalupe RD
LOCATION - STA 24+60.18 RT, W
Ver 3.40: December 1995

TRACS NO.-
DESIGNER - MN
CHECKER - AD
PAGE

Checked spread @ upstream end of Catch Basin

GUTTER FLOW HYDRAULICS
GUTTER DESCRIPTION

Roadway Grade-% Per cent--G	=	0.011
Roadway Cross-Slope-Ft./Ft.--Sx	=	0.020
Shoulder Width-Ft.--	=	1.000
Shoulder Slope-Ft./Ft.--Ss	=	0.020
Gutter Width-Ft.--W	=	1.417
Gutter Slope-Ft./Ft.--Sw	=	0.059
Gutter Depression-Inches--	=	1.003
Manning's 'N	=	0.016
Flow-CFS--Q	=	0.770
SPREAD-Ft.--T	=	15.003 <225'
Average Velocity-V-fps	=	0.336
FLOW in Gutter-CFS--Q	=	0.201
% Flow in Gutter-CFS	=	26.152
Velocity of Flow in Gutter-fps	=	0.453
Depth at Curb Line-Inches--d	=	4.264

ARIZONA DEPARTMENT OF TRANSPORTATION
DRAINAGE DESIGN SECTION

03-11-2003

PROJECT NAME- Santan
HIGHWAY NAME- Guadalupe Rd
LOCATION - STA 247+75 RT, E
Ver 3.40: December 1995

TRACS NO.-
DESIGNER - MAG
CHECKER - AJ
PAGE

Checked spread @ upstream end of wing

GUTTER FLOW HYDRAULICS
GUTTER DESCRIPTION

Roadway Grade-% Per cent--G	=	0.071
Roadway Cross-Slope-Ft./Ft.--Sx	=	0.020
Shoulder Width-Ft.--	=	1.000
Shoulder Slope-Ft./Ft.--Ss	=	0.020
Gutter Width-Ft.--W	=	1.417
Gutter Slope-Ft./Ft.--Sw	=	0.059
Gutter Depression-Inches--	=	1.003
Manning's 'N	=	0.016
Flow-CFS--Q	=	5.060
SPREAD-Ft.--T	=	21.605 < 22.50'
Average Velocity-V-fps	=	1.075
FLOW in Gutter-CFS--Q	=	0.916
% Flow in Gutter-CFS	=	18.094
Velocity of Flow in Gutter-fps	=	1.450
Depth at Curb Line-Inches--d	=	5.848

ARIZONA DEPARTMENT OF TRANSPORTATION
DRAINAGE DESIGN SECTION

03-10-2003

PROJECT NAME- Santan
HIGHWAY NAME- Guadalupe Rd
LOCATION - STA 24+62.18 LT
Ver 3.40: December 1995

TRACS NO.-
DESIGNER - MRG
CHECKER - AD
PAGE

CURB OPENING INLET--IN SUMP

GUTTER FLOW HYDRAULICS

GUTTER DESCRIPTION

Roadway Cross-Slope-Ft./Ft.--Sx	=	0.020
Shoulder Width-Ft.--	=	1.000
Shoulder Slope-Ft./Ft.--Ss	=	0.020
Gutter Width-Ft.--W	=	1.417
Gutter Slope-Ft./Ft.--Sw	=	0.059
Gutter Depression-Inches--	=	1.003
Flow-CFS--Q	=	5.450
Local Gutter Depression-Inches	=	1.000
Capture Ratio -- CURB OPENING	=	0.800

LENGTH	d(weir)	d(orifice)	d(INLET)	SPREAD
3.083	7.825	11.308	11.308	40.185
6.583	5.668	3.747	5.668	16.685
9.583	4.689	1.768	4.689	12.609
13.583	3.878	0.880	3.878	9.227
20.583	3.049	0.383	3.049	5.775

*** d(INLET) is Greater of WEIR or ORIFICE Depth.! ***

1-C15.20, L=11.5

ARIZONA DEPARTMENT OF TRANSPORTATION
DRAINAGE DESIGN SECTION

03-11-2003

PROJECT NAME- Santan
HIGHWAY NAME- Guadalupe Rd
LOCATION - STA 24+25.8 LT, E
Ver 3.40: December 1995

TRACS NO.-
DESIGNER - MRL
CHECKER - AJ
PAGE

Checked spread @ upstream end of wing.

GUTTER FLOW HYDRAULICS
GUTTER DESCRIPTION

Roadway Grade-% Per cent--G	=	0.071
Roadway Cross-Slope-Ft./Ft.--Sx	=	0.020
Shoulder Width-Ft.--	=	1.000
Shoulder Slope-Ft./Ft.--Ss	=	0.020
Gutter Width-Ft.--W	=	1.417
Gutter Slope-Ft./Ft.--Sw	=	0.059
Gutter Depression-Inches--	=	1.003
Manning's 'N	=	0.016
Flow-CFS--Q	=	5.450
SPREAD-Ft.--T	=	22.224 (22.5')
Average Velocity-V-fps	=	1.095
FLOW in Gutter-CFS--Q	=	0.958
% Flow in Gutter-CFS	=	17.582
Velocity of Flow in Gutter-fps	=	1.477
Depth at Curb Line-Inches--d	=	5.997

ARIZONA DEPARTMENT OF TRANSPORTATION
DRAINAGE DESIGN SECTION

03-11-2003

PROJECT NAME- Santan
HIGHWAY NAME- Guadalupe RD
LOCATION - STA 24+60.14 LT, Lu
Ver 3.40: December 1995

TRACS NO. -
DESIGNER - MRL
CHECKER - (A)
PAGE

Checked Flow @ upstream End of catch Basin

GUTTER FLOW HYDRAULICS
GUTTER DESCRIPTION

Roadway Grade-% Per cent--G	=	0.011
Roadway Cross-Slope-Ft./Ft.--Sx	=	0.020
Shoulder Width-Ft.--	=	1.000
Shoulder Slope-Ft./Ft.--Ss	=	0.020
Gutter Width-Ft.--W	=	1.417
Gutter Slope-Ft./Ft.--Sw	=	0.059
Gutter Depression-Inches--	=	1.003
Manning's 'N	=	0.016
Flow-CFS--Q	=	0.980
SPREAD-Ft.--T	=	16.463 < 22.50'
Average Velocity-V-fps	=	0.356
FLOW in Gutter-CFS--Q	=	0.233
% Flow in Gutter-CFS	=	23.824
Velocity of Flow in Gutter-fps	=	0.481
Depth at Curb Line-Inches--d	=	4.614

ARIZONA DEPARTMENT OF TRANSPORTATION
DRAINAGE DESIGN SECTION

03-10-2003

PROJECT NAME- Santan
HIGHWAY NAME- Guadalupe RD
LOCATION - STA 25+64 RT
Ver 3.40: December 1995

TRACS NO.-
DESIGNER - MR
CHECKER - AD
PAGE

CURB OPENING INLET -- ON GRADE

GUTTER FLOW HYDRAULICS
GUTTER DESCRIPTION

Roadway Grade-% Per cent--G	=	0.586
Roadway Cross-Slope-Ft./Ft.--Sx	=	0.020
Shoulder Width-Ft.--	=	1.000
Shoulder Slope-Ft./Ft.--Ss	=	0.020
Gutter Width-Ft.--W	=	1.417
Gutter Slope-Ft./Ft.--Sw	=	0.059
Gutter Depression-Inches--	=	1.003
Manning's 'N	=	0.016
Flow-CFS--Q	=	13.000
SPREAD-Ft.--T	=	20.687 L=22.5'
Average Velocity-V-fps	=	3.010
FLOW in Gutter-CFS--Q	=	2.458
% Flow in Gutter-CFS	=	18.910
Velocity of Flow in Gutter-fps	=	4.061
Depth at Curb Line-Inches--d	=	5.628

CURB OPENING--ADOT STD. C-15.20

Flow-CFS--Q	=	13.000
Gutter Velocity at INLET-fps	=	4.461
GUTTER FLOW at INLET-CFS--Q	=	3.073
Depth at INLET Curb Line-Inches--d	=	7.149
Local Gutter Depression-Inches	=	1.625
Length of opening: TOTAL Intercept--Ft.	=	33.282
Capture Ratio -- CURB OPENING	=	0.800

LENGTH	Efficiency	Q(Captured)	Q(By-Pass)
3.083	0.161	2.087	10.913
6.583	0.327	4.257	8.743
9.583	0.457	5.945	7.055
13.583	0.611	7.942	5.058
20.583	0.823	10.705	2.295

1-C15.20, L=19.5'

ARIZONA DEPARTMENT OF TRANSPORTATION
DRAINAGE DESIGN SECTION

03-10-2003

PROJECT NAME- Santan
HIGHWAY NAME- Guadalupe RD
LOCATION - STA 25+64 LT
Ver 3.40: December 1995

TRACS NO.-
DESIGNER - MNG
CHECKER - AJ
PAGE

CURB OPENING INLET -- ON GRADE

GUTTER FLOW HYDRAULICS
GUTTER DESCRIPTION

Roadway Grade-% Per cent--G	=	0.586
Roadway Cross-Slope-Ft./Ft.--Sx	=	0.020
Shoulder Width-Ft.--	=	1.000
Shoulder Slope-Ft./Ft.--Ss	=	0.020
Gutter Width-Ft.--W	=	1.417
Gutter Slope-Ft./Ft.--Sw	=	0.059
Gutter Depression-Inches--	=	1.003
Manning's 'N	=	0.016
Flow-CFS--Q	=	13.000
SPREAD-Ft.--T	=	20.687 L 22.15'
Average Velocity-V-fps	=	3.010
FLOW in Gutter-CFS--Q	=	2.458
% Flow in Gutter-CFS	=	18.910
Velocity of Flow in Gutter-fps	=	4.061
Depth at Curb Line-Inches--d	=	5.628

CURB OPENING--ADOT STD. C-15.20

Flow-CFS--Q	=	13.000
Gutter Velocity at INLET-fps	=	4.461
GUTTER FLOW at INLET-CFS--Q	=	3.073
Depth at INLET Curb Line-Inches--d	=	7.149
Local Gutter Depression-Inches	=	1.625
Length of opening: TOTAL Intercept--Ft.	=	33.282
Capture Ratio -- CURB OPENING	=	0.800

LENGTH	Efficiency	Q(Captured)	Q(By-Pass)
3.083	0.161	2.087	10.913
6.583	0.327	4.257	8.743
9.583	0.457	5.945	7.055
13.583	0.611	7.942	5.058
20.583	0.823	10.705	2.295

1-C15.20, L = 19.5'

Guadalupe Road Full Curb Capacity Cross-Section STA 25+64
Worksheet for Irregular Channel

Project Description	
Worksheet	Guadalupe Curb Capacity (MAC
Flow Element	Irregular Channel
Method	Manning's Formula
Solve For	Discharge

Input Data		
Slope	0.005863	ft/ft
Water Surface Elevation	0.50	ft

Options	
Current Roughness Method	Improved Lotter's Method
Open Channel Weighting Method	Improved Lotter's Method
Closed Channel Weighting Metho	Horton's Method

Results		
Mannings Coefficient	0.016	
Elevation Range	0.00 to 0.50	
Discharge	12.68	cfs
Flow Area	4.9	ft²
Wetted Perimeter	22.51	ft
Top Width	22.00	ft
Actual Depth	0.50	ft
Critical Elevation	0.49	ft
Critical Slope	0.006370	ft/ft
Velocity	2.58	ft/s
Velocity Head	0.10	ft
Specific Energy	0.60	ft
Froude Number	0.96	
Flow Type	Subcritical	

Roughness Segments

Start Station	End Station	Mannings Coefficient
0+00	0+22	0.016

Natural Channel Points

Station (ft)	Elevation (ft)
0+00	0.50
0+00	0.00
0+01	0.08
0+05	0.16
0+10	0.26
0+15	0.36
0+20	0.46
0+22	0.50

Guadalupe Road Cross Section With ADOT Curb & Gutter
Cross Section for Irregular Channel

Project Description	
Worksheet	Guadalupe Curb Capacity (MAC
Flow Element	Irregular Channel
Method	Manning's Formula
Solve For	Discharge

Section Data		
Mannings Coefficient	0.016	
Slope	0.005863	ft/ft
Water Surface Elevation	0.50	ft
Elevation Range	0.00 to 0.50	
Discharge	12.68	cfs

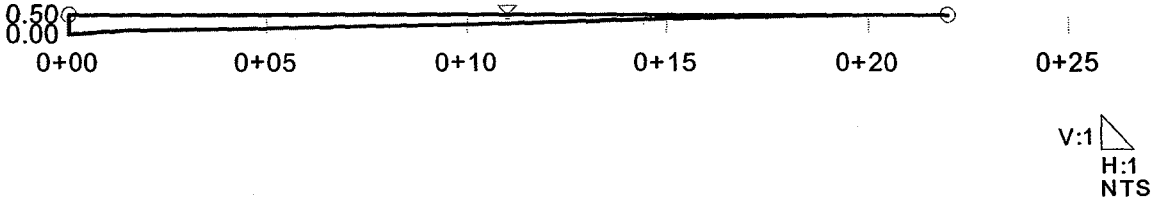

ARIZONA DEPARTMENT OF TRANSPORTATION
DRAINAGE DESIGN SECTION

03-10-2003

PROJECT NAME- Santan
HIGHWAY NAME- Elliot RD
LOCATION - STA 21+01 LT
Ver 3.40: December 1995

TRACS NO.-
DESIGNER - MRG
CHECKER - AD
PAGE

CURB OPENING INLET -- ON GRADE

GUTTER FLOW HYDRAULICS
GUTTER DESCRIPTION

Roadway Grade-% Per cent--G	=	0.470
Roadway Cross-Slope-Ft./Ft.--Sx	=	0.015
Shoulder Width-Ft.--	=	1.000
Shoulder Slope-Ft./Ft.--Ss	=	0.015
Gutter Width-Ft.--W	=	2.000
Gutter Slope-Ft./Ft.--Sw	=	0.068
Gutter Depression-Inches--	=	1.632
Manning's 'N	=	0.016
Flow-CFS--Q	=	1.780
SPREAD-Ft.--T	=	11.280
Average Velocity-V-fps	=	1.679
FLOW in Gutter-CFS--Q	=	0.947
% Flow in Gutter-CFS	=	53.208
Velocity of Flow in Gutter-fps	=	2.285
Depth at Curb Line-Inches--d	=	3.302

CURB OPENING--ADOT STD. C-15.20

Flow-CFS--Q	=	1.780
Gutter Velocity at INLET-fps	=	2.663
GUTTER FLOW at INLET-CFS--Q	=	1.317
Depth at INLET Curb Line-Inches--d	=	4.596
Local Gutter Depression-Inches	=	1.625
Length of opening: TOTAL Intercept--Ft.	=	8.880
Capture Ratio -- CURB OPENING	=	0.800

LENGTH	Efficiency	Q(Captured)	Q(By-Pass)
3.083	0.536	0.954	0.826
6.583	0.912	1.624	0.156
9.583	1.000	1.780	0.000
13.583	1.000	1.780	0.000
20.583	1.000	1.780	0.000

1-C1520, L=7.5'

ARIZONA DEPARTMENT OF TRANSPORTATION
DRAINAGE DESIGN SECTION

03-10-2003

PROJECT NAME- Santan
HIGHWAY NAME- Elliot RD
LOCATION - STA 21+01 RT
Ver 3.40: December 1995

TRACS NO.-
DESIGNER - MWb
CHECKER - AD
PAGE

CURB OPENING INLET -- ON GRADE

GUTTER FLOW HYDRAULICS
GUTTER DESCRIPTION

Roadway Grade-% Per cent--G	=	0.470
Roadway Cross-Slope-Ft./Ft.--Sx	=	0.015
Shoulder Width-Ft.--	=	1.000
Shoulder Slope-Ft./Ft.--Ss	=	0.015
Gutter Width-Ft.--W	=	2.000
Gutter Slope-Ft./Ft.--Sw	=	0.068
Gutter Depression-Inches--	=	1.632
Manning's 'N	=	0.016
Flow-CFS--Q	=	1.780
SPREAD-Ft.--T	=	11.280
Average Velocity-V-fps	=	1.679
FLOW in Gutter-CFS--Q	=	0.947
% Flow in Gutter-CFS	=	53.208
Velocity of Flow in Gutter-fps	=	2.285
Depth at Curb Line-Inches--d	=	3.302

CURB OPENING--ADOT STD. C-15.20

Flow-CFS--Q	=	1.780
Gutter Velocity at INLET-fps	=	2.663
GUTTER FLOW at INLET-CFS--Q	=	1.317
Depth at INLET Curb Line-Inches--d	=	4.596
Local Gutter Depression-Inches	=	1.625
Length of opening: TOTAL Intercept--Ft.	=	8.880
Capture Ratio -- CURB OPENING	=	0.800

LENGTH	Efficiency	Q(Captured)	Q(By-Pass)
3.083	0.536	0.954	0.826
6.583	0.912	1.624	0.156
9.583	1.000	1.780	0.000
13.583	1.000	1.780	0.000
20.583	1.000	1.780	0.000

1-C15.20, L = 7.5'

ARIZONA DEPARTMENT OF TRANSPORTATION
DRAINAGE DESIGN SECTION

03-10-2003

PROJECT NAME- Santan
HIGHWAY NAME- ELLIOT RD
LOCATION - STA 23+14 LT
Ver 3.40: December 1995

TRACS NO.-
DESIGNER - MRG
CHECKER - AJ
PAGE

CURB OPENING INLET -- ON GRADE

GUTTER FLOW HYDRAULICS
GUTTER DESCRIPTION

Roadway Grade-% Per cent--G	=	0.747
Roadway Cross-Slope-Ft./Ft.--Sx	=	0.020
Shoulder Width-Ft.--	=	1.000
Shoulder Slope-Ft./Ft.--Ss	=	0.020
Gutter Width-Ft.--W	=	2.000
Gutter Slope-Ft./Ft.--Sw	=	0.067
Gutter Depression-Inches--	=	1.608
Manning's 'N	=	0.016
Flow-CFS--Q	=	11.300 @ D=6"
SPREAD-Ft.--T	=	18.471
Average Velocity-V-fps	=	3.223
FLOW in Gutter-CFS--Q	=	3.470
% Flow in Gutter-CFS	=	30.707
Velocity of Flow in Gutter-fps	=	4.376
Depth at Curb Line-Inches--d	=	5.561

CURB OPENING--ADOT STD. C-15.20

Flow-CFS--Q	=	11.300
Gutter Velocity at INLET-fps	=	4.815
GUTTER FLOW at INLET-CFS--Q	=	4.333
Depth at INLET Curb Line-Inches--d	=	7.016
Local Gutter Depression-Inches	=	1.625
Length of opening: TOTAL Intercept--Ft.	=	29.732
Capture Ratio -- CURB OPENING	=	0.800

LENGTH	Efficiency	Q(Captured)	Q(By-Pass)
3.083	0.179	2.021	9.279
6.583	0.363	4.098	7.202
9.583	0.504	5.690	5.610
13.583	0.667	7.533	3.767
20.583	0.880	9.946	1.354

1-C15.20, L=19.50'

ARIZONA DEPARTMENT OF TRANSPORTATION
DRAINAGE DESIGN SECTION

03-10-2003

PROJECT NAME- Santan
HIGHWAY NAME- ELLIOT RD
LOCATION - STA 23+18 RT
Ver 3.40: December 1995

TRACS NO.-
DESIGNER - MNL
CHECKER - AV
PAGE

CURB OPENING INLET -- ON GRADE

GUTTER FLOW HYDRAULICS
GUTTER DESCRIPTION

Roadway Grade-% Per cent--G	=	0.747
Roadway Cross-Slope-Ft./Ft.--Sx	=	0.020
Shoulder Width-Ft.--	=	1.000
Shoulder Slope-Ft./Ft.--Ss	=	0.020
Gutter Width-Ft.--W	=	2.000
Gutter Slope-Ft./Ft.--Sw	=	0.067
Gutter Depression-Inches--	=	1.608
Manning's 'N	=	0.016
Flow-CFS--Q	=	11.300 @ D=6"
SPREAD-Ft.--T	=	18.471
Average Velocity-V-fps	=	3.223
FLOW in Gutter-CFS--Q	=	3.470
% Flow in Gutter-CFS	=	30.707
Velocity of Flow in Gutter-fps	=	4.376
Depth at Curb Line-Inches--d	=	5.561

CURB OPENING--ADOT STD. C-15.20

Flow-CFS--Q	=	11.300
Gutter Velocity at INLET-fps	=	4.815
GUTTER FLOW at INLET-CFS--Q	=	4.333
Depth at INLET Curb Line-Inches--d	=	7.016
Local Gutter Depression-Inches	=	1.625
Length of opening: TOTAL Intercept--Ft.	=	29.732
Capture Ratio -- CURB OPENING	=	0.800

LENGTH	Efficiency	Q(Captured)	Q(By-Pass)
3.083	0.179	2.021	9.279
6.583	0.363	4.098	7.202
9.583	0.504	5.690	5.610
13.583	0.667	7.533	3.767
20.583	0.880	9.946	1.354

1-C1520, L=19.50'

Elliot Road Full Curb Capacity Cross-Section STA 23+18
Worksheet for Irregular Channel

Project Description	
Worksheet	Elliot Curb Capacity (ADOT)
Flow Element	Irregular Channel
Method	Manning's Formula
Solve For	Discharge

Input Data		
Slope	0.007460	ft/ft
Water Surface Elevation	0.50	ft

Options	
Current Roughness Method	Improved Lotter's Method
Open Channel Weighting Method	Improved Lotter's Method
Closed Channel Weighting Metho	Horton's Method

Results		
Mannings Coefficient	0.016	
Elevation Range	0.00 to 0.50	
Discharge	11.30	cfs
Flow Area	4.1	ft²
Wetted Perimeter	20.51	ft
Top Width	20.00	ft
Actual Depth	0.50	ft
Critical Elevation	0.51	ft
Critical Slope	0.006448	ft/ft
Velocity	2.75	ft/s
Velocity Head	0.12	ft
Specific Energy	0.62	ft
Froude Number	1.07	
Flow Type	Supercritical	

Roughness Segments

Start Station	End Station	Mannings Coefficient
0+00	0+20	0.016

Natural Channel Points

Station (ft)	Elevation (ft)
0+00	0.50
0+00	0.00
0+02	0.14
0+05	0.20
0+10	0.30
0+15	0.40
0+20	0.50

Elliot Road Crossection With ADOT Curb & Gutter
Cross Section for Irregular Channel

Project Description	
Worksheet	Elliot Curb Capacity (ADOT)
Flow Element	Irregular Channel
Method	Manning's Formula
Solve For	Discharge

Section Data		
Mannings Coefficient	0.016	
Slope	0.007460	ft/ft
Water Surface Elevation	0.50	ft
Elevation Range	0.00 to 0.50	
Discharge	11.30	cfs

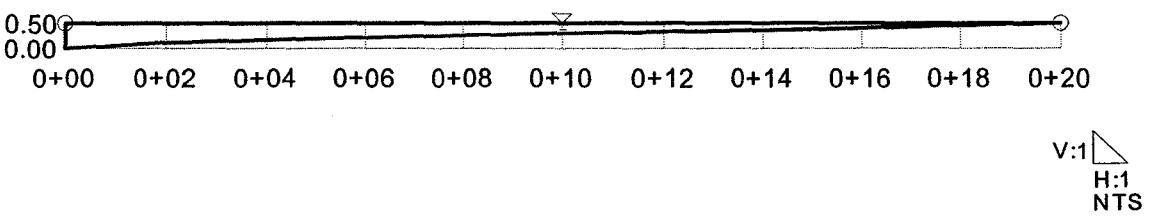

APPENDIX F DRAINAGE PLANS AND ROADWAY TYPICAL SECTIONS

NOTE:
THE ZEROS IN PARENTHESIS (0, 0.0 & 0.00) IN THE HEADING OF SOME OF THE COLUMNS ARE THE RECOMMENDED PRECISION OF THE VALUE TO BE ENTERED IN THE COLUMN.

NOTE:
FOR PIPE CULVERT PLACEMENT SEE STANDARD DRAWING C-13.15

NOTE:
PIPE OPTIONS SELECTED ARE THOSE REQUIRED TO MEET MINIMUM SERVICE LIFE.
SHADED PIPE OPTION FIELDS ARE NOT ALLOWABLE ALTERNATES.

NRCP NRCIPCP CHDPEPP

CSP - CORRUGATED STEEL PIPE
CAP - CORRUGATED ALUMINUM PIPE
RCP - REINFORCED CONCRETE PIPE
NRCP - NON-REINFORCED CONCRETE PIPE
NRCIPCP - NON-REINFORCED CAST-IN-PLACE CONCRETE PIPE
CHDPEPP - CORRUGATED HIGH DENSTIY POLYETHYLENE PLASTIC PIPE

F.H.W.A. REGION	STATE	PROJECT NO.	SHEET NO.	TOTAL SHEETS	AS BUILT
9	ARIZ.	202-C(005)B			
		202L MA 031			

Station	Plan Ref No.	⬡ Controlling Fill Height Range	Size, Corrugated (In.)	Size, Smooth (In.)	Length (0) (Ft.)	Skew (0) (Degree)	◪ Corrugation	Wall Thickness (0.00)	Zinc	Bit. Coated Zinc	Aluminum	Bit. Coated Aluminum	◪ Corrugation	Wall Thickness (0.00)	Uncoated	Bit. Coated	Class - Non Trench	Class - Trench	Class	Min Wall Thickness (0)	AASHTO M-294 Type C	AASHTO M-294 Type S	C-13.20 & C-13.25 Detail -	Size, (in) Manhole	Standard or Detail (End Sec)	S-Single / D-Double (Each)	Location (Ea)	H (0.0) (Ft.)	L Wing (0.0) (Ft.)	L 18' Slotted Drn (0) (Ft.)	L 24' Slotted Drn (0) (Ft.)	Type (Grate)	Elev. (0.00) (Ft.)	Depth (In.)	L (0.0) (Ft.)	Pipe Exc (0) (Cubic Yard)	Pipe Bk-fl (0) (Cubic Yard)	Drn Exc (0) (Cubic Yard)	Berm/Dike Emb (0) (Cubic Yard)	REMARKS
Elliot Rd. Sta 21+01 63' Rt	100	3		30	172												II	II	2			X			C-15.20			7.0	7.5				1388.83	1	18	265	62			CB 100 to Jct 100
to Channel Sta 124+39.25 ℄																									Dtl D12															
Elliot Rd. Sta 20+19.72 63' Rt	101	2		30	82												II	II	1			X			C-15.20			6.6	7.0				1388.64	1	18	118	28			CB 101 to CB 100
to Elliot Rd. Sta 21+01 63' Rt																																								Two 3.5' Wings
Elliot Rd. Sta 19+37 63' Rt	102	2		30	83												II	II	1			X			C-15.20			6.5	3.5				1388.83	1	14	115	28			CB 102 to CB 101
to Elliot Rd. Sta 20+19.72 63' Rt																																								
Elliot Rd. Sta 18+75 72.71' Rt	103	2		24	63												II	II	1			X			C-13.75			-	-				-			76	18			Jct 103 to CB 102
to Elliot Rd. Sta 19+37 63' Rt																																								
Elliot Rd. Sta 22+09.20 65' Lt	104	3		30	61												II	II	2			X		24	C-18.10			8.4					1389.50			98	21			MH 104 to Jct 104
to Channel Sta 124+39.25 ℄																									Dtl D12															
Elliot Rd Sta 21+01 63' Lt	105	3		30	109												II	II	2			X			C-15.20			7.4	7.5				1388.83	1	18	179	37			CB 105 to MH 104
to Elliot Rd. Sta 22+09.20 65' Lt																																								
Elliot Rd. Sta 20+19.72 63' Lt	106	2		30	82												II	II	1			X			C-15.20			7.0	7.0				1388.64	1	18	123	28			CB 106 to CB 105
to Elliot Rd. Sta 21+01 63' Lt																																								Two 3.5' Wings
Elliot Rd. Sta 19+37 63' Lt	107	2		30	83												II	II	1			X			C-15.20			6.9	3.5				1388.83	1	14	121	28			CB 107 to CB 106
to Elliot Rd. Sta 20+19.72 63' Lt																																								
Elliot Rd. Sta 18+75 72.71' Lt	108	2		24	63												II	II	1			X		24	C-18.10			7.3					1389.39			82	18			MH 108 to CB 107
to Elliot Rd. Sta 19+37 63' Lt																																								
Sheet Total																																					1177	268		

FILL HEIGHT RANGE TABLE (Ft.)													
RANGE NO.		1	2	3	4	5	6	7	8	9	10	11	12
FILL	>	1	3	5	8	11	15	20	25	30	40	55	70
HEIGHT (Ft.)	≤	3	5	8	11	15	20	25	30	40	55	70	90

⬡ SHOULD FIELD CONDITIONS VARY FROM THE RANGE INDICATED, CONTACT DESIGN FOR RE-EVALUATION OF PIPE DESIGN REQUIREMENTS.

◪ PIPE CORRUGATION			
A	2⅔x½	D	6x2
B	3x1	E	3x1 or 9x2½
C	9x2½		

	NAME	DATE
DESIGN	MRG	4/03
DRAWN	W.JP	4/03
CHECKED	CAD	4/03

Stanley Consultants INC.
2525 East Broadway Road, Suite 108
Phoenix, Arizona 85040
Phone: (602) 921-6500

ARIZONA DEPARTMENT OF TRANSPORTATION
INTERMODAL TRANSPORTATION DIVISION
ROADWAY DESIGN SERVICES

NEW PIPE SUMMARY SHEET

95%
PRELIMINARY
NOT FOR CONSTRUCTION

ROUTE: 202L
LOCATION: SANTAN FWY, ELLIOT ROAD - BASELINE ROAD

TRACS NO. H 5915 01C
202-C(005)B

DWG NO. G-6.1
___ OF ___

REV. DATE: 01-05-2000

04/24/2003 gi\16110\Drainage\DGN\PipeSummaries\h5150sp01.dgn

NOTE:
THE ZEROS IN PARENTHESIS (0, 0.0 & 0.00) IN THE HEADING OF SOME OF THE COLUMNS ARE THE RECOMMENDED PRECISION OF THE VALUE TO BE ENTERED IN THE COLUMN.

NOTE:
FOR PIPE CULVERT PLACEMENT SEE STANDARD DRAWING C-13.15

NOTE:
PIPE OPTIONS SELECTED ARE THOSE REQUIRED TO MEET MINIMUM SERVICE LIFE.
SHADED PIPE OPTION FIELDS ARE NOT ALLOWABLE ALTERNATES.

CSP - CORRUGATED STEEL PIPE
CAP - CORRUGATED ALUMINUM PIPE
RCP - REINFORCED CONCRETE PIPE
NRCP - NON-REINFORCED CONCRETE PIPE
NRCIPCP - NON-REINFORCED CAST-IN-PLACE CONCRETE PIPE
CHDPEPP - CORRUGATED HIGH DENSTIY POLYETHYLENE PLASTIC PIPE

F.H.W.A. REGION	STATE	PROJECT NO.	SHEET NO.	TOTAL SHEETS	AS BUILT
9	ARIZ.	202-C(005)B			
		202L MA 031			

Station	Plan Ref No.	● Controlling Fill Height Range	Size, Corrugated (In.)	Size, Smooth (In.)	Length (0) (Ft.)	Skew (0) (Degree)	CSP ☑ Corrugation	CSP Wall Thickness (0.00) (In.)	CSP Coating Zinc	CSP Coating Bit. Coated Zinc	CSP Coating Aluminum	CSP Coating Bit. Coated Aluminum	CAP ☑ Corrugation	CAP Wall Thickness (0.00) (In.)	CAP Uncoated	CAP Bit. Coated	RCP Class - Non Trench	RCP Class - Trench	NRCP Class	NRCIPCP Min Wall Thickness (0) (In.)	CHDPEPP AASHTO M-294 Type C	CHDPEPP AASHTO M-294 Type S	End Sec Each C-13.20 & C-13.25	End Sec Each Detail -	Size, (In) Manhole	Standard or Detail	S-Single / D-Double	Location	H (0.0)	L Wing (0.0)	L 18" Slotted Drn (0)	L 24" Slotted Drn (0)	Grate Type	Grate Elev. (0.00)	Inlet Depression Depth (In.)	Inlet Depression L (0.0) (Ft.)	Pipe Exc (0)	Pipe Bkfl (0)	Drn Exc (0)	Berm/Dike Emb (0)	REMARKS
Ramp EC Sta 1+64.26 25.5' Rt to Elliot Rd. Sta 18+75 72.71' Lt	109	5		24	104												IV	IV				X				C-15.80			5.6					1388.02			124	30			CB 109 to MH 108
Ramp EC Sta 1+64.26 23.5' Lt to Ramp EC Sta 1+64.26 25.5' Rt	110	2		24	51												II	II	1			X				C-15.91			5.6		20			1388.15	1	30	54	14			CB 110 to CB 109
Ramp EC Sta 2+26 23.5' Lt to Ramp EC Sta 1+64.26 23.5' Lt	111	2		24	62												II	II	1			X				C-15.91			5.5		10			1388.29	1	20	65	18			CB 111 to CB 110
Ramp ED Sta 1+70 11.5' Rt to Elliot Rd. Sta 22+09.20 65' Rt	112	3		24	106												II	II	2			X				C-15.91			5.8		5			1387.96	1	15	136	30			CB 112 to MH 104
Ramp ED Sta 2+17.67 11.5' Rt to Ramp ED Sta 1+70 11.5' Rt	113	2		24	48												II	II	1			X				C-15.91			5.5					1387.82	1	10	51	14			CB 113 to CB 112
Ramp ED Sta 2+65 11.5' Rt to Ramp ED Sta 2+17.67 11.5' Rt	114	2		24	48												II	II	1			X				C-15.91			5.5		5			1387.95	1	15	50	14			CB 114 to CB 113
Ramp ED Sta 2+17.67 23.5' Lt to Ramp ED Sta 2+17.67 11.5' Rt	115	1		24	37												III	III	3			X				C-15.80			4.0					1387.82			34	11			CB 115 to CB 113
Ramp ED Sta 5+25 11.5' Rt to Channel Sta 130+34.27 2' Lt	116	3		24	78												II	II	2			X				C-15.91			5.5		10			1390.46	1	20	123	22			CB 116 to Jct 116
202L WB Med Sta 3183+63 91.5 Lt to Channel Sta 137+84.87 2' Lt	117	3		24	299												II	II	2			X				C-15.91			5.5		25			1399.74	1	35	382	85			CB 117 to Jct 117
Sheet Total																															75						1019	238			

QUANTITIES: Cubic Yard

FILL HEIGHT RANGE TABLE (Ft.)

RANGE NO.		1	2	3	4	5	6	7	8	9	10	11	12
FILL	>	1	3	5	8	11	15	20	25	30	40	55	70
HEIGHT (Ft.)	≤	3	5	8	11	15	20	25	30	40	55	70	90

● SHOULD FIELD CONDITIONS VARY FROM THE RANGE INDICATED, CONTACT DESIGN FOR RE-EVALUATION OF PIPE DESIGN REQUIREMENTS.

☑ PIPE CORRUGATION

A	2⅔×½	D	6×2
B	3×1	E	3×1 or 9×2½
C	9×2½		

	NAME	DATE
DESIGN	MRG	4/03
DRAWN	WJP	4/03
CHECKED	CAD	4/03

Stanley Consultants inc.

ARIZONA DEPARTMENT OF TRANSPORTATION
INTERMODAL TRANSPORTATION DIVISION
ROADWAY DESIGN SERVICES

NEW PIPE SUMMARY SHEET

95%
PRELIMINARY
NOT FOR
CONSTRUCTION

ROUTE 202L — LOCATION SANTAN FWY, ELLIOT ROAD - BASELINE ROAD — DWG NO. C-6.2

TRACS NO. H 5915 01C — 202-C(005)B — ___ OF ___

REV. DATE: 01-05-2000

04/21/2003 q:\16110\Drainage\DGN\PipeSummaries\h5150sp02.dgn

NOTE:
THE ZEROS IN PARENTHESIS (0, 0.0 & 0.00) IN THE HEADING OF SOME OF THE COLUMNS ARE THE RECOMMENDED PRECISION OF THE VALUE TO BE ENTERED IN THE COLUMN.

NOTE:
FOR PIPE CULVERT PLACEMENT SEE STANDARD DRAWING C-13.15

NOTE:
PIPE OPTIONS SELECTED ARE THOSE REQUIRED TO MEET MINIMUM SERVICE LIFE.
SHADED PIPE OPTION FIELDS ARE NOT ALLOWABLE ALTERNATES.

CSP - CORRUGATED STEEL PIPE
CAP - CORRUGATED ALUMINUM PIPE
RCP - REINFORCED CONCRETE PIPE
NRCP - NON-REINFORCED CONCRETE PIPE
NRCIPCP - NON-REINFORCED CAST-IN-PLACE CONCRETE PIPE
CHDPEPP - CORRUGATED HIGH DENSTIY POLYETHYLENE PLASTIC PIPE

F.H.W.A. REGION	STATE	PROJECT NO.	SHEET NO.	TOTAL SHEETS	AS BUILT
9	ARIZ.	202-C(005)B			
		202L MA 031			

DESCRIPTION							CSP					CAP			RCP		NRCP	NRCIPCP	CHDPEPP	END TREATMENT														QUANTITIES	
				In.	In.	Ft. / Degree	In.	Coating				In.						In.		Each		Catch basin, Manhole, Headwall & Junction Structure											Cubic Yard	
																				End Sec	Ea				Ft.		Grate	Ft.						
Station	Plan Ref No.	Controlling Fill Height Range	Size, Corrugated	Size, Smooth	Length (0)	Skew (0)	Corrugation	Wall Thickness (0.00)	Zinc	Blt. Coated Zinc	Aluminum	Blt. Coated Aluminum	Corrugation	Wall Thickness (0.00)	Uncoated	Blt. Coated	Class - Non Trench	Class - Trench	Class	Min Wall Thickness (0)	AASHTO M-294 Type C	AASHTO M-294 Type S	C-13.20 & C-13.25 Detail -	Size, (In) Manhole	Standard or Detail	S-Single / D-Double	Location	H (0.0)	L Wing (0.0)	L 18" Slotted Drn (0)	L 24" Slotted Drn (0)	Type	Elev. (0.00)	Depth In.	L (0.0) Ft.	Inlet Depression Pipe Exc (0)	Pipe Bk-fl (0)	Drn Exc (0)	Berm/Dike Emb (0)	REMARKS
202L WB Med Sta 3181+69 91.5 Lt to 202L WB Med Sta 3183+63 91.5 Lt	118	2		24	194												II	II	I		X			C-15.92			5.5		25			1403.07			208	55			CB 118 to CB 117
202L EB Med Sta 3181+69 67.5' Rt to 202L WB Med Sta 3181+69, 91.5' Lt	119	2		24	167												II	II	I		X			C-15.92			5.5		30			1403.55			179	47			CB 119 to CB 118
202L EB Med Sta 3186+27 67.5' Rt to Channel Sta 140+21.72 2' Lt	120	2		24	106												II	II	I		X			C-15.91			5.5		25			1397.18	1	35	114	30			CB 120 to Jct 120
202L EB Med Sta 3187+67 96.74 Rt to Channel Sta 141+56.79 2' Lt	121	2		24	65												II	II	I		X			C-15.91			5.5		5			1395.79	1	15	67	18			CB 121 to Jct 121
202L EB Med Sta 3188+42 90.69' Rt to Channel Sta 142+31.20 1.86' Lt	122	3		24	66												II	II	2		X			C-15.91			7.5		25			1395.72	1	35	78	19			CB 122 to Jct 122
202L WB Med Sta 3188+53 114.62' Lt to 202L WB Med Sta 3188+42 90.69' Rt	124	3		24	210												II	II	2		X			C-15.91			6.0		25			1395.23	1	35	248	60			CB 124 to CB 123
202L WB Med Sta 3187+67 120.09' Lt to 202L WB Med Sta 3188+53 114.62 Lt	125	2		24	87												II	II	I		X			C-15.91			5.5		15			1395.33	1	25	94	25			CB 125 to CB 124
202L WB Med Sta 3185+96 131.34 Lt to 202L WB Med Sta 3187+67 120.09 Lt	126	2		24	172												II	II	I		X			C-15.91			5.5		25			1396.15	1	35	180	49			CB 126 to CB 125
202L WB Med Sta 3189+04 111.79' Lt to 202L WB Med Sta 3188+53 114.62' Lt	127	2		24	52												II	II	I		X			C-15.91			5.8					1395.26	1	5	57	15			CB 127 to CB 124
Sheet Total																														175						1225	318			

FILL HEIGHT RANGE TABLE (Ft.)

RANGE NO.		1	2	3	4	5	6	7	8	9	10	11	12
FILL	>	1	3	5	8	11	15	20	25	30	40	55	70
HEIGHT (Ft.)	≤	3	5	8	11	15	20	25	30	40	55	70	90

SHOULD FIELD CONDITIONS VARY FROM THE RANGE INDICATED, CONTACT DESIGN FOR RE-EVALUATION OF PIPE DESIGN REQUIREMENTS.

PIPE CORRUGATION

A	2⅔x½	D	6x2
B	3x1	E	3x1 or 9x2½
C	9x2½		

	NAME	DATE
DESIGN	MRG	4/03
DRAWN	WJP	4/03
CHECKED	CAD	4/03

Stanley Consultants Inc.
2929 East Camelback Road, Suite 130
Phoenix, Arizona 85016
Phone: (602) 957-6300

ARIZONA DEPARTMENT OF TRANSPORTATION
INTERMODAL TRANSPORTATION DIVISION
ROADWAY DESIGN SERVICES

NEW PIPE SUMMARY SHEET

95%
PRELIMINARY
NOT FOR CONSTRUCTION

ROUTE	LOCATION	
202L	SANTAN FWY. ELLIOT ROAD - BASELINE ROAD	DWG NO. C-6.3
TRACS NO. H 5915 01C	202-C(005)B	___ OF ___

REV. DATE: 01-05-2000

DATE: LOCATION: REVISIONS: FINISHED PLANS: SURVEY NO. DATE: LOCATION: REVISIONS: FINISHED PLANS: SURVEY NO.

NOTE:
THE ZEROS IN PARENTHESIS (0, 0.0 & 0.00) IN THE HEADING OF SOME OF THE COLUMNS ARE THE RECOMMENDED PRECISION OF THE VALUE TO BE ENTERED IN THE COLUMN.

NOTE:
FOR PIPE CULVERT PLACEMENT SEE STANDARD DRAWING C-13.15

NOTE:
PIPE OPTIONS SELECTED ARE THOSE REQUIRED TO MEET MINIMUM SERVICE LIFE.
SHADED PIPE OPTION FIELDS ARE NOT ALLOWABLE ALTERNATES.

CSP - CORRUGATED STEEL PIPE
CAP - CORRUGATED ALUMINUM PIPE
RCP - REINFORCED CONCRETE PIPE
NRCP - NON-REINFORCED CONCRETE PIPE
NRCIPCP - NON-REINFORCED CAST-IN-PLACE CONCRETE PIPE
CHDPEPP - CORRUGATED HIGH DENSTIY POLYETHYLENE PLASTIC PIPE

F.H.W.A. REGION	STATE	PROJECT NO.	SHEET NO.	TOTAL SHEETS	AS BUILT
9	ARIZ.	202-C(005)B			
		202L MA 031			

Station	Plan Ref No.	⬢ Controlling Fill Height Range	Size, Corrugated (In.)	Size, Smooth (In.)	Length (0) (Ft.)	Skew (0) (Degree)	◪ Corrugation	Wall Thickness (0.00)	Zinc	Bit. Coated Zinc	Aluminum	Bit. Coated Aluminum	◪ Corrugation	Wall Thickness (0.00)	Uncoated	Bit. Coated (Coating)	Class - Non Trench (In.)	Class - Trench (In.)	Class	Min Wall Thickness (0)	AASHTO M-294 Type C	AASHTO M-294 Type S	C-13.20 & C-13.25	Detail -	Size, (in) Manhole	Standard or Detail (Each)	S-Single / D-Double	Location (Catch basin, Manhole, Headwall & Junction Structure)	H (0.0) (Ea)	L Wing (0.0) (Ft.)	L 18" Slotted Drn (0) (Ft.)	L 24" Slotted Drn (0) (Ft.)	Type	Elev. (0.00) (Grate)	Depth (Ft.)	L (0.0) (Ft.)	Inlet Depression Pipe Exc (0) (In.)	Pipe Bkfl (0) (Ft.)	Drn Exc (0)	Berm/Dike Emb (0)	REMARKS
202L WB Med Sta 3190+27 106.39' Lt to 202L WB Med Sta 3189+04 111.79' Lt	128	2		24	124												II	II	I		X				C-15.91			5.5		20			1395.62	1	30	132	35			CB 128 to CB 127
202L EB Med Sta 3189+04 86.25' Rt to 202L EB Med Sta 3188+42 90.69' Rt	129	2		24	63												II	II	I		X				C-15.91			5.5		5			1395.77	1	15	67	18			CB 129 to CB 122
202L EB Med Sta 3190+27 80.76' Rt to Channel Sta 144+13.387 2' Lt	131	2		24	68												II	II	I		X				C-15.91			5.6		5			1396.13	1	15	73	19			CB 131 to Jct 131
202L EB Med Sta 3192+95 79.5' Rt to Channel Sta 146+79.74 2' Lt	132	2		24	67												II	II	2		X				C-15.91			7.0		10			1397.49	1	20	82	19			CB 132 to Jct 132
202L WB Med Sta 3192+95 103.5' Lt to 202L EB Med Sta 3192+95 79.5' Rt	133	3		24	187												II	II	2		X				C-15.91			5.5		20			1396.97	1	30	218	53			CB 133 to CB 132
202L EB Med Sta 3195+95 79.5' Rt to Channel Sta 149+79.73 1' Lt	134	3		24	70												II	II	2		X				C-15.91			8.2		5			1398.93	1	15	86	20			CB 134 to JCT 134
202L WB Med Sta 3195+95 103.5' Lt to 202L EB Med Sta 3195+95 79.5' Rt	135	3		24	187												II	II	2		X				C-15.91			6.7		15			1398.45	1	25	217	53			CB 135 to CB 134
202L EB Med Sta 3200+79 ℄ to Channel Sta 154+63.05 2' Lt	136	1		24	154												III	III	3		X				C-15.80			3.0					1397.91			152	44			CB 136 to Jct 136
202L EB Med Sta 3189+66 ℄ to 202L EB Med Sta 3190+27 80.76' Rt	137	1		24	68												III	III	3		X				C-15.80			3.0					1394.86			79	19			CB 137 to CB 131
Sheet Total																														80						1106	280			

FILL HEIGHT RANGE TABLE (Ft.)												
RANGE NO.		1	2	3	4	5	6	7	8	9	10	11	12
FILL	>	1	3	5	8	11	15	20	25	30	40	55	70
HEIGHT (Ft.)	≤	3	5	8	11	15	20	25	30	40	55	70	90

⬢ SHOULD FIELD CONDITIONS VARY FROM THE RANGE INDICATED, CONTACT DESIGN FOR RE-EVALUATION OF PIPE DESIGN REQUIREMENTS.

◪ PIPE CORRUGATION			
A	2⅔x½	D	6x2
B	3x1	E	3x1 or 9x2½
C	9x2½		

	NAME	DATE
DESIGN	MRG	4/03
DRAWN	WJP	4/03
CHECKED	CAD	4/03

Stanley Consultants inc.
2929 East Camelback Road, Suite 130
Phoenix, Arizona 85016
Phone: (602) 52-5500

ARIZONA DEPARTMENT OF TRANSPORTATION
INTERMODAL TRANSPORTATION DIVISION
ROADWAY DESIGN SERVICES

NEW PIPE SUMMARY SHEET

95%
PRELIMINARY
NOT FOR CONSTRUCTION

ROUTE: 202L
LOCATION: SANTAN FWY, ELLIOT ROAD - BASELINE ROAD

TRACS NO. H 5915 01C
202-C(005)B

DWG NO. G-6.4
___ OF ___

REV. DATE: 01-05-2000

04/21/2003 qt\16110\Drainage\DGN\PipeSummaries\h5150sp04.dgn

NOTE:
THE ZEROS IN PARENTHESIS (0, 0.0 & 0.00) IN THE HEADING OF SOME OF THE COLUMNS ARE THE RECOMMENDED PRECISION OF THE VALUE TO BE ENTERED IN THE COLUMN.

NOTE:
FOR PIPE CULVERT PLACEMENT SEE STANDARD DRAWING C-13.15

NOTE:
PIPE OPTIONS SELECTED ARE THOSE REQUIRED TO MEET MINIMUM SERVICE LIFE.
SHADED PIPE OPTION FIELDS ARE NOT ALLOWABLE ALTERNATES.

CSP - CORRUGATED STEEL PIPE
CAP - CORRUGATED ALUMINUM PIPE
RCP - REINFORCED CONCRETE PIPE
NRCP - NON-REINFORCED CONCRETE PIPE
NRCIPCP - NON-REINFORCED CAST-IN-PLACE CONCRETE PIPE
CHDPEPP - CORRUGATED HIGH DENSTIY POLYETHYLENE PLASTIC PIPE

F.H.W.A. REGION	STATE	PROJECT NO.	SHEET NO.	TOTAL SHEETS	AS BUILT
9	ARIZ.	202-C(005)B			
		202L MA 031			

Station	Plan Ref No.	Controlling Fill Height Range	Size, Corrugated (In.)	Size, Smooth (In.)	Length (0) (Ft.)	Skew (0) (Degree)	Corrugation (In.)	Wall Thickness (0.00) (In.)	Zinc Coating	Bit. Coated Zinc Coating	Aluminum Coating	Bit. Coated Aluminum Coating	Corrugation (In.)	Wall Thickness (0.00) (In.)	Uncoated (In.)	Bit. Coated (In.)	Class - Non Trench (In.)	Class - Trench (In.)	Min Wall Thickness (In.)	AASHTO M-294 Type C (0)	AASHTO M-294 Type S (0)	C-13.20 & C-13.25 (Each)	Detail - (Each)	Size, (In) Manhole (Each)	Standard or Detail (End Sec)	S-Single / D-Double (End Sec)	Location (Ea)	H (0.0) (Catch basin, Manhole, Headwall & Junction Structure)	L Wing (0.0) (Catch basin, Manhole, Headwall & Junction Structure)	L 18° Slotted Drn (0) (Catch basin, Manhole, Headwall & Junction Structure)	L 24° Slotted Drn (0) (Catch basin, Manhole, Headwall & Junction Structure)	Type (Grate)	Elev. (0.00) (Grate)	Depth (Inlet Depression) In.	L (0.0) (Inlet Depression) Ft.	Pipe Exc (0) (Cubic Yard)	Pipe Bk fl (0) (Cubic Yard)	Drn Exc (0) (Cubic Yard)	Berm/Dike Emb (0) (Cubic Yard)	REMARKS
202L EB Wed Sta 3187+64 ℄	138	1		24	99											III	III	3			X				C-15.80			3.0					1395.04			103	28		CB 138 to CB 121
to 202L EB Wed Sta 3187+67 96.74' Rt																																							
202L WB Wed Sta 3195+10 156.86' Lt	139	1		24	100											III	III	3			X				C-15.80			3.0					1395.61			78	28		CB 139 to CB 135
to 202L WB Sta 3195+95 103.5' Lt																																							
Elliot Rd. Sta 10+00 46.20' Rt	200	1		24	25											III	III	3			X				C-15.20			5.0	19.5				1386.29	1	30	21	7		CB 200 to Jct 200
to Elliot Rd. Sta 10+00 71.19' Rt																																							
Elliot Rd. Sta 10+00 46.20' Lt	201	1		24	93											III	III	3			X				C-15.20			4.0	19.5				1386.29	1	30	77	26		CB 201 to CB 200
to Elliot Rd. Sta 10+00 46.20' Rt																																							
Elliot Rd. Sta 23+18 62.51 Rt	202	2		24	20											II	II	1			X				C-15.20			6.3	19.5				1390.32	1	30	8	2		CB 202 to Jct 202
to Channel Sta 124+38.65 25.5' Rt																									D+1 D12														
Elliot Rd. Sta 23+14 73.50 Lt	203	2		24	20											II	II	1			X				C-15.20			5.0	19.5				1390.12	1	30	7	2		CB 203 to Jct 203
to Channel Sta 125+78.59 25.5' Rt																									D+1 D12														
202L EB Wed Sta 3218+70 91.5' Rt	300	5		96	388											III	III	8.5						24	C-18.10			19.0					1388.40			3502	524		MH 300 to MH 500
to 202L EB Wed Sta 3222+58 91.5' Rt																																							
202L EB Wed Sta 3216+47 91.5' Rt	301	2		36	223											II	II	1			X			24	C-18.10			7.9					1389.77			404	89		MH 301 to MH 300
to 202L EB Wed Sta 3218+70 91.5' Rt																																							
202L EB Wed Sta 3214+45 90' Rt	302	3		36	202											II	II	2			X			24	C-18.10			8.6					1392.16			387	81		MH 302 to MH 301
to 202L EB Wed Sta 3216+47 91.5 Rt																																							
Sheet Total																																				4587	787		

FILL HEIGHT RANGE TABLE (Ft.)

RANGE NO.		1	2	3	4	5	6	7	8	9	10	11	12
FILL	>	1	3	5	8	11	15	20	25	30	40	55	70
HEIGHT (Ft.)	≤	3	5	8	11	15	20	25	30	40	55	70	90

SHOULD FIELD CONDITIONS VARY FROM THE RANGE INDICATED, CONTACT DESIGN FOR RE-EVALUATION OF PIPE DESIGN REQUIREMENTS.

PIPE CORRUGATION

A	2⅔x½	D	6x2
B	3x1	E	3x1 or 9x2½
C	9x2½		

	NAME	DATE
DESIGN	MRG	4/03
DRAWN	WJP	4/03
CHECKED	CAD	4/03

Stanley Consultants inc.
2929 East Camelback Road, Suite 130
Phoenix, Arizona 85016
Phone: (602) 312-5500

ARIZONA DEPARTMENT OF TRANSPORTATION
INTERMODAL TRANSPORTATION DIVISION
ROADWAY DESIGN SERVICES

NEW PIPE SUMMARY SHEET

95%
PRELIMINARY
NOT FOR CONSTRUCTION

ROUTE: 202L
LOCATION: SANTAN FWY, ELLIOT ROAD - BASELINE ROAD

TRACS NO. H 5915 01C
202-C(005)B

DWG NO. G-6.5
___ OF ___

REV. DATE: 01-05-2000

04/21/2003 qt\16110\Drainage\DGN\PipeSummaries\h5150sp05.dgn

NOTE:
THE ZEROS IN PARENTHESIS (0, 0.0 & 0.00) IN THE HEADING OF SOME OF THE COLUMNS ARE THE RECOMMENDED PRECISION OF THE VALUE TO BE ENTERED IN THE COLUMN.

NOTE:
FOR PIPE CULVERT PLACEMENT SEE STANDARD DRAWING C-13.15

NOTE:
PIPE OPTIONS SELECTED ARE THOSE REQUIRED TO MEET MINIMUM SERVICE LIFE.
SHADED PIPE OPTION FIELDS ARE NOT ALLOWABLE ALTERNATES.

CSP - CORRUGATED STEEL PIPE
CAP - CORRUGATED ALUMINUM PIPE
RCP - REINFORCED CONCRETE PIPE
NRCP - NON-REINFORCED CONCRETE PIPE
NRCIPCP - NON-REINFORCED CAST-IN-PLACE CONCRETE PIPE
CHDPEPP - CORRUGATED HIGH DENSTIY POLYETHYLENE PLASTIC PIPE

F.A.H.P.A. REGION	STATE	PROJECT NO.	SHEET NO.	TOTAL SHEETS	AS BUILT
9	ARIZ.	202-C(005)B			
		202L MA 031			

DESCRIPTION							CSP										CAP							RCP							NRCP	NRCIPCP	CHDPEPP	END TREATMENT																	QUANTITIES	
				In.	In.	Ft.	Degree	In.	Coating								In.															In.		Each	Catch basin, Manhole, Headwall & Junction Structure																Cubic Yard	
																																		Ea				Ft.					Grate											
																																													Ft.										
																																														In.	Ft.								
Station	Plan Ref No.	Controlling Fill Height Range	Size, Corrugated	Size, Smooth	Length (0)	Skew (0)	Corrugation	Wall Thickness (0.00)	Zinc	Blt. Coated Zinc	Aluminum	Blt. Coated Aluminum	Corrugation	Wall Thickness (0.00)	Uncoated	Blt. Coated	Class - Non Trench	Class - Trench	Class	Min Wall Thickness (0)	AASHTO M-294 Type C	AASHTO M-294 Type S	C-13.20 & C-13.25 Detail -	Size, (In) Manhole	Standard or Detail	End Sec	S-Single / D-Double	Location	H (0.0)	L Wing (0.0)	L 18" Slotted Drn (0)	L 24" Slotted Drn (0)	Type	Elev. (0.00)	Depth	L (0.0)	Pipe Exc (0)	Pipe Bk fl (0)	Drn Exc (0)	Berm/Dike Emb (0)	REMARKS
Ramp GB Sta 8+26 29.5' Rt to 202L EB Med Sta 3214+45 90' Rt	303	3		30	59												II	II	2		X			24	C-18.10			10.6					1395.52			115	20			MH 303 to MH 302
202L EB Med Sta 3210+80 116.65' Rt to Ramp GB Sta 8+26 29.5' Rt	304	3		30	344												II	II	2		X			24	C-18.10			8.9					1395.56			681	117			MH 304 to MH 303
202L EB Med Sta 3207+60 103.5' Rt to 202L EB Med Sta 3210+80 116.65' Rt	305	3		24	321												II	II	2		X				C-15.80			7.6					1397.00			480	91			MH 305 to MH 304
202L EB Med Sta 3203+65 103.5' Rt to 202L EB Med Sta 3207+60 103.5' Rt	306	3		24	395												II	II	2		X				C-15.80			7.6					1398.48			550	112			MH 306 to MH 305
202L EB Med Sta 3203+65 79.5' Rt to 202L EB Med Sta 3203+65 103.5' Rt	307	3		24	22												II	II	2		X				C-15.91			6.7		5			1397.58	1	15	29	6			CB 307 to MH 306
202L WB Med Sta 3203+65 103.5' Lt to 202L EB Med Sta 3203+65 79.5' Rt	308	3		24	187												II	II	2		X				C-15.91			5.5		15			1397.10	1	25	213	.53			CB 308 to CB 307
Ramp GA Sta 6+48.09 11.5' Lt to Ramp GA Sta 7+15 11.5' Lt	309	2		24	67												II	II	1		X				C-15.91			5.8		10			1391.43	1	20	78	19			CB 309 to CB 314
Ramp GA Sta 5+83 11.05' Lt to Ramp GA Sta 6+48.09 11.5' Lt	310	2		24	66												II	II	1		X				C-15.91			5.5		5			1391.57	1	15	70	19			CB 310 to CB 309
202L WB Med 3210+10 113.43' Lt to Ramp GA Sta 5+83 11.05' Lt	311	2		24	173												II	II	1		X				C-15.91			5.5		5			1392.83	1	15	180	49			CB 311 to CB 310
Sheet Total																														40							2396	486			

FILL HEIGHT RANGE TABLE (Ft.)													
RANGE NO.		1	2	3	4	5	6	7	8	9	10	11	12
FILL	>	1	3	5	8	11	15	20	25	30	40	55	70
HEIGHT (Ft.)	≤	3	5	8	11	15	20	25	30	40	55	70	90

SHOULD FIELD CONDITIONS VARY FROM THE RANGE INDICATED, CONTACT DESIGN FOR RE-EVALUATION OF PIPE DESIGN REQUIREMENTS.

PIPE CORRUGATION			
A	2⅔x½	D	6x2
B	3x1	E	3x1 or 9x2½
C	9x2½		

	NAME	DATE
DESIGN	MRG	4/03
DRAWN	H.JP	4/03
CHECKED	CAD	4/03

Stanley Consultants INC.
2525 East Camelback Road, Suite 130
Phoenix, Arizona 85016
Phone (602) 957-0500

ARIZONA DEPARTMENT OF TRANSPORTATION
INTERMODAL TRANSPORTATION DIVISION
ROADWAY DESIGN SERVICES

NEW PIPE SUMMARY SHEET

95%
PRELIMINARY
NOT FOR CONSTRUCTION

ROUTE: 202L
LOCATION: SANTAN FWY, ELLIOT ROAD - BASELINE ROAD

TRACS NO. H 5915 01C

202-C(005)B

DWG NO. G-6.6

___ OF ___

REV. DATE: 01-05-2000

04/21/2003 gr\16110\Drainage\DGN\PipeSummaries\h5150sp06.dgn

NOTE:
THE ZEROS IN PARENTHESIS (0, 0.0 & 0.00) IN THE HEADING OF SOME OF THE COLUMNS ARE THE RECOMMENDED PRECISION OF THE VALUE TO BE ENTERED IN THE COLUMN.

NOTE:
FOR PIPE CULVERT PLACEMENT SEE STANDARD DRAWING C-13.15

NOTE:
PIPE OPTIONS SELECTED ARE THOSE REQUIRED TO MEET MINIMUM SERVICE LIFE.
SHADED PIPE OPTION FIELDS ARE NOT ALLOWABLE ALTERNATES.

NRCP - NRCIPCP - CHDPEPP

CSP - CORRUGATED STEEL PIPE
CAP - CORRUGATED ALUMINUM PIPE
RCP - REINFORCED CONCRETE PIPE
NRCP - NON-REINFORCED CONCRETE PIPE
NRCIPCP - NON-REINFORCED CAST-IN-PLACE CONCRETE PIPE
CHDPEPP - CORRUGATED HIGH DENSTIY POLYETHYLENE PLASTIC PIPE

F.H.W.A. REGION	STATE	PROJECT NO.	SHEET NO.	TOTAL SHEETS	AS BUILT
9	ARIZ.	202-C(005)B			
		202L MA 031			

Station	Plan Ref No.	⬡ Controlling Fill Height Range	Size, Corrugated (In.)	Size, Smooth (In.)	Length (0) (Ft.)	Skew (0) (Degree)	◪ Corrugation	Wall Thickness (0.00)	Zinc	Bit. Coated Zinc	Aluminum	Bit. Coated Aluminum	◪ Corrugation	Wall Thickness (0.00)	Uncoated	Bit. Coated (Coating)	Class - Non Trench (In.)	Class - Trench (In.)	Class (In.)	Min Wall Thickness (0)	AASHTO M-294 Type C	AASHTO M-294 Type S	C-13.20 & C-13.25	Detail -	Size, (in) Manhole (In.)	Standard or Detail (Each)	S-Single / D-Double (End Sec)	Location (Catch basin, Manhole, Headwall & Junction Structure)	H (0.0) (Ea)	L Wing (0.0) (Ft.)	L 18" Slotted Drn (0) (Ft.)	L 24" Slotted Drn (0) (Ft.)	Type (Grate)	Elev. (0.00) (Ft.)	Depth (In.)	L (0.0) (Ft.)	Inlet Depression Pipe Exc (0) (Cubic Yard)	Pipe Bkfl (0) (Cubic Yard)	Drn Exc (0) (Cubic Yard)	Berm/Dike Emb (0) (Cubic Yard)	REMARKS
202L WB Med Sta 3208+80 106.64 Lt	312	2		24	131												II	II	I			X				C-15.91			5.5		5			1393.76	1	15	137	37			CB 312 to CB 311
to 202L WB Med 3210+10 113.43' Lt																																									
202L WB Med Sta 3207+60 103.5' Lt	313	2		24	120												II	II	I			X				C-15.91			5.5		20			1394.56	1	30	125	34			CB 313 to CB 312
to 202L WB Med Sta 3208+80 106.64 Lt																																									
Ramp GA Sta 7+15 11.5' Lt	314	3		30	115												II	II	2			X				C-15.91			6.7		5			1391.57	1	15	179	39			CB 314 to CB 315
to Ramp GA Sta 8+30 11.5' Lt																																									
Ramp GA Sta 8+30 11.5' Lt	315	3		30	242												II	II	2			X				C-15.91			8.6		5			1392.43	1	15	420	82			CB 315 to MH 302
to 202L EB Med Sta 3214+45 90' Rt																																									
202L EB Med Sta 3222+50 79.5' Rt	316	4		24	10												III	III				X				C-15.91			5.1					1385.89	1	10	15	3			CB 316 to Jct 316
to 202L EB Med Sta 3222+50 91.5' Rt																																									
202L EB Med Sta 3222+04 79.5' Rt	317	4		24	10												III	III				X				C-15.91			5.6		10			1386.17	1	20	11	3			CB 317 to Jct 317
to 202L EB Med Sta 3222+04 91.5' Rt																																									
202L EB Med Sta 3218+70 79.5' Rt	318	3		24	10												II	II	2			X				C-15.91			6.6		5			1388.22	1	15	12	3			CB 318 to MH 300
to 202L EB Med Sta 3218+70 91.5' Rt																																									
202L WB Med Sta 3218+70 91.5' Lt	319	3		24	175												II	II	2			X				C-15.91			5.5		15			1387.99	1	25	198	50			CB 319 to CB 318
to 202L EB Med Sta 3218+70 79.5' Rt																																									
Ramp GB Sta 10+50 8.5' Rt	320	2		24	54												II	II	1			X				C-15.91			5.5		5			1396.24	1	15	63	15			CB 320 to MH 301
to 202L EB Med Sta 3216+47 91.5' Rt																																									
Sheet Total																															70						1160	266			

FILL HEIGHT RANGE TABLE (Ft.)

RANGE NO.		1	2	3	4	5	6	7	8	9	10	11	12
FILL	>	1	3	5	8	11	15	20	25	30	40	55	70
HEIGHT (Ft.)	≤	3	5	8	11	15	20	25	30	40	55	70	90

⬡ SHOULD FIELD CONDITIONS VARY FROM THE RANGE INDICATED, CONTACT DESIGN FOR RE-EVALUATION OF PIPE DESIGN REQUIREMENTS.

◪ PIPE CORRUGATION

A	2⅔x½	D	6x2
B	3x1	E	3x1 or 9x2½
C	9x2½		

	NAME	DATE
DESIGN	NRG	4/03
DRAWN	WJP	4/03
CHECKED	CAD	4/03

Stanley Consultants Inc.
2929 East Camelback Road, Suite 130
Phoenix, Arizona 85016
Phone: (602) 957-6500

ARIZONA DEPARTMENT OF TRANSPORTATION
INTERMODAL TRANSPORTATION DIVISION
ROADWAY DESIGN SERVICES

NEW PIPE SUMMARY SHEET

95%
PRELIMINARY
NOT FOR CONSTRUCTION

ROUTE: 202L
LOCATION: SANTAN FWY, ELLIOT ROAD - BASELINE ROAD
DWG NO. G-6.7
TRACS NO. H 5915 01C
202-C(005)B
___ OF ___

REV. DATE: 01-05-2000

04/21/2003 q:\16110\Drainage\DGN\PipeSummaries\h5150sp07.dgn

NOTE:
THE ZEROS IN PARENTHESIS (0, 0.0 & 0.00) IN THE HEADING OF SOME OF THE COLUMNS ARE THE RECOMMENDED PRECISION OF THE VALUE TO BE ENTERED IN THE COLUMN.

NOTE:
FOR PIPE CULVERT PLACEMENT SEE STANDARD DRAWING C-13.15

NOTE:
PIPE OPTIONS SELECTED ARE THOSE REQUIRED TO MEET MINIMUM SERVICE LIFE.
SHADED PIPE OPTION FIELDS ARE NOT ALLOWABLE ALTERNATES.

CSP - CORRUGATED STEEL PIPE
CAP - CORRUGATED ALUMINUM PIPE
RCP - REINFORCED CONCRETE PIPE
NRCP - NON-REINFORCED CONCRETE PIPE
NRCIPCP - NON-REINFORCED CAST-IN-PLACE CONCRETE PIPE
CHDPEPP - CORRUGATED HIGH DENSTIY POLYETHYLENE PLASTIC PIPE

F.H.W.A. REGION	STATE	PROJECT NO.	SHEET NO.	TOTAL SHEETS	AS BUILT
9	ARIZ.	202-C(005)B			

202L MA 031

Station	Plan Ref No.	Controlling Fill Height Range	Size, Corrugated (In.)	Size, Smooth (In.)	Length (0) (Ft.)	Skew (0) (Degree)	CSP: Corrugation	CSP: Wall Thickness (0.00) (In.)	CSP: Zinc Coating	CSP: Bit. Coated Zinc Coating	CSP: Aluminum Coating	CAP: Bit. Coated Aluminum Coating	CAP: Corrugation	CAP: Wall Thickness (0.00) (In.)	CAP: Uncoated	CAP: Bit. Coated	RCP: Class - Non Trench	RCP: Class - Trench	RCP: Class	RCP: Min Wall Thickness (0) (In.)	NRCP: AASHTO M-294 Type C	NRCIPCP: AASHTO M-294 Type S	CHDPEPP: C-13.20 & C-13.25	End Sec: Detail - Size, (In) Manhole	End Treatment (Each): Standard or Detail	Catch basin, Manhole, Headwall & Junction Structure (Ea): S-Single / D-Double	Location	H (0.0) (Ft.)	L Wing (0.0) (Ft.)	L 18" Slotted Drn (0) (Ft.)	L 24" Slotted Drn (0) (Ft.)	Type	Elev. (0.00) (Ft.)	Grate: Depth (In.)	Grate: L (0.0) (Ft.)	Inlet Depression: Pipe Exc (0) (Ft.)	Inlet Depression: Pipe Bk fl (0) (Ft.)	Inlet Depression: Drn Exc (0) (Ft.)	Inlet Depression: Berm/Dike Emb (0) (Ft.)	REMARKS
Ramp GB Sta 8+20 5.5' Rt to Ramp GB Sta 8+20 29.53' Rt	321	3		24	23												II	II	2		X				C-15.91			5.5		5			1392.47	1	15	33	7			CB 321 to Jct 321
Ramp GB Sta 7+39 5.5' Rt to Ramp GB Sta 7+39 30.04' Rt	322	3		24	23												II	II	2		X				C-15.91			5.5					1391.89	1	10	31	7			CB 322 to Jct 322
Ramp GB Sta 6+75.88 5.5' Rt to Ramp GB Sta 6+75.88 30.45' Rt	323	3		24	23												II	II	2		X				C-15.91			5.5		40			1391.75	1	50	31	7			CB 323 to Jct 323
Ramp GB Sta 6+13 5.5' Rt to Ramp GB Sta 6+13 30.67' Rt	324	3		24	24												II	II	2		X				C-15.91			5.5					1391.89	1	10	31	7			CB 324 to Jct 324
202L EB Med Sta 3211+57 97.85' Rt to 202L EB Med Sta 3211+57 122.88' Rt	325	3		24	24												II	II	2		X				C-15.91			5.4					1392.23	1	10	32	7			CB 325 to Jct 325
202L EB Med Sta 3210+80 92.61' Rt to 202L EB Med Sta 3210+80 116.65' Rt	326	3		24	23												II	II	2		X				C-15.91			5.5		5			1392.81	1	15	29	7			CB 326 to MH 304
202L EB Med Sta 3209+25 84.42' Rt to 202L EB Med Sta 3209+25 110.28' Rt	327	3		24	24												II	II	2		X				C-15.91			5.5		5			1393.93	1	15	31	7			CB 327 to Jct 327
202L EB Med Sta 3207+60 79.5' Rt to 202L EB Med Sta 3207+60 103.5' Rt	328	3		24	23												II	II	2		X				C-15.91			5.5		15			1395.04	1	25	28	7			CB 328 to MH 305
Guadalupe Rd. Sta 10+63 45.8' Lt to Guadalupe Rd. Sta 10+63 32.39' Lt	401	1		24	16												III	III	3		X				C-15.20			4.0	19.5				1400.65	1	30	14	5			CB 401 to MH 400
Sheet Total																														70						260	61			

FILL HEIGHT RANGE TABLE (Ft.)

RANGE NO.		1	2	3	4	5	6	7	8	9	10	11	12
FILL	>	1	3	5	8	11	15	20	25	30	40	55	70
HEIGHT (Ft.)	≤	3	5	8	11	15	20	25	30	40	55	70	90

SHOULD FIELD CONDITIONS VARY FROM THE RANGE INDICATED, CONTACT DESIGN FOR RE-EVALUATION OF PIPE DESIGN REQUIREMENTS.

PIPE CORRUGATION

A	2⅔x½	D	6x2
B	3x1	E	3x1 or 9x2½
C	9x2½		

	NAME	DATE
DESIGN	MRG	4/03
DRAWN	WJP	4/03
CHECKED	CAD	4/03

Stanley Consultants inc.
2929 East Camelback Road, Suite 130
Phoenix, Arizona 85016
Phone: (602) 93-5005

ARIZONA DEPARTMENT OF TRANSPORTATION
INTERMODAL TRANSPORTATION DIVISION
ROADWAY DESIGN SERVICES

NEW PIPE SUMMARY SHEET

95%
PRELIMINARY
NOT FOR CONSTRUCTION

ROUTE: 202L
LOCATION: SANTAN FWY, ELLIOT ROAD - BASELINE ROAD

TRACS NO. H 5915 01C
202-C(005)B

DWG NO. G-6.8
___ OF ___

REV. DATE: 01-05-2000

04/21/2003 gt\16110\Drainage\DGN\PipeSummaries\h5150sp08.dgn

NOTE:
THE ZEROS IN PARENTHESIS (0, 0.0 & 0.00) IN THE HEADING OF SOME OF THE COLUMNS ARE THE RECOMMENDED PRECISION OF THE VALUE TO BE ENTERED IN THE COLUMN.

NOTE:
FOR PIPE CULVERT PLACEMENT SEE STANDARD DRAWING C-13.15

NOTE:
PIPE OPTIONS SELECTED ARE THOSE REQUIRED TO MEET MINIMUM SERVICE LIFE.
SHADED PIPE OPTION FIELDS ARE NOT ALLOWABLE ALTERNATES.

CSP - CORRUGATED STEEL PIPE
CAP - CORRUGATED ALUMINUM PIPE
RCP - REINFORCED CONCRETE PIPE
NRCP - NON-REINFORCED CONCRETE PIPE
NRCIPCP - NON-REINFORCED CAST-IN-PLACE CONCRETE PIPE
CHDPEPP - CORRUGATED HIGH DENSTIY POLYETHYLENE PLASTIC PIPE

F.H.W.A. REGION	STATE	PROJECT NO.	SHEET NO.	TOTAL SHEETS	AS BUILT
9	ARIZ.	202-C(005)B			
		202L MA 031			

DESCRIPTION							CSP					CAP				RCP									END TREATMENT																QUANTITIES	
				In.	In.	Ft./ Degree	In.	Coating				In.												In.	Each																Cubic Yard	
																									End Sec	Ea						Ft.		Grate	Ft.							
Station	Plan Ref No.	⬡ Controlling Fill Height Range	Size, Corrugated	Size, Smooth	Length (0)	Skew (0)	◪ Corrugation	Wall Thickness (0.00)	Zinc	Bit. Coated Zinc	Aluminum	Bit. Coated Aluminum	◪ Corrugation	Wall Thickness (0.00)	Uncoated	Bit. Coated	Class - Non Trench	Class - Trench	Class	Min Wall Thickness (0)	AASHTO M-294 Type C	AASHTO M-294 Type S	C-13.20 & C-13.25	Detail -	Size, (in) Manhole	Standard or Detail	S-Single / D-Double	Location	H (0.0)	L Wing (0.0)	L 18" Slotted Drn (0)	L 24" Slotted Drn (0)	Type	Elev. (0.00)	Depth	Inlet Depression	L (0.0)	Pipe Exc (0)	Pipe Bk fl (0)	Drn Exc (0)	Barm/Dike Emb (0)	REMARKS
Guadalupe Rd. Sta 11+23 47.3' Rt	403	1		24	82												III	III	3		X				C-15.20			4.0	19.5				1400.98	1	30	70	23			CB 403 to MH 402
to Guadalupe Rd. Sta 11+23 32.38' Lt																																										
Guadalupe Rd. Sta 18+28.25 61' Rt	404	1		24	95												III	III	3		X				C-15.20			4.0	7.5				1408.37	1	18	80	27			CB 404 to MH 405
to Guadalupe Rd. Sta 18+28.25 31.81 Lt																																										
Guadalupe Rd. Sta 18+30.18 61' Lt	406	1		24	32												III	III	3		X				C-15.20			4.0	7.5				1408.39	1	18	27	9			CB 406 to MH 405
to Guadalupe Rd. Sta 18+28.25 31.81' Lt																																										
Guadalupe Rd. Sta 23+69.5 59.06' Rt	407	3		24	74												II	II	2		X				C-15.20			7.2	7.5				1409.51	1	18	104	21			CB 407 to Jct 407
to Channel Sta 177+29.21 25.5' Rt																									D+I D12																	
Guadalupe Rd. Sta 24+62.18 57.32' Rt	408	3		24	93												II	II	2		X				C-15.20			6.5	11.5				1409.24	1	22	118	26			CB 408 to CB 407
to Guadalupe Rd. Sta 23+69.5 59.06' Rt																																										
Guadalupe Rd. Sta 25+64 54.78' Rt	409	2		24	102												II	II	1		X				C-15.20			6.3	19.5				1409.57	1	30	122	29			CB 409 to CB 408
to Guadalupe Rd. Sta 24+62.18 57.32' Rt																																										
Guadalupe Rd. Sta 23+60 70.3' Lt	410	3		24	62												II	II	2		X				C-15.20			6.7					1409.38	1	10	81	18			CB 410 to Jct 410
to Channel Sta 178+62.44 25.5' Rt																									D+I D12																	
Guadalupe Rd. Sta 24+62.18 68.32' Lt	411	2		24	103												II	II	1		X				C-15.20			5.8	11.5				1409.02	1	22	120	29			CB 411 to CB 410
to Guadalupe Rd. Sta 23+60 70.3' Lt																																										
Guadalupe Rd. Sta 25+64 62.56' Lt	412	2		24	103												II	II	1		X				C-15.20			5.7	19.5				1409.42	1	30	111	29			CB 412 to CB 410
to Guadalupe Rd. Sta 24+62.18 68.32' Lt																																										
Sheet Total																																					833	211				

FILL HEIGHT RANGE TABLE (Ft.)													
RANGE NO.		1	2	3	4	5	6	7	8	9	10	11	12
FILL	>	1	3	5	8	11	15	20	25	30	40	55	70
HEIGHT (Ft.)	≤	3	5	8	11	15	20	25	30	40	55	70	90

⬡ SHOULD FIELD CONDITIONS VARY FROM THE RANGE INDICATED, CONTACT DESIGN FOR RE-EVALUATION OF PIPE DESIGN REQUIREMENTS.

◪ PIPE CORRUGATION			
A	2⅔x½	D	6x2
B	3x1	E	3x1 or 9x2½
C	9x2½		

	NAME	DATE
DESIGN	MRG	4/03
DRAWN	WJP	4/03
CHECKED	CAD	4/03

Stanley Consultants Inc.
2925 East Camelback Road, Suite 130
Phoenix, Arizona 85016
Phone: (602) 912-0500

ARIZONA DEPARTMENT OF TRANSPORTATION
INTERMODAL TRANSPORTATION DIVISION
ROADWAY DESIGN SERVICES

NEW PIPE SUMMARY SHEET

95%
PRELIMINARY
NOT FOR CONSTRUCTION

ROUTE	LOCATION	
202L	SANTAN FWY, ELLIOT ROAD - BASELINE ROAD	DWG NO. G-6.9
TRACS NO. H 5915 01C	202-C(005)B	___ OF ___

REV. DATE: 01-05-2000

04/22/2003 qr\16110\Drainage\DGN\PipeSummaries\h5150sp09.dgn

NOTE:
THE ZEROS IN PARENTHESIS (0, 0.0 & 0.00) IN THE HEADING OF SOME OF THE COLUMNS ARE THE RECOMMENDED PRECISION OF THE VALUE TO BE ENTERED IN THE COLUMN.

NOTE:
FOR PIPE CULVERT PLACEMENT SEE STANDARD DRAWING C-13.15

NOTE:
PIPE OPTIONS SELECTED ARE THOSE REQUIRED TO MEET MINIMUM SERVICE LIFE.
SHADED PIPE OPTION FIELDS ARE NOT ALLOWABLE ALTERNATES.

CSP - CORRUGATED STEEL PIPE
CAP - CORRUGATED ALUMINUM PIPE
RCP - REINFORCED CONCRETE PIPE
NRCP - NON-REINFORCED CONCRETE PIPE
NRCIPCP - NON-REINFORCED CAST-IN-PLACE CONCRETE PIPE
CHDPEPP - CORRUGATED HIGH DENSTIY POLYETHYLENE PLASTIC PIPE

F.H.W.A. REGION	STATE	PROJECT NO.	SHEET NO.	TOTAL SHEETS	AS BUILT
9	ARIZ.	202-C(005)B			
		202L MA 031			

DESCRIPTION / CSP / CAP / RCP / NRCP / NRCIPCP / CHDPEPP

Station	Plan Ref No.	Controlling Fill Height Range	Size, Corrugated (In.)	Size, Smooth (In.)	Length (0) (Ft.)	Skew (0) (Degree)	CSP: Corrugation	CSP: Wall Thickness (0.00) (In.)	CSP Coating: Zinc	CSP Coating: Blt. Coated Zinc	CSP Coating: Aluminum	CSP Coating: Blt. Coated Aluminum	CAP: Corrugation	CAP: Wall Thickness (0.00) (In.)	CAP: Uncoated	CAP: Blt. Coated	RCP: Class - Non Trench	RCP: Class - Trench	NRCP: Class	NRCIPCP: Min Wall Thickness (0) (In.)	CHDPEPP: AASHTO M-294 Type C	CHDPEPP: AASHTO M-294 Type S
202L EB Med Sta 3201+36.22 134.37' Rt to Channel Sta 155+00 ℄	421	2		54	31												II	II		5.5		
202L EB Med Sta 3205+28 139.12' Rt to 202L EB Med Sta 3201+36.22 134.37' Rt	422	2		54	392												II	II		5.5		
202L EB Med Sta 3209+20 143.88' Rt to 202L EB Sta 3205+28 139.12' Rt	423	2		54	393												II	II		5.5		
202L EB Med Sta 3214+92 194.31' Rt to 202L EB Sta 3209+20 143.88' Rt	424	3		54	575												II	II		5.5		
202L EB Med Sta 3220+57 245.63' Rt to 202L EB Med Sta 3214+92 194.31' Rt	425	4		54	568												III	III		5.5		
Guadalupe Rd. Sta 22+60 17' Rt to 202L EB Med Sta 3220+57 245.63' Rt	426	5		54	325												IV	IV		5.5		
Guadalupe Rd. Sta 23+10 31.8' Lt to Guadalupe Rd. Sta 22+60 17' Rt	427	5		54	70												IV	IV		5.5		
202L EB Med Sta 3222+58 91.5' Rt to 202L EB Med Sta 3222+45.36 381.44' Rt	500	9		96	299													•				
202L WB Med Sta 3222+58 103.5' Lt to 202L EB Med Sta 3222+58 91.5' Rt	501	4		96	195												III	III		8.5		
Sheet Total																						

END TREATMENT / QUANTITIES

Station	Plan Ref No.	End Sec: C-13.20 & C-13.25 (Each)	End Sec: Detail - (Each)	Size, (In) Manhole	Standard or Detail	S-Single / D-Double (Ea)	Location	H (0.0)	L Wing (0.0)	L 18" Slotted Drn (0)	L 24" Slotted Drn (0)	Grate: Type	Grate: Elev. (0.00)	Inlet Depression: Depth (In.)	Inlet Depression: L (0.0) (Ft.)	Pipe Exc (0) (Cubic Yard)	Pipe Bkfl (0) (Cubic Yard)	Drn Exc (0) (Cubic Yard)	Barm/Dike Emb (0) (Cubic Yard)	REMARKS
202L EB Med Sta 3201+36.22 134.37' Rt to Channel Sta 155+00 ℄	421			24	C-18.10			8.0					1400.08			87	23			MH 421 to Jct 421
202L EB Med Sta 3205+28 139.12' Rt to 202L EB Med Sta 3201+36.22 134.37' Rt	422			24	C-18.10			8.7					1401.18			1139	286			MH 422 to MH 421
202L EB Med Sta 3209+20 143.88' Rt to 202L EB Sta 3205+28 139.12' Rt	423			24	C-18.10			9.5					1402,42			1228	287			MH 423 to MH 422
202L EB Med Sta 3214+92 194.31' Rt to 202L EB Sta 3209+20 143.88' Rt	424			24	C-18.10			11.3					1404.96			2032	419			MH 424 to MH 423
202L EB Med Sta 3220+57 245.63' Rt to 202L EB Med Sta 3214+92 194.31' Rt	425			24	C-18.10			13.3					1407.59			2346	414			MH 425 to MH 424
Guadalupe Rd. Sta 22+60 17' Rt to 202L EB Med Sta 3220+57 245.63' Rt	426			24	C-18.10			16.7					1411.36			1613	237			MH 426 to MH 425
Guadalupe Rd. Sta 23+10 31.8' Lt to Guadalupe Rd. Sta 22+60 17' Rt	427			24	C-18.10			15.6					1410.42			373	51			MH 427 to MH 426
202L EB Med Sta 3222+58 91.5' Rt to 202L EB Med Sta 3222+45.36 381.44' Rt	500			24	C-18.10			17.5					1386.08			2628	404			MH 500 to Jct 500 •D-Load(lb/lft/ft-dia) 2875
202L WB Med Sta 3222+58 103.5' Lt to 202L EB Med Sta 3222+58 91.5' Rt	501			24	C-18.10			16.8					1385.80			1660	263			MH 501 to MH 500
Sheet Total																13106	2384			

FILL HEIGHT RANGE TABLE (Ft.)

RANGE NO.		1	2	3	4	5	6	7	8	9	10	11	12
FILL	>	1	3	5	8	11	15	20	25	30	40	55	70
HEIGHT (Ft.)	≤	3	5	8	11	15	20	25	30	40	55	70	90

SHOULD FIELD CONDITIONS VARY FROM THE RANGE INDICATED, CONTACT DESIGN FOR RE-EVALUATION OF PIPE DESIGN REQUIREMENTS.

PIPE CORRUGATION

A	$2\frac{2}{3}\times\frac{1}{2}$	D	6x2
B	3x1	E	3x1 or $9\times2\frac{1}{2}$
C	$9\times2\frac{1}{2}$		

	NAME	DATE
DESIGN	MRG	4/03
DRAWN	WJP	4/03
CHECKED	CAD	4/03

Stanley Consultants inc.

ARIZONA DEPARTMENT OF TRANSPORTATION
INTERMODAL TRANSPORTATION DIVISION
ROADWAY DESIGN SERVICES

NEW PIPE SUMMARY SHEET

95%
PRELIMINARY
NOT FOR
CONSTRUCTION

ROUTE 202L | LOCATION SANTAN FWY, ELLIOT ROAD - BASELINE ROAD | DWG NO. G-6.10

TRACS NO. H 5915 01C | 202-C(005)B | ____ OF ____

REV. DATE: 01-05-2000

04/21/2003 q:\16110\Drainage\DGN\PipeSummaries\h5150sp10.dgn

NOTE:
THE ZEROS IN PARENTHESIS (0, 0.0 & 0.00) IN THE HEADING OF SOME OF THE COLUMNS ARE THE RECOMMENDED PRECISION OF THE VALUE TO BE ENTERED IN THE COLUMN.

NOTE:
FOR PIPE CULVERT PLACEMENT SEE STANDARD DRAWING C-13.15

NOTE:
PIPE OPTIONS SELECTED ARE THOSE REQUIRED TO MEET MINIMUM SERVICE LIFE.
SHADED PIPE OPTION FIELDS ARE NOT ALLOWABLE ALTERNATES.

CSP - CORRUGATED STEEL PIPE
CAP - CORRUGATED ALUMINUM PIPE
RCP - REINFORCED CONCRETE PIPE
NRCP - NON-REINFORCED CONCRETE PIPE
NRCIPCP - NON-REINFORCED CAST-IN-PLACE CONCRETE PIPE
CHDPEPP - CORRUGATED HIGH DENSTIY POLYETHYLENE PLASTIC PIPE

F.H.W.A. REGION	STATE	PROJECT NO.	SHEET NO.	TOTAL SHEETS	AS BUILT
9	ARIZ.	202-C(005)B			
		202L MA 031			

Station	Plan Ref No.	Controlling Fill Height Range	Size, Corrugated (In.)	Size, Smooth (In.)	Length (0) (Ft.)	Skew (0) (Degree)	Corrugation	Wall Thickness (0.00)	Zinc (Coating)	Bit. Coated Zinc (Coating)	Aluminum (Coating)	Bit. Coated Aluminum (Coating)	Corrugation	Wall Thickness (0.00)	Uncoated (In.)	Bit. Coated (In.)	Class - Non Trench (In.)	Class - Trench (In.)	Class (In.)	Min Wall Thickness (0) (In.)	AASHTO M-294 Type C (In.)	AASHTO M-294 Type S (In.)	C-13.20 & C-13.25 (In.)	Detail - (In.)	Size, (In) Manhole or Detail (Each)	Standard or Detail (Each)	S-Single / D-Double (Each)	Location (Ea)	H (0.0) (Ea)	L Wing (0.0) (Ea)	L 18" Slotted Drn (0) (Ft.)	L 24" Slotted Drn (0) (Ft.)	Type (Grate)	Elev. (0.00) (Ft.)	Depth (Ft.)	L (0.0) (Ft.)	Pipe Exc (0) (Cubic Yard)	Pipe Bk fl (0) (Cubic Yard)	Drn Exc (0) (Cubic Yard)	Berm/Dike Emb (0) (Cubic Yard)	REMARKS
202L WB Wed Sta 3225+39 103.5' Lt to 202L WB Wed Sta 3222+58 103.5' Lt	502	4		60	280												III	III		6				24	C-18.10			10.6					1384.04			1234	227			MH 502 to MH 501
202L WB Wed Sta 3228+50 103.5' Lt to 202L WB Wed Sta 3225+39 103.5' Lt	503	3		54	304												II	II		5.5				24	C-18.10			9.2					1384.57			1005	222			MH 503 to MH 502
202L WB Wed Sta 3232+24 103.5' Lt to 202L WB Wed Sta 3228+50 103.5' Lt	504	2		42	366												II	II		4		X		24	C-18.10			8.5					1388.52			903	211			MH 504 to MH 503
202L WB Wed Sta 3234+56 103.5' Lt to 202L WB Wed Sta 3232+24 103.5' Lt	505	3		36	227												II	II	2			X		24	C-18.10			8.3					1391.52			428	91			MH 505 to MH 504
Ramp GC 10+75 29.5' Lt to 202L WB Wed Sta 3234+56 103.5' Lt	506	3		36	84												II	II	2			X		24	C-18.10			6.9					1391.08			149	34			MH 506 to MH 505
Ramp GC 11+75 29.5' Lt to Ramp GC 10+75 29.5' Lt	507	2		30	100												II	II	1			X		24	C-18.10			6.2					1392.04			134	34			MH 507 to MH 506
202L WB Wed Sta 3239+03 132.5' Lt to Ramp GC 11+75 29.5' Lt	508	2		30	273												II	II	1			X		24	C-18.10			6.0					1396.28			355	93			MH 508 to MH 507
202L WB Wed Sta 3242+30 107.98' Lt to 202L WB Wed Sta 3239+03 132.5' Lt	509	2		24	320												II	II	1			X			C-15.91			5.5		15			1400.96	1	25	333	91			CB 509 to MH 508
202L WB Wed Sta 3246+38 115.5' Lt to 202L WB Wed Sta 3242+30 107.98' Lt	510	2		24	404												II	II	1			X		24	C-18.10			5.5					1408.13			421	115			MH 510 to CB 509
Sheet Total																															15						4962	1118			

FILL HEIGHT RANGE TABLE (Ft.)													
RANGE NO.		1	2	3	4	5	6	7	8	9	10	11	12
FILL	>	1	3	5	8	11	15	20	25	30	40	55	70
HEIGHT (Ft.)	≤	3	5	8	11	15	20	25	30	40	55	70	90

SHOULD FIELD CONDITIONS VARY FROM THE RANGE INDICATED, CONTACT DESIGN FOR RE-EVALUATION OF PIPE DESIGN REQUIREMENTS.

PIPE CORRUGATION			
A	2⅔x½	D	6x2
B	3x1	E	3x1 or 9x2½
C	9x2½		

	NAME	DATE
DESIGN	NRG	4/03
DRAWN	WJP	4/03
CHECKED	CAD	4/03

Stanley Consultants inc.
2929 East Camelback Road, Suite 130
Phoenix, Arizona 85016
Phone: 602 957-6600

ARIZONA DEPARTMENT OF TRANSPORTATION
INTERMODAL TRANSPORTATION DIVISION
ROADWAY DESIGN SERVICES

NEW PIPE SUMMARY SHEET

95%
PRELIMINARY NOT FOR CONSTRUCTION

ROUTE: 202L
LOCATION: SANTAN FWY. ELLIOT ROAD - BASELINE ROAD

TRACS NO. H 5915 01C
202-C(005)B

DWG NO. G-6.11
___ OF ___

REV. DATE: 01-05-2000

04/21/2003 gt\15110\Drainage\DGN\PipeSummaries\h5150spl1.dgn

NOTE:
THE ZEROS IN PARENTHESIS (0, 0.0 & 0.00) IN THE HEADING OF SOME OF THE COLUMNS ARE THE RECOMMENDED PRECISION OF THE VALUE TO BE ENTERED IN THE COLUMN.

NOTE:
FOR PIPE CULVERT PLACEMENT SEE STANDARD DRAWING C-13.15

NOTE:
PIPE OPTIONS SELECTED ARE THOSE REQUIRED TO MEET MINIMUM SERVICE LIFE.
SHADED PIPE OPTION FIELDS ARE NOT ALLOWABLE ALTERNATES.

CSP - CORRUGATED STEEL PIPE
CAP - CORRUGATED ALUMINUM PIPE
RCP - REINFORCED CONCRETE PIPE
NRCP - NON-REINFORCED CONCRETE PIPE
NRCIPCP - NON-REINFORCED CAST-IN-PLACE CONCRETE PIPE
CHDPEPP - CORRUGATED HIGH DENSTIY POLYETHYLENE PLASTIC PIPE

F.H.W.A. REGION	STATE	PROJECT NO.	SHEET NO.	TOTAL SHEETS	AS BUILT
9	ARIZ.	202-C(005)B			
		202L MA 031			

Station	Plan Ref No.	Controlling Fill Height Range	Size, Corrugated (In.)	Size, Smooth (In.)	Length (0) (Ft.)	Skew (0) (Degree)	Corrugation (In.)	Wall Thickness (0.00)	Zinc Coating	Blt. Coated Zinc Coating	Aluminum Coating	Blt. Coated Aluminum Coating	Corrugation (In.)	Wall Thickness (0.00)	Uncoated	Blt. Coated	Class - Non Trench	Class - Trench	Class	Min Wall Thickness (0) (In.)	AASHTO M-294 Type C	AASHTO M-294 Type S	C-13.20 & C-13.25	Detail - End Sec	Size, (In) Manhole Standard or Detail (Each)	S-Single / D-Double (Each)	Location (Catch basin, Manhole, Headwall & Junction Structure)	H (0.0) (Ft.)	L Wing (0.0) (Ft.)	L 18" Slotted Drn (0) (Ft.)	L 24" Slotted Drn (0) (Ft.)	Type (Grate)	Elev. (0.00) (Ft.)	Depth (Inlet Depression) (In.)	L (0.0) (Ft.)	Pipe Exc (0) (Cubic Yard)	Pipe Bk-fl (0) (Cubic Yard)	Drn Exc (0) (Cubic Yard)	Berm/Dike Emb (0) (Cubic Yard)	REMARKS
202L EB Med Sta 3246+38 93.5' Rt to 202L WB Med sta 3246+38 115.5' Lt	511	2		24	209											II	II	I			X				C-15.91			5.5		5			1409.97	I	15	218	59			CB 511 to MH 510
202L EB Med Sta 3247+11 93.5' Rt to 202L EB Med Sta 3246+38 93.5' Rt	512	2		24	73											II	II	I			X				C-15.91			5.5		30			1410.41	I	40	76	21			CB 512 to CB 511
202L EB Med Sta 3248+65 ℄ to 202L EB Med Sta 3247+11 93.5' Rt	513	1		24	181											III	III	3			X				C-15.80			3.0					1410.84			189	51			CB 513 To CB 512
202L EB Med Sta 3241+41 ℄ to 202L EB Med Sta 3242+30 18.5' Rt	514	1		24	91											III	III	3			X				C-15.80			3.0					1401.04			85	26			CB 514 to CB 540
202L EB Med Sta 3222+21 ℄ to 202L EB Med Sta 3222+58 ℄	515	3		24	37											II	II	2			X				C-15.80			4.0					1385.93			48	9			CB 515 to Jct 515
202L WB Med Sta 3223+60 91.5' Lt to 202L WB Med Sta 3223+60 103.5' Lt	516	3		24	11											II	II	2			X				C-15.91			5.5		10			1385.00	I	20	15	3			CB 516 to Jct 516
202L WB Med Sta 3225+39 91.5' Lt to 202L WB Med Sta 3225+39 103.5' Lt	517	2		24	10											II	II	I			X				C-15.91			5.5					1383.85	I	10	11	3			CB 517 to MH 502
202L EB Med Sta 3225+70 18.5' Rt to 202L WB Med Sta 3225+39 91.5' Lt	518	2		24	115											II	II	I			X				C-15.91			5.5		10			1385.50	I	20	122	33			CB 518 to CB 517
202L EB Med Sta 3225+04 18.5' Rt to 202L EB Med Sta 3225+70 18.5' Rt	519	2		24	58											II	II	I			X				C-15.91			5.5					1385.65	I	10	61	16			CB 519 to CB 518
Sheet Total																														55						825	221			

FILL HEIGHT RANGE TABLE (Ft.)

RANGE NO.		1	2	3	4	5	6	7	8	9	10	11	12
FILL	>	1	3	5	8	11	15	20	25	30	40	55	70
HEIGHT (Ft.)	≤	3	5	8	11	15	20	25	30	40	55	70	90

SHOULD FIELD CONDITIONS VARY FROM THE RANGE INDICATED, CONTACT DESIGN FOR RE-EVALUATION OF PIPE DESIGN REQUIREMENTS.

PIPE CORRUGATION

A	2⅔x½	D	6x2
B	3x1	E	3x1 or 9x2½
C	9x2½		

	NAME	DATE
DESIGN	MRC	4/03
DRAWN	WJP	4/03
CHECKED	CAD	4/03

Stanley Consultants INC.
2929 East Camelback Road, Suite 130
Phoenix, Arizona 85016
Phone (602) 912-6500

ARIZONA DEPARTMENT OF TRANSPORTATION
INTERMODAL TRANSPORTATION DIVISION
ROADWAY DESIGN SERVICES

NEW PIPE SUMMARY SHEET

95%
PRELIMINARY
NOT FOR CONSTRUCTION

ROUTE: 202L
LOCATION: SANTAN FWY, ELLIOT ROAD - BASELINE ROAD

TRACS NO. H 5915 01C
202-C(005)B

DWG NO. G-6.12
___ OF ___

REV. DATE: 01-05-2000

04/21/2003 qt\16110\Drainage\DGN\PipeSummaries\h5150spl2.dgn

NOTE:
THE ZEROS IN PARENTHESIS (0, 0.0 & 0.00) IN THE HEADING OF SOME OF THE COLUMNS ARE THE RECOMMENDED PRECISION OF THE VALUE TO BE ENTERED IN THE COLUMN.

NOTE:
FOR PIPE CULVERT PLACEMENT SEE STANDARD DRAWING C-13.15

NOTE:
PIPE OPTIONS SELECTED ARE THOSE REQUIRED TO MEET MINIMUM SERVICE LIFE.
SHADED PIPE OPTION FIELDS ARE NOT ALLOWABLE ALTERNATES.

NRCP - NRCIPCP - CHDPEPP

CSP - CORRUGATED STEEL PIPE
CAP - CORRUGATED ALUMINUM PIPE
RCP - REINFORCED CONCRETE PIPE
NRCP - NON-REINFORCED CONCRETE PIPE
NRCIPCP - NON-REINFORCED CAST-IN-PLACE CONCRETE PIPE
CHDPEPP - CORRUGATED HIGH DENSTIY POLYETHYLENE PLASTIC PIPE

F.H.W.A. REGION	STATE	PROJECT NO.	SHEET NO.	TOTAL SHEETS	AS BUILT
9	ARIZ.	202-C(005)B			
		202L MA 031			

Station	Plan Ref No.	◐ Controlling Fill Height Range	Size, Corrugated (In.)	Size, Smooth (In.)	Length (0) (Ft.)	Skew (0) (Degree)	◪ Corrugation	Wall Thickness (0.00)	Zinc	Bit. Coated Zinc	Aluminum	Bit. Coated Aluminum	◪ Corrugation	Wall Thickness (0.00)	Uncoated	Bit. Coated	Class - Non Trench	Class - Trench	Class	Min Wall Thickness (0)	AASHTO M-294 Type C	AASHTO M-294 Type S	C-13.20 & C-13.25 Detail - Size, (In) Manhole	Standard or Detail S-Single / D-Double	Location	H (0.0)	L Wing (0.0)	L 18" Slotted Drn (0)	L 24" Slotted Drn (0)	Type	Elev. (0.00)	Inlet Depression Depth (In.)	L (0.0) (Ft.)	Pipe Exc (0)	Pipe Bk fl (0)	Drn Exc (0)	Berm/Dike Emb (0)	REMARKS
202L EB Wed Sta 3225+13 93.5' Rt	520	2		24	77												II	II	I			X				C-15.20		4.0					1386.66	1	10	71	22			CB 520 to CB 519
to 202L EB Wed Sta 3225+04 18.5' Rt																																							
202L EB Wed Sta 3226+38 18.5' Rt	521	2		24	69												II	II	I			X				C-15.91		5.5		10			1385.66	1	20	73	20			CB 521 to CB 518
to 202L EB Wed Sta 3225+70 18.5' Rt																																							
202L EB Wed Sta 3226+38 CL	522	1		24	17												III	III	3			X				C-15.80		4.0					1384.62			16	5			CB 522 to 521
to 202L EB Wed Sta 3226+38 18.5' Rt																																							
202L WB Wed Sta 3225+81.92 91.5' Lt	523	3		24	12												II	II	2			X				C-15.91		5.5		30			1383.53	1	40	14	3			CB 523 to Jct 523
to 202L WB Wed Sta 3225+81.92 103.5' Lt																																							
202L WB Wed Sta 3227+46 91.5' Lt	524	3		24	13												II	II	2			X				C-15.91		5.5		5			1383.85	1	15	15	4			CB 524 Jct 524
to 202L WB Wed Sta 3227+46 105.8' Lt																																							
202L WB Wed Sta 3228+50 91.5' Lt	525	2		24	10												II	II	I			X				C-15.91		5.5		5			1384.39	1	15	11	3			CB 525 to MH 503
to 202L WB Wed Sta 3228+50 103.5' Lt																																							
202L EB Wed Sta 3228+50 18.5' Rt	526	2		24	110												II	II	I			X				C-15.91		5.5		15			1386.85	1	25	115	31			CB 526 to CB 525
to 202L WB Wed Sta 3228+50 91.5' Lt																																							
202L EB Wed Sta 3232+24 18.5' Rt	527	3		24	120												II	II	2			X				C-15.91		5.5		25			1391.22	1	35	140	34			CB 527 to MH 504
to 202L WB Wed Sta 3232+24 103.5' Lt																																							
Ramp GC Sta 8+76 17.5' Lt	529	3		24	64												II	II	2			X				C-15.91		5.5		10			1390.90	1	20	79	18			CB 529 to Jct 529
to 202L WB Wed Sta 3233+16 104.87' Lt																																							
Sheet Total																														100				534	140				

FILL HEIGHT RANGE TABLE (Ft.)													
RANGE NO.		1	2	3	4	5	6	7	8	9	10	11	12
FILL	>	1	3	5	8	11	15	20	25	30	40	55	70
HEIGHT (Ft.)	≤	3	5	8	11	15	20	25	30	40	55	70	90

◐ SHOULD FIELD CONDITIONS VARY FROM THE RANGE INDICATED, CONTACT DESIGN FOR RE-EVALUATION OF PIPE DESIGN REQUIREMENTS.

◪ PIPE CORRUGATION			
A	2⅔x½	D	6x2
B	3x1	E	3x1 or 9x2½
C	9x2½		

	NAME	DATE
DESIGN	MRG	4/03
DRAWN	RJP	4/03
CHECKED	CAD	4/03

Stanley Consultants inc.
2929 East Camelback Road, Suite 130
Phoenix, Arizona 85016
Phone (602) 912-9200

ARIZONA DEPARTMENT OF TRANSPORTATION
INTERMODAL TRANSPORTATION DIVISION
ROADWAY DESIGN SERVICES

NEW PIPE SUMMARY SHEET

95%
PRELIMINARY NOT FOR CONSTRUCTION

ROUTE: 202L
LOCATION: SANTAN FWY, ELLIOT ROAD - BASELINE ROAD

TRACS NO. H 5915 01C | 202-C(005)B | DWG NO. G-6.13 | ___ OF ___

REV. DATE: 01-05-2000

04/21/2003 gi\16110\Drainage\DGN\PipeSummaries\h5150sp13.dgn

NOTE:
THE ZEROS IN PARENTHESIS (0, 0.0 & 0.00) IN THE HEADING OF SOME OF THE COLUMNS ARE THE RECOMMENDED PRECISION OF THE VALUE TO BE ENTERED IN THE COLUMN.

NOTE:
FOR PIPE CULVERT PLACEMENT SEE STANDARD DRAWING C-13.15

NOTE:
PIPE OPTIONS SELECTED ARE THOSE REQUIRED TO MEET MINIMUM SERVICE LIFE.
SHADED PIPE OPTION FIELDS ARE NOT ALLOWABLE ALTERNATES.

CSP - CORRUGATED STEEL PIPE
CAP - CORRUGATED ALUMINUM PIPE
RCP - REINFORCED CONCRETE PIPE
NRCP - NON-REINFORCED CONCRETE PIPE
NRCIPCP - NON-REINFORCED CAST-IN-PLACE CONCRETE PIPE
CHDPEPP - CORRUGATED HIGH DENSTIY POLYETHYLENE PLASTIC PIPE

F.H.W.A. REGION	STATE	PROJECT NO.	SHEET NO.	TOTAL SHEETS	AS BUILT
9	ARIZ.	202-C(005)B			
		202L MA 031			

Station	Plan Ref No.	Controlling Fill Height Range	Size, Corrugated (In.)	Size, Smooth (In.)	Length (0) (Ft.)	Skew (0) (Degree)	CSP Corrugation	CSP Wall Thickness (0.00)	CSP Zinc Coating	CSP Blt. Coated Zinc Coating	CAP Aluminum Coating	CAP Blt. Coated Aluminum Coating	CAP Corrugation	CAP Wall Thickness (0.00)	CAP Uncoated	CAP Blt. Coated	RCP Class - Non Trench	RCP Class - Trench	RCP Class	RCP Min Wall Thickness (In.)	NRCP AASHTO M-294 Type C	NRCIPCP AASHTO M-294 Type S	CHDPEPP C-13.20 & C-13.25	Detail - Size, (In) Manhole	End Sec Standard or Detail	End Treatment Each S-Single / D-Double	Catch basin, Manhole, Headwall & Junction Structure Location	H (0.0)	L Wing (0.0)	L 18" Slotted Drn (0)	L 24" Slotted Drn (0)	Type	Elev. (0.00)	Grate Depth (Ft.)	Grate L (0.0) (Ft.)	Inlet Depression Pipe Exc (0) (In.)	Inlet Depression Pipe Bk fl (0) (Ft.)	Drn Exc (0)	Berm/Dike Emb (0)	REMARKS
Ramp GC Sta 9+75.14 19.5' Lt to 202L WB Med Sta 3234+17 104.3' Lt	530	3		24	54												II	II	2		X				C-15.91			5.5					1390.58	1	10	64	15			CB 530 to Jct 530
Ramp GD Sta 10+96.52 11.5' Lt to 202L WB Med Sta 3234+56 103.5' Lt	531	1		24	220												III	III	3		X				C-15.91			5.8		10			1399.22	1	20	272	63			CB 531 to MH 505
Ramp GD Sta 9+96 11.5' Lt to Ramp GD Sta 10+96.52 11.5' Lt	532	2		24	101												II	II	2		X				C-15.91			5.5					1399.39	1	10	108	29			CB 532 to CB 531
Ramp GD Sta 8+50 11.5' Lt to Ramp GD Sta 9+96 11.5' Lt	533	2		24	146												II	II	2		X				C-15.91			5.5		5			1400.20	1	15	152	41			CB 533 to CB 532
202L EB Med Sta 3236+00 18.5' Rt to 202L EB Med Sta 3234+56.46 16.5' Rt	534	2		24	145												II	II	1		X				C-15.91			5.5		5			1396.09	1	15	153	41			CB 534 to Jct 534
Ramp GD Sta 11+97 11.5' Lt to Ramp GD Sta 10+96.52 11.5' Lt	535	2		24	101												II	II	1		X				C-15.91			5.5					1399.39	1	10	108	29			CB 535 to CB 531
Ramp GD Sta 10+96.52 25.5' Rt to Ramp GD Sta 10+96.52 11.5' Lt	536	2		24	39												II	II	1		X				C-15.80			4.0					1399.43			37	11			CB 536 to CB 531
Ramp GC Sta 10+75 19.5' Lt to Ramp GC Sta 10+75 29.5' Lt	537	2		24	10												II	II	1		X				C-15.91			5.5		5			1390.90	1	15	11	3			CB 537 to MH 506
Ramp GC Sta 11+75 19.5' Lt to Ramp GC Sta 11+75 29.5' Lt	538	2		24	10												II	II	1		X				C-15.91			5.5		10			1391.85	1	20	11	3			CB 538 to MH 507
Sheet Total																														35						916	235			

FILL HEIGHT RANGE TABLE (Ft.)

RANGE NO.		1	2	3	4	5	6	7	8	9	10	11	12
FILL	>	1	3	5	8	11	15	20	25	30	40	55	70
HEIGHT (Ft.)	≤	3	5	8	11	15	20	25	30	40	55	70	90

SHOULD FIELD CONDITIONS VARY FROM THE RANGE INDICATED, CONTACT DESIGN FOR RE-EVALUATION OF PIPE DESIGN REQUIREMENTS.

PIPE CORRUGATION

A	2⅔x½	D	6x2
B	3x1	E	3x1 or 9x2½
C	9x2½		

	NAME	DATE
DESIGN	MRG	4/03
DRAWN	W.P.	4/03
CHECKED	CAD	4/03

Stanley Consultants inc.
2929 East Camelback Road, Suite 130
Phoenix, Arizona 85016
Phone: (602) 952-0600

ARIZONA DEPARTMENT OF TRANSPORTATION
INTERMODAL TRANSPORTATION DIVISION
ROADWAY DESIGN SERVICES

NEW PIPE SUMMARY SHEET

95%
PRELIMINARY NOT FOR CONSTRUCTION

ROUTE: 202L
LOCATION: SANTAN FWY, ELLIOT ROAD - BASELINE ROAD

TRACS NO. H 5915 01C
202-C(005)B

DWG NO. G-6.14
___ OF ___

REV. DATE: 01-05-2000

04/21/2003 qr\16110\Drainage\DGN\PipeSummaries\h5150spl4.dgn

NOTE:
THE ZEROS IN PARENTHESIS (0, 0.0 & 0.00) IN THE HEADING OF SOME OF THE COLUMNS ARE THE RECOMMENDED PRECISION OF THE VALUE TO BE ENTERED IN THE COLUMN.

NOTE:
FOR PIPE CULVERT PLACEMENT SEE STANDARD DRAWING C-13.15

NOTE:
PIPE OPTIONS SELECTED ARE THOSE REQUIRED TO MEET MINIMUM SERVICE LIFE.
SHADED PIPE OPTION FIELDS ARE NOT ALLOWABLE ALTERNATES.

CSP - CORRUGATED STEEL PIPE
CAP - CORRUGATED ALUMINUM PIPE
RCP - REINFORCED CONCRETE PIPE
NRCP - NON-REINFORCED CONCRETE PIPE
NRCIPCP - NON-REINFORCED CAST-IN-PLACE CONCRETE PIPE
CHDPEPP - CORRUGATED HIGH DENSTIY POLYETHYLENE PLASTIC PIPE

F.H.W.A. REGION	STATE	PROJECT NO.	SHEET NO.	TOTAL SHEETS	AS BUILT
9	ARIZ.	202-C(005)B			
		202L MA 031			

Station	Plan Ref No.	Controlling Fill Height Range	Size, Corrugated (In.)	Size, Smooth (In.)	Length (0) (Ft.)	Skew (0) (Degree)	Corrugation	Wall Thickness (0.00)	Zinc	Bit. Coated Zinc	Aluminum	Bit. Coated Aluminum	Corrugation	Wall Thickness (0.00)	Uncoated	Bit. Coated	Class - Non Trench	Class - Trench	Class	Min Wall Thickness (0)	AASHTO M-294 Type C	AASHTO M-294 Type S	C-13.20 & C-13.25	Detail -	Size, (In) Manhole	Standard or Detail	S-Single / D-Double	Location	H (0.0)	L Wing (0.0)	L 18" Slotted Drn (0)	L 24" Slotted Drn (0)	Type	Elev. (0.00)	Inlet Depression Depth (In.)	Grate L (0.0) (Ft.)	Pipe Exc (0)	Pipe Bkfl (0)	Drn Exc (0)	Berm/Dike Emb (0)	REMARKS
202L EB Wed Sta 3239+03 18.5' Rt to 202L WB Wed Sta 3239+03 132.05' Lt	539	2		24	149											II	II	I			X				C-15.91			5.5		5			1400.01	1	15	161	42			CB 539 to MH 508
202L EB Wed Sta 3242+30 18.5' Rt to 202L WB Wed Sta 3242+30 105.98' Lt	540	2		24	125											II	II	I			X				C-15.91			6.7		5			1404.25	1	15	142	36			CB 540 to CB 509
Baseline Rd. Sta 26+35 46.71' Rt to Baseline Rd. Sta 26+35 45.52' Lt	601	1		24	96											III	III	3			X				C-15.20			4.2	11.5				1427.38	1	22	83	27			CB 601 to MH 600
Baseline Rd. Sta 26+35 48.85' Lt	602	-		-	-																				D1 D11			4.1	11.5				1427.33	1	22	0	0			CB 602 See Detail D11
Baseline Rd. Sta 23+13 52' Lt to Baseline Rd. Sta 23+42.84 54' Rt	603	1		24	5											III	III	3			X				C-15.20			4.5	11.5				1425.81	1	22	4	1			CB 603 to Jct 603
Baseline Rd. Sta 23+40 52' Rt to Channel Sta 232+59.07 8' Rt	604	1		24	7											III	III	3			X				C-15.20 D1 D12			5.0	11.5				1425.93	1	22	6	2			CB 604 to Jct 604
202L EB Sta 251+68 43.5' Rt to Channel Sta 206+65.85 1' Lt	700	2		24	52											II	II	I			X				C-15.91			6.2		15			1415.92	1	25	58	15			CB 700 to Jct 700
202L WB Wed Sta 3251+58 110.22' Lt to 202L EB Sta 251+68 43.5' Rt	701	3		24	208											II	II	2			X				C-15.92			5.5		25			1415.74			229	59			CB 701 to CB 700
202L EB Sta 256+27 43.5' Rt to Channel Sta 211+24.70 2' Lt	702	3		24	63											II	II				X				C-15.92			10.0		15			1421.64			81	18			CB 702 to Jct 702
Sheet Total																														65						764	200			

FILL HEIGHT RANGE TABLE (Ft.)													
RANGE NO.		1	2	3	4	5	6	7	8	9	10	11	12
FILL	>	1	3	5	8	11	15	20	25	30	40	55	70
HEIGHT (Ft.)	≤	3	5	8	11	15	20	25	30	40	55	70	90

SHOULD FIELD CONDITIONS VARY FROM THE RANGE INDICATED, CONTACT DESIGN FOR RE-EVALUATION OF PIPE DESIGN REQUIREMENTS.

PIPE CORRUGATION			
A	2⅔x½	D	6x2
B	3x1	E	3x1 or 9x2½
C	9x2½		

	NAME	DATE
DESIGN	MRG	4/03
DRAWN	WJP	4/03
CHECKED	CAD	4/03

Stanley Consultants inc. 2929 East Camelback Road, Suite 130 Phoenix, Arizona 85016 Phone: (602) 912-5500

ARIZONA DEPARTMENT OF TRANSPORTATION
INTERMODAL TRANSPORTATION DIVISION
ROADWAY DESIGN SERVICES

NEW PIPE SUMMARY SHEET

95%
PRELIMINARY
NOT FOR CONSTRUCTION

ROUTE: 202L
LOCATION: SANTAN FWY, ELLIOT ROAD - BASELINE ROAD

TRACS NO. H 5915 01C
202-C(005)B

DWG NO. G-6.15
___ OF ___

REV. DATE: 01-05-2000

04/21/2003 qt\16110\Drainage\DGN\PipeSummaries\h5150spl5.dgn

NOTE:
THE ZEROS IN PARENTHESIS (0, 0.0 & 0.00) IN THE HEADING OF SOME OF THE COLUMNS ARE THE RECOMMENDED PRECISION OF THE VALUE TO BE ENTERED IN THE COLUMN.

NOTE:
FOR PIPE CULVERT PLACEMENT SEE STANDARD DRAWING C-13.15

NOTE:
PIPE OPTIONS SELECTED ARE THOSE REQUIRED TO MEET MINIMUM SERVICE LIFE.
SHADED PIPE OPTION FIELDS ARE NOT ALLOWABLE ALTERNATES.

CSP - CORRUGATED STEEL PIPE
CAP - CORRUGATED ALUMINUM PIPE
RCP - REINFORCED CONCRETE PIPE
NRCP - NON-REINFORCED CONCRETE PIPE
NRCIPCP - NON-REINFORCED CAST-IN-PLACE CONCRETE PIPE
CHDPEPP - CORRUGATED HIGH DENSTIY POLYETHYLENE PLASTIC PIPE

F.H.W.A. REGION	STATE	PROJECT NO.	SHEET NO.	TOTAL SHEETS	AS BUILT
9	ARIZ.	202-C(005)B			
		202L MA 031			

Station	Plan Ref No.	Controlling Fill Height Range	Size, Corrugated (In.)	Size, Smooth (In.)	Length (0) (Ft.)	Skew (0) (Degree)	Corrugation	Wall Thickness (0.00)	Zinc	Bit. Coated Zinc	Aluminum	Bit. Coated Aluminum	Corrugation	Wall Thickness (0.00)	Uncoated	Bit. Coated	Class - Non Trench	Class - Trench	Class	Min Wall Thickness (0)	AASHTO M-294 Type C	AASHTO M-294 Type S	C-13.20 & C-13.25	Detail - Size, (In) Manhole	Standard or Detail	S-Single / D-Double	Location	H (0.0)	L Wing (0.0)	L 18" Slotted Drn (0)	L 24" Slotted Drn (0)	Type	Elev. (0.00)	Depth (In.)	L (0.0) (Ft.)	Inlet Depression	Pipe Exc (0)	Pipe Bkfl (0)	Drn Exc (0)	Berm/Dike Emb (0)	REMARKS
																								End Sec (In.)			Each					Catch basin, Manhole, Headwall & Junction Structure								QUANTITIES Cubic Yard	
																											Ea			Ft.		Grate		Ft.							
202L WB Sta 256+20 29.5' Rt to 202L EB Sta 256+27 43.5' Rt	703	2		24	113											II	II	I			X					C-15.91		5.5		5			1423.59	1	15	112	32			CB 703 to CB 702
202L WB Sta 256+61 29.5' Rt to 202L WB Sta 256+20 29.5' Rt	704	2		24	41											II	II	I			X					C-15.91		6.0		5			1424.05	1	15	44	12			CB 704 to CB 703
202L WB Sta 257+30 29.5' Rt to 202L WB Sta 256+61 29.5' Rt	705	2		24	69											II	II	I			X					C-15.91		5.5		10			1424.81	1	20	75	20			CB 705 to CB 704
202L WB Sta 258+43 29.5' Rt to 202L WB Sta 257+30 29.5' Rt	706	2		24	113											II	II	I			X					C-15.91		5.5		10			1426.03	1	20	118	32			CB 706 to CB 705
202L EB Sta 260+50 51.82 Rt to Channel Sta 215+30.16 2' Lt	707	5		24	69											IV	IV									C-15.92		13.7		15			1426.33			106	20			CB 707 to Jct 707
202L WB Sta 260+58 29.5' Rt to 202L EB Sta 260+50 51.82 Rt	708	2		24	132											II	II	I			X					C-15.91		5.5		10			1428.72	1	20	149	38			CB 708 to CB 707
202L WB Sta 263+11 29.5' Rt to 202L WB Sta 260+58 29.5' Rt	709	2		24	252											II	II	I			X					C-15.91		5.5		10			1432.00	1	20	263	72			CB 709 to CB 708
Ramp BA Sta 4+98 11.5' Rt to 202L WB Sta 263+11 29.5' Rt	710	1		24	125											III	III	3			X					C-15.91		5.5		10			1436.33	1	20	130	36			CB 710 to CB 709
202L EB Sta 265+57 43.5' Rt to Channel Sta 220+25.83 2' Lt	711	4		24	131											III	III				X					C-15.91		5.5		20			1433.23	1	30	111	37			CB 711 to Jct 711
Sheet Total																														95						1108	299			

FILL HEIGHT RANGE TABLE (Ft.)													
RANGE NO.		1	2	3	4	5	6	7	8	9	10	11	12
FILL	>	1	3	5	8	11	15	20	25	30	40	55	70
HEIGHT (Ft.)	≤	3	5	8	11	15	20	25	30	40	55	70	90

SHOULD FIELD CONDITIONS VARY FROM THE RANGE INDICATED, CONTACT DESIGN FOR RE-EVALUATION OF PIPE DESIGN REQUIREMENTS.

PIPE CORRUGATION				
A	2⅔x½	D	6x2	
B	3x1	E	3x1 or 9x2½	
C	9x2½			

	NAME	DATE
DESIGN	MRG	4/03
DRAWN	WJP	4/03
CHECKED	CAD	4/03

Stanley Consultants inc.
7025 East Greenway Road, Suite 118
Phoenix, Arizona 85054
Phone: (602) 92-6500

ARIZONA DEPARTMENT OF TRANSPORTATION
INTERMODAL TRANSPORTATION DIVISION
ROADWAY DESIGN SERVICES

NEW PIPE SUMMARY SHEET

95%
PRELIMINARY
NOT FOR CONSTRUCTION

ROUTE: 202L
LOCATION: SANTAN FWY, ELLIOT ROAD - BASELINE ROAD

TRACS NO. H 5915 01C
202-C(005)B

DWG NO. G-6.16
___ OF ___

REV. DATE: 01-05-2000

04/21/2003 q:\16110\Drainage\DGN\PipeSummaries\h5150sp16.dgn

NOTE:
THE ZEROS IN PARENTHESIS (0, 0.0 & 0.00) IN THE HEADING OF SOME OF THE COLUMNS ARE THE RECOMMENDED PRECISION OF THE VALUE TO BE ENTERED IN THE COLUMN.

NOTE:
FOR PIPE CULVERT PLACEMENT SEE STANDARD DRAWING C-13.15

NOTE:
PIPE OPTIONS SELECTED ARE THOSE REQUIRED TO MEET MINIMUM SERVICE LIFE.
SHADED PIPE OPTION FIELDS ARE NOT ALLOWABLE ALTERNATES.

CSP - CORRUGATED STEEL PIPE
CAP - CORRUGATED ALUMINUM PIPE
RCP - REINFORCED CONCRETE PIPE
NRCP - NON-REINFORCED CONCRETE PIPE
NRCIPCP - NON-REINFORCED CAST-IN-PLACE CONCRETE PIPE
CHDPEPP - CORRUGATED HIGH DENSTIY POLYETHYLENE PLASTIC PIPE

F.H.W.A. REGION	STATE	PROJECT NO.	SHEET NO.	TOTAL SHEETS	AS BUILT
9	ARIZ.	202-C(005)B			
		202L MA 031			

Station	Plan Ref No.	Controlling Fill Height Range	Size, Corrugated (In.)	Size, Smooth (In.)	Length (0) (Ft.)	Skew (0) (Degree)	Corrugation	Wall Thickness (0.00)	Zinc	Blt. Coated Zinc	Aluminum	Blt. Coated Aluminum	Corrugation	Wall Thickness (0.00)	Uncoated	Blt. Coated (Coating)	Class - Non Trench (In.)	Class - Trench	Class	Min Wall Thickness (0)	AASHTO M-294 Type C	AASHTO M-294 Type S	C-13.20 & C-13.25 Detail - End Sec	Size, (In) Manhole Standard or Detail	S-Single / D-Double	Location	H (0.0)	L Wing (0.0)	L 18" Slotted Drn (0)	L 24" Slotted Drn (0)	Type	Elev. (0.00)	Grate Depth (In.)	Grate L (0.0) (Ft.)	Inlet Depression Pipe Exc (0)	Inlet Depression Pipe Bkfl (0)	Drn Exc (0)	Berm/Dike Emb (0)	REMARKS
202L WB Sta 265+60 29.5' Rt to 202L EB Sta 265+57 43.5' Rt	712	1		24	139												III	III	3			X				C-15.91		6.3		10			1435.22	1	20	154	39			CB 712 to CB 711
202L EB Sta 268+00 42.16' Rt Channel Sta 222+63.23 2' Lt	713	6		24	136												IV	IV								C-15.92 D+1 D9		20.3		35			1436.35			284	39			CB 713 to Jct 713
202L WB Sta 268+25 29.5' Rt to 202L EB Sta 268+00 42.16' Rt	714	1		24	146												III	III	3			X				C-15.91		6.9		10			1438.65	1	20	175	41			CB 714 to CB 713
202L WB Sta 271+02 29.5' Rt to 202L WB Sta 268+25 29.5' Rt	715	3		24	276												II	II	2			X				C-15.91		8.0		20			1442.23	1	30	378	78			CB 715 to CB 714
202L WB Sta 273+52 29.5' Rt to 202L WB Sta 271+02 29.5' Rt	716	3		24	249												II	II	2			X				C-15.91		8.8		10			1445.19	1	20	379	71			CB 716 to CB 715
202L WB Sta 275+80 29.5' Rt to 202L WB Sta 273+52 29.5' Rt	717	3		24	227												II	II	2			X				C-15.91		8.8		10			1447.28	1	20	360	65			CB 717 to CB 716
Ramp BB Sta 17+62 23.5' Rt to Channel Sta 231+18.16 ℄	718	2		36	70												II	II	1			X				D+1 D10		5.5					1423.67	1	10	93	24			CB 718 to Jct 718
Ramp BB Sta 17+62 23.5' Lt Ramp BB Sta 17+62 23.5' Rt	719	2		36	49												II	II	1			X				D+1 D10		5.5					1424.16	1	10	69	17			CB 719 to CB 718
Ramp NW Sta 10+27 21.5' Rt to Ramp BB Sta 17+62 23.5' Lt	720	5		36	33												IV	IV								D+1 D9		28.4		20			1445.64			115	11			CB 720 to CB 719
Sheet Total																														115						2007	385			

FILL HEIGHT RANGE TABLE (Ft.)													
RANGE NO.		1	2	3	4	5	6	7	8	9	10	11	12
FILL HEIGHT (Ft.)	>	1	3	5	8	11	15	20	25	30	40	55	70
	≤	3	5	8	11	15	20	25	30	40	55	70	90

SHOULD FIELD CONDITIONS VARY FROM THE RANGE INDICATED, CONTACT DESIGN FOR RE-EVALUATION OF PIPE DESIGN REQUIREMENTS.

PIPE CORRUGATION			
A	2⅔x½	D	6x2
B	3x1	E	3x1 or 9x2½
C	9x2½		

	NAME	DATE
DESIGN	MRG	4/03
DRAWN	WJP	4/03
CHECKED	CAD	4/03

Stanley Consultants INC.
2929 East Camelback Road, Suite 130
Phoenix, Arizona 85016
Phone (602) 957-0500

ARIZONA DEPARTMENT OF TRANSPORTATION
INTERMODAL TRANSPORTATION DIVISION
ROADWAY DESIGN SERVICES

NEW PIPE SUMMARY SHEET

95%
PRELIMINARY
NOT FOR CONSTRUCTION

ROUTE: 202L
LOCATION: SANTAN FWY, ELLIOT ROAD - BASELINE ROAD

TRACS NO. H 5915 01C | 202-C(005)B | DWG NO. G-6.17 | ___ OF ___

REV. DATE: 01-05-2000

04/21/2003 qi\16110\Drainage\DGN\PipeSummaries\h5150spl7.dgn

NOTE:
THE ZEROS IN PARENTHESIS (0, 0.0 & 0.00) IN THE HEADING OF SOME OF THE COLUMNS ARE THE RECOMMENDED PRECISION OF THE VALUE TO BE ENTERED IN THE COLUMN.

NOTE:
FOR PIPE CULVERT PLACEMENT SEE STANDARD DRAWING C-13.15

NOTE:
PIPE OPTIONS SELECTED ARE THOSE REQUIRED TO MEET MINIMUM SERVICE LIFE.
SHADED PIPE OPTION FIELDS ARE NOT ALLOWABLE ALTERNATES.

NRCP
NRCIPCP
CHDPEPP

CSP - CORRUGATED STEEL PIPE
CAP - CORRUGATED ALUMINUM PIPE
RCP - REINFORCED CONCRETE PIPE
NRCP - NON-REINFORCED CONCRETE PIPE
NRCIPCP - NON-REINFORCED CAST-IN-PLACE CONCRETE PIPE
CHDPEPP - CORRUGATED HIGH DENSTIY POLYETHYLENE PLASTIC PIPE

F.H.W.A. REGION	STATE	PROJECT NO.	SHEET NO.	TOTAL SHEETS	AS BUILT
9	ARIZ.	202-C(005)B			
		202L MA 031			

Station	Plan Ref No.	Controlling Fill Height Range	Size, Corrugated (In.)	Size, Smooth (In.)	Length (0) (Ft.)	Skew (0) (Degree)	Corrugation	Wall Thickness (0.00)	Zinc	Blt. Coated Zinc	Aluminum	Blt. Coated Aluminum	Corrugation	Wall Thickness (0.00)	Uncoated	Blt. Coated	Class - Non Trench	Class - Trench	Class	Min Wall Thickness (0)	AASHTO M-294 Type C	AASHTO M-294 Type S	C-13.20 & C-13.25	Detail -	Size, (In) Manhole	Standard or Detail	End Sec S-Single / D-Double	Location	H (0.0)	L Wing (0.0)	L 18" Slotted Drn (0)	L 24" Slotted Drn (0)	Type	Elev. (0.00)	Grate Depth (In.)	Grate L (0.0) (Ft.)	Inlet Depression Pipe Exc (0)	Pipe Bkfl (0)	Drn Exc (0)	Berm/Dike Emb (0)	REMARKS
Ramp BB Sta 18+04 23.5' Rt to Ramp BB Sta 17+62 23.5' Rt	722	2		24	42												II	II	I		X				C-15.91			5.7					1423.89	1	10	50	14			CB 722 to CB 718
Ramp BB Sta 17+14 23.5' Rt to Ramp BB Sta 17+62 23.5' Rt	723	2		24	48												II	II	I		X				C-15.91			5.5		5			1423.97	1	15	44	12			CB 723 to CB 718
202L EB Sta 277+51 39.79' Rt to Ramp NW Sta 10+27 21.5' Rt	724	2		24	64												II	II	I		X				C-15.92			5.5					1447.13			70	18			CB 724 to CB 720
Baseline Rd. Sta 18+07 52' Rt to Baseline Rd. Sta 18+06 45.48' Lt	726	1		24	104												III	III	3		X				C-15.20			4	11.5				1423.19	1	22	88	30			CB 726 to MH 725
Ramp BA Sta 19+39 11.5' Rt to Ramp BA Sta 18+80 11.5' Rt	727	1		18	59												IV	IV			X				C-15.91			3.0					1421.26	1	10	32	14			CB 727 to CB 728
Ramp BA Sta 18+80 11.5' Rt to Ramp NW Sta 10+27 21.5' Rt	728	9		24	385												V	V							C-15.91			3.0					1421.02	1	10	328	109			CB 728 to CB 720
Ramp BA Sta 18+21 11.5' Rt to Ramp BA Sta 18+80 11.5' Rt	729	1		18	59												IV	IV			X				C-15.91			3.0		10			1421.26	1	20	32	14			CB 729 to CB 728
Baseline Rd. Sta 18+06 52' Lt to Baseline Rd. Sta 18+06 45.48' Lt	730	2		24	9												II	II	I		X				C-15.20			4.0	19.5				1423.19	1	30	7	3			CB 730 to MH 725
Ramp WS Sta 5+81.06 34.81' Lt to Baseline Rd. Sta 17+94 54' Lt	731	5		24	227												IV	IV							C-18.10			4.1					1448.98			182	65			MH 731 to CB 730
Sheet Total																														15						833	279			

FILL HEIGHT RANGE TABLE (Ft.)													
RANGE NO.		1	2	3	4	5	6	7	8	9	10	11	12
FILL	>	1	3	5	8	11	15	20	25	30	40	55	70
HEIGHT (Ft.)	≤	3	5	8	11	15	20	25	30	40	55	70	90

SHOULD FIELD CONDITIONS VARY FROM THE RANGE INDICATED, CONTACT DESIGN FOR RE-EVALUATION OF PIPE DESIGN REQUIREMENTS.

PIPE CORRUGATION			
A	2⅔x½	D	6x2
B	3x1	E	3x1 or 9x2½
C	9x2½		

	NAME	DATE
DESIGN	MRG	4/03
DRAWN	RJP	4/03
CHECKED	CAD	4/03

Stanley Consultants inc.
2999 East Camelback Road, Suite 130
Phoenix, Arizona 85016
Phone: (602) 912-5500

ARIZONA DEPARTMENT OF TRANSPORTATION
INTERMODAL TRANSPORTATION DIVISION
ROADWAY DESIGN SERVICES

NEW PIPE SUMMARY SHEET

95%
PRELIMINARY
NOT FOR CONSTRUCTION

ROUTE: 202L
LOCATION: SANTAN FWY, ELLIOT ROAD - BASELINE ROAD

TRACS NO. H 5915 01C
202-C(005)B

DWG NO. G-6.18
___ OF ___

REV. DATE: 01-05-2000

04/21/2003 q:\16110\Drainage\DGN\PipeSummaries\h5150spl8.dgn

NOTE:
THE ZEROS IN PARENTHESIS (0, 0.0 & 0.00) IN THE HEADING OF SOME OF THE COLUMNS ARE THE RECOMMENDED PRECISION OF THE VALUE TO BE ENTERED IN THE COLUMN.

NOTE:
FOR PIPE CULVERT PLACEMENT SEE STANDARD DRAWING C-13.15

NOTE:
PIPE OPTIONS SELECTED ARE THOSE REQUIRED TO MEET MINIMUM SERVICE LIFE.
SHADED PIPE OPTION FIELDS ARE NOT ALLOWABLE ALTERNATES.

NRCP
NRCIPCP
CHDPEPP

CSP - CORRUGATED STEEL PIPE
CAP - CORRUGATED ALUMINUM PIPE
RCP - REINFORCED CONCRETE PIPE
NRCP - NON-REINFORCED CONCRETE PIPE
NRCIPCP - NON-REINFORCED CAST-IN-PLACE CONCRETE PIPE
CHDPEPP - CORRUGATED HIGH DENSTIY POLYETHYLENE PLASTIC PIPE

F.H.W.A. REGION	STATE	PROJECT NO.	SHEET NO.	TOTAL SHEETS	AS BUILT
9	ARIZ.	202-C(005)B			
		202L MA 031			

DESCRIPTION							CSP									CAP				RCP					END TREATMENT																QUANTITIES	
				In.	In.	Ft. / Degree	In. / Coating									In.								In.	Each																	Cubic Yard	
																									Catch basin, Manhole, Headwall & Junction Structure																		
																										Ea			Ft.			Grate		Ft.									
Station	Plan Ref No.	Controlling Fill Height Range	Size, Corrugated	Size, Smooth	Length (0)	Skew (0)	Corrugation	Wall Thickness (0.00)	Zinc	Blt. Coated Zinc	Aluminum	Blt. Coated Aluminum	Corrugation	Wall Thickness (0.00)	Uncoated	Blt. Coated	Class - Non Trench	Class - Trench	Class	Min Wall Thickness (0)	AASHTO M-294 Type C	AASHTO M-294 Type S	C-13.20 & C-13.25	Detail -	Size, (In) Manhole	Standard or Detail	End Sec S-Single / D-Double	Location	H (0.0)	L Wing (0.0)	L 18" Slotted Drn (0)	L 24" Slotted Drn (0)	Type	Elev. (0.00)	Depth In.	Depth Ft.	L (0.0)	Inlet Depression Pipe Exc (0)	Pipe Bk-fl (0)	Drn Exc (0)	Berm/Dike Emb (0)	REMARKS
Ramp WS Sta 5+81.06 13.5' Rt	732	1		24	51											III	III	3			X				C-15.91			6.3					1451.43	1	10	51	14			CB 732 to MH 731
to Ramp WS Sta 5+81.06 34.81' Lt																																											
202L WB Sta 282+26 43.5' Lt	733	2		24	23											II	II	1			X				C-15.91			5.9					1451.09	1	10	26	7			CB 733 to CB 732
to Ramp WS Sta 5+81.06 13.5' Rt																																											
202L WB Sta 282+72 43.5' Lt	734	2		24	46											II	II	1			X				C-15.91			5.5					1450.93	1	10	49	13			CB 734 to CB 733
to 202L WB Sta 282+26 43.5' Lt																																											
Ramp WS Sta 6+45 13.5' Rt	735	2		24	64											II	II	1			X				C-15.91			5.5		5			1451.52	1	15	72	18			CB 735 to CB 732
to Ramp WS Sta 5+81.06 13.5' Rt																																											
Ramp WS Sta 5+26 13.5' Rt	736	2		24	56											II	II	1			X				C-15.91			5.5					1451.50	1	10	63	16			CB 736 to CB 732
to Ramp WS Sta 5+81.06 13.5' Rt																																											
202L WB Sta 274+32 72.82' Rt	737	1		24	41											III	III	3			X				C-15.80			4.0					1441.41			47	12			CB 737 to Jct 737
to 202L WB Sta 274+32 32.78' Rt																																											
202L WB Sta 260+57.35 53.16' Rt	738	1		24	40											III	III	3			X				C-15.80			3.1					1425.60			31	11			CB 738 to Jct 738
to 202L WB Sta 260+17 52.41' Rt																																											
Channel Sta 175+14.76 9.15' Rt	800	1		72	75											II	II								C-13.80			-					-			229	73			Jct 800 to Jct 801
to Channel 175+14.76 83.47' Rt																																											
Guadalupe Rd Sta 22+97.50 40.80' Lt	802	2		30	756											II	II	1	3		X				C-15.75			-					-			892	257			Jct 803 to Jct 802
to Guadalupe Rd Sta 26+63.47 68.89' Lt																									D+1 D12																		
Sheet Total																														5						1460	421				

FILL HEIGHT RANGE TABLE (Ft.)													
RANGE NO.		1	2	3	4	5	6	7	8	9	10	11	12
FILL	>	1	3	5	8	11	15	20	25	30	40	55	70
HEIGHT (Ft.)	≤	3	5	8	11	15	20	25	30	40	55	70	90

SHOULD FIELD CONDITIONS VARY FROM THE RANGE INDICATED, CONTACT DESIGN FOR RE-EVALUATION OF PIPE DESIGN REQUIREMENTS.

PIPE CORRUGATION			
A	2⅔x½	D	6x2
B	3x1	E	3x1 or 9x2½
C	9x2½		

	NAME	DATE
DESIGN	MRC	4/03
DRAWN	WJP	4/03
CHECKED	CAD	4/03

Stanley Consultants inc.
2929 East Camelback Road, Suite 130
Phoenix, Arizona 85016
Phone: (602) 93-1500

ARIZONA DEPARTMENT OF TRANSPORTATION
INTERMODAL TRANSPORTATION DIVISION
ROADWAY DESIGN SERVICES

NEW PIPE SUMMARY SHEET

95%
PRELIMINARY
NOT FOR CONSTRUCTION

ROUTE	LOCATION	
202L	SANTAN FWY, ELLIOT ROAD - BASELINE ROAD	DWG NO. G-6.19
TRACS NO. H 5915 01C	202-C(005)B	___ OF ___

REV. DATE: 01-05-2000

04/21/2003 q:\16110\Drainage\DGN\PipeSummaries\h5150spl9.dgn

NOTE:
THE ZEROS IN PARENTHESIS (0, 0.0 & 0.00) IN THE HEADING OF SOME OF THE COLUMNS ARE THE RECOMMENDED PRECISION OF THE VALUE TO BE ENTERED IN THE COLUMN.

NOTE:
FOR PIPE CULVERT PLACEMENT SEE STANDARD DRAWING C-13.15

NOTE:
PIPE OPTIONS SELECTED ARE THOSE REQUIRED TO MEET MINIMUM SERVICE LIFE.
SHADED PIPE OPTION FIELDS ARE NOT ALLOWABLE ALTERNATES.

NRCP, NRCIPCP, CHDPEPP

CSP - CORRUGATED STEEL PIPE
CAP - CORRUGATED ALUMINUM PIPE
RCP - REINFORCED CONCRETE PIPE
NRCP - NON-REINFORCED CONCRETE PIPE
NRCIPCP - NON-REINFORCED CAST-IN-PLACE CONCRETE PIPE
CHOPEPP - CORRUGATED HIGH DENSTIY POLYETHYLENE PLASTIC PIPE

F.H.W.A. REGION	STATE	PROJECT NO.	SHEET NO.	TOTAL SHEETS	AS BUILT
9	ARIZ.	202-C(005)B			
		202L MA 031			

DESCRIPTION							CSP										CAP				RCP													END TREATMENT																			QUANTITIES				
				In.	In.	Ft.	Degree	In.	Coating						In.										In.						Each	Catch basin, Manhole, Headwall & Junction Structure																			Cubic Yard				
																															Ea				Ft.			Grate																			
Station	Plan Ref No.	Controlling Fill Height Range	Size, Corrugated	Size, Smooth	Length (0)	Skew (0)	Corrugation	Wall Thickness (0.00)	Zinc	Blt. Coated Zinc	Aluminum	Blt. Coated Aluminum	Corrugation	Wall Thickness (0.00)	Uncoated	Blt. Coated	Class - Non Trench	Class - Trench	Class	Min Wall Thickness (0)	AASHTO M-294 Type C	AASHTO M-294 Type S	C-13.20 & C-13.25	Detail -	Size, (in) Manhole	End Sec	Standard or Detail	S-Single / D-Double	Location	H (0.0)	L Wing (0.0)	L 18" Slotted Drn (0)	L 24" Slotted Drn (0)	Type	Elev. (0.00)	Depth	L (0.0)	Inlet Depression	Pipe Exc (0)	Pipe Bk-fl (0)	Drn Exc (0)	Berm/Dike Emb (0)	REMARKS
Channel Sta 224+09.60 9' Rt	805	I		24	28												III	III	3		X						C-13.80			-					-				23	8			Jct 805 to Jct 806
to Channel Sta 224+10± 36'± Rt																																																										
Channel Sta 221+08.55 9' Rt	807	I		18	27												IV	IV			X						C-13.80			-					-				15	6			Jct 807 to Jct 808
to Channel Sta 221+08± 34'± Rt																																																										
Channel Sta 215+08.90 9' Rt	809	I		15	26												IV	IV	3		X						C-13.80			-					-				10	5			Jct 809 to Jct 810
to Channel Sta 215+09± 34'± Rt																																																										
Channel Sta 211+27.08 9' Rt	811	I		24	34												III	III	3		X						C-13.80			-					-				23	10			Jct 811 to Jct 812
to Channel Sta 211+27± 42'± Rt																																																										
Channel Sta 211+15.75 9' Rt	813	I		24	37												III	III	3		X						C-13.80			-					-				28	11			Jct 813 to Jct 814
to Channel Sta 208+16± 44.8'± Rt																																																										
Channel Sta 205+90 10' Rt	815	I		30	42												III	III	2	3	X						C-13.80			-					-				45	14			Jct 815 to Jct 816
to Channel Sta 205+90± 31'± Rt																																																										
Channel Sta 197+67 8.5' Rt	817	I		30	11												III	III	2	3	X						C-13.80			-					-				7	4			Jct 817 to Jct 818
to Channel Sta 197+68± 19'± Rt																																																										
Channel Sta 187+23.09 13.27' Rt	819	I		24	29												III	III	3		X						C-13.80			-					-				19	8			Jct 819 to Jct 820
to Channel Sta 187+23± 42'± Rt																																																										
Channel Sta 183+49± 11'± Rt	821	-		-	-																						C-13.80			-					-				0	0			Exst Pipe to Jct 821
Sheet Total																																																										

FILL HEIGHT RANGE TABLE (Ft.)													
RANGE NO.		1	2	3	4	5	6	7	8	9	10	11	12
FILL	>	1	3	5	8	11	15	20	25	30	40	55	70
HEIGHT (Ft.)	≤	3	5	8	11	15	20	25	30	40	55	70	90

SHOULD FIELD CONDITIONS VARY FROM THE RANGE INDICATED, CONTACT DESIGN FOR RE-EVALUATION OF PIPE DESIGN REQUIREMENTS.

PIPE CORRUGATION			
A	2⅔x½	D	6x2
B	3x1	E	3x1 or 9x2½
C	9x2½		

	NAME	DATE
DESIGN	MRG	4/03
DRAWN	WJP	4/03
CHECKED	CAD	4/03

Stanley Consultants INC.
2929 East Camelback Road, Suite 130
Phoenix, Arizona 85016
Phone: (602) 912-6500

ARIZONA DEPARTMENT OF TRANSPORTATION
INTERMODAL TRANSPORTATION DIVISION
ROADWAY DESIGN SERVICES

NEW PIPE SUMMARY SHEET

95%
PRELIMINARY NOT FOR CONSTRUCTION

ROUTE: 202L
LOCATION: SANTAN FWY, ELLIOT ROAD - BASELINE ROAD

DWG NO. C-6.20

TRACS NO. H 5915 01C | 202-C(005)B | ___ OF ___

REV. DATE: 01-05-2000

04/21/2003 q:\16110\Drainage\DGN\PipeSummaries\h5150sp20.dgn

NOTE:
THE ZEROS IN PARENTHESIS (0, 0.0 & 0.00) IN THE HEADING OF SOME OF THE COLUMNS ARE THE RECOMMENDED PRECISION OF THE VALUE TO BE ENTERED IN THE COLUMN.

NOTE:
FOR PIPE CULVERT PLACEMENT SEE STANDARD DRAWING C-13.15

NOTE:
PIPE OPTIONS SELECTED ARE THOSE REQUIRED TO MEET MINIMUM SERVICE LIFE.
SHADED PIPE OPTION FIELDS ARE NOT ALLOWABLE ALTERNATES.

NRCP NRCIPCP CHDPEPP

CSP - CORRUGATED STEEL PIPE
CAP - CORRUGATED ALUMINUM PIPE
RCP - REINFORCED CONCRETE PIPE
NRCP - NON-REINFORCED CONCRETE PIPE
NRCIPCP - NON-REINFORCED CAST-IN-PLACE CONCRETE PIPE
CHDPEPP - CORRUGATED HIGH DENSTIY POLYETHYLENE PLASTIC PIPE

F.A.H.W.A. REGION	STATE	PROJECT NO.	SHEET NO.	TOTAL SHEETS	AS BUILT
9	ARIZ.	202-C(005)B			
		202L MA 031			

DESCRIPTION								CSP				CAP			RCP										END TREATMENT															QUANTITIES				
				In.	In.	Ft.	Degree	In.	Coating			In.													Each															Cubic Yard				
																									Catch basin, Manhole, Headwall & Junction Structure																			
																									Ea				Ft.			Grate	Ft.											
Station	Plan Ref No.	Controlling Fill Height Range	Size, Corrugated	Size, Smooth	Length (0)	Skew (0)	Corrugation	Wall Thickness (0.00)	Zinc	Blt. Coated Zinc	Aluminum	Blt. Coated Aluminum	Corrugation	Wall Thickness (0.00)	Uncoated	Blt. Coated	Class - Non Trench	Class - Trench	Class	Min Wall Thickness	AASHTO M-294 Type C	AASHTO M-294 Type S	C-13.20 & C-13.25	Detail -	Size, (in) Manhole	Standard or Detail	End Sec	S-Single / D-Double	Location	H (0.0)	L Wing (0.0)	L 18" Slotted Drn (0)	L 24" Slotted Drn (0)	Type	Elev. (0.00)	Depth	In.	Ft.	L (0.0)	Inlet Depression	Pipe Exc (0)	Pipe Bkfl (0)	Drn Exc (0)	Berm/Dike Emb (0)	REMARKS
Channel Sta 152+11± 11.8'± Rt	822	-		-	-																					C-13.80			-					-					0	0			Exst Pipe to Jct 822
Elliot Rd. Sta 30+28.53 15.87' Rt	823	1		24	732											III	III	3			X					C-13.75			-					-					702	208			Jct 823 to Jct 824
to Channel Sta 124+87.20 25.5' Rt																																												
Elliot Rd. Sta 25+41.65 76.65' Lt	825	1		36	506											II	II	2	3.5		X					C-15.75			-					-					782	202			Jct 825 to Jct 826
to Channel Sta 125+68.99 25.5' Rt																										D+1 D12																		
Sheet Total																																								1484	410			

FILL HEIGHT RANGE TABLE (Ft.)													
RANGE NO.		1	2	3	4	5	6	7	8	9	10	11	12
FILL	>	1	3	5	8	11	15	20	25	30	40	55	70
HEIGHT (Ft.)	≤	3	5	8	11	15	20	25	30	40	55	70	90

SHOULD FIELD CONDITIONS VARY FROM THE RANGE INDICATED, CONTACT DESIGN FOR RE-EVALUATION OF PIPE DESIGN REQUIREMENTS.

PIPE CORRUGATION			
A	2⅔x½	D	6x2
B	3x1	E	3x1 or 9x2½
C	9x2½		

	NAME	DATE
DESIGN	MG	4/03
DRAWN	WJP	4/03
CHECKED	RSR	4/03

Stanley Consultants Inc.
2929 East Camelback Road, Suite 130
Phoenix, Arizona 85016
Phone: (602) 912-6500

ARIZONA DEPARTMENT OF TRANSPORTATION
INTERMODAL TRANSPORTATION DIVISION
ROADWAY DESIGN SERVICES

NEW PIPE SUMMARY SHEET

95%
PRELIMINARY
NOT FOR CONSTRUCTION

ROUTE: 202L
LOCATION: SANTAN FWY, ELLIOT ROAD - BASELINE ROAD

TRACS NO. H 5915 01C
202-C(005)B

DWG NO. G-6.21
___ OF ___

REV. DATE: 01-05-2000

04/21/2003 qr\16110\Drainage\DGN\PipeSummaries\h5150sp21.dgn

F.H.W.A. REGION	STATE	PROJECT NO.	SHEET NO.	TOTAL SHEETS	AS BUILT
9	ARIZ.	202-C(005)B			
		202L MA 031			

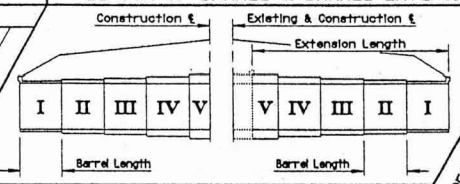

Plan Ref No. ◯ & ⊕	Structure No.	New	Extend	No. of Barrels	Barrel Span (0.0)	Barrel Height (0.0)	Culvert Length (0.0)	Skew (Degree) (0)	B-01.10 Misc Details	B-01.11 Ext Details	◪ Standard or Detail	▲ Location	Inlet Wings	Outlet Wings	◪ Standard or Detail	Apron	◪ Standard or Detail	Scour/Bank Protection	◪ Standard or Detail	Energy Dissipaters	Detail -	Linear Feet (0.0) ▲ Left of ℄ I	II	III	IV	V	▲ Right of ℄ V	IV	III	II	I	◑ Reinforcing Steel (0)	◑ Place Dowels	◑ Class S Conc f'c=3,000 psi	◑ Remove Str Conc (0)	◑ Str Exc (0)	◑ Structure Backfill (0)	Berm Emb (0)	Dike Emb (0)	Drainage Exc (0)	REMARKS
1		X		1	8	6	193		X		B.02.30	Left										97.25										14908		102		509	443				See Dwg D-4.19, D-4.20
Station: 233+12.17 BASELINE RD												Right																			95.75	14678		100		556	436				
Existing:																															Box Culvert Total	29586		202		1065	879				
2	7135	X		3	8	6	228		X		B.02.30	Left										113.1										45572		279		1303	520				See Dwg D-4.17, D-4.18
Station: 177+89.93 QUADALUPE RD												Right																			114.9	46312		284		1386	528				
Existing:																															Box Culvert Total	91884		563		2689	1048				
3	7134	X		3	8	7	221		X		B.02.30	Left										105.7										43895		274		1676	610				See Dwg D-4.15, D-4.16
Station: 125+12.50 ELLIOT RD												Right																			115.3	47908		299		1783	663				
Existing:																															Box Culvert Total	91803		570		3459	1273				
												Left																													
Station:												Right																													
Existing:																															Box Culvert Total										
												Left																													
Station:												Right																													
Existing:																															Box Culvert Total										
												Left																													
Station:												Right																													
Existing:																															Box Culvert Total										
												Left																													
Station:												Right																													
Existing:																															Box Culvert Total										
												Left																													
Station:												Right																													
Existing:																															Box Culvert Total										
												Left																													
Station:												Right																													
Existing:																															Box Culvert Total										
												Left																													
Station:												Right																													
Existing:																															Box Culvert Total										
																															Sheet Total	213273		1335		7213	3200				

NOTE:
FOR STRUCTURAL EXCAVATION, STRUCTURE BACKFILL PLACEMENT AND MEASUREMENT, SEE STANDARD DRAWING B-19.50

NOTE:
THE ZEROS IN PARENTHESIS (0, 0.0 & 0.00) IN THE HEADING OF SOME OF THE COLUMNS ARE THE RECOMMENDED PRECISION OF THE VALUE TO BE ENTERED IN THE COLUMN.

◑ TOTALS SHOWN FOR THE BOX CULVERT INCLUDE THE QUANTITIES FOR HEADWALLS, CURBS, CUT-OFF WALLS AND LAPS AT CONSTRUCTION JOINTS. QUANTITIES FOR WINGS/TRANSITION WALLS ARE MEASURED SEPERATELY.

◪ STRUCTURES SECTION STANDARD DRAWINGS JUNE, 1992 (PUBLICATION NO. 31-002) (ENGLISH EDITION)

▲ Construction ℄ Looking Ahead

	NAME	DATE
DESIGN	SG, GK	03/03
DRAWN	SG	03/03
CHECKED	F. JALAGHI	03/03

PREMIER

ARIZONA DEPARTMENT OF TRANSPORTATION
INTERMODAL TRANSPORTATION DIVISION
ROADWAY DESIGN SERVICES

REINFORCED CONC BOX CULVERT AND BOX CULVERT EXTENSION SUMMARY SHEET

PRELIMINARY 95% REVIEW NOT FOR CONSTRUCTION OR RECORDING

ROUTE	LOCATION	DWG NO. G-8.1
202L	SANTAN FWY, ELLIOT ROAD - BASELINE ROAD	
TRACS NO. H 5915 01C	202-C(005)B	___ OF ___

REV. DATE: 01-05-2000

DATE: LOCATION: REVISIONS: FINISHED PLANS: SURVEY NO. DATE: LOCATION: REVISIONS: FINISHED PLANS: SURVEY NO.

P:\2002020\Cadd\Structures\h5915BS01.dgn
Plotted By: SG 04/22/2003 09:42:56 AM

∞∞∞SYSTIME∞∞∞ ∞∞∞UGNSPECIFICATION∞∞∞

F.H.W.A. REGION	STATE	PROJECT NO.	SHEET NO.	TOTAL SHEETS	AS BUILT
9	ARIZ.	202-C(005)B			
		202L MA 031			

GENERAL NOTES

1. The topographic information shown on these plans concerning existing features is not represented to be accurate. Do not scale these features for determining their location in the field or to locate new construction items. The information on these drawings concerning the type, size and location of utilities has been shown based on the best information available. The Contractor shall be responsible for the determination of exact location of all existing utility facilities prior to construction. It is the Contractor's responsibility to protect all existing utilities, in place, unless otherwise noted or specified.

2. The Contractor shall contact Blue Stake a minimum of two (2) working days prior to start of digging to locate and flag all underground utilities. It shall further be the Contractor's responsibility to contact Blue Stake in sufficient time to allow flagging to be completed so as not to impede construction.

3. The Contractor shall be responsible to brace and support all existing utilities during construction with either permanent pipe supports or temporary pipe supports in accordance with Std. C-22.20, Sheets 1-3. Pipe supports shall not be a pay item.

4. Limits of grading are indicated by top of cut slopes and toe of fill slopes except where proposed contours are shown.

5. Cast-in-place non-reinforced concrete pipe shall not be used for pipe diameters less than 30 inches nor shall it be used for culverts or non-trench conditions.

6. Dimensions shall not be scaled from the drawings.

7. The Contractor shall remove all structures and obstructions within the project right-of-way and temporary construction easements, unless specified otherwise.

8. Concrete lined channel exposed surfaces shall be finished with skateboard/rollerblading surface treatment, except for vertical walls.

9. Water courses that have been determined as Jurisdictional Waters of the United States, by the U.S. Army Corps of Engineers, shall not be blocked or impeded before, during or after construction. Temporary by-pass facilities may need to be constructed.

10. For erosion control, refer to the Erosion Control Plans, Series "E" Drawings.

11. Catch basins with 30" connecting pipes shall have an 8" concrete wall thickness.

	NAME	DATE
DESIGN	RSR	4/03
DRAWN	CGS	4/03
CHECKED	CAD	4/03

Stanley Consultants inc
7878 East Camelback Road, Suite 110
Phoenix, Arizona 85016
Phone: (602) 957-6000

ARIZONA DEPARTMENT OF TRANSPORTATION
INTERMODAL TRANSPORTATION DIVISION
ROADWAY DESIGN SERVICES

STORM DRAIN NOTES

95%
PRELIMINARY
NOT FOR
CONSTRUCTION

ROUTE	LOCATION	DWG NO. D-1.0
202L	SANTAN FWY, ELLIOT ROAD - BASELINE ROAD	
TRACS NO. H 5915 01C	202-C(005)B	___ OF ___

04/22/2003 q:\16110\Dgn\drainage\h5915sdx.dgn

F.H.W.A. REGION	STATE	PROJECT NO.	SHEET NO.	TOTAL SHEETS	AS BUILT
9	ARIZ.	202-C(005)B			
		202L MA 031			

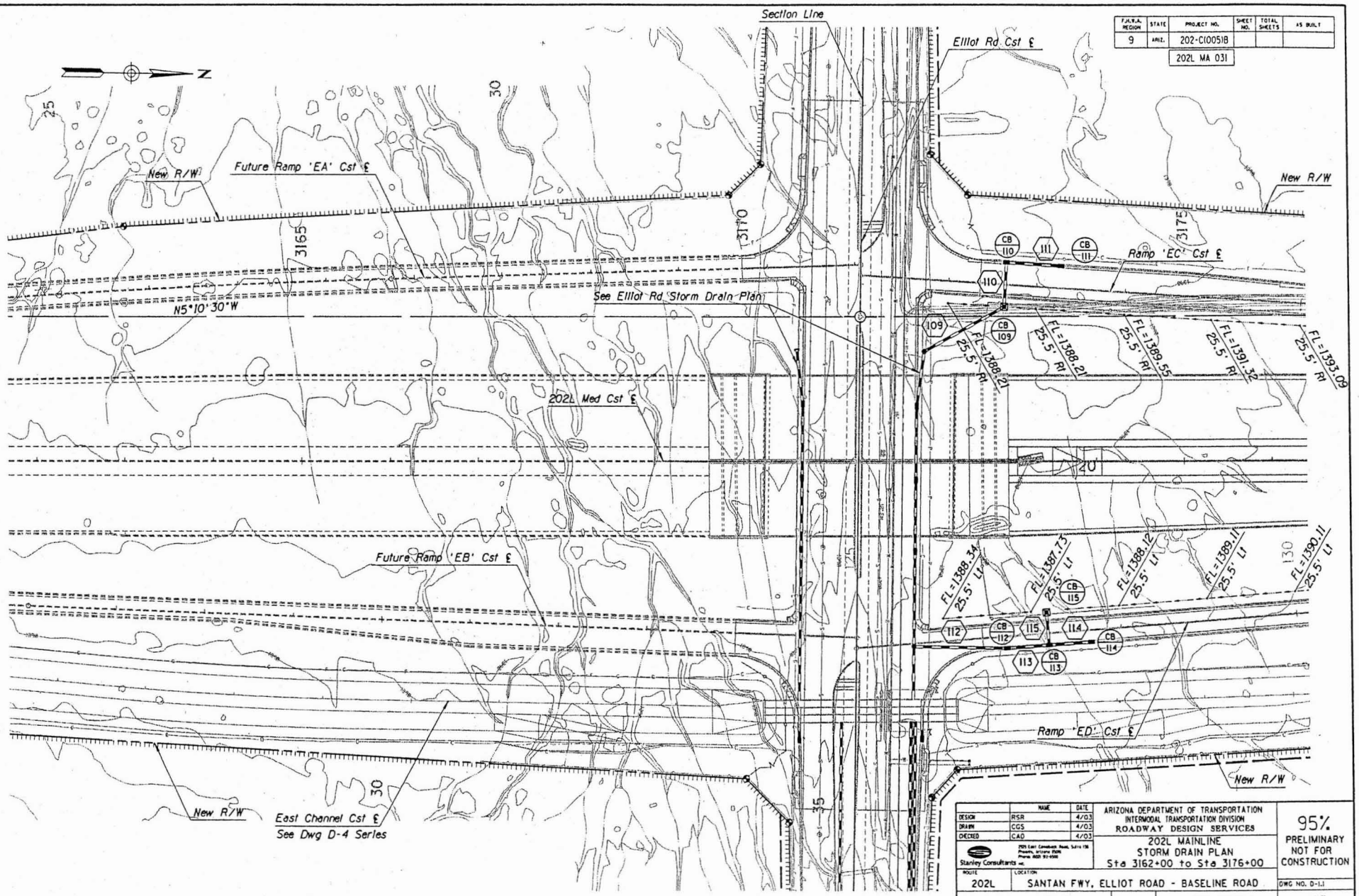

	NAME	DATE
DESIGN	RSR	4/03
DRAWN	CGS	4/03
CHECKED	CAD	4/03

Stanley Consultants inc.
2929 East Camelback Road, Suite 130
Phoenix, Arizona 85016
Phone: (602) 912-9500

ARIZONA DEPARTMENT OF TRANSPORTATION
INTERMODAL TRANSPORTATION DIVISION
ROADWAY DESIGN SERVICES

202L MAINLINE
STORM DRAIN PLAN
Sta 3162+00 to Sta 3176+00

95%
PRELIMINARY
NOT FOR
CONSTRUCTION

ROUTE	LOCATION
202L	SANTAN FWY, ELLIOT ROAD - BASELINE ROAD

DWG NO. D-1.1

TRACS NO. H 5915 01C | 202-C(005)B | ___ OF ___

04/21/2003 q:\16110\dgn\drainage\h5915sda.dgn

F.H.W.A. REGION	STATE	PROJECT NO.	SHEET NO.	TOTAL SHEETS	AS BUILT
9	ARIZ.	202-C(005)B			

202L MA 031

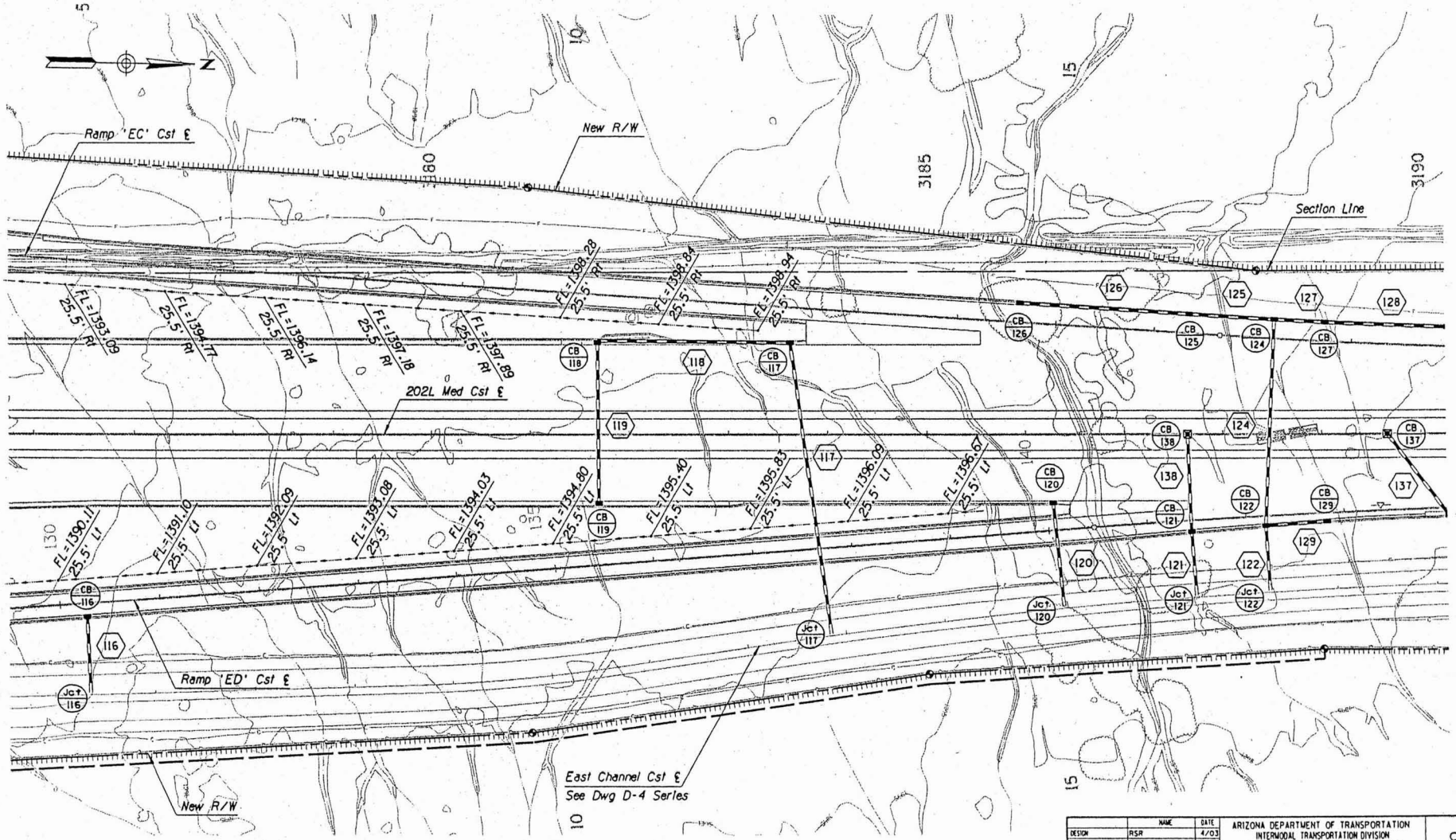

	NAME	DATE
DESIGN	RSR	4/03
DRAWN	CGS	4/03
CHECKED	CAD	4/03

Stanley Consultants INC.
2929 East Camelback Road, Suite 130
Phoenix, Arizona 85016
Phone: (602) 957-8588

ARIZONA DEPARTMENT OF TRANSPORTATION
INTERMODAL TRANSPORTATION DIVISION
ROADWAY DESIGN SERVICES

202L MAINLINE
STORM DRAIN PLAN
Sta 3176+00 to Sta 3190+00

95%
PRELIMINARY
NOT FOR CONSTRUCTION

ROUTE	LOCATION
202L	SANTAN FWY, ELLIOT ROAD - BASELINE ROAD

DWG NO. D-1.2

TRACS NO. H 5915 01C | 202-C(005)B | ___ OF ___

0472172003 gi\16110\Dgn\drainage\h5915sdb.dgn

F.H.W.A. REGION	STATE	PROJECT NO.	SHEET NO.	TOTAL SHEETS	AS BUILT
9	ARIZ.	202-C(005)B			

202L MA 031

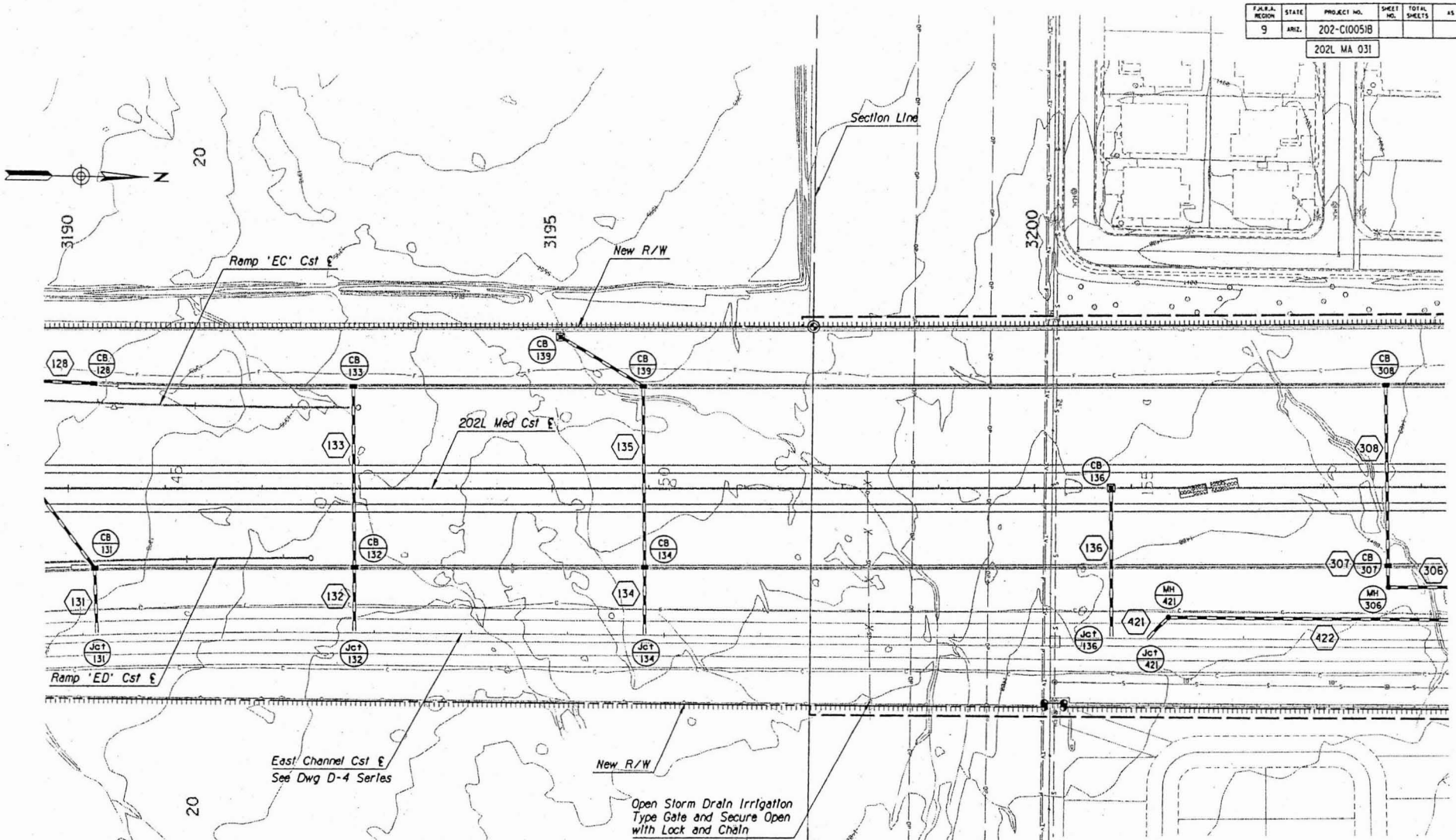

	NAME	DATE
DESIGN	RSR	4/03
DRAWN	CGS	4/03
CHECKED	CAD	4/03

Stanley Consultants inc.
2929 East Camelback Road, Suite 130
Phoenix, Arizona 85016
Phone (602) 957-6000

ARIZONA DEPARTMENT OF TRANSPORTATION
INTERMODAL TRANSPORTATION DIVISION
ROADWAY DESIGN SERVICES

202L MAINLINE
STORM DRAIN PLAN
Sta 3190+00 to Sta 3204+00

95%
PRELIMINARY
NOT FOR
CONSTRUCTION

ROUTE	LOCATION
202L	SANTAN FWY, ELLIOT ROAD - BASELINE ROAD

DWG NO. D-1.3

TRACS NO. H 5915 01C | 202-C(005)B | ___ OF ___

04/21/2003 qt\16110\Dgn\drainage\h5915sdc.dgn

DATE: | LOCATION: | REVISIONS: | FINISHED PLANS: | SURVEY NO.

F.H.W.A. REGION	STATE	PROJECT NO.	SHEET NO.	TOTAL SHEETS	AS BUILT
9	ARIZ.	202-C(005)B			

202L MA 031

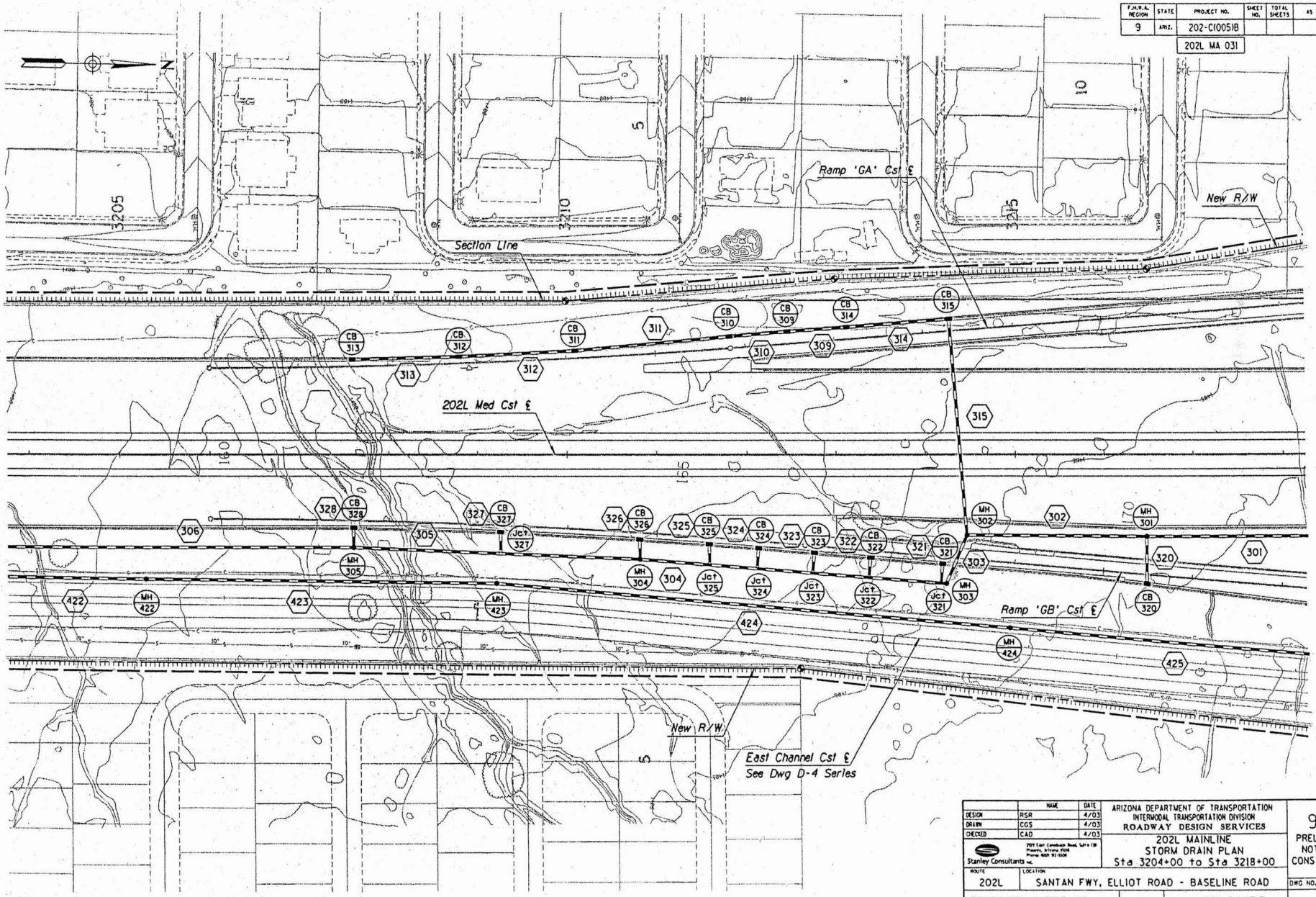

	NAME	DATE
DESIGN	RSR	4/03
DRAWN	CGS	4/03
CHECKED	CAD	4/03

Stanley Consultants inc.
2929 East Camelback Road, Suite 130
Phoenix, Arizona 85016
Phone (602) 92-9508

ARIZONA DEPARTMENT OF TRANSPORTATION
INTERMODAL TRANSPORTATION DIVISION
ROADWAY DESIGN SERVICES

202L MAINLINE
STORM DRAIN PLAN
Sta 3204+00 to Sta 3218+00

95%
PRELIMINARY
NOT FOR
CONSTRUCTION

ROUTE	LOCATION	DWG NO. D-1.4
202L	SANTAN FWY, ELLIOT ROAD - BASELINE ROAD	
TRACS NO. H 5915 01C	202-C(005)B	___ OF ___

04/21/2003 qt\16110\Dgn\drainage\h5915sdd.dgn

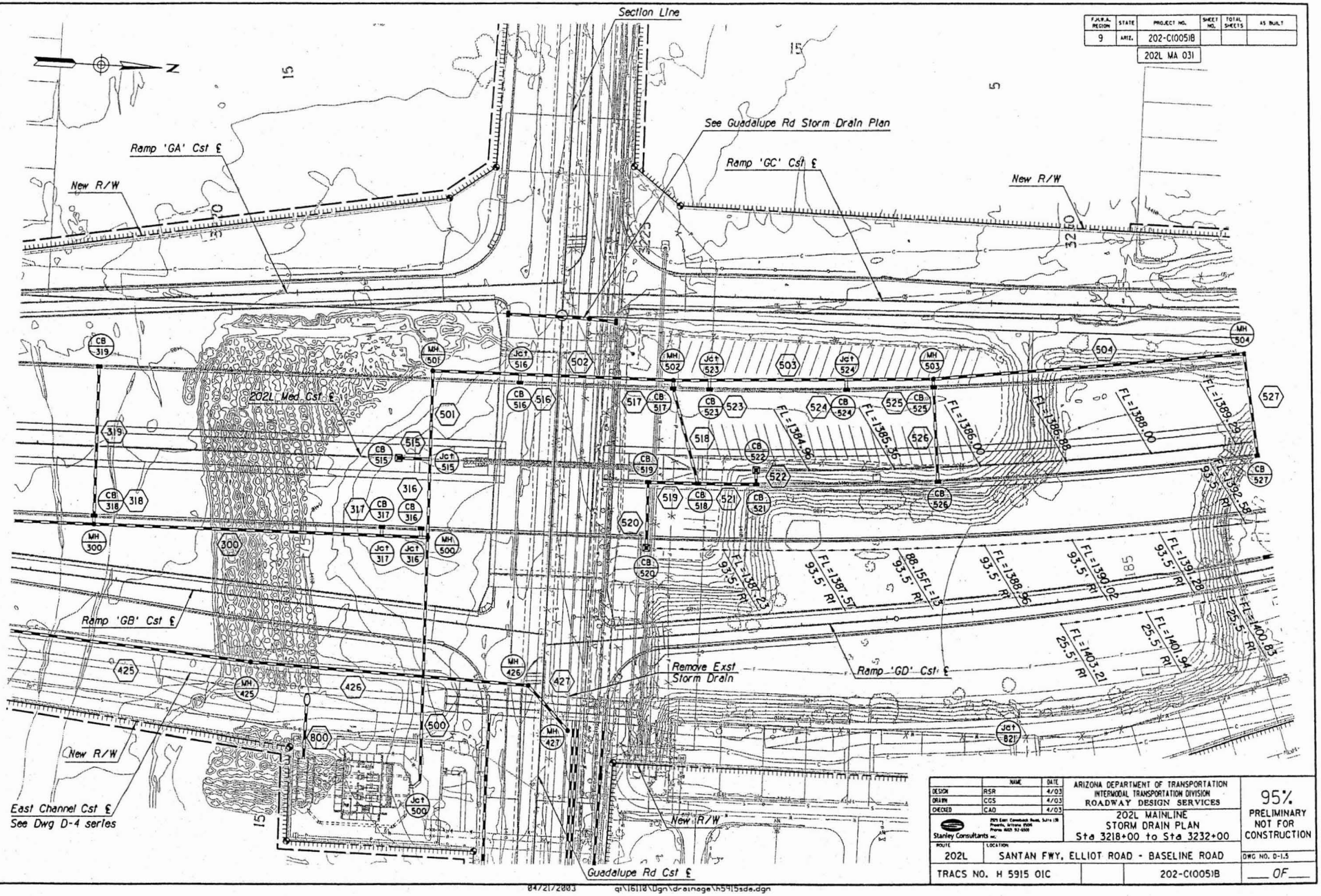

F.H.W.A. REGION	STATE	PROJECT NO.	SHEET NO.	TOTAL SHEETS	AS BUILT
9	ARIZ.	202-C(005)B			

202L MA 031

	NAME	DATE
DESIGN	RSR	4/03
DRAWN	CGS	4/03
CHECKED	CAD	4/03

Stanley Consultants Inc.
2929 East Camelback Road, Suite 139
Phoenix, Arizona 85016
Phone: (602) 957-6500

ARIZONA DEPARTMENT OF TRANSPORTATION
INTERMODAL TRANSPORTATION DIVISION
ROADWAY DESIGN SERVICES

202L MAINLINE
STORM DRAIN PLAN
Sta 3218+00 to Sta 3232+00

95%
PRELIMINARY
NOT FOR
CONSTRUCTION

ROUTE	LOCATION
202L	SANTAN FWY, ELLIOT ROAD - BASELINE ROAD

DWG NO. D-1.5

TRACS NO. H 5915 01C | 202-C(005)B | ___ OF ___

04/21/2003 qt\16118\Dgn\drainage\h5915sda.dgn

F.H.W.A. REGION	STATE	PROJECT NO.	SHEET NO.	TOTAL SHEETS	AS BUILT
9	ARIZ.	202-C(005)B			

202L MA 031

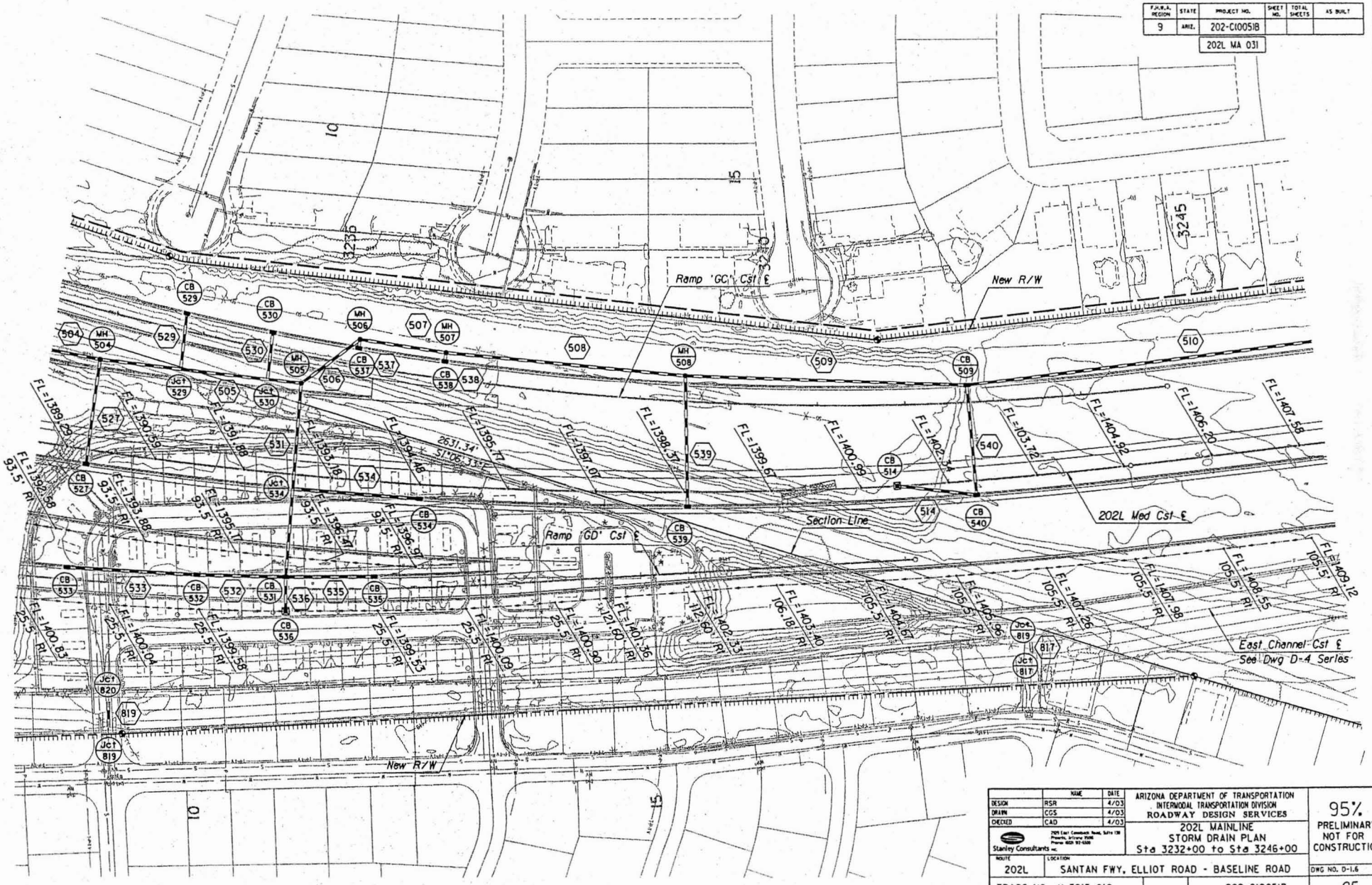

	NAME	DATE
DESIGN	RSR	4/03
DRAWN	CGS	4/03
CHECKED	CAD	4/03

Stanley Consultants Inc.
7505 East Greenback Road, Suite 130
Phoenix, Arizona 85020
Phone: (602) 957-5500

ARIZONA DEPARTMENT OF TRANSPORTATION
INTERMODAL TRANSPORTATION DIVISION
ROADWAY DESIGN SERVICES

202L MAINLINE
STORM DRAIN PLAN
Sta 3232+00 to Sta 3246+00

95%
PRELIMINARY
NOT FOR
CONSTRUCTION

ROUTE	LOCATION
202L	SANTAN FWY, ELLIOT ROAD - BASELINE ROAD

DWG NO. D-1.6

TRACS NO. H 5915 01C | 202-C(005)B | ___ OF ___

04/22/2003 qt\16110\Dgn\drainage\h5915sdf.dgn

F.H.W.A. REGION	STATE	PROJECT NO.	SHEET NO.	TOTAL SHEETS	AS BUILT
9	ARIZ.	202-C(005)B			

202L MA 031

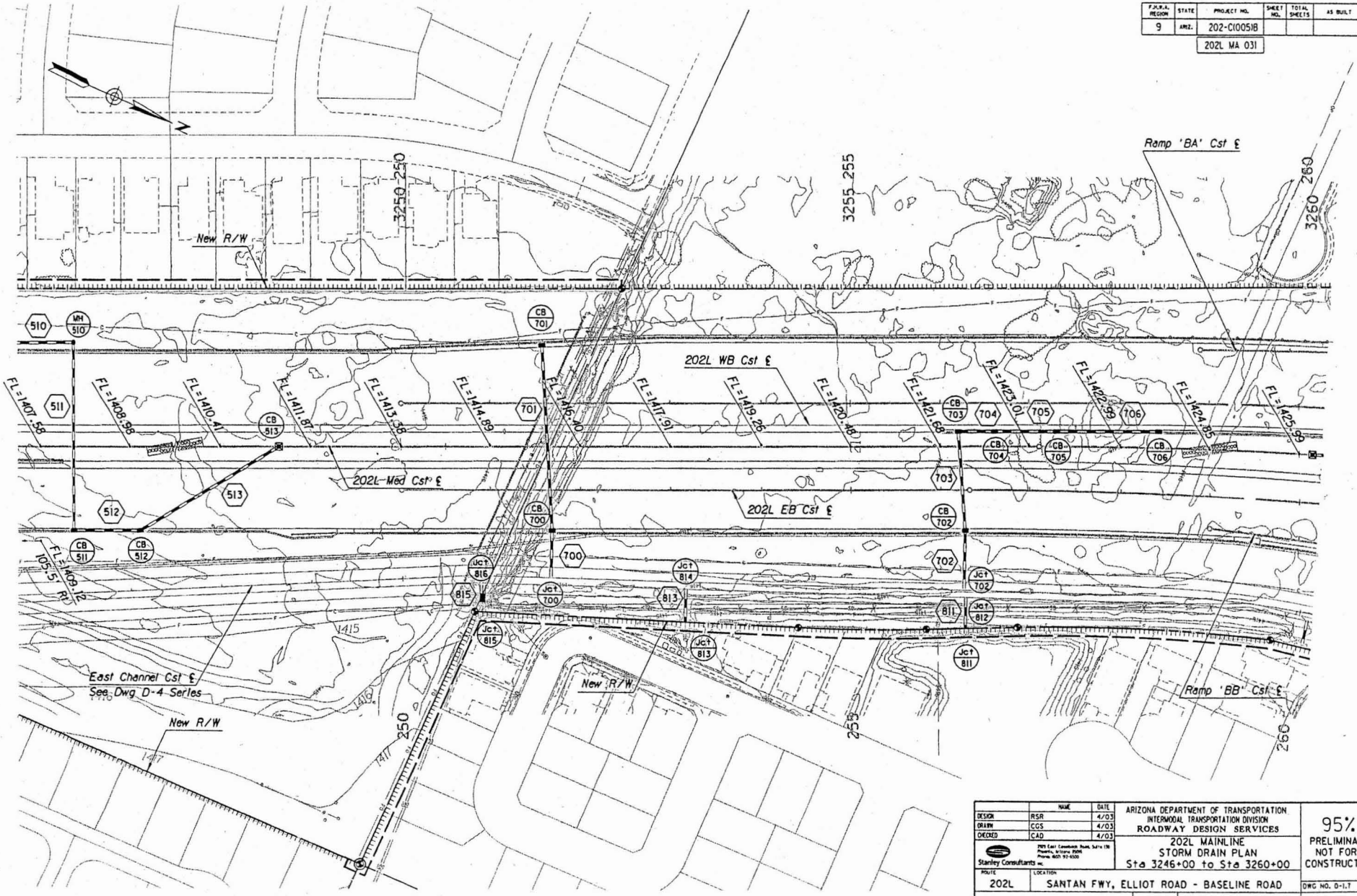

	NAME	DATE
DESIGN	RSR	4/03
DRAWN	CGS	4/03
CHECKED	CAD	4/03

Stanley Consultants inc.
7979 East Cavalcade Road, Suite 170
Phoenix, Arizona 85054
Phone: (602) 92-4500

ARIZONA DEPARTMENT OF TRANSPORTATION
INTERMODAL TRANSPORTATION DIVISION
ROADWAY DESIGN SERVICES

202L MAINLINE
STORM DRAIN PLAN
Sta 3246+00 to Sta 3260+00

95%
PRELIMINARY
NOT FOR
CONSTRUCTION

ROUTE	LOCATION
202L	SANTAN FWY, ELLIOT ROAD - BASELINE ROAD

DWG NO. D-1.7

TRACS NO. H 5915 01C | 202-C(005)B | ___ OF ___

04/21/2003 gr\16110\Dgn\drainage\h5915sdg.dgn

F.H.W.A. REGION	STATE	PROJECT NO.	SHEET NO.	TOTAL SHEETS	AS BUILT
9	ARIZ.	202-C(005)B			
		202L MA 031			

	NAME	DATE
DESIGN	RSR	4/03
DRAWN	CGS	4/03
CHECKED	CAD	4/03

Stanley Consultants INC.
2526 East Cornhusker Road, Suite 130
Phoenix, Arizona 85028
Phone: (602) 992-6500

ARIZONA DEPARTMENT OF TRANSPORTATION
INTERMODAL TRANSPORTATION DIVISION
ROADWAY DESIGN SERVICES

202L MAINLINE
STORM DRAIN PLAN
Sta 3260+00 to Sta 3274+00

95%
PRELIMINARY
NOT FOR
CONSTRUCTION

ROUTE	LOCATION	DWG NO. D-1.8
202L	SANTAN FWY, ELLIOT ROAD - BASELINE ROAD	
TRACS NO. H 5915 01C	202-C(005)B	___ OF ___

04/21/2003 q:\16110\Dgn\drainage\h5915sdh.dgn

F.H.W.A. REGION	STATE	PROJECT NO.	SHEET NO.	TOTAL SHEETS	AS BUILT
9	ARIZ.	202-C(005)B			
		202L MA 031			

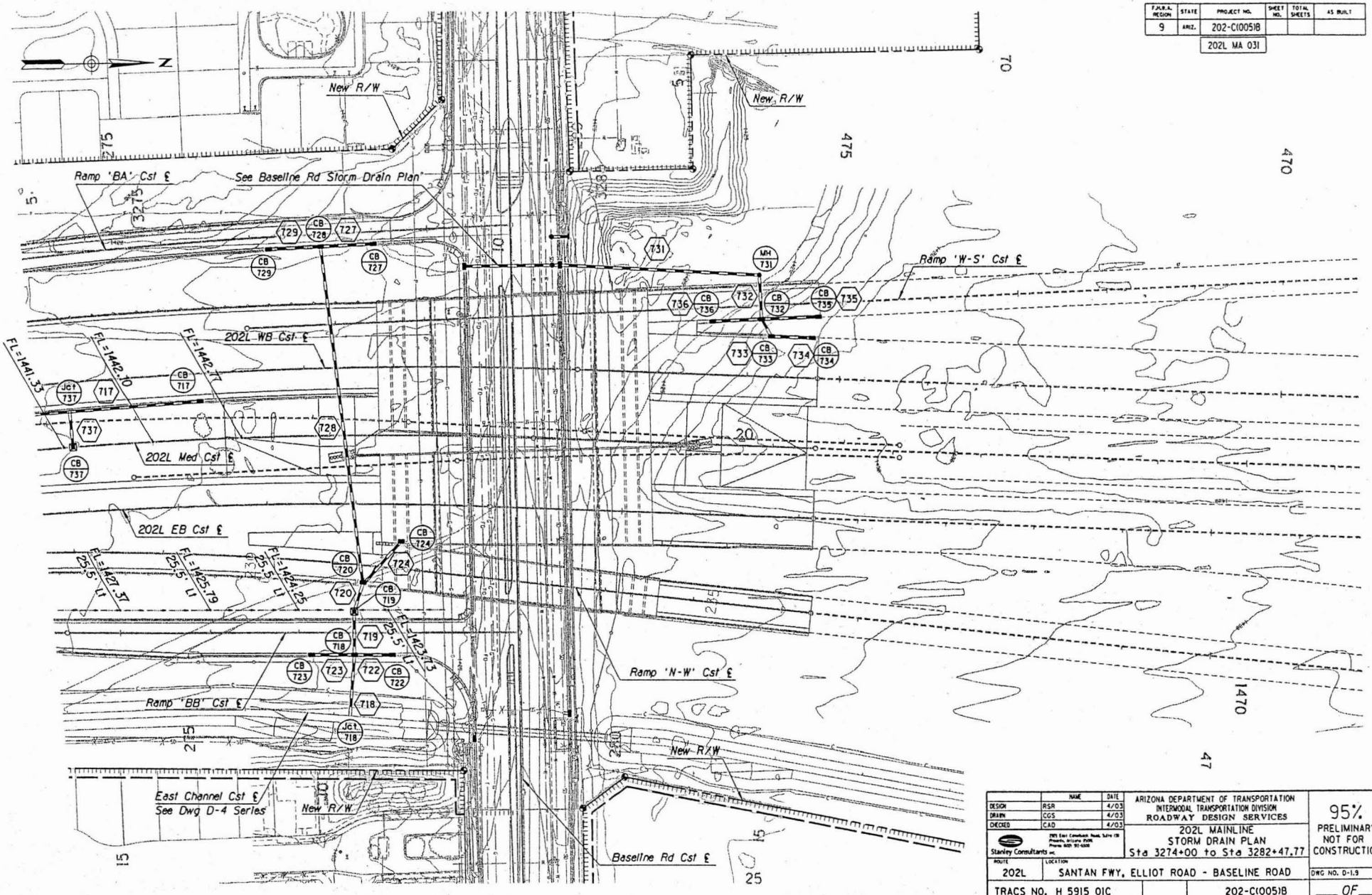

	NAME	DATE
DESIGN	RSR	4/03
DRAWN	CGS	4/03
CHECKED	CAD	4/03

Stanley Consultants INC.

ARIZONA DEPARTMENT OF TRANSPORTATION
INTERMODAL TRANSPORTATION DIVISION
ROADWAY DESIGN SERVICES

202L MAINLINE
STORM DRAIN PLAN
Sta 3274+00 to Sta 3282+47.77

95%
PRELIMINARY
NOT FOR
CONSTRUCTION

ROUTE	LOCATION	DWG NO. D-1.9
202L	SANTAN FWY, ELLIOT ROAD - BASELINE ROAD	

TRACS NO. H 5915 01C | 202-C(005)B | ___ OF ___

04/21/2003 gt\16110\Dgn\drainage\h5915sdi.dgn

F.A.H.A. REGION	STATE	PROJECT NO.	SHEET NO.	TOTAL SHEETS	AS BUILT
9	ARIZ.	202-C(005)B			
		202L MA 031			

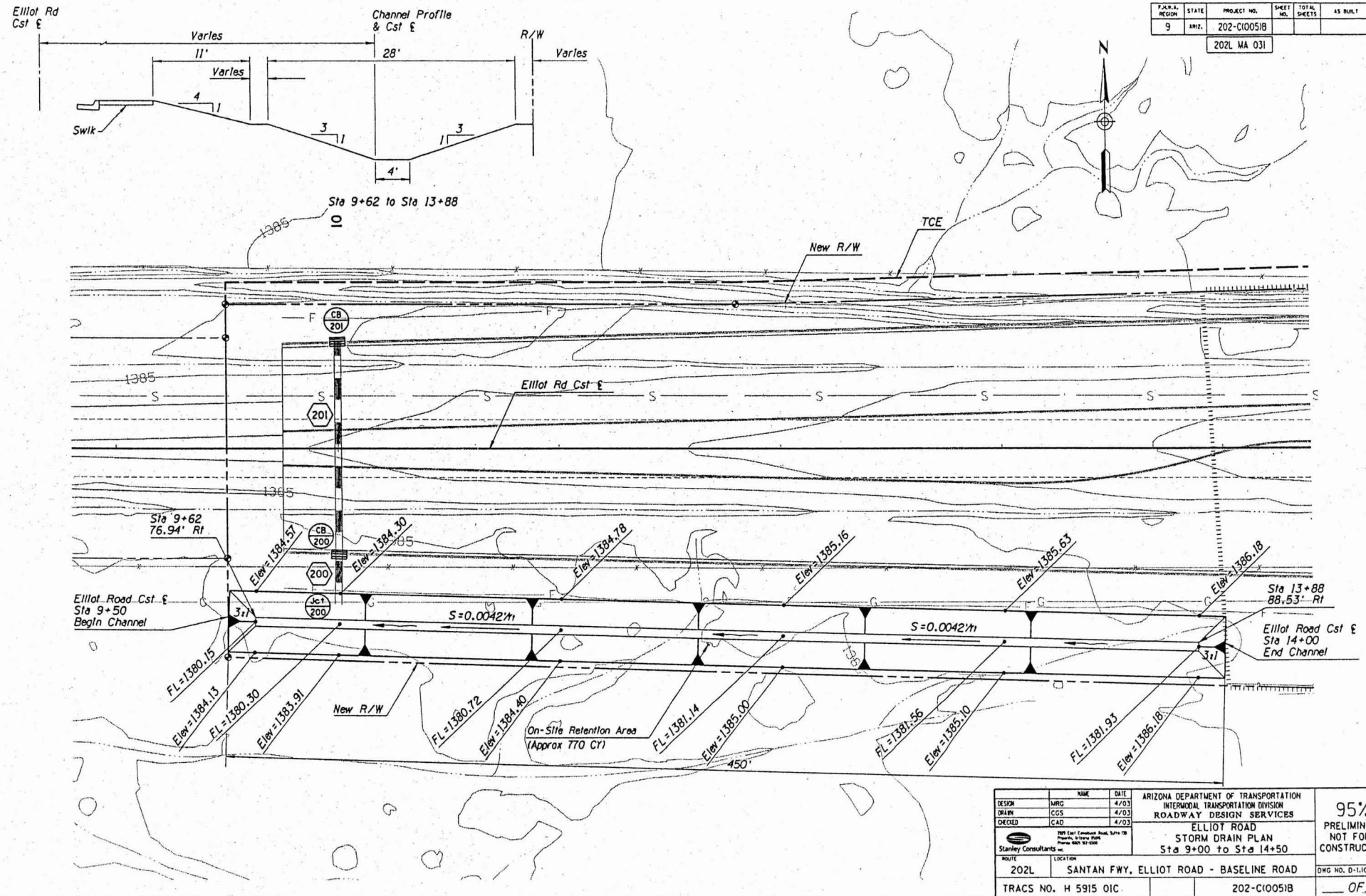

	NAME	DATE
DESIGN	MRG	4/03
DRAWN	CGS	4/03
CHECKED	CAD	4/03

Stanley Consultants inc.
7878 East Cavalcade Road, Suite 110
Phoenix, Arizona 85048
Phone: (602) 92-0505

ARIZONA DEPARTMENT OF TRANSPORTATION
INTERMODAL TRANSPORTATION DIVISION
ROADWAY DESIGN SERVICES

ELLIOT ROAD
STORM DRAIN PLAN
Sta 9+00 to Sta 14+50

95%
PRELIMINARY
NOT FOR
CONSTRUCTION

ROUTE: 202L
LOCATION: SANTAN FWY. ELLIOT ROAD - BASELINE ROAD
DWG NO. D-1.10

TRACS NO. H 5915 01C
202-C(005)B
___ OF ___

04/21/2003 gt\16110\dgn\drainage\h5915adj.dgn

DATE- | LOCATION- | REVISIONS- | FINISHED PLANS- | SURVEY NO. | DATE- | LOCATION- | REVISIONS- | FINISHED PLANS- | SURVEY NO.

F.H.W.A. REGION	STATE	PROJECT NO.	SHEET NO.	TOTAL SHEETS	AS BUILT
9	ARIZ.	202-C(005)B			
		202L MA 031			

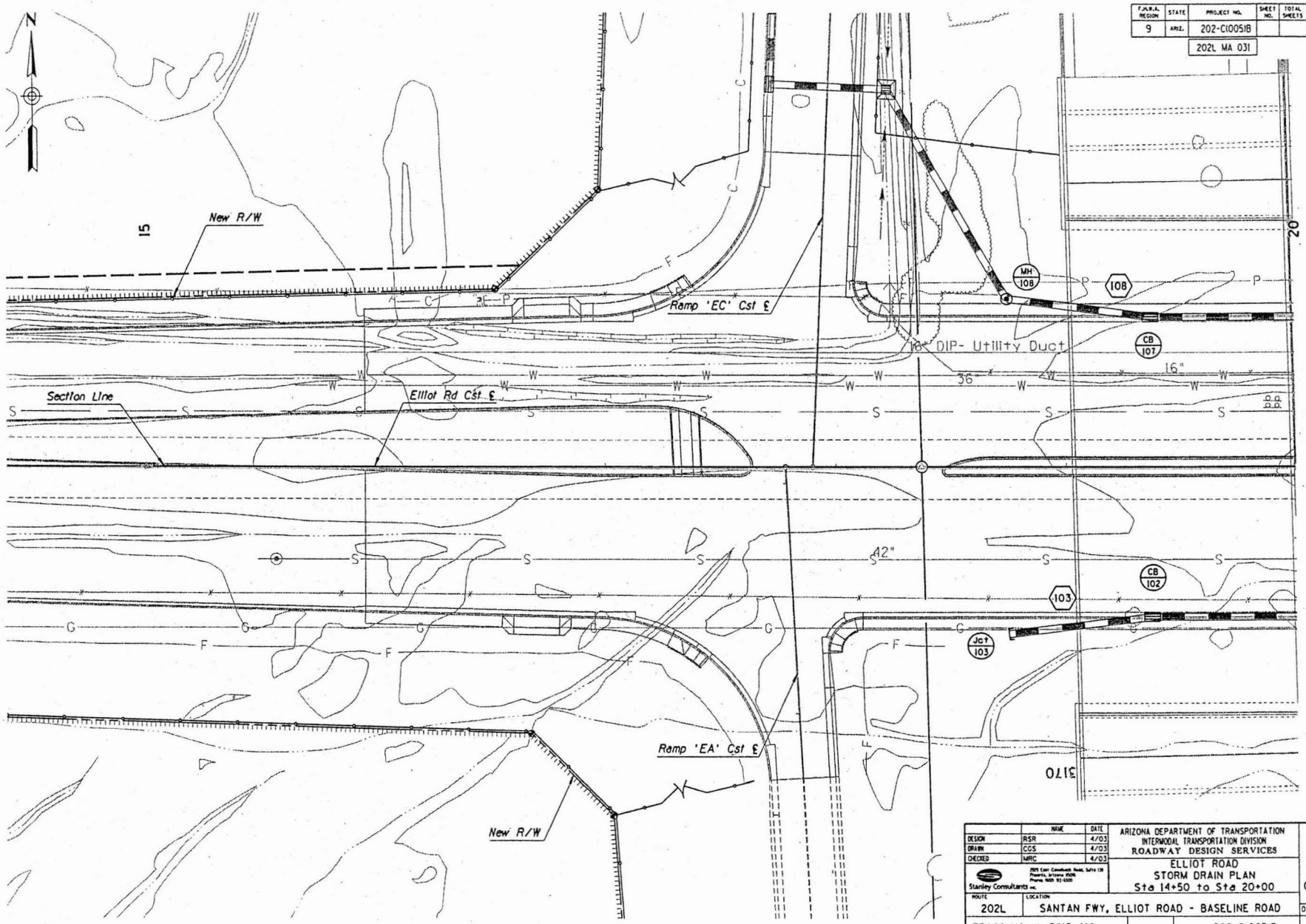

	NAME	DATE
DESIGN	RSR	4/03
DRAWN	CGS	4/03
CHECKED	MRC	4/03

Stanley Consultants inc.
7025 East Greenway Road, Suite 130
Phoenix, Arizona 85035
Phone: (602) 92-5500

ARIZONA DEPARTMENT OF TRANSPORTATION
INTERMODAL TRANSPORTATION DIVISION
ROADWAY DESIGN SERVICES

ELLIOT ROAD
STORM DRAIN PLAN
Sta 14+50 to Sta 20+00

95%
PRELIMINARY
NOT FOR
CONSTRUCTION

ROUTE	LOCATION	
202L	SANTAN FWY, ELLIOT ROAD - BASELINE ROAD	DWG NO. D-1.11
TRACS NO. H 5915 01C	202-C(005)B	___ OF ___

04/22/2003 g:\16110\Dgn\drainage\h5915dk.dgn

F.H.W.A. REGION	STATE	PROJECT NO.	SHEET NO.	TOTAL SHEETS	AS BUILT
9	ARIZ.	202-C(005)B			
		202L MA 031			

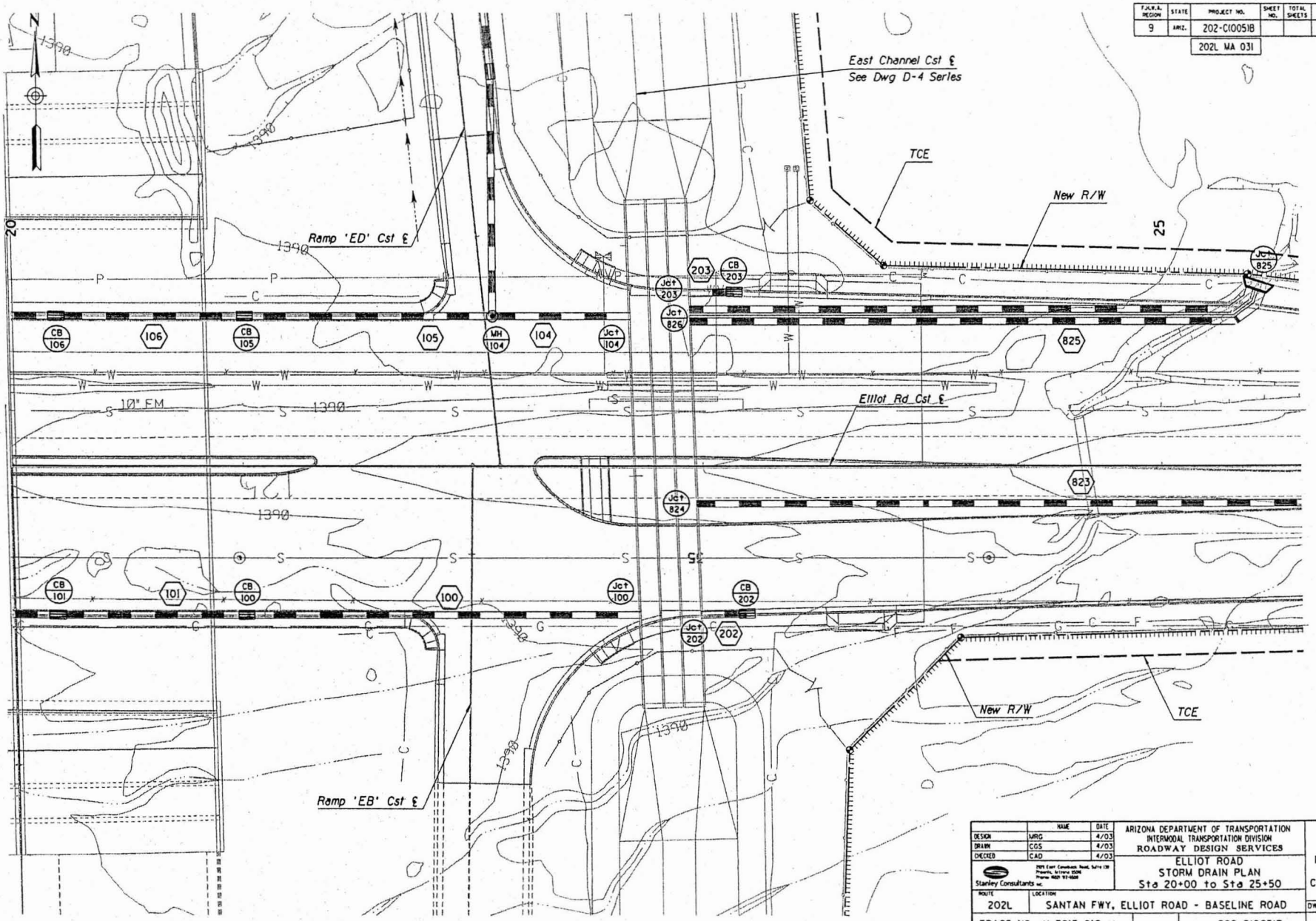

	NAME	DATE
DESIGN	MRG	4/03
DRAWN	CGS	4/03
CHECKED	CAD	4/03

Stanley Consultants INC.
7025 East Greenway Road, Suite 130
Phoenix, Arizona 85054
Phone (602) 953-8008

ARIZONA DEPARTMENT OF TRANSPORTATION
INTERMODAL TRANSPORTATION DIVISION
ROADWAY DESIGN SERVICES

ELLIOT ROAD
STORM DRAIN PLAN
Sta 20+00 to Sta 25+50

95%
PRELIMINARY
NOT FOR
CONSTRUCTION

ROUTE	LOCATION
202L	SANTAN FWY, ELLIOT ROAD - BASELINE ROAD

DWG NO. D-1.12

TRACS NO. H 5915 01C | 202-C(005)B | ___ OF ___

04/21/2003 q:\16110\Dgn\drainage\h5915sdl.dgn

F.H.W.A. REGION	STATE	PROJECT NO.	SHEET NO.	TOTAL SHEETS	AS BUILT
9	ARIZ.	202-C(005)B			
		202L MA 031			

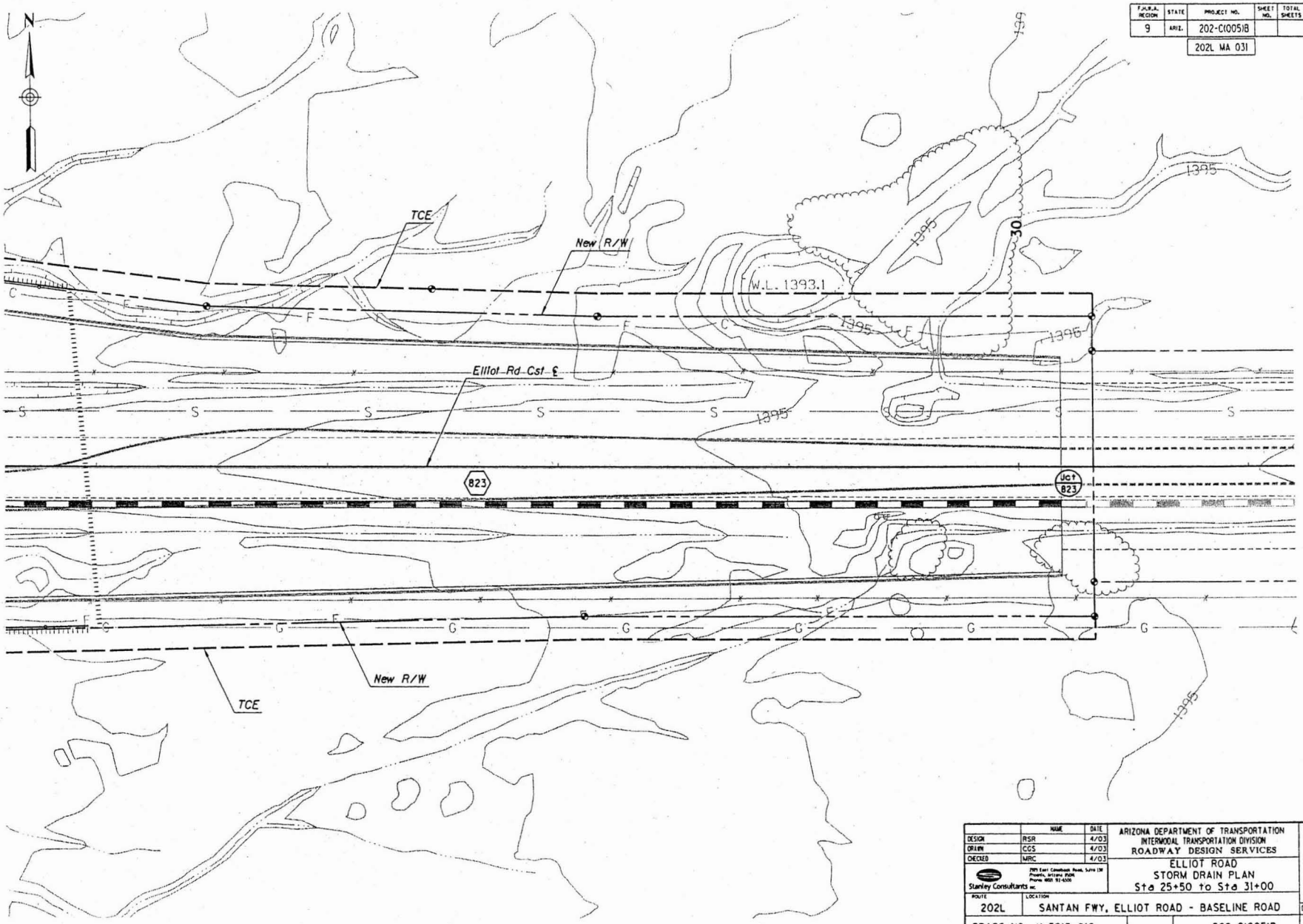

	NAME	DATE
DESIGN	RSR	4/03
DRAWN	CGS	4/03
CHECKED	MRC	4/03

Stanley Consultants inc.
7501 East Camelback Road, Suite 130
Phoenix, Arizona 85251
Phone: (602) 921-6500

ARIZONA DEPARTMENT OF TRANSPORTATION
INTERMODAL TRANSPORTATION DIVISION
ROADWAY DESIGN SERVICES

ELLIOT ROAD
STORM DRAIN PLAN
Sta 25+50 to Sta 31+00

95%
PRELIMINARY
NOT FOR CONSTRUCTION

ROUTE	LOCATION
202L	SANTAN FWY, ELLIOT ROAD - BASELINE ROAD

DWG NO. D-1.13

TRACS NO. H 5915 01C | 202-C(005)B | ___ OF ___

04/21/2003 qt\16110\Dgn\drainage\h5915sdm.dgn

F.H.W.A. REGION	STATE	PROJECT NO.	SHEET NO.	TOTAL SHEETS	AS BUILT
9	ARIZ.	202-C(005)B			

202L MA 031

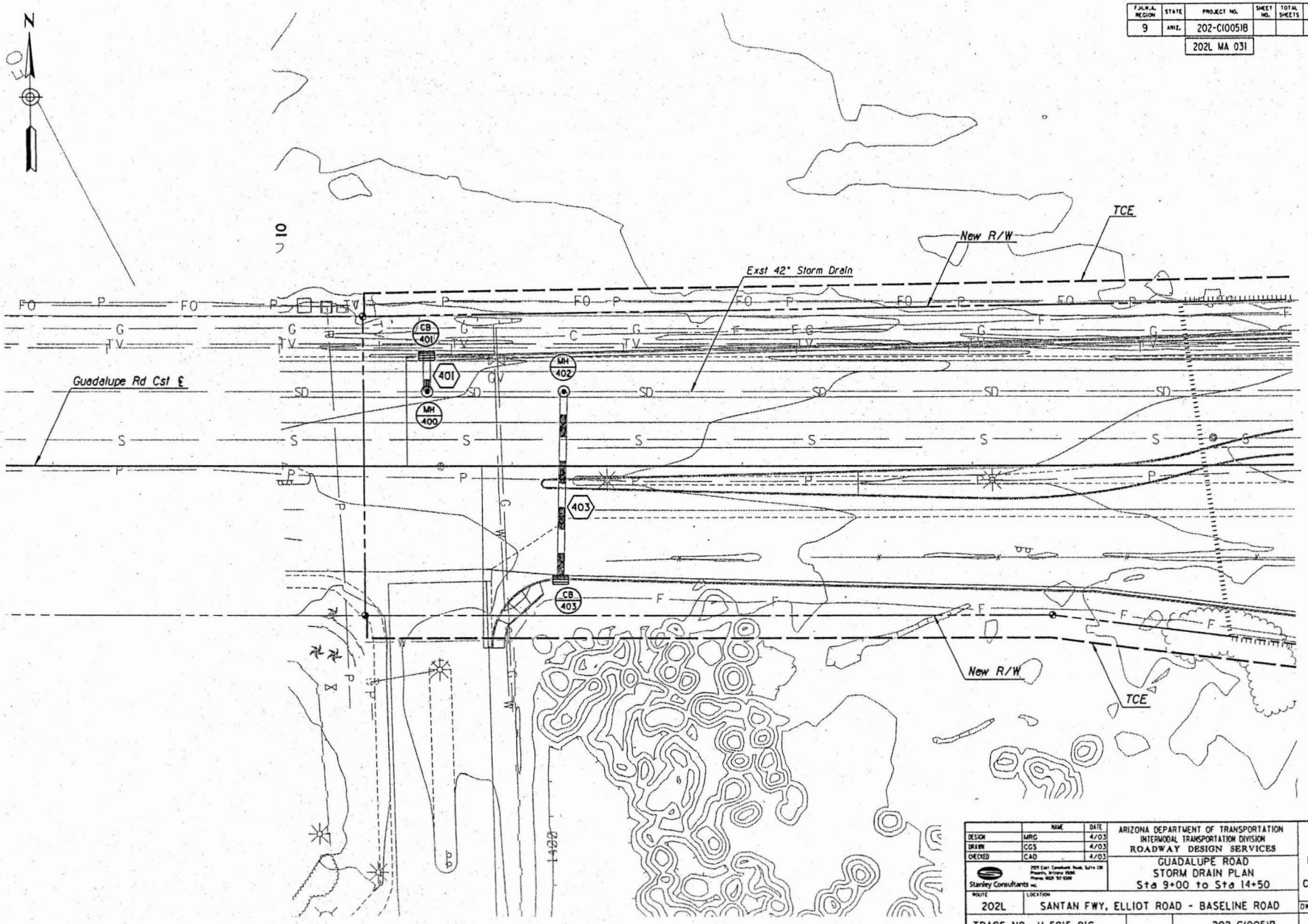

	NAME	DATE
DESIGN	MRG	4/03
DRAWN	CGS	4/03
CHECKED	CAD	4/03

Stanley Consultants inc.

ARIZONA DEPARTMENT OF TRANSPORTATION
INTERMODAL TRANSPORTATION DIVISION
ROADWAY DESIGN SERVICES

GUADALUPE ROAD
STORM DRAIN PLAN
Sta 9+00 to Sta 14+50

95%
PRELIMINARY
NOT FOR
CONSTRUCTION

ROUTE	LOCATION
202L	SANTAN FWY, ELLIOT ROAD - BASELINE ROAD

DWG NO. D-1.14

TRACS NO. H 5915 01C | 202-C(005)B | ___ OF ___

04/21/2003 qt\16110\Dgn\drainage\h5915sdn.dgn

F.H.W.A. REGION	STATE	PROJECT NO.	SHEET NO.	TOTAL SHEETS	AS BUILT
9	ARIZ.	202-C(005)B			

202L MA 031

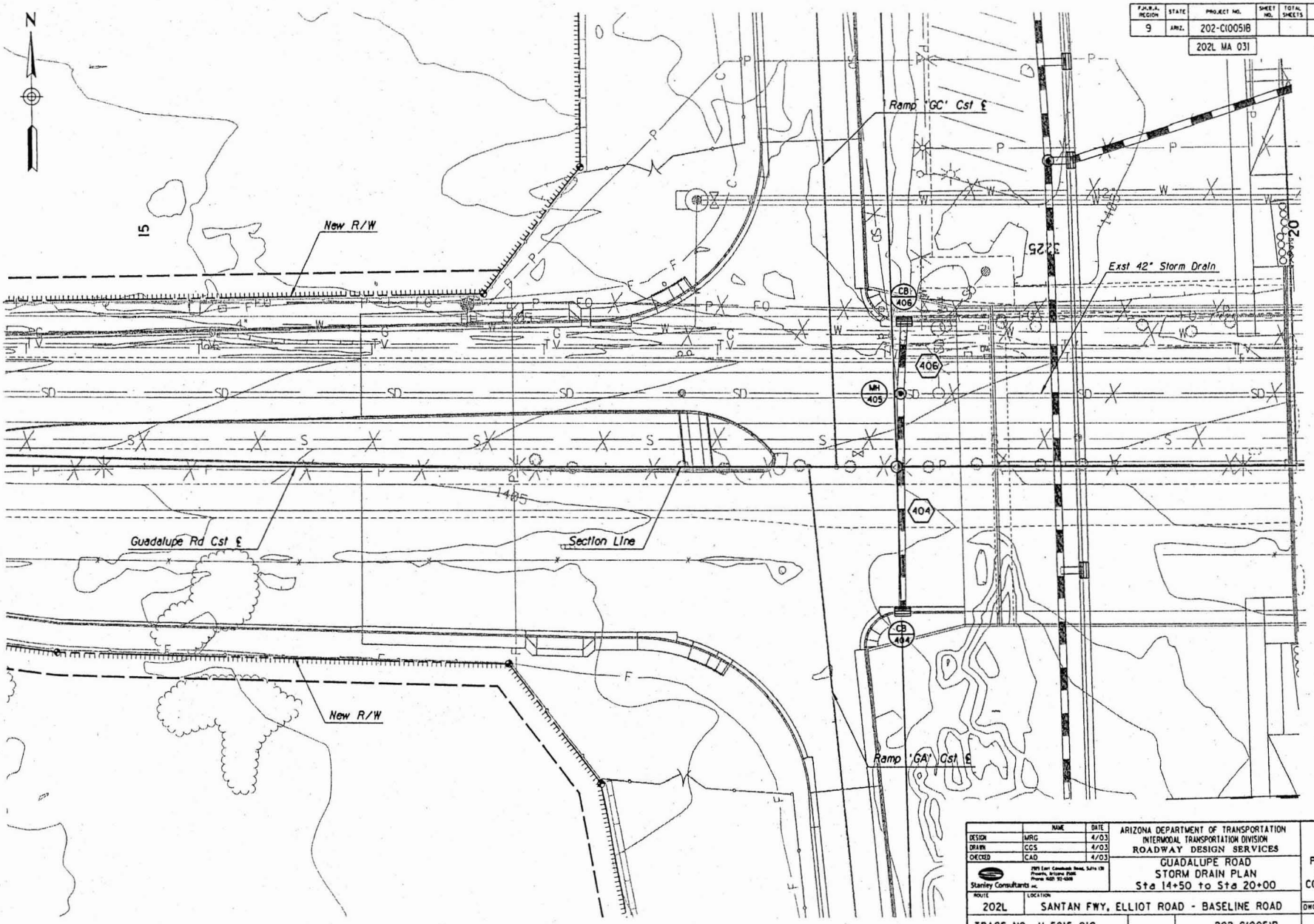

	NAME	DATE
DESIGN	MRG	4/03
DRAWN	CGS	4/03
CHECKED	CAD	4/03

Stanley Consultants inc.
2929 East Camelback Road, Suite 130
Phoenix, Arizona 85016
Phone (602) 952-0200

ARIZONA DEPARTMENT OF TRANSPORTATION
INTERMODAL TRANSPORTATION DIVISION
ROADWAY DESIGN SERVICES

GUADALUPE ROAD
STORM DRAIN PLAN
Sta 14+50 to Sta 20+00

95%
PRELIMINARY
NOT FOR CONSTRUCTION

ROUTE	LOCATION	
202L	SANTAN FWY, ELLIOT ROAD - BASELINE ROAD	DWG NO. D-1.15
TRACS NO. H 5915 01C	202-C(005)B	___ OF ___

04/21/2003 qt\16110\Dgn\drainage\h5915sdo.dgn

F.H.W.A. REGION	STATE	PROJECT NO.	SHEET NO.	TOTAL SHEETS	AS BUILT
9	ARIZ.	202-C(005)B			
		202L MA 031			

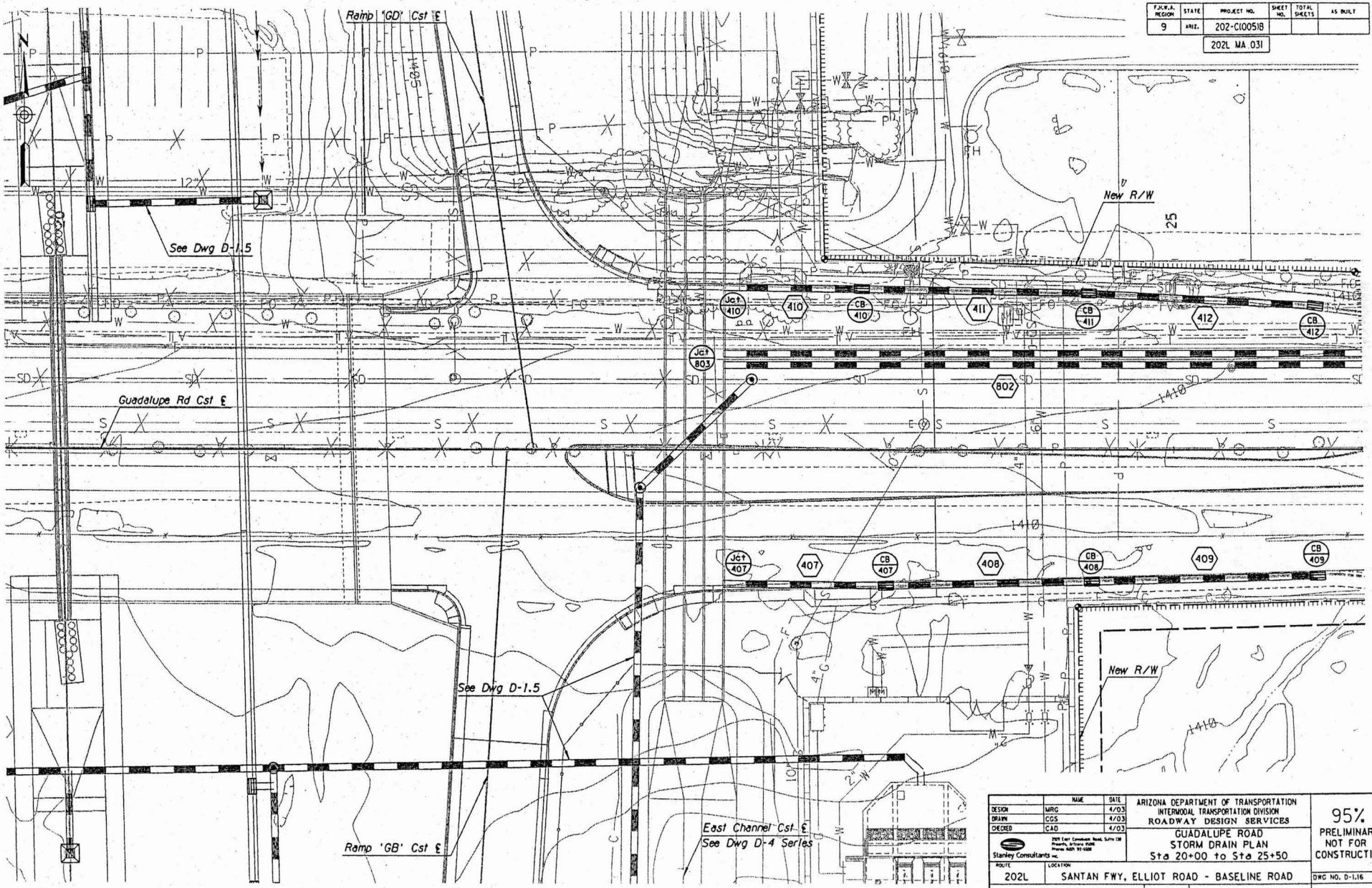

	NAME	DATE
DESIGN	MRG	4/03
DRAWN	CGS	4/03
CHECKED	CAD	4/03

Stanley Consultants INC.
2929 East Camelback Road, Suite 130
Phoenix, Arizona 85016
Phone: (602) 957-6600

ARIZONA DEPARTMENT OF TRANSPORTATION
INTERMODAL TRANSPORTATION DIVISION
ROADWAY DESIGN SERVICES

GUADALUPE ROAD
STORM DRAIN PLAN
Sta 20+00 to Sta 25+50

95%
PRELIMINARY
NOT FOR
CONSTRUCTION

ROUTE	LOCATION	DWG NO. D-1.16
202L	SANTAN FWY, ELLIOT ROAD - BASELINE ROAD	

TRACS NO. H 5915 01C | 202-C(005)B | ___ OF ___

04/22/2003 gt\16110\Dgn\drainage\h5915sdp.dgn

F.H.W.A. REGION	STATE	PROJECT NO.	SHEET NO.	TOTAL SHEETS	AS BUILT
9	ARIZ.	202-C(005)B			

202L MA 031

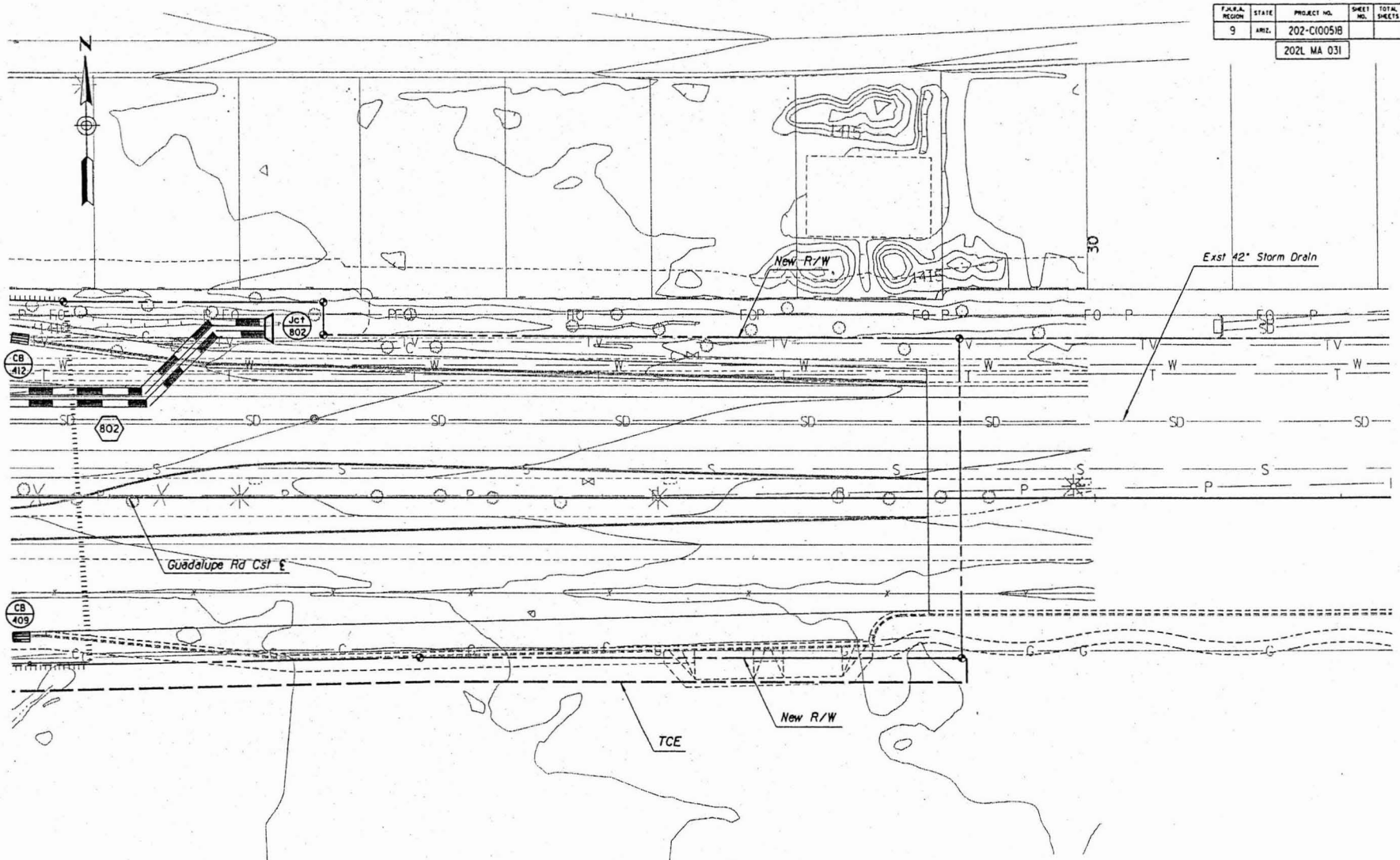

	NAME	DATE
DESIGN	RSR	4/03
DRAWN	CGS	4/03
CHECKED	MRC	4/03

Stanley Consultants inc.
3575 East Camelback Road, Suite 130
Phoenix, Arizona 85018
Phone: 602 93-1005

ARIZONA DEPARTMENT OF TRANSPORTATION
INTERMODAL TRANSPORTATION DIVISION
ROADWAY DESIGN SERVICES

GUADALUPE ROAD
STORM DRAIN PLAN
Sta 25+50 to 31+00

95%
PRELIMINARY
NOT FOR
CONSTRUCTION

ROUTE: 202L
LOCATION: SANTAN FWY, ELLIOT ROAD - BASELINE ROAD

DWG NO. D-1.17

TRACS NO. H 5915 01C

202-C(005)B

___ OF ___

04/21/2003 q:\16110\Dgn\drainage\h5915sdq.dgn

F.A.H.W.A. REGION	STATE	PROJECT NO.	SHEET NO.	TOTAL SHEETS	AS BUILT
9	ARIZ.	202-C(005)B			
		202L MA 031			

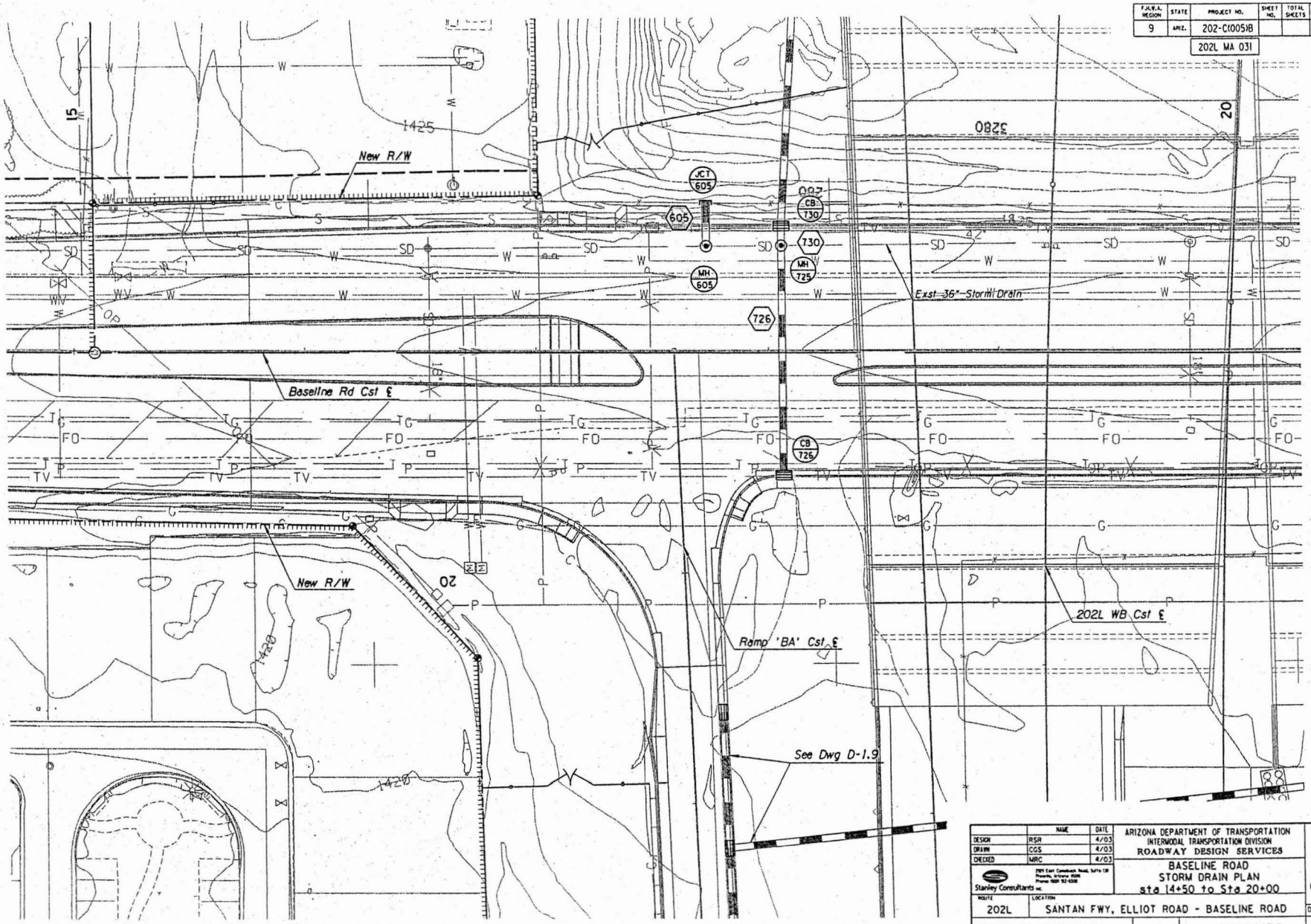

	NAME	DATE
DESIGN	RSR	4/03
DRAWN	CGS	4/03
CHECKED	MRC	4/03

Stanley Consultants INC.
7501 East Greenway Road, Suite 130
Phoenix, Arizona 85026
Phone: (602) 912-9300

ARIZONA DEPARTMENT OF TRANSPORTATION
INTERMODAL TRANSPORTATION DIVISION
ROADWAY DESIGN SERVICES

BASELINE ROAD
STORM DRAIN PLAN
sta 14+50 to Sta 20+00

95%
PRELIMINARY
NOT FOR
CONSTRUCTION

ROUTE	LOCATION	DWG NO. D-1.18
202L	SANTAN FWY, ELLIOT ROAD - BASELINE ROAD	
TRACS NO. H 5915 01C	202-C(005)B	___ OF ___

04/21/2003 qt\16110\Dgn\drainage\h5915sds.dgn

F.H.W.A. REGION	STATE	PROJECT NO.	SHEET NO.	TOTAL SHEETS	AS BUILT
9	ARIZ.	202-C(005)B			

202L MA 031

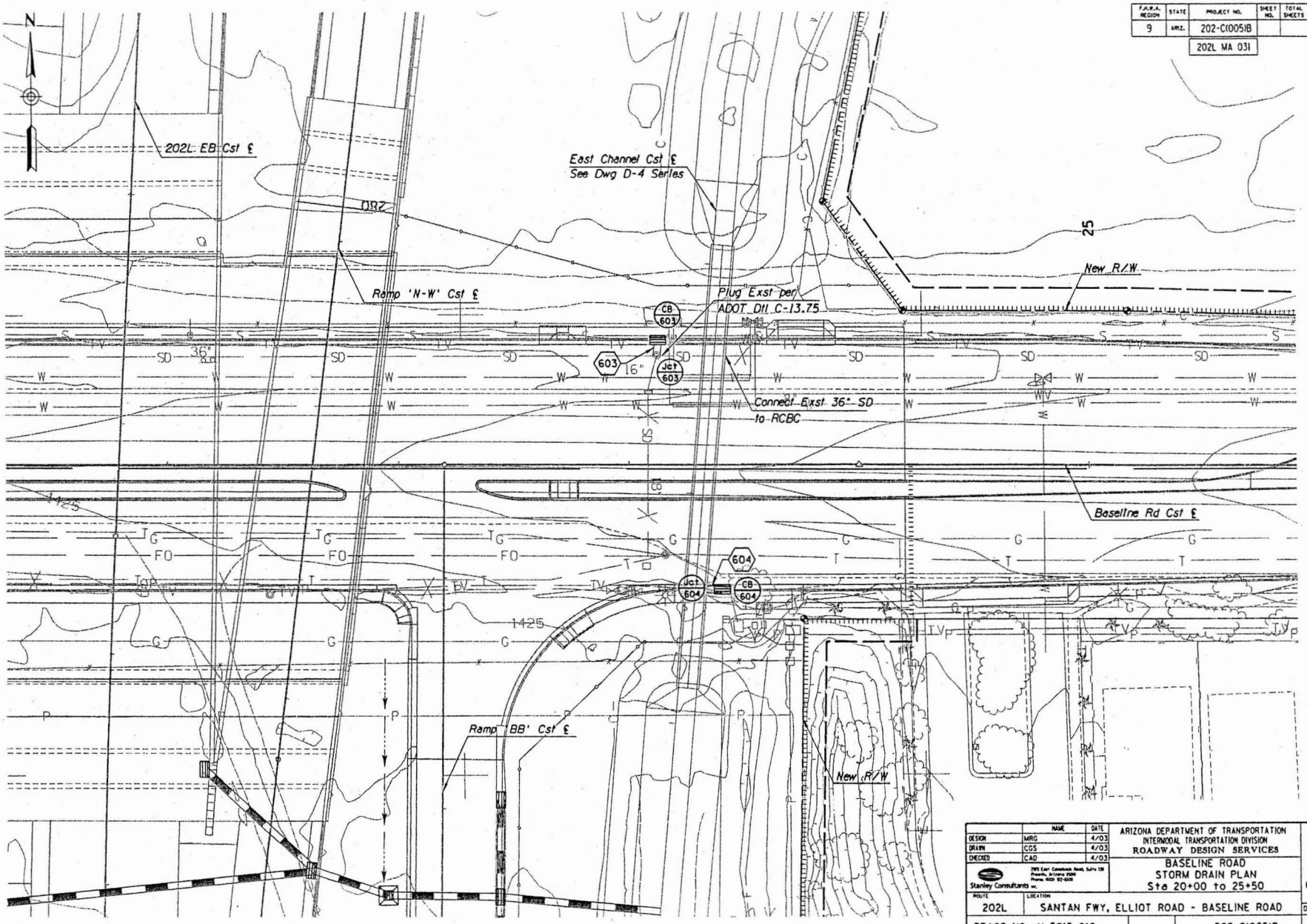

	NAME	DATE
DESIGN	MRG	4/03
DRAWN	CGS	4/03
CHECKED	CAD	4/03

Stanley Consultants Inc.
7095 East Camelback Road, Suite 130
Phoenix, Arizona 85251
Phone: (602) 92-0005

ARIZONA DEPARTMENT OF TRANSPORTATION
INTERMODAL TRANSPORTATION DIVISION
ROADWAY DESIGN SERVICES

BASELINE ROAD
STORM DRAIN PLAN
Sta 20+00 to 25+50

95%
PRELIMINARY
NOT FOR
CONSTRUCTION

ROUTE: 202L
LOCATION: SANTAN FWY, ELLIOT ROAD - BASELINE ROAD
DWG NO. D-1.19

TRACS NO. H 5915 01C
202-C(005)B
___ OF ___

04/21/2003 gr\16110\Dgn\drainage\h5915sdt.dgn

F.H.W.A. REGION	STATE	PROJECT NO.	SHEET NO.	TOTAL SHEETS	AS BUILT
9	ARIZ.	202-C(005)B			
		202L MA 031			

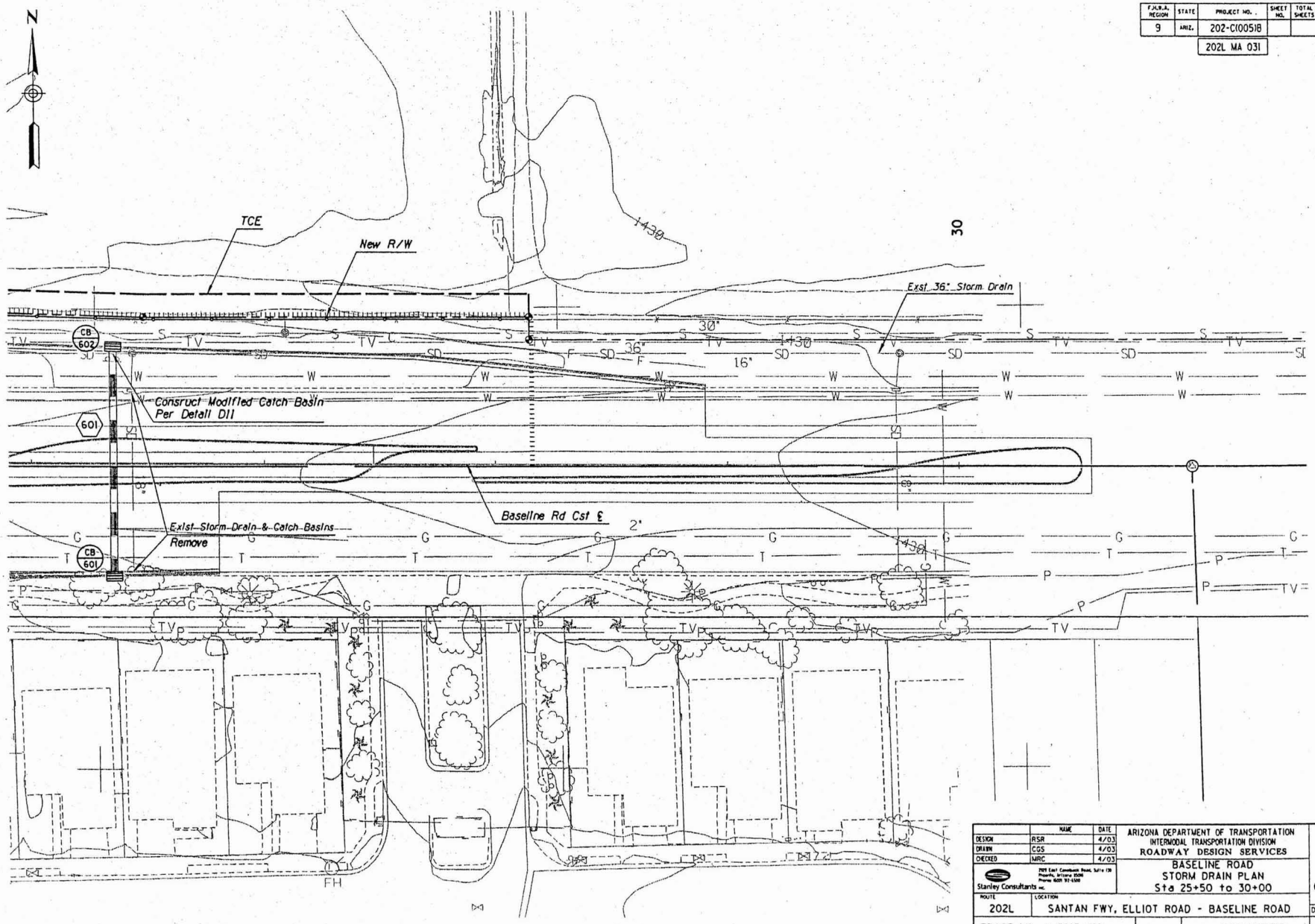

	NAME	DATE
DESIGN	RSR	4/03
DRAWN	CGS	4/03
CHECKED	MRC	4/03

Stanley Consultants inc.
2929 East Camelback Road, Suite 130
Phoenix, Arizona 85016
Phone: (602) 957-6500

ARIZONA DEPARTMENT OF TRANSPORTATION
INTERMODAL TRANSPORTATION DIVISION
ROADWAY DESIGN SERVICES

BASELINE ROAD
STORM DRAIN PLAN
Sta 25+50 to 30+00

95%
PRELIMINARY
NOT FOR
CONSTRUCTION

ROUTE	LOCATION	DWG NO. D-1.20
202L	SANTAN FWY, ELLIOT ROAD - BASELINE ROAD	
TRACS NO. H 5915 01C	202-C(005)B	___ OF ___

04/21/2003 qt\16110\Dgn\drainage\h5915sdu.dgn

F.H.W.A. REGION	STATE	PROJECT NO.	SHEET NO.	TOTAL SHEETS	AS BUILT
9	ARIZ.	202-C(005)B			
		202L MA 031			

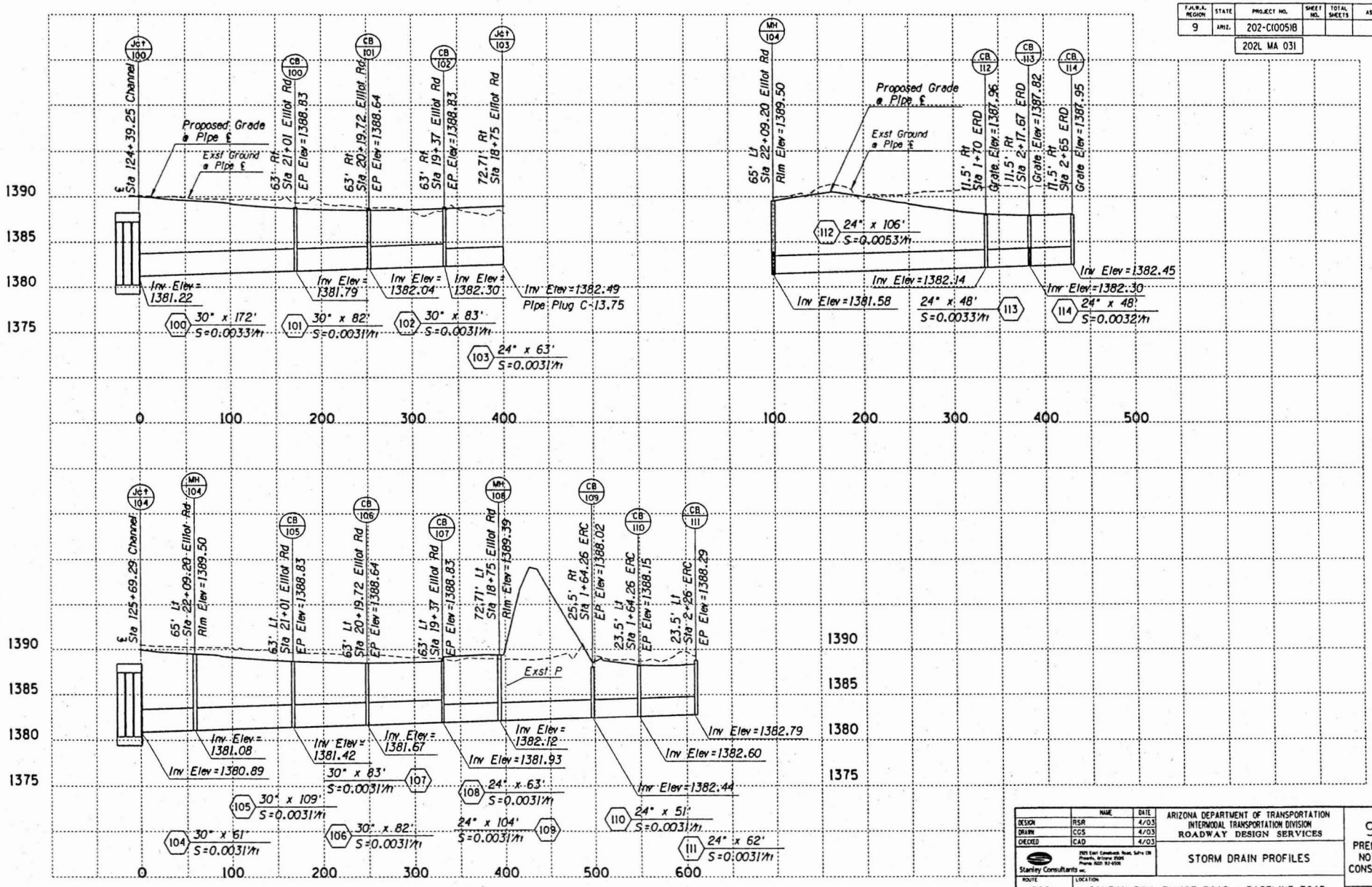

	NAME	DATE
DESIGN	RSR	4/03
DRAWN	CGS	4/03
CHECKED	CAD	4/03

Stanley Consultants inc.
2525 East Camelback Road, Suite 130
Phoenix, Arizona 85016
Phone: (602) 957-6500

ARIZONA DEPARTMENT OF TRANSPORTATION
INTERMODAL TRANSPORTATION DIVISION
ROADWAY DESIGN SERVICES

STORM DRAIN PROFILES

95%
PRELIMINARY
NOT FOR CONSTRUCTION

ROUTE	LOCATION	DWG NO. D-2.1
202L	SANTAN FWY, ELLIOT ROAD - BASELINE ROAD	
TRACS NO. H 5915 01C	202-C(005)B	___ OF ___

04/23/2003 gr\16118\Dgn\drainage\h5915sdp01.dgn

F.H.W.A. REGION	STATE	PROJECT NO.	SHEET NO.	TOTAL SHEETS	AS BUILT
9	ARIZ.	202-C(005)B			
		202L MA 031			

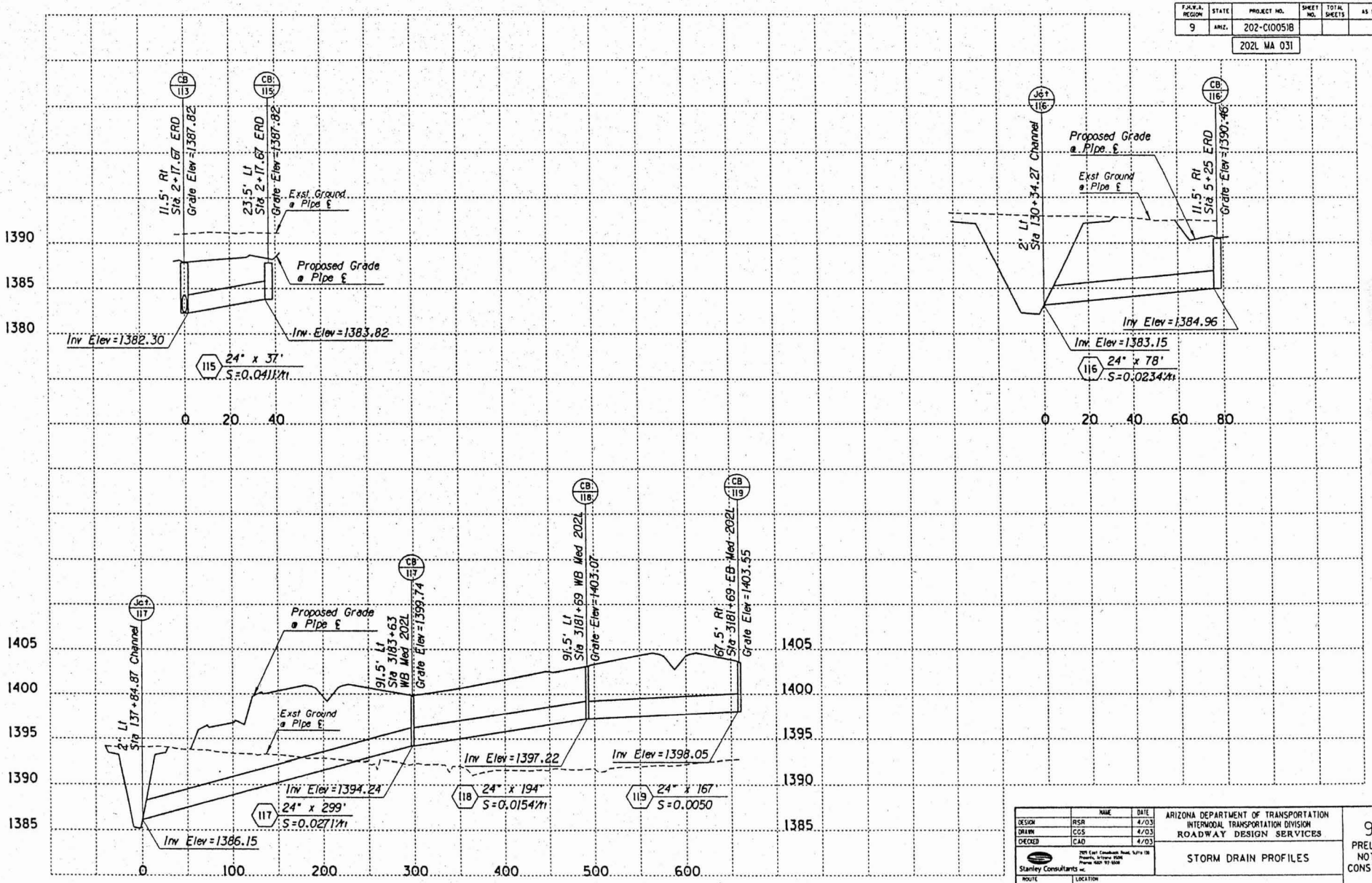

	NAME	DATE
DESIGN	RSR	4/03
DRAWN	CGS	4/03
CHECKED	CAD	4/03

Stanley Consultants INC.
7501 East Greenback Road, Suite 130
Prescott, Arizona 86306
Phone (520) 717-1500

ARIZONA DEPARTMENT OF TRANSPORTATION
INTERMODAL TRANSPORTATION DIVISION
ROADWAY DESIGN SERVICES

STORM DRAIN PROFILES

95%
PRELIMINARY
NOT FOR
CONSTRUCTION

ROUTE	LOCATION	DWG NO. 0-2.2
202L	SANTAN FWY, ELLIOT ROAD - BASELINE ROAD	
TRACS NO. H 5915 01C	202-C(005)B	___ OF ___

04/21/2003 gi\16110\Dgn\drainage\h5915sdp02.dgn

SURVEY NO. | FINISHED PLANS- | REVISIONS- | LOCATION- | DATE- | SURVEY NO. | FINISHED PLANS- | REVISIONS- | LOCATION- | DATE-

F.H.W.A. REGION	STATE	PROJECT NO.	SHEET NO.	TOTAL SHEETS	AS BUILT
9	ARIZ.	202-C(005)B			
		202L MA 031			

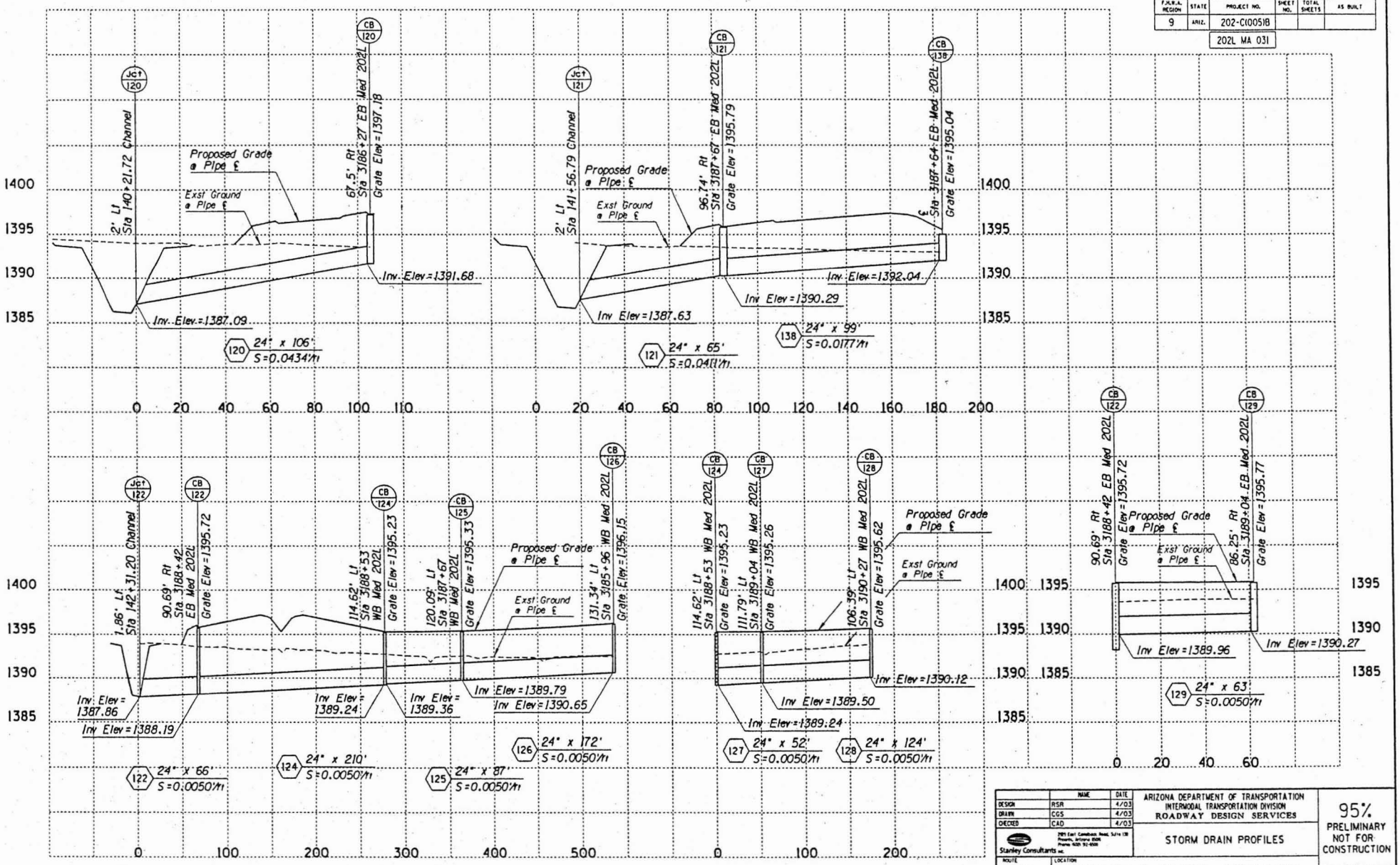

	NAME	DATE
DESIGN	RSR	4/03
DRAWN	CGS	4/03
CHECKED	CAD	4/03

Stanley Consultants inc.
7201 East Camelback Road, Suite 130
Phoenix, Arizona 85251
Phone: (480) 941-8300

ARIZONA DEPARTMENT OF TRANSPORTATION
INTERMODAL TRANSPORTATION DIVISION
ROADWAY DESIGN SERVICES

STORM DRAIN PROFILES

95%
PRELIMINARY
NOT FOR CONSTRUCTION

ROUTE: 202L
LOCATION: SANTAN FWY, ELLIOT ROAD - BASELINE ROAD

TRACS NO. H 5915 01C
202-C(005)B

DWG NO. D-2.3
___ OF ___

04/22/2003 gt\16110\Dgn\drainage\h5915adp03.dgn

F.H.W.A. REGION	STATE	PROJECT NO.	SHEET NO.	TOTAL SHEETS	AS BUILT
9	ARIZ.	202-C(005)B			
		202L MA 031			

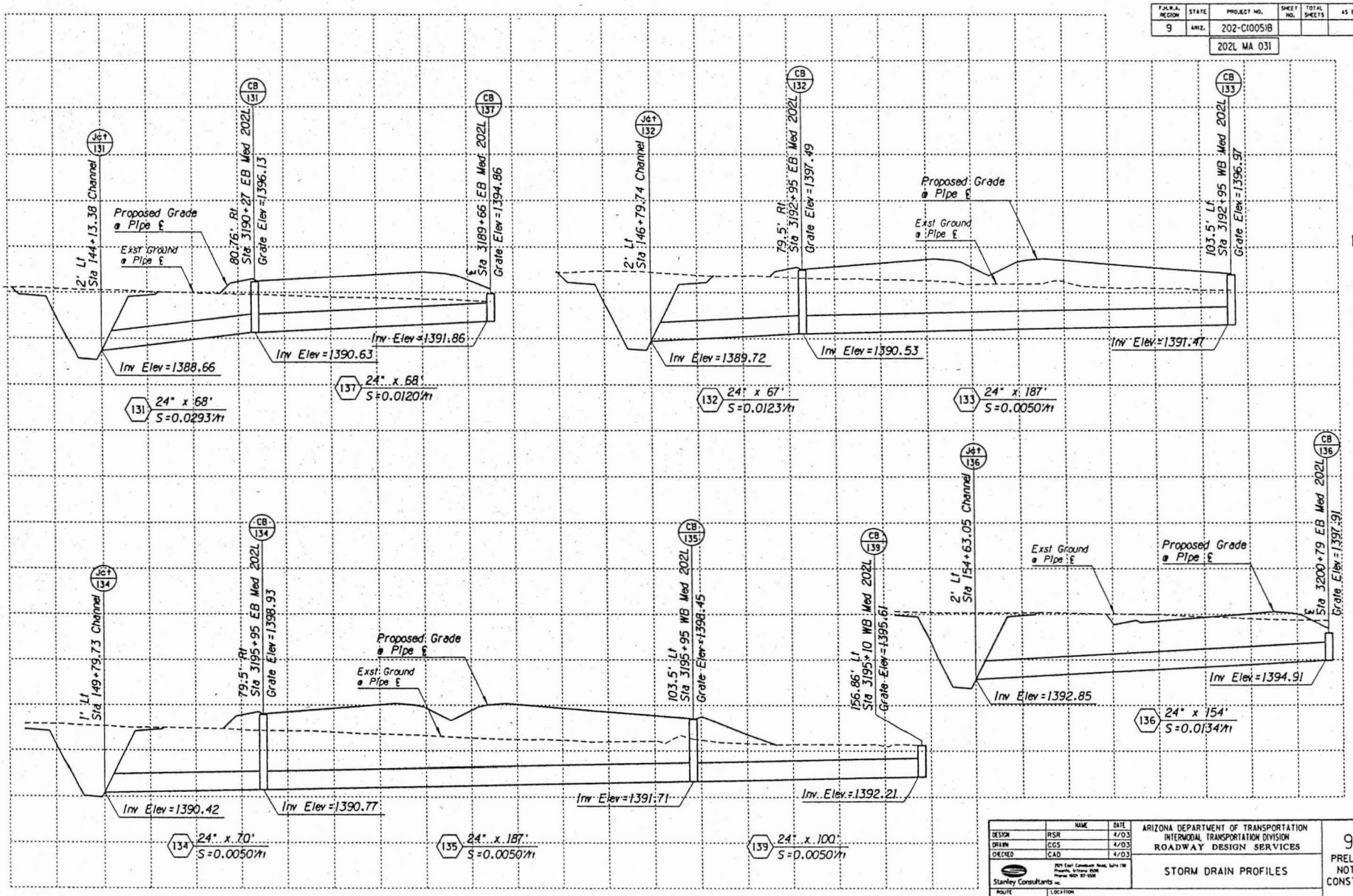

	NAME	DATE
DESIGN	RSR	4/03
DRAWN	CGS	4/03
CHECKED	CAD	4/03

Stanley Consultants inc.

ARIZONA DEPARTMENT OF TRANSPORTATION
INTERMODAL TRANSPORTATION DIVISION
ROADWAY DESIGN SERVICES

STORM DRAIN PROFILES

95%
PRELIMINARY
NOT FOR
CONSTRUCTION

ROUTE	LOCATION
202L	SANTAN FWY, ELLIOT ROAD - BASELINE ROAD

DWG NO. D-2.4

TRACS NO. H 5915 01C | 202-C(005)B | ___ OF ___

04/21/2003 gr\16110\Dgn\drainage\h5915sdp04.dgn

F.A.H.W.A. REGION	STATE	PROJECT NO.	SHEET NO.	TOTAL SHEETS	AS BUILT
9	ARIZ.	202-C(005)B			
		202L MA 031			

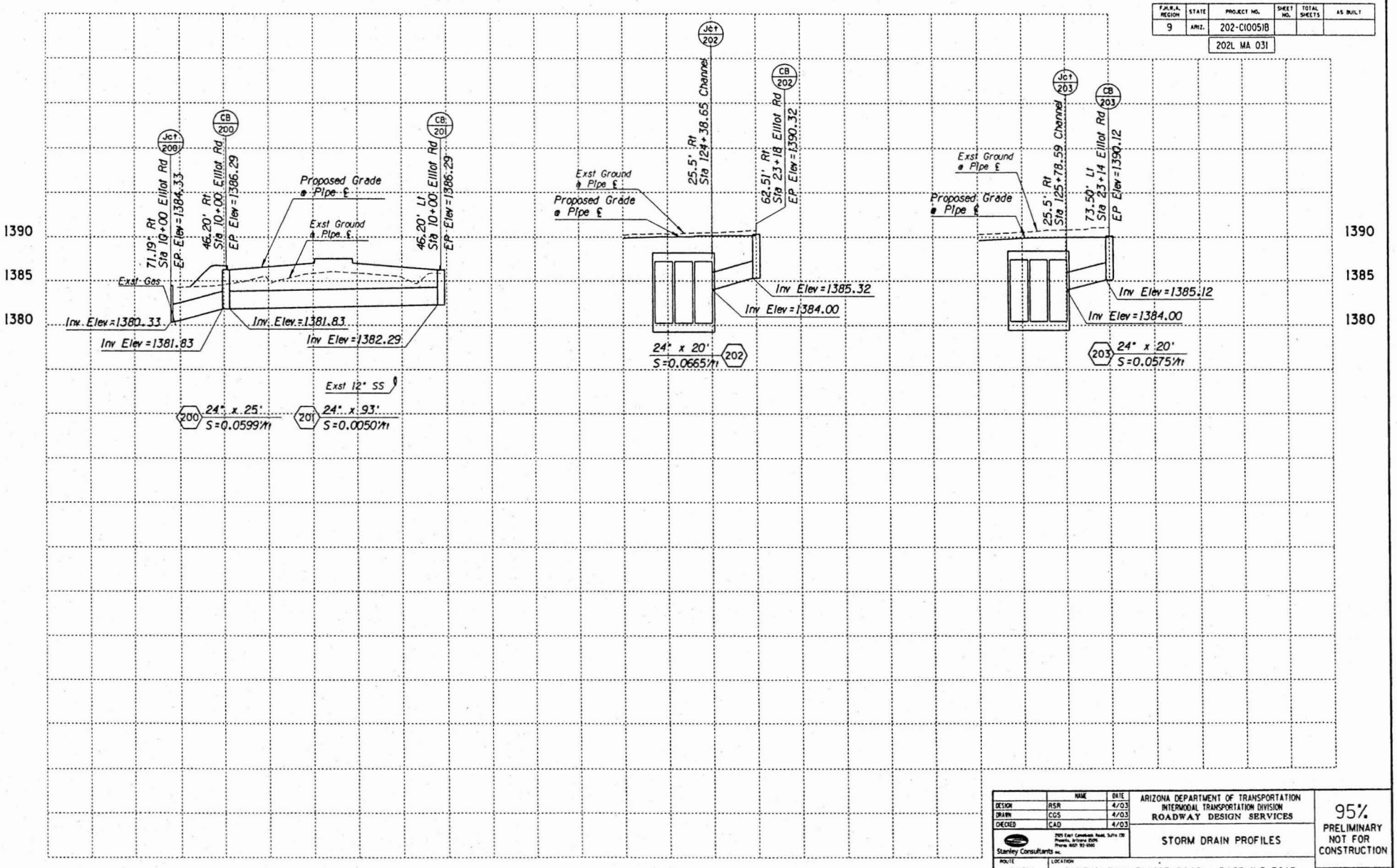

	NAME	DATE
DESIGN	RSR	4/03
DRAWN	CGS	4/03
CHECKED	CAD	4/03

Stanley Consultants Inc.
7505 East Greenlawn Road, Suite 130
Phoenix, Arizona 85054
Phone (602) 92-0000

ARIZONA DEPARTMENT OF TRANSPORTATION
INTERMODAL TRANSPORTATION DIVISION
ROADWAY DESIGN SERVICES

STORM DRAIN PROFILES

95%
PRELIMINARY
NOT FOR
CONSTRUCTION

ROUTE: 202L
LOCATION: SANTAN FWY, ELLIOT ROAD - BASELINE ROAD

TRACS NO. H 5915 01C | 202-C(005)B

DWG NO. D- 2.5
___ OF ___

04/23/2003 q:\16110\Dgn\drainage\h5915sdp05.dgn

F.H.W.A. REGION	STATE	PROJECT NO.	SHEET NO.	TOTAL SHEETS	AS BUILT
9	ARIZ.	202-C(005)B			

202L MA 031

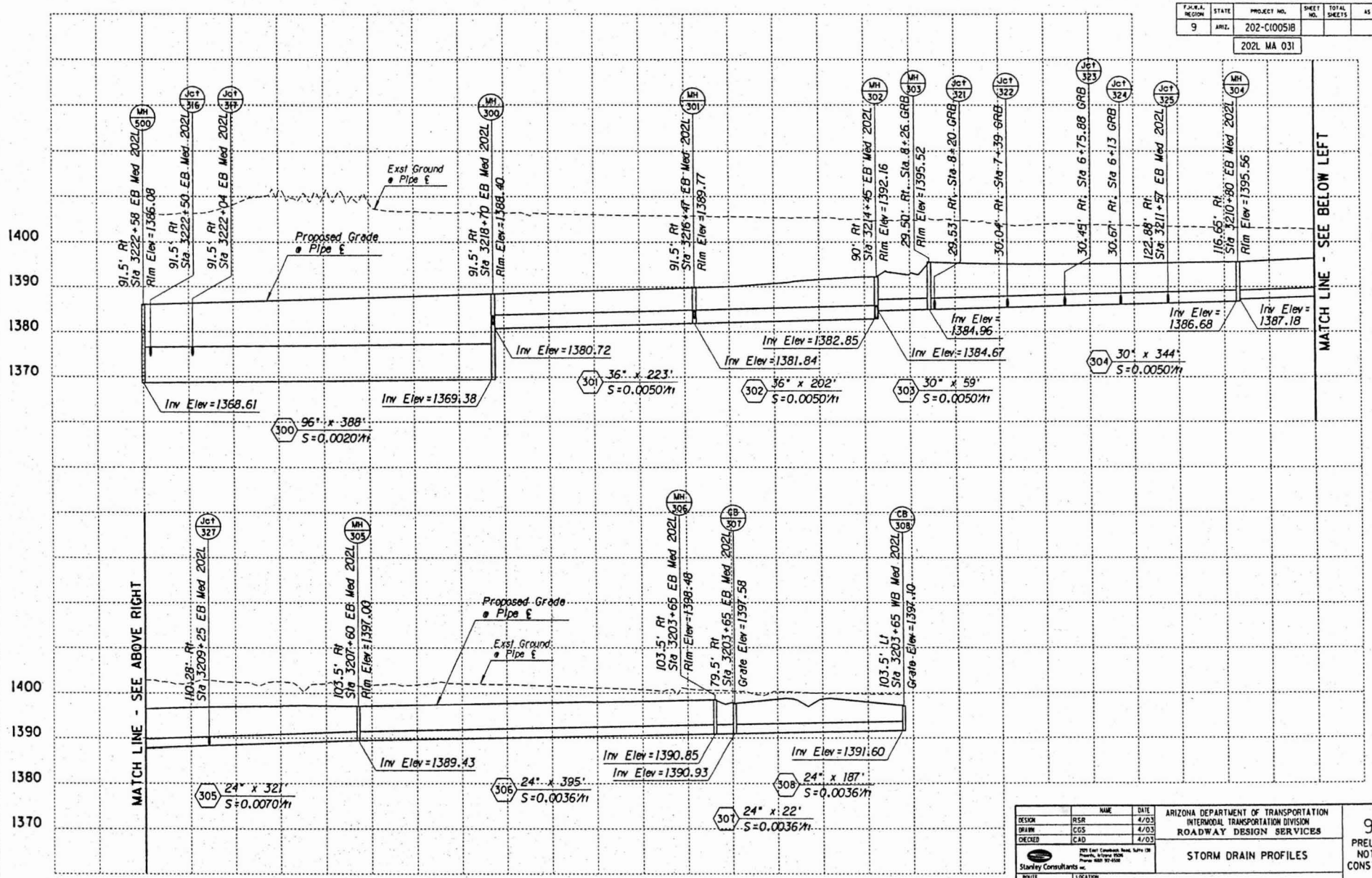

	NAME	DATE
DESIGN	RSR	4/03
DRAWN	CGS	4/03
CHECKED	CAD	4/03

Stanley Consultants inc.
2575 East Camelback Road, Suite 130
Phoenix, Arizona 85016
Phone: (602) 957-6500

ARIZONA DEPARTMENT OF TRANSPORTATION
INTERMODAL TRANSPORTATION DIVISION
ROADWAY DESIGN SERVICES

STORM DRAIN PROFILES

95%
PRELIMINARY
NOT FOR
CONSTRUCTION

ROUTE	LOCATION	DWG NO. D-2.6
202L	SANTAN FWY, ELLIOT ROAD - BASELINE ROAD	
TRACS NO. H 5915 01C	202-C(005)B	___ OF ___

04/23/2003 gr\16118\Dgn\drainage\h5915sdp06.dgn

F.H.W.A. REGION	STATE	PROJECT NO.	SHEET NO.	TOTAL SHEETS	AS BUILT
9	ARIZ.	202-C(005)B			
		202L MA 031			

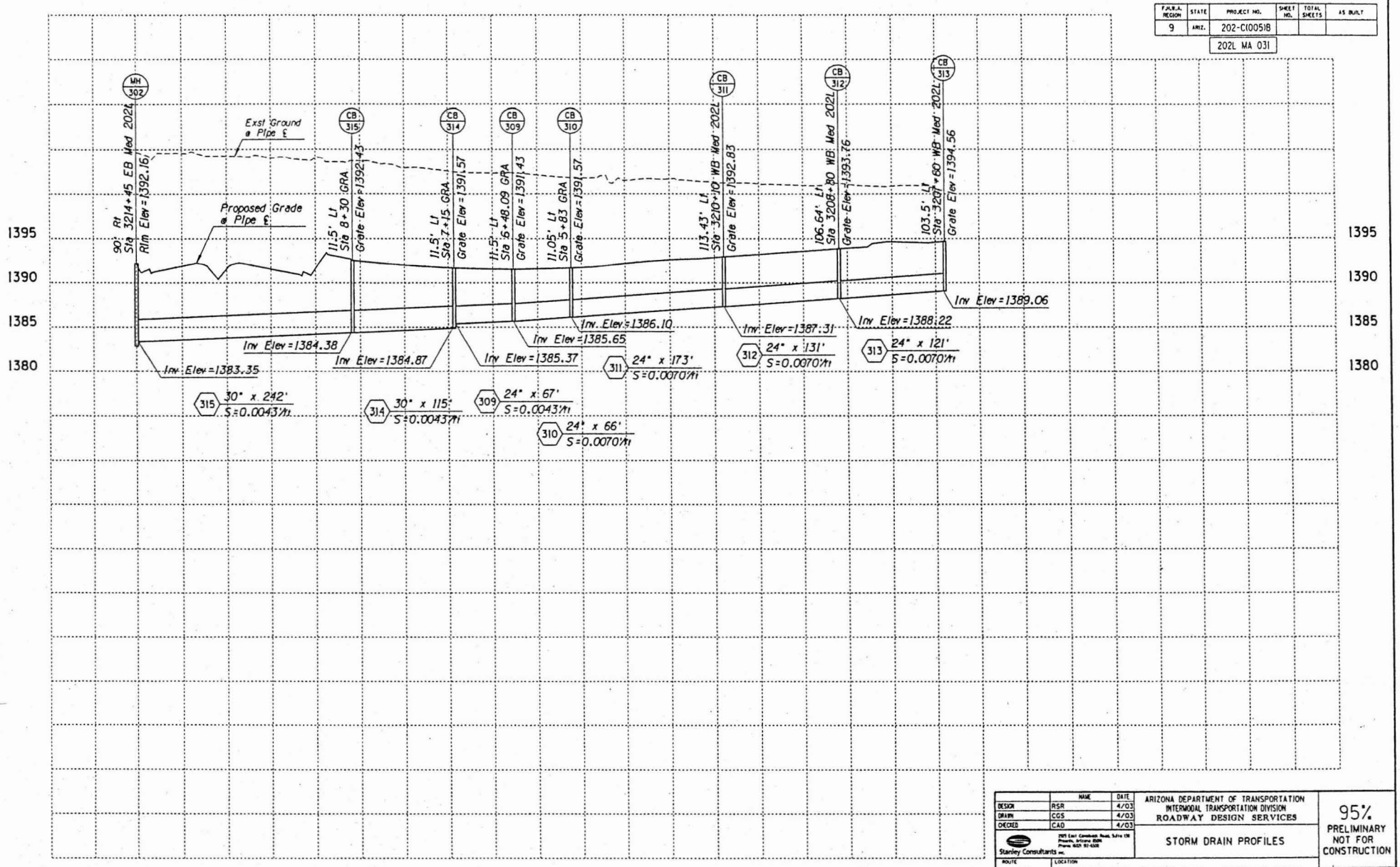

	NAME	DATE
DESIGN	RSR	4/03
DRAWN	CGS	4/03
CHECKED	CAD	4/03

Stanley Consultants INC.
2929 East Camelback Road, Suite 130
Phoenix, Arizona 85016
Phone (602) 957-6300

ARIZONA DEPARTMENT OF TRANSPORTATION
INTERMODAL TRANSPORTATION DIVISION
ROADWAY DESIGN SERVICES

STORM DRAIN PROFILES

95%
PRELIMINARY
NOT FOR
CONSTRUCTION

ROUTE: 202L
LOCATION: SANTAN FWY, ELLIOT ROAD - BASELINE ROAD

DWG NO. D-2.7

TRACS NO. H 5915 01C

202-C(005)B

___ OF ___

04/21/2003 q:\16110\Dgn\drainage\h5915sdp07.dgn

SURVEY NO. | FINISHED PLANS | REVISIONS | LOCATION | DATE

F.H.W.A. REGION	STATE	PROJECT NO.	SHEET NO.	TOTAL SHEETS	AS BUILT
9	ARIZ.	202-C(005)B			

202L MA 031

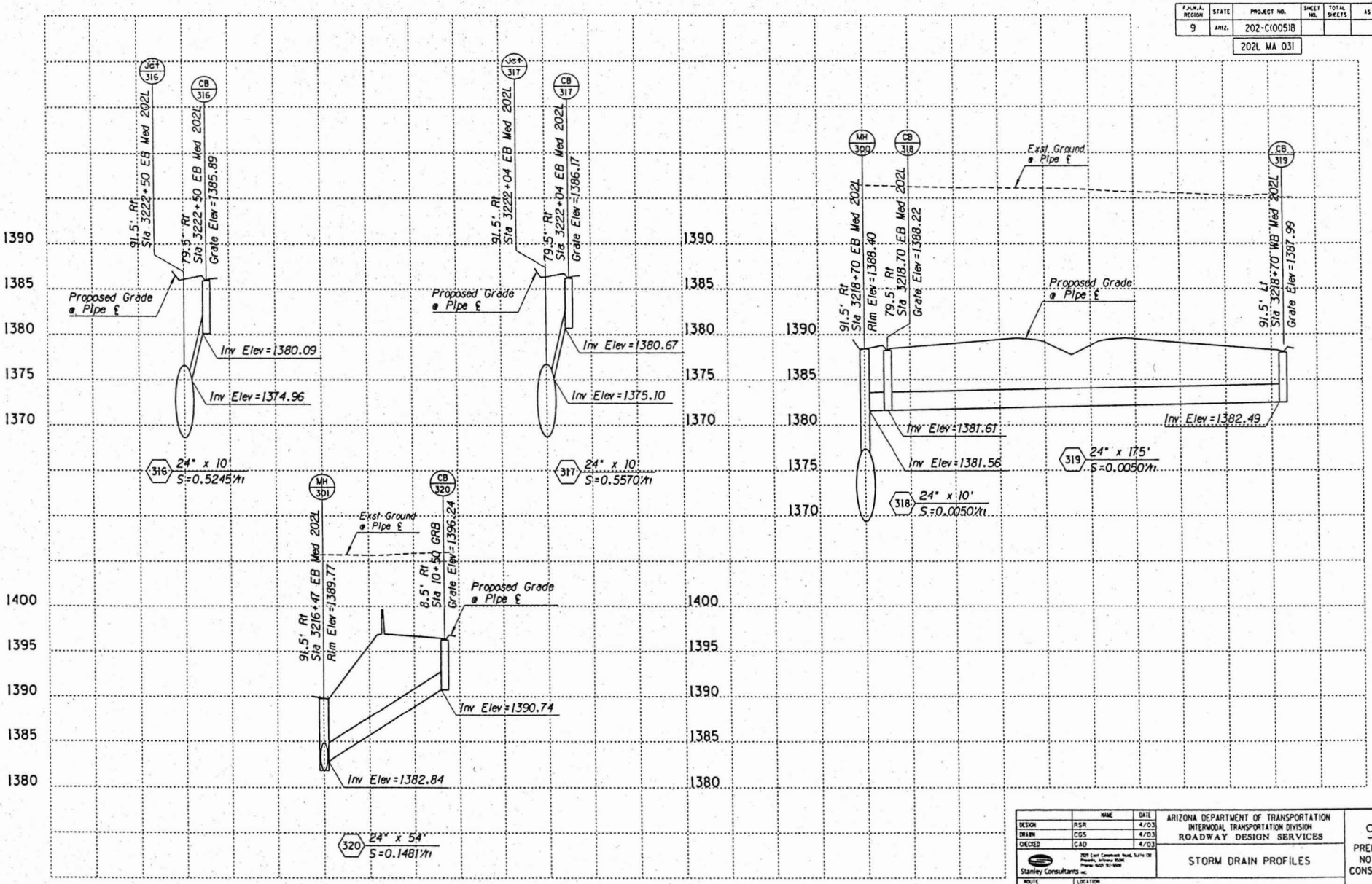

	NAME	DATE
DESIGN	RSR	4/03
DRAWN	CGS	4/03
CHECKED	CAD	4/03

Stanley Consultants inc.

ARIZONA DEPARTMENT OF TRANSPORTATION
INTERMODAL TRANSPORTATION DIVISION
ROADWAY DESIGN SERVICES

STORM DRAIN PROFILES

95%
PRELIMINARY
NOT FOR CONSTRUCTION

ROUTE: 202L
LOCATION: SANTAN FWY. ELLIOT ROAD - BASELINE ROAD

DWG NO. D-2.8

TRACS NO. H 5915 01C

202-C(005)B

___ OF ___

04/21/2003 qt\16110\Dgn\drainage\h5915sdp08.dgn

F.H.W.A. REGION	STATE	PROJECT NO.	SHEET NO.	TOTAL SHEETS	AS BUILT
9	ARIZ.	202-C(005)B			
		202L MA 031			

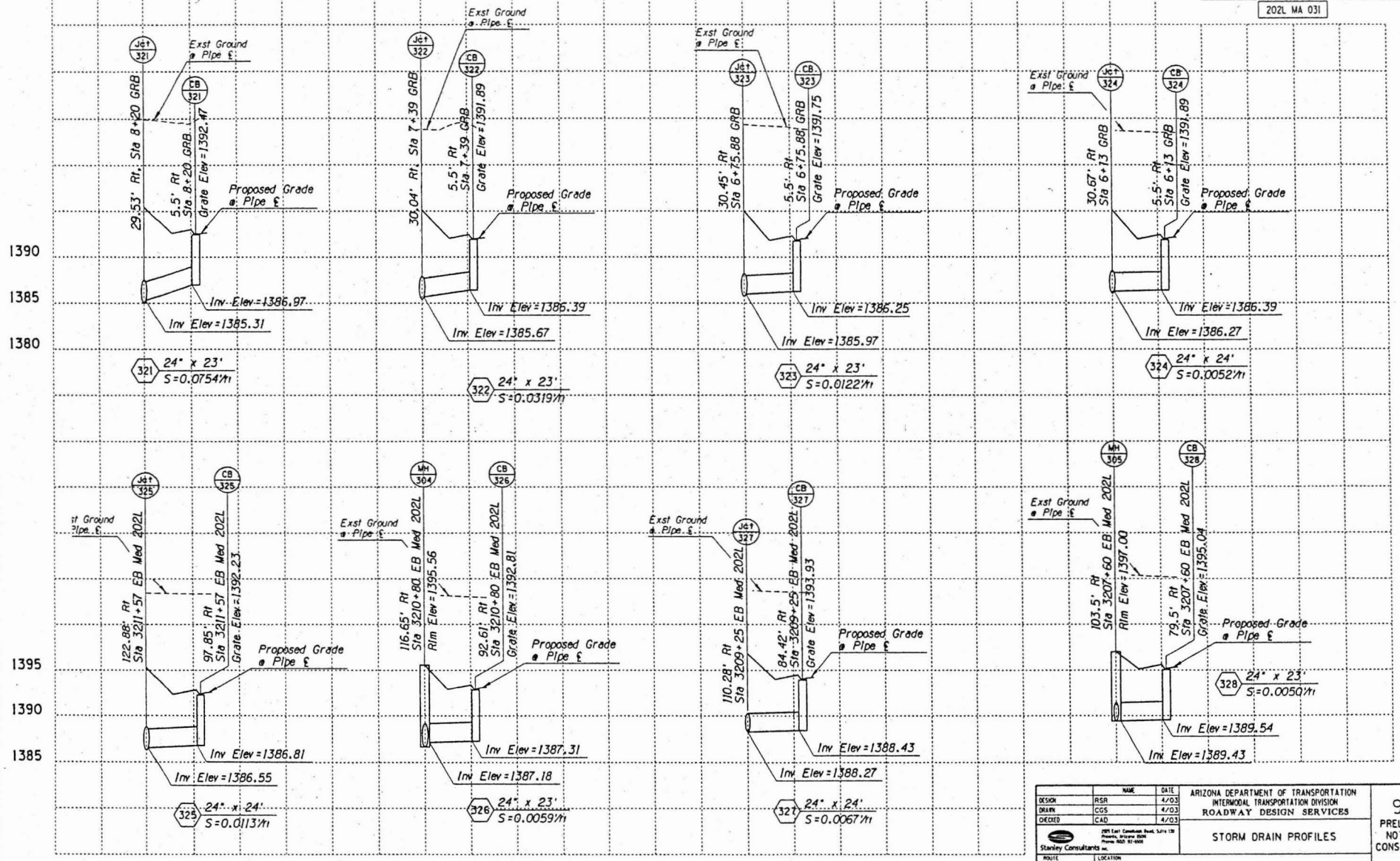

	NAME	DATE
DESIGN	RSR	4/03
DRAWN	CGS	4/03
CHECKED	CAD	4/03

Stanley Consultants Inc.
2929 East Camelback Road, Suite 130
Phoenix, Arizona 85016
Phone (602) 957-4500

ARIZONA DEPARTMENT OF TRANSPORTATION
INTERMODAL TRANSPORTATION DIVISION
ROADWAY DESIGN SERVICES

STORM DRAIN PROFILES

95%
PRELIMINARY
NOT FOR CONSTRUCTION

ROUTE: 202L
LOCATION: SANTAN FWY, ELLIOT ROAD - BASELINE ROAD

DWG NO. D-2.9

TRACS NO. H 5915 OIC | 202-C(005)B | ___ OF ___

04/21/2003 qt\16110\Dgn\drainage\h5915sdp09.dgn

F.H.W.A. REGION	STATE	PROJECT NO.	SHEET NO.	TOTAL SHEETS	AS BUILT
9	ARIZ.	202-C(005)B			
		202L MA 031			

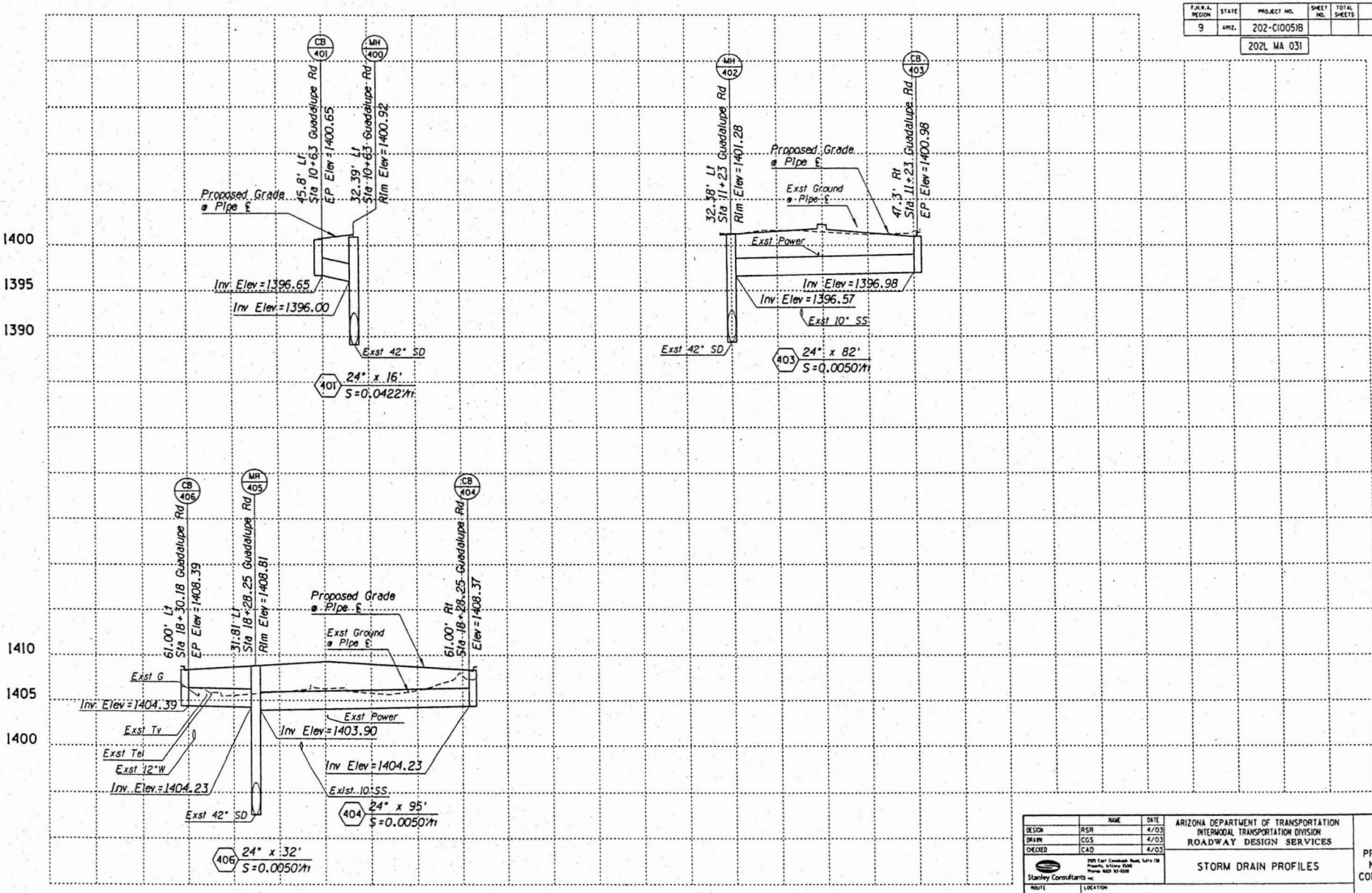

	NAME	DATE
DESIGN	RSR	4/03
DRAWN	CGS	4/03
CHECKED	CAD	4/03

Stanley Consultants inc.
2929 East Camelback Road, Suite 130
Phoenix, Arizona 85016
Phone (602) 92-5500

ARIZONA DEPARTMENT OF TRANSPORTATION
INTERMODAL TRANSPORTATION DIVISION
ROADWAY DESIGN SERVICES

STORM DRAIN PROFILES

95%
PRELIMINARY
NOT FOR
CONSTRUCTION

ROUTE: 202L
LOCATION: SANTAN FWY, ELLIOT ROAD - BASELINE ROAD

DWG NO. D-2.10

TRACS NO. H 5915 01C

202-C(005)B

___ OF ___

04/21/2003 q:\16110\Dgn\d-drainage\h5915sdp10.dgn

F.H.W.A. REGION	STATE	PROJECT NO.	SHEET NO.	TOTAL SHEETS	AS BUILT
9	ARIZ.	202-C(005)B			
		202L MA 031			

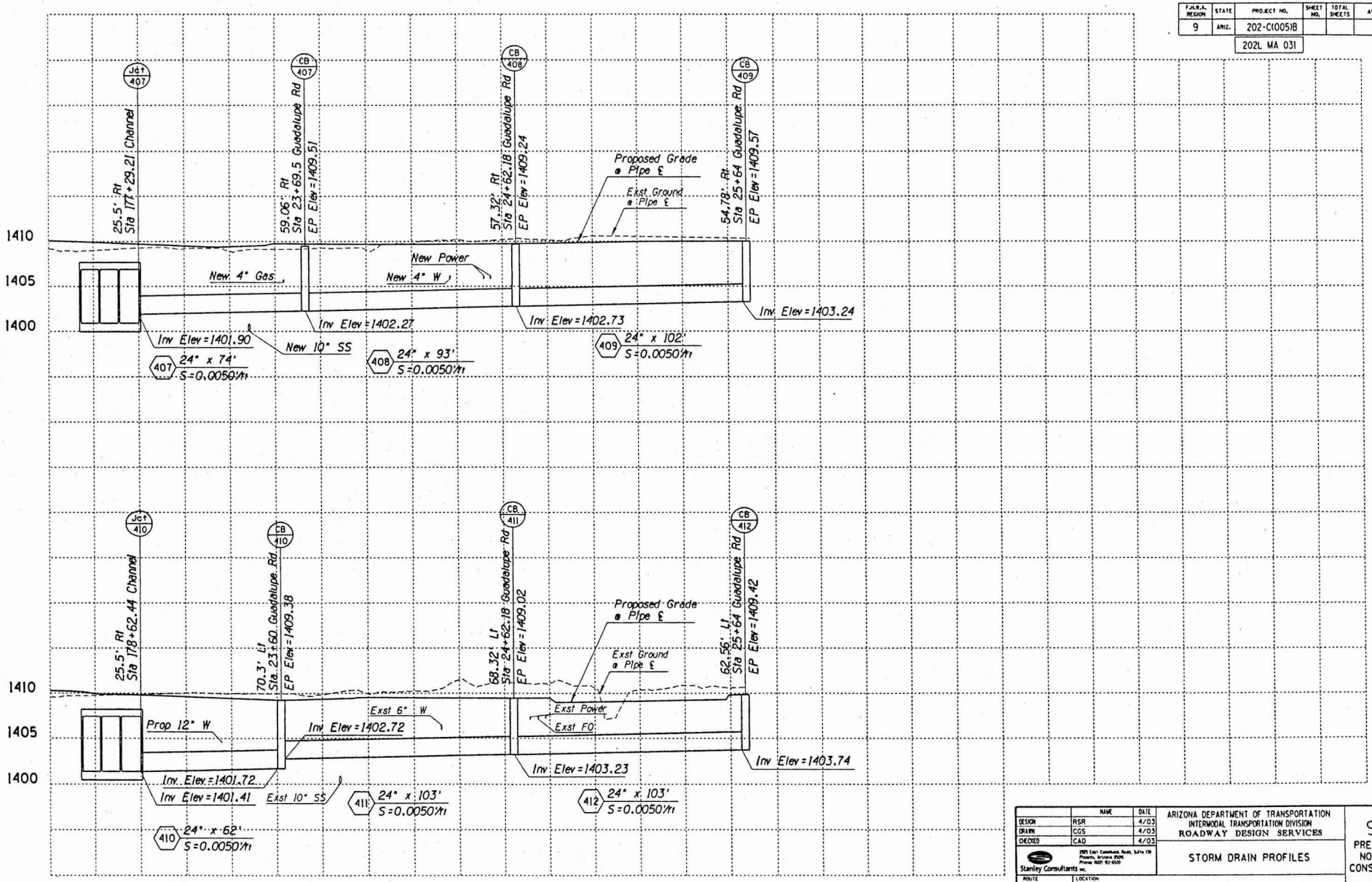

	NAME	DATE
DESIGN	RSR	4/03
DRAWN	CGS	4/03
CHECKED	CAD	4/03

Stanley Consultants INC.
2929 East Camelback Road, Suite 170
Phoenix, Arizona 85016
Phone (602) 92-6500

ARIZONA DEPARTMENT OF TRANSPORTATION
INTERMODAL TRANSPORTATION DIVISION
ROADWAY DESIGN SERVICES

STORM DRAIN PROFILES

95%
PRELIMINARY
NOT FOR CONSTRUCTION

ROUTE: 202L
LOCATION: SANTAN FWY, ELLIOT ROAD - BASELINE ROAD
DWG NO. D- 2.11

TRACS NO. H 5915 01C
202-C(005)B
___ OF ___

04/23/2003 gr\16110\Dgn\drainage\h5915sdp11.dgn

F.A.H.W.A. REGION	STATE	PROJECT NO.	SHEET NO.	TOTAL SHEETS	AS BUILT
9	ARIZ.	202-C(005)B			

202L MA 031

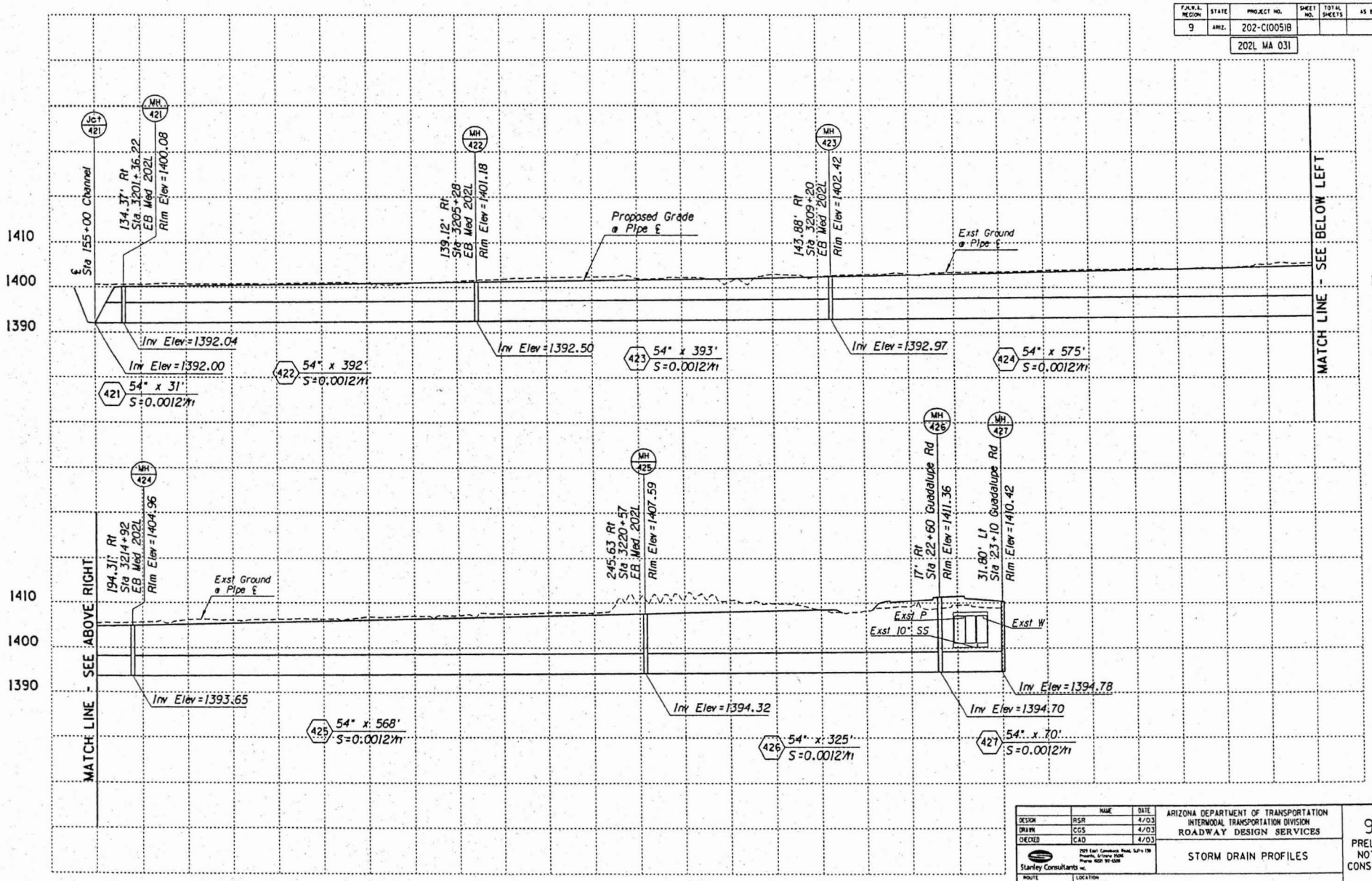

	NAME	DATE
DESIGN	RSR	4/03
DRAWN	CGS	4/03
CHECKED	CAD	4/03

Stanley Consultants inc.

ARIZONA DEPARTMENT OF TRANSPORTATION
INTERMODAL TRANSPORTATION DIVISION
ROADWAY DESIGN SERVICES

STORM DRAIN PROFILES

95%
PRELIMINARY
NOT FOR CONSTRUCTION

ROUTE	LOCATION	DWG NO. D-2.12
202L	SANTAN FWY, ELLIOT ROAD - BASELINE ROAD	
TRACS NO. H 5915 01C	202-C(005)B	___ OF ___

04/21/2003 gt\16118\dgn\drainage\h5915sdpl2.dgn

F.H.W.A. REGION	STATE	PROJECT NO.	SHEET NO.	TOTAL SHEETS	AS BUILT
9	ARIZ.	202-C(005)B			

202L MA 031

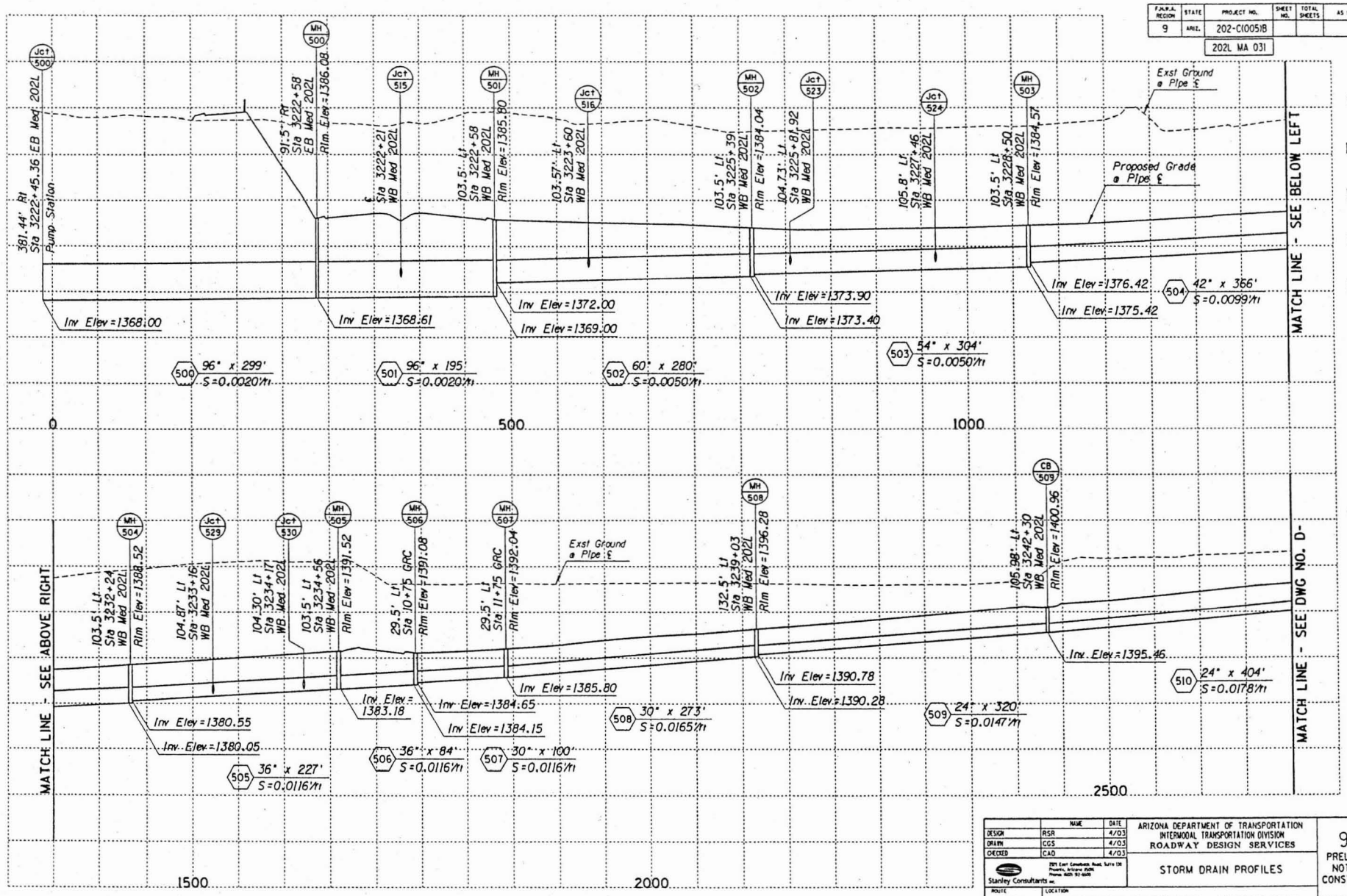

	NAME	DATE
DESIGN	RSR	4/03
DRAWN	CGS	4/03
CHECKED	CAD	4/03

Stanley Consultants Inc.

ARIZONA DEPARTMENT OF TRANSPORTATION
INTERMODAL TRANSPORTATION DIVISION
ROADWAY DESIGN SERVICES

STORM DRAIN PROFILES

95%
PRELIMINARY
NOT FOR CONSTRUCTION

ROUTE: 202L
LOCATION: SANTAN FWY, ELLIOT ROAD - BASELINE ROAD

DWG NO. D-2.13

TRACS NO. H 5915 01C | 202-C(005)B | ___ OF ___

04/21/2003 gr\16110\Dgn\drainage\h5915sdpl3.dgn

F.H.W.A. REGION	STATE	PROJECT NO.	SHEET NO.	TOTAL SHEETS	AS BUILT
9	ARIZ.	202-C(005)B			

202L MA 031

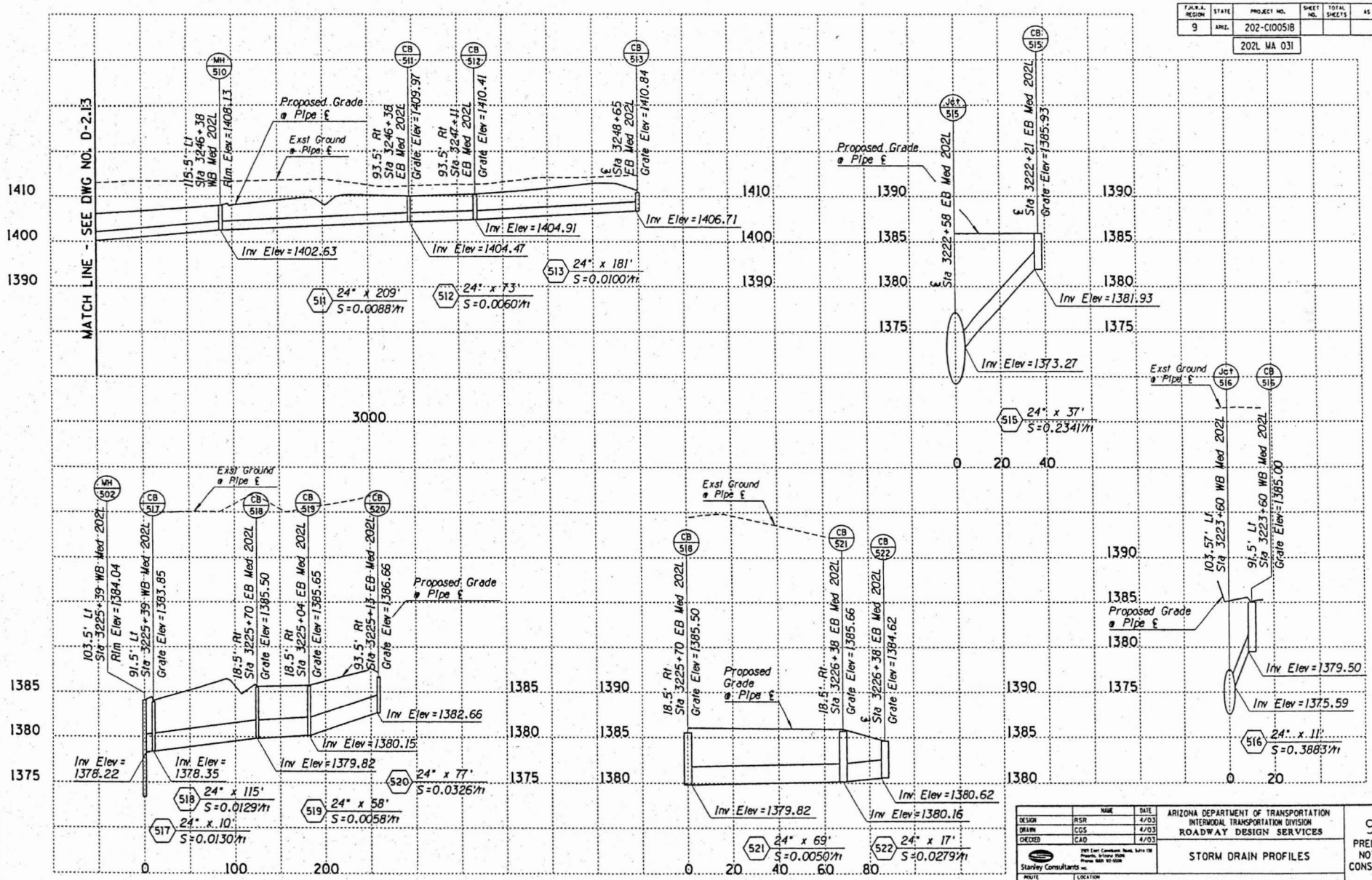

	NAME	DATE
DESIGN	RSR	4/03
DRAWN	CGS	4/03
CHECKED	CAD	4/03

Stanley Consultants Inc.

ARIZONA DEPARTMENT OF TRANSPORTATION
INTERMODAL TRANSPORTATION DIVISION
ROADWAY DESIGN SERVICES

STORM DRAIN PROFILES

95%
PRELIMINARY
NOT FOR CONSTRUCTION

ROUTE: 202L
LOCATION: SANTAN FWY, ELLIOT ROAD - BASELINE ROAD

DWG NO. D-2.14

TRACS NO. H 5915 01C

202-C(005)B

___ OF ___

04/21/2003 gr\16110\Dgn\drainage\h5915sdp14.dgn

F.H.W.A. REGION	STATE	PROJECT NO.	SHEET NO.	TOTAL SHEETS	AS BUILT
9	ARIZ.	202-C(005)B			
		202L MA 031			

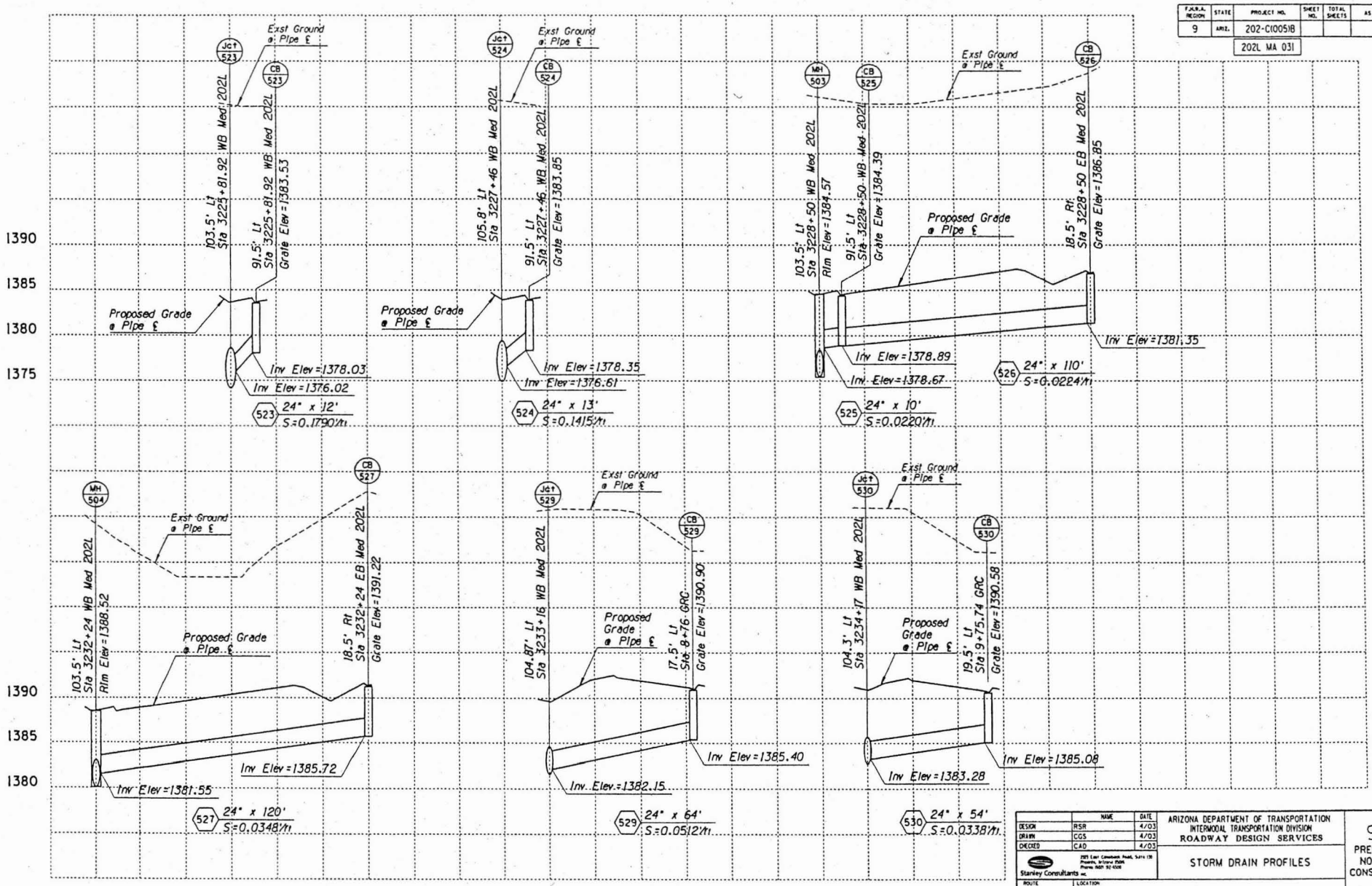

	NAME	DATE
DESIGN	RSR	4/03
DRAWN	CGS	4/03
CHECKED	CAD	4/03

Stanley Consultants inc.
2175 East Camelback Road, Suite 170
Phoenix, Arizona 85016
Phone: (602) 52-6100

ARIZONA DEPARTMENT OF TRANSPORTATION
INTERMODAL TRANSPORTATION DIVISION
ROADWAY DESIGN SERVICES

STORM DRAIN PROFILES

95%
PRELIMINARY
NOT FOR
CONSTRUCTION

ROUTE	LOCATION
202L	SANTAN FWY, ELLIOT ROAD - BASELINE ROAD

DWG NO. D-2.15

TRACS NO. H 5915 01C | 202-C(005)B | ___ OF ___

04/21/2003 g:\16110\Dgn\drainage\h5915sdp15.dgn

F.H.W.A. REGION	STATE	PROJECT NO.	SHEET NO.	TOTAL SHEETS	AS BUILT
9	ARIZ.	202-C(005)B			
		202L MA 031			

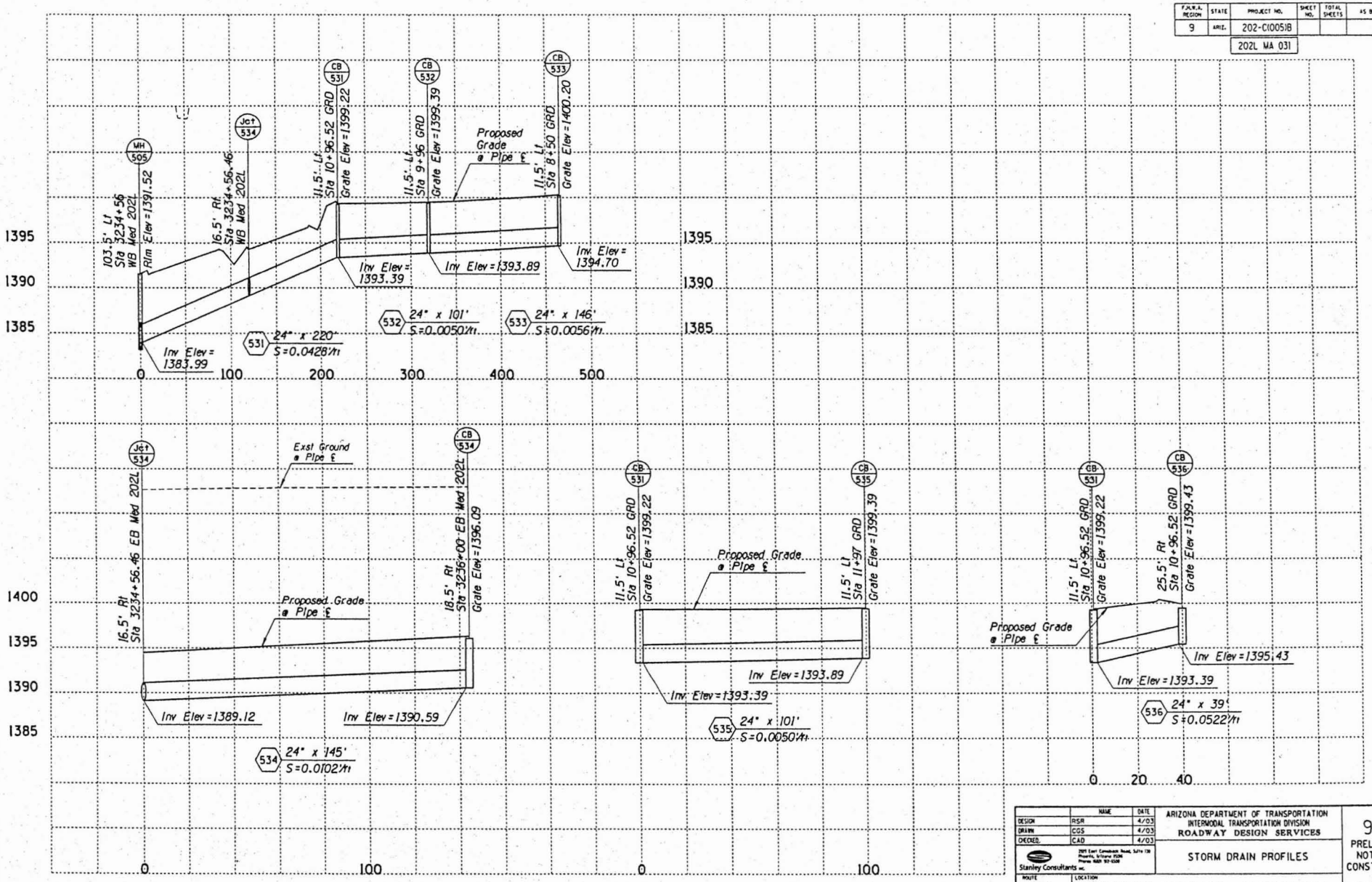

	NAME	DATE
DESIGN	RSR	4/03
DRAWN	CGS	4/03
CHECKED	CAD	4/03

Stanley Consultants INC.
2575 East Camelback Road, Suite 130
Phoenix, Arizona 85016
Phone: (602) 957-5208

ARIZONA DEPARTMENT OF TRANSPORTATION
INTERMODAL TRANSPORTATION DIVISION
ROADWAY DESIGN SERVICES

STORM DRAIN PROFILES

95%
PRELIMINARY
NOT FOR CONSTRUCTION

ROUTE: 202L
LOCATION: SANTAN FWY, ELLIOT ROAD - BASELINE ROAD

DWG NO. D-2.16

TRACS NO. H 5915 01C

202-C(005)B

___ OF ___

04/21/2003 gi\16110\Dgn\drainage\h5915sdp16.dgn

F.H.W.A. REGION	STATE	PROJECT NO.	SHEET NO.	TOTAL SHEETS	AS BUILT
9	ARIZ.	202-C(005)B			
		202L MA 031			

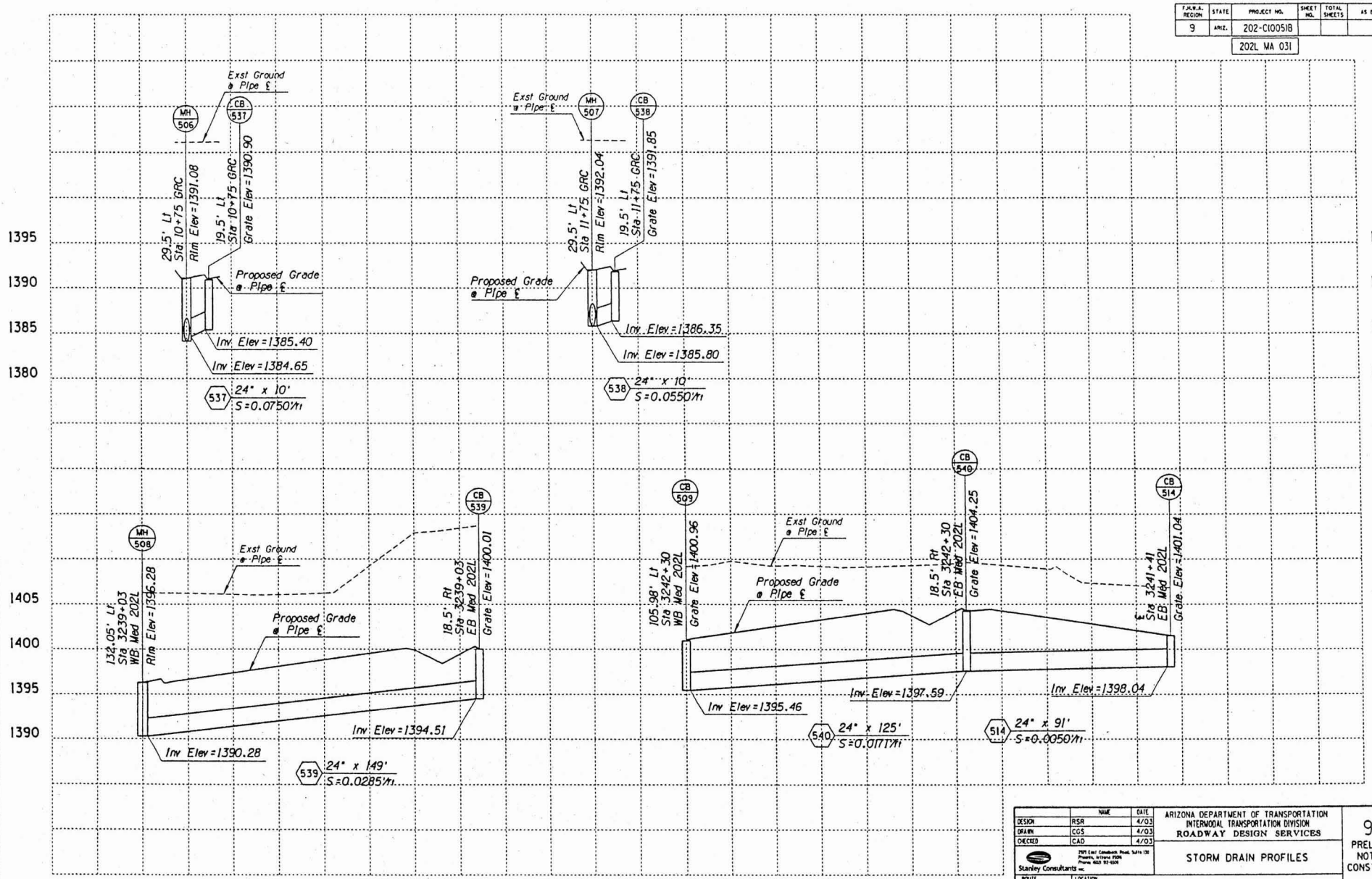

	NAME	DATE
DESIGN	RSR	4/03
DRAWN	CGS	4/03
CHECKED	CAD	4/03

Stanley Consultants inc.
7501 East Camelback Road, Suite 130
Phoenix, Arizona 85251
Phone: (602) 92-1006

ARIZONA DEPARTMENT OF TRANSPORTATION
INTERMODAL TRANSPORTATION DIVISION
ROADWAY DESIGN SERVICES

STORM DRAIN PROFILES

95%
PRELIMINARY
NOT FOR CONSTRUCTION

ROUTE: 202L
LOCATION: SANTAN FWY, ELLIOT ROAD - BASELINE ROAD

DWG NO. D-2.17

TRACS NO. H 5915 01C

202-C(005)B

___ OF ___

04/21/2003 gi\16110\Dgn\drainage\h5915dpl7.dgn

F.A.H.W.A. REGION	STATE	PROJECT NO.	SHEET NO.	TOTAL SHEETS	AS BUILT
9	ARIZ.	202-C(005)B			

202L MA 031

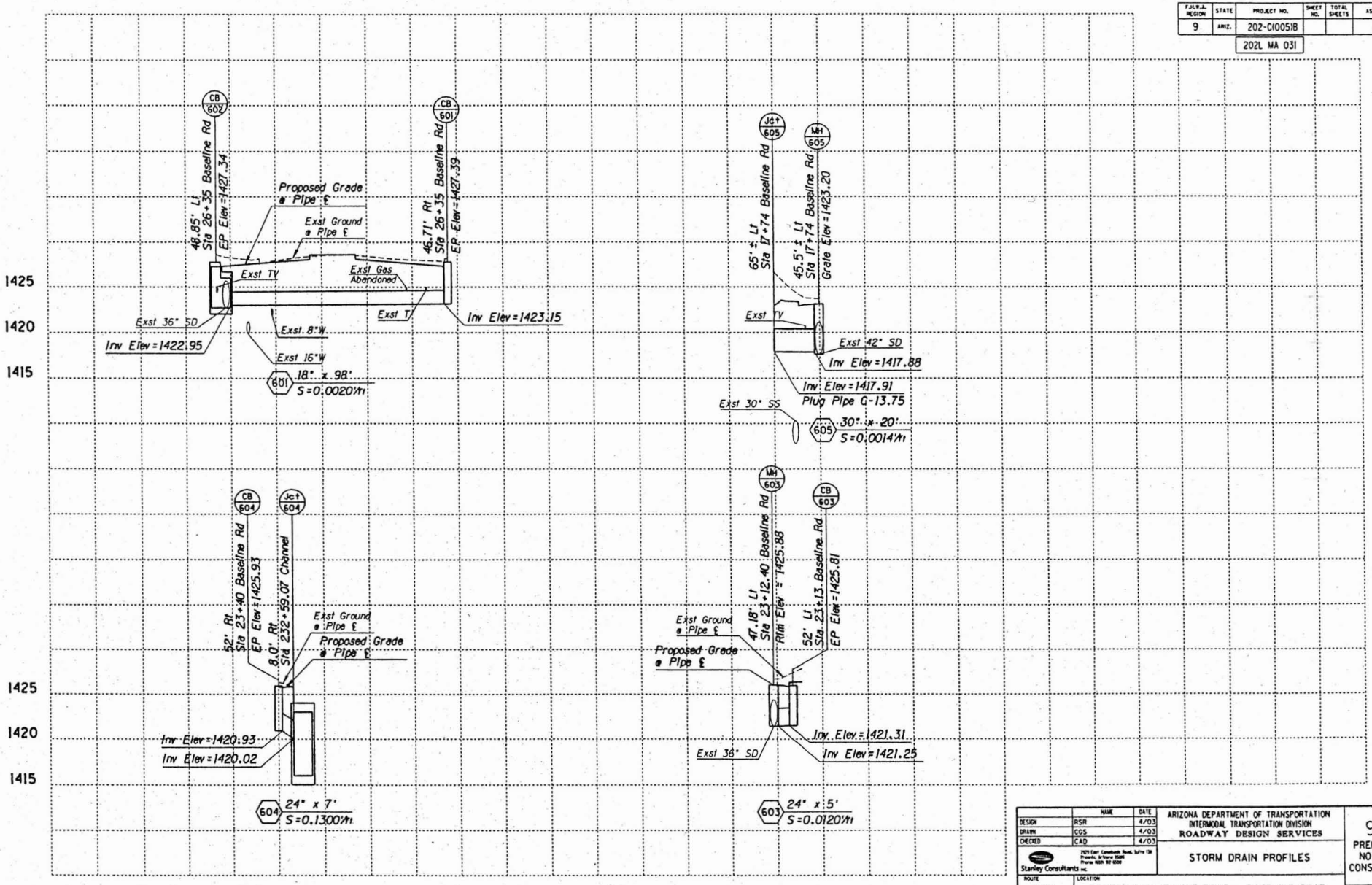

	NAME	DATE
DESIGN	RSR	4/03
DRAWN	CGS	4/03
CHECKED	CAD	4/03

Stanley Consultants inc.
2525 East Camelback Road, Suite 130
Phoenix, Arizona 85016
Phone: (602) 957-6000

ARIZONA DEPARTMENT OF TRANSPORTATION
INTERMODAL TRANSPORTATION DIVISION
ROADWAY DESIGN SERVICES

STORM DRAIN PROFILES

95%
PRELIMINARY
NOT FOR
CONSTRUCTION

ROUTE	LOCATION	DWG NO. D-2.18
202L	SANTAN FWY, ELLIOT ROAD - BASELINE ROAD	
TRACS NO. H 5915 01C	202-C(005)B	___ OF ___

04/24/2003 gt\16118\Dgn\drainage\h5915sdp18.dgn

F.H.W.A. REGION	STATE	PROJECT NO.	SHEET NO.	TOTAL SHEETS	AS BUILT
9	ARIZ.	202-C(005)B			

202L MA 031

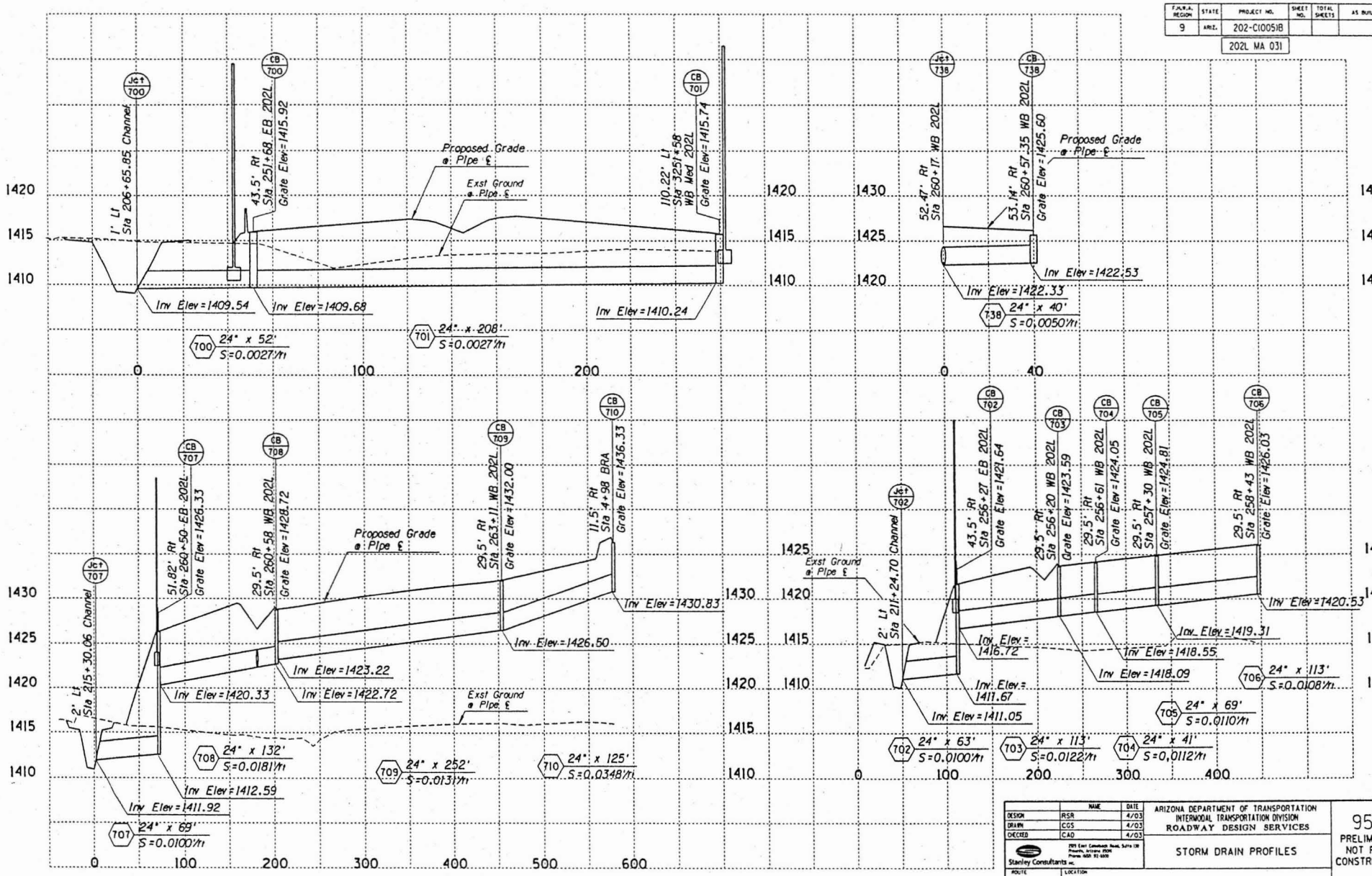

	NAME	DATE
DESIGN	RSR	4/03
DRAWN	CGS	4/03
CHECKED	CAD	4/03

Stanley Consultants inc.
1275 East Cambridge Road, Suite 130
Phoenix, Arizona 85006
Phone: (602) 92-6600

ARIZONA DEPARTMENT OF TRANSPORTATION
INTERMODAL TRANSPORTATION DIVISION
ROADWAY DESIGN SERVICES

STORM DRAIN PROFILES

95%
PRELIMINARY
NOT FOR CONSTRUCTION

ROUTE: 202L
LOCATION: SANTAN FWY, ELLIOT ROAD - BASELINE ROAD

DWG NO. D-2.19

TRACS NO. H 5915 01C | 202-C(005)B | ___ OF ___

04/21/2003 gr\16112\Dgn\drainage\h5915sdp19.dgn

F.H.W.A. REGION	STATE	PROJECT NO.	SHEET NO.	TOTAL SHEETS	AS BUILT
9	ARIZ.	202-C(005)B			

202L MA 031

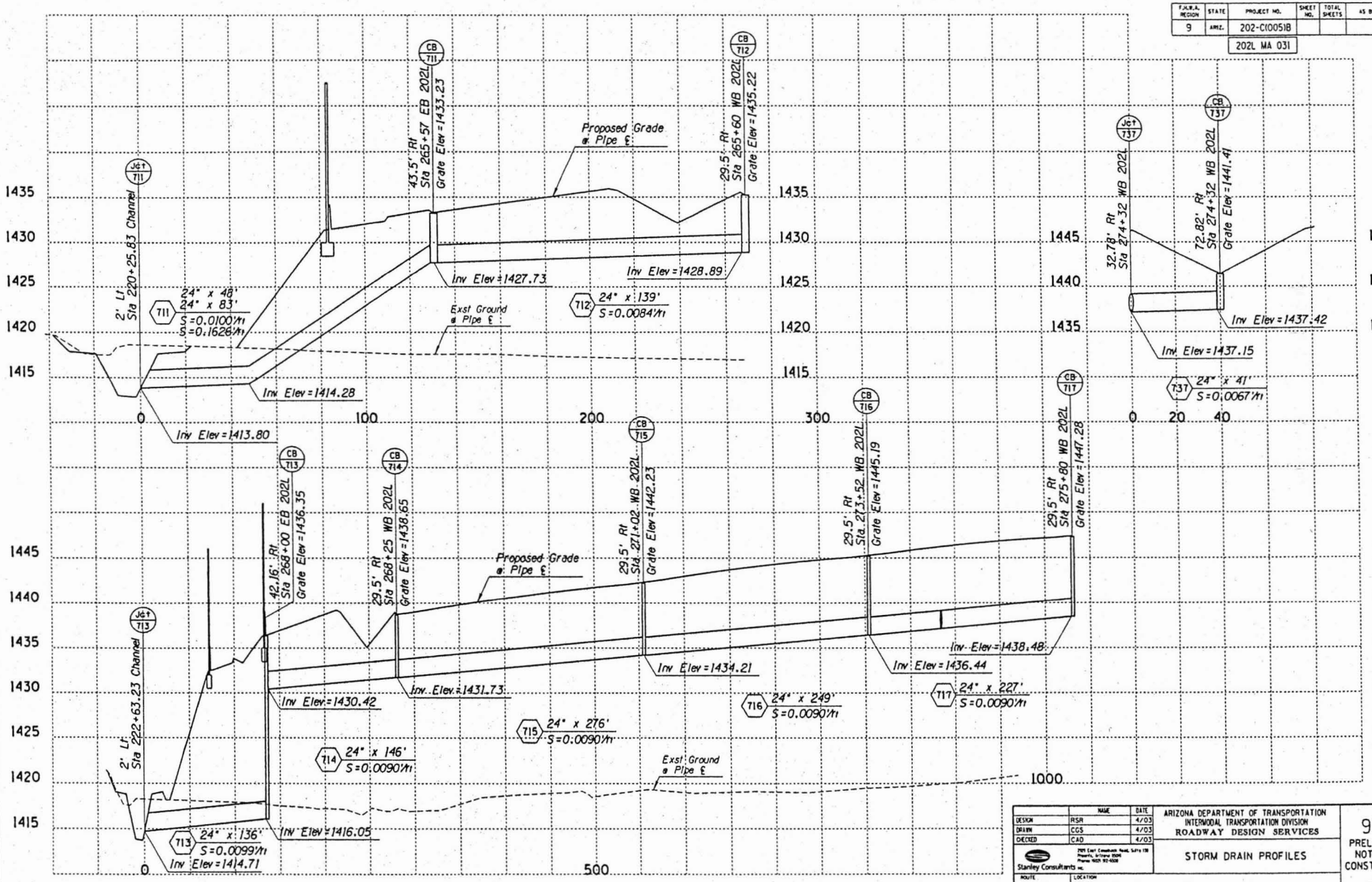

	NAME	DATE
DESIGN	RSR	4/03
DRAWN	CGS	4/03
CHECKED	CAD	4/03

Stanley Consultants inc.

ARIZONA DEPARTMENT OF TRANSPORTATION
INTERMODAL TRANSPORTATION DIVISION
ROADWAY DESIGN SERVICES

STORM DRAIN PROFILES

95%
PRELIMINARY
NOT FOR CONSTRUCTION

ROUTE: 202L
LOCATION: SANTAN FWY, ELLIOT ROAD - BASELINE ROAD

DWG NO. D-2.20

TRACS NO. H 5915 01C | 202-C(005)B | ___ OF ___

04/21/2003 gr\16118\Dgn\drainage\h5915sdp20.dgn

F.H.W.A. REGION	STATE	PROJECT NO.	SHEET NO.	TOTAL SHEETS	AS BUILT
9	ARIZ.	202-C(005)B			
		202L MA 031			

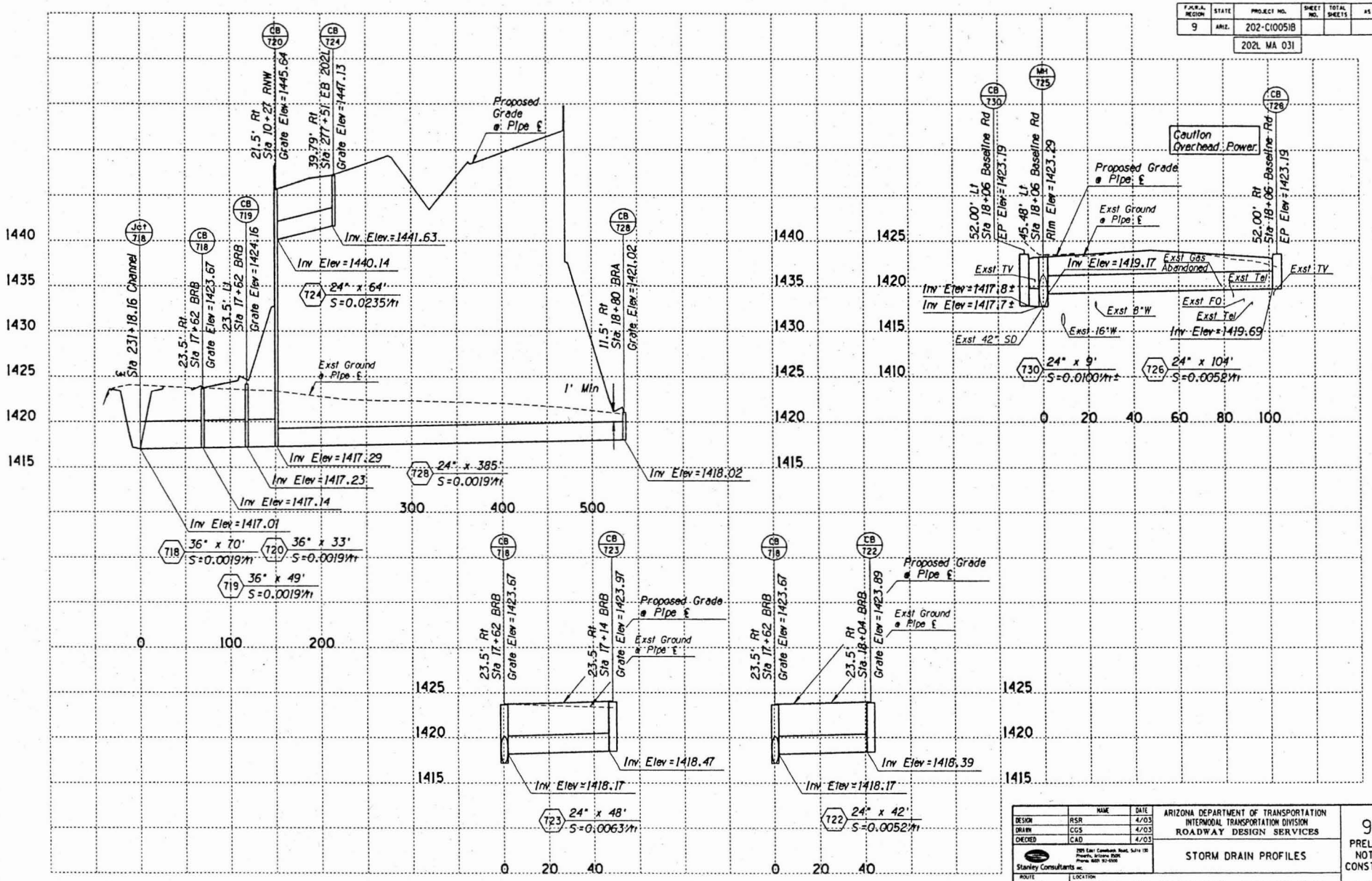

	NAME	DATE
DESIGN	RSR	4/03
DRAWN	CGS	4/03
CHECKED	CAD	4/03

Stanley Consultants Inc.
2575 East Camelback Road, Suite 130
Phoenix, Arizona 85016
Phone: (602) 912-9000

ARIZONA DEPARTMENT OF TRANSPORTATION
INTERMODAL TRANSPORTATION DIVISION
ROADWAY DESIGN SERVICES

STORM DRAIN PROFILES

95%
PRELIMINARY
NOT FOR CONSTRUCTION

ROUTE: 202L
LOCATION: SANTAN FWY, ELLIOT ROAD - BASELINE ROAD

DWG NO. D-2.21

TRACS NO. H 5915 01C

202-C(005)B

___ OF ___

04/24/2003 gi\16110\Dgn\drainage\h5915sdp21.dgn

F.H.W.A. REGION	STATE	PROJECT NO.	SHEET NO.	TOTAL SHEETS	AS BUILT
9	ARIZ.	202-C(005)B			
		202L MA 031			

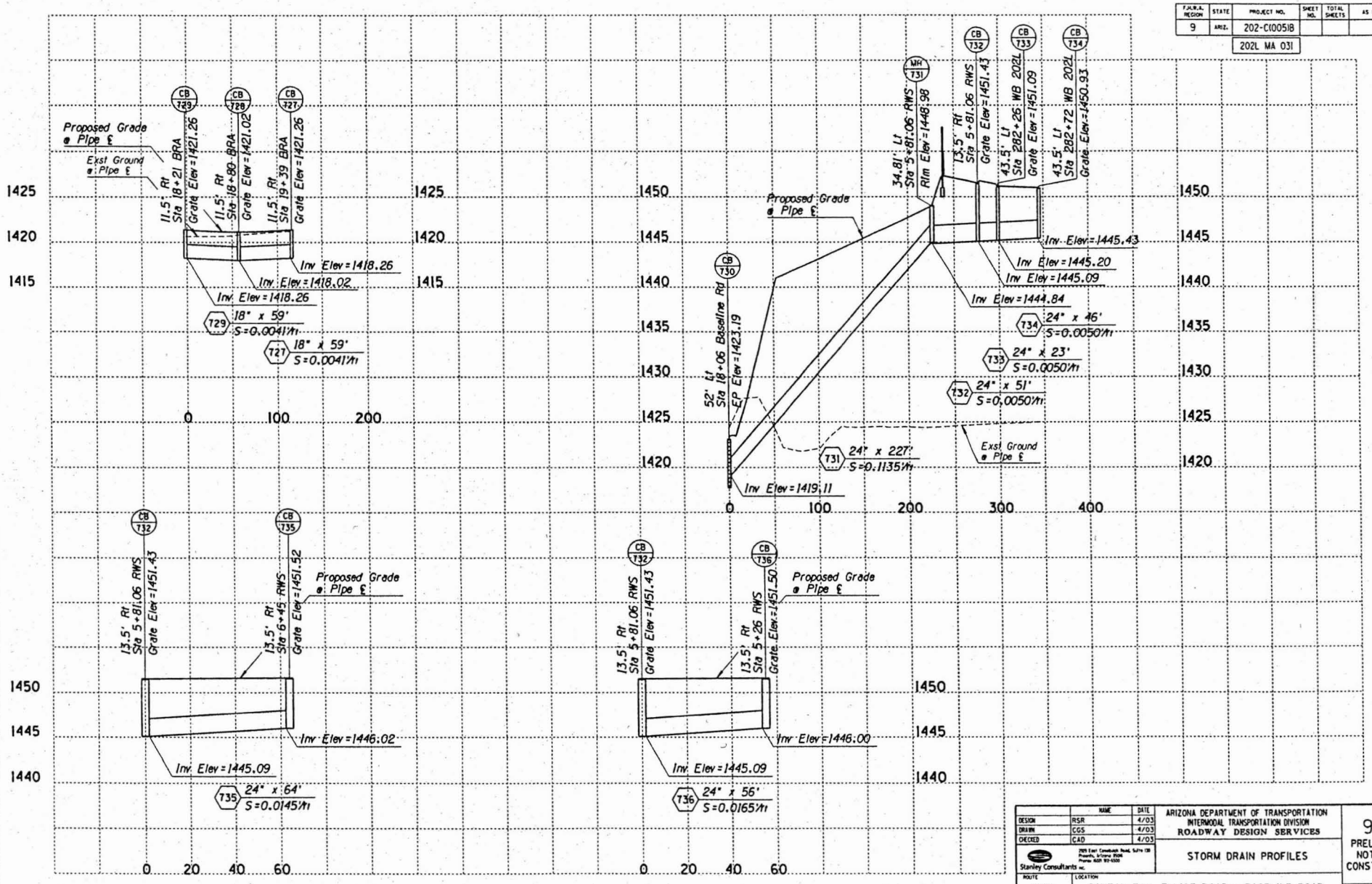

	NAME	DATE
DESIGN	RSR	4/03
DRAWN	CGS	4/03
CHECKED	CAD	4/03

Stanley Consultants Inc.
7878 East Camelback Road, Suite 130
Prescott, Arizona 86305
Phone: (928) 717-1500

ARIZONA DEPARTMENT OF TRANSPORTATION
INTERMODAL TRANSPORTATION DIVISION
ROADWAY DESIGN SERVICES

STORM DRAIN PROFILES

95%
PRELIMINARY
NOT FOR CONSTRUCTION

ROUTE	LOCATION
202L	SANTAN FWY, ELLIOT ROAD - BASELINE ROAD

DWG NO. D-2.22

TRACS NO. H 5915 01C

202-C(005)B

___ OF ___

04/24/2003 qt\16110\Dgn\drainage\h5915sdp22.dgn

F.H.W.A. REGION	STATE	PROJECT NO.	SHEET NO.	TOTAL SHEETS	AS BUILT
9	ARIZ.	202-C(005)B			

202L MA 031

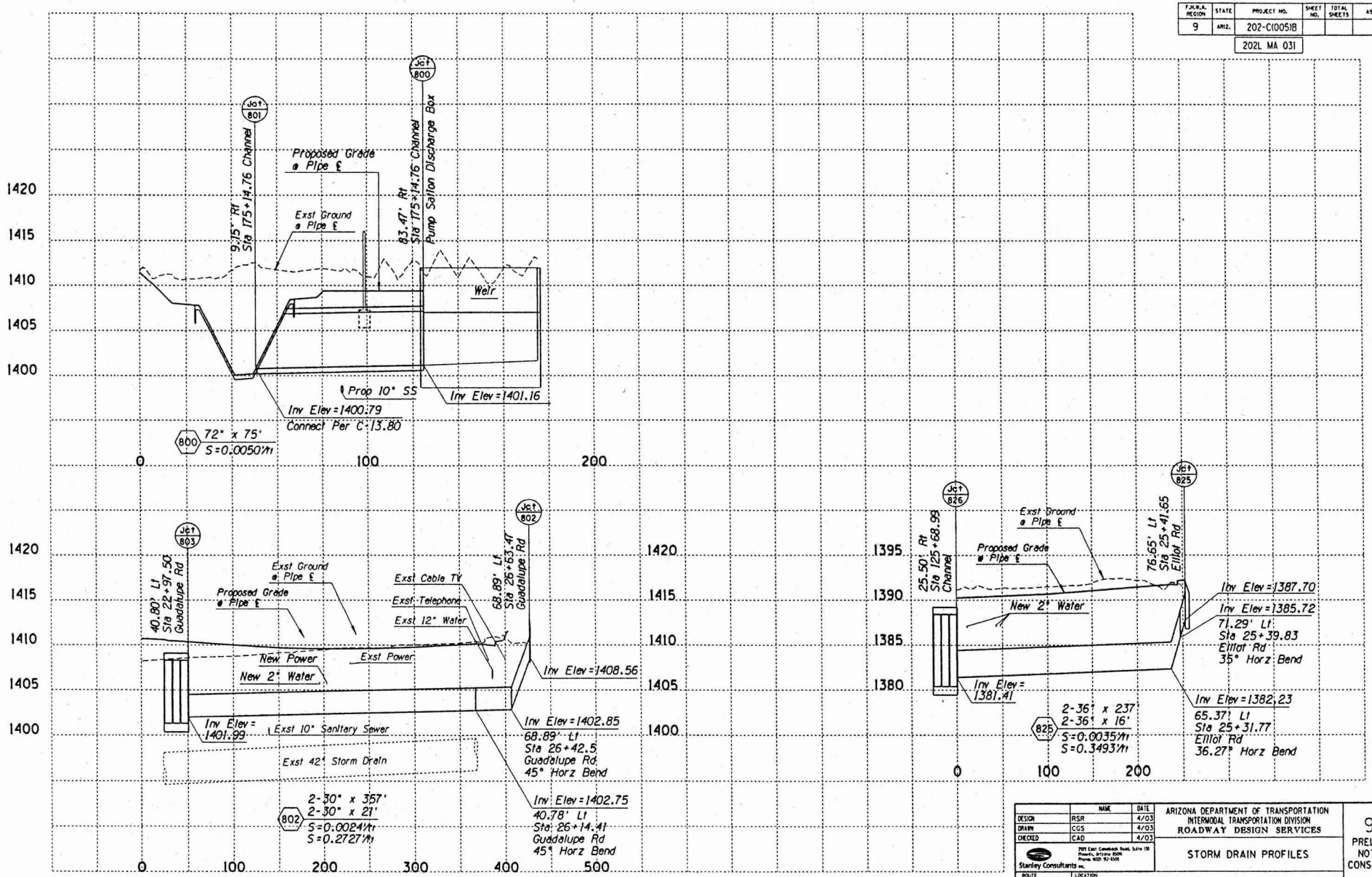

	NAME	DATE
DESIGN	RSR	4/03
DRAWN	CGS	4/03
CHECKED	CAD	4/03

Stanley Consultants inc.
7501 East Camelback Road, Suite 130
Phoenix, Arizona 85251
Phone (602) 921-4500

ARIZONA DEPARTMENT OF TRANSPORTATION
INTERMODAL TRANSPORTATION DIVISION
ROADWAY DESIGN SERVICES

STORM DRAIN PROFILES

95%
PRELIMINARY
NOT FOR
CONSTRUCTION

ROUTE	LOCATION	DWG NO. D-2.23
202L	SANTAN FWY, ELLIOT ROAD - BASELINE ROAD	
TRACS NO. H 5915 01C	202-C(005)B	___ OF ___

04/24/2003 qi\16110\Dgn\drainage\h5915sdp23.dgn

F.H.W.A. REGION	STATE	PROJECT NO.	SHEET NO.	TOTAL SHEETS	AS BUILT
9	ARIZ.	202-C(005)B			

202L MA 031

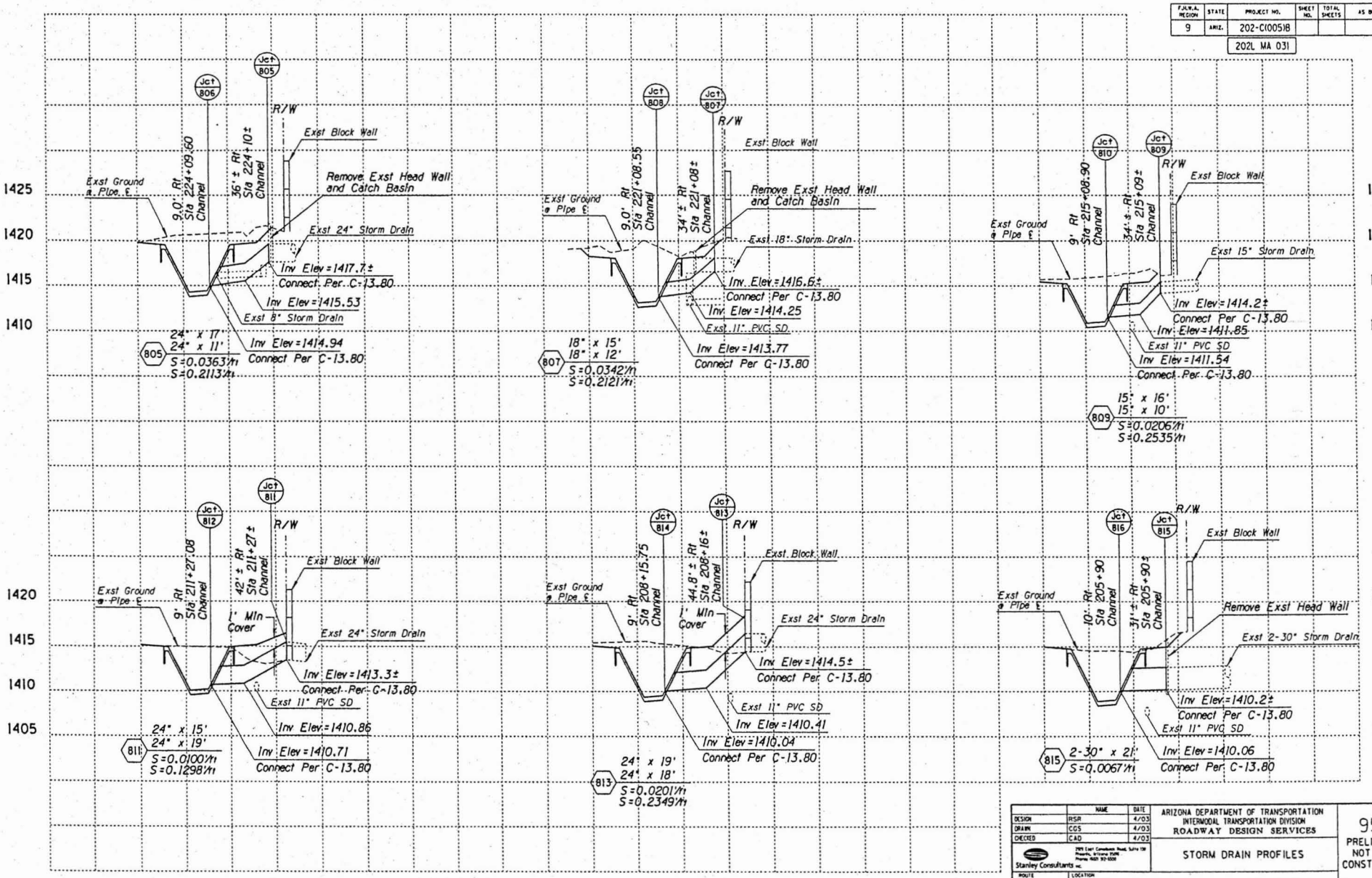

	NAME	DATE
DESIGN	RSR	4/03
DRAWN	CGS	4/03
CHECKED	CAD	4/03

Stanley Consultants INC.

ARIZONA DEPARTMENT OF TRANSPORTATION
INTERMODAL TRANSPORTATION DIVISION
ROADWAY DESIGN SERVICES

STORM DRAIN PROFILES

95%
PRELIMINARY
NOT FOR CONSTRUCTION

ROUTE: 202L
LOCATION: SANTAN FWY, ELLIOT ROAD - BASELINE ROAD

TRACS NO. H 5915 01C

202-C(005)B

DWG NO. D-2.24

___ OF ___

04/21/2003 gr\16110\Dgn\drainage\h5915sdp24.dgn

F.H.W.A. REGION	STATE	PROJECT NO.	SHEET NO.	TOTAL SHEETS	AS BUILT
9	ARIZ.	202-C(005)B			

202L MA 031

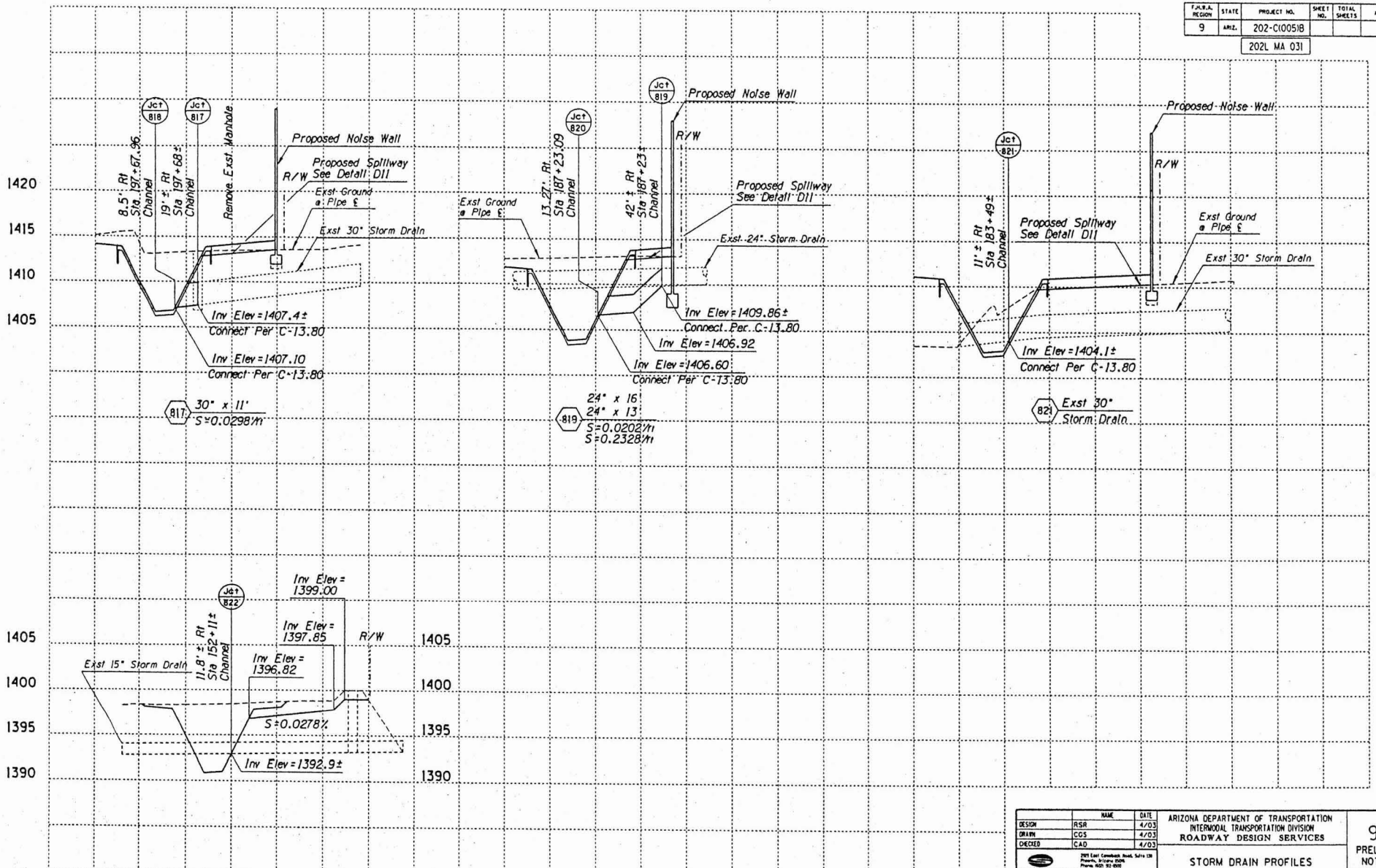

	NAME	DATE
DESIGN	RSR	4/03
DRAWN	CGS	4/03
CHECKED	CAD	4/03

Stanley Consultants inc.
2929 East Camelback Road, Suite 130
Phoenix, Arizona 85016
Phone: (602) 957-8000

ARIZONA DEPARTMENT OF TRANSPORTATION
INTERMODAL TRANSPORTATION DIVISION
ROADWAY DESIGN SERVICES

STORM DRAIN PROFILES

95%
PRELIMINARY
NOT FOR CONSTRUCTION

ROUTE	LOCATION	DWG NO. D-2.25
202L	SANTAN FWY, ELLIOT ROAD - BASELINE ROAD	
TRACS NO. H 5915 01C	202-C(005)B	___ OF ___

04/21/2003 gr\16110\dgn\drainage\h5915sdp25.dgn

F.H.W.A. REGION	STATE	PROJECT NO.	SHEET NO.	TOTAL SHEETS	AS BUILT
9	ARIZ.	202-C(005)B			
		202L MA 031			

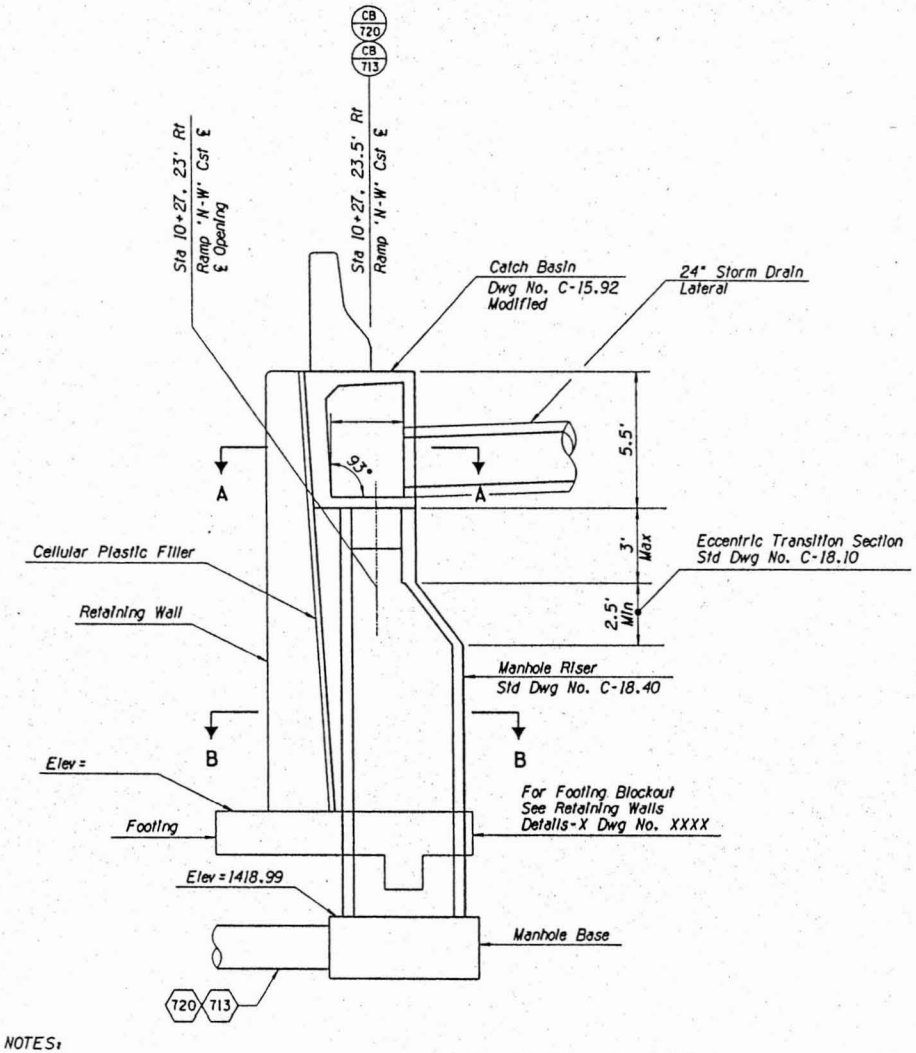

NOTES:

1. Bend Rebar at Designated Angle for Catch Basin Wall Adjacent Retaining Wall.
2. Catch Basin Dimensions and Materials per ADOT Std C-15.92 Unless Otherwise Noted.

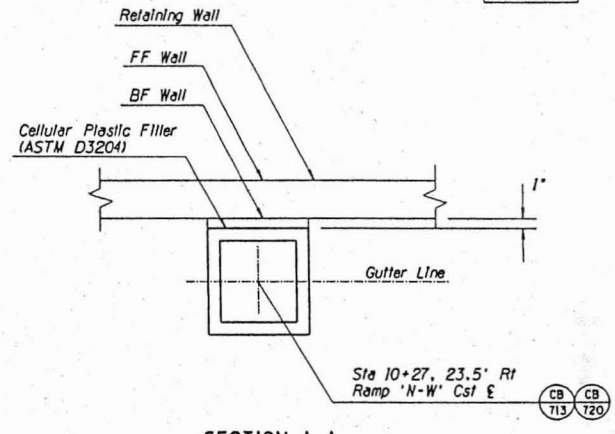

SECTION A-A
NTS

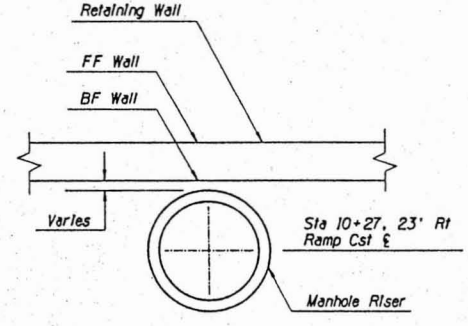

SECTION B-B
NTS

DETAIL D9

	NAME	DATE	ARIZONA DEPARTMENT OF TRANSPORTATION INTERMODAL TRANSPORTATION DIVISION ROADWAY DESIGN SERVICES	95% PRELIMINARY NOT FOR CONSTRUCTION
DESIGN	RSR	4/03		
DRAWN	CGS	4/03		
CHECKED	CAD	4/03		
Stanley Consultants INC.			CATCH BASIN MODIFIED C-15.92	
ROUTE 202L	LOCATION SANTAN FWY, ELLIOT ROAD - BASELINE ROAD			DWG NO. D-5.7
TRACS NO. H 5915 01C			202-C(005)B	___ OF ___

SURVEY NO. | FINISHED PLANS | REVISIONS | LOCATION | DATE | SURVEY NO. | FINISHED PLANS | REVISIONS | LOCATION | DATE

04/22/2003 qr\16110\Dgn\drainage\h5915dd13.dgn

F.H.W.A. REGION	STATE	PROJECT NO.	SHEET NO.	TOTAL SHEETS	AS BUILT
9	ARIZ.	202-C(005)B			
		202L MA 031			

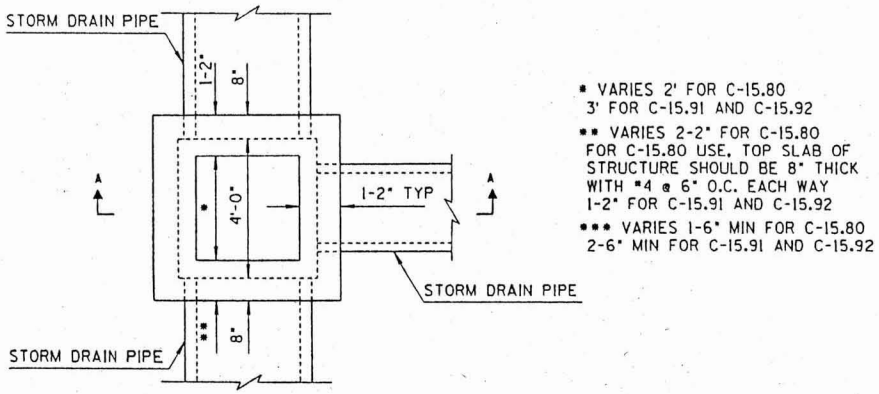

PLAN

* VARIES 2' FOR C-15.80
3' FOR C-15.91 AND C-15.92

** VARIES 2-2" FOR C-15.80
FOR C-15.80 USE, TOP SLAB OF STRUCTURE SHOULD BE 8" THICK WITH #4 @ 6" O.C. EACH WAY
1-2" FOR C-15.91 AND C-15.92

*** VARIES 1-6" MIN FOR C-15.80
2-6" MIN FOR C-15.91 AND C-15.92

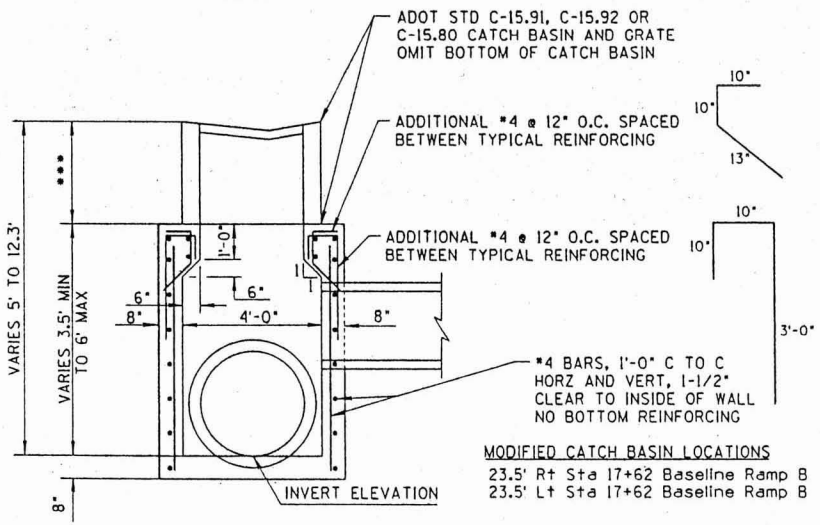

MODIFIED CATCH BASIN LOCATIONS
23.5' Rt Sta 17+62 Baseline Ramp B
23.5' Lt Sta 17+62 Baseline Ramp B

SECTION A-A

MODIFIED CATCH BASIN DETAIL

Notes:

1) Catch basin materials per ADOT Std C-15.80, C-15.91, and C-15.92.
2) Dimensions, reinforcing, and items not shown per ADOT Std C-15.80, C-15.91, and C-15.92.

DETAIL **D10**

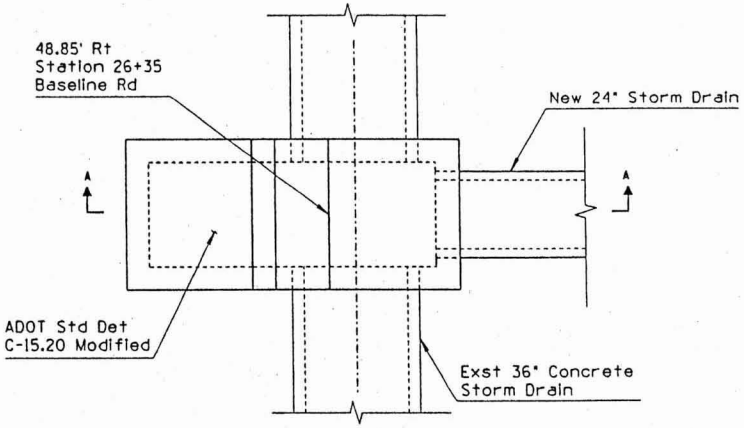

PLAN

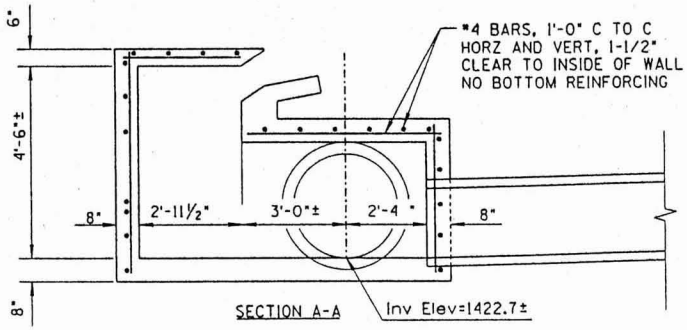

SECTION A-A

MODIFIED CATCH BASIN DETAIL

Notes:

1) Catch basin materials per ADOT Std C-15.20.
2) Dimensions, reinforcing, and items not shown per ADOT Std C-15.20.

DETAIL **D11**

	NAME	DATE	ARIZONA DEPARTMENT OF TRANSPORTATION INTERMODAL TRANSPORTATION DIVISION ROADWAY DESIGN SERVICES	95% PRELIMINARY NOT FOR CONSTRUCTION
DESIGN	RSR	4/03		
DRAWN	CGS	4/03		
CHECKED	CAD	4/03		
Stanley Consultants inc. 2929 East Camelback Road, Suite 130 Phoenix, Arizona 85016 Phone: (602) 912-5000			MODIFIED CATCH BASIN DETAILS	
ROUTE 202L	LOCATION SANTAN FWY, ELLIOT ROAD - BASELINE ROAD			DWG NO. D-5.8
TRACS NO. H 5915 01C			202-C(005)B	___ OF ___

04/22/2003 q:\16110\Dgn\drainage\h5915dd15.dgn

F.H.W.A. REGION	STATE	PROJECT NO.	SHEET NO.	TOTAL SHEETS	AS BUILT
9	ARIZ.	202-C(005)B			
		202L MA 031			

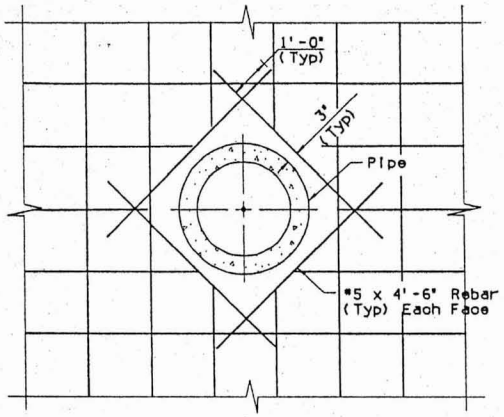

PIPE PENETRATION AT CONCRETE WALL OR BOX CULVERTS
NTS

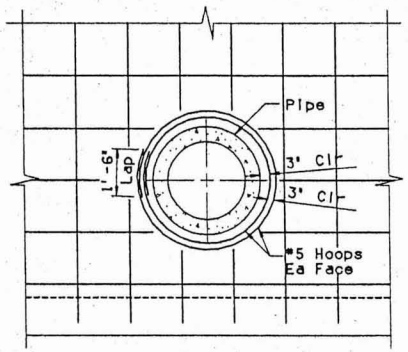

PIPE PENETRATION AT CONCRETE WALL OR BOX CULVERTS
NTS

Pipe Ref Number	Channel Station and Offset	Pipe ϕ (in)	Invert Elevation
202	124+38.65 25.5' Rt	24	1384.00
100	124+39.25 ℄	30	1381.22
104	125+69.29 ℄	30	1380.89
203	125+78.59 25.5' Rt	24	1384.00
407	177+29.21 25.5' Rt	24	1401.90
802	178+30.13 25.5' Rt	2-30	1401.99
410	178+62.44 25.5' Rt	24	1402.41
604	232+59.07 8.92' Rt	24	1420.02
Exst	233+60.60	30	1421.40±

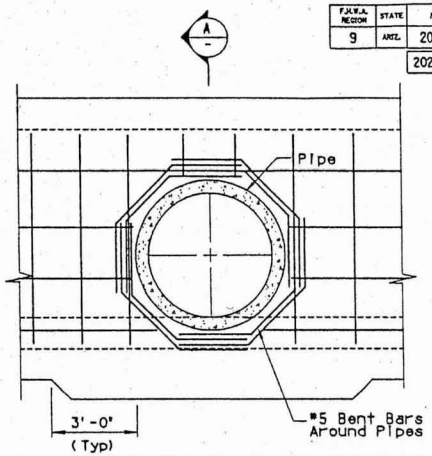

SECTION AT PIPE PENETRATION AT BOX CULVERT INVERT
NTS

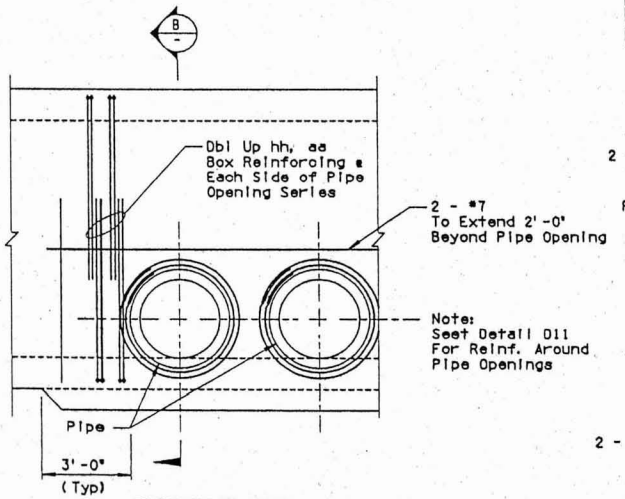

ELEVATION VIEW
TYPICAL MULTI PIPE PENETRATION
Scale: 3"=1'

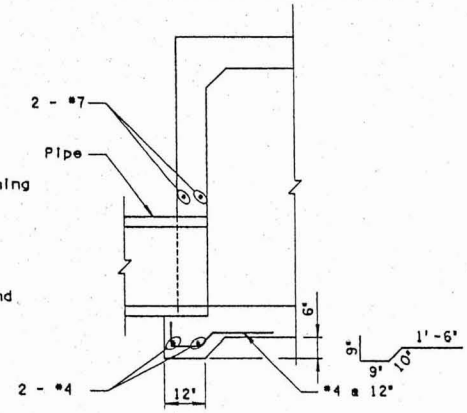

SECTION B
Scale: 3"=1'

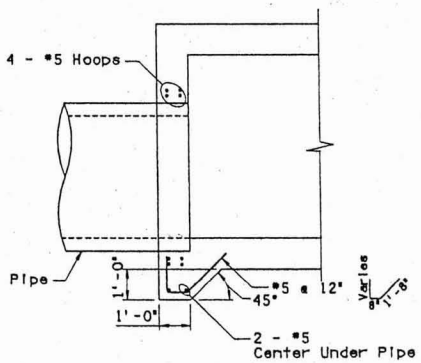

SECTION A
NTS

Note:
1. #5 hoop or bent bar set with 1'-6" overlap may be substituted for straight bars. Typical at each face.

DETAIL D12

	NAME	DATE
DESIGN	SG, GK	03/03
DRAWN	SG	03/03
CHECKED	F. JALAGHI	03/03

PREMIER

ARIZONA DEPARTMENT OF TRANSPORTATION
INTERMODAL TRANSPORTATION DIVISION
ROADWAY DESIGN SERVICES

CONNECTION DETAILS

PRELIMINARY 95% REVIEW
NOT FOR CONSTRUCTION OR RECORDING

ROUTE	LOCATION	DWG NO. D-5.9
202L	SANTAN FWY, ELLIOT ROAD - BASELINE ROAD	
TRACS NO. H 5915 01C	202-C(005)B	___ OF ___

p:\2002020\Cadd\Structures\h5915cd01.dgn
Plotted By: SG 04/02/2003 07:28:41 PM

ooooSYSTIMEoooooo oooooUGNoSPECIFICATIONoooooo

F.A.H.A. REGION	STATE	PROJECT NO.	SHEET NO.	TOTAL SHEETS	AS BUILT
9	ARIZ.	202-C(005)B			
		202L MA 031			

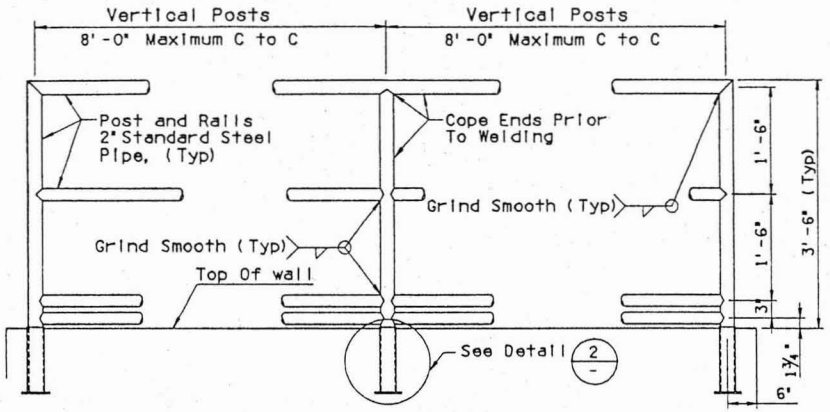

ELEVATION
42" HIGH PIPE HANDRAIL

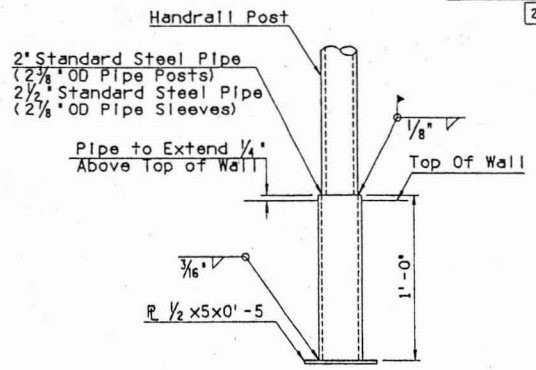

DETAIL 2

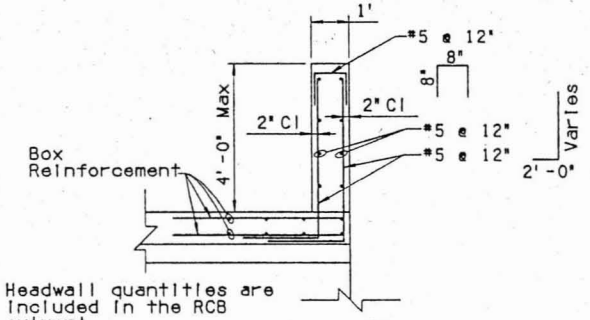

DETAIL 1
Scale: ½" = 1'-0"

4.15, 4.16, 4.17, 4.18, 4.19, 4.20

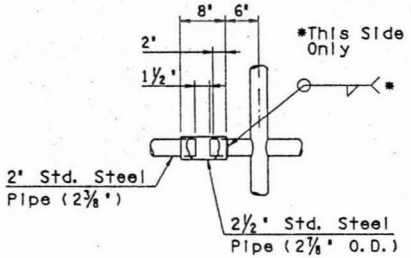

EXPANSION SLEEVE

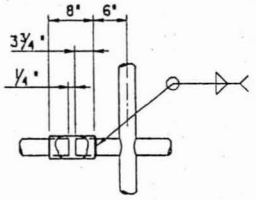

RAIL SPLICE

RAIL DETAIL

NOTES:

1. Pipe Handrail shall be continuous between wall ends and expansion joints and discontinuous through expansion joints.
2. All miscellaneous steel shall be ASTM A-36.
3. All pipe shall be ASTM A-53 Grade B.
4. All galvanizeing to be in accordance with ASTM A-123. All galvanizing that has been damaged in handling, transporting or welding shall be repaired by the application of paste compound of an approved zinc solder and flux.

DETAIL D13

	NAME	DATE
DESIGN	SG, GK	03/03
DRAWN	SG	03/03
CHECKED	F. JALAGHI	03/03

PREMIER

ARIZONA DEPARTMENT OF TRANSPORTATION
INTERMODAL TRANSPORTATION DIVISION
ROADWAY DESIGN SERVICES

HANDRAIL DETAIL

PRELIMINARY
95%
REVIEW
NOT FOR CONSTRUCTION OR RECORDING

ROUTE	LOCATION	DWG NO.
202L	SANTAN FWY, ELLIOT ROAD - BASELINE ROAD	D-5.10

TRACS NO. H 5915 01C | 202-C(005)B | ___ OF ___

p:\2002020\Cadd\Structures\h5915cd02.dgn
Plotted By: SG 04/03/2003 09:34:54 AM

ooooSYSTIMEoooooo ooooooUGNoSPECIFICATIONoooooo

F.A.P.N. REGION	STATE	PROJECT NO.	SHEET NO.	TOTAL SHEETS	AS BUILT
9	ARIZ.	202-C(005)B			
		202L MA 031			

PART 1 - To be completed by the Landscape Architect or Design Engineer

I. PROJECT DESCRIPTION

A. Owner Name and Address:

Arizona Department of Transportation
205 South 17th Avenue
Phoenix, Arizona 85007-3213

B. Project TRACS Number: H 5915 01C

C. Project Location: Santan Fwy (Baseline Rd. to Elliot Rd.)

City: Mesa County: Maricopa

Latitude: 33° 21' 50" Longitude: 111° 38' 30"

D. Project Description: The proposed Santan Fwy is a two directional Freeway with access ramps located at Elliot Rd., Guadalupe Rd., and Baseline Rd. The project includes the design of the fwy mainline and crossroad improvements at Elliot Rd., Guadalupe Rd., and Baseline Rd. A concrete lined channel is proposed along the eastern side of the roadway. The proposed channel will serve to drain the freeway and as a regional drainage facility.

II. HYDROLOGIC INFORMATION

A. Project Size:

Length (Mi.) 3.27

Area (Ac.) 152.2

B. Area to be Graded (Ac.): 125.7

C. Runoff Coefficient:

Existing 0.70

Developed 0.95

D. Receiving Water(s): East Maricopa Floodway (EMF)

III. PRESERVATION OF EXISTING VEGETATION

A. In accordance with the specifications, existing vegetation will be preserved. Clearing limits shall be confined to areas that require grading. Existing vegetation outside the boundaries of the cleared area shall be protected from damage by construction activities. Existing trees within the area to be cleared shall be preserved and protected, wherever possible.

IV. SOIL STABILIZATION MEASURES

A. All disturbed soil, which will not be paved, riprapped or otherwise covered to prevent erosion, will be revegetated and/or landscaped in accordance with the project plans and specifications.

B. Scheduling of the revegatation effort can be found on PART 2 of this sheet under SCHEDULE OF MAJOR ACTIVITIES.

V. MEASURES TO CONTROL EROSION AND SEDIMENT

A. Permanent Erosion and Sediment Controls: (Refer to Project Plans SWPPP Site Plan and Specifications)

____ Crown Ditch/Dike
____ Rock Protection
____ Rock Riprap Channel Lining
____ Sediment Basin
____ Embankment Curb
____ Spillways and Downdrains
____ Minibenching
____ Others Describe:

B. Temporary Erosion and Sediment Controls: (Refer to the Following SWPPP Site Plan and Specifications)

____ Erosion Control Mattings
____ Temporary Diversion Dikes
____ Check Dams
____ Rock Inlet/Outlet Protection
X Sand Bags
____ Silt Fence
X Sediment Logs
X Others Describe: Straw Wattels

VI. MAINTENANCE AND INSPECTIONS

A. Frequency of Inspections:

X Monthly and within 24 hours after a rainfall of 0.5 in. or more (areas with less than 20" or more mean annual rainfall).

____ Weekly and within 24 hours after a rainfall of 0.5 in. or more (areas with 20" mean annual rainfall).

NOTE: RAINFALL GAUGE TO BE KEPT ON-SITE TO DETERMINE DEPTH OF RAINFALL

B. Inspection Procedure:

ADOT's NPDES inspection checklist will be completed by the ADOT resident engineer, or his representative, and will be kept on file. If repairs are necessary, they shall be initiated within 24 hours of the inspection report.

VII. CERTIFICATION OF COMPLIANCE WITH FEDERAL, STATE AND LOCAL REGULATIONS

A. This Storm Water Pollution Plan has been prepared in accordance with ADOT's EROSION AND POLLUTION CONTROL MANUAL FOR HIGHWAY DESIGN AND CONSTRUCTION, published by ADOT, Highways Division. (June 1995)

X No other Federal, State or Local Regulations Apply.

PART 2 - To be completed by ADOT & CONTRACTOR

I. SCHEDULE OF MAJOR ACTIVITIES

A. Project Schedule:

Start Date:

End Date:

B. Construction Sequencing Schedule: (Attach Additional Sheets)

Construction Activity

II. INVENTORY OF POLLUTANTS

A. The materials or substances checked below are expected to be onsite during construction:

__ Concrete __ Asphalt
__ Paints __ Fertilizer
__ Herbicides __ Wood
__ Fuel __ Oil
__ Others, List:

III. POLLUTION CONTROL MEASURES

A. Other Best Management Practices:

__ Solid Waste Management
__ Equipment Maintenance Procedures
__ Designated Washout Areas
__ Stabilized Construction Entrance
__ Protected Chemical and Material Storage Area
__ Other, Describe:

IV. SPILL PREVENTION AND RESPONSE

A. Spill Prevention:
The procedures outlined in the Best Management Practices listed under Pollution Control Measures will be followed to prevent and contain spills of hazardous material. These preventative action include BMP's on equipment maintenance and proper handling, storage and disposal of chemicals and materials. All manufacturer's recommendations for usage, clean-up and disposal shall be followed.

B. Spill Response:
In the event of any accidental spill of chemicals or hazardous materials, contact the ADOT Hazardous Materials Specialist at ADOT's Health and Safety Section (Ph. # (602)712-7744 or Pager # (602)223-8323). If a reportable quantity is discharged in the storm water, ADOT shall contact the National Response Center and document the spill to the EPA. ADOT's Hazardous Materials Specialist shall provide instructions.

V. POLLUTION PREVENTION PLAN CERTIFICATION

A. I certify under penalty of law that I have personally examined and am familiar with the information submitted in this application and all attachments and that, based on my inquiry of those persons immediately responsible for obtaining the information contained in the application. I believe that the information is true, accurate and complete. I am aware that there are significant penalties for submitting false information, including the possibility of fine and imprisonment.

B. ADOT Resident Engineer

Signature:
Date:
Name:
Title:
ADOT District:

C. MUNICIPALITY (For local Government Project)

Signature:
Date:
Name:
Title:
Municipality:

VI. OTHER REQUIREMENTS

A. A copy of the General Permit is attached in accordance to Part IV, Section D, Subpart I(h) of the NPDES General Permit for Storm Water Discharges From Construction Activities.

B. A copy of the page from the environmental clearance for the project that discusses endangered or threatened species is attached in accordance to Part IV, Section D, Subpart I(i) of the NPDES General Permit for Storm Water Discharges From Construction Activities.

C. Note, whether listed endangered or threatened species, or critical habitat, are found in proximity to the constructin activity and whether such species may be affected by the applicant's storm water discharges or storm water discharge-related activities.

	NAME	DATE	ARIZONA DEPARTMENT OF TRANSPORTATION INTERMODAL TRANSPORTATION DIVISION ROADWAY DESIGN SERVICES	95% PRELIMINARY NOT FOR CONSTRUCTION
DESIGN	RSR	4/03		
DRAWN	NRD	4/03		
CHECKED	EAO	4/03		
Stanley Consultants inc. 2901 East Camelback Road, Suite 130 Phoenix, Arizona 85016 Phone (602) 952-6000			SWPPP GENERAL NOTES	
ROUTE 202L	LOCATION SANTAN FWY, ELLIOT ROAD - BASELINE ROAD			DWG NO. E-1.1
TRACS NO. H 5915 01C			202-C(005)B	__ OF __

04/21/2003 q:\16110\Dgn\drainage\h5915sum01.dgn

F.H.W.A. REGION	STATE	PROJECT NO.	SHEET NO.	TOTAL SHEETS	AS BUILT
9	ARIZ.	202-C(005)B			
		202L MA 031			

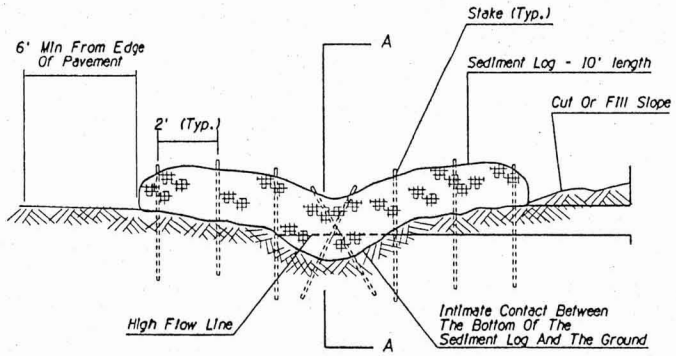

SEDIMENT LOG AND
DITCH / CHANNEL
SECTIONAL ELEVATION
(N. T. S., Typ.)

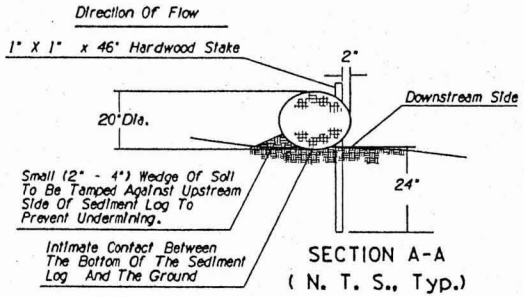

SECTION A-A
(N. T. S., Typ.)

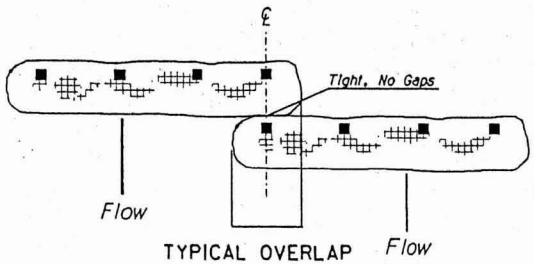

TYPICAL OVERLAP
(N. T. S., Typ.)

Typical Overlap applies to the situation where ditch /channel is wider than the length of one Sediment Log.

NOTES

Sediment logs shall be located as indicated in plans or as directed by the Engineer. They shall be selected, installed, and maintained with manufacturers' specifications and good engineering practices.

Lay sediment log across prepared channel. Trenching or burial of Sediment Logs is not required. The intimate contact between the bottom of the log and the ground is mandatory. The logs shall be installed in the swale or channel bottom and shall continue up the side slopes 2' above the high flow line, all perpendicular to the flow of water.

Stake with 1" X 1" x 46" min. hardwood stakes on 2 feet centers. The stake shall be placed through the downstream side only 2" into the log. It is only necessary for the stakes to grab one or two inches of the netting. Do not drive the stakes through the center of the log. The stakes must be driven into the ground 24". Center stakes shall be placed in an 'X' pattern.

Make sure no gaps exist between the soil and the sediment logs. Repair any rills or gullies promptly. In rock conditions the Engineer will evaluate the placement of sediment logs.

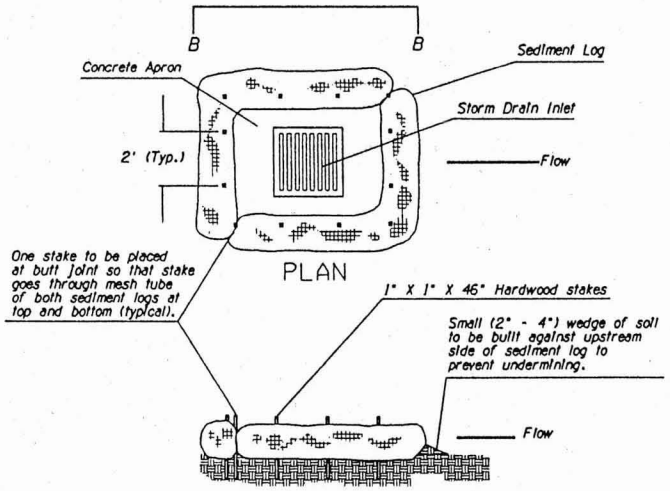

During Construction

SEDIMENT LOG STORM DRAIN PROTECTION
SECTIONAL VIEW B-B (N. T. S., Typ.)

NOTES

Sediment log and stakes to be removed once construction activities are complete. Contractor to dispose of sediment logs and dispose of trapped sediment material and to fill shallow trench created by sediment log.

DETAIL E1
SEDEMENT LOG

	NAME	DATE	ARIZONA DEPARTMENT OF TRANSPORTATION INTERMODAL TRANSPORTATION DIVISION ROADWAY DESIGN SERVICES	95% PRELIMINARY NOT FOR CONSTRUCTION
DESIGN	RSR	4/03		
DRAWN	MRD	4/03		
CHECKED	CAD	4/03		
Stanley Consultants inc. 2975 East Camelback Road, Suite 130 Phoenix, Arizona 85016 Phone: (602) 912-0505			EROSION CONTROL DETAILS	
ROUTE 202L	LOCATION SANTAN FWY, ELLIOT ROAD - BASELINE ROAD			DWG NO. E-1.2
TRACS NO. H 5915 01C			202-C(005)B	___ OF ___

04/21/2003 gr\16110\Dgn\drainage\h5915swdt101.dgn

F.H.W.A. REGION	STATE	PROJECT NO.	SHEET NO.	TOTAL SHEETS	AS BUILT
9	ARIZ.	202-C(005)B			
		202L MA 031			

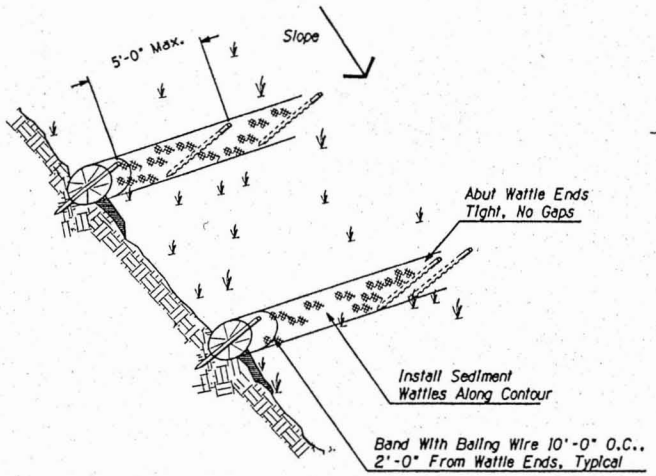

SEDIMENT WATTLE LAYOUT
(N. T. S., Typ.)

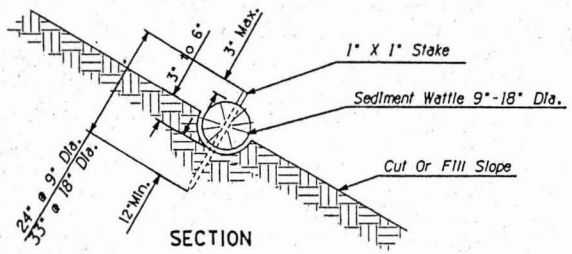

SECTION
SEDIMENT WATTLE
(N. T. S., Typ.)

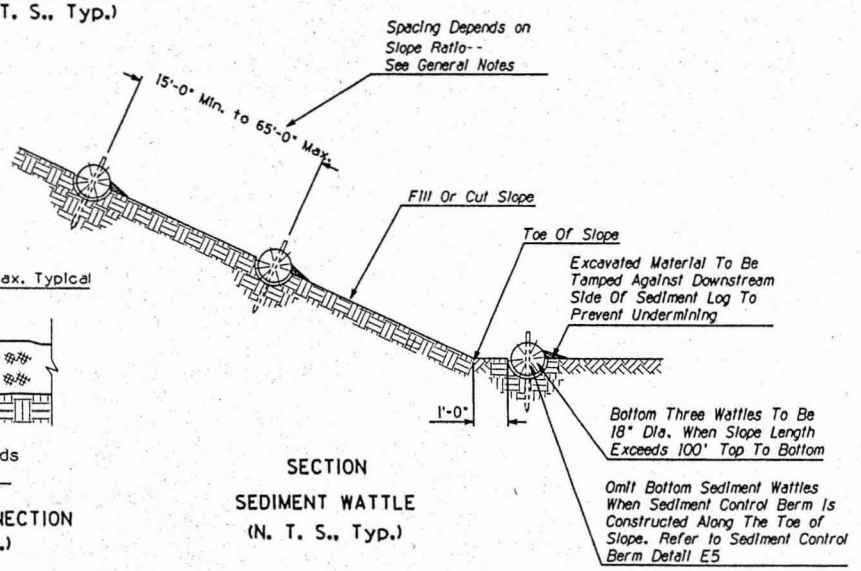

SECTION
SEDIMENT WATTLE
(N. T. S., Typ.)

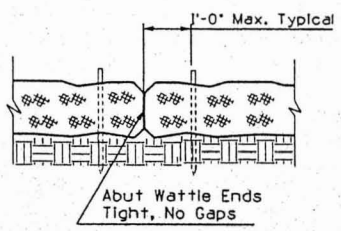

SEDIMENT WATTLE CONNECTION
(N. T. S., Typ.)

NOTES

Sediment Wattles To Be Installed As Slopes Are Constructed To Grade Or As Directed By The Engineer. They Shall Be Selected, Installed, And Maintained With Manufacturers' Specifications And Good Engineering Practices.

Trenches To Be Constructed Along Contour, Parallel To The Horizon. Trench Depth To Be 1/3 The Thickness Of The Sediment Wattle. Place Excavated Material On Downhill Side Of Trench.

Locate Sediment Wattles As Indicated On Plans Or As Directed By The Engineer. Space Trenches According To The Following Schedule:

Slope Ratio	Spacing Intervals
1:1	15'-0"
2:1	20'-0"
3:1	35'-0"
4:1	45'-0"
5:1	55'-0"
6:1	65'-0"

Sediment Wattles To Be In Continuous Contact With Trench Bottom And Sides.

Stakes To Penetrate Undisturbed Soil Of Trench Bottom 12" Minimum. Stake To Be Exposed 3" Minimum Above Top Of Wattle.

Space Stakes 5'-0" O.C. Max., 1'-0"Max. At Wattle Ends, Typical.

18" Dia. Wattles Require Two Excelsior Or Two Straw Blankets Rolled.

Repair Any Rills Or Gullies Promptly.

DETAIL E2
SEDIMENT WATTLE

	NAME	DATE	ARIZONA DEPARTMENT OF TRANSPORTATION INTERMODAL TRANSPORTATION DIVISION ROADWAY DESIGN SERVICES	95% PRELIMINARY NOT FOR CONSTRUCTION
DESIGN	RSR	4/03		
DRAWN	NRD	4/03		
CHECKED	CAD	4/03		
Stanley Consultants inc.			EROSION CONTROL DETAILS	
ROUTE 202L	LOCATION SANTAN FWY, ELLIOT ROAD - BASELINE ROAD			DWG NO. E-1.3
TRACS NO. H 5915 01C			202-C(005)B	___ OF ___

F.H.W.A. REGION	STATE	PROJECT NO.	SHEET NO.	TOTAL SHEETS	AS BUILT
9	ARIZ.	202-C(005)B			
		202L MA 031			

Station	Plan Ref No.	Straw Wattle Left	Straw Wattle Right	Straw Wattle Spacing (ft)	Straw Wattle Height (ft) ◪	Check Dams ◒ Left	Check Dams ◒ Right	Check Dams ◒ Spacing (ft)	Check Dams ◒ Depth (ft)	Cut & Fill Transitions Left	Cut & Fill Transitions Right	Cut & Fill Transitions Center	Fiber Logs o Right	Fiber Logs o Spacing (ft)	Fiber Logs o Left	Silt Fence Right	Silt Fence Spacing (ft)	Silt Fence Left	Rock Mulch & Riprap Treatment End Sections Right	Rock Mulch & Riprap Treatment End Sections Left	Rock Mulch & Riprap Treatment Headwalls Right	Straw Wattles (lf)	Check Dam (cy)	Cut & Fill Transitions (cy)	Fiber Logs (ea)	End Sections (cy)	Diversion Dike (lf)	Headwalls (cy)	REMARKS
Elliot Rd. Sta 21+01 63' Rt	100												X																
Elliot Rd. Sta 20+19.72 63' Rt	101												X																
Elliot Rd. Sta 19+37 63' Rt	102												X																
Elliot Rd. Sta 18+75 72.71' Rt	103												X																
Elliot Rd. Sta 22+09.20 65' Lt	104									X																			
Elliot Rd Sta 21+01 63' Lt	105									X																			
Elliot Rd. Sta 20+19.72 63' Lt	106									X																			
Elliot Rd. Sta 19+37 63' Lt	107									X																			
Elliot Rd. Sta 18+75 72.71' Lt	108									X																			
Ramp EC Sta 1+64.26 25.5' Rt	109												X																
Ramp EC Sta 1+64.26 23.5' Lt	110									X																			
Ramp EC Sta 2+26 23.5' Lt	111									X																			
Ramp ED Sta 1+70 11.5' Rt	112												X																
Ramp ED Sta 2+17.67 11.5' Rt	113												X																
Ramp ED Sta 2+65 11.5' Rt	114												X																
Ramp ED Sta 2+17.67 23.5' Lt	115									X																			
Ramp ED Sta 5+25 11.5' Rt	116												X																
202L WB Med Sta 3183+63 91.5 Lt	117									X																			
202L WB Med Sta 3181+69 91.5 Lt	118									X																			
202L EB Med Sta 3181+69 67.5' Rt	119												X																
202L EB Med Sta 3186+27 67.5' Rt	120												X																
202L EB Med Sta 3187+67 96.74 Rt	121												X																
202L EB Med Sta 3188+42 90.69' Rt	122												X																
202L WB Med Sta 3188+53 114.62' Lt	124									X																			
202L WB Med Sta 3187+67 120.09' Lt	125									X																			
202L WB Med Sta 3185+96 131.34 Lt	126									X																			
202L WB Med Sta 3189+04 111.79' Lt	127									X																			
Sheet Total																													

SW - Straw Wattle
CD - Cack Dam
SF - Silt Fence
FL - Fiber Logs
CF - Cut & Fill Transitions
DD - Diversion Dike & Slope drain

FL — Reference to Legend and Type of Installation
E-1 — Reference to Detail Sheet for SWPP Installation Details

NOTES:
1. The Placement of all Erosion Control Devices Listed Above Will Be Subject to Change and May be Adjusted by the Field Engineer.
2. The Erosion/Sediment Control Devices Listed Above Shall Remain in Place Until the Bare Ground is Stabalized.

◒ Spacing to be Determined by the Field Engineer.

○ Placement of Fiber Logs to be Determined by the Field Engineer.

□ Erosion Control Quantities will be Determined by the Field Engineer. Measurement for Payment will be determined Under Force Account

◪ Maximum Height of 12 inches, Unless otherwise specified.

	NAME	DATE
DESIGN	MRG	4/03
DRAWN	WJP	4/03
CHECKED	CAD	4/03

Stanley Consultants inc.
2929 East Camelback Road, Suite 130
Phoenix, Arizona 85016
Phone: 602 93-6006

ARIZONA DEPARTMENT OF TRANSPORTATION
INTERMODAL TRANSPORTATION DIVISION
ROADWAY DESIGN SERVICES

STORM WATER POLLUTION PREVENTION PLAN SUMMARY SHEET

95%
PRELIMINARY NOT FOR CONSTRUCTION

ROUTE: 202L
LOCATION: SANTAN FWY, ELLIOT ROAD - BASELINE ROAD

TRACS NO. H 5915 01C | 202-C(005)B

DWG NO. E-2.1
___ OF ___

04/21/2003 q:\16110\Drainage\DGN\SWPPPSummaries\h5150sp01.dgn

DATE: LOCATION: REVISIONS: FINISHED PLANS: SURVEY NO. DATE: LOCATION: REVISIONS: FINISHED PLANS: SURVEY NO.

F.H.W.A. REGION	STATE	PROJECT NO.	SHEET NO.	TOTAL SHEETS	AS BUILT
9	ARIZ.	202-C(005)B			
		202L MA 031			

Station	Plan Ref No.	Straw Wattle Left	Straw Wattle Right	Straw Wattle Spacing (ft)	Straw Wattle Height (ft) ◪	Check Dams ● Left	Check Dams ● Right	Check Dams ● Spacing (ft)	Check Dams ● Depth (ft)	Cut & Fill Transitions Left	Cut & Fill Transitions Right	Cut & Fill Transitions Center	Fiber Logs ○ Left	Fiber Logs ○ Right	Fiber Logs ○ Spacing (ft)	Silt Fence Left	Silt Fence Right	Silt Fence Spacing (ft)	Rock Mulch & Riprap Treatment End Sections Left	Rock Mulch & Riprap Treatment End Sections Right	Rock Mulch & Riprap Treatment Headwalls Left	Rock Mulch & Riprap Treatment Headwalls Right	Straw Wattles (lf)	Check Dam (cy)	Cut & Fill Transitions (cy)	Fiber Logs (ea)	End Sections (cy)	Diversion Dike (lf)	Headwalls (cy)	REMARKS
202L WB Med Sta 3190+27 106.39' Lt	128											X																		
202L EB Med Sta 3189+04 86.25' Rt	129													X																
202L EB Med Sta 3190+27 80.76' Rt	131													X																
202L EB Med Sta 3192+95 79.5' Rt	132													X																
202L EB Med Sta 3192+95 103.5' Lt	133											X																		
202L EB Med Sta 3195+95 79.5' Rt	134													X																
202L WB Med Sta 3195+95 103.5' Lt	135											X																		
202L EB Med Sta 3200+79 ℄	136												X																	
202L EB Med Sta 3189+66 ℄	137												X																	
202L EB Med Sta 3187+64 ℄	138												X																	
202L WB Med Sta 3195+10 156.86' Lt	139											X																		
Elliot Rd. Sta 10+00 46.20' Rt	200													X																
Elliot Rd. Sta 10+00 46.20' Lt	201											X																		
Elliot Rd. Sta 23+18 62.39 Rt	202													X																
Elliot Rd. Sta 23+14 73.50 Lt	203											X																		
202L EB Med Sta 3218+70 91.5' Rt	300													X																
202L EB Med Sta 3216+47 91.5' Rt	301													X																
202L EB Med Sta 3213+10 78.91 Rt	302													X																
Ramp GB Sta 6+96 17.87' Rt	303													X																
202L EB Med Sta 3210+80 104.63' Rt	304													X																
202L EB Med Sta 3209+25 84.42' Rt	305													X																
202L EB Med Sta 3207+60 79.5' Rt	306													X																
202L EB Med Sta 3203+65 79.5' Rt	307													X																
202L WB Med Sta 3203+65 103.5' Lt	308											X																		
Ramp GA Sta 6+48.09 11.5' Lt	309											X																		
Ramp GA Sta 5+83 11.05' Lt	310											X																		
202L WB Med 3210+10 113.43' Lt	311											X																		
Sheet Total																														

SW - Straw Wattle
CD - Ceck Dam
SF - Silt Fence
FL - Fiber Logs
CF - Cut & Fill Transitions
DD - Diversion Dike & Slope drain

FL — Reference to Legend and Type of Installation
E-1 — Reference to Detail Sheet for SWPP Installation Details

NOTES:
1. The Placement of all Erosion Control Devices Listed Above Will Be Subject to Change and May be Adjusted by the Field Engineer.
2. The Erosion/Sediment Control Devices Listed Above Shall Remain in Place Until the Bare Ground is Stabalized.

● Spacing to be Determined by the Field Engineer.

○ Placement of Fiber Logs to be Determined by the Field Engineer.

□ Erosion Control Quantities will be Determined by the Field Engineer. Measurement for Payment will be determined Under Force Account

◪ Maximum Height of 12 Inches, Unless otherwise specified.

	NAME	DATE
DESIGN	NRG	4/03
DRAWN	WJP	4/03
CHECKED	CAD	4/03

Stanley Consultants inc.
7025 East Greenback Road, Suite 130
Phoenix, Arizona 85020
Phone: (602) 957-6500

ARIZONA DEPARTMENT OF TRANSPORTATION
INTERMODAL TRANSPORTATION DIVISION
ROADWAY DESIGN SERVICES

STORM WATER POLLUTION PREVENTION PLAN SUMMARY SHEET

95%
PRELIMINARY NOT FOR CONSTRUCTION

ROUTE	LOCATION	DWG NO. E-2.2
202L	SANTAN FWY, ELLIOT ROAD - BASELINE ROAD	
TRACS NO. H 5915 01C	202-C(005)B	___ OF ___

04/21/2003 q:\16110\Drainage\DGN\SWPPPSummaries\h5150sp02.dgn

F.H.W.A. REGION	STATE	PROJECT NO.	SHEET NO.	TOTAL SHEETS	AS BUILT
9	ARIZ.	202-C(005)B			
		202L MA 031			

Station	Plan Ref. No.	Straw Wattle Left	Straw Wattle Right	Straw Wattle Spacing (ft)	Straw Wattle Height (ft) ◪	Check Dams ◒ Left	Check Dams ◒ Right	Check Dams ◒ Spacing (ft)	Check Dams ◒ Depth (ft)	Cut & Fill Transitions Left	Cut & Fill Transitions Right	Cut & Fill Transitions Center	Fiber Logs o Left	Fiber Logs o Right	Fiber Logs o Spacing (ft)	Silt Fence Left	Silt Fence Right	Silt Fence Spacing (ft)	Rock Mulch & Riprap Treatment End Sections Left	Rock Mulch & Riprap Treatment End Sections Right	Rock Mulch & Riprap Treatment Headwalls Left	Rock Mulch & Riprap Treatment Headwalls Right	Straw Wattles (lf)	Check Dam (cy)	Cut & Fill Transitions (cy)	Fiber Logs (ea)	End Sections (cy)	Diversion Dike (lf)	Headwalls (cy)	REMARKS
202L WB Med Sta 3208+80 106.64 Lt	312									X																				
202L WB Med Sta 3207+60 103.5' Lt	313									X																				
Ramp GA Sta 7+15 11.5' Lt	314									X																				
Ramp GA Sta 8+30 11.5' Lt	315									X																				
202L EB Med Sta 3222+50 79.5' Rt	316											X																		
202L EB Med Sta 3222+04 79.5' Rt	317											X																		
202L EB Med Sta 3218+70 79.5' Rt	318											X																		
202L WB Med Sta 3218+70 91.5' Lt	319									X																				
Ramp GB Sta 10+50 8.5' Rt	320											X																		
Ramp GB Sta 8+20 5.5' Rt	321											X																		
Ramp GB Sta 7+39 5.5' Rt	322											X																		
Ramp GB Sta 6+75.88 5.5' Rt	323											X																		
Ramp GB Sta 6+13 5.5' Rt	324											X																		
202L EB Med Sta 3211+57 97.85' Rt	325											X																		
202L EB Med Sta 3210+80 92.61' Rt	326											X																		
Guadalupe Rd. Sta 10+63 45.8' Lt	401									X																				
Guadalupe Rd. Sta 11+23 47.3' Rt	403											X																		
Guadalupe Rd. Sta 18+28.25 61' Rt	404											X																		
Guadalupe Rd. Sta 18+30.18 61' Lt	406									X																				
Guadalupe Rd. Sta 23+69.5 59.06' Rt	407											X																		
Guadalupe Rd. Sta 24+62.18 51.32' Rt	408											X																		
Guadalupe Rd. Sta 25+64 54.78' Rt	409											X																		
Guadalupe Rd. Sta 23+60 70.3' Lt	410									X																				
Guadalupe Rd. Sta 24+62.18 68.32' Lt	411									X																				
Guadalupe Rd. Sta 25+64 62.56' Lt	412									X																				
202L EB Med Sta 3201+36.22 134.37' Rt	421											X																		
202L EB Med Sta 3205+28 139.12' Rt	422											X																		
Sheet Total																														

SW - Straw Wattle
CD - Check Dam
SF - Silt Fence
FL - Fiber Logs
CF - Cut & Fill Transitions
DD - Diversion Dike & Slope drain

FL — Reference to Legend and Type of Installation
E-1 — Reference to Detail Sheet for SWPP Installation Details

NOTES:
1. The Placement of all Erosion Control Devices Listed Above Will Be Subject to Change and May be Adjusted by the Field Engineer.
2. The Erosion/Sediment Control Devices Listed Above Shall Remain in Place Until the Bare Ground is Stabalized.

◒ Spacing to be Determined by the Field Engineer.

o Placement of Fiber Logs to be Determined by the Field Engineer.

□ Erosion Control Quantities will be Determined by the Field Engineer. Measurement for Payment will be determined Under Force Account

◪ Maximum Height of 12 inches, Unless otherwise specified.

	NAME	DATE
DESIGN	MRG	4/03
DRAWN	WJP	4/03
CHECKED	CAD	4/03

Stanley Consultants inc.
2929 East Camelback Road, Suite 130
Phoenix, Arizona 85016
Phone: (602) 957-5500

ARIZONA DEPARTMENT OF TRANSPORTATION
INTERMODAL TRANSPORTATION DIVISION
ROADWAY DESIGN SERVICES

STORM WATER POLLUTION PREVENTION PLAN SUMMARY SHEET

95%
PRELIMINARY NOT FOR CONSTRUCTION

ROUTE: 202L
LOCATION: SANTAN FWY, ELLIOT ROAD - BASELINE ROAD
DWG NO. E-2.3
TRACS NO. H 5915 01C
202-C(005)B
___ OF ___

04/21/2003 g:\16110\Drainage\DGN\SWPPPSummaries\h5150sp03.dgn

F.H.W.A. REGION	STATE	PROJECT NO.	SHEET NO.	TOTAL SHEETS	AS BUILT
9	ARIZ.	202-C(005)B			
		202L MA 031			

Station	Plan Ref No.	Straw Wattle Left	Straw Wattle Right	Straw Wattle Spacing (ft)	Straw Wattle Height (ft) ◪	Check Dams ● Left	Check Dams ● Right	Check Dams ● Spacing (ft)	Check Dams ● Depth (ft)	Cut & Fill Transitions Left	Cut & Fill Transitions Right	Cut & Fill Transitions Left	Cut & Fill Transitions Center	Fiber Logs ○ Right	Fiber Logs ○ Spacing (ft)	Fiber Logs ○ Left	Fiber Logs ○ Right	Silt Fence Spacing (ft)	Silt Fence Left	Silt Fence Right	Rock Mulch & Riprap Treatment: End Sections Left	Rock Mulch & Riprap Treatment: End Sections Right	Rock Mulch & Riprap Treatment: Headwalls Straw Wattles (lf)	Check Dam (cy)	Cut & Fill Transitions (cy)	Fiber Logs (ea)	End Sections (cy)	Diversion Dike (lf)	Headwalls (cy)	REMARKS
202L EB Med Sta 3209+20 143.88' Rt	423													X																
202L EB Med Sta 3214+92 194.31' Rt	424													X																
202L EB Med Sta 3220+57 245.63' Rt	425													X																
Guadalupe Rd. Sta 22+60 17' Rt	426													X																
Guadalupe Rd. Sta 23+10 31.8' Lt	427											X																		
202L EB Med Sta 3222+58 91.5' Rt	500													X																
202L WB Med Sta 3222+58 103.5' Lt	501											X																		
202L WB Med Sta 3225+39 103.5' Lt	502											X																		
202L WB Med Sta 3228+50 103.5' Lt	503											X																		
202L WB Med Sta 3232+24 103.5' Lt	504											X																		
202L WB Med Sta 3234+56 103.5' Lt	505											X																		
Ramp GC 10+75 29.5' Lt	506											X																		
Ramp GC 11+75 29.5' Lt	507											X																		
202L WB Med Sta 3239+03 132.5' Lt	508											X																		
202L WB Med Sta 3242+30 107.98' Lt	509											X																		
202L WB Med Sta 3246+38 115.5' Lt	510											X																		
202L EB Med Sta 3246+38 93.5' Rt	511													X																
202L EB Med Sta 3247+11 93.5' Rt	512													X																
202L EB Med Sta 3248+65 ℄	513												X																	
202L EB Med Sta 3241+41 ℄	514												X																	
202L EB Med Sta 3222+21 ℄	515												X																	
202L WB Med Sta 3223+60 91.5' Lt	516											X																		
202L WB Med Sta 3225+39 91.5' Lt	517											X																		
202L EB Med Sta 3225+70 18.5' Rt	518													X																
202L EB Med Sta 3225+04 18.5' Rt	519													X																
202L EB Med Sta 3225+13 93.5' Rt	520													X																
202L EB Med Sta 3226+38 18.5' Rt	521													X																
Sheet Total																														

TYPE INSTALLATION — QUANTITIES □

SW - Straw Wattle
CD - Check Dam
SF - Silt Fence
FL - Fiber Logs
CF - Cut & Fill Transitions
DD - Diversion Dike & Slope drain

FL — Reference to Legend and Type of Installation
E-1 — Reference to Detail Sheet for SWPP Installation Details

NOTES:
1. The Placement of all Erosion Control Devices Listed Above Will Be Subject to Change and May be Adjusted by the Field Engineer.
2. The Erosion/Sediment Control Devices Listed Above Shall Remain In Place Until the Bare Ground Is Stabalized.

● Spacing to be Determined by the Field Engineer.

○ Placement of Fiber Logs to be Determined by the Field Engineer.

□ Erosion Control Quantities will be Determined by the Field Engineer. Measurement for Payment will be determined Under Force Account

◪ Maximum Height of 12 inches, Unless otherwise specified.

	NAME	DATE
DESIGN	MRG	4/03
DRAWN	WJP	4/03
CHECKED	CAD	4/03

Stanley Consultants Inc.

ARIZONA DEPARTMENT OF TRANSPORTATION
INTERMODAL TRANSPORTATION DIVISION
ROADWAY DESIGN SERVICES

STORM WATER POLLUTION PREVENTION PLAN SUMMARY SHEET

95%
PRELIMINARY NOT FOR CONSTRUCTION

ROUTE: 202L
LOCATION: SANTAN FWY, ELLIOT ROAD - BASELINE ROAD

DWG NO. E-2.4

TRACS NO. H 5915 01C | 202-C(005)B | ___ OF ___

04/21/2003 q:\16110\Drainage\DGN\SWPPPSummaries\h5150sp04.dgn

F.H.W.A. REGION	STATE	PROJECT NO.	SHEET NO.	TOTAL SHEETS	AS BUILT
9	ARIZ.	202-C(005)B			
		202L MA 031			

Station	Plan Ref No.	Straw Wattle Left	Straw Wattle Right	Straw Wattle Spacing (ft)	Straw Wattle Height (ft) ◪	Check Dams ◒ Left	Check Dams ◒ Right	Check Dams ◒ Spacing (ft)	Check Dams ◒ Depth (ft)	Cut & Fill Transitions Left	Cut & Fill Transitions Right	Cut & Fill Transitions Left	Cut & Fill Transitions Center	Fiber Logs ○ Right	Fiber Logs ○ Spacing (ft)	Fiber Logs ○ Left	Fiber Logs ○ Right	Silt Fence Spacing (ft)	Silt Fence Left	Silt Fence Right	Rock Mulch & Riprap Treatment End Sections Left	Rock Mulch & Riprap Treatment End Sections Right	Rock Mulch & Riprap Treatment Headwalls Straw Wattles (lf)	Rock Mulch & Riprap Treatment Headwalls Check Dam (cy)	QUANTITIES □ Cut & Fill Transitions (cy)	QUANTITIES □ Fiber Logs (ea)	QUANTITIES □ End Sections (cy)	QUANTITIES □ Diversion Dike (lf)	QUANTITIES □ Headwalls (cy)	REMARKS
202L EB Med Sta 3226+38 ℄	522												X																		
202L WB Med Sta 3225+81.92 91.5' Lt	523											X																			
202L WB Med Sta 3227+46 91.5' Lt	524											X																			
202L WB Med Sta 3228+50 91.5' Lt	525											X																			
202L EB Med Sta 3228+50 18.5' Rt	526													X																	
202L EB Med Sta 3232+24 18.5' Rt	527													X																	
Ramp GC Sta 8+76 17.5' Lt	529											X																			
Ramp GC Sta 9+75.74 19.5' Lt	530											X																			
Ramp GD Sta 10+96.52 11.5' Lt	531											X																			
Ramp GD Sta 9+96 11.5' Lt	532											X																			
Ramp GD Sta 8+50 11.5' Lt	533											X																			
202L EB Med Sta 3236+00 18.5' Rt	534													X																	
Ramp GD Sta 11+97 11.5' Lt	535											X																			
Ramp GD Sta 10+96.52 25.5' Rt	536													X																	
Ramp GC Sta 10+75 19.5' Lt	537											X																			
Ramp GC Sta 11+75 19.5' Lt	538											X																			
202L EB Med Sta 3239+03 18.5' Rt	539													X																	
202L EB Med Sta 3242+30 18.5' Rt	540													X																	
Baseline Rd. Sta 13+19 48.65' Rt	601													X																	
Baseline Rd. Sta 13+30 47.58' Lt	602											X																			
Baseline Rd. Sta 23+13 52' Lt	603											X																			
Baseline Rd. Sta 23+40 52' Rt	604													X																	
202L EB Sta 251+68 43.5' Rt	700													X																	
202L WB Med Sta 3251+58 110.22' Lt	701											X																			
202L EB Sta 256+27 43.5' Rt	702													X																	
202L WB Sta 256+20 29.5' Rt	703													X																	
202L WB Sta 256+61 29.5' Rt	704													X																	
Sheet Total																															

SW - Straw Wattle
CD - Cack Dam
SF - Silt Fence
FL - Fiber Logs
CF - Cut & Fill Transitions
DD - Diversion Dike & Slope drain

FL —— Reference to Legend and Type of Installation
E-1 —— Reference to Detail Sheet for SWPP Installation Details

NOTES:
1. The Placement of all Erosion Control Devices Listed Above Will Be Subject to Change and May be Adjusted by the Field Engineer.
2. The Erosion/Sediment Control Devices Listed Above Shall Remain in Place Until the Bare Ground is Stabilized.

◒ Spacing to be Determined by the Field Engineer.

○ Placement of Fiber Logs to be Determined by the Field Engineer.

□ Erosion Control Quantities will be Determined by the Field Engineer. Measurement for Payment will be determined Under Force Account

◪ Maximum Height of 12 inches, Unless otherwise specified.

	NAME	DATE
DESIGN	MRG	4/03
DRAWN	WJP	4/03
CHECKED	CAD	4/03

Stanley Consultants inc.
2929 East Camelback Road, Suite 130
Phoenix, Arizona 85016
Phone: (602) 912-5200

ARIZONA DEPARTMENT OF TRANSPORTATION
INTERMODAL TRANSPORTATION DIVISION
ROADWAY DESIGN SERVICES

STORM WATER POLLUTION PREVENTION PLAN SUMMARY SHEET

95%
PRELIMINARY NOT FOR CONSTRUCTION

ROUTE: 202L
LOCATION: SANTAN FWY, ELLIOT ROAD - BASELINE ROAD

TRACS NO. H 5915 01C
202-C(005)B

DWG NO. E-2.5
___ OF ___

04/21/2003 q:\16110\Drainage\DGN\SWPPPSummaries\h5150sp05.dgn

DATE: LOCATION: REVISIONS: FINISHED PLANS: SURVEY NO. DATE: LOCATION: REVISIONS: FINISHED PLANS: SURVEY NO.

F.H.W.A. REGION	STATE	PROJECT NO.	SHEET NO.	TOTAL SHEETS	AS BUILT
9	ARIZ.	202-C(005)B			
		202L MA 031			

Station	Plan Ref No.	TYPE INSTALLATION: Straw Wattle Left	Straw Wattle Right	Straw Wattle Spacing (ft)	Straw Wattle Height (ft) ◪	Check Dams ◒ Left	Check Dams Right	Check Dams Spacing (ft)	Check Dams Depth (ft)	Cut & Fill Transitions Left	Cut & Fill Transitions Right	Cut & Fill Transitions Center	Fiber Logs o Right	Fiber Logs o Spacing (ft)	Fiber Logs o Left	Silt Fence Right	Silt Fence Spacing (ft)	Silt Fence Left	Rock Mulch & Riprap Treatment: End Sections Right	End Sections Left	Headwalls Right	Headwalls Left	QUANTITIES □: Straw Wattles (lf)	Check Dam (cy)	Cut & Fill Transitions (cy)	Fiber Logs (ea)	End Sections (cy)	Diversion Dike (lf)	Headwalls (cy)	REMARKS
202L WB Sta 257+30 29.5' Rt	705												X																	
202L WB Sta 258+43 29.5' Rt	706																													
202L EB Sta 260+50 51.82 Rt	707												X																	
202L WB Sta 260+58 29.5' Rt	708												X																	
202L WB Sta 263+11 29.5' Rt	709												X																	
Ramp BA Sta 4+98 11.5' Rt	710												X																	
202L EB Sta 265+57 43.5' Rt	711												X																	
202L WB Sta 265+60 29.5' Rt	712												X																	
202L EB Sta 268+00 42.16' Rt	713												X																	
202L WB Sta 268+25 29.5' Rt	714												X																	
202L WB Sta 271+02 29.5' Rt	715												X																	
202L WB Sta 273+52 29.5' Rt	716												X																	
202L WB Sta 275+80 29.5' Rt	717												X																	
Ramp BB Sta 17+62 23.5' Rt	718												X																	
Ramp BB Sta 17+62 23.5' Lt	719									X																				
Ramp NW Sta 10+27 21.5' Rt	720												X																	
Ramp BB Sta 17+14 23.5' Rt	722												X																	
Ramp BB Sta 18+04 23.5' Rt	723												X																	
202L EB Sta 277+51 39.79' Rt	724												X																	
Baseline Rd. Sta 17+94 52' Rt	726												X																	
Ramp BA Sta 19+39 11.5' Rt	727												X																	
Ramp BA Sta 18+80 11.5' Rt	728												X																	
Ramp BA Sta 18+21 11.5' Rt	729												X																	
Baseline Rd. Sta 17+94 52' Lt	730									X																				
Ramp WS Sta 5+81.06 34.81' Lt	731									X																				
Ramp WS Sta 5+81.06 13.5' Rt	732												X																	
202L WB Sta 282+26 43.5' Lt	733									X																				
Sheet Total																														

SW - Straw Wattle
CD - Cack Dam
SF - Silt Fence
FL - Fiber Logs
CF - Cut & Fill Transitions
DD - Diversion Dike & Slope drain

FL —— Reference to Legend and Type of Installation
E-1 —— Reference to Detail Sheet for SWPP Installation Details

NOTES:
1. The Placement of all Erosion Control Devices Listed Above Will Be Subject to Change and May be Adjusted by the Field Engineer.
2. The Erosion/Sediment Control Devices Listed Above Shall Remain In Place Until the Bare Ground Is Stabalized.

◒ Spacing to be Determined by the Field Engineer.

○ Placement of Fiber Logs to be Determined by the Field Engineer.

□ Erosion Control Quantities will be Determined by the Field Engineer. Measurement for Payment will be determined Under Force Account

◪ Maximum Height of 12 Inches, Unless otherwise specified.

	NAME	DATE
DESIGN	MRG	4/03
DRAWN	WJP	4/03
CHECKED	CAD	4/03

Stanley Consultants Inc.
2929 East Camelback Road, Suite 170
Phoenix, Arizona 85016
Phone: (602) 957-1008

ARIZONA DEPARTMENT OF TRANSPORTATION
INTERMODAL TRANSPORTATION DIVISION
ROADWAY DESIGN SERVICES

STORM WATER POLLUTION PREVENTION PLAN SUMMARY SHEET

95%
PRELIMINARY NOT FOR CONSTRUCTION

ROUTE	LOCATION	
202L	SANTAN FWY, ELLIOT ROAD - BASELINE ROAD	
TRACS NO. H 5915 01C		202-C(005)B

DWG NO. E-2.6
___ OF ___

04/21/2003 gi\16110\Drainage\DGN\SWPPPSummaries\h5150sp06.dgn

F.A.H.W.A. REGION	STATE	PROJECT NO.	SHEET NO.	TOTAL SHEETS	AS BUILT
9	ARIZ.	202-C(005)B			

202L MA 031

Station	Plan Ref. No.	TYPE INSTALLATION: Straw Wattle Left	Straw Wattle Right	Straw Wattle Spacing (ft)	Straw Wattle Height (ft) ◪	Check Dams ◒ Left	Check Dams Right	Check Dams Spacing (ft)	Check Dams Depth (ft)	Cut & Fill Transitions Left	Cut & Fill Transitions Right	Fiber Logs o Left	Fiber Logs Center	Fiber Logs Right	Fiber Logs Spacing (ft)	Silt Fence Left	Silt Fence Right	Silt Fence Spacing (ft)	Rock Mulch & Riprap Treatment: End Sections Left	End Sections Right	Headwalls Left	Headwalls Right	QUANTITIES □: Straw Wattles (lf)	Check Dam (cy)	Cut & Fill Transitions (cy)	Fiber Logs (ea)	End Sections (cy)	Diversion Dike (lf)	Headwalls (cy)	REMARKS
202L WB Sta 282+72 43.5' Lt	734											X																		
Ramp WS Sta 6+45 13.5' Rt	735													X																
Ramp WS Sta 5+26 13.5' Rt	736													X																
202L WB Sta 274+32 72.82' Rt	737													X																
202L WB Sta 260+57.35 53.14' Rt	738													X																
202L Wed Sta 3179+20 to 3199+60			X	20																										
202L Wed Sta 3224+87 to 3230+10			X	20																										
202L Wed Sta 3251+66 to 3276+95			X	20																										
202L Wed Sta 3279+90 to 3282+50			X	20																										
202L Wed Sta 3174+62 to 3200+25		X		20																										
202L Wed Sta 3250+75 to 3278+13		X		20																										
202L Wed Sta 3279+80 to 3282+50		X		20																										
Sheet Total																														

SW - Straw Wattle
CD - Cack Dam
SF - Silt Fence
FL - Fiber Logs
CF - Cut & Fill Transitions
DD - Diversion Dike & Slope drain

FL —— Reference to Legend and Type of Installation
E-1 —— Reference to Detail Sheet for SWPP Installation Details

NOTES:
1. The Placement of all Erosion Control Devices Listed Above Will Be Subject to Change and May be Adjusted by the Field Engineer.
2. The Erosion/Sediment Control Devices Listed Above Shall Remain In Place Until the Bare Ground Is Stabalized.

◒ Spacing to be Determined by the Field Engineer.

○ Placement of Fiber Logs to be Determined by the Field Engineer.

□ Erosion Control Quantities will be Determined by the Field Engineer. Measurement for Payment will be determined Under Force Account

◪ Maximum Height of 12 Inches, Unless otherwise specified.

	NAME	DATE
DESIGN	MRG	4/03
DRAWN	WJP	4/03
CHECKED	CAD	4/03

Stanley Consultants inc.
2929 East Camelback Road, Suite 130
Phoenix, Arizona 85016
Phone (602) 93-6200

ARIZONA DEPARTMENT OF TRANSPORTATION
INTERMODAL TRANSPORTATION DIVISION
ROADWAY DESIGN SERVICES

STORM WATER POLLUTION PREVENTION PLAN SUMMARY SHEET

95%
PRELIMINARY
NOT FOR CONSTRUCTION

ROUTE: 202L
LOCATION: SANTAN FWY, ELLIOT ROAD - BASELINE ROAD

DWG NO. E-2.7

TRACS NO. H 5915 01C | 202-C(005)B | ___ OF ___

04/21/2003 gi\16110\Drainage\DGN\SWPPPSummaries\h5150sp07.dgn

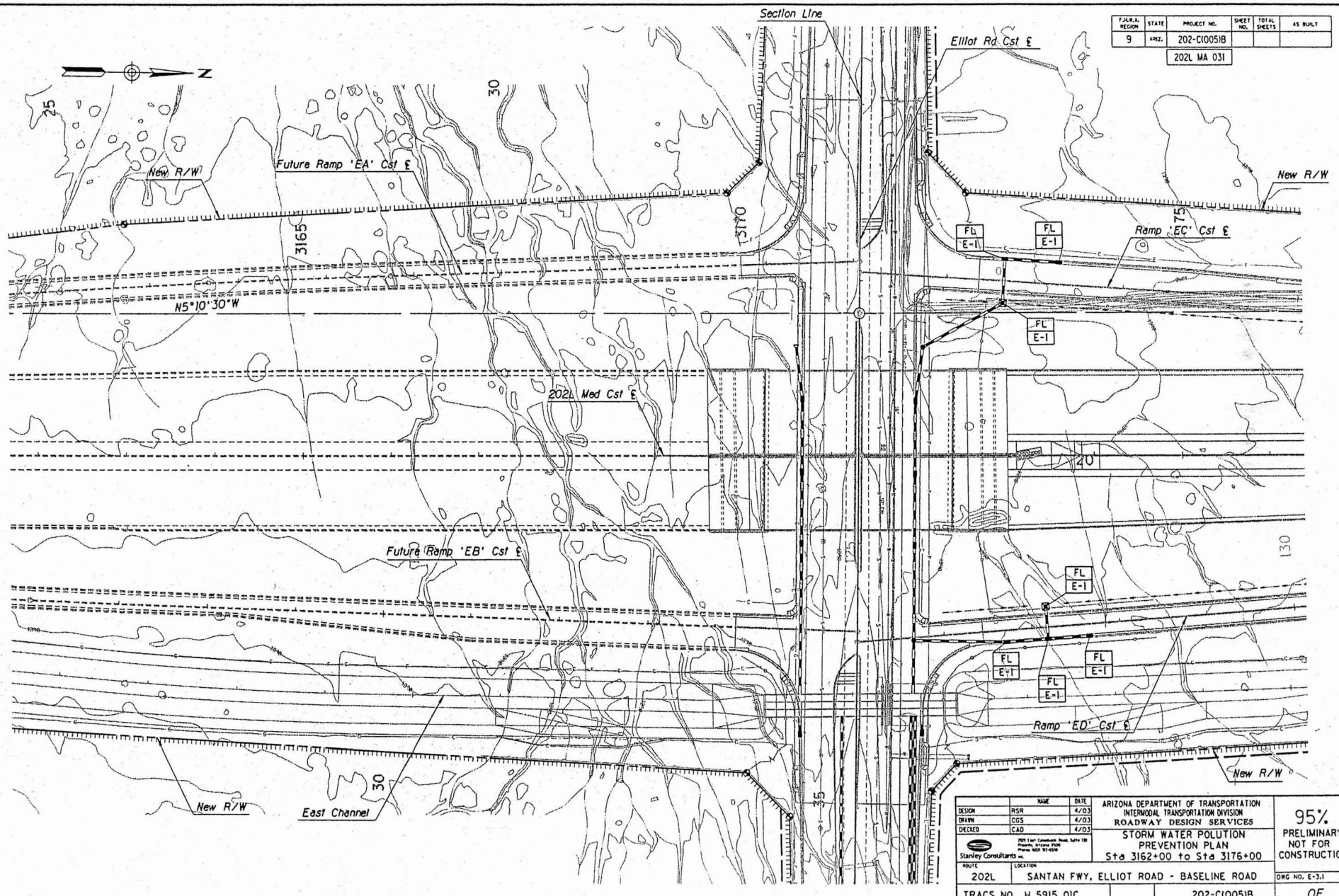

F.H.W.A. REGION	STATE	PROJECT NO.	SHEET NO.	TOTAL SHEETS	AS BUILT
9	ARIZ.	202-C(005)B			
		202L MA 031			

	NAME	DATE
DESIGN	RSR	4/03
DRAWN	CGS	4/03
CHECKED	CAD	4/03

Stanley Consultants inc.
7071 East Grandview Road, Suite 130
Phoenix, Arizona 85054
Phone (602) 97-4500

ARIZONA DEPARTMENT OF TRANSPORTATION
INTERMODAL TRANSPORTATION DIVISION
ROADWAY DESIGN SERVICES

STORM WATER POLUTION PREVENTION PLAN
Sta 3162+00 to Sta 3176+00

95%
PRELIMINARY NOT FOR CONSTRUCTION

ROUTE	LOCATION	DWG NO. E-3.1
202L	SANTAN FWY, ELLIOT ROAD - BASELINE ROAD	

TRACS NO. H 5915 01C | 202-C(005)B | ___ OF ___

04/22/2003 qt\16110\Dgn\drainage\h5915swpo.dgn

F.H.W.A. REGION	STATE	PROJECT NO.	SHEET NO.	TOTAL SHEETS	AS BUILT
9	ARIZ.	202-C(005)B			

202L MA 031

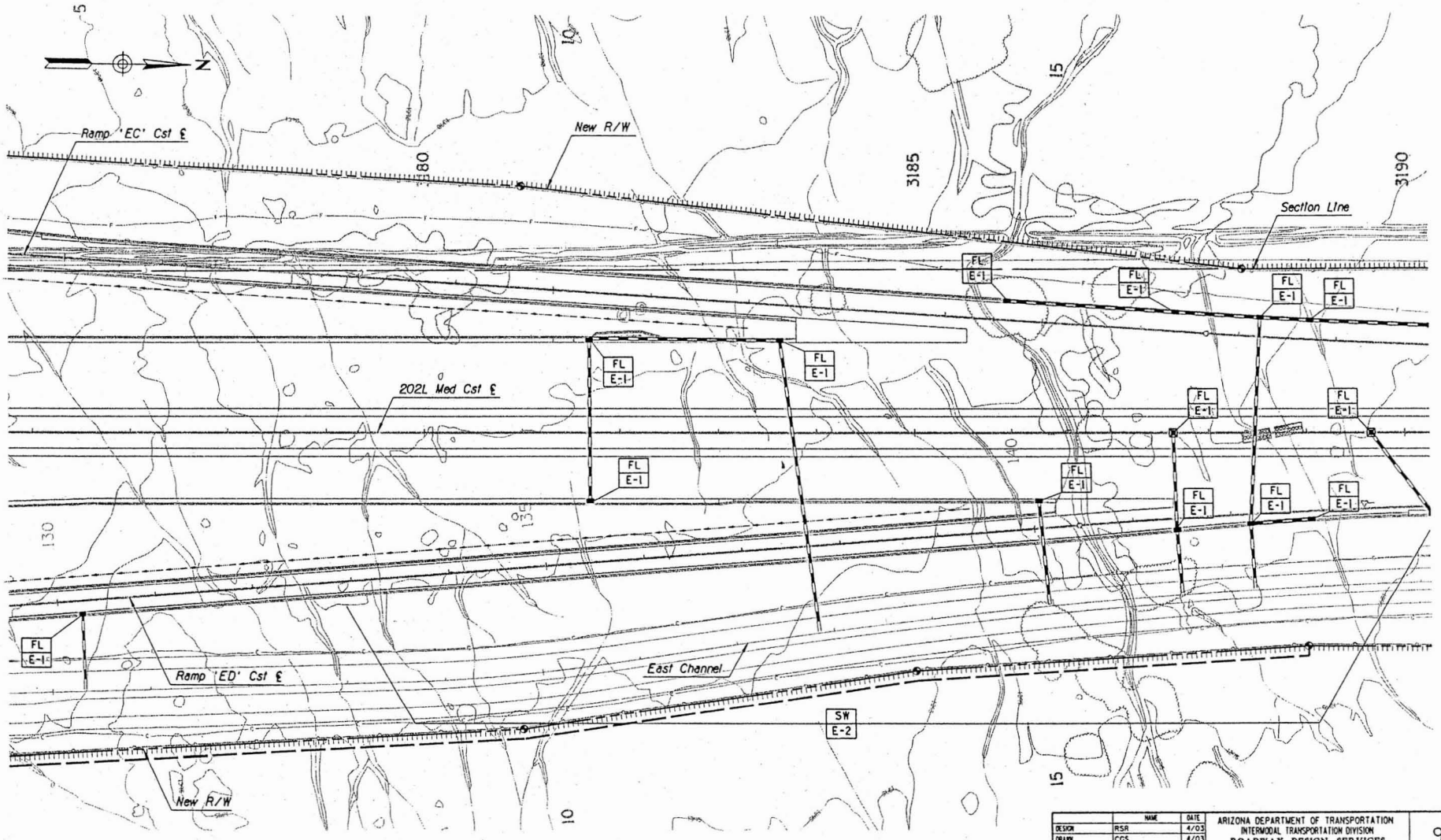

	NAME	DATE
DESIGN	RSR	4/03
DRAWN	CGS	4/03
CHECKED	CAD	4/03

Stanley Consultants Inc.
2929 East Camelback Road, Suite 130
Phoenix, Arizona 85016
Phone: 602) 957-0500

ARIZONA DEPARTMENT OF TRANSPORTATION
INTERMODAL TRANSPORTATION DIVISION
ROADWAY DESIGN SERVICES

STORM WATER POLUTION PREVENTION PLAN
Sta 3176+00 to Sta 3190+00

95%
PRELIMINARY
NOT FOR CONSTRUCTION

ROUTE: 202L
LOCATION: SANTAN FWY, ELLIOT ROAD - BASELINE ROAD

DWG NO. E-3.2

TRACS NO. H 5915 01C | 202-C(005)B | ___ OF ___

04/22/2003 q:\16110\Dgn\drainage\h5915swpb.dgn

F.H.W.A. REGION	STATE	PROJECT NO.	SHEET NO.	TOTAL SHEETS	AS BUILT
9	ARIZ.	202-C(005)B			

202L MA 031

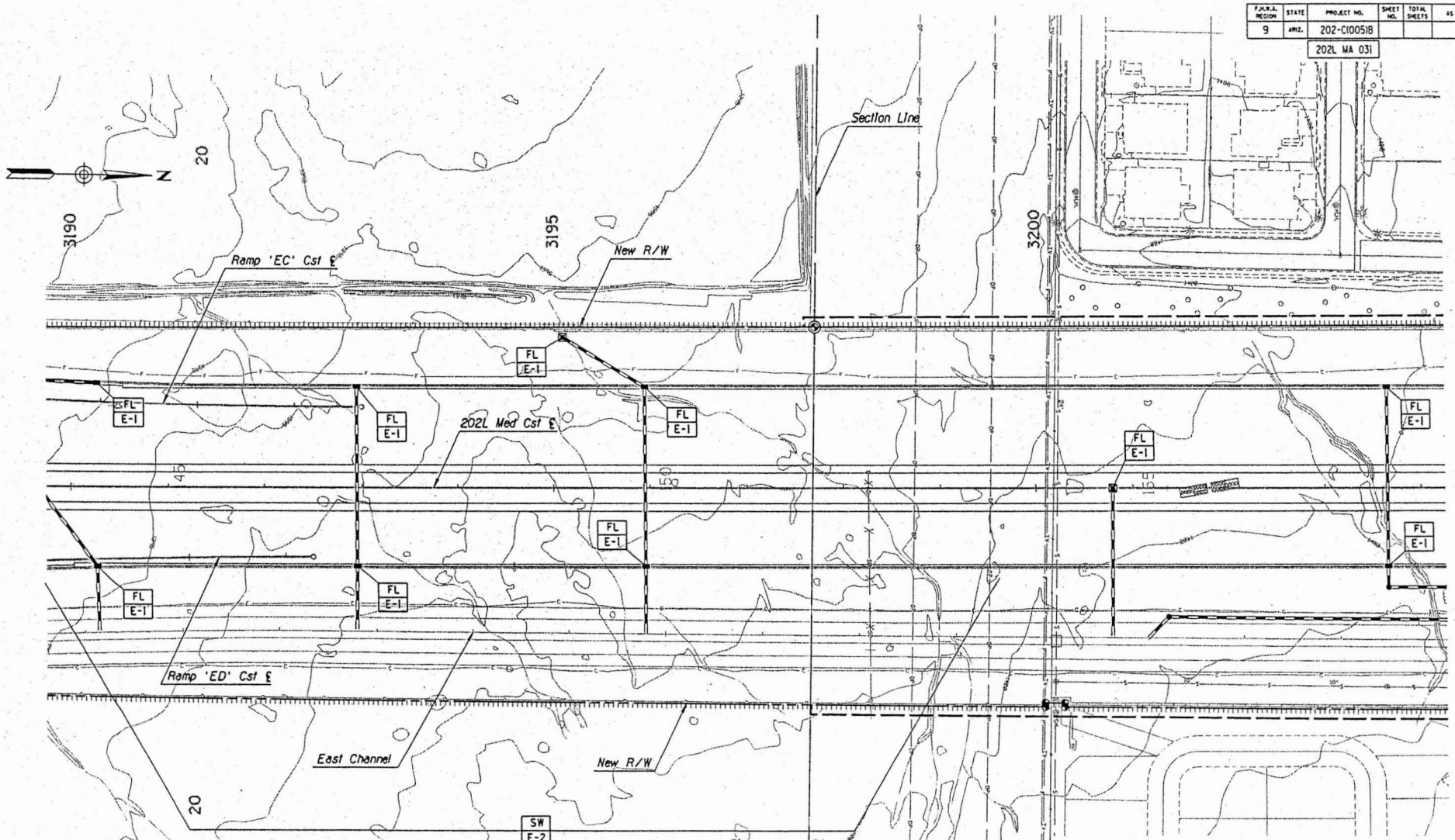

	NAME	DATE
DESIGN	RSR	4/03
DRAWN	CGS	4/03
CHECKED	CAD	4/03

Stanley Consultants Inc.
2929 East Camelback Road, Suite 130
Phoenix, Arizona 85016
Phone (602) 92-6500

ARIZONA DEPARTMENT OF TRANSPORTATION
INTERMODAL TRANSPORTATION DIVISION
ROADWAY DESIGN SERVICES

STORM WATER POLUTION PREVENTION PLAN
Sta 3190+00 to Sta 3204+00

95%
PRELIMINARY
NOT FOR CONSTRUCTION

ROUTE: 202L
LOCATION: SANTAN FWY, ELLIOT ROAD - BASELINE ROAD

DWG NO. E-3.3

TRACS NO. H 5915 01C | 202-C(005)B | ___ OF ___

04/22/2003 qi\16110\Dgn\drainage\h5915swpo.dgn

F.H.W.A. REGION	STATE	PROJECT NO.	SHEET NO.	TOTAL SHEETS	AS BUILT
9	ARIZ.	202-C(005)B			
		202L MA 031			

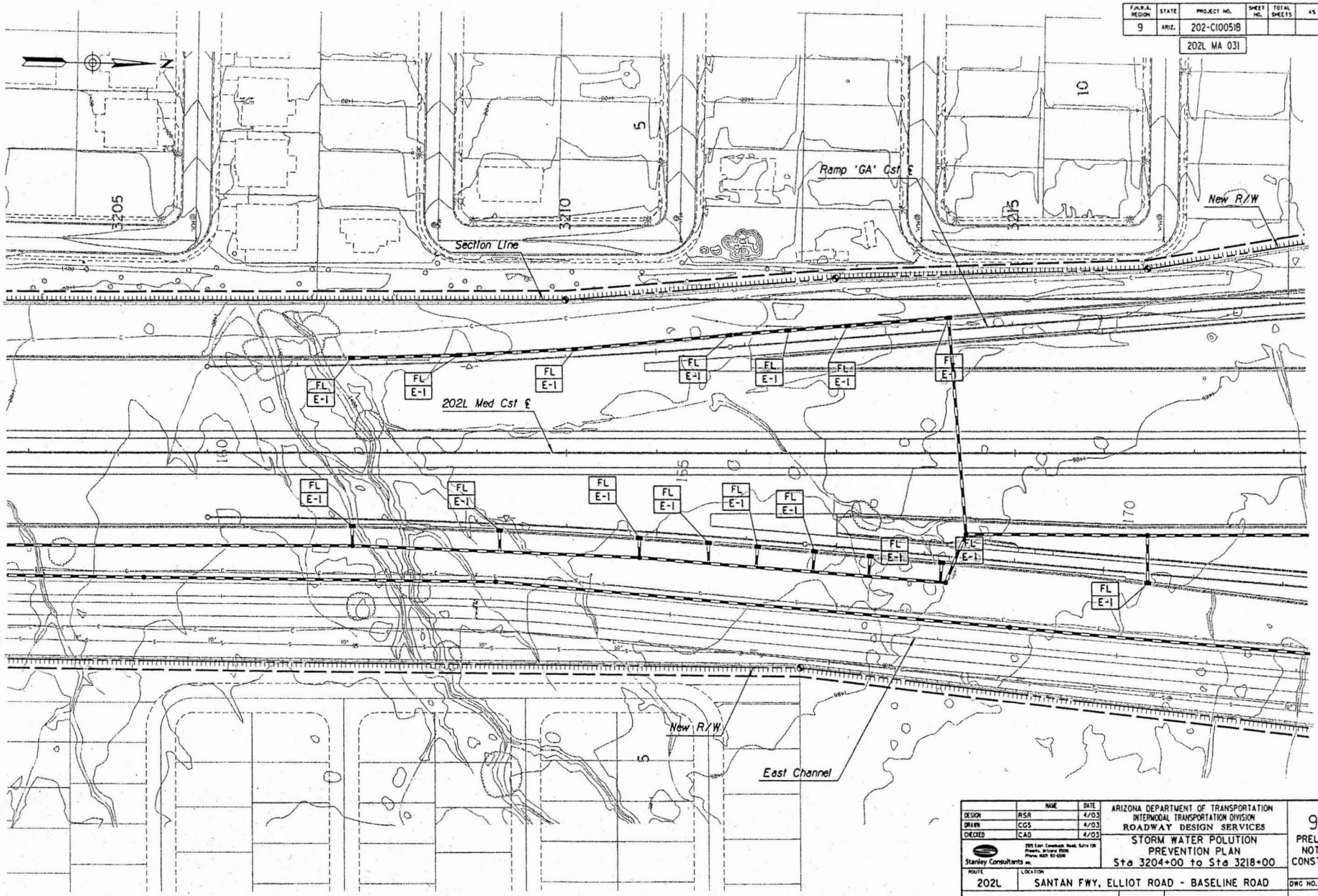

	NAME	DATE
DESIGN	RSR	4/03
DRAWN	CGS	4/03
CHECKED	CAD	4/03

Stanley Consultants INC.
2929 East Commerce Road, Suite 130
Phoenix, Arizona 85034
Phone (602) 92-0300

ARIZONA DEPARTMENT OF TRANSPORTATION
INTERMODAL TRANSPORTATION DIVISION
ROADWAY DESIGN SERVICES

STORM WATER POLUTION PREVENTION PLAN
Sta 3204+00 to Sta 3218+00

95%
PRELIMINARY
NOT FOR CONSTRUCTION

ROUTE: 202L
LOCATION: SANTAN FWY, ELLIOT ROAD - BASELINE ROAD

DWG NO. E-3.4

TRACS NO. H 5915.01C

202-C(005)B

___ OF ___

04/22/2003 q:\16110\dgn\drainage\h5915swpd.dgn

SURVEY NO. | FINISHED PLANS | REVISIONS | LOCATION | DATE

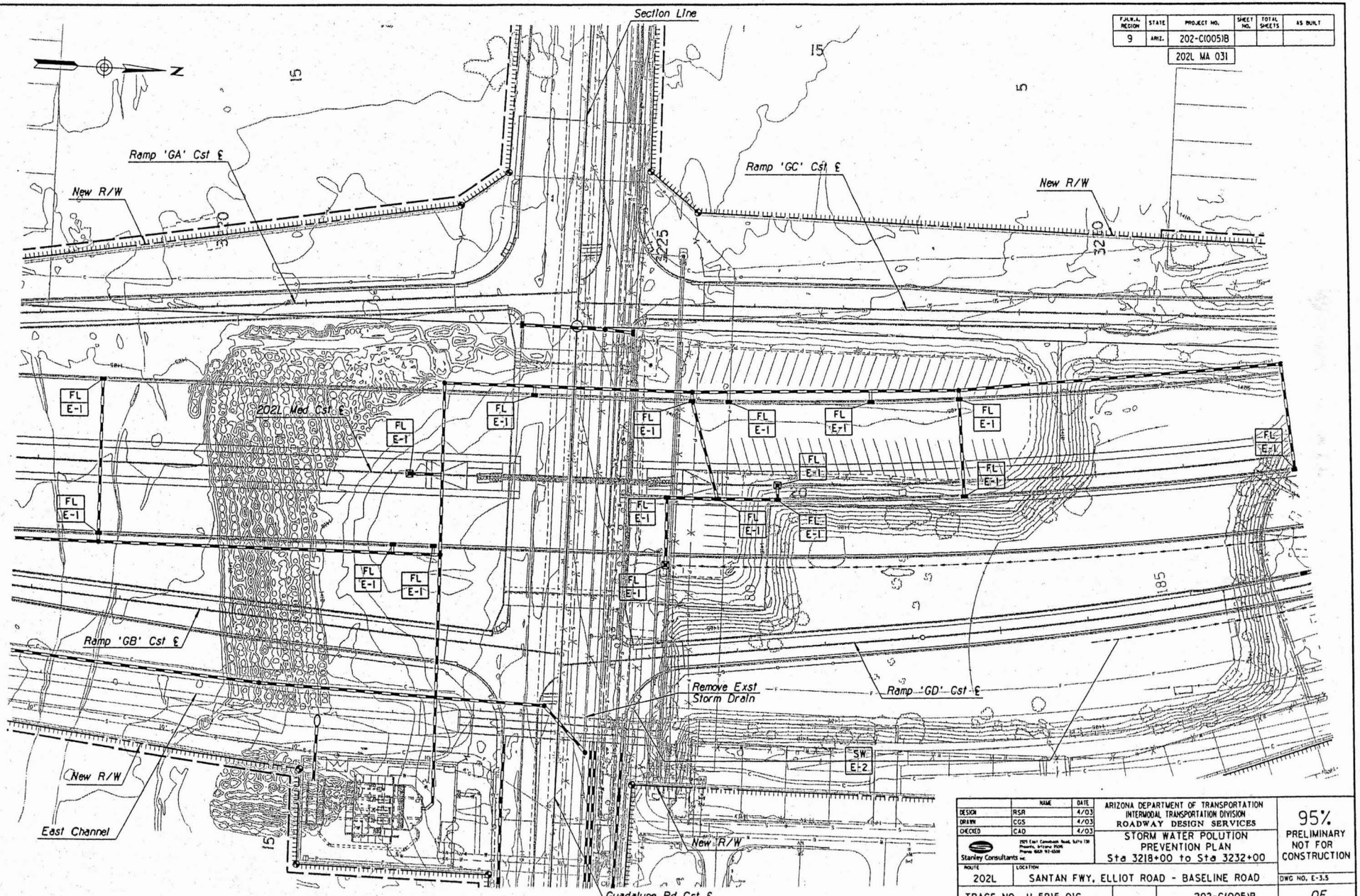

FHWA REGION	STATE	PROJECT NO.	SHEET NO.	TOTAL SHEETS	AS BUILT
9	ARIZ.	202-C(005)B			
		202L MA 031			

	NAME	DATE
DESIGN	RSR	4/03
DRAWN	CGS	4/03
CHECKED	CAD	4/03

Stanley Consultants inc
2929 East Camelback Road, Suite 130
Phoenix, Arizona 85016
Phone (602) 93-4500

ARIZONA DEPARTMENT OF TRANSPORTATION
INTERMODAL TRANSPORTATION DIVISION
ROADWAY DESIGN SERVICES

STORM WATER POLUTION PREVENTION PLAN
Sta 3218+00 to Sta 3232+00

95%
PRELIMINARY NOT FOR CONSTRUCTION

ROUTE	LOCATION
202L	SANTAN FWY, ELLIOT ROAD - BASELINE ROAD

DWG NO. E-3.5

TRACS NO. H 5915 01C | 202-C(005)B | ___ OF ___

04/22/2003 gt\16110\Dgn\drainage\h5915swpe.dgn

F.H.W.A. REGION	STATE	PROJECT NO.	SHEET NO.	TOTAL SHEETS	AS BUILT
9	ARIZ.	202-C(005)B			
		202L MA 031			

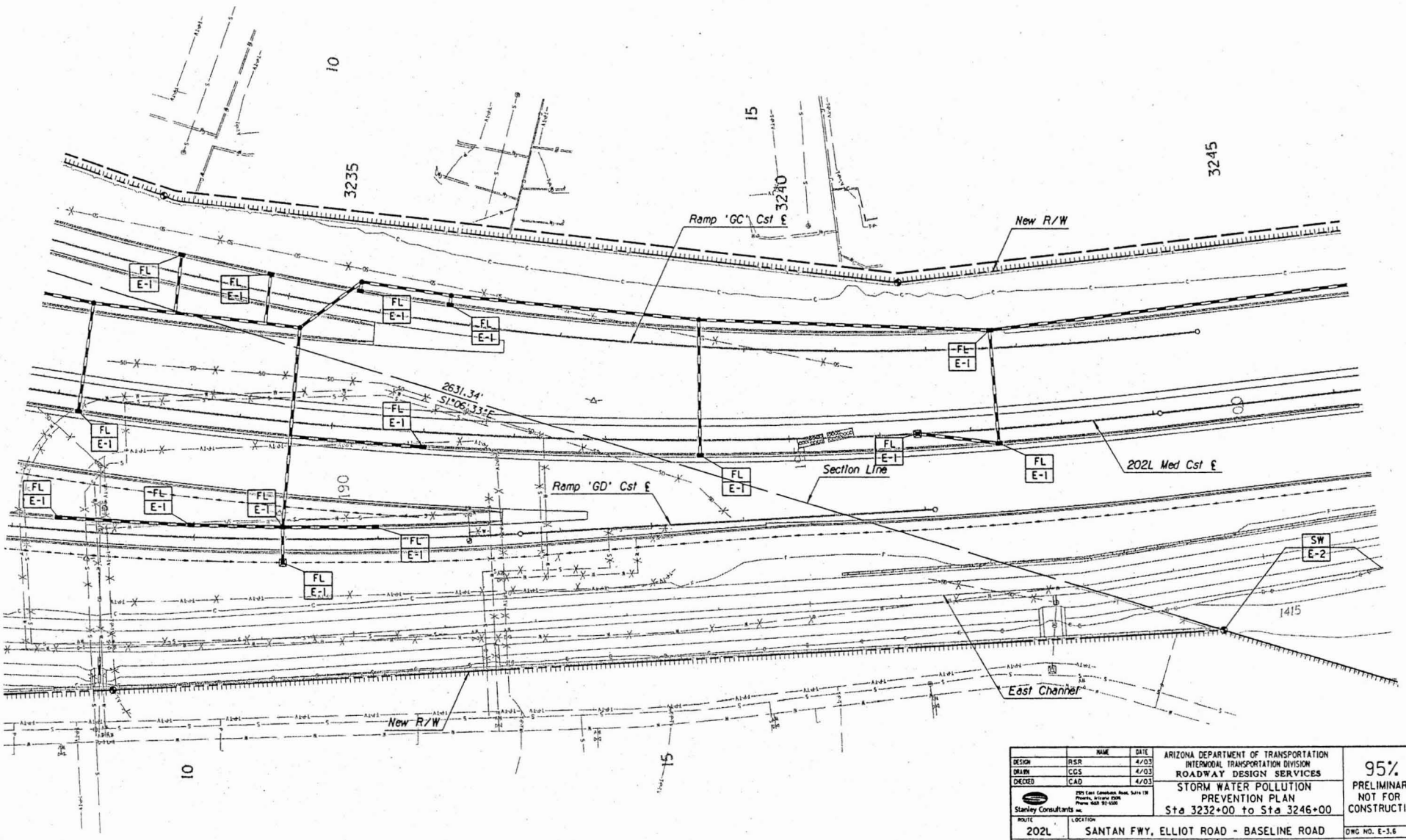

	NAME	DATE
DESIGN	RSR	4/03
DRAWN	CGS	4/03
CHECKED	CAD	4/03

Stanley Consultants INC.
2321 East Camelback Road, Suite 130
Phoenix, Arizona 85016
Phone (602) 912-5500

ARIZONA DEPARTMENT OF TRANSPORTATION
INTERMODAL TRANSPORTATION DIVISION
ROADWAY DESIGN SERVICES

STORM WATER POLLUTION PREVENTION PLAN
Sta 3232+00 to Sta 3246+00

95%
PRELIMINARY
NOT FOR CONSTRUCTION

ROUTE: 202L
LOCATION: SANTAN FWY, ELLIOT ROAD - BASELINE ROAD

DWG NO. E-3.6

TRACS NO. H 5915 01C

202-C(005)B

___ OF ___

04/22/2003 qt\16110\Dgn\drainage\h5915swpf.dgn

F.H.W.A. REGION	STATE	PROJECT NO.	SHEET NO.	TOTAL SHEETS	AS BUILT
9	ARIZ.	202-C(005)B			

202L MA 031

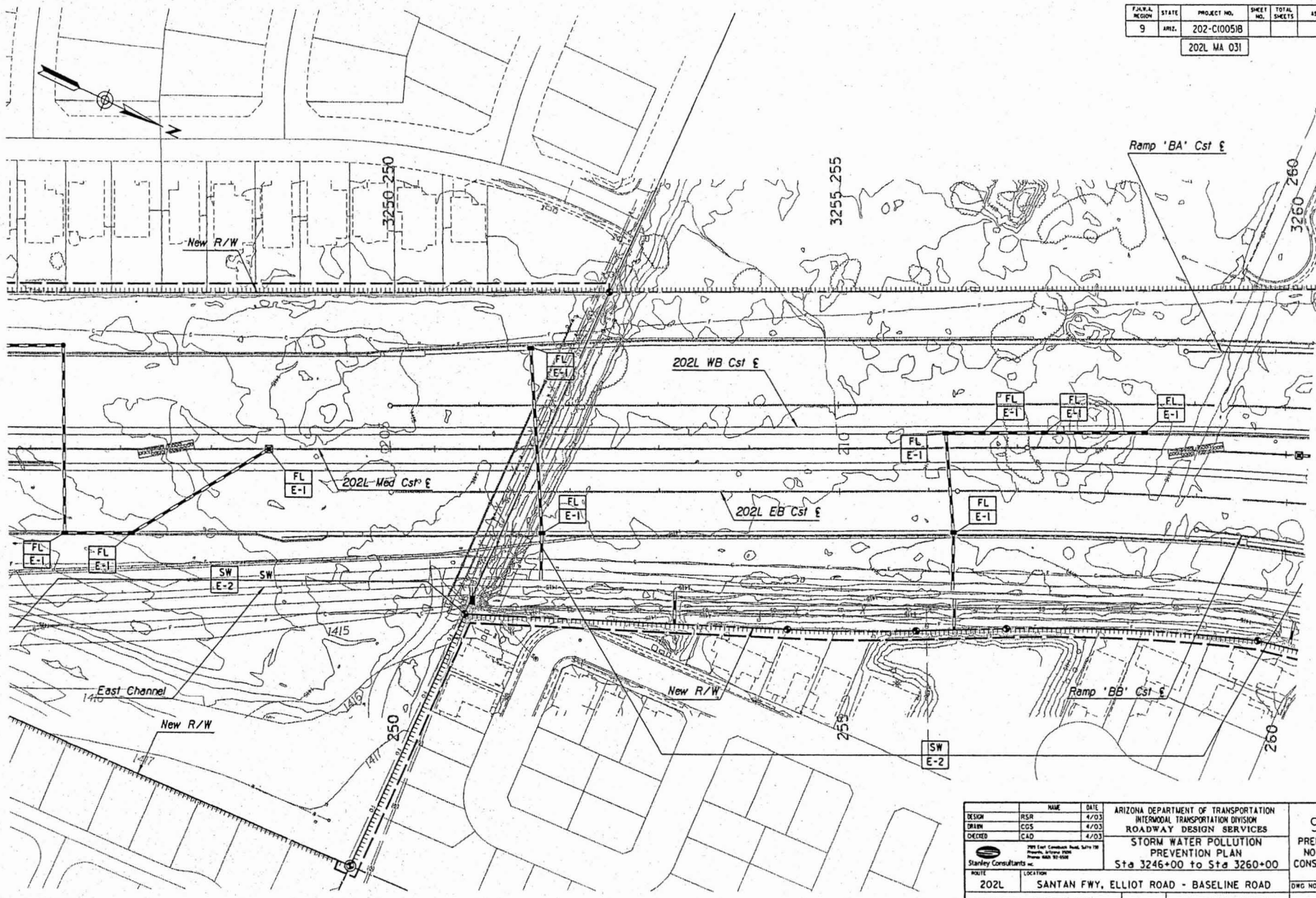

	NAME	DATE
DESIGN	RSR	4/03
DRAWN	CGS	4/03
CHECKED	CAD	4/03

Stanley Consultants inc.
2929 East Camelback Road, Suite 118
Phoenix, Arizona 85016
Phone: (602) 912-0500

ARIZONA DEPARTMENT OF TRANSPORTATION
INTERMODAL TRANSPORTATION DIVISION
ROADWAY DESIGN SERVICES

STORM WATER POLLUTION PREVENTION PLAN
Sta 3246+00 to Sta 3260+00

95%
PRELIMINARY
NOT FOR CONSTRUCTION

ROUTE	LOCATION
202L	SANTAN FWY, ELLIOT ROAD - BASELINE ROAD

DWG NO. E-3.7

TRACS NO. H 5915 01C | 202-C(005)B | ___ OF ___

8/22/2003 qt\16110\Dgn\drainage\h5915swpg.dgn

F.H.W.A. REGION	STATE	PROJECT NO.	SHEET NO.	TOTAL SHEETS	AS BUILT
9	ARIZ.	202-C(005)B			
		202L MA 031			

	NAME	DATE
DESIGN	RSR	4/03
DRAWN	CGS	4/03
CHECKED	CAD	4/03

Stanley Consultants INC.
2721 East Camelback Road, Suite 130
Phoenix, Arizona 85016
Phone (602) 957-8100

ARIZONA DEPARTMENT OF TRANSPORTATION
INTERMODAL TRANSPORTATION DIVISION
ROADWAY DESIGN SERVICES

STORM WATER POLLUTION PREVENTION PLAN
Sta 3260+00 to Sta 3274+00

95%
PRELIMINARY
NOT FOR CONSTRUCTION

ROUTE	LOCATION
202L	SANTAN FWY, ELLIOT ROAD - BASELINE ROAD

DWG NO. E-3.8

TRACS NO. H 5915 01C | 202-C(005)B | ___ OF ___

04/22/2003 gi\16110\dgn\drainage\h5915xph.dgn

F.H.W.A. REGION	STATE	PROJECT NO.	SHEET NO.	TOTAL SHEETS	AS BUILT
9	ARIZ.	202-C(005)B			

202L MA 031

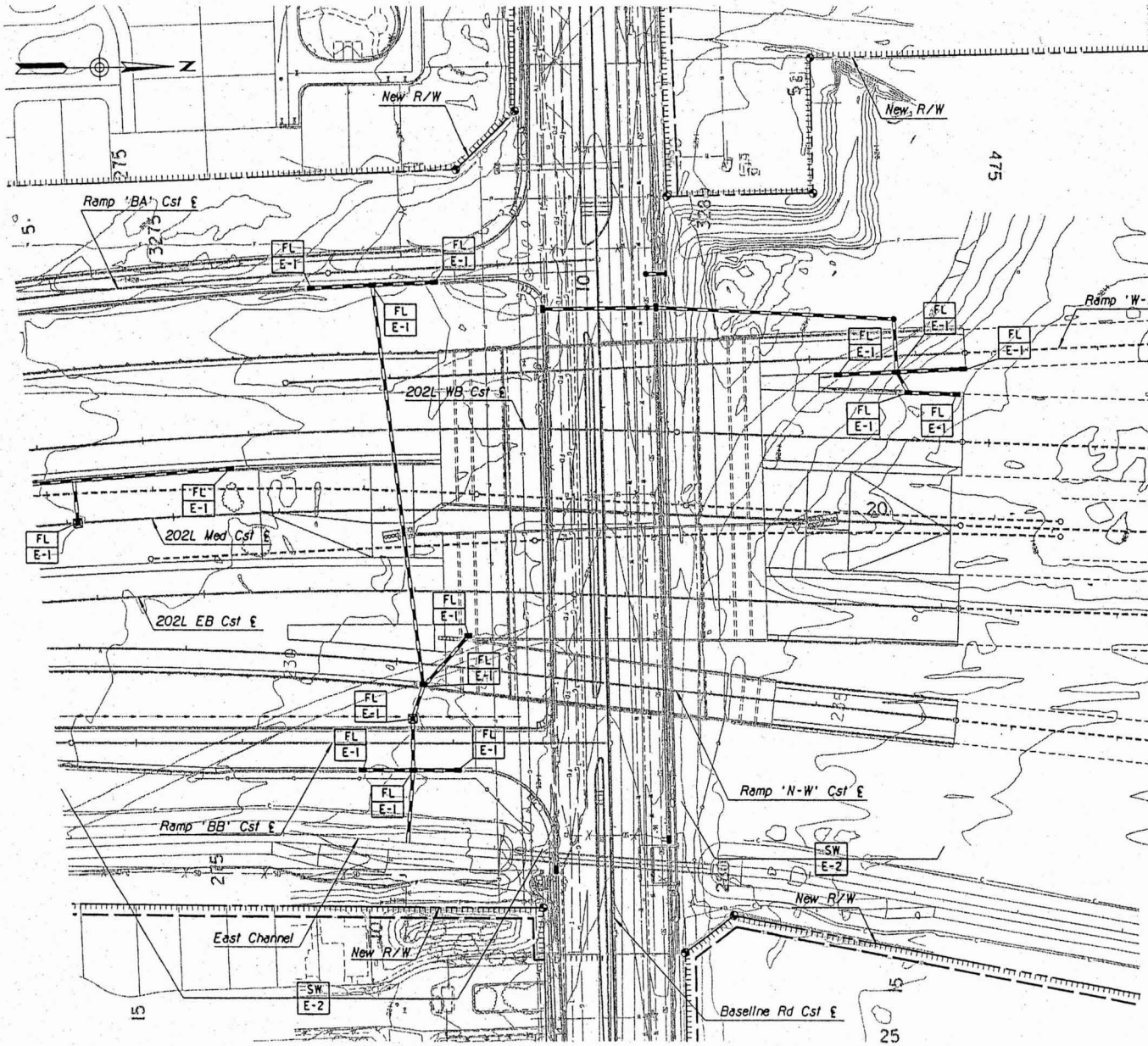

	NAME	DATE
DESIGN	RSR	4/03
DRAWN	CGS	4/03
CHECKED	CAD	4/03

Stanley Consultants INC.
7501 East Camelback Road, Suite 130
Phoenix, Arizona 85251
Phone: (480) 951-5500

ARIZONA DEPARTMENT OF TRANSPORTATION
INTERMODAL TRANSPORTATION DIVISION
ROADWAY DESIGN SERVICES

STORM WATER POLLUTION PREVENTION PLAN
Sta 3274+00 to Sta 3282+47.77

95%
PRELIMINARY NOT FOR CONSTRUCTION

ROUTE	LOCATION
202L	SANTAN FWY, ELLIOT ROAD - BASELINE ROAD

DWG NO. E-3.9

TRACS NO. H 5915 01C | 202-C(005)B | ___ OF ___

04/22/2003 gt\16110\Dgn\drainage\h5915swpi.dgn

F.H.W.A. REGION	STATE	PROJECT NO.	SHEET NO.	TOTAL SHEETS	AS BUILT
9	ARIZ.	202-C(005)B			

202L MA 031

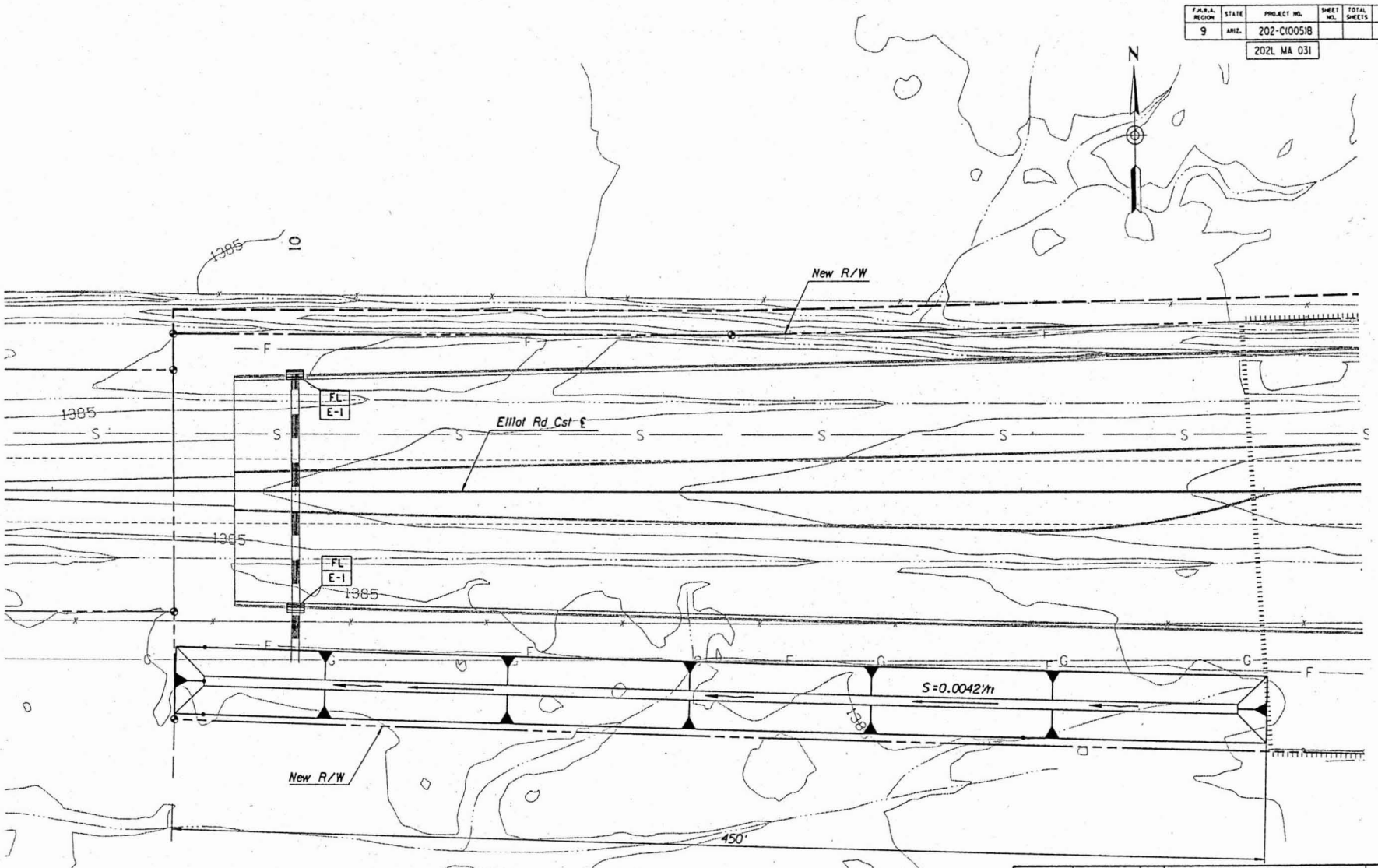

	NAME	DATE
DESIGN	MRG	4/03
DRAWN	CGS	4/03
CHECKED	CAD	4/03

Stanley Consultants inc.
2929 East Camelback Road, Suite 130
Phoenix, Arizona 85016
Phone: (602) 957-4500

ARIZONA DEPARTMENT OF TRANSPORTATION
INTERMODAL TRANSPORTATION DIVISION
ROADWAY DESIGN SERVICES

STORM WATER POLLUTION PREVENTION PLAN
ELLIOT ROAD

95%
PRELIMINARY
NOT FOR CONSTRUCTION

ROUTE: 202L
LOCATION: SANTAN FWY, ELLIOT ROAD - BASELINE ROAD

DWG NO. E-3.10

TRACS NO. H 5915 01C | 202-C(005)B | ___ OF ___

04/22/2003 qr\16110\Dgn\drainage\h5915swpj.dgn

F.H.W.A. REGION	STATE	PROJECT NO.	SHEET NO.	TOTAL SHEETS	AS BUILT
9	ARIZ.	202-C(005)B			

202L MA 031

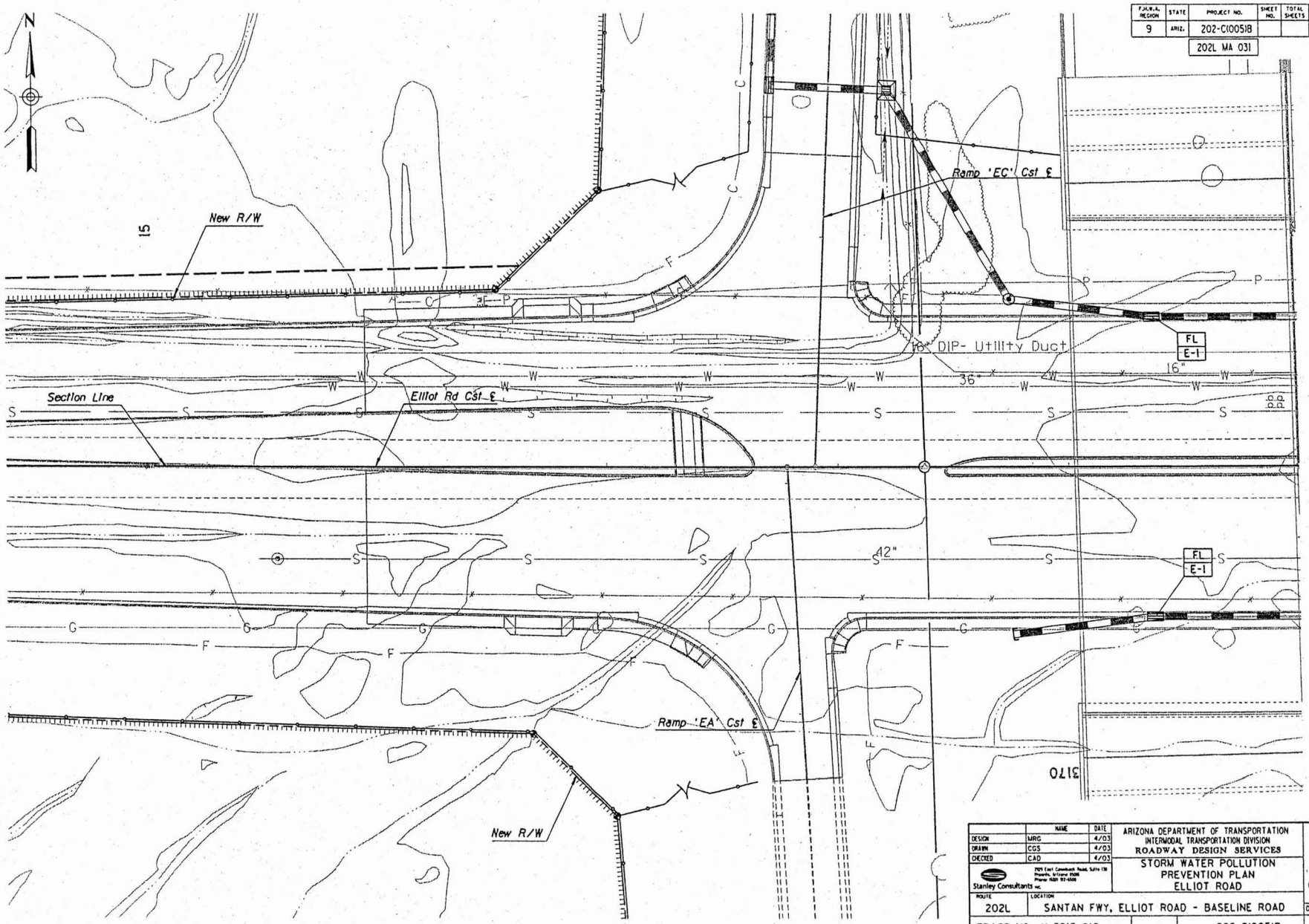

	NAME	DATE
DESIGN	MRG	4/03
DRAWN	CGS	4/03
CHECKED	CAD	4/03

Stanley Consultants inc.
7878 East Greenbrier Road, Suite 130
Phoenix, Arizona 85020
Phone (602) 957-6606

ARIZONA DEPARTMENT OF TRANSPORTATION
INTERMODAL TRANSPORTATION DIVISION
ROADWAY DESIGN SERVICES

STORM WATER POLLUTION PREVENTION PLAN
ELLIOT ROAD

95%
PRELIMINARY
NOT FOR CONSTRUCTION

ROUTE: 202L
LOCATION: SANTAN FWY, ELLIOT ROAD - BASELINE ROAD

DWG NO. E-3.11

TRACS NO. H 5915 01C | 202-C(005)B | ___ OF ___

SURVEY NO. | FINISHED PLANS | REVISIONS | LOCATION | DATE | SURVEY NO. | FINISHED PLANS | REVISIONS | LOCATION | DATE

0472272003 qt\16110\Dgn\drainage\h5915swpk.dgn

F.H.W.A. REGION	STATE	PROJECT NO.	SHEET NO.	TOTAL SHEETS	AS BUILT
9	ARIZ.	202-C(005)B			
		202L MA 031			

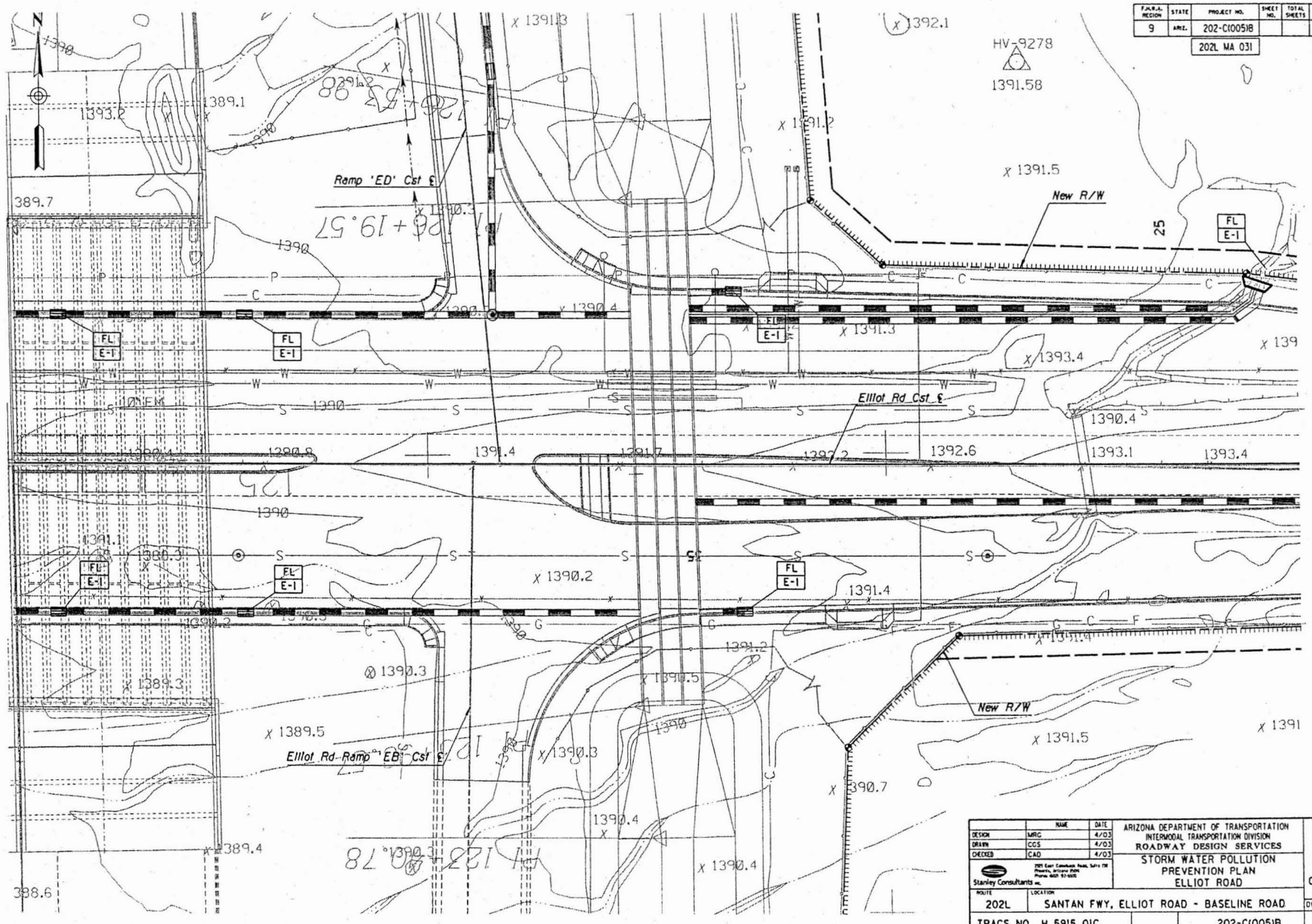

	NAME	DATE
DESIGN	MRG	4/03
DRAWN	CGS	4/03
CHECKED	CAD	4/03

Stanley Consultants inc.
7501 East Camelback Road, Suite 210
Phoenix, Arizona 85251
Phone: (602) 97-6500

ARIZONA DEPARTMENT OF TRANSPORTATION
INTERMODAL TRANSPORTATION DIVISION
ROADWAY DESIGN SERVICES

STORM WATER POLLUTION PREVENTION PLAN
ELLIOT ROAD

95%
PRELIMINARY
NOT FOR CONSTRUCTION

ROUTE	LOCATION	DWG NO. E-3.12
202L	SANTAN FWY, ELLIOT ROAD - BASELINE ROAD	
TRACS NO. H 5915 01C	202-C(005)B	___ OF ___

04/22/2003 gt\16110\Dgn\drainage\h5915swpl.dgn

F.H.W.A. REGION	STATE	PROJECT NO.	SHEET NO.	TOTAL SHEETS	AS BUILT
9	ARIZ.	202-C(005)B			

202L MA 031

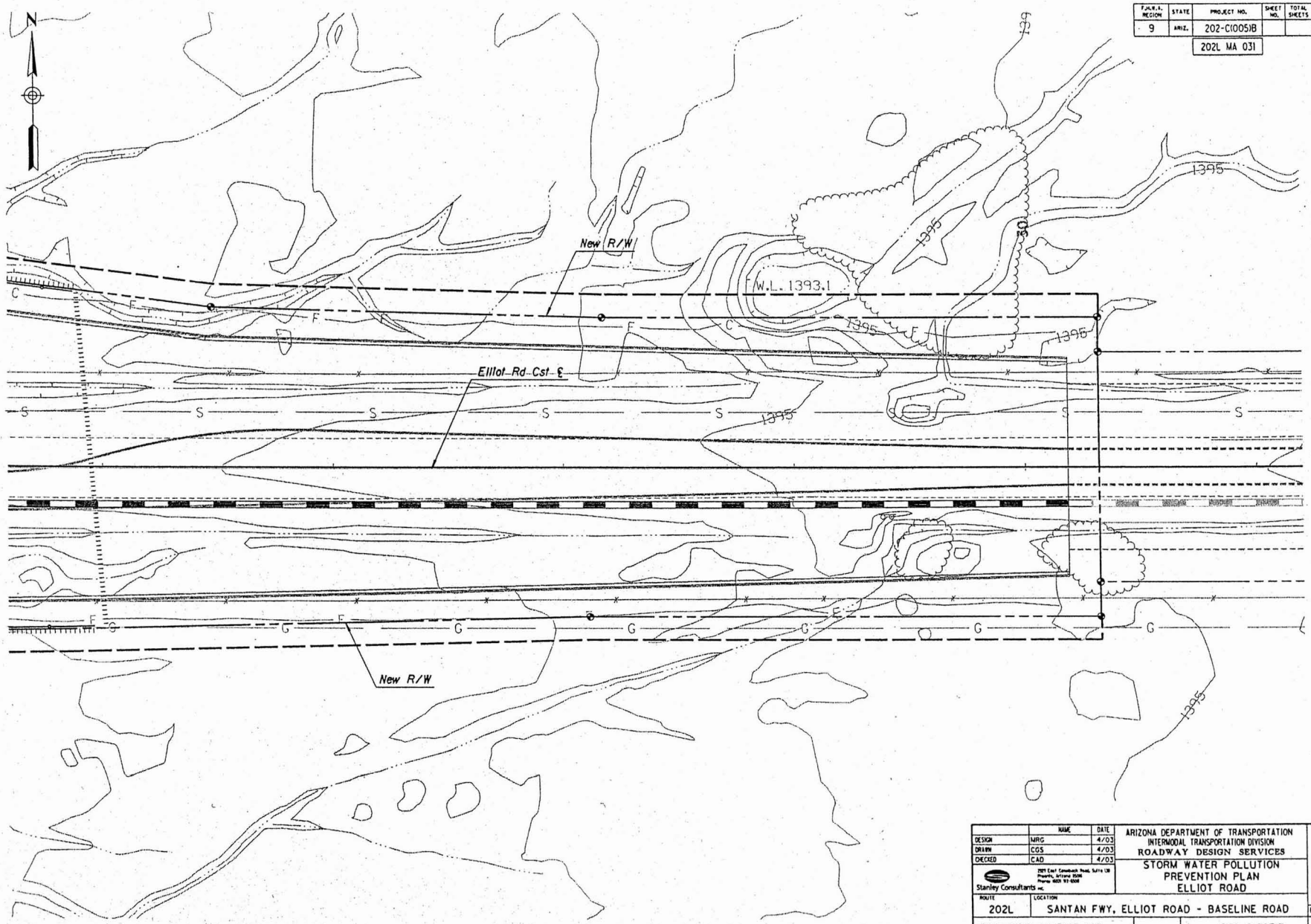

	NAME	DATE
DESIGN	MRG	4/03
DRAWN	CGS	4/03
CHECKED	CAD	4/03

Stanley Consultants inc.
2929 East Camelback Road, Suite 130
Phoenix, Arizona 85016
Phone (602) 957-6500

ARIZONA DEPARTMENT OF TRANSPORTATION
INTERMODAL TRANSPORTATION DIVISION
ROADWAY DESIGN SERVICES

STORM WATER POLLUTION PREVENTION PLAN
ELLIOT ROAD

95%
PRELIMINARY
NOT FOR CONSTRUCTION

ROUTE: 202L
LOCATION: SANTAN FWY, ELLIOT ROAD - BASELINE ROAD

DWG NO. E-3.13

TRACS NO. H 5915 01C | 202-C(005)B | ___ OF ___

FINISHED PLANS | REVISIONS | LOCATION | DATE | SURVEY NO.

04/22/2003 gt\16110\Dgn\drainage\h5915swpm.dgn

F.H.W.A. REGION	STATE	PROJECT NO.	SHEET NO.	TOTAL SHEETS	AS BUILT
9	ARIZ.	202-C(005)B			

202L MA 031

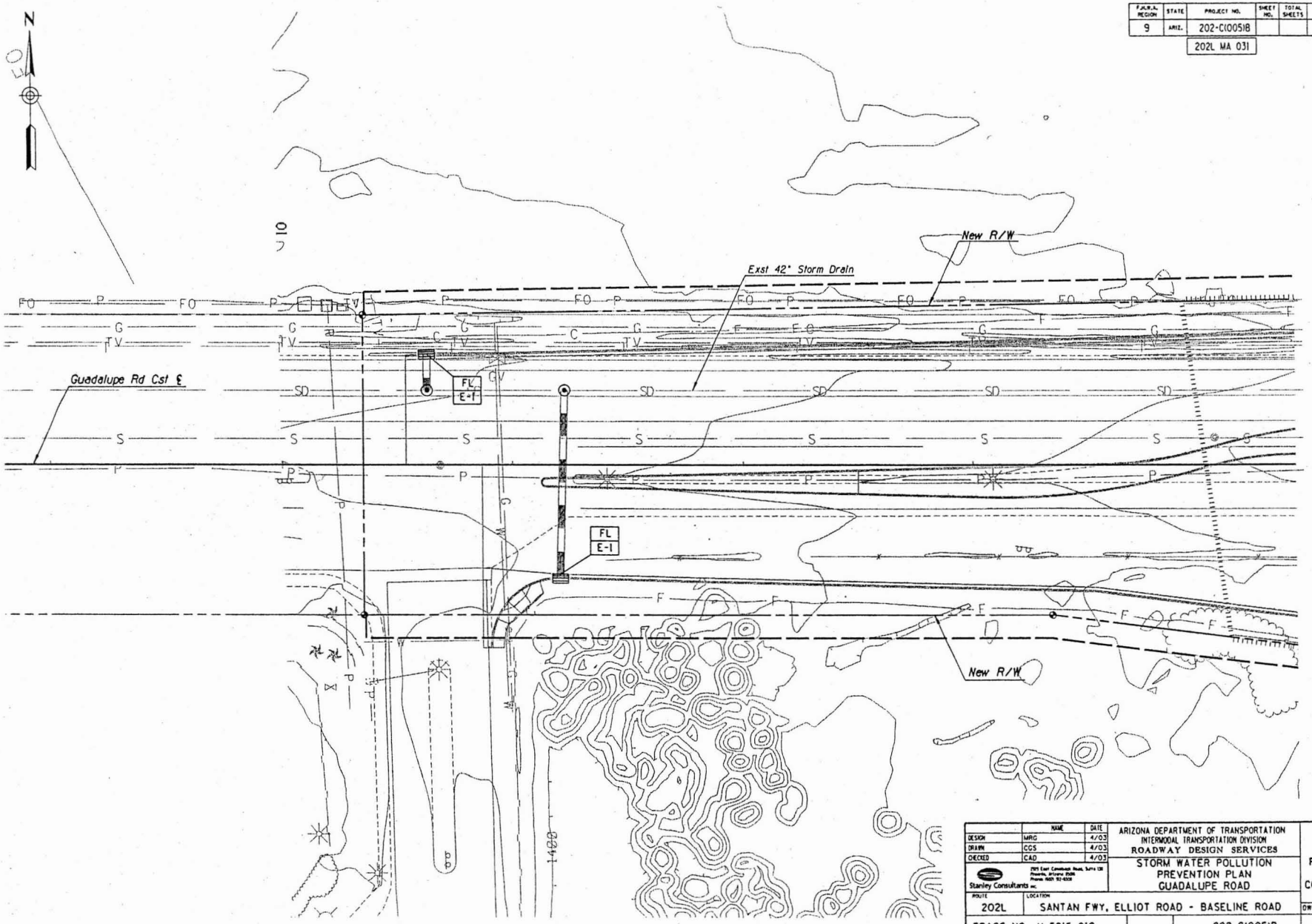

	NAME	DATE
DESIGN	MRG	4/03
DRAWN	CGS	4/03
CHECKED	CAD	4/03

Stanley Consultants inc.

ARIZONA DEPARTMENT OF TRANSPORTATION
INTERMODAL TRANSPORTATION DIVISION
ROADWAY DESIGN SERVICES

STORM WATER POLLUTION PREVENTION PLAN
GUADALUPE ROAD

95%
PRELIMINARY
NOT FOR CONSTRUCTION

ROUTE	LOCATION
202L	SANTAN FWY, ELLIOT ROAD - BASELINE ROAD

DWG NO. E-3.14

TRACS NO. H 5915 01C | 202-C(005)B | ___ OF ___

04/21/2003 q:\16110\dgn\drainage\h5915xpn.dgn

F.H.W.A. REGION	STATE	PROJECT NO.	SHEET NO.	TOTAL SHEETS	AS BUILT
9	ARIZ.	202-C(005)B			

202L MA 031

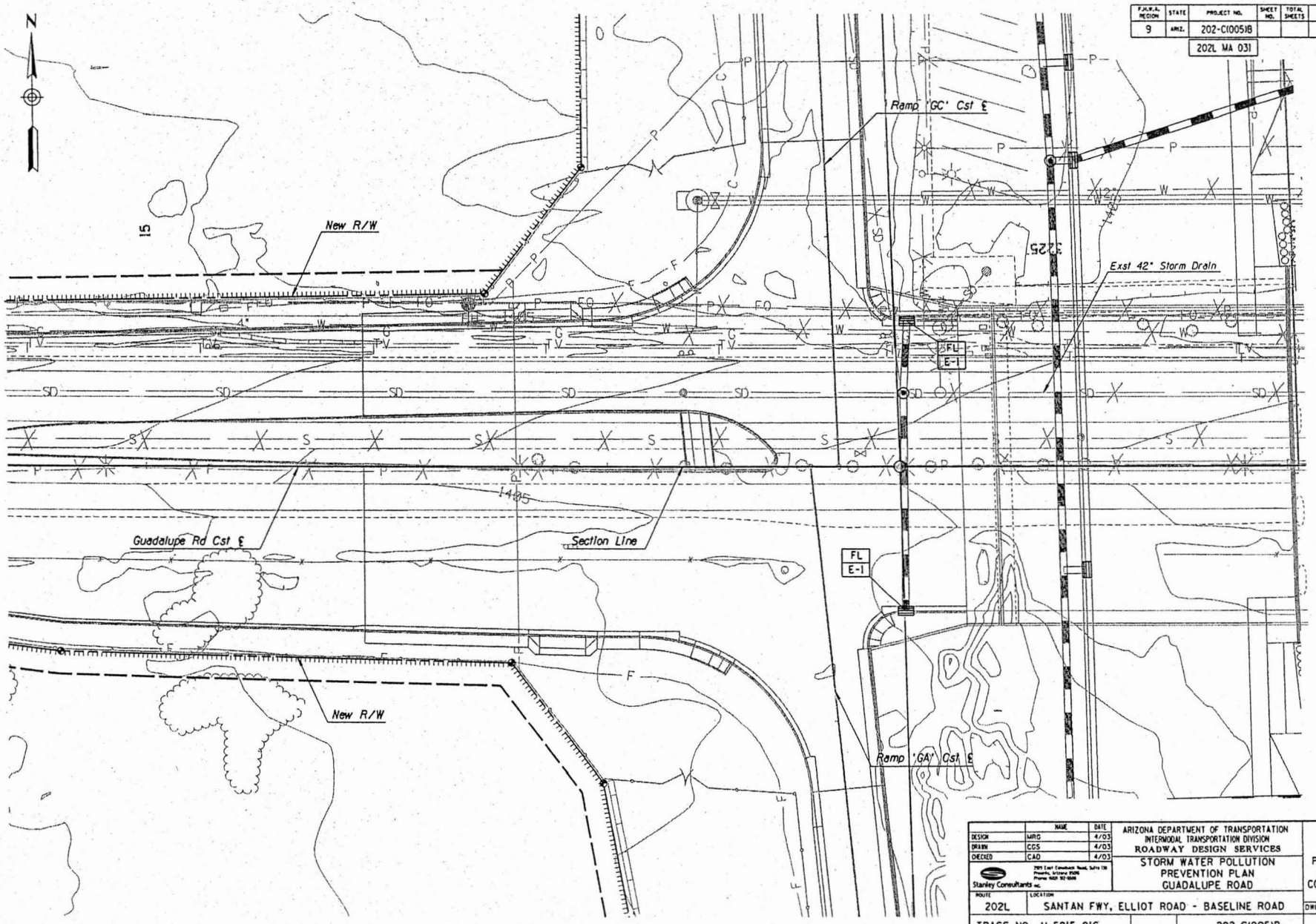

	NAME	DATE
DESIGN	MRG	4/03
DRAWN	CGS	4/03
CHECKED	CAD	4/03

Stanley Consultants inc.
7071 East Cowback Road, Suite 120
Phoenix, Arizona 85085
Phone: 602 97-1000

ARIZONA DEPARTMENT OF TRANSPORTATION
INTERMODAL TRANSPORTATION DIVISION
ROADWAY DESIGN SERVICES

STORM WATER POLLUTION PREVENTION PLAN
GUADALUPE ROAD

95%
PRELIMINARY
NOT FOR CONSTRUCTION

ROUTE	LOCATION
202L	SANTAN FWY, ELLIOT ROAD - BASELINE ROAD

DWG NO. E-3.15

TRACS NO. H 5915 01C | 202-C(005)B | ___ OF ___

04/22/2003 gt\16110\Dgn\drainage\h5915swpo.dgn

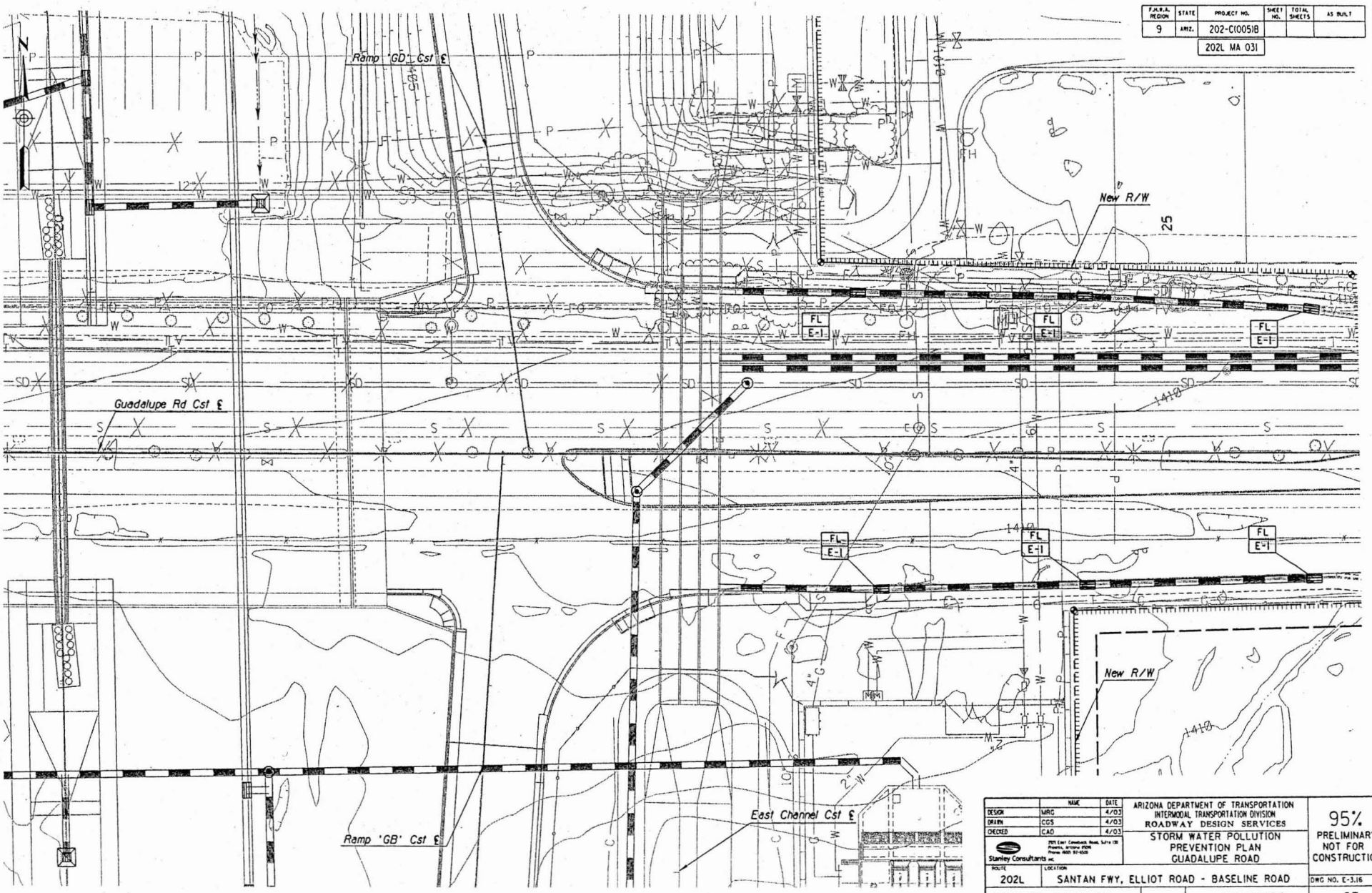

F.H.W.A. REGION	STATE	PROJECT NO.	SHEET NO.	TOTAL SHEETS	AS BUILT
9	ARIZ.	202-C(005)B			

202L MA 031

	NAME	DATE
DESIGN	MRG	4/03
DRAWN	CGS	4/03
CHECKED	CAO	4/03

Stanley Consultants inc.
7025 East Greenway Road, Suite 130
Phoenix, Arizona 85054
Phone: (602) 951-6500

ARIZONA DEPARTMENT OF TRANSPORTATION
INTERMODAL TRANSPORTATION DIVISION
ROADWAY DESIGN SERVICES

STORM WATER POLLUTION PREVENTION PLAN
GUADALUPE ROAD

95%
PRELIMINARY
NOT FOR CONSTRUCTION

ROUTE: 202L
LOCATION: SANTAN FWY, ELLIOT ROAD - BASELINE ROAD

DWG NO. E-3.16

TRACS NO. H 5915 01C | 202-C(005)B | ___ OF ___

04/22/2003 qi\16110\Dgn\drainage\h5915swpp.dgn

F.H.W.A. REGION	STATE	PROJECT NO.	SHEET NO.	TOTAL SHEETS	AS BUILT
9	ARIZ.	202-C(005)B			

202L MA 031

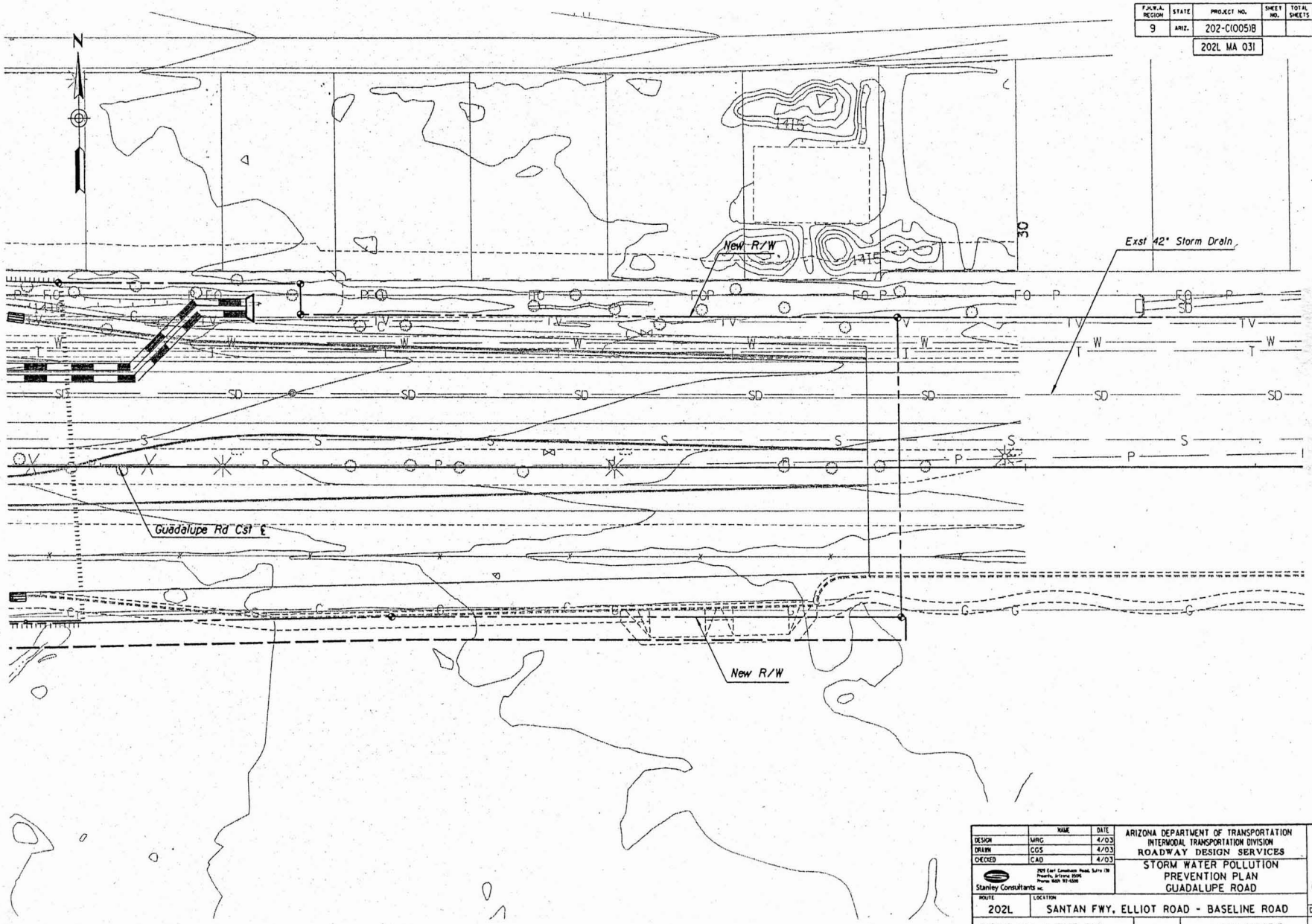

	NAME	DATE
DESIGN	MRG	4/03
DRAWN	CGS	4/03
CHECKED	CAD	4/03

Stanley Consultants inc.
7009 East Carefree Road, Suite 130
Phoenix, Arizona 85054
Phone (602) 97-4500

ARIZONA DEPARTMENT OF TRANSPORTATION
INTERMODAL TRANSPORTATION DIVISION
ROADWAY DESIGN SERVICES

STORM WATER POLLUTION PREVENTION PLAN
GUADALUPE ROAD

95%
PRELIMINARY NOT FOR CONSTRUCTION

ROUTE	LOCATION
202L	SANTAN FWY, ELLIOT ROAD - BASELINE ROAD

DWG NO. E-3.17

TRACS NO. H 5915 01C | 202-C(005)B | ___ OF ___

04/21/2003 q:\16110\dgn\drainage\h5915swpq.dgn

SURVEY NO. | FINISHED PLANS- | REVISIONS- | LOCATION- | DATE- | SURVEY NO. | FINISHED PLANS- | REVISIONS- | LOCATION- | DATE-

F.H.W.A. REGION	STATE	PROJECT NO.	SHEET NO.	TOTAL SHEETS	AS BUILT
9	ARIZ.	202-C(005)B			
		202L MA 031			

	NAME	DATE
DESIGN	MRG	4/03
DRAWN	CGS	4/03
CHECKED	CAD	4/03

Stanley Consultants inc.
2025 East Camelback Road, Suite 130
Phoenix, Arizona 85016
Phone (602) 92-6508

ARIZONA DEPARTMENT OF TRANSPORTATION
INTERMODAL TRANSPORTATION DIVISION
ROADWAY DESIGN SERVICES

STORM WATER POLLUTION PREVENTION PLAN
BASELINE ROAD

95%
PRELIMINARY
NOT FOR CONSTRUCTION

ROUTE: 202L
LOCATION: SANTAN FWY, ELLIOT ROAD - BASELINE ROAD

DWG NO. E-3.18

TRACS NO. H 5915 01C | 202-C(005)B | ___ OF ___

04/22/2003 qr\16110\dgn\drainage\h5915swps.dgn

DATE: LOCATION: REVISIONS: FINISHED PLANS: SURVEY NO.

F.H.W.A. REGION	STATE	PROJECT NO.	SHEET NO.	TOTAL SHEETS	AS BUILT
9	ARIZ.	202-C(005)B			

202L MA 031

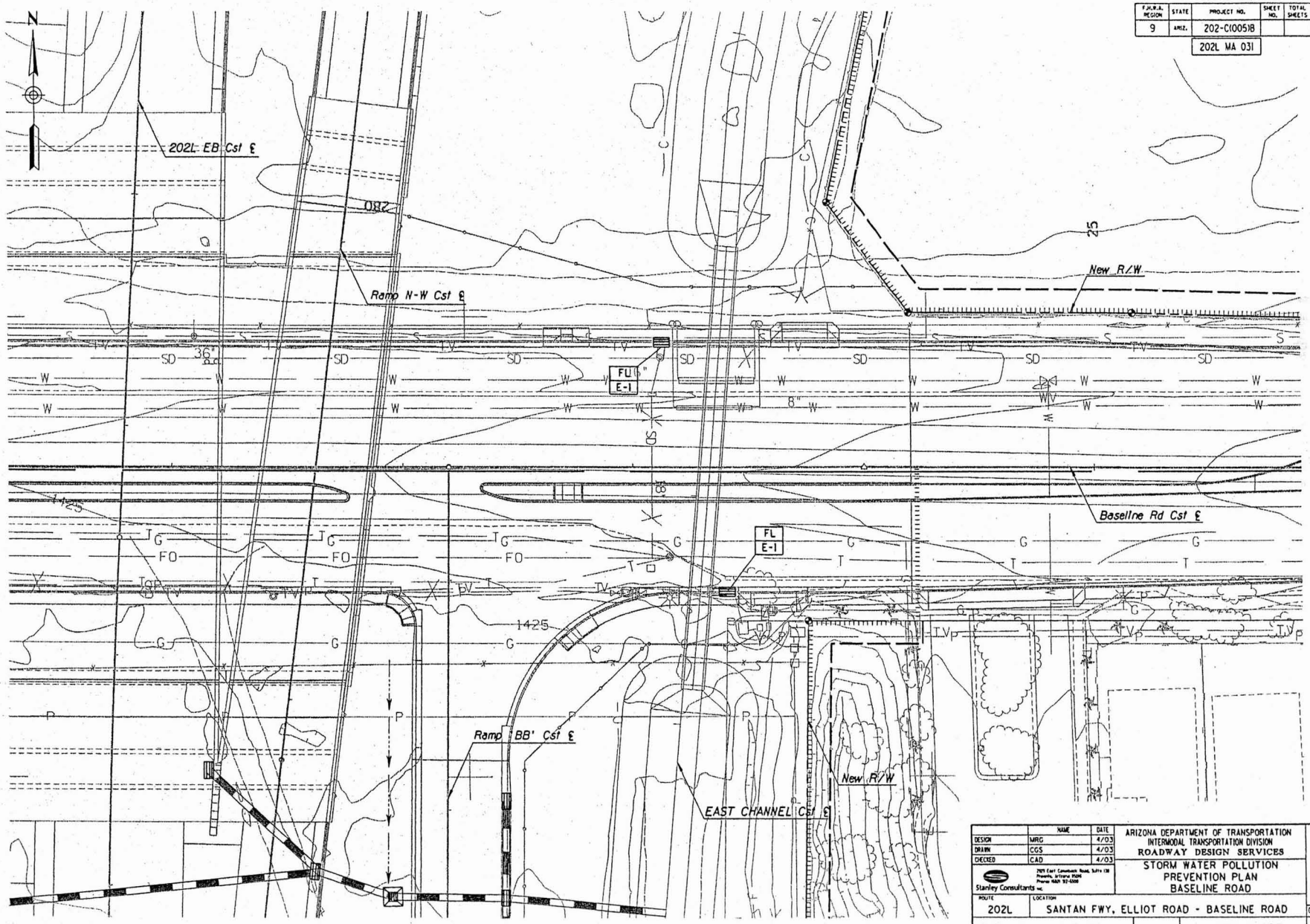

	NAME	DATE
DESIGN	MRG	4/03
DRAWN	CGS	4/03
CHECKED	CAD	4/03

Stanley Consultants INC.
2929 East Camelback Road, Suite 130
Phoenix, Arizona 85016
Phone: (602) 957-5000

ARIZONA DEPARTMENT OF TRANSPORTATION
INTERMODAL TRANSPORTATION DIVISION
ROADWAY DESIGN SERVICES

STORM WATER POLLUTION PREVENTION PLAN
BASELINE ROAD

95%
PRELIMINARY NOT FOR CONSTRUCTION

ROUTE	LOCATION
202L	SANTAN FWY, ELLIOT ROAD - BASELINE ROAD

DWG NO. E-3.19

TRACS NO. H 5915 01C | 202-C(005)B | ___ OF ___

SURVEY NO. | FINISHED PLANS | REVISIONS | LOCATION | DATE | SURVEY NO. | FINISHED PLANS | REVISIONS | LOCATION | DATE

04/22/2003 qt\16110\Dgn\drainage\h5915swpt.dgn

F.H.W.A. REGION	STATE	PROJECT NO.	SHEET NO.	TOTAL SHEETS	AS BUILT
9	ARIZ.	202-C(005)B			

202L MA 031

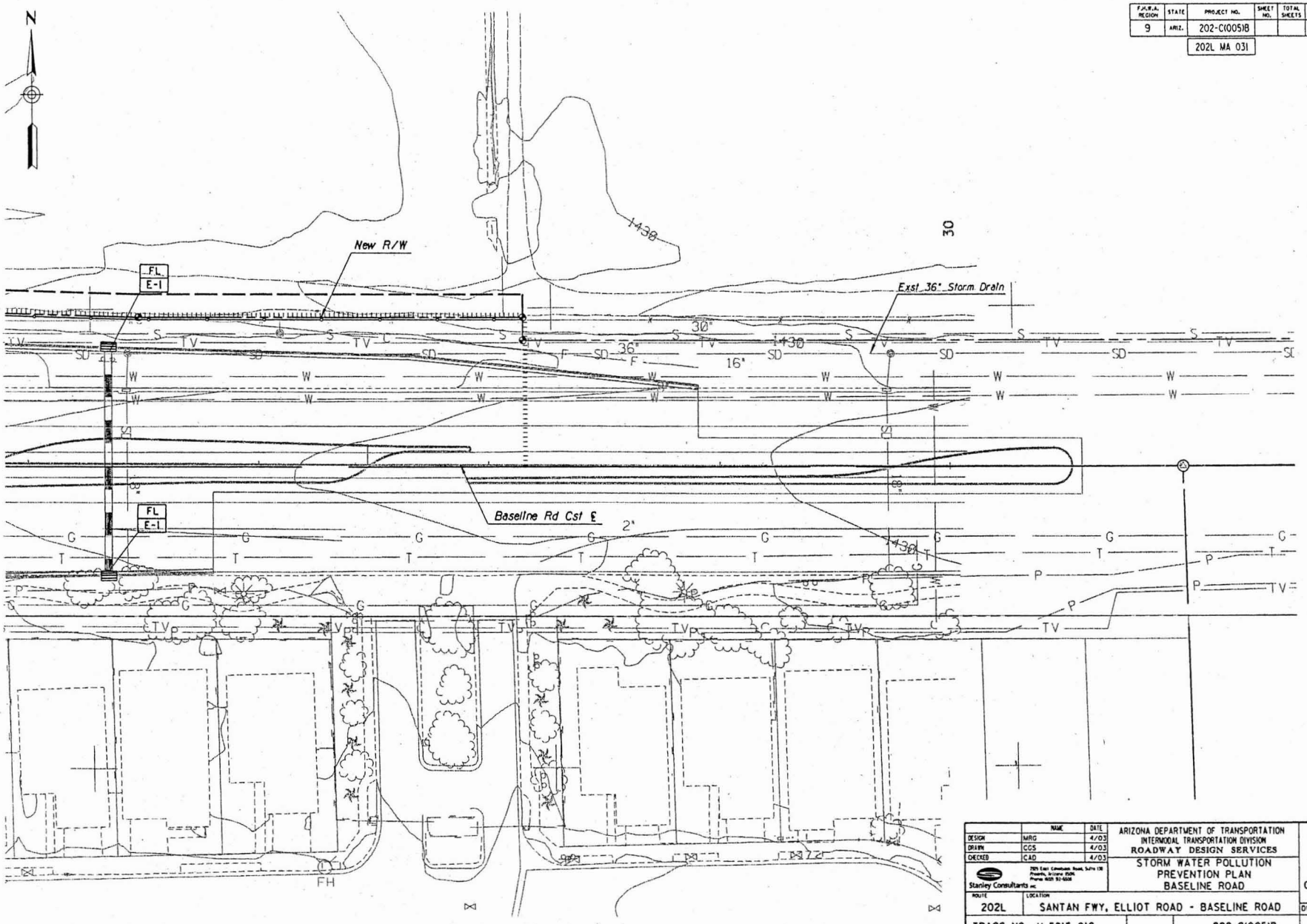

	NAME	DATE
DESIGN	MRG	4/03
DRAWN	CGS	4/03
CHECKED	CAD	4/03

Stanley Consultants INC

ARIZONA DEPARTMENT OF TRANSPORTATION
INTERMODAL TRANSPORTATION DIVISION
ROADWAY DESIGN SERVICES

STORM WATER POLLUTION PREVENTION PLAN
BASELINE ROAD

95%
PRELIMINARY
NOT FOR CONSTRUCTION

ROUTE: 202L
LOCATION: SANTAN FWY, ELLIOT ROAD - BASELINE ROAD

DWG NO. E-3.20

TRACS NO. H 5915 01C | 202-C(005)B | ___ OF ___

04/22/2003 gt\16118\Dgn\drainage\h5915sspu.dgn

F.A.H.W.A. REGION	STATE	PROJECT NO.	SHEET NO.	TOTAL SHEETS	AS BUILT
9	ARIZ.	202-C(005)B			
		202L MA 031			

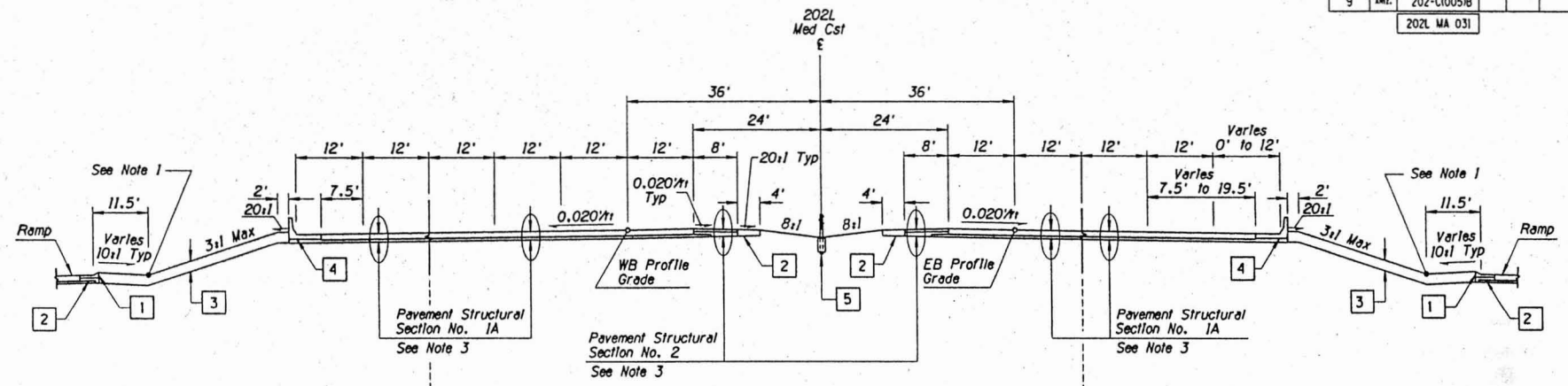

TYPICAL SECTION - MAINLINE

(WB) 202L Med Cst ℄ Sta 3169+00.00 to Sta 3183+79.98
(EB) 202L Med Cst ℄ Sta 3169+00.00 to Sta 3186+44.03

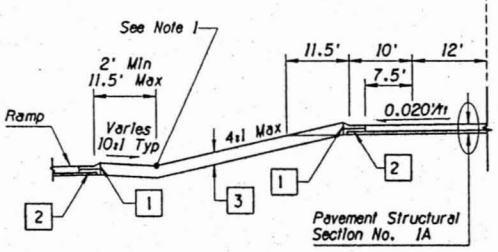

(WB) 202L Med Cst ℄ Sta 3182+50.00 to Sta 3183+79.98

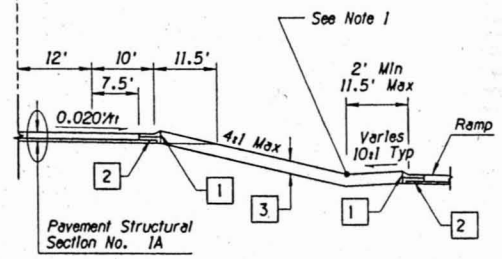

(EB) 202L Med Cst ℄ Sta 3183+00.00 to Sta 3186+44.03

Notes:

1. See Drainage Plans for Ditch Control
2. See Detail J for Shoulder Transitions and Median Paving and Grading at Elliot Road Bridges
3. Construct Embankment to Top of Subgrade and Do Not Construct the Pavement Section or Place Topsoil from 202L Med Cst ℄ Station 3169+00.00 to Station 3169+61.00 (Begin Anchor Slab)

1. Conc Curb & Gutter, Type B, C or C-1 Std C-05.10 & C-05.12 (See Plans for Type and Location)
2. Median Shoulder Treatment (See Detail 'A')
3. 24" Thick Topsoil Plating
4. Conc Half Barrier (See Plans for Type & Location)
5. Median Cable Barrier (See Cable Barrier Plans for Locations)

	NAME	DATE	ARIZONA DEPARTMENT OF TRANSPORTATION INTERMODAL TRANSPORTATION DIVISION ROADWAY DESIGN SERVICES	95% PRELIMINARY NOT FOR CONSTRUCTION
DESIGN	GJM	4/03		
DRAWN	CGS	4/03		
CHECKED	MRC	4/03	DESIGN SHEET 202L TYPICAL MAINLINE SECTIONS	
Stanley Consultants inc.				
ROUTE 202L	LOCATION SANTAN FWY, ELLIOT ROAD - BASELINE ROAD			DWG NO. G-3.2
TRACS NO. H 5915 01C			202-C(005)B	___ OF ___

04/16/03 qr\16110\dgn\gen_civil\h5915da3b.dgn

F.H.W.A. REGION	STATE	PROJECT NO.	SHEET NO.	TOTAL SHEETS	AS BUILT
9	ARIZ.	202-C(005)B			

202L MA 031

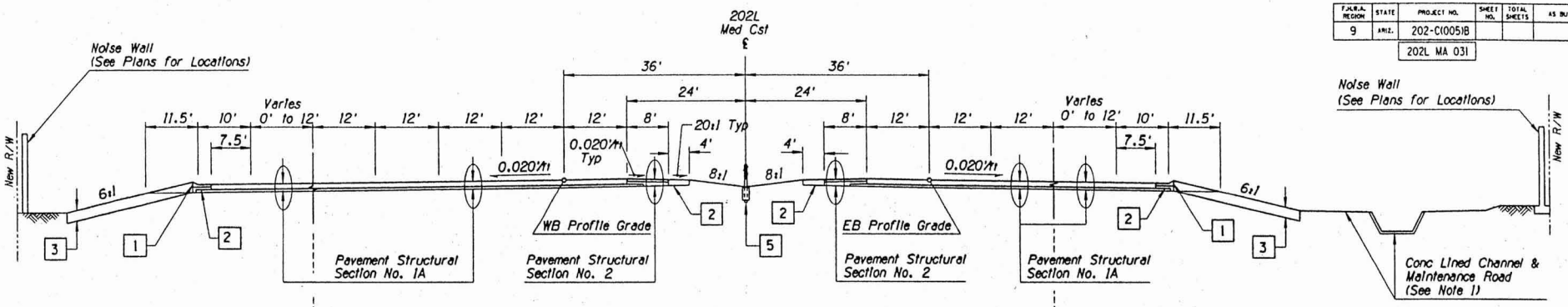

TYPICAL SECTION - MAINLINE

(WB) 202L Med Cst ℄ Sta 3183+79.98 to Sta 3202+00.00
(EB) 202L Med Cst ℄ Sta 3186+44.03 to Sta 3202+00.00

Note:

1. See Channel Sections on Dwg No. G-3.18 for Grading between Channel and Roadway, and Drainage Plans for Concrete Lined Channel Information

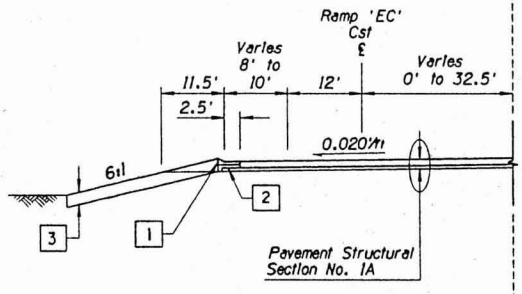

(WB) 202L Med Cst ℄ Sta 3185+54.70 to Sta 3193+00.00

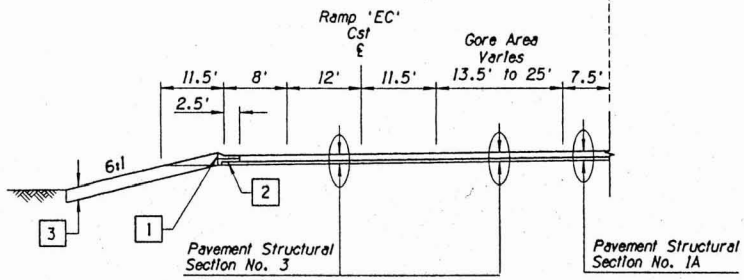

(WB) 202L Med Cst ℄ Sta 3183+79.98 to Sta 3185+54.70

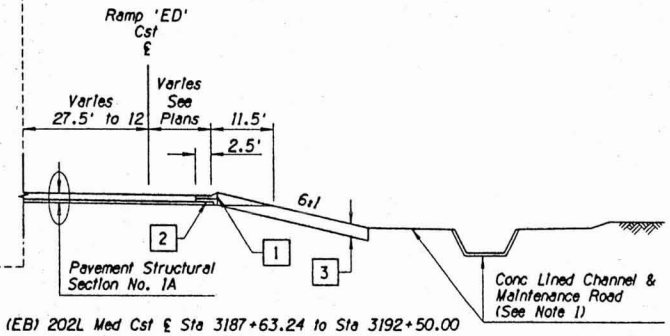

(EB) 202L Med Cst ℄ Sta 3187+63.24 to Sta 3192+50.00

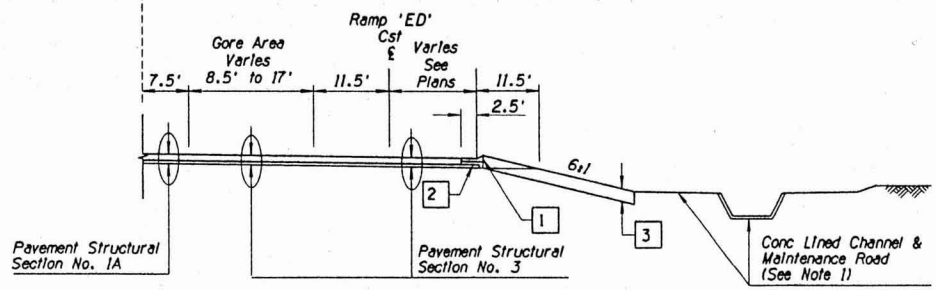

(EB) 202L Med Cst ℄ Sta 3186+44.03 to Sta 3187+63.24

1. Conc Curb & Gutter, Type B, C or C-1 Std C-05.10 & C-05.12 (See Plans for Type & Location)
2. Median Shoulder Treatment (See Detail 'A')
3. 24" Thick Topsoil Plating
4. Conc Half Barrier (See Plans for Type & Location)
5. Median Cable Barrier (See Cable Barrier Plans for Locations)

	NAME	DATE
DESIGN	GJM	4/03
DRAWN	CGS	4/03
CHECKED	MRC	4/03

Stanley Consultants inc.
2575 East Camelback Road, Suite 170
Phoenix, Arizona 85016
Phone: (602) 97-6505

ARIZONA DEPARTMENT OF TRANSPORTATION
INTERMODAL TRANSPORTATION DIVISION
ROADWAY DESIGN SERVICES

DESIGN SHEET
202L
TYPICAL MAINLINE SECTIONS

95%
PRELIMINARY
NOT FOR
CONSTRUCTION

ROUTE	LOCATION	
202L	SANTAN FWY, ELLIOT ROAD - BASELINE ROAD	DWG NO. G-3.3
TRACS NO. H 5915 01C	202-C(005)B	___ OF ___

04/16/03 qt\16110\dgn\gen_civil\h5915ds3c.dgn

F.H.W.A. REGION	STATE	PROJECT NO.	SHEET NO.	TOTAL SHEETS	AS BUILT
9	ARIZ.	202-C(005)B			
		202L MA 031			

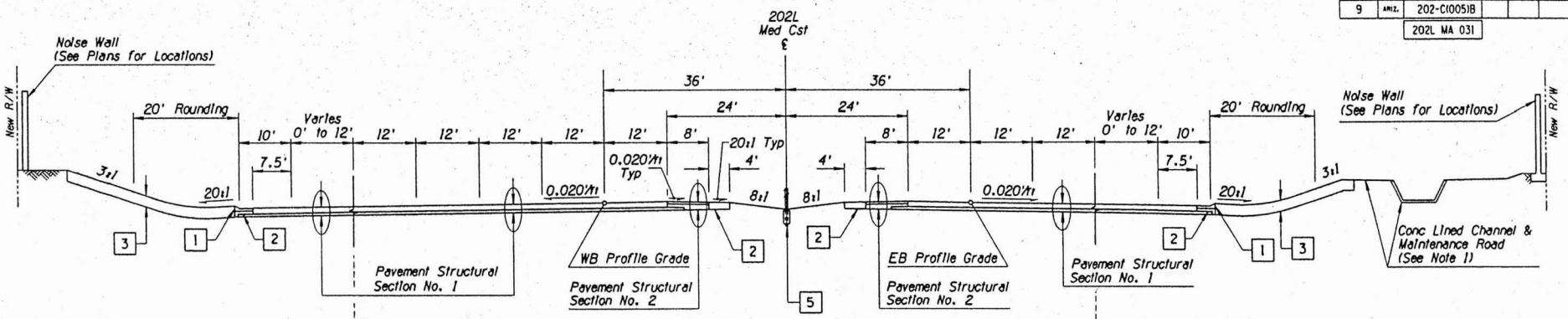

TYPICAL SECTION - MAINLINE

(WB) 202L Med Cst ℄ Sta 3202+00.00 to Sta 3212+05.94
(EB) 202L Med Cst ℄ Sta 3202+00.00 to Sta 3212+99.91

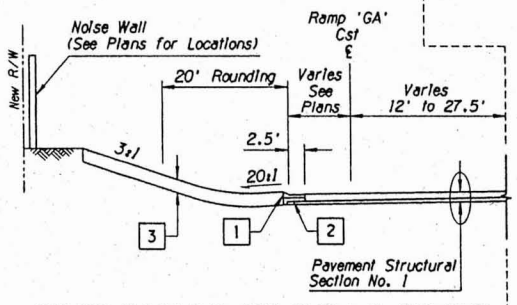

(WB) 202L Med Cst ℄ Sta 3206+00.00 to Sta 3210+86.76

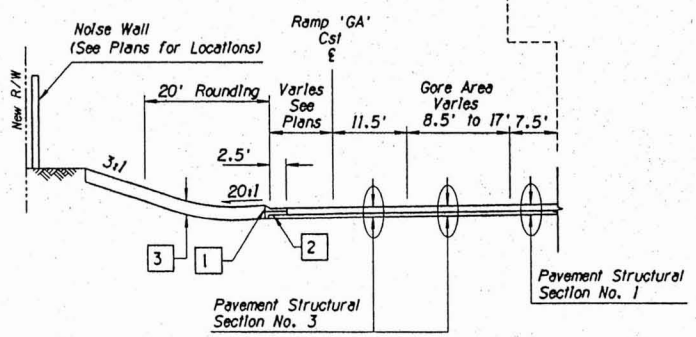

(WB) 202L Med Cst ℄ Sta 3210+86.76 to Sta 3212+05.94

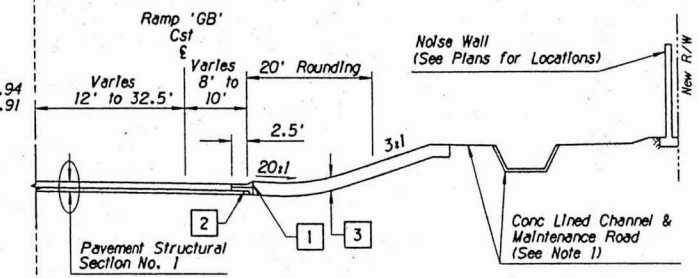

(EB) 202L Med Cst ℄ Sta 3206+00.00 to Sta 3211+59.70

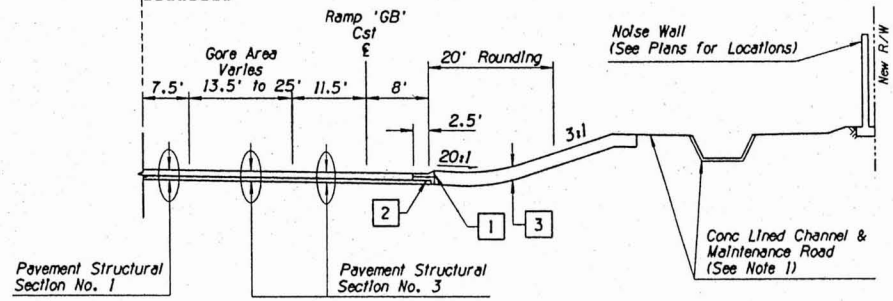

(EB) 202L Med Cst ℄ Sta 3211+59.70 to Sta 3212+99.91

Note:

1. See Channel Sections on Dwg No. G-3.18 for Grading between Channel and Roadway, and Drainage Plans for Concrete Lined Channel Information

1. Conc Curb & Gutter, Type B, C or C-1 Std C-05.10 & C-05.12 (See Plans for Type and Location)
2. Median Shoulder Treatment (See Detail 'A')
3. 24" Thick Topsoil Plating
4. Conc Half Barrier (See Plans for Type & Location)
5. Median Cable Barrier (See Cable Barrier Plans for Locations)

	NAME	DATE
DESIGN	G.JM	4/03
DRAWN	CGS	4/03
CHECKED	MRC	4/03

Stanley Consultants Inc.
2929 East Camelback Road, Suite 170
Phoenix, Arizona 85016
Phone (602) 957-6600

ARIZONA DEPARTMENT OF TRANSPORTATION
INTERMODAL TRANSPORTATION DIVISION
ROADWAY DESIGN SERVICES

DESIGN SHEET
202L
TYPICAL MAINLINE SECTIONS

95%
PRELIMINARY
NOT FOR
CONSTRUCTION

ROUTE	LOCATION	DWG NO. G-3.4
202L	SANTAN FWY, ELLIOT ROAD - BASELINE ROAD	
TRACS NO. H 5915 01C	202-C(005)B	___ OF ___

04/16/03 gr\16118\dgn\gen_civil\h5915d03d.dgn

F.H.W.A. REGION	STATE	PROJECT NO.	SHEET NO.	TOTAL SHEETS	AS BUILT
9	ARIZ.	202-C(005)B			

202L MA 031

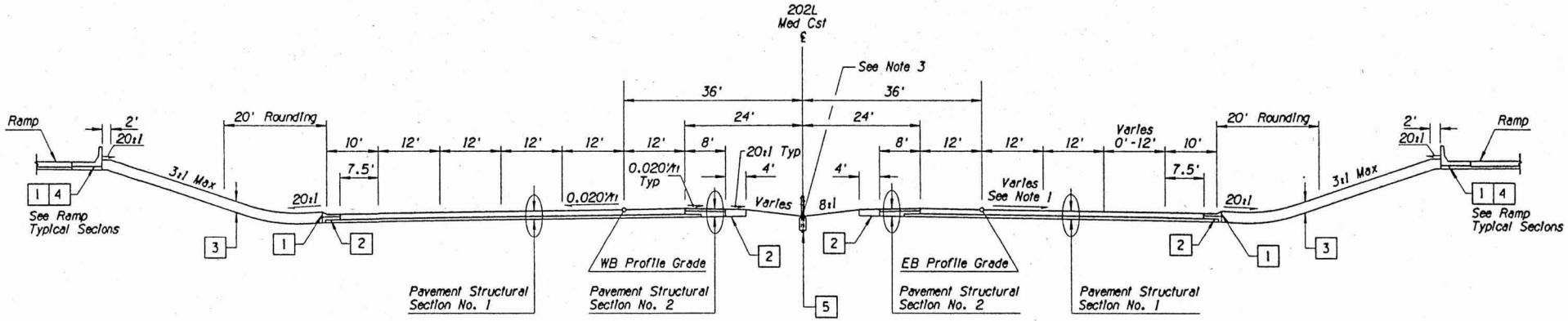

1 Conc Curb & Gutter, Type B, C or C-1
Std C-05.10 & C-05.12 (See Plans for Type and Location)

2 Median Shoulder Treatment (See Detail 'A')

3 24" Thick Topsoil Plating

4 Conc Half Barrier (See Plans for Type & Location)

5 Median Cable Barrier
(See Cable Barrier Plans for Locations)

TYPICAL SECTION - MAINLINE

(WB) 202L Med Cst ℄ Sta 3212+05.94 to Sta 3224+60.00
(EB) 202L Med Cst ℄ Sta 3212+99.91 to Sta 3224+60.00

Notes:

1. See 202L Profile Sheets for Superelevation Diagram
2. See Detail K for Shoulder Transitions and Median Paving and Grading at Guadalupe Road Bridge
3. See Drainage Plans for Ditch Control

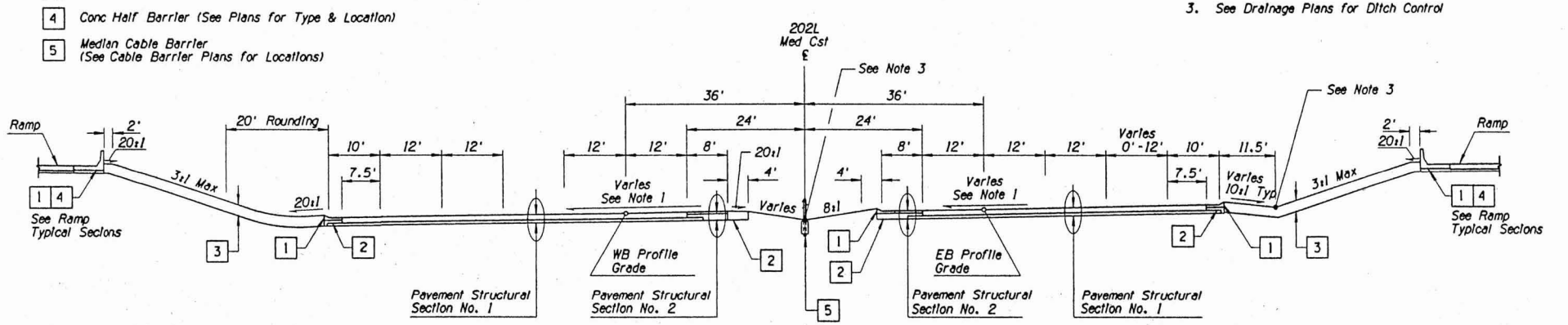

TYPICAL SECTION - MAINLINE

Superelevated Section
(WB) 202L Med Cst ℄ Sta 3224+60.00 to Sta 3235+38.53
(EB) 202L Med Cst ℄ Sta 3224+60.00 to Sta 3236+90.13

	NAME	DATE
DESIGN	GJM	4/03
DRAWN	CGS	4/03
CHECKED	MRC	4/03

Stanley Consultants inc.
2929 East Camelback Road, Suite 130
Phoenix, Arizona 85016
Phone: (602) 957-6500

ARIZONA DEPARTMENT OF TRANSPORTATION
INTERMODAL TRANSPORTATION DIVISION
ROADWAY DESIGN SERVICES

DESIGN SHEET
202L
TYPICAL MAINLINE SECTIONS

95%
PRELIMINARY
NOT FOR
CONSTRUCTION

ROUTE: 202L
LOCATION: SANTAN FWY, ELLIOT ROAD - BASELINE ROAD

TRACS NO. H 5915 01C

202-C(005)B

DWG NO. G-3.5

___ OF ___

04/16/03 gi\16110\dgn\gen_civil\h5915ds3e.dgn

F.H.W.A. REGION	STATE	PROJECT NO.	SHEET NO.	TOTAL SHEETS	AS BUILT
9	ARIZ.	202-C(005)B			

202L MA 031

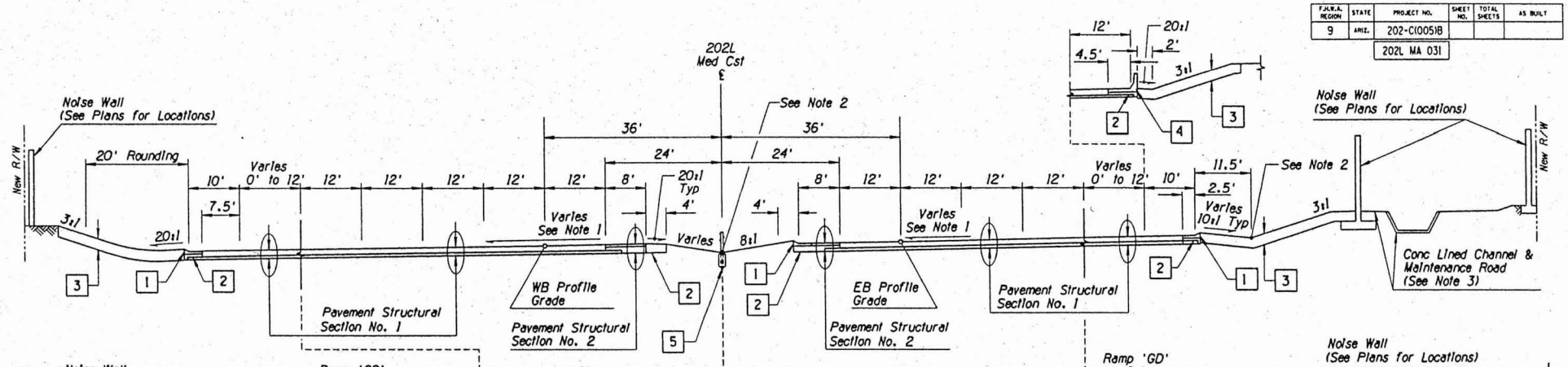

TYPICAL SECTION - MAINLINE

(WB) 202L Med Cst ℄ Sta 3235+38.53 to Sta 3250+00.00
(EB) 202L Med Cst ℄ Sta 3236+90.13 to Sta 3246+25.00

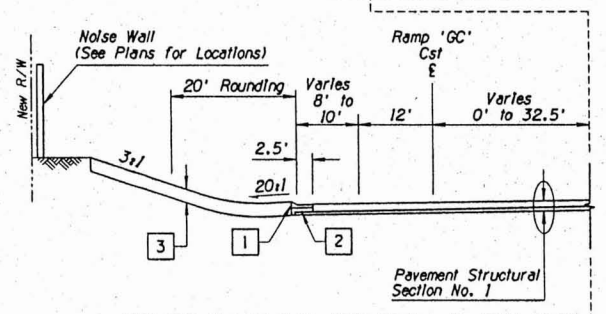

(WB) 202L Med Cst ℄ Sta 3236+85.11 to Sta 3244+60.00

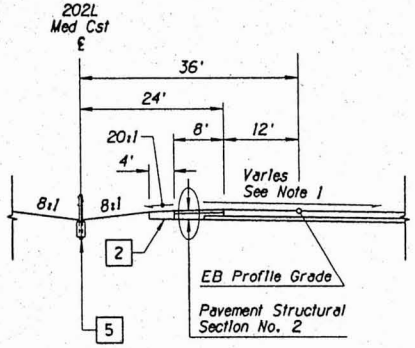

TYPICAL SECTION - MAINLINE

(EB) 202L Med Cst ℄ Sta 3246+25.00 to Sta 3250+00.00

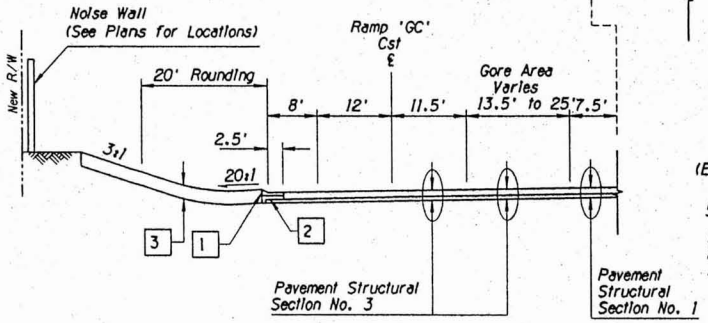

(WB) 202L Med Cst ℄ Sta 3235+38.53 to Sta 3236+85.11

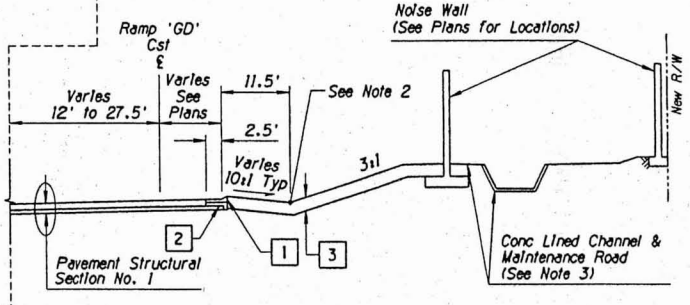

(EB) 202L Med Cst ℄ Sta 3237+81.51 to Sta 3241+55.00

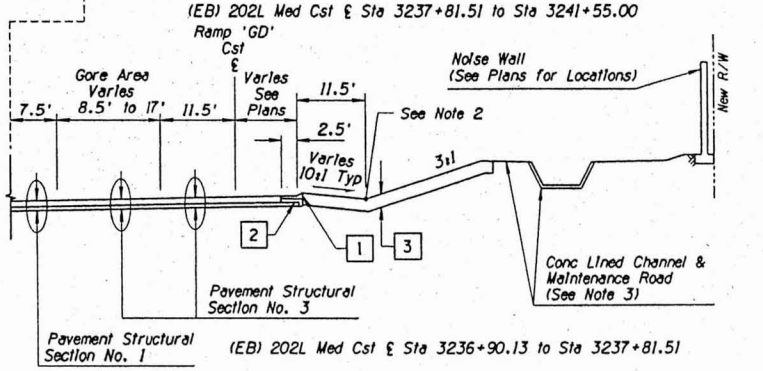

(EB) 202L Med Cst ℄ Sta 3236+90.13 to Sta 3237+81.51

Notes:

1. See 202L Profile Sheets for Superelevation Diagram
2. See Drainage Plans for Ditch Control
3. See Channel Sections on Dwg No. G-3.18 for Grading between Channel and Roadway, and Drainage Plans for Concrete Lined Channel Information

1 Conc Curb & Gutter, Type B, C or C-1 Std C-05.10 & C-05.12 (See Plans for Type and Location)

2 Median Shoulder Treatment (See Detail 'A')

3 24" Thick Topsoil Plating

4 Conc Half Barrier (See Plans for Type & Location)

5 Median Cable Barrier (See Cable Barrier Plans for Locations)

	NAME	DATE
DESIGN	GJM	4/03
DRAWN	CGS	4/03
CHECKED	MRC	4/03

Stanley Consultants INC.
2929 East Camelback Road, Suite 130
Phoenix, Arizona 85016
Phone: (602) 957-6000

ARIZONA DEPARTMENT OF TRANSPORTATION
INTERMODAL TRANSPORTATION DIVISION
ROADWAY DESIGN SERVICES

DESIGN SHEET
202L
TYPICAL MAINLINE SECTIONS

95%
PRELIMINARY
NOT FOR
CONSTRUCTION

ROUTE	LOCATION	DWG NO. G-3.6
202L	SANTAN FWY, ELLIOT ROAD - BASELINE ROAD	

TRACS NO. H 5915 01C | 202-C(005)B | ___ OF ___

04/16/03 gr\16110\dgn\gen_civil\h5915ds3f.dgn

F.H.W.A. REGION	STATE	PROJECT NO.	SHEET NO.	TOTAL SHEETS	AS BUILT
9	ARIZ.	202-C(005)B			

202L MA 031

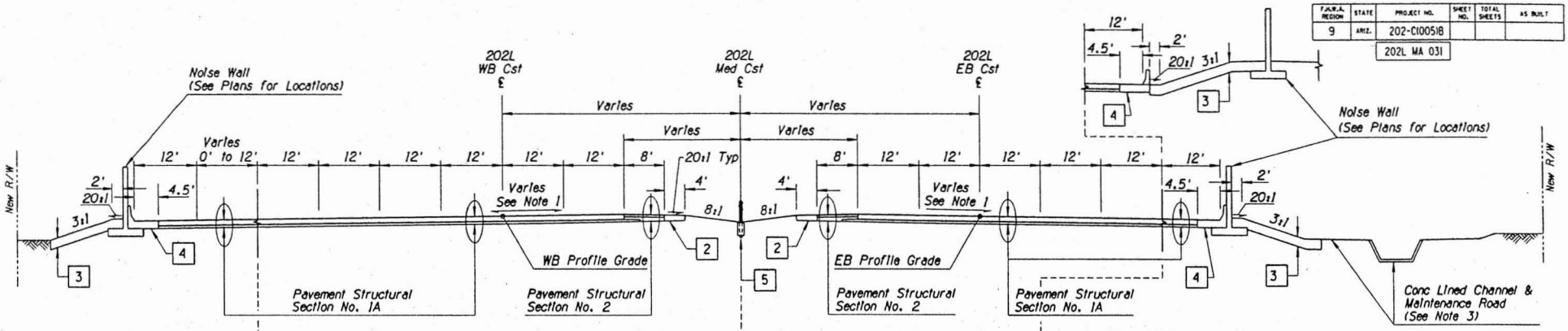

TYPICAL SECTION - MAINLINE

202L WB Sta 250+00.00 to Sta 263+62.62
202L EB Sta 250+00.00 to Sta 265+39.01

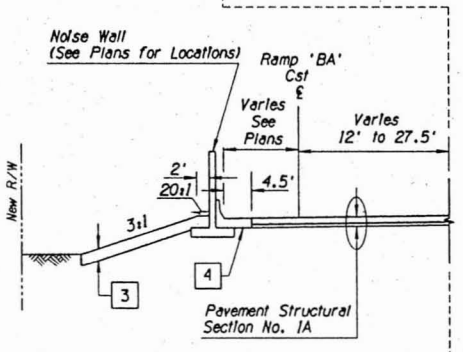

202L WB Cst ℄ Sta 258+89.24 to Sta 262+63.69

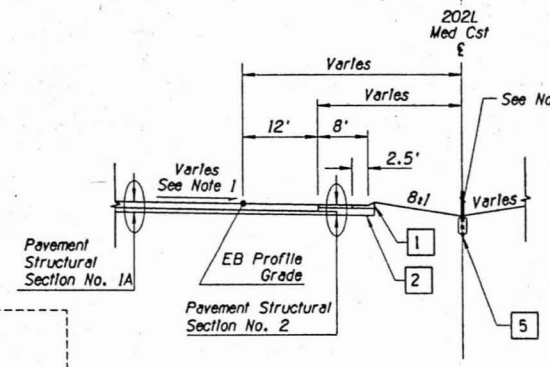

TYPICAL SECTION - MAINLINE

202L WB Sta 256+00.00 to Sta 263+62.62

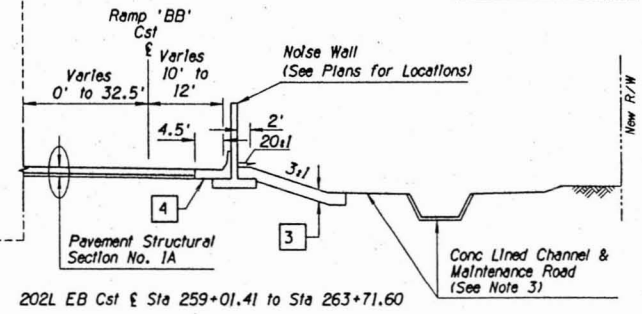

202L EB Cst ℄ Sta 259+01.41 to Sta 263+71.60

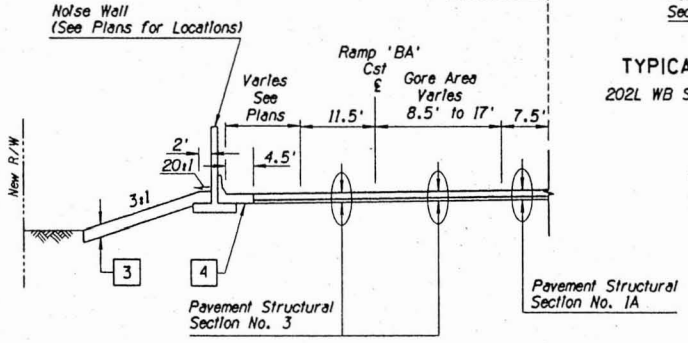

202L WB Cst ℄ Sta 262+63.69 to Sta 263+62.62

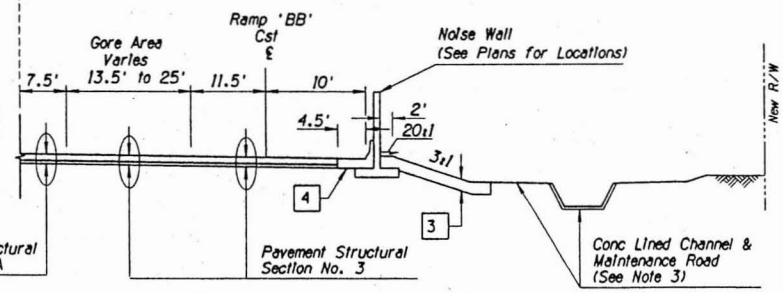

202L EB Cst ℄ Sta 263+71.60 to Sta 265+39.01

Notes:

1. See 202L Profile Sheets for Superelevation Diagram
2. See Drainage Plans for Ditch Control
3. See Channel Sections on Dwg No. G-3.18 for Grading between Channel and Roadway, and Drainage Plans for Concrete Lined Channel Information

1 Conc Curb & Gutter, Type B, C or C-1 Std C-05.10 & C-05.12 (See Plans for Type & Location)

2 Median Shoulder Treatment (See Detail 'A')

3 24" Thick Topsoil Plating

4 Conc Half Barrier (See Plans for Type & Location)

5 Median Cable Barrier (See Cable Barrier Plans for Locations)

	NAME	DATE
DESIGN	GJM	4/03
DRAWN	CGS	4/03
CHECKED	MRC	4/03

Stanley Consultants Inc.

ARIZONA DEPARTMENT OF TRANSPORTATION
INTERMODAL TRANSPORTATION DIVISION
ROADWAY DESIGN SERVICES

DESIGN SHEET
202L
TYPICAL MAINLINE SECTIONS

95%
PRELIMINARY NOT FOR CONSTRUCTION

ROUTE: 202L
LOCATION: SANTAN FWY, ELLIOT ROAD - BASELINE ROAD

DWG NO. G-3.7

TRACS NO. H 5915 01C | 202-C(005)B | ___ OF ___

04/16/03 qi\16110\dgn\gen_civil\h5915ds3g.dgn

F.H.W.A. REGION	STATE	PROJECT NO.	SHEET NO.	TOTAL SHEETS	AS BUILT
9	ARIZ.	202-C(005)B			
		202L MA 031			

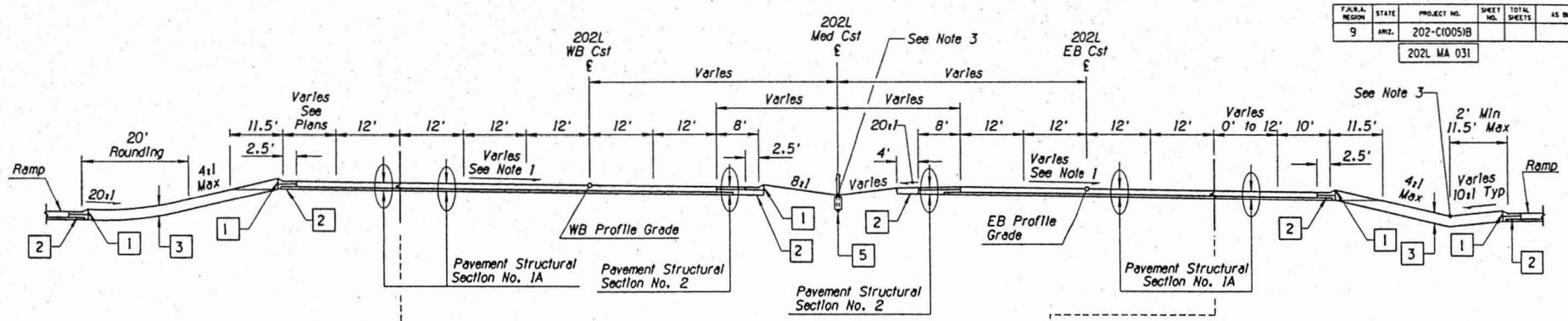

TYPICAL SECTION - MAINLINE

202L WB Sta 263+62.62 to Sta 280+37.14
202L EB Sta 265+39.01 to Sta 277+18.65

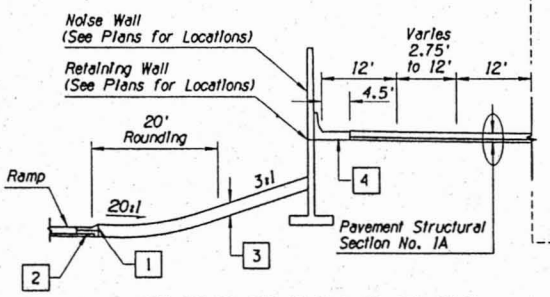

202L WB Sta 265+00.00 to Sta 276+37.40

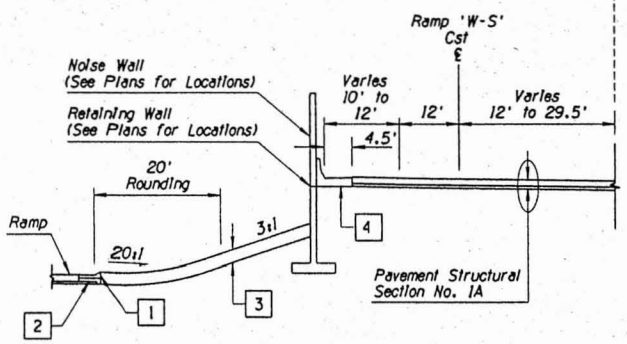

202L WB Sta 276+37.40 to Sta 280+37.14

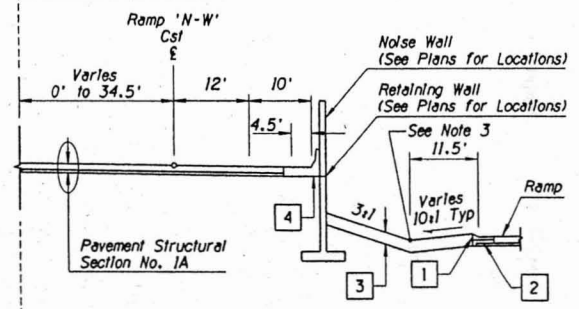

202L EB Sta 266+75.16 to Sta 275+78.01

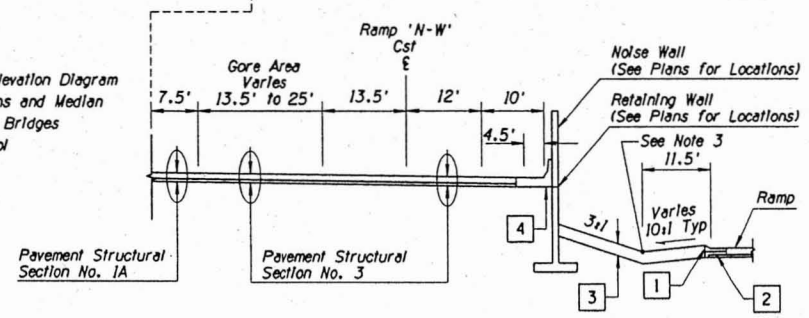

202L EB Sta 275+78.01 to Sta 277+18.65

Notes:
1. See 202L Profile Sheets for Superelevation Diagram
2. See Detail L for Shoulder Transitions and Median Paving and Grading at the Baseline Bridges
3. See Drainage Plans for Ditch Control

1. Conc Curb & Gutter, Type B, C or C-1 Std C-05.10 & C-05.12 (See Plans for Type and Location)
2. Median Shoulder Treatment (See Detail 'A')
3. 24" Thick Topsoil Plating
4. Conc Half Barrier (See Plans for Type & Location)
5. Median Cable Barrier (See Cable Barrier Plans for Locations)

	NAME	DATE
DESIGN	GJM	4/03
DRAWN	CGS	4/03
CHECKED	MRC	4/03

Stanley Consultants INC.
7501 East Camelback Road, Suite 120
Phoenix, Arizona 85251
Phone: (480) 97-4000

ARIZONA DEPARTMENT OF TRANSPORTATION
INTERMODAL TRANSPORTATION DIVISION
ROADWAY DESIGN SERVICES

DESIGN SHEET
202L
TYPICAL MAINLINE SECTIONS

95%
PRELIMINARY
NOT FOR CONSTRUCTION

ROUTE	LOCATION	DWG NO. G-3.8
202L	SANTAN FWY, ELLIOT ROAD - BASELINE ROAD	
TRACS NO. H 5915 01C	202-C(005)B	___ OF ___

04/16/03 gr\16110\dgn\gen_civil\h5915ds3h.dgn

F.A.H.W.A. REGION	STATE	PROJECT NO.	SHEET NO.	TOTAL SHEETS	AS BUILT
9	ARIZ.	202-C(005)B			
		202L MA 031			

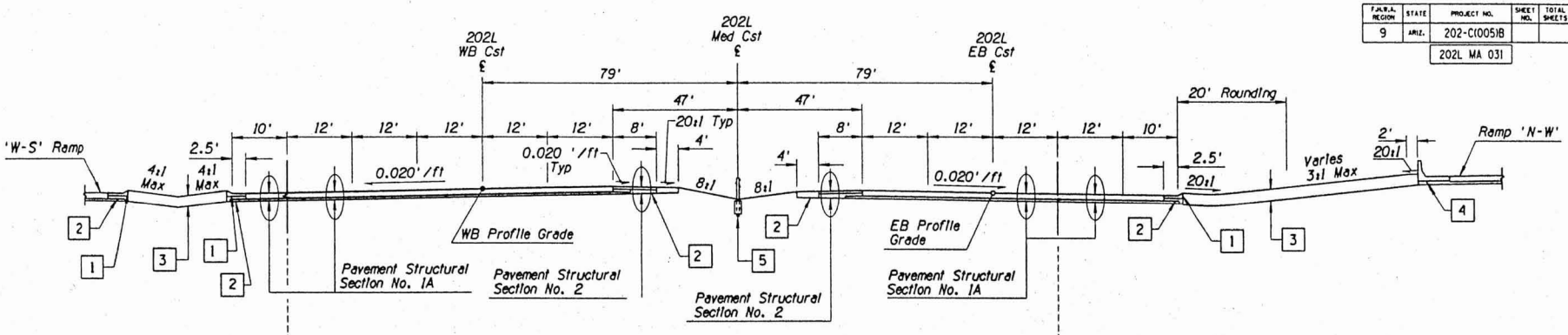

TYPICAL SECTION - MAINLINE

202L WB Sta 280+37.14 to Sta 282+79.12
202L EB Sta 277+18.65 to Sta 282+16.41

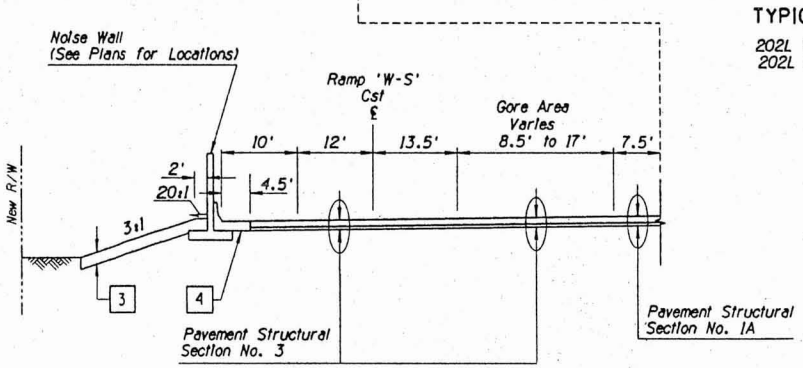

202L WB Cst ℄ Sta 280+37.14 to Sta 281+41.96

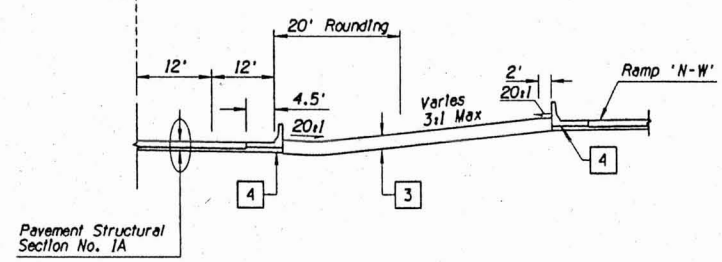

202L EB Sta to 280+36.55 Sta 281+20.00

Notes:
1. See 202L Profile Sheets for Superelevation Diagram
2. See Detail K for Shoulder Transitions and Median Paving and Grading at the Baseline Bridges

1. Conc Curb & Gutter, Type B, C or C-1 Std C-05.10 & C-05.12 (See Plans for Type and Location)
2. Median Shoulder Treatment (See Detail 'A')
3. 24" Thick Topsoil Plating
4. Conc Half Barrier (See Plans for Type & Location)
5. Median Cable Barrier (See Cable Barrier Plans for Locations)

	NAME	DATE	ARIZONA DEPARTMENT OF TRANSPORTATION INTERMODAL TRANSPORTATION DIVISION ROADWAY DESIGN SERVICES	95% PRELIMINARY NOT FOR CONSTRUCTION
DESIGN	G.M	4/03		
DRAWN	CGS	4/03		
CHECKED	MRC	4/03		
Stanley Consultants inc. 2929 East Camelback Road, Suite 170 Phoenix, Arizona 85016 Phone: (602) 952-0000			DESIGN SHEET 202L TYPICAL MAINLINE SECTIONS	
ROUTE 202L	LOCATION SANTAN FWY, ELLIOT ROAD - BASELINE ROAD			DWG NO. G-3.9
TRACS NO. H 5915 01C			202-C(005)B	___ OF ___

04/16/03 gr\16110\dgn\gen_civil\h5915ds3i.dgn

F.H.W.A. REGION	STATE	PROJECT NO.	SHEET NO.	TOTAL SHEETS	AS BUILT
9	ARIZ.	202-C(005)B			
		202L MA 031			

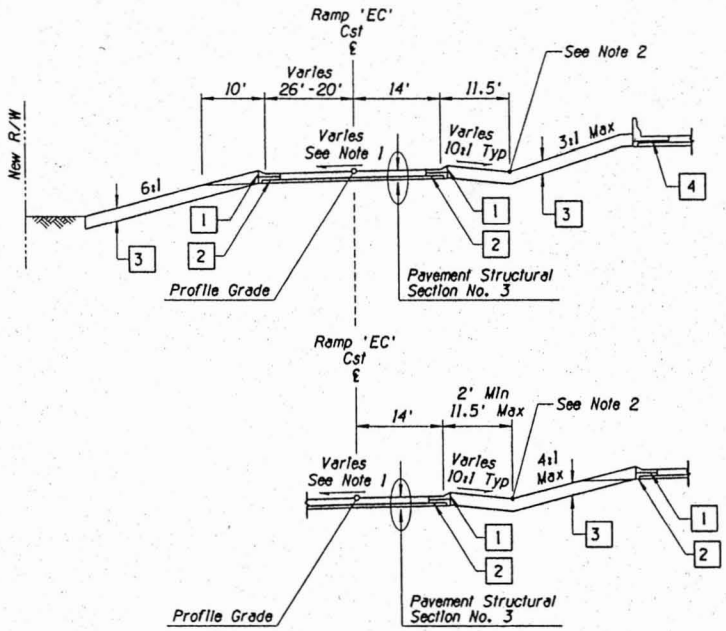

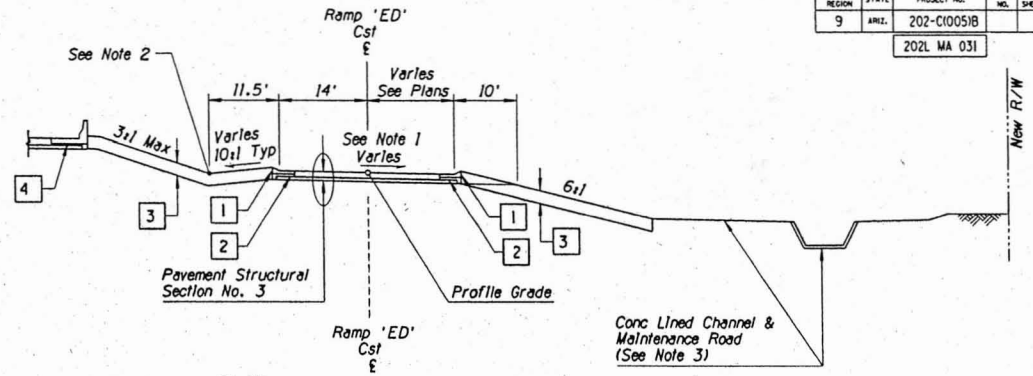

TYPICAL SECTION ELLIOT ROAD RAMP 'EC'
Sta 0+65.07 to Sta 14+22.67

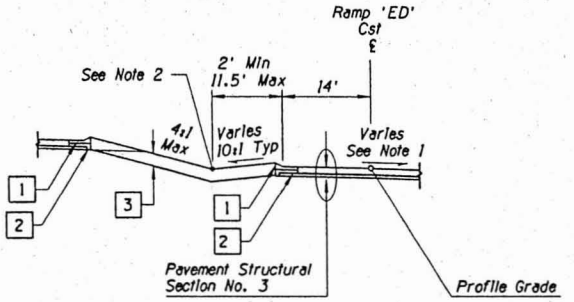

TYPICAL SECTION ELLIOT ROAD RAMP 'ED'
Sta 0+76.35 to Sta 16+41.10

1. Conc Curb & Gutter, Type B, C or C-1 Std C-05.10 & C-05.12 (See Plans for Type & Location)
2. Shoulder Treatment (See Detail 'A')
3. 24" Thick Topsoil Plating

Notes:

1. See Ramp Profile Sheets for Superelevation Diagrams
2. See Drainage Plans for Ditch Control
3. See Channel Sections on Dwg No. G-3.18 for Grading between Channel and Roadway, and Drainage Plans for Concrete Lined Channel Information

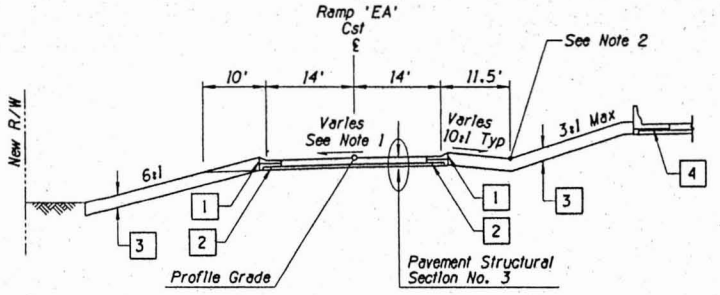

TYPICAL SECTION ELLIOT ROAD RAMP 'EA'
Sta 32+71.54 to Sta 33+42.07

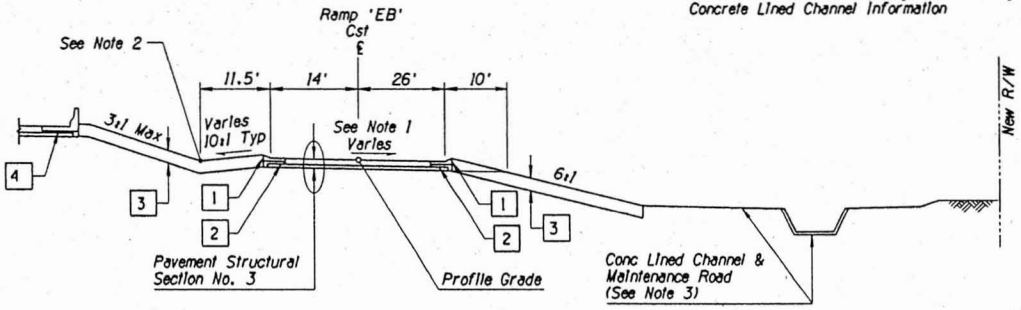

TYPICAL SECTION ELLIOT ROAD RAMP 'EB'
Sta 34+00.05 to Sta 34+73.27

	NAME	DATE	ARIZONA DEPARTMENT OF TRANSPORTATION INTERMODAL TRANSPORTATION DIVISION ROADWAY DESIGN SERVICES	95% PRELIMINARY NOT FOR CONSTRUCTION
DESIGN	GJM	4/03		
DRAWN	CGS	4/03		
CHECKED	MRC	4/03	DESIGN SHEET ELLIOT ROAD RAMPS 'A', 'B', 'C' & 'D' TYPICAL SECTIONS	
Stanley Consultants INC. 2929 East Camelback Road, Suite 130 Phoenix, Arizona 85016 Phone (602) 957-6000				
ROUTE	LOCATION			DWG NO. G-3.10
202L	SANTAN FWY, ELLIOT ROAD - BASELINE ROAD			
TRACS NO. H 5915 01C			202-C(005)B	___ OF ___

04/16/03 q:\16110\dgn\gen_civil\h5915da3j.dgn

F.H.W.A. REGION	STATE	PROJECT NO.	SHEET NO.	TOTAL SHEETS	AS BUILT
9	ARIZ.	202-C(005)B			
		202L MA 031			

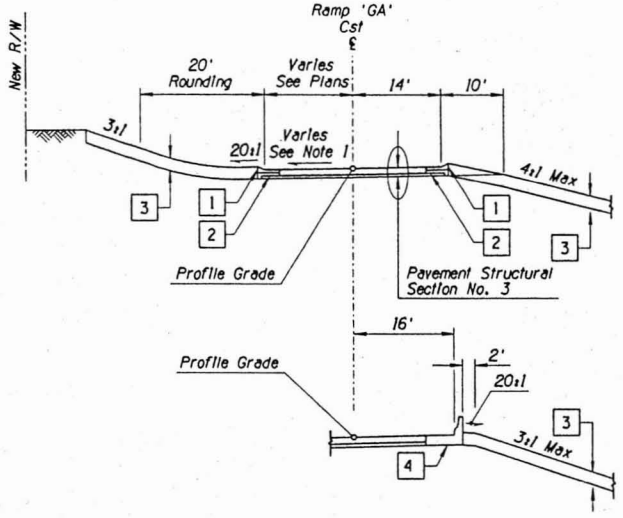

TYPICAL SECTION GUADALUPE ROAD RAMP 'GA'
Sta 4+87.09 to Sta 17+37.19

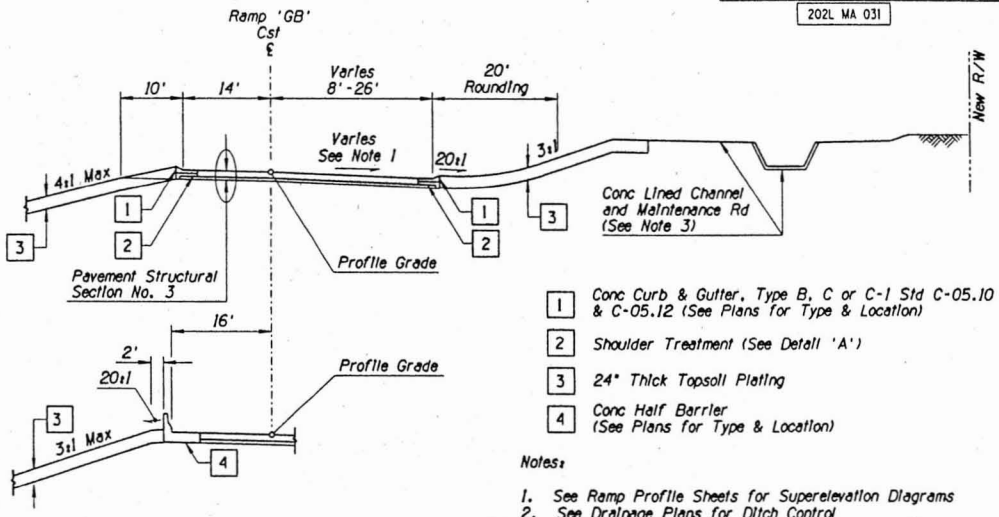

TYPICAL SECTION GUADALUPE ROAD RAMP 'GB'
Sta 5+60.21 to Sta 17+41.45

1. Conc Curb & Gutter, Type B, C or C-1 Std C-05.10 & C-05.12 (See Plans for Type & Location)
2. Shoulder Treatment (See Detail 'A')
3. 24" Thick Topsoil Plating
4. Conc Half Barrier (See Plans for Type & Location)

Notes:

1. See Ramp Profile Sheets for Superelevation Diagrams
2. See Drainage Plans for Ditch Control
3. See Channel Sections on Dwg No. G-3.18 for Grading between Channel and Roadway, and Drainage Plans for Concrete Lined Channel Information

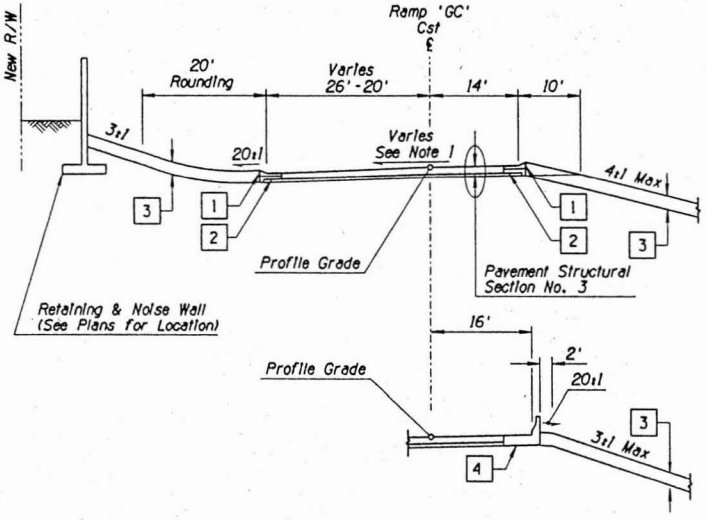

TYPICAL SECTION GUADALUPE ROAD RAMP 'GC'
Sta 0+63.03 to Sta 12+38.27

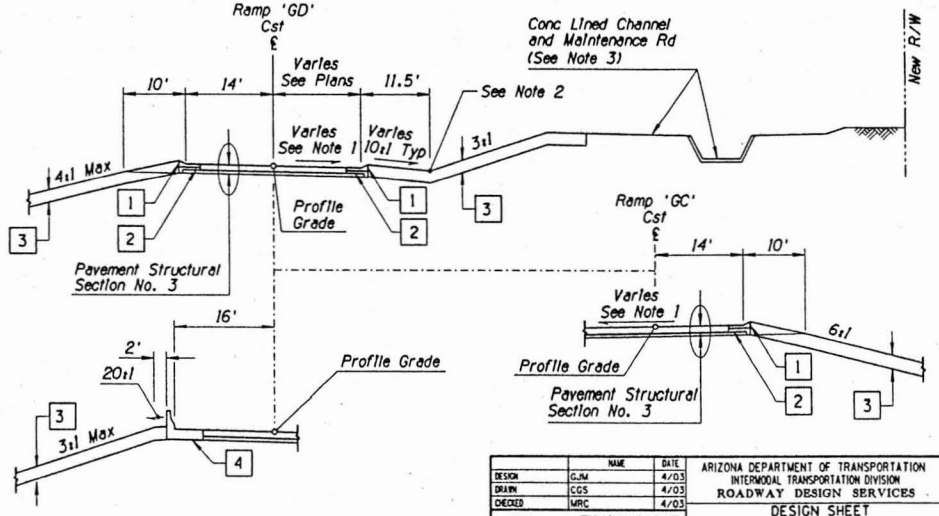

TYPICAL SECTION GUADALUPE ROAD RAMP 'GD'
Sta 0+74.67 to Sta 14+29.56

	NAME	DATE	ARIZONA DEPARTMENT OF TRANSPORTATION INTERMODAL TRANSPORTATION DIVISION ROADWAY DESIGN SERVICES	95% PRELIMINARY NOT FOR CONSTRUCTION
DESIGN	GJM	4/03		
DRAWN	CGS	4/03		
CHECKED	MRC	4/03	DESIGN SHEET GUADALUPE RD RAMPS 'A', 'B', 'C' & 'D' TYPICAL SECTIONS	
Stanley Consultants inc.				
ROUTE 202L	LOCATION SANTAN FWY, ELLIOT ROAD - BASELINE ROAD			DWG NO. G-3.11
TRACS NO. H 5915 01C			202-C(005)B	___ OF ___

04/16/03 qt\16110\dgn\gen_civil\h5915dsJk.dgn

F.H.W.A. REGION	STATE	PROJECT NO.	SHEET NO.	TOTAL SHEETS	AS BUILT
9	ARIZ.	202-C(005)B			
		202L MA 031			

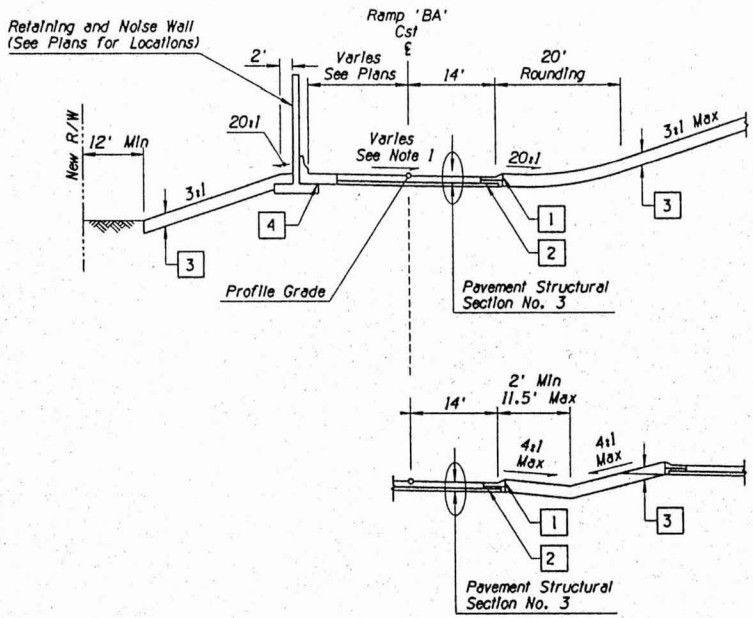

TYPICAL SECTION BASELINE ROAD RAMP 'BA'

Sta 3+80.20 to Sta 20+31.20

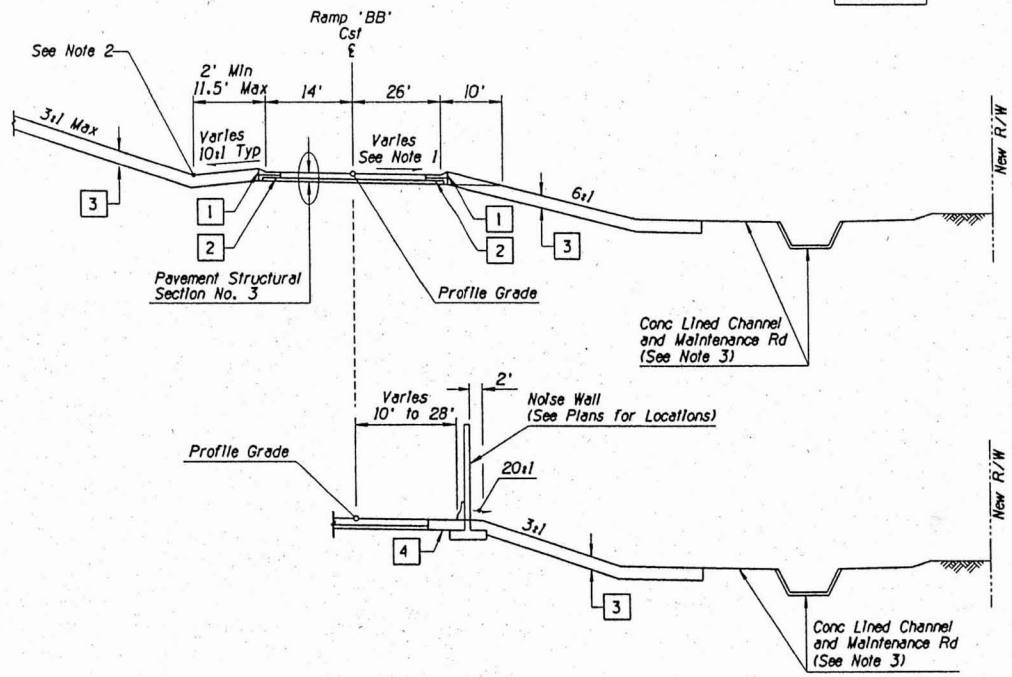

TYPICAL SECTION BASELINE ROAD RAMP 'BB'

Sta 4+65.96 to Sta 18+94.96

1. Conc Curb & Gutter, Type B, C or C-1 Std C-05.10 & C-05.12 (See Plans for Type & Location)
2. Shoulder Treatment (See Detail 'A')
3. 24" Thick Topsoil Plating
4. Conc Half Barrier (See Plans for Type & Location)

Notes:

1. See Ramp Profile Sheets for Superelevation Diagrams
2. See Drainage Plans for Ditch Control
3. See Channel Sections on Dwg No. G-3.18 for Grading between Channel and Roadway, and Drainage Plans for Concrete Lined Channel Information

	NAME	DATE
DESIGN	GJM	4/03
DRAWN	CGS	4/03
CHECKED	MRC	4/03

Stanley Consultants INC.
2929 East Camelback Road, Suite 130
Phoenix, Arizona 85016
Phone 602) 957-6500

ARIZONA DEPARTMENT OF TRANSPORTATION
INTERMODAL TRANSPORTATION DIVISION
ROADWAY DESIGN SERVICES

DESIGN SHEET
BASELINE RAMPS 'A' & 'B'
TYPICAL SECTIONS

95%
PRELIMINARY
NOT FOR
CONSTRUCTION

ROUTE: 202L
LOCATION: SANTAN FWY, ELLIOT ROAD - BASELINE ROAD

DWG NO. G-3.12

TRACS NO. H 5915 01C | 202-C(005)B | ___ OF ___

04/16/03 gr\16110\dgn\gen_civil\h5915ds31.dgn

F.H.W.A. REGION	STATE	PROJECT NO.	SHEET NO.	TOTAL SHEETS	AS BUILT
9	ARIZ.	202-C(005)B			
		202L MA 031			

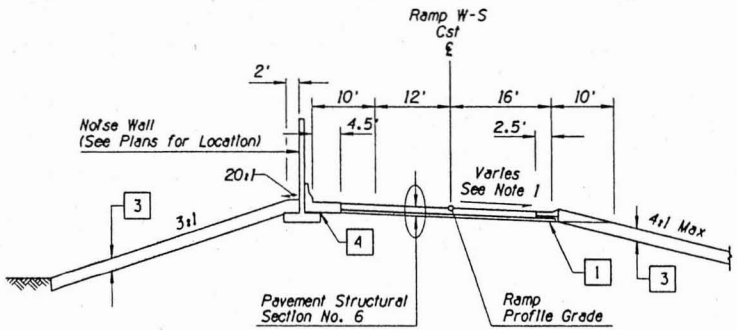

TYPICAL SECTION RAMP W-S

Sta 4+04.55 to Sta 6+47.32

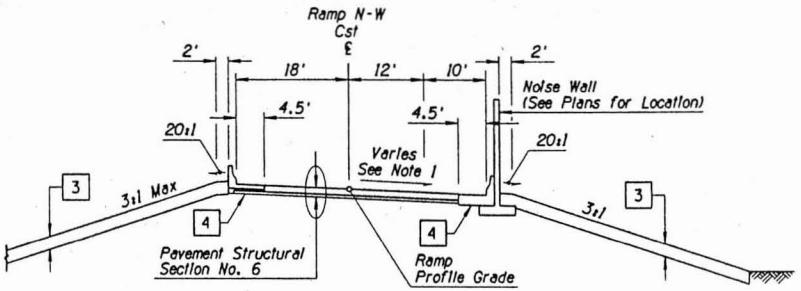

TYPICAL SECTION RAMP N-W

Sta 8+96.73 to Sta 15+32.84

1. Conc Curb & Gutter, Type B, C or C-1
   Std C-05.10 & C-05.12 (See Plans for Type & Location)
3. 24" Thick Topsoil Plating
4. Conc Half Barrier
   (See Plans for Type & Location)

Notes:

1. See Ramp Profile Sheets for Superelevation Diagrams

	NAME	DATE
DESIGN	GJM	4/03
DRAWN	CGS	4/03
CHECKED	MRC	4/03

Stanley Consultants inc.

ARIZONA DEPARTMENT OF TRANSPORTATION
INTERMODAL TRANSPORTATION DIVISION
ROADWAY DESIGN SERVICES

DESIGN SHEET
RAMP 'W-S' AND RAMP 'N-W'
TYPICAL SECTIONS

95%
PRELIMINARY
NOT FOR
CONSTRUCTION

ROUTE	LOCATION	
202L	SANTAN FWY, ELLIOT ROAD - BASELINE ROAD	DWG NO. G-3.13
TRACS NO. H 5915 01C	202-C(005)B	___ OF ___

04/16/03 qa\16110\dgn\gen_civil\h5915ds3p.dgn

F.A.H.A. REGION	STATE	PROJECT NO.	SHEET NO.	TOTAL SHEETS	AS BUILT
9	ARIZ.	202-C(005)B			
		202L MA 031			

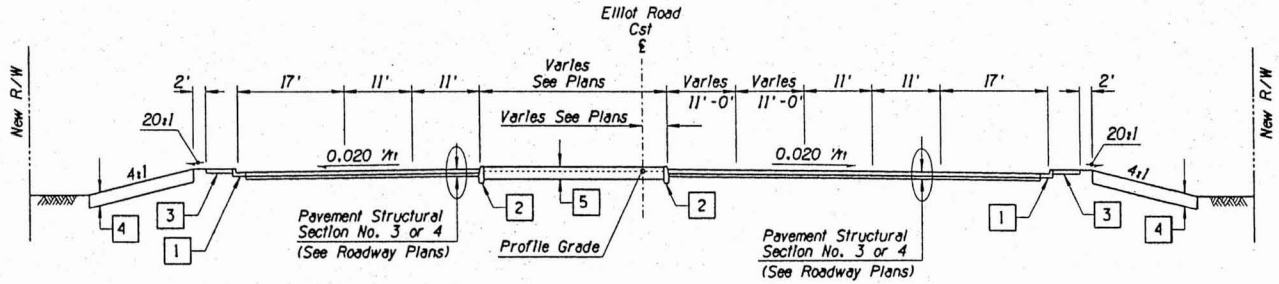

TYPICAL SECTION ELLIOT ROAD

Sta 9+75.25 to Sta 17+62.66
See Note 1

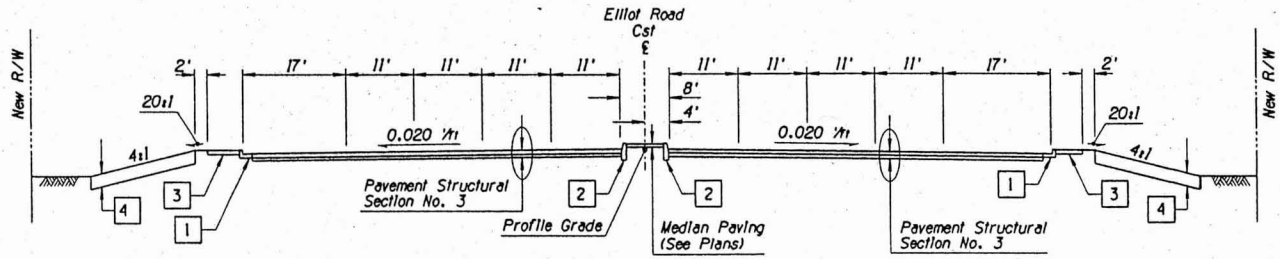

TYPICAL SECTION ELLIOT ROAD

Between Ramp Intersections
Sta 17+62.66 to Sta 22+27.34

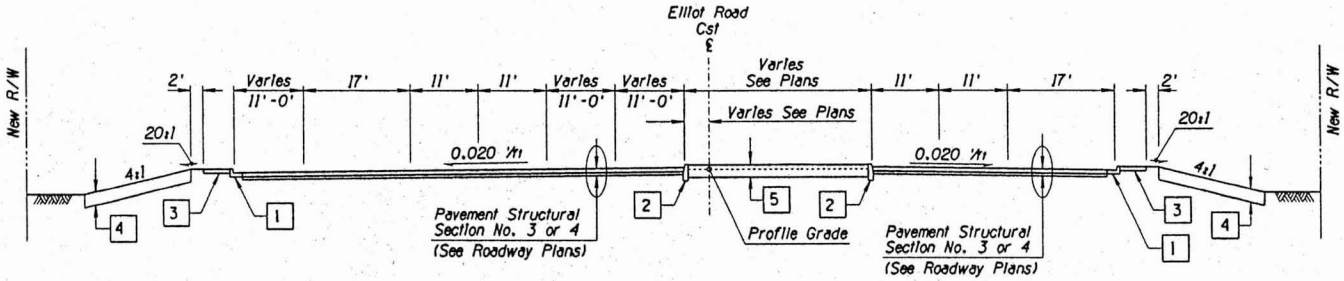

TYPICAL SECTION ELLIOT ROAD

Sta 22+27.34 to Sta 30+18.53

Notes:

1. See Drawing C-4.5 for Interim Roadway Transition from New Improvements to Existing Elliot Roadway (Elliot Road Cst ℄ Sta 6+55.16 to Sta 9+75.25)

1. Conc Curb & Gutter (See Plans for Type & Locations)
2. Conc Single Curb (See Plans for Type & Locations)
3. Conc Sidewalk (5') (See Plans for Locations)
4. 24" Thick Top Soil Plating
5. 24" Thick Top Soil Plating or Median Paving (See Plans for Median Paving Locations)

	NAME	DATE
DESIGN	GJM	4/03
DRAWN	CGS	4/03
CHECKED	MRC	4/03

Stanley Consultants Inc.
2929 East Camelback Road, Suite 130
Phoenix, Arizona 85016
Phone: (602) 97-6000

ARIZONA DEPARTMENT OF TRANSPORTATION
INTERMODAL TRANSPORTATION DIVISION
ROADWAY DESIGN SERVICES

DESIGN SHEET
ELLIOT ROAD
TYPICAL SECTIONS

95%
PRELIMINARY
NOT FOR CONSTRUCTION

ROUTE	LOCATION	
202L	SANTAN FWY, ELLIOT ROAD - BASELINE ROAD	DWG NO. G-3.14
TRACS NO. H 5915 01C	202-C(005)B	___ OF ___

SURVEY NO. | FINISHED PLANS | REVISIONS | LOCATION | DATE | SURVEY NO. | FINISHED PLANS | REVISIONS | LOCATION | DATE

04716/03 gr\16110\dgn\gen_civil\h5915d3m.dgn

F.H.W.A. REGION	STATE	PROJECT NO.	SHEET NO.	TOTAL SHEETS	AS BUILT
9	ARIZ.	202-C(005)B			
		202L MA 031			

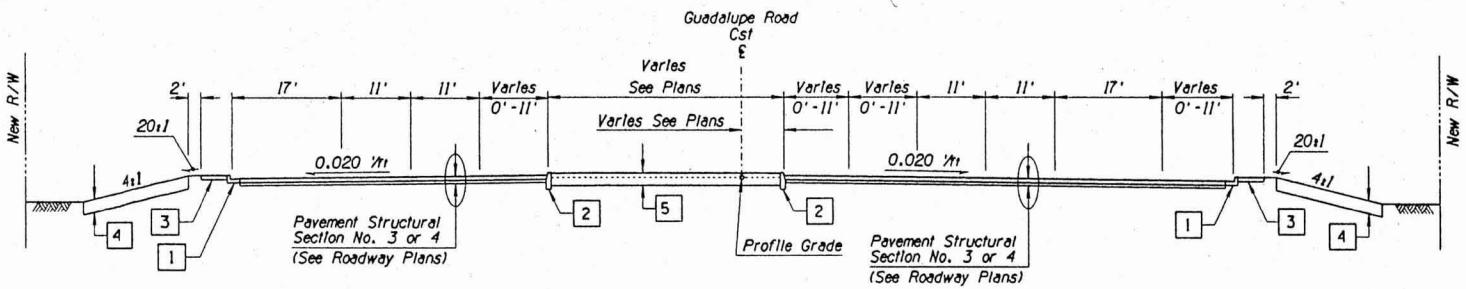

TYPICAL SECTION GUADALUPE ROAD

Sta 10+54.00 to Sta 17+72.32

1. Conc Curb & Gutter (See Plans for Type & Locations)
2. Conc Single Curb (See Plans for Type & Locations)
3. Conc Sidewalk (5') (See Plans for Location)
4. 24" Thick Top Soil Plating
5. 24" Thick Top Soil Plating or Median Paving (See Plans for Median Paving Locations)

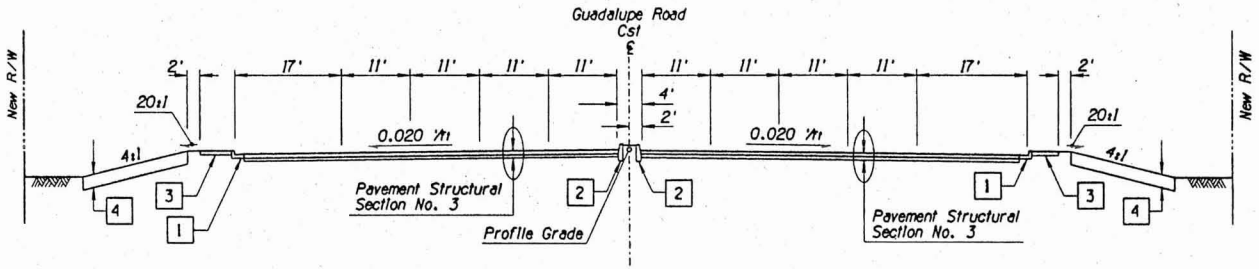

TYPICAL SECTION GUADALUPE ROAD

Between Ramp Intersections

Sta 17+72.32 to Sta 22+27.68

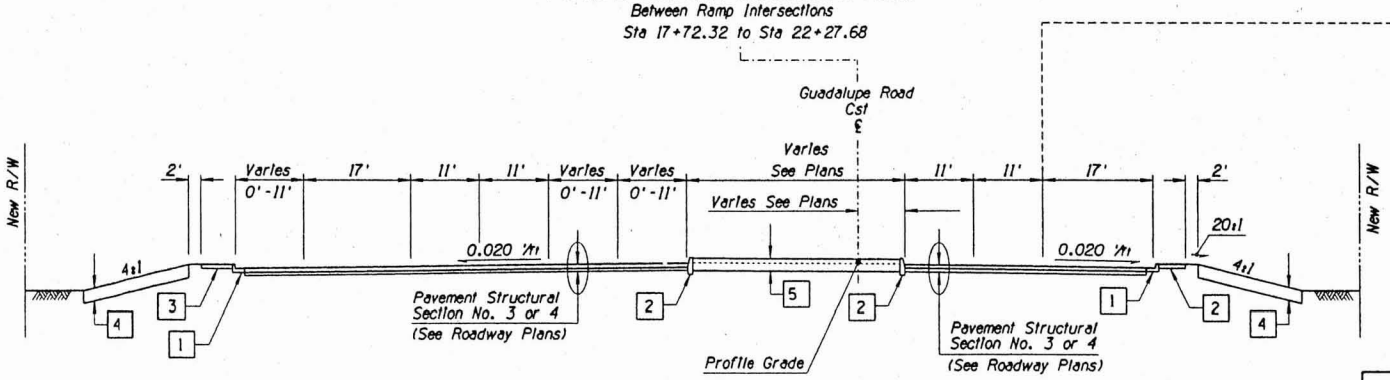

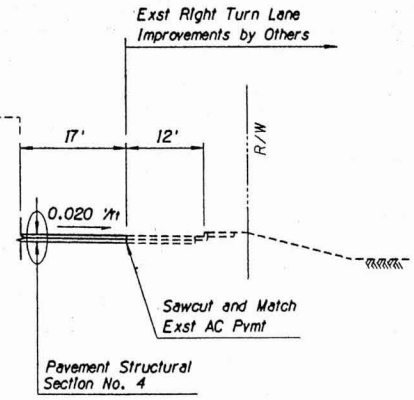

TYPICAL SECTION GUADALUPE ROAD

Sta 22+27.68 to Sta 29+31.86

	NAME	DATE
DESIGN	GJM	4/03
DRAWN	CGS	4/03
CHECKED	MRC	4/03

Stanley Consultants INC.
2929 East Camelback Road, Suite 130
Phoenix, Arizona 85016
Phone: (602) 912-6500

ARIZONA DEPARTMENT OF TRANSPORTATION
INTERMODAL TRANSPORTATION DIVISION
ROADWAY DESIGN SERVICES

DESIGN SHEET
GUADALUPE ROAD
TYPICAL SECTIONS

95%
PRELIMINARY
NOT FOR CONSTRUCTION

ROUTE	LOCATION	DWG NO. G-3.15
202L	SANTAN FWY. ELLIOT ROAD - BASELINE ROAD	
TRACS NO. H 5915 01C	202-C(005)B	___ OF ___

04/16/03 gr\16110\dgn\gen_civil\h5915ds3n.dgn

F.H.W.A. REGION	STATE	PROJECT NO.	SHEET NO.	TOTAL SHEETS	AS BUILT
9	ARIZ.	202-C(005)B			
		202L MA 031			

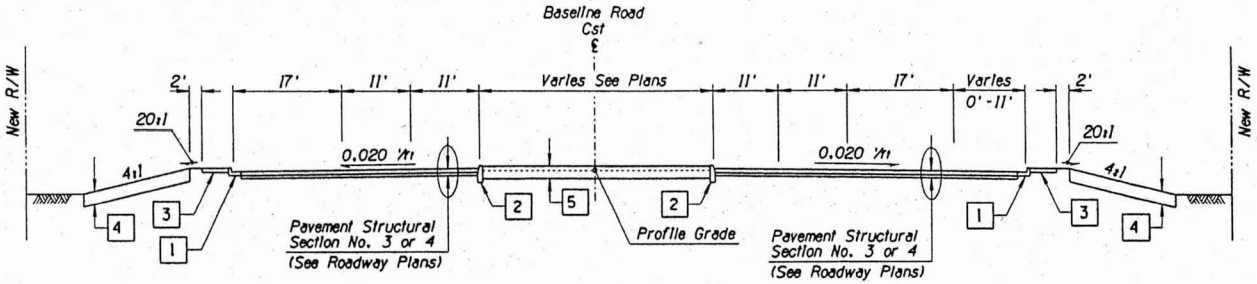

TYPICAL SECTION BASELINE ROAD

Sta 13+08.33 to Sta 17+45.50

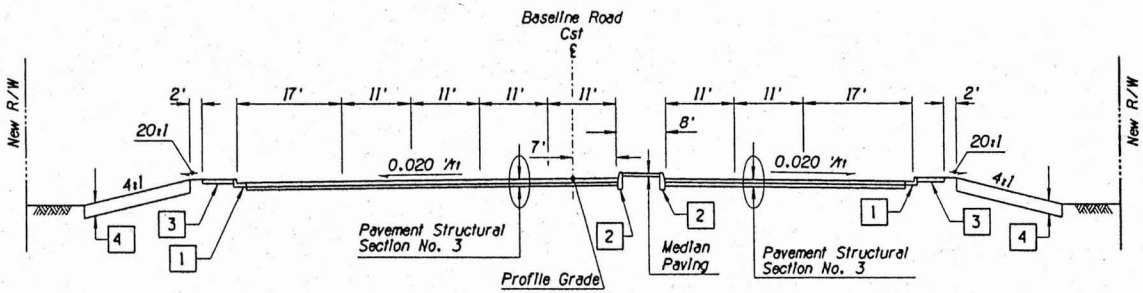

TYPICAL SECTION BASELINE ROAD

Sta 17+45.50 to Sta 22+35.09

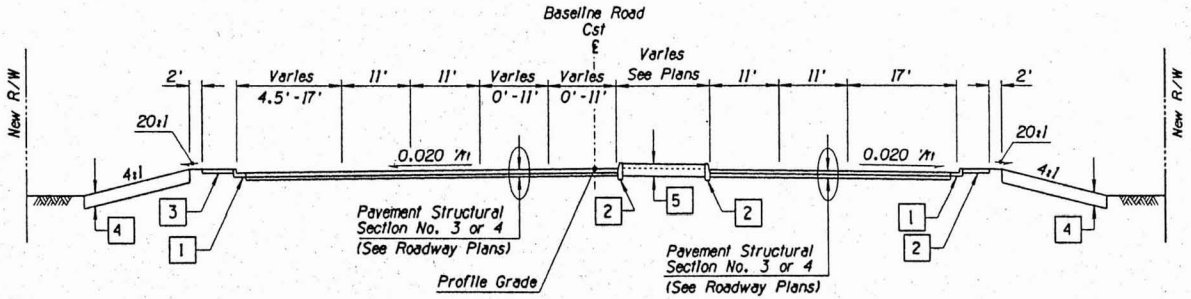

TYPICAL SECTION BASELINE ROAD

Sta 22+35.09 to Sta 30+50.00

See Baseline Roadway and Staking Plans for Additional Information

1. Conc Curb & Gutter (See Plans for Type & Locations)
2. Conc Single Curb (See Plans for Type & Locations)
3. Conc Sidewalk (5') (See Plans for Locations)
4. 24" Thick Top Soil Plating
5. 24" Thick Top Soil Plating or Median Paving (See Plans for Median Paving Locations)

	NAME	DATE
DESIGN	GJM	4/03
DRAWN	CGS	4/03
CHECKED	MRC	4/03

Stanley Consultants Inc.
7025 East Greenway Road, Suite 130
Phoenix, Arizona 85026
Phone: (602) 92-4500

ARIZONA DEPARTMENT OF TRANSPORTATION
INTERMODAL TRANSPORTATION DIVISION
ROADWAY DESIGN SERVICES

DESIGN SHEET
BASELINE ROAD
TYPICAL SECTIONS

95%
PRELIMINARY
NOT FOR
CONSTRUCTION

ROUTE	LOCATION	DWG NO. G-3.16
202L	SANTAN FWY, ELLIOT ROAD - BASELINE ROAD	
TRACS NO. H 5915 01C	202-C(005)B	___ OF ___

04/16/03 q:\16118\dgn\gen_civil\h5915ds3a.dgn

SURVEY NO. | FINISHED PLANS | REVISIONS | LOCATION | DATE

F.A.H.W.A. REGION	STATE	PROJECT NO.	SHEET NO.	TOTAL SHEETS	AS BUILT
9	ARIZ.	202-C(005)B			
		202L MA 031			

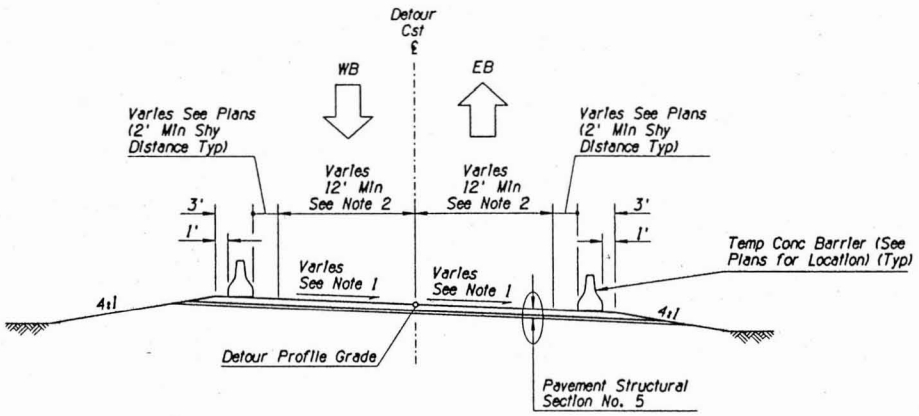

GUADALUPE ROAD DETOUR
ELLIOT ROAD DETOUR
Superelevated Section

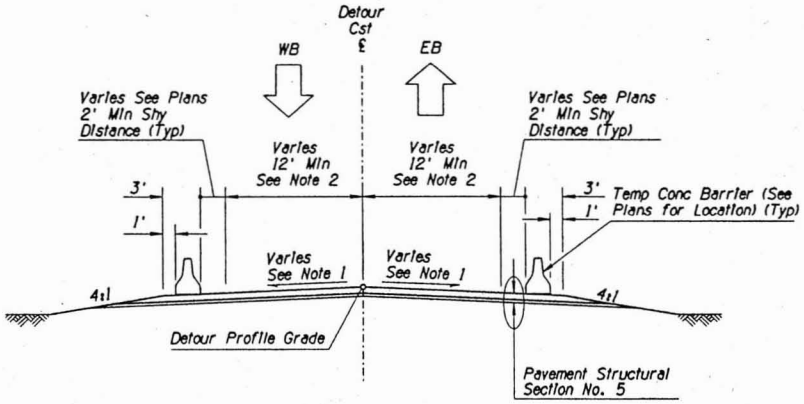

GUADALUPE ROAD DETOUR
ELLIOT ROAD DETOUR

Notes:

1. *See Detour Plan and Profile Sheets for Superelevation Diagram*
2. *See Detour Plans for locations and limits of Sawcutting and Matching Existing AC Pavement*

	NAME	DATE	ARIZONA DEPARTMENT OF TRANSPORTATION INTERMODAL TRANSPORTATION DIVISION ROADWAY DESIGN SERVICES	95% PRELIMINARY NOT FOR CONSTRUCTION
DESIGN	TEC	4/03		
DRAWN	CGS	4/03		
CHECKED	MRC	4/03		
Stanley Consultants INC. 2925 East Camelback Road, Suite 130 Phoenix, Arizona 85016 Phone: (602) 93-6000			DESIGN SHEET DETOUR TYPICAL SECTIONS	
ROUTE 202L	LOCATION SANTAN FWY, ELLIOT ROAD - BASELINE ROAD			DWG NO. G-3.17
TRACS NO. H 5915 01C			202-C(005)B	___ OF ___

04/16/03 qt\16110\dgn\gen_civil\h5915ds3g.dgn

SURVEY NO. | FINISHED PLANS | REVISIONS | LOCATION | DATE | SURVEY NO. | FINISHED PLANS | REVISIONS | LOCATION | DATE

F.H.W.A. REGION	STATE	PROJECT NO.	SHEET NO.	TOTAL SHEETS	AS BUILT
9	ARIZ.	202-C(005)B			
		202L MA 031			

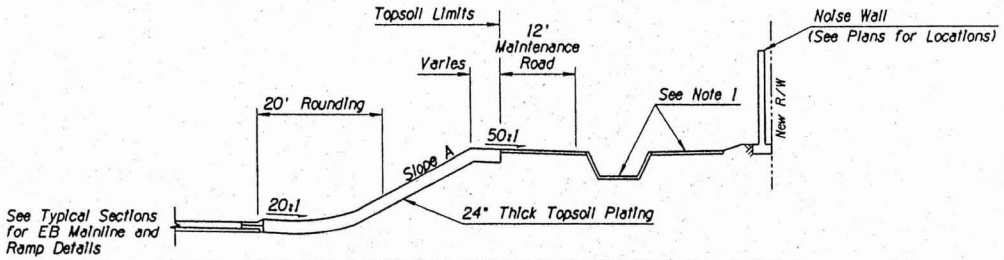

(EB) 202L Med Cst ℄ Sta 3169+00 to Sta 3170+30 Slope A=10:1
(EB) 202L Med Cst ℄ Sta 3172+40 to Sta 3174+50 Slope A=6:1
(EB) 202L Med Cst ℄ Sta 3175+00 to Sta 3176+50 Slope A=10:1
(EB) 202L Med Cst ℄ Sta 3177+00 to Sta 3178+50 Slope A=20:1
(EB) 202L Med Cst ℄ Sta 3201+00 to Sta 3204+50 Slope A=10:1
(EB) 202L Med Cst ℄ Sta 3205+00 to Sta 3208+00 Slope A=6:1
(EB) 202L Med Cst ℄ Sta 3208+50 to Sta 3218+00 Slope A=4:1
(EB) 202L Med Cst ℄ Sta 3218+50 to Sta 3220+50 Slope A=6:1
(EB) 202L Med Cst ℄ Sta 3221+00 to Sta 3223+00 Slope A=10:1
(EB) 202L Med Cst ℄ Sta 3225+00 to Sta 3229+50 Slope A=10:1
(EB) 202L Med Cst ℄ Sta 3230+00 to Sta 3232+50 Slope A=6:1
(EB) 202L Med Cst ℄ Sta 3233+00 to Sta 3240+50 Slope A=3:1

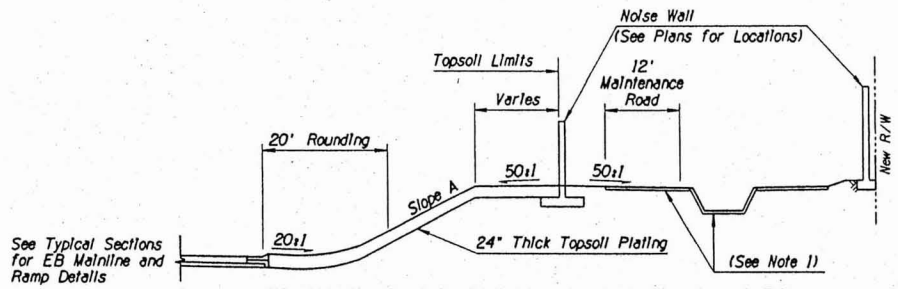

(EB) 202L Med Cst ℄ Sta 3241+50 to Sta 3242+50 Slope A=3:1
(EB) 202L Med Cst ℄ Sta 3243+00 to Sta 3249+60 Slope A=4:1

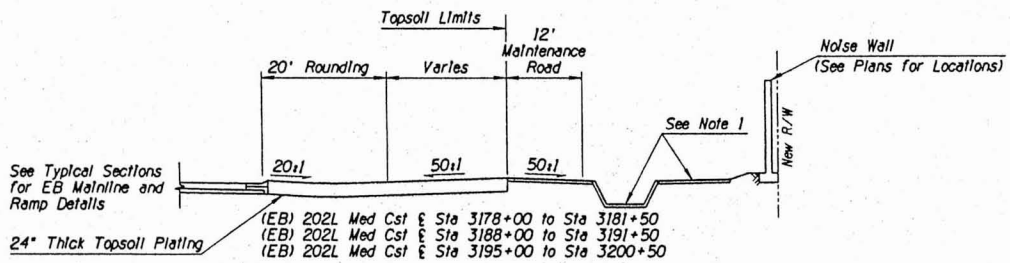

(EB) 202L Med Cst ℄ Sta 3178+00 to Sta 3181+50
(EB) 202L Med Cst ℄ Sta 3188+00 to Sta 3191+50
(EB) 202L Med Cst ℄ Sta 3195+00 to Sta 3200+50

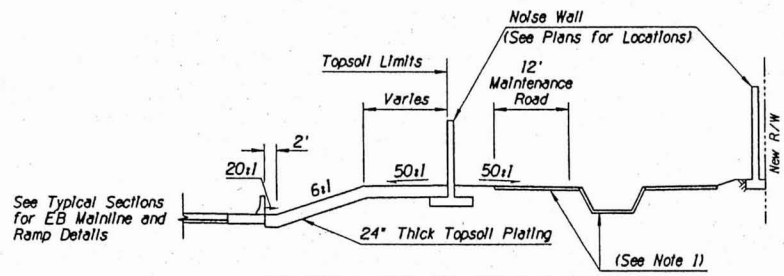

(EB) 202L Med Cst ℄ Sta 3249+60 to Sta 3251+50

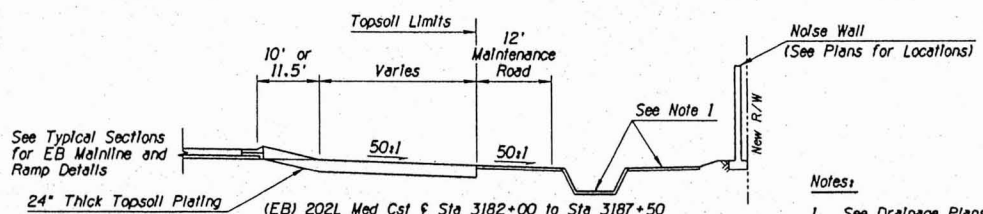

(EB) 202L Med Cst ℄ Sta 3182+00 to Sta 3187+50
(EB) 202L Med Cst ℄ Sta 3192+00 to Sta 3194+50

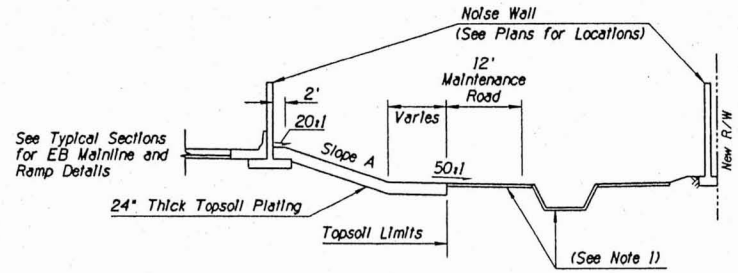

(EB) 202L Med Cst ℄ Sta 3252+17 to Sta 3257+00 Slope A=6:1
(EB) 202L Med Cst ℄ Sta 3257+50 to Sta 3278+30 Slope A=3:1

Notes:

1. See Drainage Plans for Concrete Lined Channel and Maintenance Road Information
2. Gaps In Stationing Require Transition Slopes

	NAME	DATE	ARIZONA DEPARTMENT OF TRANSPORTATION INTERMODAL TRANSPORTATION DIVISION ROADWAY DESIGN SERVICES	95% PRELIMINARY NOT FOR CONSTRUCTION
DESIGN	TEC	4/03		
DRAWN	CGS	4/03		
CHECKED	MRC	4/03		
Stanley Consultants inc. 2905 East Camelback Road, Suite 130 Phoenix, Arizona 85016 Phone: (602) 957-9008			DESIGN SHEET GRADING TYPICAL CHANNEL SECTIONS	
ROUTE 202L	LOCATION SANTAN FWY, ELLIOT ROAD - BASELINE ROAD			DWG NO. G-3.18
TRACS NO. H 5915 01C			202-C(005)B	___ OF ___

04/16/03 qr\16110\dgn\gen_civil\h5915dsJr.dgn

APPENDIX G PUMP STATION CALCULATIONS

Stanley Consultants INC.

Project No. 16110.07.00 Page No.

Subject SANTAN ELLIOT/Baseline Pump Station Screen & Air/Vac Valve

Computed by FLR Date 1/23/03

Checked by Date

Approved by Date

Sheet No. 1 of 1

* Shift Screen approximately 2'-0"

length $L_1 = 23.5'$, length $L_2 = 2.0"$

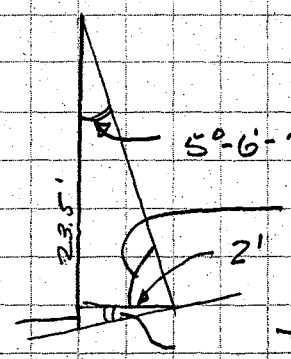

$\tan^{-1}\left(\frac{2}{23.5}\right) = 5°-6'-23"$

5°-6'-23"

84°-53'-37"

$\tan^{-1}\left(\frac{0.5}{2}\right) = 14°-2'-10"$

TOTAL $\measuredangle$ = 84°-53'-37" + 14°-2'-10"

$\measuredangle$ = 98°-55'-47"

6" AIR/VAC VALVE

*6" Combination Air & Vacuum Valve
GA Industries
Model 942

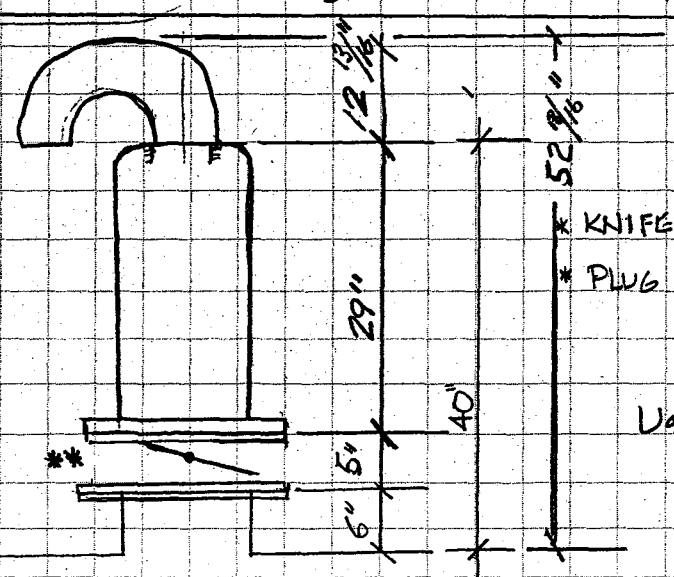

* KNIFE GATE: **2 1/4"

* PLUG VALVE: 10 1/2"

USE Knife Gate

SC 3004 R4 898

Stanley Consultants INC

Project No. 16110.07.01 Page No.

Subject Engine DRIVE - Natural Gas Usage

Computed by FLR Date 10/8/02

Checked by Date

Approved by Date

Sheet No. of

Information from Caterpillar

STD NA 525 HP

Assumed: Natural Gas Heat Content $\cong 925 \frac{BTU}{CF}$

BTU/bhp-hr = 7,900 @ 525 HP

$$\frac{BTU}{hr} = 7900 \frac{BTU}{bhp\text{-}hr} \times \frac{525\ HP}{925\ BTU/CF} = 4483.78 \frac{CF\ NG}{hr}$$

Natural Gas Rate: $\frac{4,483.78\ CFh}{60\ m/hr} = 74.73\ scfm \cong 75\ scfm.$

Number of Engine DRIVES = 3

* TOTAL Natural Gas Rate = $75 \frac{scfm}{unit} \times 3\ units = 225\ scfm.$

SC 3004R4 898

Stanley Consultants INC

Project No. 16110.07.01 Page No.

Subject Santan - Elliot/Baseline

Computed by FLR Date 9/9/02

Checked by Date

Approved by Date

Sheet No. of

Q = 215 cfs discharge @ 50yr Storm

Pipe Slope = 0.33% base on mannings formula

$$Q = \frac{1.486}{n} A R^{2/3} S^{1/2}$$

$$A = \frac{\pi D^2}{4} \qquad R = D/4$$

S = slope n = 0.013

$$S = \left(\frac{Qn}{1.486 A R^{2/3}}\right)^2 = \left(\frac{215\text{cfs} \times 0.013}{1.486 \times 28.274 \times 1.310}\right)^2 = 0.26\%$$

SC 3004R4 898

Stanley Consultants INC.

Project No. 16110.07.01 Page No.

Subject WEIR EQUATION

Computed by ~~9/F~~ FLR Date 9/25/02

Checked by Date

Approved by Date

Sheet No. of

Discharge Box 49'-0"

$Q_{max} = 215$ cfs $\cong$ 96,500 gpm.

$Q_{OUT} = 180$ cfs $\cong$ 80,800 gpm

Rectangular Weir Equation $Q = 3.33\, L\, H^{3/2}$ STEVENS WATER RESOURCES DATA BOOK page 103

$$H_1 = \left(\frac{Q_{max}}{3.33\, L}\right)^{2/3}$$

$$H_1 = \left(\frac{215 \text{ cfs}}{(3.33)(49)}\right)^{2/3} \cong 1.20'$$

$$H_2 = \left(\frac{180 \text{ cfs}}{(3.33)(49')}\right)^{2/3} \cong 1.07'$$

@215cfs Velocity = 7.6 fps. $M_L = \frac{KV^2}{2g} = \frac{(1.5)(7.6)^2}{64.4} = 1.34$

WS EL 1408.75 + 1.20' = 1409.95' Base on Max Head
1.35

Low weir elevation 1407.40 + 1.07' $\cong$ 1408.47

SC 3004R4 898

PAGE	SECTION		CONFIG.	
14	3	**C-3201**	CP/CT/CZ/CS	
ISSUED	SUPERSEDES	**639 Impeller**	VANES	PHASE
2/96	6/94		2	3

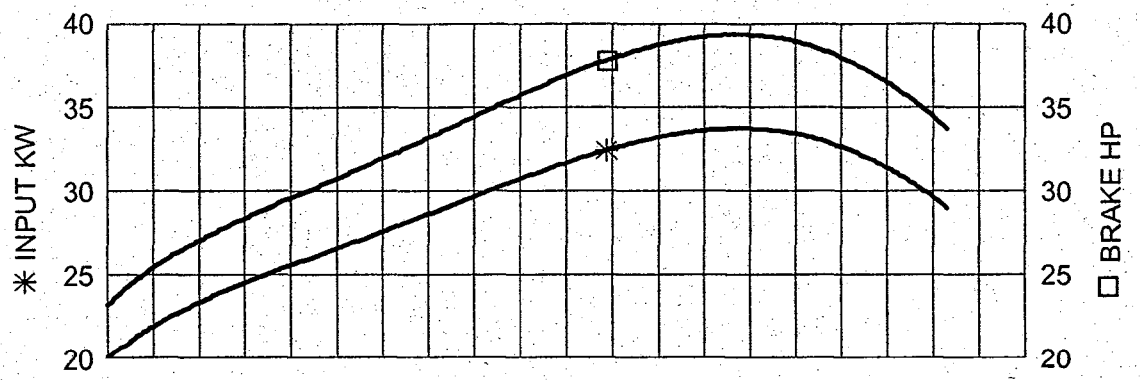

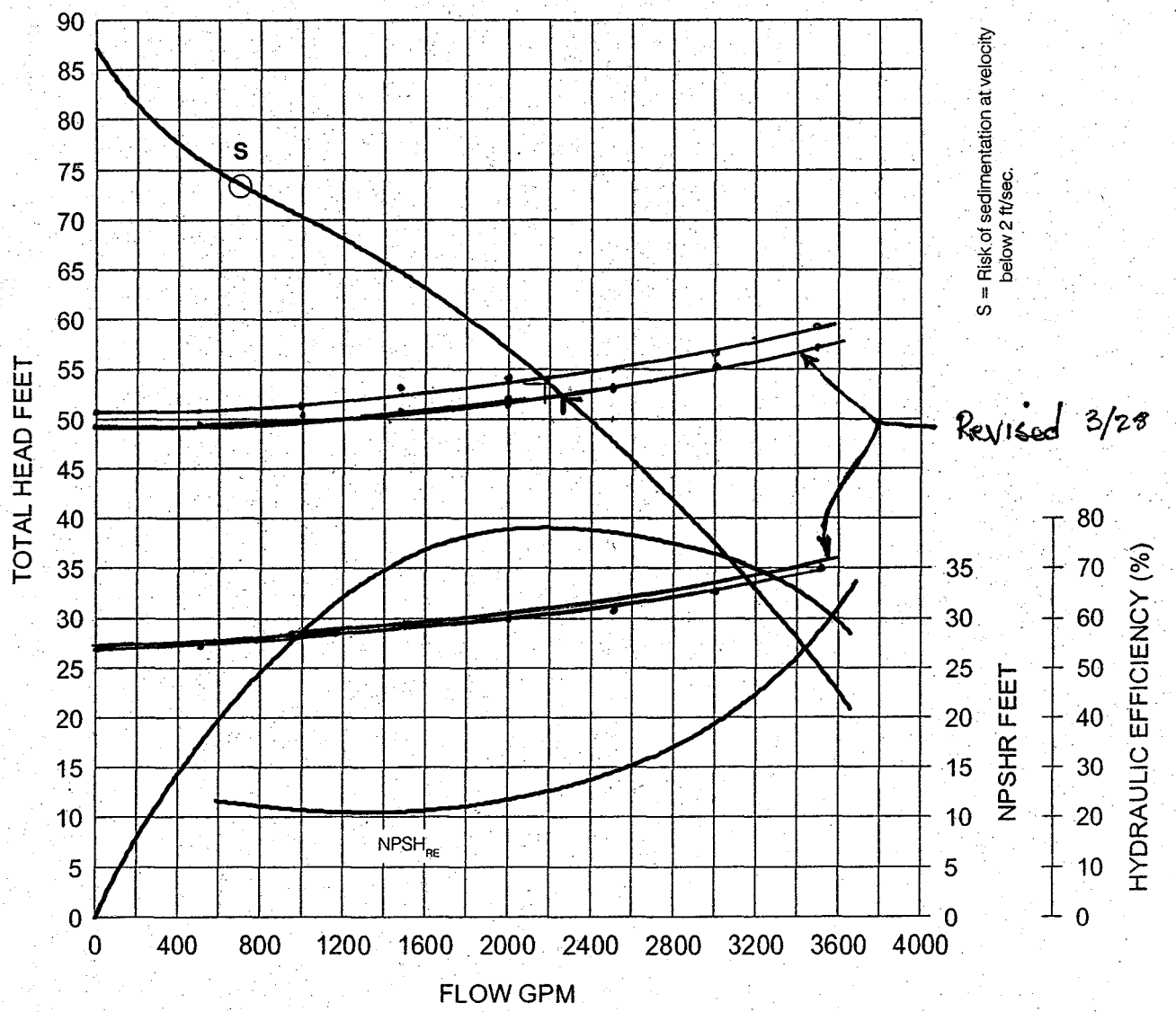

Stanley Consultants INC.

Project No. 16110.07.01 Page No.

Subject Submersible Pump - Hydraulics

Computed by FLR Date 9/25/02

Checked by Date

Approved by Date

Sheet No. 2 of 13

12" DIP PIPE = 114 LF

MINOR LOSS

	K	ΣK
90° Bends (2 EA)	0.39	0.78
45° Bends (2 EA)	0.21	0.42
Outlet	1.0	1.0
Inlet	0.5	0.5
Flap VALVE	0.15	0.15
		2.85

$$ML = \frac{KV^2}{2g} = \frac{2.85(5.67)^2}{(2 \times 32.2 \text{ fps}^2)}$$

$$ML = 1.42'$$

SC 3004R4 898

Checked By:
Approved By:

Santan Elliot Road - Baseline Road Storm Water Pump Station
Arizona Department of Transportation
Phoenix, Arizona

FLOW (GPM)	VELOCITY (FPS)					Line Size
	10	12	14	16	18	
500	2	1	1	0.8	0.6	
1000		2.8	2.1	1.6	1.3	
2000		5.7	4.2	3.2	2.5	
3000				4.8	3.8	

The recommended design velocity should be in the range of 6.0 to 12.0 fps.

Revised 3/27/03 New On-OFF Elevations From Routing Program By Water Resources Department for SANTAN ELLIOT Project.

Preliminary Static Head Calculation: Santan Storm Water Pump Station (Electric Submersible Motor)

Weir Crest Elevation ~~1409.95~~ Ft
1408.50

Low Level Pump Off Elevation 1359 Ft

High Level Max Elevation 1380.91 ~~1383~~ Ft

Static Head (Z max) ~~50.95~~ Ft
use ~~51~~ **Ft**
49.50

Static Head (Zmin) ~~26.95~~ Ft
~~27~~ **Ft**
27.59

Pump Hydraulics

Flowrate(gpm) (cfs)	0	0	0	0						
	Pipe Number 1		Pipe Number 2							
Sum K	2.85		0							
Pipe D(in)	12		0							
Pipe D(ft)	1		0							
HyRa(ft)	0.25		0							
Pipe Lenght(ft)	114		0							
	Minor HL(ft)	C-factor 120	Minor HL(ft)	C-factor 120						
Total Headloss	0	0	0	ERR	ERR					

TDH (MAX) ~~51~~ 49.5 **Ft** HP(req) 0
TDH (MIN) ~~27~~ **Ft** 27.59

c:\wks_data\Santan_StormPumpSta.wb3

3/13

Checked By:
Approved By:

Santan Elliot Road - Baseline Road Storm Water Pump Station
Arizona Department of Transportation
Phoenix, Arizona

FLOW (GPM)	VELOCITY (FPS)					Line Size
	10	12	14	16	18	
500	2	1	1	0.8	0.6	
1000		2.8	2.1	1.6	1.3	
2000		5.7	4.2	3.2	2.5	
3000				4.8	3.8	

Revised 3/27/03

The recommended design velocity should be in the range of 6.0 to 12.0 fps.

Preliminary Static Head Calculation: Santan Storm Water Pump Station (Electric Submersible Motor)

Weir Crest Elevation ~~1409.95~~ Ft
1408.50

Low Level Pump Off Elevation 1359 Ft

High Level Max Elevation 1380.91 ~~1383~~ Ft

Static Head (Z max) ~~50.95~~ Ft
use ~~51~~ Ft
49.50

Static Head (Zmin) 26.95 Ft
~~27~~ Ft
27.59

Pump Hydraulics
Flowrate(gpm) (cfs) 500 1.11 0 0

	Pipe Number 1		Pipe Number 2						
Sum K	2.85		0						
Pipe D(in)	12		0						
Pipe D(ft)	1		0						
HyRa(ft)	0.25		0						
Pipe Lenght(ft)	114		0						
	Minor HL(ft)	C-factor 120	Minor HL(ft)	C-factor 120					
Total Headloss	0.18	0.09	0.09	ERR	ERR				

49.68
TDH (MAX) ~~51~~ Ft
TDH (MIN) ~~27~~ Ft
27.76

HP(req) 8

c:\wks_data\Santan_StormPumpSta.wb3

4/13

Checked By:
Approved By:

Santan Elliot Road - Baseline Road Storm Water Pump Station
Arizona Department of Transportation
Phoenix, Arizona

FLOW (GPM)	VELOCITY (FPS)				
	10	12	14	16	18
500	2	1	1	0.8	0.6
1000		2.8	2.1	1.6	1.3
2000		5.7	4.2	3.2	2.5
3000				4.8	3.8

Line Size

Revised 3/28/03

The recommended design velocity should be in the range of 6.0 to 12.0 fps.

Preliminary Static Head Calculation: Santan Storm Water Pump Station (Electric Submersible Motor)

Weir Crest Elevation ~~1409.95~~ Ft
1408.50

Low Level Pump Off Elevation 1359 Ft

High Level Max Elevation 1380.91 ~~1383~~ Ft

Static Head (Z max) ~~50.95~~ Ft
use ~~51~~ Ft
49.50

Static Head (Zmin) ~~26.95~~ Ft
~~27~~ Ft
27.59

Pump Hydraulics
Flowrate(gpm) (cfs) 1000 2.23 0 0

	Pipe Number 1		Pipe Number 2	
Sum K	2.85		0	
Pipe D(in)	12		0	
Pipe D(ft)	1		0	
HyRa(ft)	0.25		0	
Pipe Lenght(ft)	114		0	
	Minor HL(ft)	C-factor 120	Minor HL(ft)	C-factor 120

Total Headloss 0.7 0.36 0.34 ERR ERR

TDH (MAX) 50.20 ~~52~~ Ft
TDH (MIN) 28.29 ~~28~~ Ft

HP(req) 16

c:\wks_data\Santan_StormPumpSta.wb3

5/13

Checked By:
Approved By:

Santan Elliot Road - Baseline Road Storm Water Pump Station
Arizona Department of Transportation
Phoenix, Arizona

FLOW (GPM)	VELOCITY (FPS)					Line Size
	10	12	14	16	18	
500	2	1	1	0.8	0.6	
1000		2.8	2.1	1.6	1.3	
2000		5.7	4.2	3.2	2.5	
3000				4.8	3.8	

Revised 3/28/03

The recommended design velocity should be in the range of 6.0 to 12.0 fps.

Preliminary Static Head Calculation: Santan Storm Water Pump Station (Electric Submersible Motor)

Weir Crest Elevation ~~1409.95~~ Ft
1408.50

Low Level Pump Off Elevation 1359 Ft

High Level Max Elevation 1380.91 ~~1383~~ Ft

Static Head (Z max) ~~50.95~~ Ft
use ~~51~~ Ft
49.50

Static Head (Zmin) ~~26.95~~ Ft
~~27~~ Ft
27.59

Pump Hydraulics
Flowrate(gpm) (cfs) 1500 3.34 0 0

	Pipe Number 1		Pipe Number 2						
Sum K	2.85		0						
Pipe D(in)	12		0						
Pipe D(ft)	1		0						
HyRa(ft)	0.25		0						
Pipe Lenght(ft)	114		0						
	Minor HL(ft)	C-factor 120	Minor HL(ft)	C-factor 120					
Total Headloss 1.51	0.8	0.71	ERR	ERR					

TDH (MAX) 51.01 ~~53~~ Ft
TDH (MIN) ~~29~~ Ft
29.10

HP(req) 25

6/13

c:\wks_data\Santan_StormPumpSta.wb3

Checked By:
Approved By:

Santan Elliot Road - Baseline Road Storm Water Pump Station
Arizona Department of Transportation
Phoenix, Arizona

FLOW (GPM)	VELOCITY (FPS)					Line Size
	10	12	14	16	18	
500	2	1	1	0.8	0.6	
1000		2.8	2.1	1.6	1.3	
2000		5.7	4.2	3.2	2.5	
3000				4.8	3.8	

The recommended design velocity should be in the range of 6.0 to 12.0 fps.

Revised 3/28/03 - Per New on-off Elevations

Preliminary Static Head Calculation: Santan Storm Water Pump Station (Electric Submersible Motor)

Weir Crest Elevation ~~1409.95~~ Ft
1408.50

Low Level Pump Off Elevation 1359 Ft

High Level Max Elevation ~~1383~~ Ft
1380.91

Static Head (Z max) ~~50.95~~ Ft
use ~~51~~ Ft
49.5

Static Head (Zmin) ~~26.05~~ Ft
~~27~~ Ft
27.59

Pump Hydraulics
Flowrate(gpm) (cfs) 2000 4.46 0 0

	Pipe Number 1		Pipe Number 2					
Sum K	2.85		0					
Pipe D(in)	12		0					
Pipe D(ft)	1		0					
HyRa(ft)	0.25		0					
Pipe Lenght(ft)	114		0					
	Minor HL(ft)	C-factor 120	Minor HL(ft)	C-factor 120				

Total Headloss 2.65 1.43 1.22 ERR ERR

TDH (MAX) ~~54~~ Ft
52.15'
TDH (MIN) ~~30~~ Ft
30.24'

HP(req) 34

7/13

c:\wks_data\Santan_StormPumpSta.wb3

[redacted] Checked By:
Approved By:

Santan Elliot Road - Baseline Road Storm Water Pump Station
Arizona Department of Transportation
Phoenix, Arizona

FLOW (GPM)	VELOCITY (FPS)				
	10	12	14	16	18
500	2	1	1	0.8	0.6
1000		2.8	2.1	1.6	1.3
2000		5.7	4.2	3.2	2.5
3000				4.8	3.8

Line Size

Revised 3/28/03

The recommended design velocity should be in the range of 6.0 to 12.0 fps.

Preliminary Static Head Calculation: Santan Storm Water Pump Station (Electric Submersible Motor)

Weir Crest Elevation ~~1400.05~~ Ft
1408.50

Low Level Pump Off Elevation 1359 Ft

High Level Max Elevation 1380.91 ~~1383~~ Ft

Static Head (Z max) ~~50.95~~ Ft
use ~~51~~ Ft
49.5

Static Head (Zmin) ~~26.05~~ Ft
~~27~~ Ft
27.59

Pump Hydraulics

Flowrate(gpm) (cfs)		2500	5.57	0	0					
		Pipe Number 1		Pipe Number 2						
Sum K		2.85		0						
Pipe D(in)		12		0						
Pipe D(ft)		1		0						
HyRa(ft)		0.25		0						
Pipe Lenght(ft)		114		0						
		Minor HL(ft)	C-factor 120	Minor HL(ft)	C-factor 120					
Total Headloss	4.07	2.23	1.84	ERR	ERR					

TDH (MAX) 53.57 ~~55~~ Ft
TDH (MIN) ~~31~~ Ft
31.66

HP(req) 43

c:\wks_data\Santan_StormPumpSta.wb3

8/13

Checked By:
Approved By:

Santan Elliot Road - Baseline Road Storm Water Pump Station
Arizona Department of Transportation
Phoenix, Arizona

FLOW (GPM)	VELOCITY (FPS)				
	10	12	14	16	18
500	2	1	1	0.8	0.6
1000		2.8	2.1	1.6	1.3
2000		5.7	4.2	3.2	2.5
3000				4.8	3.8

Line Size

Revised 3/28/03

The recommended design velocity should be in the range of 6.0 to 12.0 fps.

Preliminary Static Head Calculation: Santan Storm Water Pump Station (Electric Submersible Motor)

Weir Crest Elevation ~~1400.95~~ Ft
1408.50

Low Level Pump Off Elevation 1359 Ft

High Level Max Elevation 1380.91 ~~1383~~ Ft

Static Head (Z max) ~~50.95~~ Ft
use ~~51~~ Ft
49.50

Static Head (Zmin) ~~26.95~~ Ft
~~27~~ Ft
27.54

Pump Hydraulics

Flowrate(gpm) (cfs)	3000	6.68	0	0					
	Pipe Number 1		Pipe Number 2						
Sum K	2.85		0						
Pipe D(in)	12		0						
Pipe D(ft)	1		0						
HyRa(ft)	0.25		0						
Pipe Lenght(ft)	114		0						
	Minor HL(ft)	C-factor 120	Minor HL(ft)	C-factor 120					
Total Headloss	5.78	3.2	2.58	ERR	ERR				

TDH (MAX) 55.28' ~~57~~ Ft
TDH (MIN) ~~33~~ Ft
33.37'

HP(req) 54

9/13

c:\wks_data\Santan_StormPumpSta.wb3

Checked By:
Approved By:

Santan Elliot Road - Baseline Road Storm Water Pump Station
Arizona Department of Transportation
Phoenix, Arizona

FLOW (GPM)	VELOCITY (FPS)					Line Size
	10	12	14	16	18	
500	2	1	1	0.8	0.6	
1000		2.8	2.1	1.6	1.3	
2000		5.7	4.2	3.2	2.5	
3000				4.8	3.8	

Revised ~~#~~ 3/28/03.

The recommended design velocity should be in the range of 6.0 to 12.0 fps.

Preliminary Static Head Calculation: Santan Storm Water Pump Station (Electric Submersible Motor)

Weir Crest Elevation ~~1400.05~~ Ft
1408.50

Low Level Pump Off Elevation 1359 Ft

High Level Max Elevation 1380.91 ~~1388~~ Ft

Static Head (Z max) ~~50.95~~ Ft
use ~~54~~ Ft
49.50

Static Head (Zmin) ~~26.95~~ Ft
~~27~~ Ft
27.54

Pump Hydraulics
Flowrate(gpm) (cfs) 3500 7.8 0 0

	Pipe Number 1		Pipe Number 2					
Sum K	2.85		0					
Pipe D(in)	12		0					
Pipe D(ft)	1		0					
HyRa(ft)	0.25		0					
Pipe Lenght(ft)	114		0					
	Minor HL(ft)	C-factor 120	Minor HL(ft)	C-factor 120				
Total Headloss	7.79	4.36	3.43	ERR	ERR			

TDH (MAX) 57.29' ~~59~~ Ft
TDH (MIN) ~~35~~ Ft
35.38'

HP(req) 65

c:\wks_data\Santan_StormPumpSta.wb3

10/13

Checked By:
Approved By:

Santan Elliot Road - Baseline Road Storm Water Pump Station
Arizona Department of Transportation
Phoenix, Arizona

FLOW (GPM)	VELOCITY (FPS)					Line Size
	10	12	14	16	18	
500	2	1	1	0.8	0.6	
1000		2.8	2.1	1.6	1.3	
2000		5.7	4.2	3.2	2.5	
3000				4.8	3.8	

Revised 3/28/03

The recommended design velocity should be in the range of 6.0 to 12.0 fps.

Preliminary Static Head Calculation: Santan Storm Water Pump Station (Electric Submersible Motor)

Weir Crest Elevation 1408.50 ~~1409.95~~ Ft ~~1408.55~~

Low Level Pump Off Elevation 1359 Ft

High Level Max Elevation 1380.91 ~~1383~~ Ft

Static Head (Z max) ~~50.95~~ Ft
use ~~51~~ Ft
49.50

Static Head (Zmin) ~~26.95~~ Ft
~~27~~ Ft
27.59

Pump Hydraulics

Flowrate(gpm) (cfs)		4000	8.91	0	0					
		Pipe Number 1		Pipe Number 2						
Sum K		2.85		0						
Pipe D(in)		12		0						
Pipe D(ft)		1		0						
HyRa(ft)		0.25		0						
Pipe Lenght(ft)		114		0						
		Minor HL(ft)	C-factor 120	Minor HL(ft)	C-factor 120					
Total Headloss	10.09	5.7	4.39	ERR	ERR					

TDH (MAX) ~~61~~ 59.59' Ft
TDH (MIN) ~~37~~ 37.68' Ft

HP(req) 77

11/13

c:\wks_data\Santan_StormPumpSta.wb3

Checked By:
Approved By:

Santan Elliot Road - Baseline Road Storm Water Pump Station
Arizona Department of Transportation
Phoenix, Arizona

FLOW (GPM)	VELOCITY (FPS)					
	10	12	14	16	18	Line Size
500	2	1	1	0.8	0.6	
1000		2.8	2.1	1.6	1.3	
2000		5.7	4.2	3.2	2.5	
3000				4.8	3.8	

The recommended design velocity should be in the range of 6.0 to 12.0 fps.

Revised 3/28/03

Preliminary Static Head Calculation: Santan Storm Water Pump Station (Electric Submersible Motor)

Weir Crest Elevation ~~1409.95~~ Ft
1408.50

Low Level Pump Off Elevation 1359 Ft

High Level Max Elevation 1380.91 ~~1383~~ Ft

Static Head (Z max) ~~50.95~~ Ft
use ~~54~~ Ft
49.50

Static Head (Zmin) ~~26.95~~ Ft
~~27~~ Ft
27.59

Pump Hydraulics
Flowrate(gpm) (cfs) 4500 10.03 0 0

	Pipe Number 1		Pipe Number 2					
Sum K	2.85		0					
Pipe D(in)	12		0					
Pipe D(ft)	1		0					
HyRa(ft)	0.25		0					
Pipe Lenght(ft)	114		0					
	Minor HL(ft)	C-factor 120	Minor HL(ft)	C-factor 120				
Total Headloss	12.69	7.22	5.47	ERR	ERR			

TDH (MAX) 62.19 ~~64~~ Ft
TDH (MIN) ~~40~~ Ft
40.28'

HP(req) 91

12/13

c:\wks_data\Santan_StormPumpSta.wb3

Checked By:
Approved By:

Santan Elliot Road - Baseline Road Storm Water Pump Station
Arizona Department of Transportation
Phoenix, Arizona

FLOW (GPM)	VELOCITY (FPS)					
	10	12	14	16	18	Line Size
500	2	1	1	0.8	0.6	
1000		2.8	2.1	1.6	1.3	
2000		5.7	4.2	3.2	2.5	
3000				4.8	3.8	

The recommended design velocity should be in the range of 6.0 to 12.0 fps.

Preliminary Static Head Calculation: Santan Storm Water Pump Station (Electric Submersible Motor)

Weir Crest Elevation ~~1409.95~~ Ft
1408.50

Low Level Pump Off Elevation 1359 Ft

High Level Max Elevation 1380.91 ~~1383~~ Ft

Static Head (Z max) ~~50.95~~ Ft
use ~~54~~ **Ft**
49.5

Static Head (Zmin) ~~26.95~~ Ft
~~27~~ **Ft**
27.59

Pump Hydraulics

Flowrate(gpm) (cfs)		5000	11.14	0	0				
		Pipe Number 1		Pipe Number 2					
Sum K		2.85		0					
Pipe D(in)		12		0					
Pipe D(ft)		1		0					
HyRa(ft)		0.25		0					
Pipe Lenght(ft)		114		0					
		Minor HL(ft)	C-factor 120	Minor HL(ft)	C-factor 120				
Total Headloss	15.54	8.9	6.64	ERR	ERR				

TDH (MAX) 65.04 ~~67~~ **Ft** HP(req) 106
TDH (MIN) 43 **Ft**
43.13'

c:\wks_data\Santan_StormPumpSta.wb3

13/13

Stanley Consultants INC.

Project No. _____ Page No. _____

Subject _____

Computed by FLR Date _____

Checked by _____ Date _____

Approved by _____ Date _____

Sheet No. _____ of _____

From Shop Drawings.

Pump Weight - 11,300 lbs ±

Right Angle Drive - 2,000 lbs

Plate Wt - 2,450 lbs

Water Weight - 12,800 lbs ±

REVISIONS

ITEM	REQ'D	DESCRIPTION	MATERIAL	PART NO.
1	1	SUCTION BOWL	ASTM A48-CL 30	MFH101A
2	1	SUCT. BOWL BUSHING	ASTM B505-(932)	G105B
3	1	THRUST COLLAR RETAINER	ASTM A48-CL 30	MFH922A
4	1	THRUST COLLAR & KEY	ASTM 1582-CL 416	M100LA
5	1	IMPELLER	ASTM B145-(836)	MFH103A
6	1	DISCHARGE BOWL BUSHING	ASTM B505-(932)	G105B
7	1	DISCHARGE BOWL	ASTM A48-CL 30	MFH100E
8	10	LINE SHAFT BEARING	ASTM B505-(932)	K106
9	1	BOWL SHAFT	ASTM 1582-CL 416	MFH150A
10	4	LINE SHAFT COUPLING	C-1020 STL.	SJ950
11	8	BOTTOM ENCL. TUBE	ASTM A120	L108
12	1	BOTTOM DISCH. COLUMN	ASTM A283-GR D	T24X30-T
13	3	BOTTOM LINE SHAFT	AISI-1045 STL	SKL900
14	2	INTER. DISCH. COLUMN	ASTM A283-GR D	S30
15	1	INTER. LINE SHAFT	AISI-1045 STL	SKL900
16	2	TOP ENCL. TUBE	ASTM A120	L108
17	1	TOP LINE SHAFT	AISI-1045 STL	K910
18	1	DISCHARGE ELBOW	ASTM A283-GR D	16115-1
19	1	TENSION NUT BODY	ASTM A48-CL 30	L36P
20	1	TENSION NUT BUSHING	ASTM B505-(932)	K35F
21	1	TENSION NUT	CAST IRON	L38
22	1	LOCK RING	BRONZE	L39
23	1	PUMP HALF COUPLING	STEEL	K990C
24	1	INTER. ADJ. FLANGE	STEEL	K991D
25	1	MOTOR HALF COUPLING	STEEL	M992A
26	1	LUBRICATOR - 24 VOLT DC	SOLENOID	STOCK
27	1	OIL RESERVOIR - 2.5 GALLON	ALUMINUM	STOCK

ITEMS NO. 2, 5, 6, 8, 9 & 20 ARE RECOMMENDED SPARE PARTS

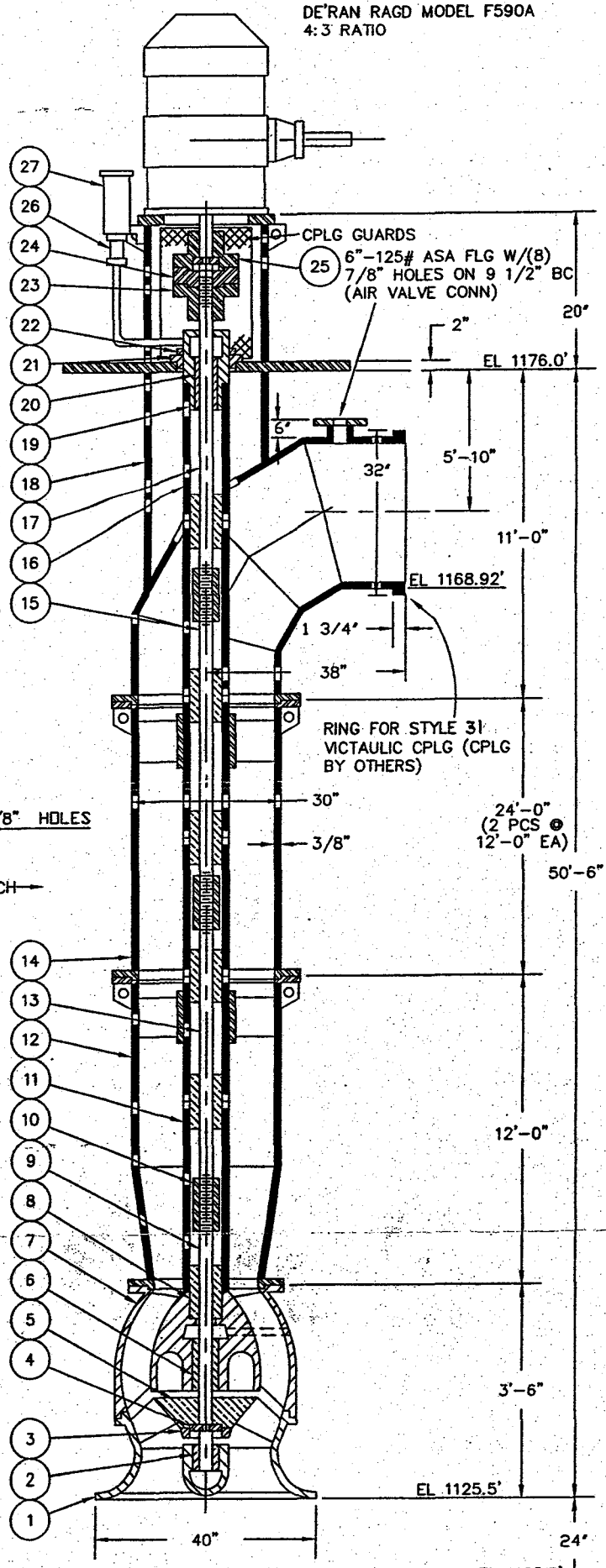

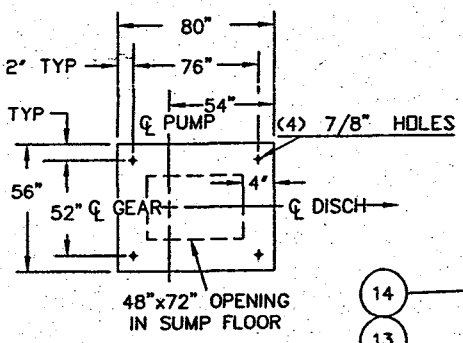

BASE PLATE DETAIL

BOWL SHAFT DIA= 2 7/16'
LINE SHAFT DIA= 2 7/16'
ENCLOSING TUBE= 4'

SHOP ORDER - 16115/19

ARIZONA DEPT. OF TRANSPORTATION
PRICE (SR101L) / SANTAN (SR202L)

CASCADE PUMP COMPANY
SANTA FE SPRINGS, CALIFORNIA

#24MF MIXED FLOW PUMP
30" O.D. DISCHARGE

JAMES, COOKE & HOBSON

DRAWN	CHECKED	SCALE
HB	LB	3MS5724

ORDER 040202-IMPL
DATE 7/9/02

Plotted By: Fred Rouse 11/13/02
Checked By:
Approved By:

CASCADE PUMP COMPANY
10107 South Norwalk Boulevard • PO Box 2767
Santa Fe Springs, California 90670-0767

CURVE NUMBER	DATE	SUPERCEDES
MF2408A5	07-92	NEW ISSUE

24

MF

880 RPM

CASCADE MIXED FLOW PUMP

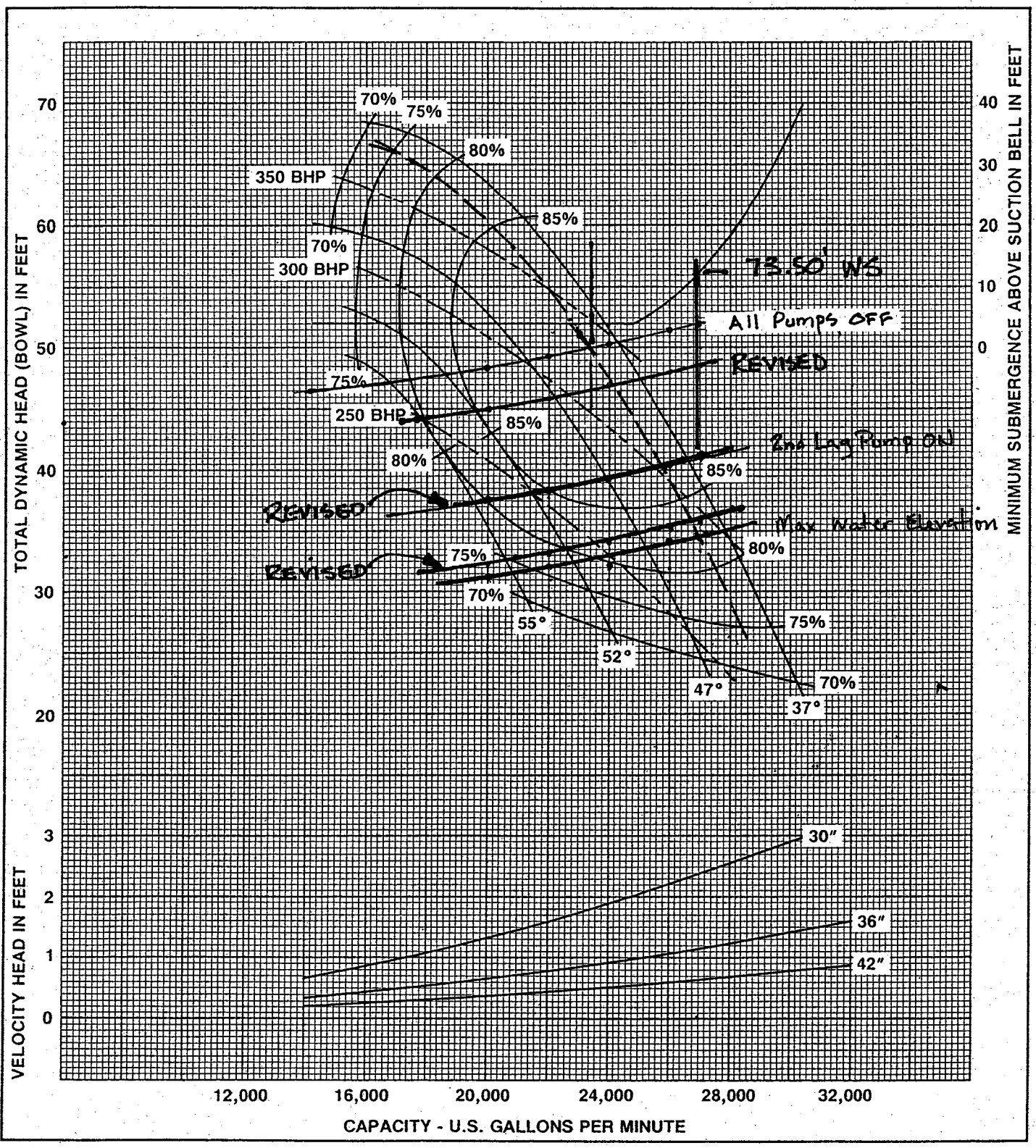

CURVE CHARACTERISTICS BASED ON PUMP PERFORMANCE WITH SPECIFIED AMOUNT OF CLEAR, NON-AERATED, FRESH COLD WATER.

THIS PERFORMANCE CURVE IS FOR ESTIMATING ONLY. CURVE SHOWS SINGLE STAGE PERFORMANCE. FOR MULTIPLE, VARIABLE AND OTHER SPEED APPLICATIONS, CONSULT FACTORY.

Stanley Consultants INC.

Project No. 16110.11.01 Page No.

Subject Engine Horsepower

Computed by FLR Date 9/11/02

Checked by Date

Approved by Date

Revised 3/28/03

Sheet No. 1 of 2

Maximum Elevation
Q = 27,000 gpm
TDH = 34.76 feet
Efficiency = 82%

Minimum Elevation
Q = 23,400 gpm
TDH = 50.0 feet
Efficiency = 85% ±

$$BHP = \frac{QH}{(3960)\times(E)} =$$

* Horsepower Based Factory Pump Curves
Certified Pump Curves

$$* \; BHP = \frac{(\cancel{23,400}\ \cancel{24,000}\ gpm)\ \cancel{50'}\ 47'}{3960 \times (88\%)}$$

Maximum Elevation (Minimum Head)

* BHP ≅ ~~335.74~~ 323.70

$$BHP_{Min} = \frac{(\cancel{27,000}\ 26,700)(\cancel{34.76}\ 36.00)}{(3960)(\cancel{0.82}\ 0.83)} = \cancel{289.02}\ 292.44\ HP$$

$$* \; BHP_{T(Max)} = \frac{\cancel{335.74}\ 323.70}{(0.96)(0.99)(0.99)}$$

$$* \; BHP_{T(Max)} = \cancel{356.83} \cong 344.00$$

Low Elevation (Maximum Head

** Add 12% ≅ ~~400 HP~~ 386.0 HP.

$$BHP_{Max} = \frac{(\cancel{23,400}\ 24,000\ gpm)(\cancel{50'}\ 47')}{(3960)\times(\cancel{85\%}\ 85\%)} = \cancel{347.59}\ 335.12\ HP$$

* Actual Efficiency is Much Higher 88+%

$$BHP_T = \frac{BHP}{(\text{Gear Head Losses in Percentage})(\text{Line Shaft Loss in percentage})(\text{Drive Line Losses in percentage})}$$

Gear Head Losses = 97%
Line Shaft Losses = 99%
Drive Line Losses = 99%

$$BHP_{T(Max)} = \frac{\cancel{347.59}\ 335.12\ HP}{(97\%)(99\%)(99\%)} = \cancel{365.62}\ 352.50\ HP$$

$$BHP_{T(Min)} = \frac{\cancel{289.02}\ 292.44\ HP}{(96\%)(99\%)(99\%)} = \cancel{308.19}\ 310.81\ HP$$

394.80

Add 12% BHP - ~~365.62~~ 352.50 HP × 1.12 = ~~409.48~~ max Break HorsePower

BHP_{REQ} = ~~409.5~~ 395.00

Stanley Consultants INC.

Project No. 16110.11.01 Page No.

Subject Engine Drive Derate.

Computed by FLR Date 9/11/02

Checked by Date

Approved by Date

Sheet No. of

* Derate Engine For Equipment and Environmental Factor

Standard NA Engine Drive @ 1200 RPM 525HP

	525 HP
Fan	(-38 HP)
Elevation	(-14.33 HP)
Temp	(-63.47 HP)
DERATED Horsepower	409.2

☐ Derate for Elev 3% per 1000' above 500'

$1411 - 500 = 911' * 3\% \times 911/1000' = 2.73\%$

$(2.73\%)(525) = 14.33$ HP

☐ Derate for temp 1.86% per 10°F above 85°F.

$150°F - 85°F = 65°F * \frac{65°F}{10°F}(1.86\%) \times 525$

$\Delta_T = 63.47$ HP

CATERPILLAR DERATES Engine 86% for Conditions @ SANTAN-ELLIOT RD - BASELINE RD

The ACTUAL DERATED BHP ≅ 419

CALCULATION 525 BHP - 38 HP for Fan = 487 BHP

DERATED BHP = 487 BHP x 0.86 = 418.82 BHP

DERATED BHP ≅ 419 BHP

JCH James, Cooke, & Hobson, Inc.

Sales Engineers

Date: September 13, 2002
To: FRED ROUSE
Company: STANLEY CONSULTANTS

Fax: 912-6577

Re:

Sender: Mark Lux

YOU SHOULD RECEIVE 4 PAGE(S) INCLUDING THIS COVER SHEET. IF YOU DO NOT RECEIVE ALL THE PAGES, PLEASE CALL 602-243-0585.

FRED:

I ASKED CASCADE PUMP TO REVIEW PREVIOUS TEST CURVES FOR PUMPS SUPPLIED ON ADOT PROJECTS. IT APPEARS THAT MOST OF THE PUMPS SUPPLIED PREVIOUSLY UTILIZED THE CD4 IMPELLER AND NOT THE A5 IMPELLER WHICH YOU HAVE SELECTED FOR THIS PROJECT. HOWEVER, THEY DID HAVE TEST INFORMATION FROM A PREVIOUS TEST WITH AN A5 IMPELLER. THE DESIGN CONDITION FOR THAT PARTICULAR PROJECT WAS 23,500GPM @ 50.0 FT. TDH. (VERY SIMILAR TO THE ADOT PROJECT YOU ARE WORKING ON). AS YOU WILL NOTE, THE EFFICIENCY AT THAT POINT WAS 88%+. CASCADE MENTIONED THAT FOUR PUMPS WERE TESTED AND THE RESULTS WERE SIMILAR FOR ALL FOUR. I THINK THAT IF YOU SHOULD USE A PUMP EFFICIENCY OF 85%, IT WOULD BE VERY CONSERVATIVE.

FEEL FREE TO GIVE ME A CALL IF YOU SHOULD HAVE QUESTIONS. THANKS AGAIN.

Phone 602-243-0585 4632 South 36th Street Phoenix,AZ 85040 Fax 602-276-5402

CERTIFIED CORRECT

CURVE NO. 2821

CASCADE PUMP COMPANY
SANTA FE SPRINGS, CALIFORNIA

PUMP PERFORMANCE

ONE STAGE 24 MF PUMP

880 RPM

GULF STATES ENGINEERING CO. INC.
CITY OF GREENVILLE, MISSISSIPPI
STORMWATER DRAINAGE PROJECT
PROJECT 10-59
C.O. No. 38638A
S.O. No. 13825

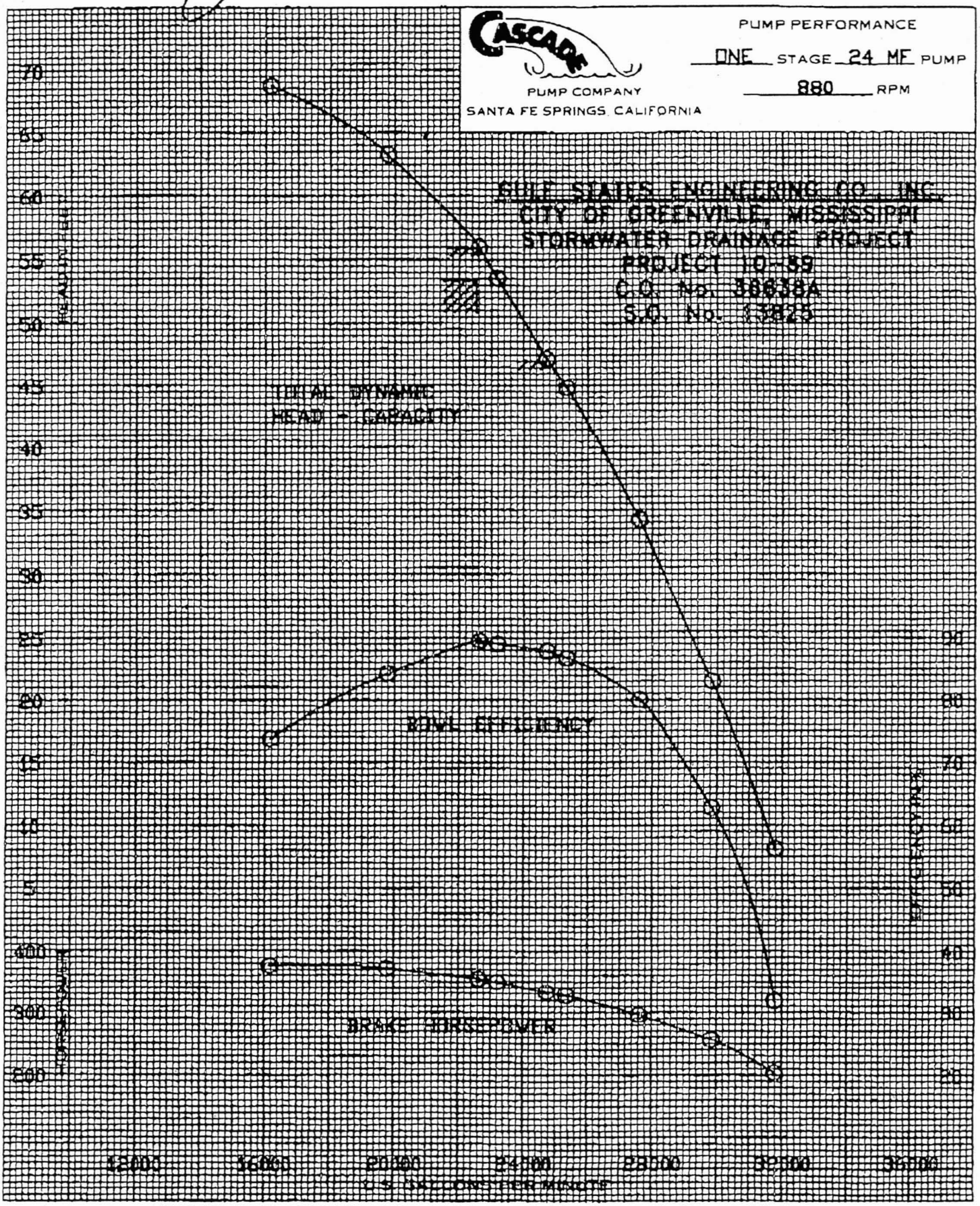

E06T 9/84

CURVES SHOW APPROXIMATELY THE CHARACTERISTICS WHEN PUMPING CLEAR NON-AERATED WATER. NO GUARANTEE IS MADE EXCEPT FOR THE RATED POINT.

Computed By: FLR 11/12/02
Check By:
Approved By:

Santan TI Storm Water Pump Station
Arizona Department of Transportation
Phoenix, Arizona

FLOW (GPM)	VELOCITY (FPS)				
	24"	30"	36"	42"	48"
22500	16	**10.2**	7.1	5.2	4
45000		19.3	14.2	9.8	8.4
67500			21.3	15.6	12
90000				20.8	16

The recommended design velocity should be in the range of 6.0 to 12.0 fps.

WATER SURFACE OVER WEIR ≅ 1407.47 USE 1407.50
Revised 3/26/03 - FLR

Preliminary Static Head Calculation: Santan Storm Water Pump Station
With One (1) Pump Running @ Low Level Water Surface Elevation

Weir Crest Elevation ~~1409.95~~ Ft 1408.50

Weir Crest Elevation (Max) ~~1409.95~~ Ft 1408.50

Low Level Pump Off Elevation ~~1366~~ Ft 1365

High Level Max Elevation ~~1377~~ Ft
(2nd Lag Pump On Elev) 1375.5 Revised ON-OFF ELEV.

Static Head (Z max) 43.95 Ft
use ~~43.95~~ Ft 40.50

Static Head (Zmin) 32.95 Ft
~~32.95~~ Ft 33.00

Pump Hydraulics

Flowrate(gpm) (cfs)	20000 44.56	20000 44.56	20000 44.56				
	Pipe Number 1	Pipe Number 2	Pipe Number 3				
Sum K	0.25	0.25	1.51				
Pipe D(in)	24	26	30				
Pipe D(ft)	2	2.17	2.5				
HyRa(ft)	0.5	0.54	0.63				
Pipe Lenght(ft)	3.5	37.25	56				
	Minor HL(ft) C-factor 120	Minor HL(ft) C-factor 120	HL(ft) C-factor 120				
Total Headloss	4.5 0.78 0.09	0.56 0.65	1.93 0.49				

TDH (MAX) ~~48.45~~ Ft 45.00
TDH (MIN) ~~37.45~~ Ft 37.50

HP(req) 287.9

c:\wks_data\Santan_StormPumpSta.wb3

Computed By: FLR 11/12/02
Checked By:
Approved By:

Santan TI Storm Water Pump Station
Arizona Department of Transportation
Phoenix, Arizona

FLOW (GPM)	VELOCITY (FPS)				
	24"	30"	36"	42"	48"
22500	16	**10.2**	7.1	5.2	4
45000		19.3	14.2	9.8	8.4
67500			21.3	15.6	12
90000				20.8	16

The recommended design velocity should be in the range of 6.0 to 12.0 fps.

Revised 3/26/03 FLR

Preliminary Static Head Calculation: Santan Storm Water Pump Station
With One (1) Pump Running @ Low Level Water Surface Elevation

Weir Crest Elevation ~~1409.95~~ Ft 1408.50

Weir Crest Elevation (Max) ~~1409.95~~ Ft 1408.50

Low Level Pump Off Elevation ~~1366~~ 1368 Ft

High Level Max Elevation (2nd Lag Pump on Elev) ~~1377~~ Ft 1375.50 Revised ON-OFF ELEV.

Static Head (Z max) 43.95 Ft
use ~~43.95~~ **Ft** 40.50

Static Head (Zmin) 32.95 Ft
~~32.95~~ **Ft** 33.0

Pump Hydraulics

Flowrate(gpm) (cfs)		22000	49.02	22000	49.02	22000	49.02					
		Pipe Number 1		Pipe Number 2		Pipe Number 3						
Sum K		0.25		0.25		1.51						
Pipe D(in)		24		26		30						
Pipe D(ft)		2		2.17		2.5						
HyRa(ft)		0.5		0.54		0.63						
Pipe Lenght(ft)		3.5		37.25		56						
		Minor HL(ft)	C-factor 120	Minor HL(ft)	C-factor 120	HL(ft)	C-factor 120					
Total Headloss	5.43	0.95	0.11	0.68	0.77	2.34	0.58					

TDH (MAX) ~~49.38~~ 45.93 **Ft** HP(req) 322.7
TDH (MIN) ~~38.38~~ **Ft** 38.43

c:\wks_data\Santan_StormPumpSta.wb3

Computed By: FLR 11/14/02
Checked By:
Approved By:

Santan TI Storm Water Pump Station
Arizona Department of Transportation
Phoenix, Arizona

FLOW (GPM)	VELOCITY (FPS)				
	24"	30"	36"	42"	48"
22500	16	10.2	7.1	5.2	4
45000		19.3	14.2	9.8	8.4
67500			21.3	15.6	12
90000				20.8	16

The recommended design velocity should be in the range of 6.0 to 12.0 fps.

Revised 3/26/03 FLR

Preliminary Static Head Calculation: Santan Storm Water Pump Station
With One (1) Pump Running @ Low Level Water Surface Elevation

Weir Crest Elevation ~~1409.95~~ Ft
1408.50

Weir Crest Elevation (Max) ~~1409.95~~ Ft
1408.50

Low Level Pump Off Elevation 1368 ~~1366~~ Ft

High Level Max Elevation (2nd Lag Pump On Elev) ~~1377~~ Ft
1375.5

Static Head (Z max) 43.95 Ft
use ~~43.95~~ Ft
40.50

Static Head (Zmin) 32.95 Ft
~~32.95~~ Ft
33.00

Pump Hydraulics

Flowrate(gpm) (cfs)		24000	53.48	24000	53.48	24000	53.48					
		Pipe Number 1		Pipe Number 2		Pipe Number 3						
Sum K		0.25		0.25		1.51						
Pipe D(in)		24		26		30						
Pipe D(ft)		2		2.17		2.5						
HyRa(ft)		0.5		0.54		0.63						
Pipe Lenght(ft)		3.5		37.25		56						
		Minor HL(ft)	C-factor 120	Minor HL(ft)	C-factor 120	HL(ft)	C-factor 120					
Total Headloss	6.44	1.12	0.13	0.81	0.91	2.78	0.69					

TDH (MAX) 46.94 ~~50.39~~ Ft HP(req) 359.3
TDH (MIN) ~~39.39~~ Ft
39.44

c:\wks_data\Santan_StormPumpSta.wb3

Computed By: FLR 11/12/02
Check By:
Approved By:

Santan TI Storm Water Pump Station
Arizona Department of Transportation
Phoenix, Arizona

FLOW (GPM)	VELOCITY (FPS)				
	24"	30"	36"	42"	48"
22500	16	**10.2**	7.1	5.2	4
45000		19.3	14.2	9.8	8.4
67500			21.3	15.6	12
90000				20.8	16

The recommended design velocity should be in the range of 6.0 to 12.0 fps.

Revised 3/26/03 FLR

Preliminary Static Head Calculation: Santan Storm Water Pump Station
With One (1) Pump Running @ Low Level Water Surface Elevation

Weir Crest Elevation ~~1409.95~~ Ft 1408.50

Weir Crest Elevation (Max) ~~1409.95~~ Ft 1408.50

Low Level Pump Off Elevation 1365 ~~1360~~ Ft

High Level Max Elevation (2nd Lag Pump On Elev.) ~~1377~~ Ft 1375.50

Static Head (Z max) ~~43.95~~ Ft
use ~~43.95~~ Ft 40.50

Static Head (Zmin) ~~32.95~~ Ft
~~32.95~~ Ft 33.0

Pump Hydraulics

Flowrate(gpm) (cfs)		26000	57.93	26000	57.93	26000	57.93							
		Pipe Number 1		Pipe Number 2		Pipe Number 3								
Sum K		0.25		0.25		1.51								
Pipe D(in)		24		26		30								
Pipe D(ft)		2		2.17		2.5								
HyRa(ft)		0.5		0.54		0.63								
Pipe Lenght(ft)		3.5		37.25		56								
		Minor HL(ft)	C-factor 120	Minor HL(ft)	C-factor 120	HL(ft)	C-factor 120							
Total Headloss	7.53	1.32	0.15	0.95	1.05	3.27	0.79							

TDH (MAX) 48.03 ~~51.48~~ Ft
TDH (MIN) ~~48.48~~ Ft 40.53

HP(req) 397.6

c:\wks_data\Santan_StormPumpSta.wb3

[redacted]

Computed By: [redacted] 11/12/02
Checked By:
Approved By:

Santan TI Storm Water Pump Station
Arizona Department of Transportation
Phoenix, Arizona

FLOW (GPM)	VELOCITY (FPS)				
	24"	30"	36"	42"	48"
22500	16	10.2	7.1	5.2	4
45000		19.3	14.2	9.8	8.4
67500			21.3	15.6	12
90000				20.8	16

The recommended design velocity should be in the range of 6.0 to 12.0 fps.

Revised 3/26/03

Preliminary Static Head Calculation: Santan Storm Water Pump Station
With One (1) Pump Running @ Low Level Water Surface Elevation

Weir Crest Elevation ~~1409.95~~ Ft 1407.50

Weir Crest Elevation (Max) 1409.95 Ft 1407.50

Low Level Pump Off Elevation ~~1366~~ 1368 Ft

High Level Max Elevation (2nd Lag Pump On Elev.) ~~1377~~ Ft 1375.50

Revised ON-OFF Elev.

Static Head (Z max) 43.95 Ft
use ~~43.95~~ Ft 40.50

Static Head (Zmin) 32.95 Ft
~~32.95~~ Ft 33.00

Pump Hydraulics
Flowrate(gpm) (cfs) 27000 60.16 27000 60.16 27000 60.16

	Pipe Number 1		Pipe Number 2		Pipe Number 3					
Sum K	0.25		0.25		1.51					
Pipe D(in)	24		26		30					
Pipe D(ft)	2		2.17		2.5					
HyRa(ft)	0.5		0.54		0.63					
Pipe Lenght(ft)	3.5		37.25		56					
	Minor HL(ft)	C-factor 120	Minor HL(ft)	C-factor 120	HL(ft)	C-factor 120				
Total Headloss	8.11	1.42	0.16	1.03	1.13	3.52	0.85			

TDH (MAX) 48.61 ~~52.06~~ Ft
TDH (MIN) ~~41.06~~ Ft 41.11

HP(req) 417.6

c:\wks_data\Santan_StormPumpSta.wb3

[redacted]mputed [redacted]; [redacted]2 [redacted]1/1[redacted]2
Checked By:
Approved By:

Santan TI Storm Water Pump Station
Arizona Department of Transportation
Phoenix, Arizona

FLOW (GPM)	VELOCITY (FPS)				
	24"	30"	36"	42"	48"
22500	16	10.2	7.1	5.2	4
45000		19.3	14.2	9.8	8.4
67500			21.3	15.6	12
90000				20.8	16

The recommended design velocity should be in the range of 6.0 to 12.0 fps.

Revised 3/26/03

Preliminary Static Head Calculation: Santan Storm Water Pump Station
With One (1) Pump Running @ Low Level Water Surface Elevation

Weir Crest Elevation ~~1409.95~~ Ft
1408.50

Weir Crest Elevation (Max) ~~1409.95~~ Ft
1408.50

Low Level Pump Off Elevation 1368 ~~1366~~ Ft

High Level Max Elevation 1380.91 ~~1383.3~~ Ft
(MAX WATER SURFACE)

Static Head (Z max) ~~43.05~~ Ft
use ~~43.95~~ Ft
40.50

Static Head (Zmin) 27.59 ~~26.65~~ Ft
~~26.65~~ Ft
27.59

Pump Hydraulics

Flowrate(gpm) (cfs)		20000	44.56	20000	44.56	20000	44.56
		Pipe Number 1		Pipe Number 2		Pipe Number 3	
Sum K		0.25		0.25		1.51	
Pipe D(in)		24		26		30	
Pipe D(ft)		2		2.17		2.5	
HyRa(ft)		0.5		0.54		0.63	
Pipe Lenght(ft)		3.5		37.25		56	
		Minor HL(ft)	C-factor 120	Minor HL(ft)	C-factor 120	HL(ft)	C-factor 120
Total Headloss	4.5	0.78	0.09	0.56	0.65	1.93	0.49

TDH (MAX) 45.00 ~~48.45~~ Ft
TDH (MIN) ~~31.15~~ Ft
32.09

HP(req) 287.9

c:\wks_data\Santan_StormPumpSta.wb3

Checked By:
Approved By:

Santan TI Storm Water Pump Station
Arizona Department of Transportation
Phoenix, Arizona

FLOW (GPM)	VELOCITY (FPS)				
	24"	30"	36"	42"	48"
22500	16	**10.2**	7.1	5.2	4
45000		19.3	14.2	9.8	8.4
67500			21.3	15.6	12
90000				20.8	16

The recommended design velocity should be in the range of 6.0 to 12.0 fps.

Revised 3/26/03

Preliminary Static Head Calculation: Santan Storm Water Pump Station
With One (1) Pump Running @ Low Level Water Surface Elevation

Weir Crest Elevation ~~1409.95~~ Ft 1409.50

Weir Crest Elevation (Max) ~~1409.95~~ Ft 1409.50

Low Level Pump Off Elevation ~~1366~~ 1368 Ft

High Level Max Elevation ~~1383.3~~ 1380.91 Ft
(Max Water Surface)

Static Head (Z max) ~~49.95~~ Ft
use ~~43.95~~ Ft 40.50

Static Head (Zmin) ~~26.65~~ Ft
~~26.65~~ Ft 27.59

Pump Hydraulics

Flowrate(gpm) (cfs)		22000	49.02	22000	49.02	22000	49.02					
		Pipe Number 1		Pipe Number 2		Pipe Number 3						
Sum K		0.25		0.25		1.51						
Pipe D(in)		24		26		30						
Pipe D(ft)		2		2.17		2.5						
HyRa(ft)		0.5		0.54		0.63						
Pipe Lenght(ft)		3.5		37.25		56						
		Minor HL(ft)	C-factor 120	Minor HL(ft)	C-factor 120	HL(ft)	C-factor 120					
Total Headloss	5.43	0.95	0.11	0.68	0.77	2.34	0.58					

TDH (MAX) ~~49.38~~ 45.93 Ft
HP(req) 322.7
TDH (MIN) ~~32.08~~ Ft 33.36

c:\wks_data\Santan_StormPumpSta.wb3

[redacted] Checked By:
Approved By:

Santan TI Storm Water Pump Station
Arizona Department of Transportation
Phoenix, Arizona

FLOW (GPM)	VELOCITY (FPS)				
	24"	30"	36"	42"	48"
22500	16	**10.2**	7.1	5.2	4
45000		19.3	14.2	9.8	8.4
67500			21.3	15.6	12
90000				20.8	16

The recommended design velocity should be in the range of 6.0 to 12.0 fps.

Revised 3/26/03

Preliminary Static Head Calculation: Santan Storm Water Pump Station
With One (1) Pump Running @ Low Level Water Surface Elevation

Weir Crest Elevation ~~1409.95~~ Ft
1408.50

Weir Crest Elevation (Max) ~~1409.95~~ Ft
1408.50

Low Level Pump Off Elevation 1368 ~~1366~~ Ft

High Level Max Elevation ~~1377~~ Ft
(Max. Water Surface) 1380.91

Static Head (Z max) ~~43.95~~ Ft
use ~~43.95~~ Ft
40.50

Static Head (Zmin) ~~32.95~~ Ft
~~32.95~~ Ft
27.59

Pump Hydraulics
Flowrate(gpm) (cfs) 24000 53.48 24000 53.48 24000 53.48

	Pipe Number 1		Pipe Number 2		Pipe Number 3					
Sum K	0.25		0.25		1.51					
Pipe D(in)	24		26		30					
Pipe D(ft)	2		2.17		2.5					
HyRa(ft)	0.5		0.54		0.63					
Pipe Lenght(ft)	3.5		37.25		56					
	Minor HL(ft)	C-factor 120	Minor HL(ft)	C-factor 120	HL(ft)	C-factor 120				
Total Headloss	6.44	1.12	0.13	0.81	0.91	2.78	0.69			

46.94
TDH (MAX) ~~50.39~~ Ft
TDH (MIN) ~~39.39~~ Ft
84.03

HP(req) 359.3

c:\wks_data\Santan_StormPumpSta.wb3

Checked By:
Approved By:

Santan TI Storm Water Pump Station
Arizona Department of Transportation
Phoenix, Arizona

FLOW (GPM)	VELOCITY (FPS)				
	24"	30"	36"	42"	48"
22500	16	**10.2**	7.1	5.2	4
45000		19.3	14.2	9.8	8.4
67500			21.3	15.6	12
90000				20.8	16

The recommended design velocity should be in the range of 6.0 to 12.0 fps.

Revised 3/26/03 ZLR

Preliminary Static Head Calculation: Santan Storm Water Pump Station
With One (1) Pump Running @ Low Level Water Surface Elevation

Weir Crest Elevation ~~1409.95~~ Ft
1408.50

Weir Crest Elevation (Max) ~~1409.95~~ Ft
1408.50

Low Level Pump Off Elevation 1368 ~~1366~~ Ft

High Level Max Elevation 1380.91 ~~1383.3~~ Ft
(Max Water Surface)

Static Head (Z max) ~~43.95~~ Ft
use ~~43.95~~ **Ft**
40.50

Static Head (Zmin) ~~26.65~~ Ft
~~26.65~~ **Ft**
27.59

Pump Hydraulics

Flowrate(gpm) (cfs)		26000	57.93	26000	57.93	26000	57.93					
		Pipe Number 1		Pipe Number 2		Pipe Number 3						
Sum K		0.25		0.25		1.51						
Pipe D(in)		24		26		30						
Pipe D(ft)		2		2.17		2.5						
HyRa(ft)		0.5		0.54		0.63						
Pipe Lenght(ft)		3.5		37.25		56						
		Minor HL(ft)	C-factor 120	Minor HL(ft)	C-factor 120	HL(ft)	C-factor 120					
Total Headloss	7.53	1.32	0.15	0.95	1.05	3.27	0.79					

TDH (MAX) 48.03 ~~51.48~~ **Ft** HP(req) 397.6
TDH (MIN) ~~34.18~~ **Ft**
35.12

c:\wks_data\Santan_StormPumpSta.wb3

Checked By:
Approved By:

Santan TI Storm Water Pump Station
Arizona Department of Transportation
Phoenix, Arizona

FLOW (GPM)	VELOCITY (FPS)				
	24"	30"	36"	42"	48"
22500	16	**10.2**	7.1	5.2	4
45000		19.3	14.2	9.8	8.4
67500			21.3	15.6	12
90000				20.8	16

The recommended design velocity should be in the range of 6.0 to 12.0 fps.

Preliminary Static Head Calculation: Santan Storm Water Pump Station
With One (1) Pump Running @ Low Level Water Surface Elevation

Weir Crest Elevation ~~1409.95~~ Ft
1408.50

Weir Crest Elevation (Max) ~~1409.95~~ Ft
1408.50

Low Level Pump Off Elevation 1368 ~~1366~~ Ft

High Level Max Elevation (Max Water Surface) 1380.91 ~~1383.3~~ Ft

Static Head (Z max) ~~43.95~~ Ft
use ~~43.95~~ **Ft**
40.50

Static Head (Zmin) 26.65 Ft
~~26.65~~ **Ft**
27.99

Pump Hydraulics
Flowrate(gpm) (cfs) 27000 60.16 27000 60.16 27000 60.16

	Pipe Number 1		Pipe Number 2		Pipe Number 3					
Sum K	0.25		0.25		1.51					
Pipe D(in)	24		26		30					
Pipe D(ft)	2		2.17		2.5					
HyRa(ft)	0.5		0.54		0.63					
Pipe Lenght(ft)	3.5		37.25		56					
	Minor HL(ft)	C-factor 120	Minor HL(ft)	C-factor 120	HL(ft)	C-factor 120				
Total Headloss 8.11	1.42	0.16	1.03	1.13	3.52	0.85				

TDH (MAX) 48.61 ~~52.06~~ Ft HP(req) 417.6
TDH (MIN) ~~34.70~~ Ft
35.70

c:\wks_data\Santan_StormPumpSta.wb3

CATERPILLAR®

Gas Industrial Engine

G3512

Standard and Low Emission

525-1005 hp

wt 13,760lbs.

SPECIFICATIONS

V-12, 4-Stroke-Cycle, Spark Ignited

Bore—in (mm)	6.7 (170)
Stroke—in (mm)	7.5 (190)
Displacement—cu in (L)	3,158 (51.8)
Compression Ratio	8:1, 9:1
Aspiration	Naturally Aspirated or Turbocharged-Aftercooled
Lube Oil Capacity — gal (L)	
STD	136 (515)
LE	81 (307)
Jacket Water System — gal (L)	
Capacity w/o Radiator	45 (170)

Shown with Optional Equipment

CATERPILLAR ENGINE FACILITIES ISO 9001 CERTIFIED

FEATURES

■ DIESEL STRENGTH

All Caterpillar® gas engines are built on diesel frames which means greater service life. Caterpillar gas engines inherit more from their diesel counterparts than just strength. They are backed by the same support system recognized as one of the most sophisticated and dependable in the world.

■ APPLICATION FLEXIBILITY

Broad operating speed range and ability to burn a wide spectrum of gaseous fuels.

■ LOW EMISSIONS

Low emission engines are capable of NO(x) levels as low as 2.0 grams/hp-hr.

■ CATERPILLAR® GAS ENGINES

Represent the latest technology in engine design. Engines are offered in both naturally aspirated and turbocharged/aftercooled configurations. TA is offered as standard and low emission. These different configurations offer:

- High energy ignition systems for consistent firing
- High efficient combustion chamber for complete burning of the fuel.
- Modern component design such as deep cup, oil gallery piston.

■ DETONATION SENSITIVE TIMING

Low emission engines and standard engines with electronic ignition system include automatic timing control for continuous detonation protection.

CATERPILLAR®

G3512 GAS INDUSTRIAL ENGINE

STANDARD EQUIPMENT

Air cleaners
  single stage, dry, with service indicator
Breather, crankcase
Carburetor
  natural gas
Cooler
  lubricating oil
Filter
  lubricating oil, RH
Flywheel housing
  SAE No. 00
Governor
  Woodward
Ignition system
  Altronic III or Caterpillar electronic ignition system
Instrument panel, RH
  8 gauge panel (STD)
  12 gauge panel (LE)
  oil pressure
  coolant temperature
  oil pressure differential
  intake manifold
    temp (TA only)
    pressure (LE)
  service meter
  exhaust pyrometer (LE)
Lifting eyes
Manifold, exhaust
  watercooled
Pumps, gear driven
  aftercooler water (TA only)
  jacket water
Rails, mounting, 10 in.
Regulator, gas pressure
SAE standard rotation
Thermostats and housing
Torsional vibration damper

OPTIONAL EQUIPMENT

Air to air aftercooler connection
Air head for 3161
Cooling systems
  high temp (LE only)
CSA ignition
Exhaust fittings
Low pressure gas conversion
Muffler
Power takeoffs
Starting systems
Tachometer

CONTINUOUS RATINGS (bhp)

Aspiration	1400 rpm	1200 rpm	1100 rpm	1000 rpm	900 rpm	800 rpm	700 rpm
LE TA-90, 8:1	1005	860	790	720	650	575	500
LE TA-130, 8:1	945	810	745	675	610	540	475
STD TA-90, 9:1	–	815	745	675	610	540	475
STD TA-130, 9:1	–	790	725	660	595	530	460
STD NA, 9:1	–	525	485	440	395	370	320

PHYSICAL FACTORS

	Height in (mm)	Width in (mm)	Length in (mm)	Weight lb (kg)
LE TA	73.4 (1863)	67.1 (1703)	110 (2788)	14,650 (6651)
STD TA	73.4 (1863)	67.1 (1703)	110 (2788)	14,450 (6560)
STD NA	75.2 (1911)	64.7 (1642)	105 (2671)	13,400 (6084)

CATERPILLAR®

FUEL CONSUMPTION

LE TA-90

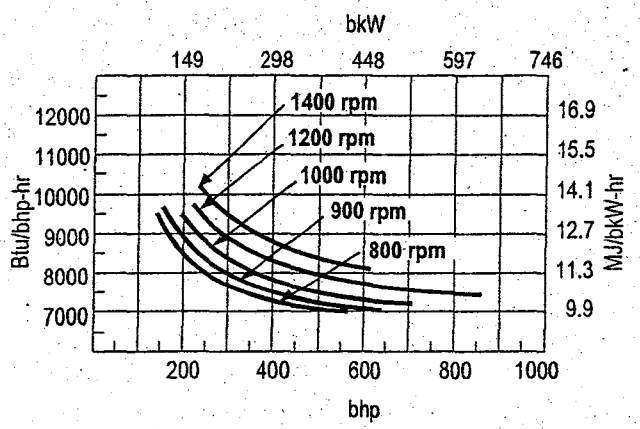

LE TA-130

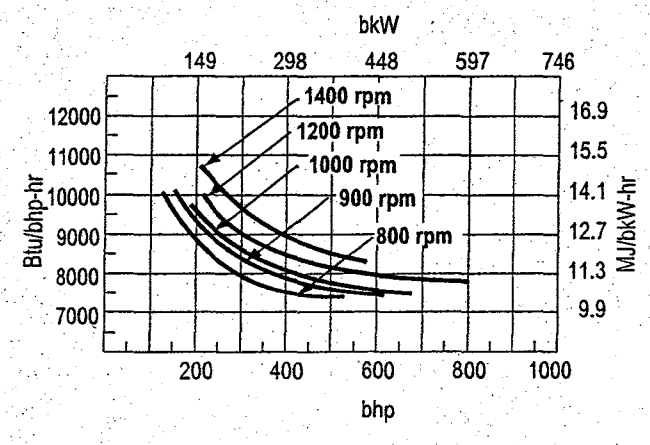

STD TA-90

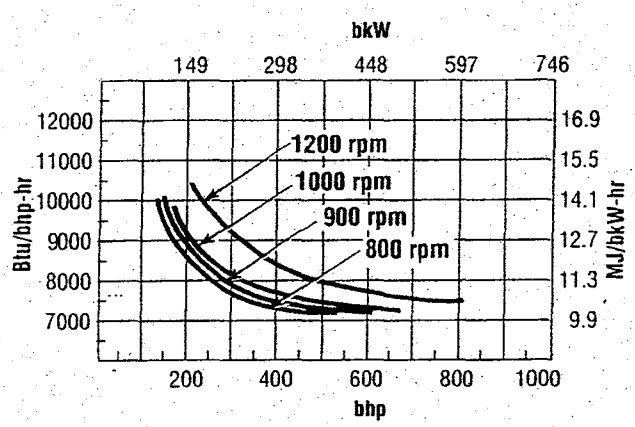

STD TA-130

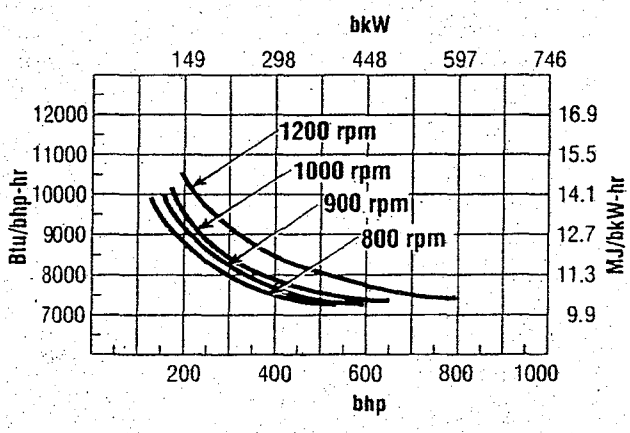

STD NA

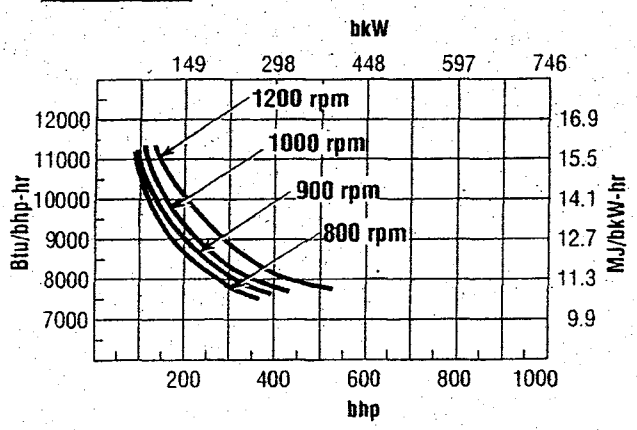

LE refers to low emission engine configuration.
STD refers to standard engine configuration.
90 refers to aftercooler water inlet temperature in 90° F (32° C).
130 refers to aftercooler water inlet temperature in 130° F (54° C).
All data is based on standard conditions. 77° F (25° C) 500 ft Alt.
These ratings do not allow for overload capability.

GAS INDUSTRIAL ENGINE

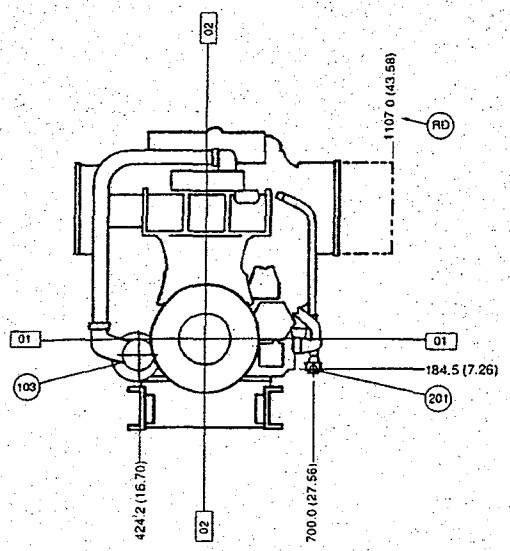

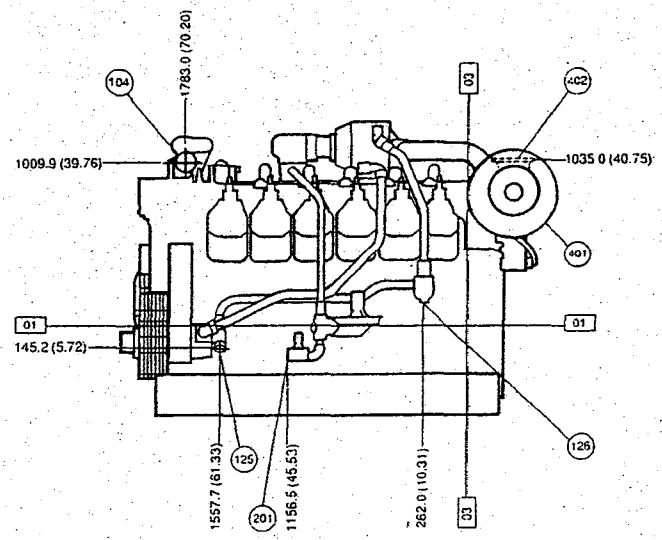

01	Centerline of Crankshaft	104	Jacket Water Outlet	401	Air Inlet
02	Centerline of Engine	125	Aftercooler Water Inlet	402	Exhaust
03	Rear Face of Cylinder Block	126	Aftercooler Water Outlet	RD	Removal Distance
103	Jacket Water Inlet	201	Fuel Inlet		

See General Dimension Drawing 7W4444 for additional detail and NA information

Note: General configuration not to be used for installation.

RATING CONDITIONS AND DEFINITIONS

Ratings are based on SAE J1349 standard conditions of 29.61 in-Hg (100 kPa) and 77° F (25° C) ISO3046, DIN6271, BS5514. Standard conditions of 29.61 in-Hg (100 kPa) 81° F (27° C) and API 7B-11C standard conditions of 29.38 in-Hg (99 kPa) and 85° F (29° C) also apply.

Ratings are based on dry natural gas having an LHV (low heat valve) of 905 btu/cu ft (35.22 MJ/N m³). Variations in altitude, temperature, and gas composition from standard conditions may require a reduction in engine horsepower.

Turbocharged-aftercooled ratings apply to 5,000 ft (1525 m) and 77° F (25° C). For applications which exceed these limits contact your Caterpillar dealer. Naturally aspirated engines apply to 500 ft (150 m) and 85° F (29° C). For applications above these limits derate 3% per 1000 ft (305 m) and 1.86% per 10° F (5.6° C).

© 1995 Caterpillar

Stanley Consultants INC

Project No. _____ Page No. _____

Subject Price Baseline To Elliot Pump Station

Computed by RSP Date _____

Checked by _____ Date _____

Approved by _____ Date _____

Sheet No. _____ of _____

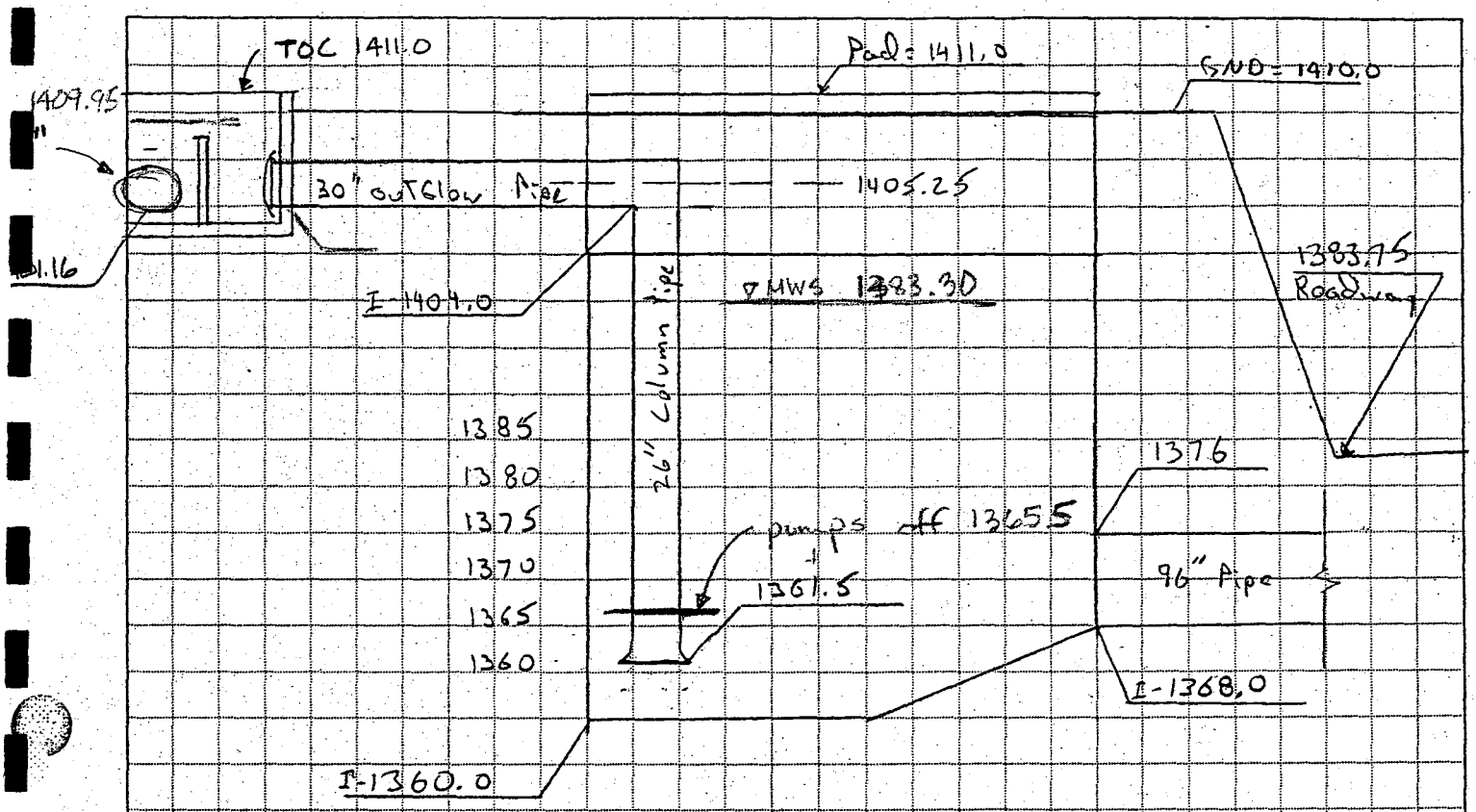

Wet Well + Pump Station Layout

WSEL	Static Head	Q	System H
1365	40.25'	35.65	2.27
1370	35.25'	40.11	2.87
1375	30.25'	44.56	3.54
1380	25.25'	49.02	4.29
1385	20.25'	53.48	5.10
		57.53	5.99
		63.39	6.94
		66.84	7.97

SC 3004R4 898

Culvert Design Report
N/A

Solve For: Headwater Elevation

Culvert Summary					
Allowable HW Elevation	N/A	ft	Storm Event	Design	
Computed Headwater Elev	1,407.18	ft	Discharge	182.00	cfs
Headwater Depth/Height	1.00		Tailwater Elevation	1,405.00	ft
Inlet Control HW Elev.	1,406.79	ft	Control Type	Entrance Control	
Outlet Control HW Elev.	1,407.18	ft			

Grades					
Upstream Invert	1,401.16	ft	Downstream Invert	1,400.79	ft
Length	75.00	ft	Constructed Slope	0.004933	ft/ft

Hydraulic Profile					
Profile	CompositeS1S2		Depth, Downstream	4.21	ft
Slope Type	Steep		Normal Depth	3.39	ft
Flow Regime	N/A		Critical Depth	3.68	ft
Velocity Downstream	8.59	ft/s	Critical Slope	0.003825	ft/ft

Section					
Section Shape	Circular		Mannings Coefficient	0.013	
Section Material	Concrete		Span	6.00	ft
Section Size	72 inch		Rise	6.00	ft
Number Sections	1				

Outlet Control Properties					
Outlet Control HW Elev.	1,407.18	ft	Upstream Velocity Head	1.56	ft
Ke	0.50		Entrance Loss	0.78	ft

Inlet Control Properties					
Inlet Control HW Elev.	1,406.79	ft	Flow Control	Unsubmerged	
Inlet Type	Square edge w/headwall		Area Full	28.3	ft^2
K	0.00980		HDS 5 Chart	1	
M	2.00000		HDS 5 Scale	1	
C	0.03980		Equation Form	1	
Y	0.67000				

Performance Curves Report
Trial-1

Range Data:				
	Minimum	Maximum	Increment	
Discharge	0.00	200.00	20.00	cfs

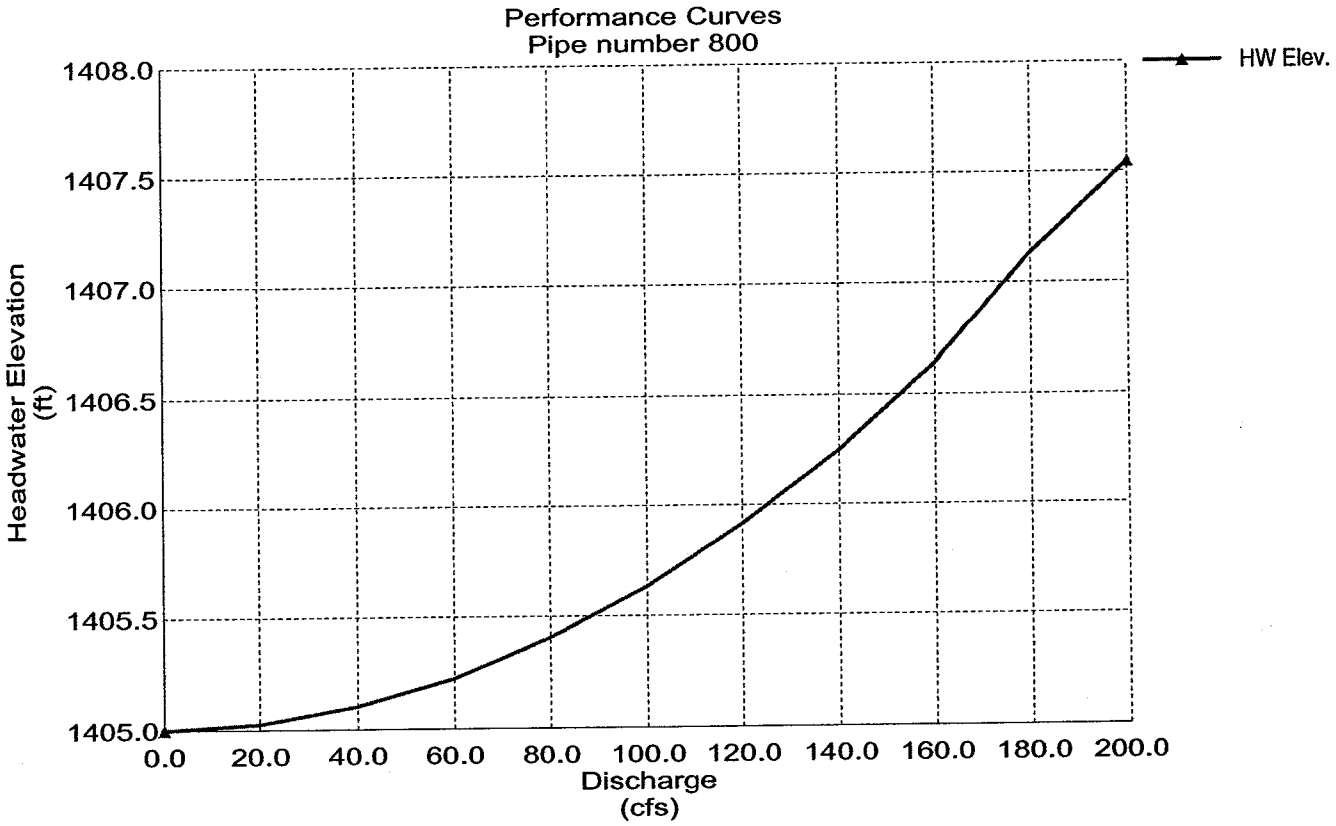

APPENDIX H PUMP STATION HYDROGRAPH ROUTING ANALYSIS

INFLOW HYDROGRAPH

Santan Freeway - SR 202L Baseline to Elliot - Baumgardner Inflow Hydrograph

Stanley Consultants INC. ADOT

SCI Proj # : 16110

Designed By: BNS Date: 3-25-03
Checked By: [illegible] Date: 4-3-03
Approved By: Date:

BAUMGARDNER METHOD II FOR DETERMINING DESIGN INFLOW HYDROGRAPHS
RATIONAL EQUATION/SCS HYDROGRAPH METHOD

Tabular Hydrograph Unit Discharges (qp) For Type II Distribution
Tc = 0.2 hr, Tt = 0 hr and IA/P = 0.10 Used To Determine q_p

K = 0.263

Q = (q_p)(K)

Time (hrs)	Time (hrs)	Tc=.2 qp (csm/in)	Q (cfs)	Average Q (cfs)	Incremental Volume (cf)	Cumulative Volume (cf)	Time (hrs)
11.0	0.0	23	6	-	-	-	0.0
11.3	0.3	31	8	7.1	7669	7669	0.3
11.6	0.6	47	12	10.3	11078	18747	0.6
11.9	0.9	209	55	33.7	36357	55104	0.9
12.0	1.0	403	106	80.5	28972	84076	1.0
12.1	1.1	739	194	150.2	54062	138138	1.1
12.2	1.2	800	210	202.4	72856	210994	1.2
12.3	1.3	481	127	168.5	60643	271637	1.3
12.4	1.4	250	66	96.1	34606	306242	1.4
12.5	1.5	166	44	54.7	19693	325936	1.5
12.6	1.6	128	34	38.7	13918	339854	1.6
12.7	1.7	102	27	30.2	10888	350742	1.7
12.8	1.8	86	23	24.7	8900	359642	1.8
13.0	2.0	70	18	20.5	14770	374412	2.0
13.2	2.2	61	16	17.2	12403	386815	2.2
13.4	2.4	54	14	15.1	10888	397703	2.4
13.6	2.6	49	13	13.5	9752	407455	2.6
13.8	2.8	44	12	12.2	8805	416261	2.8
14.0	3.0	40	11	11.0	7953	424214	3.0
14.3	3.3	35	9	9.9	10652	434865	3.3
14.6	3.6	33	9	8.9	9657	444523	3.6
15.0	4.0	30	8	8.3	11930	456452	4.0
15.5	4.5	27	7	7.5	13492	469944	4.5
16.0	5.0	24	6	6.7	12072	482016	5.0
16.5	5.5	21	6	5.9	10652	492667	5.5

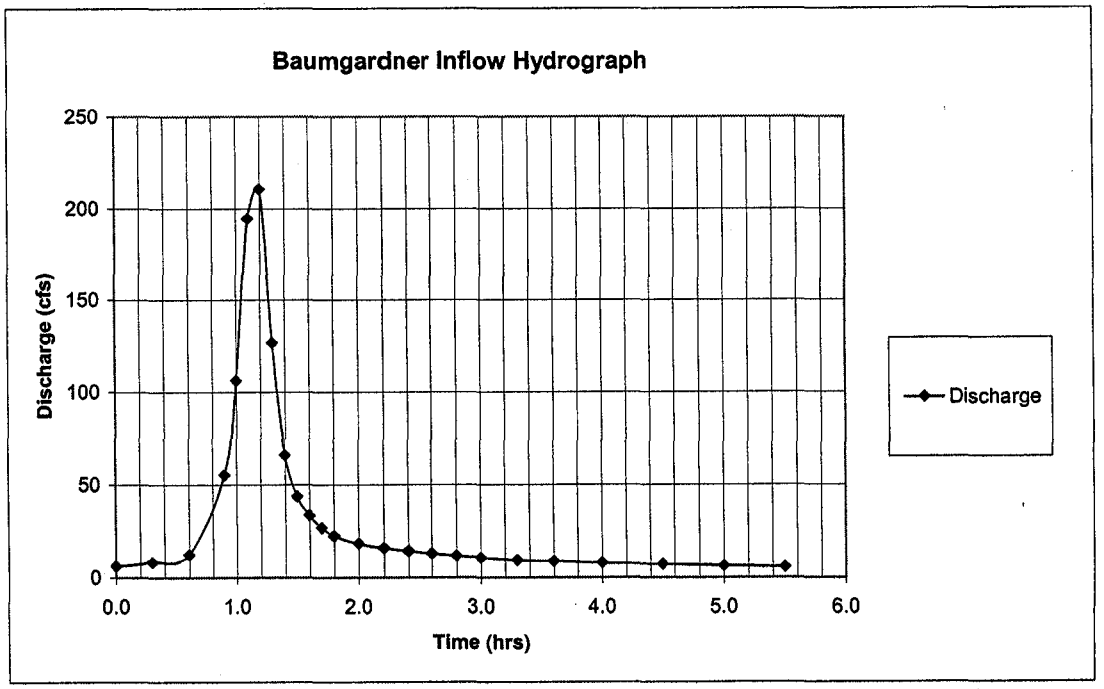

Stanley Consultants INC.

Project No. 16110 Page No.

Subject SR 202L PUMP STATION INFLOW HYDROGRAPH

Computed by B SCHALK Date 2-14-03

Checked by [illegible] Date 4-3-03

Approved by Date

Sheet No. 1 of 7

BAUMGARDNER METHOD II UTILIZED FOR DETERMINING DESIGN INFLOW HYDROGRAPH.

METHOD II FOUND IN ADOT'S STORM WATER PUMP STATION DESIGN DOCUMENTS, 1991.

METHOD II:

RATIONAL EQ = PEAK FLOW RATE SCS METHOD

$$Q = q_{peak}(DA)(Q)$$

WHERE:

q_{peak} = PEAK VALUE OF q_p

q_p TAKEN FROM TABULAR HYDROGRAPH UNIT DISCHARGES ($\frac{csm}{in}$) FOR SCS TYPE II RAINFALL DISTRIBUTION

DA = DRAINAGE AREA

Q = RATIONAL EQ. PEAK DISCHARGE

AND:

AFTER CALCULATING Q BY RATIONAL RATIONAL EQ, Q & DA ARE KNOWN

THUS:

$$Q = q_{peak}(DA)(Q) = q_{peak}(K)$$

$$K = \frac{Q}{q_{peak}}$$; Q & q_{peak} MUST BE BASED ON THE SAME TIME OF CONCENTRATION

SC 3004R4 898

Stanley Consultants INC.

Project No. 16110 Page No.
Subject SR 202L PUMP STATION INFLOW HYDROGRAPH

Computed by B SCHALK Date 2-14-03
Checked by [illegible] Date 4-3-03
Approved by Date

Sheet No. 2 of 7

THUS CONT.:

K = EQUIVALENT COEFFICIENT;

ONCE K VALUE HAS BEEN DETERMINED, OTHER q_p FROM SCS TYPE II CAN BE MULTIPLIED BY K TO CONSTRUCT THE INFLOW HYDROGRAPH

RATIONAL METHOD PEAK DISCHARGE, Q:

$Q = C i A$

WHERE:

Q = PEAK DISCHARGE (CFS)
C = RUNOFF COEFFICIENT
i = AVG RAINFALL INTENSITY (IN/HR) OF CALCULATED RAINFALL DURATION FOR SELECTED RAINFALL RETURN PERIOD
A = CONTRIBUTING DRAINAGE AREA (ACRES)

AND:

VALUES OF C AND A ARE TAKEN FROM STORMCAD (SEE ATTACHED):
- TITLE: SANTAN FREEWAY-BASELINE TO ELLIOT
- PATH 1: Q:\16110\DRAINAGE\STORMCAD\PUMPSTATIONSOUTH.STM
- PATH 2: Q:\16110\DRAINAGE\STORMCAD\PUMPSTATIONNORTH.STM

SC 3004R4 898

Stanley Consultants INC.

Project No. 16110 Page No.
Subject SR 202L PUMP STATION
INFLOW HYDROGRAPH

Computed by B SCHALK Date 2-17-03
Checked by [illegible] Date 4-3-03
Approved by Date
Sheet No. 3 of 7

RATIONAL EQ CONT:

AT STORMCAD NODE MH 300:
CA = 14.290 AC

AT STORMCAD NODE MH 501:
CA = 20.856 AC

14.290 + 20.856 = 35.146 AC

CA = 35.1 AC

THE INTENSITY, i, USED IN THE RATIONAL EQUATION IS BASED ON A 50-YR, 10-MIN RAINFALL EVENT. THE 10-MIN DURATION IS EQUAL TO THE ASSUMED TIME OF CONCENTRATION. AN I-D-F CURVE WAS CONSTRUCTED, BASED ON THE ADOT METHODOLOGY, IN ORDER TO DETERMINE THE 50-YR, 10-MIN RAINFALL INTENSITY. SEE ATTACHED I-D-F CALCS.

50-YR, 10-MIN i = 5.87 IN/HR

Q = CiA = (5.87)(35.1) = 206 CFS

USE Q = 210 CFS (RATIONAL EQ. Q)

NOTES: ① 10-MIN DURATION IS ADOT MIN DURATION (DRAINAGE DESIGN MANUAL, SEC 2.2.4) AND PRODUCES MOST CONSERVATIVE RATIONAL EQ. PEAK Q.

② SUB-BASIN AREAS USED FOR STORMCAD AND RATIONAL EQ ATTACHED.

SC 3004R4 898

Stanley Consultants INC.

Project No. 16110 Page No.

Subject SR 202L PUMP STATION INFLOW HYDROGRAPH

Computed by B SCHALK Date 2-18-03

Checked by AD Date 4-3-03

Approved by Date

Sheet No. 4 of 7

DETERMINATION OF APPROPRIATE SCS TYPE II HYDROGRAPH UNIT DISCHARGES TO UTILIZE FOR RAUN GARTNER METHOD II:

VALUES OF TIME OF CONCENTRATION (T_c) AND TRAVEL TIME (T_t) DETERMINED BY ROUNDING METHOD (USDA TR-55, CHAP. 5)

	ACTUAL VALUES	TABLE VALUES BY ROUNDING METHOD		
		1	2	3
T_c	.167	.2	.1	.2
T_t	0	0	0	0
SUM	.167	.2	.1	.2

∴ BECAUSE .2 APPROXIMATES .167 BETTER THAN .1, USE T_c = .2 AND T_t = 0 FOR SELECTING APPROPRIATE SCS TYP II UNIT HYDROGRAPH.

NOTES: ① T_c = 10 MIN = .167 HR (ADOT MIN)
② NO ROUTING OF DOWNSTREAM SUBAREA C2, THUS T_t = 0 HR

THE SCS TYP II VALUE OF I_a/P WAS ASSUMED TO BE 0.10 IN ORDER TO REFLECT MINIMAL INITIAL ABSTRACTION AND MAXIMUM RUNOFF.

VALUES USED TO SELECT APPROPRIATE TABULAR HYDROGRAPH UNIT DISCHARGES FOR SCS TYPE II RAINFALL DISTRIBUTION:

T_c = 0.2 HR
T_t = 0.0 HR
I_a/P = 0.10

(SEE ATTACHED TR-55, 2ND EDITION, EXHIBIT 5-II)

SC 3004R4 898

Stanley Consultants INC.

Project No. 16110 Page No.

Subject SR 202L PUMP STATION INFLOW HYDROGRAPH

Computed by B SCHALK Date 2-18-03

Checked by CA Date 4-3-03

Approved by Date

Sheet No. 5 of 7

CALCULATION OF EQUIVALENT COEFFICIENT, K, USED WITH SCS TYPE II UNIT HYDROGRAPH TO CONSTRUCT INFLOW HYDROGRAPH:

$$K = \frac{Q}{q_{peak}}$$ WHERE;

Q = RATIONAL Q = 210 CFS

q_{peak} = PEAK UNIT HYDROGRAPH DISCHARGE = 800 csm/IN

$$K = \frac{210}{800} = 0.263$$

NOTES:

① NO DIMENSIONAL UNITS ARE USED SINCE K IS STRICTLY A SHAPE FACTOR

② q_{peak} FROM SCS TYPE II RAINFALL DISTRIBUTION UNIT HYDROGRAPH WITH T_L = 12 HR, T_a = 0 HR AND $\frac{I_a}{P}$ = 0.10

SC 3004R4 898

Project #	16110
Subject	SR 202L Pump Station Inflow Hydrograph
Date	2/18/2003
Computed By	B. Schalk
Checked By	
Sheet No.	6 of 7

BAUMGARDNER METHOD II FOR DETERMINING DESIGN INFLOW HYDROGRAPHS
RATIONAL EQUATION/SCS HYDROGRAPH METHOD

Tabular Hydrograph Unit Discharges (qp) For Type II Distribution With Tc = 0.2 hr, Tt = 0 hr, IA/P = 0.10 Used To Determine q_p

K = 0.263

Inflow Q = $(q_p)(K)$

Time (hours)	Time Increment (hours)	Elapsed Time (hours)	qp (csm/in)	Inflow Q (cfs)	Average Inflow (cfs)	Incremental Mass Curve (1000 cf)	Cumulative Mass Curve (1000 cf)
11	0	0	23	6.05			
11.3	0.3	0.3	31	8.15	7.10	7.66908	7.66908
11.6	0.3	0.6	47	12.36	10.26	11.07756	18.74664
11.9	0.3	0.9	209	54.97	33.66	36.35712	55.10376
12	0.1	1	403	105.99	80.48	28.97208	84.07584
12.1	0.1	1.1	739	194.36	150.17	54.06228	138.13812
12.2	0.1	1.2	800	210.40	202.38	72.85626	210.99438
12.3	0.1	1.3	481	126.50	168.45	60.64254	271.63692
12.4	0.1	1.4	250	65.75	96.13	34.60554	306.24246
12.5	0.1	1.5	166	43.66	54.70	19.69344	325.9359
12.6	0.1	1.6	128	33.66	38.66	13.91796	339.85386
12.7	0.1	1.7	102	26.83	30.25	10.8882	350.74206
12.8	0.1	1.8	86	22.62	24.72	8.89992	359.64198
13	0.2	2	70	18.41	20.51	14.77008	374.41206
13.2	0.2	2.2	61	16.04	17.23	12.40308	386.81514
13.4	0.2	2.4	54	14.20	15.12	10.8882	397.70334
13.6	0.2	2.6	49	12.89	13.54	9.75204	407.45538
13.8	0.2	2.8	44	11.57	12.23	8.80524	416.26062
14	0.2	3	40	10.52	11.05	7.95312	424.21374
14.3	0.3	3.3	35	9.21	9.86	10.6515	434.86524
14.6	0.3	3.6	33	8.68	8.94	9.65736	444.5226
15	0.4	4	30	7.89	8.28	11.92968	456.45228
15.5	0.5	4.5	27	7.10	7.50	13.4919	469.94418
16	0.5	5	24	6.31	6.71	12.0717	482.01588
16.5	0.5	5.5	21	5.52	5.92	10.6515	492.66738
17	0.5	6	20	5.26	5.39	9.7047	502.37208
17.5	0.5	6.5	19	5.00	5.13	9.2313	511.60338
18	0.5	7	18	4.73	4.87	8.7579	520.36128
19	1	8	16	4.21	4.47	16.0956	536.45688
20	1	9	13	3.42	3.81	13.7286	550.18548
22	2	11	12	3.16	3.29	23.67	573.85548
26	4	15	0	0.00	1.58	22.7232	596.57868

Pipe Report

Pipe	Upstream Node	Downstream Node	Average Velocity (ft/s)	Total CA (acres)	System Intensity (in/hr)	System Flow Time (min)	Discharge (cfs)	Length (ft)	Constructed Slope (ft/ft)	Section Size	Roughness	Upstream Invert Elevation (ft)	Downstream Invert Elevation (ft)	Upstream HGL (ft)	Downstream HGL (ft)
P-501	MH 501	MH 500	2.42	20.856	5.78	10.53	121.46	195.00	0.002000	96 inch	0.013	1,369.00	1,368.61	1,381.32	1,381.29
P-502	MH 502	Jct 516	5.82	19.325	5.87	9.75	114.34	178.03	0.004999	60 inch	0.013	1,373.40	1,372.51	1,382.01	1,381.66
P-502A	Jct 516	MH 501	6.24	20.856	5.82	10.26	122.46	101.99	0.005000	60 inch	0.013	1,372.51	1,372.00	1,381.62	1,381.40
P-503	MH 503	JCT 524	6.03	16.219	5.87	8.93	95.97	101.64	0.005018	54 inch	0.013	1,375.42	1,374.91	1,382.89	1,382.65
P-503A	JCT 524	Jct 523	6.16	16.569	5.87	9.21	98.04	160.31	0.004990	54 inch	0.013	1,374.91	1,374.11	1,382.61	1,382.21
P-503B	Jct 523	MH 502	6.43	17.279	5.87	9.64	102.24	41.96	0.005005	54 inch	0.013	1,374.11	1,373.90	1,382.17	1,382.06
P-504	MH 504	MH 503	8.35	13.570	5.87	8.20	80.29	365.45	0.009933	42 inch	0.012	1,380.05	1,376.42	1,384.95	1,382.96
P-505	MH 505	Jct 530	9.27	11.078	5.87	7.82	65.55	37.97	0.011588	36 inch	0.012	1,383.18	1,382.74	1,387.62	1,387.30
P-505A	Jct 530	Jct 529	9.58	11.440	5.87	7.89	67.69	98.82	0.011637	36 inch	0.012	1,382.74	1,381.59	1,387.14	1,386.27
P-505B	Jct 529	MH 504	10.78	12.879	5.87	8.06	76.21	89.97	0.011559	36 inch	0.012	1,381.59	1,380.55	1,386.08	1,385.08
P-506	MH 506	MH 505	7.03	8.404	5.87	6.95	49.72	83.88	0.011564	36 inch	0.012	1,384.15	1,383.18	1,388.92	1,388.52
P-507	MH 507	MH 506	9.66	8.017	5.87	6.78	47.44	99.10	0.011604	30 inch	0.012	1,385.80	1,384.65	1,390.57	1,389.44
P-508	MH 508	MH 507	7.55	5.762	5.87	6.18	34.10	272.18	0.016460	30 inch	0.012	1,390.28	1,385.80	1,392.27	1,390.91
P-509	CB 509	MH 508	10.30	5.067	5.87	5.66	29.98	319.21	0.014661	24 inch	0.012	1,395.46	1,390.78	1,397.32	1,392.44
P-510	MH 510	CB 509	3.60	1.227	5.87	3.79	7.26	403.85	0.017754	24 inch	0.012	1,402.63	1,395.46	1,403.59	1,397.77
P-511	CB 511	MH 510	4.40	1.227	5.87	3.00	7.26	208.99	0.008804	24 inch	0.012	1,404.47	1,402.63	1,405.43	1,403.77
P-512	CB 512	CB 511	0.00	0.000	0.00	0.00	0.00	73.00	0.006027	24 inch	0.012	1,404.91	1,404.47	1,405.61	1,405.61
P-516	CB 516	Jct 516	2.88	1.531	5.87	3.00	9.06	10.07	0.694141	24 inch	0.012	1,379.50	1,372.51	1,381.67	1,381.66
P-517	CB 517	MH 502	3.85	2.046	5.87	5.10	12.11	10.00	0.013000	24 inch	0.012	1,378.35	1,378.22	1,382.53	1,382.50
P-518	CB 518	CB 517	3.44	1.825	5.87	4.55	10.80	114.21	0.012871	24 inch	0.012	1,379.82	1,378.35	1,382.85	1,382.63
P-519	CB 519	CB 518	2.24	1.190	5.87	3.37	7.04	57.21	0.005768	24 inch	0.012	1,380.15	1,379.82	1,383.00	1,382.95
P-520	CB 520	CB 519	3.45	1.132	5.87	3.00	6.70	77.00	0.032597	24 inch	0.012	1,382.66	1,380.15	1,383.58	1,383.07
P-521	CB 521	CB 518	0.73	0.389	5.87	3.00	2.30	68.25	0.004982	24 inch	0.012	1,380.16	1,379.82	1,382.89	1,382.89
P-523	CB 523	Jct 523	1.34	0.710	5.87	3.00	4.20	11.23	0.349065	24 inch	0.012	1,378.03	1,374.11	1,382.19	1,382.19
P-524	CB 524	JCT 524	0.66	0.350	5.87	3.00	2.07	12.30	0.279675	24 inch	0.012	1,378.35	1,374.91	1,382.62	1,382.62
P-525	CB 525	MH 503	4.99	2.649	5.87	4.42	15.67	10.00	0.022000	24 inch	0.012	1,378.89	1,378.67	1,383.46	1,383.42
P-526	CB 526	CB 525	1.29	0.687	5.87	3.00	4.06	110.00	0.022364	24 inch	0.012	1,381.35	1,378.89	1,383.55	1,383.52
P-527	CB 527	MH 504	2.70	0.691	5.87	3.00	4.09	120.00	0.034750	24 inch	0.012	1,385.72	1,381.55	1,386.43	1,385.89
P-529	CB 529	Jct 529	3.93	1.440	5.87	3.00	8.52	63.19	0.060294	24 inch	0.012	1,385.40	1,381.59	1,386.44	1,386.23
P-530	CB 530	Jct 530	0.68	0.361	5.87	3.00	2.14	53.21	0.043977	24 inch	0.012	1,385.08	1,382.74	1,387.18	1,387.17
P-531	CB 531	Jct 534	5.20	1.982	5.87	7.15	11.73	99.63	0.042859	24 inch	0.012	1,393.39	1,389.12	1,394.62	1,390.63
P-531A	Jct 534	MH 505	5.80	2.675	5.87	7.47	15.83	120.00	0.042750	24 inch	0.012	1,389.12	1,383.99	1,390.55	1,388.85
P-532	CB 532	CB 531	3.23	0.811	5.87	3.62	4.80	100.17	0.004992	24 inch	0.012	1,393.89	1,393.39	1,394.66	1,394.72
P-533	CB 533	CB 532	3.89	0.712	5.87	3.00	4.22	145.47	0.005568	24 inch	0.012	1,394.70	1,393.89	1,395.42	1,394.68
P-534	CB 534	Jct 534	2.85	0.693	5.87	3.00	4.10	144.05	0.010205	24 inch	0.012	1,390.59	1,389.12	1,391.30	1,390.64

Pipe Report

Pipe	Upstream Node	Downstream Node	Average Velocity (ft/s)	Total CA (acres)	System Intensity (in/hr)	System Flow Time (min)	Discharge (cfs)	Length (ft)	Constructed Slope (ft/ft)	Section Size	Roughness	Upstream Invert Elevation (ft)	Downstream Invert Elevation (ft)	Upstream HGL (ft)	Downstream HGL (ft)
* P-300	MH 300	Jct 317	1.68	14.290	5.87	9.26	84.6	334.00	0.0020	96 inch	0.013	1,369.38	1,368.72	1,381.64	1,381.61
P-300A	Jct 317	Jct 316	1.66	15.259	5.42	12.57	83.4	46.01	0.0020	96 inch	0.013	1,368.72	1,368.63	1,381.61	1,381.61
P-300B	Jct 316	MH 500	1.68	15.669	5.34	13.03	84.4	8.00	0.0020	96 inch	0.013	1,368.63	1,368.61	1,381.60	1,381.60
P-301	MH 301	MH 300	9.81	11.253	5.87	8.88	66.6	223.00	0.0050	36 inch	0.012	1,381.84	1,380.72	1,385.41	1,383.33
P-302	MH 302	Jct 322	8.17	9.756	5.87	8.21	57.7	30.03	0.0050	36 inch	0.012	1,383.52	1,383.37	1,388.05	1,387.86
P-302A	Jct 322	Jct 321	8.25	9.861	5.87	8.27	58.3	81.05	0.0050	36 inch	0.012	1,383.37	1,382.97	1,387.77	1,387.24
P-302B	Jct 321	MH 301	8.50	10.153	5.87	8.43	60.1	226.15	0.0050	36 inch	0.012	1,382.97	1,381.84	1,387.14	1,385.58
P-303	MH 303	MH 302	6.23	5.171	5.87	8.09	30.6	45.61	0.0070	30 inch	0.012	1,385.31	1,385.00	1,389.19	1,388.97
P-304A	MH 304	Jct 325	5.12	4.245	5.87	7.44	25.1	77.24	0.0070	30 inch	0.012	1,386.81	1,386.27	1,390.74	1,390.49
P-304B	Jct 325	Jct 324	5.38	4.463	5.87	7.69	26.4	54.03	0.0070	30 inch	0.012	1,386.27	1,385.89	1,390.44	1,390.25
P-304C	Jct 324	Jct 323	5.84	4.849	5.87	7.86	28.7	62.75	0.0070	30 inch	0.012	1,385.89	1,385.46	1,390.18	1,389.92
P-304D	Jct 323	MH 303	6.23	5.171	5.87	8.03	30.6	20.11	0.0070	30 inch	0.012	1,385.46	1,385.31	1,389.85	1,389.75
P-305	CB 305	MH 304	4.63	3.837	5.87	6.87	22.7	156.06	0.0070	30 inch	0.012	1,387.91	1,386.81	1,391.21	1,390.80
P-306	CB 306	CB 305	6.49	3.445	5.87	6.45	20.4	165.07	0.0070	24 inch	0.012	1,389.56	1,388.41	1,392.40	1,391.26
P-307	CB 307	CB 306	4.82	2.561	5.87	5.09	15.2	395.01	0.0035	24 inch	0.012	1,390.95	1,389.56	1,394.01	1,392.49
P-308	CB 308	CB 307	2.87	1.525	5.87	4.00	9.0	187.01	0.0035	24 inch	0.012	1,391.60	1,390.95	1,394.62	1,394.36
P-309	CB 309	MH 302	3.84	4.586	5.87	6.35	27.1	224.78	0.0050	36 inch	0.012	1,384.65	1,383.52	1,389.29	1,388.97
P-310	CB 310	CB 309	5.17	2.747	5.87	6.14	16.3	65.08	0.0070	24 inch	0.012	1,386.10	1,385.65	1,389.79	1,389.50
P-311	CB 311	CB 310	4.02	2.135	5.87	5.43	12.6	172.17	0.0070	24 inch	0.012	1,387.31	1,386.10	1,390.30	1,389.85
P-312	CB 312	CB 311	3.20	1.701	5.87	4.75	10.1	130.18	0.0070	24 inch	0.012	1,388.22	1,387.31	1,390.56	1,390.34
P-313	CB 313	CB 312	2.66	1.304	5.87	4.00	7.7	120.04	0.0070	24 inch	0.012	1,389.06	1,388.22	1,390.66	1,390.58
P-314	CB 314	CB 309	3.00	1.594	5.87	4.66	9.4	66.91	0.0063	24 inch	0.012	1,386.07	1,385.65	1,389.60	1,389.50
P-315	CB 315	CB 314	2.91	1.545	5.87	4.00	9.1	115.00	0.0075	24 inch	0.012	1,386.93	1,386.07	1,389.78	1,389.62
P-316	CB 316	Jct 316	0.86	0.410	5.87	4.00	2.4	9.78	1.1722	24 inch	0.012	1,380.09	1,368.63	1,381.60	1,381.61
P-317	CB 317	Jct 317	3.18	0.969	5.87	4.00	5.7	10.00	1.1952	24 inch	0.012	1,380.67	1,368.72	1,381.52	1,381.61
P-318	CB 318	MH 300	6.81	3.036	5.87	4.63	18.0	10.00	0.0050	24 inch	0.012	1,381.61	1,381.56	1,383.22	1,383.09
P-319	CB 319	CB 318	4.60	1.742	5.87	4.00	10.3	175.01	0.0050	24 inch	0.012	1,382.49	1,381.61	1,383.64	1,383.27
P-320	CB 320	MH 301	3.40	1.100	5.87	4.00	6.5	53.34	0.1669	24 inch	0.012	1,390.74	1,381.84	1,391.64	1,385.50
P-321	CB 321	Jct 321	1.88	0.292	5.87	4.00	1.7	38.93	0.1028	24 inch	0.012	1,386.97	1,382.97	1,387.43	1,387.16
P-322	CB 322	Jct 322	0.20	0.105	5.87	4.00	0.6	34.91	0.0363	24 inch	0.012	1,384.64	1,383.37	1,387.77	1,387.77
P-323	CB 323	Jct 323	0.61	0.322	5.87	4.00	1.9	10.54	0.0104	24 inch	0.012	1,386.25	1,386.14	1,390.49	1,390.48
P-324	CB 324	Jct 324	0.73	0.385	5.87	4.00	2.3	10.89	0.0327	24 inch	0.012	1,386.25	1,385.89	1,390.21	1,390.21
P-325	CB 325	Jct 325	0.41	0.219	5.87	4.00	1.3	10.83	0.0497	24 inch	0.012	1,386.81	1,386.27	1,390.46	1,390.46
P-326	CB 326	MH 304	0.77	0.407	5.87	4.00	2.4	10.02	0.0496	24 inch	0.012	1,387.31	1,386.81	1,390.77	1,390.77
P-500	MH 500	45 ^ BEND	3.90	36.525	5.33	13.11	196.2	287.50	0.0020	96 inch	0.013	1,368.61	1,368.04	1,381.41	1,381.27

Santan Freeway - Baseline to Elliot - DDF & IDF Relations

Stanley Consultants INC. ADOT

SCI Proj.# : 16110

Designed By: RSR Date: 10-11-02
Checked By: CAD Date: 10/25/02
Approved By: Date:

PART A

Determine rainfall depths from the isopluval maps.

	Rainfall depth, inches	
2-year, 6-hour	$P_{2,6'}$	1.1
2-year, 24-hour	$P_{2,24'}$	1.3
100-year, 6-hour	$P_{100,6'}$	3.0
100-year, 24-hour	$P_{100,24'}$	3.6

PART B

Compute the following:

2 year, 1-hour	$P_{2,1'}$	0.9
100-year, 1-hour	$P_{100,1'}$	2.4
2-year, 2-hour	$P_{2,2'}$	0.9
2-year, 3-hour	$P_{2,3'}$	1.0
2-year, 12-hour	$P_{2,12'}$	1.2
100-year, 2-hour	$P_{100,2'}$	2.6
100-year, 3-hour	$P_{100,3'}$	2.7
100-year, 12-hour	$P_{100,12'}$	3.3

PART C

Compute the short duration rainfall zone Zone = 8

Determine the Short Duration Rainfall Ratios (Table 1-1)

Duration	Ratio			
(minutes)	2-year		100 -year	
5	A =	0.34	E =	0.3
10	B =	0.51	F =	0.46
15	C =	0.62	G =	0.59
30	D =	0.82	H =	0.8

Compute the following:

2-year, 5-minute	$P_{2,5''}$	0.3
2-year, 10-minute	$P_{2,10''}$	0.4
2-year, 15-minute	$P_{2,15''}$	0.5
2-year, 30-minute	$P_{2,30''}$	0.7
100-year, 5-minute	$P_{100,5''}$	0.7
100-year, 10-minute	$P_{100,10''}$	1.1
100-year, 15-minute	$P_{100,15''}$	1.4
100-year, 30-minute	$P_{100,30''}$	1.9

Santan Freeway - Baseline to Elliot - DDF & IDF Relations

Stanley Consultants INC

ADOT

SCI Proj # : 16110

Designed By: RSR Date: 10-11-02
Checked By: [illegible] Date: 10/25/02
Approved By: Date:

PART D

For any flood frequency (T-year) other than the 2-year or the 100-year, calculate the rainfall depth for each rainfall duration (t) by the following equation:

$$P_{T,t} = (X)P_{2T,t} + (Y)P_{100,t}$$

where X and Y for a selected frequency (T-year) are

Frequency (T-year)	X	Y
5-year	0.674	0.278
10-year	0.496	0.449
25-year	0.293	0.669
50-year	0.146	0.835
500-year	-0.337	1.381

Selected frequency = 5 year X = .674 Y = .278

5-min	$P_{5,5'}$	0.4
10-min	$P_{5,5'}$	0.6
15-min	$P_{5,15'}$	0.7
30-min	$P_{5,30'}$	1.0
1-hour	$P_{5,1'}$	1.2
2-hour	$P_{5,2'}$	1.4
3-hour	$P_{5,3'}$	1.4
6-hour	$P_{5,6'}$	1.6
12-hour	$P_{5,12'}$	1.7
24-hour	$P_{5,24'}$	1.9

Selected frequency = 10 year X = .496 Y = .449

5-min	$P_{10,5'}$	0.5
10-min	$P_{10,10'}$	0.7
15-min	$P_{10,15'}$	0.9
30-min	$P_{10,30'}$	1.2
1-hour	$P_{10,1'}$	1.5
2-hour	$P_{10,2'}$	1.6
3-hour	$P_{10,3'}$	1.7
6-hour	$P_{10,6'}$	1.9
12-hour	$P_{10,12'}$	2.1
24-hour	$P_{10,24'}$	2.3

Selected frequency = 25 year X = .293 Y = .669

5-min	$P_{25,5'}$	0.6
10-min	$P_{25,10'}$	0.9
15-min	$P_{25,15'}$	1.1
30-min	$P_{25,30'}$	1.5
1-hour	$P_{25,1'}$	1.8
2-hour	$P_{25,2'}$	2.0
3-hour	$P_{25,3'}$	2.1
6-hour	$P_{25,6'}$	2.3
12-hour	$P_{25,12'}$	2.6
24-hour	$P_{25,24'}$	2.8

Stanley Consultants INC. ADOT

SCI Proj # : 16110

Designed By: RGR Date: 10-11-02
Checked By: AD Date: 10/25/02
Approved By: Date:

Selected frequency = 50 year X = .146 Y = .835

5-min	$P_{50,5'}$	0.6
10-min	$P_{50,10'}$	1.0
15-min	$P_{50,15'}$	1.3
30-min	$P_{50,30'}$	1.7
1-hour	$P_{50,1'}$	2.1
2-hour	$P_{50,2'}$	2.3
3-hour	$P_{50,3'}$	2.4
6-hour	$P_{50,6'}$	2.7
12-hour	$P_{50,12'}$	2.9
24-hour	$P_{50,24'}$	3.2

Selected frequency = 500 year X = -.337 Y = 1.381

5-min	$P_{500,5'}$	0.9
10-min	$P_{500,10'}$	1.4
15-min	$P_{500,15'}$	1.8
30-min	$P_{500,30'}$	2.4
1-hour	$P_{500,1'}$	3.0
2-hour	$P_{500,2'}$	3.3
3-hour	$P_{500,3'}$	3.4
6-hour	$P_{500,6'}$	3.8
12-hour	$P_{500,12'}$	4.2
24-hour	$P_{500,24'}$	4.5

PART E

Tabulate the rainfall Depth-Duration-Frequency statistics below:

Duration	Rainfall depth, in inches						
	Frequency, in years						
	2	5	10	25	50	100	500
5-min	0.29	0.40	0.47	0.56	0.64	0.71	0.89
10-min *	0.44	0.60	0.71	0.86	0.98	1.10	1.37
15-min	0.53	0.75	0.90	1.10	1.25	1.41	1.76
30-min *	0.70	1.00	1.20	1.48	1.69	1.91	2.39
1-hour	0.86	1.24	1.50	1.84	2.11	2.38	3.00
2-hour	0.94	1.36	1.63	2.01	2.30	2.59	3.26
3-hour	1.00	1.43	1.72	2.12	2.43	2.73	3.44
6-hour	1.10	1.58	1.89	2.33	2.67	3.00	3.77
12-hour	1.21	1.73	2.08	2.56	2.93	3.30	4.15
24-hour	1.31	1.88	2.27	2.79	3.20	3.60	4.53

* Note: 10-min and 30-min values are not coded into the PH record for HEC-1

Santan Freeway - Baseline to Elliot - DDF & IDF Relations

Stanley Consultants INC. ADOT

SCI Proj # : 16110

Designed By: RSR Date: 10-11-02
Checked By: (A) Date: 10/25/02
Approved By: Date:

Rainfall Intensity-Duration-Frequency worksheet:

Duration	Rainfall Intensity, in inches/hour						
	Frequency, in years						
	2	5	10	25	50	100'	500
5-min	3.52	4.76	5.61	6.79	7.70	8.61	10.70
10-min	2.63	3.60	4.25	5.17	5.87	6.57	8.19
15-min	2.13	3.00	3.58	4.38	5.00	5.62	7.04
30-min	1.41	2.01	2.41	2.96	3.39	3.81	4.79
1-hour	0.86	1.24	1.50	1.84	2.11	2.38	3.00
2-hour	0.47	0.68	0.82	1.01	1.15	1.30	1.63
3-hour	0.33	0.48	0.57	0.71	0.81	0.91	1.15
6-hour	0.18	0.26	0.32	0.39	0.44	0.50	0.63
12-hour	0.10	0.14	0.17	0.21	0.24	0.28	0.35
24-hour	0.05	0.08	0.09	0.12	0.13	0.15	0.19

Rainfall Intensity Duration Frequency Curves

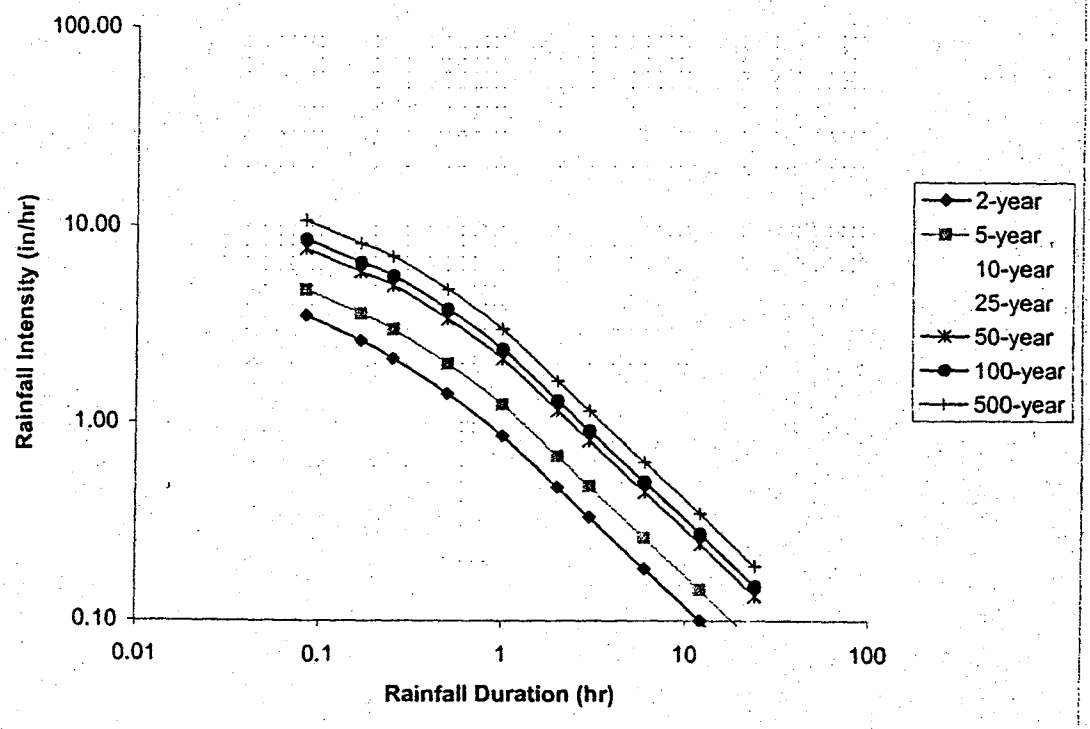

Development of composite flood hydrograph

This section describes the procedure for developing the peak discharge and selected discharge values of a composite flood hydrograph.

Selecting T_c and T_t

First, use worksheet 5a to develop a summary of basic watershed data by subarea. Then use worksheet 5b to develop a tabular hydrograph discharge summary; this summary displays the effect of individual subarea hydrographs as routed to the watershed point of interest. Use $\sum T_t$ for each subarea as the total reach travel time from that subarea through the watershed to the point of interest. Compute the hydrograph coordinates for selected $\sum T_t$'s using the appropriate sheets in exhibit 5. The flow at any time is:

$$q = q_t A_m Q \qquad \text{[eq. 5-1]}$$

where:

q = hydrograph coordinate (cfs) at hydrograph time t
q_t = tabular hydrograph unit discharge from exhibit 5 (csm/in)
A_m = drainage area of individual subarea (mi²)
Q = runoff (in)

Since the timing of peak discharge changes with T_c and T_t, interpolation of peak discharge for T_c and T_t values for use in exhibit 5 is not recommended. Interpolation may result in an estimate of peak discharge that would be invalid because it would be lower than either of the hydrographs. Therefore, round the actual values of T_c and T_t to values presented in exhibit 5. Perform this rounding so that the sum of the selected table values is close to the sum of actual T_c and T_t. An acceptable procedure is to select the results of one of three rounding operations:

1. Round T_c and T_t separately to the nearest table value and sum,
2. Round T_c down and T_t up to nearest table value and sum,
3. Round T_c up and T_t down to nearest table value and sum.

From these three alternatives, choose the pair of rounded T_c and T_t values whose sum is closest to the sum of the actual T_c and T_t. If two rounding methods produce sums equally close to the actual sum, use the combination in which rounded T_c is closest to actual T_c. An illustration of the rounding procedure is as follows:

Table 5-1 I_a values for runoff curve numbers

Curve number	I_a (in)	Curve number	I_a (in)
40	3.000	70	0.857
41	2.878	71	0.817
42	2.762	72	0.778
43	2.651	73	0.740
44	2.545	74	0.703
45	2.444	75	0.667
46	2.348	76	0.632
47	2.255	77	0.597
48	2.167	78	0.564
49	2.082	79	0.532
50	2.000	80	0.500
51	1.922	81	0.469
52	1.846	82	0.439
53	1.774	83	0.410
54	1.704	84	0.381
55	1.636	85	0.353
56	1.571	86	0.326
57	1.509	87	0.299
58	1.448	88	0.273
59	1.390	89	0.247
60	1.333	90	0.222
61	1.279	91	0.198
62	1.226	92	0.174
63	1.175	93	0.151
64	1.125	94	0.128
65	1.077	95	0.105
66	1.030	96	0.083
67	0.985	97	0.062
68	0.941	98	0.041
69	0.899		

	Actual values	Table values by rounding method		
		1	2	3
T_c	1.1	1.0	1.0	1.25
T_t	1.7	1.5	2.0	1.5
Sum	2.8	2.5	3.0	2.75

In this instance, the results from method 3 would be selected because the sum 2.75 is closest to the actual sum of 2.8.

Selecting I_a / P

The computed I_a / P value can be rounded to the nearest I_a / P value in exhibits 5-I through 5-III, or the hydrograph values (csm/in) can be linearly interpolated because I_a / P interpolation generally involves peaks that occur at the same time.

Summing for the composite hydrograph

The composite hydrograph is the summation of prerouted individual subarea hydrographs at each time shown on worksheet 5b. Only the times encompassing the expected maximum composite discharge are summed to define a portion of the composite hydrograph.

If desired, the entire composite hydrograph can be approximated by linear extrapolation as follows:

1. Set up a table similar to worksheet 5b. Include on this table the full range of hydrograph times displayed in exhibit 5.
2. Compute the subarea discharge values for those times and insert them in the table.
3. Sum the values to obtain the composite hydrograph.
4. Apply linear extrapolation to the first two points and the last two points of the composite hydrograph. The volume under this approximation of the entire composite hydrograph may differ from the computed runoff volume.

Limitations

The Tabular method is used to determine peak flows and hydrographs within a watershed. However, its accuracy decreases as the complexity of the watershed increases. If you want to compare present and developed conditions of a watershed, use the same procedure for estimating T_c for both conditions.

Use the TR-20 computer program (SCS 1983) instead of the Tabular method if any of the following conditions applies:

- T_t is greater than 3 hours (largest T_t in exhibit 5).
- T_c is greater than 2 hours (largest T_c in exhibit 5).
- Drainage areas of individual subareas differ by a factor of 5 or more.
- The entire composite flood hydrograph or entire runoff volume is required for detailed flood routings. The hydrograph based on extrapolation is only an approximation of the entire hydrograph.
- The time of peak discharge must be more accurate than that obtained through the Tabular method.

The composite flood hydrograph should be compared with actual stream gage data where possible. The instantaneous peak flow value from the composite flood hydrograph can be compared with data from USGS curves of peak flow versus drainage area.

Exhibit 5-II: Tabular hydrograph unit discharges (csm/in) for type II rainfall distribution—continued

HYDROGRAPH TIME(HOURS)

TRVL TIME (hr)	11.0	11.3	11.6	11.9	12.0	12.1	12.2	12.3	12.4	12.5	12.6	12.7	12.8	13.0	13.2	13.4	13.6	13.8	14.0	14.3	14.6	15.0	15.5	16.0	16.5	17.0	17.5	18.0	19.0	20.0	22.0	26.0
IA/P = 0.10													* * * TC = 0.2 HR * * *																IA/P = 0.10			
0.0	23	31	47	209	403	739	800	481	250	166	128	102	86	70	61	54	49	44	40	35	33	30	27	24	21	20	19	18	16	13	12	0
.10	19	26	39	86	168	325	601	733	565	355	229	161	122	83	69	59	53	47	43	37	34	31	28	25	22	21	19	18	16	14	12	0
.20	17	23	32	49	74	136	262	488	652	594	435	298	207	115	81	67	58	51	46	40	35	32	29	26	23	21	20	19	16	14	12	0
.30	16	22	30	46	64	112	212	396	566	585	485	360	258	139	90	71	60	53	48	41	36	32	29	26	23	21	20	19	16	14	12	0
.40	14	19	25	37	43	57	94	173	322	485	551	507	409	227	129	87	68	58	52	44	38	33	30	27	24	21	20	19	17	14	12	0
.50	13	18	24	35	40	52	80	142	262	410	504	506	441	269	153	98	73	61	53	45	39	34	30	27	24	22	20	19	17	15	12	0
.75	10	13	17	23	26	30	34	40	55	86	150	247	349	438	360	240	151	101	75	57	47	39	33	29	26	23	21	20	18	15	12	0
1.0	9	11	14	19	21	24	26	30	35	44	62	101	167	337	413	353	245	157	104	68	53	42	35	31	28	24	22	20	18	16	12	0
1.5	6	8	10	13	14	15	17	19	21	23	26	30	37	73	166	288	356	337	264	154	91	57	42	35	30	27	24	22	19	17	13	3
2.0	4	5	7	8	9	10	10	11	12	14	15	16	18	23	31	55	114	206	291	324	239	125	63	44	35	31	28	24	20	18	14	9
2.5	3	4	5	6	6	7	7	8	9	9	10	11	12	15	18	22	32	58	111	227	298	246	122	63	43	35	31	27	22	19	15	11
3.0	1	2	3	4	4	4	5	5	6	6	7	7	8	9	11	13	16	19	27	59	138	280	248	137	70	46	36	31	25	21	16	11
IA/P = 0.30													* * * TC = 0.2 HR * * *																IA/P = 0.30			
0.0	0	0	0	39	180	545	697	497	276	198	158	130	110	93	81	73	67	61	56	49	46	43	39	35	32	30	29	27	24	21	19	0
.10	0	0	0	2	27	129	407	600	532	361	252	190	150	108	90	79	71	65	59	52	48	44	41	36	32	31	29	28	25	21	19	0
.20	0	0	0	2	19	92	302	501	521	415	306	228	176	119	95	82	73	67	61	53	48	45	41	37	33	31	29	28	25	21	19	0
.30	0	0	0	0	1	13	66	223	408	484	438	350	269	163	114	93	80	72	65	57	51	46	42	38	34	31	30	28	25	22	19	0
.40	0	0	0	0	1	9	47	164	327	431	436	379	306	189	127	98	83	74	67	58	52	47	43	38	34	31	30	28	25	22	19	0
.50	0	0	0	0	0	0	6	33	120	258	374	415	391	271	173	121	95	81	72	62	55	48	44	40	35	32	30	29	26	22	19	0
.75	0	0	0	0	0	0	2	13	50	126	221	302	348	323	240	167	121	96	81	68	59	50	45	41	37	33	31	29	26	23	19	0
1.0	0	0	0	0	0	0	0	0	1	6	24	69	139	285	331	280	204	145	109	82	68	56	48	43	39	35	32	30	27	24	19	0
1.5	0	0	0	0	0	0	0	0	0	0	0	0	1	16	79	186	271	288	247	165	110	76	58	49	44	40	35	32	29	26	20	5
2.0	0	0	0	0	0	0	0	0	0	0	0	0	0	0	3	24	80	163	235	262	202	123	76	58	49	43	39	35	30	27	21	13
2.5	0	0	0	0	0	0	0	0	0	0	0	0	0	0	0	1	6	28	77	179	242	207	120	75	57	48	43	39	32	29	22	17
3.0	0	0	0	0	0	0	0	0	0	0	0	0	0	0	0	0	0	0	4	30	101	207	227	130	80	59	49	44	35	30	24	18
IA/P = 0.50													* * * TC = 0.2 HR * * *																IA/P = 0.50			
0.0	0	0	0	0	7	98	371	322	221	182	158	137	120	104	94	86	80	74	69	62	60	57	52	47	44	42	40	39	35	30	28	0
.10	0	0	0	0	4	67	270	305	249	204	174	149	130	108	97	88	82	76	71	64	60	57	53	48	44	42	41	39	35	30	28	0
.20	0	0	0	0	0	3	45	195	268	255	221	189	163	125	106	95	87	80	75	67	62	58	54	49	45	43	41	39	35	31	28	0
.30	0	0	0	0	0	2	31	140	226	245	229	203	176	134	111	98	89	82	76	68	62	59	55	50	45	43	41	39	36	31	28	0
.40	0	0	0	0	0	1	21	101	184	225	228	211	188	144	117	101	91	84	78	69	63	59	55	50	45	43	41	40	36	31	28	0
.50	0	0	0	0	0	0	1	14	72	146	199	218	213	175	137	113	99	89	82	73	66	60	56	52	47	43	42	40	36	32	28	0
.75	0	0	0	0	0	0	0	5	28	71	121	162	186	193	161	133	112	98	88	78	70	62	57	53	48	44	42	41	37	33	28	0
1.0	0	0	0	0	0	0	0	0	0	2	13	38	77	154	186	174	147	122	105	89	78	68	60	56	51	46	43	42	38	34	28	0
1.5	0	0	0	0	0	0	0	0	0	0	0	0	2	22	71	129	163	168	150	120	98	80	67	60	55	51	46	43	40	36	28	4
2.0	0	0	0	0	0	0	0	0	0	0	0	0	0	0	5	25	65	112	146	157	134	103	79	67	60	55	50	46	41	38	29	14
2.5	0	0	0	0	0	0	0	0	0	0	0	0	0	0	0	1	8	26	60	117	148	136	101	79	66	59	54	50	43	39	31	24
3.0	0	0	0	0	0	0	0	0	0	0	0	0	0	0	0	0	0	2	9	40	90	142	130	99	78	66	59	54	45	41	33	26

RAINFALL TYPE = II * * * TC = 0.2 HR * * * SHEET 2 OF 10

Storm Water Pump Station Design Documents

Volume I

DESIGN GUIDELINES

1991

(Volume II is a separate set of Sample Plans)

Contract 88-24
Price Expressway
General Consultant
TRACS No. H-2222-01D

Prepared for:

Arizona Department of Transportation

Prepared by:

HDR Engineering, Inc.
Phoenix, Arizona

HDR

REGISTERED PROFESSIONAL ENGINEER (CIVIL)
CERTIFICATE NO. 11117
JEROME J. ZOVNE
Date Signed 12-14-91
ARIZONA, U.S.A.

APPENDIX A

BAUMGARDNER METHOD TYPE II

BAUMGARDNER METHOD II FOR DETERMINING DESIGN INFLOW HYDROGRAPHS - RATIONAL EQUATION/SCS HYDROGRAPH METHOD.

Robert H. Baumgardner
March 1982

1.0 Introduction

Highway engineers have traditionally been concerned with designing hydraulic structures to pass the peak design flow; however, the cost-savings feature of providing storage to reduce peak rates of flow has been amply demonstrated. Storage is a critical element in detention basin and storm water pumping station design.

To analyse the benefits of storage, a reservoir routing procedure must be used; this procedure requires a design inflow hydrograph. Over the years, a number of "Modified Rational Equation" or "Triangular Rational Equation" hydrograph methods have been developed. For the most part, these methods have been somewhat approximate with questionable merits.

The Soil Conservation Service (SCS) has developed a hydrograph procedure (1) that can be used in the rural or urban setting. Engineers have been reluctant to use this procedure for highway drainage design for two reasons: First, the SCS method has its roots in an agricultural format; the urban case is achieved by applying several "correction factors." Second, the storm drainage system is usually designed using a Rational Equation/Manning's Formula method. This means that different peak flows could be arrived at for the storm drain system and the detention basin.

THE PURPOSE OF THIS PAPER IS TO DEVELOP A DESIGN INFLOW HYDROGRAPH PROCEDURE BY COMBINING THE RATIONAL EQUATION WITH THE STANDARDIZED SCS HYDROGRAPH SHAPE. THIS HYDROGRAPH PROCEDURE HAS TWO ADVANTAGES. FIRST, THE HYDROGRAPH PEAK IS COMPATIBLE WITH THE RATIONAL EQUATION PEAK FLOW RATE, AND SECOND, A SMOOTH CURVELINEAR HYDROGRAPH IS PRODUCED THAT CAN BE USED IN RESERVOIR ROUTING PROCEDURES.

2.0 Rational Equation

Much has already been written about the Rational Equation, and it is far beyond the scope of this paper to repeat these discussions; however, it should be remembered that the Rational Equation will only produce a peak flow rate. To obtain a hydrograph, separate, additional assumptions must be made. The Rational Equation is:

$$Q = CIA \tag{1}$$

where:

Q = peak rate of runoff, cfs.
C = coefficient of runoff.
I = rainfall intensity, in/hr.
A = drainage area, Ac.

Detailed design guidance for determining the various parameters is provided in several references (2, 3, 4, and 5). The HDS No. 4, "Design of Roadside Drainage Channels," suggests that the Rational Equational be limited to drainage areas less than 200 arces (2, p.7); however, the more recent FHWA publication, "Design of Urban Highway Drainage" (3) suggests that the Rational Equation is valid for drainage areas up to 500-750 acres (3, p. 3-14).

An example problem will be woven through the discussion. For the example problem, the drainage area is 7.0 Ac., runoff coefficient-0.7, time of concentration-12 min., and the rainfall intensity for a 10-year storm in the Washington area is 5.5 in/hr. The peak rate of flow is:

$$Q = CIA$$

$$Q = 0.7 \times 5.5 \times 7.0$$

$$Q = 27.0 \text{ cfs.}$$

3.0 Triangular Hydrograph

Some discussion of the triangular Rational hydrograph must be provided, since it is so popular. This method produces a triangular hydrograph whose peak is determined by the Rational Equation and with rising and falling legs equal to T_c and 1.67 T_c, respectively, as shown in figure 1. ONE OF THE GOALS OF THIS PAPER WILL DEMONSTRATE THAT THE TRIANGULAR "RATIONAL" HYDROGRAPH DOES NOT PRODUCE ENOUGH TOTAL VOLUME OF RUNOFF FOR STORAGE PROBLEMS.

The triangular Rational hyrograph method produces a very limited design hydrograph. For the example problem, the base of the hydrograph would only be 32 minutes; the rising and falling limbs of the hydrograph are quite short.

In detention basin design, the rising limb of the hydrograph is quite important since considerable volume of runoff will go into storage. This reduces the available storage in the basin when the peak center portion of the hydrograph arrives at the basin. The shortcomings of the triangular hydrograph are demonstrated in Section 6.0.

NOTE: Figure 1 not available.

4.0 SCS Urban Hydrology

In chapter 5, of the SCS publication TR-55, "Urban Hydrology for Small Watersheds" (1), a tabular hydrograph method for urban watersheds is developed. In this method, flow rates for clock times are developed by the following equation (1, p. 5-3):

$$q = q_p \ (DA) \ (Q) \qquad (2)$$

where:

q = hydrograph ordinate, cfs.
q_p = tabular hydrograph unit discharge values, csm/in (cfs/sq.mi./in. of runoff).
DA = drainage area, sq miles
Q = runoff, in.

The (DA) term is self-explanatory, while the (Q) term represents the runoff from a 24-hour storm of a given frequency. In the SCS method, the 24-hour rainfall, SCS type II rainfall distribution, and runoff curve number (hydrologic soil-cover complexes) interact to determine the (Q) term. (The peak rate of flow (Q) determined by the Rational Equation is equivalent to the peak value of (q) for the SCS methods. Different definitions for the Q symbol between the methods is confusing. For the purpose of this paper, THE PEAK RATE OF FLOW FOR THE DEVELOPED HYDROGRAPH IS GIVEN THE SYMBOL Q SINCE IT IS PRODUCED BY THE RATIONAL EQUATION; LESSER FLOW RATES ARE GIVEN THE SYMBOL q.)

THE SHAPE OF THE HYDROGRAPH IS DETERMINED BY THE (q_p) TERM. THE DESIGN TABLES FOR DEVELOPING THIS TERM WILL BE GLEANED FROM THE SCS METHOD TO ESTABLISH THE SHAPE OF THE HYDROGRAPHS USED IN THIS PAPER.

Vaules of q_p are provided in table 5-3 of the SCS publication TR-55 (1) for times of concentrations between 0.1 hrs. to 2.0 hrs. This table has been reproduced in Appendix A. Table 5-3 was developed by computing hydrographs and routing them through stream reaches (1, p. 5-1).

A THOROUGH UNDERSTANDING OF CHAPTER 5, AND SCS METHODS IN GENERAL, SHOULD BE OBTAINED BEFORE ATTEMPTING TO DEVELOP THE HYDROGRAPH PROCEDURE USED IN THIS PAPER.

5.0 Rational Equation/SCS Hydrograph Method

With the background information on the Rational Equation and SCS hydrograph established, the Rational Equation/SCS Hydrograph Method can now be developed.

First, THE PEAK OF THE HYDROGRAPH IS DETERMINED BY THE RATIONAL EQUATION as discussed in Section 2.0. For the example problem, the peak rate of runoff (Q) is 27.0 cfs.

Next, the Rational Equation peak rate of runoff (Q) is set equal to the peak rate of runoff as determined by the SCS method (equation 2):

Rational Equation = Peak Rate of Flow SCS Method

$$Q = q_{peak} (DA) (Q) \tag{3}$$

where:

q_{peak} = peak value of q_p

Peak values (q_{peak}) of q_p are developed in table 1 based on a review of table 5-3 (Appendix A) and figure 5-2 of the SCS publication TR-55 (1); figure 5-2 is shown as figure 2. NOW BY SUBSTITUTING THE PEAK VALUE OF q_p FOR THE SAME TIME OF CONCENTRATION AS USED IN DETERMINING THE PEAK RATE OF FLOW FOR THE RATIONAL EQUATION, the combined (DA) (Q) term can be solved for, because two values of the equation are known.

Since both the (DA) and (Q) terms are constant, they can be replaced by an equivalent coefficient.

$$Q = q_{peak} K \tag{4}$$

$$K = \frac{Q}{q_{peak}} \tag{5}$$

where:

K = equivalent coefficient

Once the K value has been determined, other values of q_p can be multiplied by K to constuct the hydrograph.

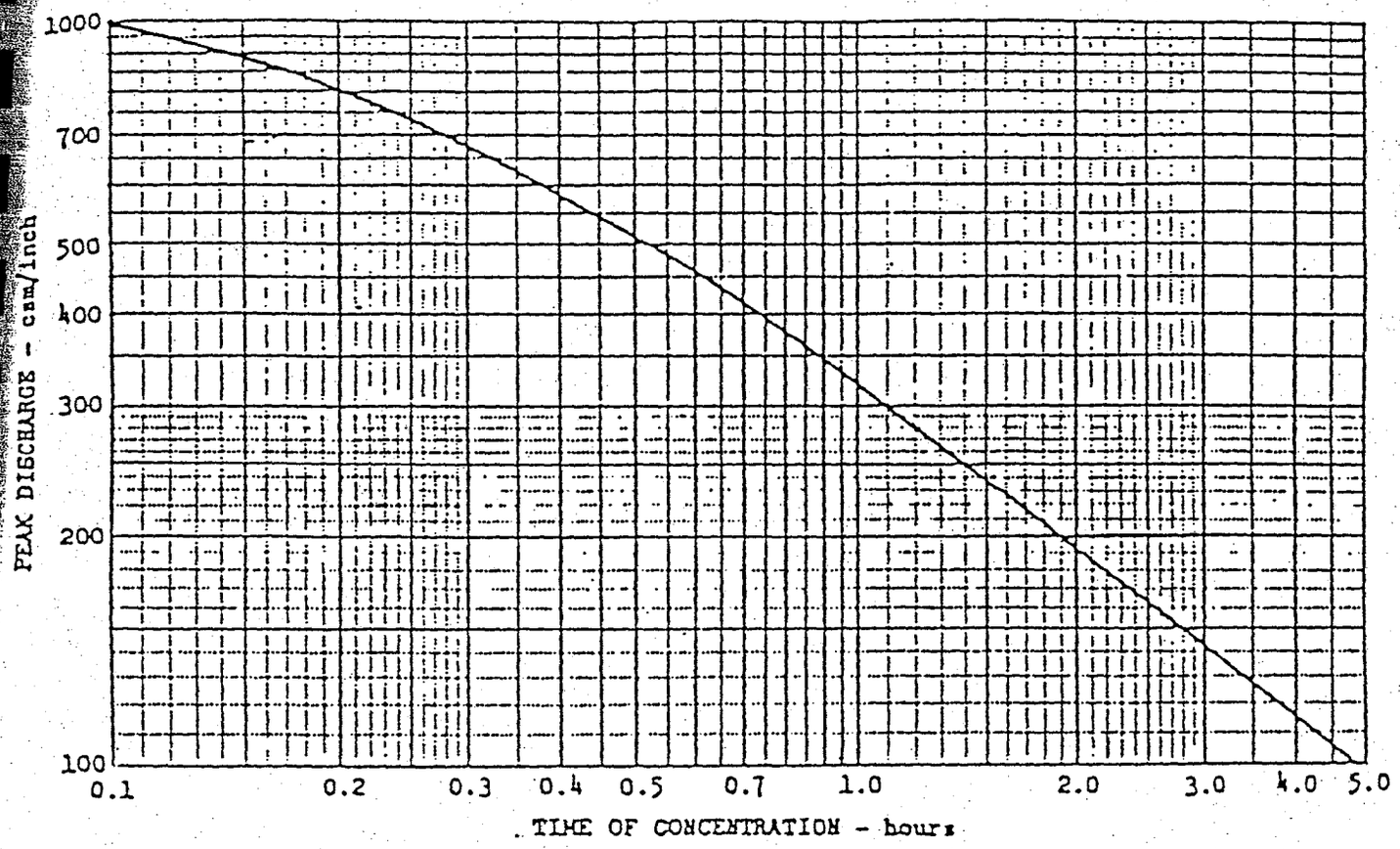

Figure 5-2.—Peak discharge in csm per inch of runoff versus time of concentration (T_c) for 24-hour, type-II storm distribution.

Figure 2

Time of Concentration (hrs)	Clock Time of Peak (hr)	Peak Values (q_{peak}) of (q_p)[1]
.1	11.8	991
.2	11.9	796
.3	11.95	665
.4	12.05	580
.5	12.1	496
.75	12.3	388
1.0	12.5	316
1.25	12.6	271
1.50	12.85	236
2.0	13.0	192

Table 1 Peak Values (q_{peak}) of q_p

[1] Note that no dimensional units are used since this is strictly a shape factor.

$$q = q_p \times K \qquad (6)$$

IT MUST BE REMEMBERED THAT THE VALUES USED FOR q_p MUST COME FROM THE TIME OF CONCENTRATION TABLE (TABLE 5-3 APPENDIX A) WITH THE SAME VALUE AS THE TIME OF CONCENTRATION DEVELOPED BY THE RATIONAL EQUATION. If the developed time of concentration is a different value than the available tables, a special table must be developed by interpolation.

From the example problem, the peak rate of runoff is 27.0 cfs. Selecting a q_{peak} value of 796 from table 1, for a time of concentration 0.2 hrs, and using equation 5:

$$K = \frac{27.0}{796}$$

$$K = .033919598$$

Now by using the values of q_p from the 0.2 hrs time of concentration table (Table 5-3, Appendix A), the hydrograph can be constructed using equation 6 as shown in table 2. The resulting design inflow hydrograph is shown in figure 3.

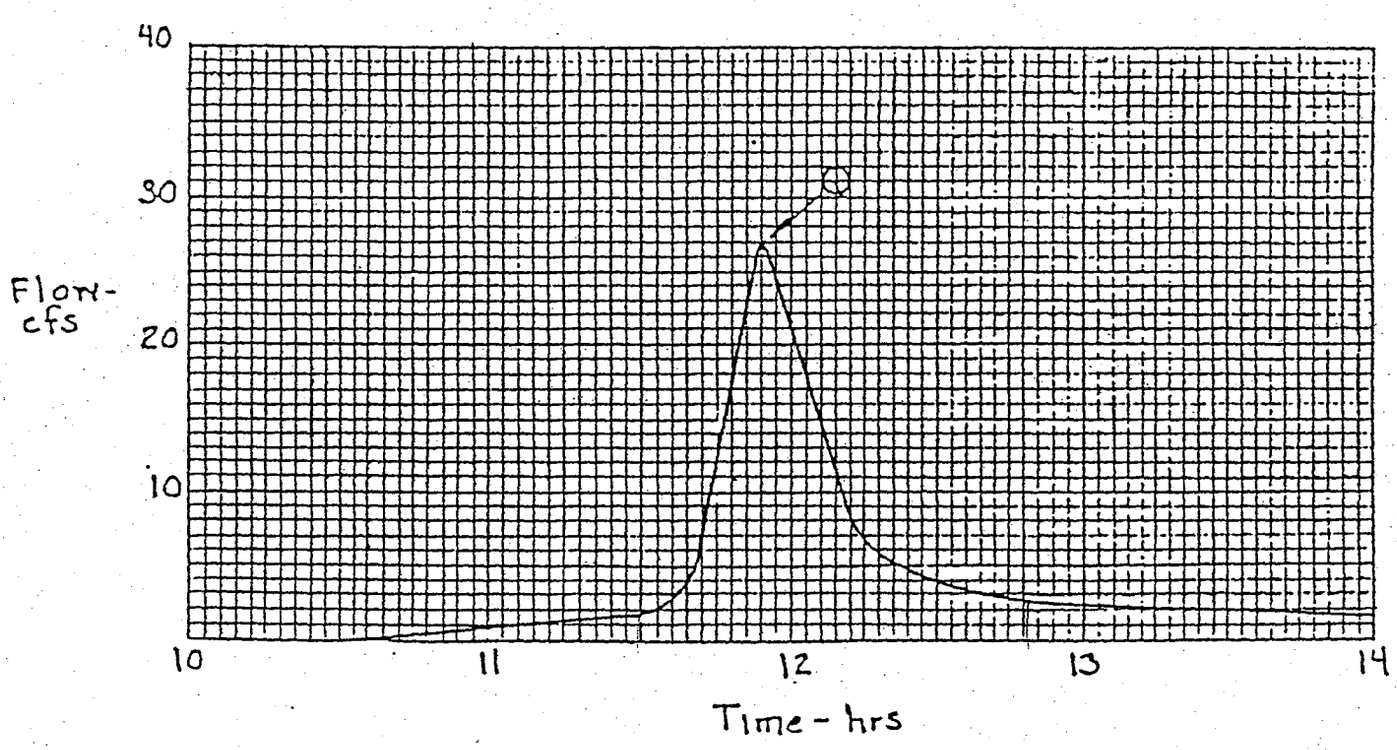

Figure 3. Design Inflow Hydrograph

Time (hrs)	q_p		(cfs)
11.0	23	.033919598	.8
11.5	47		1.6
11.7	208		7.1
11.8	509		17.3
11.9	796		27.0
12.0	641		21.7
12.1	424		14.4
12.2	245		8.3
12.3	170		5.8
12.4	138		4.7
12.5	121		4.1
12.6	104		3.5
12.7	85		2.9
12.8	75		2.5
12.9	71		2.4
13.0	68		2.3
13.2	56		1.9
13.5	49		1.7
14.0	40		1.4
14.5	34		1.2
15.0	29		1.0
16.0	24		.8
18.0	18		.6
20.0	14		.5

Table 2. Design Inflow Hydrograph Calculations

STAGE – STORAGE REALATIONSHIP

Santan Freeway - SR 202L Baseline to Elliot - Stage-Storage

Stanley Consultants INC.

ADOT

SCI Proj. # : 16110

Designed By: BNS Date: 3-25-03
Checked By: [illegible] Date: 4-4-03
Approved By: Date:

Pipe Diameter, D	**8**	**ft**
Pipe Slope, S	**0.002**	**ft/ft**
Pipe Length, L	**882**	**ft**
DS Pipe Invert	**1368**	**ft**
US Pipe Invert	**1369.764**	**ft**

WSEL (ft)	Depth in Wet Well (ft)	Wet Well Volume (cf)	Storage Pipe Case (FHWA Series 5)	Pipe Volume (cf)	Total Volume (cf)	WSEL (ft)
1360	0	0	-	0	0	1360
1361	1	1520	-	0	1520	1361
1362	2	3220	-	0	3220	1362
1363	3	5110	-	0	5110	1363
1364	4	7180	-	0	7180	1364
1365	5	9430	-	0	9430	1365
1366	6	11870	-	0	11870	1366
1367	7	14440	-	0	14440	1367
1368	8	17140	Case 1	0	17140	1368
1369	9	19980	Case 1	750	20730	1369
1370	10	22820	Case 2	4020	26840	1370
1371	11	25670	Case 2	9510	35180	1371
1372	12	28520	Case 2	16030	44550	1372
1373	13	31370	Case 2	22970	54340	1373
1374	14	34220	Case 2	29870	64090	1374
1375	15	37070	Case 2	36230	73300	1375
1376	16	39920	Case 2	41390	81310	1376
1377	17	42770	Case 4	43940	86710	1377
1378	18	45620	Case 5	44330	89950	1378
1379	19	48470	Case 5	44330	92800	1379
1380	20	51310	Case 5	44330	95640	1380
1381	21	54160	Case 5	44330	98490	1381
1382	22	57010	Case 5	44330	101340	1382
1383	23	59860	Case 5	44330	104190	1383
1384	24	62710	Case 5	44330	107040	1384
1385	25	65560	Case 5	44330	109890	1385

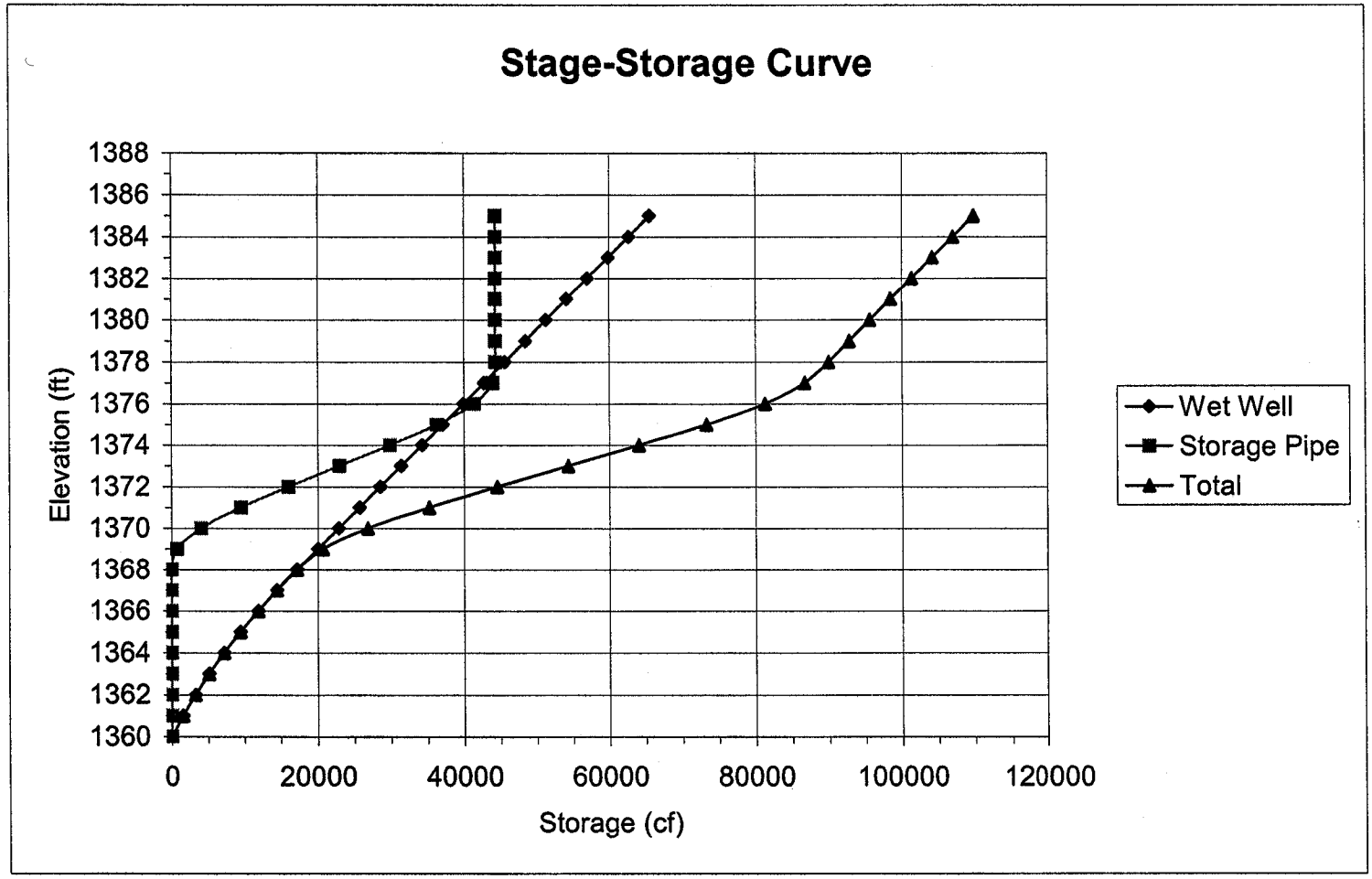
Stage-Storage Curve
Elevation (ft)
1388
1386
1384
1382
1380
1378
1376
1374
1372
1370
1368
1366
1364
1362
1360
0
20000
40000
60000
80000
100000
120000
Storage (cf)
Wet Well
Storage Pipe
Total

Stanley Consultants INC.

Project No. 16110 Page No.

Subject SR 202L PUMP STATION
96" ϕ STORAGE PIPES
L = 882

Computed by B SCHALK Date 3-25-03
Checked by (A) Date 4-4-03
Approved by Date
Sheet No. of

ASSUMPTIONS:

- 60% PLANS SHOW 96" ϕ STORAGE PIPES IN A "T" CONFIGURATION (SEE ATTACHED 95% PLANS). STORAGE ESTIMATE BASED ON A SINGLE PIPE CONFIG, WHICH IS A CONSERVATIVE SCENARIO DUE TO A LOWER STORAGE ESTIMATE CALC.

- PIPE LENGTH @ 60%, L = 871 FEET.
  PIPE LENGTH @ 95%, L = 882 FEET.
  PIPE SLOPE @ 60% = SLOPE @ 95%, S = .002'/FT

- 95% PLANS CALL FOR "T" CONFIG, ALTHOUGH STORAGE ESTIMATE IS BASED ON SINGLE, STRAIGHT PIPE (SEE ABOVE + 95% PLANS).

- STORAGE PIPE INVERT @ WET WELL = 1368 FEET
  " " SOFFIT @ WET WELL = 1376 FEET

  UPSTREAM INVERT = 1368 + (.002)(882)
  = 1369.76 FEET
  UPSTREAM SOFFIT = 1369.76 + 8 = 1377.76 FEET

- PIPE STORAGE BASED ON 5 CASES DESCRIBED IN FHA'S HYDRAULIC DESIGN OF STORMWATER PUMPING STATIONS USING PROGRAMABLE CALCULATORS, MAY 1982. CASES 1 - 5 ATTACHED.

WSEL	CASE #	WSEL	CASE #	WSEL	CASE #
1368	–	1374	2	1380	5
1369	1	1375	2	1381	5
1370	2	1376	2	1382	5
1371	2	1377	4	1383	5
1372	2	1378	5	1384	5
1373	2	1379	5	1385	5

SC 3004R4 898

SCI Proj. # : 16110
SCI Proj: SR 202L Pump Station Storage Pipe
Designed By: Date:
Checked By: Date: 4-4-03
Approved By: Date:

CASE #1
Volume of Water in Pipe, V = Ungula Eq Volume

Ungula Eq		
WSEL	**1369**	**ft**
Pipe Diam, D	8	ft
Pipe Slope, S	0.002	ft/ft
DS Pipe Invert	1368	ft
Pipe Length	882	ft
US Pipe Invert	1369.764	ft
Depth of Water, d	1	ft

$\phi = \pi - \cos^{-1}((2d/D-1))$
$a = (D/2)\sin(\phi)$
$V = (1/3S)[a(3(D/2)^2-a^2)+3(D/2)^2(d-D/2)\phi]$ (Ungula Eq)

ϕ	0.7211416	
a	2.64097	
Volume of Water in Pipe, V	**750.35623**	**cf**

CASE #2

Actual Volume of Water in Pipe, V = Ungula V - Imaginary Ungula V

Ungula Eq			**Imaginary Ungula Eq**		
WSEL	**1370**	**ft**	**WSEL**	**1370**	**ft**
Pipe Diam, D	8	ft	Pipe Diam, D	8	ft
Pipe Slope, S	0.002	ft/ft	Pipe Slope, S	0.002	ft/ft
DS Pipe Invert	1368	ft	DS Pipe Invert	1368	ft
Pipe Length, L	882	ft	Pipe Length	882	ft
US Pipe Invert	1369.764	ft	US Pipe Invert	1369.764	ft
Depth of Water, d	2	ft	Depth of Water, d'	0.236	ft
$\phi = \pi - \cos^{-1}((2d/D-1))$			$\phi = \pi - \cos^{-1}((2d/D-1))$		
$a = (D/2)\sin(\phi)$			$a = (D/2)\sin(\phi)$		
$V = (1/3S)[a(3(D/2)^2-a^2)+3(D/2)^2(d-D/2)\phi]$		(Ungula Eq)	$V = (1/3S)[a(3(D/2)^2-a^2)+3(D/2)^2(d-D/2)\phi]$		(Ungula Eq)
			$d' = d - LS$		
ϕ	1.0456049		ϕ	0.34363	
a	3.4609119		a	1.34763	
Volume of Water in Pipe, V	4048.5343	cf	Volume of Water in Pipe, V	25.7338	cf

Actual Volume of Water in Pipe, V **4022.8005 cf**

CASE #2

Actual Volume of Water in Pipe, V = Ungula V - Imaginary Ungula V

Ungula Eq			**Imaginary Ungula Eq**		
WSEL	**1371**	**ft**	**WSEL**	**1371**	**ft**
Pipe Diam, D	8	ft	Pipe Diam, D	8	ft
Pipe Slope, S	0.002	ft/ft	Pipe Slope, S	0.002	ft/ft
DS Pipe Invert	1368	ft	DS Pipe Invert	1368	ft
Pipe Length, L	882	ft	Pipe Length	882	ft
US Pipe Invert	1369.764	ft	US Pipe Invert	1369.764	ft
Depth of Water, d	3	ft	Depth of Water, d	1.236	ft
$\phi = \pi - \cos^{-1}((2d/D-1))$			$\phi = \pi - \cos^{-1}((2d/D-1))$		
$a = (D/2)\sin(\phi)$			$a = (D/2)\sin(\phi)$		
$V = (1/3S)[a(3(D/2)^2-a^2)+3(D/2)^2(d-D/2)\phi]$		(Ungula Eq)	$V = (1/3S)[a(3(D/2)^2-a^2)+3(D/2)^2(d-D/2)\phi]$		(Ungula Eq)
ϕ	1.3165234		ϕ	0.806332	
a	3.8713858		a	2.887013	
Volume of Water in Pipe, V	10768.417	cf	Volume of Water in Pipe, V	1256.022	cf

Actual Volume of Water in Pipe, V **9512.3956 cf**

CASE #2

Actual Volume of Water in Pipe, V = Ungula V - Imaginary Ungula V

Ungula Eq			**Imaginary Ungula Eq**		
WSEL	**1372**	**ft**	**WSEL**	**1372**	**ft**
Pipe Diam, D	8	ft	Pipe Diam, D	8	ft
Pipe Slope, S	0.002	ft/ft	Pipe Slope, S	0.002	ft/ft
DS Pipe Invert	1368	ft	DS Pipe Invert	1368	ft
Pipe Length, L	882	ft	Pipe Length	882	ft
US Pipe Invert	1369.764	ft	US Pipe Invert	1369.764	ft
Depth of Water, d	4	ft	Depth of Water, d'	2.236	ft
$\phi = \pi - \cos^{-1}((2d/D-1))$			$\phi = \pi - \cos^{-1}((2d/D-1))$		
$a = (D/2)\sin(\phi)$			$a = (D/2)\sin(\phi)$		
$V = (1/3S)[a(3(D/2)^2-a^2)+3(D/2)^2(d-D/2)\phi]$		(Ungula Eq)	$V = (1/3S)[a(3(D/2)^2-a^2)+3(D/2)^2(d-D/2)\phi]$		(Ungula Eq)
			$d' = d - LS$		
ϕ	1.5692037		ϕ	1.112491	
a	3.9999949		a	3.587214	
Volume of Water in Pipe, V	21333.333	cf	Volume of Water in Pipe, V	5304.798	cf

Actual Volume of Water in Pipe, V **16028.536 cf**

CASE #2

Actual Volume of Water in Pipe, V = Ungula V - Imaginary Ungula V

Ungula Eq			**Imaginary Ungula Eq**		
WSEL	**1373**	**ft**	**WSEL**	**1373**	**ft**
Pipe Diam, D	8	ft	Pipe Diam, D	8	ft
Pipe Slope, S	0.002	ft/ft	Pipe Slope, S	0.002	ft/ft
DS Pipe Invert	1368	ft	DS Pipe Invert	1368	ft
Pipe Length, L	882	ft	Pipe Length	882	ft
US Pipe Invert	1369.764	ft	US Pipe Invert	1369.764	ft
Depth of Water, d	5	ft	Depth of Water, d'	3.236	ft

$\phi = \pi - \cos^{-1}((2d/D-1))$

$a = (D/2)\sin(\phi)$

$V = (1/3S)[a(3(D/2)^2-a^2)+3(D/2)^2(d-D/2)\phi]$ (Ungula Eq)

$\phi = \pi - \cos^{-1}((2d/D-1))$

$a = (D/2)\sin(\phi)$

$V = (1/3S)[a(3(D/2)^2-a^2)+3(D/2)^2(d-D/2)\phi]$ (Ungula Eq)

$d' = d - LS$

ϕ	1.8218839		ϕ	1.377023	
a	3.8745711		a	3.925138	
Volume of Water in Pipe, V	35877.269	cf	Volume of Water in Pipe, V	12905.83	cf

Actual Volume of Water in Pipe, V **22971.438 cf**

CASE #2

Actual Volume of Water in Pipe, V = Ungula V - Imaginary Ungula V

Ungula Eq			**Imaginary Ungula Eq**		
WSEL	**1374**	**ft**	**WSEL**	**1374**	**ft**
Pipe Diam, D	8	ft	Pipe Diam, D	8	ft
Pipe Slope, S	0.002	ft/ft	Pipe Slope, S	0.002	ft/ft
DS Pipe Invert	1368	ft	DS Pipe Invert	1368	ft
Pipe Length, L	882	ft	Pipe Length	882	ft
US Pipe Invert	1369.764	ft	US Pipe Invert	1369.764	ft
Depth of Water, d	6	ft	Depth of Water, d'	4.236	ft
$\phi = \pi - \cos^{-1}((2d/D-1))$			$\phi = \pi - \cos^{-1}((2d/D-1))$		
$a = (D/2)\sin(\phi)$			$a = (D/2)\sin(\phi)$		
$V = (1/3S)[a(3(D/2)^2-a^2)+3(D/2)^2(d-D/2)\phi]$		(Ungula Eq)	$V = (1/3S)[a(3(D/2)^2-a^2)+3(D/2)^2(d-D/2)\phi]$		(Ungula Eq)
			$d' = d - LS$		
ϕ	2.0928024		ϕ	1.628238	
a	3.4672825		a	3.993403	
Volume of Water in Pipe, V	54275.793	cf	Volume of Water in Pipe, V	24407.36	cf

Actual Volume of Water in Pipe, V **29868.434 cf**

CASE #2

Actual Volume of Water in Pipe, V = Ungula V - Imaginary Ungula V

Ungula Eq			**Imaginary Ungula Eq**		
WSEL	**1375**	**ft**	**WSEL**	**1375**	**ft**
Pipe Diam, D	8	ft	Pipe Diam, D	8	ft
Pipe Slope, S	0.002	ft/ft	Pipe Slope, S	0.002	ft/ft
DS Pipe Invert	1368	ft	DS Pipe Invert	1368	ft
Pipe Length, L	882	ft	Pipe Length	882	ft
US Pipe Invert	1369.764	ft	US Pipe Invert	1369.764	ft
Depth of Water, d	7	ft	Depth of Water, d'	5.236	ft
$\phi = \pi - \cos^{-1}((2d/D-1))$			$\phi = \pi - \cos^{-1}((2d/D-1))$		
$a = (D/2)\sin(\phi)$			$a = (D/2)\sin(\phi)$		
$V = (1/3S)[a(3(D/2)^2-a^2)+3(D/2)^2(d-D/2)\phi]$		(Ungula Eq)	$V = (1/3S)[a(3(D/2)^2-a^2)+3(D/2)^2(d-D/2)\phi]$		(Ungula Eq)
			$d' = d - LS$		
ϕ	2.4172658		ϕ	1.883345	
a	2.6505259		a	3.806212	
Volume of Water in Pipe, V	76115.134	cf	Volume of Water in Pipe, V	39881.95	cf
Actual Volume of Water in Pipe, V		**36233.18**	**cf**		

CASE #2

Actual Volume of Water in Pipe, V = Ungula V - Imaginary Ungula V

Ungula Eq			**Imaginary Ungula Eq**		
WSEL	**1376**	**ft**	**WSEL**	**1376**	**ft**
Pipe Diam, D	8	ft	Pipe Diam, D	8	ft
Pipe Slope, S	0.002	ft/ft	Pipe Slope, S	0.002	ft/ft
DS Pipe Invert	1368	ft	DS Pipe Invert	1368	ft
Pipe Length, L	882	ft	Pipe Length	882	ft
US Pipe Invert	1369.764	ft	US Pipe Invert	1369.764	ft
Depth of Water, d	8	ft	Depth of Water, d'	6.236	ft
$\phi = \pi - \cos^{-1}((2d/D-1))$			$\phi = \pi - \cos^{-1}((2d/D-1))$		
$a = (D/2)\sin(\phi)$			$a = (D/2)\sin(\phi)$		
$V = (1/3S)[a(3(D/2)^2-a^2)+3(D/2)^2(d-D/2)\phi]$		(Ungula Eq)	$V = (1/3S)[a(3(D/2)^2-a^2)+3(D/2)^2(d-D/2)\phi]$		(Ungula Eq)
			$d' = d - LS$		
ϕ	3.14		ϕ	2.162383	
a	0.0063706		a	3.320228	
Volume of Water in Pipe, V	100530.96	cf	Volume of Water in Pipe, V	59142.21	cf

Actual Volume of Water in Pipe, V **41388.754 cf**

CASE #4

Actual Volume of Water in Pipe, V = Full Pipe V - Empty Ungula V

Full Pipe Eq			**Empty Ungula Eq**		
WSEL	**1377**	**ft**	**WSEL**	**1377**	**ft**
Pipe Diam, D	8	ft	Pipe Diam, D	8	ft
Pipe Slope, S	0.002	ft/ft	Pipe Slope, S	0.002	ft/ft
DS Pipe Invert	1368	ft	DS Pipe Invert	1368	ft
Pipe Length, L	882	ft	Pipe Length	882	ft
US Pipe Invert	1369.764	ft	US Pipe Invert	1369.764	ft
Depth of Water, d	9	ft	Depth of Water, d'	0.764	ft
			$\phi = \pi - \cos^{-1}((2d/D-1))$		
$V = L\pi D^2/4$			$a = (D/2)\sin(\phi)$		
			$V = (1/3S)[a(3(D/2)^2-a^2)+3(D/2)^2(d-D/2)\phi]$	(Ungula Eq)	
Volume of Water in Pipe, V	44334.259	cf	$d' = LS + D - d$		
			ϕ	0.626755	
			a	2.346078	
			Volume of Water in Pipe, V	391.0272	cf

Actual Volume of Water in Pipe, V **43943.232 cf**

CASE #5
Actual Volume of Water in Pipe, V = Full Pipe V

Full Pipe Eq		
WSEL	**1378**	**ft**
Pipe Diam, D	8	ft
Pipe Slope, S	0.002	ft/ft
DS Pipe Invert	1368	ft
Pipe Length, L	882	ft
US Pipe Invert	1369.764	ft
Depth of Water, d	10	ft

$V = L\pi D^2/4$

Actual Volume of Water in Pipe, V **44334.259 cf**

CASE #5
Actual Volume of Water in Pipe, V = Full Pipe V

Full Pipe Eq		
WSEL	**1379**	**ft**
Pipe Diam, D	8	ft
Pipe Slope, S	0.002	ft/ft
DS Pipe Invert	1368	ft
Pipe Length, L	882	ft
US Pipe Invert	1369.764	ft
Depth of Water, d	11	ft

$V = L\pi D^2/4$

Actual Volume of Water in Pipe, V **44334.259 cf**

CASE #5
Actual Volume of Water in Pipe, V = Full Pipe V

Full Pipe Eq		
WSEL	**1380**	**ft**
Pipe Diam, D	8	ft
Pipe Slope, S	0.002	ft/ft
DS Pipe Invert	1368	ft
Pipe Length, L	882	ft
US Pipe Invert	1369.764	ft
Depth of Water, d	12	ft

$V = L\pi D^2/4$

Actual Volume of Water in Pipe, V **44334.259 cf**

CASE #5
Actual Volume of Water in Pipe, V = Full Pipe V

Full Pipe Eq		
WSEL	**1381**	**ft**
Pipe Diam, D	8	ft
Pipe Slope, S	0.002	ft/ft
DS Pipe Invert	1368	ft
Pipe Length, L	882	ft
US Pipe Invert	1369.764	ft
Depth of Water, d	13	ft

$V = L\pi D^2/4$

Actual Volume of Water in Pipe, V **44334.259 cf**

CASE #5
Actual Volume of Water in Pipe, V = Full Pipe V

Full Pipe Eq		
WSEL	**1382**	**ft**
Pipe Diam, D	8	ft
Pipe Slope, S	0.002	ft/ft
DS Pipe Invert	1368	ft
Pipe Length, L	882	ft
US Pipe Invert	1369.764	ft
Depth of Water, d	14	ft

$V = L\pi D^2/4$

Actual Volume of Water in Pipe, V **44334.259 cf**

CASE #5
Actual Volume of Water in Pipe, V = Full Pipe V

Full Pipe Eq		
WSEL	**1383**	**ft**
Pipe Diam, D	8	ft
Pipe Slope, S	0.002	ft/ft
DS Pipe Invert	1368	ft
Pipe Length, L	882	ft
US Pipe Invert	1369.764	ft
Depth of Water, d	15	ft

$V = L\pi D^2/4$

Actual Volume of Water in Pipe, V **44334.259 cf**

CASE #5
Actual Volume of Water in Pipe, V = Full Pipe V

Full Pipe Eq		
WSEL	**1384**	**ft**
Pipe Diam, D	8	ft
Pipe Slope, S	0.002	ft/ft
DS Pipe Invert	1368	ft
Pipe Length, L	882	ft
US Pipe Invert	1369.764	ft
Depth of Water, d	16	ft

$V = L\pi D^2/4$

Actual Volume of Water in Pipe, V **44334.259 cf**

CASE #5
Actual Volume of Water in Pipe, V = Full Pipe V

Full Pipe Eq		
WSEL	**1385**	**ft**
Pipe Diam, D	8	ft
Pipe Slope, S	0.002	ft/ft
DS Pipe Invert	1368	ft
Pipe Length, L	882	ft
US Pipe Invert	1369.764	ft
Depth of Water, d	17	ft

$V = L\pi D^2/4$

Actual Volume of Water in Pipe, V **44334.259 cf**

Hydraulic Design of Stormwater Pumping Stations Using Programable Calculators

Texas Instruments
TI-59
Calculator Design
Series No. 5

MAY 1982

U.S. Department
of Transportation

Federal Highway
Administration

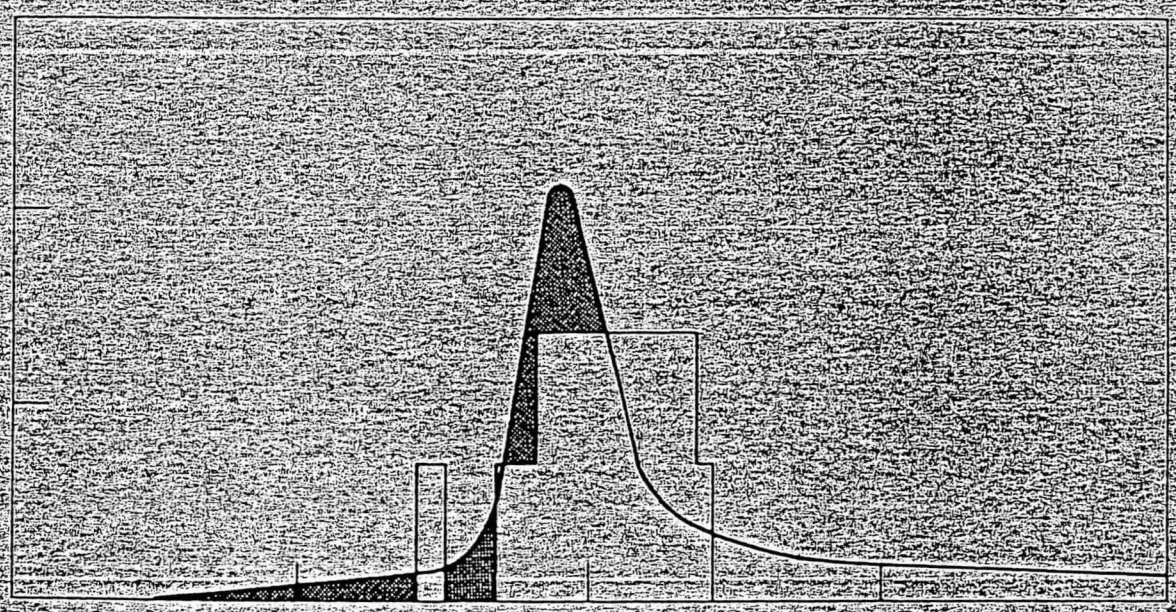

Program Set 2

Program Label B

The first program contained in program set two is Program Label B. As discussed in previous sections, Program Label B is used to determine the additional storage provided by circular pipes which feed into the pumping station wet well.

Program Label B is complex because the computation of the volume provided by a sloping circular pipe of a given length is a complicated problem, as will be demonstrated by the discussion of Program Label B below.

Equations

There are three equations used in this program to compute the volume added to the reservoir by a fixed length of circular pipe, of a certain diameter and slope. The first equation is used when the pipe is full throughout its length. This is simply the end area of the pipe times its length or:

$$V = \frac{\pi D^2}{4} L$$

where: V is the volume computed in cubic feet.

D is the inside diameter of the pipe in feet.

L is the length of the pipe in feet.

The second equation, presented below, is used when the volume of water in the pipe may be represented by a truncated right circular cylinder. This is illustrated in the figure below:

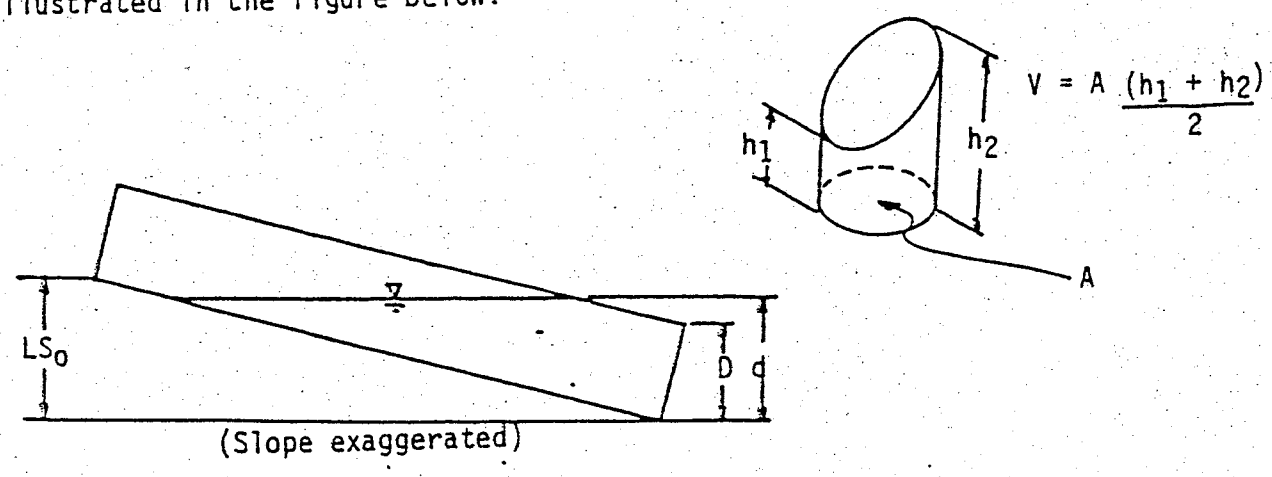

FIGURE 11. Truncated Right Circular Cylinder

where:

h_2 is equal to d/S_o, h_1 is equal to $(d - D)/S_o$
and $d = (n \Delta H)$

The total volume of water is given by the equation:

$$V = \frac{\pi D^2}{4S_o} ((n \Delta H) - D/2)$$

where: D is the inside pipe diameter in feet.

$(n \Delta H)$ is the depth of the water in integral height increments as defined above for trapezoidal basins.

S_o is the slope of the pipe in feet per foot.

The third equation is somewhat more complicated and is used to compute the volume of water in an ungula or wedge of a right circular cylinder. This is used frequently in Program Label B. To derive this equation, one must resort to integral calculus. The derivation is lengthy and will not be given here. However, this equation is given in a number of handbooks [1] for those who wish to verify its applicability.

The equation for the volume contained within an ungula of a right circular cylinder is:

$$V = \frac{h}{3\,b} \left[a(3R^2 - a^2) + 3R^2 (b - R)\phi \right]$$

where $\phi = \pi - \mathrm{Cos}^{-1} \left[\frac{2b}{D} - 1 \right]$

and $a = \frac{D}{2} \mathrm{Sin}\ \phi$

[1] Handbook of Engineering Fundamentals, Eshbach, John Wiley Publishers.

as shown in the figure

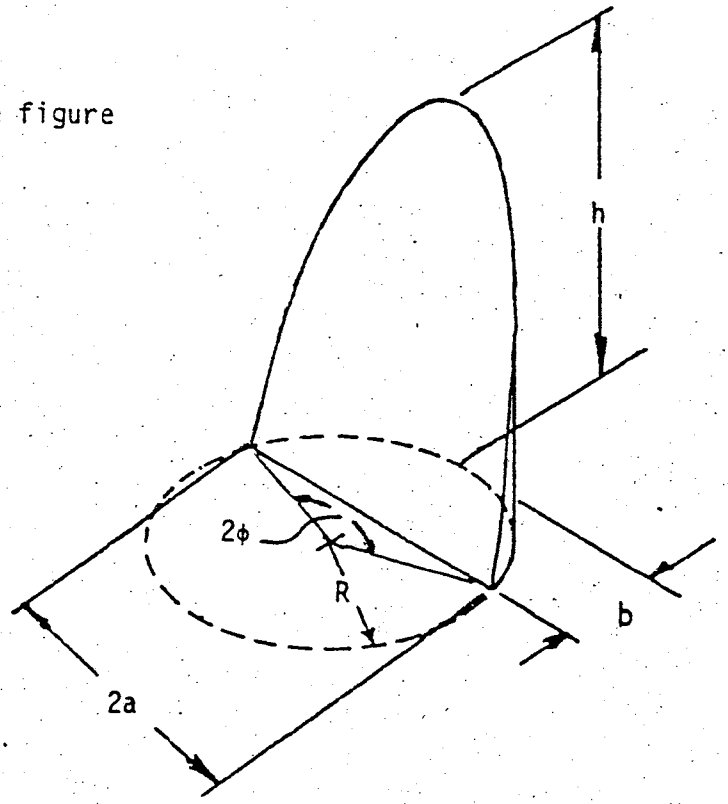

FIGURE 12. Ungula of A Cylinder

for the case of a horizontal water surface intersecting the inside surface of a sloping circular pipe, as illustrated below:

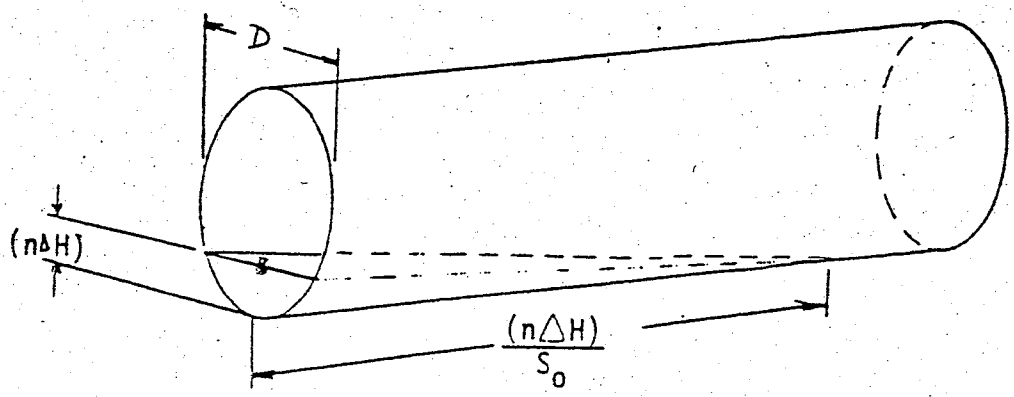

FIGURE 13. Horizontal Water Surface Intersecting Inside Surface of a Sloping Circular Pipe

The above equation may be rewritten as:

$$V = \frac{1}{3S_o}\left[a\left(3\left(\frac{D}{2}\right)^2 - a^2\right) + 3\left(\frac{D}{2}\right)^2\left((n\Delta H) - \left(\frac{D}{2}\right)\right)\phi\right]$$

where: $(n \Delta H)$ is defined above and

$$b = (n \Delta H),\ h = \frac{n \Delta H}{S_o},\ a = \frac{D}{2}\operatorname{Sin}\phi,\ \phi = \pi - \operatorname{Cos}^{-1}\left[\frac{2(n \Delta H)}{D} - 1\right]$$

This form of the equation is used in Program Label B to determine the volume of water within an ungula of a right circular cylinder.

With the three equations presented it is possible to compute the additional volume provided by a pipe feeding into the pumping station wet well.

Before proceding with a description of the program algorithm for Program Label B, it is necessary to discuss how the three equations presented above are used to compute the volume of water contained in a sloping circular pipe. As illustrated in the figure on the next page there are five cases which describe the problem completely.

- Case number 1 occurs when the depth of the water is less than the pipe diameter and also less than the elevation of the far invert of the pipe. This volume is computed by a straightforward application of the "ungula" equation.

- Case number 2 occurs when the depth of water is less than the pipe diameter but greater than the elvation of the far invert of the pipe. This volume is computed by a double application of the ungula formula. First, the pipe is "imaginarily" extended until the situation is the same as in case 1, i.e., the depth of water is less than the far invert elevation of the pipe. This volume is computed by the "ungula" equation. Second, the volume of water contained within the "imaginary extention" is computed, again using the "ungula" equation. This second volume is subtracted from the first, to compute the actual volume within the pipe.

- Case number 3 occurs when the depth of water is greater than the pipe diameter and less than the far invert elevation of the pipe. (This case occurs for steep or very long pipes). This volume is computed by a straightforward application of the equation for a truncated right circular cylinder described above.

Figure 14. Volume in Sloping Circular Pipes

Case 1; $d \leq D$ and $d \leq LS_o$

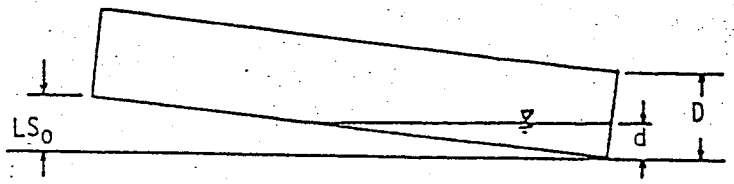

V = ungula

Case 2; $d \leq D$, $d > LS_o$

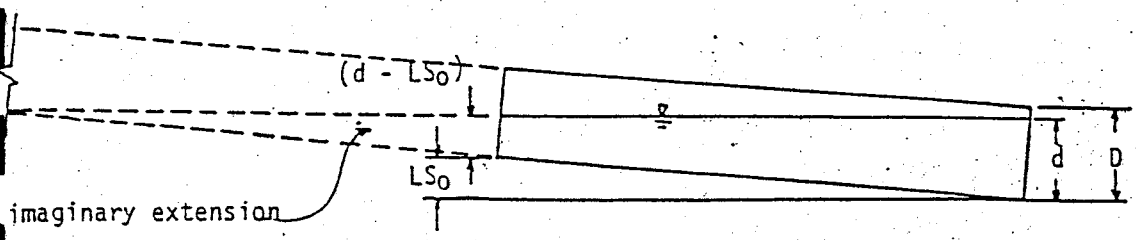

Case 3; $d > D$, $d \leq LS_o$

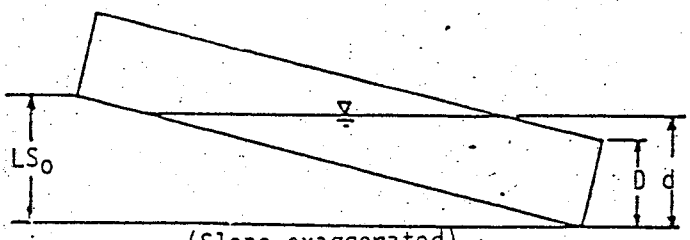

(Slope exaggerated)

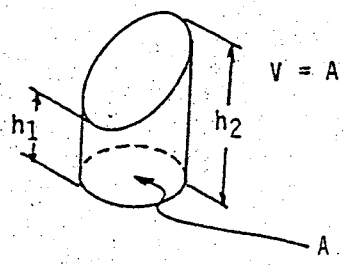

$$V = A \frac{(h_1 + h_2)}{2}$$

Case 4; $d > D$, $d > LS_o$, $d < LS_o + D$

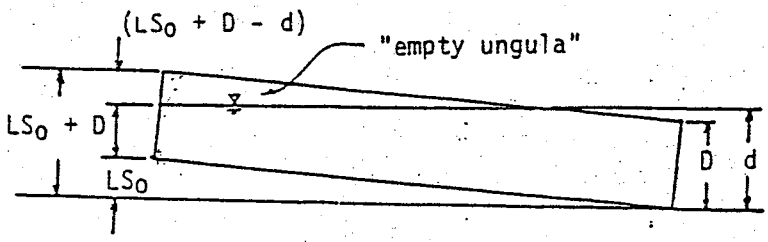

Case 5; $d > D$, $d > LS_o + D$

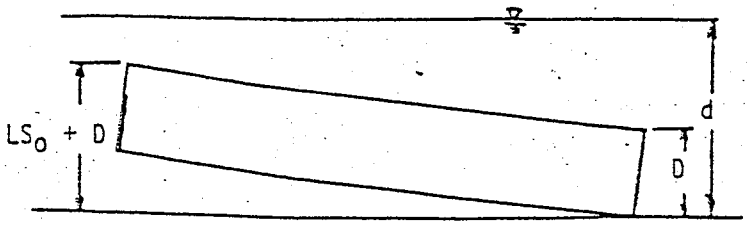

- Case number 4 occurs when the depth of water is greater than the pipe diameter, greater than the far invert of the pipe but less than the far crown of the pipe (i.e., the pipe is not full). In this case the volume of water contained within the pipe is computed by a combination of two equations. First, the volume of a full pipe is computed using the equation presented above for the full pipe. Second, the volume of the "empty ungula" is computed, using the ungula equation. The volume of the "empty ungula" is then subtracted from the full pipe to compute the volume of water contained in the pipe.

- Case number 5 occurs when the pipe is full. This occurs when the depth of water is greater than the pipe diameter, and also greater than the far crown of the pipe. The volume of water contained in a full pipe is computed by a straightforward application of the equation presented above for a full pipe.

As illustrated in the flowchart for the program algorithm, much of the program is dedicated to determining what case we are dealing with.

Program Algorithm

The first step in this program is to enter the necessary pipe parameters of diameters (D), slope (S_o), length (L), and downstream invert elevation. The next step is to determine which height increment the downstream invert elevation corresponds to. This allows the program to add the volume contributed by the pipe to the correct data registers. The next step is to determine the additional volume provided by the pipe for each reservoir height increment above the pipe invert and add this to the cumulative stage-storage relationship being developed. This step requires a number of iterations, in order to account for all of the reservoir height increments above the invert of the pipe. For each iteration, it is necessary to determine which case we are dealing with and consequently which equations to apply.

This complex algorithm is presented in the flowchart on the next page.

3-25-03

F.H.W.A. REGION	STATE	PROJECT NO.	SHEET NO.	TOTAL SHEETS	AS BUILT
9	ARIZ.	202-C(005)B			

202L MA 031

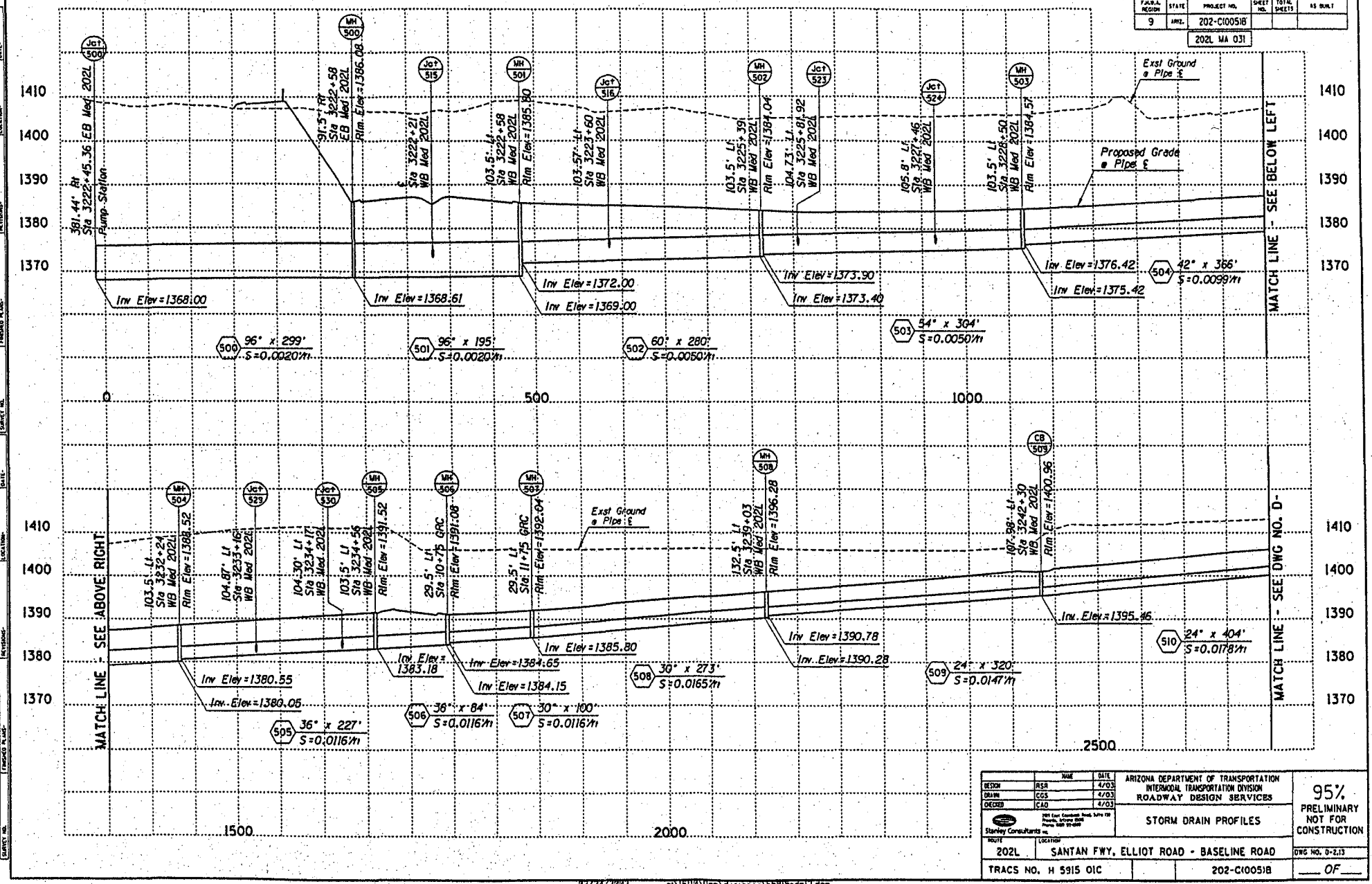

	NAME	DATE
DESIGN	RSR	4/03
DRAWN	CGS	4/03
CHECKED	CAD	4/03

Stanley Consultants Inc.

ARIZONA DEPARTMENT OF TRANSPORTATION
INTERMODAL TRANSPORTATION DIVISION
ROADWAY DESIGN SERVICES

STORM DRAIN PROFILES

95%
PRELIMINARY
NOT FOR CONSTRUCTION

ROUTE: 202L
LOCATION: SANTAN FWY, ELLIOT ROAD - BASELINE ROAD

TRACS NO. H 5915 01C

202-C(005)B

DWG NO. D-2.13

___ OF ___

3-25-03

F.H.W.A. REGION	STATE	PROJECT NO.	SHEET NO.	TOTAL SHEETS	AS BUILT
9	ARIZ.	202-C(005)B			

202L MA 031

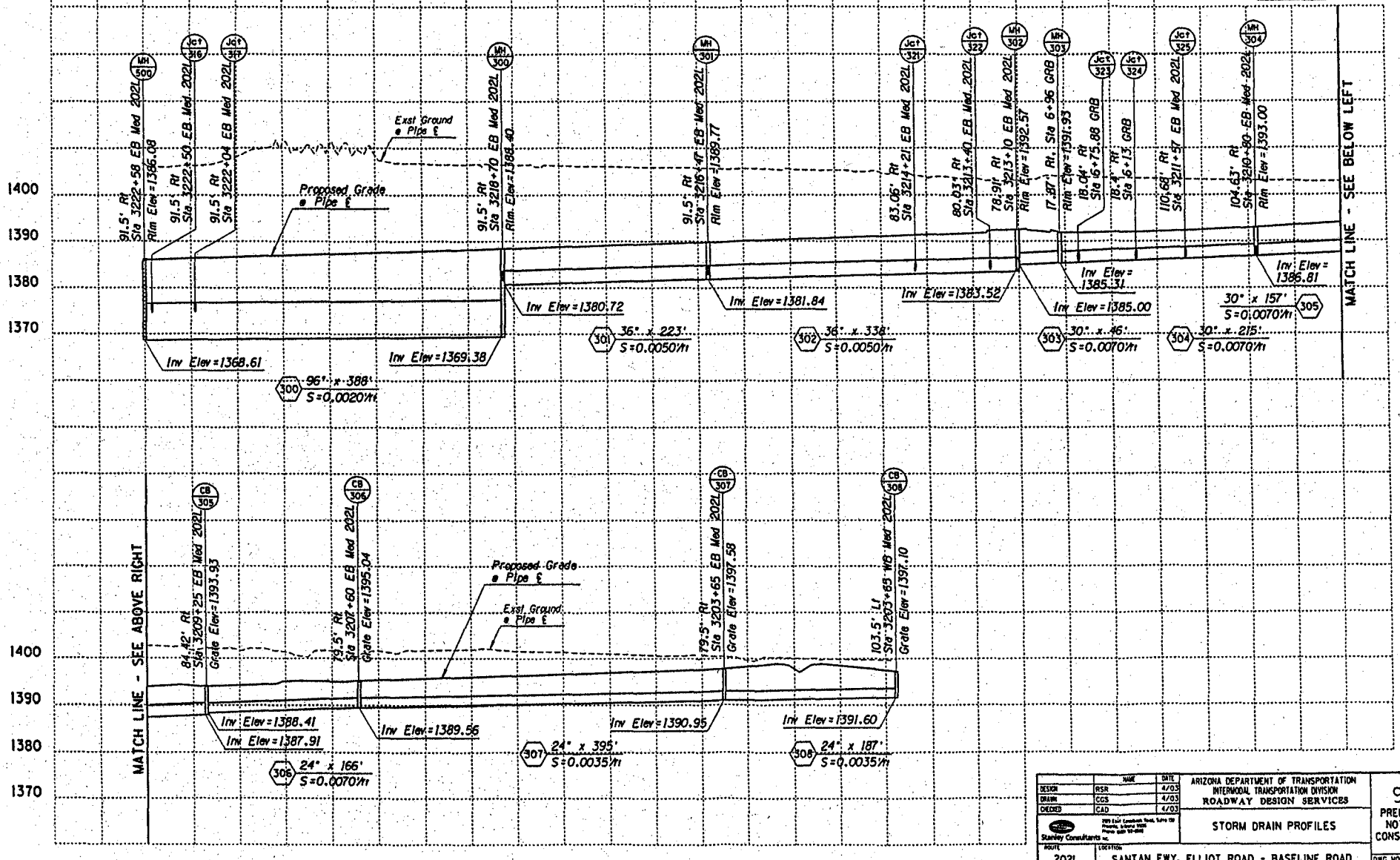

	NAME	DATE
DESIGN	RSR	4/03
DRAWN	CGS	4/03
CHECKED	CAD	4/03

Stanley Consultants Inc.

ARIZONA DEPARTMENT OF TRANSPORTATION
INTERMODAL TRANSPORTATION DIVISION
ROADWAY DESIGN SERVICES

STORM DRAIN PROFILES

95%
PRELIMINARY
NOT FOR CONSTRUCTION

ROUTE: 202L
LOCATION: SANTAN FWY, ELLIOT ROAD - BASELINE ROAD

TRACS NO. H 5915 01C | 202-C(005)B | DWG NO. D-2.6 | ___ OF ___

03/25/2003 dr\16110\Dgn\drainage\h5915=dp06.dgn

SR 202L Pump Station
Wet Well Storage Estimate
SCI #16110

	Increment D ft	D	Flat L 1 ft	Sloped L 2 ft	Sloped L3 ft	W 1 ft	W 2 ft	Incremental Volume CF	Acc. Volume CF
				31.00	12.00				
1360.00	0.00	0.00	26.00	0.00		47.00	36.00		
1360.50	0.50	0.50	26.00	1.94		47.00	36.00	737.77	737.77
1361.00	0.50	1.00	26.00	3.88		47.00	36.00	783.30	1521.06
1361.50	0.50	1.50	26.00	5.81		47.00	36.00	828.83	2349.89
1362.00	0.50	2.00	26.00	7.75		47.00	36.00	874.36	3224.25
1362.50	0.50	2.50	26.00	9.69		47.00	36.00	919.89	4144.14
1363.00	0.50	3.00	26.00	11.63		47.00	36.00	965.42	5109.56
1363.50	0.50	3.50	26.00	13.56		47.00	36.00	1010.95	6120.52
1364.00	0.50	4.00	26.00	15.50		47.00	36.00	1056.48	7177.00
1364.50	0.50	4.50	26.00	17.44		47.00	36.00	1102.02	8279.02
1365.00	0.50	5.00	26.00	19.38	0.00	47.00	36.00	1147.55	9426.56
1365.50	0.50	5.50	26.00	21.31	0.31	47.00	36.00	1211.31	10637.88
1366.00	0.50	6.00	26.00	23.25	2.25	47.00	36.00	1231.56	11869.44
1366.50	0.50	6.50	26.00	25.19	4.19	47.00	36.00	1266.44	13135.88
1367.00	0.50	7.00	26.00	27.13	6.13	47.00	36.00	1301.31	14437.19
1367.50	0.50	7.50	26.00	29.06	8.06	47.00	36.00	1336.19	15773.38
1368.00	0.50	8.00	26.00	31.00	10.00	47.00	36.00	1371.06	17144.44
1368.50	0.50	8.50	26.00	33.00	12.00	47.00	36.00	1406.50	18550.94
1369.00	0.50	9.00	26.00	33.00	12.00	47.00	36.00	1424.50	19975.44
1369.50	0.50	9.50	26.00	33.00	12.00	47.00	36.00	1424.50	21399.94
1370.00	0.50	10.00	26.00	33.00	12.00	47.00	36.00	1424.50	22824.44
1370.50	0.50	10.50	26.00	33.00	12.00	47.00	36.00	1424.50	24248.94
1371.00	0.50	11.00	26.00	33.00	12.00	47.00	36.00	1424.50	25673.44
1371.50	0.50	11.50	26.00	33.00	12.00	47.00	36.00	1424.50	27097.94
1372.00	0.50	12.00	26.00	33.00	12.00	47.00	36.00	1424.50	28522.44
1372.50	0.50	12.50	26.00	33.00	12.00	47.00	36.00	1424.50	29946.94
1373.00	0.50	13.00	26.00	33.00	12.00	47.00	36.00	1424.50	31371.44
1373.50	0.50	13.50	26.00	33.00	12.00	47.00	36.00	1424.50	32795.94
1374.00	0.50	14.00	26.00	33.00	12.00	47.00	36.00	1424.50	34220.44
1374.50	0.50	14.50	26.00	33.00	12.00	47.00	36.00	1424.50	35644.94
1375.00	0.50	15.00	26.00	33.00	12.00	47.00	36.00	1424.50	37069.44

DESIGNED BY: A DATE: 3/5/03
CHECKED BY: BNS DATE: 3/5/03
APPROVED BY: A DATE: 4/4/03

Q:\16110\Drainage\MSexcel\Wet Well Vol 8-27-02

SR 202L Pump Station
Wet Well Storage Estimate
SCI #16110

	Increment D ft	D	Flat L 1 ft	Sloped L 2 ft	Sloped L3 ft	W 1 ft	W 2 ft	Incremental Volume CF	Acc. Volume CF
1375.50	0.50	15.50	26.00	33.00	12.00	47.00	36.00	1424.50	38493.94
1376.00	0.50	16.00	26.00	33.00	12.00	47.00	36.00	1424.50	39918.44
1376.50	0.50	16.50	26.00	33.00	12.00	47.00	36.00	1424.50	41342.94
1377.00	0.50	17.00	26.00	33.00	12.00	47.00	36.00	1424.50	42767.44
1377.50	0.50	17.50	26.00	33.00	12.00	47.00	36.00	1424.50	44191.94
1378.00	0.50	18.00	26.00	33.00	12.00	47.00	36.00	1424.50	45616.44
1378.50	0.50	18.50	26.00	33.00	12.00	47.00	36.00	1424.50	47040.94
1379.00	0.50	19.00	26.00	33.00	12.00	47.00	36.00	1424.50	48465.44
1379.50	0.50	19.50	26.00	33.00	12.00	47.00	36.00	1424.50	49889.94
1380.00	0.50	20.00	26.00	33.00	12.00	47.00	36.00	1424.50	51314.44
1380.50	0.50	20.50	26.00	33.00	12.00	47.00	36.00	1424.50	52738.94
1381.00	0.50	21.00	26.00	33.00	12.00	47.00	36.00	1424.50	54163.44
1381.50	0.50	21.50	26.00	33.00	12.00	47.00	36.00	1424.50	55587.94
1382.00	0.50	22.00	26.00	33.00	12.00	47.00	36.00	1424.50	57012.44
1382.50	0.50	22.50	26.00	33.00	12.00	47.00	36.00	1424.50	58436.94
1383.00	0.50	23.00	26.00	33.00	12.00	47.00	36.00	1424.50	59861.44
1383.50	0.50	23.50	26.00	33.00	12.00	47.00	36.00	1424.50	61285.94
1384.00	0.50	24.00	26.00	33.00	12.00	47.00	36.00	1424.50	62710.44
1384.50	0.50	24.50	26.00	33.00	12.00	47.00	36.00	1424.50	64134.94
1385.00	0.50	25.00	26.00	33.00	12.00	47.00	36.00	1424.50	65559.44

STATIC HEAD CALCULATIONS

STATIC HEAD CALCULATION, H_S

Non-Submerged Weir

Weir Length = **49** **ft** (see attached drawings)

Weir Width = **0.83** **ft** (see attached drawings)

Weir Equation: $Q = CLh_w^{1.5}$

h_w = depth of water above weir

h_w (ft)	"C" Values			Q (cfs)
	.75 (ft)	.83 (ft)	1.0 (ft)	
0.20	2.75	2.73	2.69	11.97
0.40	2.80	2.77	2.72	34.39
0.60	2.89	2.85	2.75	64.79
0.80	3.04	2.98	2.85	104.46
1.00	3.14	3.09	2.98	151.35
1.20	3.20	3.16	3.08	203.65
1.40	3.26	3.24	3.20	263.05
1.60	3.29	3.29	3.28	325.95
1.80	3.32	3.32	3.31	392.49
2.00	3.31	3.31	3.30	458.30
2.50	3.32	3.32	3.31	642.43
3.00	3.32	3.32	3.32	845.31

Note: "C" values based on Handbook of Hydraulics, 5th Ed., McGraw - Hill Book Company

h_w values based on Handbook of Hydraulics, 5th Ed., McGraw - Hill Book Company

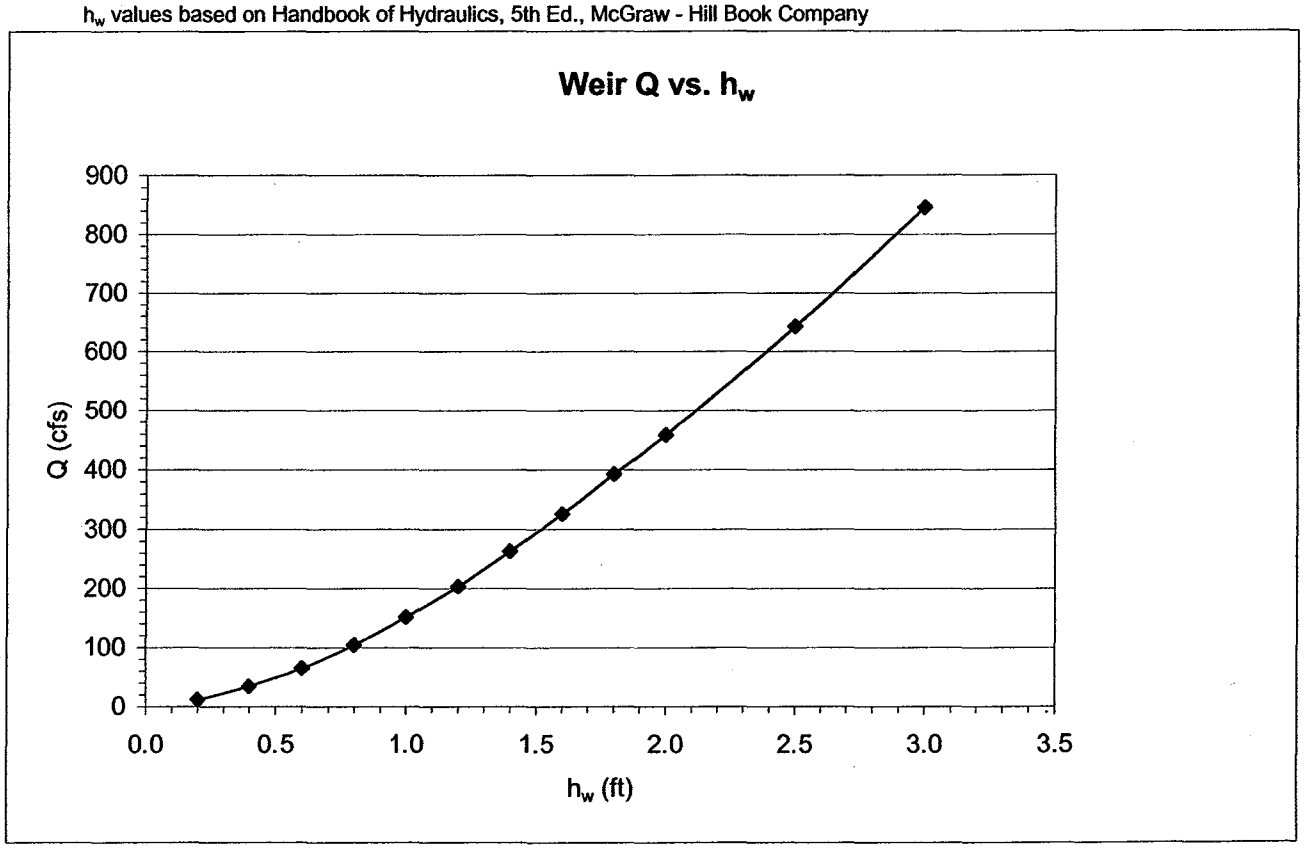

STATIC HEAD CALCULATION, H_S (continued)

Top-of-Weir Elev 1407.4 ft (see attached drawings)
Static Head, H_s = WSEL Above Weir - Wet Well WSEL
WSEL Above Weir = Top-of-Weir Elev + h_w
h_w taken from Weir Q vs. h_w Curve

			Static Head, H_s (ft)				
Q	h_w	WSEL Above Weir	Wet Well WSEL (ft)	Wet Well WSEL (ft)	Wet Well WSEL (ft)	Wet Well WSEL (ft)	Wet Well WSEL (ft)
(cfs)	(ft)	(ft)	1365	1370	1375	1380	1385
0	0	0	42.4	37.4	32.4	27.4	22.4
35.65	0.41	1407.81	42.81	37.81	32.81	27.81	22.81
40.11	0.44	1407.84	42.84	37.84	32.84	27.84	22.84
44.56	0.47	1407.87	42.87	37.87	32.87	27.87	22.87
49.02	0.50	1407.90	42.90	37.90	32.90	27.90	22.90
53.48	0.53	1407.93	42.93	37.93	32.93	27.93	22.93
57.93	0.55	1407.95	42.95	37.95	32.95	27.95	22.95
62.39	0.58	1407.98	42.98	37.98	32.98	27.98	22.98
66.84	0.61	1408.01	43.01	38.01	33.01	28.01	23.01

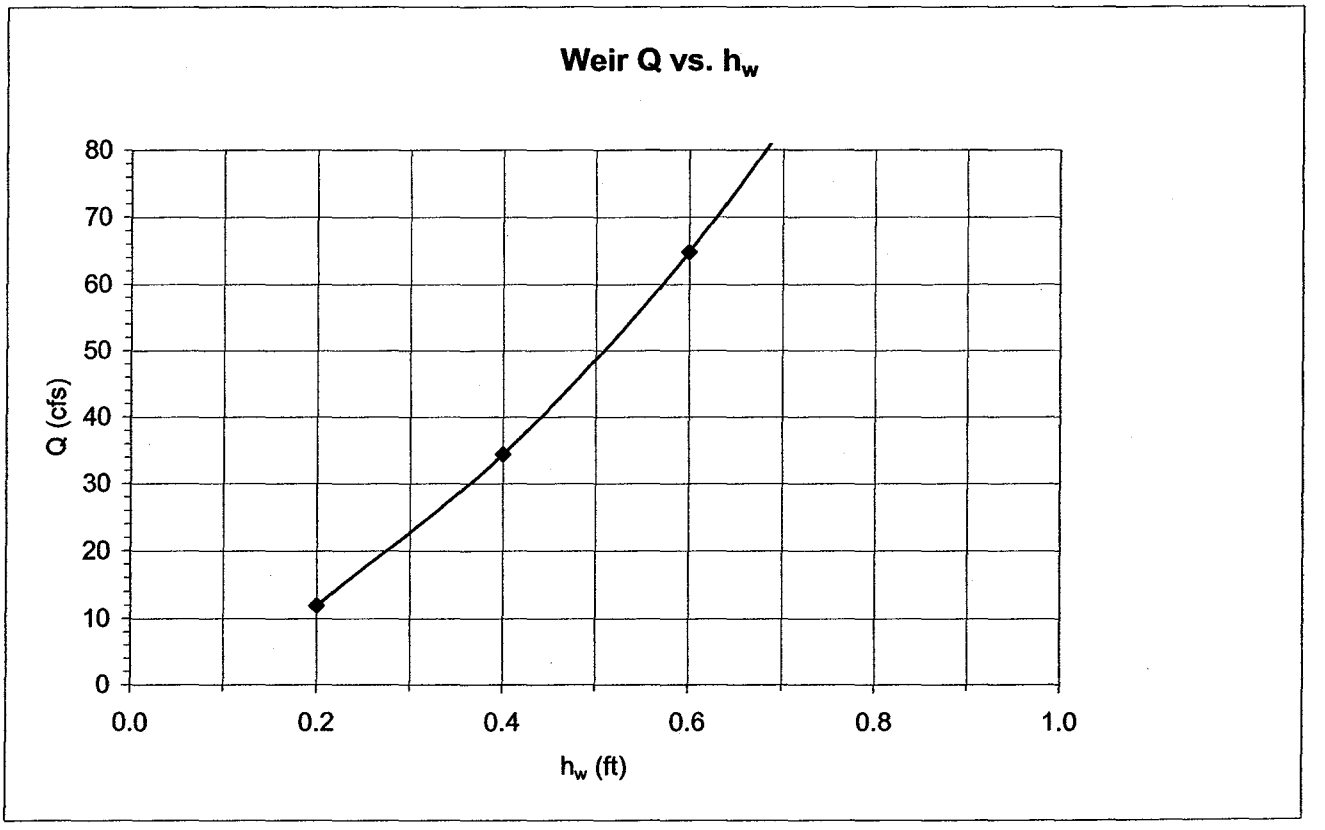

F.A.P.J. SECTION	STATE	PROJECT NO.	SHEET NO.	TOTAL SHEETS	AS BUILT
9	ARIZ.	202-C(005)B			
		202L MA 031			

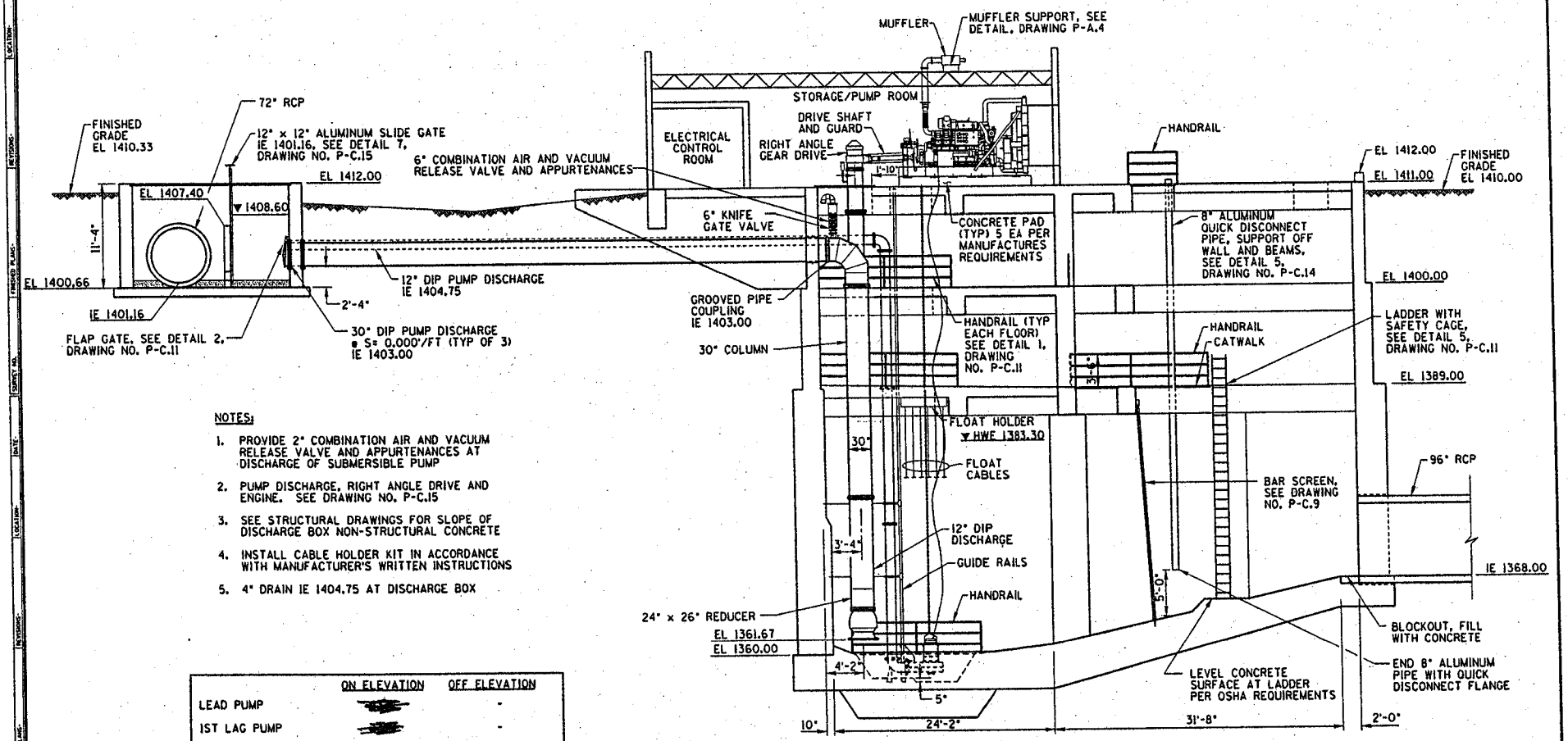

NOTES:

1. PROVIDE 2" COMBINATION AIR AND VACUUM RELEASE VALVE AND APPURTENANCES AT DISCHARGE OF SUBMERSIBLE PUMP
2. PUMP DISCHARGE, RIGHT ANGLE DRIVE AND ENGINE. SEE DRAWING NO. P-C.15
3. SEE STRUCTURAL DRAWINGS FOR SLOPE OF DISCHARGE BOX NON-STRUCTURAL CONCRETE
4. INSTALL CABLE HOLDER KIT IN ACCORDANCE WITH MANUFACTURER'S WRITTEN INSTRUCTIONS
5. 4" DRAIN IE 1404.75 AT DISCHARGE BOX

	ON ELEVATION	OFF ELEVATION
LEAD PUMP	[redacted]	-
1ST LAG PUMP	[redacted]	-
2ND LAG PUMP	[redacted]	-
HIGH WATER ALARM	[redacted]	-
ALL PUMPS OFF	-	1366

SECTION A-A

	NAME	DATE
DESIGN	FLR	4/03
DRAWN	CGS	4/03
CHECKED	LJL	4/03

Stanley Consultants Inc.

ARIZONA DEPARTMENT OF TRANSPORTATION
INTERMODAL TRANSPORTATION DIVISION
ROADWAY DESIGN SERVICES

PUMP STATION
SECTION A-A

95%
PRELIMINARY
NOT FOR CONSTRUCTION

ROUTE: 202L
LOCATION: SANTAN FWY, ELLIOT ROAD - BASELINE ROAD
DWG NO. P-C.6

TRACS NO. H 5915 01C
202-C(005)B
___ OF ___

02/27/2003 U:\15110\Str\PUMP\P5915m05.dgn

FRICTION LOSS CALCULATIONS

Santan Freeway - SR 202L Baseline to Elliot - Outflow Pipe Friction Losses

Stanley Consultants INC.

ADOT

SCI Proj # : 16110
ADOT Proj # :

Designed By:
Checked By: (A)
Approved By:

Date:
Date: 4-8-03
Date:

Pipe Diameter (in)	Pipe X-Sect Area (sq ft)	Item	Pipe Length (ft)	Q (gpm)	Q (cfs)	Velocity (fps)	Velocity Head (ft)	Headloss Coefficient K	Headloss (ft)	Type of Loss
24	3.141593	Expansion		16000	35.65062389	11.34794478	1.999625011	0.25	0.500	Minor
29.25	4.666370071	Pump Column	36	16000	35.65062389	7.639904967	0.9063377		0.177	Friction
29.25	4.666370071	Long Radius Elbow		16000	35.65062389	7.639904967	0.9063377	0.25	0.227	Minor
30	4.908739063	Coupling		16000	35.65062389	7.262684659	0.819046405	0.05	0.041	Minor
30	4.908739063	Discharge Pipe	65	16000	35.65062389	7.262684659	0.819046405		0.528	Friction
30	4.908739063	Flap Gate		16000	35.65062389	7.262684659	0.819046405	0.15	0.123	Minor
30	4.908739063	Outlet		16000	35.65062389	7.262684659	0.819046405	1	0.819	Outlet
								HL Total =	2.41	
24	3.141593	Expansion		18000	40.10695187	12.76643788	2.530775405	0.25	0.633	Minor
29.25	4.666370071	Pump Column	36	18000	40.10695187	8.594893088	1.147083652		0.221	Friction
29.25	4.666370071	Long Radius Elbow		18000	40.10695187	8.594893088	1.147083652	0.25	0.287	Minor
30	4.908739063	Coupling		18000	40.10695187	8.170520242	1.036605606	0.05	0.052	Minor
30	4.908739063	Discharge Pipe	65	18000	40.10695187	8.170520242	1.036605606		0.656	Friction
30	4.908739063	Flap Gate		18000	40.10695187	8.170520242	1.036605606	0.15	0.155	Minor
30	4.908739063	Outlet		18000	40.10695187	8.170520242	1.036605606	1	1.037	Outlet
								HL Total =	3.04	
24	3.141593	Expansion		20000	44.56327986	14.18493098	3.12441408	0.25	0.781	Minor
29.25	4.666370071	Pump Column	36	20000	44.56327986	9.549881209	1.416152657		0.268	Friction
29.25	4.666370071	Long Radius Elbow		20000	44.56327986	9.549881209	1.416152657	0.25	0.354	Minor
30	4.908739063	Coupling		20000	44.56327986	9.078355824	1.279760007	0.05	0.064	Minor
30	4.908739063	Discharge Pipe	65	20000	44.56327986	9.078355824	1.279760007		0.797	Friction
30	4.908739063	Flap Gate		20000	44.56327986	9.078355824	1.279760007	0.15	0.192	Minor
30	4.908739063	Outlet		20000	44.56327986	9.078355824	1.279760007	1	1.280	Outlet
								HL Total =	3.74	
24	3.141593	Expansion		22000	49.01960784	15.60342407	3.780541037	0.25	0.945	Minor
29.25	4.666370071	Pump Column	36	22000	49.01960784	10.50486933	1.713544715		0.320	Friction
29.25	4.666370071	Long Radius Elbow		22000	49.01960784	10.50486933	1.713544715	0.25	0.428	Minor
30	4.908739063	Coupling		22000	49.01960784	9.986191407	1.548509609	0.05	0.077	Minor
30	4.908739063	Discharge Pipe	65	22000	49.01960784	9.986191407	1.548509609		0.951	Friction
30	4.908739063	Flap Gate		22000	49.01960784	9.986191407	1.548509609	0.15	0.232	Minor
30	4.908739063	Outlet		22000	49.01960784	9.986191407	1.548509609	1	1.549	Outlet
								HL Total =	4.50	

Santan Freeway - SR 202L Baseline to Elliot - Outflow Pipe Friction Losses

Stanley Consultants INC.

ADOT

SCI Proj # : 16110
ADOT Proj # :

Designed By:
Checked By:
Approved By:

Date:
Date: 4-8-03
Date:

Pipe Diameter (in)	Pipe X-Sect Area (sq ft)	Item	Pipe Length (ft)	Q (gpm)	Q (cfs)	Velocity (fps)	Velocity Head (ft)	Headloss Coefficient K	Headloss (ft)	Type of Loss
24	3.141593	Expansion		24000	53.47593583	17.02191717	4.499156276	0.25	1.125	Minor
29.25	4.666370071	Pump Column	36	24000	53.47593583	11.45985745	2.039259826		0.376	Friction
29.25	4.666370071	Long Radius Elbow		24000	53.47593583	11.45985745	2.039259826	0.25	0.510	Minor
30	4.908739063	Coupling		24000	53.47593583	10.89402699	1.842854411	0.05	0.092	Minor
30	4.908739063	Discharge Pipe	65	24000	53.47593583	10.89402699	1.842854411		1.117	Friction
30	4.908739063	Flap Gate		24000	53.47593583	10.89402699	1.842854411	0.15	0.276	Minor
30	4.908739063	Outlet		24000	53.47593583	10.89402699	1.842854411	1	1.843	Outlet
								HL Total =	5.34	
24	3.141593	Expansion		26000	57.93226381	18.44041027	5.280259796	0.25	1.320	Minor
29.25	4.666370071	Pump Column	36	26000	57.93226381	12.41484557	2.39329799		0.435	Friction
29.25	4.666370071	Long Radius Elbow		26000	57.93226381	12.41484557	2.39329799	0.25	0.598	Minor
30	4.908739063	Coupling		26000	57.93226381	11.80186257	2.162794412	0.05	0.108	Minor
30	4.908739063	Discharge Pipe	65	26000	57.93226381	11.80186257	2.162794412		1.295	Friction
30	4.908739063	Flap Gate		26000	57.93226381	11.80186257	2.162794412	0.15	0.324	Minor
30	4.908739063	Outlet		26000	57.93226381	11.80186257	2.162794412	1	2.163	Outlet
								HL Total =	6.24	
24	3.141593	Expansion		28000	62.3885918	19.85890337	6.123851597	0.25	1.531	Minor
29.25	4.666370071	Pump Column	36	28000	62.3885918	13.36983369	2.775659207		0.499	Friction
29.25	4.666370071	Long Radius Elbow		28000	62.3885918	13.36983369	2.775659207	0.25	0.694	Minor
30	4.908739063	Coupling		28000	62.3885918	12.70969815	2.508329614	0.05	0.125	Minor
30	4.908739063	Discharge Pipe	65	28000	62.3885918	12.70969815	2.508329614		1.466	Friction
30	4.908739063	Flap Gate		28000	62.3885918	12.70969815	2.508329614	0.15	0.376	Minor
30	4.908739063	Outlet		28000	62.3885918	12.70969815	2.508329614	1	2.508	Outlet
								HL Total =	7.22	
24	3.141593	Expansion		30000	66.84491979	21.27739646	7.029931681	0.25	1.757	Minor
29.25	4.666370071	Pump Column	36	30000	66.84491979	14.32482181	3.186343478		0.567	Friction
29.25	4.666370071	Long Radius Elbow		30000	66.84491979	14.32482181	3.186343478	0.25	0.797	Minor
30	4.908739063	Coupling		30000	66.84491979	13.61753374	2.879460016	0.05	0.144	Minor
30	4.908739063	Discharge Pipe	65	30000	66.84491979	13.61753374	2.879460016		1.688	Fiction
30	4.908739063	Flap Gate		30000	66.84491979	13.61753374	2.879460016	0.15	0.432	Minor
30	4.908739063	Outlet		30000	66.84491979	13.61753374	2.879460016	1	2.879	Outlet
								HL Total =	8.26	

TOTAL DYNAMIC HEAD CALCULATIONS

SYSTEM CURVES

PUMP CURVES

PUMP OUTFLOW CURVE

Santan Freeway - SR 202L Baseline to Elliot - System & Pump Curves

Stanley Consultants INC. ADOT

SCI Proj # : 16110

Designed By: RNS Date: 3-25-03
Checked By: CAV Date: 4-8-03
Approved By: Date:

Total Dynamic Head = TDH = Static Head + System Losses
System Curves based on TDH and Q
Pump Curve based on Cascade Pump Co. Curve No. MF2408A5
Pump Outflow based on TDH vs. Q for specified WSEL, at intersection of System Curve & Pump Curve

System Curves						
Q (cfs)	Q (gpm)	TDH (ft) WS=1365	TDH (ft) WS=1370	TDH (ft) WS=1375	TDH (ft) WS=1380	TDH (ft) WS=1385
0	0	42.40	37.40	32.40	27.40	22.40
35.65	16000	45.22	40.22	35.22	30.22	25.22
40.11	18000	45.88	40.88	35.88	30.88	25.88
44.56	20000	46.61	41.61	36.61	31.61	26.61
49.02	22000	47.40	42.40	37.40	32.40	27.40
53.48	24000	48.27	43.27	38.27	33.27	28.27
57.93	26000	49.19	44.19	39.19	34.19	29.19
62.39	28000	50.20	45.20	40.20	35.20	30.20
66.84	30000	51.27	46.27	41.27	36.27	31.27

Pump Curve		
Q (cfs)	Q (gpm)	TDH (ft)
36.54189	16400	67
45.00891	20200	59
49.01961	22000	55
52.13904	23400	49
54.81283	24600	44
57.48663	25800	40
59.93761	26900	35
63.72549	28600	26

Pump Outflow	
WSEL (ft)	Q (cfs)
1365	52.5
1370	54.5
1375	58.0
1380	60.0
1385	62.0

Santan Freeway - SR 202L Baseline to Elliot - System & Pump Curves

Stanley Consultants INC. ADOT

SCI Proj # : 16110

Designed By: BNS Date: 3-25-03
Checked By: [illegible] Date: 4-8-03
Approved By: Date:

Total Dynamic Head = TDH = Static Head + System Losses
System Curves based on TDH and Q
Pump Curve based on Cascade Pump Co. Curve No. MF2408A5
Pump Outflow based on TDH vs. Q for specified WSEL, at intersection of System Curve & Pump Curve

System Curves						
Q (cfs)	Q (gpm)	TDH (ft) WS=1365	TDH (ft) WS=1370	TDH (ft) WS=1375	TDH (ft) WS=1380	TDH (ft) WS=1385
0	0	42.40	37.40	32.40	27.40	22.40
35.65	16000	45.22	40.22	35.22	30.22	25.22
40.11	18000	45.88	40.88	35.88	30.88	25.88
44.56	20000	46.61	41.61	36.61	31.61	26.61
49.02	22000	47.40	42.40	37.40	32.40	27.40
53.48	24000	48.27	43.27	38.27	33.27	28.27
57.93	26000	49.19	44.19	39.19	34.19	29.19
62.39	28000	50.20	45.20	40.20	35.20	30.20
66.84	30000	51.27	46.27	41.27	36.27	31.27

Pump Curve		
Q (cfs)	Q (gpm)	TDH (ft)
36.54189	16400	67
45.00891	20200	59
49.01961	22000	55
52.13904	23400	49
54.81283	24600	44
57.48663	25800	40
59.93761	26900	35
63.72549	28600	26

Pump Outflow	
WSEL (ft)	Q (cfs)
1365	52.5
1370	54.5
1375	58.0
1380	60.0
1385	62.0

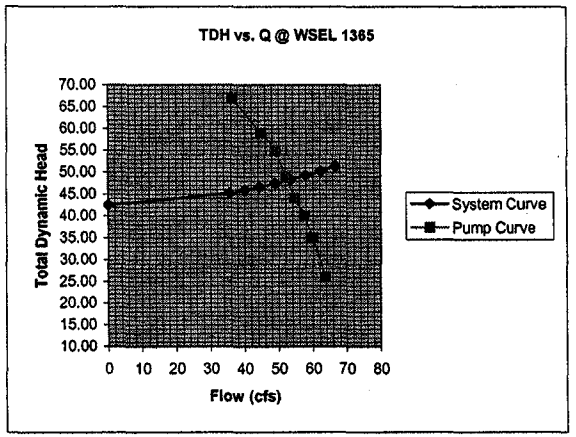

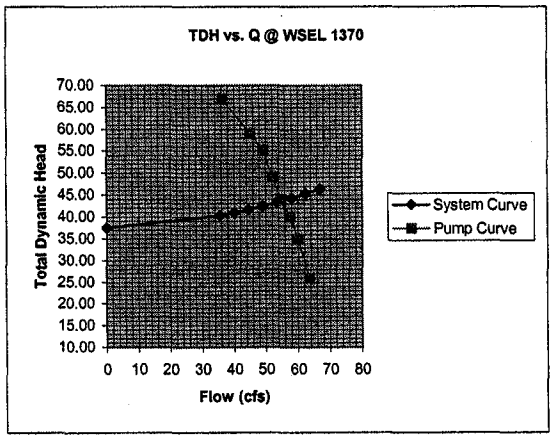

Santan Freeway - SR 202L Baseline to Elliot - System & Pump Curves

Stanley Consultants INC. ADOT

SCI Proj # : 16110

Designed By: BNS Date: 3-25-03
Checked By: [illegible] Date: 4-8-03
Approved By: Date:

Total Dynamic Head = TDH = Static Head + System Losses
System Curves based on TDH and Q
Pump Curve based on Cascade Pump Co. Curve No. MF2408A5
Pump Outflow based on TDH vs. Q for specified WSEL, at intersection of System Curve & Pump Curve

System Curves						
Q (cfs)	Q (gpm)	TDH (ft) WS=1365	TDH (ft) WS=1370	TDH (ft) WS=1375	TDH (ft) WS=1380	TDH (ft) WS=1385
0	0	42.40	37.40	32.40	27.40	22.40
35.65	16000	45.22	40.22	35.22	30.22	25.22
40.11	18000	45.88	40.88	35.88	30.88	25.88
44.56	20000	46.61	41.61	36.61	31.61	26.61
49.02	22000	47.40	42.40	37.40	32.40	27.40
53.48	24000	48.27	43.27	38.27	33.27	28.27
57.93	26000	49.19	44.19	39.19	34.19	29.19
62.39	28000	50.20	45.20	40.20	35.20	30.20
66.84	30000	51.27	46.27	41.27	36.27	31.27

Pump Curve		
Q (cfs)	Q (gpm)	TDH (ft)
36.54189	16400	67
45.00891	20200	59
49.01961	22000	55
52.13904	23400	49
54.81283	24600	44
57.48663	25800	40
59.93761	26900	35
63.72549	28600	26

Pump Outflow	
WSEL (ft)	Q (cfs)
1365	52.5
1370	54.5
1375	58.0
1380	60.0
1385	62.0

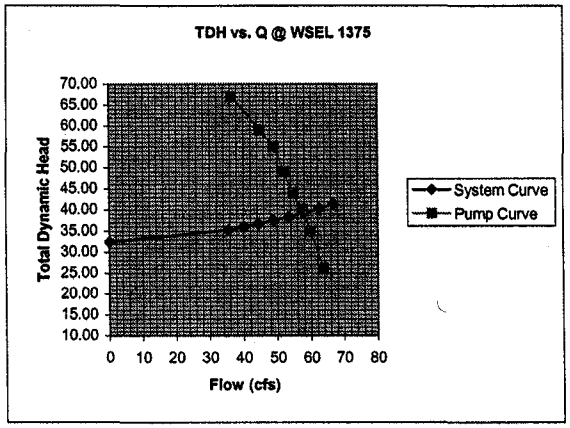

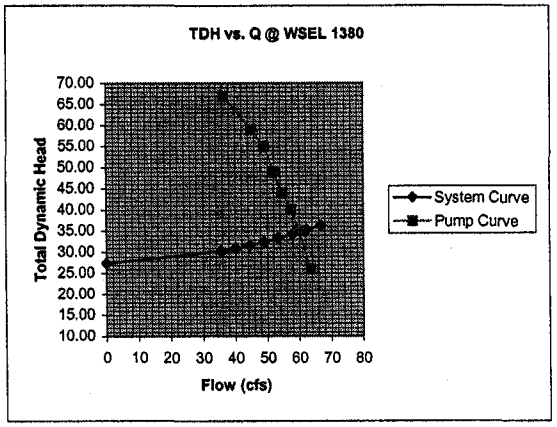

Santan Freeway - SR 202L Baseline to Elliot - System & Pump Curves

Stanley Consultants INC. ADOT

SCI Proj # : 16110

Designed By: BNS Date: 3-25-03
Checked By: AD Date: 4-8-03
Approved By: Date:

Total Dynamic Head = TDH = Static Head + System Losses
System Curves based on TDH and Q
Pump Curve based on Cascade Pump Co. Curve No. MF2408A5
Pump Outflow based on TDH vs. Q for specified WSEL, at intersection of System Curve & Pump Curve

System Curves						
Q (cfs)	Q (gpm)	TDH (ft) WS=1365	TDH (ft) WS=1370	TDH (ft) WS=1375	TDH (ft) WS=1380	TDH (ft) WS=1385
0	0	42.40	37.40	32.40	27.40	22.40
35.65	16000	45.22	40.22	35.22	30.22	25.22
40.11	18000	45.88	40.88	35.88	30.88	25.88
44.56	20000	46.61	41.61	36.61	31.61	26.61
49.02	22000	47.40	42.40	37.40	32.40	27.40
53.48	24000	48.27	43.27	38.27	33.27	28.27
57.93	26000	49.19	44.19	39.19	34.19	29.19
62.39	28000	50.20	45.20	40.20	35.20	30.20
66.84	30000	51.27	46.27	41.27	36.27	31.27

Pump Curve		
Q (cfs)	Q (gpm)	TDH (ft)
36.54189	16400	67
45.00891	20200	59
49.01961	22000	55
52.13904	23400	49
54.81283	24600	44
57.48663	25800	40
59.93761	26900	35
63.72549	28600	26

Pump Outflow	
WSEL (ft)	Q (cfs)
1365	52.5
1370	54.5
1375	58.0
1380	60.0
1385	62.0

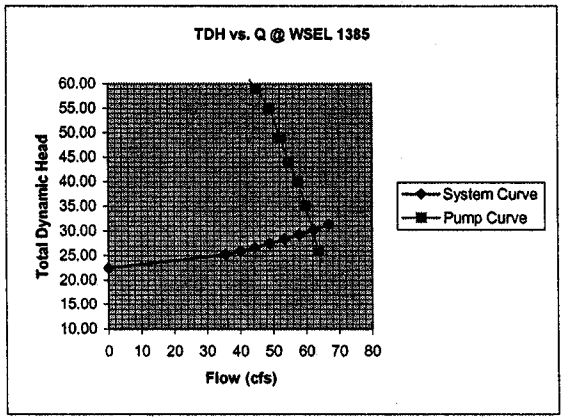

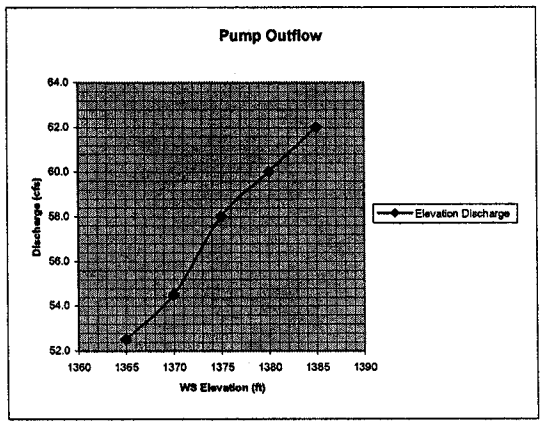

Plotted By: FRED ROUSE 11/13/02
Checked By:
Approved By:

CASCADE PUMP COMPANY
10107 South Norwalk Boulevard • PO Box 2767
Santa Fe Springs, California 90670-0767

CURVE NUMBER	DATE	SUPERCEDES
MF2408A5	07-92	NEW ISSUE

24

MF

880 RPM

SCI #16110

USED TO CALCULATE PUMP CURVE TDH VS. Q

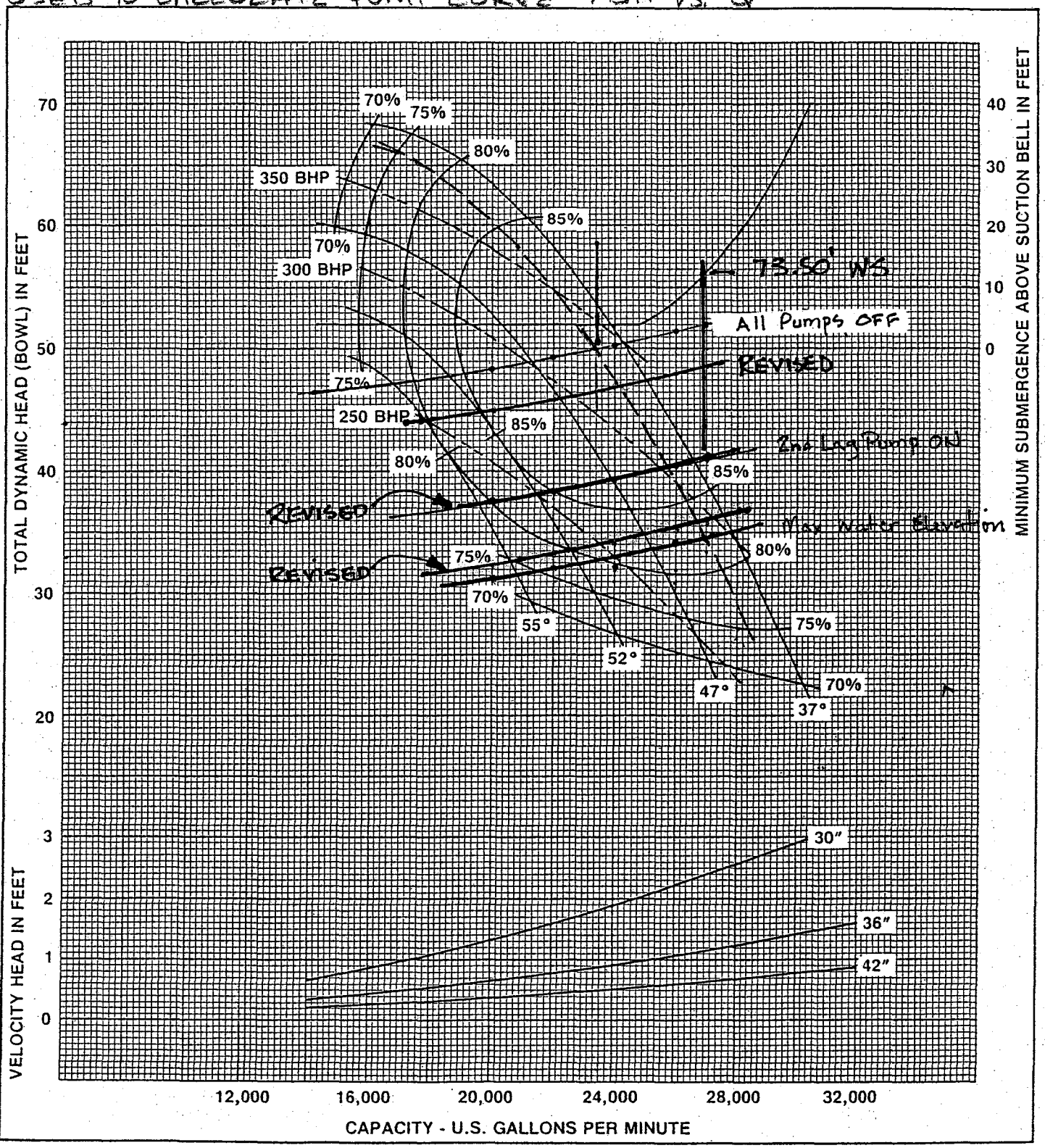

CURVE CHARACTERISTICS BASED ON PUMP PERFORMANCE WITH SPECIFIED AMOUNT OF CLEAR, NON-AERATED, FRESH COLD WATER.

THIS PERFORMANCE CURVE IS FOR ESTIMATING ONLY. CURVE SHOWS SINGLE STAGE PERFORMANCE. FOR MULTIPLE, VARIABLE AND OTHER SPEED APPLICATIONS, CONSULT FACTORY.

PUMP STATION HYDROGRAPH ROUTING

Santan Freeway - SR 202L Baseline to Elliot - Pump Station Routing

Stanley Consultants INC.

ADOT

SCI Proj # : 16110

Designed By: BNS Date: 3-25-03
Checked By: [illegible] Date: 4-8-03
Approved By: Date:

Max WS = 1380.91

	Pump 1	Pump 2	Pump 3	Pump 4
Pump Run Time	52.20 Min	32.70 Min	21.30 Min	0.00 Min
	4.5	5.5	7.5	0
Pump Warmups	3.00 Min	3.00 Min	3.00 Min	3.00 Min
Float Switch On/Off Elevations (ft)				
On Elev	1372.5	1373.5	1375.5	1500
Off Elev	1368	1368	1368	1400

Time (hrs)	Inflow (cfs)	Incremental Inflow Volume (cf)	Cumulative Inflow Volume (cf)	Pump 1 (cf)	Pump 2 (cf)	Pump 3 (cf)	Pump 4 (cf)	Pump Out (cf)	Outflow (cfs)	Cumulative Outflow (cf)	Total Storage (cf)	WSEL (ft)
0.0000	0.0	0.0	0.0					0.0				1360.00
0.0025	6.1	27.3	27.3	0.0	0.0	0.0	0.0	0.0	0.0	0.0	27	1360.02
0.0050	6.1	54.7	82.0	0.0	0.0	0.0	0.0	0.0	0.0	0.0	82	1360.05
0.0075	6.1	54.8	136.8	0.0	0.0	0.0	0.0	0.0	0.0	0.0	137	1360.09
0.0100	6.1	55.0	191.8	0.0	0.0	0.0	0.0	0.0	0.0	0.0	192	1360.13
0.0125	6.1	55.2	247.0	0.0	0.0	0.0	0.0	0.0	0.0	0.0	247	1360.16
0.0150	6.2	55.3	302.3	0.0	0.0	0.0	0.0	0.0	0.0	0.0	302	1360.20
0.0175	6.2	55.5	357.7	0.0	0.0	0.0	0.0	0.0	0.0	0.0	358	1360.24
0.0200	6.2	55.6	413.4	0.0	0.0	0.0	0.0	0.0	0.0	0.0	413	1360.27
0.0225	6.2	55.8	469.1	0.0	0.0	0.0	0.0	0.0	0.0	0.0	469	1360.31
0.0250	6.2	55.9	525.1	0.0	0.0	0.0	0.0	0.0	0.0	0.0	525	1360.35
0.0275	6.2	56.1	581.2	0.0	0.0	0.0	0.0	0.0	0.0	0.0	581	1360.38
0.0300	6.3	56.3	637.4	0.0	0.0	0.0	0.0	0.0	0.0	0.0	637	1360.42
0.0325	6.3	56.4	693.8	0.0	0.0	0.0	0.0	0.0	0.0	0.0	694	1360.46
0.0350	6.3	56.6	750.4	0.0	0.0	0.0	0.0	0.0	0.0	0.0	750	1360.49
0.0375	6.3	56.7	807.1	0.0	0.0	0.0	0.0	0.0	0.0	0.0	807	1360.53
0.0400	6.3	56.9	864.0	0.0	0.0	0.0	0.0	0.0	0.0	0.0	864	1360.57
0.0425	6.3	57.0	921.1	0.0	0.0	0.0	0.0	0.0	0.0	0.0	921	1360.61
0.0450	6.4	57.2	978.3	0.0	0.0	0.0	0.0	0.0	0.0	0.0	978	1360.64
0.0475	6.4	57.4	1035.6	0.0	0.0	0.0	0.0	0.0	0.0	0.0	1036	1360.68
0.0500	6.4	57.5	1093.2	0.0	0.0	0.0	0.0	0.0	0.0	0.0	1093	1360.72
0.0525	6.4	57.7	1150.8	0.0	0.0	0.0	0.0	0.0	0.0	0.0	1151	1360.76
0.0550	6.4	57.8	1208.7	0.0	0.0	0.0	0.0	0.0	0.0	0.0	1209	1360.80
0.0575	6.5	58.0	1266.7	0.0	0.0	0.0	0.0	0.0	0.0	0.0	1267	1360.83
0.0600	6.5	58.1	1324.8	0.0	0.0	0.0	0.0	0.0	0.0	0.0	1325	1360.87
0.0625	6.5	58.3	1383.1	0.0	0.0	0.0	0.0	0.0	0.0	0.0	1383	1360.91
0.0650	6.5	58.5	1441.6	0.0	0.0	0.0	0.0	0.0	0.0	0.0	1442	1360.95
0.0675	6.5	58.6	1500.2	0.0	0.0	0.0	0.0	0.0	0.0	0.0	1500	1360.99
0.0700	6.5	58.8	1559.0	0.0	0.0	0.0	0.0	0.0	0.0	0.0	1559	1361.02
0.0725	6.6	58.9	1617.9	0.0	0.0	0.0	0.0	0.0	0.0	0.0	1618	1361.06
0.0750	6.6	59.1	1677.0	0.0	0.0	0.0	0.0	0.0	0.0	0.0	1677	1361.09
0.0775	6.6	59.3	1736.3	0.0	0.0	0.0	0.0	0.0	0.0	0.0	1736	1361.13
0.0800	6.6	59.4	1795.7	0.0	0.0	0.0	0.0	0.0	0.0	0.0	1796	1361.16
0.0825	6.6	59.6	1855.3	0.0	0.0	0.0	0.0	0.0	0.0	0.0	1855	1361.20
0.0850	6.6	59.7	1915.0	0.0	0.0	0.0	0.0	0.0	0.0	0.0	1915	1361.23
0.0875	6.7	59.9	1974.9	0.0	0.0	0.0	0.0	0.0	0.0	0.0	1975	1361.27
0.0900	6.7	60.0	2034.9	0.0	0.0	0.0	0.0	0.0	0.0	0.0	2035	1361.30
0.0925	6.7	60.2	2095.1	0.0	0.0	0.0	0.0	0.0	0.0	0.0	2095	1361.34
0.0950	6.7	60.4	2155.5	0.0	0.0	0.0	0.0	0.0	0.0	0.0	2155	1361.37
0.0975	6.7	60.5	2216.0	0.0	0.0	0.0	0.0	0.0	0.0	0.0	2216	1361.41
0.1000	6.8	60.7	2276.7	0.0	0.0	0.0	0.0	0.0	0.0	0.0	2277	1361.45
0.1025	6.8	60.8	2337.5	0.0	0.0	0.0	0.0	0.0	0.0	0.0	2337	1361.48
0.1050	6.8	61.0	2398.5	0.0	0.0	0.0	0.0	0.0	0.0	0.0	2398	1361.52
0.1075	6.8	61.1	2459.6	0.0	0.0	0.0	0.0	0.0	0.0	0.0	2460	1361.55
0.1100	6.8	61.3	2520.9	0.0	0.0	0.0	0.0	0.0	0.0	0.0	2521	1361.59
0.1125	6.8	61.5	2582.4	0.0	0.0	0.0	0.0	0.0	0.0	0.0	2582	1361.62

	Pump 1	Pump 2	Pump 3	Pump 4
Pump Run Time	52.20 Min	32.70 Min	21.30 Min	0.00 Min
	4.5	5.5	7.5	0
Pump Warmups	3.00 Min	3.00 Min	3.00 Min	3.00 Min
Float Switch On/Off Elevations (ft)				
On Elev	1372.5	1373.5	1375.5	1500
Off Elev	1368	1368	1368	1400

Max WS = 1380.91

Time (hrs)	Inflow (cfs)	Incremental Inflow Volume (cf)	Cumulative Inflow Volume (cf)	Pump 1 (cf)	Pump 2 (cf)	Pump 3 (cf)	Pump 4 (cf)	Pump Out (cf)	Outflow (cfs)	Cumulative Outflow (cf)	Total Storage (cf)	WSEL (ft)
0.1150	6.9	61.6	2644.0	0.0	0.0	0.0	0.0	0.0	0.0	0.0	2644	1361.66
0.1175	6.9	61.8	2705.8	0.0	0.0	0.0	0.0	0.0	0.0	0.0	2706	1361.70
0.1200	6.9	61.9	2767.7	0.0	0.0	0.0	0.0	0.0	0.0	0.0	2768	1361.73
0.1225	6.9	62.1	2829.8	0.0	0.0	0.0	0.0	0.0	0.0	0.0	2830	1361.77
0.1250	6.9	62.3	2892.1	0.0	0.0	0.0	0.0	0.0	0.0	0.0	2892	1361.81
0.1275	6.9	62.4	2954.5	0.0	0.0	0.0	0.0	0.0	0.0	0.0	2954	1361.84
0.1300	7.0	62.6	3017.1	0.0	0.0	0.0	0.0	0.0	0.0	0.0	3017	1361.88
0.1325	7.0	62.7	3079.8	0.0	0.0	0.0	0.0	0.0	0.0	0.0	3080	1361.92
0.1350	7.0	62.9	3142.7	0.0	0.0	0.0	0.0	0.0	0.0	0.0	3143	1361.95
0.1375	7.0	63.0	3205.7	0.0	0.0	0.0	0.0	0.0	0.0	0.0	3206	1361.99
0.1400	7.0	63.2	3268.9	0.0	0.0	0.0	0.0	0.0	0.0	0.0	3269	1362.03
0.1425	7.0	63.4	3332.3	0.0	0.0	0.0	0.0	0.0	0.0	0.0	3332	1362.06
0.1450	7.1	63.5	3395.8	0.0	0.0	0.0	0.0	0.0	0.0	0.0	3396	1362.09
0.1475	7.1	63.7	3459.4	0.0	0.0	0.0	0.0	0.0	0.0	0.0	3459	1362.13
0.1500	7.1	63.8	3523.3	0.0	0.0	0.0	0.0	0.0	0.0	0.0	3523	1362.16
0.1525	7.1	64.0	3587.3	0.0	0.0	0.0	0.0	0.0	0.0	0.0	3587	1362.19
0.1550	7.1	64.1	3651.4	0.0	0.0	0.0	0.0	0.0	0.0	0.0	3651	1362.23
0.1575	7.2	64.3	3715.7	0.0	0.0	0.0	0.0	0.0	0.0	0.0	3716	1362.26
0.1600	7.2	64.5	3780.2	0.0	0.0	0.0	0.0	0.0	0.0	0.0	3780	1362.30
0.1625	7.2	64.6	3844.8	0.0	0.0	0.0	0.0	0.0	0.0	0.0	3845	1362.33
0.1650	7.2	64.8	3909.6	0.0	0.0	0.0	0.0	0.0	0.0	0.0	3910	1362.36
0.1675	7.2	64.9	3974.5	0.0	0.0	0.0	0.0	0.0	0.0	0.0	3975	1362.40
0.1700	7.2	65.1	4039.6	0.0	0.0	0.0	0.0	0.0	0.0	0.0	4040	1362.43
0.1725	7.3	65.3	4104.9	0.0	0.0	0.0	0.0	0.0	0.0	0.0	4105	1362.47
0.1750	7.3	65.4	4170.3	0.0	0.0	0.0	0.0	0.0	0.0	0.0	4170	1362.50
0.1775	7.3	65.6	4235.8	0.0	0.0	0.0	0.0	0.0	0.0	0.0	4236	1362.54
0.1800	7.3	65.7	4301.5	0.0	0.0	0.0	0.0	0.0	0.0	0.0	4302	1362.57
0.1825	7.3	65.9	4367.4	0.0	0.0	0.0	0.0	0.0	0.0	0.0	4367	1362.61
0.1850	7.3	66.0	4433.5	0.0	0.0	0.0	0.0	0.0	0.0	0.0	4433	1362.64
0.1875	7.4	66.2	4499.7	0.0	0.0	0.0	0.0	0.0	0.0	0.0	4500	1362.68
0.1900	7.4	66.4	4566.0	0.0	0.0	0.0	0.0	0.0	0.0	0.0	4566	1362.71
0.1925	7.4	66.5	4632.5	0.0	0.0	0.0	0.0	0.0	0.0	0.0	4633	1362.75
0.1950	7.4	66.7	4699.2	0.0	0.0	0.0	0.0	0.0	0.0	0.0	4699	1362.78
0.1975	7.4	66.8	4766.0	0.0	0.0	0.0	0.0	0.0	0.0	0.0	4766	1362.82
0.2000	7.5	67.0	4833.0	0.0	0.0	0.0	0.0	0.0	0.0	0.0	4833	1362.85
0.2025	7.5	67.1	4900.2	0.0	0.0	0.0	0.0	0.0	0.0	0.0	4900	1362.89
0.2050	7.5	67.3	4967.5	0.0	0.0	0.0	0.0	0.0	0.0	0.0	4967	1362.92
0.2075	7.5	67.5	5034.9	0.0	0.0	0.0	0.0	0.0	0.0	0.0	5035	1362.96
0.2100	7.5	67.6	5102.5	0.0	0.0	0.0	0.0	0.0	0.0	0.0	5103	1363.00
0.2125	7.5	67.8	5170.3	0.0	0.0	0.0	0.0	0.0	0.0	0.0	5170	1363.03
0.2150	7.6	67.9	5238.2	0.0	0.0	0.0	0.0	0.0	0.0	0.0	5238	1363.06
0.2175	7.6	68.1	5306.3	0.0	0.0	0.0	0.0	0.0	0.0	0.0	5306	1363.09
0.2200	7.6	68.2	5374.6	0.0	0.0	0.0	0.0	0.0	0.0	0.0	5375	1363.13
0.2225	7.6	68.4	5443.0	0.0	0.0	0.0	0.0	0.0	0.0	0.0	5443	1363.16
0.2250	7.6	68.6	5511.6	0.0	0.0	0.0	0.0	0.0	0.0	0.0	5512	1363.19
0.2275	7.6	68.7	5580.3	0.0	0.0	0.0	0.0	0.0	0.0	0.0	5580	1363.23
0.2300	7.7	68.9	5649.2	0.0	0.0	0.0	0.0	0.0	0.0	0.0	5649	1363.26
0.2325	7.7	69.0	5718.2	0.0	0.0	0.0	0.0	0.0	0.0	0.0	5718	1363.29
0.2350	7.7	69.2	5787.4	0.0	0.0	0.0	0.0	0.0	0.0	0.0	5787	1363.33
0.2375	7.7	69.4	5856.7	0.0	0.0	0.0	0.0	0.0	0.0	0.0	5857	1363.36
0.2400	7.7	69.5	5926.3	0.0	0.0	0.0	0.0	0.0	0.0	0.0	5926	1363.39
0.2425	7.7	69.7	5995.9	0.0	0.0	0.0	0.0	0.0	0.0	0.0	5996	1363.43
0.2450	7.8	69.8	6065.8	0.0	0.0	0.0	0.0	0.0	0.0	0.0	6066	1363.46
0.2475	7.8	70.0	6135.7	0.0	0.0	0.0	0.0	0.0	0.0	0.0	6136	1363.50
0.2500	7.8	70.1	6205.9	0.0	0.0	0.0	0.0	0.0	0.0	0.0	6206	1363.53

	Pump 1 (cf)	Pump 2 (cf)	Pump 3 (cf)	Pump 4 (cf)
Pump Run Time	52.20 Min	32.70 Min	21.30 Min	0.00 Min
	4.5	5.5	7.5	0
Pump Warmups	3.00 Min	3.00 Min	3.00 Min	3.00 Min
Float Switch On/Off Elevations (ft)				
On Elev	1372.5	1373.5	1375.5	1500
Off Elev	1368	1368	1368	1400

Max WS = 1380.91

Time (hrs)	Inflow (cfs)	Incremental Inflow Volume (cf)	Cumulative Inflow Volume (cf)	Pump 1 (cf)	Pump 2 (cf)	Pump 3 (cf)	Pump 4 (cf)	Pump Out (cf)	Outflow (cfs)	Cumulative Outflow (cf)	Total Storage (cf)	WSEL (ft)
0.2525	7.8	70.3	6276.2	0.0	0.0	0.0	0.0	0.0	0.0	0.0	6276	1363.56
0.2550	7.8	70.5	6346.6	0.0	0.0	0.0	0.0	0.0	0.0	0.0	6347	1363.60
0.2575	7.9	70.6	6417.3	0.0	0.0	0.0	0.0	0.0	0.0	0.0	6417	1363.63
0.2600	7.9	70.8	6488.0	0.0	0.0	0.0	0.0	0.0	0.0	0.0	6488	1363.67
0.2625	7.9	70.9	6559.0	0.0	0.0	0.0	0.0	0.0	0.0	0.0	6559	1363.70
0.2650	7.9	71.1	6630.0	0.0	0.0	0.0	0.0	0.0	0.0	0.0	6630	1363.73
0.2675	7.9	71.2	6701.3	0.0	0.0	0.0	0.0	0.0	0.0	0.0	6701	1363.77
0.2700	7.9	71.4	6772.7	0.0	0.0	0.0	0.0	0.0	0.0	0.0	6773	1363.80
0.2725	8.0	71.6	6844.3	0.0	0.0	0.0	0.0	0.0	0.0	0.0	6844	1363.84
0.2750	8.0	71.7	6916.0	0.0	0.0	0.0	0.0	0.0	0.0	0.0	6916	1363.87
0.2775	8.0	71.9	6987.9	0.0	0.0	0.0	0.0	0.0	0.0	0.0	6988	1363.91
0.2800	8.0	72.0	7059.9	0.0	0.0	0.0	0.0	0.0	0.0	0.0	7060	1363.94
0.2825	8.0	72.2	7132.1	0.0	0.0	0.0	0.0	0.0	0.0	0.0	7132	1363.98
0.2850	8.0	72.4	7204.4	0.0	0.0	0.0	0.0	0.0	0.0	0.0	7204	1364.01
0.2875	8.1	72.5	7276.9	0.0	0.0	0.0	0.0	0.0	0.0	0.0	7277	1364.04
0.2900	8.1	72.7	7349.6	0.0	0.0	0.0	0.0	0.0	0.0	0.0	7350	1364.08
0.2925	8.1	72.8	7422.4	0.0	0.0	0.0	0.0	0.0	0.0	0.0	7422	1364.11
0.2950	8.1	73.0	7495.4	0.0	0.0	0.0	0.0	0.0	0.0	0.0	7495	1364.14
0.2975	8.1	73.1	7568.6	0.0	0.0	0.0	0.0	0.0	0.0	0.0	7569	1364.17
0.3000	8.2	73.3	7641.9	0.0	0.0	0.0	0.0	0.0	0.0	0.0	7642	1364.21
0.3025	8.2	73.5	7715.4	0.0	0.0	0.0	0.0	0.0	0.0	0.0	7715	1364.24
0.3050	8.2	73.9	7789.2	0.0	0.0	0.0	0.0	0.0	0.0	0.0	7789	1364.27
0.3075	8.3	74.2	7863.4	0.0	0.0	0.0	0.0	0.0	0.0	0.0	7863	1364.30
0.3100	8.3	74.5	7937.9	0.0	0.0	0.0	0.0	0.0	0.0	0.0	7938	1364.34
0.3125	8.3	74.8	8012.7	0.0	0.0	0.0	0.0	0.0	0.0	0.0	8013	1364.37
0.3150	8.4	75.1	8087.8	0.0	0.0	0.0	0.0	0.0	0.0	0.0	8088	1364.40
0.3175	8.4	75.4	8163.2	0.0	0.0	0.0	0.0	0.0	0.0	0.0	8163	1364.44
0.3200	8.4	75.7	8239.0	0.0	0.0	0.0	0.0	0.0	0.0	0.0	8239	1364.47
0.3225	8.5	76.1	8315.0	0.0	0.0	0.0	0.0	0.0	0.0	0.0	8315	1364.50
0.3250	8.5	76.4	8391.4	0.0	0.0	0.0	0.0	0.0	0.0	0.0	8391	1364.54
0.3275	8.5	76.7	8468.1	0.0	0.0	0.0	0.0	0.0	0.0	0.0	8468	1364.57
0.3300	8.6	77.0	8545.1	0.0	0.0	0.0	0.0	0.0	0.0	0.0	8545	1364.61
0.3325	8.6	77.3	8622.4	0.0	0.0	0.0	0.0	0.0	0.0	0.0	8622	1364.64
0.3350	8.6	77.6	8700.1	0.0	0.0	0.0	0.0	0.0	0.0	0.0	8700	1364.68
0.3375	8.7	78.0	8778.0	0.0	0.0	0.0	0.0	0.0	0.0	0.0	8778	1364.71
0.3400	8.7	78.3	8856.3	0.0	0.0	0.0	0.0	0.0	0.0	0.0	8856	1364.75
0.3425	8.7	78.6	8934.9	0.0	0.0	0.0	0.0	0.0	0.0	0.0	8935	1364.78
0.3450	8.8	78.9	9013.8	0.0	0.0	0.0	0.0	0.0	0.0	0.0	9014	1364.82
0.3475	8.8	79.2	9093.0	0.0	0.0	0.0	0.0	0.0	0.0	0.0	9093	1364.85
0.3500	8.9	79.5	9172.5	0.0	0.0	0.0	0.0	0.0	0.0	0.0	9173	1364.89
0.3525	8.9	79.8	9252.4	0.0	0.0	0.0	0.0	0.0	0.0	0.0	9252	1364.92
0.3550	8.9	80.2	9332.5	0.0	0.0	0.0	0.0	0.0	0.0	0.0	9333	1364.96
0.3575	9.0	80.5	9413.0	0.0	0.0	0.0	0.0	0.0	0.0	0.0	9413	1364.99
0.3600	9.0	80.8	9493.8	0.0	0.0	0.0	0.0	0.0	0.0	0.0	9494	1365.03
0.3625	9.0	81.1	9574.9	0.0	0.0	0.0	0.0	0.0	0.0	0.0	9575	1365.06
0.3650	9.1	81.4	9656.3	0.0	0.0	0.0	0.0	0.0	0.0	0.0	9656	1365.09
0.3675	9.1	81.7	9738.1	0.0	0.0	0.0	0.0	0.0	0.0	0.0	9738	1365.13
0.3700	9.1	82.1	9820.1	0.0	0.0	0.0	0.0	0.0	0.0	0.0	9820	1365.16
0.3725	9.2	82.4	9902.5	0.0	0.0	0.0	0.0	0.0	0.0	0.0	9903	1365.19
0.3750	9.2	82.7	9985.2	0.0	0.0	0.0	0.0	0.0	0.0	0.0	9985	1365.23
0.3775	9.2	83.0	10068.2	0.0	0.0	0.0	0.0	0.0	0.0	0.0	10068	1365.26
0.3800	9.3	83.3	10151.5	0.0	0.0	0.0	0.0	0.0	0.0	0.0	10152	1365.30
0.3825	9.3	83.6	10235.1	0.0	0.0	0.0	0.0	0.0	0.0	0.0	10235	1365.33
0.3850	9.3	83.9	10319.1	0.0	0.0	0.0	0.0	0.0	0.0	0.0	10319	1365.36
0.3875	9.4	84.3	10403.4	0.0	0.0	0.0	0.0	0.0	0.0	0.0	10403	1365.40

	Pump 1	Pump 2	Pump 3	Pump 4
Pump Run Time	52.20 Min	32.70 Min	21.30 Min	0.00 Min
	4.5	5.5	7.5	0
Pump Warmups	3.00 Min	3.00 Min	3.00 Min	3.00 Min
Float Switch On/Off Elevations (ft)				
On Elev	1372.5	1373.5	1375.5	1500
Off Elev	1368	1368	1368	1400

Max WS = 1380.91

Time (hrs)	Inflow (cfs)	Incremental Inflow Volume (cf)	Cumulative Inflow Volume (cf)	Pump 1 (cf)	Pump 2 (cf)	Pump 3 (cf)	Pump 4 (cf)	Pump Out (cf)	Outflow (cfs)	Cumulative Outflow (cf)	Total Storage (cf)	WSEL (ft)
0.3900	9.4	84.6	10487.9	0.0	0.0	0.0	0.0	0.0	0.0	0.0	10488	1365.43
0.3925	9.5	84.9	10572.8	0.0	0.0	0.0	0.0	0.0	0.0	0.0	10573	1365.47
0.3950	9.5	85.2	10658.0	0.0	0.0	0.0	0.0	0.0	0.0	0.0	10658	1365.50
0.3975	9.5	85.5	10743.6	0.0	0.0	0.0	0.0	0.0	0.0	0.0	10744	1365.54
0.4000	9.6	85.8	10829.4	0.0	0.0	0.0	0.0	0.0	0.0	0.0	10829	1365.57
0.4025	9.6	86.2	10915.6	0.0	0.0	0.0	0.0	0.0	0.0	0.0	10916	1365.61
0.4050	9.6	86.5	11002.1	0.0	0.0	0.0	0.0	0.0	0.0	0.0	11002	1365.64
0.4075	9.7	86.8	11088.8	0.0	0.0	0.0	0.0	0.0	0.0	0.0	11089	1365.68
0.4100	9.7	87.1	11175.9	0.0	0.0	0.0	0.0	0.0	0.0	0.0	11176	1365.72
0.4125	9.7	87.4	11263.4	0.0	0.0	0.0	0.0	0.0	0.0	0.0	11263	1365.75
0.4150	9.8	87.7	11351.1	0.0	0.0	0.0	0.0	0.0	0.0	0.0	11351	1365.79
0.4175	9.8	88.1	11439.2	0.0	0.0	0.0	0.0	0.0	0.0	0.0	11439	1365.82
0.4200	9.8	88.4	11527.5	0.0	0.0	0.0	0.0	0.0	0.0	0.0	11528	1365.86
0.4225	9.9	88.7	11616.2	0.0	0.0	0.0	0.0	0.0	0.0	0.0	11616	1365.90
0.4250	9.9	89.0	11705.2	0.0	0.0	0.0	0.0	0.0	0.0	0.0	11705	1365.93
0.4275	9.9	89.3	11794.5	0.0	0.0	0.0	0.0	0.0	0.0	0.0	11795	1365.97
0.4300	10.0	89.6	11884.2	0.0	0.0	0.0	0.0	0.0	0.0	0.0	11884	1366.01
0.4325	10.0	89.9	11974.1	0.0	0.0	0.0	0.0	0.0	0.0	0.0	11974	1366.04
0.4350	10.0	90.3	12064.4	0.0	0.0	0.0	0.0	0.0	0.0	0.0	12064	1366.08
0.4375	10.1	90.6	12154.9	0.0	0.0	0.0	0.0	0.0	0.0	0.0	12155	1366.11
0.4400	10.1	90.9	12245.8	0.0	0.0	0.0	0.0	0.0	0.0	0.0	12246	1366.15
0.4425	10.2	91.2	12337.0	0.0	0.0	0.0	0.0	0.0	0.0	0.0	12337	1366.18
0.4450	10.2	91.5	12428.6	0.0	0.0	0.0	0.0	0.0	0.0	0.0	12429	1366.22
0.4475	10.2	91.8	12520.4	0.0	0.0	0.0	0.0	0.0	0.0	0.0	12520	1366.25
0.4500	10.3	92.2	12612.6	0.0	0.0	0.0	0.0	0.0	0.0	0.0	12613	1366.29
0.4525	10.3	92.5	12705.0	0.0	0.0	0.0	0.0	0.0	0.0	0.0	12705	1366.32
0.4550	10.3	92.8	12797.8	0.0	0.0	0.0	0.0	0.0	0.0	0.0	12798	1366.36
0.4575	10.4	93.1	12890.9	0.0	0.0	0.0	0.0	0.0	0.0	0.0	12891	1366.40
0.4600	10.4	93.4	12984.3	0.0	0.0	0.0	0.0	0.0	0.0	0.0	12984	1366.43
0.4625	10.4	93.7	13078.1	0.0	0.0	0.0	0.0	0.0	0.0	0.0	13078	1366.47
0.4650	10.5	94.0	13172.1	0.0	0.0	0.0	0.0	0.0	0.0	0.0	13172	1366.51
0.4675	10.5	94.4	13266.5	0.0	0.0	0.0	0.0	0.0	0.0	0.0	13266	1366.54
0.4700	10.5	94.7	13361.2	0.0	0.0	0.0	0.0	0.0	0.0	0.0	13361	1366.58
0.4725	10.6	95.0	13456.2	0.0	0.0	0.0	0.0	0.0	0.0	0.0	13456	1366.62
0.4750	10.6	95.3	13551.5	0.0	0.0	0.0	0.0	0.0	0.0	0.0	13551	1366.65
0.4775	10.6	95.6	13647.1	0.0	0.0	0.0	0.0	0.0	0.0	0.0	13647	1366.69
0.4800	10.7	95.9	13743.0	0.0	0.0	0.0	0.0	0.0	0.0	0.0	13743	1366.73
0.4825	10.7	96.3	13839.3	0.0	0.0	0.0	0.0	0.0	0.0	0.0	13839	1366.77
0.4850	10.7	96.6	13935.9	0.0	0.0	0.0	0.0	0.0	0.0	0.0	13936	1366.80
0.4875	10.8	96.9	14032.8	0.0	0.0	0.0	0.0	0.0	0.0	0.0	14033	1366.84
0.4900	10.8	97.2	14130.0	0.0	0.0	0.0	0.0	0.0	0.0	0.0	14130	1366.88
0.4925	10.9	97.5	14227.5	0.0	0.0	0.0	0.0	0.0	0.0	0.0	14227	1366.92
0.4950	10.9	97.8	14325.3	0.0	0.0	0.0	0.0	0.0	0.0	0.0	14325	1366.96
0.4975	10.9	98.2	14423.5	0.0	0.0	0.0	0.0	0.0	0.0	0.0	14423	1366.99
0.5000	11.0	98.5	14521.9	0.0	0.0	0.0	0.0	0.0	0.0	0.0	14522	1367.03
0.5025	11.0	98.8	14620.7	0.0	0.0	0.0	0.0	0.0	0.0	0.0	14621	1367.07
0.5050	11.0	99.1	14719.8	0.0	0.0	0.0	0.0	0.0	0.0	0.0	14720	1367.10
0.5075	11.1	99.4	14819.2	0.0	0.0	0.0	0.0	0.0	0.0	0.0	14819	1367.14
0.5100	11.1	99.7	14919.0	0.0	0.0	0.0	0.0	0.0	0.0	0.0	14919	1367.18
0.5125	11.1	100.0	15019.0	0.0	0.0	0.0	0.0	0.0	0.0	0.0	15019	1367.21
0.5150	11.2	100.4	15119.4	0.0	0.0	0.0	0.0	0.0	0.0	0.0	15119	1367.25
0.5175	11.2	100.7	15220.0	0.0	0.0	0.0	0.0	0.0	0.0	0.0	15220	1367.29
0.5200	11.2	101.0	15321.0	0.0	0.0	0.0	0.0	0.0	0.0	0.0	15321	1367.33
0.5225	11.3	101.3	15422.3	0.0	0.0	0.0	0.0	0.0	0.0	0.0	15422	1367.36
0.5250	11.3	101.6	15524.0	0.0	0.0	0.0	0.0	0.0	0.0	0.0	15524	1367.40

	Pump 1	Pump 2	Pump 3	Pump 4
Pump Run Time	52.20 Min	32.70 Min	21.30 Min	0.00 Min
	4.5	5.5	7.5	0
Pump Warmups	3.00 Min	3.00 Min	3.00 Min	3.00 Min
Float Switch On/Off Elevations (ft)				
On Elev	1372.5	1373.5	1375.5	1500
Off Elev	1368	1368	1368	1400

Max WS = 1380.91

Time (hrs)	Inflow (cfs)	Incremental Inflow Volume (cf)	Cumulative Inflow Volume (cf)	Pump 1 (cf)	Pump 2 (cf)	Pump 3 (cf)	Pump 4 (cf)	Pump Out (cf)	Outflow (cfs)	Cumulative Outflow (cf)	Total Storage (cf)	WSEL (ft)
0.5275	11.3	101.9	15625.9	0.0	0.0	0.0	0.0	0.0	0.0	0.0	15626	1367.44
0.5300	11.4	102.3	15728.2	0.0	0.0	0.0	0.0	0.0	0.0	0.0	15728	1367.48
0.5325	11.4	102.6	15830.7	0.0	0.0	0.0	0.0	0.0	0.0	0.0	15831	1367.52
0.5350	11.4	102.9	15933.6	0.0	0.0	0.0	0.0	0.0	0.0	0.0	15934	1367.55
0.5375	11.5	103.2	16036.8	0.0	0.0	0.0	0.0	0.0	0.0	0.0	16037	1367.59
0.5400	11.5	103.5	16140.3	0.0	0.0	0.0	0.0	0.0	0.0	0.0	16140	1367.63
0.5425	11.6	103.8	16244.2	0.0	0.0	0.0	0.0	0.0	0.0	0.0	16244	1367.67
0.5450	11.6	104.1	16348.3	0.0	0.0	0.0	0.0	0.0	0.0	0.0	16348	1367.71
0.5475	11.6	104.5	16452.8	0.0	0.0	0.0	0.0	0.0	0.0	0.0	16453	1367.75
0.5500	11.7	104.8	16557.6	0.0	0.0	0.0	0.0	0.0	0.0	0.0	16558	1367.78
0.5525	11.7	105.1	16662.7	0.0	0.0	0.0	0.0	0.0	0.0	0.0	16663	1367.82
0.5550	11.7	105.4	16768.1	0.0	0.0	0.0	0.0	0.0	0.0	0.0	16768	1367.86
0.5575	11.8	105.7	16873.8	0.0	0.0	0.0	0.0	0.0	0.0	0.0	16874	1367.90
0.5600	11.8	106.0	16979.8	0.0	0.0	0.0	0.0	0.0	0.0	0.0	16980	1367.94
0.5625	11.8	106.4	17086.2	0.0	0.0	0.0	0.0	0.0	0.0	0.0	17086	1367.98
0.5650	11.9	106.7	17192.9	0.0	0.0	0.0	0.0	0.0	0.0	0.0	17193	1368.01
0.5675	11.9	107.0	17299.9	0.0	0.0	0.0	0.0	0.0	0.0	0.0	17300	1368.04
0.5700	11.9	107.3	17407.2	0.0	0.0	0.0	0.0	0.0	0.0	0.0	17407	1368.07
0.5725	12.0	107.6	17514.8	0.0	0.0	0.0	0.0	0.0	0.0	0.0	17515	1368.10
0.5750	12.0	107.9	17622.7	0.0	0.0	0.0	0.0	0.0	0.0	0.0	17623	1368.13
0.5775	12.0	108.3	17731.0	0.0	0.0	0.0	0.0	0.0	0.0	0.0	17731	1368.16
0.5800	12.1	108.6	17839.5	0.0	0.0	0.0	0.0	0.0	0.0	0.0	17840	1368.19
0.5825	12.1	108.9	17948.4	0.0	0.0	0.0	0.0	0.0	0.0	0.0	17948	1368.23
0.5850	12.2	109.2	18057.6	0.0	0.0	0.0	0.0	0.0	0.0	0.0	18058	1368.26
0.5875	12.2	109.5	18167.1	0.0	0.0	0.0	0.0	0.0	0.0	0.0	18167	1368.29
0.5900	12.2	109.8	18276.9	0.0	0.0	0.0	0.0	0.0	0.0	0.0	18277	1368.32
0.5925	12.3	110.1	18387.1	0.0	0.0	0.0	0.0	0.0	0.0	0.0	18387	1368.35
0.5950	12.3	110.5	18497.6	0.0	0.0	0.0	0.0	0.0	0.0	0.0	18498	1368.38
0.5975	12.3	110.8	18608.3	0.0	0.0	0.0	0.0	0.0	0.0	0.0	18608	1368.41
0.6000	12.4	111.1	18719.4	0.0	0.0	0.0	0.0	0.0	0.0	0.0	18719	1368.44
0.6025	12.7	112.8	18832.3	0.0	0.0	0.0	0.0	0.0	0.0	0.0	18832	1368.47
0.6050	13.1	116.0	18948.3	0.0	0.0	0.0	0.0	0.0	0.0	0.0	18948	1368.50
0.6075	13.4	119.2	19067.5	0.0	0.0	0.0	0.0	0.0	0.0	0.0	19068	1368.54
0.6100	13.8	122.4	19190.0	0.0	0.0	0.0	0.0	0.0	0.0	0.0	19190	1368.57
0.6125	14.1	125.6	19315.6	0.0	0.0	0.0	0.0	0.0	0.0	0.0	19316	1368.61
0.6150	14.5	128.8	19444.4	0.0	0.0	0.0	0.0	0.0	0.0	0.0	19444	1368.64
0.6175	14.8	132.0	19576.5	0.0	0.0	0.0	0.0	0.0	0.0	0.0	19576	1368.68
0.6200	15.2	135.2	19711.7	0.0	0.0	0.0	0.0	0.0	0.0	0.0	19712	1368.72
0.6225	15.6	138.4	19850.1	0.0	0.0	0.0	0.0	0.0	0.0	0.0	19850	1368.75
0.6250	15.9	141.6	19991.7	0.0	0.0	0.0	0.0	0.0	0.0	0.0	19992	1368.79
0.6275	16.3	144.8	20136.5	0.0	0.0	0.0	0.0	0.0	0.0	0.0	20136	1368.83
0.6300	16.6	148.0	20284.5	0.0	0.0	0.0	0.0	0.0	0.0	0.0	20284	1368.88
0.6325	17.0	151.2	20435.7	0.0	0.0	0.0	0.0	0.0	0.0	0.0	20436	1368.92
0.6350	17.3	154.4	20590.1	0.0	0.0	0.0	0.0	0.0	0.0	0.0	20590	1368.96
0.6375	17.7	157.6	20747.6	0.0	0.0	0.0	0.0	0.0	0.0	0.0	20748	1369.00
0.6400	18.0	160.8	20908.4	0.0	0.0	0.0	0.0	0.0	0.0	0.0	20908	1369.03
0.6425	18.4	164.0	21072.4	0.0	0.0	0.0	0.0	0.0	0.0	0.0	21072	1369.06
0.6450	18.8	167.2	21239.6	0.0	0.0	0.0	0.0	0.0	0.0	0.0	21240	1369.08
0.6475	19.1	170.4	21409.9	0.0	0.0	0.0	0.0	0.0	0.0	0.0	21410	1369.11
0.6500	19.5	173.6	21583.5	0.0	0.0	0.0	0.0	0.0	0.0	0.0	21583	1369.14
0.6525	19.8	176.8	21760.2	0.0	0.0	0.0	0.0	0.0	0.0	0.0	21760	1369.17
0.6550	20.2	180.0	21940.2	0.0	0.0	0.0	0.0	0.0	0.0	0.0	21940	1369.20
0.6575	20.5	183.1	22123.3	0.0	0.0	0.0	0.0	0.0	0.0	0.0	22123	1369.23
0.6600	20.9	186.3	22309.7	0.0	0.0	0.0	0.0	0.0	0.0	0.0	22310	1369.26
0.6625	21.2	189.5	22499.2	0.0	0.0	0.0	0.0	0.0	0.0	0.0	22499	1369.29

	Pump 1	Pump 2	Pump 3	Pump 4
Pump Run Time	52.20 Min	32.70 Min	21.30 Min	0.00 Min
	4.5	5.5	7.5	0
Pump Warmups	3.00 Min	3.00 Min	3.00 Min	3.00 Min
Float Switch On/Off Elevations (ft)				
On Elev	1372.5	1373.5	1375.5	1500
Off Elev	1368	1368	1368	1400

Max WS =	1380.91

Time (hrs)	Inflow (cfs)	Incremental Inflow Volume (cf)	Cumulative Inflow Volume (cf)	Pump 1 (cf)	Pump 2 (cf)	Pump 3 (cf)	Pump 4 (cf)	Pump Out (cf)	Outflow (cfs)	Cumulative Outflow (cf)	Total Storage (cf)	WSEL (ft)
0.6650	21.6	192.7	22692.0	0.0	0.0	0.0	0.0	0.0	0.0	0.0	22692	1369.32
0.6675	21.9	195.9	22887.9	0.0	0.0	0.0	0.0	0.0	0.0	0.0	22888	1369.35
0.6700	22.3	199.1	23087.0	0.0	0.0	0.0	0.0	0.0	0.0	0.0	23087	1369.39
0.6725	22.7	202.3	23289.3	0.0	0.0	0.0	0.0	0.0	0.0	0.0	23289	1369.42
0.6750	23.0	205.5	23494.8	0.0	0.0	0.0	0.0	0.0	0.0	0.0	23495	1369.45
0.6775	23.4	208.7	23703.6	0.0	0.0	0.0	0.0	0.0	0.0	0.0	23704	1369.49
0.6800	23.7	211.9	23915.5	0.0	0.0	0.0	0.0	0.0	0.0	0.0	23915	1369.52
0.6825	24.1	215.1	24130.6	0.0	0.0	0.0	0.0	0.0	0.0	0.0	24131	1369.56
0.6850	24.4	218.3	24348.9	0.0	0.0	0.0	0.0	0.0	0.0	0.0	24349	1369.59
0.6875	24.8	221.5	24570.3	0.0	0.0	0.0	0.0	0.0	0.0	0.0	24570	1369.63
0.6900	25.1	224.7	24795.0	0.0	0.0	0.0	0.0	0.0	0.0	0.0	24795	1369.67
0.6925	25.5	227.9	25022.9	0.0	0.0	0.0	0.0	0.0	0.0	0.0	25023	1369.70
0.6950	25.9	231.1	25254.0	0.0	0.0	0.0	0.0	0.0	0.0	0.0	25254	1369.74
0.6975	26.2	234.3	25488.3	0.0	0.0	0.0	0.0	0.0	0.0	0.0	25488	1369.78
0.7000	26.6	237.5	25725.7	0.0	0.0	0.0	0.0	0.0	0.0	0.0	25726	1369.82
0.7025	26.9	240.7	25966.4	0.0	0.0	0.0	0.0	0.0	0.0	0.0	25966	1369.86
0.7050	27.3	243.9	26210.3	0.0	0.0	0.0	0.0	0.0	0.0	0.0	26210	1369.90
0.7075	27.6	247.1	26457.3	0.0	0.0	0.0	0.0	0.0	0.0	0.0	26457	1369.94
0.7100	28.0	250.3	26707.6	0.0	0.0	0.0	0.0	0.0	0.0	0.0	26708	1369.98
0.7125	28.3	253.4	26961.0	0.0	0.0	0.0	0.0	0.0	0.0	0.0	26961	1370.01
0.7150	28.7	256.6	27217.7	0.0	0.0	0.0	0.0	0.0	0.0	0.0	27218	1370.05
0.7175	29.0	259.8	27477.5	0.0	0.0	0.0	0.0	0.0	0.0	0.0	27477	1370.08
0.7200	29.4	263.0	27740.5	0.0	0.0	0.0	0.0	0.0	0.0	0.0	27741	1370.11
0.7225	29.8	266.2	28006.8	0.0	0.0	0.0	0.0	0.0	0.0	0.0	28007	1370.14
0.7250	30.1	269.4	28276.2	0.0	0.0	0.0	0.0	0.0	0.0	0.0	28276	1370.17
0.7275	30.5	272.6	28548.8	0.0	0.0	0.0	0.0	0.0	0.0	0.0	28549	1370.20
0.7300	30.8	275.8	28824.6	0.0	0.0	0.0	0.0	0.0	0.0	0.0	28825	1370.24
0.7325	31.2	279.0	29103.6	0.0	0.0	0.0	0.0	0.0	0.0	0.0	29104	1370.27
0.7350	31.5	282.2	29385.8	0.0	0.0	0.0	0.0	0.0	0.0	0.0	29386	1370.31
0.7375	31.9	285.4	29671.2	0.0	0.0	0.0	0.0	0.0	0.0	0.0	29671	1370.34
0.7400	32.2	288.6	29959.8	0.0	0.0	0.0	0.0	0.0	0.0	0.0	29960	1370.37
0.7425	32.6	291.8	30251.6	0.0	0.0	0.0	0.0	0.0	0.0	0.0	30252	1370.41
0.7450	33.0	295.0	30546.6	0.0	0.0	0.0	0.0	0.0	0.0	0.0	30547	1370.44
0.7475	33.3	298.2	30844.8	0.0	0.0	0.0	0.0	0.0	0.0	0.0	30845	1370.48
0.7500	33.7	301.4	31146.2	0.0	0.0	0.0	0.0	0.0	0.0	0.0	31146	1370.52
0.7525	34.0	304.6	31450.7	0.0	0.0	0.0	0.0	0.0	0.0	0.0	31451	1370.55
0.7550	34.4	307.8	31758.5	0.0	0.0	0.0	0.0	0.0	0.0	0.0	31759	1370.59
0.7575	34.7	311.0	32069.5	0.0	0.0	0.0	0.0	0.0	0.0	0.0	32069	1370.63
0.7600	35.1	314.2	32383.6	0.0	0.0	0.0	0.0	0.0	0.0	0.0	32384	1370.66
0.7625	35.4	317.4	32701.0	0.0	0.0	0.0	0.0	0.0	0.0	0.0	32701	1370.70
0.7650	35.8	320.6	33021.5	0.0	0.0	0.0	0.0	0.0	0.0	0.0	33022	1370.74
0.7675	36.1	323.7	33345.3	0.0	0.0	0.0	0.0	0.0	0.0	0.0	33345	1370.78
0.7700	36.5	326.9	33672.2	0.0	0.0	0.0	0.0	0.0	0.0	0.0	33672	1370.82
0.7725	36.9	330.1	34002.4	0.0	0.0	0.0	0.0	0.0	0.0	0.0	34002	1370.86
0.7750	37.2	333.3	34335.7	0.0	0.0	0.0	0.0	0.0	0.0	0.0	34336	1370.90
0.7775	37.6	336.5	34672.2	0.0	0.0	0.0	0.0	0.0	0.0	0.0	34672	1370.94
0.7800	37.9	339.7	35012.0	0.0	0.0	0.0	0.0	0.0	0.0	0.0	35012	1370.98
0.7825	38.3	342.9	35354.9	0.0	0.0	0.0	0.0	0.0	0.0	0.0	35355	1371.02
0.7850	38.6	346.1	35701.0	0.0	0.0	0.0	0.0	0.0	0.0	0.0	35701	1371.06
0.7875	39.0	349.3	36050.3	0.0	0.0	0.0	0.0	0.0	0.0	0.0	36050	1371.09
0.7900	39.3	352.5	36402.8	0.0	0.0	0.0	0.0	0.0	0.0	0.0	36403	1371.13
0.7925	39.7	355.7	36758.5	0.0	0.0	0.0	0.0	0.0	0.0	0.0	36759	1371.17
0.7950	40.1	358.9	37117.4	0.0	0.0	0.0	0.0	0.0	0.0	0.0	37117	1371.21
0.7975	40.4	362.1	37479.5	0.0	0.0	0.0	0.0	0.0	0.0	0.0	37479	1371.25
0.8000	40.8	365.3	37844.8	0.0	0.0	0.0	0.0	0.0	0.0	0.0	37845	1371.28

	Pump 1	Pump 2	Pump 3	Pump 4
Pump Run Time	52.20 Min	32.70 Min	21.30 Min	0.00 Min
	4.5	5.5	7.5	0
Pump Warmups	3.00 Min	3.00 Min	3.00 Min	3.00 Min
Float Switch On/Off Elevations (ft)				
On Elev	1372.5	1373.5	1375.5	1500
Off Elev	1368	1368	1368	1400

Max WS = 1380.91

Time (hrs)	Inflow (cfs)	Incremental Inflow Volume (cf)	Cumulative Inflow Volume (cf)	Pump 1 (cf)	Pump 2 (cf)	Pump 3 (cf)	Pump 4 (cf)	Pump Out (cf)	Outflow (cfs)	Cumulative Outflow (cf)	Total Storage (cf)	WSEL (ft)
0.8025	41.1	368.5	38213.3	0.0	0.0	0.0	0.0	0.0	0.0	0.0	38213	1371.32
0.8050	41.5	371.7	38584.9	0.0	0.0	0.0	0.0	0.0	0.0	0.0	38585	1371.36
0.8075	41.8	374.9	38959.8	0.0	0.0	0.0	0.0	0.0	0.0	0.0	38960	1371.40
0.8100	42.2	378.1	39337.9	0.0	0.0	0.0	0.0	0.0	0.0	0.0	39338	1371.44
0.8125	42.5	381.3	39719.1	0.0	0.0	0.0	0.0	0.0	0.0	0.0	39719	1371.48
0.8150	42.9	384.5	40103.6	0.0	0.0	0.0	0.0	0.0	0.0	0.0	40104	1371.53
0.8175	43.3	387.7	40491.3	0.0	0.0	0.0	0.0	0.0	0.0	0.0	40491	1371.57
0.8200	43.6	390.9	40882.1	0.0	0.0	0.0	0.0	0.0	0.0	0.0	40882	1371.61
0.8225	44.0	394.0	41276.2	0.0	0.0	0.0	0.0	0.0	0.0	0.0	41276	1371.65
0.8250	44.3	397.2	41673.4	0.0	0.0	0.0	0.0	0.0	0.0	0.0	41673	1371.69
0.8275	44.7	400.4	42073.8	0.0	0.0	0.0	0.0	0.0	0.0	0.0	42074	1371.74
0.8300	45.0	403.6	42477.5	0.0	0.0	0.0	0.0	0.0	0.0	0.0	42477	1371.78
0.8325	45.4	406.8	42884.3	0.0	0.0	0.0	0.0	0.0	0.0	0.0	42884	1371.82
0.8350	45.7	410.0	43294.3	0.0	0.0	0.0	0.0	0.0	0.0	0.0	43294	1371.87
0.8375	46.1	413.2	43707.5	0.0	0.0	0.0	0.0	0.0	0.0	0.0	43708	1371.91
0.8400	46.4	416.4	44124.0	0.0	0.0	0.0	0.0	0.0	0.0	0.0	44124	1371.95
0.8425	46.8	419.6	44543.6	0.0	0.0	0.0	0.0	0.0	0.0	0.0	44544	1372.00
0.8450	47.2	422.8	44966.4	0.0	0.0	0.0	0.0	0.0	0.0	0.0	44966	1372.04
0.8475	47.5	426.0	45392.4	0.0	0.0	0.0	0.0	0.0	0.0	0.0	45392	1372.09
0.8500	47.9	429.2	45821.6	0.0	0.0	0.0	0.0	0.0	0.0	0.0	45822	1372.13
0.8525	48.2	432.4	46254.0	0.0	0.0	0.0	0.0	0.0	0.0	0.0	46254	1372.17
0.8550	48.6	435.6	46689.5	0.0	0.0	0.0	0.0	0.0	0.0	0.0	46690	1372.22
0.8575	48.9	438.8	47128.3	0.0	0.0	0.0	0.0	0.0	0.0	0.0	47128	1372.26
0.8600	49.3	442.0	47570.3	0.0	0.0	0.0	0.0	0.0	0.0	0.0	47570	1372.31
0.8625	49.6	445.2	48015.5	0.0	0.0	0.0	0.0	0.0	0.0	0.0	48015	1372.35
0.8650	50.0	448.4	48463.9	0.0	0.0	0.0	0.0	0.0	0.0	0.0	48464	1372.40
0.8675	50.4	451.6	48915.4	0.0	0.0	0.0	0.0	0.0	0.0	0.0	48915	1372.45
0.8700	50.7	454.8	49370.2	0.0	0.0	0.0	0.0	0.0	0.0	0.0	49370	1372.49
0.8725	51.1	458.0	49828.1	0.0	0.0	0.0	0.0	0.0	0.0	0.0	49828	1372.54
0.8750	51.4	461.2	50289.3	Warmup 0009	0.0	0.0	0.0	0.0	0.0	0.0	50289	1372.59
0.8775	51.8	464.3	50753.6	Warmup 0018	0.0	0.0	0.0	0.0	0.0	0.0	50754	1372.63
0.8800	52.1	467.5	51221.2	Warmup 0027	0.0	0.0	0.0	0.0	0.0	0.0	51221	1372.68
0.8825	52.5	470.7	51691.9	Warmup 0036	0.0	0.0	0.0	0.0	0.0	0.0	51692	1372.73
0.8850	52.8	473.9	52165.8	Warmup 0045	0.0	0.0	0.0	0.0	0.0	0.0	52166	1372.78
0.8875	53.2	477.1	52643.0	Warmup 0054	0.0	0.0	0.0	0.0	0.0	0.0	52643	1372.83
0.8900	53.5	480.3	53123.3	Warmup 0063	0.0	0.0	0.0	0.0	0.0	0.0	53123	1372.88
0.8925	53.9	483.5	53606.8	Warmup 0072	0.0	0.0	0.0	0.0	0.0	0.0	53607	1372.93
0.8950	54.3	486.7	54093.5	Warmup 0081	0.0	0.0	0.0	0.0	0.0	0.0	54094	1372.97
0.8975	54.6	489.9	54583.4	Warmup 0090	0.0	0.0	0.0	0.0	0.0	0.0	54583	1373.02
0.9000	55.0	493.1	55076.5	Warmup 0099	0.0	0.0	0.0	0.0	0.0	0.0	55077	1373.08
0.9025	56.2	500.4	55577.0	Warmup 0108	0.0	0.0	0.0	0.0	0.0	0.0	55577	1373.13
0.9050	57.5	511.9	56088.9	Warmup 0117	0.0	0.0	0.0	0.0	0.0	0.0	56089	1373.18
0.9075	58.8	523.4	56612.3	Warmup 0126	0.0	0.0	0.0	0.0	0.0	0.0	56612	1373.23
0.9100	60.1	534.9	57147.2	Warmup 0135	0.0	0.0	0.0	0.0	0.0	0.0	57147	1373.29
0.9125	61.3	546.4	57693.6	Warmup 0144	0.0	0.0	0.0	0.0	0.0	0.0	57694	1373.34
0.9150	62.6	557.8	58251.4	Warmup 0153	0.0	0.0	0.0	0.0	0.0	0.0	58251	1373.40
0.9175	63.9	569.3	58820.7	Warmup 0162	0.0	0.0	0.0	0.0	0.0	0.0	58821	1373.46
0.9200	65.2	580.8	59401.5	Warmup 0171	0.0	0.0	0.0	0.0	0.0	0.0	59402	1373.52
0.9225	66.4	592.3	59993.8	Warmup 0180	Warmup 0009	0.0	0.0	0.0	0.0	0.0	59994	1373.58
0.9250	67.7	603.8	60597.6	513.1	Warmup 0018	0.0	0.0	513.1	57.0	513.1	60085	1373.59
0.9275	69.0	615.2	61212.8	513.1	Warmup 0027	0.0	0.0	513.1	57.0	1026.2	60187	1373.60
0.9300	70.3	626.7	61839.5	513.2	Warmup 0036	0.0	0.0	513.2	57.0	1539.3	60300	1373.61
0.9325	71.5	638.2	62477.7	513.3	Warmup 0045	0.0	0.0	513.3	57.0	2052.6	60425	1373.62
0.9350	72.8	649.7	63127.4	513.3	Warmup 0054	0.0	0.0	513.3	57.0	2565.9	60561	1373.64
0.9375	74.1	661.2	63788.6	513.4	Warmup 0063	0.0	0.0	513.4	57.0	3079.3	60709	1373.65

	Pump 1	Pump 2	Pump 3	Pump 4
Pump Run Time	52.20 Min	32.70 Min	21.30 Min	0.00 Min
	4.5	5.5	7.5	0
Pump Warmups	3.00 Min	3.00 Min	3.00 Min	3.00 Min
Float Switch On/Off Elevations (ft)				
On Elev	1372.5	1373.5	1375.5	1500
Off Elev	1368	1368	1368	1400

Max WS = 1380.91

Time (hrs)	Inflow (cfs)	Incremental Inflow Volume (cf)	Cumulative Inflow Volume (cf)	Pump 1 (cf)	Pump 2 (cf)	Pump 3 (cf)	Pump 4 (cf)	Pump Out (cf)	Outflow (cfs)	Cumulative Outflow (cf)	Total Storage (cf)	WSEL (ft)
0.9400	75.4	672.6	64461.2	513.5	Warmup 0072	0.0	0.0	513.5	57.1	3592.9	60868	1373.67
0.9425	76.7	684.1	65145.3	513.6	Warmup 0081	0.0	0.0	513.6	57.1	4106.5	61039	1373.69
0.9450	77.9	695.6	65840.9	513.7	Warmup 0090	0.0	0.0	513.7	57.1	4620.2	61221	1373.71
0.9475	79.2	707.1	66548.0	513.8	Warmup 0099	0.0	0.0	513.8	57.1	5134.1	61414	1373.73
0.9500	80.5	718.6	67266.6	514.0	Warmup 0108	0.0	0.0	514.0	57.1	5648.0	61619	1373.75
0.9525	81.8	730.0	67996.6	514.1	Warmup 0117	0.0	0.0	514.1	57.1	6162.1	61835	1373.77
0.9550	83.0	741.5	68738.2	514.2	Warmup 0126	0.0	0.0	514.2	57.1	6676.4	62062	1373.79
0.9575	84.3	753.0	69491.2	514.4	Warmup 0135	0.0	0.0	514.4	57.2	7190.8	62300	1373.82
0.9600	85.6	764.5	70255.6	514.5	Warmup 0144	0.0	0.0	514.5	57.2	7705.3	62550	1373.84
0.9625	86.9	776.0	71031.6	514.7	Warmup 0153	0.0	0.0	514.7	57.2	8220.0	62812	1373.87
0.9650	88.1	787.4	71819.0	514.9	Warmup 0162	0.0	0.0	514.9	57.2	8734.9	63084	1373.90
0.9675	89.4	798.9	72618.0	515.1	Warmup 0171	0.0	0.0	515.1	57.2	9249.9	63368	1373.93
0.9700	90.7	810.4	73428.4	515.2	Warmup 0180	0.0	0.0	515.2	57.2	9765.2	63663	1373.96
0.9725	92.0	821.9	74250.2	515.4	515.4	0.0	0.0	1030.8	114.5	10796.0	63454	1373.93
0.9750	93.2	833.4	75083.6	515.3	515.3	0.0	0.0	1030.6	114.5	11826.6	63257	1373.91
0.9775	94.5	844.8	75928.4	515.2	515.2	0.0	0.0	1030.3	114.5	12856.9	63072	1373.90
0.9800	95.8	856.3	76784.8	515.0	515.0	0.0	0.0	1030.1	114.5	13887.0	62898	1373.88
0.9825	97.1	867.8	77652.6	514.9	514.9	0.0	0.0	1029.9	114.4	14916.9	62736	1373.86
0.9850	98.3	879.3	78531.9	514.8	514.8	0.0	0.0	1029.6	114.4	15946.5	62585	1373.85
0.9875	99.6	890.8	79422.6	514.7	514.7	0.0	0.0	1029.5	114.4	16976.0	62447	1373.83
0.9900	100.9	902.2	80324.9	514.6	514.6	0.0	0.0	1029.3	114.4	18005.2	62320	1373.82
0.9925	102.2	913.7	81238.6	514.6	514.6	0.0	0.0	1029.1	114.3	19034.4	62204	1373.81
0.9950	103.4	925.2	82163.8	514.5	514.5	0.0	0.0	1029.0	114.3	20063.3	62100	1373.80
0.9975	104.7	936.7	83100.5	514.4	514.4	0.0	0.0	1028.8	114.3	21092.1	62008	1373.79
1.0000	106.0	948.2	84048.6	514.4	514.4	0.0	0.0	1028.7	114.3	22120.9	61928	1373.78
1.0025	108.2	963.8	85012.5	514.3	514.3	0.0	0.0	1028.6	114.3	23149.5	61863	1373.77
1.0050	110.4	983.7	85996.2	514.3	514.3	0.0	0.0	1028.5	114.3	24178.0	61818	1373.77
1.0075	112.6	1003.6	86999.8	514.2	514.2	0.0	0.0	1028.5	114.3	25206.4	61793	1373.76
1.0100	114.8	1023.5	88023.3	514.2	514.2	0.0	0.0	1028.4	114.3	26234.9	61788	1373.76
1.0125	117.0	1043.4	89066.7	514.2	514.2	0.0	0.0	1028.4	114.3	27263.3	61803	1373.77
1.0150	119.2	1063.3	90129.9	514.2	514.2	0.0	0.0	1028.4	114.3	28291.8	61838	1373.77
1.0175	121.5	1083.1	91213.1	514.2	514.2	0.0	0.0	1028.5	114.3	29320.2	61893	1373.77
1.0200	123.7	1103.0	92316.1	514.3	514.3	0.0	0.0	1028.6	114.3	30348.8	61967	1373.78
1.0225	125.9	1122.9	93439.0	514.3	514.3	0.0	0.0	1028.7	114.3	31377.5	62062	1373.79
1.0250	128.1	1142.8	94581.8	514.4	514.4	0.0	0.0	1028.8	114.3	32406.2	62176	1373.80
1.0275	130.3	1162.7	95744.4	514.5	514.5	0.0	0.0	1028.9	114.3	33435.2	62309	1373.82
1.0300	132.5	1182.6	96927.0	514.5	514.5	0.0	0.0	1029.1	114.3	34464.3	62463	1373.83
1.0325	134.7	1202.4	98129.4	514.6	514.6	0.0	0.0	1029.3	114.4	35493.6	62636	1373.85
1.0350	136.9	1222.3	99351.7	514.8	514.8	0.0	0.0	1029.5	114.4	36523.1	62829	1373.87
1.0375	139.1	1242.2	100593.9	514.9	514.9	0.0	0.0	1029.8	114.4	37552.8	63041	1373.89
1.0400	141.3	1262.1	101856.0	515.0	515.0	0.0	0.0	1030.0	114.4	38582.9	63273	1373.92
1.0425	143.5	1282.0	103138.0	515.2	515.2	0.0	0.0	1030.3	114.5	39613.2	63525	1373.94
1.0450	145.8	1301.8	104439.9	515.3	515.3	0.0	0.0	1030.7	114.5	40643.9	63796	1373.97
1.0475	148.0	1321.7	105761.6	515.5	515.5	0.0	0.0	1031.0	114.6	41674.9	64087	1374.00
1.0500	150.2	1341.6	107103.2	515.7	515.7	0.0	0.0	1031.4	114.6	42706.3	64397	1374.03
1.0525	152.4	1361.5	108464.7	515.9	515.9	0.0	0.0	1031.8	114.6	43738.1	64727	1374.07
1.0550	154.6	1381.4	109846.1	516.1	516.1	0.0	0.0	1032.3	114.7	44770.4	65076	1374.11
1.0575	156.8	1401.3	111247.3	516.4	516.4	0.0	0.0	1032.7	114.7	45803.2	65444	1374.15
1.0600	159.0	1421.1	112668.5	516.6	516.6	0.0	0.0	1033.3	114.8	46836.4	65832	1374.19
1.0625	161.2	1441.0	114109.5	516.9	516.9	0.0	0.0	1033.8	114.9	47870.2	66239	1374.23
1.0650	163.4	1460.9	115570.4	517.2	517.2	0.0	0.0	1034.3	114.9	48904.5	66666	1374.28
1.0675	165.6	1480.8	117051.2	517.5	517.5	0.0	0.0	1034.9	115.0	49939.5	67112	1374.33
1.0700	167.8	1500.7	118551.9	517.8	517.8	0.0	0.0	1035.5	115.1	50975.0	67577	1374.38
1.0725	170.1	1520.6	120072.5	518.1	518.1	0.0	0.0	1036.2	115.1	52011.2	68061	1374.43
1.0750	172.3	1540.4	121612.9	518.4	518.4	0.0	0.0	1036.8	115.2	53048.0	68565	1374.49

Pump Run Time			
52.20 Min	32.70 Min	21.30 Min	0.00 Min
4.5	5.5	7.5	0
Pump Warmups			
3.00 Min	3.00 Min	3.00 Min	3.00 Min
Float Switch On/Off Elevations (ft)			
1372.5	1373.5	1375.5	1500
1368	1368	1368	1400

On Elev
Off Elev

Max WS = 1380.91

Time (hrs)	Inflow (cfs)	Incremental Inflow Volume (cf)	Cumulative Inflow Volume (cf)	Pump 1 (cf)	Pump 2 (cf)	Pump 3 (cf)	Pump 4 (cf)	Pump Out (cf)	Outflow (cfs)	Cumulative Outflow (cf)	Total Storage (cf)	WSEL (ft)
1.0775	174.5	1560.3	123173.2	518.8	518.8	0.0	0.0	1037.5	115.3	54085.5	69088	1374.54
1.0800	176.7	1580.2	124753.4	519.1	519.1	0.0	0.0	1038.2	115.4	55123.8	69630	1374.60
1.0825	178.9	1600.1	126353.5	519.5	519.5	0.0	0.0	1039.0	115.4	56162.7	70191	1374.66
1.0850	181.1	1620.0	127973.5	519.9	519.9	0.0	0.0	1039.7	115.5	57202.5	70771	1374.73
1.0875	183.3	1639.9	129613.4	520.3	520.3	0.0	0.0	1040.5	115.6	58243.0	71370	1374.79
1.0900	185.5	1659.7	131273.1	520.7	520.7	0.0	0.0	1041.4	115.7	59284.4	71989	1374.86
1.0925	187.7	1679.6	132952.7	521.1	521.1	0.0	0.0	1042.2	115.8	60326.6	72626	1374.93
1.0950	189.9	1699.5	134652.2	521.5	521.5	0.0	0.0	1043.1	115.9	61369.7	73283	1375.00
1.0975	192.1	1719.4	136371.6	522.0	522.0	0.0	0.0	1044.0	116.0	62413.6	73958	1375.08
1.1000	194.4	1739.3	138110.9	522.3	522.3	0.0	0.0	1044.6	116.1	63458.2	74653	1375.17
1.1025	194.8	1751.0	139861.9	522.6	522.6	0.0	0.0	1045.2	116.1	64503.5	75358	1375.26
1.1050	195.2	1754.6	141616.5	522.9	522.9	0.0	0.0	1045.9	116.2	65549.3	76067	1375.35
1.1075	195.6	1758.2	143374.8	523.2	523.2	0.0	0.0	1046.5	116.3	66595.8	76779	1375.43
1.1100	196.0	1761.8	145136.6	523.6	523.6	0.0	0.0	1047.1	116.3	67642.9	77494	1375.52
1.1125	196.4	1765.5	146902.1	523.9	523.9	Warmup 0009	0.0	1047.8	116.4	68690.7	78211	1375.61
1.1150	196.8	1769.1	148671.2	524.2	524.2	Warmup 0018	0.0	1048.4	116.5	69739.1	78932	1375.70
1.1175	197.2	1772.7	150443.8	524.5	524.5	Warmup 0027	0.0	1049.1	116.6	70788.2	79656	1375.79
1.1200	197.6	1776.3	152220.1	524.9	524.9	Warmup 0036	0.0	1049.7	116.6	71837.9	80382	1375.88
1.1225	198.0	1779.9	154000.0	525.2	525.2	Warmup 0045	0.0	1050.4	116.7	72888.2	81112	1375.98
1.1250	198.4	1783.5	155783.5	525.5	525.5	Warmup 0054	0.0	1051.0	116.8	73939.3	81844	1376.10
1.1275	198.8	1787.1	157570.6	526.0	526.0	Warmup 0063	0.0	1051.9	116.9	74991.2	82579	1376.24
1.1300	199.2	1790.7	159361.4	526.4	526.4	Warmup 0072	0.0	1052.9	117.0	76044.1	83317	1376.37
1.1325	199.6	1794.3	161155.7	526.9	526.9	Warmup 0081	0.0	1053.9	117.1	77097.9	84058	1376.51
1.1350	200.0	1797.9	162953.6	527.4	527.4	Warmup 0090	0.0	1054.9	117.2	78152.8	84801	1376.65
1.1375	200.4	1801.6	164755.2	527.9	527.9	Warmup 0099	0.0	1055.9	117.3	79208.7	85547	1376.78
1.1400	200.8	1805.2	166560.3	528.4	528.4	Warmup 0108	0.0	1056.8	117.4	80265.5	86295	1376.92
1.1425	201.2	1808.8	168369.1	528.9	528.9	Warmup 0117	0.0	1057.8	117.5	81323.4	87046	1377.10
1.1450	201.6	1812.4	170181.5	529.6	529.6	Warmup 0126	0.0	1059.1	117.7	82382.5	87799	1377.34
1.1475	202.0	1816.0	171997.5	530.4	530.4	Warmup 0135	0.0	1060.8	117.9	83443.3	88554	1377.57
1.1500	202.4	1819.6	173817.1	531.2	531.2	Warmup 0144	0.0	1062.5	118.1	84505.8	89311	1377.80
1.1525	202.8	1823.2	175640.3	532.1	532.1	Warmup 0153	0.0	1064.2	118.2	85570.0	90070	1378.04
1.1550	203.2	1826.8	177467.1	533.0	533.0	Warmup 0162	0.0	1065.9	118.4	86635.9	90831	1378.31
1.1575	203.6	1830.4	179297.6	533.9	533.9	Warmup 0171	0.0	1067.8	118.6	87703.7	91594	1378.58
1.1600	204.0	1834.0	181131.6	534.9	534.9	Warmup 0180	0.0	1069.8	118.9	88773.5	92358	1378.84
1.1625	204.4	1837.7	182969.2	535.8	535.8	535.8	0.0	1607.5	178.6	90381.0	92588	1378.93
1.1650	204.8	1841.3	184810.5	536.1	536.1	536.1	0.0	1608.4	178.7	91989.4	92821	1379.01
1.1675	205.2	1844.9	186655.4	536.4	536.4	536.4	0.0	1609.3	178.8	93598.7	93057	1379.09
1.1700	205.6	1848.5	188503.9	536.7	536.7	536.7	0.0	1610.2	178.9	95208.9	93295	1379.17
1.1725	206.0	1852.1	190355.9	537.0	537.0	537.0	0.0	1611.1	179.0	96819.9	93536	1379.26
1.1750	206.4	1855.7	192211.6	537.3	537.3	537.3	0.0	1612.0	179.1	98431.9	93780	1379.34
1.1775	206.8	1859.3	194071.0	537.6	537.6	537.6	0.0	1612.9	179.2	100044.9	94026	1379.43
1.1800	207.2	1862.9	195933.9	538.0	538.0	538.0	0.0	1613.9	179.3	101658.7	94275	1379.52
1.1825	207.6	1866.5	197800.4	538.3	538.3	538.3	0.0	1614.8	179.4	103273.5	94527	1379.61
1.1850	208.0	1870.1	199670.5	538.6	538.6	538.6	0.0	1615.8	179.5	104889.3	94781	1379.70
1.1875	208.4	1873.7	201544.3	538.9	538.9	538.9	0.0	1616.7	179.6	106506.0	95038	1379.79
1.1900	208.8	1877.4	203421.6	539.2	539.2	539.2	0.0	1617.7	179.7	108123.8	95298	1379.88
1.1925	209.2	1881.0	205302.6	539.6	539.6	539.6	0.0	1618.7	179.9	109742.5	95560	1379.97
1.1950	209.6	1884.6	207187.2	539.9	539.9	539.9	0.0	1619.7	180.0	111362.2	95825	1380.06
1.1975	210.0	1888.2	209075.4	540.2	540.2	540.2	0.0	1620.7	180.1	112982.9	96093	1380.16
1.2000	210.4	1891.8	210967.2	540.6	540.6	540.6	0.0	1621.7	180.2	114604.6	96363	1380.25
1.2025	208.3	1884.2	212851.3	540.9	540.9	540.9	0.0	1622.7	180.3	116227.3	96624	1380.35
1.2050	206.2	1865.3	214716.6	541.2	541.2	541.2	0.0	1623.7	180.4	117851.0	96866	1380.43
1.2075	204.1	1846.4	216563.0	541.5	541.5	541.5	0.0	1624.6	180.5	119475.7	97087	1380.51
1.2100	202.0	1827.5	218390.5	541.8	541.8	541.8	0.0	1625.5	180.6	121101.2	97289	1380.58
1.2125	199.9	1808.7	220199.2	542.1	542.1	542.1	0.0	1626.3	180.7	122727.4	97472	1380.64

	Pump Run Time			
	52.20 Min	32.70 Min	21.30 Min	0.00 Min
	4.5	5.5	7.5	0
	Pump Warmups			
	3.00 Min	3.00 Min	3.00 Min	3.00 Min
	Float Switch On/Off Elevations (ft)			
On Elev	1372.5	1373.5	1375.5	1500
Off Elev	1368	1368	1368	1400

Max WS = 1380.91

Time (hrs)	Inflow (cfs)	Incremental Inflow Volume (cf)	Cumulative Inflow Volume (cf)	Pump 1 (cf)	Pump 2 (cf)	Pump 3 (cf)	Pump 4 (cf)	Pump Out (cf)	Outflow (cfs)	Cumulative Outflow (cf)	Total Storage (cf)	WSEL (ft)
1.2150	197.8	1789.8	221989.0	542.3	542.3	542.3	0.0	1626.9	180.8	124354.4	97635	1380.70
1.2175	195.7	1770.9	223759.9	542.5	542.5	542.5	0.0	1627.6	180.8	125981.9	97778	1380.75
1.2200	193.6	1752.0	225511.9	542.7	542.7	542.7	0.0	1628.1	180.9	127610.0	97902	1380.79
1.2225	191.5	1733.1	227245.0	542.9	542.9	542.9	0.0	1628.6	181.0	129238.6	98006	1380.83
1.2250	189.4	1714.3	228959.3	543.0	543.0	543.0	0.0	1629.0	181.0	130867.6	98092	1380.86
1.2275	187.3	1695.4	230654.7	543.1	543.1	543.1	0.0	1629.3	181.0	132496.8	98158	1380.88
1.2300	185.2	1676.5	232331.2	543.2	543.2	543.2	0.0	1629.5	181.1	134126.4	98205	1380.90
1.2325	183.1	1657.6	233988.9	543.2	543.2	543.2	0.0	1629.7	181.1	135756.1	98233	1380.91
1.2350	181.0	1638.8	235627.6	543.3	543.3	543.3	0.0	1629.8	181.1	137385.9	98242	1380.91
1.2375	178.9	1619.9	237247.5	543.3	543.3	543.3	0.0	1629.9	181.1	139015.8	98232	1380.91
1.2400	176.8	1601.0	238848.5	543.3	543.3	543.3	0.0	1629.8	181.1	140645.6	98203	1380.90
1.2425	174.7	1582.1	240430.7	543.2	543.2	543.2	0.0	1629.7	181.1	142275.3	98155	1380.88
1.2450	172.6	1563.3	241993.9	543.2	543.2	543.2	0.0	1629.5	181.1	143904.9	98089	1380.86
1.2475	170.5	1544.4	243538.3	543.1	543.1	543.1	0.0	1629.3	181.0	145534.1	98004	1380.83
1.2500	168.5	1525.5	245063.8	543.0	543.0	543.0	0.0	1629.0	181.0	147163.1	97901	1380.79
1.2525	166.4	1506.6	246570.4	542.9	542.9	542.9	0.0	1628.6	181.0	148791.7	97779	1380.75
1.2550	164.3	1487.7	248058.2	542.7	542.7	542.7	0.0	1628.1	180.9	150419.8	97638	1380.70
1.2575	162.2	1468.9	249527.0	542.5	542.5	542.5	0.0	1627.6	180.8	152047.3	97480	1380.65
1.2600	160.1	1450.0	250977.0	542.3	542.3	542.3	0.0	1627.0	180.8	153674.3	97303	1380.58
1.2625	158.0	1431.1	252408.2	542.1	542.1	542.1	0.0	1626.3	180.7	155300.6	97108	1380.51
1.2650	155.9	1412.2	253820.4	541.9	541.9	541.9	0.0	1625.6	180.6	156926.2	96894	1380.44
1.2675	153.8	1393.4	255213.8	541.6	541.6	541.6	0.0	1624.8	180.5	158550.9	96663	1380.36
1.2700	151.7	1374.5	256588.2	541.3	541.3	541.3	0.0	1623.9	180.4	160174.8	96413	1380.27
1.2725	149.6	1355.6	257943.9	541.0	541.0	541.0	0.0	1622.9	180.3	161797.7	96146	1380.18
1.2750	147.5	1336.7	259280.6	540.6	540.6	540.6	0.0	1621.9	180.2	163419.7	95861	1380.08
1.2775	145.4	1317.9	260598.4	540.3	540.3	540.3	0.0	1620.8	180.1	165040.5	95558	1379.97
1.2800	143.3	1299.0	261897.4	539.9	539.9	539.9	0.0	1619.7	180.0	166660.2	95237	1379.86
1.2825	141.2	1280.1	263177.5	539.5	539.5	539.5	0.0	1618.5	179.8	168278.6	94899	1379.74
1.2850	139.1	1261.2	264438.8	539.1	539.1	539.1	0.0	1617.2	179.7	169895.8	94543	1379.61
1.2875	137.0	1242.3	265681.1	538.6	538.6	538.6	0.0	1615.8	179.5	171511.7	94169	1379.48
1.2900	134.9	1223.5	266904.6	538.1	538.1	538.1	0.0	1614.4	179.4	173126.1	93779	1379.34
1.2925	132.8	1204.6	268109.2	537.6	537.6	537.6	0.0	1612.9	179.2	174739.0	93370	1379.20
1.2950	130.7	1185.7	269294.9	537.1	537.1	537.1	0.0	1611.4	179.0	176350.4	92945	1379.05
1.2975	128.6	1166.8	270461.7	536.6	536.6	536.6	0.0	1609.7	178.9	177960.1	92502	1378.90
1.3000	126.5	1148.0	271609.7	536.0	536.0	536.0	0.0	1608.1	178.7	179568.2	92042	1378.73
1.3025	125.0	1131.7	272741.4	535.4	535.4	535.4	0.0	1606.3	178.5	181174.5	91567	1378.57
1.3050	123.5	1118.0	273859.4	534.8	534.8	534.8	0.0	1604.5	178.3	182779.0	91080	1378.40
1.3075	121.9	1104.4	274963.8	534.2	534.2	534.2	0.0	1602.7	178.1	184381.7	90582	1378.22
1.3100	120.4	1090.7	276054.5	533.6	533.6	533.6	0.0	1600.8	177.9	185982.5	90072	1378.04
1.3125	118.9	1077.0	277131.5	533.0	533.0	533.0	0.0	1598.9	177.7	187581.4	89550	1377.88
1.3150	117.4	1063.3	278194.8	532.4	532.4	532.4	0.0	1597.1	177.5	189178.4	89016	1377.71
1.3175	115.9	1049.7	279244.5	531.8	531.8	531.8	0.0	1595.3	177.3	190773.7	88471	1377.54
1.3200	114.4	1036.0	280280.5	531.2	531.2	531.2	0.0	1593.5	177.1	192367.2	87913	1377.37
1.3225	112.8	1022.3	281302.8	530.5	530.5	530.5	0.0	1591.6	176.8	193958.8	87344	1377.20
1.3250	111.3	1008.7	282311.5	529.9	529.9	529.9	0.0	1589.7	176.6	195548.5	86763	1377.02
1.3275	109.8	995.0	283306.5	529.3	529.3	529.3	0.0	1587.8	176.4	197136.3	86170	1376.90
1.3300	108.3	981.3	284287.8	528.8	528.8	528.8	0.0	1586.5	176.3	198722.8	85565	1376.79
1.3325	106.8	967.7	285255.5	528.4	528.4	528.4	0.0	1585.3	176.1	200308.1	84947	1376.67
1.3350	105.2	954.0	286209.5	528.0	528.0	528.0	0.0	1584.1	176.0	201892.2	84317	1376.56
1.3375	103.7	940.3	287149.8	527.6	527.6	527.6	0.0	1582.8	175.9	203475.0	83675	1376.44
1.3400	102.2	926.7	288076.4	527.2	527.2	527.2	0.0	1581.5	175.7	205056.5	83020	1376.32
1.3425	100.7	913.0	288989.4	526.7	526.7	526.7	0.0	1580.2	175.6	206636.8	82353	1376.19
1.3450	99.2	899.3	289888.7	526.3	526.3	526.3	0.0	1578.9	175.4	208215.6	81673	1376.07
1.3475	97.6	885.6	290774.4	525.8	525.8	525.8	0.0	1577.5	175.3	209793.2	80981	1375.96
1.3500	96.1	872.0	291646.4	525.5	525.5	525.5	0.0	1576.4	175.2	211369.5	80277	1375.87

	Pump 1	Pump 2	Pump 3	Pump 4
Pump Run Time	52.20 Min	32.70 Min	21.30 Min	0.00 Min
	4.5	5.5	7.5	0
Pump Warmups	3.00 Min	3.00 Min	3.00 Min	3.00 Min
Float Switch On/Off Elevations (ft)				
On Elev	1372.5	1373.5	1375.5	1500
Off Elev	1368	1368	1368	1400

Max WS = 1380.91

Time (hrs)	Inflow (cfs)	Incremental Inflow Volume (cf)	Cumulative Inflow Volume (cf)	Pump 1 (cf)	Pump 2 (cf)	Pump 3 (cf)	Pump 4 (cf)	Pump Out (cf)	Outflow (cfs)	Cumulative Outflow (cf)	Total Storage (cf)	WSEL (ft)
1.3525	94.6	858.3	292504.7	525.1	525.1	525.1	0.0	1575.4	175.0	212944.9	79560	1375.78
1.3550	93.1	844.6	293349.3	524.8	524.8	524.8	0.0	1574.4	174.9	214519.4	78830	1375.69
1.3575	91.6	831.0	294180.3	524.5	524.5	524.5	0.0	1573.5	174.8	216092.8	78087	1375.60
1.3600	90.1	817.3	294997.6	524.2	524.2	524.2	0.0	1572.5	174.7	217665.3	77332	1375.50
1.3625	88.5	803.6	295801.2	523.8	523.8	523.8	0.0	1571.4	174.6	219236.7	76564	1375.41
1.3650	87.0	790.0	296591.1	523.5	523.5	523.5	0.0	1570.4	174.5	220807.1	75784	1375.31
1.3675	85.5	776.3	297367.4	523.1	523.1	523.1	0.0	1569.3	174.4	222376.5	74991	1375.21
1.3700	84.0	762.6	298130.0	522.8	522.8	522.8	0.0	1568.3	174.3	223944.8	74185	1375.11
1.3725	82.5	748.9	298879.0	522.4	522.4	522.4	0.0	1567.2	174.1	225511.9	73367	1375.01
1.3750	80.9	735.3	299614.3	522.0	522.0	522.0	0.0	1566.1	174.0	227078.0	72536	1374.92
1.3775	79.4	721.6	300335.9	521.5	521.5	521.5	0.0	1564.4	173.8	228642.5	71693	1374.83
1.3800	77.9	707.9	301043.8	520.9	520.9	520.9	0.0	1562.7	173.6	230205.2	70839	1374.73
1.3825	76.4	694.3	301738.1	520.3	520.3	520.3	0.0	1560.9	173.4	231766.1	69972	1374.64
1.3850	74.9	680.6	302418.7	519.7	519.7	519.7	0.0	1559.2	173.2	233325.3	69093	1374.54
1.3875	73.3	666.9	303085.6	519.1	519.1	519.1	0.0	1557.4	173.0	234882.7	68203	1374.45
1.3900	71.8	653.3	303738.9	518.5	518.5	518.5	0.0	1555.5	172.8	236438.2	67301	1374.35
1.3925	70.3	639.6	304378.5	517.9	517.9	517.9	0.0	1553.7	172.6	237991.9	66387	1374.25
1.3950	68.8	625.9	305004.4	517.3	517.3	517.3	0.0	1551.8	172.4	239543.7	65461	1374.15
1.3975	67.3	612.3	305616.7	516.6	516.6	516.6	0.0	1549.9	172.2	241093.6	64523	1374.05
1.4000	65.8	598.6	306215.2	516.0	516.0	516.0	0.0	1548.0	172.0	242641.6	63574	1373.95
1.4025	65.2	589.3	306804.5	515.4	515.4	515.4	0.0	1546.1	171.8	244187.7	62617	1373.85
1.4050	64.6	584.3	307388.8	514.7	514.7	514.7	0.0	1544.2	171.6	245731.9	61657	1373.75
1.4075	64.1	579.3	307968.1	514.1	514.1	514.1	0.0	1542.4	171.4	247274.3	60694	1373.65
1.4100	63.5	574.4	308542.5	513.5	513.5	513.5	0.0	1540.5	171.2	248814.8	59728	1373.55
1.4125	63.0	569.4	309111.9	512.9	512.9	512.9	0.0	1538.6	171.0	250353.5	58758	1373.45
1.4150	62.4	564.4	309676.3	512.3	512.3	512.3	0.0	1536.8	170.8	251890.3	57786	1373.35
1.4175	61.9	559.4	310235.7	511.6	511.6	511.6	0.0	1534.9	170.5	253425.1	56811	1373.25
1.4200	61.3	554.5	310790.2	511.0	511.0	511.0	0.0	1533.0	170.3	254958.1	55832	1373.15
1.4225	60.8	549.5	311339.7	510.4	510.4	510.4	0.0	1531.1	170.1	256489.2	54850	1373.05
1.4250	60.2	544.5	311884.2	509.7	509.7	509.7	0.0	1529.2	169.9	258018.4	53866	1372.95
1.4275	59.7	539.6	312423.8	509.1	509.1	509.1	0.0	1527.3	169.7	259545.7	52878	1372.85
1.4300	59.1	534.6	312958.3	508.5	508.5	508.5	0.0	1525.4	169.5	261071.1	51887	1372.75
1.4325	58.6	529.6	313488.0	507.8	507.8	507.8	0.0	1523.5	169.3	262594.5	50893	1372.65
1.4350	58.0	524.6	314012.6	507.2	507.2	507.2	0.0	1521.5	169.1	264116.1	49897	1372.55
1.4375	57.5	519.7	314532.3	506.5	506.5	506.5	0.0	1519.6	168.8	265635.7	48897	1372.44
1.4400	56.9	514.7	315047.0	505.9	505.9	505.9	0.0	1517.7	168.6	267153.4	47894	1372.34
1.4425	56.4	509.7	315556.7	505.3	505.3	505.3	0.0	1515.8	168.4	268669.1	46888	1372.24
1.4450	55.8	504.8	316061.5	504.6	504.6	504.6	0.0	1513.8	168.2	270183.0	45879	1372.14
1.4475	55.3	499.8	316561.3	504.0	504.0	504.0	0.0	1511.9	168.0	271694.8	44866	1372.03
1.4500	54.7	494.8	317056.1	503.3	503.3	503.3	0.0	1509.9	167.8	273204.7	43851	1371.93
1.4525	54.2	489.9	317546.0	502.6	502.6	502.6	0.0	1507.9	167.5	274712.6	42833	1371.82
1.4550	53.6	484.9	318030.8	501.9	501.9	501.9	0.0	1505.8	167.3	276218.5	41812	1371.71
1.4575	53.0	479.9	318510.7	501.3	501.3	501.3	0.0	1503.8	167.1	277722.2	40788	1371.60
1.4600	52.5	474.9	318985.7	500.6	500.6	500.6	0.0	1501.7	166.9	279224.0	39762	1371.49
1.4625	51.9	470.0	319455.6	499.9	499.9	499.9	0.0	1499.6	166.6	280723.6	38732	1371.38
1.4650	51.4	465.0	319920.6	499.2	499.2	499.2	0.0	1497.6	166.4	282221.2	37699	1371.27
1.4675	50.8	460.0	320380.7	498.5	498.5	498.5	0.0	1495.5	166.2	283716.6	36664	1371.16
1.4700	50.3	455.1	320835.7	497.8	497.8	497.8	0.0	1493.4	165.9	285210.0	35626	1371.05
1.4725	49.7	450.1	321285.8	497.1	497.1	497.1	0.0	1491.3	165.7	286701.3	34584	1370.93
1.4750	49.2	445.1	321730.9	496.4	496.4	496.4	0.0	1489.1	165.5	288190.4	33541	1370.80
1.4775	48.6	440.1	322171.1	495.6	495.6	495.6	0.0	1486.7	165.2	289677.1	32494	1370.68
1.4800	48.1	435.2	322606.2	494.8	494.8	494.8	0.0	1484.3	164.9	291161.4	31445	1370.55
1.4825	47.5	430.2	323036.4	494.0	494.0	494.0	0.0	1481.9	164.7	292643.3	30393	1370.43
1.4850	47.0	425.2	323461.7	493.2	493.2	493.2	0.0	1479.6	164.4	294122.9	29339	1370.30
1.4875	46.4	420.3	323881.9	492.4	492.4	492.4	0.0	1477.2	164.1	295600.0	28282	1370.17

	Pump 1	Pump 2	Pump 3	Pump 4
Pump Run Time	52.20 Min	32.70 Min	21.30 Min	0.00 Min
	4.5	5.5	7.5	0
Pump Warmups	3.00 Min	3.00 Min	3.00 Min	3.00 Min
Float Switch On/Off Elevations (ft)				
On Elev	1372.5	1373.5	1375.5	1500
Off Elev	1368	1368	1368	1400

Max WS = 1380.91

Time (hrs)	Inflow (cfs)	Incremental Inflow Volume (cf)	Cumulative Inflow Volume (cf)	Pump 1 (cf)	Pump 2 (cf)	Pump 3 (cf)	Pump 4 (cf)	Pump Out (cf)	Outflow (cfs)	Cumulative Outflow (cf)	Total Storage (cf)	WSEL (ft)
1.4900	45.9	415.3	324297.2	491.6	491.6	491.6	0.0	1474.8	163.9	297074.8	27222	1370.05
1.4925	45.3	410.3	324707.5	490.8	490.8	490.8	0.0	1472.4	163.6	298547.2	26160	1369.89
1.4950	44.8	405.3	325112.9	490.1	490.1	490.1	0.0	1470.3	163.4	300017.5	25095	1369.71
1.4975	44.2	400.4	325513.3	489.5	489.5	489.5	0.0	1468.4	163.2	301485.9	24027	1369.54
1.5000	43.7	395.4	325908.7	488.8	488.8	488.8	0.0	1466.5	162.9	302952.4	22956	1369.36
1.5025	43.4	391.8	326300.5	488.2	488.2	488.2	0.0	1464.6	162.7	304417.0	21883	1369.19
1.5050	43.2	389.5	326690.0	487.6	487.6	487.6	0.0	1462.7	162.5	305879.8	20810	1369.01
1.5075	42.9	387.3	327077.3	486.9	486.9	486.9	0.0	1460.8	162.3	307340.6	19737	1368.72
1.5100	42.7	385.1	327462.4	485.9	485.9	485.9	0.0	1457.7	162.0	308798.3	18664	1368.42
1.5125	42.4	382.8	327845.2	484.8	484.8	484.8	0.0	1454.5	161.6	310252.8	17592	1368.13
1.5150	42.2	380.6	328225.7	483.8	483.8	483.8	0.0	1451.3	161.3	311704.1	16522	1367.77
1.5175	41.9	378.3	328604.0	0.0	0.0	0.0	0.0	0.0	0.0	311704.1	16900	1367.91
1.5200	41.7	376.1	328980.1	0.0	0.0	0.0	0.0	0.0	0.0	311704.1	17276	1368.04
1.5225	41.4	373.8	329353.9	0.0	0.0	0.0	0.0	0.0	0.0	311704.1	17650	1368.14
1.5250	41.2	371.6	329725.5	0.0	0.0	0.0	0.0	0.0	0.0	311704.1	18021	1368.25
1.5275	40.9	369.3	330094.8	0.0	0.0	0.0	0.0	0.0	0.0	311704.1	18391	1368.35
1.5300	40.7	367.1	330461.8	0.0	0.0	0.0	0.0	0.0	0.0	311704.1	18758	1368.45
1.5325	40.4	364.8	330826.7	0.0	0.0	0.0	0.0	0.0	0.0	311704.1	19123	1368.55
1.5350	40.2	362.6	331189.2	0.0	0.0	0.0	0.0	0.0	0.0	311704.1	19485	1368.65
1.5375	39.9	360.3	331549.5	0.0	0.0	0.0	0.0	0.0	0.0	311704.1	19845	1368.75
1.5400	39.7	358.1	331907.6	0.0	0.0	0.0	0.0	0.0	0.0	311704.1	20204	1368.85
1.5425	39.4	355.8	332263.4	0.0	0.0	0.0	0.0	0.0	0.0	311704.1	20559	1368.95
1.5450	39.2	353.6	332617.0	0.0	0.0	0.0	0.0	0.0	0.0	311704.1	20913	1369.03
1.5475	38.9	351.3	332968.3	0.0	0.0	0.0	0.0	0.0	0.0	311704.1	21264	1369.09
1.5500	38.7	349.1	333317.4	0.0	0.0	0.0	0.0	0.0	0.0	311704.1	21613	1369.14
1.5525	38.4	346.8	333664.2	0.0	0.0	0.0	0.0	0.0	0.0	311704.1	21960	1369.20
1.5550	38.2	344.6	334008.8	0.0	0.0	0.0	0.0	0.0	0.0	311704.1	22305	1369.26
1.5575	37.9	342.3	334351.1	0.0	0.0	0.0	0.0	0.0	0.0	311704.1	22647	1369.31
1.5600	37.7	340.1	334691.2	0.0	0.0	0.0	0.0	0.0	0.0	311704.1	22987	1369.37
1.5625	37.4	337.8	335029.0	0.0	0.0	0.0	0.0	0.0	0.0	311704.1	23325	1369.42
1.5650	37.2	335.6	335364.6	0.0	0.0	0.0	0.0	0.0	0.0	311704.1	23661	1369.48
1.5675	36.9	333.3	335697.9	0.0	0.0	0.0	0.0	0.0	0.0	311704.1	23994	1369.53
1.5700	36.7	331.1	336029.0	0.0	0.0	0.0	0.0	0.0	0.0	311704.1	24325	1369.59
1.5725	36.4	328.8	336357.9	0.0	0.0	0.0	0.0	0.0	0.0	311704.1	24654	1369.64
1.5750	36.2	326.6	336684.4	0.0	0.0	0.0	0.0	0.0	0.0	311704.1	24980	1369.70
1.5775	35.9	324.3	337008.8	0.0	0.0	0.0	0.0	0.0	0.0	311704.1	25305	1369.75
1.5800	35.7	322.1	337330.9	0.0	0.0	0.0	0.0	0.0	0.0	311704.1	25627	1369.80
1.5825	35.4	319.8	337650.7	0.0	0.0	0.0	0.0	0.0	0.0	311704.1	25947	1369.85
1.5850	35.2	317.6	337968.3	0.0	0.0	0.0	0.0	0.0	0.0	311704.1	26264	1369.91
1.5875	34.9	315.3	338283.7	0.0	0.0	0.0	0.0	0.0	0.0	311704.1	26580	1369.96
1.5900	34.7	313.1	338596.7	0.0	0.0	0.0	0.0	0.0	0.0	311704.1	26893	1370.01
1.5925	34.4	310.8	338907.6	0.0	0.0	0.0	0.0	0.0	0.0	311704.1	27204	1370.04
1.5950	34.2	308.6	339216.2	0.0	0.0	0.0	0.0	0.0	0.0	311704.1	27512	1370.08
1.5975	33.9	306.3	339522.5	0.0	0.0	0.0	0.0	0.0	0.0	311704.1	27818	1370.12
1.6000	33.7	304.1	339826.6	0.0	0.0	0.0	0.0	0.0	0.0	311704.1	28123	1370.15
1.6025	33.5	302.2	340128.8	0.0	0.0	0.0	0.0	0.0	0.0	311704.1	28425	1370.19
1.6050	33.3	300.7	340429.5	0.0	0.0	0.0	0.0	0.0	0.0	311704.1	28725	1370.23
1.6075	33.2	299.1	340728.6	0.0	0.0	0.0	0.0	0.0	0.0	311704.1	29025	1370.26
1.6100	33.0	297.6	341026.2	0.0	0.0	0.0	0.0	0.0	0.0	311704.1	29322	1370.30
1.6125	32.8	296.1	341322.3	0.0	0.0	0.0	0.0	0.0	0.0	311704.1	29618	1370.33
1.6150	32.6	294.5	341616.8	0.0	0.0	0.0	0.0	0.0	0.0	311704.1	29913	1370.37
1.6175	32.5	293.0	341909.8	0.0	0.0	0.0	0.0	0.0	0.0	311704.1	30206	1370.40
1.6200	32.3	291.4	342201.2	0.0	0.0	0.0	0.0	0.0	0.0	311704.1	30497	1370.44
1.6225	32.1	289.9	342491.1	0.0	0.0	0.0	0.0	0.0	0.0	311704.1	30787	1370.47
1.6250	32.0	288.4	342779.5	0.0	0.0	0.0	0.0	0.0	0.0	311704.1	31075	1370.51

	Pump Run Time			
	52.20 Min	32.70 Min	21.30 Min	0.00 Min
	4.5	5.5	7.5	0
	Pump Warmups			
	3.00 Min	3.00 Min	3.00 Min	3.00 Min
	Float Switch On/Off Elevations (ft)			
On Elev	1372.5	1373.5	1375.5	1500
Off Elev	1368	1368	1368	1400

Max WS =	1380.91

Time (hrs)	Inflow (cfs)	Incremental Inflow Volume (cf)	Cumulative Inflow Volume (cf)	Pump 1 (cf)	Pump 2 (cf)	Pump 3 (cf)	Pump 4 (cf)	Pump Out (cf)	Outflow (cfs)	Cumulative Outflow (cf)	Total Storage (cf)	WSEL (ft)
1.6275	31.8	286.8	343066.3	0.0	0.0	0.0	0.0	0.0	0.0	311704.1	31362	1370.54
1.6300	31.6	285.3	343351.6	0.0	0.0	0.0	0.0	0.0	0.0	311704.1	31647	1370.58
1.6325	31.4	283.7	343635.3	0.0	0.0	0.0	0.0	0.0	0.0	311704.1	31931	1370.61
1.6350	31.3	282.2	343917.5	0.0	0.0	0.0	0.0	0.0	0.0	311704.1	32213	1370.64
1.6375	31.1	280.7	344198.2	0.0	0.0	0.0	0.0	0.0	0.0	311704.1	32494	1370.68
1.6400	30.9	279.1	344477.3	0.0	0.0	0.0	0.0	0.0	0.0	311704.1	32773	1370.71
1.6425	30.8	277.6	344754.9	0.0	0.0	0.0	0.0	0.0	0.0	311704.1	33051	1370.74
1.6450	30.6	276.1	345031.0	0.0	0.0	0.0	0.0	0.0	0.0	311704.1	33327	1370.78
1.6475	30.4	274.5	345305.5	0.0	0.0	0.0	0.0	0.0	0.0	311704.1	33601	1370.81
1.6500	30.2	273.0	345578.4	0.0	0.0	0.0	0.0	0.0	0.0	311704.1	33874	1370.84
1.6525	30.1	271.4	345849.9	0.0	0.0	0.0	0.0	0.0	0.0	311704.1	34146	1370.88
1.6550	29.9	269.9	346119.8	0.0	0.0	0.0	0.0	0.0	0.0	311704.1	34416	1370.91
1.6575	29.7	268.4	346388.1	0.0	0.0	0.0	0.0	0.0	0.0	311704.1	34684	1370.94
1.6600	29.6	266.8	346655.0	0.0	0.0	0.0	0.0	0.0	0.0	311704.1	34951	1370.97
1.6625	29.4	265.3	346920.2	0.0	0.0	0.0	0.0	0.0	0.0	311704.1	35216	1371.00
1.6650	29.2	263.7	347184.0	0.0	0.0	0.0	0.0	0.0	0.0	311704.1	35480	1371.03
1.6675	29.0	262.2	347446.2	0.0	0.0	0.0	0.0	0.0	0.0	311704.1	35742	1371.06
1.6700	28.9	260.7	347706.9	0.0	0.0	0.0	0.0	0.0	0.0	311704.1	36003	1371.09
1.6725	28.7	259.1	347966.0	0.0	0.0	0.0	0.0	0.0	0.0	311704.1	36262	1371.12
1.6750	28.5	257.6	348223.6	0.0	0.0	0.0	0.0	0.0	0.0	311704.1	36519	1371.14
1.6775	28.4	256.1	348479.6	0.0	0.0	0.0	0.0	0.0	0.0	311704.1	36776	1371.17
1.6800	28.2	254.5	348734.1	0.0	0.0	0.0	0.0	0.0	0.0	311704.1	37030	1371.20
1.6825	28.0	253.0	348987.1	0.0	0.0	0.0	0.0	0.0	0.0	311704.1	37283	1371.22
1.6850	27.9	251.4	349238.5	0.0	0.0	0.0	0.0	0.0	0.0	311704.1	37534	1371.25
1.6875	27.7	249.9	349488.4	0.0	0.0	0.0	0.0	0.0	0.0	311704.1	37784	1371.28
1.6900	27.5	248.4	349736.8	0.0	0.0	0.0	0.0	0.0	0.0	311704.1	38033	1371.30
1.6925	27.3	246.8	349983.6	0.0	0.0	0.0	0.0	0.0	0.0	311704.1	38280	1371.33
1.6950	27.2	245.3	350228.9	0.0	0.0	0.0	0.0	0.0	0.0	311704.1	38525	1371.36
1.6975	27.0	243.7	350472.6	0.0	0.0	0.0	0.0	0.0	0.0	311704.1	38769	1371.38
1.7000	26.8	242.2	350714.8	0.0	0.0	0.0	0.0	0.0	0.0	311704.1	39011	1371.41
1.7025	26.7	241.0	350955.8	0.0	0.0	0.0	0.0	0.0	0.0	311704.1	39252	1371.43
1.7050	26.6	240.0	351195.8	0.0	0.0	0.0	0.0	0.0	0.0	311704.1	39492	1371.46
1.7075	26.5	239.1	351434.9	0.0	0.0	0.0	0.0	0.0	0.0	311704.1	39731	1371.49
1.7100	26.4	238.1	351673.0	0.0	0.0	0.0	0.0	0.0	0.0	311704.1	39969	1371.51
1.7125	26.3	237.2	351910.2	0.0	0.0	0.0	0.0	0.0	0.0	311704.1	40206	1371.54
1.7150	26.2	236.2	352146.4	0.0	0.0	0.0	0.0	0.0	0.0	311704.1	40442	1371.56
1.7175	26.1	235.3	352381.7	0.0	0.0	0.0	0.0	0.0	0.0	311704.1	40678	1371.59
1.7200	26.0	234.3	352616.0	0.0	0.0	0.0	0.0	0.0	0.0	311704.1	40912	1371.61
1.7225	25.9	233.4	352849.4	0.0	0.0	0.0	0.0	0.0	0.0	311704.1	41145	1371.64
1.7250	25.8	232.4	353081.8	0.0	0.0	0.0	0.0	0.0	0.0	311704.1	41378	1371.66
1.7275	25.7	231.5	353313.3	0.0	0.0	0.0	0.0	0.0	0.0	311704.1	41609	1371.69
1.7300	25.6	230.5	353543.9	0.0	0.0	0.0	0.0	0.0	0.0	311704.1	41840	1371.71
1.7325	25.5	229.6	353773.5	0.0	0.0	0.0	0.0	0.0	0.0	311704.1	42069	1371.74
1.7350	25.4	228.7	354002.1	0.0	0.0	0.0	0.0	0.0	0.0	311704.1	42298	1371.76
1.7375	25.2	227.7	354229.8	0.0	0.0	0.0	0.0	0.0	0.0	311704.1	42526	1371.78
1.7400	25.1	226.8	354456.6	0.0	0.0	0.0	0.0	0.0	0.0	311704.1	42753	1371.81
1.7425	25.0	225.8	354682.4	0.0	0.0	0.0	0.0	0.0	0.0	311704.1	42978	1371.83
1.7450	24.9	224.9	354907.3	0.0	0.0	0.0	0.0	0.0	0.0	311704.1	43203	1371.86
1.7475	24.8	223.9	355131.2	0.0	0.0	0.0	0.0	0.0	0.0	311704.1	43427	1371.88
1.7500	24.7	223.0	355354.2	0.0	0.0	0.0	0.0	0.0	0.0	311704.1	43650	1371.90
1.7525	24.6	222.0	355576.2	0.0	0.0	0.0	0.0	0.0	0.0	311704.1	43872	1371.93
1.7550	24.5	221.1	355797.3	0.0	0.0	0.0	0.0	0.0	0.0	311704.1	44093	1371.95
1.7575	24.4	220.1	356017.4	0.0	0.0	0.0	0.0	0.0	0.0	311704.1	44313	1371.97
1.7600	24.3	219.2	356236.6	0.0	0.0	0.0	0.0	0.0	0.0	311704.1	44532	1372.00
1.7625	24.2	218.2	356454.8	0.0	0.0	0.0	0.0	0.0	0.0	311704.1	44751	1372.02

	Pump 1	Pump 2	Pump 3	Pump 4
Pump Run Time	52.20 Min	32.70 Min	21.30 Min	0.00 Min
	4.5	5.5	7.5	0
Pump Warmups	3.00 Min	3.00 Min	3.00 Min	3.00 Min
Float Switch On/Off Elevations (ft)				
On Elev	1372.5	1373.5	1375.5	1500
Off Elev	1368	1368	1368	1400

Max WS = 1380.91

Time (hrs)	Inflow (cfs)	Incremental Inflow Volume (cf)	Cumulative Inflow Volume (cf)	Pump 1 (cf)	Pump 2 (cf)	Pump 3 (cf)	Pump 4 (cf)	Pump Out (cf)	Outflow (cfs)	Cumulative Outflow (cf)	Total Storage (cf)	WSEL (ft)
1.7650	24.1	217.3	356672.1	0.0	0.0	0.0	0.0	0.0	0.0	311704.1	44968	1372.04
1.7675	24.0	216.3	356888.4	0.0	0.0	0.0	0.0	0.0	0.0	311704.1	45184	1372.06
1.7700	23.9	215.4	357103.8	0.0	0.0	0.0	0.0	0.0	0.0	311704.1	45400	1372.09
1.7725	23.8	214.5	357318.3	0.0	0.0	0.0	0.0	0.0	0.0	311704.1	45614	1372.11
1.7750	23.7	213.5	357531.8	0.0	0.0	0.0	0.0	0.0	0.0	311704.1	45828	1372.13
1.7775	23.6	212.6	357744.4	0.0	0.0	0.0	0.0	0.0	0.0	311704.1	46040	1372.15
1.7800	23.5	211.6	357956.0	0.0	0.0	0.0	0.0	0.0	0.0	311704.1	46252	1372.17
1.7825	23.4	210.7	358166.6	0.0	0.0	0.0	0.0	0.0	0.0	311704.1	46463	1372.20
1.7850	23.2	209.7	358376.3	0.0	0.0	0.0	0.0	0.0	0.0	311704.1	46672	1372.22
1.7875	23.1	208.8	358585.1	0.0	0.0	0.0	0.0	0.0	0.0	311704.1	46881	1372.24
1.7900	23.0	207.8	358792.9	0.0	0.0	0.0	0.0	0.0	0.0	311704.1	47089	1372.26
1.7925	22.9	206.9	358999.8	0.0	0.0	0.0	0.0	0.0	0.0	311704.1	47296	1372.28
1.7950	22.8	205.9	359205.7	0.0	0.0	0.0	0.0	0.0	0.0	311704.1	47502	1372.30
1.7975	22.7	205.0	359410.7	0.0	0.0	0.0	0.0	0.0	0.0	311704.1	47707	1372.32
1.8000	22.6	204.0	359614.8	0.0	0.0	0.0	0.0	0.0	0.0	311704.1	47911	1372.34
1.8025	22.6	203.3	359818.1	0.0	0.0	0.0	0.0	0.0	0.0	311704.1	48114	1372.36
1.8050	22.5	202.9	360020.9	0.0	0.0	0.0	0.0	0.0	0.0	311704.1	48317	1372.38
1.8075	22.5	202.4	360223.3	0.0	0.0	0.0	0.0	0.0	0.0	311704.1	48519	1372.41
1.8100	22.4	201.9	360425.2	0.0	0.0	0.0	0.0	0.0	0.0	311704.1	48721	1372.43
1.8125	22.4	201.4	360626.7	0.0	0.0	0.0	0.0	0.0	0.0	311704.1	48923	1372.45
1.8150	22.3	201.0	360827.6	0.0	0.0	0.0	0.0	0.0	0.0	311704.1	49124	1372.47
1.8175	22.2	200.5	361028.1	0.0	0.0	0.0	0.0	0.0	0.0	311704.1	49324	1372.49
1.8200	22.2	200.0	361228.1	0.0	0.0	0.0	0.0	0.0	0.0	311704.1	49524	1372.51
1.8225	22.1	199.5	361427.6	Warmup 0009	0.0	0.0	0.0	0.0	0.0	311704.1	49724	1372.53
1.8250	22.1	199.1	361626.7	Warmup 0018	0.0	0.0	0.0	0.0	0.0	311704.1	49923	1372.55
1.8275	22.0	198.6	361825.3	Warmup 0027	0.0	0.0	0.0	0.0	0.0	311704.1	50121	1372.57
1.8300	22.0	198.1	362023.4	Warmup 0036	0.0	0.0	0.0	0.0	0.0	311704.1	50319	1372.59
1.8325	21.9	197.6	362221.1	Warmup 0045	0.0	0.0	0.0	0.0	0.0	311704.1	50517	1372.61
1.8350	21.9	197.2	362418.2	Warmup 0054	0.0	0.0	0.0	0.0	0.0	311704.1	50714	1372.63
1.8375	21.8	196.7	362614.9	Warmup 0063	0.0	0.0	0.0	0.0	0.0	311704.1	50911	1372.65
1.8400	21.8	196.2	362811.2	Warmup 0072	0.0	0.0	0.0	0.0	0.0	311704.1	51107	1372.67
1.8425	21.7	195.8	363006.9	Warmup 0081	0.0	0.0	0.0	0.0	0.0	311704.1	51303	1372.69
1.8450	21.7	195.3	363202.2	Warmup 0090	0.0	0.0	0.0	0.0	0.0	311704.1	51498	1372.71
1.8475	21.6	194.8	363397.0	Warmup 0099	0.0	0.0	0.0	0.0	0.0	311704.1	51693	1372.73
1.8500	21.6	194.3	363591.3	Warmup 0108	0.0	0.0	0.0	0.0	0.0	311704.1	51887	1372.75
1.8525	21.5	193.9	363785.2	Warmup 0117	0.0	0.0	0.0	0.0	0.0	311704.1	52081	1372.77
1.8550	21.5	193.4	363978.6	Warmup 0126	0.0	0.0	0.0	0.0	0.0	311704.1	52274	1372.79
1.8575	21.4	192.9	364171.5	Warmup 0135	0.0	0.0	0.0	0.0	0.0	311704.1	52467	1372.81
1.8600	21.4	192.4	364363.9	Warmup 0144	0.0	0.0	0.0	0.0	0.0	311704.1	52660	1372.83
1.8625	21.3	192.0	364555.9	Warmup 0153	0.0	0.0	0.0	0.0	0.0	311704.1	52852	1372.85
1.8650	21.3	191.5	364747.4	Warmup 0162	0.0	0.0	0.0	0.0	0.0	311704.1	53043	1372.87
1.8675	21.2	191.0	364938.4	Warmup 0171	0.0	0.0	0.0	0.0	0.0	311704.1	53234	1372.89
1.8700	21.1	190.5	365128.9	Warmup 0180	0.0	0.0	0.0	0.0	0.0	311704.1	53425	1372.91
1.8725	21.1	190.1	365319.0	508.8	0.0	0.0	0.0	508.8	56.5	312212.9	53106	1372.87
1.8750	21.0	189.6	365508.6	508.6	0.0	0.0	0.0	508.6	56.5	312721.5	52787	1372.84
1.8775	21.0	189.1	365697.7	508.4	0.0	0.0	0.0	508.4	56.5	313229.9	52468	1372.81
1.8800	20.9	188.6	365886.4	508.2	0.0	0.0	0.0	508.2	56.5	313738.1	52148	1372.78
1.8825	20.9	188.2	366074.5	508.0	0.0	0.0	0.0	508.0	56.4	314246.1	51828	1372.74
1.8850	20.8	187.7	366262.2	507.8	0.0	0.0	0.0	507.8	56.4	314753.9	51508	1372.71
1.8875	20.8	187.2	366449.5	507.6	0.0	0.0	0.0	507.6	56.4	315261.4	51188	1372.68
1.8900	20.7	186.8	366636.2	507.4	0.0	0.0	0.0	507.4	56.4	315768.8	50867	1372.65
1.8925	20.7	186.3	366822.5	507.2	0.0	0.0	0.0	507.2	56.4	316276.0	50547	1372.61
1.8950	20.6	185.8	367008.3	507.0	0.0	0.0	0.0	507.0	56.3	316782.9	50225	1372.58
1.8975	20.6	185.3	367193.7	506.8	0.0	0.0	0.0	506.8	56.3	317289.7	49904	1372.55
1.9000	20.5	184.9	367378.5	506.5	0.0	0.0	0.0	506.5	56.3	317796.2	49582	1372.51

	Pump 1	Pump 2	Pump 3	Pump 4
Pump Run Time	52.20 Min	32.70 Min	21.30 Min	0.00 Min
	4.5	5.5	7.5	0
Pump Warmups	3.00 Min	3.00 Min	3.00 Min	3.00 Min
Float Switch On/Off Elevations (ft)				
On Elev	1372.5	1373.5	1375.5	1500
Off Elev	1368	1368	1368	1400

Max WS = 1380.91

Time (hrs)	Inflow (cfs)	Incremental Inflow Volume (cf)	Cumulative Inflow Volume (cf)	Pump 1 (cf)	Pump 2 (cf)	Pump 3 (cf)	Pump 4 (cf)	Pump Out (cf)	Outflow (cfs)	Cumulative Outflow (cf)	Total Storage (cf)	WSEL (ft)
1.9025	20.5	184.4	367562.9	506.3	0.0	0.0	0.0	506.3	56.3	318302.6	49260	1372.48
1.9050	20.4	183.9	367746.8	506.1	0.0	0.0	0.0	506.1	56.2	318808.7	48938	1372.45
1.9075	20.4	183.4	367930.3	505.9	0.0	0.0	0.0	505.9	56.2	319314.6	48616	1372.42
1.9100	20.3	183.0	368113.2	505.7	0.0	0.0	0.0	505.7	56.2	319820.4	48293	1372.38
1.9125	20.3	182.5	368295.7	505.5	0.0	0.0	0.0	505.5	56.2	320325.9	47970	1372.35
1.9150	20.2	182.0	368477.8	505.3	0.0	0.0	0.0	505.3	56.1	320831.2	47647	1372.32
1.9175	20.1	181.5	368659.3	505.1	0.0	0.0	0.0	505.1	56.1	321336.3	47323	1372.28
1.9200	20.1	181.1	368840.4	504.9	0.0	0.0	0.0	504.9	56.1	321841.1	46999	1372.25
1.9225	20.0	180.6	369021.0	504.7	0.0	0.0	0.0	504.7	56.1	322345.8	46675	1372.22
1.9250	20.0	180.1	369201.1	504.5	0.0	0.0	0.0	504.5	56.1	322850.3	46351	1372.18
1.9275	19.9	179.7	369380.8	504.3	0.0	0.0	0.0	504.3	56.0	323354.5	46026	1372.15
1.9300	19.9	179.2	369559.9	504.0	0.0	0.0	0.0	504.0	56.0	323858.6	45701	1372.12
1.9325	19.8	178.7	369738.7	503.8	0.0	0.0	0.0	503.8	56.0	324362.4	45376	1372.08
1.9350	19.8	178.2	369916.9	503.6	0.0	0.0	0.0	503.6	56.0	324866.1	45051	1372.05
1.9375	19.7	177.8	370094.7	503.4	0.0	0.0	0.0	503.4	55.9	325369.5	44725	1372.02
1.9400	19.7	177.3	370271.9	503.2	0.0	0.0	0.0	503.2	55.9	325872.7	44399	1371.98
1.9425	19.6	176.8	370448.8	503.0	0.0	0.0	0.0	503.0	55.9	326375.7	44073	1371.95
1.9450	19.6	176.3	370625.1	502.8	0.0	0.0	0.0	502.8	55.9	326878.5	43747	1371.91
1.9475	19.5	175.9	370801.0	502.6	0.0	0.0	0.0	502.6	55.8	327381.0	43420	1371.88
1.9500	19.5	175.4	370976.4	502.3	0.0	0.0	0.0	502.3	55.8	327883.4	43093	1371.84
1.9525	19.4	174.9	371151.3	502.1	0.0	0.0	0.0	502.1	55.8	328385.5	42766	1371.81
1.9550	19.4	174.4	371325.7	501.9	0.0	0.0	0.0	501.9	55.8	328887.4	42438	1371.77
1.9575	19.3	174.0	371499.7	501.7	0.0	0.0	0.0	501.7	55.7	329389.1	42111	1371.74
1.9600	19.3	173.5	371673.2	501.5	0.0	0.0	0.0	501.5	55.7	329890.5	41783	1371.70
1.9625	19.2	173.0	371846.2	501.2	0.0	0.0	0.0	501.2	55.7	330391.8	41454	1371.67
1.9650	19.1	172.6	372018.8	501.0	0.0	0.0	0.0	501.0	55.7	330892.8	41126	1371.63
1.9675	19.1	172.1	372190.9	500.8	0.0	0.0	0.0	500.8	55.6	331393.6	40797	1371.60
1.9700	19.0	171.6	372362.5	500.6	0.0	0.0	0.0	500.6	55.6	331894.2	40468	1371.56
1.9725	19.0	171.1	372533.6	500.4	0.0	0.0	0.0	500.4	55.6	332394.5	40139	1371.53
1.9750	18.9	170.7	372704.3	500.1	0.0	0.0	0.0	500.1	55.6	332894.7	39810	1371.49
1.9775	18.9	170.2	372874.5	499.9	0.0	0.0	0.0	499.9	55.5	333394.6	39480	1371.46
1.9800	18.8	169.7	373044.2	499.7	0.0	0.0	0.0	499.7	55.5	333894.3	39150	1371.42
1.9825	18.8	169.2	373213.4	499.5	0.0	0.0	0.0	499.5	55.5	334393.7	38820	1371.39
1.9850	18.7	168.8	373382.2	499.2	0.0	0.0	0.0	499.2	55.5	334893.0	38489	1371.35
1.9875	18.7	168.3	373550.5	499.0	0.0	0.0	0.0	499.0	55.4	335392.0	38158	1371.32
1.9900	18.6	167.8	373718.3	498.8	0.0	0.0	0.0	498.8	55.4	335890.8	37827	1371.28
1.9925	18.6	167.3	373885.6	498.6	0.0	0.0	0.0	498.6	55.4	336389.4	37496	1371.25
1.9950	18.5	166.9	374052.5	498.4	0.0	0.0	0.0	498.4	55.4	336887.7	37165	1371.21
1.9975	18.5	166.4	374218.9	498.1	0.0	0.0	0.0	498.1	55.3	337385.9	36833	1371.18
2.0000	18.4	165.9	374384.8	497.9	0.0	0.0	0.0	497.9	55.3	337883.8	36501	1371.14
2.0025	18.4	165.6	374550.4	497.7	0.0	0.0	0.0	497.7	55.3	338381.5	36169	1371.11
2.0050	18.4	165.3	374715.7	497.5	0.0	0.0	0.0	497.5	55.3	338878.9	35837	1371.07
2.0075	18.3	165.0	374880.7	497.2	0.0	0.0	0.0	497.2	55.2	339376.2	35505	1371.03
2.0100	18.3	164.8	375045.5	497.0	0.0	0.0	0.0	497.0	55.2	339873.2	35172	1371.00
2.0125	18.3	164.5	375210.0	496.8	0.0	0.0	0.0	496.8	55.2	340370.0	34840	1370.96
2.0150	18.2	164.2	375374.2	496.5	0.0	0.0	0.0	496.5	55.2	340866.5	34508	1370.92
2.0175	18.2	164.0	375538.1	496.3	0.0	0.0	0.0	496.3	55.1	341362.8	34175	1370.88
2.0200	18.2	163.7	375701.8	496.0	0.0	0.0	0.0	496.0	55.1	341858.9	33843	1370.84
2.0225	18.1	163.4	375865.3	495.8	0.0	0.0	0.0	495.8	55.1	342354.7	33511	1370.80
2.0250	18.1	163.2	376028.4	495.5	0.0	0.0	0.0	495.5	55.1	342850.2	33178	1370.76
2.0275	18.1	162.9	376191.3	495.3	0.0	0.0	0.0	495.3	55.0	343345.5	32846	1370.72
2.0300	18.1	162.6	376353.9	495.0	0.0	0.0	0.0	495.0	55.0	343840.5	32513	1370.68
2.0325	18.0	162.4	376516.3	494.8	0.0	0.0	0.0	494.8	55.0	344335.3	32181	1370.64
2.0350	18.0	162.1	376678.4	494.5	0.0	0.0	0.0	494.5	54.9	344829.8	31849	1370.60
2.0375	18.0	161.8	376840.2	494.3	0.0	0.0	0.0	494.3	54.9	345324.1	31516	1370.56

Pump Run Time			
52.20 Min	32.70 Min	21.30 Min	0.00 Min
4.5	5.5	7.5	0
Pump Warmups			
3.00 Min	3.00 Min	3.00 Min	3.00 Min
Float Switch On/Off Elevations (ft)			
On Elev 1372.5	1373.5	1375.5	1500
Off Elev 1368	1368	1368	1400

Max WS = 1380.91

Time (hrs)	Inflow (cfs)	Incremental Inflow Volume (cf)	Cumulative Inflow Volume (cf)	Pump 1 (cf)	Pump 2 (cf)	Pump 3 (cf)	Pump 4 (cf)	Pump Out (cf)	Outflow (cfs)	Cumulative Outflow (cf)	Total Storage (cf)	WSEL (ft)
2.0400	17.9	161.6	377001.8	494.0	0.0	0.0	0.0	494.0	54.9	345818.2	31184	1370.52
2.0425	17.9	161.3	377163.1	493.8	0.0	0.0	0.0	493.8	54.9	346311.9	30851	1370.48
2.0450	17.9	161.0	377324.1	493.5	0.0	0.0	0.0	493.5	54.8	346805.5	30519	1370.44
2.0475	17.8	160.8	377484.9	493.3	0.0	0.0	0.0	493.3	54.8	347298.8	30186	1370.40
2.0500	17.8	160.5	377645.4	493.0	0.0	0.0	0.0	493.0	54.8	347791.8	29854	1370.36
2.0525	17.8	160.2	377805.6	492.8	0.0	0.0	0.0	492.8	54.8	348284.6	29521	1370.32
2.0550	17.8	160.0	377965.6	492.5	0.0	0.0	0.0	492.5	54.7	348777.1	29188	1370.28
2.0575	17.7	159.7	378125.3	492.3	0.0	0.0	0.0	492.3	54.7	349269.4	28856	1370.24
2.0600	17.7	159.4	378284.7	492.0	0.0	0.0	0.0	492.0	54.7	349761.4	28523	1370.20
2.0625	17.7	159.2	378443.9	491.8	0.0	0.0	0.0	491.8	54.6	350253.2	28191	1370.16
2.0650	17.6	158.9	378602.8	491.5	0.0	0.0	0.0	491.5	54.6	350744.7	27858	1370.12
2.0675	17.6	158.6	378761.4	491.3	0.0	0.0	0.0	491.3	54.6	351235.9	27525	1370.08
2.0700	17.6	158.4	378919.8	491.0	0.0	0.0	0.0	491.0	54.6	351727.0	27193	1370.04
2.0725	17.6	158.1	379077.9	490.8	0.0	0.0	0.0	490.8	54.5	352217.7	26860	1370.00
2.0750	17.5	157.8	379235.7	490.5	0.0	0.0	0.0	490.5	54.5	352708.2	26527	1369.95
2.0775	17.5	157.6	379393.3	490.3	0.0	0.0	0.0	490.3	54.5	353198.6	26195	1369.89
2.0800	17.5	157.3	379550.6	490.1	0.0	0.0	0.0	490.1	54.5	353688.7	25862	1369.84
2.0825	17.4	157.0	379707.6	489.9	0.0	0.0	0.0	489.9	54.4	354178.6	25529	1369.79
2.0850	17.4	156.8	379864.4	489.7	0.0	0.0	0.0	489.7	54.4	354668.3	25196	1369.73
2.0875	17.4	156.5	380020.9	489.5	0.0	0.0	0.0	489.5	54.4	355157.9	24863	1369.68
2.0900	17.3	156.2	380177.1	489.3	0.0	0.0	0.0	489.3	54.4	355647.2	24530	1369.62
2.0925	17.3	156.0	380333.1	489.1	0.0	0.0	0.0	489.1	54.3	356136.3	24197	1369.57
2.0950	17.3	155.7	380488.8	488.9	0.0	0.0	0.0	488.9	54.3	356625.3	23864	1369.51
2.0975	17.3	155.4	380644.2	488.7	0.0	0.0	0.0	488.7	54.3	357114.0	23530	1369.46
2.1000	17.2	155.2	380799.4	488.5	0.0	0.0	0.0	488.5	54.3	357602.6	23197	1369.40
2.1025	17.2	154.9	380954.3	488.4	0.0	0.0	0.0	488.4	54.3	358090.9	22863	1369.35
2.1050	17.2	154.6	381109.0	488.2	0.0	0.0	0.0	488.2	54.2	358579.1	22530	1369.29
2.1075	17.1	154.4	381263.3	488.0	0.0	0.0	0.0	488.0	54.2	359067.0	22196	1369.24
2.1100	17.1	154.1	381417.4	487.8	0.0	0.0	0.0	487.8	54.2	359554.8	21863	1369.19
2.1125	17.1	153.8	381571.3	487.6	0.0	0.0	0.0	487.6	54.2	360042.4	21529	1369.13
2.1150	17.0	153.6	381724.8	487.4	0.0	0.0	0.0	487.4	54.2	360529.7	21195	1369.08
2.1175	17.0	153.3	381878.2	487.2	0.0	0.0	0.0	487.2	54.1	361016.9	20861	1369.02
2.1200	17.0	153.0	382031.2	487.0	0.0	0.0	0.0	487.0	54.1	361503.9	20527	1368.94
2.1225	17.0	152.8	382184.0	486.7	0.0	0.0	0.0	486.7	54.1	361990.6	20193	1368.85
2.1250	16.9	152.5	382336.5	486.4	0.0	0.0	0.0	486.4	54.0	362477.0	19860	1368.76
2.1275	16.9	152.2	382488.7	486.0	0.0	0.0	0.0	486.0	54.0	362963.0	19526	1368.66
2.1300	16.9	152.0	382640.7	485.7	0.0	0.0	0.0	485.7	54.0	363448.7	19192	1368.57
2.1325	16.8	151.7	382792.4	485.4	0.0	0.0	0.0	485.4	53.9	363934.0	18858	1368.48
2.1350	16.8	151.4	382943.9	485.0	0.0	0.0	0.0	485.0	53.9	364419.1	18525	1368.39
2.1375	16.8	151.2	383095.0	484.7	0.0	0.0	0.0	484.7	53.9	364903.7	18191	1368.29
2.1400	16.8	150.9	383245.9	484.4	0.0	0.0	0.0	484.4	53.8	365388.1	17858	1368.20
2.1425	16.7	150.6	383396.6	484.0	0.0	0.0	0.0	484.0	53.8	365872.1	17524	1368.11
2.1450	16.7	150.4	383547.0	483.7	0.0	0.0	0.0	483.7	53.7	366355.8	17191	1368.01
2.1475	16.7	150.1	383697.1	483.4	0.0	0.0	0.0	483.4	53.7	366839.2	16858	1367.90
2.1500	16.6	149.8	383846.9	0.0	0.0	0.0	0.0	0.0	0.0	366839.2	17008	1367.95
2.1525	16.6	149.6	383996.5	0.0	0.0	0.0	0.0	0.0	0.0	366839.2	17157	1368.00
2.1550	16.6	149.3	384145.8	0.0	0.0	0.0	0.0	0.0	0.0	366839.2	17307	1368.05
2.1575	16.5	149.0	384294.9	0.0	0.0	0.0	0.0	0.0	0.0	366839.2	17456	1368.09
2.1600	16.5	148.8	384443.6	0.0	0.0	0.0	0.0	0.0	0.0	366839.2	17604	1368.13
2.1625	16.5	148.5	384592.2	0.0	0.0	0.0	0.0	0.0	0.0	366839.2	17753	1368.17
2.1650	16.5	148.2	384740.4	0.0	0.0	0.0	0.0	0.0	0.0	366839.2	17901	1368.21
2.1675	16.4	148.0	384888.4	0.0	0.0	0.0	0.0	0.0	0.0	366839.2	18049	1368.25
2.1700	16.4	147.7	385036.1	0.0	0.0	0.0	0.0	0.0	0.0	366839.2	18197	1368.29
2.1725	16.4	147.4	385183.6	0.0	0.0	0.0	0.0	0.0	0.0	366839.2	18344	1368.34
2.1750	16.3	147.2	385330.7	0.0	0.0	0.0	0.0	0.0	0.0	366839.2	18492	1368.38

	Pump 1	Pump 2	Pump 3	Pump 4
Pump Run Time	52.20 Min	32.70 Min	21.30 Min	0.00 Min
	4.5	5.5	7.5	0
Pump Warmups	3.00 Min	3.00 Min	3.00 Min	3.00 Min
Float Switch On/Off Elevations (ft)				
On Elev	1372.5	1373.5	1375.5	1500
Off Elev	1368	1368	1368	1400

Max WS = 1380.91

Time (hrs)	Inflow (cfs)	Incremental Inflow Volume (cf)	Cumulative Inflow Volume (cf)	Pump 1 (cf)	Pump 2 (cf)	Pump 3 (cf)	Pump 4 (cf)	Pump Out (cf)	Outflow (cfs)	Cumulative Outflow (cf)	Total Storage (cf)	WSEL (ft)
2.1775	16.3	146.9	385477.7	0.0	0.0	0.0	0.0	0.0	0.0	366839.2	18638	1368.42
2.1800	16.3	146.7	385624.3	0.0	0.0	0.0	0.0	0.0	0.0	366839.2	18785	1368.46
2.1825	16.3	146.4	385770.7	0.0	0.0	0.0	0.0	0.0	0.0	366839.2	18932	1368.50
2.1850	16.2	146.1	385916.8	0.0	0.0	0.0	0.0	0.0	0.0	366839.2	19078	1368.54
2.1875	16.2	145.9	386062.7	0.0	0.0	0.0	0.0	0.0	0.0	366839.2	19224	1368.58
2.1900	16.2	145.6	386208.2	0.0	0.0	0.0	0.0	0.0	0.0	366839.2	19369	1368.62
2.1925	16.1	145.3	386353.6	0.0	0.0	0.0	0.0	0.0	0.0	366839.2	19514	1368.66
2.1950	16.1	145.1	386498.6	0.0	0.0	0.0	0.0	0.0	0.0	366839.2	19659	1368.70
2.1975	16.1	144.8	386643.4	0.0	0.0	0.0	0.0	0.0	0.0	366839.2	19804	1368.74
2.2000	16.0	144.5	386787.9	0.0	0.0	0.0	0.0	0.0	0.0	366839.2	19949	1368.78
2.2025	16.0	144.3	386932.2	0.0	0.0	0.0	0.0	0.0	0.0	366839.2	20093	1368.82
2.2050	16.0	144.1	387076.3	0.0	0.0	0.0	0.0	0.0	0.0	366839.2	20237	1368.86
2.2075	16.0	143.9	387220.1	0.0	0.0	0.0	0.0	0.0	0.0	366839.2	20381	1368.90
2.2100	16.0	143.7	387363.8	0.0	0.0	0.0	0.0	0.0	0.0	366839.2	20525	1368.94
2.2125	15.9	143.5	387507.3	0.0	0.0	0.0	0.0	0.0	0.0	366839.2	20668	1368.98
2.2150	15.9	143.2	387650.5	0.0	0.0	0.0	0.0	0.0	0.0	366839.2	20811	1369.01
2.2175	15.9	143.0	387793.6	0.0	0.0	0.0	0.0	0.0	0.0	366839.2	20954	1369.04
2.2200	15.9	142.8	387936.4	0.0	0.0	0.0	0.0	0.0	0.0	366839.2	21097	1369.06
2.2225	15.8	142.6	388079.0	0.0	0.0	0.0	0.0	0.0	0.0	366839.2	21240	1369.08
2.2250	15.8	142.4	388221.4	0.0	0.0	0.0	0.0	0.0	0.0	366839.2	21382	1369.11
2.2275	15.8	142.2	388363.6	0.0	0.0	0.0	0.0	0.0	0.0	366839.2	21524	1369.13
2.2300	15.8	142.0	388505.7	0.0	0.0	0.0	0.0	0.0	0.0	366839.2	21666	1369.15
2.2325	15.7	141.8	388647.4	0.0	0.0	0.0	0.0	0.0	0.0	366839.2	21808	1369.18
2.2350	15.7	141.6	388789.0	0.0	0.0	0.0	0.0	0.0	0.0	366839.2	21950	1369.20
2.2375	15.7	141.4	388930.4	0.0	0.0	0.0	0.0	0.0	0.0	366839.2	22091	1369.22
2.2400	15.7	141.2	389071.6	0.0	0.0	0.0	0.0	0.0	0.0	366839.2	22232	1369.25
2.2425	15.7	141.0	389212.6	0.0	0.0	0.0	0.0	0.0	0.0	366839.2	22373	1369.27
2.2450	15.6	140.8	389353.3	0.0	0.0	0.0	0.0	0.0	0.0	366839.2	22514	1369.29
2.2475	15.6	140.6	389493.9	0.0	0.0	0.0	0.0	0.0	0.0	366839.2	22655	1369.32
2.2500	15.6	140.3	389634.2	0.0	0.0	0.0	0.0	0.0	0.0	366839.2	22795	1369.34
2.2525	15.6	140.1	389774.4	0.0	0.0	0.0	0.0	0.0	0.0	366839.2	22935	1369.36
2.2550	15.5	139.9	389914.3	0.0	0.0	0.0	0.0	0.0	0.0	366839.2	23075	1369.38
2.2575	15.5	139.7	390054.0	0.0	0.0	0.0	0.0	0.0	0.0	366839.2	23215	1369.41
2.2600	15.5	139.5	390193.6	0.0	0.0	0.0	0.0	0.0	0.0	366839.2	23354	1369.43
2.2625	15.5	139.3	390332.9	0.0	0.0	0.0	0.0	0.0	0.0	366839.2	23494	1369.45
2.2650	15.4	139.1	390472.0	0.0	0.0	0.0	0.0	0.0	0.0	366839.2	23633	1369.48
2.2675	15.4	138.9	390610.9	0.0	0.0	0.0	0.0	0.0	0.0	366839.2	23772	1369.50
2.2700	15.4	138.7	390749.6	0.0	0.0	0.0	0.0	0.0	0.0	366839.2	23910	1369.52
2.2725	15.4	138.5	390888.1	0.0	0.0	0.0	0.0	0.0	0.0	366839.2	24049	1369.54
2.2750	15.4	138.3	391026.3	0.0	0.0	0.0	0.0	0.0	0.0	366839.2	24187	1369.57
2.2775	15.3	138.1	391164.4	0.0	0.0	0.0	0.0	0.0	0.0	366839.2	24325	1369.59
2.2800	15.3	137.9	391302.3	0.0	0.0	0.0	0.0	0.0	0.0	366839.2	24463	1369.61
2.2825	15.3	137.7	391439.9	0.0	0.0	0.0	0.0	0.0	0.0	366839.2	24601	1369.63
2.2850	15.3	137.4	391577.4	0.0	0.0	0.0	0.0	0.0	0.0	366839.2	24738	1369.66
2.2875	15.2	137.2	391714.6	0.0	0.0	0.0	0.0	0.0	0.0	366839.2	24875	1369.68
2.2900	15.2	137.0	391851.6	0.0	0.0	0.0	0.0	0.0	0.0	366839.2	25012	1369.70
2.2925	15.2	136.8	391988.5	0.0	0.0	0.0	0.0	0.0	0.0	366839.2	25149	1369.72
2.2950	15.2	136.6	392125.1	0.0	0.0	0.0	0.0	0.0	0.0	366839.2	25286	1369.75
2.2975	15.1	136.4	392261.5	0.0	0.0	0.0	0.0	0.0	0.0	366839.2	25422	1369.77
2.3000	15.1	136.2	392397.7	0.0	0.0	0.0	0.0	0.0	0.0	366839.2	25559	1369.79
2.3025	15.1	136.0	392533.7	0.0	0.0	0.0	0.0	0.0	0.0	366839.2	25695	1369.81
2.3050	15.1	135.8	392669.5	0.0	0.0	0.0	0.0	0.0	0.0	366839.2	25830	1369.83
2.3075	15.1	135.6	392805.1	0.0	0.0	0.0	0.0	0.0	0.0	366839.2	25966	1369.86
2.3100	15.0	135.4	392940.5	0.0	0.0	0.0	0.0	0.0	0.0	366839.2	26101	1369.88
2.3125	15.0	135.2	393075.6	0.0	0.0	0.0	0.0	0.0	0.0	366839.2	26236	1369.90

Pump Run Time			
52.20 Min	32.70 Min	21.30 Min	0.00 Min
4.5	5.5	7.5	0
Pump Warmups			
3.00 Min	3.00 Min	3.00 Min	3.00 Min
Float Switch On/Off Elevations (ft)			
On Elev 1372.5	1373.5	1375.5	1500
Off Elev 1368	1368	1368	1400

Max WS = 1380.91

Time (hrs)	Inflow (cfs)	Incremental Inflow Volume (cf)	Cumulative Inflow Volume (cf)	Pump 1 (cf)	Pump 2 (cf)	Pump 3 (cf)	Pump 4 (cf)	Pump Out (cf)	Outflow (cfs)	Cumulative Outflow (cf)	Total Storage (cf)	WSEL (ft)
2.3150	15.0	135.0	393210.6	0.0	0.0	0.0	0.0	0.0	0.0	366839.2	26371	1369.92
2.3175	15.0	134.8	393345.4	0.0	0.0	0.0	0.0	0.0	0.0	366839.2	26506	1369.95
2.3200	14.9	134.5	393479.9	0.0	0.0	0.0	0.0	0.0	0.0	366839.2	26641	1369.97
2.3225	14.9	134.3	393614.2	0.0	0.0	0.0	0.0	0.0	0.0	366839.2	26775	1369.99
2.3250	14.9	134.1	393748.4	0.0	0.0	0.0	0.0	0.0	0.0	366839.2	26909	1370.01
2.3275	14.9	133.9	393882.3	0.0	0.0	0.0	0.0	0.0	0.0	366839.2	27043	1370.02
2.3300	14.8	133.7	394016.0	0.0	0.0	0.0	0.0	0.0	0.0	366839.2	27177	1370.04
2.3325	14.8	133.5	394149.5	0.0	0.0	0.0	0.0	0.0	0.0	366839.2	27310	1370.06
2.3350	14.8	133.3	394282.8	0.0	0.0	0.0	0.0	0.0	0.0	366839.2	27444	1370.07
2.3375	14.8	133.1	394415.9	0.0	0.0	0.0	0.0	0.0	0.0	366839.2	27577	1370.09
2.3400	14.8	132.9	394548.8	0.0	0.0	0.0	0.0	0.0	0.0	366839.2	27710	1370.10
2.3425	14.7	132.7	394681.5	0.0	0.0	0.0	0.0	0.0	0.0	366839.2	27842	1370.12
2.3450	14.7	132.5	394814.0	0.0	0.0	0.0	0.0	0.0	0.0	366839.2	27975	1370.14
2.3475	14.7	132.3	394946.3	0.0	0.0	0.0	0.0	0.0	0.0	366839.2	28107	1370.15
2.3500	14.7	132.1	395078.3	0.0	0.0	0.0	0.0	0.0	0.0	366839.2	28239	1370.17
2.3525	14.6	131.9	395210.2	0.0	0.0	0.0	0.0	0.0	0.0	366839.2	28371	1370.18
2.3550	14.6	131.6	395341.8	0.0	0.0	0.0	0.0	0.0	0.0	366839.2	28503	1370.20
2.3575	14.6	131.4	395473.3	0.0	0.0	0.0	0.0	0.0	0.0	366839.2	28634	1370.22
2.3600	14.6	131.2	395604.5	0.0	0.0	0.0	0.0	0.0	0.0	366839.2	28765	1370.23
2.3625	14.5	131.0	395735.5	0.0	0.0	0.0	0.0	0.0	0.0	366839.2	28896	1370.25
2.3650	14.5	130.8	395866.4	0.0	0.0	0.0	0.0	0.0	0.0	366839.2	29027	1370.26
2.3675	14.5	130.6	395997.0	0.0	0.0	0.0	0.0	0.0	0.0	366839.2	29158	1370.28
2.3700	14.5	130.4	396127.4	0.0	0.0	0.0	0.0	0.0	0.0	366839.2	29288	1370.29
2.3725	14.5	130.2	396257.6	0.0	0.0	0.0	0.0	0.0	0.0	366839.2	29418	1370.31
2.3750	14.4	130.0	396387.6	0.0	0.0	0.0	0.0	0.0	0.0	366839.2	29548	1370.32
2.3775	14.4	129.8	396517.4	0.0	0.0	0.0	0.0	0.0	0.0	366839.2	29678	1370.34
2.3800	14.4	129.6	396646.9	0.0	0.0	0.0	0.0	0.0	0.0	366839.2	29808	1370.36
2.3825	14.4	129.4	396776.3	0.0	0.0	0.0	0.0	0.0	0.0	366839.2	29937	1370.37
2.3850	14.3	129.2	396905.5	0.0	0.0	0.0	0.0	0.0	0.0	366839.2	30066	1370.39
2.3875	14.3	129.0	397034.4	0.0	0.0	0.0	0.0	0.0	0.0	366839.2	30195	1370.40
2.3900	14.3	128.8	397163.2	0.0	0.0	0.0	0.0	0.0	0.0	366839.2	30324	1370.42
2.3925	14.3	128.5	397291.7	0.0	0.0	0.0	0.0	0.0	0.0	366839.2	30453	1370.43
2.3950	14.2	128.3	397420.1	0.0	0.0	0.0	0.0	0.0	0.0	366839.2	30581	1370.45
2.3975	14.2	128.1	397548.2	0.0	0.0	0.0	0.0	0.0	0.0	366839.2	30709	1370.46
2.4000	14.2	127.9	397676.1	0.0	0.0	0.0	0.0	0.0	0.0	366839.2	30837	1370.48
2.4025	14.2	127.7	397803.9	0.0	0.0	0.0	0.0	0.0	0.0	366839.2	30965	1370.49
2.4050	14.2	127.6	397931.5	0.0	0.0	0.0	0.0	0.0	0.0	366839.2	31092	1370.51
2.4075	14.2	127.4	398058.9	0.0	0.0	0.0	0.0	0.0	0.0	366839.2	31220	1370.53
2.4100	14.1	127.3	398186.2	0.0	0.0	0.0	0.0	0.0	0.0	366839.2	31347	1370.54
2.4125	14.1	127.2	398313.4	0.0	0.0	0.0	0.0	0.0	0.0	366839.2	31474	1370.56
2.4150	14.1	127.0	398440.4	0.0	0.0	0.0	0.0	0.0	0.0	366839.2	31601	1370.57
2.4175	14.1	126.9	398567.2	0.0	0.0	0.0	0.0	0.0	0.0	366839.2	31728	1370.59
2.4200	14.1	126.7	398693.9	0.0	0.0	0.0	0.0	0.0	0.0	366839.2	31855	1370.60
2.4225	14.1	126.6	398820.5	0.0	0.0	0.0	0.0	0.0	0.0	366839.2	31981	1370.62
2.4250	14.0	126.4	398946.9	0.0	0.0	0.0	0.0	0.0	0.0	366839.2	32108	1370.63
2.4275	14.0	126.3	399073.2	0.0	0.0	0.0	0.0	0.0	0.0	366839.2	32234	1370.65
2.4300	14.0	126.1	399199.3	0.0	0.0	0.0	0.0	0.0	0.0	366839.2	32360	1370.66
2.4325	14.0	126.0	399325.3	0.0	0.0	0.0	0.0	0.0	0.0	366839.2	32486	1370.68
2.4350	14.0	125.8	399451.1	0.0	0.0	0.0	0.0	0.0	0.0	366839.2	32612	1370.69
2.4375	14.0	125.7	399576.7	0.0	0.0	0.0	0.0	0.0	0.0	366839.2	32738	1370.71
2.4400	13.9	125.5	399702.3	0.0	0.0	0.0	0.0	0.0	0.0	366839.2	32863	1370.72
2.4425	13.9	125.4	399827.6	0.0	0.0	0.0	0.0	0.0	0.0	366839.2	32988	1370.74
2.4450	13.9	125.2	399952.9	0.0	0.0	0.0	0.0	0.0	0.0	366839.2	33114	1370.75
2.4475	13.9	125.1	400078.0	0.0	0.0	0.0	0.0	0.0	0.0	366839.2	33239	1370.77
2.4500	13.9	124.9	400202.9	0.0	0.0	0.0	0.0	0.0	0.0	366839.2	33364	1370.78

	Pump 1	Pump 2	Pump 3	Pump 4
Pump Run Time	52.20 Min	32.70 Min	21.30 Min	0.00 Min
	4.5	5.5	7.5	0
Pump Warmups	3.00 Min	3.00 Min	3.00 Min	3.00 Min
Float Switch On/Off Elevations (ft)				
On Elev	1372.5	1373.5	1375.5	1500
Off Elev	1368	1368	1368	1400

Max WS = 1380.91

Time (hrs)	Inflow (cfs)	Incremental Inflow Volume (cf)	Cumulative Inflow Volume (cf)	Pump 1 (cf)	Pump 2 (cf)	Pump 3 (cf)	Pump 4 (cf)	Pump Out (cf)	Outflow (cfs)	Cumulative Outflow (cf)	Total Storage (cf)	WSEL (ft)
2.4525	13.9	124.8	400327.7	0.0	0.0	0.0	0.0	0.0	0.0	366839.2	33489	1370.80
2.4550	13.8	124.6	400452.3	0.0	0.0	0.0	0.0	0.0	0.0	366839.2	33613	1370.81
2.4575	13.8	124.5	400576.8	0.0	0.0	0.0	0.0	0.0	0.0	366839.2	33738	1370.83
2.4600	13.8	124.3	400701.1	0.0	0.0	0.0	0.0	0.0	0.0	366839.2	33862	1370.84
2.4625	13.8	124.2	400825.3	0.0	0.0	0.0	0.0	0.0	0.0	366839.2	33986	1370.86
2.4650	13.8	124.0	400949.4	0.0	0.0	0.0	0.0	0.0	0.0	366839.2	34110	1370.87
2.4675	13.8	123.9	401073.3	0.0	0.0	0.0	0.0	0.0	0.0	366839.2	34234	1370.89
2.4700	13.7	123.7	401197.0	0.0	0.0	0.0	0.0	0.0	0.0	366839.2	34358	1370.90
2.4725	13.7	123.6	401320.6	0.0	0.0	0.0	0.0	0.0	0.0	366839.2	34481	1370.92
2.4750	13.7	123.5	401444.1	0.0	0.0	0.0	0.0	0.0	0.0	366839.2	34605	1370.93
2.4775	13.7	123.3	401567.4	0.0	0.0	0.0	0.0	0.0	0.0	366839.2	34728	1370.95
2.4800	13.7	123.2	401690.6	0.0	0.0	0.0	0.0	0.0	0.0	366839.2	34851	1370.96
2.4825	13.7	123.0	401813.6	0.0	0.0	0.0	0.0	0.0	0.0	366839.2	34974	1370.98
2.4850	13.6	122.9	401936.4	0.0	0.0	0.0	0.0	0.0	0.0	366839.2	35097	1370.99
2.4875	13.6	122.7	402059.1	0.0	0.0	0.0	0.0	0.0	0.0	366839.2	35220	1371.00
2.4900	13.6	122.6	402181.7	0.0	0.0	0.0	0.0	0.0	0.0	366839.2	35343	1371.02
2.4925	13.6	122.4	402304.1	0.0	0.0	0.0	0.0	0.0	0.0	366839.2	35465	1371.03
2.4950	13.6	122.3	402426.4	0.0	0.0	0.0	0.0	0.0	0.0	366839.2	35587	1371.04
2.4975	13.6	122.1	402548.5	0.0	0.0	0.0	0.0	0.0	0.0	366839.2	35709	1371.06
2.5000	13.5	122.0	402670.5	0.0	0.0	0.0	0.0	0.0	0.0	366839.2	35831	1371.07
2.5025	13.5	121.8	402792.3	0.0	0.0	0.0	0.0	0.0	0.0	366839.2	35953	1371.08
2.5050	13.5	121.7	402914.0	0.0	0.0	0.0	0.0	0.0	0.0	366839.2	36075	1371.10
2.5075	13.5	121.5	403035.5	0.0	0.0	0.0	0.0	0.0	0.0	366839.2	36196	1371.11
2.5100	13.5	121.4	403156.9	0.0	0.0	0.0	0.0	0.0	0.0	366839.2	36318	1371.12
2.5125	13.5	121.2	403278.1	0.0	0.0	0.0	0.0	0.0	0.0	366839.2	36439	1371.13
2.5150	13.4	121.1	403399.2	0.0	0.0	0.0	0.0	0.0	0.0	366839.2	36560	1371.15
2.5175	13.4	120.9	403520.2	0.0	0.0	0.0	0.0	0.0	0.0	366839.2	36681	1371.16
2.5200	13.4	120.8	403641.0	0.0	0.0	0.0	0.0	0.0	0.0	366839.2	36802	1371.17
2.5225	13.4	120.6	403761.6	0.0	0.0	0.0	0.0	0.0	0.0	366839.2	36922	1371.19
2.5250	13.4	120.5	403882.1	0.0	0.0	0.0	0.0	0.0	0.0	366839.2	37043	1371.20
2.5275	13.4	120.3	404002.4	0.0	0.0	0.0	0.0	0.0	0.0	366839.2	37163	1371.21
2.5300	13.3	120.2	404122.6	0.0	0.0	0.0	0.0	0.0	0.0	366839.2	37283	1371.22
2.5325	13.3	120.1	404242.7	0.0	0.0	0.0	0.0	0.0	0.0	366839.2	37404	1371.24
2.5350	13.3	119.9	404362.6	0.0	0.0	0.0	0.0	0.0	0.0	366839.2	37523	1371.25
2.5375	13.3	119.8	404482.4	0.0	0.0	0.0	0.0	0.0	0.0	366839.2	37643	1371.26
2.5400	13.3	119.6	404602.0	0.0	0.0	0.0	0.0	0.0	0.0	366839.2	37763	1371.28
2.5425	13.3	119.5	404721.4	0.0	0.0	0.0	0.0	0.0	0.0	366839.2	37882	1371.29
2.5450	13.2	119.3	404840.7	0.0	0.0	0.0	0.0	0.0	0.0	366839.2	38002	1371.30
2.5475	13.2	119.2	404959.9	0.0	0.0	0.0	0.0	0.0	0.0	366839.2	38121	1371.31
2.5500	13.2	119.0	405078.9	0.0	0.0	0.0	0.0	0.0	0.0	366839.2	38240	1371.33
2.5525	13.2	118.9	405197.8	0.0	0.0	0.0	0.0	0.0	0.0	366839.2	38359	1371.34
2.5550	13.2	118.7	405316.5	0.0	0.0	0.0	0.0	0.0	0.0	366839.2	38477	1371.35
2.5575	13.2	118.6	405435.1	0.0	0.0	0.0	0.0	0.0	0.0	366839.2	38596	1371.36
2.5600	13.2	118.4	405553.5	0.0	0.0	0.0	0.0	0.0	0.0	366839.2	38714	1371.38
2.5625	13.1	118.3	405671.8	0.0	0.0	0.0	0.0	0.0	0.0	366839.2	38833	1371.39
2.5650	13.1	118.1	405789.9	0.0	0.0	0.0	0.0	0.0	0.0	366839.2	38951	1371.40
2.5675	13.1	118.0	405907.9	0.0	0.0	0.0	0.0	0.0	0.0	366839.2	39069	1371.42
2.5700	13.1	117.8	406025.7	0.0	0.0	0.0	0.0	0.0	0.0	366839.2	39187	1371.43
2.5725	13.1	117.7	406143.4	0.0	0.0	0.0	0.0	0.0	0.0	366839.2	39304	1371.44
2.5750	13.1	117.5	406260.9	0.0	0.0	0.0	0.0	0.0	0.0	366839.2	39422	1371.45
2.5775	13.0	117.4	406378.3	0.0	0.0	0.0	0.0	0.0	0.0	366839.2	39539	1371.47
2.5800	13.0	117.2	406495.6	0.0	0.0	0.0	0.0	0.0	0.0	366839.2	39656	1371.48
2.5825	13.0	117.1	406612.7	0.0	0.0	0.0	0.0	0.0	0.0	366839.2	39773	1371.49
2.5850	13.0	116.9	406729.6	0.0	0.0	0.0	0.0	0.0	0.0	366839.2	39890	1371.50
2.5875	13.0	116.8	406846.4	0.0	0.0	0.0	0.0	0.0	0.0	366839.2	40007	1371.52
2.5900	13.0	116.6	406963.0	0.0	0.0	0.0	0.0	0.0	0.0	366839.2	40124	1371.53

	Pump 1	Pump 2	Pump 3	Pump 4
Pump Run Time	52.20 Min	32.70 Min	21.30 Min	0.00 Min
	4.5	5.5	7.5	0
Pump Warmups	3.00 Min	3.00 Min	3.00 Min	3.00 Min
Float Switch On/Off Elevations (ft)				
On Elev	1372.5	1373.5	1375.5	1500
Off Elev	1368	1368	1368	1400

Max WS = 1380.91

Time (hrs)	Inflow (cfs)	Incremental Inflow Volume (cf)	Cumulative Inflow Volume (cf)	Pump 1 (cf)	Pump 2 (cf)	Pump 3 (cf)	Pump 4 (cf)	Pump Out (cf)	Outflow (cfs)	Cumulative Outflow (cf)	Total Storage (cf)	WSEL (ft)
2.5925	12.9	116.5	407079.5	0.0	0.0	0.0	0.0	0.0	0.0	366839.2	40240	1371.54
2.5950	12.9	116.4	407195.9	0.0	0.0	0.0	0.0	0.0	0.0	366839.2	40357	1371.55
2.5975	12.9	116.2	407312.1	0.0	0.0	0.0	0.0	0.0	0.0	366839.2	40473	1371.56
2.6000	12.9	116.1	407428.2	0.0	0.0	0.0	0.0	0.0	0.0	366839.2	40589	1371.58
2.6025	12.9	115.9	407544.1	0.0	0.0	0.0	0.0	0.0	0.0	366839.2	40705	1371.59
2.6050	12.9	115.8	407659.8	0.0	0.0	0.0	0.0	0.0	0.0	366839.2	40821	1371.60
2.6075	12.8	115.6	407775.4	0.0	0.0	0.0	0.0	0.0	0.0	366839.2	40936	1371.61
2.6100	12.8	115.5	407890.9	0.0	0.0	0.0	0.0	0.0	0.0	366839.2	41052	1371.63
2.6125	12.8	115.3	408006.2	0.0	0.0	0.0	0.0	0.0	0.0	366839.2	41167	1371.64
2.6150	12.8	115.2	408121.4	0.0	0.0	0.0	0.0	0.0	0.0	366839.2	41282	1371.65
2.6175	12.8	115.0	408236.4	0.0	0.0	0.0	0.0	0.0	0.0	366839.2	41397	1371.66
2.6200	12.8	114.9	408351.3	0.0	0.0	0.0	0.0	0.0	0.0	366839.2	41512	1371.68
2.6225	12.7	114.7	408466.0	0.0	0.0	0.0	0.0	0.0	0.0	366839.2	41627	1371.69
2.6250	12.7	114.6	408580.6	0.0	0.0	0.0	0.0	0.0	0.0	366839.2	41741	1371.70
2.6275	12.7	114.4	408695.0	0.0	0.0	0.0	0.0	0.0	0.0	366839.2	41856	1371.71
2.6300	12.7	114.3	408809.3	0.0	0.0	0.0	0.0	0.0	0.0	366839.2	41970	1371.72
2.6325	12.7	114.1	408923.4	0.0	0.0	0.0	0.0	0.0	0.0	366839.2	42084	1371.74
2.6350	12.7	114.0	409037.4	0.0	0.0	0.0	0.0	0.0	0.0	366839.2	42198	1371.75
2.6375	12.6	113.8	409151.3	0.0	0.0	0.0	0.0	0.0	0.0	366839.2	42312	1371.76
2.6400	12.6	113.7	409265.0	0.0	0.0	0.0	0.0	0.0	0.0	366839.2	42426	1371.77
2.6425	12.6	113.5	409378.5	0.0	0.0	0.0	0.0	0.0	0.0	366839.2	42539	1371.79
2.6450	12.6	113.4	409491.9	0.0	0.0	0.0	0.0	0.0	0.0	366839.2	42653	1371.80
2.6475	12.6	113.2	409605.1	0.0	0.0	0.0	0.0	0.0	0.0	366839.2	42766	1371.81
2.6500	12.6	113.1	409718.2	0.0	0.0	0.0	0.0	0.0	0.0	366839.2	42879	1371.82
2.6525	12.5	113.0	409831.2	0.0	0.0	0.0	0.0	0.0	0.0	366839.2	42992	1371.83
2.6550	12.5	112.8	409944.0	0.0	0.0	0.0	0.0	0.0	0.0	366839.2	43105	1371.85
2.6575	12.5	112.7	410056.6	0.0	0.0	0.0	0.0	0.0	0.0	366839.2	43217	1371.86
2.6600	12.5	112.5	410169.1	0.0	0.0	0.0	0.0	0.0	0.0	366839.2	43330	1371.87
2.6625	12.5	112.4	410281.5	0.0	0.0	0.0	0.0	0.0	0.0	366839.2	43442	1371.88
2.6650	12.5	112.2	410393.7	0.0	0.0	0.0	0.0	0.0	0.0	366839.2	43555	1371.89
2.6675	12.4	112.1	410505.8	0.0	0.0	0.0	0.0	0.0	0.0	366839.2	43667	1371.91
2.6700	12.4	111.9	410617.7	0.0	0.0	0.0	0.0	0.0	0.0	366839.2	43779	1371.92
2.6725	12.4	111.8	410729.5	0.0	0.0	0.0	0.0	0.0	0.0	366839.2	43890	1371.93
2.6750	12.4	111.6	410841.1	0.0	0.0	0.0	0.0	0.0	0.0	366839.2	44002	1371.94
2.6775	12.4	111.5	410952.5	0.0	0.0	0.0	0.0	0.0	0.0	366839.2	44113	1371.95
2.6800	12.4	111.3	411063.9	0.0	0.0	0.0	0.0	0.0	0.0	366839.2	44225	1371.97
2.6825	12.3	111.2	411175.0	0.0	0.0	0.0	0.0	0.0	0.0	366839.2	44336	1371.98
2.6850	12.3	111.0	411286.1	0.0	0.0	0.0	0.0	0.0	0.0	366839.2	44447	1371.99
2.6875	12.3	110.9	411397.0	0.0	0.0	0.0	0.0	0.0	0.0	366839.2	44558	1372.00
2.6900	12.3	110.7	411507.7	0.0	0.0	0.0	0.0	0.0	0.0	366839.2	44669	1372.01
2.6925	12.3	110.6	411618.3	0.0	0.0	0.0	0.0	0.0	0.0	366839.2	44779	1372.02
2.6950	12.3	110.4	411728.7	0.0	0.0	0.0	0.0	0.0	0.0	366839.2	44890	1372.03
2.6975	12.2	110.3	411839.0	0.0	0.0	0.0	0.0	0.0	0.0	366839.2	45000	1372.05
2.7000	12.2	110.1	411949.1	0.0	0.0	0.0	0.0	0.0	0.0	366839.2	45110	1372.06
2.7025	12.2	110.0	412059.1	0.0	0.0	0.0	0.0	0.0	0.0	366839.2	45220	1372.07
2.7050	12.2	109.8	412169.0	0.0	0.0	0.0	0.0	0.0	0.0	366839.2	45330	1372.08
2.7075	12.2	109.7	412278.7	0.0	0.0	0.0	0.0	0.0	0.0	366839.2	45440	1372.09
2.7100	12.2	109.5	412388.2	0.0	0.0	0.0	0.0	0.0	0.0	366839.2	45549	1372.10
2.7125	12.1	109.4	412497.6	0.0	0.0	0.0	0.0	0.0	0.0	366839.2	45658	1372.11
2.7150	12.1	109.3	412606.9	0.0	0.0	0.0	0.0	0.0	0.0	366839.2	45768	1372.12
2.7175	12.1	109.1	412716.0	0.0	0.0	0.0	0.0	0.0	0.0	366839.2	45877	1372.14
2.7200	12.1	109.0	412824.9	0.0	0.0	0.0	0.0	0.0	0.0	366839.2	45986	1372.15
2.7225	12.1	108.8	412933.7	0.0	0.0	0.0	0.0	0.0	0.0	366839.2	46095	1372.16
2.7250	12.1	108.7	413042.4	0.0	0.0	0.0	0.0	0.0	0.0	366839.2	46203	1372.17
2.7275	12.0	108.5	413150.9	0.0	0.0	0.0	0.0	0.0	0.0	366839.2	46312	1372.18
2.7300	12.0	108.4	413259.3	0.0	0.0	0.0	0.0	0.0	0.0	366839.2	46420	1372.19

	Pump 1	Pump 2	Pump 3	Pump 4
Pump Run Time	52.20 Min	32.70 Min	21.30 Min	0.00 Min
	4.5	5.5	7.5	0
Pump Warmups	3.00 Min	3.00 Min	3.00 Min	3.00 Min
Float Switch On/Off Elevations (ft)				
On Elev	1372.5	1373.5	1375.5	1500
Off Elev	1368	1368	1368	1400

Max WS = 1380.91

Time (hrs)	Inflow (cfs)	Incremental Inflow Volume (cf)	Cumulative Inflow Volume (cf)	Pump 1 (cf)	Pump 2 (cf)	Pump 3 (cf)	Pump 4 (cf)	Pump Out (cf)	Outflow (cfs)	Cumulative Outflow (cf)	Total Storage (cf)	WSEL (ft)
2.7325	12.0	108.2	413367.5	0.0	0.0	0.0	0.0	0.0	0.0	366839.2	46528	1372.20
2.7350	12.0	108.1	413475.5	0.0	0.0	0.0	0.0	0.0	0.0	366839.2	46636	1372.21
2.7375	12.0	107.9	413583.5	0.0	0.0	0.0	0.0	0.0	0.0	366839.2	46744	1372.22
2.7400	12.0	107.8	413691.2	0.0	0.0	0.0	0.0	0.0	0.0	366839.2	46852	1372.24
2.7425	12.0	107.6	413798.9	0.0	0.0	0.0	0.0	0.0	0.0	366839.2	46960	1372.25
2.7450	11.9	107.5	413906.3	0.0	0.0	0.0	0.0	0.0	0.0	366839.2	47067	1372.26
2.7475	11.9	107.3	414013.7	0.0	0.0	0.0	0.0	0.0	0.0	366839.2	47175	1372.27
2.7500	11.9	107.2	414120.9	0.0	0.0	0.0	0.0	0.0	0.0	366839.2	47282	1372.28
2.7525	11.9	107.0	414227.9	0.0	0.0	0.0	0.0	0.0	0.0	366839.2	47389	1372.29
2.7550	11.9	106.9	414334.8	0.0	0.0	0.0	0.0	0.0	0.0	366839.2	47496	1372.30
2.7575	11.9	106.7	414441.5	0.0	0.0	0.0	0.0	0.0	0.0	366839.2	47602	1372.31
2.7600	11.8	106.6	414548.1	0.0	0.0	0.0	0.0	0.0	0.0	366839.2	47709	1372.32
2.7625	11.8	106.4	414654.5	0.0	0.0	0.0	0.0	0.0	0.0	366839.2	47815	1372.33
2.7650	11.8	106.3	414760.8	0.0	0.0	0.0	0.0	0.0	0.0	366839.2	47922	1372.34
2.7675	11.8	106.1	414867.0	0.0	0.0	0.0	0.0	0.0	0.0	366839.2	48028	1372.36
2.7700	11.8	106.0	414973.0	0.0	0.0	0.0	0.0	0.0	0.0	366839.2	48134	1372.37
2.7725	11.8	105.8	415078.8	0.0	0.0	0.0	0.0	0.0	0.0	366839.2	48240	1372.38
2.7750	11.7	105.7	415184.5	0.0	0.0	0.0	0.0	0.0	0.0	366839.2	48345	1372.39
2.7775	11.7	105.6	415290.1	0.0	0.0	0.0	0.0	0.0	0.0	366839.2	48451	1372.40
2.7800	11.7	105.4	415395.5	0.0	0.0	0.0	0.0	0.0	0.0	366839.2	48556	1372.41
2.7825	11.7	105.3	415500.7	0.0	0.0	0.0	0.0	0.0	0.0	366839.2	48662	1372.42
2.7850	11.7	105.1	415605.8	0.0	0.0	0.0	0.0	0.0	0.0	366839.2	48767	1372.43
2.7875	11.7	105.0	415710.8	0.0	0.0	0.0	0.0	0.0	0.0	366839.2	48872	1372.44
2.7900	11.6	104.8	415815.6	0.0	0.0	0.0	0.0	0.0	0.0	366839.2	48976	1372.45
2.7925	11.6	104.7	415920.3	0.0	0.0	0.0	0.0	0.0	0.0	366839.2	49081	1372.46
2.7950	11.6	104.5	416024.8	0.0	0.0	0.0	0.0	0.0	0.0	366839.2	49186	1372.47
2.7975	11.6	104.4	416129.2	0.0	0.0	0.0	0.0	0.0	0.0	366839.2	49290	1372.48
2.8000	11.6	104.2	416233.4	0.0	0.0	0.0	0.0	0.0	0.0	366839.2	49394	1372.49
2.8025	11.6	104.1	416337.5	0.0	0.0	0.0	0.0	0.0	0.0	366839.2	49498	1372.51
2.8050	11.5	104.0	416441.5	Warmup 0009	0.0	0.0	0.0	0.0	0.0	366839.2	49602	1372.52
2.8075	11.5	103.9	416545.3	Warmup 0018	0.0	0.0	0.0	0.0	0.0	366839.2	49706	1372.53
2.8100	11.5	103.7	416649.0	Warmup 0027	0.0	0.0	0.0	0.0	0.0	366839.2	49810	1372.54
2.8125	11.5	103.6	416752.7	Warmup 0036	0.0	0.0	0.0	0.0	0.0	366839.2	49914	1372.55
2.8150	11.5	103.5	416856.2	Warmup 0045	0.0	0.0	0.0	0.0	0.0	366839.2	50017	1372.56
2.8175	11.5	103.4	416959.5	Warmup 0054	0.0	0.0	0.0	0.0	0.0	366839.2	50120	1372.57
2.8200	11.5	103.3	417062.8	Warmup 0063	0.0	0.0	0.0	0.0	0.0	366839.2	50224	1372.58
2.8225	11.5	103.1	417165.9	Warmup 0072	0.0	0.0	0.0	0.0	0.0	366839.2	50327	1372.59
2.8250	11.4	103.0	417269.0	Warmup 0081	0.0	0.0	0.0	0.0	0.0	366839.2	50430	1372.60
2.8275	11.4	102.9	417371.9	Warmup 0090	0.0	0.0	0.0	0.0	0.0	366839.2	50533	1372.61
2.8300	11.4	102.8	417474.7	Warmup 0099	0.0	0.0	0.0	0.0	0.0	366839.2	50635	1372.62
2.8325	11.4	102.7	417577.3	Warmup 0108	0.0	0.0	0.0	0.0	0.0	366839.2	50738	1372.63
2.8350	11.4	102.6	417679.9	Warmup 0117	0.0	0.0	0.0	0.0	0.0	366839.2	50841	1372.64
2.8375	11.4	102.4	417782.3	Warmup 0126	0.0	0.0	0.0	0.0	0.0	366839.2	50943	1372.65
2.8400	11.4	102.3	417884.6	Warmup 0135	0.0	0.0	0.0	0.0	0.0	366839.2	51045	1372.66
2.8425	11.3	102.2	417986.8	Warmup 0144	0.0	0.0	0.0	0.0	0.0	366839.2	51148	1372.67
2.8450	11.3	102.1	418088.9	Warmup 0153	0.0	0.0	0.0	0.0	0.0	366839.2	51250	1372.68
2.8475	11.3	102.0	418190.8	Warmup 0162	0.0	0.0	0.0	0.0	0.0	366839.2	51352	1372.69
2.8500	11.3	101.8	418292.7	Warmup 0171	0.0	0.0	0.0	0.0	0.0	366839.2	51454	1372.71
2.8525	11.3	101.7	418394.4	Warmup 0180	0.0	0.0	0.0	0.0	0.0	366839.2	51555	1372.72
2.8550	11.3	101.6	418496.0	507.6	0.0	0.0	0.0	507.6	56.4	367346.8	51149	1372.67
2.8575	11.3	101.5	418597.5	507.3	0.0	0.0	0.0	507.3	56.4	367854.1	50743	1372.63
2.8600	11.3	101.4	418698.9	507.1	0.0	0.0	0.0	507.1	56.3	368361.2	50338	1372.59
2.8625	11.2	101.2	418800.1	506.8	0.0	0.0	0.0	506.8	56.3	368868.0	49932	1372.55
2.8650	11.2	101.1	418901.2	506.6	0.0	0.0	0.0	506.6	56.3	369374.6	49527	1372.51
2.8675	11.2	101.0	419002.3	506.3	0.0	0.0	0.0	506.3	56.3	369880.9	49121	1372.47
2.8700	11.2	100.9	419103.2	506.0	0.0	0.0	0.0	506.0	56.2	370386.9	48716	1372.43

	Pump 1	Pump 2	Pump 3	Pump 4
Pump Run Time	52.20 Min	32.70 Min	21.30 Min	0.00 Min
	4.5	5.5	7.5	0
Pump Warmups	3.00 Min	3.00 Min	3.00 Min	3.00 Min
Float Switch On/Off Elevations (ft)				
On Elev	1372.5	1373.5	1375.5	1500
Off Elev	1368	1368	1368	1400

Max WS = 1380.91

Time (hrs)	Inflow (cfs)	Incremental Inflow Volume (cf)	Cumulative Inflow Volume (cf)	Pump 1 (cf)	Pump 2 (cf)	Pump 3 (cf)	Pump 4 (cf)	Pump Out (cf)	Outflow (cfs)	Cumulative Outflow (cf)	Total Storage (cf)	WSEL (ft)
2.8725	11.2	100.8	419203.9	505.8	0.0	0.0	0.0	505.8	56.2	370892.7	48311	1372.38
2.8750	11.2	100.7	419304.6	505.5	0.0	0.0	0.0	505.5	56.2	371398.2	47906	1372.34
2.8775	11.2	100.5	419405.1	505.3	0.0	0.0	0.0	505.3	56.1	371903.5	47502	1372.30
2.8800	11.2	100.4	419505.5	505.0	0.0	0.0	0.0	505.0	56.1	372408.5	47097	1372.26
2.8825	11.1	100.3	419605.8	504.7	0.0	0.0	0.0	504.7	56.1	372913.2	46693	1372.22
2.8850	11.1	100.2	419706.0	504.5	0.0	0.0	0.0	504.5	56.1	373417.7	46288	1372.18
2.8875	11.1	100.1	419806.1	504.2	0.0	0.0	0.0	504.2	56.0	373921.9	45884	1372.14
2.8900	11.1	99.9	419906.0	504.0	0.0	0.0	0.0	504.0	56.0	374425.9	45480	1372.10
2.8925	11.1	99.8	420005.9	503.7	0.0	0.0	0.0	503.7	56.0	374929.6	45076	1372.05
2.8950	11.1	99.7	420105.6	503.4	0.0	0.0	0.0	503.4	55.9	375433.0	44673	1372.01
2.8975	11.1	99.6	420205.2	503.2	0.0	0.0	0.0	503.2	55.9	375936.2	44269	1371.97
2.9000	11.0	99.5	420304.6	502.9	0.0	0.0	0.0	502.9	55.9	376439.1	43866	1371.93
2.9025	11.0	99.4	420404.0	502.6	0.0	0.0	0.0	502.6	55.8	376941.8	43462	1371.88
2.9050	11.0	99.2	420503.2	502.4	0.0	0.0	0.0	502.4	55.8	377444.1	43059	1371.84
2.9075	11.0	99.1	420602.3	502.1	0.0	0.0	0.0	502.1	55.8	377946.2	42656	1371.80
2.9100	11.0	99.0	420701.3	501.8	0.0	0.0	0.0	501.8	55.8	378448.0	42253	1371.75
2.9125	11.0	98.9	420800.2	501.6	0.0	0.0	0.0	501.6	55.7	378949.6	41851	1371.71
2.9150	11.0	98.8	420899.0	501.3	0.0	0.0	0.0	501.3	55.7	379450.9	41448	1371.67
2.9175	11.0	98.6	420997.6	501.0	0.0	0.0	0.0	501.0	55.7	379951.9	41046	1371.63
2.9200	10.9	98.5	421096.2	500.7	0.0	0.0	0.0	500.7	55.6	380452.6	40644	1371.58
2.9225	10.9	98.4	421194.6	500.5	0.0	0.0	0.0	500.5	55.6	380953.1	40241	1371.54
2.9250	10.9	98.3	421292.9	500.2	0.0	0.0	0.0	500.2	55.6	381453.3	39840	1371.50
2.9275	10.9	98.2	421391.0	499.9	0.0	0.0	0.0	499.9	55.5	381953.3	39438	1371.45
2.9300	10.9	98.1	421489.1	499.7	0.0	0.0	0.0	499.7	55.5	382452.9	39036	1371.41
2.9325	10.9	97.9	421587.0	499.4	0.0	0.0	0.0	499.4	55.5	382952.3	38635	1371.37
2.9350	10.9	97.8	421684.8	499.1	0.0	0.0	0.0	499.1	55.5	383451.4	38233	1371.33
2.9375	10.8	97.7	421782.5	498.9	0.0	0.0	0.0	498.9	55.4	383950.3	37832	1371.28
2.9400	10.8	97.6	421880.1	498.6	0.0	0.0	0.0	498.6	55.4	384448.9	37431	1371.24
2.9425	10.8	97.5	421977.6	498.3	0.0	0.0	0.0	498.3	55.4	384947.2	37030	1371.20
2.9450	10.8	97.3	422074.9	498.0	0.0	0.0	0.0	498.0	55.3	385445.2	36630	1371.15
2.9475	10.8	97.2	422172.1	497.8	0.0	0.0	0.0	497.8	55.3	385943.0	36229	1371.11
2.9500	10.8	97.1	422269.2	497.5	0.0	0.0	0.0	497.5	55.3	386440.5	35829	1371.07
2.9525	10.8	97.0	422366.2	497.2	0.0	0.0	0.0	497.2	55.2	386937.7	35428	1371.03
2.9550	10.8	96.9	422463.1	497.0	0.0	0.0	0.0	497.0	55.2	387434.7	35028	1370.98
2.9575	10.7	96.8	422559.9	496.7	0.0	0.0	0.0	496.7	55.2	387931.4	34628	1370.93
2.9600	10.7	96.6	422656.5	496.4	0.0	0.0	0.0	496.4	55.2	388427.8	34229	1370.89
2.9625	10.7	96.5	422753.0	496.1	0.0	0.0	0.0	496.1	55.1	388923.9	33829	1370.84
2.9650	10.7	96.4	422849.4	495.8	0.0	0.0	0.0	495.8	55.1	389419.6	33430	1370.79
2.9675	10.7	96.3	422945.7	495.5	0.0	0.0	0.0	495.5	55.1	389915.1	33031	1370.74
2.9700	10.7	96.2	423041.8	495.2	0.0	0.0	0.0	495.2	55.0	390410.3	32632	1370.69
2.9725	10.7	96.0	423137.9	494.9	0.0	0.0	0.0	494.9	55.0	390905.2	32233	1370.65
2.9750	10.7	95.9	423233.8	494.6	0.0	0.0	0.0	494.6	55.0	391399.7	31834	1370.60
2.9775	10.6	95.8	423329.6	494.3	0.0	0.0	0.0	494.3	54.9	391894.0	31436	1370.55
2.9800	10.6	95.7	423425.3	494.0	0.0	0.0	0.0	494.0	54.9	392388.0	31037	1370.50
2.9825	10.6	95.6	423520.9	493.7	0.0	0.0	0.0	493.7	54.9	392881.7	30639	1370.46
2.9850	10.6	95.4	423616.3	493.4	0.0	0.0	0.0	493.4	54.8	393375.0	30241	1370.41
2.9875	10.6	95.3	423711.6	493.1	0.0	0.0	0.0	493.1	54.8	393868.1	29844	1370.36
2.9900	10.6	95.2	423806.9	492.8	0.0	0.0	0.0	492.8	54.8	394360.9	29446	1370.31
2.9925	10.6	95.1	423901.9	492.5	0.0	0.0	0.0	492.5	54.7	394853.3	29049	1370.26
2.9950	10.5	95.0	423996.9	492.2	0.0	0.0	0.0	492.2	54.7	395345.5	28651	1370.22
2.9975	10.5	94.9	424091.8	491.9	0.0	0.0	0.0	491.9	54.7	395837.4	28254	1370.17
3.0000	10.5	94.7	424186.5	491.6	0.0	0.0	0.0	491.6	54.6	396328.9	27858	1370.12
3.0025	10.5	94.6	424281.2	491.3	0.0	0.0	0.0	491.3	54.6	396820.2	27461	1370.07
3.0050	10.5	94.5	424375.7	491.0	0.0	0.0	0.0	491.0	54.6	397311.2	27065	1370.03
3.0075	10.5	94.4	424470.1	490.7	0.0	0.0	0.0	490.7	54.5	397801.8	26668	1369.97
3.0100	10.5	94.3	424564.5	490.4	0.0	0.0	0.0	490.4	54.5	398292.2	26272	1369.91

	Pump 1	Pump 2	Pump 3	Pump 4
Pump Run Time	52.20 Min	32.70 Min	21.30 Min	0.00 Min
	4.5	5.5	7.5	0
Pump Warmups	3.00 Min	3.00 Min	3.00 Min	3.00 Min
Float Switch On/Off Elevations (ft)				
On Elev	1372.5	1373.5	1375.5	1500
Off Elev	1368	1368	1368	1400

Max WS = 1380.91

Time (hrs)	Inflow (cfs)	Incremental Inflow Volume (cf)	Cumulative Inflow Volume (cf)	Pump 1 (cf)	Pump 2 (cf)	Pump 3 (cf)	Pump 4 (cf)	Pump Out (cf)	Outflow (cfs)	Cumulative Outflow (cf)	Total Storage (cf)	WSEL (ft)
3.0125	10.5	94.2	424658.7	490.2	0.0	0.0	0.0	490.2	54.5	398782.4	25876	1369.84
3.0150	10.5	94.1	424752.8	489.9	0.0	0.0	0.0	489.9	54.4	399272.3	25480	1369.78
3.0175	10.4	94.0	424846.9	489.7	0.0	0.0	0.0	489.7	54.4	399762.0	25085	1369.71
3.0200	10.4	93.9	424940.8	489.5	0.0	0.0	0.0	489.5	54.4	400251.5	24689	1369.65
3.0225	10.4	93.8	425034.6	489.2	0.0	0.0	0.0	489.2	54.4	400740.7	24294	1369.58
3.0250	10.4	93.7	425128.4	489.0	0.0	0.0	0.0	489.0	54.3	401229.7	23899	1369.52
3.0275	10.4	93.6	425222.0	488.8	0.0	0.0	0.0	488.8	54.3	401718.5	23504	1369.45
3.0300	10.4	93.5	425315.6	488.5	0.0	0.0	0.0	488.5	54.3	402207.0	23109	1369.39
3.0325	10.4	93.4	425409.0	488.3	0.0	0.0	0.0	488.3	54.3	402695.3	22714	1369.32
3.0350	10.4	93.3	425502.4	488.1	0.0	0.0	0.0	488.1	54.2	403183.4	22319	1369.26
3.0375	10.4	93.2	425595.6	487.8	0.0	0.0	0.0	487.8	54.2	403671.2	21924	1369.20
3.0400	10.3	93.2	425688.8	487.6	0.0	0.0	0.0	487.6	54.2	404158.8	21530	1369.13
3.0425	10.3	93.1	425781.8	487.4	0.0	0.0	0.0	487.4	54.2	404646.2	21136	1369.07
3.0450	10.3	93.0	425874.8	487.1	0.0	0.0	0.0	487.1	54.1	405133.4	20741	1369.00
3.0475	10.3	92.9	425967.6	486.9	0.0	0.0	0.0	486.9	54.1	405620.3	20347	1368.89
3.0500	10.3	92.8	426060.4	486.5	0.0	0.0	0.0	486.5	54.1	406106.8	19954	1368.78
3.0525	10.3	92.7	426153.1	486.1	0.0	0.0	0.0	486.1	54.0	406592.9	19560	1368.67
3.0550	10.3	92.6	426245.6	485.7	0.0	0.0	0.0	485.7	54.0	407078.6	19167	1368.56
3.0575	10.3	92.5	426338.1	485.3	0.0	0.0	0.0	485.3	53.9	407564.0	18774	1368.46
3.0600	10.3	92.4	426430.4	484.9	0.0	0.0	0.0	484.9	53.9	408048.9	18382	1368.35
3.0625	10.2	92.3	426522.7	484.5	0.0	0.0	0.0	484.5	53.8	408533.4	17989	1368.24
3.0650	10.2	92.2	426614.9	484.2	0.0	0.0	0.0	484.2	53.8	409017.6	17597	1368.13
3.0675	10.2	92.1	426706.9	483.8	0.0	0.0	0.0	483.8	53.8	409501.4	17206	1368.02
3.0700	10.2	92.0	426798.9	483.4	0.0	0.0	0.0	483.4	53.7	409984.7	16814	1367.88
3.0725	10.2	91.9	426890.8	0.0	0.0	0.0	0.0	0.0	0.0	409984.7	16906	1367.91
3.0750	10.2	91.8	426982.5	0.0	0.0	0.0	0.0	0.0	0.0	409984.7	16998	1367.95
3.0775	10.2	91.7	427074.2	0.0	0.0	0.0	0.0	0.0	0.0	409984.7	17089	1367.98
3.0800	10.2	91.6	427165.8	0.0	0.0	0.0	0.0	0.0	0.0	409984.7	17181	1368.01
3.0825	10.2	91.5	427257.3	0.0	0.0	0.0	0.0	0.0	0.0	409984.7	17273	1368.04
3.0850	10.1	91.4	427348.6	0.0	0.0	0.0	0.0	0.0	0.0	409984.7	17364	1368.06
3.0875	10.1	91.3	427439.9	0.0	0.0	0.0	0.0	0.0	0.0	409984.7	17455	1368.09
3.0900	10.1	91.2	427531.1	0.0	0.0	0.0	0.0	0.0	0.0	409984.7	17546	1368.11
3.0925	10.1	91.1	427622.2	0.0	0.0	0.0	0.0	0.0	0.0	409984.7	17637	1368.14
3.0950	10.1	91.0	427713.2	0.0	0.0	0.0	0.0	0.0	0.0	409984.7	17728	1368.16
3.0975	10.1	90.9	427804.0	0.0	0.0	0.0	0.0	0.0	0.0	409984.7	17819	1368.19
3.1000	10.1	90.8	427894.8	0.0	0.0	0.0	0.0	0.0	0.0	409984.7	17910	1368.21
3.1025	10.1	90.7	427985.5	0.0	0.0	0.0	0.0	0.0	0.0	409984.7	18001	1368.24
3.1050	10.1	90.6	428076.1	0.0	0.0	0.0	0.0	0.0	0.0	409984.7	18091	1368.27
3.1075	10.0	90.5	428166.6	0.0	0.0	0.0	0.0	0.0	0.0	409984.7	18182	1368.29
3.1100	10.0	90.4	428257.0	0.0	0.0	0.0	0.0	0.0	0.0	409984.7	18272	1368.32
3.1125	10.0	90.3	428347.3	0.0	0.0	0.0	0.0	0.0	0.0	409984.7	18363	1368.34
3.1150	10.0	90.2	428437.5	0.0	0.0	0.0	0.0	0.0	0.0	409984.7	18453	1368.37
3.1175	10.0	90.1	428527.5	0.0	0.0	0.0	0.0	0.0	0.0	409984.7	18543	1368.39
3.1200	10.0	90.0	428617.5	0.0	0.0	0.0	0.0	0.0	0.0	409984.7	18633	1368.42
3.1225	10.0	89.9	428707.4	0.0	0.0	0.0	0.0	0.0	0.0	409984.7	18723	1368.44
3.1250	10.0	89.8	428797.2	0.0	0.0	0.0	0.0	0.0	0.0	409984.7	18813	1368.47
3.1275	10.0	89.7	428886.9	0.0	0.0	0.0	0.0	0.0	0.0	409984.7	18902	1368.49
3.1300	10.0	89.6	428976.5	0.0	0.0	0.0	0.0	0.0	0.0	409984.7	18992	1368.52
3.1325	9.9	89.5	429066.0	0.0	0.0	0.0	0.0	0.0	0.0	409984.7	19081	1368.54
3.1350	9.9	89.4	429155.4	0.0	0.0	0.0	0.0	0.0	0.0	409984.7	19171	1368.57
3.1375	9.9	89.3	429244.7	0.0	0.0	0.0	0.0	0.0	0.0	409984.7	19260	1368.59
3.1400	9.9	89.2	429334.0	0.0	0.0	0.0	0.0	0.0	0.0	409984.7	19349	1368.62
3.1425	9.9	89.1	429423.1	0.0	0.0	0.0	0.0	0.0	0.0	409984.7	19438	1368.64
3.1450	9.9	89.0	429512.1	0.0	0.0	0.0	0.0	0.0	0.0	409984.7	19527	1368.66
3.1475	9.9	88.9	429601.0	0.0	0.0	0.0	0.0	0.0	0.0	409984.7	19616	1368.69
3.1500	9.9	88.8	429689.8	0.0	0.0	0.0	0.0	0.0	0.0	409984.7	19705	1368.71

	Pump 1	Pump 2	Pump 3	Pump 4
Pump Run Time	52.20 Min	32.70 Min	21.30 Min	0.00 Min
	4.5	5.5	7.5	0
Pump Warmups	3.00 Min	3.00 Min	3.00 Min	3.00 Min
Float Switch On/Off Elevations (ft)				
On Elev	1372.5	1373.5	1375.5	1500
Off Elev	1368	1368	1368	1400

Max WS = 1380.91

Time (hrs)	Inflow (cfs)	Incremental Inflow Volume (cf)	Cumulative Inflow Volume (cf)	Pump 1 (cf)	Pump 2 (cf)	Pump 3 (cf)	Pump 4 (cf)	Pump Out (cf)	Outflow (cfs)	Cumulative Outflow (cf)	Total Storage (cf)	WSEL (ft)
3.1525	9.9	88.7	429778.5	0.0	0.0	0.0	0.0	0.0	0.0	409984.7	19794	1368.74
3.1550	9.8	88.6	429867.1	0.0	0.0	0.0	0.0	0.0	0.0	409984.7	19882	1368.76
3.1575	9.8	88.5	429955.6	0.0	0.0	0.0	0.0	0.0	0.0	409984.7	19971	1368.79
3.1600	9.8	88.4	430044.1	0.0	0.0	0.0	0.0	0.0	0.0	409984.7	20059	1368.81
3.1625	9.8	88.3	430132.4	0.0	0.0	0.0	0.0	0.0	0.0	409984.7	20148	1368.84
3.1650	9.8	88.2	430220.6	0.0	0.0	0.0	0.0	0.0	0.0	409984.7	20236	1368.86
3.1675	9.8	88.1	430308.7	0.0	0.0	0.0	0.0	0.0	0.0	409984.7	20324	1368.89
3.1700	9.8	88.0	430396.7	0.0	0.0	0.0	0.0	0.0	0.0	409984.7	20412	1368.91
3.1725	9.8	87.9	430484.7	0.0	0.0	0.0	0.0	0.0	0.0	409984.7	20500	1368.94
3.1750	9.8	87.8	430572.5	0.0	0.0	0.0	0.0	0.0	0.0	409984.7	20588	1368.96
3.1775	9.7	87.7	430660.2	0.0	0.0	0.0	0.0	0.0	0.0	409984.7	20675	1368.98
3.1800	9.7	87.6	430747.8	0.0	0.0	0.0	0.0	0.0	0.0	409984.7	20763	1369.01
3.1825	9.7	87.5	430835.4	0.0	0.0	0.0	0.0	0.0	0.0	409984.7	20851	1369.02
3.1850	9.7	87.4	430922.8	0.0	0.0	0.0	0.0	0.0	0.0	409984.7	20938	1369.03
3.1875	9.7	87.3	431010.1	0.0	0.0	0.0	0.0	0.0	0.0	409984.7	21025	1369.05
3.1900	9.7	87.2	431097.4	0.0	0.0	0.0	0.0	0.0	0.0	409984.7	21113	1369.06
3.1925	9.7	87.1	431184.5	0.0	0.0	0.0	0.0	0.0	0.0	409984.7	21200	1369.08
3.1950	9.7	87.0	431271.5	0.0	0.0	0.0	0.0	0.0	0.0	409984.7	21287	1369.09
3.1975	9.7	86.9	431358.5	0.0	0.0	0.0	0.0	0.0	0.0	409984.7	21374	1369.11
3.2000	9.6	86.8	431445.3	0.0	0.0	0.0	0.0	0.0	0.0	409984.7	21461	1369.12
3.2025	9.6	86.7	431532.1	0.0	0.0	0.0	0.0	0.0	0.0	409984.7	21547	1369.13
3.2050	9.6	86.6	431618.7	0.0	0.0	0.0	0.0	0.0	0.0	409984.7	21634	1369.15
3.2075	9.6	86.5	431705.2	0.0	0.0	0.0	0.0	0.0	0.0	409984.7	21721	1369.16
3.2100	9.6	86.4	431791.7	0.0	0.0	0.0	0.0	0.0	0.0	409984.7	21807	1369.18
3.2125	9.6	86.3	431878.0	0.0	0.0	0.0	0.0	0.0	0.0	409984.7	21893	1369.19
3.2150	9.6	86.2	431964.3	0.0	0.0	0.0	0.0	0.0	0.0	409984.7	21980	1369.20
3.2175	9.6	86.1	432050.4	0.0	0.0	0.0	0.0	0.0	0.0	409984.7	22066	1369.22
3.2200	9.6	86.1	432136.5	0.0	0.0	0.0	0.0	0.0	0.0	409984.7	22152	1369.23
3.2225	9.5	86.0	432222.4	0.0	0.0	0.0	0.0	0.0	0.0	409984.7	22238	1369.25
3.2250	9.5	85.9	432308.3	0.0	0.0	0.0	0.0	0.0	0.0	409984.7	22324	1369.26
3.2275	9.5	85.8	432394.0	0.0	0.0	0.0	0.0	0.0	0.0	409984.7	22409	1369.27
3.2300	9.5	85.7	432479.7	0.0	0.0	0.0	0.0	0.0	0.0	409984.7	22495	1369.29
3.2325	9.5	85.6	432565.3	0.0	0.0	0.0	0.0	0.0	0.0	409984.7	22581	1369.30
3.2350	9.5	85.5	432650.7	0.0	0.0	0.0	0.0	0.0	0.0	409984.7	22666	1369.32
3.2375	9.5	85.4	432736.1	0.0	0.0	0.0	0.0	0.0	0.0	409984.7	22751	1369.33
3.2400	9.5	85.3	432821.3	0.0	0.0	0.0	0.0	0.0	0.0	409984.7	22837	1369.34
3.2425	9.5	85.2	432906.5	0.0	0.0	0.0	0.0	0.0	0.0	409984.7	22922	1369.36
3.2450	9.4	85.1	432991.6	0.0	0.0	0.0	0.0	0.0	0.0	409984.7	23007	1369.37
3.2475	9.4	85.0	433076.5	0.0	0.0	0.0	0.0	0.0	0.0	409984.7	23092	1369.39
3.2500	9.4	84.9	433161.4	0.0	0.0	0.0	0.0	0.0	0.0	409984.7	23177	1369.40
3.2525	9.4	84.8	433246.2	0.0	0.0	0.0	0.0	0.0	0.0	409984.7	23261	1369.41
3.2550	9.4	84.7	433330.8	0.0	0.0	0.0	0.0	0.0	0.0	409984.7	23346	1369.43
3.2575	9.4	84.6	433415.4	0.0	0.0	0.0	0.0	0.0	0.0	409984.7	23431	1369.44
3.2600	9.4	84.5	433499.9	0.0	0.0	0.0	0.0	0.0	0.0	409984.7	23515	1369.46
3.2625	9.4	84.4	433584.2	0.0	0.0	0.0	0.0	0.0	0.0	409984.7	23600	1369.47
3.2650	9.4	84.3	433668.5	0.0	0.0	0.0	0.0	0.0	0.0	409984.7	23684	1369.48
3.2675	9.3	84.2	433752.7	0.0	0.0	0.0	0.0	0.0	0.0	409984.7	23768	1369.50
3.2700	9.3	84.1	433836.8	0.0	0.0	0.0	0.0	0.0	0.0	409984.7	23852	1369.51
3.2725	9.3	84.0	433920.8	0.0	0.0	0.0	0.0	0.0	0.0	409984.7	23936	1369.52
3.2750	9.3	83.9	434004.6	0.0	0.0	0.0	0.0	0.0	0.0	409984.7	24020	1369.54
3.2775	9.3	83.8	434088.4	0.0	0.0	0.0	0.0	0.0	0.0	409984.7	24104	1369.55
3.2800	9.3	83.7	434172.1	0.0	0.0	0.0	0.0	0.0	0.0	409984.7	24187	1369.57
3.2825	9.3	83.6	434255.7	0.0	0.0	0.0	0.0	0.0	0.0	409984.7	24271	1369.58
3.2850	9.3	83.5	434339.2	0.0	0.0	0.0	0.0	0.0	0.0	409984.7	24354	1369.59
3.2875	9.3	83.4	434422.6	0.0	0.0	0.0	0.0	0.0	0.0	409984.7	24438	1369.61
3.2900	9.2	83.3	434505.9	0.0	0.0	0.0	0.0	0.0	0.0	409984.7	24521	1369.62

	Pump 1	Pump 2	Pump 3	Pump 4
Pump Run Time	52.20 Min	32.70 Min	21.30 Min	0.00 Min
	4.5	5.5	7.5	0
Pump Warmups	3.00 Min	3.00 Min	3.00 Min	3.00 Min
Float Switch On/Off Elevations (ft)				
On Elev	1372.5	1373.5	1375.5	1500
Off Elev	1368	1368	1368	1400

Max WS = 1380.91

Time (hrs)	Inflow (cfs)	Incremental Inflow Volume (cf)	Cumulative Inflow Volume (cf)	Pump 1 (cf)	Pump 2 (cf)	Pump 3 (cf)	Pump 4 (cf)	Pump Out (cf)	Outflow (cfs)	Cumulative Outflow (cf)	Total Storage (cf)	WSEL (ft)
3.2925	9.2	83.2	434589.0	0.0	0.0	0.0	0.0	0.0	0.0	409984.7	24604	1369.63
3.2950	9.2	83.1	434672.1	0.0	0.0	0.0	0.0	0.0	0.0	409984.7	24687	1369.65
3.2975	9.2	83.0	434755.1	0.0	0.0	0.0	0.0	0.0	0.0	409984.7	24770	1369.66
3.3000	9.2	82.9	434838.0	0.0	0.0	0.0	0.0	0.0	0.0	409984.7	24853	1369.67
3.3025	9.2	82.8	434920.8	0.0	0.0	0.0	0.0	0.0	0.0	409984.7	24936	1369.69
3.3050	9.2	82.8	435003.6	0.0	0.0	0.0	0.0	0.0	0.0	409984.7	25019	1369.70
3.3075	9.2	82.7	435086.4	0.0	0.0	0.0	0.0	0.0	0.0	409984.7	25102	1369.72
3.3100	9.2	82.7	435169.1	0.0	0.0	0.0	0.0	0.0	0.0	409984.7	25184	1369.73
3.3125	9.2	82.7	435251.8	0.0	0.0	0.0	0.0	0.0	0.0	409984.7	25267	1369.74
3.3150	9.2	82.6	435334.4	0.0	0.0	0.0	0.0	0.0	0.0	409984.7	25350	1369.76
3.3175	9.2	82.6	435417.0	0.0	0.0	0.0	0.0	0.0	0.0	409984.7	25432	1369.77
3.3200	9.2	82.5	435499.5	0.0	0.0	0.0	0.0	0.0	0.0	409984.7	25515	1369.78
3.3225	9.2	82.5	435582.0	0.0	0.0	0.0	0.0	0.0	0.0	409984.7	25597	1369.80
3.3250	9.2	82.5	435664.5	0.0	0.0	0.0	0.0	0.0	0.0	409984.7	25680	1369.81
3.3275	9.2	82.4	435746.9	0.0	0.0	0.0	0.0	0.0	0.0	409984.7	25762	1369.82
3.3300	9.2	82.4	435829.3	0.0	0.0	0.0	0.0	0.0	0.0	409984.7	25845	1369.84
3.3325	9.1	82.4	435911.7	0.0	0.0	0.0	0.0	0.0	0.0	409984.7	25927	1369.85
3.3350	9.1	82.3	435994.0	0.0	0.0	0.0	0.0	0.0	0.0	409984.7	26009	1369.86
3.3375	9.1	82.3	436076.3	0.0	0.0	0.0	0.0	0.0	0.0	409984.7	26092	1369.88
3.3400	9.1	82.2	436158.5	0.0	0.0	0.0	0.0	0.0	0.0	409984.7	26174	1369.89
3.3425	9.1	82.2	436240.7	0.0	0.0	0.0	0.0	0.0	0.0	409984.7	26256	1369.90
3.3450	9.1	82.2	436322.8	0.0	0.0	0.0	0.0	0.0	0.0	409984.7	26338	1369.92
3.3475	9.1	82.1	436405.0	0.0	0.0	0.0	0.0	0.0	0.0	409984.7	26420	1369.93
3.3500	9.1	82.1	436487.0	0.0	0.0	0.0	0.0	0.0	0.0	409984.7	26502	1369.94
3.3525	9.1	82.0	436569.1	0.0	0.0	0.0	0.0	0.0	0.0	409984.7	26584	1369.96
3.3550	9.1	82.0	436651.1	0.0	0.0	0.0	0.0	0.0	0.0	409984.7	26666	1369.97
3.3575	9.1	82.0	436733.0	0.0	0.0	0.0	0.0	0.0	0.0	409984.7	26748	1369.98
3.3600	9.1	81.9	436814.9	0.0	0.0	0.0	0.0	0.0	0.0	409984.7	26830	1370.00
3.3625	9.1	81.9	436896.8	0.0	0.0	0.0	0.0	0.0	0.0	409984.7	26912	1370.01
3.3650	9.1	81.8	436978.7	0.0	0.0	0.0	0.0	0.0	0.0	409984.7	26994	1370.02
3.3675	9.1	81.8	437060.5	0.0	0.0	0.0	0.0	0.0	0.0	409984.7	27076	1370.03
3.3700	9.1	81.8	437142.2	0.0	0.0	0.0	0.0	0.0	0.0	409984.7	27157	1370.04
3.3725	9.1	81.7	437223.9	0.0	0.0	0.0	0.0	0.0	0.0	409984.7	27239	1370.05
3.3750	9.1	81.7	437305.6	0.0	0.0	0.0	0.0	0.0	0.0	409984.7	27321	1370.06
3.3775	9.1	81.6	437387.3	0.0	0.0	0.0	0.0	0.0	0.0	409984.7	27403	1370.07
3.3800	9.1	81.6	437468.9	0.0	0.0	0.0	0.0	0.0	0.0	409984.7	27484	1370.08
3.3825	9.1	81.6	437550.4	0.0	0.0	0.0	0.0	0.0	0.0	409984.7	27566	1370.09
3.3850	9.1	81.5	437631.9	0.0	0.0	0.0	0.0	0.0	0.0	409984.7	27647	1370.10
3.3875	9.1	81.5	437713.4	0.0	0.0	0.0	0.0	0.0	0.0	409984.7	27729	1370.11
3.3900	9.0	81.4	437794.9	0.0	0.0	0.0	0.0	0.0	0.0	409984.7	27810	1370.12
3.3925	9.0	81.4	437876.3	0.0	0.0	0.0	0.0	0.0	0.0	409984.7	27892	1370.13
3.3950	9.0	81.4	437957.6	0.0	0.0	0.0	0.0	0.0	0.0	409984.7	27973	1370.14
3.3975	9.0	81.3	438039.0	0.0	0.0	0.0	0.0	0.0	0.0	409984.7	28054	1370.15
3.4000	9.0	81.3	438120.3	0.0	0.0	0.0	0.0	0.0	0.0	409984.7	28136	1370.16
3.4025	9.0	81.2	438201.5	0.0	0.0	0.0	0.0	0.0	0.0	409984.7	28217	1370.17
3.4050	9.0	81.2	438282.7	0.0	0.0	0.0	0.0	0.0	0.0	409984.7	28298	1370.17
3.4075	9.0	81.2	438363.9	0.0	0.0	0.0	0.0	0.0	0.0	409984.7	28379	1370.18
3.4100	9.0	81.1	438445.0	0.0	0.0	0.0	0.0	0.0	0.0	409984.7	28460	1370.19
3.4125	9.0	81.1	438526.1	0.0	0.0	0.0	0.0	0.0	0.0	409984.7	28541	1370.20
3.4150	9.0	81.1	438607.2	0.0	0.0	0.0	0.0	0.0	0.0	409984.7	28622	1370.21
3.4175	9.0	81.0	438688.2	0.0	0.0	0.0	0.0	0.0	0.0	409984.7	28703	1370.22
3.4200	9.0	81.0	438769.1	0.0	0.0	0.0	0.0	0.0	0.0	409984.7	28784	1370.23
3.4225	9.0	80.9	438850.1	0.0	0.0	0.0	0.0	0.0	0.0	409984.7	28865	1370.24
3.4250	9.0	80.9	438931.0	0.0	0.0	0.0	0.0	0.0	0.0	409984.7	28946	1370.25
3.4275	9.0	80.9	439011.8	0.0	0.0	0.0	0.0	0.0	0.0	409984.7	29027	1370.26
3.4300	9.0	80.8	439092.6	0.0	0.0	0.0	0.0	0.0	0.0	409984.7	29108	1370.27

	Pump 1	Pump 2	Pump 3	Pump 4
Pump Run Time	52.20 Min	32.70 Min	21.30 Min	0.00 Min
	4.5	5.5	7.5	0
Pump Warmups	3.00 Min	3.00 Min	3.00 Min	3.00 Min
Float Switch On/Off Elevations (ft)				
On Elev	1372.5	1373.5	1375.5	1500
Off Elev	1368	1368	1368	1400

Max WS = 1380.91

Time (hrs)	Inflow (cfs)	Incremental Inflow Volume (cf)	Cumulative Inflow Volume (cf)	Pump 1 (cf)	Pump 2 (cf)	Pump 3 (cf)	Pump 4 (cf)	Pump Out (cf)	Outflow (cfs)	Cumulative Outflow (cf)	Total Storage (cf)	WSEL (ft)
3.4325	9.0	80.8	439173.4	0.0	0.0	0.0	0.0	0.0	0.0	409984.7	29189	1370.28
3.4350	9.0	80.7	439254.1	0.0	0.0	0.0	0.0	0.0	0.0	409984.7	29269	1370.29
3.4375	9.0	80.7	439334.8	0.0	0.0	0.0	0.0	0.0	0.0	409984.7	29350	1370.30
3.4400	9.0	80.7	439415.5	0.0	0.0	0.0	0.0	0.0	0.0	409984.7	29431	1370.31
3.4425	9.0	80.6	439496.1	0.0	0.0	0.0	0.0	0.0	0.0	409984.7	29511	1370.32
3.4450	9.0	80.6	439576.7	0.0	0.0	0.0	0.0	0.0	0.0	409984.7	29592	1370.33
3.4475	8.9	80.5	439657.2	0.0	0.0	0.0	0.0	0.0	0.0	409984.7	29672	1370.34
3.4500	8.9	80.5	439737.7	0.0	0.0	0.0	0.0	0.0	0.0	409984.7	29753	1370.35
3.4525	8.9	80.5	439818.2	0.0	0.0	0.0	0.0	0.0	0.0	409984.7	29833	1370.36
3.4550	8.9	80.4	439898.6	0.0	0.0	0.0	0.0	0.0	0.0	409984.7	29914	1370.37
3.4575	8.9	80.4	439979.0	0.0	0.0	0.0	0.0	0.0	0.0	409984.7	29994	1370.38
3.4600	8.9	80.3	440059.3	0.0	0.0	0.0	0.0	0.0	0.0	409984.7	30075	1370.39
3.4625	8.9	80.3	440139.6	0.0	0.0	0.0	0.0	0.0	0.0	409984.7	30155	1370.40
3.4650	8.9	80.3	440219.9	0.0	0.0	0.0	0.0	0.0	0.0	409984.7	30235	1370.41
3.4675	8.9	80.2	440300.1	0.0	0.0	0.0	0.0	0.0	0.0	409984.7	30315	1370.42
3.4700	8.9	80.2	440380.3	0.0	0.0	0.0	0.0	0.0	0.0	409984.7	30396	1370.43
3.4725	8.9	80.1	440460.4	0.0	0.0	0.0	0.0	0.0	0.0	409984.7	30476	1370.44
3.4750	8.9	80.1	440540.5	0.0	0.0	0.0	0.0	0.0	0.0	409984.7	30556	1370.45
3.4775	8.9	80.1	440620.6	0.0	0.0	0.0	0.0	0.0	0.0	409984.7	30636	1370.46
3.4800	8.9	80.0	440700.6	0.0	0.0	0.0	0.0	0.0	0.0	409984.7	30716	1370.46
3.4825	8.9	80.0	440780.6	0.0	0.0	0.0	0.0	0.0	0.0	409984.7	30796	1370.47
3.4850	8.9	79.9	440860.5	0.0	0.0	0.0	0.0	0.0	0.0	409984.7	30876	1370.48
3.4875	8.9	79.9	440940.4	0.0	0.0	0.0	0.0	0.0	0.0	409984.7	30956	1370.49
3.4900	8.9	79.9	441020.3	0.0	0.0	0.0	0.0	0.0	0.0	409984.7	31036	1370.50
3.4925	8.9	79.8	441100.1	0.0	0.0	0.0	0.0	0.0	0.0	409984.7	31115	1370.51
3.4950	8.9	79.8	441179.9	0.0	0.0	0.0	0.0	0.0	0.0	409984.7	31195	1370.52
3.4975	8.9	79.7	441259.7	0.0	0.0	0.0	0.0	0.0	0.0	409984.7	31275	1370.53
3.5000	8.9	79.7	441339.4	0.0	0.0	0.0	0.0	0.0	0.0	409984.7	31355	1370.54
3.5025	8.8	79.7	441419.0	0.0	0.0	0.0	0.0	0.0	0.0	409984.7	31434	1370.55
3.5050	8.8	79.6	441498.7	0.0	0.0	0.0	0.0	0.0	0.0	409984.7	31514	1370.56
3.5075	8.8	79.6	441578.3	0.0	0.0	0.0	0.0	0.0	0.0	409984.7	31594	1370.57
3.5100	8.8	79.6	441657.8	0.0	0.0	0.0	0.0	0.0	0.0	409984.7	31673	1370.58
3.5125	8.8	79.5	441737.3	0.0	0.0	0.0	0.0	0.0	0.0	409984.7	31753	1370.59
3.5150	8.8	79.5	441816.8	0.0	0.0	0.0	0.0	0.0	0.0	409984.7	31832	1370.60
3.5175	8.8	79.4	441896.2	0.0	0.0	0.0	0.0	0.0	0.0	409984.7	31912	1370.61
3.5200	8.8	79.4	441975.6	0.0	0.0	0.0	0.0	0.0	0.0	409984.7	31991	1370.62
3.5225	8.8	79.4	442055.0	0.0	0.0	0.0	0.0	0.0	0.0	409984.7	32070	1370.63
3.5250	8.8	79.3	442134.3	0.0	0.0	0.0	0.0	0.0	0.0	409984.7	32150	1370.64
3.5275	8.8	79.3	442213.6	0.0	0.0	0.0	0.0	0.0	0.0	409984.7	32229	1370.65
3.5300	8.8	79.2	442292.8	0.0	0.0	0.0	0.0	0.0	0.0	409984.7	32308	1370.66
3.5325	8.8	79.2	442372.0	0.0	0.0	0.0	0.0	0.0	0.0	409984.7	32387	1370.67
3.5350	8.8	79.2	442451.2	0.0	0.0	0.0	0.0	0.0	0.0	409984.7	32466	1370.67
3.5375	8.8	79.1	442530.3	0.0	0.0	0.0	0.0	0.0	0.0	409984.7	32546	1370.68
3.5400	8.8	79.1	442609.4	0.0	0.0	0.0	0.0	0.0	0.0	409984.7	32625	1370.69
3.5425	8.8	79.0	442688.4	0.0	0.0	0.0	0.0	0.0	0.0	409984.7	32704	1370.70
3.5450	8.8	79.0	442767.4	0.0	0.0	0.0	0.0	0.0	0.0	409984.7	32783	1370.71
3.5475	8.8	79.0	442846.3	0.0	0.0	0.0	0.0	0.0	0.0	409984.7	32862	1370.72
3.5500	8.8	78.9	442925.3	0.0	0.0	0.0	0.0	0.0	0.0	409984.7	32941	1370.73
3.5525	8.8	78.9	443004.1	0.0	0.0	0.0	0.0	0.0	0.0	409984.7	33019	1370.74
3.5550	8.8	78.8	443083.0	0.0	0.0	0.0	0.0	0.0	0.0	409984.7	33098	1370.75
3.5575	8.8	78.8	443161.8	0.0	0.0	0.0	0.0	0.0	0.0	409984.7	33177	1370.76
3.5600	8.7	78.8	443240.6	0.0	0.0	0.0	0.0	0.0	0.0	409984.7	33256	1370.77
3.5625	8.7	78.7	443319.3	0.0	0.0	0.0	0.0	0.0	0.0	409984.7	33335	1370.78
3.5650	8.7	78.7	443398.0	0.0	0.0	0.0	0.0	0.0	0.0	409984.7	33413	1370.79
3.5675	8.7	78.6	443476.6	0.0	0.0	0.0	0.0	0.0	0.0	409984.7	33492	1370.80
3.5700	8.7	78.6	443555.2	0.0	0.0	0.0	0.0	0.0	0.0	409984.7	33570	1370.81

	Pump Run Time			
	52.20 Min	32.70 Min	21.30 Min	0.00 Min
	4.5	5.5	7.5	0
	Pump Warmups			
	3.00 Min	3.00 Min	3.00 Min	3.00 Min
	Float Switch On/Off Elevations (ft)			
On Elev	1372.5	1373.5	1375.5	1500
Off Elev	1368	1368	1368	1400

Max WS = 1380.91

Time (hrs)	Inflow (cfs)	Incremental Inflow Volume (cf)	Cumulative Inflow Volume (cf)	Pump 1 (cf)	Pump 2 (cf)	Pump 3 (cf)	Pump 4 (cf)	Pump Out (cf)	Outflow (cfs)	Cumulative Outflow (cf)	Total Storage (cf)	WSEL (ft)
3.5725	8.7	78.6	443633.8	0.0	0.0	0.0	0.0	0.0	0.0	409984.7	33649	1370.82
3.5750	8.7	78.5	443712.3	0.0	0.0	0.0	0.0	0.0	0.0	409984.7	33728	1370.83
3.5775	8.7	78.5	443790.8	0.0	0.0	0.0	0.0	0.0	0.0	409984.7	33806	1370.84
3.5800	8.7	78.4	443869.2	0.0	0.0	0.0	0.0	0.0	0.0	409984.7	33885	1370.84
3.5825	8.7	78.4	443947.6	0.0	0.0	0.0	0.0	0.0	0.0	409984.7	33963	1370.85
3.5850	8.7	78.4	444026.0	0.0	0.0	0.0	0.0	0.0	0.0	409984.7	34041	1370.86
3.5875	8.7	78.3	444104.3	0.0	0.0	0.0	0.0	0.0	0.0	409984.7	34120	1370.87
3.5900	8.7	78.3	444182.6	0.0	0.0	0.0	0.0	0.0	0.0	409984.7	34198	1370.88
3.5925	8.7	78.2	444260.9	0.0	0.0	0.0	0.0	0.0	0.0	409984.7	34276	1370.89
3.5950	8.7	78.2	444339.1	0.0	0.0	0.0	0.0	0.0	0.0	409984.7	34354	1370.90
3.5975	8.7	78.2	444417.2	0.0	0.0	0.0	0.0	0.0	0.0	409984.7	34433	1370.91
3.6000	8.7	78.1	444495.4	0.0	0.0	0.0	0.0	0.0	0.0	409984.7	34511	1370.92
3.6025	8.7	78.1	444573.5	0.0	0.0	0.0	0.0	0.0	0.0	409984.7	34589	1370.93
3.6050	8.7	78.0	444651.5	0.0	0.0	0.0	0.0	0.0	0.0	409984.7	34667	1370.94
3.6075	8.7	78.0	444729.5	0.0	0.0	0.0	0.0	0.0	0.0	409984.7	34745	1370.95
3.6100	8.7	78.0	444807.5	0.0	0.0	0.0	0.0	0.0	0.0	409984.7	34823	1370.96
3.6125	8.7	77.9	444885.4	0.0	0.0	0.0	0.0	0.0	0.0	409984.7	34901	1370.97
3.6150	8.6	77.9	444963.2	0.0	0.0	0.0	0.0	0.0	0.0	409984.7	34979	1370.98
3.6175	8.6	77.8	445041.1	0.0	0.0	0.0	0.0	0.0	0.0	409984.7	35056	1370.99
3.6200	8.6	77.8	445118.8	0.0	0.0	0.0	0.0	0.0	0.0	409984.7	35134	1370.99
3.6225	8.6	77.7	445196.6	0.0	0.0	0.0	0.0	0.0	0.0	409984.7	35212	1371.00
3.6250	8.6	77.7	445274.3	0.0	0.0	0.0	0.0	0.0	0.0	409984.7	35290	1371.01
3.6275	8.6	77.6	445351.9	0.0	0.0	0.0	0.0	0.0	0.0	409984.7	35367	1371.02
3.6300	8.6	77.6	445429.5	0.0	0.0	0.0	0.0	0.0	0.0	409984.7	35445	1371.03
3.6325	8.6	77.6	445507.1	0.0	0.0	0.0	0.0	0.0	0.0	409984.7	35522	1371.04
3.6350	8.6	77.5	445584.6	0.0	0.0	0.0	0.0	0.0	0.0	409984.7	35600	1371.04
3.6375	8.6	77.5	445662.1	0.0	0.0	0.0	0.0	0.0	0.0	409984.7	35677	1371.05
3.6400	8.6	77.4	445739.5	0.0	0.0	0.0	0.0	0.0	0.0	409984.7	35755	1371.06
3.6425	8.6	77.4	445816.9	0.0	0.0	0.0	0.0	0.0	0.0	409984.7	35832	1371.07
3.6450	8.6	77.3	445894.2	0.0	0.0	0.0	0.0	0.0	0.0	409984.7	35909	1371.08
3.6475	8.6	77.3	445971.5	0.0	0.0	0.0	0.0	0.0	0.0	409984.7	35987	1371.09
3.6500	8.6	77.2	446048.7	0.0	0.0	0.0	0.0	0.0	0.0	409984.7	36064	1371.09
3.6525	8.6	77.2	446125.9	0.0	0.0	0.0	0.0	0.0	0.0	409984.7	36141	1371.10
3.6550	8.6	77.2	446203.1	0.0	0.0	0.0	0.0	0.0	0.0	409984.7	36218	1371.11
3.6575	8.6	77.1	446280.2	0.0	0.0	0.0	0.0	0.0	0.0	409984.7	36295	1371.12
3.6600	8.6	77.1	446357.3	0.0	0.0	0.0	0.0	0.0	0.0	409984.7	36373	1371.13
3.6625	8.6	77.0	446434.3	0.0	0.0	0.0	0.0	0.0	0.0	409984.7	36450	1371.14
3.6650	8.6	77.0	446511.3	0.0	0.0	0.0	0.0	0.0	0.0	409984.7	36527	1371.14
3.6675	8.5	76.9	446588.2	0.0	0.0	0.0	0.0	0.0	0.0	409984.7	36603	1371.15
3.6700	8.5	76.9	446665.1	0.0	0.0	0.0	0.0	0.0	0.0	409984.7	36680	1371.16
3.6725	8.5	76.8	446741.9	0.0	0.0	0.0	0.0	0.0	0.0	409984.7	36757	1371.17
3.6750	8.5	76.8	446818.7	0.0	0.0	0.0	0.0	0.0	0.0	409984.7	36834	1371.18
3.6775	8.5	76.8	446895.5	0.0	0.0	0.0	0.0	0.0	0.0	409984.7	36911	1371.18
3.6800	8.5	76.7	446972.2	0.0	0.0	0.0	0.0	0.0	0.0	409984.7	36987	1371.19
3.6825	8.5	76.7	447048.9	0.0	0.0	0.0	0.0	0.0	0.0	409984.7	37064	1371.20
3.6850	8.5	76.6	447125.5	0.0	0.0	0.0	0.0	0.0	0.0	409984.7	37141	1371.21
3.6875	8.5	76.6	447202.1	0.0	0.0	0.0	0.0	0.0	0.0	409984.7	37217	1371.22
3.6900	8.5	76.5	447278.6	0.0	0.0	0.0	0.0	0.0	0.0	409984.7	37294	1371.23
3.6925	8.5	76.5	447355.1	0.0	0.0	0.0	0.0	0.0	0.0	409984.7	37370	1371.23
3.6950	8.5	76.4	447431.6	0.0	0.0	0.0	0.0	0.0	0.0	409984.7	37447	1371.24
3.6975	8.5	76.4	447508.0	0.0	0.0	0.0	0.0	0.0	0.0	409984.7	37523	1371.25
3.7000	8.5	76.4	447584.3	0.0	0.0	0.0	0.0	0.0	0.0	409984.7	37600	1371.26
3.7025	8.5	76.3	447660.6	0.0	0.0	0.0	0.0	0.0	0.0	409984.7	37676	1371.27
3.7050	8.5	76.3	447736.9	0.0	0.0	0.0	0.0	0.0	0.0	409984.7	37752	1371.27
3.7075	8.5	76.2	447813.1	0.0	0.0	0.0	0.0	0.0	0.0	409984.7	37828	1371.28
3.7100	8.5	76.2	447889.3	0.0	0.0	0.0	0.0	0.0	0.0	409984.7	37905	1371.29

	Pump 1	Pump 2	Pump 3	Pump 4
Pump Run Time	52.20 Min	32.70 Min	21.30 Min	0.00 Min
	4.5	5.5	7.5	0
Pump Warmups	3.00 Min	3.00 Min	3.00 Min	3.00 Min
Float Switch On/Off Elevations (ft)				
On Elev	1372.5	1373.5	1375.5	1500
Off Elev	1368	1368	1368	1400

Max WS = 1380.91

Time (hrs)	Inflow (cfs)	Incremental Inflow Volume (cf)	Cumulative Inflow Volume (cf)	Pump 1 (cf)	Pump 2 (cf)	Pump 3 (cf)	Pump 4 (cf)	Pump Out (cf)	Outflow (cfs)	Cumulative Outflow (cf)	Total Storage (cf)	WSEL (ft)
3.7125	8.5	76.1	447965.4	0.0	0.0	0.0	0.0	0.0	0.0	409984.7	37981	1371.30
3.7150	8.5	76.1	448041.5	0.0	0.0	0.0	0.0	0.0	0.0	409984.7	38057	1371.31
3.7175	8.4	76.0	448117.6	0.0	0.0	0.0	0.0	0.0	0.0	409984.7	38133	1371.32
3.7200	8.4	76.0	448193.6	0.0	0.0	0.0	0.0	0.0	0.0	409984.7	38209	1371.32
3.7225	8.4	76.0	448269.5	0.0	0.0	0.0	0.0	0.0	0.0	409984.7	38285	1371.33
3.7250	8.4	75.9	448345.5	0.0	0.0	0.0	0.0	0.0	0.0	409984.7	38361	1371.34
3.7275	8.4	75.9	448421.3	0.0	0.0	0.0	0.0	0.0	0.0	409984.7	38437	1371.35
3.7300	8.4	75.8	448497.1	0.0	0.0	0.0	0.0	0.0	0.0	409984.7	38512	1371.36
3.7325	8.4	75.8	448572.9	0.0	0.0	0.0	0.0	0.0	0.0	409984.7	38588	1371.36
3.7350	8.4	75.7	448648.7	0.0	0.0	0.0	0.0	0.0	0.0	409984.7	38664	1371.37
3.7375	8.4	75.7	448724.4	0.0	0.0	0.0	0.0	0.0	0.0	409984.7	38740	1371.38
3.7400	8.4	75.6	448800.0	0.0	0.0	0.0	0.0	0.0	0.0	409984.7	38815	1371.39
3.7425	8.4	75.6	448875.6	0.0	0.0	0.0	0.0	0.0	0.0	409984.7	38891	1371.40
3.7450	8.4	75.6	448951.2	0.0	0.0	0.0	0.0	0.0	0.0	409984.7	38966	1371.40
3.7475	8.4	75.5	449026.7	0.0	0.0	0.0	0.0	0.0	0.0	409984.7	39042	1371.41
3.7500	8.4	75.5	449102.2	0.0	0.0	0.0	0.0	0.0	0.0	409984.7	39117	1371.42
3.7525	8.4	75.4	449177.6	0.0	0.0	0.0	0.0	0.0	0.0	409984.7	39193	1371.43
3.7550	8.4	75.4	449253.0	0.0	0.0	0.0	0.0	0.0	0.0	409984.7	39268	1371.44
3.7575	8.4	75.3	449328.3	0.0	0.0	0.0	0.0	0.0	0.0	409984.7	39344	1371.44
3.7600	8.4	75.3	449403.6	0.0	0.0	0.0	0.0	0.0	0.0	409984.7	39419	1371.45
3.7625	8.4	75.2	449478.8	0.0	0.0	0.0	0.0	0.0	0.0	409984.7	39494	1371.46
3.7650	8.4	75.2	449554.0	0.0	0.0	0.0	0.0	0.0	0.0	409984.7	39569	1371.47
3.7675	8.3	75.2	449629.2	0.0	0.0	0.0	0.0	0.0	0.0	409984.7	39644	1371.48
3.7700	8.3	75.1	449704.3	0.0	0.0	0.0	0.0	0.0	0.0	409984.7	39720	1371.48
3.7725	8.3	75.1	449779.4	0.0	0.0	0.0	0.0	0.0	0.0	409984.7	39795	1371.49
3.7750	8.3	75.0	449854.4	0.0	0.0	0.0	0.0	0.0	0.0	409984.7	39870	1371.50
3.7775	8.3	75.0	449929.4	0.0	0.0	0.0	0.0	0.0	0.0	409984.7	39945	1371.51
3.7800	8.3	74.9	450004.3	0.0	0.0	0.0	0.0	0.0	0.0	409984.7	40020	1371.52
3.7825	8.3	74.9	450079.2	0.0	0.0	0.0	0.0	0.0	0.0	409984.7	40095	1371.52
3.7850	8.3	74.8	450154.1	0.0	0.0	0.0	0.0	0.0	0.0	409984.7	40169	1371.53
3.7875	8.3	74.8	450228.9	0.0	0.0	0.0	0.0	0.0	0.0	409984.7	40244	1371.54
3.7900	8.3	74.8	450303.6	0.0	0.0	0.0	0.0	0.0	0.0	409984.7	40319	1371.55
3.7925	8.3	74.7	450378.4	0.0	0.0	0.0	0.0	0.0	0.0	409984.7	40394	1371.56
3.7950	8.3	74.7	450453.0	0.0	0.0	0.0	0.0	0.0	0.0	409984.7	40468	1371.56
3.7975	8.3	74.6	450527.7	0.0	0.0	0.0	0.0	0.0	0.0	409984.7	40543	1371.57
3.8000	8.3	74.6	450602.2	0.0	0.0	0.0	0.0	0.0	0.0	409984.7	40618	1371.58
3.8025	8.3	74.5	450676.8	0.0	0.0	0.0	0.0	0.0	0.0	409984.7	40692	1371.59
3.8050	8.3	74.5	450751.3	0.0	0.0	0.0	0.0	0.0	0.0	409984.7	40767	1371.60
3.8075	8.3	74.4	450825.7	0.0	0.0	0.0	0.0	0.0	0.0	409984.7	40841	1371.60
3.8100	8.3	74.4	450900.1	0.0	0.0	0.0	0.0	0.0	0.0	409984.7	40915	1371.61
3.8125	8.3	74.4	450974.5	0.0	0.0	0.0	0.0	0.0	0.0	409984.7	40990	1371.62
3.8150	8.3	74.3	451048.8	0.0	0.0	0.0	0.0	0.0	0.0	409984.7	41064	1371.63
3.8175	8.2	74.3	451123.1	0.0	0.0	0.0	0.0	0.0	0.0	409984.7	41138	1371.64
3.8200	8.2	74.2	451197.3	0.0	0.0	0.0	0.0	0.0	0.0	409984.7	41213	1371.64
3.8225	8.2	74.2	451271.5	0.0	0.0	0.0	0.0	0.0	0.0	409984.7	41287	1371.65
3.8250	8.2	74.1	451345.6	0.0	0.0	0.0	0.0	0.0	0.0	409984.7	41361	1371.66
3.8275	8.2	74.1	451419.7	0.0	0.0	0.0	0.0	0.0	0.0	409984.7	41435	1371.67
3.8300	8.2	74.1	451493.8	0.0	0.0	0.0	0.0	0.0	0.0	409984.7	41509	1371.68
3.8325	8.2	74.0	451567.8	0.0	0.0	0.0	0.0	0.0	0.0	409984.7	41583	1371.68
3.8350	8.2	74.0	451641.7	0.0	0.0	0.0	0.0	0.0	0.0	409984.7	41657	1371.69
3.8375	8.2	73.9	451715.7	0.0	0.0	0.0	0.0	0.0	0.0	409984.7	41731	1371.70
3.8400	8.2	73.9	451789.5	0.0	0.0	0.0	0.0	0.0	0.0	409984.7	41805	1371.71
3.8425	8.2	73.8	451863.4	0.0	0.0	0.0	0.0	0.0	0.0	409984.7	41879	1371.71
3.8450	8.2	73.8	451937.1	0.0	0.0	0.0	0.0	0.0	0.0	409984.7	41952	1371.72
3.8475	8.2	73.7	452010.9	0.0	0.0	0.0	0.0	0.0	0.0	409984.7	42026	1371.73
3.8500	8.2	73.7	452084.6	0.0	0.0	0.0	0.0	0.0	0.0	409984.7	42100	1371.74

	Pump Run Time			
	52.20 Min	32.70 Min	21.30 Min	0.00 Min
	4.5	5.5	7.5	0
	Pump Warmups			
	3.00 Min	3.00 Min	3.00 Min	3.00 Min
	Float Switch On/Off Elevations (ft)			
On Elev	1372.5	1373.5	1375.5	1500
Off Elev	1368	1368	1368	1400

Max WS = 1380.91

Time (hrs)	Inflow (cfs)	Incremental Inflow Volume (cf)	Cumulative Inflow Volume (cf)	Pump 1 (cf)	Pump 2 (cf)	Pump 3 (cf)	Pump 4 (cf)	Pump Out (cf)	Outflow (cfs)	Cumulative Outflow (cf)	Total Storage (cf)	WSEL (ft)
3.8525	8.2	73.7	452158.2	0.0	0.0	0.0	0.0	0.0	0.0	409984.7	42174	1371.75
3.8550	8.2	73.6	452231.8	0.0	0.0	0.0	0.0	0.0	0.0	409984.7	42247	1371.75
3.8575	8.2	73.6	452305.4	0.0	0.0	0.0	0.0	0.0	0.0	409984.7	42321	1371.76
3.8600	8.2	73.5	452378.9	0.0	0.0	0.0	0.0	0.0	0.0	409984.7	42394	1371.77
3.8625	8.2	73.5	452452.4	0.0	0.0	0.0	0.0	0.0	0.0	409984.7	42468	1371.78
3.8650	8.2	73.4	452525.8	0.0	0.0	0.0	0.0	0.0	0.0	409984.7	42541	1371.79
3.8675	8.2	73.4	452599.2	0.0	0.0	0.0	0.0	0.0	0.0	409984.7	42614	1371.79
3.8700	8.1	73.3	452672.5	0.0	0.0	0.0	0.0	0.0	0.0	409984.7	42688	1371.80
3.8725	8.1	73.3	452745.8	0.0	0.0	0.0	0.0	0.0	0.0	409984.7	42761	1371.81
3.8750	8.1	73.3	452819.1	0.0	0.0	0.0	0.0	0.0	0.0	409984.7	42834	1371.82
3.8775	8.1	73.2	452892.3	0.0	0.0	0.0	0.0	0.0	0.0	409984.7	42908	1371.82
3.8800	8.1	73.2	452965.5	0.0	0.0	0.0	0.0	0.0	0.0	409984.7	42981	1371.83
3.8825	8.1	73.1	453038.6	0.0	0.0	0.0	0.0	0.0	0.0	409984.7	43054	1371.84
3.8850	8.1	73.1	453111.6	0.0	0.0	0.0	0.0	0.0	0.0	409984.7	43127	1371.85
3.8875	8.1	73.0	453184.7	0.0	0.0	0.0	0.0	0.0	0.0	409984.7	43200	1371.86
3.8900	8.1	73.0	453257.7	0.0	0.0	0.0	0.0	0.0	0.0	409984.7	43273	1371.86
3.8925	8.1	72.9	453330.6	0.0	0.0	0.0	0.0	0.0	0.0	409984.7	43346	1371.87
3.8950	8.1	72.9	453403.5	0.0	0.0	0.0	0.0	0.0	0.0	409984.7	43419	1371.88
3.8975	8.1	72.9	453476.3	0.0	0.0	0.0	0.0	0.0	0.0	409984.7	43492	1371.89
3.9000	8.1	72.8	453549.2	0.0	0.0	0.0	0.0	0.0	0.0	409984.7	43564	1371.89
3.9025	8.1	72.8	453621.9	0.0	0.0	0.0	0.0	0.0	0.0	409984.7	43637	1371.90
3.9050	8.1	72.7	453694.6	0.0	0.0	0.0	0.0	0.0	0.0	409984.7	43710	1371.91
3.9075	8.1	72.7	453767.3	0.0	0.0	0.0	0.0	0.0	0.0	409984.7	43783	1371.92
3.9100	8.1	72.6	453839.9	0.0	0.0	0.0	0.0	0.0	0.0	409984.7	43855	1371.93
3.9125	8.1	72.6	453912.5	0.0	0.0	0.0	0.0	0.0	0.0	409984.7	43928	1371.93
3.9150	8.1	72.5	453985.1	0.0	0.0	0.0	0.0	0.0	0.0	409984.7	44000	1371.94
3.9175	8.1	72.5	454057.6	0.0	0.0	0.0	0.0	0.0	0.0	409984.7	44073	1371.95
3.9200	8.0	72.5	454130.0	0.0	0.0	0.0	0.0	0.0	0.0	409984.7	44145	1371.96
3.9225	8.0	72.4	454202.4	0.0	0.0	0.0	0.0	0.0	0.0	409984.7	44218	1371.96
3.9250	8.0	72.4	454274.8	0.0	0.0	0.0	0.0	0.0	0.0	409984.7	44290	1371.97
3.9275	8.0	72.3	454347.1	0.0	0.0	0.0	0.0	0.0	0.0	409984.7	44362	1371.98
3.9300	8.0	72.3	454419.4	0.0	0.0	0.0	0.0	0.0	0.0	409984.7	44435	1371.99
3.9325	8.0	72.2	454491.6	0.0	0.0	0.0	0.0	0.0	0.0	409984.7	44507	1372.00
3.9350	8.0	72.2	454563.8	0.0	0.0	0.0	0.0	0.0	0.0	409984.7	44579	1372.00
3.9375	8.0	72.1	454635.9	0.0	0.0	0.0	0.0	0.0	0.0	409984.7	44651	1372.01
3.9400	8.0	72.1	454708.0	0.0	0.0	0.0	0.0	0.0	0.0	409984.7	44723	1372.02
3.9425	8.0	72.1	454780.1	0.0	0.0	0.0	0.0	0.0	0.0	409984.7	44795	1372.03
3.9450	8.0	72.0	454852.1	0.0	0.0	0.0	0.0	0.0	0.0	409984.7	44867	1372.03
3.9475	8.0	72.0	454924.1	0.0	0.0	0.0	0.0	0.0	0.0	409984.7	44939	1372.04
3.9500	8.0	71.9	454996.0	0.0	0.0	0.0	0.0	0.0	0.0	409984.7	45011	1372.05
3.9525	8.0	71.9	455067.9	0.0	0.0	0.0	0.0	0.0	0.0	409984.7	45083	1372.05
3.9550	8.0	71.8	455139.7	0.0	0.0	0.0	0.0	0.0	0.0	409984.7	45155	1372.06
3.9575	8.0	71.8	455211.5	0.0	0.0	0.0	0.0	0.0	0.0	409984.7	45227	1372.07
3.9600	8.0	71.7	455283.2	0.0	0.0	0.0	0.0	0.0	0.0	409984.7	45298	1372.08
3.9625	8.0	71.7	455354.9	0.0	0.0	0.0	0.0	0.0	0.0	409984.7	45370	1372.08
3.9650	8.0	71.7	455426.6	0.0	0.0	0.0	0.0	0.0	0.0	409984.7	45442	1372.09
3.9675	8.0	71.6	455498.2	0.0	0.0	0.0	0.0	0.0	0.0	409984.7	45513	1372.10
3.9700	7.9	71.6	455569.7	0.0	0.0	0.0	0.0	0.0	0.0	409984.7	45585	1372.11
3.9725	7.9	71.5	455641.3	0.0	0.0	0.0	0.0	0.0	0.0	409984.7	45657	1372.11
3.9750	7.9	71.5	455712.7	0.0	0.0	0.0	0.0	0.0	0.0	409984.7	45728	1372.12
3.9775	7.9	71.4	455784.2	0.0	0.0	0.0	0.0	0.0	0.0	409984.7	45799	1372.13
3.9800	7.9	71.4	455855.6	0.0	0.0	0.0	0.0	0.0	0.0	409984.7	45871	1372.13
3.9825	7.9	71.3	455926.9	0.0	0.0	0.0	0.0	0.0	0.0	409984.7	45942	1372.14
3.9850	7.9	71.3	455998.2	0.0	0.0	0.0	0.0	0.0	0.0	409984.7	46013	1372.15
3.9875	7.9	71.3	456069.5	0.0	0.0	0.0	0.0	0.0	0.0	409984.7	46085	1372.16
3.9900	7.9	71.2	456140.7	0.0	0.0	0.0	0.0	0.0	0.0	409984.7	46156	1372.16

	Pump 1	Pump 2	Pump 3	Pump 4
Pump Run Time	52.20 Min	32.70 Min	21.30 Min	0.00 Min
	4.5	5.5	7.5	0
Pump Warmups	3.00 Min	3.00 Min	3.00 Min	3.00 Min
Float Switch On/Off Elevations (ft)				
On Elev	1372.5	1373.5	1375.5	1500
Off Elev	1368	1368	1368	1400

Max WS = 1380.91

Time (hrs)	Inflow (cfs)	Incremental Inflow Volume (cf)	Cumulative Inflow Volume (cf)	Pump 1 (cf)	Pump 2 (cf)	Pump 3 (cf)	Pump 4 (cf)	Pump Out (cf)	Outflow (cfs)	Cumulative Outflow (cf)	Total Storage (cf)	WSEL (ft)
3.9925	7.9	71.2	456211.8	0.0	0.0	0.0	0.0	0.0	0.0	409984.7	46227	1372.17
3.9950	7.9	71.1	456283.0	0.0	0.0	0.0	0.0	0.0	0.0	409984.7	46298	1372.18
3.9975	7.9	71.1	456354.0	0.0	0.0	0.0	0.0	0.0	0.0	409984.7	46369	1372.19
4.0000	7.9	71.0	456425.1	0.0	0.0	0.0	0.0	0.0	0.0	409984.7	46440	1372.19
4.0025	7.9	71.0	456496.1	0.0	0.0	0.0	0.0	0.0	0.0	409984.7	46511	1372.20
4.0050	7.9	71.0	456567.0	0.0	0.0	0.0	0.0	0.0	0.0	409984.7	46582	1372.21
4.0075	7.9	70.9	456637.9	0.0	0.0	0.0	0.0	0.0	0.0	409984.7	46653	1372.21
4.0100	7.9	70.9	456708.8	0.0	0.0	0.0	0.0	0.0	0.0	409984.7	46724	1372.22
4.0125	7.9	70.9	456779.7	0.0	0.0	0.0	0.0	0.0	0.0	409984.7	46795	1372.23
4.0150	7.9	70.8	456850.5	0.0	0.0	0.0	0.0	0.0	0.0	409984.7	46866	1372.24
4.0175	7.9	70.8	456921.3	0.0	0.0	0.0	0.0	0.0	0.0	409984.7	46937	1372.24
4.0200	7.9	70.7	456992.0	0.0	0.0	0.0	0.0	0.0	0.0	409984.7	47007	1372.25
4.0225	7.9	70.7	457062.7	0.0	0.0	0.0	0.0	0.0	0.0	409984.7	47078	1372.26
4.0250	7.9	70.7	457133.4	0.0	0.0	0.0	0.0	0.0	0.0	409984.7	47149	1372.27
4.0275	7.8	70.6	457204.0	0.0	0.0	0.0	0.0	0.0	0.0	409984.7	47219	1372.27
4.0300	7.8	70.6	457274.6	0.0	0.0	0.0	0.0	0.0	0.0	409984.7	47290	1372.28
4.0325	7.8	70.6	457345.2	0.0	0.0	0.0	0.0	0.0	0.0	409984.7	47360	1372.29
4.0350	7.8	70.5	457415.7	0.0	0.0	0.0	0.0	0.0	0.0	409984.7	47431	1372.29
4.0375	7.8	70.5	457486.2	0.0	0.0	0.0	0.0	0.0	0.0	409984.7	47501	1372.30
4.0400	7.8	70.5	457556.7	0.0	0.0	0.0	0.0	0.0	0.0	409984.7	47572	1372.31
4.0425	7.8	70.4	457627.1	0.0	0.0	0.0	0.0	0.0	0.0	409984.7	47642	1372.32
4.0450	7.8	70.4	457697.5	0.0	0.0	0.0	0.0	0.0	0.0	409984.7	47713	1372.32
4.0475	7.8	70.4	457767.8	0.0	0.0	0.0	0.0	0.0	0.0	409984.7	47783	1372.33
4.0500	7.8	70.3	457838.2	0.0	0.0	0.0	0.0	0.0	0.0	409984.7	47853	1372.34
4.0525	7.8	70.3	457908.4	0.0	0.0	0.0	0.0	0.0	0.0	409984.7	47924	1372.34
4.0550	7.8	70.2	457978.7	0.0	0.0	0.0	0.0	0.0	0.0	409984.7	47994	1372.35
4.0575	7.8	70.2	458048.9	0.0	0.0	0.0	0.0	0.0	0.0	409984.7	48064	1372.36
4.0600	7.8	70.2	458119.1	0.0	0.0	0.0	0.0	0.0	0.0	409984.7	48134	1372.37
4.0625	7.8	70.1	458189.2	0.0	0.0	0.0	0.0	0.0	0.0	409984.7	48204	1372.37
4.0650	7.8	70.1	458259.3	0.0	0.0	0.0	0.0	0.0	0.0	409984.7	48275	1372.38
4.0675	7.8	70.1	458329.4	0.0	0.0	0.0	0.0	0.0	0.0	409984.7	48345	1372.39
4.0700	7.8	70.0	458399.4	0.0	0.0	0.0	0.0	0.0	0.0	409984.7	48415	1372.39
4.0725	7.8	70.0	458469.4	0.0	0.0	0.0	0.0	0.0	0.0	409984.7	48485	1372.40
4.0750	7.8	70.0	458539.4	0.0	0.0	0.0	0.0	0.0	0.0	409984.7	48555	1372.41
4.0775	7.8	69.9	458609.3	0.0	0.0	0.0	0.0	0.0	0.0	409984.7	48625	1372.42
4.0800	7.8	69.9	458679.2	0.0	0.0	0.0	0.0	0.0	0.0	409984.7	48694	1372.42
4.0825	7.8	69.9	458749.1	0.0	0.0	0.0	0.0	0.0	0.0	409984.7	48764	1372.43
4.0850	7.8	69.8	458818.9	0.0	0.0	0.0	0.0	0.0	0.0	409984.7	48834	1372.44
4.0875	7.8	69.8	458888.7	0.0	0.0	0.0	0.0	0.0	0.0	409984.7	48904	1372.44
4.0900	7.7	69.7	458958.4	0.0	0.0	0.0	0.0	0.0	0.0	409984.7	48974	1372.45
4.0925	7.7	69.7	459028.1	0.0	0.0	0.0	0.0	0.0	0.0	409984.7	49043	1372.46
4.0950	7.7	69.7	459097.8	0.0	0.0	0.0	0.0	0.0	0.0	409984.7	49113	1372.47
4.0975	7.7	69.6	459167.4	0.0	0.0	0.0	0.0	0.0	0.0	409984.7	49183	1372.47
4.1000	7.7	69.6	459237.1	0.0	0.0	0.0	0.0	0.0	0.0	409984.7	49252	1372.48
4.1025	7.7	69.6	459306.6	0.0	0.0	0.0	0.0	0.0	0.0	409984.7	49322	1372.49
4.1050	7.7	69.5	459376.2	0.0	0.0	0.0	0.0	0.0	0.0	409984.7	49391	1372.49
4.1075	7.7	69.5	459445.7	0.0	0.0	0.0	0.0	0.0	0.0	409984.7	49461	1372.50
4.1100	7.7	69.5	459515.1	Warmup 0009	0.0	0.0	0.0	0.0	0.0	409984.7	49530	1372.51
4.1125	7.7	69.4	459584.6	Warmup 0018	0.0	0.0	0.0	0.0	0.0	409984.7	49600	1372.52
4.1150	7.7	69.4	459654.0	Warmup 0027	0.0	0.0	0.0	0.0	0.0	409984.7	49669	1372.52
4.1175	7.7	69.4	459723.3	Warmup 0036	0.0	0.0	0.0	0.0	0.0	409984.7	49739	1372.53
4.1200	7.7	69.3	459792.6	Warmup 0045	0.0	0.0	0.0	0.0	0.0	409984.7	49808	1372.54
4.1225	7.7	69.3	459861.9	Warmup 0054	0.0	0.0	0.0	0.0	0.0	409984.7	49877	1372.54
4.1250	7.7	69.3	459931.2	Warmup 0063	0.0	0.0	0.0	0.0	0.0	409984.7	49946	1372.55
4.1275	7.7	69.2	460000.4	Warmup 0072	0.0	0.0	0.0	0.0	0.0	409984.7	50016	1372.56
4.1300	7.7	69.2	460069.6	Warmup 0081	0.0	0.0	0.0	0.0	0.0	409984.7	50085	1372.57

	Pump 1	Pump 2	Pump 3	Pump 4
Pump Run Time	52.20 Min	32.70 Min	21.30 Min	0.00 Min
	4.5	5.5	7.5	0
Pump Warmups	3.00 Min	3.00 Min	3.00 Min	3.00 Min
Float Switch On/Off Elevations (ft)				
On Elev	1372.5	1373.5	1375.5	1500
Off Elev	1368	1368	1368	1400

Max WS = 1380.91

Time (hrs)	Inflow (cfs)	Incremental Inflow Volume (cf)	Cumulative Inflow Volume (cf)	Pump 1 (cf)	Pump 2 (cf)	Pump 3 (cf)	Pump 4 (cf)	Pump Out (cf)	Outflow (cfs)	Cumulative Outflow (cf)	Total Storage (cf)	WSEL (ft)
4.1325	7.7	69.1	460138.7	Warmup 0090	0.0	0.0	0.0	0.0	0.0	409984.7	50154	1372.57
4.1350	7.7	69.1	460207.8	Warmup 0099	0.0	0.0	0.0	0.0	0.0	409984.7	50223	1372.58
4.1375	7.7	69.1	460276.9	Warmup 0108	0.0	0.0	0.0	0.0	0.0	409984.7	50292	1372.59
4.1400	7.7	69.0	460345.9	Warmup 0117	0.0	0.0	0.0	0.0	0.0	409984.7	50361	1372.59
4.1425	7.7	69.0	460415.0	Warmup 0126	0.0	0.0	0.0	0.0	0.0	409984.7	50430	1372.60
4.1450	7.7	69.0	460483.9	Warmup 0135	0.0	0.0	0.0	0.0	0.0	409984.7	50499	1372.61
4.1475	7.7	68.9	460552.9	Warmup 0144	0.0	0.0	0.0	0.0	0.0	409984.7	50568	1372.61
4.1500	7.7	68.9	460621.8	Warmup 0153	0.0	0.0	0.0	0.0	0.0	409984.7	50637	1372.62
4.1525	7.6	68.9	460690.6	Warmup 0162	0.0	0.0	0.0	0.0	0.0	409984.7	50706	1372.63
4.1550	7.6	68.8	460759.4	Warmup 0171	0.0	0.0	0.0	0.0	0.0	409984.7	50775	1372.64
4.1575	7.6	68.8	460828.2	Warmup 0180	0.0	0.0	0.0	0.0	0.0	409984.7	50844	1372.64
4.1600	7.6	68.8	460897.0	507.1	0.0	0.0	0.0	507.1	56.3	410491.9	50405	1372.60
4.1625	7.6	68.7	460965.7	506.9	0.0	0.0	0.0	506.9	56.3	410998.7	49967	1372.55
4.1650	7.6	68.7	461034.4	506.6	0.0	0.0	0.0	506.6	56.3	411505.3	49529	1372.51
4.1675	7.6	68.6	461103.0	506.3	0.0	0.0	0.0	506.3	56.3	412011.6	49091	1372.46
4.1700	7.6	68.6	461171.7	506.0	0.0	0.0	0.0	506.0	56.2	412517.7	48654	1372.42
4.1725	7.6	68.6	461240.2	505.7	0.0	0.0	0.0	505.7	56.2	413023.4	48217	1372.37
4.1750	7.6	68.5	461308.8	505.5	0.0	0.0	0.0	505.5	56.2	413528.9	47780	1372.33
4.1775	7.6	68.5	461377.3	505.2	0.0	0.0	0.0	505.2	56.1	414034.0	47343	1372.29
4.1800	7.6	68.5	461445.8	504.9	0.0	0.0	0.0	504.9	56.1	414538.9	46907	1372.24
4.1825	7.6	68.4	461514.2	504.6	0.0	0.0	0.0	504.6	56.1	415043.5	46471	1372.20
4.1850	7.6	68.4	461582.6	504.3	0.0	0.0	0.0	504.3	56.0	415547.9	46035	1372.15
4.1875	7.6	68.4	461651.0	504.1	0.0	0.0	0.0	504.1	56.0	416051.9	45599	1372.11
4.1900	7.6	68.3	461719.3	503.8	0.0	0.0	0.0	503.8	56.0	416555.7	45164	1372.06
4.1925	7.6	68.3	461787.6	503.5	0.0	0.0	0.0	503.5	55.9	417059.2	44728	1372.02
4.1950	7.6	68.3	461855.8	503.2	0.0	0.0	0.0	503.2	55.9	417562.4	44293	1371.97
4.1975	7.6	68.2	461924.1	502.9	0.0	0.0	0.0	502.9	55.9	418065.4	43859	1371.93
4.2000	7.6	68.2	461992.2	502.6	0.0	0.0	0.0	502.6	55.8	418568.0	43424	1371.88
4.2025	7.6	68.2	462060.4	502.3	0.0	0.0	0.0	502.3	55.8	419070.3	42990	1371.83
4.2050	7.6	68.1	462128.5	502.1	0.0	0.0	0.0	502.1	55.8	419572.4	42556	1371.79
4.2075	7.6	68.1	462196.6	501.8	0.0	0.0	0.0	501.8	55.8	420074.1	42122	1371.74
4.2100	7.6	68.0	462264.6	501.5	0.0	0.0	0.0	501.5	55.7	420575.6	41689	1371.69
4.2125	7.6	68.0	462332.6	501.2	0.0	0.0	0.0	501.2	55.7	421076.8	41256	1371.65
4.2150	7.6	68.0	462400.6	500.9	0.0	0.0	0.0	500.9	55.7	421577.7	40823	1371.60
4.2175	7.5	67.9	462468.6	500.6	0.0	0.0	0.0	500.6	55.6	422078.3	40390	1371.56
4.2200	7.5	67.9	462536.5	500.3	0.0	0.0	0.0	500.3	55.6	422578.6	39958	1371.51
4.2225	7.5	67.9	462604.3	500.0	0.0	0.0	0.0	500.0	55.6	423078.6	39526	1371.46
4.2250	7.5	67.8	462672.2	499.7	0.0	0.0	0.0	499.7	55.5	423578.3	39094	1371.42
4.2275	7.5	67.8	462740.0	499.4	0.0	0.0	0.0	499.4	55.5	424077.7	38662	1371.37
4.2300	7.5	67.8	462807.7	499.1	0.0	0.0	0.0	499.1	55.5	424576.9	38231	1371.33
4.2325	7.5	67.7	462875.4	498.9	0.0	0.0	0.0	498.9	55.4	425075.7	37800	1371.28
4.2350	7.5	67.7	462943.1	498.6	0.0	0.0	0.0	498.6	55.4	425574.3	37369	1371.23
4.2375	7.5	67.7	463010.8	498.3	0.0	0.0	0.0	498.3	55.4	426072.6	36938	1371.19
4.2400	7.5	67.6	463078.4	498.0	0.0	0.0	0.0	498.0	55.3	426570.5	36508	1371.14
4.2425	7.5	67.6	463146.0	497.7	0.0	0.0	0.0	497.7	55.3	427068.2	36078	1371.10
4.2450	7.5	67.5	463213.5	497.4	0.0	0.0	0.0	497.4	55.3	427565.6	35648	1371.05
4.2475	7.5	67.5	463281.1	497.1	0.0	0.0	0.0	497.1	55.2	428062.8	35218	1371.00
4.2500	7.5	67.5	463348.5	496.8	0.0	0.0	0.0	496.8	55.2	428559.6	34789	1370.95
4.2525	7.5	67.4	463416.0	496.5	0.0	0.0	0.0	496.5	55.2	429056.1	34360	1370.90
4.2550	7.5	67.4	463483.4	496.2	0.0	0.0	0.0	496.2	55.1	429552.3	33931	1370.85
4.2575	7.5	67.4	463550.8	495.9	0.0	0.0	0.0	495.9	55.1	430048.1	33503	1370.80
4.2600	7.5	67.3	463618.1	495.5	0.0	0.0	0.0	495.5	55.1	430543.7	33074	1370.75
4.2625	7.5	67.3	463685.4	495.2	0.0	0.0	0.0	495.2	55.0	431038.9	32647	1370.70
4.2650	7.5	67.3	463752.7	494.9	0.0	0.0	0.0	494.9	55.0	431533.7	32219	1370.64
4.2675	7.5	67.2	463819.9	494.6	0.0	0.0	0.0	494.6	55.0	432028.3	31792	1370.59
4.2700	7.5	67.2	463887.1	494.2	0.0	0.0	0.0	494.2	54.9	432522.6	31365	1370.54

	Pump 1	Pump 2	Pump 3	Pump 4
Pump Run Time	52.20 Min	32.70 Min	21.30 Min	0.00 Min
	4.5	5.5	7.5	0
Pump Warmups	3.00 Min	3.00 Min	3.00 Min	3.00 Min
Float Switch On/Off Elevations (ft)				
On Elev	1372.5	1373.5	1375.5	1500
Off Elev	1368	1368	1368	1400

Max WS = 1380.91

Time (hrs)	Inflow (cfs)	Incremental Inflow Volume (cf)	Cumulative Inflow Volume (cf)	Pump 1 (cf)	Pump 2 (cf)	Pump 3 (cf)	Pump 4 (cf)	Pump Out (cf)	Outflow (cfs)	Cumulative Outflow (cf)	Total Storage (cf)	WSEL (ft)
4.2725	7.5	67.2	463954.2	493.9	0.0	0.0	0.0	493.9	54.9	433016.5	30938	1370.49
4.2750	7.5	67.1	464021.4	493.6	0.0	0.0	0.0	493.6	54.8	433510.1	30511	1370.44
4.2775	7.5	67.1	464088.4	493.3	0.0	0.0	0.0	493.3	54.8	434003.3	30085	1370.39
4.2800	7.4	67.1	464155.5	493.0	0.0	0.0	0.0	493.0	54.8	434496.3	29659	1370.34
4.2825	7.4	67.0	464222.5	492.6	0.0	0.0	0.0	492.6	54.7	434988.9	29234	1370.29
4.2850	7.4	67.0	464289.5	492.3	0.0	0.0	0.0	492.3	54.7	435481.2	28808	1370.24
4.2875	7.4	66.9	464356.4	492.0	0.0	0.0	0.0	492.0	54.7	435973.2	28383	1370.19
4.2900	7.4	66.9	464423.3	491.7	0.0	0.0	0.0	491.7	54.6	436464.9	27958	1370.13
4.2925	7.4	66.9	464490.2	491.3	0.0	0.0	0.0	491.3	54.6	436956.2	27534	1370.08
4.2950	7.4	66.8	464557.1	491.0	0.0	0.0	0.0	491.0	54.6	437447.2	27110	1370.03
4.2975	7.4	66.8	464623.9	490.7	0.0	0.0	0.0	490.7	54.5	437938.0	26686	1369.97
4.3000	7.4	66.8	464690.6	490.4	0.0	0.0	0.0	490.4	54.5	438428.4	26262	1369.91
4.3025	7.4	66.7	464757.4	490.2	0.0	0.0	0.0	490.2	54.5	438918.5	25839	1369.84
4.3050	7.4	66.7	464824.1	489.9	0.0	0.0	0.0	489.9	54.4	439408.4	25416	1369.77
4.3075	7.4	66.7	464890.7	489.7	0.0	0.0	0.0	489.7	54.4	439898.1	24993	1369.70
4.3100	7.4	66.6	464957.3	489.4	0.0	0.0	0.0	489.4	54.4	440387.5	24570	1369.63
4.3125	7.4	66.6	465023.9	489.2	0.0	0.0	0.0	489.2	54.4	440876.7	24147	1369.56
4.3150	7.4	66.6	465090.5	488.9	0.0	0.0	0.0	488.9	54.3	441365.6	23725	1369.49
4.3175	7.4	66.5	465157.0	488.7	0.0	0.0	0.0	488.7	54.3	441854.2	23303	1369.42
4.3200	7.4	66.5	465223.5	488.4	0.0	0.0	0.0	488.4	54.3	442342.7	22881	1369.35
4.3225	7.4	66.4	465289.9	488.2	0.0	0.0	0.0	488.2	54.2	442830.8	22459	1369.28
4.3250	7.4	66.4	465356.3	487.9	0.0	0.0	0.0	487.9	54.2	443318.7	22038	1369.21
4.3275	7.4	66.4	465422.7	487.7	0.0	0.0	0.0	487.7	54.2	443806.4	21616	1369.15
4.3300	7.4	66.3	465489.1	487.4	0.0	0.0	0.0	487.4	54.2	444293.8	21195	1369.08
4.3325	7.4	66.3	465555.4	487.2	0.0	0.0	0.0	487.2	54.1	444781.0	20774	1369.01
4.3350	7.4	66.3	465621.6	486.9	0.0	0.0	0.0	486.9	54.1	445267.9	20354	1368.90
4.3375	7.4	66.2	465687.9	486.5	0.0	0.0	0.0	486.5	54.1	445754.5	19933	1368.78
4.3400	7.4	66.2	465754.1	486.1	0.0	0.0	0.0	486.1	54.0	446240.6	19514	1368.66
4.3425	7.3	66.2	465820.2	485.7	0.0	0.0	0.0	485.7	54.0	446726.2	19094	1368.54
4.3450	7.3	66.1	465886.4	485.3	0.0	0.0	0.0	485.3	53.9	447211.5	18675	1368.43
4.3475	7.3	66.1	465952.5	484.8	0.0	0.0	0.0	484.8	53.9	447696.3	18256	1368.31
4.3500	7.3	66.1	466018.5	484.4	0.0	0.0	0.0	484.4	53.8	448180.8	17838	1368.19
4.3525	7.3	66.0	466084.5	484.0	0.0	0.0	0.0	484.0	53.8	448664.8	17420	1368.08
4.3550	7.3	66.0	466150.5	483.6	0.0	0.0	0.0	483.6	53.7	449148.3	17002	1367.95
4.3575	7.3	66.0	466216.5	0.0	0.0	0.0	0.0	0.0	0.0	449148.3	17068	1367.97
4.3600	7.3	65.9	466282.4	0.0	0.0	0.0	0.0	0.0	0.0	449148.3	17134	1368.00
4.3625	7.3	65.9	466348.3	0.0	0.0	0.0	0.0	0.0	0.0	449148.3	17200	1368.02
4.3650	7.3	65.8	466414.1	0.0	0.0	0.0	0.0	0.0	0.0	449148.3	17266	1368.04
4.3675	7.3	65.8	466479.9	0.0	0.0	0.0	0.0	0.0	0.0	449148.3	17332	1368.05
4.3700	7.3	65.8	466545.7	0.0	0.0	0.0	0.0	0.0	0.0	449148.3	17397	1368.07
4.3725	7.3	65.7	466611.4	0.0	0.0	0.0	0.0	0.0	0.0	449148.3	17463	1368.09
4.3750	7.3	65.7	466677.1	0.0	0.0	0.0	0.0	0.0	0.0	449148.3	17529	1368.11
4.3775	7.3	65.7	466742.8	0.0	0.0	0.0	0.0	0.0	0.0	449148.3	17594	1368.13
4.3800	7.3	65.6	466808.4	0.0	0.0	0.0	0.0	0.0	0.0	449148.3	17660	1368.14
4.3825	7.3	65.6	466874.0	0.0	0.0	0.0	0.0	0.0	0.0	449148.3	17726	1368.16
4.3850	7.3	65.6	466939.6	0.0	0.0	0.0	0.0	0.0	0.0	449148.3	17791	1368.18
4.3875	7.3	65.5	467005.1	0.0	0.0	0.0	0.0	0.0	0.0	449148.3	17857	1368.20
4.3900	7.3	65.5	467070.6	0.0	0.0	0.0	0.0	0.0	0.0	449148.3	17922	1368.22
4.3925	7.3	65.5	467136.0	0.0	0.0	0.0	0.0	0.0	0.0	449148.3	17988	1368.24
4.3950	7.3	65.4	467201.5	0.0	0.0	0.0	0.0	0.0	0.0	449148.3	18053	1368.25
4.3975	7.3	65.4	467266.8	0.0	0.0	0.0	0.0	0.0	0.0	449148.3	18119	1368.27
4.4000	7.3	65.3	467332.2	0.0	0.0	0.0	0.0	0.0	0.0	449148.3	18184	1368.29
4.4025	7.3	65.3	467397.5	0.0	0.0	0.0	0.0	0.0	0.0	449148.3	18249	1368.31
4.4050	7.3	65.3	467462.8	0.0	0.0	0.0	0.0	0.0	0.0	449148.3	18314	1368.33
4.4075	7.2	65.2	467528.0	0.0	0.0	0.0	0.0	0.0	0.0	449148.3	18380	1368.35
4.4100	7.2	65.2	467593.2	0.0	0.0	0.0	0.0	0.0	0.0	449148.3	18445	1368.36

Max WS =	1380.91

	Pump Run Time			
	52.20 Min	32.70 Min	21.30 Min	0.00 Min
	4.5	5.5	7.5	0
	Pump Warmups			
	3.00 Min	3.00 Min	3.00 Min	3.00 Min
	Float Switch On/Off Elevations (ft)			
On Elev	1372.5	1373.5	1375.5	1500
Off Elev	1368	1368	1368	1400

Time (hrs)	Inflow (cfs)	Incremental Inflow Volume (cf)	Cumulative Inflow Volume (cf)	Pump 1 (cf)	Pump 2 (cf)	Pump 3 (cf)	Pump 4 (cf)	Pump Out (cf)	Outflow (cfs)	Cumulative Outflow (cf)	Total Storage (cf)	WSEL (ft)
4.4125	7.2	65.2	467658.4	0.0	0.0	0.0	0.0	0.0	0.0	449148.3	18510	1368.38
4.4150	7.2	65.1	467723.5	0.0	0.0	0.0	0.0	0.0	0.0	449148.3	18575	1368.40
4.4175	7.2	65.1	467788.6	0.0	0.0	0.0	0.0	0.0	0.0	449148.3	18640	1368.42
4.4200	7.2	65.1	467853.7	0.0	0.0	0.0	0.0	0.0	0.0	449148.3	18705	1368.44
4.4225	7.2	65.0	467918.7	0.0	0.0	0.0	0.0	0.0	0.0	449148.3	18770	1368.45
4.4250	7.2	65.0	467983.7	0.0	0.0	0.0	0.0	0.0	0.0	449148.3	18835	1368.47
4.4275	7.2	65.0	468048.7	0.0	0.0	0.0	0.0	0.0	0.0	449148.3	18900	1368.49
4.4300	7.2	64.9	468113.6	0.0	0.0	0.0	0.0	0.0	0.0	449148.3	18965	1368.51
4.4325	7.2	64.9	468178.5	0.0	0.0	0.0	0.0	0.0	0.0	449148.3	19030	1368.53
4.4350	7.2	64.8	468243.3	0.0	0.0	0.0	0.0	0.0	0.0	449148.3	19095	1368.54
4.4375	7.2	64.8	468308.1	0.0	0.0	0.0	0.0	0.0	0.0	449148.3	19160	1368.56
4.4400	7.2	64.8	468372.9	0.0	0.0	0.0	0.0	0.0	0.0	449148.3	19225	1368.58
4.4425	7.2	64.7	468437.7	0.0	0.0	0.0	0.0	0.0	0.0	449148.3	19289	1368.60
4.4450	7.2	64.7	468502.4	0.0	0.0	0.0	0.0	0.0	0.0	449148.3	19354	1368.62
4.4475	7.2	64.7	468567.0	0.0	0.0	0.0	0.0	0.0	0.0	449148.3	19419	1368.63
4.4500	7.2	64.6	468631.7	0.0	0.0	0.0	0.0	0.0	0.0	449148.3	19483	1368.65
4.4525	7.2	64.6	468696.3	0.0	0.0	0.0	0.0	0.0	0.0	449148.3	19548	1368.67
4.4550	7.2	64.6	468760.8	0.0	0.0	0.0	0.0	0.0	0.0	449148.3	19613	1368.69
4.4575	7.2	64.5	468825.4	0.0	0.0	0.0	0.0	0.0	0.0	449148.3	19677	1368.71
4.4600	7.2	64.5	468889.9	0.0	0.0	0.0	0.0	0.0	0.0	449148.3	19742	1368.72
4.4625	7.2	64.5	468954.3	0.0	0.0	0.0	0.0	0.0	0.0	449148.3	19806	1368.74
4.4650	7.2	64.4	469018.8	0.0	0.0	0.0	0.0	0.0	0.0	449148.3	19870	1368.76
4.4675	7.2	64.4	469083.1	0.0	0.0	0.0	0.0	0.0	0.0	449148.3	19935	1368.78
4.4700	7.1	64.4	469147.5	0.0	0.0	0.0	0.0	0.0	0.0	449148.3	19999	1368.80
4.4725	7.1	64.3	469211.8	0.0	0.0	0.0	0.0	0.0	0.0	449148.3	20063	1368.81
4.4750	7.1	64.3	469276.1	0.0	0.0	0.0	0.0	0.0	0.0	449148.3	20128	1368.83
4.4775	7.1	64.2	469340.3	0.0	0.0	0.0	0.0	0.0	0.0	449148.3	20192	1368.85
4.4800	7.1	64.2	469404.6	0.0	0.0	0.0	0.0	0.0	0.0	449148.3	20256	1368.87
4.4825	7.1	64.2	469468.7	0.0	0.0	0.0	0.0	0.0	0.0	449148.3	20320	1368.89
4.4850	7.1	64.1	469532.9	0.0	0.0	0.0	0.0	0.0	0.0	449148.3	20385	1368.90
4.4875	7.1	64.1	469597.0	0.0	0.0	0.0	0.0	0.0	0.0	449148.3	20449	1368.92
4.4900	7.1	64.1	469661.0	0.0	0.0	0.0	0.0	0.0	0.0	449148.3	20513	1368.94
4.4925	7.1	64.0	469725.1	0.0	0.0	0.0	0.0	0.0	0.0	449148.3	20577	1368.96
4.4950	7.1	64.0	469789.1	0.0	0.0	0.0	0.0	0.0	0.0	449148.3	20641	1368.98
4.4975	7.1	64.0	469853.0	0.0	0.0	0.0	0.0	0.0	0.0	449148.3	20705	1368.99
4.5000	7.1	63.9	469917.0	0.0	0.0	0.0	0.0	0.0	0.0	449148.3	20769	1369.01
4.5025	7.1	63.9	469980.9	0.0	0.0	0.0	0.0	0.0	0.0	449148.3	20833	1369.02
4.5050	7.1	63.9	470044.7	0.0	0.0	0.0	0.0	0.0	0.0	449148.3	20896	1369.03
4.5075	7.1	63.8	470108.5	0.0	0.0	0.0	0.0	0.0	0.0	449148.3	20960	1369.04
4.5100	7.1	63.8	470172.3	0.0	0.0	0.0	0.0	0.0	0.0	449148.3	21024	1369.05
4.5125	7.1	63.7	470236.1	0.0	0.0	0.0	0.0	0.0	0.0	449148.3	21088	1369.06
4.5150	7.1	63.7	470299.8	0.0	0.0	0.0	0.0	0.0	0.0	449148.3	21151	1369.07
4.5175	7.1	63.7	470363.5	0.0	0.0	0.0	0.0	0.0	0.0	449148.3	21215	1369.08
4.5200	7.1	63.6	470427.1	0.0	0.0	0.0	0.0	0.0	0.0	449148.3	21279	1369.09
4.5225	7.1	63.6	470490.7	0.0	0.0	0.0	0.0	0.0	0.0	449148.3	21342	1369.10
4.5250	7.1	63.6	470554.3	0.0	0.0	0.0	0.0	0.0	0.0	449148.3	21406	1369.11
4.5275	7.1	63.5	470617.8	0.0	0.0	0.0	0.0	0.0	0.0	449148.3	21469	1369.12
4.5300	7.1	63.5	470681.3	0.0	0.0	0.0	0.0	0.0	0.0	449148.3	21533	1369.13
4.5325	7.0	63.5	470744.8	0.0	0.0	0.0	0.0	0.0	0.0	449148.3	21596	1369.14
4.5350	7.0	63.4	470808.2	0.0	0.0	0.0	0.0	0.0	0.0	449148.3	21660	1369.15
4.5375	7.0	63.4	470871.6	0.0	0.0	0.0	0.0	0.0	0.0	449148.3	21723	1369.16
4.5400	7.0	63.4	470935.0	0.0	0.0	0.0	0.0	0.0	0.0	449148.3	21787	1369.17
4.5425	7.0	63.3	470998.3	0.0	0.0	0.0	0.0	0.0	0.0	449148.3	21850	1369.18
4.5450	7.0	63.3	471061.6	0.0	0.0	0.0	0.0	0.0	0.0	449148.3	21913	1369.19
4.5475	7.0	63.3	471124.8	0.0	0.0	0.0	0.0	0.0	0.0	449148.3	21976	1369.20
4.5500	7.0	63.2	471188.0	0.0	0.0	0.0	0.0	0.0	0.0	449148.3	22040	1369.21

	Pump 1	Pump 2	Pump 3	Pump 4
Pump Run Time	52.20 Min	32.70 Min	21.30 Min	0.00 Min
	4.5	5.5	7.5	0
Pump Warmups	3.00 Min	3.00 Min	3.00 Min	3.00 Min
Float Switch On/Off Elevations (ft)				
On Elev	1372.5	1373.5	1375.5	1500
Off Elev	1368	1368	1368	1400

Max WS = 1380.91

Time (hrs)	Inflow (cfs)	Incremental Inflow Volume (cf)	Cumulative Inflow Volume (cf)	Pump 1 (cf)	Pump 2 (cf)	Pump 3 (cf)	Pump 4 (cf)	Pump Out (cf)	Outflow (cfs)	Cumulative Outflow (cf)	Total Storage (cf)	WSEL (ft)
4.5525	7.0	63.2	471251.2	0.0	0.0	0.0	0.0	0.0	0.0	449148.3	22103	1369.22
4.5550	7.0	63.1	471314.4	0.0	0.0	0.0	0.0	0.0	0.0	449148.3	22166	1369.24
4.5575	7.0	63.1	471377.5	0.0	0.0	0.0	0.0	0.0	0.0	449148.3	22229	1369.25
4.5600	7.0	63.1	471440.6	0.0	0.0	0.0	0.0	0.0	0.0	449148.3	22292	1369.26
4.5625	7.0	63.0	471503.6	0.0	0.0	0.0	0.0	0.0	0.0	449148.3	22355	1369.27
4.5650	7.0	63.0	471566.6	0.0	0.0	0.0	0.0	0.0	0.0	449148.3	22418	1369.28
4.5675	7.0	63.0	471629.6	0.0	0.0	0.0	0.0	0.0	0.0	449148.3	22481	1369.29
4.5700	7.0	62.9	471692.5	0.0	0.0	0.0	0.0	0.0	0.0	449148.3	22544	1369.30
4.5725	7.0	62.9	471755.4	0.0	0.0	0.0	0.0	0.0	0.0	449148.3	22607	1369.31
4.5750	7.0	62.9	471818.3	0.0	0.0	0.0	0.0	0.0	0.0	449148.3	22670	1369.32
4.5775	7.0	62.8	471881.1	0.0	0.0	0.0	0.0	0.0	0.0	449148.3	22733	1369.33
4.5800	7.0	62.8	471943.9	0.0	0.0	0.0	0.0	0.0	0.0	449148.3	22796	1369.34
4.5825	7.0	62.8	472006.6	0.0	0.0	0.0	0.0	0.0	0.0	449148.3	22858	1369.35
4.5850	7.0	62.7	472069.3	0.0	0.0	0.0	0.0	0.0	0.0	449148.3	22921	1369.36
4.5875	7.0	62.7	472132.0	0.0	0.0	0.0	0.0	0.0	0.0	449148.3	22984	1369.37
4.5900	7.0	62.6	472194.7	0.0	0.0	0.0	0.0	0.0	0.0	449148.3	23046	1369.38
4.5925	7.0	62.6	472257.3	0.0	0.0	0.0	0.0	0.0	0.0	449148.3	23109	1369.39
4.5950	7.0	62.6	472319.9	0.0	0.0	0.0	0.0	0.0	0.0	449148.3	23172	1369.40
4.5975	6.9	62.5	472382.4	0.0	0.0	0.0	0.0	0.0	0.0	449148.3	23234	1369.41
4.6000	6.9	62.5	472444.9	0.0	0.0	0.0	0.0	0.0	0.0	449148.3	23297	1369.42
4.6025	6.9	62.5	472507.4	0.0	0.0	0.0	0.0	0.0	0.0	449148.3	23359	1369.43
4.6050	6.9	62.4	472569.8	0.0	0.0	0.0	0.0	0.0	0.0	449148.3	23421	1369.44
4.6075	6.9	62.4	472632.2	0.0	0.0	0.0	0.0	0.0	0.0	449148.3	23484	1369.45
4.6100	6.9	62.4	472694.6	0.0	0.0	0.0	0.0	0.0	0.0	449148.3	23546	1369.46
4.6125	6.9	62.3	472756.9	0.0	0.0	0.0	0.0	0.0	0.0	449148.3	23609	1369.47
4.6150	6.9	62.3	472819.2	0.0	0.0	0.0	0.0	0.0	0.0	449148.3	23671	1369.48
4.6175	6.9	62.3	472881.5	0.0	0.0	0.0	0.0	0.0	0.0	449148.3	23733	1369.49
4.6200	6.9	62.2	472943.7	0.0	0.0	0.0	0.0	0.0	0.0	449148.3	23795	1369.50
4.6225	6.9	62.2	473005.9	0.0	0.0	0.0	0.0	0.0	0.0	449148.3	23858	1369.51
4.6250	6.9	62.2	473068.0	0.0	0.0	0.0	0.0	0.0	0.0	449148.3	23920	1369.52
4.6275	6.9	62.1	473130.1	0.0	0.0	0.0	0.0	0.0	0.0	449148.3	23982	1369.53
4.6300	6.9	62.1	473192.2	0.0	0.0	0.0	0.0	0.0	0.0	449148.3	24044	1369.54
4.6325	6.9	62.0	473254.3	0.0	0.0	0.0	0.0	0.0	0.0	449148.3	24106	1369.55
4.6350	6.9	62.0	473316.3	0.0	0.0	0.0	0.0	0.0	0.0	449148.3	24168	1369.56
4.6375	6.9	62.0	473378.3	0.0	0.0	0.0	0.0	0.0	0.0	449148.3	24230	1369.57
4.6400	6.9	61.9	473440.2	0.0	0.0	0.0	0.0	0.0	0.0	449148.3	24292	1369.58
4.6425	6.9	61.9	473502.1	0.0	0.0	0.0	0.0	0.0	0.0	449148.3	24354	1369.59
4.6450	6.9	61.9	473564.0	0.0	0.0	0.0	0.0	0.0	0.0	449148.3	24416	1369.60
4.6475	6.9	61.8	473625.8	0.0	0.0	0.0	0.0	0.0	0.0	449148.3	24477	1369.61
4.6500	6.9	61.8	473687.6	0.0	0.0	0.0	0.0	0.0	0.0	449148.3	24539	1369.62
4.6525	6.9	61.8	473749.4	0.0	0.0	0.0	0.0	0.0	0.0	449148.3	24601	1369.63
4.6550	6.9	61.7	473811.1	0.0	0.0	0.0	0.0	0.0	0.0	449148.3	24663	1369.64
4.6575	6.9	61.7	473872.8	0.0	0.0	0.0	0.0	0.0	0.0	449148.3	24724	1369.65
4.6600	6.8	61.7	473934.4	0.0	0.0	0.0	0.0	0.0	0.0	449148.3	24786	1369.66
4.6625	6.8	61.6	473996.0	0.0	0.0	0.0	0.0	0.0	0.0	449148.3	24848	1369.67
4.6650	6.8	61.6	474057.6	0.0	0.0	0.0	0.0	0.0	0.0	449148.3	24909	1369.68
4.6675	6.8	61.5	474119.2	0.0	0.0	0.0	0.0	0.0	0.0	449148.3	24971	1369.69
4.6700	6.8	61.5	474180.7	0.0	0.0	0.0	0.0	0.0	0.0	449148.3	25032	1369.70
4.6725	6.8	61.5	474242.2	0.0	0.0	0.0	0.0	0.0	0.0	449148.3	25094	1369.71
4.6750	6.8	61.4	474303.6	0.0	0.0	0.0	0.0	0.0	0.0	449148.3	25155	1369.72
4.6775	6.8	61.4	474365.0	0.0	0.0	0.0	0.0	0.0	0.0	449148.3	25217	1369.73
4.6800	6.8	61.4	474426.4	0.0	0.0	0.0	0.0	0.0	0.0	449148.3	25278	1369.74
4.6825	6.8	61.3	474487.7	0.0	0.0	0.0	0.0	0.0	0.0	449148.3	25339	1369.75
4.6850	6.8	61.3	474549.0	0.0	0.0	0.0	0.0	0.0	0.0	449148.3	25401	1369.76
4.6875	6.8	61.3	474610.3	0.0	0.0	0.0	0.0	0.0	0.0	449148.3	25462	1369.77
4.6900	6.8	61.2	474671.5	0.0	0.0	0.0	0.0	0.0	0.0	449148.3	25523	1369.78

	Pump Run Time			
	52.20 Min	32.70 Min	21.30 Min	0.00 Min
	4.5	5.5	7.5	0
	Pump Warmups			
	3.00 Min	3.00 Min	3.00 Min	3.00 Min
	Float Switch On/Off Elevations (ft)			
On Elev	1372.5	1373.5	1375.5	1500
Off Elev	1368	1368	1368	1400

Max WS = 1380.91

Time (hrs)	Inflow (cfs)	Incremental Inflow Volume (cf)	Cumulative Inflow Volume (cf)	Pump 1 (cf)	Pump 2 (cf)	Pump 3 (cf)	Pump 4 (cf)	Pump Out (cf)	Outflow (cfs)	Cumulative Outflow (cf)	Total Storage (cf)	WSEL (ft)
4.6925	6.8	61.2	474732.7	0.0	0.0	0.0	0.0	0.0	0.0	449148.3	25584	1369.79
4.6950	6.8	61.2	474793.9	0.0	0.0	0.0	0.0	0.0	0.0	449148.3	25646	1369.80
4.6975	6.8	61.1	474855.0	0.0	0.0	0.0	0.0	0.0	0.0	449148.3	25707	1369.81
4.7000	6.8	61.1	474916.1	0.0	0.0	0.0	0.0	0.0	0.0	449148.3	25768	1369.82
4.7025	6.8	61.1	474977.1	0.0	0.0	0.0	0.0	0.0	0.0	449148.3	25829	1369.83
4.7050	6.8	61.0	475038.1	0.0	0.0	0.0	0.0	0.0	0.0	449148.3	25890	1369.84
4.7075	6.8	61.0	475099.1	0.0	0.0	0.0	0.0	0.0	0.0	449148.3	25951	1369.85
4.7100	6.8	60.9	475160.1	0.0	0.0	0.0	0.0	0.0	0.0	449148.3	26012	1369.86
4.7125	6.8	60.9	475221.0	0.0	0.0	0.0	0.0	0.0	0.0	449148.3	26073	1369.87
4.7150	6.8	60.9	475281.8	0.0	0.0	0.0	0.0	0.0	0.0	449148.3	26133	1369.88
4.7175	6.8	60.8	475342.7	0.0	0.0	0.0	0.0	0.0	0.0	449148.3	26194	1369.89
4.7200	6.8	60.8	475403.5	0.0	0.0	0.0	0.0	0.0	0.0	449148.3	26255	1369.90
4.7225	6.7	60.8	475464.2	0.0	0.0	0.0	0.0	0.0	0.0	449148.3	26316	1369.91
4.7250	6.7	60.7	475525.0	0.0	0.0	0.0	0.0	0.0	0.0	449148.3	26377	1369.92
4.7275	6.7	60.7	475585.7	0.0	0.0	0.0	0.0	0.0	0.0	449148.3	26437	1369.93
4.7300	6.7	60.7	475646.3	0.0	0.0	0.0	0.0	0.0	0.0	449148.3	26498	1369.94
4.7325	6.7	60.6	475707.0	0.0	0.0	0.0	0.0	0.0	0.0	449148.3	26559	1369.95
4.7350	6.7	60.6	475767.5	0.0	0.0	0.0	0.0	0.0	0.0	449148.3	26619	1369.96
4.7375	6.7	60.6	475828.1	0.0	0.0	0.0	0.0	0.0	0.0	449148.3	26680	1369.97
4.7400	6.7	60.5	475888.6	0.0	0.0	0.0	0.0	0.0	0.0	449148.3	26740	1369.98
4.7425	6.7	60.5	475949.1	0.0	0.0	0.0	0.0	0.0	0.0	449148.3	26801	1369.99
4.7450	6.7	60.4	476009.5	0.0	0.0	0.0	0.0	0.0	0.0	449148.3	26861	1370.00
4.7475	6.7	60.4	476070.0	0.0	0.0	0.0	0.0	0.0	0.0	449148.3	26922	1370.01
4.7500	6.7	60.4	476130.3	0.0	0.0	0.0	0.0	0.0	0.0	449148.3	26982	1370.02
4.7525	6.7	60.3	476190.7	0.0	0.0	0.0	0.0	0.0	0.0	449148.3	27042	1370.02
4.7550	6.7	60.3	476251.0	0.0	0.0	0.0	0.0	0.0	0.0	449148.3	27103	1370.03
4.7575	6.7	60.3	476311.3	0.0	0.0	0.0	0.0	0.0	0.0	449148.3	27163	1370.04
4.7600	6.7	60.2	476371.5	0.0	0.0	0.0	0.0	0.0	0.0	449148.3	27223	1370.05
4.7625	6.7	60.2	476431.7	0.0	0.0	0.0	0.0	0.0	0.0	449148.3	27283	1370.05
4.7650	6.7	60.2	476491.8	0.0	0.0	0.0	0.0	0.0	0.0	449148.3	27344	1370.06
4.7675	6.7	60.1	476552.0	0.0	0.0	0.0	0.0	0.0	0.0	449148.3	27404	1370.07
4.7700	6.7	60.1	476612.1	0.0	0.0	0.0	0.0	0.0	0.0	449148.3	27464	1370.07
4.7725	6.7	60.1	476672.1	0.0	0.0	0.0	0.0	0.0	0.0	449148.3	27524	1370.08
4.7750	6.7	60.0	476732.1	0.0	0.0	0.0	0.0	0.0	0.0	449148.3	27584	1370.09
4.7775	6.7	60.0	476792.1	0.0	0.0	0.0	0.0	0.0	0.0	449148.3	27644	1370.10
4.7800	6.7	60.0	476852.1	0.0	0.0	0.0	0.0	0.0	0.0	449148.3	27704	1370.10
4.7825	6.7	59.9	476912.0	0.0	0.0	0.0	0.0	0.0	0.0	449148.3	27764	1370.11
4.7850	6.7	59.9	476971.9	0.0	0.0	0.0	0.0	0.0	0.0	449148.3	27824	1370.12
4.7875	6.6	59.8	477031.7	0.0	0.0	0.0	0.0	0.0	0.0	449148.3	27883	1370.13
4.7900	6.6	59.8	477091.5	0.0	0.0	0.0	0.0	0.0	0.0	449148.3	27943	1370.13
4.7925	6.6	59.8	477151.3	0.0	0.0	0.0	0.0	0.0	0.0	449148.3	28003	1370.14
4.7950	6.6	59.7	477211.0	0.0	0.0	0.0	0.0	0.0	0.0	449148.3	28063	1370.15
4.7975	6.6	59.7	477270.7	0.0	0.0	0.0	0.0	0.0	0.0	449148.3	28122	1370.15
4.8000	6.6	59.7	477330.4	0.0	0.0	0.0	0.0	0.0	0.0	449148.3	28182	1370.16
4.8025	6.6	59.6	477390.0	0.0	0.0	0.0	0.0	0.0	0.0	449148.3	28242	1370.17
4.8050	6.6	59.6	477449.6	0.0	0.0	0.0	0.0	0.0	0.0	449148.3	28301	1370.18
4.8075	6.6	59.6	477509.2	0.0	0.0	0.0	0.0	0.0	0.0	449148.3	28361	1370.18
4.8100	6.6	59.5	477568.7	0.0	0.0	0.0	0.0	0.0	0.0	449148.3	28420	1370.19
4.8125	6.6	59.5	477628.2	0.0	0.0	0.0	0.0	0.0	0.0	449148.3	28480	1370.20
4.8150	6.6	59.5	477687.7	0.0	0.0	0.0	0.0	0.0	0.0	449148.3	28539	1370.20
4.8175	6.6	59.4	477747.1	0.0	0.0	0.0	0.0	0.0	0.0	449148.3	28599	1370.21
4.8200	6.6	59.4	477806.5	0.0	0.0	0.0	0.0	0.0	0.0	449148.3	28658	1370.22
4.8225	6.6	59.3	477865.8	0.0	0.0	0.0	0.0	0.0	0.0	449148.3	28717	1370.23
4.8250	6.6	59.3	477925.1	0.0	0.0	0.0	0.0	0.0	0.0	449148.3	28777	1370.23
4.8275	6.6	59.3	477984.4	0.0	0.0	0.0	0.0	0.0	0.0	449148.3	28836	1370.24
4.8300	6.6	59.2	478043.6	0.0	0.0	0.0	0.0	0.0	0.0	449148.3	28895	1370.25

	Pump 1	Pump 2	Pump 3	Pump 4
Pump Run Time	52.20 Min	32.70 Min	21.30 Min	0.00 Min
	4.5	5.5	7.5	0
Pump Warmups	3.00 Min	3.00 Min	3.00 Min	3.00 Min
Float Switch On/Off Elevations (ft)				
On Elev	1372.5	1373.5	1375.5	1500
Off Elev	1368	1368	1368	1400

Max WS = 1380.91

Time (hrs)	Inflow (cfs)	Incremental Inflow Volume (cf)	Cumulative Inflow Volume (cf)	Pump 1 (cf)	Pump 2 (cf)	Pump 3 (cf)	Pump 4 (cf)	Pump Out (cf)	Outflow (cfs)	Cumulative Outflow (cf)	Total Storage (cf)	WSEL (ft)
4.8325	6.6	59.2	478102.8	0.0	0.0	0.0	0.0	0.0	0.0	449148.3	28954	1370.25
4.8350	6.6	59.2	478162.0	0.0	0.0	0.0	0.0	0.0	0.0	449148.3	29014	1370.26
4.8375	6.6	59.1	478221.1	0.0	0.0	0.0	0.0	0.0	0.0	449148.3	29073	1370.27
4.8400	6.6	59.1	478280.2	0.0	0.0	0.0	0.0	0.0	0.0	449148.3	29132	1370.27
4.8425	6.6	59.1	478339.3	0.0	0.0	0.0	0.0	0.0	0.0	449148.3	29191	1370.28
4.8450	6.6	59.0	478398.3	0.0	0.0	0.0	0.0	0.0	0.0	449148.3	29250	1370.29
4.8475	6.6	59.0	478457.3	0.0	0.0	0.0	0.0	0.0	0.0	449148.3	29309	1370.30
4.8500	6.5	59.0	478516.3	0.0	0.0	0.0	0.0	0.0	0.0	449148.3	29368	1370.30
4.8525	6.5	58.9	478575.2	0.0	0.0	0.0	0.0	0.0	0.0	449148.3	29427	1370.31
4.8550	6.5	58.9	478634.1	0.0	0.0	0.0	0.0	0.0	0.0	449148.3	29486	1370.32
4.8575	6.5	58.8	478692.9	0.0	0.0	0.0	0.0	0.0	0.0	449148.3	29545	1370.32
4.8600	6.5	58.8	478751.7	0.0	0.0	0.0	0.0	0.0	0.0	449148.3	29603	1370.33
4.8625	6.5	58.8	478810.5	0.0	0.0	0.0	0.0	0.0	0.0	449148.3	29662	1370.34
4.8650	6.5	58.7	478869.3	0.0	0.0	0.0	0.0	0.0	0.0	449148.3	29721	1370.35
4.8675	6.5	58.7	478928.0	0.0	0.0	0.0	0.0	0.0	0.0	449148.3	29780	1370.35
4.8700	6.5	58.7	478986.6	0.0	0.0	0.0	0.0	0.0	0.0	449148.3	29838	1370.36
4.8725	6.5	58.6	479045.3	0.0	0.0	0.0	0.0	0.0	0.0	449148.3	29897	1370.37
4.8750	6.5	58.6	479103.9	0.0	0.0	0.0	0.0	0.0	0.0	449148.3	29956	1370.37
4.8775	6.5	58.6	479162.4	0.0	0.0	0.0	0.0	0.0	0.0	449148.3	30014	1370.38
4.8800	6.5	58.5	479221.0	0.0	0.0	0.0	0.0	0.0	0.0	449148.3	30073	1370.39
4.8825	6.5	58.5	479279.5	0.0	0.0	0.0	0.0	0.0	0.0	449148.3	30131	1370.39
4.8850	6.5	58.5	479337.9	0.0	0.0	0.0	0.0	0.0	0.0	449148.3	30190	1370.40
4.8875	6.5	58.4	479396.4	0.0	0.0	0.0	0.0	0.0	0.0	449148.3	30248	1370.41
4.8900	6.5	58.4	479454.7	0.0	0.0	0.0	0.0	0.0	0.0	449148.3	30306	1370.42
4.8925	6.5	58.4	479513.1	0.0	0.0	0.0	0.0	0.0	0.0	449148.3	30365	1370.42
4.8950	6.5	58.3	479571.4	0.0	0.0	0.0	0.0	0.0	0.0	449148.3	30423	1370.43
4.8975	6.5	58.3	479629.7	0.0	0.0	0.0	0.0	0.0	0.0	449148.3	30481	1370.44
4.9000	6.5	58.2	479687.9	0.0	0.0	0.0	0.0	0.0	0.0	449148.3	30540	1370.44
4.9025	6.5	58.2	479746.1	0.0	0.0	0.0	0.0	0.0	0.0	449148.3	30598	1370.45
4.9050	6.5	58.2	479804.3	0.0	0.0	0.0	0.0	0.0	0.0	449148.3	30656	1370.46
4.9075	6.5	58.1	479862.5	0.0	0.0	0.0	0.0	0.0	0.0	449148.3	30714	1370.46
4.9100	6.5	58.1	479920.6	0.0	0.0	0.0	0.0	0.0	0.0	449148.3	30772	1370.47
4.9125	6.5	58.1	479978.6	0.0	0.0	0.0	0.0	0.0	0.0	449148.3	30830	1370.48
4.9150	6.4	58.0	480036.7	0.0	0.0	0.0	0.0	0.0	0.0	449148.3	30888	1370.49
4.9175	6.4	58.0	480094.7	0.0	0.0	0.0	0.0	0.0	0.0	449148.3	30946	1370.49
4.9200	6.4	58.0	480152.6	0.0	0.0	0.0	0.0	0.0	0.0	449148.3	31004	1370.50
4.9225	6.4	57.9	480210.6	0.0	0.0	0.0	0.0	0.0	0.0	449148.3	31062	1370.51
4.9250	6.4	57.9	480268.4	0.0	0.0	0.0	0.0	0.0	0.0	449148.3	31120	1370.51
4.9275	6.4	57.9	480326.3	0.0	0.0	0.0	0.0	0.0	0.0	449148.3	31178	1370.52
4.9300	6.4	57.8	480384.1	0.0	0.0	0.0	0.0	0.0	0.0	449148.3	31236	1370.53
4.9325	6.4	57.8	480441.9	0.0	0.0	0.0	0.0	0.0	0.0	449148.3	31294	1370.53
4.9350	6.4	57.7	480499.7	0.0	0.0	0.0	0.0	0.0	0.0	449148.3	31351	1370.54
4.9375	6.4	57.7	480557.4	0.0	0.0	0.0	0.0	0.0	0.0	449148.3	31409	1370.55
4.9400	6.4	57.7	480615.0	0.0	0.0	0.0	0.0	0.0	0.0	449148.3	31467	1370.55
4.9425	6.4	57.6	480672.7	0.0	0.0	0.0	0.0	0.0	0.0	449148.3	31524	1370.56
4.9450	6.4	57.6	480730.3	0.0	0.0	0.0	0.0	0.0	0.0	449148.3	31582	1370.57
4.9475	6.4	57.6	480787.9	0.0	0.0	0.0	0.0	0.0	0.0	449148.3	31640	1370.58
4.9500	6.4	57.5	480845.4	0.0	0.0	0.0	0.0	0.0	0.0	449148.3	31697	1370.58
4.9525	6.4	57.5	480902.9	0.0	0.0	0.0	0.0	0.0	0.0	449148.3	31755	1370.59
4.9550	6.4	57.5	480960.4	0.0	0.0	0.0	0.0	0.0	0.0	449148.3	31812	1370.60
4.9575	6.4	57.4	481017.8	0.0	0.0	0.0	0.0	0.0	0.0	449148.3	31869	1370.60
4.9600	6.4	57.4	481075.2	0.0	0.0	0.0	0.0	0.0	0.0	449148.3	31927	1370.61
4.9625	6.4	57.4	481132.5	0.0	0.0	0.0	0.0	0.0	0.0	449148.3	31984	1370.62
4.9650	6.4	57.3	481189.9	0.0	0.0	0.0	0.0	0.0	0.0	449148.3	32042	1370.62
4.9675	6.4	57.3	481247.2	0.0	0.0	0.0	0.0	0.0	0.0	449148.3	32099	1370.63
4.9700	6.4	57.3	481304.4	0.0	0.0	0.0	0.0	0.0	0.0	449148.3	32156	1370.64

Pump Run Time			
52.20 Min	32.70 Min	21.30 Min	0.00 Min
4.5	5.5	7.5	0
Pump Warmups			
3.00 Min	3.00 Min	3.00 Min	3.00 Min
Float Switch On/Off Elevations (ft)			
On Elev 1372.5	1373.5	1375.5	1500
Off Elev 1368	1368	1368	1400

Max WS = 1380.91

Time (hrs)	Inflow (cfs)	Incremental Inflow Volume (cf)	Cumulative Inflow Volume (cf)	Pump 1 (cf)	Pump 2 (cf)	Pump 3 (cf)	Pump 4 (cf)	Pump Out (cf)	Outflow (cfs)	Cumulative Outflow (cf)	Total Storage (cf)	WSEL (ft)
4.9725	6.4	57.2	481361.6	0.0	0.0	0.0	0.0	0.0	0.0	449148.3	32213	1370.64
4.9750	6.4	57.2	481418.8	0.0	0.0	0.0	0.0	0.0	0.0	449148.3	32270	1370.65
4.9775	6.3	57.1	481475.9	0.0	0.0	0.0	0.0	0.0	0.0	449148.3	32328	1370.66
4.9800	6.3	57.1	481533.1	0.0	0.0	0.0	0.0	0.0	0.0	449148.3	32385	1370.66
4.9825	6.3	57.1	481590.1	0.0	0.0	0.0	0.0	0.0	0.0	449148.3	32442	1370.67
4.9850	6.3	57.0	481647.2	0.0	0.0	0.0	0.0	0.0	0.0	449148.3	32499	1370.68
4.9875	6.3	57.0	481704.2	0.0	0.0	0.0	0.0	0.0	0.0	449148.3	32556	1370.69
4.9900	6.3	57.0	481761.1	0.0	0.0	0.0	0.0	0.0	0.0	449148.3	32613	1370.69
4.9925	6.3	56.9	481818.1	0.0	0.0	0.0	0.0	0.0	0.0	449148.3	32670	1370.70
4.9950	6.3	56.9	481875.0	0.0	0.0	0.0	0.0	0.0	0.0	449148.3	32727	1370.71
4.9975	6.3	56.9	481931.8	0.0	0.0	0.0	0.0	0.0	0.0	449148.3	32783	1370.71
5.0000	6.3	56.8	481988.7	0.0	0.0	0.0	0.0	0.0	0.0	449148.3	32840	1370.72
5.0025	6.3	56.8	482045.4	0.0	0.0	0.0	0.0	0.0	0.0	449148.3	32897	1370.73
5.0050	6.3	56.8	482102.2	0.0	0.0	0.0	0.0	0.0	0.0	449148.3	32954	1370.73
5.0075	6.3	56.7	482158.9	0.0	0.0	0.0	0.0	0.0	0.0	449148.3	33011	1370.74
5.0100	6.3	56.7	482215.6	0.0	0.0	0.0	0.0	0.0	0.0	449148.3	33067	1370.75
5.0125	6.3	56.6	482272.3	0.0	0.0	0.0	0.0	0.0	0.0	449148.3	33124	1370.75
5.0150	6.3	56.6	482328.9	0.0	0.0	0.0	0.0	0.0	0.0	449148.3	33181	1370.76
5.0175	6.3	56.6	482385.4	0.0	0.0	0.0	0.0	0.0	0.0	449148.3	33237	1370.77
5.0200	6.3	56.5	482442.0	0.0	0.0	0.0	0.0	0.0	0.0	449148.3	33294	1370.77
5.0225	6.3	56.5	482498.5	0.0	0.0	0.0	0.0	0.0	0.0	449148.3	33350	1370.78
5.0250	6.3	56.5	482555.0	0.0	0.0	0.0	0.0	0.0	0.0	449148.3	33407	1370.79
5.0275	6.3	56.4	482611.4	0.0	0.0	0.0	0.0	0.0	0.0	449148.3	33463	1370.79
5.0300	6.3	56.4	482667.8	0.0	0.0	0.0	0.0	0.0	0.0	449148.3	33519	1370.80
5.0325	6.3	56.4	482724.2	0.0	0.0	0.0	0.0	0.0	0.0	449148.3	33576	1370.81
5.0350	6.3	56.3	482780.5	0.0	0.0	0.0	0.0	0.0	0.0	449148.3	33632	1370.81
5.0375	6.3	56.3	482836.8	0.0	0.0	0.0	0.0	0.0	0.0	449148.3	33688	1370.82
5.0400	6.2	56.3	482893.0	0.0	0.0	0.0	0.0	0.0	0.0	449148.3	33745	1370.83
5.0425	6.2	56.2	482949.3	0.0	0.0	0.0	0.0	0.0	0.0	449148.3	33801	1370.83
5.0450	6.2	56.2	483005.5	0.0	0.0	0.0	0.0	0.0	0.0	449148.3	33857	1370.84
5.0475	6.2	56.2	483061.6	0.0	0.0	0.0	0.0	0.0	0.0	449148.3	33913	1370.85
5.0500	6.2	56.1	483117.7	0.0	0.0	0.0	0.0	0.0	0.0	449148.3	33969	1370.85
5.0525	6.2	56.1	483173.8	0.0	0.0	0.0	0.0	0.0	0.0	449148.3	34025	1370.86
5.0550	6.2	56.0	483229.8	0.0	0.0	0.0	0.0	0.0	0.0	449148.3	34082	1370.87
5.0575	6.2	56.0	483285.9	0.0	0.0	0.0	0.0	0.0	0.0	449148.3	34138	1370.88
5.0600	6.2	56.0	483341.8	0.0	0.0	0.0	0.0	0.0	0.0	449148.3	34193	1370.88
5.0625	6.2	55.9	483397.8	0.0	0.0	0.0	0.0	0.0	0.0	449148.3	34249	1370.89
5.0650	6.2	55.9	483453.7	0.0	0.0	0.0	0.0	0.0	0.0	449148.3	34305	1370.90
5.0675	6.2	55.9	483509.5	0.0	0.0	0.0	0.0	0.0	0.0	449148.3	34361	1370.90
5.0700	6.2	55.8	483565.4	0.0	0.0	0.0	0.0	0.0	0.0	449148.3	34417	1370.91
5.0725	6.2	55.8	483621.2	0.0	0.0	0.0	0.0	0.0	0.0	449148.3	34473	1370.92
5.0750	6.2	55.8	483676.9	0.0	0.0	0.0	0.0	0.0	0.0	449148.3	34529	1370.92
5.0775	6.2	55.7	483732.6	0.0	0.0	0.0	0.0	0.0	0.0	449148.3	34584	1370.93
5.0800	6.2	55.7	483788.3	0.0	0.0	0.0	0.0	0.0	0.0	449148.3	34640	1370.94
5.0825	6.2	55.7	483844.0	0.0	0.0	0.0	0.0	0.0	0.0	449148.3	34696	1370.94
5.0850	6.2	55.6	483899.6	0.0	0.0	0.0	0.0	0.0	0.0	449148.3	34751	1370.95
5.0875	6.2	55.6	483955.2	0.0	0.0	0.0	0.0	0.0	0.0	449148.3	34807	1370.96
5.0900	6.2	55.5	484010.7	0.0	0.0	0.0	0.0	0.0	0.0	449148.3	34862	1370.96
5.0925	6.2	55.5	484066.3	0.0	0.0	0.0	0.0	0.0	0.0	449148.3	34918	1370.97
5.0950	6.2	55.5	484121.7	0.0	0.0	0.0	0.0	0.0	0.0	449148.3	34973	1370.98
5.0975	6.2	55.4	484177.2	0.0	0.0	0.0	0.0	0.0	0.0	449148.3	35029	1370.98
5.1000	6.2	55.4	484232.6	0.0	0.0	0.0	0.0	0.0	0.0	449148.3	35084	1370.99
5.1025	6.2	55.4	484287.9	0.0	0.0	0.0	0.0	0.0	0.0	449148.3	35140	1371.00
5.1050	6.1	55.3	484343.3	0.0	0.0	0.0	0.0	0.0	0.0	449148.3	35195	1371.00
5.1075	6.1	55.3	484398.6	0.0	0.0	0.0	0.0	0.0	0.0	449148.3	35250	1371.01
5.1100	6.1	55.3	484453.8	0.0	0.0	0.0	0.0	0.0	0.0	449148.3	35306	1371.01

	Pump Run Time			
	52.20 Min	32.70 Min	21.30 Min	0.00 Min
	4.5	5.5	7.5	0
	Pump Warmups			
	3.00 Min	3.00 Min	3.00 Min	3.00 Min
	Float Switch On/Off Elevations (ft)			
On Elev	1372.5	1373.5	1375.5	1500
Off Elev	1368	1368	1368	1400

Max WS = 1380.91

Time (hrs)	Inflow (cfs)	Incremental Inflow Volume (cf)	Cumulative Inflow Volume (cf)	Pump 1 (cf)	Pump 2 (cf)	Pump 3 (cf)	Pump 4 (cf)	Pump Out (cf)	Outflow (cfs)	Cumulative Outflow (cf)	Total Storage (cf)	WSEL (ft)
5.1125	6.1	55.2	484509.1	0.0	0.0	0.0	0.0	0.0	0.0	449148.3	35361	1371.02
5.1150	6.1	55.2	484564.3	0.0	0.0	0.0	0.0	0.0	0.0	449148.3	35416	1371.03
5.1175	6.1	55.2	484619.4	0.0	0.0	0.0	0.0	0.0	0.0	449148.3	35471	1371.03
5.1200	6.1	55.1	484674.5	0.0	0.0	0.0	0.0	0.0	0.0	449148.3	35526	1371.04
5.1225	6.1	55.1	484729.6	0.0	0.0	0.0	0.0	0.0	0.0	449148.3	35581	1371.04
5.1250	6.1	55.1	484784.7	0.0	0.0	0.0	0.0	0.0	0.0	449148.3	35636	1371.05
5.1275	6.1	55.0	484839.7	0.0	0.0	0.0	0.0	0.0	0.0	449148.3	35691	1371.05
5.1300	6.1	55.0	484894.7	0.0	0.0	0.0	0.0	0.0	0.0	449148.3	35746	1371.06
5.1325	6.1	54.9	484949.6	0.0	0.0	0.0	0.0	0.0	0.0	449148.3	35801	1371.07
5.1350	6.1	54.9	485004.5	0.0	0.0	0.0	0.0	0.0	0.0	449148.3	35856	1371.07
5.1375	6.1	54.9	485059.4	0.0	0.0	0.0	0.0	0.0	0.0	449148.3	35911	1371.08
5.1400	6.1	54.8	485114.2	0.0	0.0	0.0	0.0	0.0	0.0	449148.3	35966	1371.08
5.1425	6.1	54.8	485169.0	0.0	0.0	0.0	0.0	0.0	0.0	449148.3	36021	1371.09
5.1450	6.1	54.8	485223.8	0.0	0.0	0.0	0.0	0.0	0.0	449148.3	36075	1371.10
5.1475	6.1	54.7	485278.5	0.0	0.0	0.0	0.0	0.0	0.0	449148.3	36130	1371.10
5.1500	6.1	54.7	485333.2	0.0	0.0	0.0	0.0	0.0	0.0	449148.3	36185	1371.11
5.1525	6.1	54.7	485387.9	0.0	0.0	0.0	0.0	0.0	0.0	449148.3	36240	1371.11
5.1550	6.1	54.6	485442.5	0.0	0.0	0.0	0.0	0.0	0.0	449148.3	36294	1371.12
5.1575	6.1	54.6	485497.1	0.0	0.0	0.0	0.0	0.0	0.0	449148.3	36349	1371.12
5.1600	6.1	54.6	485551.7	0.0	0.0	0.0	0.0	0.0	0.0	449148.3	36403	1371.13
5.1625	6.1	54.5	485606.2	0.0	0.0	0.0	0.0	0.0	0.0	449148.3	36458	1371.14
5.1650	6.1	54.5	485660.7	0.0	0.0	0.0	0.0	0.0	0.0	449148.3	36512	1371.14
5.1675	6.0	54.4	485715.1	0.0	0.0	0.0	0.0	0.0	0.0	449148.3	36567	1371.15
5.1700	6.0	54.4	485769.5	0.0	0.0	0.0	0.0	0.0	0.0	449148.3	36621	1371.15
5.1725	6.0	54.4	485823.9	0.0	0.0	0.0	0.0	0.0	0.0	449148.3	36676	1371.16
5.1750	6.0	54.3	485878.2	0.0	0.0	0.0	0.0	0.0	0.0	449148.3	36730	1371.17
5.1775	6.0	54.3	485932.5	0.0	0.0	0.0	0.0	0.0	0.0	449148.3	36784	1371.17
5.1800	6.0	54.3	485986.8	0.0	0.0	0.0	0.0	0.0	0.0	449148.3	36838	1371.18
5.1825	6.0	54.2	486041.0	0.0	0.0	0.0	0.0	0.0	0.0	449148.3	36893	1371.18
5.1850	6.0	54.2	486095.2	0.0	0.0	0.0	0.0	0.0	0.0	449148.3	36947	1371.19
5.1875	6.0	54.2	486149.4	0.0	0.0	0.0	0.0	0.0	0.0	449148.3	37001	1371.19
5.1900	6.0	54.1	486203.5	0.0	0.0	0.0	0.0	0.0	0.0	449148.3	37055	1371.20
5.1925	6.0	54.1	486257.6	0.0	0.0	0.0	0.0	0.0	0.0	449148.3	37109	1371.21
5.1950	6.0	54.1	486311.7	0.0	0.0	0.0	0.0	0.0	0.0	449148.3	37163	1371.21
5.1975	6.0	54.0	486365.7	0.0	0.0	0.0	0.0	0.0	0.0	449148.3	37217	1371.22
5.2000	6.0	54.0	486419.7	0.0	0.0	0.0	0.0	0.0	0.0	449148.3	37271	1371.22
5.2025	6.0	53.9	486473.6	0.0	0.0	0.0	0.0	0.0	0.0	449148.3	37325	1371.23
5.2050	6.0	53.9	486527.5	0.0	0.0	0.0	0.0	0.0	0.0	449148.3	37379	1371.23
5.2075	6.0	53.9	486581.4	0.0	0.0	0.0	0.0	0.0	0.0	449148.3	37433	1371.24
5.2100	6.0	53.8	486635.3	0.0	0.0	0.0	0.0	0.0	0.0	449148.3	37487	1371.25
5.2125	6.0	53.8	486689.1	0.0	0.0	0.0	0.0	0.0	0.0	449148.3	37541	1371.25
5.2150	6.0	53.8	486742.9	0.0	0.0	0.0	0.0	0.0	0.0	449148.3	37595	1371.26
5.2175	6.0	53.7	486796.6	0.0	0.0	0.0	0.0	0.0	0.0	449148.3	37648	1371.26
5.2200	6.0	53.7	486850.3	0.0	0.0	0.0	0.0	0.0	0.0	449148.3	37702	1371.27
5.2225	6.0	53.7	486904.0	0.0	0.0	0.0	0.0	0.0	0.0	449148.3	37756	1371.27
5.2250	6.0	53.6	486957.6	0.0	0.0	0.0	0.0	0.0	0.0	449148.3	37809	1371.28
5.2275	6.0	53.6	487011.2	0.0	0.0	0.0	0.0	0.0	0.0	449148.3	37863	1371.29
5.2300	5.9	53.6	487064.7	0.0	0.0	0.0	0.0	0.0	0.0	449148.3	37916	1371.29
5.2325	5.9	53.5	487118.3	0.0	0.0	0.0	0.0	0.0	0.0	449148.3	37970	1371.30
5.2350	5.9	53.5	487171.8	0.0	0.0	0.0	0.0	0.0	0.0	449148.3	38023	1371.30
5.2375	5.9	53.5	487225.2	0.0	0.0	0.0	0.0	0.0	0.0	449148.3	38077	1371.31
5.2400	5.9	53.4	487278.6	0.0	0.0	0.0	0.0	0.0	0.0	449148.3	38130	1371.31
5.2425	5.9	53.4	487332.0	0.0	0.0	0.0	0.0	0.0	0.0	449148.3	38184	1371.32
5.2450	5.9	53.3	487385.3	0.0	0.0	0.0	0.0	0.0	0.0	449148.3	38237	1371.33
5.2475	5.9	53.3	487438.7	0.0	0.0	0.0	0.0	0.0	0.0	449148.3	38290	1371.33
5.2500	5.9	53.3	487491.9	0.0	0.0	0.0	0.0	0.0	0.0	449148.3	38344	1371.34

	Pump 1	Pump 2	Pump 3	Pump 4
Pump Run Time	52.20 Min	32.70 Min	21.30 Min	0.00 Min
	4.5	5.5	7.5	0
Pump Warmups	3.00 Min	3.00 Min	3.00 Min	3.00 Min
Float Switch On/Off Elevations (ft)				
On Elev	1372.5	1373.5	1375.5	1500
Off Elev	1368	1368	1368	1400

Max WS = 1380.91

Time (hrs)	Inflow (cfs)	Incremental Inflow Volume (cf)	Cumulative Inflow Volume (cf)	Pump 1 (cf)	Pump 2 (cf)	Pump 3 (cf)	Pump 4 (cf)	Pump Out (cf)	Outflow (cfs)	Cumulative Outflow (cf)	Total Storage (cf)	WSEL (ft)
5.2525	5.9	53.2	487545.2	0.0	0.0	0.0	0.0	0.0	0.0	449148.3	38397	1371.34
5.2550	5.9	53.2	487598.4	0.0	0.0	0.0	0.0	0.0	0.0	449148.3	38450	1371.35
5.2575	5.9	53.2	487651.5	0.0	0.0	0.0	0.0	0.0	0.0	449148.3	38503	1371.35
5.2600	5.9	53.1	487704.7	0.0	0.0	0.0	0.0	0.0	0.0	449148.3	38556	1371.36
5.2625	5.9	53.1	487757.8	0.0	0.0	0.0	0.0	0.0	0.0	449148.3	38609	1371.37
5.2650	5.9	53.1	487810.8	0.0	0.0	0.0	0.0	0.0	0.0	449148.3	38663	1371.37
5.2675	5.9	53.0	487863.9	0.0	0.0	0.0	0.0	0.0	0.0	449148.3	38716	1371.38
5.2700	5.9	53.0	487916.9	0.0	0.0	0.0	0.0	0.0	0.0	449148.3	38769	1371.38
5.2725	5.9	53.0	487969.8	0.0	0.0	0.0	0.0	0.0	0.0	449148.3	38821	1371.39
5.2750	5.9	52.9	488022.7	0.0	0.0	0.0	0.0	0.0	0.0	449148.3	38874	1371.39
5.2775	5.9	52.9	488075.6	0.0	0.0	0.0	0.0	0.0	0.0	449148.3	38927	1371.40
5.2800	5.9	52.8	488128.5	0.0	0.0	0.0	0.0	0.0	0.0	449148.3	38980	1371.41
5.2825	5.9	52.8	488181.3	0.0	0.0	0.0	0.0	0.0	0.0	449148.3	39033	1371.41
5.2850	5.9	52.8	488234.1	0.0	0.0	0.0	0.0	0.0	0.0	449148.3	39086	1371.42
5.2875	5.9	52.7	488286.8	0.0	0.0	0.0	0.0	0.0	0.0	449148.3	39138	1371.42
5.2900	5.9	52.7	488339.5	0.0	0.0	0.0	0.0	0.0	0.0	449148.3	39191	1371.43
5.2925	5.9	52.7	488392.2	0.0	0.0	0.0	0.0	0.0	0.0	449148.3	39244	1371.43
5.2950	5.8	52.6	488444.8	0.0	0.0	0.0	0.0	0.0	0.0	449148.3	39296	1371.44
5.2975	5.8	52.6	488497.4	0.0	0.0	0.0	0.0	0.0	0.0	449148.3	39349	1371.44
5.3000	5.8	52.6	488550.0	0.0	0.0	0.0	0.0	0.0	0.0	449148.3	39402	1371.45
5.3025	5.8	52.5	488602.5	0.0	0.0	0.0	0.0	0.0	0.0	449148.3	39454	1371.46
5.3050	5.8	52.5	488655.0	0.0	0.0	0.0	0.0	0.0	0.0	449148.3	39507	1371.46
5.3075	5.8	52.5	488707.5	0.0	0.0	0.0	0.0	0.0	0.0	449148.3	39559	1371.47
5.3100	5.8	52.4	488759.9	0.0	0.0	0.0	0.0	0.0	0.0	449148.3	39612	1371.47
5.3125	5.8	52.4	488812.3	0.0	0.0	0.0	0.0	0.0	0.0	449148.3	39664	1371.48
5.3150	5.8	52.4	488864.6	0.0	0.0	0.0	0.0	0.0	0.0	449148.3	39716	1371.48
5.3175	5.8	52.3	488916.9	0.0	0.0	0.0	0.0	0.0	0.0	449148.3	39769	1371.49
5.3200	5.8	52.3	488969.2	0.0	0.0	0.0	0.0	0.0	0.0	449148.3	39821	1371.50
5.3225	5.8	52.2	489021.5	0.0	0.0	0.0	0.0	0.0	0.0	449148.3	39873	1371.50
5.3250	5.8	52.2	489073.7	0.0	0.0	0.0	0.0	0.0	0.0	449148.3	39925	1371.51
5.3275	5.8	52.2	489125.9	0.0	0.0	0.0	0.0	0.0	0.0	449148.3	39978	1371.51
5.3300	5.8	52.1	489178.0	0.0	0.0	0.0	0.0	0.0	0.0	449148.3	40030	1371.52
5.3325	5.8	52.1	489230.1	0.0	0.0	0.0	0.0	0.0	0.0	449148.3	40082	1371.52
5.3350	5.8	52.1	489282.2	0.0	0.0	0.0	0.0	0.0	0.0	449148.3	40134	1371.53
5.3375	5.8	52.0	489334.2	0.0	0.0	0.0	0.0	0.0	0.0	449148.3	40186	1371.53
5.3400	5.8	52.0	489386.2	0.0	0.0	0.0	0.0	0.0	0.0	449148.3	40238	1371.54
5.3425	5.8	52.0	489438.2	0.0	0.0	0.0	0.0	0.0	0.0	449148.3	40290	1371.55
5.3450	5.8	51.9	489490.1	0.0	0.0	0.0	0.0	0.0	0.0	449148.3	40342	1371.55
5.3475	5.8	51.9	489542.0	0.0	0.0	0.0	0.0	0.0	0.0	449148.3	40394	1371.56
5.3500	5.8	51.9	489593.8	0.0	0.0	0.0	0.0	0.0	0.0	449148.3	40445	1371.56
5.3525	5.8	51.8	489645.7	0.0	0.0	0.0	0.0	0.0	0.0	449148.3	40497	1371.57
5.3550	5.8	51.8	489697.4	0.0	0.0	0.0	0.0	0.0	0.0	449148.3	40549	1371.57
5.3575	5.7	51.7	489749.2	0.0	0.0	0.0	0.0	0.0	0.0	449148.3	40601	1371.58
5.3600	5.7	51.7	489800.9	0.0	0.0	0.0	0.0	0.0	0.0	449148.3	40653	1371.58
5.3625	5.7	51.7	489852.6	0.0	0.0	0.0	0.0	0.0	0.0	449148.3	40704	1371.59
5.3650	5.7	51.6	489904.2	0.0	0.0	0.0	0.0	0.0	0.0	449148.3	40756	1371.60
5.3675	5.7	51.6	489955.8	0.0	0.0	0.0	0.0	0.0	0.0	449148.3	40807	1371.60
5.3700	5.7	51.6	490007.4	0.0	0.0	0.0	0.0	0.0	0.0	449148.3	40859	1371.61
5.3725	5.7	51.5	490058.9	0.0	0.0	0.0	0.0	0.0	0.0	449148.3	40911	1371.61
5.3750	5.7	51.5	490110.4	0.0	0.0	0.0	0.0	0.0	0.0	449148.3	40962	1371.62
5.3775	5.7	51.5	490161.9	0.0	0.0	0.0	0.0	0.0	0.0	449148.3	41014	1371.62
5.3800	5.7	51.4	490213.3	0.0	0.0	0.0	0.0	0.0	0.0	449148.3	41065	1371.63
5.3825	5.7	51.4	490264.7	0.0	0.0	0.0	0.0	0.0	0.0	449148.3	41116	1371.63
5.3850	5.7	51.4	490316.1	0.0	0.0	0.0	0.0	0.0	0.0	449148.3	41168	1371.64
5.3875	5.7	51.3	490367.4	0.0	0.0	0.0	0.0	0.0	0.0	449148.3	41219	1371.64
5.3900	5.7	51.3	490418.7	0.0	0.0	0.0	0.0	0.0	0.0	449148.3	41270	1371.65

	Pump 1	Pump 2	Pump 3	Pump 4
Pump Run Time	52.20 Min	32.70 Min	21.30 Min	0.00 Min
	4.5	5.5	7.5	0
Pump Warmups	3.00 Min	3.00 Min	3.00 Min	3.00 Min
Float Switch On/Off Elevations (ft)				
On Elev	1372.5	1373.5	1375.5	1500
Off Elev	1368	1368	1368	1400

Max WS = 1380.91

Time (hrs)	Inflow (cfs)	Incremental Inflow Volume (cf)	Cumulative Inflow Volume (cf)	Pump 1 (cf)	Pump 2 (cf)	Pump 3 (cf)	Pump 4 (cf)	Pump Out (cf)	Outflow (cfs)	Cumulative Outflow (cf)	Total Storage (cf)	WSEL (ft)
5.3925	5.7	51.3	490469.9	0.0	0.0	0.0	0.0	0.0	0.0	449148.3	41322	1371.66
5.3950	5.7	51.2	490521.2	0.0	0.0	0.0	0.0	0.0	0.0	449148.3	41373	1371.66
5.3975	5.7	51.2	490572.3	0.0	0.0	0.0	0.0	0.0	0.0	449148.3	41424	1371.67
5.4000	5.7	51.1	490623.5	0.0	0.0	0.0	0.0	0.0	0.0	449148.3	41475	1371.67
5.4025	5.7	51.1	490674.6	0.0	0.0	0.0	0.0	0.0	0.0	449148.3	41526	1371.68
5.4050	5.7	51.1	490725.7	0.0	0.0	0.0	0.0	0.0	0.0	449148.3	41577	1371.68
5.4075	5.7	51.0	490776.7	0.0	0.0	0.0	0.0	0.0	0.0	449148.3	41628	1371.69
5.4100	5.7	51.0	490827.7	0.0	0.0	0.0	0.0	0.0	0.0	449148.3	41679	1371.69
5.4125	5.7	51.0	490878.7	0.0	0.0	0.0	0.0	0.0	0.0	449148.3	41730	1371.70
5.4150	5.7	50.9	490929.6	0.0	0.0	0.0	0.0	0.0	0.0	449148.3	41781	1371.70
5.4175	5.7	50.9	490980.5	0.0	0.0	0.0	0.0	0.0	0.0	449148.3	41832	1371.71
5.4200	5.6	50.9	491031.4	0.0	0.0	0.0	0.0	0.0	0.0	449148.3	41883	1371.72
5.4225	5.6	50.8	491082.2	0.0	0.0	0.0	0.0	0.0	0.0	449148.3	41934	1371.72
5.4250	5.6	50.8	491133.0	0.0	0.0	0.0	0.0	0.0	0.0	449148.3	41985	1371.73
5.4275	5.6	50.8	491183.7	0.0	0.0	0.0	0.0	0.0	0.0	449148.3	42035	1371.73
5.4300	5.6	50.7	491234.4	0.0	0.0	0.0	0.0	0.0	0.0	449148.3	42086	1371.74
5.4325	5.6	50.7	491285.1	0.0	0.0	0.0	0.0	0.0	0.0	449148.3	42137	1371.74
5.4350	5.6	50.6	491335.8	0.0	0.0	0.0	0.0	0.0	0.0	449148.3	42187	1371.75
5.4375	5.6	50.6	491386.4	0.0	0.0	0.0	0.0	0.0	0.0	449148.3	42238	1371.75
5.4400	5.6	50.6	491437.0	0.0	0.0	0.0	0.0	0.0	0.0	449148.3	42289	1371.76
5.4425	5.6	50.5	491487.5	0.0	0.0	0.0	0.0	0.0	0.0	449148.3	42339	1371.76
5.4450	5.6	50.5	491538.0	0.0	0.0	0.0	0.0	0.0	0.0	449148.3	42390	1371.77
5.4475	5.6	50.5	491588.5	0.0	0.0	0.0	0.0	0.0	0.0	449148.3	42440	1371.77
5.4500	5.6	50.4	491638.9	0.0	0.0	0.0	0.0	0.0	0.0	449148.3	42491	1371.78
5.4525	5.6	50.4	491689.3	0.0	0.0	0.0	0.0	0.0	0.0	449148.3	42541	1371.79
5.4550	5.6	50.4	491739.7	0.0	0.0	0.0	0.0	0.0	0.0	449148.3	42591	1371.79
5.4575	5.6	50.3	491790.0	0.0	0.0	0.0	0.0	0.0	0.0	449148.3	42642	1371.80
5.4600	5.6	50.3	491840.3	0.0	0.0	0.0	0.0	0.0	0.0	449148.3	42692	1371.80
5.4625	5.6	50.3	491890.6	0.0	0.0	0.0	0.0	0.0	0.0	449148.3	42742	1371.81
5.4650	5.6	50.2	491940.8	0.0	0.0	0.0	0.0	0.0	0.0	449148.3	42792	1371.81
5.4675	5.6	50.2	491991.0	0.0	0.0	0.0	0.0	0.0	0.0	449148.3	42843	1371.82
5.4700	5.6	50.2	492041.1	0.0	0.0	0.0	0.0	0.0	0.0	449148.3	42893	1371.82
5.4725	5.6	50.1	492091.2	0.0	0.0	0.0	0.0	0.0	0.0	449148.3	42943	1371.83
5.4750	5.6	50.1	492141.3	0.0	0.0	0.0	0.0	0.0	0.0	449148.3	42993	1371.83
5.4775	5.6	50.0	492191.4	0.0	0.0	0.0	0.0	0.0	0.0	449148.3	43043	1371.84
5.4800	5.6	50.0	492241.4	0.0	0.0	0.0	0.0	0.0	0.0	449148.3	43093	1371.84
5.4825	5.6	50.0	492291.3	0.0	0.0	0.0	0.0	0.0	0.0	449148.3	43143	1371.85
5.4850	5.5	49.9	492341.3	0.0	0.0	0.0	0.0	0.0	0.0	449148.3	43193	1371.86
5.4875	5.5	49.9	492391.2	0.0	0.0	0.0	0.0	0.0	0.0	449148.3	43243	1371.86
5.4900	5.5	49.9	492441.0	0.0	0.0	0.0	0.0	0.0	0.0	449148.3	43293	1371.87
5.4925	5.5	49.8	492490.9	0.0	0.0	0.0	0.0	0.0	0.0	449148.3	43343	1371.87
5.4950	5.5	49.8	492540.7	0.0	0.0	0.0	0.0	0.0	0.0	449148.3	43392	1371.88
5.4975	5.5	49.8	492590.4	0.0	0.0	0.0	0.0	0.0	0.0	449148.3	43442	1371.88

PUMP STATION INFLOW & OUTFLOW HYDROGRAPHS

PUMP STATION INFLOW, OUTFLOW & TOTAL STORAGE MASS CURVES

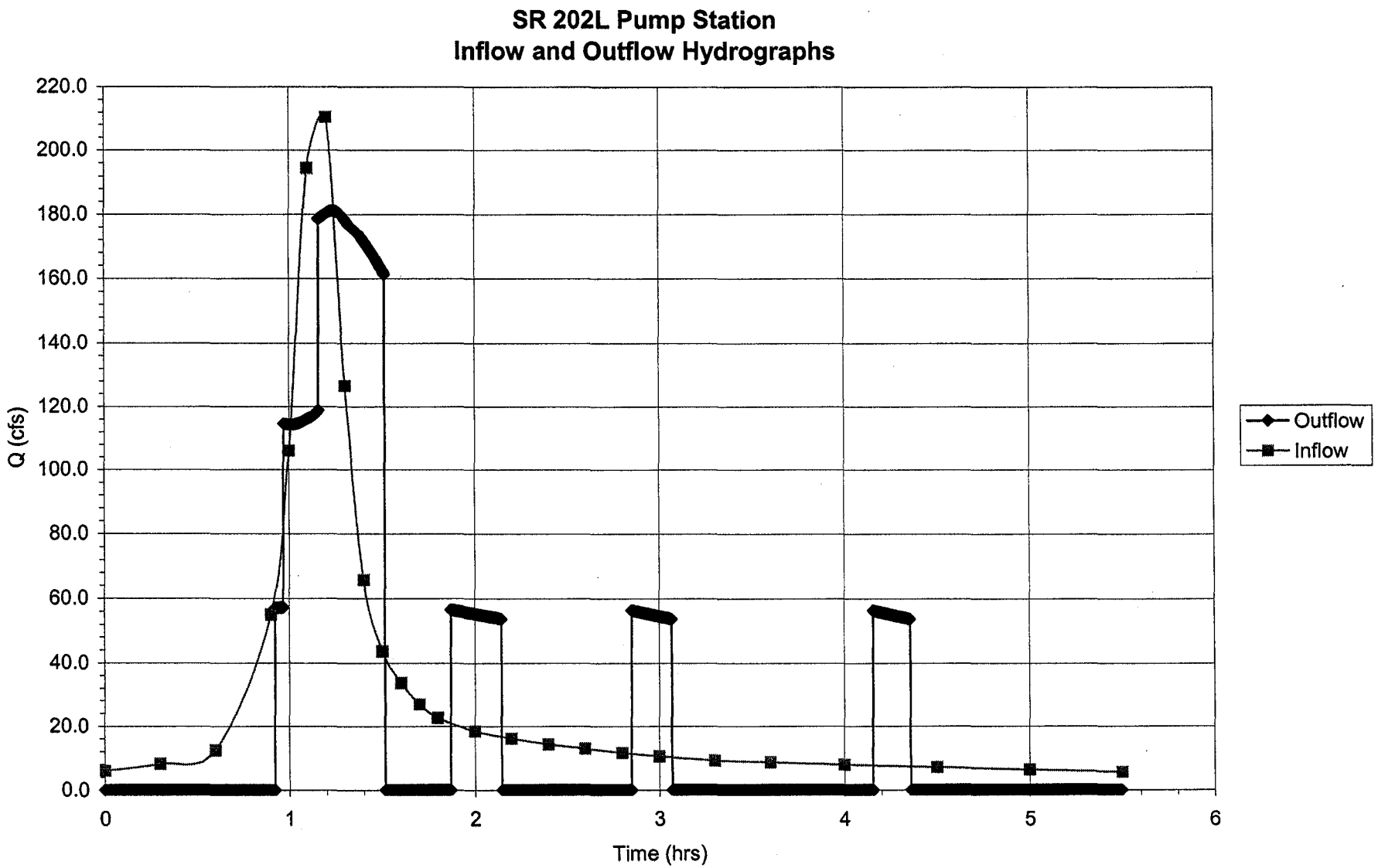
SR 202L Pump Station
Inflow and Outflow Hydrographs
220.0
200.0
180.0
160.0
140.0
120.0
100.0
80.0
60.0
40.0
20.0
0.0
Q (cfs)
0
1
2
3
4
5
6
Time (hrs)
Outflow
Inflow

SR 202L Pump Station
Inflow, Outflow and Total Storage Mass Curves

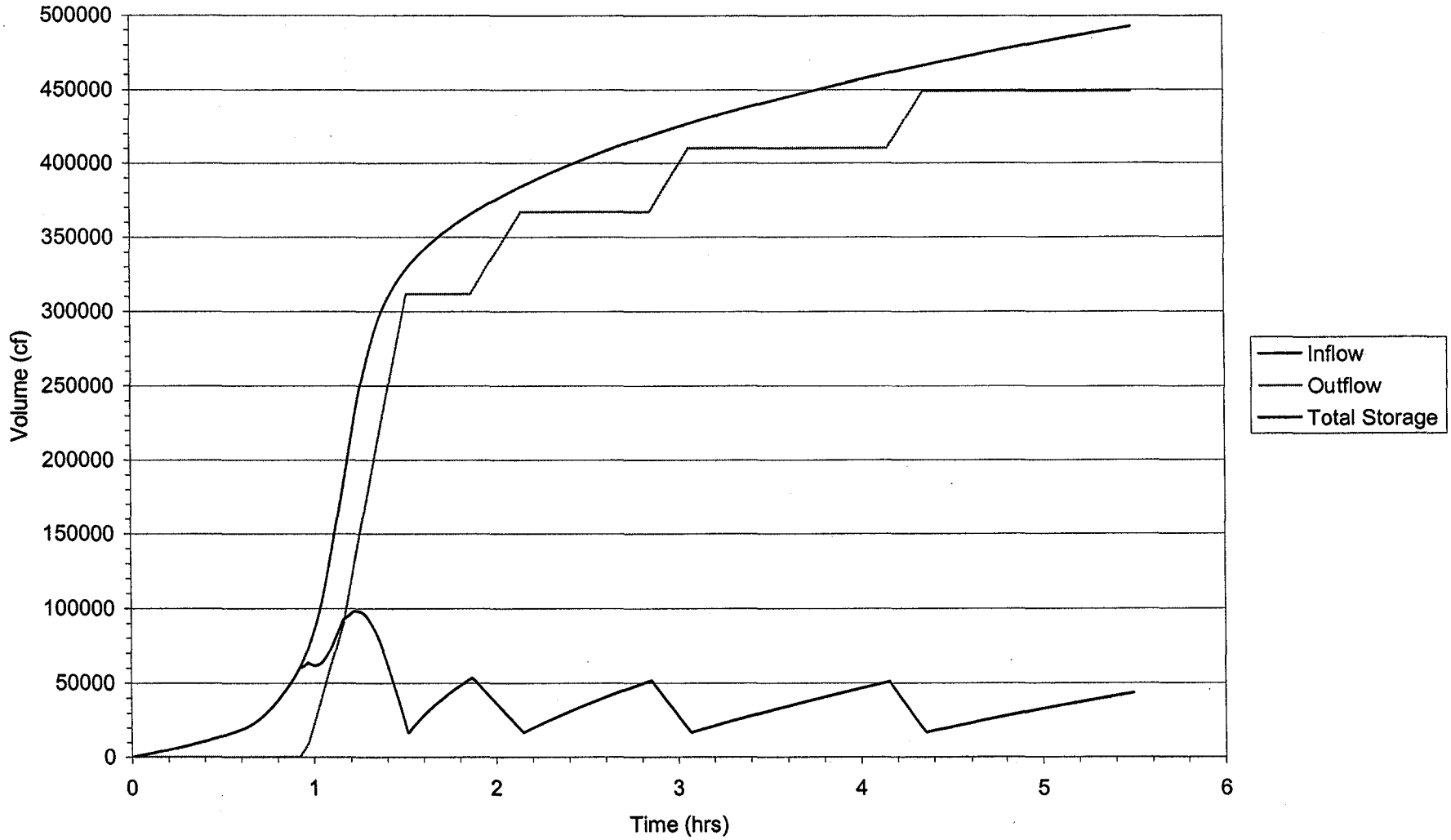

APPENDIX I PUMP STATION PLANS

STATE OF ARIZONA
DEPARTMENT OF TRANSPORTATION
INTERMODAL TRANSPORTATION DIVISION

PLAN AND PROFILE OF PROPOSED
STATE HIGHWAY
SANTAN FREEWAY (SR LOOP 202)
STP-202-C(005)B
202 MA 031

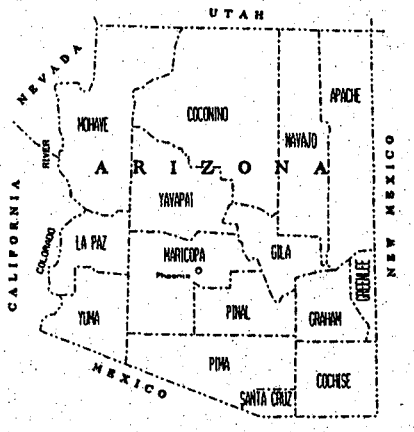

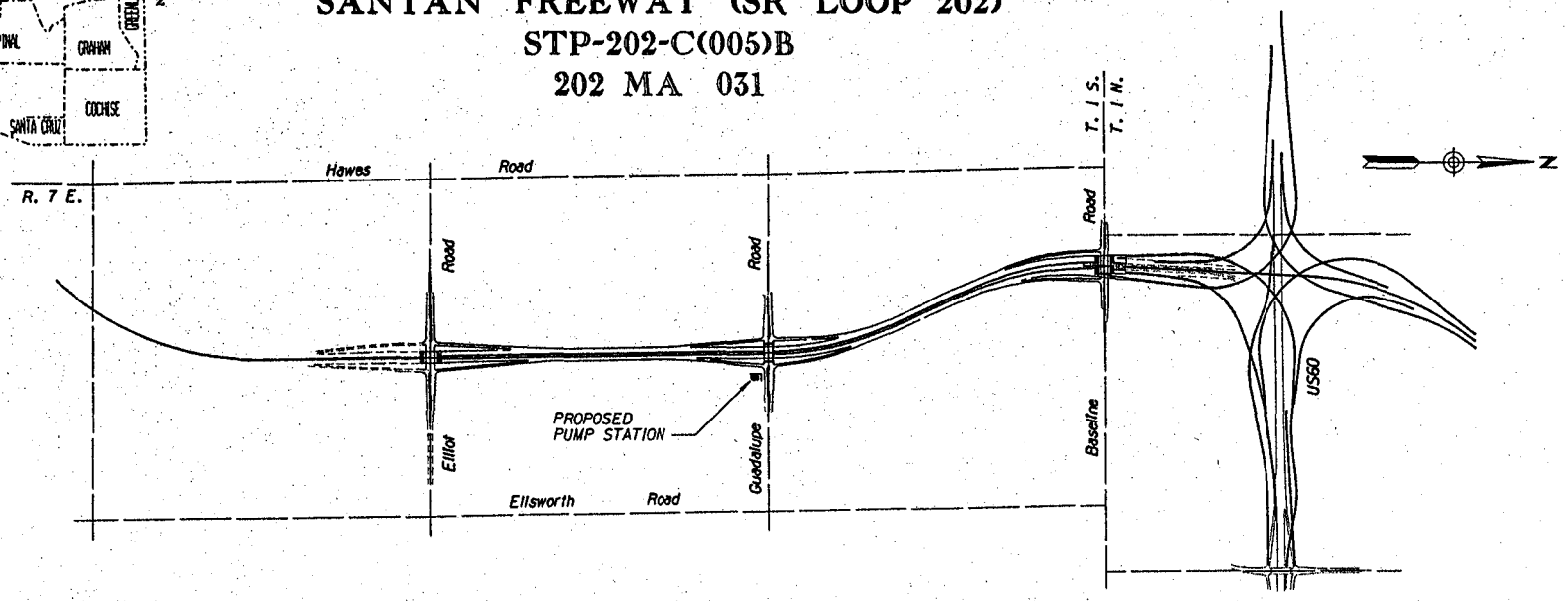

ELLIOT ROAD TO BASELINE ROAD
STORMWATER PUMP STATION

ARIZONA DEPARTMENT OF TRANSPORTATION
INTERMODAL TRANSPORTATION DIVISION
APPROVED: BILL HIGGINS
ACTING STATE ENGINEER

APPROVED DATE

ASSISTANT STATE ENGINEER

DWG NO. P-G.1

04/22/03 q:\16110\5b-a\PUMP\p5415g01.dgn

F.H.W.A. REGION	STATE	PROJECT NO.	SHEET NO.	TOTAL SHEETS	AS BUILT
9	ARIZ.	202-C(005)B			
		202L MA 031			

INDEX OF DRAWINGS

DRAWING NO.	SHEET TITLE
	GENERAL
P-G.1	COVER SHEET
P-G.2	INDEX OF DRAWINGS AND GENERAL NOTES
P-G.3	PUMP STATION ABBREVIATIONS
	CIVIL
P-C.1	PUMP STATION SITE PLAN
P-C.2	PUMP STATION FLOOR PLAN ELEVATION 1411.00
P-C.3	PUMP STATION FLOOR PLAN ELEVATION 1400.00
P-C.4	PUMP STATION FLOOR PLAN ELEVATION 1389.00
P-C.5	PUMP STATION FLOOR PLAN ELEVATION 1361.00
P-C.6	PUMP STATION SECTION A-A
P-C.7	PUMP STATION SECTION B-B
P-C.8	PUMP STATION GATE DETAILS
P-C.9	PUMP STATION BAR SCREEN DETAILS, SHEET NO. 1
P-C.10	PUMP STATION BAR SCREEN DETAILS, SHEET NO. 2
P-C.11	PUMP STATION HANDRAIL, LADDER, SHAFT COUPLING GUARD AND FLAP GATE DETAILS
P-C.12	PUMP STATION PIPE SUPPORTS AND DETAILS
P-C.13	PUMP STATION DETAIL NO. PC1
P-C.14	PUMP STATION DETAIL NO. PC1
P-C.15	PUMP STATION MISCELLANEOUS DETAILS
P-C.16	PUMP STATION PUMP DISCHARGE/ENGINE DRIVE SECTION
P-C.17	4" & 2" SERVICE WATER PROFILE
P-C.18	6" FIRE SERVICE WATER LINE PROFILE
P-C.19	PRIVATE FIRE SERVICE MAIN - DOUBLE CHECK ASSEMBLY BACKFLOW PREVENTION ASSEMBLY
	ARCHITECTURAL
P-A.1	PUMP STATION FLOOR PLAN
P-A.2	PUMP STATION BUILDING ELEVATIONS
P-A.3	PUMP STATION BUILDING ELEVATIONS AND BUILDING SECTION
P-A.4	PUMP STATION ROOF PLAN
P-A.5	PUMP STATION WALL SECTIONS
P-A.6	PUMP STATION OPENING SCHEDULE AND ROOM FINISH SCHEDULE AND DETAILS
P-A.7	PUMP STATION ARCHITECTURAL DETAILS-SHEET 1
P-A.8	PUMP STATION ARCHITECTURAL DETAILS-SHEET 2

DRAWING NO.	SHEET TITLE
	STRUCTURAL
P-S.1A	STRUCTURAL NOTES AND DRAWING INDEX
P-S.1B	STRUCTURAL NOTES
P-S.2A	FOUNDATION DATA 1 OF 2 (NOT INCLUDED)
P-S.2B	FOUNDATION DATA 2 OF 2 (NOT INCLUDED)
P-S.3	STRUCTURAL EXCAVATION AND BACKFILL LIMITS
P-S.4	FLOOR PLAN ELEVATION 1361.00 & 1368.00
P-S.5	FLOOR PLAN ELEVATION 1389.00
P-S.6	FLOOR PLAN ELEVATION 1400.00
P-S.7	FLOOR PLAN ELEVATION 1411.00
P-S.8	LONGITUDINAL SECTION A-A
P-S.9	TRAVERSE SECTION B-B
P-S.10	ROOF PLANS & ELEVATION
P-S.11	BUILDING SECTIONS
P-S.12	STRUCTURAL DETAILS-SHEET 1
P-S.13	STRUCTURAL DETAILS-SHEET 2
P-S.14	STRUCTURAL DETAILS-SHEET 3
P-S.15	SECTIONS AND DETAILS
P-S.16	SECTIONS AND DETAILS
P-S.17	SECTIONS AND DETAILS
P-S.18	SECTIONS AND DETAILS
P-S.19	SECTION AND DETAILS
P-S.20	STAIR PLAN, SECTION AND DETAIL
P-S.21	MISCELLANEOUS DETAILS
P-S.22	PLATFORM DETAILS
P-S.23	DISCHARGE BOX PLAN AND SECTIONS
P-S.24	DISCHARGE BOX SECTIONS AND DETAILS
	MECHANICAL
P-HV.1	PUMP STATION LEGEND, MECHANICAL EQUIPMENT SCHEDULES AND DETAILS
P-HV.2	PUMP STATION HVAC AND PIPING PLANS @ EL 1361.00 AND EL 1389.00
P-HV.3	PUMP STATION HVAC AND PIPING PLANS @ EL 1400.00 AND EL 1411.00
P-HV.4	PUMP STATION ROOF HVAC PLAN
P-HV.5	PUMP STATION MECHANICAL SECTION-SHEET 1
P-HV.6	PUMP STATION MECHANICAL SECTION-SHEET 2

	ELECTRICAL
P-E.1	PUMP STATION ELECTRICAL LEGEND
P-E.2	PUMP STATION ELECTRICAL SITE PLAN
P-E.3	PUMP STATION ELECTRICAL ONE-LINE DIAGRAM
P-E.4	PUMP STATION POWER AND LIGHTING PLANS @ EL 1361.00 AND EL 1389.00
P-E.5	PUMP STATION POWER PLANS @ EL 1400.00 AND EL 1411.00
P-E.6	PUMP STATION ROOF POWER PLAN AND ELECTRICAL CONTROL ROOM PLAN
P-E.7	PUMP STATION LIGHTING PLANS @ EL 1400.00 AND EL 1411.00
P-E.8	PUMP STATION ELECTRICAL DETAILS
P-E.9	PUMP STATION ELECTRICAL SCHEDULES
P-E.10	PUMP STATION CONTROL AND WIRING SCHEMATIC-SHEET 1
P-E.11	PUMP STATION CONTROL AND WIRING SCHEMATIC-SHEET 2
P-E.12	PUMP STATION CONTROL AND WIRING SCHEMATIC-SHEET 3
P-E.13	PUMP STATION CONTROL AND ALARM SCHEMATIC DIAGRAM-SHEET 1
P-E.14	PUMP STATION CONTROL AND ALARM SCHEMATIC DIAGROM-SHEET 2

GENERAL NOTES:

1. DATUM 1929 NATIONAL GEODETIC VERTICAL DATUM
2. A THOROUGH ATTEMPT HAS BEEN MADE TO SHOW THE LOCATIONS OF ALL UNDERGROUND OBSTRUCTIONS AND UTILITY LINES IN THE WORK AREA. HOWEVER, THE CONTRACTOR SHALL BE RESPONSIBLE FOR ANY DAMAGE TO OBSTRUCTIONS AND UTILITY LINES ENCOUNTERED DURING CONSTRUCTION AND SHALL DETERMINE THE EXACT LOCATION OF UTILITIES IN ADVANCE OF EXCAVATION AND TRENCHING
3. THE ENGINEER WILL NOT BE RESPONSIBLE FOR CONSTRUCTION MEANS, METHODS, TECHNIQUES, SEQUENCES OR PROCEDURES OR FOR SAFETY PRECAUTIONS OR PROGRAMS UTILIZED IN CONNECTION WITH THE WORK, AND WILL NOT BE RESPONSIBLE FOR THE CONTRACTOR'S FAILURE TO CARRY OUT THE WORK
4. FOR STRUCTURAL CRITERIA AND NOTES, SEE DRAWING P-S.1
5. FOR MECHANICAL LEGEND, MECHANICAL EQUIPMENT SCHEDULES AND DETAILS, SEE DRAWING P-HV.1
6. FOR ELECTRICAL LEGEND, ABBREVIATIONS AND NOTES, SEE DRAWING P-E.1
7. IN ACCORDANCE WITH AAC R18-4-119, ALL MATERIALS ADDED AFTER JANUARY 1, 1993 WHICH MAY COME INTO CONTACT WITH DRINKING WATER SHALL CONFORM TO NATIONAL SANITATION FOUNDATION STANDARD 60 AND 61

	NAME	DATE
DESIGN	FLR	4/03
DRAWN	CGS	4/03
CHECKED	L.A.	4/03

Stanley Consultants inc.

ARIZONA DEPARTMENT OF TRANSPORTATION
INTERMODAL TRANSPORTATION DIVISION
ROADWAY DESIGN SERVICES

INDEX OF DRAWINGS AND GENERAL NOTES

95%
PRELIMINARY NOT FOR CONSTRUCTION

ROUTE: 202L
LOCATION: SANTAN FWY, ELLIOT ROAD - BASELINE ROAD
DWG NO. P-G.2

TRACS NO. H 5915 01C | 202-C(005)B | ___ OF ___

04/22/03 qr\16110\56-6\PUMP\P5915g02.dgn

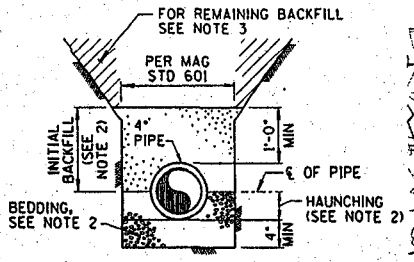

NOTES:

1. FOR ALLOWABLE TRENCH WIDTH, SEE SPECIFICATIONS
2. BEDDING MATERIAL, HAUNCHING AND INITIAL BACKFILL SHALL BE "ABC" PER MAG STANDARD SPECIFICATIONS 702. COMPACT TO 95% MAXIMUM DENSITY, ASTM D698
3. CAREFULLY PLACED BACKFILL SHALL BE FINELY DIVIDED, JOB EXCAVATED MATERIAL, FREE FROM DEBRIS, STONES LARGER THAN 1½", ORGANIC MATTER, FROZEN MATERIAL, AND COMPACTED IN 6" LAYERS TO 95% MAXIMUM DENSITY, ASTM D698. SELECT BACKFILL MAY BE SUBSTITUTED FOR JOB EXCAVATED MATERIAL AND SHALL BE USED WHERE REMAINING BACKFILL IS SPECIFIED TO BE SELECT BACKFILL MATERIAL

TYPICAL TYPE I PIPE BEDDING TRENCH CROSS-SECTION

NTS

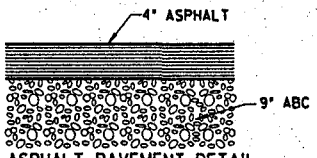

ASPHALT PAVEMENT DETAIL

NTS

LEGEND:

1. 7'-11" SIDEWALK PER STD DTL C-05.20
2. ASPHALT PAVEMENT PER DTL THIS SHEET
3. PERIMETER WALL PS PER SD 8.02. SEE SHEET S-1.38 FOR WALL ELEVATION. PAID FEE AT THE LUMP SUM BID PRICE FOR STORM WATER PUMP STATION
4. SWING GATES PER DETAIL B ON DWG NO. P-C.8

CONTROL COORDINATES (INSIDE FACE OF WALL)		
CORNER	NORTHING	EASTING
1W	860180.49	783681.78
2W	860353.38	783682.39
3W	860352.96	783799.39
4W	860181.97	783789.79
5W	860187.53	783707.24
6W	860316.40	783719.69
7W	860316.31	783744.69
8W	860187.36	783756.24

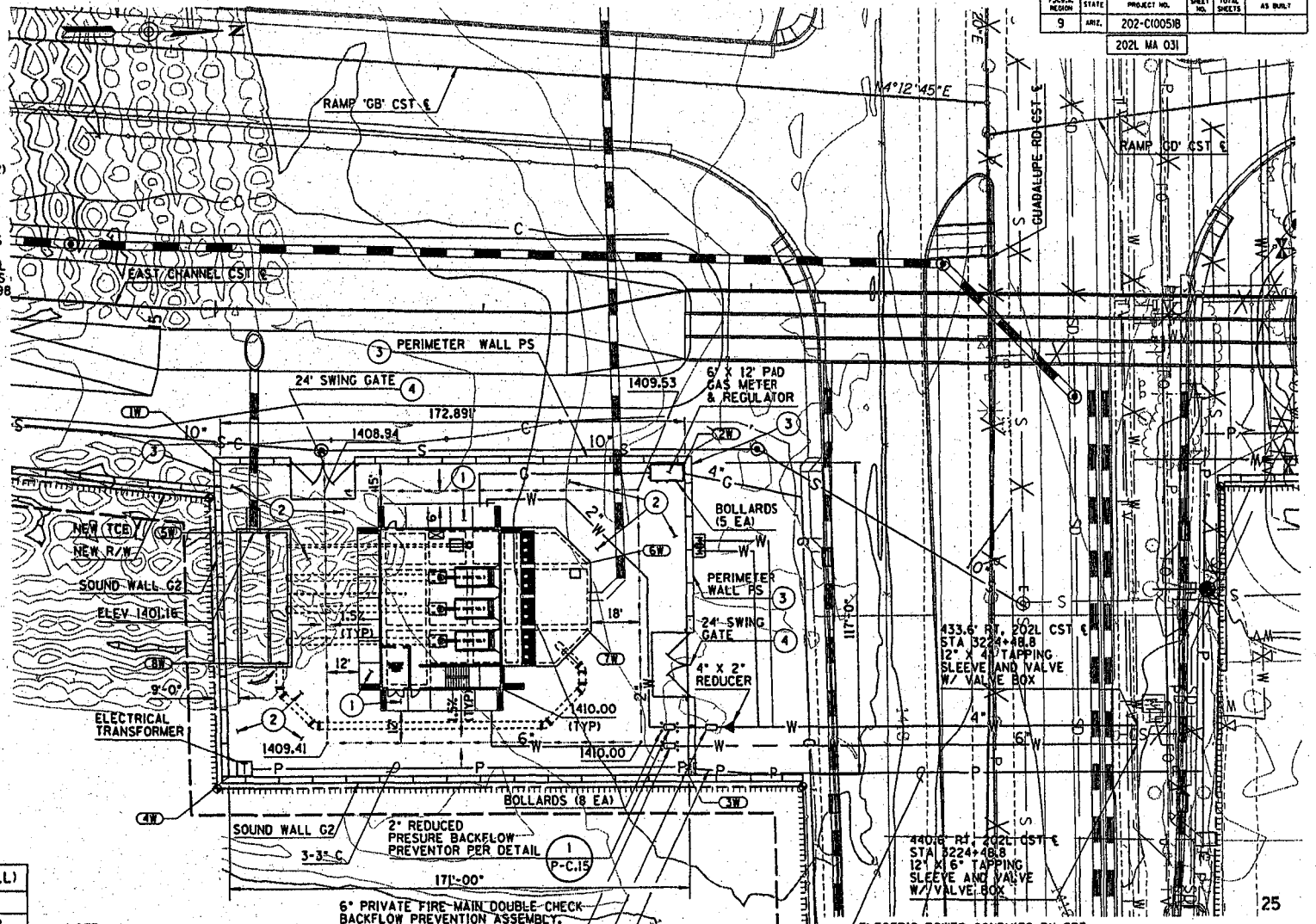

ELECTRIC POWER CONDUITS BY SRP

NOTE:

1. MINIMUM DEPTH OF WATER LINE SHALL BE 3'-0"
2. PUMP STATION ADDRESS: 8809 E. GUADALUPE ROAD MESA, AZ 85212
3. SEE ELECTRICAL DRAWING FOR CONDUIT DETAILS

6" PRIVATE FIRE MAIN DOUBLE CHECK BACKFLOW PREVENTION ASSEMBLY. SEE DETAIL ON DWG NO. P-C.19

2" WATER METER WITH METER BOX/PER DETAIL PC1

CONTRACTOR TO INSTALL 3/3" C & 1/-1½"C FROM 5'-0" NORTH OF PERIMETER WALL TO PS TRANSFORMER

F.A.H.P.A. REGION	STATE	PROJECT NO.	SHEET NO.	TOTAL SHEETS	AS BUILT
9	ARIZ.	202-C10051B			

202L MA 031

	NAME	DATE
DESIGN	FLR	4/03
DRAWN	CGS	4/03
CHECKED	LJL	4/03

Stanley Consultants inc.

ARIZONA DEPARTMENT OF TRANSPORTATION INTERMODAL TRANSPORTATION DIVISION ROADWAY DESIGN SERVICES

PUMP STATION SITE PLAN

95% PRELIMINARY NOT FOR CONSTRUCTION

ROUTE: 202L

LOCATION: SANTAN FWY, ELLIOT ROAD - BASELINE ROAD

DWG NO. P-C.1

TRACS NO. H 5915 01C

202-C10051B

___ OF ___

04/17/03 U:\16110\St-6\PUMP\p5915pln.dgn

F.H.W.A. REGION	STATE	PROJECT NO.	SHEET NO.	TOTAL SHEETS	AS BUILT
9	ARIZ.	202-C(005)B			
		202L MA 031			

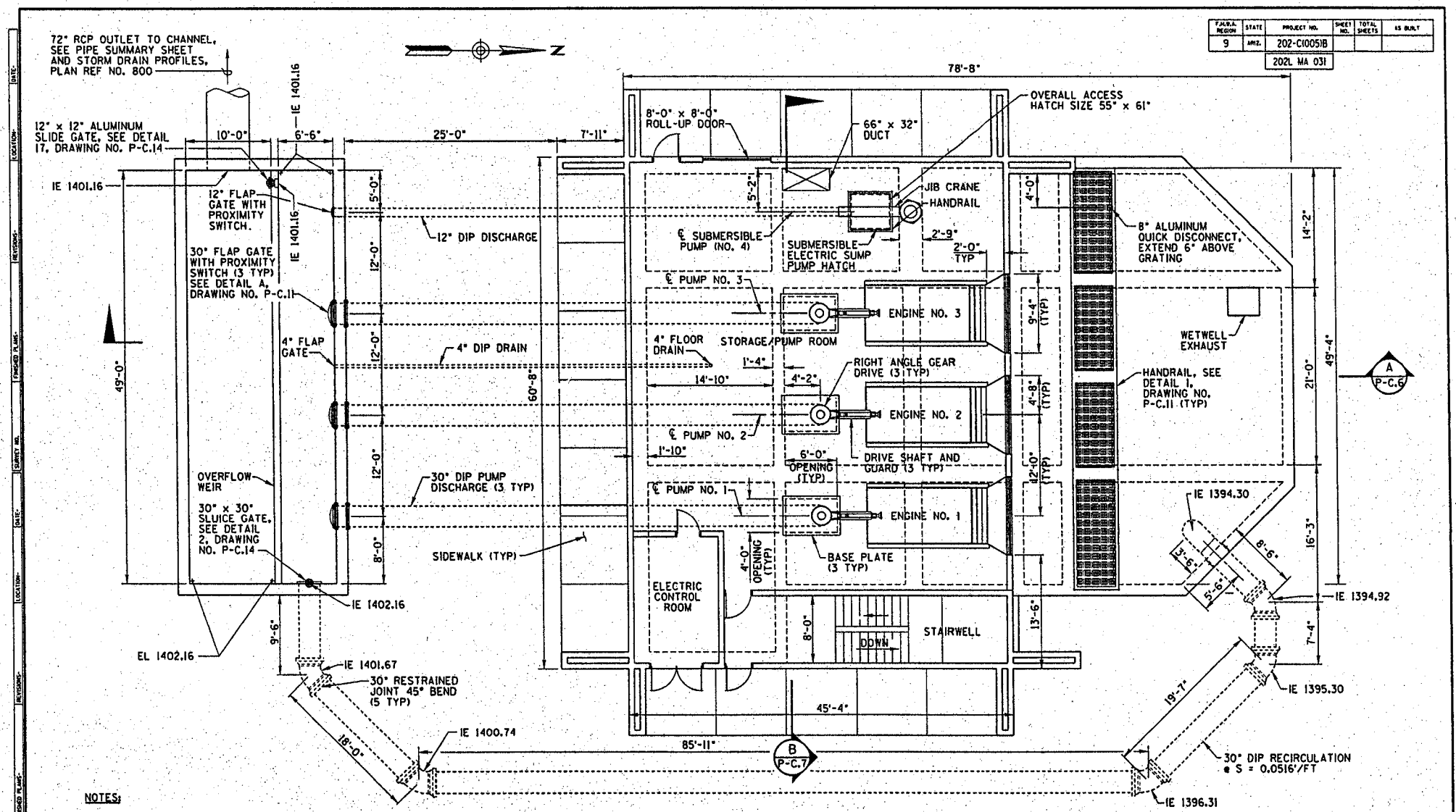

NOTES:

1. SEE ARCHITECTURAL DRAWINGS FOR BUILDING DIMENSIONS
2. SEE STRUCTURAL DRAWINGS FOR STRUCTURAL DIMENSIONS AND DETAILS
3. FOR SECTIONS A AND B, SEE DRAWINGS NO. P-C.6 AND P-C.7

FLOOR PLAN ELEVATION 1411.00

	NAME	DATE
DESIGN	FLR	4/03
DRAWN	CGS	4/03
CHECKED	L.J.	4/03

Stanley Consultants inc.

ARIZONA DEPARTMENT OF TRANSPORTATION
INTERMODAL TRANSPORTATION DIVISION
ROADWAY DESIGN SERVICES

PUMP STATION FLOOR PLAN ELEVATION 1411.00

95%
PRELIMINARY NOT FOR CONSTRUCTION

ROUTE: 202L
LOCATION: SANTAN FWY, ELLIOT ROAD - BASELINE ROAD

DWG NO. P-C.2

TRACS NO. H 5915 01C | 202-C(005)B | ___ OF ___

04/11/03 gi\16110\strc\pump\p5915m01.dgn

F.H.W.A. REGION	STATE	PROJECT NO.	SHEET NO.	TOTAL SHEETS	AS BUILT
9	ARIZ.	202-C(005)B			
		202L MA 031			

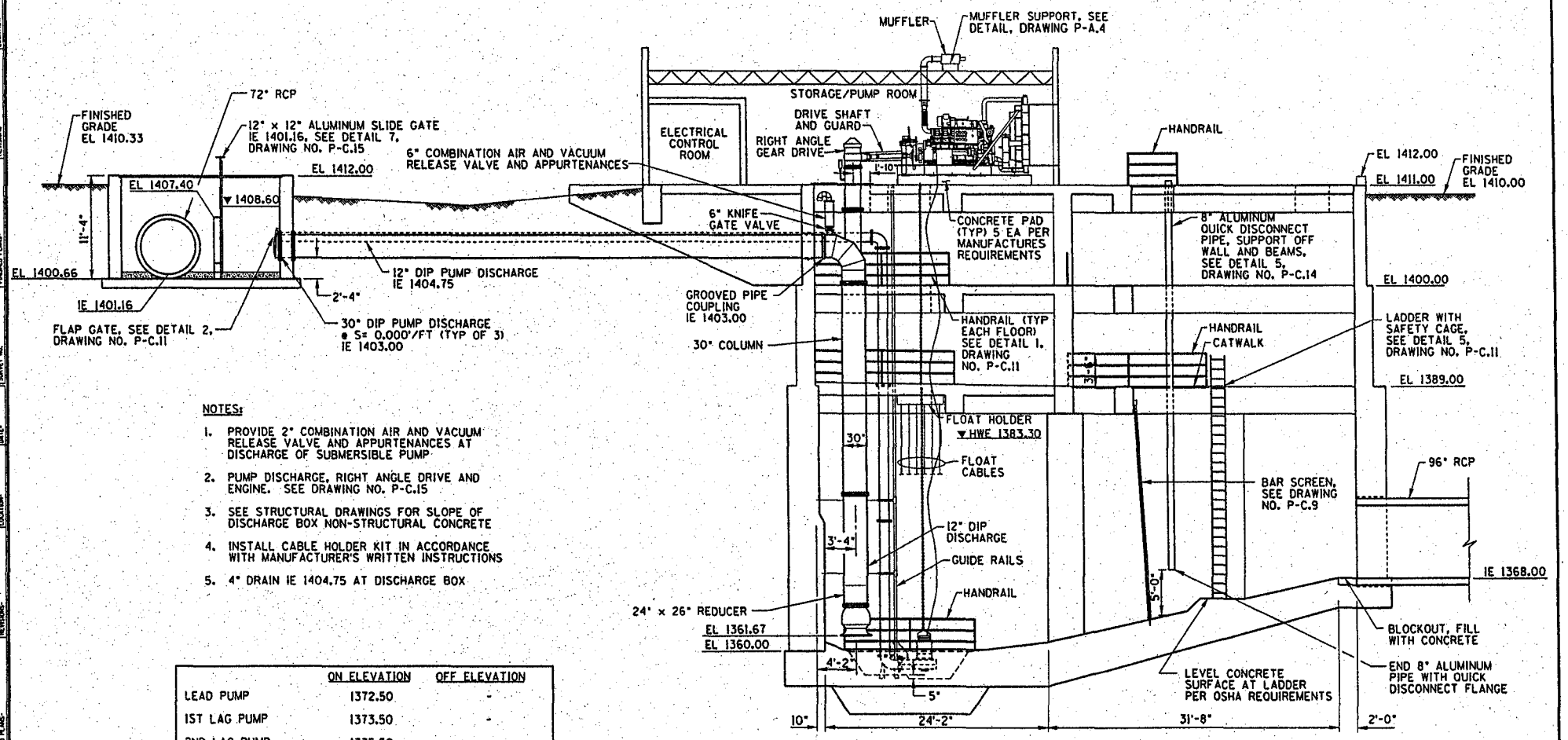

SECTION A-A

NOTES:

1. PROVIDE 2" COMBINATION AIR AND VACUUM RELEASE VALVE AND APPURTENANCES AT DISCHARGE OF SUBMERSIBLE PUMP
2. PUMP DISCHARGE, RIGHT ANGLE DRIVE AND ENGINE. SEE DRAWING NO. P-C.15
3. SEE STRUCTURAL DRAWINGS FOR SLOPE OF DISCHARGE BOX NON-STRUCTURAL CONCRETE
4. INSTALL CABLE HOLDER KIT IN ACCORDANCE WITH MANUFACTURER'S WRITTEN INSTRUCTIONS
5. 4" DRAIN IE 1404.75 AT DISCHARGE BOX

	ON ELEVATION	OFF ELEVATION
LEAD PUMP	1372.50	-
1ST LAG PUMP	1373.50	-
2ND LAG PUMP	1375.50	-
MAXIMUM WATER ELEV	1380.91	-
HIGH WATER ALARM	1383.00	-
ALL PUMPS OFF	-	1368.00

	NAME	DATE
DESIGN	FLR	4/03
DRAWN	CGS	4/03
CHECKED	L.J.	4/03

Stanley Consultants Inc.

ARIZONA DEPARTMENT OF TRANSPORTATION
INTERMODAL TRANSPORTATION DIVISION
ROADWAY DESIGN SERVICES

PUMP STATION
SECTION A-A

95%
PRELIMINARY
NOT FOR CONSTRUCTION

ROUTE: 202L
LOCATION: SANTAN FWY, ELLIOT ROAD - BASELINE ROAD
DWG NO. P-C.6
TRACS NO. H 5915 01C
202-C(005)B
___ OF ___

04/11/03 qr\16110\stro\pump\p5915m05.dgn

F.H.W.A. REGION	STATE	PROJECT NO.	SHEET NO.	TOTAL SHEETS	AS BUILT
9	ARIZ.	202-C(005)B			

202L MA 031

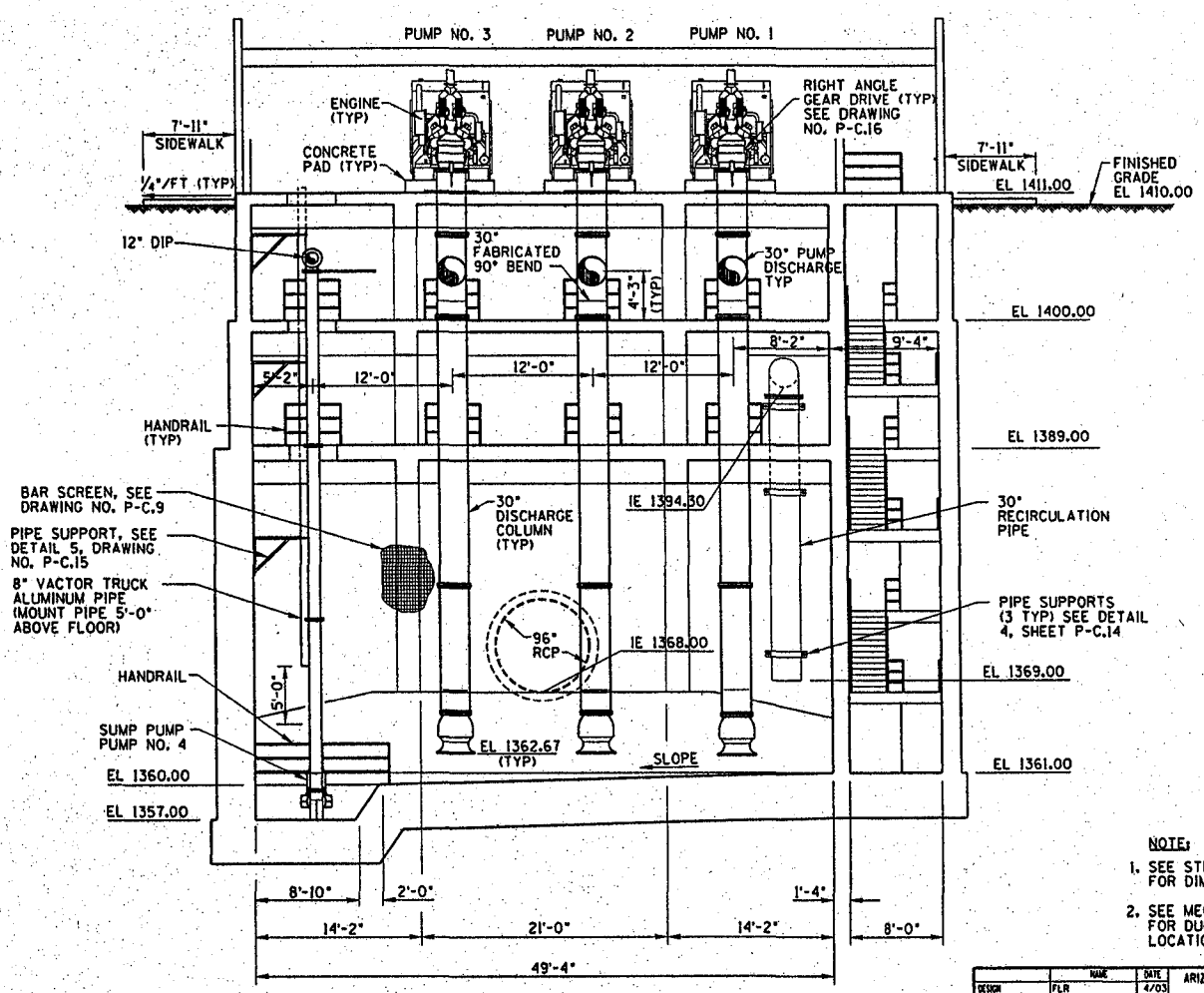

SECTION B-B

NOTE:

1. SEE STRUCTURAL DRAWINGS FOR DIMENSIONS AND DETAILS
2. SEE MECHANICAL DRAWINGS FOR DUCTWORK SIZE AND LOCATIONS

	NAME	DATE
DESIGN	F.L.R.	4/03
DRAWN	C.G.S.	4/03
CHECKED	L.J.L.	4/03

Stanley Consultants Inc.

ARIZONA DEPARTMENT OF TRANSPORTATION
INTERMODAL TRANSPORTATION DIVISION
ROADWAY DESIGN SERVICES

PUMP STATION
SECTION B-B

95%
PRELIMINARY
NOT FOR CONSTRUCTION

ROUTE: 202L
LOCATION: SANTAN FWY, ELLIOT ROAD - BASELINE ROAD

DWG NO. P-C.7

TRACS NO. H 5915 01C

202-C(005)B

___ OF ___

04/11/03 g:\16110\atc\pump\p5915m06.dgn

F.H.W.A. REGION	STATE	PROJECT NO.	SHEET NO.	TOTAL SHEETS	AS BUILT
9	ARIZ.	202-C(005)B			
		202L MA 031			

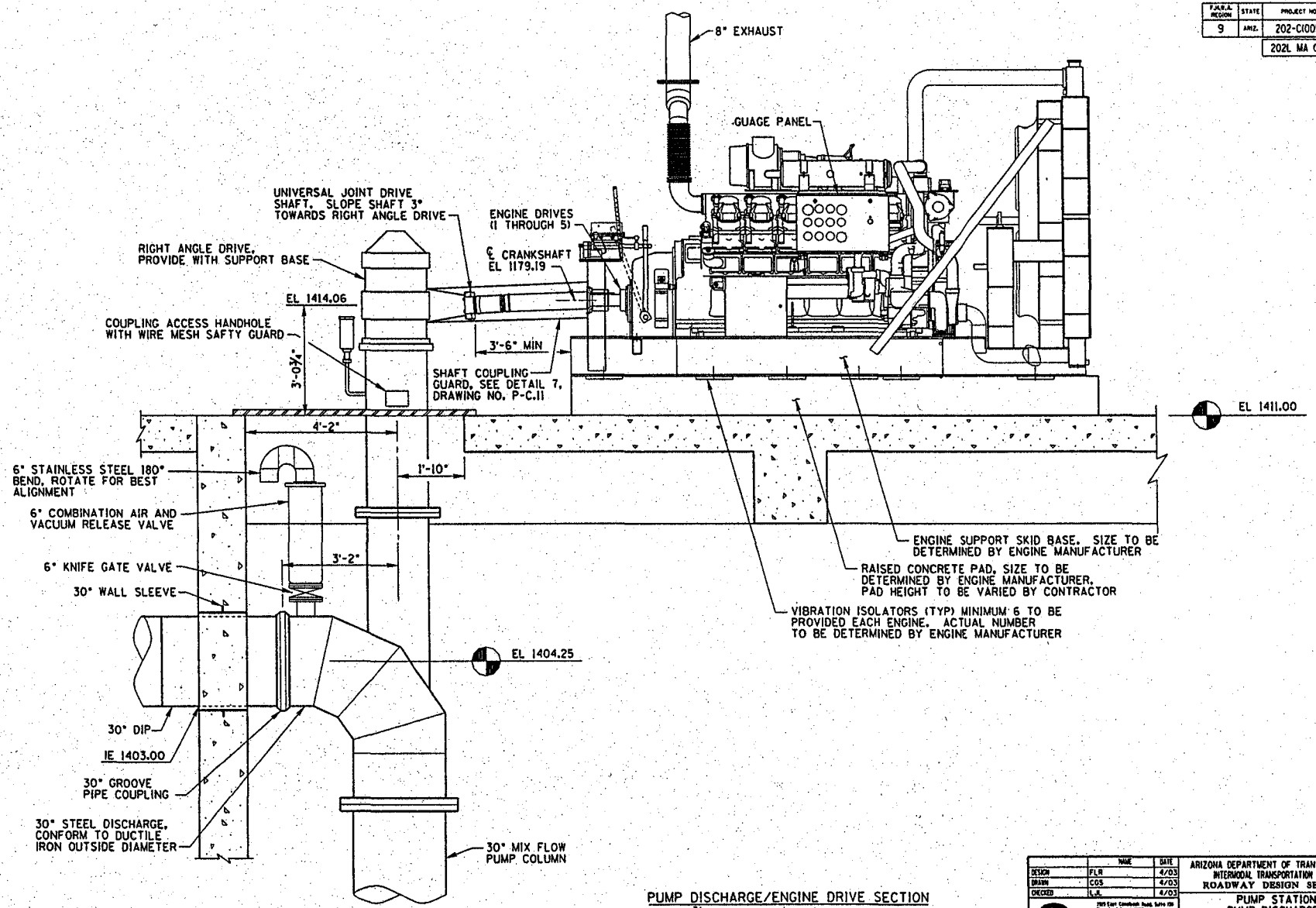

PUMP DISCHARGE/ENGINE DRIVE SECTION
SCALE: ¾" = 1'-0"

	NAME	DATE
DESIGN	FLR	4/03
DRAWN	CGS	4/03
CHECKED	L.A.	4/03

Stanley Consultants INC.
7505 East Camelback Road, Suite 130
Phoenix, Arizona 85251
Phone (480) 99-5200

ARIZONA DEPARTMENT OF TRANSPORTATION
INTERMODAL TRANSPORTATION DIVISION
ROADWAY DESIGN SERVICES

PUMP STATION
PUMP DISCHARGE/
ENGINE DRIVE SECTION

95%
PRELIMINARY
NOT FOR
CONSTRUCTION

ROUTE: 202L
LOCATION: SANTAN FWY, ELLIOT ROAD - BASELINE ROAD
DWG NO. P-C.16

TRACS NO. H 5915 01C | 202-C(005)B | ___ OF ___

04/11/03 gi\16110\stra\pump\p5915c15.dgn

F.H.W.A. REGION	STATE	PROJECT NO.	SHEET NO.	TOTAL SHEETS	AS BUILT
9	ARIZ.	202-C(005)B			
		202L MA 031			

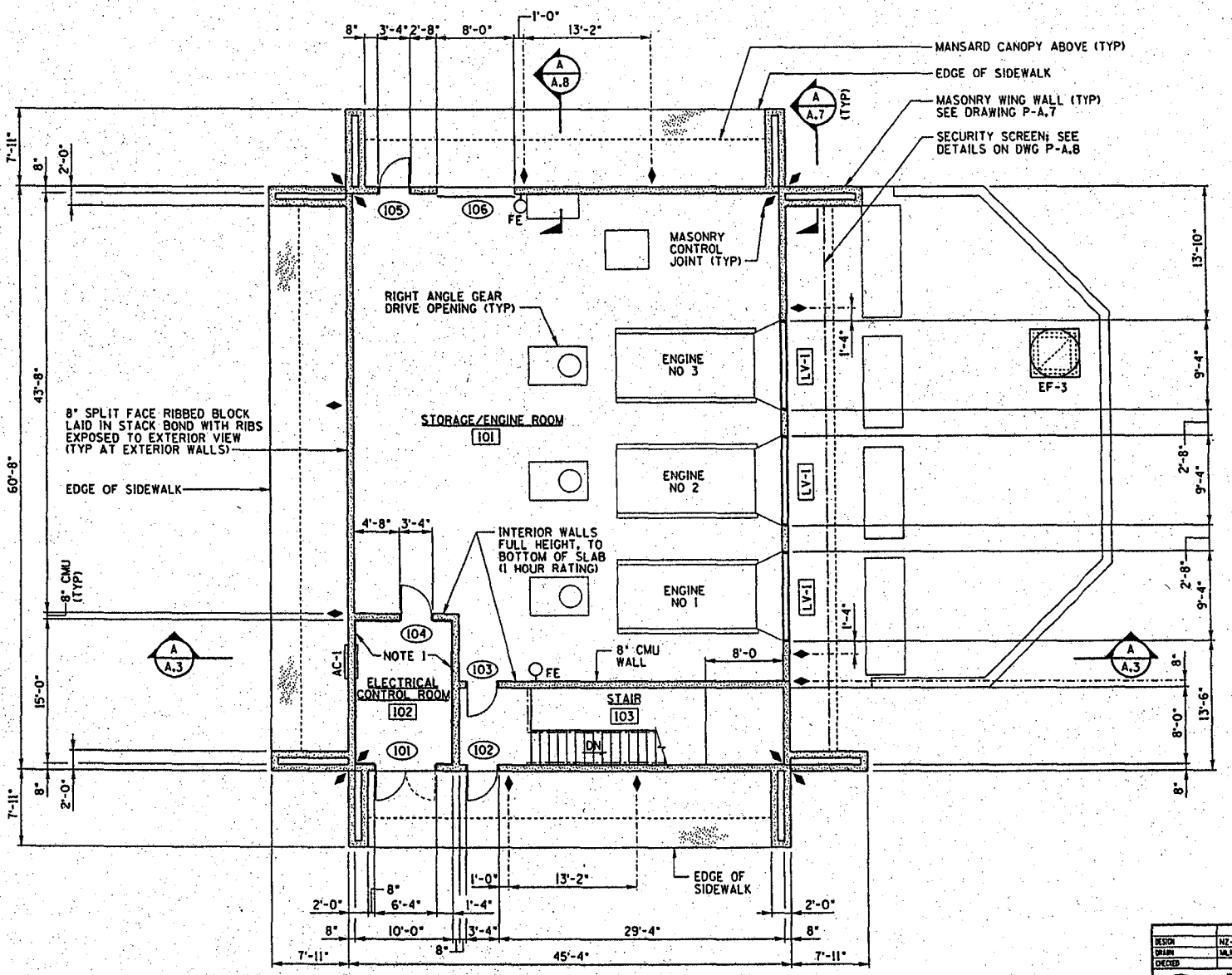

FLOOR PLAN
SCALE: 3/16" = 1'-0"

NOTES:

1. 5/8" GYPSUM BOARD OVER 1½" RIGID INSULATION AND METAL FURRING CHANNELS (TYP) ELECTRICAL CONTROL ROOM NO 102.

	NAME	DATE
DESIGN	NZ-H	4/03
DRAWN	MLM	4/03
CHECKED		4/03

Stanley Consultants inc.

ARIZONA DEPARTMENT OF TRANSPORTATION
INTERMODAL TRANSPORTATION DIVISION
ROADWAY DESIGN SERVICES

PUMP STATION FLOOR PLAN

95%
PRELIMINARY NOT FOR CONSTRUCTION

ROUTE: 202L
LOCATION: SANTAN FWY, ELLIOT ROAD - BASELINE ROAD
DWG NO. P-A.1
TRACS NO. H 5915 01C
202-C(005)B
___ OF ___

04/11/03 qt\16110\stra\pump\muscatine\p5915e01.dgn

F.H.W.A. REGION	STATE	PROJECT NO.	SHEET NO.	TOTAL SHEETS	AS BUILT
9	ARIZ.	202-C(005)B			
		202L MA 031			

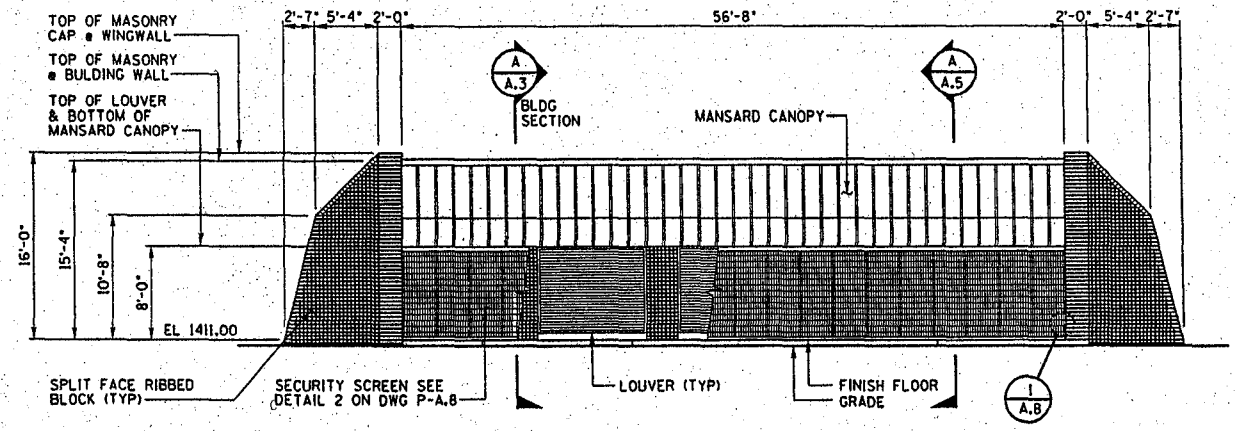

NORTH ELEVATION
SCALE: 3/16" = 1'-0"

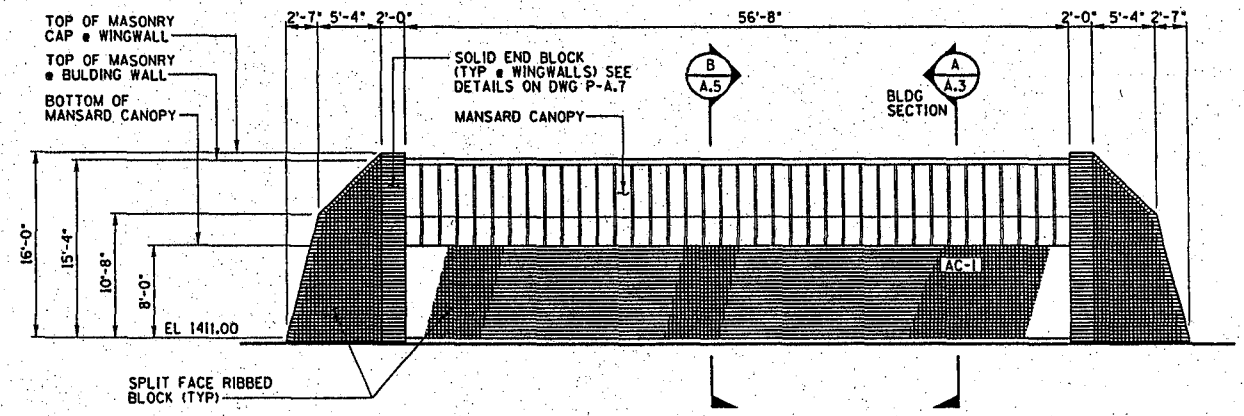

SOUTH ELEVATION
SCALE: 3/16" = 1'-0"

	NAME	DATE
DESIGN	NZ-H	4/03
DRAWN	MLM	4/03
CHECKED		4/03

Stanley Consultants Inc.

ARIZONA DEPARTMENT OF TRANSPORTATION
INTERMODAL TRANSPORTATION DIVISION
ROADWAY DESIGN SERVICES

PUMP STATION
BUILDING ELEVATIONS

95%
PRELIMINARY
NOT FOR CONSTRUCTION

ROUTE: 202L
LOCATION: SANTAN FWY, ELLIOT ROAD - BASELINE ROAD

TRACS NO. H 5915 01C | 202-C(005)B | DWG NO. P-A.2 | ___ OF ___

04/11/03 q:\16110\strc\pump\muscatine\p5915a02.dgn

F.H.W.A. REGION	STATE	PROJECT NO.	SHEET NO.	TOTAL SHEETS	AS BUILT
9	ARIZ.	202-C(005)B			
		202L MA 031			

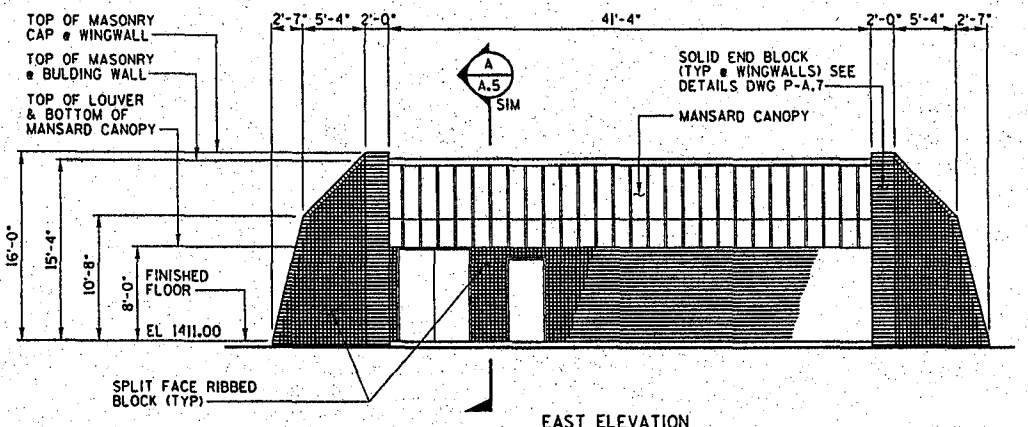

EAST ELEVATION
SCALE: 3/16" = 1'-0"

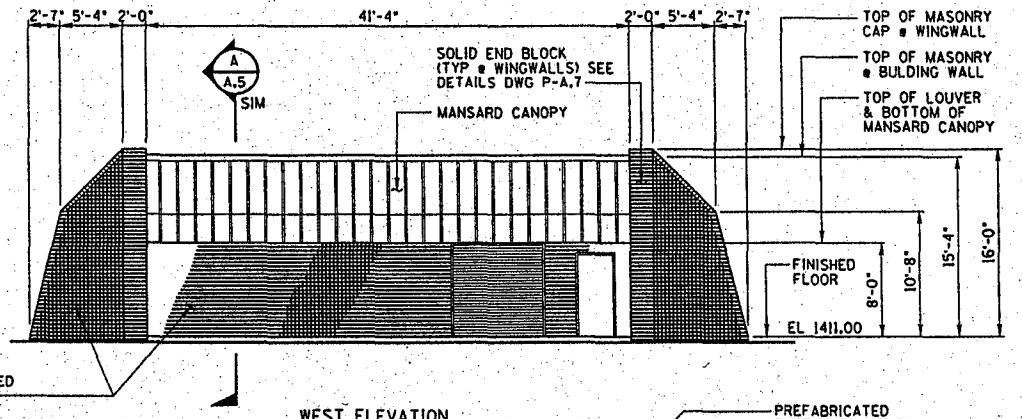

WEST ELEVATION
SCALE: 3/16" = 1'-0"

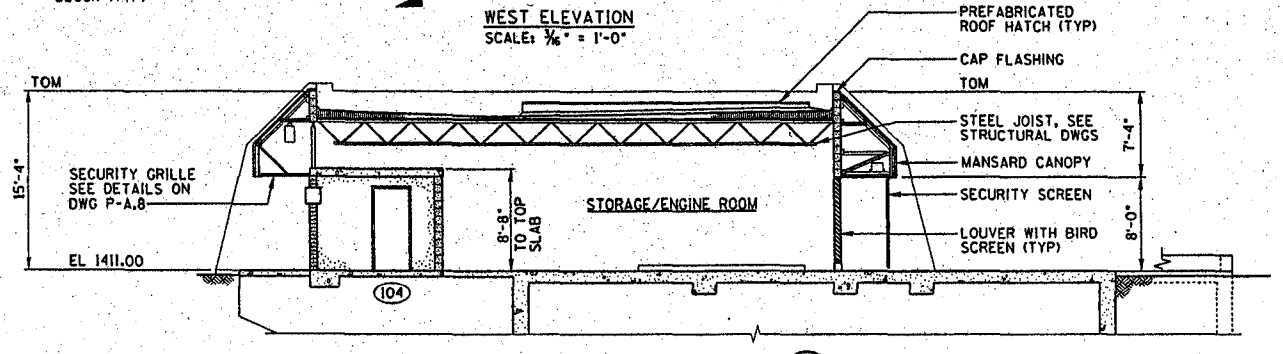

SECTION A A.1 A.2
SCALE: 3/16" = 1'-0"

	NAME	DATE
DESIGN	NZ-H	4/03
DRAWN	MLM	4/03
CHECKED		4/03

Stanley Consultants Inc.

ARIZONA DEPARTMENT OF TRANSPORTATION
INTERMODAL TRANSPORTATION DIVISION
ROADWAY DESIGN SERVICES

PUMP STATION
BUILDING ELEVATIONS
AND BUILDING SECTION

95%
PRELIMINARY
NOT FOR CONSTRUCTION

ROUTE: 202L
LOCATION: SANTAN FWY, ELLIOT ROAD - BASELINE ROAD

DWG NO. P-A.3

TRACS NO. H 5915 01C | 202-C(005)B | ___ OF ___

04/11/03 q:\16110\stra\pump\muscatine\p5915a03.dgn