Property of
Flood Control District of MC Library
Please Return to
2801 W. Durango
Phoenix, AZ 85009

DRAINAGE DESIGN REPORT
CONTRACT 86-06
OUTER LOOP HIGHWAY PROJECT
PROJECT NO. RBM 600-0-305

VOLUME I OF II

REGISTERED PROFESSIONAL ENGINEER (CIVIL)
CERTIFICATE NO.
21007
ROBERT E.
JACOBS
Date Signed 4-17-90
ARIZONA, U.S.A.

TABLE OF CONTENTS

VOLUME I

Section

1.0 DRAINAGE NARRATIVE

1.1 Introduction

1.2 Hydrology

1.3 Drainageways

1.4 Detention Basins

1.5 Storm Drains

2.0 55th AVENUE DRAINAGEWAY

2.1 Culvert Computation Sheet

3.0 SKUNK CREEK CHANNELIZATION

3.1 HEC II - Existing Condition

3.2 HEC II - Prop. Condition - D.S. of OLH

3.3 Culvert Computation Sheet

3.4 HEC II - Prop. Condition - U.S. of OLH

3.5 Superelevation Computations

3.6 Drop Structure Design

3.7 Rip Rap Design

3.8 Plan & Profile Sheets

4.0 SCATTER WASH CHANNELIZATION

4.1 HEC II - Existing Condition

4.2 HEC II - Prop. Condition - D.S. of OLH

4.3 Culvert Computation Sheet

4.4 HEC II - Prop. Condition - U.S. of OLH

REGISTERED PROFESSIONAL ENGINEER (CIVIL)
CERTIFICATE NO. 21007
ROBERT E. JACOBS
Date Signed 4-17-90
ARIZONA, U.S.A.

TABLE OF CONTENTS (cont.)

Section

4.5 Offsite Runoff Calculations

4.6 Drop Structure Design

4.7 Rip Rap Design

5.0 51ST AVE. DETENTION BASIN

5.1 Drainage Area Map (by OLHMC)

5.2 Stage Storage Computations

5.3 Stage Discharge Computations

5.4 HEC I - Outlet Control

5.5 HEC I - Emergency Spillway Only

5.6 HEC I - Drain Time Under Free Outfall

5.7 HEC II - Inflow Channel

VOLUME II

6.0 35TH AVE. DETENTION BASIN

6.1 HEC I (by OLHMC)

6.2 Side Weir Analysis

6.3 Stage Storage Compuations

6.4 Stage Discharge Computations

6.5 HEC I - 35th Av Det. Basin

6.6 HEC I - Spillway Only

6.7 HEC II - Diversion Channel

6.8 W.S. Profile - 35th Ave. to Basin

6.9 Culvert Cross Sections

6.10 HEC I - Test Cases for varying diversion

TABLE OF CONTENTS (cont.)

Section	
7.0	PAVEMENT DRAINAGE HYDROLOGY
7.1	Rainfall Intensities
7.2	Rainfall Intensiy Curves
8.0	INLET SIZING
8.1	Pavement Drainage Worksheets
8.2	Pavement Drainage Area Maps
9.0	STORM DRAIN DESIGN
9.1	Circular Pipe Values
9.2	Storm Sewer Calculation Sheets
10.0	SCOUR ANALYSIS

Tab 1

INTRODUCTION

The purpose of this report is to present the assumptions, criteria, and analysis used in the design of drainage facilities for Section 5-C of the proposed Outer Loop Highway (OLH). This segment of the OLH begins approximately 500 feet east of 59th Avenue and closely parallels the Beardsley Road alignment to approximately 500 feet east of 35th Avenue. The improvements for this section consist of an elevated mainline roadway with paralleling frontage roads which have vertical alignments that are typically near existing grade. A portion of the frontage road system utilizes existing Beardsley Road. Three drainageways are encountered within this project - the 55th Avenue Drainageway (also known as the Arrowhead Lakes Outlet), Skunk Creek, and Scatter Wash. In addition to the drainageways, two detention basins have been incorporated on the north side of the OLH to attenuate the flow contributions from offsite drainage areas. One detention basin is located just north of the North Frontage Road approximately 500 feet east of 51st Avenue. The other detention basin is located on the northeast corner of 35th Avenue and the North Frontage Road.

HYDROLOGY

The offsite hydrology analysis for the drainageways was prepared by others and provided to Stanley/Mettee-McGill-Murphy, Inc. (S/MMM) by the Outer Loop Management Consultant (OLMC). The following table is a summary of the 100 year discharges for the various drainageways found in the previously mentioned hydrology analysis.

OFFSITE HYDROLOGY TABLE

Description	Discharge (cfs)
55th Avenue Drainageway	2,520
Skunk Creek	2,600
Scatter Wash	6,100

Additional hydrologic information on the watersheds above the proposed detention basins was provided by the OLMC. This information consisted of a 100 year HEC I analysis for each watershed, and an inflow hydrograph for each detention basin location. S/MMM utilized this information to complete flood routing computations and determine the necessary storage volumes for the detention basins.

The onsite hydrologic analysis was completed by S/MMM using the methods outlined in the manual of "Hydrologic Design for Highway Drainage in Arizona" by the Arizona Highway Department Bridge Division. The above methods were applied to determine the rainfall intensities for 2 year, 5 year, 10 year, 25 year, 50 year, and 100 year return period storms with 1 hour, 6 hour, and 24 hour durations. The 10 year, 1 hour event was then selected as the design storm for the roadway drainage facilities as set forth in the Outer Loop Highway Design Procedures Manual. The 10 year, 1 hour rainfall intensity was employed in conjunction with the rational method (see Section 7) to determine the flows to be used for catch basin and storm drain design. All roadway drainage design was completed in accordance with the guidelines and criteria specified in the Outer Loop Highway Design Procedures Manual.

DRAINAGEWAYS

55th Avenue Drainageway

The 55th Avenue Drainageway provides an outlet for the Arrowhead Lakes detention system through a 6 - 10' x 4' concrete box culvert underneath existing Beardsley Road. At the direction of the OLMC this culvert was analyzed to determine its existing capacity, which was found to be 2,400 cfs operating under inlet control. The drainageway will continue from the existing CBC in a concrete lined vertical wall channel to the mainline where it will be conveyed via a 6 - 10' x 4' CBC to its outlet just south of the South Frontage Road.

Skunk Creek

The second drainageway encountered on this project is Skunk Creek. The Skunk Creek watershed is a major flood contributor in the northwest Phoenix area. As a result, there has been a great deal of work completed to mitigate the impact on the Skunk Creek floodplain. The U.S. Corps of Engineers has completed the Adobe Dam flood control project to reduce the 100 year peak discharge into Skunk Creek. The 100 year discharge is now calculated to be 2,600 cfs. Skunk Creek crosses this project just east of 43rd Avenue in an unimproved channel. The existing channel flows westerly for approximately 1,300 feet to an improved unlined channel which was constructed to convey Skunk Creek flows through the Overland Hills Subdivision. The improvements designed for Skunk Creek at the Outer Loop Highway Project include channelization and a series of drop structures, bank protection, a 5 - 10' x 6' concrete box culvert under the roadway, and an improved downstream channel. The concrete box culvert has been located to allow for a future Traffic Interchange to be constructed at 43rd Avneue.

Scatter Wash

The third drainageway on this project is Scatter Wash. Scatter Wash is the largest drainageway crossing this segment of the Outer Loop Highway. The existing Scatter Wash channel is ill

defined. The 100 year discharge of 6,100 cfs results in an approximate 2,000 foot wide floodplain as it crosses existing Beardsley Road.

The improvements designed for Scatter Wash have been developed to control and convey the 6,100 cfs flow under the Outer Loop Highway Project. The channel improvements for Scatter Wash will intercept the flow as it sheets across 35th Avenue north of Beardsley Road. The channelization then funnels the flow down to a minimum width of 120' wide and incorporates a series of three drop structures to reduce flow velocities and meet roadway vertical alignment requirements. The collected flow is then passed under the Outer Loop Highway in a 10 - 10' x 6' concrete box culvert. The height of one cell of the box culvert has been increased to 8 feet at the direction of A.D.O.T. for the City of Phoenix for an equipment pass. Channel improvements have been extended from the CBC outlet, which allow the flow to expand to meet the existing downstream floodway width. The banks will be concrete lined.

DETENTION BASINS

51st Avenue Detention Basin

The 51st Avenue Detention basin has been designed to handle the 100 year storm using the inflow information provided the OLMC. Flood routing computations were performed using HEC 1 to determine the peak storage volume required. The peak storage requirement for the 51st Avenue Detention basin is 34 acre-ft. In the case of a storm that exceeds the freeboard, the basin emergency spillway will direct the overflow south to the North Frontage Road to 51st Avenue overland. The 51st Avenue Detention basin outlet has been designed to handle an additional 17.7 cfs above its peak discharge to accommodate additional runoff expected by the City of Phoenix. Computations indicate this outlet will drain the detention basin within 36 hours.

35th Avenue Detention Basin

The 35th Avenue Detention basin has also been designed to handle a 100 year storm with the inflow information provided by the OLMC. Similar analysis was performed for this basin to determine the necessary peak storage volume. The peak storage requirement for the 35th Avenue Detention basin is 34 acre-ft. In the event the capacity of the basin is exceeded, the side weir that delivers runoff will function also as a spillway for the detention basin. The overflow then will continue in the diversion channel to Scatter Wash.

The inlet channel that delivers runoff to the detention basin was sized to carry 582 cfs. Provisions were made in the delivery system for a side flow weir inlet into the basin which allows 250 cfs to bypass the basin. Drainage of the detention basin will be accomplished by a 36" RCP outlet line to Scatter Wash.

STORM DRAINS

Drainage of the Outer Loop Highway will be provided by a storm drain system which will convey the runoff to one of the drainageways that crosses this section with the exception of runoff from the 55th Avenue Drainageway on west to 59th Avenue. This drainage will be picked up by the section to the west (Sec 5-b). All flows east of Scatter wash will outlet into it. Runoff between Scatter Wash and Skunk Creek will be collected and discharged into Skunk Creek. Runoff from Skunk Creek to 51st Avenue will be picked up and carried to the 55th Avenue Drainageway and discharged. The sizing of the storm drain is based upon the 10 year storm event with the hydraulic grade line for the 10 year storm to remain below the catch basin inlet.

Tab 2

ARIZONA HIGHWAY DEPARTMENT

CULVERT COMPUTATION SHEET

PROJECT: Outer Loop Sec 5a

DESIGNER: M Lopez

STATION: 1071 + 74 ±

DATE: 1-19-88

HYDROLOGIC AND CHANNEL INFORMATION

DRAINAGE AREA 3.95 sq mi

Q_1 = ≈ 1104 cfs

Q_2 = ____

TW_1 = ____

TW_2 = ____

(Q_1 = DESIGN DISCHARGE, SAY Q_{25})
(Q_2 = CHECK DISCHARGE, SAY Q_{50})

SKETCH

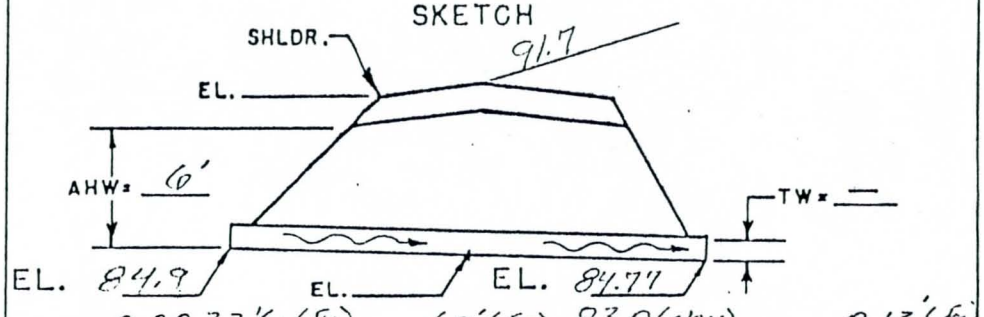

S_0 = 0.0047'/ft L = 476' (N) L/100 S_0 = 1.9

MEAN STREAM VELOCITY = ____

CULVERT DESCRIPTION		Q	CAP. CHART HW	HEADWATER COMPUTATION										CONTROL HW	OUTLET VELOCITY	COST	DHW ELEV.	COMMENTS
				INLET CONT.		OUTLET CONTROL HW = H + h_0 − LS_0												
SIZE	ENTR. TYPE			HW/D	HW	K_e	H	d_c	$\frac{d_c + D}{2}$	TW	h_0	LS_0	HW					
6-10'x4' x60'	90° r15° Conserv.	2400	2	1.75	7.0'	0.5	1.1	3.7	3.85		3.85	.13	4.8	7.0				Exist. Cond.
																		(Inlet Cont)
		2400	2	1.75	7.0	0.5	1.6	3.7	3.85'		3.85	1.9	3.6'	7.0				New Cond.
																		(Inlet Cont
																		Extension does
																		not < cap.)

SUMMARY & RECOMMENDATIONS

CHART I

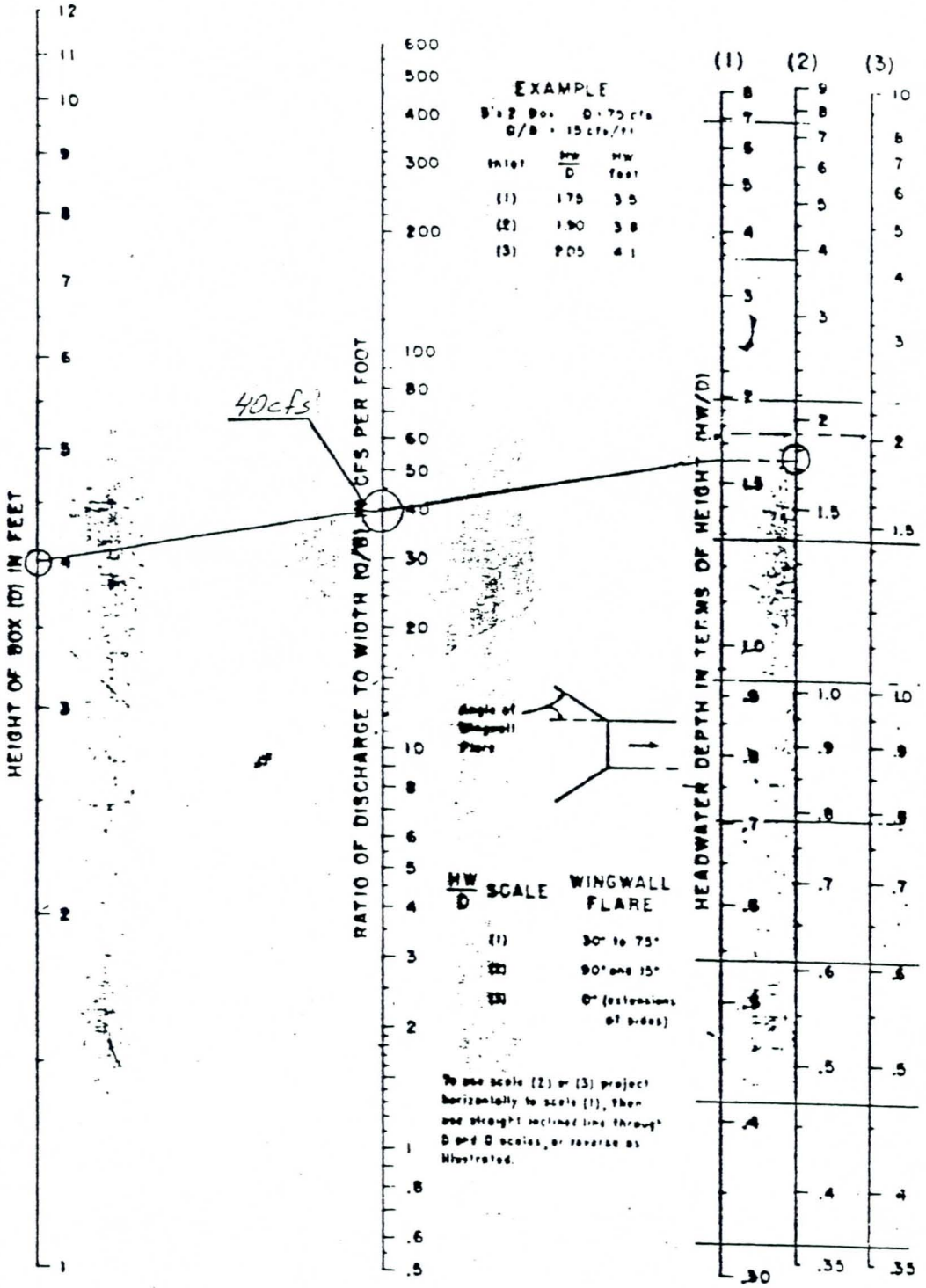

HEADWATER DEPTH
FOR BOX CULVERTS
WITH INLET CONTROL

BUREAU OF PUBLIC ROADS JAN 1963

Tab 3

```
1*************************************************
 * WATER SURFACE PROFILES                        *
 * VERSION OF NOVEMBER 1976                      *
 * UPDATED MAY 1984                              *
 * IBM-PC-XT VERSION AUGUST 1985                 *
 * RUN DATE  10-31-89   TIME  08:20:07            *
 *************************************************
```

```
*************************************
* U.S. ARMY CORPS OF ENGINEERS      *
* THE HYDROLOGIC ENGINEERING CENTER *
* 609 SECOND STREET, SUITE D        *
* DAVIS, CALIFORNIA 95616           *
* (916) 440-2105 (FTS) 448-2105      *
*************************************
```

```
X     X  XXXXXXX   XXXXX              XXXXX
X     X  X        X     X            X     X
X     X  X        X                        X
XXXXXXX  XXXX     X          XXXXX    XXXXX
X     X  X        X                  X
X     X  X        X     X            X
X     X  XXXXXXX   XXXXX              XXXXXXX
```

1

10-31-89 08:20:07 PAGE 1

THIS RUN EXECUTED 10-31-89

```
*************************************************
  HEC2 RELEASE DATED NOV 76 UPDATED MAY  1984
  ERROR CORR -  01,02,03,04,05,06
  MODIFICATION -  50,51,52,53,54,55,56
  IBM-PC-XT VERSION AUGUST 1985
*************************************************
```

```
FR FREE FORMAT
T1     SKUNK CREEK FLOODPLAIN STUDY   **** EXISTING ****
T2     100 YEAR FLOW - SKCRA
T3     STANLEY/METTEE-MCGILL-MURPHY

J1  ICHECK    INQ       NINV      IDIR      STRT      METRIC    HVINS     Q         WSEL      FQ

       0.        2.        0.        0. -1.000000      .00       .0        0.   314.280      .000

J2  NPROF     IPLOT     PRFVS     XSECV     XSECH     FN        ALLDC     IBW       CHNIM     ITRACE

     -1.000      .000    -1.000      .000    20.000      .000      .000      .000      .000      .000

J3  VARIABLE CODES FOR SUMMARY PRINTOUT

    150.000      .000      .000      .000      .000      .000      .000      .000      .000      .000

J6  IHLEQ     ICOPY
```

	1.000	.000	.000	.000	.000	.000	.000	.000	.000	.000
BT	1.000	2600.000	.000	.000	.000	.000	.000	.000	.000	.000
NC	.030	.030	.030	.100	.300	.000	.000	.000	.000	.000
X1	6.388	6.000	9960.000	10037.000	.000	.000	.000	.000	.000	.000
GR	316.000	9921.000	316.000	9960.000	311.000	9960.000	311.000	10037.000	316.000	10037.000
GR	316.000	10079.000	.000	.000	.000	.000	.000	.000	.000	.000
X1	6.391	5.000	9930.000	10060.000	23.000	23.000	23.000	.000	.000	.000
GR	316.000	9930.000	310.000	9962.000	310.000	10000.000	310.000	10020.000	315.000	10060.000
X1	6.408	7.000	9960.000	10045.000	60.000	130.000	90.000	.000	.000	.000
GR	317.000	9945.000	312.000	9960.000	311.000	9968.000	310.000	10000.000	311.000	10025.000
GR	315.000	10045.000	316.000	10059.000	.000	.000	.000	.000	.000	.000
X1	6.465	6.000	9954.000	10056.000	290.000	310.000	300.000	.000	.000	.000
GR	317.000	9954.000	312.000	9965.000	311.400	10000.000	312.000	10030.000	317.000	10056.000
GR	318.000	10107.000	.000	.000	.000	.000	.000	.000	.000	.000

1

X1	6.515	5.000	9960.000	10046.000	260.000	265.000	265.000	.000	.000	.000
GR	318.000	9960.000	312.000	9973.000	311.700	10000.000	312.000	10030.000	318.000	10045.000
X1	6.529	8.000	9950.000	10045.000	80.000	80.000	75.000	.000	.000	.000
GR	319.000	9950.000	319.000	9968.000	312.000	9980.000	311.600	10000.000	312.000	10020.000
GR	313.000	10030.000	318.000	10045.000	319.000	10053.000	.000	.000	.000	.000
X1	6.586	10.000	9940.000	10050.000	300.000	300.000	300.000	.000	.000	.000
GR	320.000	9940.000	317.000	9955.000	315.000	9964.000	314.000	9979.000	313.000	9992.000
GR	312.300	10000.000	313.000	10010.000	314.000	10036.000	319.000	10042.000	320.000	10050.000
X1	6.624	12.000	9856.000	10064.000	175.000	215.000	200.000	.000	.000	.000
GR	320.000	9856.000	319.000	9857.000	318.000	9876.000	318.000	9890.000	319.000	9898.000
GR	319.000	9938.000	315.000	9979.000	314.000	9989.000	313.700	10000.000	314.000	10007.000
GR	315.000	10034.000	322.000	10064.000	.000	.000	.000	.000	.000	.000
X1	6.660	10.000	9878.000	10018.000	175.000	195.000	190.000	.000	.000	.000
GR	321.000	9878.000	318.000	9911.000	317.000	9950.000	315.000	9972.000	314.000	9995.000
GR	313.700	10000.000	314.000	10004.000	320.000	10018.000	322.000	10023.000	323.000	10050.000
X1	6.720	9.000	9960.000	10104.000	300.000	300.000	315.000	.000	.000	.000
GR	322.000	9960.000	319.000	9966.000	318.000	9972.000	317.000	10000.000	318.000	10012.000
GR	318.000	10030.000	319.000	10040.000	320.000	10104.000	321.000	10118.000	.000	.000
X1	6.764	13.000	9940.000	10184.000	230.000	230.000	230.000	.000	.000	.000
GR	323.000	9911.000	323.000	9940.000	322.000	9943.000	321.000	9943.000	320.000	9948.000
GR	319.000	9985.000	318.000	10000.000	319.000	10014.000	319.000	10035.000	320.000	10046.000
GR	321.000	10095.000	322.000	10162.000	323.000	10184.000	.000	.000	.000	.000
X1	6.814	10.000	9914.000	10175.000	325.000	200.000	265.000	.000	.000	.000
GR	328.000	9885.000	325.000	9914.000	322.000	9960.000	321.000	9992.000	320.900	10000.000

```
GR    321.000  10014.000    322.000   10046.000     323.000   10075.000     324.000   10167.000     325.000   10175.000

X1      6.880      8.000   9918.000   10080.000     360.000     330.000     350.000       .000        .000        .000
GR    327.000   9918.000    323.000    9926.000     323.000    9965.000     324.000    9985.000     324.000   10000.000
GR    324.000  10020.000    324.000   10070.000     327.000   10080.000        .000       .000        .000        .000

X1      5.937      6.000   9947.000   10055.000     325.000     275.000     300.000       .000        .000        .000
GR    330.000   9947.000    324.000    9960.000     324.000    9985.000     324.300   10000.000     325.000   10040.000
GR    329.000  10055.000       .000        .000        .000        .000        .000       .000        .000        .000

X1      6.994      8.000   9940.000   10049.000     310.000     290.000     300.000       .000        .000        .000
GR    330.000   9940.000    326.000    9953.000     325.000    9960.000     324.300   10000.000     324.000   10015.000
GR    324.000  10034.000    325.000   10037.000     330.000   10049.000        .000       .000        .000        .000
EJ       .000       .000       .000        .000        .000        .000        .000       .000        .000        .000
1
 10-31-89     08:20:07                                                                                          PAGE    3


   SECNO    DEPTH    CWSEL    CRIWS    WSELK    EG       HV       HL       OLOSS   BANK ELEV
   Q        QLOB     QCH      QROB     ALOB     ACH      AROB     VOL      TWA   LEFT/RIGHT
   TIME     VLOB     VCH      VROB     XNL      XNCH     XNR      WTN      ELMIN      SSTA
   SLOPE    XLOBL    XLCH     XLOBR    ITRIAL   IDC      ICONT    CORAR    TOPWID     ENDST


*PROF 1

IHLEQ = 1.  THEREFORE FRICTION LOSS (HL) IS CALCULATED AS A FUNCTION OF
PROFILE TYPE, WHICH CAN VARY FROM REACH TO REACH.  SEE DOCUMENTATION FOR
DETAILS.


CCHV=    .100 CEHV=    .300
*SECNO 6.388
3720 CRITICAL DEPTH ASSUMED
     6.39     3.27   314.27   314.27   314.28   315.93     1.65      .00      .00   316.00
    2600.       0.    2600.       0.       0.     252.       0.       0.       0.   316.00
      .00      .00    10.32      .00     .030     .030     .030     .000   311.00  9960.00
  .009950       0.       0.       0.        0        4        0      .00    77.00 10037.00
0
*SECNO 6.391
3280 CROSS SECTION      6.39 EXTENDED       .76 FEET


3301 HV CHANGED MORE THAN HVINS

     6.39     5.77   315.77      .00      .00   316.11      .34      .05      .13   316.00
    2600.       0.    2600.       0.       0.     553.       0.       0.       0.   315.00
      .00      .00     4.70      .00     .030     .030     .030     .000   310.00  9931.28
  .001311      23.      23.      23.        3        0        0      .00   128.72 10060.00
0
*SECNO 6.408
     6.41     5.71   315.71      .00      .00   316.36      .65      .16      .09   312.00
    2600.      73.    2523.       4.      21.     385.       4.       1.       0.   315.00
      .01     3.50     6.55     1.21     .030     .030     .030     .000   310.00  9948.85
  .002348      60.      90.     130.        2        0        0      .00   106.16 10055.01
```

```
0
*SECNO 6.465
    6.47     5.08   316.48      .00      .00   317.19      .71      .81      .02   317.00
   2600.       0.   2600.       0.       0.     385.       0.       4.       1.   317.00
     .02      .00     6.76      .00     .030     .030     .030     .000   311.40  9955.15
  .003068     290.     300.     310.        2        0        0      .00    98.14 10053.29
0
1
 10-31-89    08:20:07                                                                    PAGE    4

   SECNO    DEPTH    CWSEL    CRIWS    WSELK     EG       HV       HL      QLOSS   BANK ELEV
   Q        QLOB     QCH      QROB     ALOB      ACH      AROB     VOL     TWA   LEFT/RIGHT
   TIME     VLOB     VCH      VROB     XNL       XNCH     XNR      WTN     ELMIN      SSTA
   SLOPE    XLOBL    XLCH     XLOBR    ITRIAL    IDC      ICONT    CORAR   TOPWID     ENDST

*SECNO 6.515
    6.51     5.51   317.21      .00      .00   317.97      .76      .77      .02   318.00
   2600.       0.   2600.       0.       0.     371.       0.       6.       2.   318.00
     .03      .00     7.00      .00     .030     .030     .030     .000   311.70  9961.70
  .002763     260.     265.     265.        2        0        0      .00    82.20 10043.90
0
*SECNO 6.529
    6.53     5.66   317.26      .00      .00   318.31     1.04      .25      .08   319.00
   2600.       0.   2600.       0.       0.     317.       0.       7.       2.   318.00
     .03      .00     8.19      .00     .030     .030     .030     .000   311.60  9970.97
  .002925      80.      75.      80.        2        0        0      .00    71.82 10042.80
0
*SECNO 6.586
    6.59     6.31   318.61      .00      .00   319.23      .62      .88      .04   320.00
   2600.       0.   2600.       0.       0.     412.       0.       9.       2.   320.00
     .04      .00     6.32      .00     .030     .030     .030     .000   312.30  9946.92
  .002362     300.     300.     300.        2        0        0      .00    94.62 10041.54
0
*SECNO 6.624
    6.62     5.70   319.40      .00      .00   319.85      .45      .60      .02   320.00
   2600.       0.   2600.       0.       0.     480.       0.      11.       3.   322.00
     .05      .00     5.42      .00     .030     .030     .030     .000   313.70  9856.61
  .003659     175.     200.     215.        2        0        0      .00   196.22 10052.83
0
*SECNO 6.660
    6.66     6.25   319.95      .00      .00   320.53      .58      .64      .04   321.00
   2600.       0.   2600.       0.       0.     426.       0.      13.       4.   320.00
     .06      .00     6.10      .00     .030     .030     .030     .000   313.70  9889.46
  .003118     175.     190.     195.        0        0        0      .00   128.44 10017.90
0
*SECNO 6.720
3280 CROSS SECTION      6.72 EXTENDED       .22 FEET

    6.72     4.22   321.22      .00      .00   321.99      .76     1.40      .06   322.00
   2600.       0.   2570.      30.       0.     365.      10.      16.       5.   320.00
     .08      .00     7.04     2.99     .030     .030     .030     .000   317.00  9961.56
  .005796     300.     315.     300.        1        0        0      .00   156.44 10118.00
0
```

```
   SECNO    DEPTH    CWSEL    CRIWS    WSELK    EG       HV       HL       OLOSS   BANK ELEV
   Q        QLOB     QCH      QROB     ALOB     ACH      AROB     VOL      TWA   LEFT/RIGHT
   TIME     VLOB     VCH      VROB     XNL      XNCH     XNR      WTN      ELMIN      SSTA
   SLOPE    XLOBL    XLCH     XLOBR    ITRIAL   IDC      ICONT    CORAR    TOPWID     ENDST


*SECNO 6.764
     6.76     4.61   322.61      .00      .00   322.97      .36      .95      .04   323.00
    2600.       0.   2600.       0.       0.     537.       0.      19.       6.   323.00
      .09      .00     4.84      .00     .030     .030     .030     .000   318.00  9941.18
  .003188     230.     230.     230.        2        0        0      .00   234.20 10175.38
0
*SECNO 6.814
     6.81     3.24   324.14      .00      .00   324.87      .72     1.79      .11   325.00
    2600.       0.   2600.       0.       0.     381.       0.      21.       7.   325.00
      .10      .00     6.82      .00     .030     .030     .030     .000   320.90  9927.16
  .010294     325.     265.     200.        7        0        0      .00   240.98 10168.13
0
*SECNO 6.880
     6.88     3.42   326.42      .00      .00   327.02      .60     2.14      .01   327.00
    2600.       0.   2600.       0.       0.     419.       0.      25.       9.   327.00
      .11      .00     6.20      .00     .030     .030     .030     .000   323.00  9919.16
  .004347     360.     350.     330.        2        0        0      .00   158.91 10078.07
0
*SECNO 6.937

3301 HV CHANGED MORE THAN HVINS

     6.94     3.69   327.69      .00      .00   328.89     1.20     1.70      .18   330.00
    2600.       0.   2600.       0.       0.     296.       0.      27.      10.   329.00
      .12      .00     8.79      .00     .030     .030     .030     .000   324.00  9951.99
  .007349     325.     300.     275.        3        0        0      .00    98.11 10050.11
0
*SECNO 6.994

3301 HV CHANGED MORE THAN HVINS

     6.99     5.38   329.38      .00      .00   329.89      .51      .93      .07   330.00
    2600.       0.   2600.       0.       0.     453.       0.      30.      10.   330.00
      .14      .00     5.74      .00     .030     .030     .030     .000   324.00  9942.01
  .001959     310.     300.     290.        2        0        0      .00   105.50 10047.51
0
```


THIS RUN EXECUTED 10-31-89

****
HEC2 RELEASE DATED NOV 76 UPDATED MAY 1984

ERROR CORR - 01,02,03,04,05,06
MODIFICATION - 50,51,52,53,54,55,56
IBM-PC-XT VERSION AUGUST 1985
****

NOTE- ASTERISK (*) AT LEFT OF CROSS-SECTION NUMBER INDICATES MESSAGE IN SUMMARY OF ERRORS LIST

TANLEY/METTEE-MCGILL-MUR

SUMMARY PRINTOUT TABLE 150

	SECNO	XLCH	ELTRD	ELLC	ELMIN	Q	CWSEL	CRIWS	EG	10K*S	VCH	AREA	.01K
*	6.398	.00	.00	.00	311.00	2600.00	314.27	314.27	315.93	99.50	10.32	252.04	260.66
	6.391	23.00	.00	.00	310.00	2600.00	315.77	.00	316.11	13.11	4.70	553.06	718.08
	6.408	90.00	.00	.00	310.00	2600.00	315.71	.00	316.36	23.48	6.55	409.59	536.61
	6.465	300.00	.00	.00	311.40	2600.00	316.48	.00	317.19	30.68	6.76	384.75	469.40
	6.515	265.00	.00	.00	311.70	2600.00	317.21	.00	317.97	27.63	7.00	371.47	494.59
	6.529	75.00	.00	.00	311.60	2600.00	317.26	.00	318.31	39.26	8.19	317.34	414.93
	6.586	300.00	.00	.00	312.30	2600.00	318.61	.00	319.23	23.62	6.32	411.58	535.02
	6.624	200.00	.00	.00	313.70	2600.00	319.40	.00	319.85	36.59	5.42	479.78	429.83
	6.660	190.00	.00	.00	313.70	2600.00	319.95	.00	320.53	31.18	6.10	425.91	465.65
	6.720	315.00	.00	.00	317.00	2600.00	321.22	.00	321.99	57.96	7.04	375.14	341.50
	6.764	230.00	.00	.00	318.00	2600.00	322.61	.00	322.97	31.88	4.84	536.82	460.49
	6.814	265.00	.00	.00	320.90	2600.00	324.14	.00	324.87	102.94	6.82	381.20	255.26
	6.880	350.00	.00	.00	323.00	2600.00	326.42	.00	327.02	43.47	6.20	419.13	394.37
	6.937	300.00	.00	.00	324.00	2600.00	327.69	.00	328.89	73.49	8.79	295.75	303.30
	6.994	300.00	.00	.00	324.00	2600.00	329.38	.00	329.89	19.59	5.74	453.33	587.49

1
10-31-89 08:20:07 PAGE 7

TANLEY/METTEE-MCGILL-MUR

SUMMARY PRINTOUT TABLE 150

	SECNO	Q	CWSEL	DIFWSP	DIFWSX	DIFKWS	TOPWID	XLCH
*	6.388	2600.00	314.27	.00	.00	-.01	77.00	.00
	6.391	2600.00	315.77	.00	1.49	.00	128.72	23.00
	6.408	2600.00	315.71	.00	-.06	.00	106.16	90.00
	6.465	2600.00	316.48	.00	.77	.00	98.14	300.00
	6.515	2600.00	317.21	.00	.73	.00	82.20	265.00
	6.529	2600.00	317.26	.00	.05	.00	71.82	75.00
	6.586	2600.00	318.61	.00	1.35	.00	94.62	300.00
	6.624	2600.00	319.40	.00	.78	.00	196.22	200.00
	6.660	2600.00	319.95	.00	.55	.00	128.44	190.00
	6.720	2600.00	321.22	.00	1.28	.00	156.44	315.00
	6.764	2600.00	322.61	.00	1.38	.00	234.20	230.00
	6.814	2600.00	324.14	.00	1.54	.00	240.98	265.00
	6.880	2600.00	326.42	.00	2.28	.00	158.91	350.00
	6.927	2600.00	327.69	.00	1.27	.00	98.11	300.00
	6.994	2600.00	329.38	.00	1.69	.00	105.50	300.00

1

10-31-89 08:20:07 PAGE 8

SUMMARY OF ERRORS AND SPECIAL NOTES

CAUTION SECNO= 6.388 PROFILE= 1 CRITICAL DEPTH ASSUMED

1

10-31-89 08:20:21 PAGE 1

THIS RUN EXECUTED 10-31-89

****

HEC2 RELEASE DATED NOV 76 UPDATED MAY 1984
ERROR CORR - 01,02,03,04,05,06
MODIFICATION - 50,51,52,53,54,55,56
IBM-PC-XT VERSION AUGUST 1985

```
1*****************************************************
 *  WATER SURFACE PROFILES                           *
 *  VERSION OF NOVEMBER 1976                         *
 *  UPDATED MAY 1984                                 *
 *  IBM-PC-XT VERSION AUGUST 1985                    *
 *  RUN DATE  10-31-89   TIME  08:29:57              *
*****************************************************
```

```
*************************************
 *  U.S. ARMY CORPS OF ENGINEERS     *
 *  THE HYDROLOGIC ENGINEERING CENTER *
 *  609 SECOND STREET, SUITE D       *
 *  DAVIS, CALIFORNIA 95616          *
  *  (916) 440-2105 (FTS) 448-2105    *
*************************************
```

```
X     X  XXXXXXX   XXXXX             XXXXX
X     X  X       X     X           X     X
X     X  X       X                       X
XXXXXXX  XXXX     X         XXXXX    XXXXX
X     X  X       X                 X
X     X  X       X     X           X
X     X  XXXXXXX   XXXXX            XXXXXXX
```

1

10-31-89 08:29:58 PAGE 1

THIS RUN EXECUTED 10-31-89

```
*************************************************
  HEC2 RELEASE DATED NOV 76 UPDATED MAY  1984
  ERROR CORR -  01,02,03,04,05,06
  MODIFICATION -  50,51,52,53,54,55,56
  IBM-PC-XT VERSION AUGUST 1985
*************************************************
```

```
FR FREE FORMAT
T1     SKUNK CREEK FLOODPLAIN STUDY   **** IMPROVED DOWNSTREAM CHANNEL ****
T2     100 YEAR FLOW - SKCRB
T3     STANLEY/METTEE-MCGILL-MURPHY

J1  ICHECK    INQ       NINV      IDIR      STRT      METRIC    HVINS     Q         WSEL      FQ

       0.        2.        0.        0. -1.000000      .00       .0        0.   314.280      .000

J2  NPROF     IPLOT     PRFVS     XSECV     XSECH     FN        ALLDC     IBW       CHNIM     ITRACE

    -1.000      .000    -1.000      .000    20.000      .000      .000      .000      .000      .000

J3  VARIABLE CODES FOR SUMMARY PRINTOUT

   150.000      .000      .000      .000      .000      .000      .000      .000      .000      .000

J6  IHLEQ     ICOPY
```

```
     1.000     .000     .000     .000     .000     .000     .000     .000     .000     .000

QT     1.000  2600.000     .000     .000     .000     .000     .000     .000     .000     .000
NC      .030     .030     .030     .100     .300     .000     .000     .000     .000     .000
X1     6.388     6.000  9960.000 10037.000     .000     .000     .000     .000     .000     .000
GR   316.000  9921.000   316.000  9960.000  311.000  9960.000  311.000 10037.000  316.000 10037.000
GR   316.000 10079.000     .000     .000     .000     .000     .000     .000     .000     .000

X1     6.391     5.000  9930.000 10060.000   23.000   23.000   23.000     .000     .000     .000
GR   316.000  9930.000   310.000  9962.000  310.000 10000.000  310.000 10020.000  315.000 10060.000

X1     6.408     7.000  9950.000 10045.000   60.000  130.000   90.000     .000     .000     .000
GR   317.000  9945.000   312.000  9960.000  311.000  9968.000  310.000 10000.000  311.000 10025.000
GR   315.000 10045.000   316.000 10059.000     .000     .000     .000     .000     .000     .000

X1     6.465     6.000  9954.000 10056.000  290.000  310.000  300.000     .000     .000     .000
GR   317.000  9954.000   312.000  9965.000  311.400 10000.000  312.000 10030.000  317.000 10056.000
GR   318.000 10107.000     .000     .000     .000     .000     .000     .000     .000     .000
1
 10-31-89     08:29:58                                                                    PAGE    2


X1     6.515     5.000  9960.000 10049.000  260.000  265.000  265.000     .000     .000     .000
GR   318.000  9960.000   312.000  9974.000  311.800 10000.000  312.000 10021.000  318.000 10049.000

X1    16.568     5.000  9950.000 10050.000  250.000  280.000  280.000     .000     .000     .000
GR   323.180  9950.000   313.180  9970.000  312.580 10000.000  313.180 10050.000  323.180 10050.000

X1    16.628      .000     .000     .000  312.000  360.000  336.000     .000     .940     .000

X1    16.710      .000     .000     .000  434.000  434.000  434.000     .000    1.220     .000

X1    16.761      .000     .000     .000  292.000  250.000  271.000     .000     .760     .000

X1    16.774     5.000  9973.330 10026.670   57.000   57.000   57.000     .000     .000     .000
GR   322.160  9973.330   316.160  9973.330  315.660 10000.000  316.160 10026.670  322.160 10026.670
EJ      .000     .000     .000     .000     .000     .000     .000     .000     .000     .000
1
 10-31-89     08:29:58                                                                    PAGE    3


   SECNO    DEPTH    CWSEL    CRIWS    WSELK    EG       HV       HL       OLOSS   BANK ELEV
   Q        QLOB     QCH      QROB     ALOB     ACH      AROB     VOL      TWA   LEFT/RIGHT
   TIME     VLOB     VCH      VROB     XNL      XNCH     XNR      WTN      ELMIN      SSTA
   SLOPE    XLOBL    XLCH     XLOBR    ITRIAL   IDC      ICONT    CORAR    TOPWID     ENDST


*PROF 1

IHLEQ = 1.  THEREFORE FRICTION LOSS (HL) IS CALCULATED AS A FUNCTION OF
PROFILE TYPE, WHICH CAN VARY FROM REACH TO REACH.  SEE DOCUMENTATION FOR
DETAILS.
```

```
CCHV=    .100 CEHV=    .300
*SECNO 6.388
3720 CRITICAL DEPTH ASSUMED
     6.39     3.27   314.27   314.27   314.28   315.93     1.65      .00      .00   316.00
    2600.       0.    2600.       0.       0.     252.       0.       0.       0.   316.00
      .00      .00    10.32      .00     .030     .030     .030     .000   311.00  9960.00
  .009950       0.       0.       0.        0        4        0      .00    77.00 10037.00
0
*SECNO 6.391
3280 CROSS SECTION      6.39 EXTENDED      .76 FEET


3301 HV CHANGED MORE THAN HVINS

     6.39     5.77   315.77      .00      .00   316.11      .34      .05      .13   316.00
    2600.       0.    2600.       0.       0.     553.       0.       0.       0.   315.00
      .00      .00     4.70      .00     .030     .030     .030     .000   310.00  9931.28
  .001311      23.      23.      23.        3        0        0      .00   128.72 10060.00
0
*SECNO 6.408
     6.41     5.71   315.71      .00      .00   315.36      .65      .16      .09   312.00
    2600.      73.    2523.       4.      21.     385.       4.       1.       0.   315.00
      .01     3.50     6.55     1.21     .030     .030     .030     .000   310.00  9948.85
  .002348      60.      90.     130.        2        0        0      .00   106.16 10055.01
0
*SECNO 6.465
     6.47     5.08   316.48      .00      .00   317.19      .71      .81      .02   317.00
    2600.       0.    2600.       0.       0.     385.       0.       4.       1.   317.00
      .02      .00     6.76      .00     .030     .030     .030     .000   311.40  9955.15
  .003058     290.     300.     310.        2        0        0      .00    98.14 10053.29
0
1
 10-31-89    08:29:58                                                                    PAGE    4


   SECNO    DEPTH    CWSEL    CRIWS    WSELK    EG       HV       HL       OLOSS    BANK ELEV
   Q        QLOB     QCH      QROB     ALOB     ACH      AROB     VOL      TWA    LEFT/RIGHT
   TIME     VLOB     VCH      VROB     XNL      XNCH     XNR      WTN      ELMIN      SSTA
   SLOPE    XLOBL    XLCH     XLOBR    ITRIAL   IDC      ICONT    CORAR    TOPWID     ENDST


*SECNO 6.515
     6.51     5.43   317.23      .00      .00   317.97      .74      .77      .01   318.00
    2600.       0.    2600.       0.       0.     376.       0.       6.       2.   318.00
      .03      .00     6.91      .00     .030     .030     .030     .000   311.80  9961.81
  .002749     250.     255.     265.        2        0        0      .00    84.87 10046.68
0
*SECNO 16.568
    16.57     5.40   317.98      .00      .00   318.82      .85      .83      .03   323.18
    2600.       0.    2600.       0.       0.     352.       0.       9.       2.   323.18
      .04      .00     7.39      .00     .030     .030     .030     .000   312.58  9960.41
  .003164     280.     280.     280.        2        0        0      .00    79.19 10039.59
0
*SECNO 16.628
```

```
   16.63     5.53   319.05      .00      .00   319.85      .80     1.02      .00   324.12
   2600.       0.    2600.       0.       0.     362.       0.      11.       3.   324.12
     .05      .00     7.18      .00     .030     .030     .030     .000   313.52  9960.15
  .002901     312.     336.     360.        2        0        0      .00    79.71 10039.85
0
*SECNO 16.710
   16.71     5.56   320.30      .00      .00   321.09      .79     1.24      .00   325.34
   2600.       0.    2600.       0.       0.     365.       0.      15.       3.   325.34
     .07      .00     7.12      .00     .030     .030     .030     .000   314.74  9960.07
  .002830     434.     434.     434.        2        0        0      .00    79.86 10039.93
0
*SECNO 16.761
   16.76     5.57   321.07      .00      .00   321.85      .78      .76      .00   326.10
   2600.       0.    2600.       0.       0.     366.       0.      17.       4.   326.10
     .08      .00     7.09      .00     .030     .030     .030     .000   315.50  9960.04
  .002800     292.     271.     250.        0        0        0      .00    79.92 10039.96
0
*SECNO 16.774

3301 HV CHANGED MORE THAN HVINS

   16.77     5.10   320.76      .00      .00   322.33     1.57      .24      .24   322.16
   2600.       0.    2600.       0.       0.     259.       0.      18.       4.   322.16
     .08      .00    10.05      .00     .030     .030     .030     .000   315.66  9973.33
  .006197      57.      57.      57.        3        0        0      .00    53.34 10026.67
0
1
 10-31-89    08:29:59                                                                    PAGE    5


                                                                    THIS RUN EXECUTED 10-31-89
*************************************************
  HEC2 RELEASE DATED NOV 76 UPDATED MAY  1984
  ERROR CORR -  01,02,03,04,05,06
  MODIFICATION -  50,51,52,53,54,55,56
  IBM-PC-XT VERSION AUGUST 1985
*************************************************


NOTE- ASTERISK (*) AT LEFT OF CROSS-SECTION NUMBER INDICATES MESSAGE IN SUMMARY OF ERRORS LIST


TANLEY/METTEE-MCGILL-MUR

SUMMARY PRINTOUT TABLE  150


      SECNO     XLCH     ELTRD     ELLC     ELMIN      Q       CWSEL    CRIWS     EG      10K*S     VCH     AREA     .01K

*     6.388      .00       .00      .00    311.00  2600.00   314.27   314.27   315.93    99.50    10.32   252.04   260.66

      6.391    23.00       .00      .00    310.00  2600.00   315.77      .00   316.11    13.11     4.70   553.06   718.08
```

6.408	90.00	.00	.00	310.00	2600.00	315.71	.00	316.36	23.48	6.55	409.59	536.61
6.465	300.00	.00	.00	311.40	2600.00	316.48	.00	317.19	30.68	6.76	384.75	469.40
6.515	265.00	.00	.00	311.80	2600.00	317.23	.00	317.97	27.49	6.91	376.41	495.87
16.568	280.00	.00	.00	312.58	2600.00	317.98	.00	318.82	31.54	7.39	351.83	462.21
16.628	336.00	.00	.00	313.52	2600.00	319.05	.00	319.85	29.01	7.18	362.14	482.70
16.710	434.00	.00	.00	314.74	2600.00	320.30	.00	321.09	28.30	7.12	365.16	488.75
16.761	271.00	.00	.00	315.50	2600.00	321.07	.00	321.85	28.00	7.09	366.46	491.38
16.774	57.00	.00	.00	315.66	2600.00	320.76	.00	322.33	61.97	10.05	258.75	330.29

1

TANLEY/METTEE-MCGILL-MUR

SUMMARY PRINTOUT TABLE 150

	SECND	Q	CWSEL	DIFWSP	DIFWSX	DIFKWS	TOPWID	XLCH
*	6.388	2600.00	314.27	.00	.00	-.01	77.00	.00
	6.391	2600.00	315.77	.00	1.49	.00	128.72	23.00
	6.408	2600.00	315.71	.00	-.06	.00	106.16	90.00
	6.465	2600.00	316.48	.00	.77	.00	98.14	300.00
	6.515	2600.00	317.23	.00	.75	.00	84.87	265.00
	16.568	2600.00	317.98	.00	.75	.00	79.19	280.00
	16.628	2600.00	319.05	.00	1.07	.00	79.71	336.00
	16.710	2600.00	320.30	.00	1.26	.00	79.86	434.00
	16.761	2600.00	321.07	.00	.77	.00	79.92	271.00
	16.774	2600.00	320.76	.00	-.31	.00	53.34	57.00

1

SUMMARY OF ERRORS AND SPECIAL NOTES

CAUTION SECNO= 6.388 PROFILE= 1 CRITICAL DEPTH ASSUMED

1

10-31-89 08:30:06 PAGE 1

THIS RUN EXECUTED 10-31-89

```
**************************************************
  HEC2 RELEASE DATED NOV 76 UPDATED MAY  1984
  ERROR CORR -  01,02,03,04,05,06
  MODIFICATION -  50,51,52,53,54,55,56
  IBM-PC-XT VERSION AUGUST 1985
**************************************************
```

PROJECT: RBM 600-0-305

DESIGNER: MAL

DATE: 3-21-88

HYDROLOGIC AND CHANNEL INFORMATION

Q_1 = _____ TW_1 = _____

Q_2 = 2600 TW_2 = 4.6

(Q_1 = DESIGN DISCHARGE, SAY Q_{25}
Q_2 = CHECK DISCHARGE, SAY ~~Q_{50}~~ OR Q_{100})

SKETCH

STATION: Skunk Creek

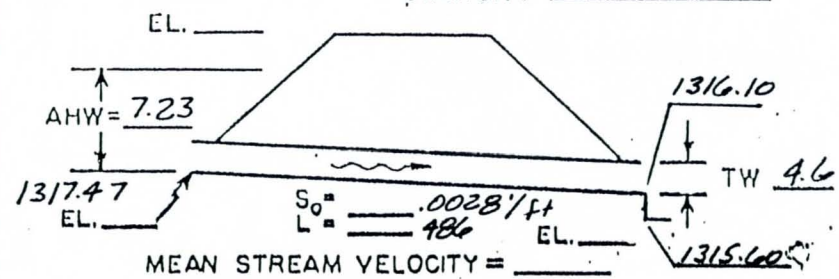

MEAN STREAM VELOCITY = _____

MAX. STREAM VELOCITY = _____

CULVERT DESCRIPTION (ENTRANCE TYPE)	Q	SIZE	HEADWATER COMPUTATION: INLET CONT. $\frac{HW}{D}$	HW	OUTLET CONTROL $HW = H + h_o - LS_o$: K_c	H	d_c	$\frac{d_c+D}{2}$	TW	h_o	LS_o	HW	CONTROLLING HW	OUTLET VELOCITY	COST	COMMENTS
5-10'x6'x486			1.2	7.2	.5	*3.4	4.4	5.2	4.6	4.6	1.4	6.6	7.2	8.7		Inlet Cont.

SUMMARY & RECOMMENDATIONS:

* $2.8 + (.25 \frac{V^2}{2g} \times 2)$ ← Bend Loss

V_c = 8.67 ft/s

Note: Controlling HW El. is used to begin WS El. for HEC2 (upstream) run without reducing for velocity Head.

Conservative

Figure 7

```
1*************************************************
 * WATER SURFACE PROFILES                        *
 * VERSION OF NOVEMBER 1976                      *
 * UPDATED MAY 1984                              *
 * IBM-PC-XT VERSION AUGUST 1985                 *
 * RUN DATE  10-31-89   TIME  08:30:27            *
 *************************************************
```

```
*************************************
* U.S. ARMY CORPS OF ENGINEERS      *
* THE HYDROLOGIC ENGINEERING CENTER *
* 609 SECOND STREET, SUITE D        *
* DAVIS, CALIFORNIA 95616           *
* (916) 440-2105 (FTS) 448-2105     *
*************************************
```

```
X     X  XXXXXXX   XXXXX              XXXXX
X     X  X        X     X            X     X
X     X  X        X                        X
XXXXXXX  XXXX     X          XXXXX    XXXXX
X     X  X        X                  X
X     X  X        X     X            X
X     X  XXXXXXX   XXXXX              XXXXXXX
```

1

10-31-89 08:30:27 PAGE 1

THIS RUN EXECUTED 10-31-89

```
*************************************************
  HEC2 RELEASE DATED NOV 76 UPDATED MAY  1984
  ERROR CORR -  01,02,03,04,05,06
  MODIFICATION -  50,51,52,53,54,55,56
  IBM-PC-XT VERSION AUGUST 1985
*************************************************
```

```
FR FREE FORMAT
T1     SKUNK CREEK FLOODPLAIN STUDY   **** IMPROVED UPSTREAM CHANNEL ****
T2     100 YEAR FLOW - SKCRC
T3     STANLEY/METTEE-MCGILL-MURPHY

J1  ICHECK    INQ       NINV      IDIR      STRT      METRIC    HVINS     Q         WSEL      FQ

       0.        0.        0.        0.   .000000      .00        .0     2600.   324.780      .000

J2  NPROF     IPLOT     PRFVS     XSECV     XSECH     FN        ALLDC     IBW       CHNIM     ITRACE

    -1.000      .000    -1.000      .000    20.000      .000      .000      .000      .000      .000

J3  VARIABLE CODES FOR SUMMARY PRINTOUT

   150.000      .000      .000      .000      .000      .000      .000      .000      .000      .000

J6  IHLEQ     ICOPY
```

```
     1.000      .000      .000      .000      .000      .000      .000      .000      .000      .000

NC      .012      .012      .012      .100      .300      .000      .000      .000      .000      .000
X1    16.850     4.000  9970.580 10029.420      .000      .000      .000      .000      .000      .000
GR   326.340  9970.580   317.500  9970.580   317.440 10029.420   326.340 10029.420      .000      .000

X1    16.861     4.000  9968.000 10031.330    10.000    10.000    10.000      .000      .000      .000
GR   326.340  9968.000   317.530  9968.000   317.470 10031.330   326.340 10031.330      .000      .000

X1    16.862     4.000  9968.000 10031.330     1.000     1.000     1.000      .000      .000      .000
GR   326.340  9968.000   320.500  9968.000   320.500 10031.330   326.340 10031.330      .000      .000

NC      .030      .030      .030      .000      .000      .000      .000      .000      .000      .000
X1    16.870     5.000  9953.000 10041.500    37.000    53.000    45.000      .000      .000      .000
GR   327.100  9953.000   321.100  9965.000   320.600 10000.000   321.100 10034.000   324.800 10041.500
1
 10-31-89     08:30:27                                                                          PAGE    2

X1    16.908     6.000  9939.000 10053.000   200.000   200.000   200.000      .000      .000      .000
GR   329.000  9939.000   326.000  9949.000   321.500  9961.000   321.000 10000.000   321.500 10038.000
GR   329.000 10053.000      .000      .000      .000      .000      .000      .000      .000      .000

X1    16.919     4.000  9960.000 10040.000    55.000    55.000    60.000      .000      .000      .000
GR   329.000  9960.000   321.000  9960.000   321.000 10040.000   329.000 10040.000      .000      .000

X1    16.924     4.000  9960.000 10040.000    27.000    27.000    27.000      .000      .000      .000
GR   331.000  9960.000   321.000  9960.000   321.000 10040.000   331.000 10040.000      .000      .000

X1    16.925     4.000  9960.000 10040.000     1.000     1.000     1.000      .000      .000      .000
GR   331.000  9960.000   324.000  9960.000   324.000 10040.000   331.000 10040.000      .000      .000

X1    16.927      .000  9960.000 10040.000    12.000    12.000    12.000      .000      .000      .000

X1    16.937     7.000  9930.000 10070.000    50.000    50.000    50.000      .000      .000      .000
GR   330.000  9930.000   325.000  9955.000   324.000  9985.000   324.000 10030.000   325.000 10038.000
GR   328.000 10046.000   329.000 10070.000      .000      .000      .000      .000      .000      .000
EJ      .000      .000      .000      .000      .000      .000      .000      .000      .000      .000
1
 10-31-89     08:30:27                                                                          PAGE    3

   SECNO    DEPTH    CWSEL    CRIWS    WSELK    EG       HV       HL       OLOSS   BANK ELEV
   Q        QLOB     QCH      QROB     ALOB     ACH      AROB     VOL      TWA   LEFT/RIGHT
   TIME     VLOB     VCH      VROB     XNL      XNCH     XNR      WTN      ELMIN     SSTA
   SLOPE    XLOBL    XLCH     XLOBR    ITRIAL   IDC      ICONT    CORAR    TOPWID    ENDST

*PROF 1

IHLEQ = 1.  THEREFORE FRICTION LOSS (HL) IS CALCULATED AS A FUNCTION OF
PROFILE TYPE, WHICH CAN VARY FROM REACH TO REACH.  SEE DOCUMENTATION FOR
DETAILS.
```

```
CCHV=    .100 CEHV=    .300
*SECNO 16.860
    16.86     7.34   324.78      .00   324.78   325.35      .57      .00      .00   326.34
    2600.       0.    2600.       0.       0.    430.       0.       0.       0.   326.34
      .00      .00     6.04      .00     .012     .012     .012     .000   317.44  9970.58
  .000226       0.       0.       0.        0        0        0      .00    58.84 10029.42
0
*SECNO 16.861
    16.86     7.41   324.88      .00      .00   325.36      .48      .00      .01   326.34
    2600.       0.    2600.       0.       0.    467.       0.       0.       0.   326.34
      .00      .00     5.56      .00     .012     .012     .012     .000   317.47  9958.00
  .000186      10.      10.      10.        2        0        0      .00    63.33 10031.33
0
*SECNO 16.862

3301 HV CHANGED MORE THAN HVINS

3685 20 TRIALS ATTEMPTED WSEL,CWSEL
3693 PROBABLE MINIMUM SPECIFIC ENERGY
3720 CRITICAL DEPTH ASSUMED
    16.86     3.74   324.24   324.24      .00   325.11     1.88      .00      .42   326.34
    2600.       0.    2600.       0.       0.    237.       0.       0.       0.   326.34
      .00      .00    10.99      .00     .012     .012     .012     .000   320.50  9958.00
  .001577       1.       1.       1.       20        8        0      .00    63.33 10031.33
0
*SECNO 16.870
3260 CROSS SECTION     16.87 EXTENDED      .71 FEET


3301 HV CHANGED MORE THAN HVINS

    16.87     4.91   325.51      .00      .00   326.32      .81      .10      .11   327.10
    2600.       0.    2600.       0.       0.    360.       0.       0.       0.   324.80
      .00      .00     7.21      .00     .030     .030     .030     .000   320.60  9956.17
  .003233      37.      45.      53.        5        0        0      .00    85.33 10041.50
0
1
 10-31-83    08:30:27                                                                    PAGE    4


   SECNO    DEPTH    CWSEL    CRIWS    WSELK    EG       HV       HL       OLOSS    BANK ELEV
   Q        QLOB     QCH      QROB     ALOB     ACH      AROB     VOL      TWA    LEFT/RIGHT
   TIME     VLOB     VCH      VROB     XNL      XNCH     XNR      WTN      ELMIN      SSTA
   SLOPE    XLOBL    XLCH     XLOBR    ITRIAL   IDC      ICONT    CORAR    TOPWID     ENDST


*SECNO 16.908
    16.91     5.30   326.30      .00      .00   326.84      .53      .49      .03   329.00
    2600.       0.    2600.       0.       0.    443.       0.       2.       1.   329.00
      .01      .00     5.87      .00     .030     .030     .030     .000   321.00  9947.98
  .001969     200.     200.     200.        2        0        0      .00    99.63 10047.61
0
*SECNO 16.919
    16.92     5.40   326.40      .00      .00   326.96      .55      .11      .01   329.00
```

```
    2600.      0.    2600.      0.      0.     432.      0.      3.      1.    329.00
      .01     .00     6.02     .00    .030     .030    .030    .000  321.00  9960.00
  .001849     65.     60.     55.       2        0       0     .00   80.00 10040.00
0
*SECNO 16.924
    16.92    5.46   326.46     .00     .00   327.01     .55     .05     .00   331.00
    2600.      0.    2600.      0.      0.     436.      0.      3.      1.    331.00
      .02     .00     5.97     .00    .030     .030    .030    .000  321.00  9960.00
  .001794     27.     27.     27.       0        0       0     .00   80.00 10040.00
0
*SECNO 16.925

3301 HV CHANGED MORE THAN HVINS

3585 20 TRIALS ATTEMPTED WSEL,CWSEL
3693 PROBABLE MINIMUM SPECIFIC ENERGY
3720 CRITICAL DEPTH ASSUMED
    16.92    3.20   327.20   327.20     .00   328.50    1.50     .01     .31   331.00
    2600.      0.    2600.      0.      0.     256.      0.      3.      1.    331.00
      .02     .00    10.15     .00    .030     .030    .030    .000  324.00  9960.00
  .009872      1.      1.      1.      20       11       0     .00   80.00 10040.00
0
*SECNO 16.927
    16.93    3.80   327.80     .00     .00   328.33    1.13     .09     .05   331.00
    2600.      0.    2600.      0.      0.     304.      0.      3.      1.    331.00
      .02     .00     8.54     .00    .030     .030    .030    .000  324.00  9960.00
  .005655     12.     12.     12.       5        0       0     .00   80.00 10040.00
0
*SECNO 16.937
1
 10-31-89     08:30:27                                                          PAGE    5

   SECNO    DEPTH    CWSEL    CRIWS    WSELK    EG       HV       HL       OLOSS   BANK ELEV
   Q        QLOB     QCH      QROB     ALOB     ACH      AROB     VOL      TWA   LEFT/RIGHT
   TIME     VLOB     VCH      VROB     XNL      XNCH     XNR      WTN      ELMIN      SSTA
   SLOPE    XLOBL    XLCH     XLOBR    ITRIAL   IDC      ICONT    CORAR    TOPWID     ENDST


3301 HV CHANGED MORE THAN HVINS

    16.94    4.58   328.58     .00     .00   329.19     .61     .21     .05   330.00
    2600.      0.    2600.      0.      0.     414.      0.      4.      1.    329.00
      .02     .00     6.29     .00    .030     .030    .030    .000  324.00  9937.11
  .003224     50.     50.     50.       3        0       0     .00  122.74 10059.86
0
1
 10-31-89     08:30:27                                                          PAGE    6


                                                                THIS RUN EXECUTED 10-31-89
**************************************************
```

HEC2 RELEASE DATED NOV 76 UPDATED MAY 1984
ERROR CORR - 01,02,03,04,05,06
MODIFICATION - 50,51,52,53,54,55,56
IBM-PC-XT VERSION AUGUST 1985
****

NOTE- ASTERISK (*) AT LEFT OF CROSS-SECTION NUMBER INDICATES MESSAGE IN SUMMARY OF ERRORS LIST

TANLEY/METTEE-MCGILL-MUR

SUMMARY PRINTOUT TABLE 150

	SECNO	XLCH	ELTRD	ELLC	ELMIN	Q	CWSEL	CRIWS	EG	10K*S	VCH	AREA	.01K
	16.860	.00	.00	.00	317.44	2600.00	324.78	.00	325.35	2.26	6.04	430.12	1730.39
	16.861	10.00	.00	.00	317.47	2600.00	324.88	.00	325.36	1.86	5.56	467.21	1906.97
*	16.862	1.00	.00	.00	320.50	2600.00	324.24	324.24	326.11	15.77	10.99	236.55	654.71
	16.870	45.00	.00	.00	320.60	2600.00	325.51	.00	326.32	32.33	7.21	360.45	457.25
	16.908	200.00	.00	.00	321.00	2600.00	326.30	.00	326.84	19.69	5.87	443.14	585.87
	16.919	60.00	.00	.00	321.00	2600.00	326.40	.00	326.95	18.49	5.02	431.70	604.69
	16.924	27.00	.00	.00	321.00	2600.00	326.46	.00	327.01	17.94	5.97	435.82	613.67
*	16.925	1.00	.00	.00	324.00	2600.00	327.20	327.20	328.80	98.72	10.15	255.65	251.69
	16.927	12.00	.00	.00	324.00	2600.00	327.80	.00	328.53	56.55	8.54	304.32	345.75
	16.937	50.00	.00	.00	324.00	2600.00	328.58	.00	329.19	32.24	6.29	413.53	457.50

1
10-31-89 08:30:27 PAGE 7

TANLEY/METTEE-MCGILL-MUR

SUMMARY PRINTOUT TABLE 150

	SECNO	Q	CWSEL	DIFWSP	DIFWSX	DIFKWS	TOPWID	XLCH
	16.860	2600.00	324.78	.00	.00	.00	58.84	.00
	16.861	2600.00	324.88	.00	.10	.00	63.33	10.00
*	16.862	2600.00	324.24	.00	-.64	.00	63.33	1.00
	16.870	2600.00	325.51	.00	1.28	.00	85.33	45.00

	16.908	2600.00	326.30	.00	.79	.00	99.63	200.00
	16.919	2600.00	326.40	.00	.09	.00	80.00	60.00
	16.924	2600.00	326.46	.00	.06	.00	80.00	27.00
*	16.925	2600.00	327.20	.00	.74	.00	80.00	1.00
	16.927	2600.00	327.80	.00	.60	.00	80.00	12.00
	16.937	2600.00	328.58	.00	.78	.00	122.74	50.00

1

SUMMARY OF ERRORS AND SPECIAL NOTES

```
CAUTION  SECNO=    16.862  PROFILE= 1  CRITICAL DEPTH ASSUMED
CAUTION  SECNO=    16.862  PROFILE= 1  PROBABLE MINIMUM SPECIFIC ENERGY
CAUTION  SECNO=    16.862  PROFILE= 1  20 TRIALS ATTEMPTED TO BALANCE WSEL

CAUTION  SECNO=    16.925  PROFILE= 1  CRITICAL DEPTH ASSUMED
CAUTION  SECNO=    16.925  PROFILE= 1  PROBABLE MINIMUM SPECIFIC ENERGY
CAUTION  SECNO=    16.925  PROFILE= 1  20 TRIALS ATTEMPTED TO BALANCE WSEL
```

1

THIS RUN EXECUTED 10-31-89

```
*****************************************************
  HEC2 RELEASE DATED NOV 76 UPDATED MAY  1984
  ERROR CORR -  01,02,03,04,05,06
  MODIFICATION -  50,51,52,53,54,55,56
  IBM-PC-XT VERSION AUGUST 1985
*****************************************************
```

SKUNK CREEK
WATER SURFACE ELEVATION
PROPOSED VS EXISTING

EXISTING CONDITION		PROPOSED CONDITION	
SEC. NO.	ELEV.	SEC. NO.	ELEV.
6.388	314.27	6.388	314.27
6.391	315.77	6.391	315.77
6.408	315.71	6.408	315.71
6.465	316.48	6.465	316.48
6.515	317.21	6.515	317.23
6.529	317.26		
		16.568	317.98
6.586	318.61		
6.624	319.40		
		16.628	319.05
6.660	319.95		
		16.710	320.30
6.720	321.22		
6.764	322.61	16.761	321.07
		16.774	320.76
6.814	324.14		
		16.860	324.78
		16.861	324.88
		16.862	324.24
		16.870	325.51
6.880	326.42		
		16.908	326.30
		16.919	326.40
		16.924	326.46
		16.925	327.20
6.937	327.69	16.927	327.80
		16.937	328.58
6.994	329.38		

STANLEY/METTEE-McGILL-MURPHY
1450 EAST INDIAN SCHOOL ROAD
PHOENIX, ARIZONA 85014

JOB ADOT OLH DRAINAGE
SHEET NO. _____ OF _____
CALCULATED BY M Lopez DATE 6/13/89
CHECKED BY _____ DATE _____
SCALE _____

SKUNK CREEK - Superelevation Computations

7. Superelevation

Subcritical flow - No adjustment required

Ref.
TM 6-44
OLH DPM
BK #26

Supercritical flow: $y = Cv^2W/gr_c$

Where:

y = Additional freeboard, outside of curve

v = Velocity, fps.

W = Channel width, (at top of water surface) in feet.

r_c = Radius of curvature from channel centerline, in feet.

g = Gravity, 32.2 ft/sec.^{2}

c = The following tabulation relates the coefficient C with flow conditions, channel shape, and curve geometry:

Type of Flow	Channel Shape	Curve Geometry	Coefficient C Value
Tranquil	Rect.	Simple	0.5
Tranquil	Trap.	Simple	0.5
Rapid	Rect.	Simple	1.0
Rapid	Trap.	Simple	1.0
Rapid	Rect.	Spiral transition	0.5
Rapid	Trap.	Spiral transition	1.0
Rapid	Rect.	Spiral-banked	.05

@ Sec 16.761
$y = .5(7.1)^2 80 / 32.2(383) = 0.16'$ (neglible)

@ Sec 16.628
$y = .5(7.2)^2 80/32.2(700) = 0.09$ (neglible)

PRODUCT 205-1 NEBS Inc., Groton, Mass 01471 To Order PHONE TOLL FREE 1-800-225-6380

STANLEY/METTEE-McGILL-MURPHY
1450 EAST INDIAN SCHOOL ROAD
PHOENIX, ARIZONA 85014

JOB Outer Loop - Skunk Creek
SHEET NO. 1 OF 1
CALCULATED BY M Lopez DATE 11-4-87
CHECKED BY MRC DATE 6-1-88
SCALE

Drop Structure @ CBC Inlet

Ref H.E.C. #14

FLOW GEOMETRY CONSIDERATIONS

The flow geometry at straight drop structures, figure IX-1, can be described by the drop number, defined:

$$N_d = q^2/gh_o^3$$

Where q is the discharge per unit width of the crest overfall, g is the acceleration of gravity, and h_o is the height of the drop. The functions are:

$$L_1/h_o = 4.30\ N_d^{0.27},$$

$$Y_1/h_o = 1.00\ N_d^{0.22},$$

$$Y_2/h_o = 0.54\ N_d^{0.425} \text{ and}$$

$$Y_3/h_o = 1.66\ N_d^{0.27}.$$

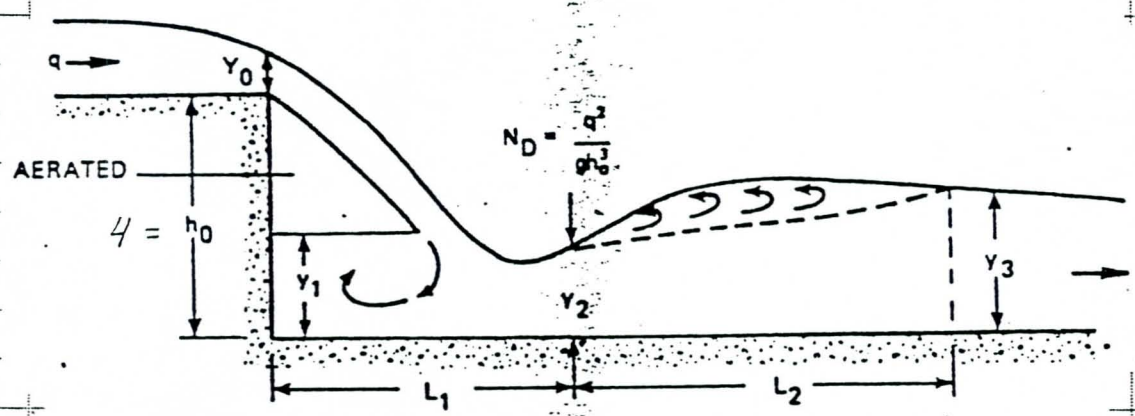

$N_d = (2600/(60/\cos 35°))^2 / (32.2)(4)^3 = 0.6114$ ✓

$L_1 = (4)(4.3)(.6114)^{0.27} = 15.1$ ✓

$Y_1 = (4)(.6114)^{0.22} = 3.6'$ ✓ (No Aeration Full Flow)

$Y_2 = (4)(.54)(.6114)^{.425} = 1.8'$ ✓

$Y_3 = (4)(1.66)(.6114)^{0.27} = 5.8'$ ✓ (below top of CBC)

STANLEY CONSULTANTS
OF ARIZONA, INC.
ENGINEERS • PLANNERS • SURVEYORS
3117 NORTH 16TH STREET
PHOENIX, AZ 85016 • (602) 279-0901

JOB OLH-SKCR Drop Structure
SHEET NO. 1 OF 3
CALCULATED BY MAL DATE 1/29/90
CHECKED BY DATE
SCALE

Revision of Stilling Basin Sta 105+87 based on example provided from DCCO (OLHMC) used on design Sect 4a.

Ref: "Open Channel Flow" by Henderson Eq 6-37,38,40,
USBR "Design of Small Canal Structure" P223
Trajectory Equation

$$Y_c = \sqrt[3]{\frac{q^2}{g}} \qquad q = 2600 \text{ cfs}/80' = 32.5 \text{ cfs/ft}$$

$$= \sqrt[3]{\frac{(32.5)^2}{32.2}} = 3.20'$$

$$\Delta Z_0 = 3'$$

$$\frac{Y_c}{\Delta Z_0} = 3.20'/3' = 1.07$$

$$Y_1 = \Delta Z_0 \cdot 0.54 \left(Y_c/\Delta Z_0 \right)^{1.275}$$

$$= 3 \cdot 0.54 (1.07)^{1.275}$$

$$= 1.77'$$

$$Y_2 = \Delta Z_0 \cdot 1.66 \left(Y_c/\Delta Z_0 \right)^{0.81}$$

$$= 3 \cdot 1.66 (1.07)^{0.81}$$

$$= 5.26'$$

PRODUCT 205-1/NEBS Inc., Groton, Mass. 01471. To Order PHONE TOLL FREE 1-800-225-6380

STANLEY CONSULTANTS
OF ARIZONA, INC.
ENGINEERS • PLANNERS • SURVEYORS
3117 NORTH 16TH STREET
PHOENIX, AZ 85016 • (602) 279-0901

JOB OLH-SKCR Drop Structure
SHEET NO. 2 OF 3
CALCULATED BY MAL DATE 1/29/90
CHECKED BY DATE
SCALE

Trajectory Length

$Y = Y_c + \Delta Z_o = 3.2 + 3' = 6.2'$

$Y = \frac{1}{2} g t^2$, $t = \sqrt{2Y/g} = 0.621$, $V = q/Y_c = 32.5/3.2 = 10.15$

$L_d = V \times t = 10.15 \times 0.621 = 6.3'$

$L_j = 6.9(Y_2 - Y_1) = 6.9 \times (5.26 - 1.77) = 24.08'$

$L = L_d + L_j = 6.3 + 24.08 = 30.38' > 26'$ redesign Basin

USE 32' length.

Sill Height

$1/6\ Y_2 = 1/6\ (5.26) = 0.88'$ use 1'

Tailwater Depth

TW = 5.4' Sect 16.919 See HEC II Run

$F_r = \frac{V_1}{\sqrt{gY_1}} = \frac{32.5/1.77}{\sqrt{32.2(1.77)}} = 2.43$ ✓

STANLEY CONSULTANTS
OF ARIZONA, INC.
ENGINEERS • PLANNERS • SURVEYORS
3117 NORTH 16TH STREET
PHOENIX, AZ 85016 • (602) 279-0901

JOB OLH-SKCR Drop Structure
SHEET NO. 3 OF 3
CALCULATED BY MAL DATE 1/29/90
CHECKED BY _____ DATE _____
SCALE _____

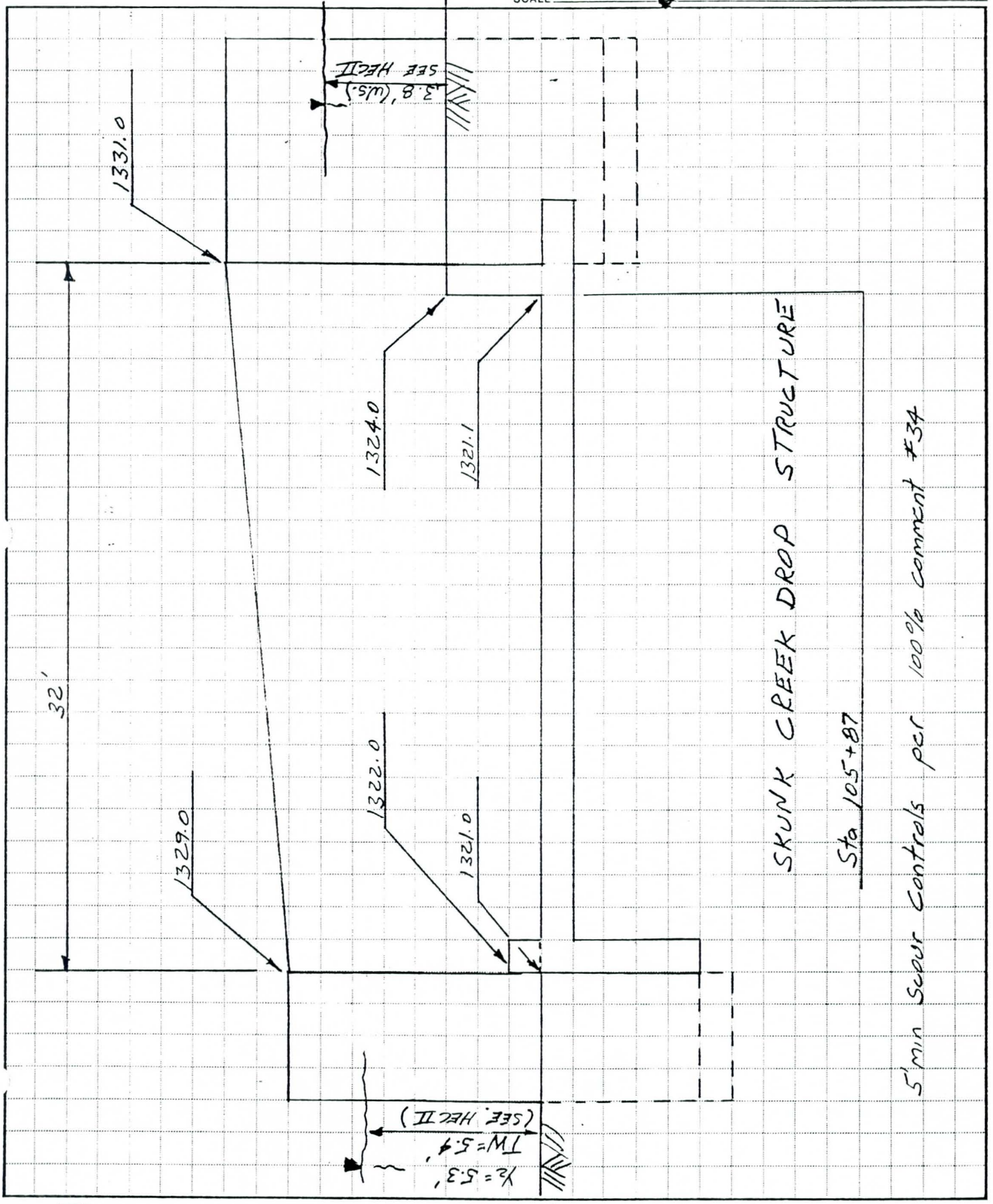

PRODUCT 205-1 NEBS Inc., Groton, Mass. 01471 To Order PHONE TOLL FREE 1-800-225-6380

Rip Rap Design

Sect. 16.87
Ref. OLH-Geotech Design Criteria

Factor of Safety = 1.4

Specific Gravity of Stone = 2.40

$\theta = 26.56^\circ$ = 2:1 side slope

$\alpha = B/y = 69/4.9 \approx 14$ $\qquad Z = 2$

Try $F = 0.45$

$$\text{Depth } (y) = 0.45 \left[\frac{Q}{(\alpha + Z) F} \right]^{0.4}$$

$$\text{Hyd. Rad } (R) = y \frac{(\alpha + Z)}{(\alpha + Z \operatorname{cosec} \theta)}$$

$$\text{Velocity } (V) = 4.0 F^{0.8} \left(\frac{Q}{\alpha + Z} \right)^{0.2}$$

$Z = 2$
$\alpha = 15$
$\operatorname{cosec} \theta = 2.236$

$$V = 4(.45)^{0.8} \left(\frac{2600}{14+2} \right)^{0.2} = 5.85 \text{ ft/s}$$

$$y = .45 \left[\frac{2600}{(14+2).45} \right]^{.4} = 4.75 \text{ ft} \quad (4.9' \text{ per HEC II})$$

$$R = \frac{4.75 \cdot (14+2)}{(14 + 2(2.236))} = 4.11 \text{ ft}$$

Rip Rap Design (cont'd)

ϕ Angle of Repose 40° (conservative)

$$K = \left(1 - \frac{\sin^2\theta}{\sin^2\phi}\right)^{1/2} = 0.718 \text{ (sides only)}$$

$$d_{50} = .0017\left(SF \times C_{R_b} \times \frac{1}{S_s - 1}\right)^{3/2} \frac{V^3}{R^{1/2}}$$

$$.0017\left(1.4 \times 1.15 \times \frac{1}{2.4-1}\right)^{3/2} \frac{(5.85)^3}{(4.11)^{1/2}}$$

$= 0.21$ ft $= 2\frac{1}{2}''$ Use $d_{50} = 6''$

$$V_{obtained} = \frac{37.7}{(0.21)^{1/6}} (4.11)^{2/3} (.0020)^{1/2}$$

$= 5.61$ ft/s

$$F_{obtained} = \frac{V_{obtained}}{(gy)^{1/2}}$$

$$= \frac{5.61}{(32.2(4.75))^{1/2}}$$

$= .45 = .45$ OK

STANLEY/METTEE-McGILL-MURPHY
1450 EAST INDIAN SCHOOL ROAD
PHOENIX, ARIZONA 85014

Rip Rap Design (downstream of CBC)

$B/y = 60/5 = 12' \Rightarrow C_{RB} = 1.2$

$d_{50} = .0017 \left(SF \times C_{RB} D \times 1/S_s - 1\right)^{3/2} V^3/R^{1/2}$

$D = 2.65 (R/W)^{-0.5} \Rightarrow 2.65 (380/84)^{-0.5} = 1.25$

$d_{50} = .0017 \left(1.4 \times 1.20 (1.25) \times 1/2.4 - 1\right)^{3/2} V^3/R^{1/2}$

$= .0031 \; V^3/R^{1/2}$

Depth $(y) = 0.5 \left[\dfrac{Q}{(\alpha+Z)F}\right]^{0.4}$

Hydraulic Radius $(R) = \dfrac{y(\alpha+Z)}{(\alpha+2\,\mathrm{cosec}\,\theta)}$

Velocity $(V) = 4.0\, F^{0.8} \left(\dfrac{Q}{\alpha+Z}\right)^{0.2}$

$Z = 2$

$\alpha = B/y = 60/5.5 = 11$

$\mathrm{cosec}\,\theta = 2.236$

STANLEY/METTEE-McGILL-MURPHY
1450 EAST INDIAN SCHOOL ROAD
PHOENIX, ARIZONA 85014

Try F = .5

$$V = 4\,(.5)^{.8}\left(\frac{2600}{(11+2)}\right)^{0.2} = 6.63$$

$$y = 0.5\left[\frac{2600}{(\alpha+2)(.5)}\right]^{0.4} = 5.49$$

$$R = \frac{(5.49)\,(11+2)}{(11+2(2.236))} = 4.61$$

$$d_{50} = .0031\,(6.63)^3 / (4.61)^{1/2} = 0.42 = 5''$$

** USE $d_{50} = 6''$

$$V_{obtained} = \frac{37.7}{(d_{50})^{1/6}}(R)^{2/3}(S)^{1/2}$$

$$\frac{37.7}{(0.42)^{1/6}}(4.61)^{2/3}(.0028)^{1/2}$$

$$= 6.39 \qquad 7.12 \text{ (HEC II)}$$

$$F_{obtained} = \frac{V_{ob.}}{(g(y))^{1/2}}$$

$$= \frac{6.39}{(32.2(5.49))^{1/2}}$$

$$= 0.48 \quad \therefore \quad OK$$

** Decision by ADOT not to add rip rap to channel bottom

B/y ≈ 82/5.5 ≈ 15

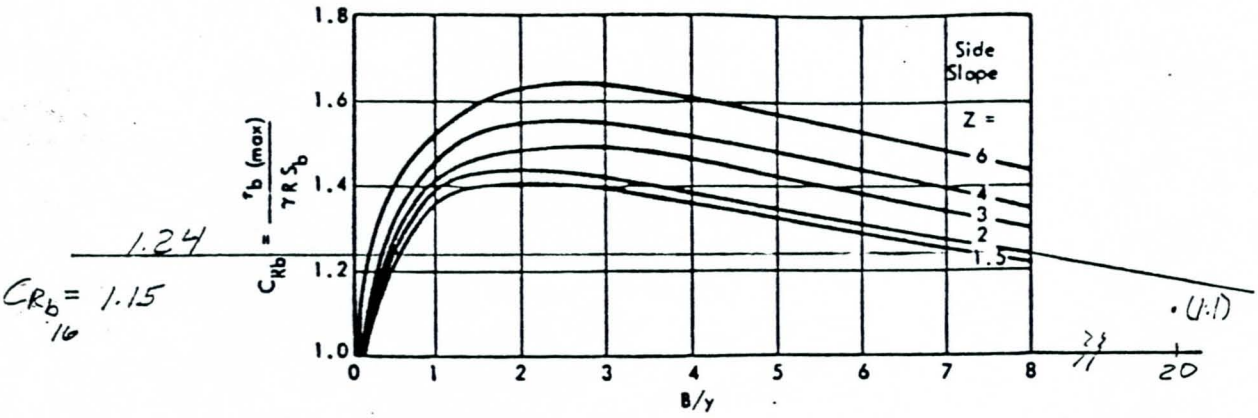

(a) *Maximum boundary shear stress on bottom of trapezoidal channels.* After Anderson et al (70)

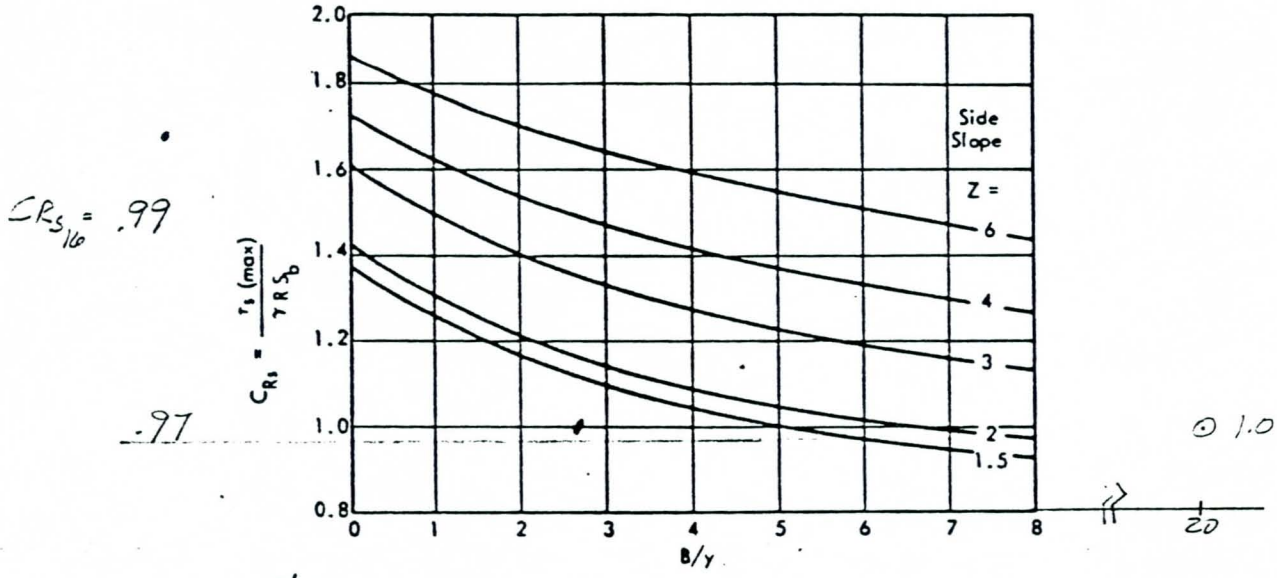

(b) *Maximum boundary shear stress on sides of trapezoidal channels.* After Anderson et al (70)

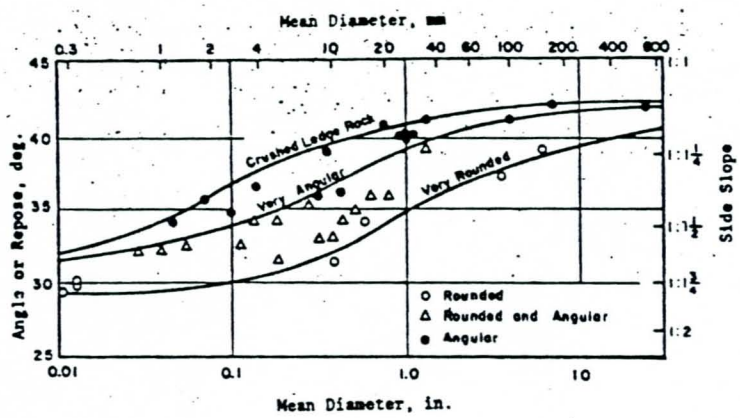

(c) Angle of repose. After EM 1110-2-1601

OUTER LOOP HIGHWAY PROJECT – GEOTECHNICAL DESIGN CRITERIA

DeLEUW, CATHER & CO. MANAGEMENT CONSULTANT TO ARIZONA DEPARTMENT OF TRANSPORTATION	Corrective Factors for Rip-Rap Design		
	REV.	DATE	FIG. NO. 7-9

F.H.W.A. REGION	STATE	PROJECT NO.	SHEET NO.	TOTAL SHEETS	AS BUILT
9	ARIZ.	RBM-600-0-504	128	262	

263-1100

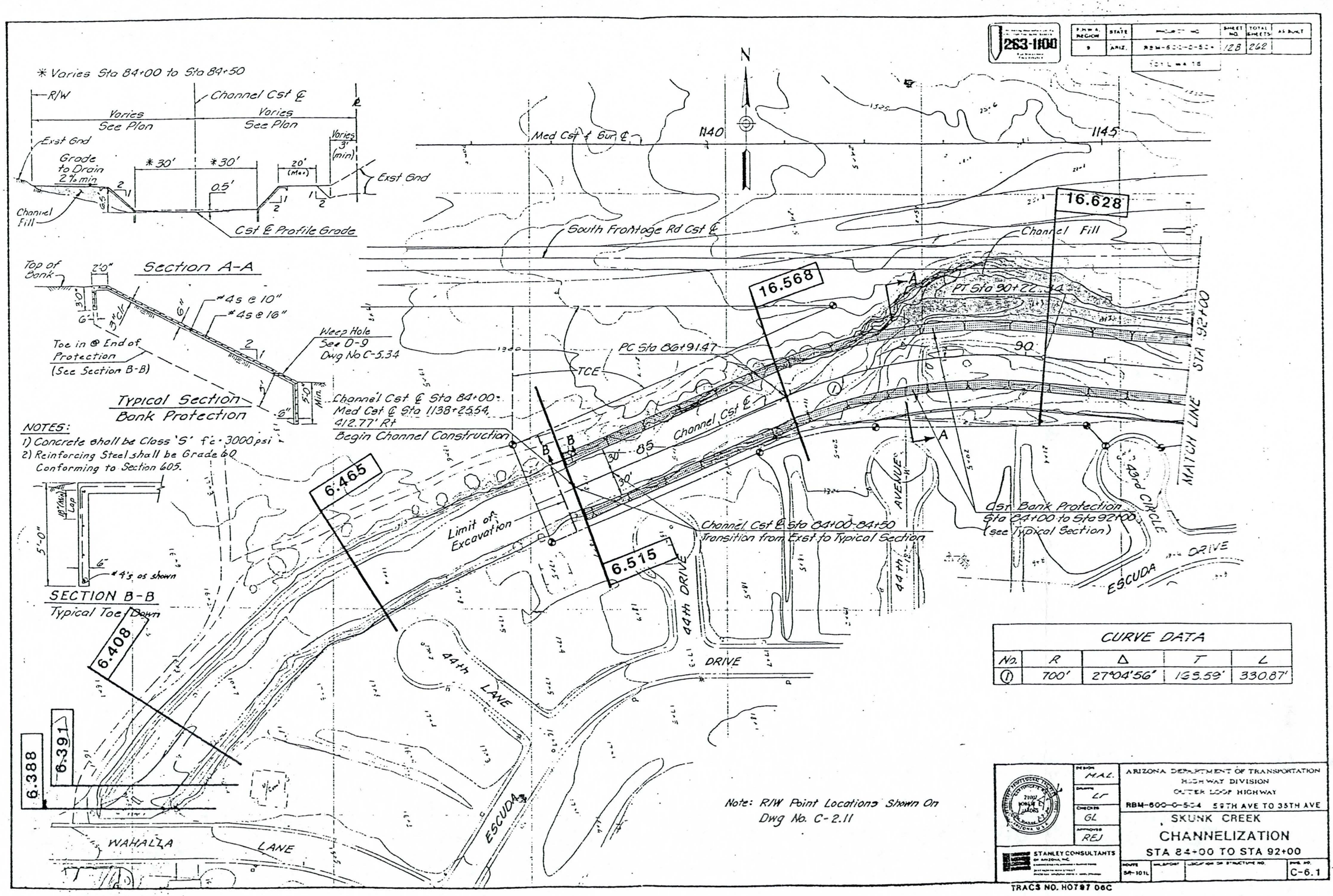

CURVE DATA				
No.	R	Δ	T	L
1	700'	27°04'56"	135.59'	330.87'

DESIGN M.A.L.	ARIZONA DEPARTMENT OF TRANSPORTATION HIGHWAY DIVISION OUTER LOOP HIGHWAY	
DRAWN LF	RBM-600-0-504 59TH AVE TO 35TH AVE	
CHECKED GL	SKUNK CREEK CHANNELIZATION STA 84+00 TO STA 92+00	
APPROVED REJ		
STANLEY CONSULTANTS OF ARIZONA, INC.	ROUTE SR-101L	DWG. NO. C-6.1

TRACS NO. H0787 06C

F.H.W.A. REGION	STATE	PROJECT NO.	SHEET NO.	TOTAL SHEETS	AS BUILT
9	ARIZ	RBM-800-0-504	189	262	
		TOTAL WORK			

263-1100

NOTE:
Use of Shotcrete is Permitted for Construction of Transition Walls.

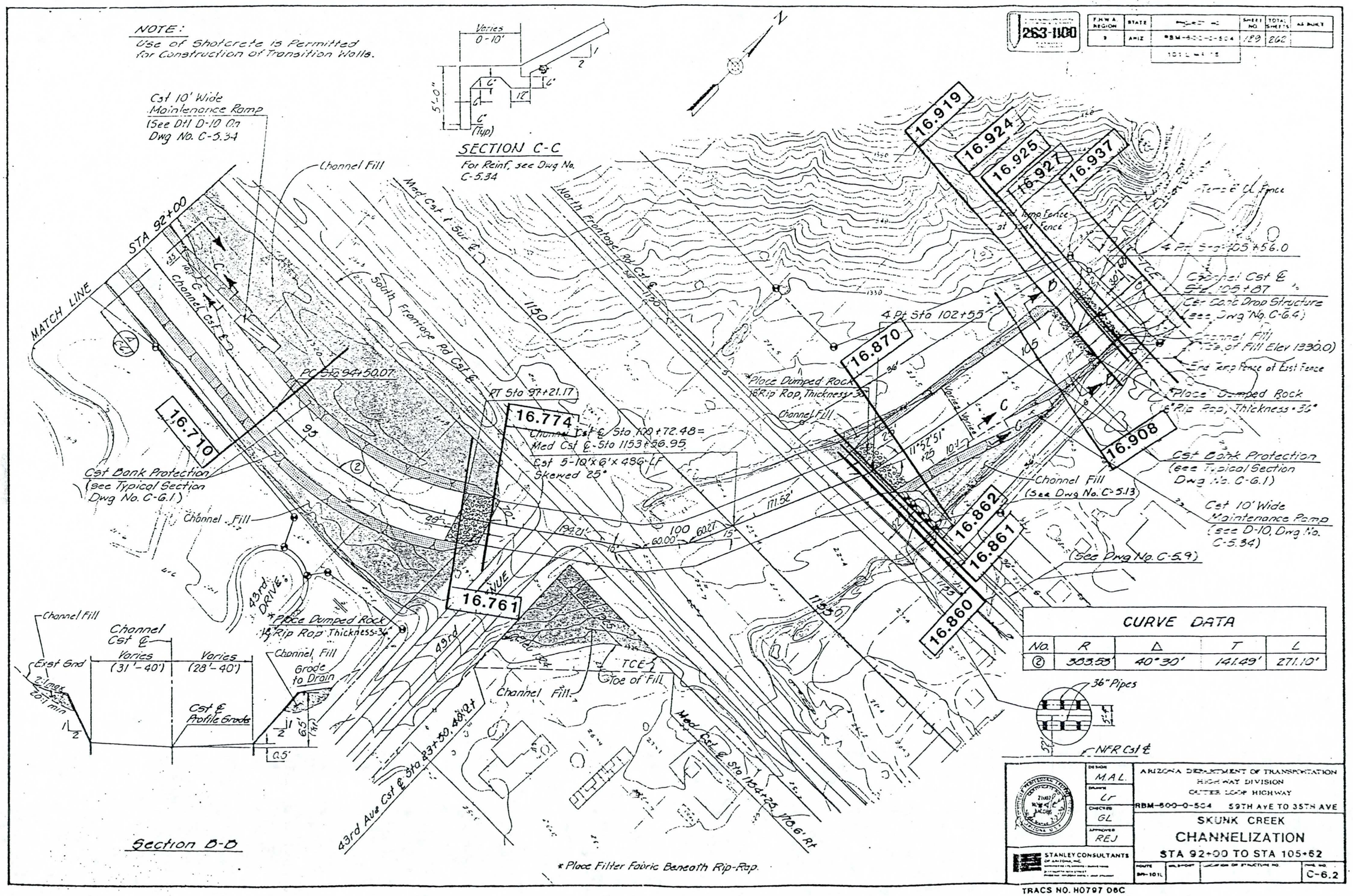

CURVE DATA				
No.	R	Δ	T	L
2	383.58'	40°30'	141.49'	271.10'

DESIGN M.A.L.
DRAWN LT
CHECKED GL
APPROVED REJ

STANLEY CONSULTANTS OF ARIZONA, INC.

ARIZONA DEPARTMENT OF TRANSPORTATION
HIGHWAY DIVISION
CUTTER LOOP HIGHWAY
RBM-800-0-504 59TH AVE TO 35TH AVE

SKUNK CREEK
CHANNELIZATION
STA 92+00 TO STA 105+62

ROUTE RBM-101L | MILEPOST | LOCATION OF STRUCTURE NO. | SHEET NO. C-6.2

TRACS NO. H0797 06C

F.H.W.A. REGION	STATE	PROJECT NO.	SHEET NO.	TOTAL SHEETS	AS BUILT
9	ARIZ.	RBM-600-0-504	130	262	

101 L MA 16

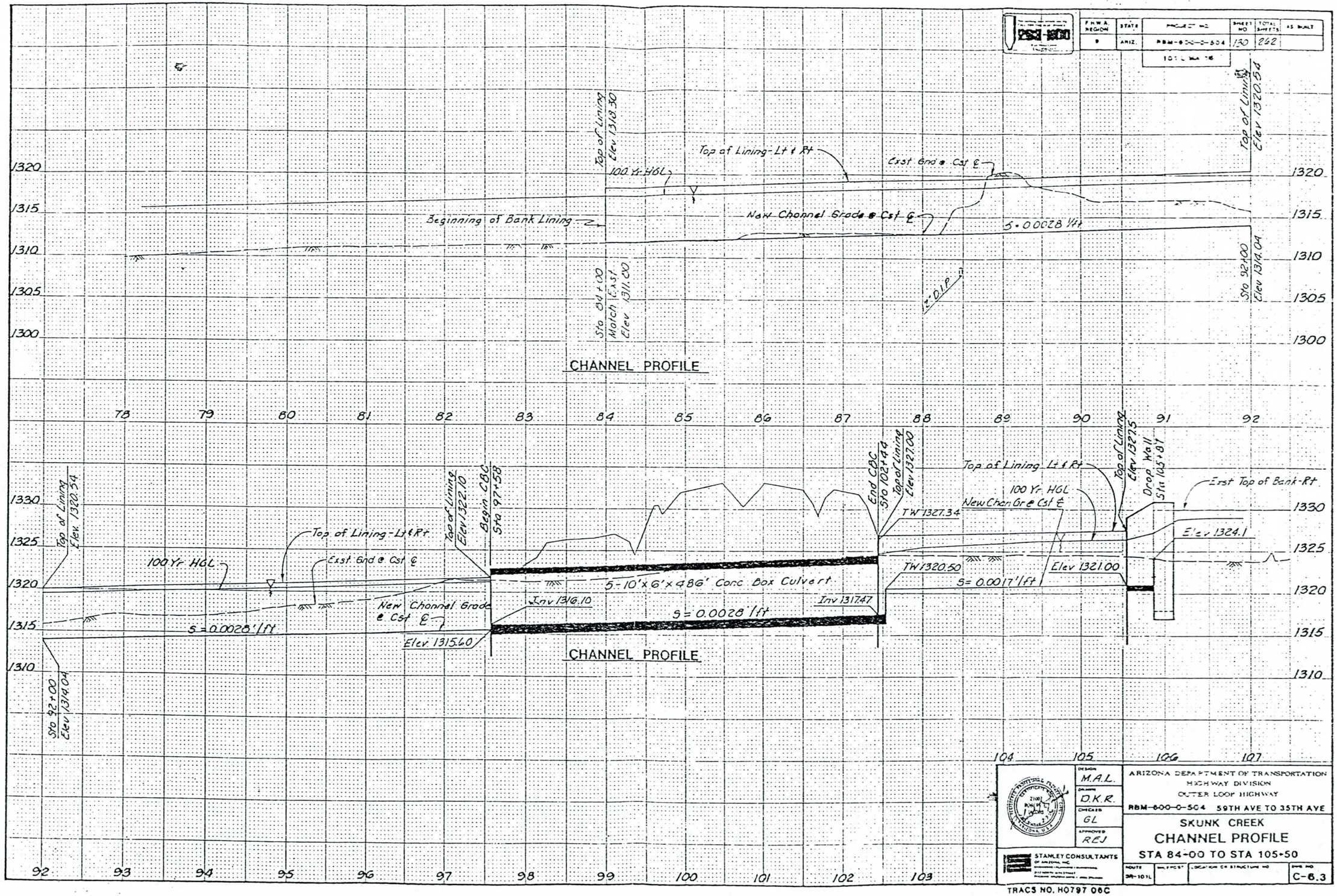

DESIGN	M.A.L.
DRAWN	D.K.R.
CHECKED	GL
APPROVED	REJ

STANLEY CONSULTANTS OF ARIZONA, INC.

ARIZONA DEPARTMENT OF TRANSPORTATION
HIGHWAY DIVISION
OUTER LOOP HIGHWAY
RBM-600-0-504 59TH AVE TO 35TH AVE

SKUNK CREEK
CHANNEL PROFILE
STA 84-00 TO STA 105-50

ROUTE	MILEPOST	LOCATION OR STRUCTURE NO	DWG. NO
SR-101L			C-6.3

TRACS NO. H0797 06C

F.H.W.A. REGION	STATE	PROJECT NO.	SHEET NO.	TOTAL SHEETS	AS BUILT
9	ARIZ.	RBM-800-0-504	131	268	
		TOTAL [illegible]			

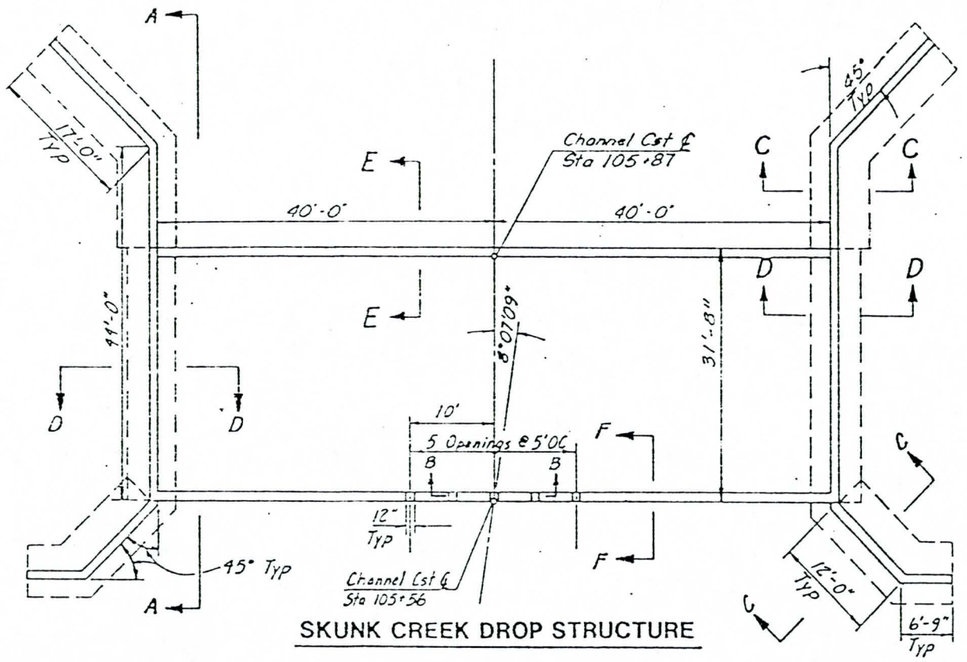

SKUNK CREEK DROP STRUCTURE

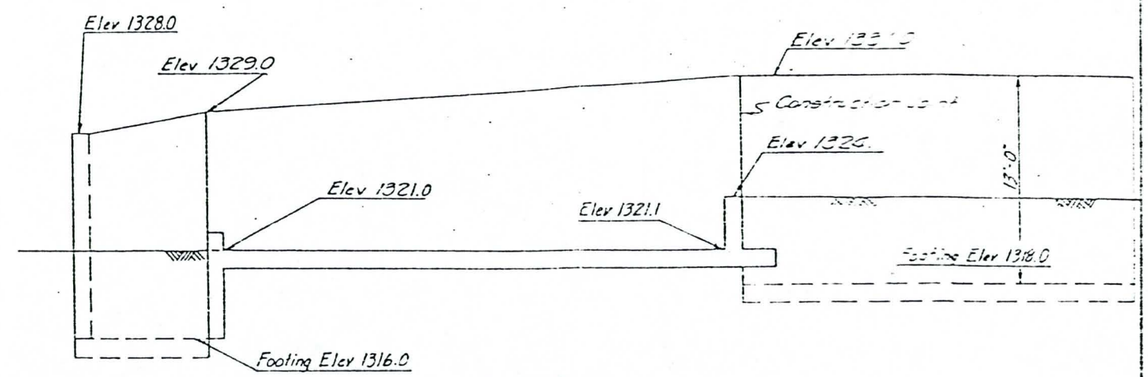

SECTION A-A

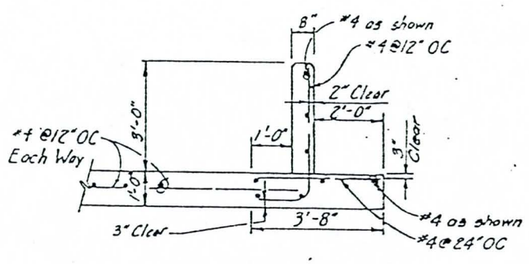

SECTION E-E

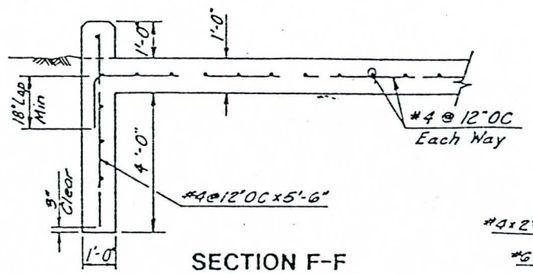

SECTION F-F

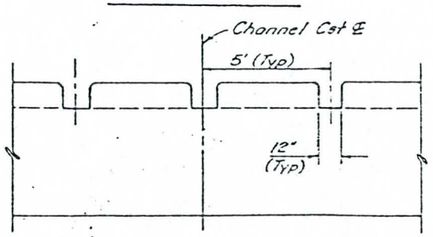

SECTION B-B

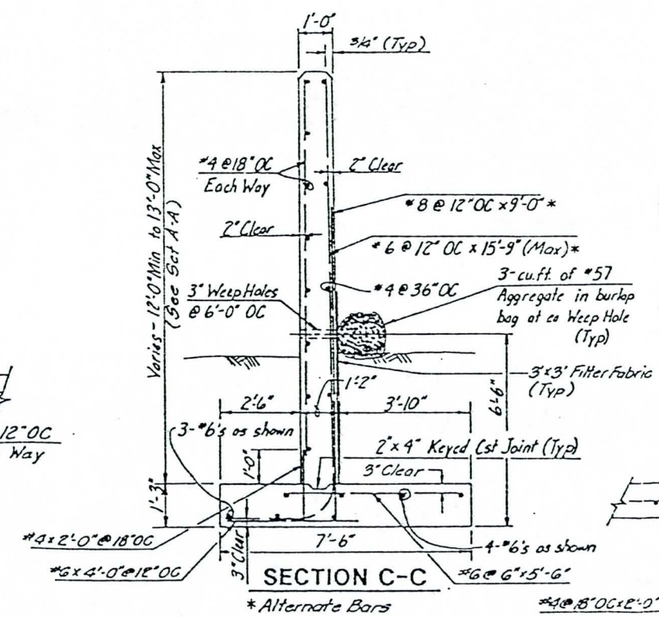

SECTION C-C

* Alternate Bars

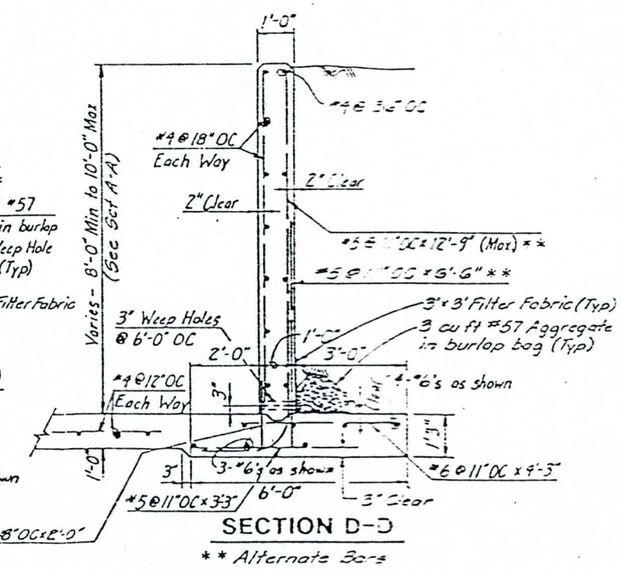

SECTION D-D

* * Alternate Bars

GENERAL NOTES

1. All concrete shall be Class "S" with a 28 day f'c = 3000 psi
2. Reinforcing Steel shall be Grade 40 for bar sizes #6 or smaller & Grade 60 for bar sizes #7 or larger Conforming to Section 605.
3. 3/4" Chamfer all exposed corners.

DESIGN MAL; AL	ARIZONA DEPARTMENT OF TRANSPORTATION HIGHWAY DIVISION OUTER LOOP HIGHWAY	
DRAWN DM	RBM-800-0-504 59TH AVE TO 35TH AVE	
CHECKED GL	SKUNK CREEK DETAILS	
APPROVED REJ		
STANLEY CONSULTANTS OF ARIZONA, INC.	ROUTE 101L	DWG NO C-6.4

TRACS NO. H0797 08C

```
1*****************************************************
 *  WATER SURFACE PROFILES                           *
 *  VERSION OF NOVEMBER 1976                         *
 *  UPDATED MAY 1984                                 *
 *  IBM-PC-XT VERSION AUGUST 1985                    *
 *  RUN DATE  10-31-89   TIME  09:07:54              *
*****************************************************
```

```
*************************************
 *  U.S. ARMY CORPS OF ENGINEERS     *
 *  THE HYDROLOGIC ENGINEERING CENTER *
 *  609 SECOND STREET, SUITE D       *
 *  DAVIS, CALIFORNIA 95616          *
  *  (916) 440-2105 (FTS) 448-2105    *
*************************************
```

```
X     X  XXXXXXX   XXXXX            XXXXX
X     X  X       X     X          X     X
X     X  X       X                      X
XXXXXXX  XXXX     X         XXXXX   XXXXX
X     X  X       X                X
X     X  X       X     X          X
X     X  XXXXXXX   XXXXX           XXXXXXX
```

1

10-31-89 09:07:54 PAGE 1

THIS RUN EXECUTED 10-31-89

```
*************************************************
  HEC2 RELEASE DATED NOV 76 UPDATED MAY  1984
  ERROR CORR -  01,02,03,04,05,06
  MODIFICATION -  50,51,52,53,54,55,56
  IBM-PC-XT VERSION AUGUST 1985
*************************************************
```

```
FR FREE FORMAT
T1     SCATTER WASH FLOODPLAIN STUDY   **** EXISTING ****
T2     100 YEAR FLOW -    SCTWSHA.IN
T3     STANLEY/METTEE-MCGILL-MURPHY

J1  ICHECK    INQ       NINV      IDIR      STRT      METRIC    HVINS     Q         WSEL      FQ

       0.       2.       0.        0.   .000000      .00       .0        0.   320.430      .000

J2  NPROF     IPLOT     PRFVS     XSECV     XSECH     FN        ALLDC     IBW       CHNIM     ITRACE

     -1.000     .000    -1.000     .000      .000      .000    -1.000     .000      .000      .000

J6  IHLEQ     ICOPY

      1.000     .000      .000      .000      .000      .000      .000      .000      .000      .000


NC       .038      .038      .038      .100      .300      .000      .000      .000      .000      .000
```

BT	1.000	5100.000	.000	.000	.000	.000	.000	.000	.000	.000
X1	16.639	4.000	9760.000	10172.000	10.000	10.000	10.000	.000	.000	.000
GR	321.500	9760.000	318.000	9780.000	318.000	10152.000	322.000	10172.000	.000	.000
NC	.030	.030	.030	.100	.300	.000	.000	.000	.000	.000
X1	16.644	5.000	9705.000	10140.000	10.000	10.000	10.000	.000	.000	.000
GR	321.700	9705.000	318.000	9730.000	318.000	10000.000	318.000	10120.000	322.500	10140.000
NC	.045	.045	.039	.100	.300	.000	.000	.000	.000	.000
X1	16.660	11.000	8570.000	10590.000	165.000	235.000	185.000	.000	.000	.000
GR	320.000	8570.000	319.500	8920.000	319.500	9940.000	320.000	9800.000	320.000	9940.000
GR	320.000	10000.000	320.000	10065.000	320.000	10170.000	320.000	10345.000	321.000	10435.000
GR	322.000	10590.000	.000	.000	.000	.000	.000	.000	.000	.000
X1	16.730	13.000	9730.000	10015.000	455.000	330.000	405.000	.000	.000	.000
GR	323.000	9850.000	322.000	9120.000	321.500	9730.000	321.000	9970.000	322.000	10015.000
GR	324.000	10040.000	324.000	10080.000	322.000	10115.000	322.000	10280.000	322.000	10510.000
GR	322.000	10600.000	323.000	10730.000	324.000	10850.000	.000	.000	.000	.000

1

X1	16.830	10.000	9500.000	10920.000	455.000	415.000	480.000	.000	.000	.000
GR	324.000	9600.000	322.600	9975.000	322.600	10210.000	324.000	10275.000	326.000	10305.000
GR	326.000	10460.000	324.000	10535.000	322.500	10580.000	323.500	10740.000	324.000	10920.000
X1	16.910	10.000	9910.000	10205.000	480.000	540.000	500.000	.000	.000	.000
GR	325.000	9835.000	324.000	9910.000	324.000	10000.000	324.000	10130.000	324.000	10205.000
GR	326.000	10320.000	326.000	10540.000	326.000	10840.000	328.000	10500.000	330.000	11025.000
X1	17.010	7.000	9885.000	10745.000	500.000	800.000	520.000	.000	.000	.000
GR	335.000	9885.000	330.000	9525.000	328.000	9870.000	327.000	10000.000	328.000	10025.000
GR	330.000	10480.000	332.000	10745.000	.000	.000	.000	.000	.000	.000
X1	17.110	9.000	9150.000	10850.000	500.000	300.000	550.000	.000	.000	.000
GR	334.000	9150.000	332.000	9450.000	330.000	9900.000	330.000	9995.000	328.500	10000.000
GR	330.000	10005.000	330.000	10220.000	332.000	10700.000	334.000	10850.000	.000	.000
X1	17.290	8.000	9100.000	11440.000	950.000	500.000	950.000	.000	.000	.000
GR	340.000	9100.000	338.000	9520.000	336.000	9750.000	334.000	9990.000	331.000	10000.000
GR	334.000	10015.000	334.000	11300.000	336.000	11440.000	.000	.000	.000	.000
X1	17.320	10.000	9200.000	11150.000	430.000	400.000	600.000	.000	.000	.000
GR	340.000	9200.000	338.000	9675.000	336.000	9990.000	334.500	10000.000	336.000	10010.000
GR	338.000	10230.000	338.000	10290.000	336.000	11020.000	338.000	11125.000	340.000	11150.000
X1	17.430	8.000	9690.000	11310.000	560.000	520.000	600.000	.000	.000	.000
GR	344.000	9690.000	342.000	9700.000	342.000	9770.000	340.000	9790.000	338.000	9990.000
GR	335.500	10000.000	338.000	10010.000	340.000	11310.000	.000	.000	.000	.000
X1	17.530	9.000	9500.000	10790.000	450.000	750.000	550.000	.000	.000	.000
GR	346.000	9500.000	344.000	9550.000	344.000	9850.000	342.000	9885.000	340.000	9950.000
GR	337.500	10000.000	340.000	10010.000	342.000	10110.000	344.000	10790.000	.000	.000

```
X1     17.540     10.000   9590.000  10950.000    470.000    550.000    600.000       .000       .000       .000
GR    348.000   9590.000    346.000   9950.000    344.000   9965.000    344.000   9990.000    340.600  10000.000
GR    342.000  10004.000    344.000  10190.000    346.000  10280.000    346.000  10800.000    348.000  10950.000

X1     17.820      9.000   9760.000  10590.000    650.000    430.000    600.000       .000       .000       .000
GR    350.000   9760.000    348.000   9920.000    346.000   9990.000    343.500  10000.000    346.000  10010.000
GR    348.000  10150.000    348.000  10370.000    350.000  10590.000    352.000  10840.000       .000       .000
EJ       .000       .000       .000       .000       .000       .000       .000       .000       .000       .000
1
 10-31-89    09:07:54                                                                                    PAGE    3


   SECNO    DEPTH    CWSEL    CRIWS    WSELK    EG       HV       HL       OLOSS   BANK ELEV
   Q        QLOB     QCH      QROB     ALOB     ACH      AROB     VOL      TWA   LEFT/RIGHT
   TIME     VLOB     VCH      VROB     XNL      XNCH     XNR      WTN      ELMIN     SSTA
   SLOPE    XLOBL    XLCH     XLOBR    ITRIAL   IDC      ICONT    CORAR    TOPWID    ENDST


*PROF 1

IHLEQ = 1.  THEREFORE FRICTION LOSS (HL) IS CALCULATED AS A FUNCTION OF
PROFILE TYPE, WHICH CAN VARY FROM REACH TO REACH.  SEE DOCUMENTATION FOR
DETAILS.

CRITICAL DEPTH TO BE CALCULATED AT ALL CROSS SECTIONS

CCHV=    .100 CEHV=    .300
*SECNO 16.539
    16.54     2.43   320.43   320.00   320.43   321.09      .55      .00      .00   321.50
    6100.       0.    6100.       0.       0.     936.       0.       0.       0.   322.00
      .00      .00     5.52      .00     .038     .038     .038     .000   318.00  9766.11
  .008908      10.      10.      10.        0       14        0      .00   398.04 10164.15
0
CCHV=    .100 CEHV=    .300
*SECNO 16.644
    16.64     2.66   320.66   319.94      .00   321.16      .50      .05      .02   321.70
    6100.       0.    6100.       0.       0.    1050.       0.       0.       0.   322.50
      .00      .00     5.65      .00     .030     .030     .030     .000   318.00  9711.98
  .003892      10.      10.      10.        2       15        0      .00   419.88 10131.96
0
CCHV=    .100 CEHV=    .300
*SECNO 16.660
3280 CROSS SECTION     16.66 EXTENDED      1.50 FEET

    16.66     1.90   321.50   320.49      .00   321.55      .06      .35      .04   320.00
    6100.       0.    6100.       0.       0.    3155.       0.       9.       5.   322.00
      .03      .00     1.93      .00     .045     .038     .045     .000   319.60  8570.00
  .001281     165.     185.     235.        3       17        0      .00  1941.99 10511.99
0
*SECNO 16.730

3265 DIVIDED FLOW

    16.73     1.83   322.83   322.66      .00   323.09      .26     1.48      .06   321.50
    6100.    2487.    2321.    1292.     748.     439.     457.      32.      22.   322.00
```

```
     .06      3.32      5.29      2.82      .045      .038      .045      .000   321.00  8904.28
   .010278    455.      405.      330.        3        15         0       .00  1728.47 10707.86
0
1
 10-31-89     09:07:54                                                                          PAGE    4


   SECNO     DEPTH     CWSEL     CRIWS     WSELK     EG        HV        HL        QLOSS    BANK ELEV
   Q         QLOB      QCH       QROB      ALOB      ACH       AROB      VOL       TWA    LEFT/RIGHT
   TIME      VLOB      VCH       VROB      XNL       XNCH      XNR       WTN       ELMIN       SSTA
   SLOPE     XLOBL     XLCH      XLOBR     ITRIAL    IDC       ICONT     CORAR     TOPWID      ENDST


*SECNO 16.830

3265 DIVIDED FLOW

3280 CROSS SECTION     16.83 EXTENDED      1.03 FEET

    16.83     2.53    325.03    324.18      .00    325.18      .15      2.07      .01    324.00
    6100.       0.     6100.       0.       0.     1955.       0.       51.      37.    324.00
      .10      .00      3.06      .00     .045      .038     .045      .000   322.50  9600.00
   .002819    455.      480.      415.        4        11         0       .00  1114.05 10520.00
0
*SECNO 16.910
    16.91     2.76    326.76    326.38      .00    327.12      .35      1.88      .06    324.00
    6100.      207.     4416.     1477.      72.      817.     613.       71.      50.    324.00
      .13     2.67      5.41      2.41     .045      .038     .045      .000   324.00  9858.07
   .004912    480.      500.      540.        3        11         0       .00  1005.01 10863.08
0
*SECNO 17.010
    17.01     3.72    330.72    330.41      .00    331.22      .50      4.06      .04    335.00
    6100.       0.     6100.       0.       0.     1073.       0.       89.      62.    332.00
      .15      .00      5.69      .00     .045      .038     .045      .000   327.00  9919.24
   .010955    500.      520.      800.        4        11         0       .00   656.16 10575.40
0
*SECNO 17.110
    17.11     4.25    332.75    331.59      .00    332.84      .09      1.58      .04    334.00
    6100.       0.     6100.       0.       0.     2580.       0.      112.      75.    334.00
      .22      .00      2.36      .00     .045      .038     .045      .000   328.50  9337.29
   .001647    500.      550.      300.        4        10         0       .00  1419.07 10756.36
0
*SECNO 17.290
    17.29     4.34    335.34    334.82      .00    335.49      .15      2.63      .02    340.00
    6100.       0.     6100.       0.       0.     1964.       0.      151.     107.    336.00
      .31      .00      3.11      .00     .045      .038     .045      .000   331.00  9829.15
   .004662    950.      950.      500.        4        13         0       .00  1564.66 11393.82
0
*SECNO 17.320
    17.32     3.80    338.30    337.72      .00    338.47      .16      2.97      .00    340.00
    6100.       0.     6100.       0.       0.     1876.       0.      188.     128.    340.00
      .36      .00      3.25      .00     .045      .038     .045      .000   334.50  9603.07
   .005253    430.      600.      400.        6        13         0       .00  1525.71 11128.79
0
1
```

```
  SECNO    DEPTH    CWSEL    CRIWS    WSELK    EG       HV       HL       OLOSS   BANK ELEV
  Q        QLOB     QCH      QROB     ALOB     ACH      AROB     VOL      TWA   LEFT/RIGHT
  TIME     VLOB     VCH      VROB     XNL      XNCH     XNR      WTN      ELMIN      SSTA
  SLOPE    XLOBL    XLCH     XLOBR    ITRIAL   IDC      ICONT    CORAR    TOPWID     ENDST


*SECNO 17.430
3280 CROSS SECTION     17.43 EXTENDED       .48 FEET

    17.43     4.99   340.49   339.68      .00   340.59      .11     2.12      .01   344.00
    6100.       0.    6100.       0.       0.    2239.       0.     217.     149.    340.00
      .42      .00     2.65      .00     .045     .038     .045     .000   335.50  9785.18
  .002665     560.     600.     620.        4        8        0      .00  1524.82 11310.00
0
*SECNO 17.530
    17.53     6.09   343.59   343.32      .00   344.09      .51     3.38      .12   346.00
    6100.       0.    6100.       0.       0.    1067.       0.     238.     164.    344.00
      .45      .00     5.72      .00     .045     .038     .045     .000   337.50  9885.23
  .014162     450.     550.     750.        3       11        0      .00   782.54 10647.77
0
*SECNO 17.640
    17.64     6.56   347.16   346.23      .00   347.31      .16     3.18      .04   348.00
    6100.       0.    6100.       0.       0.    1930.       0.     258.     177.    348.00
      .50      .00     3.16      .00     .045     .038     .045     .000   340.60  9740.60
  .003265     470.     600.     550.        5        9        0      .00  1146.65 10887.25
0
*SECNO 17.820
    17.82     6.30   349.80   349.13      .00   350.10      .30     2.74      .04   350.00
    6100.       0.    6100.       0.       0.    1396.       0.     281.     191.    350.00
      .54      .00     4.37      .00     .045     .038     .045     .000   343.50  9775.65
  .005675     650.     600.     430.        3        9        0      .00   792.83 10568.48
0
1
```


THIS RUN EXECUTED 10-31-89

```
*****************************************************
  HEC2 RELEASE DATED NOV 76 UPDATED MAY  1984
  ERROR CORR -  01,02,03,04,05,06
  MODIFICATION -  50,51,52,53,54,55,56
  IBM-PC-XT VERSION AUGUST 1985
*****************************************************
```

NOTE- ASTERISK (*) AT LEFT OF CROSS-SECTION NUMBER INDICATES MESSAGE IN SUMMARY OF ERRORS LIST

TANLEY/METTEE-MCGILL-MUR

SUMMARY PRINTOUT TABLE 150

SECND	XLCH	ELTRD	ELLC	ELMIN	Q	CWSEL	CRIWS	EG	10K*S	VCH	AREA	.01K
16.639	.00	.00	.00	318.00	6100.00	320.43	320.00	321.09	89.08	6.52	935.59	646.32
16.644	10.00	.00	.00	318.00	6100.00	320.66	319.94	321.16	36.92	5.65	1080.24	1003.50
16.660	185.00	.00	.00	319.50	6100.00	321.50	320.49	321.55	12.81	1.93	3155.47	1704.61
16.730	405.00	.00	.00	321.00	6100.00	322.83	322.65	323.09	102.78	5.29	1544.52	601.70
16.830	480.00	.00	.00	322.50	6100.00	325.03	324.18	325.18	28.19	3.06	1994.35	1148.86
16.910	500.00	.00	.00	324.00	6100.00	326.76	326.38	327.12	49.12	5.41	1501.42	870.38
17.010	520.00	.00	.00	327.00	6100.00	330.72	330.41	331.22	109.55	5.68	1073.50	582.79
17.110	550.00	.00	.00	328.50	6100.00	332.75	331.59	332.84	16.47	2.35	2580.27	1502.88
17.290	950.00	.00	.00	331.00	6100.00	335.34	334.82	335.49	46.62	3.11	1964.00	893.42
17.320	600.00	.00	.00	334.50	6100.00	338.30	337.72	338.47	52.53	3.25	1875.81	841.50
17.420	600.00	.00	.00	335.50	6100.00	340.49	339.68	340.59	26.65	2.65	2299.07	1181.59
17.530	550.00	.00	.00	337.50	6100.00	343.59	343.32	344.09	141.62	5.72	1056.79	512.59
17.640	600.00	.00	.00	340.60	6100.00	347.16	346.23	347.31	32.65	3.16	1930.19	1067.51
17.820	600.00	.00	.00	343.50	6100.00	349.80	349.13	350.10	58.75	4.37	1396.27	795.84

TANLEY/METTEE-MOBILL-MUR

SUMMARY PRINTOUT TABLE 150

SECND	Q	CWSEL	DIFWSP	DIFWSX	DIFKWS	TOPWID	XLCH
16.639	6100.00	320.43	.00	.00	.00	398.04	.00
16.644	6100.00	320.66	.00	.23	.00	419.88	10.00
16.660	6100.00	321.50	.00	.83	.00	1941.99	185.00
16.730	6100.00	322.83	.00	1.34	.00	1728.47	405.00
16.830	6100.00	325.03	.00	2.20	.00	1114.05	480.00
16.910	6100.00	326.76	.00	1.73	.00	1005.01	500.00

17.010	6100.00	330.72	.00	3.96	.00	656.16	520.00
17.110	6100.00	332.75	.00	2.03	.00	1419.07	550.00
17.290	6100.00	335.34	.00	2.59	.00	1564.66	950.00
17.320	6100.00	338.30	.00	2.96	.00	1525.71	600.00
17.430	6100.00	340.49	.00	2.18	.00	1524.82	600.00
17.530	6100.00	343.59	.00	3.10	.00	782.54	550.00
17.640	6100.00	347.16	.00	3.57	.00	1146.65	600.00
17.820	6100.00	349.80	.00	2.64	.00	792.83	600.00

1

SUMMARY OF ERRORS AND SPECIAL NOTES

1

THIS RUN EXECUTED 10-31-89

```
**************************************************
  HEC2 RELEASE DATED NOV 76 UPDATED MAY  1984
  ERROR CORR -  01,02,03,04,05,06
  MODIFICATION -  50,51,52,53,54,55,56
  IBM-PC-XT VERSION AUGUST 1985
**************************************************
```

```
1*****************************************************
 * WATER SURFACE PROFILES                            *
 * VERSION OF NOVEMBER 1976                          *
 * UPDATED MAY 1984                                  *
 * IBM-PC-XT VERSION AUGUST 1985                     *
 * RUN DATE  10-31-89   TIME  09:05:29                *
*****************************************************
```

```
*************************************
* U.S. ARMY CORPS OF ENGINEERS      *
* THE HYDROLOGIC ENGINEERING CENTER *
* 609 SECOND STREET, SUITE D        *
* DAVIS, CALIFORNIA 95616           *
* (916) 440-2105 (FTS) 448-2105     *
*************************************
```

```
X     X  XXXXXXX   XXXXX            XXXXX
X     X  X        X     X          X     X
X     X  X        X                      X
XXXXXXX  XXXX     X         XXXXX   XXXXX
X     X  X        X                X
X     X  X        X     X          X
X     X  XXXXXXX   XXXXX           XXXXXXX
```

```
1
 10-31-89     09:05:29                                                    PAGE    1
```

THIS RUN EXECUTED 10-31-89

```
*****************************************************
  HEC2 RELEASE DATED NOV 76 UPDATED MAY  1984
  ERROR CORR -  01,02,03,04,05,06
  MODIFICATION -  50,51,52,53,54,55,56
  IBM-PC-XT VERSION AUGUST 1985
*****************************************************
```

```
FR FREE FORMAT
T1     SCATTER WASH FLOODPLAIN STUDY   **** PROPOSED ****
T2     100 YEAR FLOW - DOWNSTREAM OF OLH - SCTWSHE.IN
T3     STANLEY/METTEE-MCGILL-MURPHY

J1  ICHECK    INQ       NINV      IDIR      STRT      METRIC    HVINS     Q         WSEL      FQ

      0.        2.        0.        0.   .000000      .00       .0        0.   320.430     .000

J2  NPROF     IPLOT     PRFVS     XSECV     XSECH     FN        ALLDC     IBW       CHNIM     ITRACE

    -1.000     .000    -1.000     .000      .000      .000    -1.000     .000      .000      .000

J6  IHLEQ     ICOPY

     1.000     .000      .000      .000      .000      .000      .000      .000      .000      .000


NC      .038      .038      .038      .100      .300      .000      .000      .000      .000      .000
```

BT	1.000	6100.000	.000	.000	.000	.000	.000	.000	.000	.000
X1	16.639	4.000	9760.000	10172.000	10.000	10.000	10.000	.000	.000	.000
GR	321.500	9760.000	318.000	9780.000	318.000	10152.000	322.000	10172.000	.000	.000
NC	.030	.030	.030	.100	.300	.000	.000	.000	.000	.000
X1	16.644	5.000	9705.000	10140.000	10.000	10.000	10.000	.000	.000	.000
GR	321.700	9705.000	318.000	9730.000	318.000	10000.000	318.000	10120.000	322.500	10140.000
NC	.045	.045	.038	.100	.300	.000	.000	.000	.000	.000
X1	16.660	11.000	9800.000	10000.000	165.000	225.000	185.000	.000	.000	.000
GR	320.000	8570.000	319.500	8920.000	319.500	9640.000	320.000	9800.000	320.000	9940.000
GR	320.000	10000.000	320.000	10065.000	320.000	10170.000	320.000	10345.000	321.000	10435.000
GR	322.000	10590.000	.000	.000	.000	.000	.000	.000	.000	.000
X1	16.730	13.000	9730.000	10015.000	455.000	330.000	405.000	.000	.000	.000
GR	323.000	8860.000	322.000	9120.000	321.500	9730.000	321.000	9970.000	322.000	10015.000
GR	324.000	10040.000	324.000	10080.000	322.000	10115.000	322.000	10280.000	322.000	10510.000
GR	322.000	10500.000	323.000	10730.000	324.000	10880.000	.000	.000	.000	.000

X1	16.830	11.000	9975.000	10210.000	455.000	415.000	450.000	.000	.000	.000
GR	324.000	9600.000	322.500	9975.000	322.500	10210.000	324.000	10275.000	326.000	10305.000
GR	326.000	10460.000	324.000	10535.000	322.500	10580.000	322.500	10740.000	324.000	10920.000
GR	326.000	11040.000	.000	.000	.000	.000	.000	.000	.000	.000
X1	16.910	10.000	9910.000	10205.000	480.000	540.000	500.000	.000	.000	.000
GR	323.000	9835.000	324.000	9910.000	324.000	10030.000	324.000	10130.000	324.000	10205.000
GR	326.000	10320.000	326.000	10540.000	326.000	10840.000	328.000	10900.000	330.000	11025.000
X1	17.010	13.000	9875.000	10515.000	500.000	800.000	520.000	.000	.000	.000
GR	335.000	9875.000	330.000	9895.000	329.000	9915.000	328.000	9917.000	328.000	9990.000
GR	327.000	9995.000	326.800	10000.000	327.000	10005.000	328.000	10007.000	328.000	10087.000
GR	329.000	10250.000	330.000	10470.000	332.000	10515.000	.000	.000	.000	.000
NC	.030	.030	.030	.000	.000	.000	.000	.000	.000	.000
X1	117.040	7.000	9790.000	10416.000	120.000	120.000	120.000	.000	.000	.000
GR	335.000	9790.000	330.000	9823.000	329.000	9828.000	328.200	9860.000	327.000	10000.000
GR	330.200	10405.000	333.000	10416.000	.000	.000	.000	.000	.000	.000
X1	117.060	5.000	9750.000	10380.000	100.000	100.000	100.000	.000	.000	.000
GR	331.000	9750.000	329.000	9826.000	327.200	10000.000	333.000	10288.000	333.000	10380.000
X1	117.100	5.000	9804.000	10312.000	205.000	195.000	200.000	.000	.000	.000
GR	333.000	9804.000	329.000	9812.000	327.500	10000.000	329.500	10295.000	333.500	10312.000
X1	117.140	5.000	9816.000	10242.000	200.000	195.000	200.000	.000	.000	.000
GR	332.500	9815.000	329.000	9825.000	328.000	10000.000	329.000	10224.000	333.500	10242.000
X1	117.180	5.000	9854.000	10177.000	210.000	190.000	200.000	.000	.000	.000
GR	334.000	9854.000	329.000	9864.000	328.400	10000.000	329.000	10163.000	333.500	10177.000
X1	117.220	5.000	9890.000	10133.000	220.000	190.000	200.000	.000	.000	.000

```
GR    334.500   9890.000    329.500    9900.000    325.900   10000.000    329.500   10124.000    324.000   10128.000

X1    117.260      5.000   9911.000   10100.000    205.000     190.000    200.000       .000       .000       .000
GR    335.000   9911.000    329.900    9922.000    329.300   10000.000    329.800   10090.000    335.000   10100.000

X1    117.300      5.000   9922.000   10081.000    200.000     200.000    200.000       .000       .000       .000
GR    335.000   9922.000    330.200    9933.000    329.700   10000.000    330.200   10069.000    336.500   10081.000

X1    117.340      5.000   9923.000   10075.000    200.000     200.000    200.000       .000       .000       .000
GR    337.000   9923.000    330.700    9936.000    330.200   10000.000    330.700   10064.000    335.000   10075.000

X1    117.360       .000       .000       .000    135.000     135.000    135.000       .000       .280       .000

NC       .000       .000       .000       .300       .500       .000       .000       .000       .000       .000
NH      2.000       .030  10010.000       .015  10055.000       .000       .000       .000       .000       .000
X1    117.370      5.000   9923.000  10055.000     30.000      30.000     30.000       .000       .000       .000
GR    337.500   9923.000    331.000    9936.000    330.500   10010.000    330.500   10055.000    336.500   10055.000
1
 10-31-89     09:05:29                                                                                    PAGE    3


NH      2.000       .030   9955.000       .015  10055.000       .000       .000       .000       .000       .000
X1    117.380      5.000   9923.000  10055.000     30.000      30.000     30.000       .000       .000       .000
GR    337.500   9923.000    320.560    9936.000    330.560    9955.000    330.560   10055.000    336.560   10055.000

NC       .015       .015       .015       .300       .500       .000       .000       .000       .000       .000
X1    117.390      4.000   9945.000  10055.000     30.000      30.000     30.000       .000       .000       .000
GR    335.620   9945.000    320.620    9945.000    330.620   10055.000    336.620   10055.000       .000       .000
EJ       .000       .000       .000       .000       .000       .000       .000       .000       .000       .000
1
 10-31-89     09:05:29                                                                                    PAGE    4


   SECNO    DEPTH    CWSEL    CRIWS    WSELK    EG       HV       HL       QLOSS   BANK ELEV
   Q        QLOB     QCH      QROB     ALOB     ACH      AROB     VOL      TWA   LEFT/RIGHT
   TIME     VLOB     VCH      VROB     XNL      XNCH     XNR      WTN      ELMIN     SSTA
   SLOPE    XLOBL    XLCH     XLOBR    ITRIAL   IDC      ICONT    CORAR    TOPWID    ENDST


*PROF 1

IHLEQ = 1.  THEREFORE FRICTION LOSS (HL) IS CALCULATED AS A FUNCTION OF
PROFILE TYPE, WHICH CAN VARY FROM REACH TO REACH.  SEE DOCUMENTATION FOR
DETAILS.

CRITICAL DEPTH TO BE CALCULATED AT ALL CROSS SECTIONS

CCHV=    .100 CEHV=    .300
*SECNO 16.629
    16.64     2.43   320.43   320.00   320.43   321.09      .66      .00      .00   321.50
    6100.       0.    6100.      0.       0.     936.       0.       0.       0.   322.00
      .00      .00     6.52      .00     .038     .038     .038     .000   318.00  9766.11
  .008908      10.      10.      10.       0       14        0      .00   336.04 10164.15
0
```

```
CCHV=    .100 CEHV=    .300
*SECNO 16.644
    16.64     2.66   320.66   319.94      .00   321.16      .50      .05      .02   321.70
    6100.       0.    6100.       0.       0.    1080.       0.       0.       0.   322.50
      .00      .00     5.55      .00     .030     .030     .030     .000   318.00  9711.98
  .002692      10.      10.      10.        2       15        0      .00   419.88 10131.86
0
CCHV=    .100 CEHV=    .300
*SECNO 16.660
3280 CROSS SECTION     16.66 EXTENDED      1.54 FEET

    16.66     1.94   321.54   320.51      .00   321.59      .05      .39      .04   320.00
    6100.    4432.     624.    1044.    2282.     308.     648.       9.       5.   320.00
      .03     1.94     2.03     1.61     .045     .038     .045     .000   319.50  8570.00
  .001515     165.     185.     235.        3       22        0      .00  1948.39 10518.39
0
*SECNO 16.730

3265 DIVIDED FLOW

    16.73     1.91   322.91   322.66      .00   323.13      .22     1.49      .05   321.50
    6100.    2508.    2250.    1342.     808.     459.     502.      33.      23.   322.00
      .05     3.11     4.90     2.67     .045     .038     .045     .000   321.00  8885.76
  .008311     455.     405.     330.        3       15        0      .00  1758.38 10717.12
0
1
 10-31-89     09:05:29                                                                    PAGE    5

   SECNO    DEPTH    CWSEL    CRIWS    WSELK    EG       HV       HL       OLOSS   BANK ELEV
   Q        QLOB     QCH      QROB     ALOB     ACH      AROB     VOL      TWA   LEFT/RIGHT
   TIME     VLOB     VCH      VROB     XNL      XNCH     XNR      WTN      ELMIN      SSTA
   SLOPE    XLOBL    XLCH     XLOBR    ITRIAL   IDC      IDONT    DERAR    TOPWID     ENDST

*SECNO 16.830

3265 DIVIDED FLOW

3280 CROSS SECTION     16.83 EXTENDED      1.04 FEET

    16.83     2.54   325.04   324.28      .00   325.19      .15     2.06      .01   322.60
    6100.    1745.    2277.    2078.     654.     574.     815.      53.      38.   322.60
      .10     2.67     3.97     2.55     .045     .038     .045     .000   322.50  9600.00
  .003125     455.     480.     415.        2       11        0      .00  1177.37 10982.60
0
*SECNO 16.910
    16.91     2.82   326.82   326.38      .00   327.15      .33     1.91      .05   324.00
    6100.     208.    4357.    1535.      75.     833.     648.      74.      51.   324.00
      .13     2.73     5.23     2.37     .045     .038     .045     .000   324.00  9857.08
  .004489     480.     500.     540.        3       11        0      .00  1007.50 10864.68
0
*SECNO 17.010
    17.01     3.73   330.53   330.23      .00   331.07      .54     3.85      .05   325.00
    6100.       0.    6100.       0.       0.    1034.       0.      92.      52.   332.00

                                4
```

```
      .16      .00     5.30      .00     .045     .038     .045     .000   326.90  9892.86
  .010779     500.     520.     800.       4       11        0      .00   589.19 10482.05
0
 *SECNO 117.040
   117.04     4.20   331.20   329.82      .00   331.41      .21      .31      .03   335.00
    6100.       0.    6100.       0.       0.    1644.       0.      95.      64.   333.00
      .17      .00     3.71      .00     .030     .030     .030     .000   327.00  9815.10
  .001443     120.     120.     120.       2       15        0      .00   583.91 10408.92
0
 *SECNO 117.060
 3280 CROSS SECTION    117.06 EXTENDED       .36 FEET

   117.06     4.15   331.35   330.00      .00   331.56      .20      .14      .00   331.00
    6100.       0.    6100.       0.       0.    1689.       0.      93.      55.   333.00
      .17      .00     3.61      .00     .030     .030     .030     .000   327.20  9750.00
  .001408     100.     100.     100.       2       19        0      .00   623.44 10373.44
0
1
  10-31-89     09:05:29                                                                PAGE    6


    SECNO    DEPTH    CWBEL    CRIWS    WSELK     EG       HV       HL     OLOSS   BANK ELEV
    Q        QLOB     QCH      QROB     ALOB      ACH      ARDE     VOL    TWA   LEFT/RIGHT
    TIME     VLOB     VCH      VROB     XNL       XNCH     XNR      WTN    ELMIN      SSTA
    SLOPE    XLOBL    XLCH     XLOBR    ITRIAL    IDC      ICONT    CBRAR  TOPWID     ENDST


 *SECNO 117.100
   117.10     4.01   331.51   330.14      .00   331.85      .24      .22      .01   332.00
    6100.       0.    6100.       0.       0.    1543.       0.     106.      62.   333.50
      .19      .00     3.95      .00     .030     .030     .030     .000   327.50  9806.78
  .001413     205.     200.     195.       2       14        0      .00   497.65 10304.43
0
 *SECNO 117.140
   117.14     3.87   331.87   330.42      .00   332.18      .31      .31      .02   333.50
    6100.       0.    6100.       0.       0.    1373.       0.     113.      70.   333.50
      .20      .00     4.44      .00     .030     .030     .030     .000   328.00  9819.24
  .001645     200.     200.     195.       1       14        0      .00   416.27 10235.51
0
 *SECNO 117.180
   117.18     3.75   332.15   331.01      .00   332.65      .51      .42      .08   334.00
    6100.       0.    6100.       0.       0.    1067.       0.     119.      72.   333.50
      .21      .00     5.71      .00     .030     .030     .030     .000   328.40  9857.71
  .002649     210.     200.     190.       2       14        0      .00   316.58 10174.29
0
 *SECNO 117.220
   117.22     3.57   332.57   332.02      .00   333.53      .96      .74      .14   334.50
    6100.       0.    6100.       0.       0.     775.       0.     123.      73.   334.00
      .22      .00     7.87      .00     .030     .030     .030     .000   328.90  9893.85
  .005214     220.     200.     190.       1       15        0      .00   236.31 10130.15
0
 *SECNO 117.260
   117.26     4.17   333.47   332.95      .00   334.70     1.23     1.08      .08   335.00
    6100.       0.    6100.       0.       0.     685.       0.     126.      74.   335.00
      .22      .00     8.91      .00     .030     .030     .030     .000   329.30  9914.25
```

B/W 100'

```
  .005625    205.    200.    190.      2      5      0     .00   182.80 10097.05
0
 *SECNO 117.300
   117.30    4.76  334.46  333.85    .00  335.84   1.38   1.10    .04   336.00
    6100.      0.   6100.      0.     0.    648.     0.   129.    75.   336.50
      .23     .00    9.42     .00   .030    .030   .030   .000  329.70  9924.92
  .005337    200.    200.    200.      2      5      0     .00   152.19 10077.11
0
1
 10-31-89    09:05:29                                                          PAGE    7


   SECNO    DEPTH    CWSEL    CRIWS    WSELK    EG       HV       HL       OLOSS   BANK ELEV
   Q        QLOB     QCH      QROB     ALOB     ACH      AROB     VOL      TWA   LEFT/RIGHT
   TIME     VLOB     VCH      VROB     XNL      XNCH     XNR      WTN      ELMIN      SSTA
   SLOPE    XLOBL    XLCH     XLOBR    ITRIAL   IDC      ICONT    CORAR    TOPWID     ENDST


 *SECNO 117.340
   117.34    5.40  335.60  334.49    .00  336.75   1.15    .89    .02   337.00
    6100.      0.   6100.      0.     0.    709.     0.   133.    75.   336.00
      .24     .00    8.61     .00   .030    .030   .030   .000  330.20  9925.99
  .003823    200.    200.    200.      2     11      0     .00   146.26 10074.17
0
 *SECNO 117.360
   117.36    5.74  336.22  334.77    .00  337.28   1.00    .46    .01   337.28
    6100.      0.   6100.      0.     0.    759.     0.   135.    76.   336.28
      .24     .00    8.02     .00   .030    .030   .030   .000  330.48  9925.19
  .002082    135.    135.    135.      0     15      0     .00   149.62 10074.87
0
 CCHV=    .300 CEHV=    .500
 1490 NH CARD USED
 *SECNO 117.370
   117.37    5.68  336.18  334.94    .00  337.41   1.23    .07    .12   337.50
    6100.      0.   6100.      0.     0.    684.     0.   135.    76.   336.50
      .24     .00    8.91     .00   .030    .022   .030   .000  330.50  9925.64
  .001993     30.     30.     30.      2     15      0     .00   129.36 10055.00
0
 1490 NH CARD USED
 *SECNO 117.380
   117.38    5.84  336.40  334.83    .00  337.49   1.09    .04    .04   337.50
    6100.      0.   6100.      0.     0.    728.     0.   136.    76.   336.56
      .24     .00    8.38     .00   .030    .016   .030   .000  330.56  9925.05
  .000527     30.     30.     30.      2     15      0     .00   129.35 10055.00
0
 CCHV=    .300 CEHV=    .500
 *SECNO 117.390
   117.39    5.60  336.22  335.17    .00  337.74   1.52    .03    .22   336.62
    6100.      0.   6100.      0.     0.    616.     0.   136.    76.   336.62
      .24     .00    9.90     .00   .015    .015   .015   .000  330.62  9945.00
  .001143     30.     30.     30.      2     15      0     .00   110.00 10055.00
0
1
 10-31-89    09:05:29                                                          PAGE    8
```

THIS RUN EXECUTED 10-31-85

```
**************************************************
  HEC2 RELEASE DATED NOV 76 UPDATED MAY  1984
  ERROR CORR -  01,02,03,04,05,06
  MODIFICATION -  50,51,52,53,54,55,56
  IBM-PC-XT VERSION AUGUST 1985
**************************************************
```

NOTE- ASTERISK (*) AT LEFT OF CROSS-SECTION NUMBER INDICATES MESSAGE IN SUMMARY OF ERRORS LIST

TANLEY/METTEE-MCGILL-MUR

SUMMARY PRINTOUT TABLE 150

SECNO	XLOC	ELTRD	ELLOC	ELMIN	Q	CWSEL	CRIWS	EG	10K*S	VCH	AREA	.01K
16.636	.00	.00	.00	318.00	6100.00	320.48	320.00	321.09	89.08	6.51	935.53	646.32
16.544	10.00	.00	.00	318.00	6100.00	320.66	319.94	321.16	35.82	3.35	1080.24	1003.90
16.660	185.00	.00	.00	319.60	6100.00	321.54	320.51	321.59	15.15	2.02	3235.84	1567.02
16.700	405.00	.00	.00	321.00	6100.00	322.31	322.66	323.13	83.11	4.30	1785.70	663.12
16.930	480.00	.00	.00	322.50	6100.00	325.04	324.28	325.19	31.25	2.97	2042.32	1091.16
16.910	500.00	.00	.00	324.00	6100.00	326.32	326.38	327.15	44.33	3.23	1354.86	910.49
17.010	520.00	.00	.00	326.80	6100.00	330.53	330.23	331.07	107.79	5.91	1032.67	567.54
117.040	120.00	.00	.00	327.00	6100.00	331.20	329.92	331.41	14.43	3.71	1644.37	1605.74
117.080	100.00	.00	.00	327.20	6100.00	331.35	330.00	331.56	14.08	3.61	1686.30	1625.41
117.100	200.00	.00	.00	327.50	6100.00	331.61	330.14	331.85	14.13	3.95	1542.73	1522.81
117.140	200.00	.00	.00	328.00	6100.00	331.87	330.42	332.19	16.45	4.44	1372.77	1304.08
117.180	200.00	.00	.00	328.40	6100.00	332.15	331.01	332.65	26.49	5.71	1067.44	1135.24
117.220	200.00	.00	.00	328.90	6100.00	332.57	332.02	333.53	52.14	7.57	775.43	844.79
117.260	200.00	.00	.00	329.30	6100.00	333.47	332.95	334.70	56.25	8.91	634.32	813.36
117.300	200.00	.00	.00	329.70	6100.00	334.46	333.85	335.84	53.37	9.42	647.74	834.99
117.340	200.00	.00	.00	330.20	6100.00	335.60	334.49	336.75	38.22	8.61	708.38	986.57
117.360	135.00	.00	.00	330.49	6100.00	336.22	334.77	337.23	30.53	8.03	759.25	1098.62

SECND	XLCH	ELTRD	ELLC	ELMIN	Q	CWSEL	CRIWS	EG	10K*S	VCH	AREA	.01K
117.370	30.00	.00	.00	330.50	6100.00	336.18	334.94	337.41	19.93	8.91	684.32	1366.52
117.380	30.00	.00	.00	330.56	6100.00	336.40	334.83	337.49	9.27	8.38	727.55	2003.87
117.390	30.00	.00	.00	330.62	6100.00	326.22	325.17	337.74	11.42	9.90	516.04	1804.23

TANLEY/METTEE-MCGILL-MUR

SUMMARY PRINTOUT TABLE 150

SECND	Q	CWSEL	DIFWSP	DIFWSX	DIFKWS	TOPWID	XLCH
16.639	6100.00	320.43	.00	.00	.00	333.04	.00
16.644	6100.00	320.66	.00	.23	.00	419.88	10.00
16.660	6100.00	321.54	.00	.87	.00	1348.33	185.00
16.730	6100.00	322.91	.00	1.37	.00	1753.33	405.00
16.830	6100.00	325.04	.00	2.13	.00	1177.37	450.00
16.910	6100.00	326.82	.00	1.78	.00	1007.60	500.00
17.010	6100.00	330.53	.00	3.71	.00	533.19	520.00
117.040	6100.00	331.20	.00	.67	.00	593.81	120.00
117.060	6100.00	331.35	.00	.15	.00	523.44	100.00
117.100	6100.00	331.61	.00	.25	.00	437.65	200.00
117.140	6100.00	331.87	.00	.26	.00	415.27	200.00
117.180	6100.00	332.13	.00	.26	.00	316.58	200.00
117.220	6100.00	332.57	.00	.43	.00	226.31	200.00
117.260	6100.00	333.47	.00	.89	.00	182.50	200.00
117.300	6100.00	334.46	.00	.99	.00	152.19	200.00
117.340	6100.00	335.60	.00	1.14	.00	143.28	200.00

117.360	6100.00	336.22	.00	.62	.00	149.58	135.00
117.370	6100.00	336.18	.00	-.04	.00	129.36	30.00
117.380	6100.00	336.40	.00	.22	.00	129.95	30.00
117.390	6100.00	336.22	.00	-.18	.00	110.00	30.00

1

10-31-89 09:05:29 PAGE 11

SUMMARY OF ERRORS AND SPECIAL NOTES

1

10-31-89 09:05:53 PAGE 1

THIS RUN EXECUTED 10-31-89

```
*************************************************
 HEC2 RELEASE DATED NOV 76 UPDATED MAY  1984
 ERROR CORR -  01,02,03,04,05,06
 MODIFICATION -  30,31,32,33,34,35,36
 IBM-PC-XT VERSION AUGUST 1985
*************************************************
```

SCATTERWASH
WATER SURFACE ELEVATION
EXISTING VS PROPOSED

EXISTING CONDITION		PROPOSED CONDITION	
SEC. NO.	ELEV.	SEC. NO.	ELEV.
16.64	320.43	16.64	320.43
16.64	320.66	16.64	320.66
16.660	321.50	16.660	321.54
16.730	322.83	16.730	322.91
16.830	325.03	16.830	325.04
16.910	326.76	16.910	326.92
17.010	330.72	17.010	330.53
		117.040	331.20
		117.060	331.35
		117.100	331.61
17.110	332.75	117.140	331.97
		117.180	332.15
		117.220	332.57
		117.260	333.47
17.290	335.34	117.300	334.46
17.320	338.30	117.340	335.60
		117.360	336.22
		117.370	336.18
		117.380	336.40
		117.390	336.22
17.430	340.49	117.440	340.10
		117.450	340.10
		117.460	338.63
		117.480	339.51
17.530	343.59		
		117.580	342.28
		117.620	342.56
		117.630	342.58
		117.640	342.59
		117.650	344.49
		117.670	345.77
		117.710	346.20
17.640	347.16	117.720	347.27
17.820	349.80	117.730	348.52

PROJECT: RBM 600-0-305

DESIGNER: MAL

DATE: 3-21-88

HYDROLOGIC AND CHANNEL INFORMATION

Q_1 = _____ TW_1 = _____

Q_2 = 2600 TW_2 = 4.3

(Q_1 = DESIGN DISCHARGE, SAY Q_{25}
Q_2 = CHECK DISCHARGE, SAY Q_{50} OR Q_{100})

SKETCH

STATION: Skunk Creek

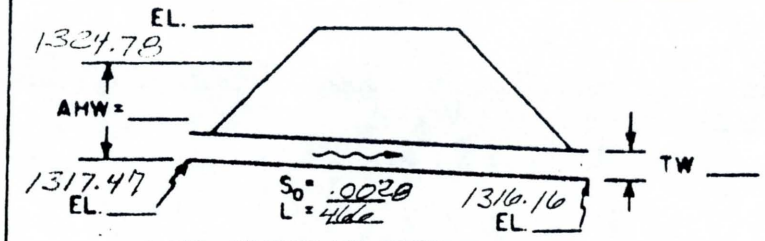

MEAN STREAM VELOCITY = _____

MAX. STREAM VELOCITY = _____

CULVERT DESCRIPTION (ENTRANCE TYPE)	Q	SIZE	HEADWATER COMPUTATION: INLET CONT. $\frac{HW}{D}$	HW	OUTLET CONTROL $HW = H + h_o - LS_o$: K_e	H	d_c	$\frac{d_c+D}{2}$	TW	h_o	LS_o	HW	CONTROLLING HW	OUTLET VELOCITY	COST	COMMENTS
5-10x6 x			1.2	7.2	.5	* 3.4	4.3	5.2	4.4	5.2	1.3	7.3	7.3	10		
466																

SUMMARY & RECOMMENDATIONS:

* $2.8 + \underbrace{(.25\,V^2/2g) \times 2}_{\text{1/2 Velocity Head}}$ ← Bend Loss

$V_c = 8.67$ ft/s

Note: Controlling HW Elev. is used to begin WS Elev of upstream HEC 2 run without reducing for velocity head.

Conservative

Figure 7

CHART 8

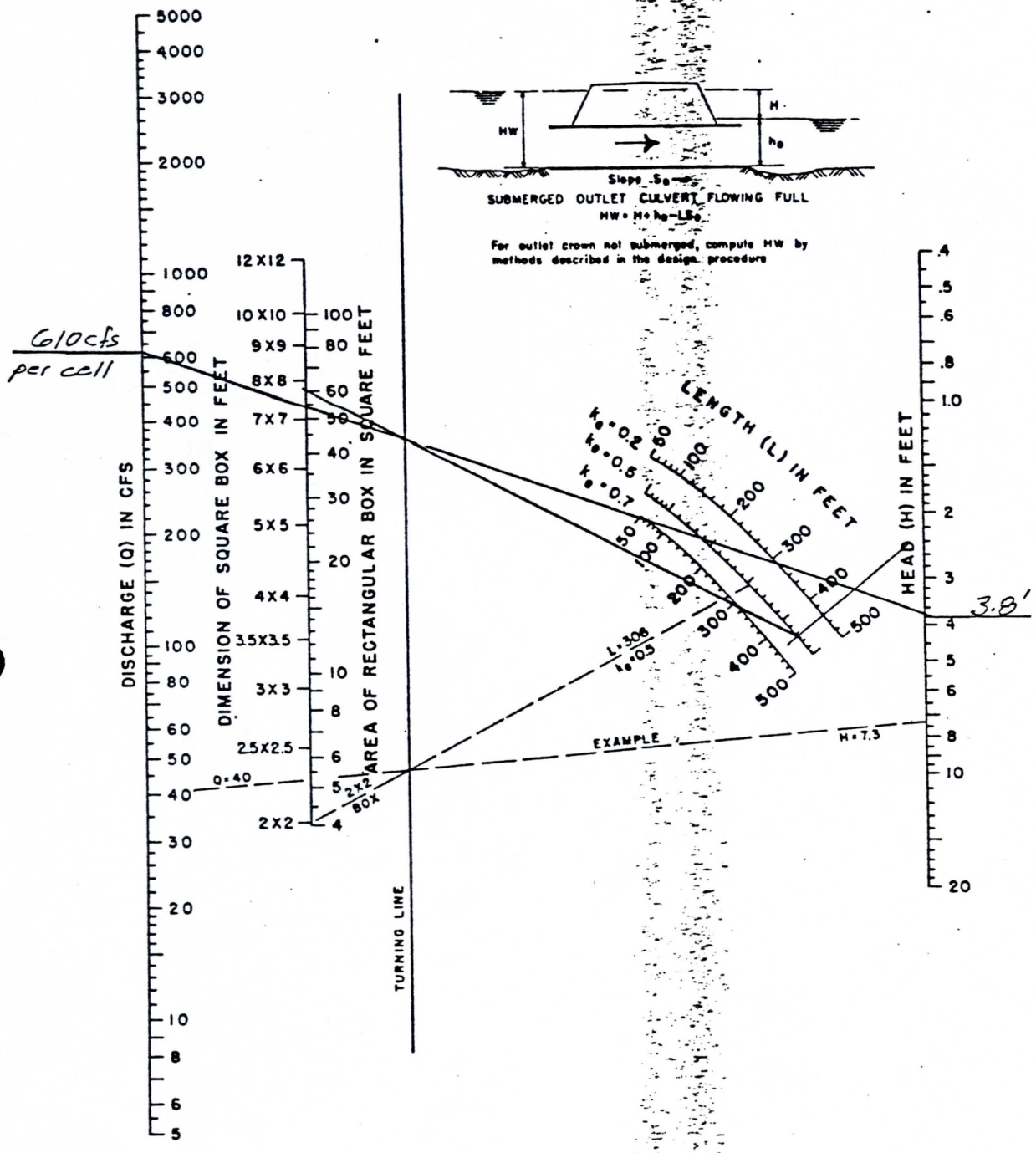

HEAD FOR
CONCRETE BOX CULVERTS
FLOWING FULL
n = 0.012

BUREAU OF PUBLIC ROADS JAN. 1963

```
1*****************************************************
 *  WATER SURFACE PROFILES                           *
 *  VERSION OF NOVEMBER 1976                         *
 *  UPDATED MAY 1984                                 *
 *  IBM-PC-XT VERSION AUGUST 1985                    *
 *  RUN DATE  10-31-89   TIME  09:06:25               *
 *****************************************************
```

```
*************************************
 *  U.S. ARMY CORPS OF ENGINEERS     *
 *  THE HYDROLOGIC ENGINEERING CENTER *
 *  609 SECOND STREET, SUITE D       *
 *  DAVIS, CALIFORNIA 95616          *
  *  (916) 440-2105 (FTS) 448-2105     *
*************************************
```

```
X     X  XXXXXXX   XXXXX              XXXXX
X     X  X        X     X            X     X
X     X  X        X                        X
XXXXXXX  XXXX     X          XXXXX    XXXXX
X     X  X        X                  X
X     X  X        X     X            X
X     X  XXXXXXX   XXXXX             XXXXXXX
```

```
1
 10-31-89     09:06:25                                                                    PAGE    1
```

```
                                                                    THIS RUN EXECUTED 10-31-89
 ***************************************************
   HEC2 RELEASE DATED NOV 76 UPDATED MAY  1984
   ERROR CORR -  01,02,03,04,05,06
   MODIFICATION -  50,51,52,53,54,55,56
   IBM-PC-XT VERSION AUGUST 1985
 ***************************************************
```

```
FR FREE FORMAT
C
T1     SCATTER WASH FLOODPLAIN STUDY   **** PROPOSED ****
T2     100 YEAR FLOW - UPSTREAM OF OLH - SCTWSHC.IN
T3     STANLEY/METTEE-MCGILL-MURPHY

J1  ICHECK    INQ       NINV      IDIR      STRT      METRIC    HVINS     Q         WSEL      FQ

       0.        2.        0.        0.   .000000       .00        .0        0.   340.100      .000

J2  NPROF     IPLOT     PRFVS     XSECV     XSECH     FN        ALLDC     IBW       CHNIM     ITRACE

     -1.000      .000    -1.000      .000      .000      .000      .000      .000      .000      .000

J6  IHLEQ     ICCPY

      1.000      .000      .000      .000      .000      .000      .000      .000      .000      .000
```

```
NC      .015      .015      .015      .000      .000      .000      .000      .000      .000      .000
QT     1.000   6100.000      .000      .000      .000      .000      .000      .000      .000      .000
        CBC INLET - STA 202+48
X1   117.440      4.000   9936.000  10064.000      .000      .000      .000      .000      .000      .000
GR   341.000   9936.000   331.500   9936.000   331.340  10064.000   341.000  10064.000      .000      .000

X1   117.450      .000      .000      .000     10.000     10.000     10.000      .000      .020      .000

        DROP WALL  - STA 202+59.54
X1   117.450      4.000   9936.000  10064.000     1.000      1.000      1.000      .000      .000      .000
GR   341.000   9936.000   334.500   9936.000   334.500  10064.000   341.000  10064.000      .000      .000

NC      .030      .030      .030      .000      .000      .000      .000      .000      .000      .000
        PC STA 203+51.47
X1   117.480      5.000   9933.600  10066.400    75.000    105.000     91.930      .000      .000      .000
GR   341.000   9933.600   335.300   9945.000   334.800  10000.000   335.300  10055.000   341.000  10065.400
1
 10-31-89     09:06:25                                                                          PAGE    2


        STA 209+00
X1   117.580      5.000   9853.000  10136.000   500.000    575.000    549.000      .000      .000      .000
GR   343.000   9853.000   337.500   9865.000   337.010  10000.000   337.500  10125.000   343.000  10136.000

X1   117.620      5.000   9796.000  10192.000   200.000    200.000    200.000      .000      .000      .000
GR   344.300   9796.000   338.300   9808.000   337.800  10000.000   338.300  10180.000   344.300  10192.000

        END SILL  -  STA 211+48
X1   117.630      4.000   9794.000  10194.000    48.000     48.000     48.000      .000      .000      .000
GR   345.500   9794.000   338.500   9794.000   338.500  10194.000   345.500  10194.000      .000      .000

X1   117.640      .000      .000      .000     14.000     14.000     14.000      .000      .060      .000

        DROP WALL  -  STA 211+62
X1   117.650      4.000   9794.000  10194.000     1.000      1.000      1.000      .000      .000      .000
GR   345.500   9794.000   342.560   9794.000   342.560  10194.000   345.500  10194.000      .000      .000

        STA 213+35 SKEWED 20 DEG. LT
X1   117.670      4.000   9727.000  10255.000   205.000    150.000    150.000      .000      .000      .000
GR   347.000   9727.000   342.000   9743.000   343.000  10250.000   347.000  10255.000      .000      .000

        STA 215+65 SKEWED 40 DEG. LT
X1   117.710      5.000   9590.000  10389.000   310.000    160.000    220.000      .000      .000      .000
GR   349.000   9590.000   344.000   9610.000   343.350  10000.000   343.000  10365.000   349.000  10389.000

        STA 215+65 DROP STRUCTURE
X1   117.720      5.000   9588.000  10389.000     1.000      1.000      1.000      .000      .000      .000
CI 10000.000    343.360      .000      4.000     4.000     12.000      .000      .000      .000      .000
GR   349.000   9588.000   345.500   9598.000   346.000  10000.000   345.000  10377.000   349.000  10389.000

        - NATURAL CHANNEL
X1   117.730      7.000   9475.000  10475.000   100.000    100.000    120.000      .000      .000      .000
CI      .000      .004      .000      .000      .000      .000      .000      .000      .000      .000
GR   349.000   9475.000   348.000   9560.000   348.000   9625.000   347.000   9675.000   347.000  10000.000
```

```
GR    347.000  10310.000    348.000   10475.000       .000       .000       .000       .000       .000       .000
EJ       .000       .000       .000       .000       .000       .000       .000       .000       .000       .000
1
 10-31-89     09:06:25                                                                                    PAGE    3


   SECNO    DEPTH    CWSEL    CRIWS    WSELK    EG       HV       HL       CLOSS   BANK ELEV
   Q        QLOB     QCH      QROB     ALOB     ACH      AROB     VOL      TWA   LEFT/RIGHT
   TIME     VLOB     VCH      VROB     XNL      XNCH     XNR      WTN      ELMIN      SSTA
   SLOPE    XLOBL    XLCH     XLOBR    ITRIAL   IDC      ICONT    CORAR    TOPWID     ENDST


*PROF 1

IHLEQ = 1.  THEREFORE FRICTION LOSS (HL) IS CALCULATED AS A FUNCTION OF
PROFILE TYPE, WHICH CAN VARY FROM REACH TO REACH.  SEE DOCUMENTATION FOR
DETAILS.

*SECNO 117.440
        CBC INLET - STA 202+48
   117.44     8.75   340.10      .00   340.10   340.57      .47      .00      .00   341.00
    6100.       0.    6100.       0.       0.    1111.       0.       0.       0.    341.00
      .00      .00     5.49      .00     .015     .015     .015     .000   331.34  9936.00
  .000264       0.       0.       0.        0        0        0      .00   128.00 10064.00
0
*SECNO 117.450
   117.45     8.74   340.10      .00      .00   340.57      .47      .00      .00   341.02
    6100.       0.    6100.       0.       0.    1108.       0.       0.       0.    341.02
      .00      .00     5.50      .00     .015     .015     .015     .000   331.35  9936.00
  .000265      10.      10.      10.        0        0        0      .00   128.00 10064.00
0
*SECNO 117.450

3201 HV CHANGED MORE THAN HVINS

3685 20 TRIALS ATTEMPTED WSEL,CWSEL
3693 PROBABLE MINIMUM SPECIFIC ENERGY
3720 CRITICAL DEPTH ASSUMED
         DROP WALL  - STA 202+59.54
   117.46     4.13   338.53   338.63      .00   340.70     2.06      .00      .00   341.00
    6100.       0.    6100.       0.       0.     529.       0.       0.       0.    341.00
      .00      .00    11.53      .00     .015     .015     .015     .000   334.50  9936.00
  .002219       1.       1.       1.       20       11        0      .00   128.00 10064.00
0
*SECNO 117.490
3685 20 TRIALS ATTEMPTED WSEL,CWSEL
3693 PROBABLE MINIMUM SPECIFIC ENERGY
3720 CRITICAL DEPTH ASSUMED
         PC STA 203+51.47
   117.49     4.71   339.51   339.51      .00   341.50     2.08      .77     -.37   341.00
    6100.       0.    6100.       0.       0.     527.       0.       1.       0.    341.00
      .00      .00    11.59      .00     .030     .030     .030     .000   334.80  9936.57
  .008372      75.      92.     105.       20        8        0      .00   126.86 10063.43
0
1
```

```
   SECNO    DEPTH    CWSEL    CRIWS    WSELK    EG       HV       HL       OLOSS   BANK ELEV
   Q        QLOB     QCH      QROB     ALOB     ACH      AROB     VOL      TWA   LEFT/RIGHT
   TIME     VLOB     VCH      VROB     XNL      XNCH     XNR      WTN      ELMIN      SSTA
   SLOPE    XLOBL    XLCH     XLOBR    ITRIAL   IDC      ICONT    CORAR    TOPWID     ENDST


*SECNO 117.580

3301 HV CHANGED MORE THAN HVINS

          STA 209+00
   117.58     5.27   342.28      .00      .00   342.59      .31      .39      .00   343.00
    6100.       0.    6100.       0.       0.    1356.       0.      13.       3.   343.00
      .04      .00     4.50      .00     .030     .030     .030     .000   337.01  9854.55
  .001016     500.     549.     575.        3        0        0      .00   280.02 10134.58
0
 *SECNO 117.620
   117.62     4.76   342.56      .00      .00   342.78      .20      .17      .00   344.30
    6100.       0.    6100.       0.       0.    1717.       0.      20.       4.   344.30
      .05      .00     3.55      .00     .030     .030     .030     .000   337.80  9799.47
  .000715     200.     200.     200.        2        0        0      .00   389.07 10188.53
0
 *SECNO 117.630
          END SILL  -  STA 211+48
   117.63     4.08   342.59      .00      .00   342.80      .22      .04      .00   345.50
    6100.       0.    6100.       0.       0.    1833.       0.      22.       5.   345.50
      .05      .00     3.74      .00     .030     .030     .030     .000   338.50  9794.00
  .000895      48.      48.      48.        2        0        0      .00   400.00 10194.00
0
 *SECNO 117.640
   117.64     4.03   342.59      .00      .00   342.81      .22      .01      .00   345.56
    6100.       0.    6100.       0.       0.    1814.       0.      23.       5.   345.56
      .05      .00     3.79      .00     .030     .030     .030     .000   338.56  9794.00
  .000931      14.      14.      14.        0        0        0      .00   400.00 10194.00
0
 *SECNO 117.650

3301 HV CHANGED MORE THAN HVINS

3685 20 TRIALS ATTEMPTED WSEL,CWSEL
3693 PROBABLE MINIMUM SPECIFIC ENERGY
3720 CRITICAL DEPTH ASSUMED
         DROP WALL  -  STA 211+62
   117.65     1.93   344.49   344.49      .00   345.46      .97      .01      .00   345.50
    6100.       0.    6100.       0.       0.     773.       0.      23.       5.   345.50
      .05      .00     7.89      .00     .030     .030     .030     .000   342.56  9794.00
  .010689       1.       1.       1.       20       11        0      .00   400.00 10194.00
0
1
```

```
   SECNO    DEPTH    CWSEL    CRIWS    WSELK    EG       HV       HL       QLOSS   BANK ELEV
   Q        QLOB     QCH      QROB     ALOB     ACH      AROB     VOL      TWA   LEFT/RIGHT
   TIME     VLOB     VCH      VROB     XNL      XNCH     XNR      WTN      ELMIN      SSTA
   SLOPE    XLOBL    XLCH     XLOBR    ITRIAL   IDC      ICONT    CORAR    TOPWID     ENDST


*SECNO 117.570

3301 HV CHANGED MORE THAN HVINS

          STA 213+35 SKEWED 20 DEG. LT
   117.57     2.77   345.77      .00      .00   346.05      .28      .59      .00   347.00
    6100.       0.    6100.       0.       0.    1437.       0.      27.       7.   347.00
      .07      .00     4.25      .00     .030     .030     .030     .000   342.00  9731.91
  .001944     205.     180.     150.        3        0        0      .00   529.18 10261.09
0
 *SECNO 117.710
          STA 215+65 SKEWED 40 DEG. LT
   117.71     3.20   346.20      .00      .00   346.33      .13      .29      .00   349.00
    6100.       0.    6100.       0.       0.    2118.       0.      37.      10.   349.00
      .09      .00     2.98      .00     .030     .030     .030     .000   342.00  9601.19
  .000993     310.     230.     150.        3        0        0      .00   776.62 10377.21
0
 *SECNO 117.720
 CHIMP CLSTA=  10000.00 CELCH=    343.35 BW=     12.00 STCHL=   9588.00 STCHR=  10389.00
 EXCAVATION DATA
 AEX=     60.19SQ-FT     VEXR=       .0K*CU-YD     VEXT=        .0K*CU-YD


 3301 HV CHANGED MORE THAN HVINS

 3695 20 TRIALS ATTEMPTED WSEL,CWSEL
 3693 PROBABLE MINIMUM SPECIFIC ENERGY
 3720 CRITICAL DEPTH ASSUMED
          STA 215+65 DROP STRUCTURE
   117.72     3.91   347.27   347.27      .00   347.91      .63      .01     -.01   349.00
    6100.       0.    6100.       0.       0.     956.       0.      37.      10.   349.00
      .09      .00     5.38      .00     .030     .030     .030     .000   343.35  9594.91
  .012849       1.       1.       1.       20       11        0      .00   787.18 10382.09
0
 *SECNO 117.730
 CHIMP CLSTA=  10000.00 CELCH=    343.79 BW=     12.00 STCHL=   9475.00 STCHR=  10475.00
 EXCAVATION DATA
 AEX=     79.79SQ-FT     VEXR=       .3K*CU-YD     VEXT=        .3K*CU-YD

1
  10-31-89     09:06:25                                                                    PAGE    5


   SECNO    DEPTH    CWSEL    CRIWS    WSELK    EG       HV       HL       QLOSS   BANK ELEV
   Q        QLOB     QCH      QROB     ALOB     ACH      AROB     VOL      TWA   LEFT/RIGHT
   TIME     VLOB     VCH      VROB     XNL      XNCH     XNR      WTN      ELMIN      SSTA
   SLOPE    XLOBL    XLCH     XLOBR    ITRIAL   IDC      ICONT    CORAR    TOPWID     ENDST
```

3280 CROSS SECTION 117.73 EXTENDED .53 FEET

- NATURAL CHANNEL

117.73	4.73	348.52	.00	.00	348.86	.33	.95	.00	349.00
6100.	0.	6100.	0.	0.	1318.	0.	40.	13.	349.00
.10	.00	4.63	.00	.030	.030	.030	.000	343.79	9513.33
.005729	100.	120.	100.	1	0	0	.00	933.97	10475.00

0
1

10-31-89 09:06:25 PAGE 7

THIS RUN EXECUTED 10-31-89

```
*************************************************
  HEC2 RELEASE DATED NOV 76 UPDATED MAY  1984
  ERROR CORR -  01,02,03,04,05,06
  MODIFICATION -  50,51,52,53,54,55,56
  IBM-PC-XT VERSION AUGUST 1985
*************************************************
```

NOTE- ASTERISK (*) AT LEFT OF CROSS-SECTION NUMBER INDICATES MESSAGE IN SUMMARY OF ERRORS LIST

TANLEY/METTEE-MCGILL-MLR

SUMMARY PRINTOUT TABLE 150

	SECNO	XLCH	ELTRD	ELLC	ELMIN	Q	CWSEL	CRIWS	EG	10K*S	VCH	AREA	.01K
	117.440	.00	.00	.00	331.34	6100.00	340.10	.00	340.57	2.04	5.49	1111.04	4271.14
	117.450	10.00	.00	.00	331.36	6100.00	340.10	.00	340.57	2.05	5.50	1108.74	4257.13
*	117.460	1.00	.00	.00	334.50	6100.00	338.53	338.53	340.70	22.19	11.53	529.09	1294.90
*	117.480	91.93	.00	.00	334.80	6100.00	339.51	339.51	341.60	83.72	11.58	526.55	583.70
	117.580	549.00	.00	.00	337.01	6100.00	342.28	.00	342.59	10.19	4.50	1356.49	1913.85
	117.620	200.00	.00	.00	337.80	6100.00	342.55	.00	342.76	7.19	3.55	1716.51	2279.50
	117.630	48.00	.00	.00	338.50	6100.00	342.58	.00	342.80	8.95	3.74	1633.07	2038.77
	117.640	14.00	.00	.00	338.56	6100.00	342.59	.00	342.81	9.31	3.78	1612.59	1998.71
*	117.650	1.00	.00	.00	342.56	6100.00	344.49	344.49	345.46	105.89	7.99	772.80	590.02
	117.670	180.00	.00	.00	343.00	6100.00	345.77	.00	345.05	19.44	4.25	1436.52	1383.54
	117.710	230.00	.00	.00	343.00	6100.00	346.20	.00	346.33	8.88	2.88	2118.09	2045.90

*	117.720	1.00	.00	.00	343.35	6100.00	347.27	347.27	347.91	128.49	6.38	955.51	538.16
	117.730	120.00	.00	.00	343.79	6100.00	348.52	.00	348.86	57.29	4.63	1318.17	805.90

1

10-31-89 09:06:25 PAGE 8

TANLEY/METTEE-MCGILL-MUR

SUMMARY PRINTOUT TABLE 150

	SECNO	Q	CWSEL	DIFWSP	DIFWSX	DIFKWS	TOPWID	XLCH
	117.440	6100.00	340.10	.00	.00	.00	128.00	.00
	117.450	6100.00	340.10	.00	.00	.00	128.00	10.00
*	117.460	6100.00	338.63	.00	-1.47	.00	128.00	1.00
*	117.480	6100.00	339.51	.00	.88	.00	126.85	91.93
	117.580	6100.00	342.28	.00	2.76	.00	230.02	549.00
	117.620	6100.00	342.56	.00	.29	.00	389.07	200.00
	117.630	6100.00	342.58	.00	.02	.00	400.00	48.00
	117.640	6100.00	342.59	.00	.01	.00	400.00	14.00
*	117.650	6100.00	344.49	.00	1.90	.00	400.00	1.00
	117.670	6100.00	345.77	.00	1.28	.00	529.18	180.00
	117.710	6100.00	346.20	.00	.43	.00	776.63	200.00
*	117.720	6100.00	347.27	.00	1.07	.00	797.18	1.00
	117.730	6100.00	348.52	.00	1.25	.00	959.97	120.00

1

10-31-89 09:06:25 PAGE 9

SUMMARY OF ERRORS AND SPECIAL NOTES

```
CAUTION  SECNO=   117.460  PROFILE= 1  CRITICAL DEPTH ASSUMED
CAUTION  SECNO=   117.460  PROFILE= 1  PROBABLE MINIMUM SPECIFIC ENERGY
CAUTION  SECNO=   117.460  PROFILE= 1  20 TRIALS ATTEMPTED TO BALANCE WSEL

CAUTION  SECNO=   117.480  PROFILE= 1  CRITICAL DEPTH ASSUMED
```

```
CAUTION  SECNO=   117.480  PROFILE= 1  PROBABLE MINIMUM SPECIFIC ENERGY
CAUTION  SECNO=   117.480  PROFILE= 1  20 TRIALS ATTEMPTED TO BALANCE WSEL

CAUTION  SECNO=   117.650  PROFILE= 1  CRITICAL DEPTH ASSUMED
CAUTION  SECNO=   117.650  PROFILE= 1  PROBABLE MINIMUM SPECIFIC ENERGY
CAUTION  SECNO=   117.650  PROFILE= 1  20 TRIALS ATTEMPTED TO BALANCE WSEL

CAUTION  SECNO=   117.720  PROFILE= 1  CRITICAL DEPTH ASSUMED
CAUTION  SECNO=   117.720  PROFILE= 1  PROBABLE MINIMUM SPECIFIC ENERGY
CAUTION  SECNO=   117.720  PROFILE= 1  20 TRIALS ATTEMPTED TO BALANCE WSEL

1
 10-31-89     09:06:39                                                                    PAGE    1


                                                                    THIS RUN EXECUTED 10-31-89

**************************************************
  HEC2 RELEASE DATED NOV 76 UPDATED MAY  1984
  ERROR CORR -  01,02,03,04,05,06
  MODIFICATION -  50,51,52,53,54,55,56
  IBM-PC-XT VERSION AUGUST 1985
**************************************************
```

CURVE DATA				
No.	R	Δ	T	L
(1)	1000.00'	51°30'00"	482.34'	898.84'
(2)	651.58'	72°44'41.0"	479.90'	827.27'
(3)	1390.51'	59°15'56.3"	790.97'	1438.32'

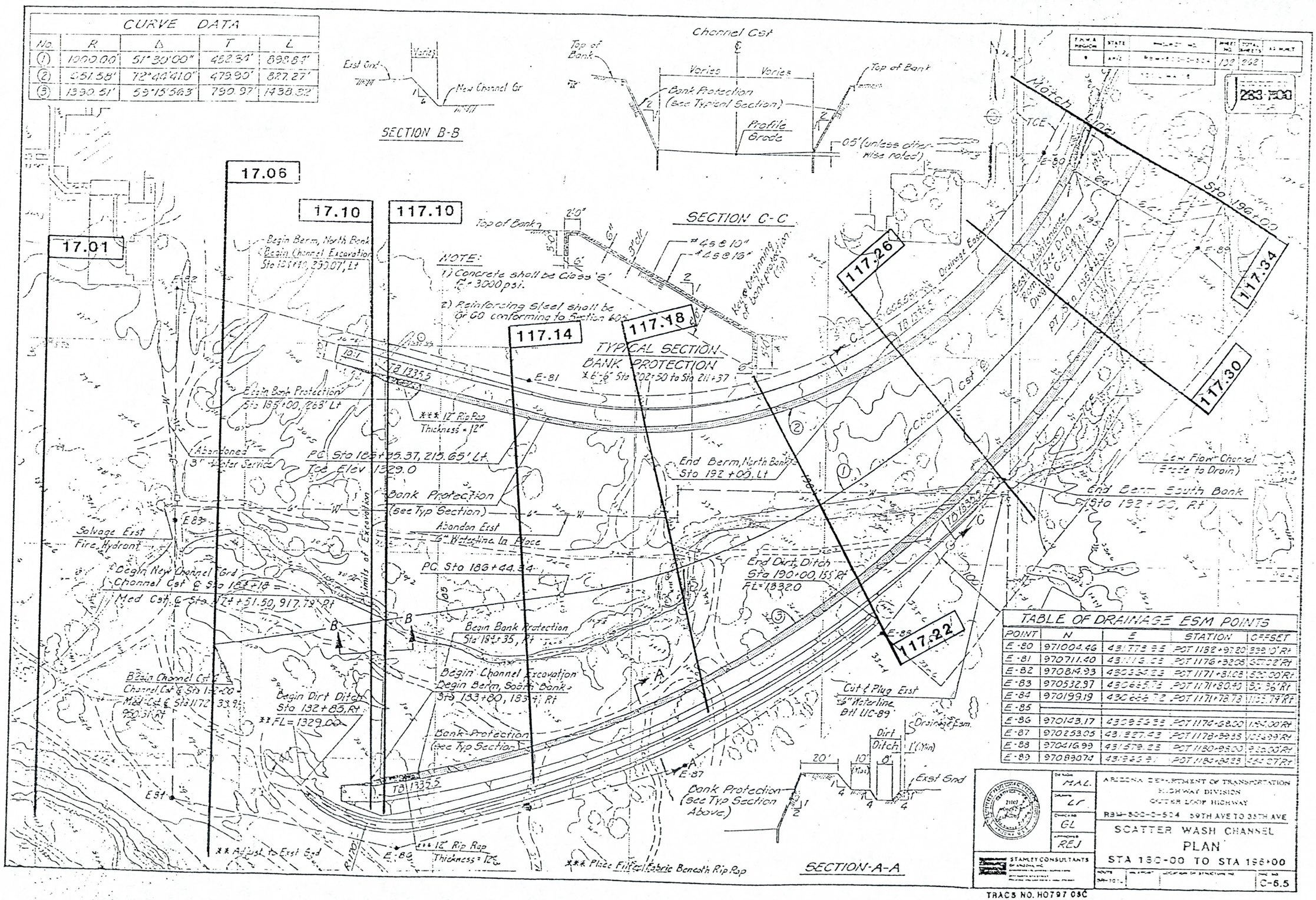

TABLE OF DRAINAGE ESM POINTS				
POINT	N	E	STATION	OFFSET
E-80	971004.46	431775.55	POT 1182+97.20	339.01' Rt
E-81	970711.40	431116.53	POT 1176+32.08	507.02' Rt
E-82	970814.93	430334.23	POT 1171+81.08	503.00' Rt
E-83	970532.97	430665.75	POT 1171+80.40	50.96' Rt
E-84	970199.19	430686.72	POT 1171+78.73	103.74' Rt
E-85				
E-86	970193.17	430853.33	POT 1176+68.00	150.00' Rt
E-87	970253.06	431327.43	POT 1178+39.35	108.99' Rt
E-88	970416.99	431579.23	POT 1180+95.00	96.00' Rt
E-89	970830.74	431945.91	POT 1183+84.33	144.07' Rt

DESIGNED HAL	ARIZONA DEPARTMENT OF TRANSPORTATION HIGHWAY DIVISION SCATTER LOOP HIGHWAY RSW-800-0-524 99TH AVE TO 35TH AVE	
DRAWN LF	SCATTER WASH CHANNEL PLAN STA 180+00 TO STA 198+00	
CHECKED GL		
APPROVED REJ		
STANLEY CONSULTANTS OF ARIZONA, INC.	ROUTE RSW-101-L	C-6.5

TRACS NO. H0797 03C

TABLE OF DRAINAGE ESM POINTS					
POINT	N	E	STATION	OFFSET	
E-40	971618.09	432122.01	POT 1186+45	271.87' Lt	Med Cst ℄ Sur ℄
E-41	971852.34	432265.13	POT 1187+90	515.00' Lt	Med Cst ℄ Sur ℄
E-42	971602.67	432426.96	POT 1189+50	275.09' Lt	Med Cst ℄ Sur ℄
E-43	971785.13	432626.74	POT 1191+50	435.00' Lt	Med Cst ℄ Sur ℄

NOTE:
Use of Shotcrete is Permitted for Construction of Transition Walls.

CURVE DATA				
No.	R	Δ	T	L
1	700.00	41°00'	261.72'	500.91'
2	450.00	57°00'	244.33'	447.68'
3	1000.00	25°00'	221.69'	436.33'

*Place Filter Fabric Beneath Rip-Rap

F.H.W.A. REGION	STATE	PROJECT NO	SHEET NO	TOTAL SHEETS	AS BUILT
9	ARIZ	RBM-600-0-504	183	262	
		TOTAL MILES			

263-1100

Varies 0-10'
12"
6'
6'-6"
6" (Typ)

SECTION C-C
For Reinf, see Dwg No. C-5.34

Channel Cst ℄ Sta 200+00
Med Cst ℄ Sta 1186+20
Construct 9-10'x6'x430' LF CBC
1-10'x8'x430 LF CBC.
Sk 30° Rt

*Place Dumped Rock
18" Rip Rap, Thickness = 36"

Fill Exst Low Flow Channel

Grouted Rip Rap

SECTION B-B
(2" min cover of grout above Rip Rap)

Match Line

Sta 196+00

TCE

R-44
R-47
R-51
T.B. 1338.0
Grouted Rip Rap
64'
191.0'
239.0'
1185
200
45
55'
PC Sta 203+51.47
205
Varies
Channel Cst ℄
Cst Bank Protection (See Typical Section Dwg No. C-6.5)
3:1 Taper
PT Sta 207+49.52, 84.01' Lt
Begin Maintenance Ramp (see D-19, Dwg No. C-5.34)
PT Sta 208+47.68, 120.25' Rt
PT Sta 209+52.33
Sta 209+00
Match Line
See Dwg No. C-5.11 For 96" SD
*Place Dumped Rock
18" Rip Rap, Thickness = 36"
See Dtl D-1 Dwg No. C-5.31
E-40
E-41
E-42
E-43
117.45
117.46
117.48
117.44
117.34
117.36
117.39
117.37
117.38
117.53
South Frontage Rd Cst ℄
North Frontage Rd Cst ℄
Med Cst ℄
R/W
1190
Cst Bank Protection (see Typical Section Dwg No. C-6.5)
TCE
Limit of Channel Fill
Grade to Drain
Grade to Drain

Section A-A

Channel Cst ℄
20'
Varies (See Plan)
Varies (See Plan)
20'
Exst Grd
1/4
1/2
Profile Grade
Varies (See Profile)
0.5'

DESIGN	M.A.L.
DRAWN	LF
CHECKED	GL
APPROVED	REJ

STANLEY CONSULTANTS OF ARIZONA, INC.

ARIZONA DEPARTMENT OF TRANSPORTATION
HIGHWAY DIVISION
OUTER LOOP HIGHWAY
RBM-600-0-504 59TH AVE TO 35TH AVE

SCATTER WASH CHANNEL
PLAN
STA 196+00 TO STA 209+00

ROUTE SR-101L | MILEPOST | DESCRIPTION OF STRUCTURE NO. | DWG NO C-6.6

TRACS NO. H0797 05C

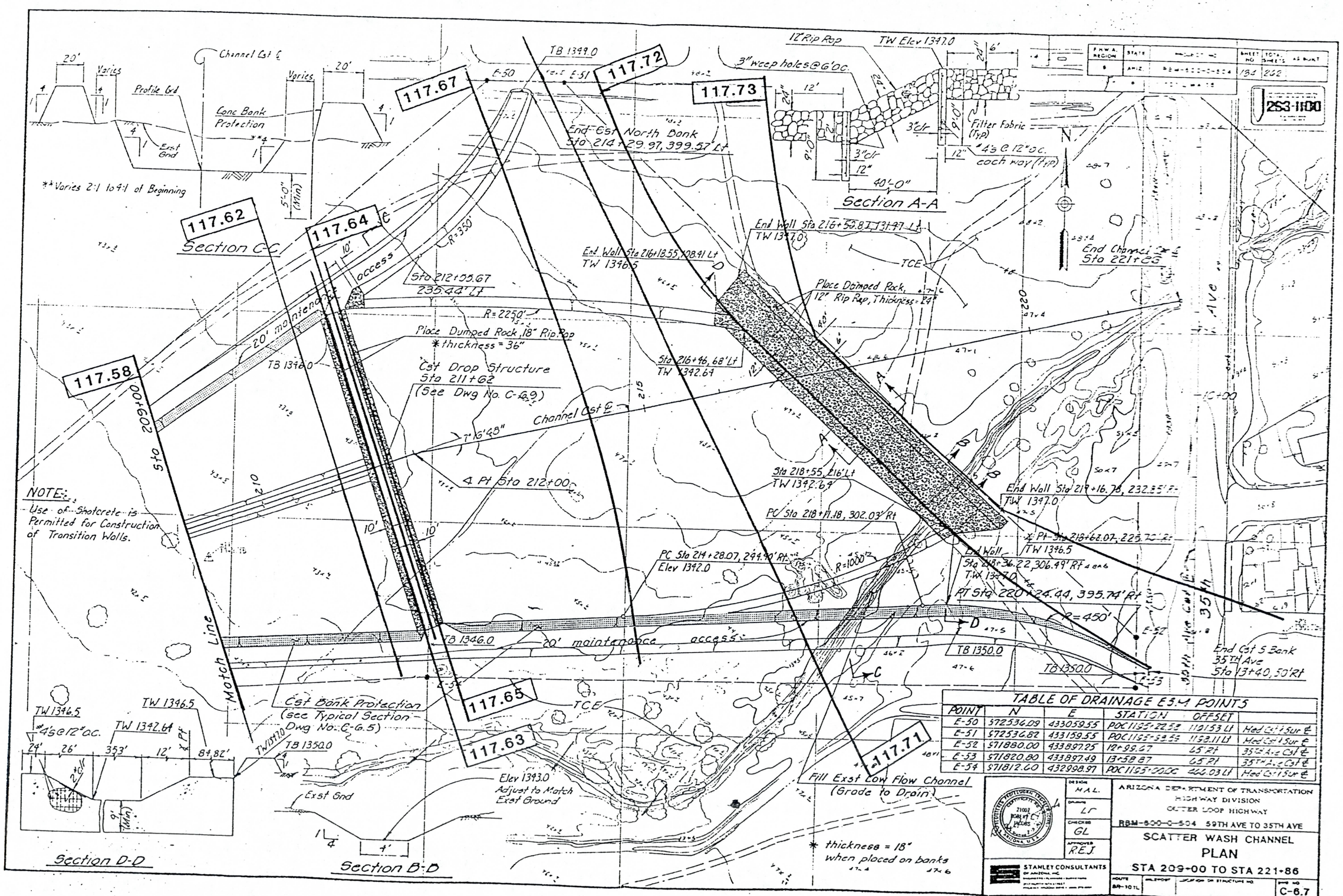
Section C-C
Section A-A
Section D-D
Section B-D
Match Line
20' maintenance access
Cst Drop Structure
Sta 211+62
(See Dwg No. C-6.9)
Cst Bank Protection
(See Typical Section
Dwg No. C-6.5)
Place Dumped Rock, 18" Rip Rap
*thickness = 36"
Place Dumped Rock,
12" Rip Rap, Thickness = 24"
Fill Exst Low Flow Channel
(Grade to Drain)
*thickness = 18"
when placed on banks
Elev 1343.0
Adjust to Match
Exst Ground
Exst Gnd
Channel Cst ℄
End Cst S Bank
35TH Ave
Sta 13+40, 50'Rt
End Cst North Bank
Sta 214+29.97, 399.57' Lt
End Channel
Sta 221+86
Filter Fabric
(Typ)
#4's @ 12" oc.
each way (Typ)
3" weep holes @ 6' oc.
12" Rip Rap
TW Elev 1347.0
117.58
117.62
117.63
117.64
117.65
117.67
117.71
117.72
117.73
Sta 209+00
Sta 210
Sta 215
Sta 220
35TH Ave
TABLE OF DRAINAGE ESM POINTS
POINT | N | E | STATION | OFFSET
E-50 | 572536.09 | 433059.55 | POC 1195+22.58 | 119.53' Lt | Med Cst ℄ Sur ℄
E-51 | 572536.82 | 433159.55 | POC 1195+33.55 | 119.31' Lt | Med Cst ℄ Sur ℄
E-52 | 571880.00 | 433897.25 | 12+99.47 | 65' Rt | 35TH Ave Cst ℄
E-53 | 571820.80 | 433897.49 | 13+58.87 | 65' Rt | 35TH Ave Cst ℄
E-54 | 571812.60 | 432998.97 | POC 1195+00.00 | 466.03' Lt | Med Cst ℄ Sur ℄
NOTE:
Use of Shotcrete is Permitted for Construction of Transition Walls.
DESIGN H.A.L.
DRAWN L.T.
CHECKED G.L.
APPROVED R.E.J.
STANLEY CONSULTANTS OF ARIZONA, INC.
ARIZONA DEPARTMENT OF TRANSPORTATION
HIGHWAY DIVISION
OUTER LOOP HIGHWAY
RBM-800-0-504 59TH AVE TO 35TH AVE
SCATTER WASH CHANNEL
PLAN
STA 209+00 TO STA 221+86
ROUTE BR-101L
SHEET NO. C-6.7
TRACS NO. H0797 00C

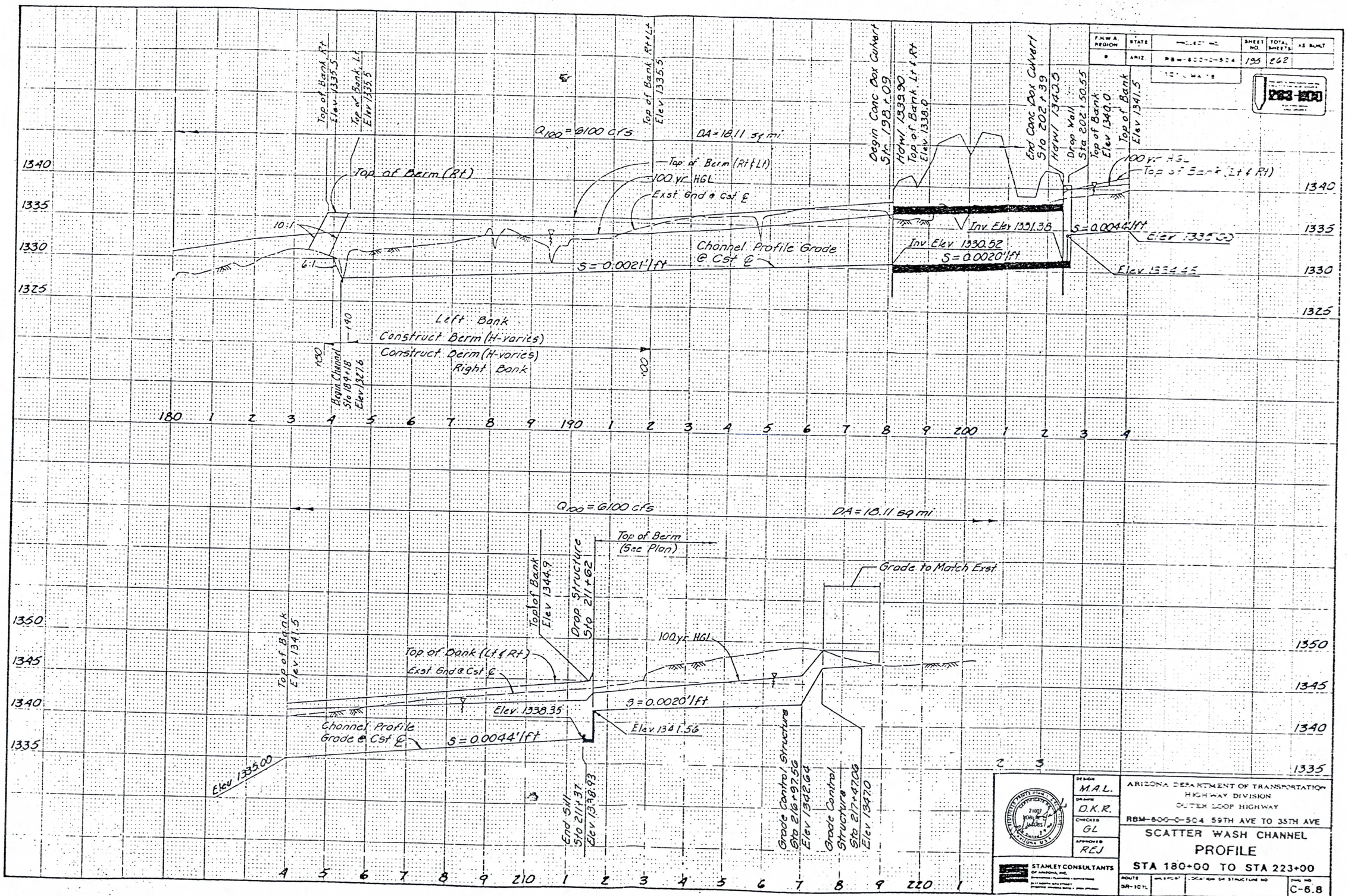

F.H.W.A. REGION	STATE	PROJECT NO.	SHEET NO.	TOTAL SHEETS	AS BUILT
9	ARIZ.	RBM-800-C-504	195	262	

283-284

DESIGN M.A.L.
DRAWN D.K.R.
CHECKED GL
APPROVED REJ

STANLEY CONSULTANTS OF ARIZONA, INC.

ARIZONA DEPARTMENT OF TRANSPORTATION
HIGHWAY DIVISION
OUTER LOOP HIGHWAY
RBM-800-C-504 59TH AVE TO 35TH AVE

SCATTER WASH CHANNEL
PROFILE
STA 180+00 TO STA 223+00

ROUTE SR-101L | MILEPOST | LOCATION OR STRUCTURE NO | DWG NO C-6.8

TRACS NO. H0797 D6C

F.H.W.A. REGION	STATE	PROJECT NO.	SHEET NO.	TOTAL SHEETS	AS BUILT
9	ARIZ	RBM-800-0-504	136	262	

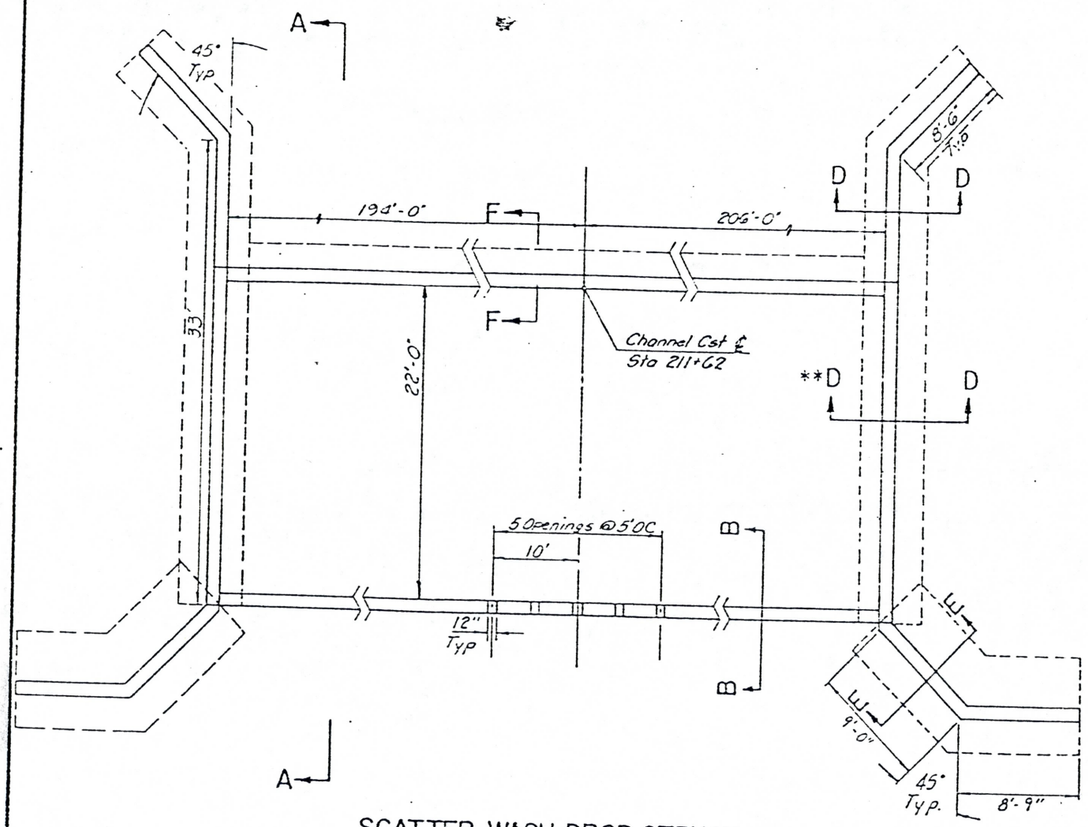

SCATTER WASH DROP STRUCTURE

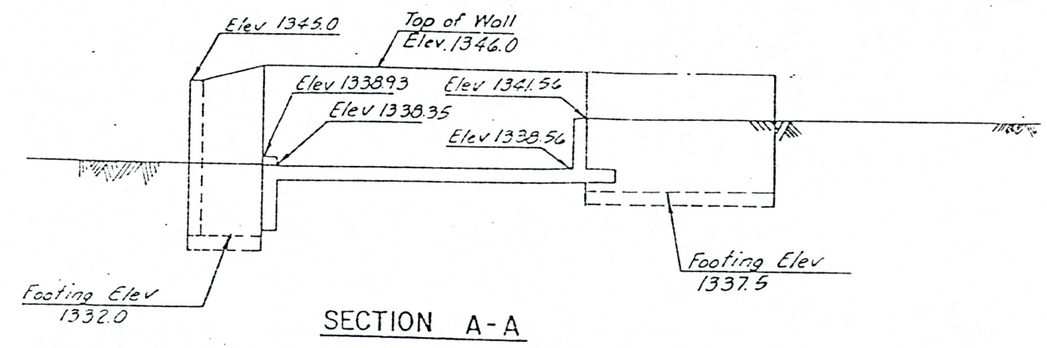

SECTION A-A

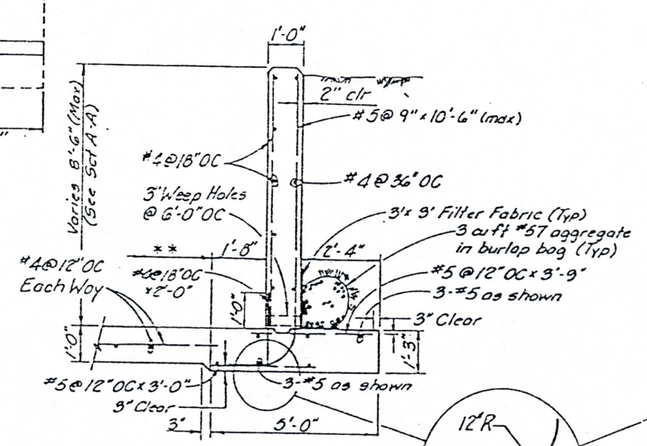

SECTION D-D

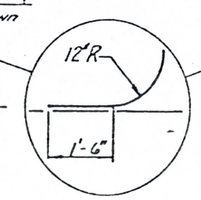

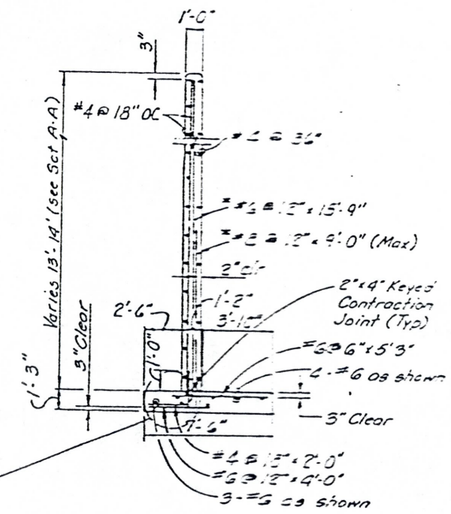

SECTION E-E

* Alternate Bars

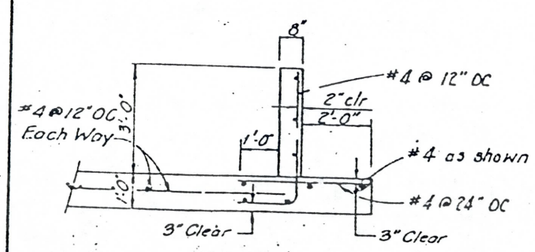

SECTION F-F

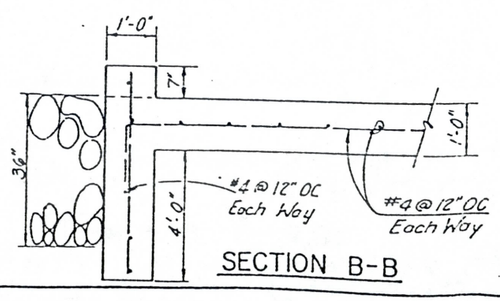

SECTION B-B

GENERAL NOTES

1. All concrete shall be Class "S" f'_c = 3000 psi.
2. Reinforcing steel shall be Grade 40 for bar sizes #6 or smaller & Grade 60 for bar sizes #7 or larger Conforming to Section 605
3. 3/4" Chamfer on all exposed corners.

DESIGN	MAL, AL
DRAWN	CGS
CHECKED	GL
APPROVED	REJ

STANLEY CONSULTANTS OF ARIZONA, INC.

ARIZONA DEPARTMENT OF TRANSPORTATION
HIGHWAY DIVISION
OUTER LOOP HIGHWAY
RBM-800-0-504 59TH AVE TO 35TH AVE

SCATTER WASH
DETAILS

ROUTE	SHEET	STRUCTURE NO.	DWG. NO.
39-101L			C-6.9

TRACS NO. H0797 06C

FHWA REGION	STATE	PROJECT NO	SHEET NO	TOTAL SHEETS	AS BUILT
9	ARIZ	RBA-600-0-505			

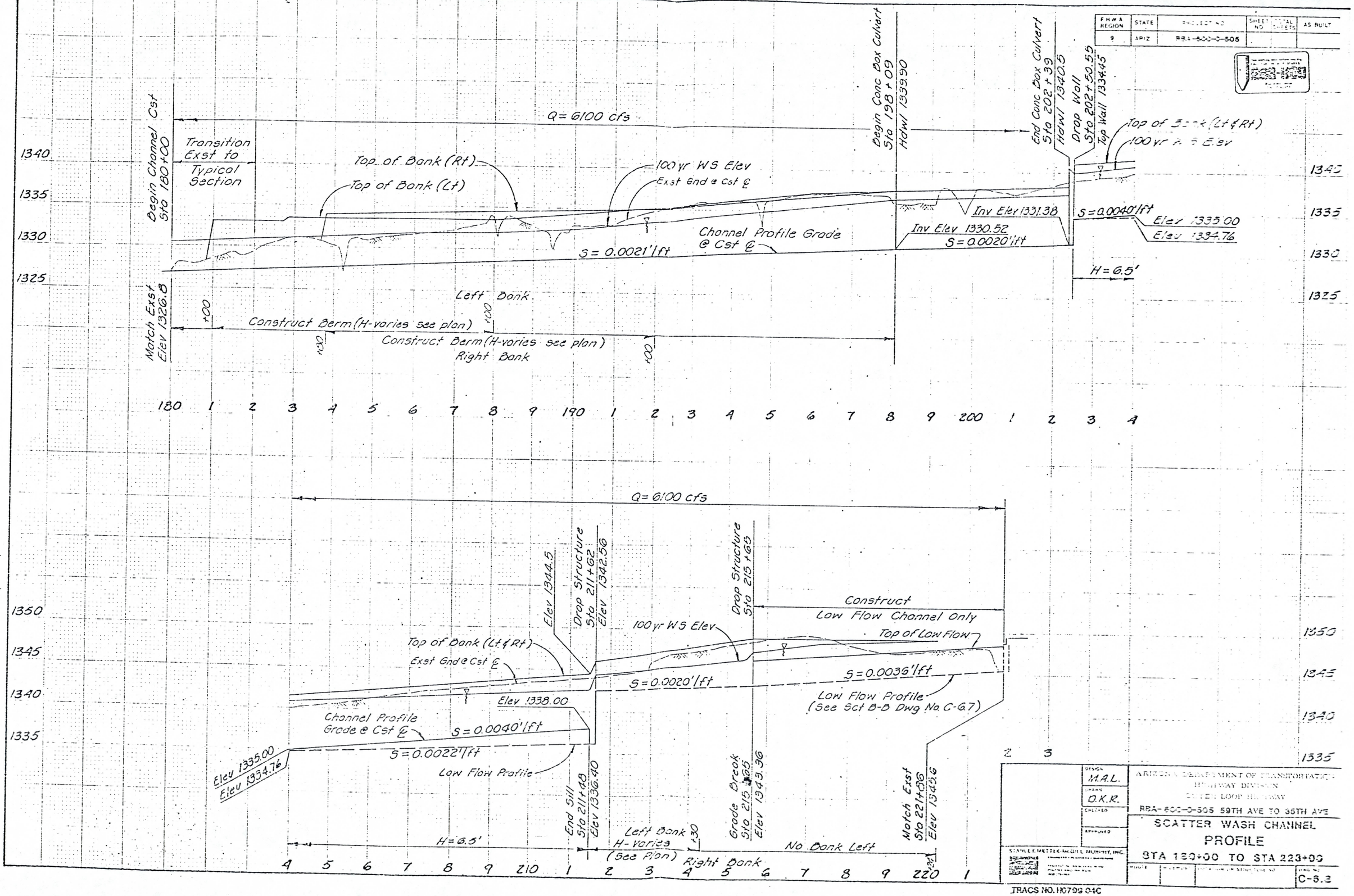

DESIGN M.A.L.	ARIZONA DEPARTMENT OF TRANSPORTATION	
DRAWN O.K.R.	HIGHWAY DIVISION	
CHECKED	SUN CITY LOOP HIGHWAY	
APPROVED	RBA-600-0-505 59TH AVE TO 35TH AVE	
STANLEY METTER McGILL MURPHY, INC.	SCATTER WASH CHANNEL PROFILE	
	STA 180+00 TO STA 223+00	
		C-6.3

TRACS NO. H0799 04C

STANLEY CONSULTANTS
OF ARIZONA, INC.
ENGINEERS • PLANNERS • SURVEYORS
3117 NORTH 16TH STREET
PHOENIX, AZ 85016 • (602) 279-0901

JOB OLH- SctWsh Offsite
SHEET NO. 1 OF
CALCULATED BY MAL DATE 1/16/90
CHECKED BY DATE
SCALE

Offsite Runoff (South Side)

$Q_{100} = C I_{t_c} A$ ← 100 yr

$L = 3000'$ 27 min per ADOT
$S = 0.006'/ft$
$n = 0.038$
$A = 22 Ac$
$C = 0.5$ (Ref: Standard Handbook for Civil Engineers, 3rd Ed, Single Family Areas) Conservative

$t_c = L/V = 3000'/1.1'/s = 2{,}727 s = 45 min$

from Average velocity for shallow concentrated flow.

$i_{45} = 3.1$ in/hr (see Intensity curves Sect 7.2)

$Q = 0.5 \times 3.1$ in/hr $\times 22 Ac = 34$ cfs

Offsite Runoff (North Side)

$L = 1100$ ft
$S = 0.006$
$A = 11 Ac$

$t_c = L/V = 1100$ ft$/1.1$ ft/s $= 1000 s = 17$ min

$i_{17} = 5.4$ in/hr

$Q_{100} = 0.5 \times 5.4$ in/hr $\times 11 Ac = 30$ cfs

PRODUCT 205-1 NEBS Inc., Groton, Mass. 01471. To Order PHONE TOLL FREE 1-800-225-6380

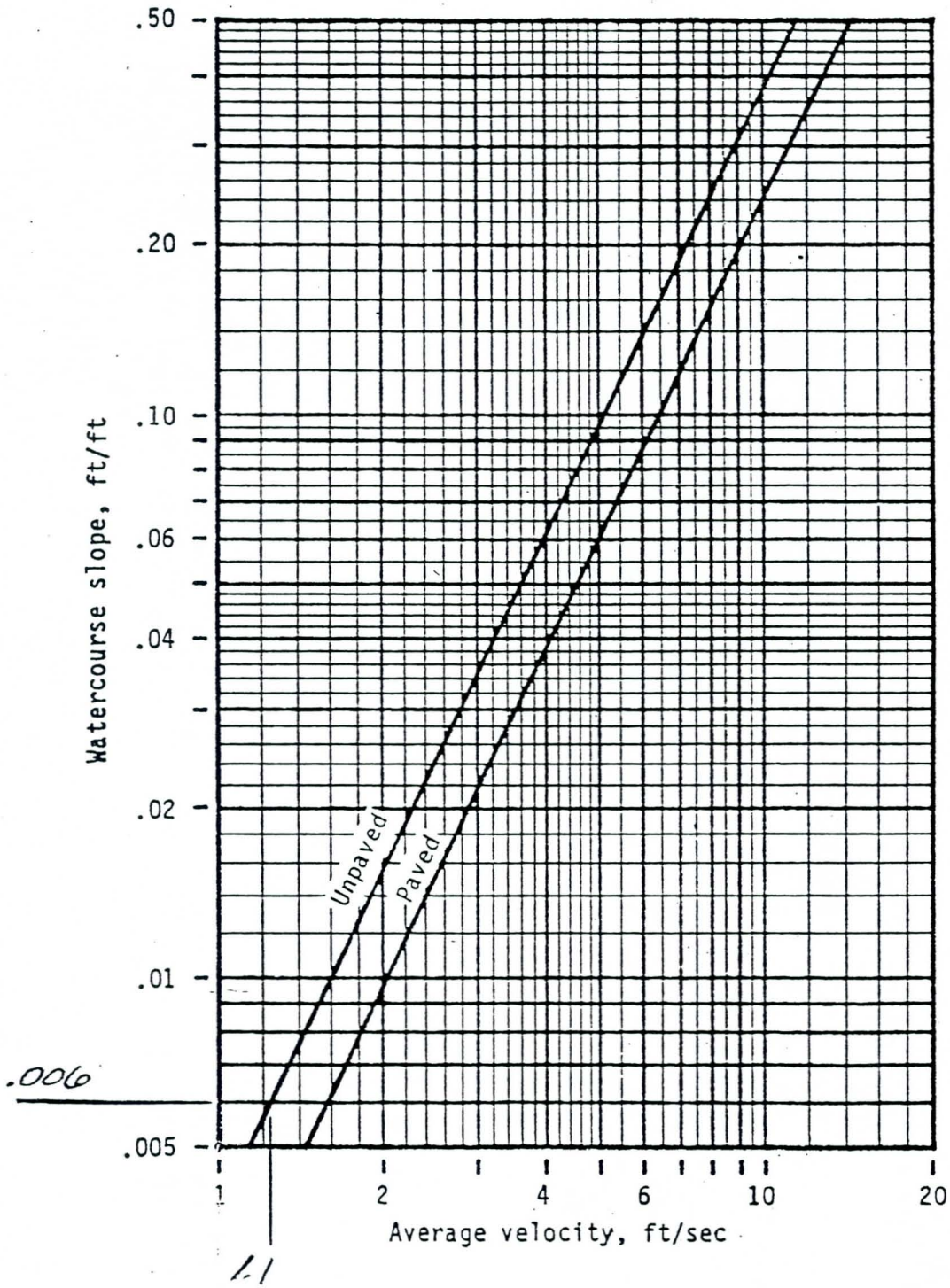

Figure 3-1.—Average velocities for estimating travel time for shallow concentrated flow.

STANLEY/METTEE-McGILL-MURPHY 1222222

JOB NAME.....703-1 FILE..000703-1

02-15-1990 TIME 13:49:17
HYDROLOGY----------502

DESIGN DATA
TRAPEZOIDAL SECTION
WIDTH AT BOTTOM..... 8 FEET
SIDE SLOPE ON LEFT..... 4 /1
SIDE SLOPE ON RIGHT.... 4 /1

MANNING'S N..... .02
SLOPE..... .00500

DEPTH FT.	W.AT TOP FT.	P.WET FT.	AREA (SQ.FT.)	VEL.FT/SEC	RATE CFS
0	8	8	0	0	0
.25	10	10.06	2.25	1.94	4.37
.5	12	12.12	5	2.92	14.6
.75	14	14.18	8.25	3.67	30.28
1	16	16.25	12	4.3	51.66
1.25	18	18.31	16.25	4.87	79.06

****

STANLEY/METTEE-McGILL-MURPHY 1222222

JOB NAME.....703-1 FILE..000703-1

02-15-1990 TIME 13:51:28
HYDROLOGY----------502

DESIGN DATA
TRAPEZOIDAL SECTION
WIDTH AT BOTTOM..... 8 FEET
SIDE SLOPE ON LEFT..... 4 /1
SIDE SLOPE ON RIGHT.... 4 /1

MANNING'S N..... .035
SLOPE..... .00500

DEPTH FT.	W.AT TOP FT.	P.WET FT.	AREA (SQ.FT.)	VEL.FT/SEC	RATE CFS
0	8	8	0	0	0
.2	9.6	9.65	1.76	.97	1.7
.4	11.2	11.3	3.84	1.47	5.63
.6	12.8	12.95	6.24	1.85	11.55
.8	14.4	14.6	8.96	2.17	19.48
1	16	16.25	12	2.46	29.52
1.2	17.6	17.9	15.36	2.72	41.76

****

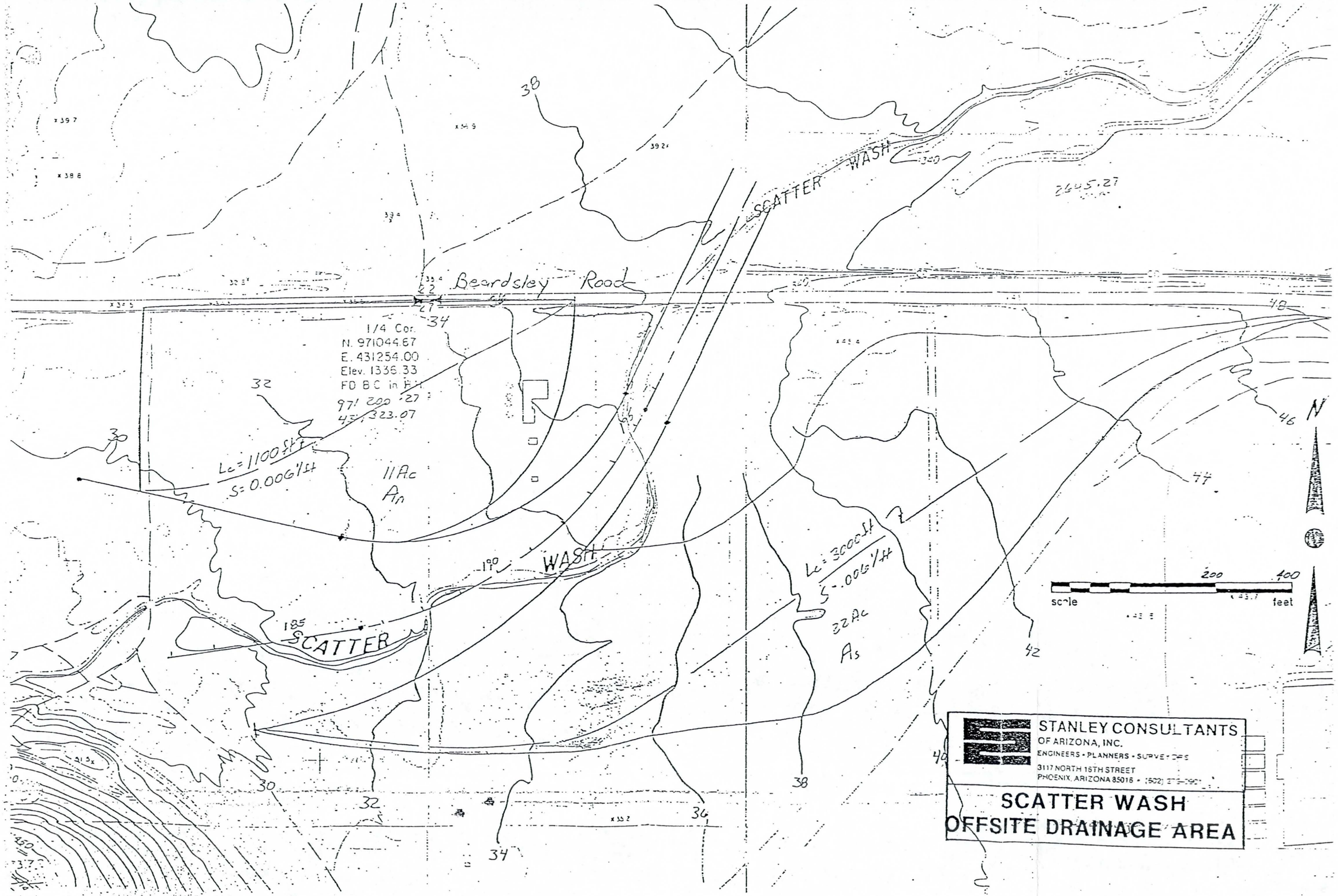
Beardsley Road
SCATTER WASH
SCATTER WASH
1/4 Cor.
N. 971044.67
E. 431254.00
Elev. 1336.33
FD B C in H
Lc = 1100 ft
S = 0.006'/ft
11 Ac
An
Lc = 3000 ft
S = .006'/ft
32 Ac
As
2645.27
N
200
400
scale
feet
STANLEY CONSULTANTS
OF ARIZONA, INC.
ENGINEERS • PLANNERS • SURVEYORS
3117 NORTH 16TH STREET
PHOENIX, ARIZONA 85016 • (602)
SCATTER WASH
OFFSITE DRAINAGE AREA

STANLEY CONSULTANTS
OF ARIZONA, INC.
ENGINEERS • PLANNERS • SURVEYORS
3117 NORTH 16TH STREET
PHOENIX, AZ 85016 • (602) 279-0901

JOB OLH - Sct Wsh Stilling Basin
SHEET NO. 1 OF 3
CALCULATED BY MAL DATE 1/15/90
CHECKED BY DATE
SCALE

Revision of Stilling Basin Sta 211+62 based on Example provided from Dcco (OLHMC) used on Sect 4a.

Reference: "Open Channel Flow" by Henderson Eq 6-37, 38, 40, USBR "Design of Small Canal Structure" P.223 Trajectory Eq for trajectory length

$$Y_c = \sqrt[3]{\frac{q^2}{g}} \qquad q = 6100\,cfs/400\,ft = 15.3$$

$$Y_c = \sqrt[3]{\frac{(15.3)^2}{32.2}} = 1.94$$

$$\Delta Z_0 = 4.16'$$

$$\frac{Y_c}{\Delta Z_0} = \frac{1.94}{4.16'} = 0.47$$

$$Y_1 = \Delta Z_0 \cdot 0.54\,(Y_c/\Delta Z_0)^{1.275}$$

$$= 4.16(0.54)(1.94/4.16)^{1.275}$$

$$= 0.86'$$

$$Y_2 = \Delta Z_0 \cdot 1.66\,(Y_c/\Delta Z_0)^{0.81}$$

$$= 4.16(1.66)(1.94/4.16)^{0.81}$$

$$= 3.72'$$

PRODUCT 205-1 NEBS Inc., Groton, Mass. 01471 To Order PHONE TOLL FREE 1-800-225-6380

STANLEY CONSULTANTS
OF ARIZONA, INC.
ENGINEERS • PLANNERS • SURVEYORS
3117 NORTH 16TH STREET
PHOENIX, AZ 85016 • (602) 279-0901

JOB: OLH – Sct Wsh Stilling Basin
SHEET NO. 2 OF 3
CALCULATED BY: MAL DATE: 1/15/90
CHECKED BY: DATE:
SCALE:

Trajectory Length

$Y = Y_2 + \Delta Z_0 = 1.94 + 4.16 = 6.10$

$Y = \frac{1}{2} g t^2$, $t = \sqrt{2Y/g} = 0.616$, $V = \frac{Q}{Y_2} = 15.3/1.94 = 7.89$

$L_d = V \times t = 7.89 \text{ fps} \times 0.616 \text{ s} = 4.86'$

$L_j = 6.9(Y_2 - Y_1) = (3.72 - 0.86) \times 6.9 = 19.73'$

$L = L_j + L_d = 19.73' + 4.86' = 24.59' > 13$ Need redesign of structure.
use 26'

Sill Height $= \frac{1}{6} y_2 = \frac{1}{6}(3.72') = 0.62' \approx 7\frac{1}{2}''$

Tail water depth

$T_w = 4.08'$ From X sect. 117.63 Hec II run

$F_r = \frac{V_1}{\sqrt{g Y_1}} = \frac{15.3/0.86}{(32.2 \cdot 0.86)^{1/2}} = \frac{17.79}{5.26} = 3.38$

PRODUCT 205-1 NEBS Inc., Groton, Mass. 01471 To Order PHONE TOLL FREE 1-800-225-6380

STANLEY CONSULTANTS
OF ARIZONA, INC.
ENGINEERS • PLANNERS • SURVEYORS
3117 NORTH 16TH STREET
PHOENIX, AZ 85016 • (602) 279-0901

JOB _____

SHEET NO. _____ OF _____

CALCULATED BY _____ DATE _____

CHECKED BY _____ DATE _____

SCALE _____

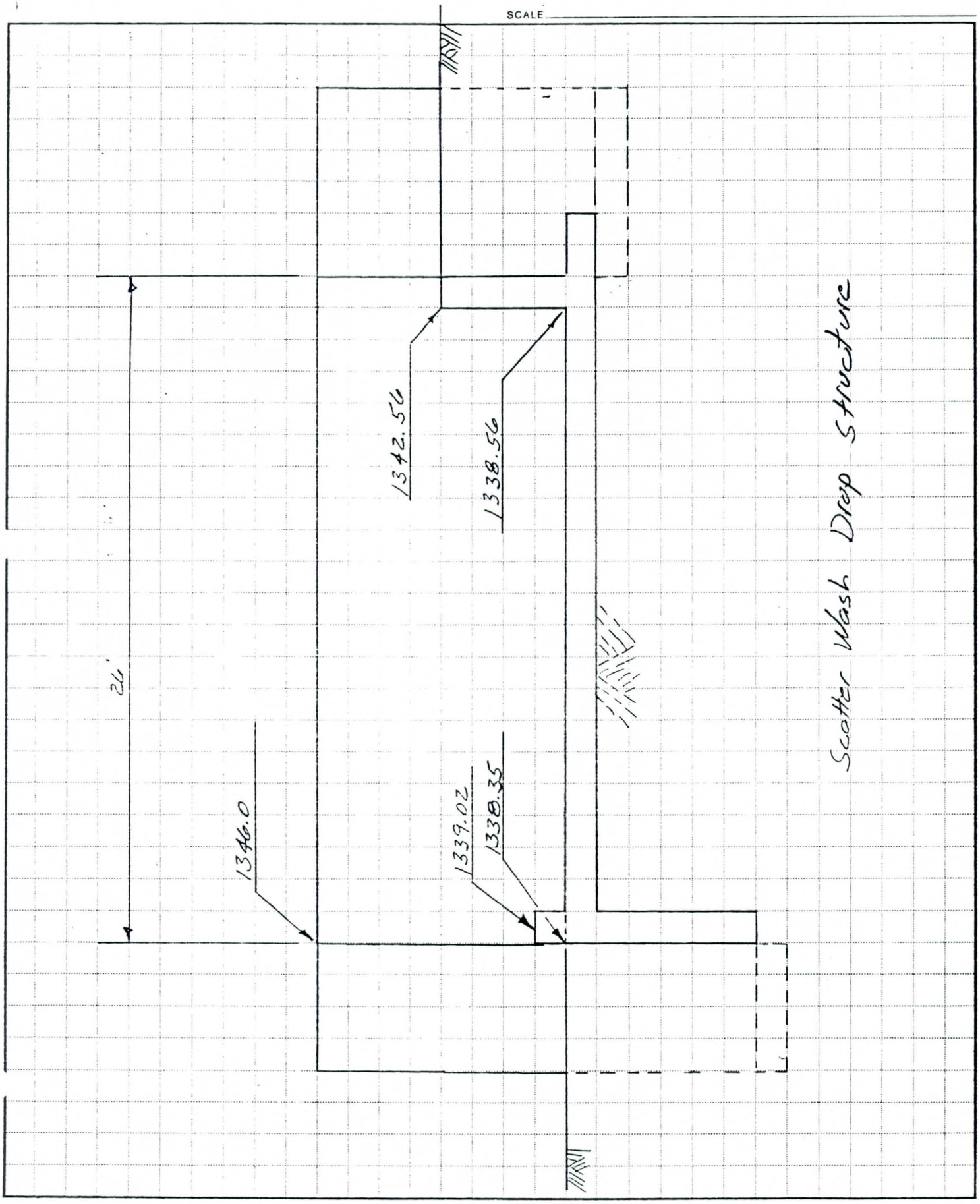

PRODUCT 205-1 NEBS Inc. Groton, Mass. 01471. To Order PHONE TOLL FREE 1-800-225-6380

UPSTREAM OLH
SCATTER WASH – RIPRAP DESIGN

Bed Riprap design Sta 202+50 to 211+62

Source: "Outer Loop Highway - Geotechnical Design Criteria"

Section 7.3 page 7(10)

$$d_{50} = 0.0017 \left(SF \times \frac{CD}{K} \times \frac{1}{S_s - 1} \right)^{3/2} \frac{V^3}{R^{1/2}}$$

- $SF = 1.4$ Section 7.3.1 pg 7(12)
- $C_{Rb} = 1.1$ Section 7.3.3. $B/y = 23.4 > 20$
- $C_{Rs} = 1.0$
- $R = y$

Curved bed w/ channel ℄ Radius 700' (Section 7.3.5)

$$D = 2.65 (r/w)^{-0.5} \qquad r = 700' \quad w = 136'$$
$$D = 2.65 \left(\frac{700}{136}\right)^{-0.5} = 1.17$$

- $D = 1.17$
- $S_s = 2.40$
- $K = 1.0$ channel bed (Sta 203+00)

$Q = 6100$ cfs $\alpha = B/y = 23.4$ $z = \cot\theta = 2$ $\theta = 26.57°$

Trial & Error Solution

$F_{Tried} = 0.50$

$$y = 0.5 \left[\frac{Q}{(\alpha + z) F}\right]^{0.4} = 0.5 \left[\frac{6100}{(25.4)0.5}\right]^{0.4} = 5.91 \text{ ft} = R$$

$$V = 4.0 F^{0.8} \left(\frac{Q}{\alpha + z}\right)^{0.2} = 4 (0.5)^{0.8} \left(\frac{6100}{25.4}\right)^{0.2} = 6.88 \text{ ft/s}$$

STANLEY/METTEE-McGILL-MURPHY
1450 EAST INDIAN SCHOOL ROAD
PHOENIX, ARIZONA 85014

SCATTER WASH BED RIPRAP DESIGN CONT. STA 202+50 to 211+62

$$d_{50} = 0.0017\left(SF \times \frac{C_D}{K} \times \frac{1}{S_s - 1}\right)^{3/2} \frac{V^3}{R^{1/2}}$$

$$d_{50} = 0.0017\left(1.4 \times \frac{1.1(1.17)}{1.0} \times \frac{1}{2.4-1}\right)^{3/2} \frac{V^3}{R^{1/2}}$$

$$d_{50} = 0.002482 \frac{V^3}{R^{1/2}}$$

$$d_{50} = 0.002482 \frac{(6.88\ ft/s)^3}{\sqrt{5.91\ ft}} = 0.332\ ft$$

$$V_{obt} = \frac{37.7}{(d_{50})^{1/6}}(R)^{2/3}(S_o)^{1/2} = 37.7(0.004)^{1/2}\frac{R^{2/3}}{(d_{50})^{1/6}} = 2.384\frac{R^{2/3}}{(d_{50})^{1/6}}$$

$$V_{obt} = 2.384(5.91)^{2/3}\frac{1}{(0.332)^{1/6}} = 9.36\ ft/s$$

$$F_{obt} = \frac{V_{obt}}{(gy)^{1/2}} = \frac{9.36}{(32.2 \times 5.91)^{1/2}} = 0.679$$

$F_{tried} \neq F_{obt}$

Try $F_{tried} = 0.61$

$$y = 0.5\left[\frac{6100}{25.4(0.61)}\right]^{0.4} = 5.45\ ft$$

$$V = 4(0.61)^{0.8}\left(\frac{6100}{25.4}\right)^{0.2} = 8.06$$

$$d_{50} = 0.002482\frac{(8.06)^3}{(5.45)^{1/2}} = 0.55\ ft$$

$$V_{obt} = 2.384\frac{(5.45)^{2/3}}{(.55)^{1/6}} = 8.15\ ft/s$$

$$F_{obt} = \frac{8.15}{(32.2 \times 5.45)^{1/2}} = 0.615$$

$F_{obt} \approx F_{tried}$ ok

SCATTER WASH RIPRAP DESIGN CONT. STA 202+50 to 211+62

Use $d_{50} = .55$ ft ∴ Use 6"ϕ Rock for bottom of channel, with 12" thickness of 6"ϕ Rock from STA 202+50 to STA 211+62.

Check section @ Sta 208+50

$Q = 6100$ cfs ✓ $\alpha = B/y = 46.0$ ✓ $z = \cot\theta = 2$ $\theta = 26.57°$ ✓

$F_{tried} = 0.60$

$$y = 0.5\left[\frac{6100}{(46+2)0.6}\right]^{0.4} = 4.26 \text{ ft}$$

$$V = 4(0.6)^{0.8}\left(\frac{6100}{46}\right)^{0.2} = 7.00 \text{ ft/s}$$

$$d_{50} = 0.002482\,\frac{(7.00)^3}{(4.26)^{1/2}} = 0.412 \text{ ft}$$

$$V_{obt} = 2.384\,\frac{(4.26)^{2/3}}{(0.412)^{1/6}} = 7.26 \text{ ft/s}$$

$$F_{obt} = \frac{7.26}{(32.2 \times 4.26)^{1/2}} = 0.62 \qquad F_{tried} \neq F_{obt}$$

$F_{tried} = 0.61$

$$y = 0.5\left[\frac{6100}{(46)(0.61)}\right]^{0.4} = 4.23 \text{ ft} \checkmark$$

$$V = 4(0.61)^{0.8}\left(\frac{6100}{46}\right)^{0.2} = 7.09 \text{ ft/s} \checkmark$$

$$d_{50} = 0.002482\,\frac{(7.09)^3}{(4.23)^{1/2}} = 0.43 \text{ ft} \checkmark$$

$$V_{obt} = 2.384\,\frac{(4.23)^{2/3}}{(0.43)^{1/6}} = 7.18 \text{ ft/s} \checkmark$$

$$F_{obt} = \frac{7.18}{(32.2 \times 4.23)^{1/2}} = 0.615 \checkmark \qquad F_{tried} = F_{obt} \quad \text{OK} \checkmark$$

6"ϕ Riprap in Bed ok for above section

SCATTER WASH BED RIPRAP DESIGN

Bed Riprap design Sta 211+62 to 215+65

@ STA 211+62 $B/y = \frac{415}{1.8} = 230.6 > 20$

- $S_F = 1.4$ ✓
- $C_{rb} = 1.1$ ✓
- $C_{rs} = 1.0$ ✓
- $R = y$ ✓
- $D = 1$ ✓ Straight channel
- $S_s = 2.40$ ✓
- $K = 1.0$ ✓ Channel bed

$Q = 6100$ cfs $\alpha = 230$ ✓ $z = 4$ ✓

$$d_{50} = 0.0017\left(1.4 \times \frac{1.1(1)}{1} \times \frac{1}{2.4-1}\right)^{3/2} \frac{V^3}{R^{1/2}} = 0.001961 \frac{V^3}{y^{1/2}}$$ ✓

$F_{tried} = 0.61$

$$y = 0.5\left[\frac{6100}{(230+4)0.61}\right]^{0.4} = 2.25 \text{ ft}$$

$$V = 4.0(0.61)^{0.8}\left(\frac{6100}{234}\right)^{0.2} = 5.17 \text{ ft/s}$$

$$d_{50} = 0.001961\frac{(5.17)^3}{(2.25)^{1/2}} = 0.18$$

$$V_{act} = \frac{37.7}{(0.18)^{1/6}}(0.0020)^{1/2}(2.25)^{2/3} = 3.85$$

STANLEY/METTEE-McGILL-MURPHY
1450 EAST INDIAN SCHOOL ROAD
PHOENIX, ARIZONA 85014

SCATTER WASH BED RIPRAP DESIGN

Bed Riprap design Sta 211+62 to 215+65

@ Sta 211+62

$$F_{obt} = \frac{3.85}{(32.2 \times 2.25)^{1/2}} = 0.45 \qquad F_{tried} \neq F_{obt}$$

$F_{tried} = 0.56$

$$y = 0.5 \left[\frac{6100}{(230+4)\,0.56}\right]^{0.4} = 2.32 \text{ ft}$$

$$V = 4.0\,(0.56)^{0.8} \left(\frac{6100}{234}\right)^{0.2} = 4.83 \text{ ft/s}$$

$$d_{50} = 0.001961 \frac{(4.83)^3}{(2.32)^{1/2}} = 0.15 \text{ ft}$$

$$V_{ob} = \frac{37.7}{(0.15)^{1/6}} (.002)^{1/2} (2.32)^{2/3} = 4.05 \text{ ft/s}$$

$$F_{obt} = \frac{4.05}{(32.2 \times 2.32)^{1/2}} = 0.47$$

$F_{tried} \neq F_{obt}$

$F_{tried} = 0.50$

$$y = 0.5 \left[\frac{6100}{(234)\,0.50}\right]^{0.4} = 2.43 \text{ ft}$$

$$V = 4.0\,(0.50)^{0.8} \left(\frac{6100}{234}\right)^{0.2} = 4.41 \text{ ft/s}$$

$$d_{50} = 0.001961 \frac{(4.41)^3}{(2.43)^{1/2}} = 0.11 \text{ ft}$$

STANLEY/METTEE-McGILL-MURPHY
1450 EAST INDIAN SCHOOL ROAD
PHOENIX, ARIZONA 85014

SCATTER WASH BED RIPRAP DESIGN

Bed Riprap design Sta 211+62 to 215+65

@ Sta 211+62

$$V_{obt} = \frac{37.7}{(0.11)^{1/6}} (.002)^{1/2} (2.43)^{2/3} = 4.4 \text{ ft/s}$$

$$F_{obt} = \frac{4.40}{(32.2 \times 2.43)^{1/2}} = 0.497 = 0.50$$

$F_{obt} = F_{Tried}$

Between Stations 211+62 and 215+65 use a

$d_{50} = 0.25$ ft or $d_{50} = 3''$ ϕ stone

STANLEY/METTEE-McGILL-MURPHY
1450 EAST INDIAN SCHOOL ROAD
PHOENIX, ARIZONA 85014

DOWNSTREAM OLH
SCATTER WASH – RIPRAP DESIGN

Bed Riprap Design Sta 195+43.18 to 186+48.89

@ Sta 195+43.18 $\alpha = \frac{B}{y} = \frac{128}{5} = 25.6 > 20$

- $SF = 1.4$ ✓
- $C_{r_o} = 1.1$ ✓
- $R = y$ ✓
- $S_s = 2.40$ ✓
- $K = 1.0$ ✓
- $D = 2.65\left(\frac{\gamma}{w}\right)^{-0.5} = 2.65\left(\frac{1000}{152}\right)^{-0.5} = 1.03$ ✓

$Q = 6100$ cfs ✓ $\alpha = 25.6$ ✓ $z = 2$ ✓

$$d_{50} = 0.0017\left(1.4 \times \frac{1.1(1.03)}{1.0} \times \frac{1}{2.4-1}\right)^{3/2} \frac{V^3}{R^{1/2}} = 0.002050 \frac{V^3}{(y)^{1/2}}$$

$F_{tried} = 0.60$

$$y = 0.5\left[\frac{6100}{(27.6)(0.6)}\right]^{0.4} = 5.31 \text{ ft}$$

$$V = 4(0.60)^{0.8}\left(\frac{6100}{27.6}\right)^{0.2} = 7.82 \text{ ft/s}$$

$$d_{50} = 0.002050 \frac{(7.82)^3}{(5.31)^{1/2}} = 0.43 \text{ ft}$$

$$V_{obt} = \frac{37.7}{(0.43)^{1/6}}(.0021)^{1/2}(5.31)^{2/3} = 1.7276 \frac{R^{2/3}}{(d_{50})^{1/6}} = 6.05 \text{ ft/s}$$

$$F_{obt} = \frac{6.05}{(32.2 \times 5.31)^{1/2}} = 0.46$$

$F_{tried} \neq F_{obt}$

SCATTER WASH - RIPRAP DESIGN

Bed Riprap Design Sta 195+43.18 to 186+48.89

@ Sta 195+43.18

$F_{tried} = 0.52$

$$y = 0.5\left[\frac{6100}{(27.6)(0.52)}\right]^{0.4} = 5.63 \text{ ft}$$

$$V = 4\,(0.52)^{0.8}\left(\frac{6100}{27.6}\right)^{0.2} = 6.98 \text{ ft/s}$$

$$d_{50} = 0.002050\,\frac{(6.98)^3}{(5.63)^{1/2}} = 0.29 \text{ ft}$$

$$V_{bot} = \frac{37.7}{(0.29)^{1/6}}(.0021)^{1/2}(5.63)^{2/3} = 6.72 \text{ ft/s}$$

$$F_{bot} = \frac{6.72}{(32.2 \times 5.63)^{1/2}} = 0.50$$

$F_{tried} = 0.51$

$$y = 0.5\left[\frac{6100}{(27.6)(0.51)}\right]^{0.4} = 5.67$$

$$V = 4\,(0.51)^{0.8}\left(\frac{6100}{27.6}\right)^{0.2} = 6.87$$

$$d_{50} = 0.002050\,\frac{(6.87)^3}{(5.67)^{1/2}} = 0.28$$

$$V_{bot} = \frac{37.7}{(0.28)^{1/6}}(.0021)^{1/2}(5.67)^{2/3} = 6.79$$

$$F_{bot} = \frac{6.79}{(32.2 \times 5.67)^{1/2}} = 0.50$$

$F_{tried} \approx F_{bot}$ ok

SCATTER WASH - RIPRAP DESIGN

Bed Riprap Design Sta 195+43.18 to 186+48.89

@ Sta 195+43.18

Use d_{50} = 6" ϕ rock from Sta 195+43.18 to 186+48.89 to protect bed of channel. ✓

Check downstream
@ Sta 186+48.89 $\alpha = \frac{B}{y} = \frac{375}{3.6} = 104 > 20$ ✓ $z = 2$ ✓

- SF = 1.4 ✓
- C_{rb} = 1.1 ✓
- R = y ✓
- S_s = 2.40 ✓
- K = 1.0 ✓
- D = 1.03 ✓

Q = 6100 cfs ✓ α = 104 ✓ z = 2 ✓

$$d_{50} = 0.0017\left(1.4 \times \frac{1.1(1.03)}{1.0} \times \frac{1}{2.4-1}\right)^{3/2} \frac{V^3}{R^{1/2}} = 0.002050 \frac{V^3}{y^{1/2}}$$ ✓

F_{tried} = 0.50

$$y = 0.50\left[\frac{6100}{(64+2)\,0.5}\right]^{0.4} = 3.34 \text{ ft}$$ ✓

$$V = 4(0.50)^{0.8}\left(\frac{6100}{106}\right)^{0.2} = 5.17 \text{ ft/s}$$ ✓

$$d_{50} = 0.002050\,\frac{(5.17)^3}{(3.34)^{1/2}} = 0.16 \text{ ft}$$ ✓

STANLEY/METTEE-McGILL-MURPHY
1450 EAST INDIAN SCHOOL ROAD
PHOENIX, ARIZONA 85014

SCATTER WASH - RIPRAP DESIGN

Bed Riprap Design Sta 195+43.18 to 186+48.89

@ Sta 186+48.89

$$V_{ob} = \frac{37.7}{(0.16)^{1/6}} (.0021)^{1/2} (3.34)^{2/3} = 5.24 \text{ ft/s}$$

$$F_{obt} = \frac{5.24}{(32.2 \times 3.34)^{1/2}} = 0.505$$

$F_{tried} \approx F_{obt}$ ok

Use d_{50} = 6"ϕ rock from Sta 195+43.18 to 186+48.89

Tab 5

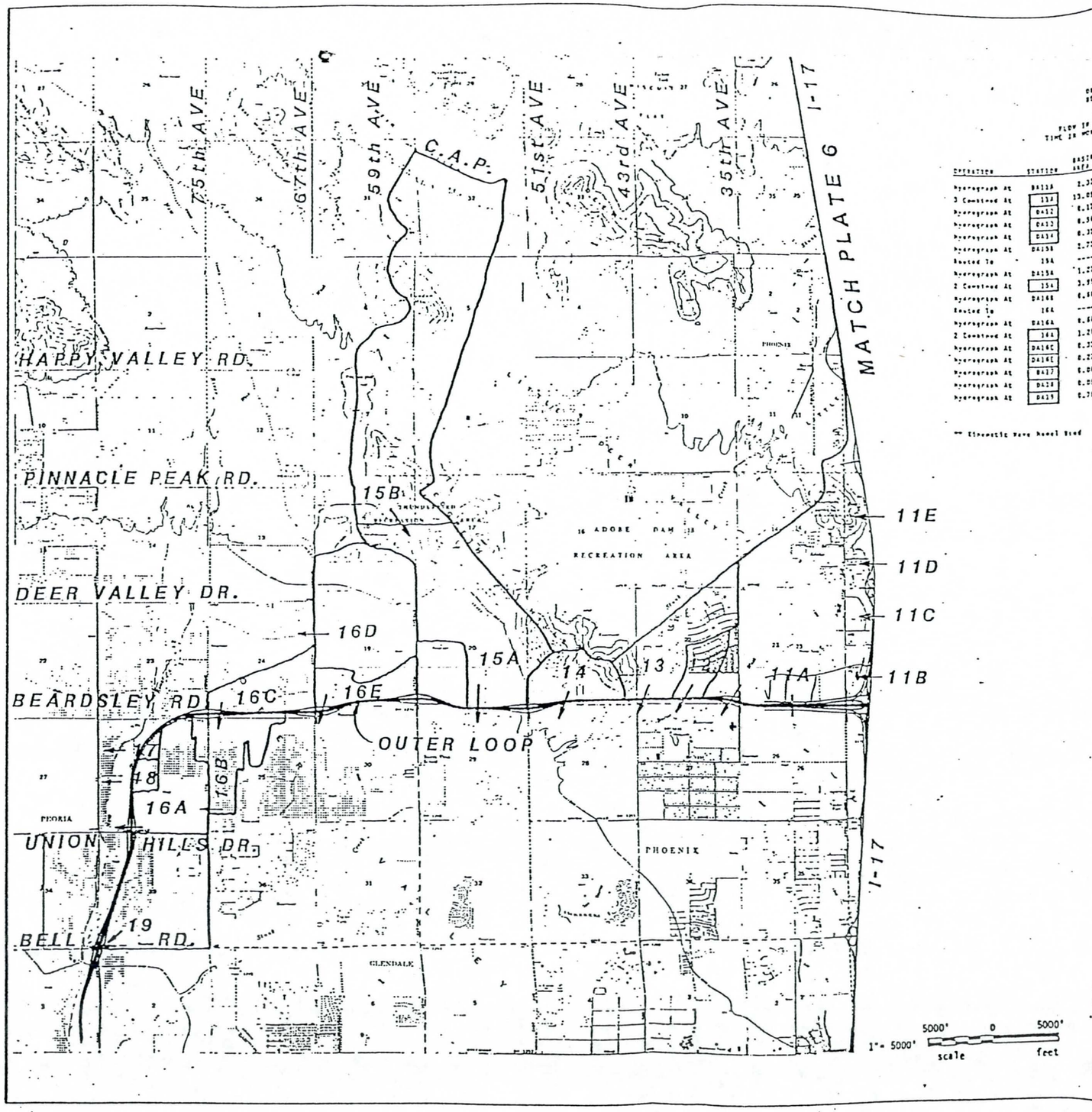

RUNOFF SUMMARY
BELL ROAD TO I-17
100-YR SCHEMES
BASIN SCHEMES
FLOW IN CUBIC FEET PER SECOND
TIME IN HOURS, AREA IN SQUARE MILES

OPERATION	STATION	BASIN AREA	CUBIC NUMBER	LAG TIME	PEAK FLOW	TIME OF PEAK	VOLUME (AC-FT)
Hydrograph At	DA13A	0.33	83	0.42	2126	12.83	277
3 Combined At	13A	13.09	--	----	5620	12.17	1574
Hydrograph At	DA12	0.17	62	0.91	120	12.00	29
Hydrograph At	DA13	0.56	83	1.57	2028	12.67	4237
Hydrograph At	DA14	0.32	84	0.28	667	12.33	46
Hydrograph At	DA15B	1.73	56	2.69	2431	12.00	379
Routed To	15A	----	--	----	2381	12.17	379
Hydrograph At	DA15A	1.22	54	1.32	2229	12.50	213
2 Combined At	15A	3.95	--	----	3129	12.67	592
Hydrograph At	DA16B	0.60	84	1.45	276	12.83	73
Routed To	16A	----	--	----	275	12.83	73
Hydrograph At	DA16A	0.68	83	1.25	343	12.33	77
2 Combined At	16A	1.26	--	----	614	12.50	150
Hydrograph At	DA16C	0.33	83	1.00	223	12.17	39
Hydrograph At	DA16E	0.27	88	1.73	142	12.83	39
Hydrograph At	DA17	0.06	87	0.79	54	12.83	8
Hydrograph At	DA18	0.05	87	0.40	34	12.67	7
Hydrograph At	DA19	0.78	80	--	243	12.33	67

-- Hydrograph Have Reached Peak

LEGEND

PSA	WATERSHED AREA I.D.
~~	WATERSHED AREA BOUNDARY
→	DIRECTION OF FLOW
PS	DISCHARGE CONCENTRATION AT FREEWAY

	MC	ARIZONA DEPARTMENT OF TRANSPORTATION HIGHWAY DIVISION OUTER LOOP HIGHWAY BELL ROAD TO C.A.P. CANAL
	FC	RUNOFF SUMMARY AND DRAINAGE AREA MAP 100 Year Frequency
GREENER ENGINEERING SCIENCES 7310 N. 16th Street, Suite 160 Phoenix, Arizona 85020 (602) 275-5400		PLATE 5

51AVE DETENTION BASIN
STAGE STORAGE
FILE :51STOR.WK1

4:1 SIDE SLOPES
SIZE : A 620
B 530
C 430

TOP ELEVATION 1307
WEIR ELEVATION 1306

ELEVATION	DEPTH	SURFACE AREA (AC)	INCREMENTAL VOLUME(AC-FT)	ACCUMULATIVE VOLUME (AC-FT)
1306	1	6.63	6.53	46.93
1305	2	6.43	6.34	40.40
1304	3	6.24	6.14	34.06
1303	4	6.05	5.95	27.92
1302	5	5.86	5.77	21.97
1301	6	5.67	5.58	16.20
1300	7	5.49	5.40	10.62
1299	8	5.31	5.22	5.22
1298	9	5.13		0.00

STAGE STORAGE CURVE

W S ELEVATION VS STORAGE

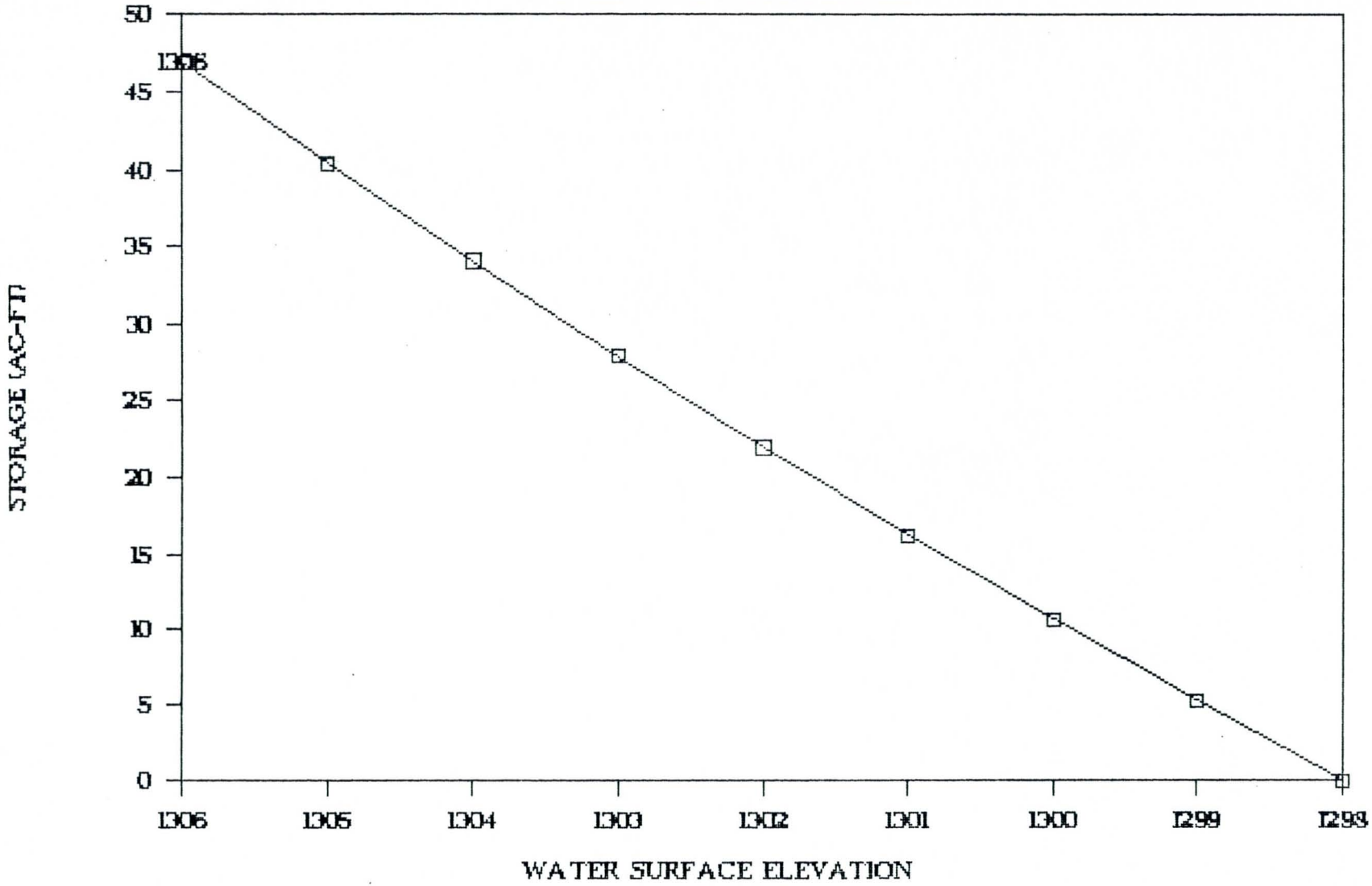

STAGE DISCHARGE TABLE
51 AVE. DETENTION BASIN
WITH EXCESS CAPACITY FOR CITY OF PHOENIX (17.7CFS)
36" & 30" & 24" OUFALL LINE

OUTFALL ELEVA 1295.00
K = 1.486/nAR^2/3
n=.012

LINE NO.	DIAM. (IN)	"K"	DISCHARGE Q (CFS)	PIPE SLOPE	PIPE CAPACITY	LENGTH (FT)	FR. SLOPE Sf (ft/ft)	HD LOSS (FT)	UPSTREAM W.S.ELEV.
P-24	36	722	26.65 *	0.0018	30.63	117	0.0014	0.16	1295.2
P-25	36	722	26.65 *	0.0018	30.63	330	0.0014	0.45	1295.6
P-26	36	722	26.65 *	0.0018	30.63	330	0.0014	0.45	1296.1
P-27	36	722	26.65 *	0.0018	30.63	330	0.0014	0.45	1296.5
P-28	36	722	26.65 *	0.0018	30.63	330	0.0014	0.45	1297.0
P-29	30	444	8.95	0.0018	18.85	330	0.0004	0.13	1297.1
P-30	30	444	8.95	0.0018	18.85	300	0.0004	0.12	1297.2
P-31	30	444	8.95	0.0018	18.85	300	0.0004	0.12	1297.3
P-32	30	444	8.95	0.0018	18.85	322	0.0004	0.13	1297.5
P-33	24	245	8.95	0.0018	10.40	300	0.0013	0.40	1297.9
P-34	24	245	8.95	0.0018	10.40	100	0.0013	0.13	1298.0

STAGE DISCHARGE TABLE
51 AVE. DETENTION BASIN
WITH EXCESS CAPACITY FOR CITY OF PHOENIX (17.7CFS)
36" & 30" & 24" OUFALL LINE

OUTFALL ELEVA 1295.00
K = 1.486/nAR^2/3
n=.012

LINE NO.	DIAM. (IN)	"K"	DISCHARGE Q (CFS)	PIPE SLOPE	PIPE CAPACITY	LENGTH (FT)	FR. SLOPE Sf (ft/ft)	HD LOSS (FT)	UPSTREAM W.S.ELEV.
P-24	36	722	29.05 *	0.0018	30.63	117	0.0016	0.19	1295.2
P-25	36	722	29.05 *	0.0018	30.63	330	0.0016	0.53	1295.7
P-26	36	722	29.05 *	0.0018	30.63	330	0.0016	0.53	1296.3
P-27	36	722	29.05 *	0.0018	30.63	330	0.0016	0.53	1296.8
P-28	36	722	29.05 *	0.0018	30.63	330	0.0016	0.53	1297.3
P-29	30	444	11.35	0.0018	18.85	330	0.0007	0.22	1297.5
P-30	30	444	11.35	0.0018	18.85	300	0.0007	0.20	1297.7
P-31	30	444	11.35	0.0018	18.85	300	0.0007	0.20	1297.9
P-32	30	444	11.35	0.0018	18.85	322	0.0007	0.21	1298.1
P-33	24	245	11.35	0.0018	10.40	300	0.0021	0.64	1298.8
P-34	24	245	11.35	0.0018	10.40	100	0.0021	0.21	1299.0

STAGE DISCHARGE TABLE
51 AVE. DETENTION BASIN
WITH EXCESS CAPACITY FOR CITY OF PHOENIX (17.7CFS)
36" & 30" & 24" OUFALL LINE

OUTFALL ELEVA 1295.00
K = 1.486/nAR^2/3
n=.012

LINE NO.	DIAM. (IN)	"K"	DISCHARGE Q (CFS)	PIPE SLOPE	PIPE CAPACITY	LENGTH (FT)	FR. SLOPE Sf (ft/ft)	HD LOSS (FT)	UPSTREAM W.S.ELEV.
P-24	36	722	31.10 *	0.0018	30.63	117	0.0019	0.22	1295.2
P-25	36	722	31.10 *	0.0018	30.63	330	0.0019	0.61	1295.8
P-26	36	722	31.10 *	0.0018	30.63	330	0.0019	0.61	1296.4
P-27	36	722	31.10 *	0.0018	30.63	330	0.0019	0.61	1297.1
P-28	36	722	31.10 *	0.0018	30.63	330	0.0019	0.61	1297.7
P-29	30	444	13.40	0.0018	18.85	330	0.0009	0.30	1298.0
P-30	30	444	13.40	0.0018	18.85	300	0.0009	0.27	1298.2
P-31	30	444	13.40	0.0018	18.85	300	0.0009	0.27	1298.5
P-32	30	444	13.40	0.0018	18.85	322	0.0009	0.29	1298.8
P-33	24	245	13.40	0.0018	10.40	300	0.0030	0.90	1299.7
P-34	24	245	13.40	0.0018	10.40	100	0.0030	0.30	1300.0

STAGE DISCHARGE TABLE
51 AVE. DETENTION BASIN
WITH EXCESS CAPACITY FOR CITY OF PHOENIX (17.7CFS)
36" & 30" & 24" OUFALL LINE

OUTFALL ELEVA 1295.00
K = 1.486/nAR^2/3
n=.012

LINE NO.	DIAM. (IN)	"K"	DISCHARGE Q (CFS)	PIPE SLOPE	PIPE CAPACITY	LENGTH (FT)	FR. SLOPE Sf (ft/ft)	HD LOSS (FT)	UPSTREAM W.S.ELEV.
P-24	36	722	32.93 *	0.0018	30.63	117	0.0021	0.24	1295.2
P-25	36	722	32.93 *	0.0018	30.63	330	0.0021	0.69	1295.9
P-26	36	722	32.93 *	0.0018	30.63	330	0.0021	0.69	1296.6
P-27	36	722	32.93 *	0.0018	30.63	330	0.0021	0.69	1297.3
P-28	36	722	32.93 *	0.0018	30.63	330	0.0021	0.69	1298.0
P-29	30	444	15.23	0.0018	18.85	330	0.0012	0.39	1298.4
P-30	30	444	15.23	0.0018	18.85	300	0.0012	0.35	1298.7
P-31	30	444	15.23	0.0018	18.85	300	0.0012	0.35	1299.1
P-32	30	444	15.23	0.0018	18.85	322	0.0012	0.38	1299.5
P-33	24	245	15.23	0.0018	10.40	300	0.0039	1.16	1300.6
P-34	24	245	15.23	0.0018	10.40	100	0.0039	0.39	1301.0

STAGE DISCHARGE TABLE
51 AVE. DETENTION BASIN
WITH EXCESS CAPACITY FOR CITY OF PHOENIX (17.7CFS)
36" & 30" & 24" OUFALL LINE

OUTFALL ELEVA 1295.00
K = 1.486/nAR^2/3
n=.012

LINE NO.	DIAM. (IN)	"K"	DISCHARGE Q (CFS)	PIPE SLOPE	PIPE CAPACITY	LENGTH (FT)	FR. SLOPE Sf (ft/ft)	HD LOSS (FT)	UPSTREAM W.S.ELEV.
P-24	36	722	34.58 *	0.0018	30.63	117	0.0023	0.27	1295.3
P-25	36	722	34.58 *	0.0018	30.63	330	0.0023	0.76	1296.0
P-26	36	722	34.58 *	0.0018	30.63	330	0.0023	0.76	1296.8
P-27	36	722	34.58 *	0.0018	30.63	330	0.0023	0.76	1297.5
P-28	36	722	34.58 *	0.0018	30.63	330	0.0023	0.76	1298.3
P-29	30	444	16.88	0.0018	18.85	330	0.0014	0.48	1298.8
P-30	30	444	16.88	0.0018	18.85	300	0.0014	0.43	1299.2
P-31	30	444	16.88	0.0018	18.85	300	0.0014	0.43	1299.6
P-32	30	444	16.88	0.0018	18.85	322	0.0014	0.46	1300.1
P-33	24	245	16.88	0.0018	10.40	300	0.0047	1.42	1301.5
P-34	24	245	16.88	0.0018	10.40	100	0.0047	0.47	1302.0

STAGE DISCHARGE TABLE
51 AVE. DETENTION BASIN
WITH EXCESS CAPACITY FOR CITY OF PHOENIX (17.7CFS)
36" & 30" & 24" OUFALL LINE

OUTFALL ELEVA 1295.00
K = 1.486/nAR^2/3
n=.012

LINE NO.	DIAM. (IN)	"K"	DISCHARGE Q (CFS)	PIPE SLOPE	PIPE CAPACITY	LENGTH (FT)	FR. SLOPE Sf (ft/ft)	HD LOSS (FT)	UPSTREAM W.S.ELEV.
P-24	36	722	36.11 *	0.0018	30.63	117	0.0025	0.29	1295.3
P-25	36	722	36.11 *	0.0018	30.63	330	0.0025	0.83	1296.1
P-26	36	722	36.11 *	0.0018	30.63	330	0.0025	0.83	1296.9
P-27	36	722	36.11 *	0.0018	30.63	330	0.0025	0.83	1297.8
P-28	36	722	36.11 *	0.0018	30.63	330	0.0025	0.83	1298.6
P-29	30	444	18.41	0.0018	18.85	330	0.0017	0.57	1299.2
P-30	30	444	18.41	0.0018	18.85	300	0.0017	0.52	1299.7
P-31	30	444	18.41	0.0018	18.85	300	0.0017	0.52	1300.2
P-32	30	444	18.41	0.0018	18.85	322	0.0017	0.55	1300.7
P-33	24	245	18.41	0.0018	10.40	300	0.0056	1.69	1302.4
P-34	24	245	18.41	0.0018	10.40	100	0.0056	0.56	1303.0

STAGE DISCHARGE TABLE
51 AVE. DETENTION BASIN
WITH EXCESS CAPACITY FOR CITY OF PHOENIX (17.7CFS)
36" & 30" & 24" OUFALL LINE

OUTFALL ELEVA 1295.00
K = 1.486/nAR^2/3
n=.012

LINE NO.	DIAM. (IN)	"K"	DISCHARGE Q (CFS)	PIPE SLOPE	PIPE CAPACITY	LENGTH (FT)	FR. SLOPE Sf (ft/ft)	HD LOSS (FT)	UPSTREAM W.S.ELEV.
P-24	36	722	37.53 *	0.0018	30.63	117	0.0027	0.32	1295.3
P-25	36	722	37.53 *	0.0018	30.63	330	0.0027	0.89	1296.2
P-26	36	722	37.53 *	0.0018	30.63	330	0.0027	0.89	1297.1
P-27	36	722	37.53 *	0.0018	30.63	330	0.0027	0.89	1298.0
P-28	36	722	37.53 *	0.0018	30.63	330	0.0027	0.89	1298.9
P-29	30	444	19.83	0.0018	18.85	330	0.0020	0.66	1299.5
P-30	30	444	19.83	0.0018	18.85	300	0.0020	0.60	1300.1
P-31	30	444	19.83	0.0018	18.85	300	0.0020	0.60	1300.7
P-32	30	444	19.83	0.0018	18.85	322	0.0020	0.64	1301.4
P-33	24	245	19.83	0.0018	10.40	300	0.0065	1.96	1303.3
P-34	24	245	19.83	0.0018	10.40	100	0.0065	0.65	1304.0

STAGE DISCHARGE TABLE
51 AVE. DETENTION BASIN
WITH EXCESS CAPACITY FOR CITY OF PHOENIX (17.7CFS)
36" & 30" & 24" OUFALL LINE

OUTFALL ELEVA 1295.00
K = 1.486/nAR^2/3
n=.012

LINE NO.	DIAM. (IN)	"K"	DISCHARGE Q (CFS)	PIPE SLOPE	PIPE CAPACITY	LENGTH (FT)	FR. SLOPE Sf (ft/ft)	HD LOSS (FT)	UPSTREAM W.S.ELEV.
P-24	36	722	38.88 *	0.0018	30.63	117	0.0029	0.34	1295.3
P-25	36	722	38.88 *	0.0018	30.63	330	0.0029	0.96	1296.3
P-26	36	722	38.88 *	0.0018	30.63	330	0.0029	0.96	1297.3
P-27	36	722	38.88 *	0.0018	30.63	330	0.0029	0.96	1298.2
P-28	36	722	38.88 *	0.0018	30.63	330	0.0029	0.96	1299.2
P-29	30	444	21.18	0.0018	18.85	330	0.0023	0.75	1299.9
P-30	30	444	21.18	0.0018	18.85	300	0.0023	0.68	1300.6
P-31	30	444	21.18	0.0018	18.85	300	0.0023	0.68	1301.3
P-32	30	444	21.18	0.0018	18.85	322	0.0023	0.73	1302.0
P-33	24	245	21.18	0.0018	10.40	300	0.0075	2.24	1304.3
P-34	24	245	21.18	0.0018	10.40	100	0.0075	0.75	1305.0

STAGE DISCHARGE TABLE
51 AVE. DETENTION BASIN
WITH EXCESS CAPACITY FOR CITY OF PHOENIX (17.7CFS)
36" & 30" & 24" OUFALL LINE

OUTFALL ELEVA 1295.00
K = 1.486/nAR^2/3
n=.012

LINE NO.	DIAM. (IN)	"K"	DISCHARGE Q (CFS)	PIPE SLOPE	PIPE CAPACITY	LENGTH (FT)	FR. SLOPE Sf (ft/ft)	HD LOSS (FT)	UPSTREAM W.S.ELEV.
P-24	36	722	40.15 *	0.0018	30.63	117	0.0031	0.36	1295.4
P-25	36	722	40.15 *	0.0018	30.63	330	0.0031	1.02	1296.4
P-26	36	722	40.15 *	0.0018	30.63	330	0.0031	1.02	1297.4
P-27	36	722	40.15 *	0.0018	30.63	330	0.0031	1.02	1298.4
P-28	36	722	40.15 *	0.0018	30.63	330	0.0031	1.02	1299.4
P-29	30	444	22.45	0.0018	18.85	330	0.0026	0.84	1300.3
P-30	30	444	22.45	0.0018	18.85	300	0.0026	0.77	1301.1
P-31	30	444	22.45	0.0018	18.85	300	0.0026	0.77	1301.8
P-32	30	444	22.45	0.0018	18.85	322	0.0026	0.82	1302.6
P-33	24	245	22.45	0.0018	10.40	300	0.0084	2.52	1305.2
P-34	24	245	22.45	0.0018	10.40	100	0.0084	0.84	1306.0

STAGE DISCHARGE CURVES

W S ELEV. VS. DISCHARGE

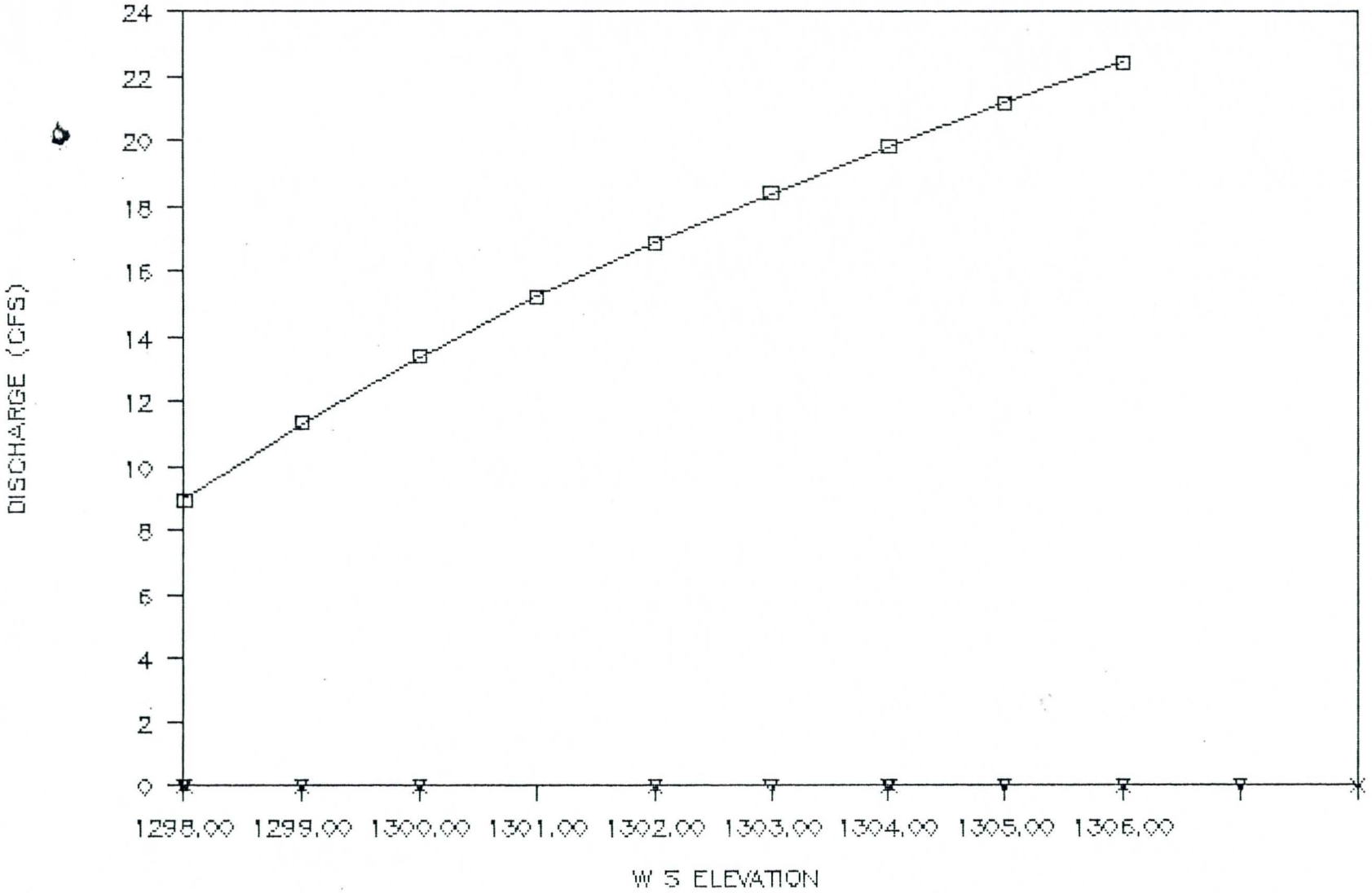

1

****

FLOOD HYDROGRAPH PACKAGE HEC-1 (IBM XT 512K VERSION) -FEB 1,1985

U.S. ARMY CORPS OF ENGINEERS, THE HYDROLOGIC ENGINEERING CENTER, 609 SECOND STREET, DAVIS, CA. 95616

****

THIS HEC-1 VERSION CONTAINS ALL OPTIONS EXCEPT ECONOMICS, AND THE NUMBER OF PLANS ARE REDUCED TO 3

1 HEC-1 INPUT PAGE 1

```
        LINE          ID.......1.......2.......3.......4.......5.......6.......7.......8.......9......10

*** FREE ***
           1          ID   OUTER LOOP HIGHWAY 51ST AVE DETENTION BASIN
           2          ID   DRAINAGE BASINS 14A, 14B AND 14C
           3          ID   100 YEAR STORM ROUTING THROUGH DETENTION BASIN
           4          ID    OUTFALL SUBMERGED WITH 10 YEAR STORM IN SKUNK CREEK
           5          ID    OUTFALL LINE HAS EXCESS CAPACITY FOR CITY OF PHOENIX
           6          ID    FILE 51AVZ.IN
                      *DIAGRAM
           7          IT       2                    240
           8          IO       5

           9          KK   DA14C
          10          KM   RUNOFF FROM 14C
          11          BA    0.06
          12          PH                   0.72    1.41    2.48    2.75    2.94    3.29    3.80    4.08
          13          LS             93
          14          UD     .12

          15          KK    R14B
          16          KM   ROUTE RUNOFF FROM 14C TO 14B
          17          RK    1000   .0068    .018           TRAP       8       2

          18          KK   DA14B
          19          KM   RUNOFF FROM 14B
          20          BA     .14
          21          LS             93
          22          UD     .16

          23          KK    C14B
          24          KM   COMBINE HYDROGRAPHS 14C AND 14B
          25          HC       2

          26          KK    R14A
          27          KM   ROUTE COMBINED RUNOFF FROM 14B TO 14A
          28          RK    3400   .0068    .018           TRAP       8       2
```

```
29          KK   DA14A
30          KM   RUNOFF FROM 14A
31          BA     .12
32          LS              85
33          UD     .16

34          KK    C14A
35          KM   COMBINE HYDROGRAGHS 14C, 14B AND 14A
36          KO       1
37          HC       2

38          KK    BA14
39          KM   ROUTE COMBINED RUNOFF TO 51ST AVE DETENTION BASIN
40          KO       1
41          RS       1    STOR      -1       0
42          SV       0    5.22   10.62   16.20   21.97   27.92   34.06   40.40   46.93
43          SQ    8.95   11.35   13.40   15.23   16.88   18.41   19.83   21.18   22.45
44          SE    1298    1299    1300    1301    1302    1303    1304    1305    1306
45
```

1 HEC-1 INPUT PAGE 2

```
LINE          ID.......1.......2.......3.......4.......5.......6.......7.......8.......9......10

46          ZZ
```

1

```
            SCHEMATIC DIAGRAM OF STREAM NETWORK
INPUT
 LINE     (V) ROUTING          (--->) DIVERSION OR PUMP FLOW

  NO.     (.) CONNECTOR        (<---) RETURN OF DIVERTED OR PUMPED FLOW

   9      DA14C
             V
             V
  15       R14B
             .
             .
  18         .       DA14B
             .          .
             .          .
  23       C14B............
             V
             V
  26       R14A
             .
             .
  29         .       DA14A
             .          .
             .          .
  34       C14A............
             V
             V
  38       BA14

 **) RUNOFF ALSO COMPUTED AT THIS LOCATION
```

```
1                                        ****
                    FLOOD HYDROGRAPH PACKAGE HEC-1 (IBM XT 512K VERSION) -FEB 1,1985
          U.S. ARMY CORPS OF ENGINEERS, THE HYDROLOGIC ENGINEERING CENTER, 609 SECOND STREET, DAVIS, CA. 95616
                                        ****


                    OUTER LOOP HIGHWAY 51ST AVE DETENTION BASIN
                    DRAINAGE BASINS 14A, 14B AND 14C
                    100 YEAR STORM ROUTING THROUGH DETENTION BASIN
                     OUTFALL SUBMERGED WITH 10 YEAR STORM IN SKUNK CREEK
                     OUTFALL LINE HAS EXCESS CAPACITY FOR CITY OF PHOENIX
                     FILE 51AVZ.IN

  8 IO        OUTPUT CONTROL VARIABLES
                   IPRNT          5  PRINT CONTROL
                   IPLOT          0  PLOT CONTROL
                   QSCAL         0.  HYDROGRAPH PLOT SCALE

   IT         HYDROGRAPH TIME DATA
                    NMIN          2  MINUTES IN COMPUTATION INTERVAL
                   IDATE      1   0  STARTING DATE
                   ITIME       0000  STARTING TIME
                      NQ        240  NUMBER OF HYDROGRAPH ORDINATES
                  NDDATE      1   0  ENDING DATE
                  NDTIME       0758  ENDING TIME

             COMPUTATION INTERVAL     .03 HOURS
                  TOTAL TIME BASE    7.97 HOURS

       ENGLISH UNITS


*** *** *** *** *** *** *** *** *** *** *** *** *** *** *** *** *** *** *** *** *** *** *** *** *** *** *** *** *** *** *** *** ***


          **************
          *            *
 34 KK    *     C14A   *
          *            *
          **************

 36 KO        OUTPUT CONTROL VARIABLES
                   IPRNT          1  PRINT CONTROL
                   IPLOT          0  PLOT CONTROL
                   QSCAL         0.  HYDROGRAPH PLOT SCALE

 37 HC        HYDROGRAPH COMBINATION
                   ICOMP          2  NUMBER OF HYDROGRAPHS TO COMBINE

                                        ***

*****************************************************************************************************************************
```

HYDROGRAPH AT STATION C14A
SUM OF 2 HYDROGRAPHS

DA	MON	HRMN	ORD	FLOW	DA	MON	HRMN	ORD	FLOW	DA	MON	HRMN	ORD	FLOW	DA	MON	HRMN	ORD	FLOW
1		0000	1	0.	1		0200	61	0.	1		0400	121	287.	1		0600	181	27.
1		0002	2	0.	1		0202	62	0.	1		0402	122	384.	1		0602	182	26.
1		0004	3	0.	1		0204	63	0.	1		0404	123	515.	1		0604	183	26.
1		0006	4	0.	1		0206	64	0.	1		0406	124	662.	1		0606	184	25.
1		0008	5	0.	1		0208	65	0.	1		0408	125	788.	1		0608	185	25.
1		0010	6	0.	1		0210	66	0.	1		0410	126	858.	1		0610	186	25.
1		0012	7	0.	1		0212	67	0.	1		0412	127	864.	1		0612	187	24.
1		0014	8	0.	1		0214	68	0.	1		0414	128	820.	1		0614	188	24.
1		0016	9	0.	1		0216	69	1.	1		0416	129	748.	1		0616	189	24.
1		0018	10	0.	1		0218	70	1.	1		0418	130	667.	1		0618	190	23.
1		0020	11	0.	1		0220	71	1.	1		0420	131	590.	1		0620	191	23.
1		0022	12	0.	1		0222	72	1.	1		0422	132	520.	1		0622	192	23.
1		0024	13	0.	1		0224	73	1.	1		0424	133	459.	1		0624	193	22.
1		0026	14	0.	1		0226	74	1.	1		0426	134	405.	1		0626	194	22.
1		0028	15	0.	1		0228	75	2.	1		0428	135	359.	1		0628	195	22.
1		0030	16	0.	1		0230	76	2.	1		0430	136	319.	1		0630	196	21.
1		0032	17	0.	1		0232	77	2.	1		0432	137	285.	1		0632	197	21.
1		0034	18	0.	1		0234	78	2.	1		0434	138	255.	1		0634	198	21.
1		0036	19	0.	1		0236	79	2.	1		0436	139	226.	1		0636	199	21.
1		0038	20	0.	1		0238	80	3.	1		0438	140	199.	1		0638	200	20.
1		0040	21	0.	1		0240	81	3.	1		0440	141	173.	1		0640	201	20.
1		0042	22	0.	1		0242	82	3.	1		0442	142	150.	1		0642	202	20.
1		0044	23	0.	1		0244	83	4.	1		0444	143	131.	1		0644	203	20.
1		0046	24	0.	1		0246	84	4.	1		0446	144	114.	1		0646	204	20.
1		0048	25	0.	1		0248	85	4.	1		0448	145	101.	1		0648	205	19.
1		0050	26	0.	1		0250	86	4.	1		0450	146	90.	1		0650	206	19.
1		0052	27	0.	1		0252	87	5.	1		0452	147	81.	1		0652	207	19.
1		0054	28	0.	1		0254	88	5.	1		0454	148	73.	1		0654	208	19.
1		0056	29	0.	1		0256	89	5.	1		0456	149	67.	1		0656	209	18.
1		0058	30	0.	1		0258	90	6.	1		0458	150	62.	1		0658	210	18.
1		0100	31	0.	1		0300	91	6.	1		0500	151	58.	1		0700	211	18.
1		0102	32	0.	1		0302	92	7.	1		0502	152	55.	1		0702	212	18.
1		0104	33	0.	1		0304	93	7.	1		0504	153	52.	1		0704	213	18.
1		0106	34	0.	1		0306	94	8.	1		0506	154	49.	1		0706	214	18.
1		0108	35	0.	1		0308	95	8.	1		0508	155	48.	1		0708	215	18.
1		0110	36	0.	1		0310	96	9.	1		0510	156	46.	1		0710	216	19.
1		0112	37	0.	1		0312	97	9.	1		0512	157	45.	1		0712	217	19.
1		0114	38	0.	1		0314	98	10.	1		0514	158	44.	1		0714	218	19.
1		0116	39	0.	1		0316	99	10.	1		0516	159	42.	1		0716	219	20.
1		0118	40	0.	1		0318	100	11.	1		0518	160	41.	1		0718	220	20.
1		0120	41	0.	1		0320	101	12.	1		0520	161	41.	1		0720	221	20.
1		0122	42	0.	1		0322	102	12.	1		0522	162	40.	1		0722	222	20.
1		0124	43	0.	1		0324	103	13.	1		0524	163	39.	1		0724	223	20.
1		0126	44	0.	1		0326	104	14.	1		0526	164	38.	1		0726	224	20.
1		0128	45	0.	1		0328	105	15.	1		0528	165	37.	1		0728	225	20.
1		0130	46	0.	1		0330	106	16.	1		0530	166	36.	1		0730	226	20.
1		0132	47	0.	1		0332	107	18.	1		0532	167	36.	1		0732	227	20.

1	0134	48	0.	*	1	0334	108	20.	*	1	0534	168	35.	*	1	0734	228	20.
1	0136	49	0.	*	1	0336	109	23.	*	1	0536	169	34.	*	1	0736	229	20.
1	0138	50	0.	*	1	0338	110	28.	*	1	0538	170	33.	*	1	0738	230	20.
1	0140	51	0.	*	1	0340	111	34.	*	1	0540	171	33.	*	1	0740	231	20.
1	0142	52	0.	*	1	0342	112	43.	*	1	0542	172	32.	*	1	0742	232	20.
1	0144	53	0.	*	1	0344	113	54.	*	1	0544	173	31.	*	1	0744	233	20.
1	0146	54	0.	*	1	0346	114	66.	*	1	0546	174	31.	*	1	0746	234	20.
1	0148	55	0.	*	1	0348	115	80.	*	1	0548	175	30.	*	1	0748	235	20.
1	0150	56	0.	*	1	0350	116	96.	*	1	0550	176	29.	*	1	0750	236	20.
1	0152	57	0.	*	1	0352	117	116.	*	1	0552	177	29.	*	1	0752	237	19.
1	0154	58	0.	*	1	0354	118	140.	*	1	0554	178	28.	*	1	0754	238	19.
1	0156	59	0.	*	1	0356	119	173.	*	1	0556	179	28.	*	1	0756	239	19.
1	0158	60	0.	*	1	0358	120	219.	*	1	0558	180	27.	*	1	0758	240	19.
				*					*					*				

****

PEAK FLOW	TIME		MAXIMUM AVERAGE FLOW			
			6-HR	24-HR	72-HR	7.97-HR
+ (CFS)	(HR)					
		(CFS)				
+ 864.	4.20		83.	63.	63.	63.
		(INCHES)	2.416	2.416	2.416	2.416
		(AC-FT)	41.	41.	41.	41.

CUMULATIVE AREA = .32 SQ MI

** ***

```
          **************
          *            *
 38 KK    *     BA14   *
          *            *
          **************
```

40 KO OUTPUT CONTROL VARIABLES

IPRNT	1	PRINT CONTROL
IPLOT	0	PLOT CONTROL
QSCAL	0.	HYDROGRAPH PLOT SCALE

ERROR 1 CARD NO. 45

HYDROGRAPH ROUTING DATA

41 RS STORAGE ROUTING

NSTPS	1	NUMBER OF SUBREACHES
ITYP	STOR	TYPE OF INITIAL CONDITION
RSVRIC	-1.00	INITIAL CONDITION
X	.00	WORKING R AND D COEFFICIENT

42 SV	STORAGE	.0	5.2	10.6	16.2	22.0	27.9	34.1	40.4	46.9

43 SQ	DISCHARGE	9.	11.	13.	15.	17.	18.	20.	21.	22.
44 SE	ELEVATION	1298.00	1299.00	1300.00	1301.00	1302.00	1303.00	1304.00	1305.00	1306.00

***

HYDROGRAPH AT STATION BA14

DA	MON	HRMN	ORD	OUTFLOW	STORAGE	STAGE	DA	MON	HRMN	ORD	OUTFLOW	STORAGE	STAGE	DA	MON	HRMN	ORD	OUTFLOW	STORAGE	STAGE
1		0000	1	0.	.0	1298.0	1		0240	81	9.	.0	1298.0	1		0520	161	20.	33.2	1303.9
1		0002	2	9.	.0	1298.0	1		0242	82	9.	.0	1298.0	1		0522	162	20.	33.3	1303.9
1		0004	3	9.	.0	1298.0	1		0244	83	9.	.0	1298.0	1		0524	163	20.	33.3	1303.9
1		0006	4	9.	.0	1298.0	1		0246	84	9.	.0	1298.0	1		0526	164	20.	33.4	1303.9
1		0008	5	9.	.0	1298.0	1		0248	85	9.	.0	1298.0	1		0528	165	20.	33.4	1303.9
1		0010	6	9.	.0	1298.0	1		0250	86	9.	.0	1298.0	1		0530	166	20.	33.5	1303.9
1		0012	7	9.	.0	1298.0	1		0252	87	9.	.0	1298.0	1		0532	167	20.	33.5	1303.9
1		0014	8	9.	.0	1298.0	1		0254	88	9.	.0	1298.0	1		0534	168	20.	33.5	1303.9
1		0016	9	9.	.0	1298.0	1		0256	89	9.	.0	1298.0	1		0536	169	20.	33.6	1303.9
1		0018	10	9.	.0	1298.0	1		0258	90	9.	.0	1298.0	1		0538	170	20.	33.6	1303.9
1		0020	11	9.	.0	1298.0	1		0300	91	9.	.0	1298.0	1		0540	171	20.	33.7	1303.9
1		0022	12	9.	.0	1298.0	1		0302	92	9.	.0	1298.0	1		0542	172	20.	33.7	1303.9
1		0024	13	9.	.0	1298.0	1		0304	93	9.	.0	1298.0	1		0544	173	20.	33.7	1303.9
1		0026	14	9.	.0	1298.0	1		0306	94	9.	.0	1298.0	1		0546	174	20.	33.8	1304.0
1		0028	15	9.	.0	1298.0	1		0308	95	9.	.0	1298.0	1		0548	175	20.	33.8	1304.0
1		0030	16	9.	.0	1298.0	1		0310	96	9.	.0	1298.0	1		0550	176	20.	33.8	1304.0
1		0032	17	9.	.0	1298.0	1		0312	97	9.	.0	1298.0	1		0552	177	20.	33.8	1304.0
1		0034	18	9.	.0	1298.0	1		0314	98	9.	.0	1298.0	1		0554	178	20.	33.9	1304.0
1		0036	19	9.	.0	1298.0	1		0316	99	9.	.0	1298.0	1		0556	179	20.	33.9	1304.0
1		0038	20	9.	.0	1298.0	1		0318	100	9.	.0	1298.0	1		0558	180	20.	33.9	1304.0
1		0040	21	9.	.0	1298.0	1		0320	101	9.	.0	1298.0	1		0600	181	20.	33.9	1304.0
1		0042	22	9.	.0	1298.0	1		0322	102	9.	.0	1298.0	1		0602	182	20.	33.9	1304.0
1		0044	23	9.	.0	1298.0	1		0324	103	9.	.0	1298.0	1		0604	183	20.	34.0	1304.0
1		0046	24	9.	.0	1298.0	1		0326	104	9.	.0	1298.0	1		0606	184	20.	34.0	1304.0
1		0048	25	9.	.0	1298.0	1		0328	105	9.	.0	1298.0	1		0608	185	20.	34.0	1304.0
1		0050	26	9.	.0	1298.0	1		0330	106	9.	.1	1298.0	1		0610	186	20.	34.0	1304.0
1		0052	27	9.	.0	1298.0	1		0332	107	9.	.1	1298.0	1		0612	187	20.	34.0	1304.0
1		0054	28	9.	.0	1298.0	1		0334	108	9.	.1	1298.0	1		0614	188	20.	34.0	1304.0
1		0056	29	9.	.0	1298.0	1		0336	109	9.	.1	1298.0	1		0616	189	20.	34.0	1304.0
1		0058	30	9.	.0	1298.0	1		0338	110	9.	.2	1298.0	1		0618	190	20.	34.0	1304.0
1		0100	31	9.	.0	1298.0	1		0340	111	9.	.3	1298.0	1		0620	191	20.	34.1	1304.0
1		0102	32	9.	.0	1298.0	1		0342	112	9.	.3	1298.1	1		0622	192	20.	34.1	1304.0
1		0104	33	9.	.0	1298.0	1		0344	113	9.	.4	1298.1	1		0624	193	20.	34.1	1304.0
1		0106	34	9.	.0	1298.0	1		0346	114	9.	.6	1298.1	1		0626	194	20.	34.1	1304.0
1		0108	35	9.	.0	1298.0	1		0348	115	9.	.8	1298.1	1		0628	195	20.	34.1	1304.0
1		0110	36	9.	.0	1298.0	1		0350	116	9.	1.0	1298.2	1		0630	196	20.	34.1	1304.0
1		0112	37	9.	.0	1298.0	1		0352	117	10.	1.2	1298.2	1		0632	197	20.	34.1	1304.0
1		0114	38	9.	.0	1298.0	1		0354	118	10.	1.6	1298.3	1		0634	198	20.	34.1	1304.0
1		0116	39	9.	.0	1298.0	1		0356	119	10.	2.0	1298.4	1		0636	199	20.	34.1	1304.0
1		0118	40	9.	.0	1298.0	1		0358	120	10.	2.5	1298.5	1		0638	200	20.	34.1	1304.0
1		0120	41	9.	.0	1298.0	1		0400	121	10.	3.2	1298.6	1		0640	201	20.	34.1	1304.0

1	0122	42	9.	.0	1298.0	*	1	0402	122	11.	4.0	1298.8	*	1	0642	202	20.	34.1	1304.0
1	0124	43	9.	.0	1298.0	*	1	0404	123	11.	5.3	1299.0	*	1	0644	203	20.	34.1	1304.0
1	0126	44	9.	.0	1298.0	*	1	0406	124	12.	6.8	1299.3	*	1	0646	204	20.	34.1	1304.0
1	0128	45	9.	.0	1298.0	*	1	0408	125	13.	8.8	1299.7	*	1	0648	205	20.	34.1	1304.0
1	0130	46	9.	.0	1298.0	*	1	0410	126	14.	11.0	1300.1	*	1	0650	206	20.	34.1	1304.0
1	0132	47	9.	.0	1298.0	*	1	0412	127	14.	13.4	1300.5	*	1	0652	207	20.	34.1	1304.0
1	0134	48	9.	.0	1298.0	*	1	0414	128	15.	15.7	1300.9	*	1	0654	208	20.	34.1	1304.0
1	0136	49	9.	.0	1298.0	*	1	0416	129	16.	17.8	1301.3	*	1	0656	209	20.	34.1	1304.0
1	0138	50	9.	.0	1298.0	*	1	0418	130	16.	19.7	1301.6	*	1	0658	210	20.	34.1	1304.0
1	0140	51	9.	.0	1298.0	*	1	0420	131	17.	21.4	1301.9	*	1	0700	211	20.	34.1	1304.0
1	0142	52	9.	.0	1298.0	*	1	0422	132	17.	22.8	1302.1	*	1	0702	212	20.	34.1	1304.0
1	0144	53	9.	.0	1298.0	*	1	0424	133	17.	24.1	1302.4	*	1	0704	213	20.	34.1	1304.0
1	0146	54	9.	.0	1298.0	*	1	0426	134	18.	25.3	1302.6	*	1	0706	214	20.	34.1	1304.0
1	0148	55	9.	.0	1298.0	*	1	0428	135	18.	26.3	1302.7	*	1	0708	215	20.	34.1	1304.0
1	0150	56	9.	.0	1298.0	*	1	0430	136	18.	27.2	1302.9	*	1	0710	216	20.	34.1	1304.0
1	0152	57	9.	.0	1298.0	*	1	0432	137	18.	28.0	1303.0	*	1	0712	217	20.	34.1	1304.0
1	0154	58	9.	.0	1298.0	*	1	0434	138	19.	28.6	1303.1	*	1	0714	218	20.	34.1	1304.0
1	0156	59	9.	.0	1298.0	*	1	0436	139	19.	29.3	1303.2	*	1	0716	219	20.	34.1	1304.0
1	0158	60	9.	.0	1298.0	*	1	0438	140	19.	29.8	1303.3	*	1	0718	220	20.	34.1	1304.0
1	0200	61	9.	.0	1298.0	*	1	0440	141	19.	30.3	1303.4	*	1	0720	221	20.	34.1	1304.0
1	0202	62	9.	.0	1298.0	*	1	0442	142	19.	30.6	1303.4	*	1	0722	222	20.	34.1	1304.0
1	0204	63	9.	.0	1298.0	*	1	0444	143	19.	31.0	1303.5	*	1	0724	223	20.	34.1	1304.0
1	0206	64	9.	.0	1298.0	*	1	0446	144	19.	31.3	1303.5	*	1	0726	224	20.	34.1	1304.0
1	0208	65	9.	.0	1298.0	*	1	0448	145	19.	31.5	1303.6	*	1	0728	225	20.	34.1	1304.0
1	0210	66	9.	.0	1298.0	*	1	0450	146	19.	31.7	1303.6	*	1	0730	226	20.	34.1	1304.0
1	0212	67	9.	.0	1298.0	*	1	0452	147	19.	31.9	1303.6	*	1	0732	227	20.	34.1	1304.0
1	0214	68	9.	.0	1298.0	*	1	0454	148	19.	32.1	1303.7	*	1	0734	228	20.	34.1	1304.0
1	0216	69	9.	.0	1298.0	*	1	0456	149	19.	32.2	1303.7	*	1	0736	229	20.	34.1	1304.0
1	0218	70	9.	.0	1298.0	*	1	0458	150	19.	32.3	1303.7	*	1	0738	230	20.	34.1	1304.0
1	0220	71	9.	.0	1298.0	*	1	0500	151	19.	32.4	1303.7	*	1	0740	231	20.	34.1	1304.0
1	0222	72	9.	.0	1298.0	*	1	0502	152	19.	32.5	1303.8	*	1	0742	232	20.	34.1	1304.0
1	0224	73	9.	.0	1298.0	*	1	0504	153	19.	32.6	1303.8	*	1	0744	233	20.	34.1	1304.0
1	0226	74	9.	.0	1298.0	*	1	0506	154	20.	32.7	1303.8	*	1	0746	234	20.	34.1	1304.0
1	0228	75	9.	.0	1298.0	*	1	0508	155	20.	32.8	1303.8	*	1	0748	235	20.	34.1	1304.0
1	0230	76	9.	.0	1298.0	*	1	0510	156	20.	32.9	1303.8	*	1	0750	236	20.	34.1	1304.0
1	0232	77	9.	.0	1298.0	*	1	0512	157	20.	32.9	1303.8	*	1	0752	237	20.	34.1	1304.0
1	0234	78	9.	.0	1298.0	*	1	0514	158	20.	33.0	1303.8	*	1	0754	238	20.	34.1	1304.0
1	0236	79	9.	.0	1298.0	*	1	0516	159	20.	33.1	1303.8	*	1	0756	239	20.	34.1	1304.0
1	0238	80	9.	.0	1298.0	*	1	0518	160	20.	33.1	1303.8	*	1	0758	240	20.	34.1	1304.0
						*							*						

****

PEAK FLOW	TIME		MAXIMUM AVERAGE FLOW			
			6-HR	24-HR	72-HR	7.97-HR
+ (CFS)	(HR)					
		(CFS)				
+ 20.	6.67		16.	14.	14.	14.
		(INCHES)	.455	.540	.540	.540
		(AC-FT)	8.	9.	9.	9.

PEAK STORAGE	TIME	MAXIMUM AVERAGE STORAGE			
		6-HR	24-HR	72-HR	7.97-HR
+ (AC-FT)	(HR)				
34.	6.67	21.	16.	16.	16.

PEAK STAGE (FEET)	TIME (HR)	MAXIMUM AVERAGE STAGE 6-HR	24-HR	72-HR	7.97-HR
1304.01	6.70	1301.66	1300.75	1300.75	1300.75

CUMULATIVE AREA = .32 SQ MI

1

RUNOFF SUMMARY
FLOW IN CUBIC FEET PER SECOND
TIME IN HOURS, AREA IN SQUARE MILES

OPERATION	STATION	PEAK FLOW	TIME OF PEAK	AVERAGE FLOW FOR MAXIMUM PERIOD 6-HOUR	24-HOUR	72-HOUR	BASIN AREA	MAXIMUM STAGE	TIME OF MAX STAGE
HYDROGRAPH AT	DA14C	201.	4.10	17.	13.	13.	.06		
ROUTED TO	R14B	201.	4.13	17.	13.	13.	.06		
HYDROGRAPH AT	DA14B	419.	4.17	41.	31.	31.	.14		
2 COMBINED AT	C14B	615.	4.13	58.	44.	44.	.20		
ROUTED TO	R14A	600.	4.20	58.	43.	43.	.20		
HYDROGRAPH AT	DA14A	272.	4.17	26.	19.	19.	.12		
2 COMBINED AT	C14A	864.	4.20	83.	63.	63.	.32		
ROUTED TO	BA14	20.	6.67	16.	14.	14.	.32		
								1304.01	6.70

THIS HEC-1 VERSION CONTAINS ALL OPTIONS EXCEPT ECONOMICS, AND THE NUMBER OF PLANS ARE REDUCED TO 3


```
      LINE          ID.......1.......2.......3.......4.......5.......6.......7.......8.......9......10

*** FREE ***
         1          ID   OUTER LOOP HIGHWAY 51ST AVE DETENTION BASIN
         2          ID   DRAINAGE BASINS 14A, 14B AND 14C
         3          ID   100 YEAR STORM ROUTING
         4          ID    FILE 51AVA.IN    **** SPILLWAY ONLY ****
                    *DIAGRAM
         5          IT      2                    300
         6          IO      5

         7          KK   DA14C
         8          KM   RUNOFF FROM 14C
         9          BA    0.06
        10          PH                  0.72    1.41    2.48    2.75    2.94    3.28    3.80    4.08
        11          LS             93
        12          UD     .12

        13          KK    R14B
        14          KM   ROUTE RUNOFF FROM 14C TO 14B
        15          RK    1000   .0068    .018           TRAP      8       2

        16          KK   DA14B
        17          KM   RUNOFF FROM 14B
        18          BA     .14
        19          LS             93
        20          UD     .16

        21          KK    C14B
        22          KM   COMBINE HYDROGRAPHS 14C AND 14B
        23          HC      2

        24          KK    R14A
        25          KM   ROUTE COMBINED RUNOFF FROM 14B TO 14A
        26          RK    3400   .0068    .018           TRAP      8       2

        27          KK   DA14A
        28          KM   RUNOFF FROM 14A
        29          BA     .12
        30          LS             85
        31          UD     .16

        32          KK    C14A
        33          KM   COMBINE HYDROGRAGHS 14C, 14B AND 14A
        34          HC      2

        35          KK    BA14
        36          KM   ROUTE COMBINED RUNOFF TO 51ST AVE DETENTION BASIN
        37          KO      1       2
        38          RS      1    STOR      -1       0
        39          SV      0    5.22   10.62   16.20   21.97   27.92   34.06   40.40   46.93   53.66
        40          SE   1298    1299    1300    1301    1302    1303    1304    1305    1306    1307
        41          SS   1306     600     3.0     1.5
        42
        43          ZZ
```

```
                    SCHEMATIC DIAGRAM OF STREAM NETWORK
INPUT
 LINE      (V) ROUTING          (--->) DIVERSION OR PUMP FLOW

 NO.       (.) CONNECTOR        (<---) RETURN OF DIVERTED OR PUMPED FLOW

  7       DA14C
             V
             V
 13        R14B
             .
             .
 16          .       DA14B
             .          .
             .          .
 21        C14B............
             V
             V
 24        R14A
             .
             .
 27          .       DA14A
             .          .
             .          .
 32        C14A............
             V
             V
 35        BA14

(***) RUNOFF ALSO COMPUTED AT THIS LOCATION
                                                        ****
1
                    FLOOD HYDROGRAPH PACKAGE HEC-1 (IBM XT 512K VERSION) -FEB 1,1985
          U.S. ARMY CORPS OF ENGINEERS, THE HYDROLOGIC ENGINEERING CENTER, 609 SECOND STREET, DAVIS, CA. 95616
                                                        ****


                    OUTER LOOP HIGHWAY 51ST AVE DETENTION BASIN
                    DRAINAGE BASINS 14A, 14B AND 14C
                    100 YEAR STORM ROUTING
                     FILE 51AVA.IN    **** SPILLWAY ONLY ****

  6 IO        OUTPUT CONTROL VARIABLES
                   IPRNT          5  PRINT CONTROL
                   IPLOT          0  PLOT CONTROL
                   QSCAL         0.  HYDROGRAPH PLOT SCALE

    IT        HYDROGRAPH TIME DATA
                    NMIN          2  MINUTES IN COMPUTATION INTERVAL
                   IDATE     1    0  STARTING DATE
                   ITIME       0000  STARTING TIME
                      NQ        300  NUMBER OF HYDROGRAPH ORDINATES
                  NDDATE     1    0  ENDING DATE
                  NDTIME       0958  ENDING TIME

              COMPUTATION INTERVAL     .03 HOURS
                  TOTAL TIME BASE    9.97 HOURS

         ENGLISH UNITS

*** *** *** *** *** *** *** *** *** *** *** *** *** *** *** *** *** *** *** *** *** *** *** *** *** *** *** *** *** *** *** *** ***
```

```
              **************
              *            *
35 KK         *    BA14    *
              *            *
              **************

37 KO          OUTPUT CONTROL VARIABLES
                    IPRNT          1  PRINT CONTROL
                    IPLOT          2  PLOT CONTROL
                    QSCAL         0.  HYDROGRAPH PLOT SCALE

            HYDROGRAPH ROUTING DATA

38 RS          STORAGE ROUTING
                    NSTPS          1  NUMBER OF SUBREACHES
                     ITYP       STOR  TYPE OF INITIAL CONDITION
                   RSVRIC      -1.00  INITIAL CONDITION
                        X        .00 WORKING R AND D COEFFICIENT

39 SV           STORAGE        .0      5.2     10.6     16.2     22.0     27.9     34.1     40.4     46.9     53.7

40 SE          ELEVATION    1298.00  1299.00  1300.00  1301.00  1302.00  1303.00  1304.00  1305.00  1306.00  1307.00

41 SS          SPILLWAY
                     CREL    1306.00  SPILLWAY CREST ELEVATION
                    SPWID     600.00  SPILLWAY WIDTH
                     COQW       3.00  WEIR COEFFICIENT
                     EXPW       1.50  EXPONENT OF HEAD

                                                  ***

                                   COMPUTED OUTFLOW-ELEVATION DATA

              OUTFLOW      .00      .00      .30     2.46     8.36    19.79    38.57    66.64   105.88   158.00
            ELEVATION  1298.00  1306.00  1306.00  1306.01  1306.03  1306.05  1306.08  1306.11  1306.15  1306.20

              OUTFLOW   225.00   308.57   410.73   533.36   678.09   847.00  1041.70  1264.29  1516.34  1800.00
            ELEVATION  1306.25  1306.31  1306.37  1306.44  1306.52  1306.60  1306.69  1306.79  1306.89  1307.00

                                   COMPUTED STORAGE-OUTFLOW-ELEVATION DATA

              STORAGE      .00     5.22    10.62    16.20    21.97    27.92    34.06    40.40    46.93    47.01
              OUTFLOW      .00      .00      .00      .00      .00      .00      .00      .00      .00     2.46
            ELEVATION  1298.00  1299.00  1300.00  1301.00  1302.00  1303.00  1304.00  1305.00  1306.00  1306.01

              STORAGE    47.12    47.26    47.45    47.68    47.95    48.26    48.61    49.01    49.44    49.92
              OUTFLOW     8.36    19.79    38.57    66.64   105.88   158.00   225.00   308.57   410.73   533.36
            ELEVATION  1306.03  1306.05  1306.08  1306.11  1306.15  1306.20  1306.25  1306.31  1306.37  1306.44

              STORAGE    50.44    51.00    51.60    52.25    52.93    53.66
              OUTFLOW   678.09   847.00  1041.70  1264.29  1516.34  1800.00
            ELEVATION  1306.52  1306.60  1306.69  1306.79  1306.89  1307.00
```

HYDROGRAPH AT STATION BA14

DA	MON	HRMN	ORD	OUTFLOW	STORAGE	STAGE	DA	MON	HRMN	ORD	OUTFLOW	STORAGE	STAGE	DA	MON	HRMN	ORD	OUTFLOW	STORAGE	STAGE
1		0000	1	0.	34.1	1304.0	1		0320	101	0.	34.2	1304.0	1		0640	201	35.	47.4	1306.1
1		0002	2	0.	34.1	1304.0	1		0322	102	0.	34.2	1304.0	1		0642	202	35.	47.4	1306.1
1		0004	3	0.	34.1	1304.0	1		0324	103	0.	34.2	1304.0	1		0644	203	34.	47.4	1306.1
1		0006	4	0.	34.1	1304.0	1		0326	104	0.	34.2	1304.0	1		0646	204	33.	47.4	1306.1
1		0008	5	0.	34.1	1304.0	1		0328	105	0.	34.3	1304.0	1		0648	205	33.	47.4	1306.1
1		0010	6	0.	34.1	1304.0	1		0330	106	0.	34.3	1304.0	1		0650	206	32.	47.4	1306.1
1		0012	7	0.	34.1	1304.0	1		0332	107	0.	34.3	1304.0	1		0652	207	31.	47.4	1306.1
1		0014	8	0.	34.1	1304.0	1		0334	108	0.	34.3	1304.0	1		0654	208	31.	47.4	1306.1
1		0016	9	0.	34.1	1304.0	1		0336	109	0.	34.3	1304.0	1		0656	209	30.	47.4	1306.1
1		0018	10	0.	34.1	1304.0	1		0338	110	0.	34.3	1304.0	1		0658	210	29.	47.4	1306.1
1		0020	11	0.	34.1	1304.0	1		0340	111	0.	34.3	1304.0	1		0700	211	29.	47.4	1306.1
1		0022	12	0.	34.1	1304.0	1		0342	112	0.	34.4	1304.0	1		0702	212	28.	47.3	1306.1
1		0024	13	0.	34.1	1304.0	1		0344	113	0.	34.4	1304.1	1		0704	213	28.	47.3	1306.1
1		0026	14	0.	34.1	1304.0	1		0346	114	0.	34.4	1304.1	1		0706	214	27.	47.3	1306.1
1		0028	15	0.	34.1	1304.0	1		0348	115	0.	34.4	1304.1	1		0708	215	27.	47.3	1306.1
1		0030	16	0.	34.1	1304.0	1		0350	116	0.	34.4	1304.1	1		0710	216	26.	47.3	1306.1
1		0032	17	0.	34.1	1304.0	1		0352	117	0.	34.5	1304.1	1		0712	217	26.	47.3	1306.1
1		0034	18	0.	34.1	1304.0	1		0354	118	0.	34.5	1304.1	1		0714	218	25.	47.3	1306.1
1		0036	19	0.	34.1	1304.0	1		0356	119	0.	34.5	1304.1	1		0716	219	25.	47.3	1306.1
1		0038	20	0.	34.1	1304.0	1		0358	120	0.	34.5	1304.1	1		0718	220	25.	47.3	1306.1
1		0040	21	0.	34.1	1304.0	1		0400	121	0.	34.6	1304.1	1		0720	221	24.	47.3	1306.1
1		0042	22	0.	34.1	1304.0	1		0402	122	0.	34.6	1304.1	1		0722	222	24.	47.3	1306.1
1		0044	23	0.	34.1	1304.0	1		0404	123	0.	34.6	1304.1	1		0724	223	24.	47.3	1306.1
1		0046	24	0.	34.1	1304.0	1		0406	124	0.	34.7	1304.1	1		0726	224	23.	47.3	1306.1
1		0048	25	0.	34.1	1304.0	1		0408	125	0.	34.7	1304.1	1		0728	225	23.	47.3	1306.1
1		0050	26	0.	34.1	1304.0	1		0410	126	0.	34.7	1304.1	1		0730	226	23.	47.3	1306.1
1		0052	27	0.	34.1	1304.0	1		0412	127	0.	34.8	1304.1	1		0732	227	22.	47.3	1306.1
1		0054	28	0.	34.1	1304.0	1		0414	128	0.	34.8	1304.1	1		0734	228	22.	47.3	1306.1
1		0056	29	0.	34.1	1304.0	1		0416	129	0.	34.8	1304.1	1		0736	229	22.	47.3	1306.1
1		0058	30	0.	34.1	1304.0	1		0418	130	0.	34.9	1304.1	1		0738	230	21.	47.3	1306.1
1		0100	31	0.	34.1	1304.0	1		0420	131	0.	34.9	1304.1	1		0740	231	21.	47.3	1306.1
1		0102	32	0.	34.1	1304.0	1		0422	132	0.	35.0	1304.1	1		0742	232	21.	47.3	1306.1
1		0104	33	0.	34.1	1304.0	1		0424	133	0.	35.0	1304.2	1		0744	233	21.	47.3	1306.1
1		0106	34	0.	34.1	1304.0	1		0426	134	0.	35.1	1304.2	1		0746	234	20.	47.3	1306.1
1		0108	35	0.	34.1	1304.0	1		0428	135	0.	35.1	1304.2	1		0748	235	20.	47.3	1306.1
1		0110	36	0.	34.1	1304.0	1		0430	136	0.	35.2	1304.2	1		0750	236	20.	47.3	1306.0
1		0112	37	0.	34.1	1304.0	1		0432	137	0.	35.2	1304.2	1		0752	237	20.	47.3	1306.0
1		0114	38	0.	34.1	1304.0	1		0434	138	0.	35.3	1304.2	1		0754	238	20.	47.3	1306.0
1		0116	39	0.	34.1	1304.0	1		0436	139	0.	35.4	1304.2	1		0756	239	19.	47.3	1306.0
1		0118	40	0.	34.1	1304.0	1		0438	140	0.	35.5	1304.2	1		0758	240	19.	47.3	1306.0
1		0120	41	0.	34.1	1304.0	1		0440	141	0.	35.6	1304.2	1		0800	241	19.	47.3	1306.0
1		0122	42	0.	34.1	1304.0	1		0442	142	0.	35.7	1304.3	1		0802	242	19.	47.3	1306.0
1		0124	43	0.	34.1	1304.0	1		0444	143	0.	35.9	1304.3	1		0804	243	19.	47.2	1306.0
1		0126	44	0.	34.1	1304.0	1		0446	144	0.	36.0	1304.3	1		0806	244	19.	47.2	1306.0
1		0128	45	0.	34.1	1304.0	1		0448	145	0.	36.3	1304.3	1		0808	245	19.	47.2	1306.0
1		0130	46	0.	34.1	1304.0	1		0450	146	0.	36.5	1304.4	1		0810	246	19.	47.2	1306.0
1		0132	47	0.	34.1	1304.0	1		0452	147	0.	36.9	1304.4	1		0812	247	19.	47.2	1306.0
1		0134	48	0.	34.1	1304.0	1		0454	148	0.	37.3	1304.5	1		0814	248	19.	47.2	1306.0
1		0136	49	0.	34.1	1304.0	1		0456	149	0.	37.7	1304.6	1		0816	249	19.	47.3	1306.0
1		0138	50	0.	34.1	1304.0	1		0458	150	0.	38.3	1304.7	1		0818	250	19.	47.3	1306.0
1		0140	51	0.	34.1	1304.0	1		0500	151	0.	39.0	1304.8	1		0820	251	19.	47.3	1306.0
1		0142	52	0.	34.1	1304.0	1		0502	152	0.	40.0	1304.9	1		0822	252	19.	47.3	1306.0
1		0144	53	0.	34.1	1304.0	1		0504	153	0.	41.3	1305.1	1		0824	253	20.	47.3	1306.0
1		0146	54	0.	34.1	1304.0	1		0506	154	0.	43.0	1305.4	1		0826	254	20.	47.3	1306.0
1		0148	55	0.	34.1	1304.0	1		0508	155	0.	45.0	1305.7	1		0828	255	20.	47.3	1306.0
1		0150	56	0.	34.1	1304.0	1		0510	156	22.	47.3	1306.1	1		0830	256	20.	47.3	1306.0
1		0152	57	0.	34.1	1304.0	1		0512	157	350.	49.2	1306.3	1		0832	257	20.	47.3	1306.1

1	0154	58	0.	34.1	1304.0	*	1	0514	158	613.	50.2	1306.5	*	1	0834	258	20.	47.3	1306.1
1	0156	59	0.	34.1	1304.0	*	1	0516	159	715.	50.6	1306.5	*	1	0836	259	20.	47.3	1306.1
1	0158	60	0.	34.1	1304.0	*	1	0518	160	715.	50.6	1306.5	*	1	0838	260	20.	47.3	1306.1
1	0200	61	0.	34.1	1304.0	*	1	0520	161	668.	50.4	1306.5	*	1	0840	261	20.	47.3	1306.1
1	0202	62	0.	34.1	1304.0	*	1	0522	162	608.	50.2	1306.5	*	1	0842	262	20.	47.3	1306.1
1	0204	63	0.	34.1	1304.0	*	1	0524	163	544.	50.0	1306.5	*	1	0844	263	20.	47.3	1306.1
1	0206	64	0.	34.1	1304.0	*	1	0526	164	487.	49.7	1306.4	*	1	0846	264	20.	47.3	1306.0
1	0208	65	0.	34.1	1304.0	*	1	0528	165	434.	49.5	1306.4	*	1	0848	265	20.	47.3	1306.0
1	0210	66	0.	34.1	1304.0	*	1	0530	166	387.	49.3	1306.4	*	1	0850	266	20.	47.3	1306.0
1	0212	67	0.	34.1	1304.0	*	1	0532	167	347.	49.2	1306.3	*	1	0852	267	20.	47.3	1306.0
1	0214	68	0.	34.1	1304.0	*	1	0534	168	310.	49.0	1306.3	*	1	0854	268	20.	47.3	1306.0
1	0216	69	0.	34.1	1304.0	*	1	0536	169	279.	48.9	1306.3	*	1	0856	269	20.	47.3	1306.0
1	0218	70	0.	34.1	1304.0	*	1	0538	170	249.	48.7	1306.3	*	1	0858	270	20.	47.3	1306.0
1	0220	71	0.	34.1	1304.0	*	1	0540	171	221.	48.6	1306.2	*	1	0900	271	19.	47.3	1306.0
1	0222	72	0.	34.1	1304.0	*	1	0542	172	197.	48.5	1306.2	*	1	0902	272	19.	47.3	1306.0
1	0224	73	0.	34.1	1304.0	*	1	0544	173	174.	48.3	1306.2	*	1	0904	273	19.	47.3	1306.0
1	0226	74	0.	34.1	1304.0	*	1	0546	174	153.	48.2	1306.2	*	1	0906	274	19.	47.3	1306.0
1	0228	75	0.	34.1	1304.0	*	1	0548	175	136.	48.1	1306.2	*	1	0908	275	19.	47.3	1306.0
1	0230	76	0.	34.1	1304.0	*	1	0550	176	121.	48.0	1306.2	*	1	0910	276	19.	47.3	1306.0
1	0232	77	0.	34.1	1304.0	*	1	0552	177	108.	48.0	1306.2	*	1	0912	277	19.	47.2	1306.0
1	0234	78	0.	34.1	1304.0	*	1	0554	178	97.	47.9	1306.1	*	1	0914	278	19.	47.2	1306.0
1	0236	79	0.	34.1	1304.0	*	1	0556	179	88.	47.8	1306.1	*	1	0916	279	19.	47.2	1306.0
1	0238	80	0.	34.1	1304.0	*	1	0558	180	80.	47.8	1306.1	*	1	0918	280	18.	47.2	1306.0
1	0240	81	0.	34.1	1304.0	*	1	0600	181	74.	47.7	1306.1	*	1	0920	281	18.	47.2	1306.0
1	0242	82	0.	34.1	1304.0	*	1	0602	182	68.	47.7	1306.1	*	1	0922	282	18.	47.2	1306.0
1	0244	83	0.	34.1	1304.0	*	1	0604	183	64.	47.7	1306.1	*	1	0924	283	18.	47.2	1306.0
1	0246	84	0.	34.1	1304.0	*	1	0606	184	60.	47.6	1306.1	*	1	0926	284	18.	47.2	1306.0
1	0248	85	0.	34.1	1304.0	*	1	0608	185	57.	47.6	1306.1	*	1	0928	285	18.	47.2	1306.0
1	0250	86	0.	34.1	1304.0	*	1	0610	186	54.	47.6	1306.1	*	1	0930	286	18.	47.2	1306.0
1	0252	87	0.	34.1	1304.0	*	1	0612	187	51.	47.6	1306.1	*	1	0932	287	18.	47.2	1306.0
1	0254	88	0.	34.1	1304.0	*	1	0614	188	49.	47.5	1306.1	*	1	0934	288	17.	47.2	1306.0
1	0256	89	0.	34.1	1304.0	*	1	0616	189	48.	47.5	1306.1	*	1	0936	289	17.	47.2	1306.0
1	0258	90	0.	34.1	1304.0	*	1	0618	190	46.	47.5	1306.1	*	1	0938	290	17.	47.2	1306.0
1	0300	91	0.	34.1	1304.0	*	1	0620	191	45.	47.5	1306.1	*	1	0940	291	17.	47.2	1306.0
1	0302	92	0.	34.1	1304.0	*	1	0622	192	43.	47.5	1306.1	*	1	0942	292	17.	47.2	1306.0
1	0304	93	0.	34.1	1304.0	*	1	0624	193	42.	47.5	1306.1	*	1	0944	293	17.	47.2	1306.0
1	0306	94	0.	34.1	1304.0	*	1	0626	194	41.	47.5	1306.1	*	1	0946	294	17.	47.2	1306.0
1	0308	95	0.	34.2	1304.0	*	1	0628	195	40.	47.5	1306.1	*	1	0948	295	17.	47.2	1306.0
1	0310	96	0.	34.2	1304.0	*	1	0630	196	39.	47.5	1306.1	*	1	0950	296	17.	47.2	1306.0
1	0312	97	0.	34.2	1304.0	*	1	0632	197	38.	47.4	1306.1	*	1	0952	297	17.	47.2	1306.0
1	0314	98	0.	34.2	1304.0	*	1	0634	198	38.	47.4	1306.1	*	1	0954	298	16.	47.2	1306.0
1	0316	99	0.	34.2	1304.0	*	1	0636	199	37.	47.4	1306.1	*	1	0956	299	16.	47.2	1306.0
1	0318	100	0.	34.2	1304.0	*	1	0638	200	36.	47.4	1306.1	*	1	0958	300	16.	47.2	1306.0
						*							*						

****

PEAK FLOW	TIME		MAXIMUM AVERAGE FLOW			
			6-HR	24-HR	72-HR	9.97-HR
+ (CFS)	(HR)					
		(CFS)				
+ 715.	5.27		62.	37.	37.	37.
		(INCHES)	1.809	1.809	1.809	1.809
		(AC-FT)	31.	31.	31.	31.

PEAK STORAGE	TIME	MAXIMUM AVERAGE STORAGE			
		6-HR	24-HR	72-HR	9.97-HR
+ (AC-FT)	(HR)				
51.	5.27	45.	41.	41.	41.

PEAK STAGE	TIME	MAXIMUM AVERAGE STAGE			
		6-HR	24-HR	72-HR	9.97-HR
+ (FEET)	(HR)				
1306.54	5.27	1305.76	1305.06	1305.06	1305.06

CUMULATIVE AREA = .32 SQ MI

STATION BA14

(I) INFLOW, (O) OUTFLOW

	0.	100.	200.	300.	400.	500.	600.	700.	800.	900.	0.	0.	0.
								(S) STORAGE					
	0.	0.	0.	0.	0.	0.	30.	35.	40.	45.	50.	55.	0.

```
DAHRMN PER
 10000   1I---------.---------.---------.---------.---------.---------.------S-.---------.---------.---------.---------.---------.
10328 105I        .         .         .         .         .         .      S.         .         .         .         .         .
 10330 106I       .         .         .         .         .         .       S.        .         .         .         .         .
 10332 1070I      .         .         .         .         .         .       S.        .         .         .         .         .
 10334 1080I      .         .         .         .         .         .       S.        .         .         .         .         .
 10336 1090I      .         .         .         .         .         .       S.        .         .         .         .         .
 10338 1100I      .         .         .         .         .         .       S.        .         .         .         .         .
 10340 1110I.....................................................S.........................................
 10342 1120I      .         .         .         .         .         .       S.        .         .         .         .         .
 10344 1130I      .         .         .         .         .         .       S.        .         .         .         .         .
 10346 1140I      .         .         .         .         .         .       S.        .         .         .         .         .
 10348 1150I      .         .         .         .         .         .       S.        .         .         .         .         .
 10350 1160I      .         .         .         .         .         .       S.        .         .         .         .         .
 10352 1170I      .         .         .         .         .         .       S.        .         .         .         .         .
 10354 1180I      .         .         .         .         .         .       S.        .         .         .         .         .
 10356 1190I      .         .         .         .         .         .       S.        .         .         .         .         .
 10358 1200I      .         .         .         .         .         .       S.        .         .         .         .         .
 10400 1210I.....................................................S.........................................
 10402 1220I      .         .         .         .         .         .       S.        .         .         .         .         .
 10404 1230I      .         .         .         .         .         .       S.        .         .         .         .         .
 10406 1240I      .         .         .         .         .         .       S.        .         .         .         .         .
 10408 1250I      .         .         .         .         .         .       S.        .         .         .         .         .
 10410 1260I      .         .         .         .         .         .       S.        .         .         .         .         .
 10412 1270I      .         .         .         .         .         .        S        .         .         .         .         .
 10414 1280I      .         .         .         .         .         .        S        .         .         .         .         .
 10416 1290I      .         .         .         .         .         .        S        .         .         .         .         .
 10418 1300 I     .         .         .         .         .         .        S        .         .         .         .         .
 10420 1310 I....................................................S.........................................
 10422 1320 I     .         .         .         .         .         .        S        .         .         .         .         .
 10424 1330 I     .         .         .         .         .         .        S        .         .         .         .         .
 10426 1340 I     .         .         .         .         .         .        S        .         .         .         .         .
 10428 1350 I     .         .         .         .         .         .        S        .         .         .         .         .
 10430 1360 I     .         .         .         .         .         .        S        .         .         .         .         .
 10432 1370 I     .         .         .         .         .         .        S        .         .         .         .         .
 10434 1380  I    .         .         .         .         .         .        .S       .         .         .         .         .
 10436 1390  I    .         .         .         .         .         .        .S       .         .         .         .         .
 10438 1400  I    .         .         .         .         .         .        .S       .         .         .         .         .
 10440 1410 . I...................................................S.........................................
 10442 1420    I  .         .         .         .         .         .        .S       .         .         .         .         .
 10444 1430     I .         .         .         .         .         .        . S      .         .         .         .         .
 10446 1440      I.         .         .         .         .         .        . S      .         .         .         .         .
 10448 1450       I.        .         .         .         .         .        .  S     .         .         .         .         .
 10450 1460        .I       .         .         .         .         .        .  S     .         .         .         .         .
 10452 1470        . I      .         .         .         .         .        .   S    .         .         .         .         .
 10454 1480        .  I     .         .         .         .         .        .   S    .         .         .         .         .
 10456 1490        .     I. .         .         .         .         .        .   S    .         .         .         .         .
 10458 1500        .       . I        .         .         .         .        .    S   .         .         .         .         .
 10500 1510 ...............I.........................................S.........................................
 10502 1520        .         .         .         I         .         .        .     S  .         .         .         .         .
 10504 1530        .         .         .         .         . I       .        .      S .         .         .         .         .
 10506 1540        .         .         .         .         .         .      I .       S .         .         .         .         .
 10508 1550        .         .         .         .         .         .        .      I  S        .         .         .         .
 10510 156. O      .         .         .         .         .         .        .       I . S      .         .         .         .
 10512 157.        .         .         .   O     .         .         .        .        I .  S    .         .         .         .
 10514 158.        .         .         .         .         .        .O        .      I  .  S    .         .         .         .
 10516 159.        .         .         .         .         .         .       .O  I   .     .S    .         .         .         .
 10518 160.        .         .         .         .         .         .     I .O      .     .S    .         .         .         .
 10520 161.......................................I...O.................................S.........................
```

```
10522 162.         .         .         .         .         . I       .O        .         .         .         S         .         .
10524 163.         .         .         .         .     I   .   O     .         .         .         .         S         .         .
10526 164.         .         .         .         .I       O.         .         .         .         .        S.         .         .
10528 165.         .         .         .     I   .  O      .         .         .         .         .        S.         .         .
10530 166.         .         .         . I      O.         .         .         .         .         .        S.         .         .
10532 167.         .         .        I.    O    .         .         .         .         .         .       S .         .         .
10534 168.         .         .     I   .O        .         .         .         .         .         .       S .         .         .
10536 169.         .         .  I    O .         .         .         .         .         .         .       S .         .         .
10538 170.         .         I    O    .         .         .         .         .         .         .      S  .         .         .
10540 171. . . . . . . .I. . O . . . . . . . . . . . . . . . . . . . . . . . . . . . . . . . . . . . . .S. . . . . . . . . . .
10542 172.         .    I    O         .         .         .         .         .         .         .      S  .         .         .
10544 173.         .  I   O  .         .         .         .         .         .         .         .      S  .         .         .
10546 174.         .I   O    .         .         .         .         .         .         .         .     S   .         .         .
10548 175.         I   O     .         .         .         .         .         .         .         .     S   .         .         .
10550 176.        I. O       .         .         .         .         .         .         .         .     S   .         .         .
10552 177.       I .O        .         .         .         .         .         .         .         .     S   .         .         .
10554 178.      I  O         .         .         .         .         .         .         .         .     S   .         .         .
10556 179.      I O.         .         .         .         .         .         .         .         .     S   .         .         .
10558 180.     I O .         .         .         .         .         .         .         .         .     S   .         .         .
10600 181. . . IO. . . . . . . . . . . . . . . . . . . . . . . . . . . . . . . . . . . . . . . . . . . . .S. . . . . . . . . . . .
10602 182.    I O  .         .         .         .         .         .         .         .         .    S    .         .         .
10604 183.    IO   .         .         .         .         .         .         .         .         .    S    .         .         .
10606 184.    IO   .         .         .         .         .         .         .         .         .    S    .         .         .
10608 185.    IO   .         .         .         .         .         .         .         .         .    S    .         .         .
10610 186.    I    .         .         .         .         .         .         .         .         .    S    .         .         .
10612 187.   IO    .         .         .         .         .         .         .         .         .    S    .         .         .
10614 188.   IO    .         .         .         .         .         .         .         .         .    S    .         .         .
10616 189.   IO    .         .         .         .         .         .         .         .         .    S    .         .         .
10618 190.   IO    .         .         .         .         .         .         .         .         .    S    .         .         .
10620 191. . I . . . . . . . . . . . . . . . . . . . . . . . . . . . . . . . . . . . . . . . . . . . . .S. . . . . . . . . . . .
10622 192.   I     .         .         .         .         .         .         .         .         .    S    .         .         .
10624 193.   I     .         .         .         .         .         .         .         .         .    S    .         .         .
10626 194.   I     .         .         .         .         .         .         .         .         .    S    .         .         .
10628 195.   I     .         .         .         .         .         .         .         .         .    S    .         .         .
10630 196.   I     .         .         .         .         .         .         .         .         .    S    .         .         .
10632 197.   I     .         .         .         .         .         .         .         .         .    S    .         .         .
10634 198.   I     .         .         .         .         .         .         .         .         .    S    .         .         .
10636 199.  IO     .         .         .         .         .         .         .         .         .    S    .         .         .
10638 200.  IO     .         .         .         .         .         .         .         .         .    S    .         .         .
10640 201. .IO . . . . . . . . . . . . . . . . . . . . . . . . . . . . . . . . . . . . . . . . . . . . .S. . . . . . . . . . . .
10642 202.  I      .         .         .         .         .         .         .         .         .    S    .         .         .
10644 203.  I      .         .         .         .         .         .         .         .         .    S    .         .         .
10646 204.  I      .         .         .         .         .         .         .         .         .    S    .         .         .
10648 205.  I      .         .         .         .         .         .         .         .         .    S    .         .         .
10650 206.  I      .         .         .         .         .         .         .         .         .    S    .         .         .
10652 207.  I      .         .         .         .         .         .         .         .         .    S    .         .         .
10654 208.  I      .         .         .         .         .         .         .         .         .    S    .         .         .
10656 209.  I      .         .         .         .         .         .         .         .         .    S    .         .         .
10658 210.  I      .         .         .         .         .         .         .         .         .    S    .         .         .
10700 211. .I. . . . . . . . . . . . . . . . . . . . . . . . . . . . . . . . . . . . . . . . . . . . . .S. . . . . . . . . . . .
10702 212.  I      .         .         .         .         .         .         .         .         .    S    .         .         .
10704 213.  I      .         .         .         .         .         .         .         .         .    S    .         .         .
10706 214.  I      .         .         .         .         .         .         .         .         .    S    .         .         .
10708 215.  I      .         .         .         .         .         .         .         .         .    S    .         .         .
10710 216. IO      .         .         .         .         .         .         .         .         .    S    .         .         .
10712 217. IO      .         .         .         .         .         .         .         .         .    S    .         .         .
10714 218. IO      .         .         .         .         .         .         .         .         .    S    .         .         .
10716 219. IO      .         .         .         .         .         .         .         .         .    S    .         .         .
10718 220. I       .         .         .         .         .         .         .         .         .    S    .         .         .
```

RUNOFF SUMMARY
FLOW IN CUBIC FEET PER SECOND
TIME IN HOURS, AREA IN SQUARE MILES

	OPERATION	STATION	PEAK FLOW	TIME OF PEAK	AVERAGE FLOW FOR MAXIMUM PERIOD 6-HOUR	24-HOUR	72-HOUR	BASIN AREA	MAXIMUM STAGE	TIME OF MAX STAGE
+	HYDROGRAPH AT	DA14C	203.	5.10	18.	11.	11.	.06		
+	ROUTED TO	R14B	203.	5.13	18.	11.	11.	.06		
+	HYDROGRAPH AT	DA14B	423.	5.17	42.	26.	26.	.14		
+	2 COMBINED AT	C14B	622.	5.13	60.	37.	37.	.20		
+	ROUTED TO	R14A	607.	5.20	60.	37.	37.	.20		
+	HYDROGRAPH AT	DA14A	279.	5.17	28.	17.	17.	.12		
+	2 COMBINED AT	C14A	877.	5.20	88.	53.	53.	.32		
+	ROUTED TO	BA14	715.	5.27	62.	37.	37.	.32		
+									1306.54	5.27

1

```
                                        ****
                FLOOD HYDROGRAPH PACKAGE HEC-1 (IBM XT 512K VERSION) -FEB 1,1985
U.S. ARMY CORPS OF ENGINEERS, THE HYDROLOGIC ENGINEERING CENTER, 609 SECOND STREET, DAVIS, CA. 95616
                                        ****
```

THIS HEC-1 VERSION CONTAINS ALL OPTIONS EXCEPT ECONOMICS, AND THE NUMBER OF PLANS ARE REDUCED TO 3

1 HEC-1 INPUT PAGE 1

```
        LINE          ID.......1.......2.......3.......4.......5.......6.......7.......8.......9......10

*** FREE ***
           1          ID   OUTER LOOP HIGHWAY 51ST AVE DETENTION BASIN
           2          ID   DRAINAGE BASINS 14A, 14B AND 14C
           3          ID   100 YEAR STORM ROUTING
           4          ID    FILE 51AVB.IN   ****  BASIN DRAIN TIME  ****
                      *DIAGRAM
           5          IT      15                    198
           6          IO       5

           7          KK   DA14C
           8          KM   RUNOFF FROM 14C
           9          BA    0.06
          10          PH                   0.72    1.41    2.48    2.75    2.94    3.28    3.80    4.08
          11          LS             93
          12          UD     .12

          13          KK    R14B
          14          KM   ROUTE RUNOFF FROM 14C TO 14B
          15          RK    1000   .0068    .018           TRAP      8       2

          16          KK   DA14B
          17          KM   RUNOFF FROM 14B
          18          BA     .14
          19          LS             93
          20          UD     .16

          21          KK    C14B
          22          KM   COMBINE HYDROGRAPHS 14C AND 14B
          23          HC       2

          24          KK    R14A
          25          KM   ROUTE COMBINED RUNOFF FROM 14B TO 14A
          26          RK    3400   .0068    .018           TRAP      8       2

          27          KK   DA14A
          28          KM   RUNOFF FROM 14A
```

```
29          BA     .12
30          LS              85
31          UD     .16

32          KK    C14A
33          KM   COMBINE HYDROGRAGHS 14C, 14B AND 14A
34          HC       2

35          KK    BA14
36          KM   ROUTE COMBINED RUNOFF TO 51ST AVE DETENTION BASIN
37          KO       0       2
38          RS       1    STOR      -1       0
39          SV       0    5.22   10.62   16.20   21.97   27.92   34.06   40.40   46.93
40          SQ    8.95   11.35   13.40   15.23   16.88   18.41   19.83   21.18   22.45
41          SE    1298    1299    1300    1301    1302    1303    1304    1305    1306
42
43          ZZ
```

1

SCHEMATIC DIAGRAM OF STREAM NETWORK

```
INPUT
 LINE      (V) ROUTING          (--->) DIVERSION OR PUMP FLOW

  NO.      (.) CONNECTOR        (<---) RETURN OF DIVERTED OR PUMPED FLOW

   7       DA14C
              V
              V
  13        R14B
              .
              .
  16          .       DA14B
              .          .
              .          .
  21        C14B............
              V
              V
  24        R14A
              .
              .
  27          .       DA14A
              .          .
              .          .
  32        C14A............
              V
              V
  35        BA14
```

(***) RUNOFF ALSO COMPUTED AT THIS LOCATION

1

****

FLOOD HYDROGRAPH PACKAGE HEC-1 (IBM XT 512K VERSION) -FEB 1,1985

U.S. ARMY CORPS OF ENGINEERS, THE HYDROLOGIC ENGINEERING CENTER, 609 SECOND STREET, DAVIS, CA. 95616

****

```
                    OUTER LOOP HIGHWAY 51ST AVE DETENTION BASIN
                    DRAINAGE BASINS 14A, 14B AND 14C
                    100 YEAR STORM ROUTING
                     FILE 51AVB.IN   ****  BASIN DRAIN TIME  ****

  6 IO        OUTPUT CONTROL VARIABLES
                   IPRNT          5  PRINT CONTROL
                   IPLOT          0  PLOT CONTROL
                   QSCAL         0.  HYDROGRAPH PLOT SCALE

    IT        HYDROGRAPH TIME DATA
                    NMIN         15  MINUTES IN COMPUTATION INTERVAL
                   IDATE     1    0  STARTING DATE
                   ITIME       0000  STARTING TIME
                      NQ        198  NUMBER OF HYDROGRAPH ORDINATES
                  NDDATE     3    0  ENDING DATE
                  NDTIME       0115  ENDING TIME

              COMPUTATION INTERVAL     .25 HOURS
                   TOTAL TIME BASE   49.25 HOURS

        ENGLISH UNITS

WARNING *** TIME INTERVAL IS GREATER THAN .29*LAG

WARNING *** TIME INTERVAL IS GREATER THAN .29*LAG

WARNING *** TIME INTERVAL IS GREATER THAN .29*LAG


*** *** *** *** *** *** *** *** *** *** *** *** *** *** *** *** *** *** *** *** *** *** *** *** *** *** *** *** *** *** *** *** ***


          **************
          *            *
  35 KK   *      BA14  *
          *            *
          **************

  37 KO        OUTPUT CONTROL VARIABLES
                   IPRNT          5  PRINT CONTROL
                   IPLOT          2  PLOT CONTROL
                   QSCAL         0.  HYDROGRAPH PLOT SCALE

 ERROR 1     CARD NO.   42
1                                                STATION     BA14

                     (I) INFLOW,   (O) OUTFLOW
        0.      100.      200.      300.      400.      500.      600.      700.        0.        0.        0.        0.        0.
                                                                                   (S) STORAGE
        0.        0.        0.        0.        0.        0.        0.       10.       20.       30.       40.        0.        0.
 DAHRMN PER
  10000   1I---------.---------.---------.---------.---------.---------S---------.---------.---------.---------.---------.---------.
```

```
10015  2IO      .     .     .     .     .     S     .     .     .     .     .     .
10030  3IO      .     .     .     .     .     S     .     .     .     .     .     .
10045  4IO      .     .     .     .     .     S     .     .     .     .     .     .
10100  5IO      .     .     .     .     .     S     .     .     .     .     .     .
10115  6IO      .     .     .     .     .     S     .     .     .     .     .     .
10130  7IO      .     .     .     .     .     S     .     .     .     .     .     .
10145  8IO      .     .     .     .     .     S     .     .     .     .     .     .
10200  9IO      .     .     .     .     .     S     .     .     .     .     .     .
10215  10IO     .     .     .     .     .     S     .     .     .     .     .     .
10230  11IO.....................................S.....................................
10245  12IO     .     .     .     .     .     S     .     .     .     .     .     .
10300  13IO     .     .     .     .     .     S     .     .     .     .     .     .
10315  14IO     .     .     .     .     .     S     .     .     .     .     .     .
10330  15IO     .     .     .     .     .     S     .     .     .     .     .     .
10345  16IO     .     .     .     .     .     S     .     .     .     .     .     .
10400  17IO     .     .     .     .     .     S     .     .     .     .     .     .
10415  18IO     .     .     .     .     .     S     .     .     .     .     .     .
10430  19IO     .     .     .     .     .     S     .     .     .     .     .     .
10445  20IO     .     .     .     .     .     S     .     .     .     .     .     .
10500  21IO.....................................S.....................................
10515  22IO     .     .     .     .     .     S     .     .     .     .     .     .
10530  23IO     .     .     .     .     .     S     .     .     .     .     .     .
10545  24IO     .     .     .     .     .     S     .     .     .     .     .     .
10600  25IO     .     .     .     .     .     S     .     .     .     .     .     .
10615  26IO     .     .     .     .     .     S     .     .     .     .     .     .
10630  27IO     .     .     .     .     .     S     .     .     .     .     .     .
10645  28IO     .     .     .     .     .     S     .     .     .     .     .     .
10700  29IO     .     .     .     .     .     S     .     .     .     .     .     .
10715  30IO     .     .     .     .     .     S     .     .     .     .     .     .
10730  31IO.....................................S.....................................
10745  32IO     .     .     .     .     .     S     .     .     .     .     .     .
10800  33IO     .     .     .     .     .     S     .     .     .     .     .     .
10815  34IO     .     .     .     .     .     S     .     .     .     .     .     .
10830  35IO     .     .     .     .     .     S     .     .     .     .     .     .
10845  36IO     .     .     .     .     .     S     .     .     .     .     .     .
10900  37.I     .     .     .     .     .     S     .     .     .     .     .     .
10915  38.I     .     .     .     .     .     S     .     .     .     .     .     .
10930  39.I     .     .     .     .     .     S     .     .     .     .     .     .
10945  40.I     .     .     .     .     .     S     .     .     .     .     .     .
11000  41.I.....................................S.....................................
11015  42.I     .     .     .     .     .     S     .     .     .     .     .     .
11030  43.I     .     .     .     .     .     S     .     .     .     .     .     .
11045  44.I     .     .     .     .     .     S     .     .     .     .     .     .
11100  45.0I    .     .     .     .     .     S     .     .     .     .     .     .
11115  46.0I    .     .     .     .     .     S     .     .     .     .     .     .
11130  47.0 I   .     .     .     .     .     .S    .     .     .     .     .     .
11145  48.0   I .     .     .     .     .     .S    .     .     .     .     .     .
11200  49.0     .     I     .     .     .     .  S  .     .     .     .     .     .
11215  50.0     .     .     .     .     .     .   I . S   .     .     .     .     .
11230  51. 0...................................I.................S.................
11245  52. 0     .     . I   .     .     .     .     .     .     .S    .     .     .
11300  53. 0    .I     .     .     .     .     .     .     .     .  S  .     .     .
11315  54. 0  I .     .     .     .     .     .     .     .     .  S  .     .     .
11330  55. 0 I  .     .     .     .     .     .     .     .     .  S  .     .     .
11345  56. 0I   .     .     .     .     .     .     .     .     .  S  .     .     .
```

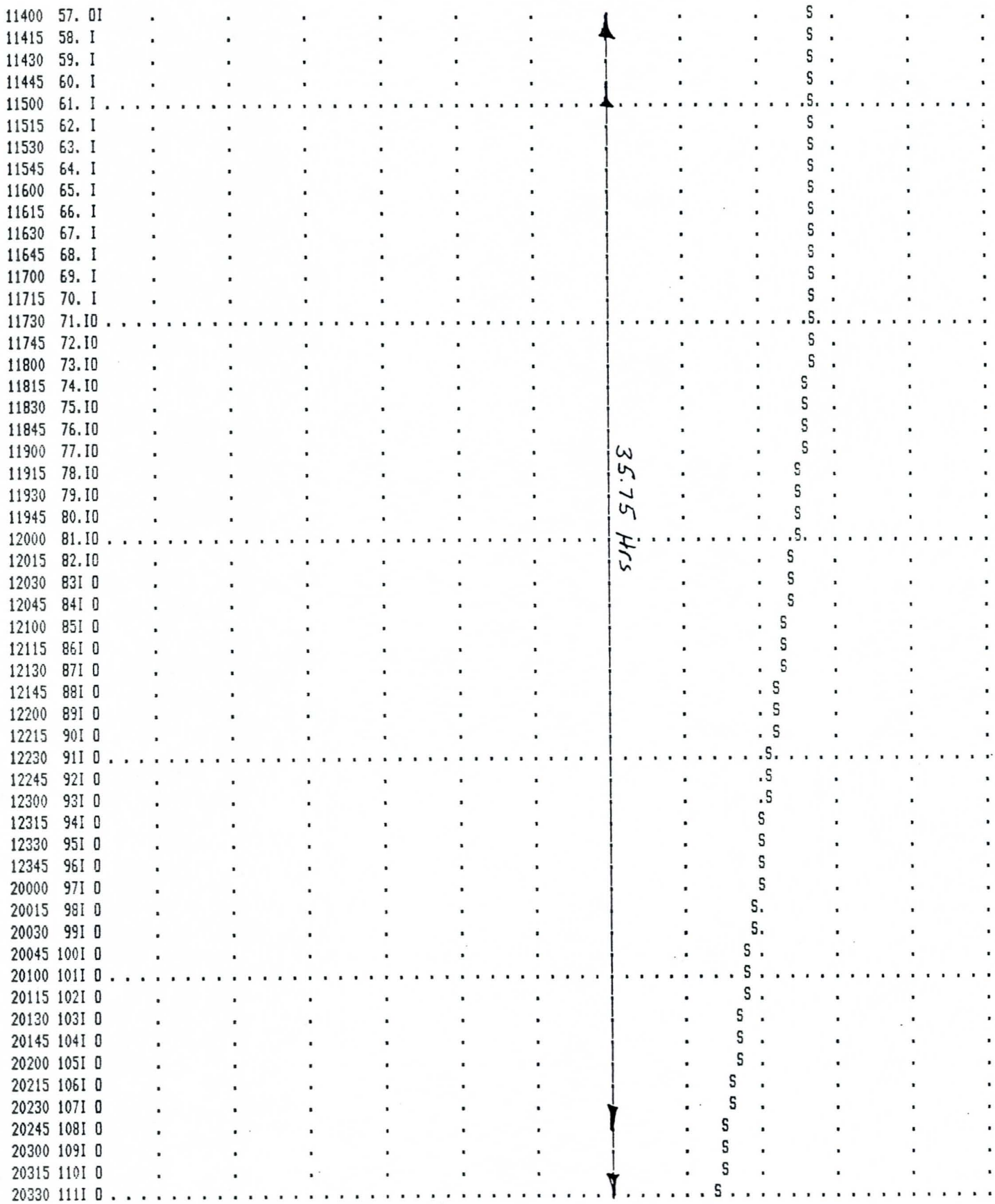
11400 57. OI
11415 58. I
11430 59. I
11445 60. I
11500 61. I
11515 62. I
11530 63. I
11545 64. I
11600 65. I
11615 66. I
11630 67. I
11645 68. I
11700 69. I
11715 70. I
11730 71.IO
11745 72.IO
11800 73.IO
11815 74.IO
11830 75.IO
11845 76.IO
11900 77.IO
11915 78.IO
11930 79.IO
11945 80.IO
12000 81.IO
12015 82.IO
12030 83I O
12045 84I O
12100 85I O
12115 86I O
12130 87I O
12145 88I O
12200 89I O
12215 90I O
12230 91I O
12245 92I O
12300 93I O
12315 94I O
12330 95I O
12345 96I O
20000 97I O
20015 98I O
20030 99I O
20045 100I O
20100 101I O
20115 102I O
20130 103I O
20145 104I O
20200 105I O
20215 106I O
20230 107I O
20245 108I O
20300 109I O
20315 110I O
20330 111I O
35.75 Hrs

```
20345 112I O                                                  S
20400 113I O                                                  S
20415 114I O                                                 S
20430 115I O                                                 S
20445 116I O                                                 S
20500 117I O                                                S
20515 118I O                                                S
20530 119I O                                                S
20545 120I O                                               S
20600 121I O                                               S
20615 122I O                                               S
20630 123I O                                              S
20645 124I O                                              S
20700 125I O                                              S
20715 126I O                                             S.
20730 127I O                                             S.
20745 128I O                                             S.
20800 129I O                                            S
20815 130I O                                            S
20830 131I O                                            S
20845 132I O                                           S
20900 133I O                                           S
20915 134I O                                           S
20930 135I O                                          S
20945 136I O                                          S
21000 137I O                                          S
21015 138IO                                          S
21030 139IO                                          S
21045 140IO                                          S
21100 141IO                                         S
21115 142IO                                         S
21130 143IO                                         S
21145 144IO                                         S
21200 145IO                                        S
21215 146IO                                        S
21230 147IO                                        S
21245 148IO                                       S
21300 149IO                                       S
21315 150IO                                       S
21330 151IO                                      S.
21345 152IO                                      S
21400 153IO                                      S
21415 154IO                                      S
21430 155IO                                     S
21445 156IO                                     S
21500 157IO                                     S
21515 158IO                                     S
21530 159IO                                    S.
21545 160IO                                    S.
21600 161IO                                    S.
21615 162IO                                    S.
21630 163IO                                   S
21645 164IO                                   S
21700 165IO                                   S
21715 166IO                                  S
```

35.75 HRS

```
21730 167IO      .         .         .         .         .         S         .         .         .         .         .         .
21745 168IO      .         .         .         .         .         S         .         .         .         .         .         .
21800 169IO      .         .         .         .         .         S         .         .         .         .         .         .
21815 170IO      .         .         .         .         .        S         .         .         .         .         .         .
21830 171IO.     .         .         .         .         .        S         .         .         .         .         .         .
21845 172IO      .         .         .         .         .        S         .         .         .         .         .         .
21900 173IO      .         .         .         .         .        S         .         .         .         .         .         .
21915 174IO      .         .         .         .         .        S         .         .         .         .         .         .
21930 175IO      .         .         .         .         .       S         .         .         .         .         .         .
21945 176IO      .         .         .         .         .       S         .         .         .         .         .         .
22000 177IO      .         .         .         .         .       S         .         .         .         .         .         .
22015 178IO      .         .         .         .         .       S         .         .         .         .         .         .
22030 179IO      .         .         .         .         .      S         .         .         .         .         .         .
22045 180IO      .         .         .         .         .      S         .         .         .         .         .         .
22100 181IO.     .         .         .         .         .      S         .         .         .         .         .         .
22115 182IO      .         .         .         .         .      S         .         .         .         .         .         .
22130 183IO      .         .         .         .         .     S         .         .         .         .         .         .
22145 184IO      .         .         .         .         .     S         .         .         .         .         .         .
22200 185IO      .         .         .         .         .     S         .         .         .         .         .         .
22215 186IO      .         .         .         .         .     S         .         .         .         .         .         .
22230 187IO      .         .         .         .         .     S         .         .         .         .         .         .
22245 188IO      .         .         .         .         .    S         .         .         .         .         .         .
22300 189IO      .         .         .         .         .    S         .         .         .         .         .         .
22315 190IO      .         .         .         .         .    S         .         .         .         .         .         .
22330 191IO.     .         .         .         .         .    S         .         .         .         .         .         .
22345 192IO      .         .         .         .         .    S         .         .         .         .         .         .
30000 193IO      .         .         .         .         .   S         .         .         .         .         .         .
30015 194IO      .         .         .         .         .   S         .         .         .         .         .         .
30030 195IO      .         .         .         .         .   S         .         .         .         .         .         .
30045 196IO      .         .         .         .         .   S         .         .         .         .         .         .
30100 197IO      .         .         .         .         .   S         .         .         .         .         .         .
30115 198IO--------.---------.---------.---------.---------S---------.---------.---------.---------.---------.---------.
1
1
```

35.75 HRS

RUNOFF SUMMARY
FLOW IN CUBIC FEET PER SECOND
TIME IN HOURS, AREA IN SQUARE MILES

	OPERATION	STATION	PEAK FLOW	TIME OF PEAK	AVERAGE FLOW FOR MAXIMUM PERIOD 6-HOUR	24-HOUR	72-HOUR	BASIN AREA	MAXIMUM STAGE	TIME OF MAX STAGE
+	HYDROGRAPH AT	DA14C	165.	12.25	19.	5.	3.	.06		
+	ROUTED TO	R14B	154.	12.25	19.	5.	3.	.06		
+	HYDROGRAPH AT	DA14B	349.	12.25	44.	12.	6.	.14		
+	2 COMBINED AT	C14B	503.	12.25	63.	18.	9.	.20		
	ROUTED TO									

```
+                    R14A      415.   12.25        63.        18.        9.        .20
HYDROGRAPH AT
+                    DA14A     239.   12.25        30.        8.         4.        .12
2 COMBINED AT
+                    C14A      654.   12.25        93.        26.        13.       .32
ROUTED TO
+                    BA14       21.   14.75        20.        18.        14.       .32
+                                                                                        1304.53      14.75
```

STANLEY/METTEE-McGILL-MURPHY
1450 EAST INDIAN SCHOOL ROAD
PHOENIX, ARIZONA 85014

JOB Outer Loop Highway
SHEET NO. _____ OF _____
CALCULATED BY MAL DATE 5-17-89
CHECKED BY _____ DATE _____
SCALE _____

51st Ave Detention Basin Low Flow

Outlet Pipe: 24" conc pipe (square edge with headwall)

Free flow = 12 cfs @ H/d = 1 (Inlet Control) H.E.C. #5
= 245.1 $\sqrt{S}$ = 245.1 $(.0018)^{1/2}$ = 10.4 cfs ⇐ controls

DESIGN DATA
TRAPEZOIDAL SECTION
WIDTH AT BOTTOM..... 6 FEET
SIDE SLOPE ON LEFT..... 4 /1
SIDE SLOPE ON RIGHT..... 4 /1

MANNING'S N..... .035
SLOPE..... .00280

EPTH FT.	W.AT TOP FT.	P.WET FT.	AREA (SQ.FT.)	VEL.FT/SEC	RATE CFS
0	6	6	0	0	0
.2	7.6	7.65	1.36	.71	.97
.4	9.2	9.3	3.04	1.07	3.25
.6	10.8	10.95	5.04	1.34	6.77
.8	12.4	12.6	7.36	1.57	11.59
1	14	14.25	10	1.78	17.79
1.2	15.6	15.9	12.96	1.97	25.48
1.4	17.2	17.54	16.24	2.14	34.75
1.6	18.8	19.19	19.84	2.3	45.69
1.8	20.4	20.84	23.76	2.46	58.41

$R_h = A/P$
0.58

****

Rip Rap Sizing

C = 1.3 (see fig 5-3-d)
D = 1 (straight section)
(SN) = 1.25
K = 0.86
G_s = 2.4
V = 1.57 cfs
R_h = 0.58

$$d_{50} = 0.0017 \left(\frac{1.3\,(1.25)}{0.86(1.4)}\right)^{1/2} \frac{(1.57)^3}{(0.58)^{1/2}}$$

$$= 0.0017\,(1.16)\,(5.08)$$

$$= 0.01'$$

use 6" dumped rip rap
(min. size)

Discharge from emergency spillways shall flow where, historically, the flows have gone. If the flow has to be diverted to the neighbor drainage area, the Consultant should consider a water course or measures which can minimize flood damage.

5.3.11 Riprap Design

1. Major Channels

Major channels, of greater than 1000 cfs, or where riprap is a critical element for safety, shall be designed in accordance with procedures outlined in Chapter 7, Geotechnical Procedures Manual.

2. Small Channels

A simplified method utilizing the formula as shown below may be used.

Average size equation:

$$d_{50} = 0.0017 \left(\frac{CD\,(SN)}{K\,(G_S - 1)} \right)^{1.5} \frac{V^3}{R^{1/2}}$$

d_{50} = Average size of cobbles, in inches, defined as 50 percent (by weight) of the riprap, will pass the sieve with meshes of this size.

C = Ratio of maximum to average boundary shear

D = Ratio of maximum boundary shear in bend to average boundary shear

K = Ratio of critical tractive shear force on side slope to critical tractive shear force on channel bed

SN = Stability number

V = Average velocity in the channel, fps.

R = Hydraulic radius, ft.

G_S = Specific gravity of rock

K Factor

$$K = 1 - \frac{\sin^2 \Theta}{\sin^2 \Phi}$$

Where:

Θ = Side slope angle

Φ = angle of repose of riprap

Riprap shall be angular rock with an angle of repose of 40° or larger. Use 40° for computation as follows:

slope	K
2:1	0.52
2.5:1	0.67
3:1	0.76
4:1	0.86
5:1	0.91
6:1	0.94

3. D Factor

$$D = \frac{2.65}{\sqrt{(r/w)}}$$

r = Radius of channel of center line

w = Channel top width

D = 1.0 for $r/w > 7.0$

4. C Factor

To be determined from Figure 5-3d

5. SN Values

Riprap shall have a stability number greater than:

Culvert outlets and minor channel- - - - - - - - - SN = 1.25

Roadway embankments and major channels- - - - - - SN =1.40

Bank protection at bridges - - - - - - - - - - - - - SN = 1.60

6. Size Distribution

Rock shall be sized assuming a specific gravity of 2.40, unless site specific information is available. By substituting C, D, K, SN, G_s, V, and R into the equation, d_{50} shall be determined.

Gradation of riprap shall be as follows:

		d_{50} class						
% Passing Rock	Gradation	6"	8"	12"	18"	24"	30"	36"
100-80	1.75 d_{50}	10	12	21	36	42	54	60
60-40	1.00 d_{50}	6	8	12	18	24	30	36
40-20	0.75 d_{50}	4	6	8	12	18	24	24
5-0	0.33 d_{50}	2	4	4	6	8	10	12

5.3.12 Pump Stations

1. General

For a depressed roadway, where gravity drainage is infeasible, a pump station incorporated with a storage reservoir shall be provided. Purpose of the reservoir is to reduce the peak discharge flowing into the drainage system, and to reduce initial capital and long-term operational costs of the pump station. Consultant shall refer to FHWA's publication "Manual for Highway Storm Water

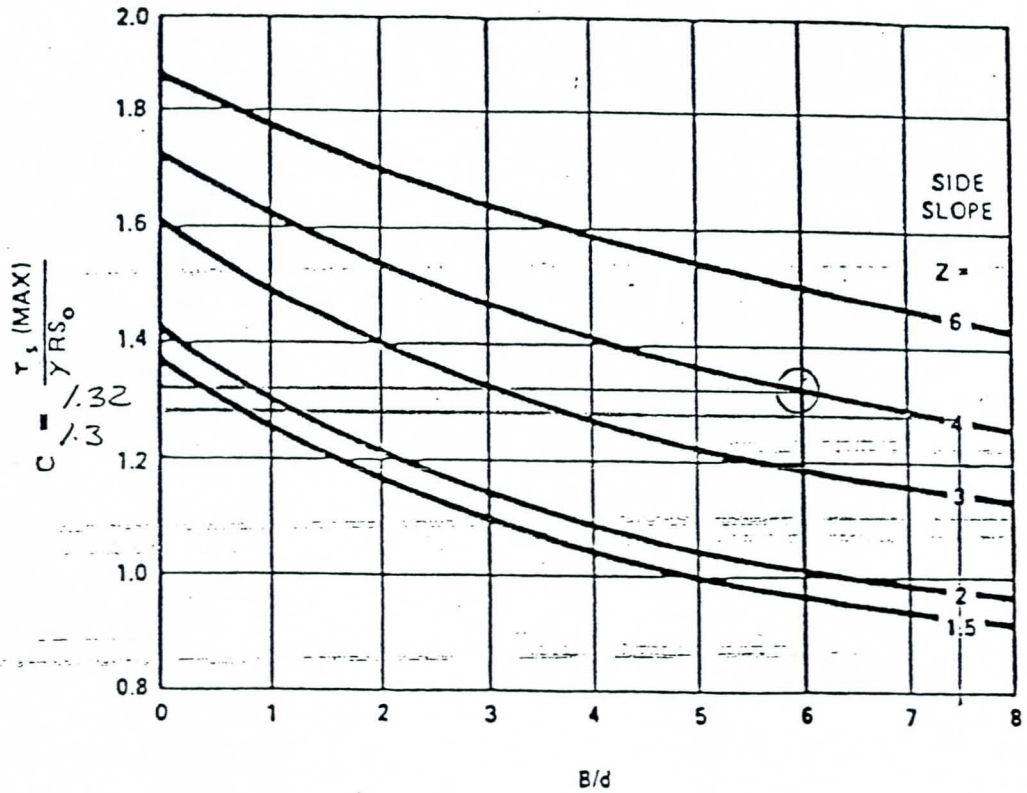

MAXIMUM BOUNDARY SHEAR STRESS
ON SIDES OF TRAPEZOIDAL CHANNELS

```
1*************************************************
* WATER SURFACE PROFILES                        *
* VERSION OF NOVEMBER 1976                      *
* UPDATED MAY 1984                              *
* IBM-PC-XT VERSION AUGUST 1985                 *
* RUN DATE  06-27-89   TIME  09:22:14           *
*************************************************
```

```
*************************************
* U.S. ARMY CORPS OF ENGINEERS      *
* THE HYDROLOGIC ENGINEERING CENTER *
* 609 SECOND STREET, SUITE D        *
* DAVIS, CALIFORNIA 95616           *
* (916) 440-2105 (FTS) 448-2105     *
*************************************
```

```
X     X  XXXXXXX  XXXXX            XXXXX
X     X  X       X    X           X    X
X     X  X       X                     X
XXXXXXX  XXXX    X         XXXXX   XXXXX
X     X  X       X                X
X     X  X       X    X           X
X     X  XXXXXXX  XXXXX            XXXXXXX
```

1

06-27-89 09:22:14 PAGE 1

THIS RUN EXECUTED 06-27-89

```
*************************************************
  HEC2 RELEASE DATED NOV 76 UPDATED MAY  1984
  ERROR CORR -  01,02,03,04,05,06
  MODIFICATION -  50,51,52,53,54,55,56
  IBM-PC-XT VERSION AUGUST 1985
*************************************************
```

FR FREE FORMAT
T1 CONC. LINED CHANNEL
T2 DETENTION BASIN TO 43RD AV. **SUPERCRITICAL *****
T3 STANLEY CONSULTANTS OF AZ.,INC.***** 51CHZ.IN ****

J1	ICHECK	INQ	NINV	IDIR	STRT	METRIC	HVINS	Q	WSEL	FQ
	0.	2.	0.	1.	-1.000000	.00	.0	0.	319.780	.000

J3 VARIABLE CODES FOR SUMMARY PRINTOUT

150.000	.000	.000	.000	.000	.000	.000	.000	.000	.000

NC	.030	.030	.018	.100	.300	.000	.000	.000	.000	.000
QT	1.000	235.000	.000	.000	.000	.000	.000	.000	.000	.000
X1	33500.000	7.000	990.000	1010.000	200.000	200.000	200.000	.000	.000	.000
GR	318.780	988.000	318.780	990.000	315.780	996.000	315.780	1000.000	315.780	1004.000
GR	318.780	1010.000	318.780	1012.000	.000	.000	.000	.000	.000	.000
X1	33300.000	.000	.000	.000	200.000	200.000	200.000	.000	-1.200	.000
X1	33100.000	.000	.000	.000	300.000	300.000	300.000	.000	-1.800	.000
X1	32800.000	.000	.000	.000	308.000	308.000	308.000	.000	-1.800	.000
X1	32492.000	.000	.000	.000	20.000	20.000	20.000	.000	-1.848	.000

```
NC      .000      .000      .012      .000      -.000      .000      .000      .000      .000      .000
SB      .000     1.560     2.600      .000     10.000      .000     50.000      .000   309.670   309.400
X1  32472.000     8.000   995.000  1005.000     40.000    40.000     40.000      .000      .000      .000
X2      .000      .000     1.000   314.670    315.670      .000      .000      .000      .000      .000
X3    10.000      .000      .000      .000       .000      .000      .000      .000      .000      .000
GR   314.670   991.000   314.670   993.000    314.670   995.000   309.670   995.000   309.670  1005.000
GR   314.670  1005.000   314.670  1007.000    314.670  1009.000      .000      .000      .000      .000
1
 06-27-89     09:22:14                                                                          PAGE    2


X1  32432.000      .000      .000      .000     1.000     1.000     1.000      .000     -.270      .000
X3    10.000      .000      .000      .000      .000      .000      .000      .000      .000      .000

NC      .000      .000      .018      .000      .000      .000      .000      .000      .000      .000
QT     1.000   560.000      .000      .000      .000      .000      .000      .000      .000      .000
X1  32433.000     8.000   995.000  1005.000    32.000    32.000    32.000      .000      .000      .000
GR   314.400   993.000   314.400   995.000   309.400   995.000   307.980   996.000   307.820  1004.000
GR   309.400  1005.000   314.400  1005.000   314.400  1007.000      .000      .000      .000      .000

QT     1.000   900.000      .000      .000      .000      .000      .000      .000      .000      .000
X1  32400.000     5.000   985.000  1015.000   200.000   200.000   200.000      .000      .000      .000
GR   313.180   985.000   307.760   996.000   307.680  1000.000   307.600  1004.000   313.180  1015.000

X1  32200.000      .000      .000      .000   200.000   200.000   200.000      .000    -1.360      .000

X1  32000.000      .000      .000      .000   200.000   200.000   200.000      .000    -1.360      .000

X1  31800.000      .000      .000      .000   200.000   200.000   200.000      .000    -1.360      .000

X1  31600.000      .000      .000      .000   200.000   200.000   200.000      .000    -1.360      .000

X1  31400.000      .000      .000      .000   200.000   200.000   200.000      .000    -1.360      .000

X1  31200.000      .000      .000      .000   104.000   104.000   104.000      .000    -1.360      .000

X1  31096.000      .000      .000      .000      .000      .000      .000      .000     -.710      .000
EJ      .000      .000      .000      .000      .000      .000      .000      .000      .000      .000
1
 06-27-89     09:22:14                                                                          PAGE    3


   SECNO    DEPTH    CWSEL    CRIWS    WSELK    EG       HV       HL       OLOSS   BANK ELEV
   Q        QLOB     QCH      QROB     ALOB     ACH      AROB     VOL      TWA   LEFT/RIGHT
   TIME     VLOB     VCH      VROB     XNL      XNCH     XNR      WTN      ELMIN     SSTA
   SLOPE    XLOBL    XLCH     XLOBR    ITRIAL   IDC      ICONT    CORAR    TOPWID    ENDST


*PROF 1


CCHV=    .100 CEHV=    .300
*SECNO 33500.000
3720 CRITICAL DEPTH ASSUMED
 33500.00     2.42   318.20   318.20   319.78   319.09      .89      .00      .00   318.78
    235.       0.     235.       0.       0.      31.       0.       0.       0.   318.78
     .00      .00     7.58      .00     .030     .018     .030     .000   315.78   991.17
  .004321       0.       0.       0.        0       13        0      .00    17.67  1008.83
0
*SECNO 33300.000
 33300.00     2.14   316.72   317.00      .00   317.97     1.25     1.08      .04   317.58
    235.       0.     235.       0.       0.      26.       0.       0.       0.   317.58
     .01      .00     8.99      .00     .030     .018     .030     .000   314.58   991.74
  .006956     200.     200.     200.        4        5        0      .00    16.53  1008.26
0
```

```
*SECNO 33100.000
 33100.00     1.97   314.75   315.20      .00   316.32     1.57     1.62      .03   315.78
    235.       0.     235.       0.       0.      23.       0.       0.       0.   315.78
     .01      .00    10.06      .00     .030     .018     .030     .000   312.78   992.08
  .009534     200.     200.     200.        6        8        0      .00    15.84  1007.92
0
*SECNO 32800.000

3301 HV CHANGED MORE THAN HVINS

3685 20 TRIALS ATTEMPTED WSEL,CWSEL
3693 PROBABLE MINIMUM SPECIFIC ENERGY
3720 CRITICAL DEPTH ASSUMED
 32800.00     2.42   313.40   313.40      .00   314.29      .89     1.85      .82   313.98
    235.       0.     235.       0.       0.      31.       0.       0.       0.   313.98
     .02      .00     7.57      .00     .030     .018     .030     .000   310.98   991.17
  .004320     300.     300.     300.       20       11        0      .00    17.67  1008.83
0
*SECNO 32492.000
 32492.00     2.11   311.24   311.55      .00   312.54     1.30     1.70      .04   312.13
    235.       0.     235.       0.       0.      26.       0.       1.       0.   312.13
     .03      .00     9.16      .00     .030     .018     .030     .000   309.13   991.80
  .007344     308.     308.     308.        4        5        0      .00    16.41  1008.20
0
1
 06-27-89     09:22:14                                                                    PAGE    4


   SECNO     DEPTH     CWSEL     CRIWS     WSELK     EG        HV        HL        OLOSS    BANK ELEV
   Q         QLOB      QCH       QROB      ALOB      ACH       AROB      VOL       TWA    LEFT/RIGHT
   TIME      VLOB      VCH       VROB      XNL       XNCH      XNR       WTN       ELMIN       SSTA
   SLOPE     XLOBL     XLCH      XLOBR     ITRIAL    IDC       ICONT     CORAR     TOPWID      ENDST


SPECIAL BRIDGE

SB  XK        XKOR      COFQ      RDLEN     BWC       BWP       BAREA     SS        ELCHU     ELCHD
      .00      1.56      2.60       .00     10.00       .00     50.00       .00    309.67    309.40

*SECNO 32472.000

6070,LOW FLOW BY NORMAL BRIDGE

EGPRS=      .000  EGLWC=   313.709  ELLC=   314.670  PCWSE=   311.238  ELTRD=   315.670

3370 NORMAL BRIDGE,NRD=  0 MIN ELTRD=  315.67 MAX ELLC=  314.67

3685 20 TRIALS ATTEMPTED WSEL,CWSEL
3693 PROBABLE MINIMUM SPECIFIC ENERGY
3720 CRITICAL DEPTH ASSUMED

3495 OVERBANK AREA ASSUMED NON-EFFECTIVE,ELLEA=      314.67 ELREA=      314.67

 32472.00     2.58   312.25   312.25      .00   313.54     1.29      .08      .11   314.67
    235.       0.     235.       0.       0.      26.       0.       1.       0.   314.67
     .03      .00     9.12      .00     .030     .012     .030     .000   309.67   995.00
  .002674      20.      20.      20.       20       12        0      .00    10.00  1005.00
0
*SECNO 32432.000

3495 OVERBANK AREA ASSUMED NON-EFFECTIVE,ELLEA=      314.40 ELREA=      314.40

 32432.00     2.22   311.62   311.97      .00   313.36     1.74      .13      .04   314.40
    235.       0.     235.       0.       0.      22.       0.       1.       0.   314.40
     .03      .00    10.59      .00     .030     .012     .030     .000   309.40   995.00
  .004123      40.      40.      40.        6        5        0      .00    10.00  1005.00
```

```
0
 *SECNO 32433.000

 3301 HV CHANGED MORE THAN HVINS

 3685 20 TRIALS ATTEMPTED WSEL,CWSEL
 3693 PROBABLE MINIMUM SPECIFIC ENERGY
 3720 CRITICAL DEPTH ASSUMED
  32433.00     4.81   312.63   312.63      .00   314.95     2.32      .01      .17   314.40
      560.       0.     560.       0.       0.      46.       0.       1.       0.   314.40
       .03      .00    12.22      .00     .030     .018     .030     .000   307.82   995.00
   .006338       1.       1.       1.       20       17        0      .00    10.00  1005.00
0
1
  06-27-89     09:22:14                                                                    PAGE    5

    SECNO     DEPTH     CWSEL     CRIWS     WSELK     EG        HV        HL        QLOSS    BANK ELEV
    Q         QLOB      QCH       QROB      ALOB      ACH       AROB      VOL       TWA    LEFT/RIGHT
    TIME      VLOB      VCH       VROB      XNL       XNCH      XNR       WTN       ELMIN      SSTA
    SLOPE     XLOBL     XLCH      XLOBR     ITRIAL    IDC       ICONT     CORAR     TOPWID     ENDST


 *SECNO 32400.000

 3301 HV CHANGED MORE THAN HVINS

  32400.00     4.14   311.74   312.61      .00   314.66     2.92      .24      .06   313.18
      900.       0.     900.       0.       0.      66.       0.       1.       0.   313.18
       .03      .00    13.71      .00     .030     .018     .030     .000   307.60   987.90
   .008097      32.      32.      32.       12        8        0      .00    24.27  1012.18
0
 *SECNO 32200.000
  32200.00     4.40   310.64   311.25      .00   313.08     2.45     1.43      .14   311.82
      900.       0.     900.       0.       0.      72.       0.       1.       1.   311.82
       .04      .00    12.56      .00     .030     .018     .030     .000   306.24   987.41
   .006381     200.     200.     200.        6       11        0      .00    25.25  1012.66
0
 *SECNO 32000.000
  32000.00     4.34   309.22   309.91      .00   311.76     2.55     1.31      .01   310.46
      900.       0.     900.       0.       0.      70.       0.       1.       1.   310.46
       .04      .00    12.80      .00     .030     .018     .030     .000   304.88   987.52
   .006727     200.     200.     200.        9        8        0      .00    25.03  1012.55
0
 *SECNO 31800.000
  31800.00     4.34   307.86   308.56      .00   310.41     2.55     1.35      .00   309.10
      900.       0.     900.       0.       0.      70.       0.       2.       1.   309.10
       .05      .00    12.82      .00     .030     .018     .030     .000   303.52   987.53
   .006758     200.     200.     200.        9        8        0      .00    25.01  1012.54
0
 *SECNO 31600.000
  31600.00     4.34   306.50   307.20      .00   309.06     2.56     1.35      .00   307.74
      900.       0.     900.       0.       0.      70.       0.       2.       1.   307.74
       .05      .00    12.85      .00     .030     .018     .030     .000   302.16   987.54
   .006790     200.     200.     200.        9        8        0      .00    24.99  1012.53
0
 *SECNO 31400.000
  31400.00     4.33   305.13   305.84      .00   307.70     2.57     1.36      .00   306.38
      900.       0.     900.       0.       0.      70.       0.       2.       1.   306.38
       .06      .00    12.85      .00     .030     .018     .030     .000   300.80   987.55
   .006800     200.     200.     200.        9        8        0      .00    24.98  1012.53
0
1
  06-27-89     09:22:14                                                                    PAGE    6
```

```
   SECNO     DEPTH     CWSEL     CRIWS     WSELK     EG        HV        HL        OLOSS     BANK ELEV
   Q         QLOB      QCH       QROB      ALOB      ACH       AROB      VOL       TWA     LEFT/RIGHT
   TIME      VLOB      VCH       VROB      XNL       XNCH      XNR       WTN       ELMIN       SSTA
   SLOPE     XLOBL     XLCH      XLOBR     ITRIAL    IDC       ICONT     CORAR     TOPWID      ENDST


*SECNO 31200.000
 31200.00     4.33    303.77    304.48       .00    306.34      2.57      1.36       .00    305.02
     900.       0.      900.        0.        0.       70.        0.        3.        1.    305.02
      .06      .00     12.86       .00      .030      .018      .030      .000    299.44    987.55
  .006802     200.      200.      200.         9         8         0       .00     24.98   1012.53
0
*SECNO 31096.000
 31096.00     4.31    303.04    303.77       .00    305.62      2.59       .71       .00    304.31
     900.       0.      900.        0.        0.       70.        0.        3.        1.    304.31
      .06      .00     12.91       .00      .030      .018      .030      .000    298.73    987.57
  .006882     104.      104.      104.         8         8         0       .00     24.93   1012.50
0
1
 06-27-89     09:22:14                                                                          PAGE    7


                                                                                THIS RUN EXECUTED 06-27-89

 ##############################################
  HEC2 RELEASE DATED NOV 76 UPDATED MAY  1984
  ERROR CORR -  01,02,03,04,05,06
  MODIFICATION -  50,51,52,53,54,55,56
  IBM-PC-XT VERSION AUGUST 1985
 ##############################################
```

STANLEY/METTEE-McGILL-MURPHY
1450 EAST INDIAN SCHOOL ROAD
PHOENIX, ARIZONA 85014

JOB OLH - 51st Av Detention Cha
SHEET NO. ____ OF ____
CALCULATED BY MAL DATE 6/27/89
CHECKED BY ____ DATE ____
SCALE ____

Freeboard Calculations

$F = 1/5\ (y + v^2/2g)$

Where:
F = freeboard in ft.
y = flow depth in ft.
v = velocity in fps
g = gravity, 32.2 ft/sec^2

For leveed channels where the water surface elevation is higher than natural ground, one-foot addition to the above freeboard shall be required.

The channel system will be checked to accommodate 120 percent of the design flow. Any deficiencies in the channel system shall be brought to the Management Consultant's attention along with mitigation measures.

SEC No. 32492 (See Hec 2 run)

$F = 1/5\ (2.11 + (9.16)^2/2(32.2)) = 0.68' \Rightarrow 1'$ min controls

SEC No. 31200 (See HEC 2 run)

$F = 1/5\ (4.33 + (12.86)^2/2(32.2)) = 1.38'$

PRODUCT 205-1 NEBS Inc Groton, Mass 01471 To Order PHONE TOLL FREE 1-800-225-6380

```
*************************************************
 HEC2 RELEASE DATED NOV 76 UPDATED MAY  1984
 ERROR CORR -  01,02,03,04,05,06
 MODIFICATION -  50,51,52,53,54,55,56
 IBM-PC-XT VERSION AUGUST 1985
*************************************************


T1 ****************************************
T2  ******** 20% EXCESS FOR FREEBOARD*******
T3 ****************************************

J1  ICHECK    INQ      NINV     IDIR     STRT     METRIC   HVINS    Q       WSEL     FQ

      0.       3.       0.       1. -1.000000      .00      .0       0.   320.000    .000

J2  NPROF    IPLOT    PRFVS    XSECV    XSECH     FN      ALLDC    IBW     CHNIM    ITRACE

     2.000    .000   -1.000    .000     .000     .000     .000    .000     .000     .000

1
 06-28-89    10:43:02                                                                    PAGE   2

   SECNO    DEPTH    CWSEL    CRIWS    WSELK    EG       HV       HL       OLOSS   BANK ELEV
   Q        QLOB     QCH      QROB     ALOB     ACH      AROB     VOL      TWA   LEFT/RIGHT
   TIME     VLOB     VCH      VROB     XNL      XNCH     XNR      WTN      ELMIN     SSTA
   SLOPE    XLOBL    XLCH     XLOBR    ITRIAL   IDC      ICONT    CORAR    TOPWID    ENDST


 *PROF 2


 CCHV=    .100 CEHV=    .300
 *SECNO 33500.000
 3720 CRITICAL DEPTH ASSUMED
  33500.00    2.67   318.45   318.45   320.00   319.42     .97     .00     .00   318.78
      282.      0.     282.      0.       0.      36.      0.      0.      0.    318.78
       .00     .00    7.90     .00     .030     .018    .030    .000   315.78   990.65
   .004218      0.      0.      0.        0       13       0     .00    18.70  1009.35
0
 *SECNO 33300.000
  33300.00    2.36   316.94   317.26     .00   318.32    1.38    1.06     .04   317.58
      282.      0.     282.      0.       0.      30.      0.      0.      0.    317.58
       .01     .00    9.43     .00     .030     .018    .030    .000   314.58   991.29
   .006882     200.    200.     200.       4        5       0     .00    17.42  1008.71
0
 *SECNO 33100.000
  33100.00    2.17   314.95   315.45     .00   316.68    1.73    1.50     .04   315.78
      282.      0.     282.      0.       0.      27.      0.      0.      0.    315.78
       .01     .00   10.57     .00     .030     .018    .030    .000   312.78   991.67
   .009470     200.    200.     200.       6        8       0     .00    16.66  1008.33
0
 *SECNO 32800.000

 3301 HV CHANGED MORE THAN HVINS

  32800.00    2.67   313.65   313.65     .00   314.62     .98    1.83     .23   313.98
      282.      0.     282.      0.       0.      36.      0.      0.      0.    313.98
       .02     .00    7.93     .00     .030     .018    .030    .000   310.98   990.66
   .004255     300.    300.     300.       2       11       0     .00    18.67  1009.34
0
```

```
*SECNO 32492.000
 32492.00     2.33   311.46   311.81      .00   312.89     1.43     1.68      .05   312.13
    282.        0.     282.       0.       0.      29.       0.       1.       0.   312.13
     .03       .00     9.61      .00     .030     .018     .030     .000   309.13   991.36
  .007263     308.     308.     308.        4        5        0      .00    17.28  1008.64
0
1
 06-28-89     10:43:02                                                                    PAGE    3


   SECNO    DEPTH    CWSEL    CRIWS    WSELK    EG       HV       HL       OLOSS   BANK ELEV
   Q        QLOB     QCH      QROB     ALOB     ACH      AROB     VOL      TWA   LEFT/RIGHT
   TIME     VLOB     VCH      VROB     XNL      XNCH     XNR      WTN      ELMIN     SSTA
   SLOPE    XLOBL    XLCH     XLOBR    ITRIAL   IDC      ICONT    CORAR    TOPWID    ENDST


SPECIAL BRIDGE

SB  XK       XKOR     COFQ     RDLEN    BWC      BWP      BAREA    SS       ELCHU    ELCHD
     .00     1.56     2.60      .00    10.00      .00    50.00      .00   309.67   309.40

*SECNO 32472.000

6070,LOW FLOW BY NORMAL BRIDGE

EGPRS=      .000  EGLNC=   314.276  ELLC=   314.670  PCWSE=   311.460  ELTRD=   315.670

3370 NORMAL BRIDGE,NRD=  0 MIN ELTRD=  315.67 MAX ELLC=  314.67

3685 20 TRIALS ATTEMPTED WSEL,CWSEL
3693 PROBABLE MINIMUM SPECIFIC ENERGY
3720 CRITICAL DEPTH ASSUMED

3495 OVERBANK AREA ASSUMED NON-EFFECTIVE,ELLEA=      314.67 ELREA=      314.67

 32472.00     2.90   312.57   312.57      .00   314.04     1.47      .08      .12   314.67
    282.        0.     282.       0.       0.      29.       0.       1.       0.   314.67
     .03       .00     9.72      .00     .030     .012     .030     .000   309.67   995.00
  .002740      20.      20.      20.       20       15        0      .00    10.00  1005.00
0
*SECNO 32432.000

3495 OVERBANK AREA ASSUMED NON-EFFECTIVE,ELLEA=      314.40 ELREA=      314.40

 32432.00     2.53   311.93   312.30      .00   313.86     1.93      .13      .05   314.40
    282.        0.     282.       0.       0.      25.       0.       1.       0.   314.40
     .03       .00    11.15      .00     .030     .012     .030     .000   309.40   995.00
  .004056      40.      40.      40.        6        5        0      .00    10.00  1005.00
0
*SECNO 32433.000

3301 HV CHANGED MORE THAN HVINS

3685 20 TRIALS ATTEMPTED WSEL,CWSEL
3693 PROBABLE MINIMUM SPECIFIC ENERGY
3720 CRITICAL DEPTH ASSUMED
 32433.00     5.40   313.22   313.22      .00   315.84     2.62      .01      .20   314.40
    672.        0.     672.       0.       0.      52.       0.       1.       0.   314.40
     .03       .00    12.99      .00     .030     .018     .030     .000   307.82   995.00
  .006625       1.       1.       1.       20       17        0      .00    10.00  1005.00
0
```

```
  SECNO    DEPTH    CWSEL    CRIWS    WSELK    EG       HV       HL       OLOSS   BANK ELEV
  Q        QLOB     QCH      QROB     ALOB     ACH      AROB     VOL      TWA   LEFT/RIGHT
  TIME     VLOB     VCH      VROB     XNL      XNCH     XNR      WTN      ELMIN      SSTA
  SLOPE    XLOBL    XLCH     XLOBR    ITRIAL   IDC      ICONT    CORAR    TOPWID     ENDST


*SECNO 32400.000

3301 HV CHANGED MORE THAN HVINS

 32400.00     4.40   312.00   313.11      .00   315.50     3.50      .26      .09   313.18
    1080.       0.    1080.       0.       0.      72.       0.       1.       0.   313.18
      .03      .00    15.02      .00     .030     .018     .030     .000   307.60   987.39
  .009104      32.      32.      32.       12        5        0      .00    25.29  1012.68
0
*SECNO 32200.000

3301 HV CHANGED MORE THAN HVINS

 32200.00     4.78   311.02   311.73      .00   313.74     2.72     1.52      .23   311.82
    1080.       0.    1080.       0.       0.      82.       0.       1.       1.   311.82
      .04      .00    13.23      .00     .030     .018     .030     .000   306.24   986.64
  .006465     200.     200.     200.        6       11        0      .00    26.77  1013.41
0
*SECNO 32000.000
 32000.00     4.73   309.61   310.39      .00   312.41     2.80     1.32      .01   310.46
    1080.       0.    1080.       0.       0.      80.       0.       2.       1.   310.46
      .04      .00    13.44      .00     .030     .018     .030     .000   304.88   986.73
  .006735     200.     200.     200.        7        8        0      .00    26.59  1013.32
0
*SECNO 31800.000
 31800.00     4.72   308.24   309.03      .00   311.06     2.82     1.35      .00   309.10
    1080.       0.    1080.       0.       0.      80.       0.       2.       1.   309.10
      .05      .00    13.48      .00     .030     .018     .030     .000   303.52   986.75
  .006791     200.     200.     200.       10        8        0      .00    26.55  1013.30
0
*SECNO 31600.000
 31600.00     4.74   306.90   307.67      .00   309.70     2.81     1.35      .00   307.74
    1080.       0.    1080.       0.       0.      80.       0.       2.       1.   307.74
      .05      .00    13.44      .00     .030     .018     .030     .000   302.16   986.73
  .006744     200.     200.     200.        9        8        0      .00    26.58  1013.32
0
*SECNO 31400.000
 31400.00     4.73   305.53   306.31      .00   308.35     2.82     1.35      .00   306.38
    1080.       0.    1080.       0.       0.      80.       0.       3.       1.   306.38
      .05      .00    13.47      .00     .030     .018     .030     .000   300.80   986.75
  .006783     200.     200.     200.        9        8        0      .00    26.56  1013.30
0
```



```
  SECNO    DEPTH    CWSEL    CRIWS    WSELK    EG       HV       HL       OLOSS   BANK ELEV
  Q        QLOB     QCH      QROB     ALOB     ACH      AROB     VOL      TWA   LEFT/RIGHT
  TIME     VLOB     VCH      VROB     XNL      XNCH     XNR      WTN      ELMIN      SSTA
  SLOPE    XLOBL    XLCH     XLOBR    ITRIAL   IDC      ICONT    CORAR    TOPWID     ENDST
```

```
*SECNO 31200.000
 31200.00     4.71   304.15   304.95     .00   306.98     2.83     1.36     .00   305.02
    1080.       0.    1080.       0.      0.      80.       0.       3.      1.   305.02
      .06      .00    13.50      .00    .030     .018     .030     .000   299.44   986.76
  .006830     200.     200.     200.      10       8        0      .00    26.53  1013.29
0
*SECNO 31096.000
 31096.00     4.70   303.43   304.24     .00   306.27     2.84      .71     .00   304.31
    1080.       0.    1080.       0.      0.      80.       0.       3.      1.   304.31
      .06      .00    13.53      .00    .030     .018     .030     .000   298.73   986.77
  .006862     104.     104.     104.       8       8        0      .00    26.51  1013.28
0
1
 06-28-89     10:43:02                                                                PAGE    6


                                                                    THIS RUN EXECUTED 06-28-89

 ***********************************************
  HEC2 RELEASE DATED NOV 76 UPDATED MAY  1984
  ERROR CORR -  01,02,03,04,05,06
  MODIFICATION -  50,51,52,53,54,55,56
  IBM-PC-XT VERSION AUGUST 1985
 ***********************************************


 J3   150
```

THIS RUN EXECUTED 06-28-89

```
**************************************************
 HEC2 RELEASE DATED NOV 76 UPDATED MAY  1984
 ERROR CORR -  01,02,03,04,05,06
 MODIFICATION -  50,51,52,53,54,55,56
 IBM-PC-XT VERSION AUGUST 1985
**************************************************
```

NOTE- ASTERISK (*) AT LEFT OF CROSS-SECTION NUMBER INDICATES MESSAGE IN SUMMARY OF ERRORS LIST

TANLEY CONSULTANTS OF AZ

SUMMARY PRINTOUT TABLE 150

	SECNO	XLCH	ELTRD	ELLC	ELMIN	Q 100	CWSEL	CRIWS	EG	10K*S	VCH	AREA	.01K
*	33500.000	.00	.00	.00	315.78	235.00	318.20	318.20	319.09	43.21	7.58	31.02	35.7
	33300.000	200.00	.00	.00	314.58	235.00	316.72	317.00	317.97	69.56	8.99	26.15	28.1
	33100.000	200.00	.00	.00	312.78	235.00	314.75	315.20	316.32	95.34	10.06	23.37	24.0
*	32800.000	300.00	.00	.00	310.98	235.00	313.40	313.40	314.29	43.20	7.57	31.02	35.7
	32492.000	308.00	.00	.00	309.13	235.00	311.24	311.55	312.54	73.44	9.16	25.65	27.4
*	32472.000	20.00	315.67	314.67	309.67	235.00	312.25	312.25	313.54	26.74	9.12	25.76	45.4
	32432.000	40.00	.00	.00	309.40	235.00	311.62	311.97	313.36	41.23	10.59	22.19	36.6
*	32433.000	1.00	.00	.00	307.82	560.00	312.63	312.63	314.95	63.38	12.22	45.82	70.3
	32400.000	32.00	.00	.00	307.60	900.00	311.74	312.61	314.66	80.97	13.71	65.66	100.0
	32200.000	200.00	.00	.00	306.24	900.00	310.64	311.25	313.08	63.81	12.56	71.68	112.6
	32000.000	200.00	.00	.00	304.88	900.00	309.22	309.91	311.76	67.27	12.80	70.30	109.7
	31800.000	200.00	.00	.00	303.52	900.00	307.86	308.56	310.41	67.58	12.82	70.18	109.4
	31600.000	200.00	.00	.00	302.16	900.00	306.50	307.20	309.06	67.90	12.85	70.05	109.2
	31400.000	200.00	.00	.00	300.80	900.00	305.13	305.84	307.70	68.00	12.85	70.02	109.1
	31200.000	200.00	.00	.00	299.44	900.00	303.77	304.48	306.34	68.02	12.86	70.01	109.1
	31096.000	104.00	.00	.00	298.73	900.00	303.04	303.77	305.62	68.82	12.91	69.71	108.4

TANLEY CONSULTANTS OF AZ

SUMMARY PRINTOUT TABLE 150

	SECNO	Q	CWSEL	DIFWSP	DIFWSX	DIFKWS	TOPWID	XLCH
*	33500.000	235.00	318.20	.00	.00	-1.58	17.67	.00
	33300.000	235.00	316.72	.00	-1.48	.00	16.53	200.00
	33100.000	235.00	314.75	.00	-1.97	.00	15.84	200.00
*	32800.000	235.00	313.40	.00	-1.35	.00	17.67	300.00
	32492.000	235.00	311.24	.00	-2.16	.00	16.41	308.00
*	32472.000	235.00	312.25	.00	1.01	.00	10.00	20.00
	32432.000	235.00	311.62	.00	-.63	.00	10.00	40.00
*	32433.000	560.00	312.63	.00	1.01	.00	10.00	1.00
	32400.000	900.00	311.74	.00	-.89	.00	24.27	32.00
	32200.000	900.00	310.64	.00	-1.10	.00	25.25	200.00
	32000.000	900.00	309.22	.00	-1.42	.00	25.03	200.00
	31800.000	900.00	307.86	.00	-1.36	.00	25.01	200.00
	31600.000	900.00	306.50	.00	-1.36	.00	24.99	200.00
	31400.000	900.00	305.13	.00	-1.36	.00	24.98	200.00
	31200.000	900.00	303.77	.00	-1.36	.00	24.98	200.00
	31096.000	900.00	303.04	.00	-.74	.00	24.93	104.00

LEGEND: ▽ 120% Q_{100}
▼ 100 yr Q

CROSS-SECTION NO. 33500.000

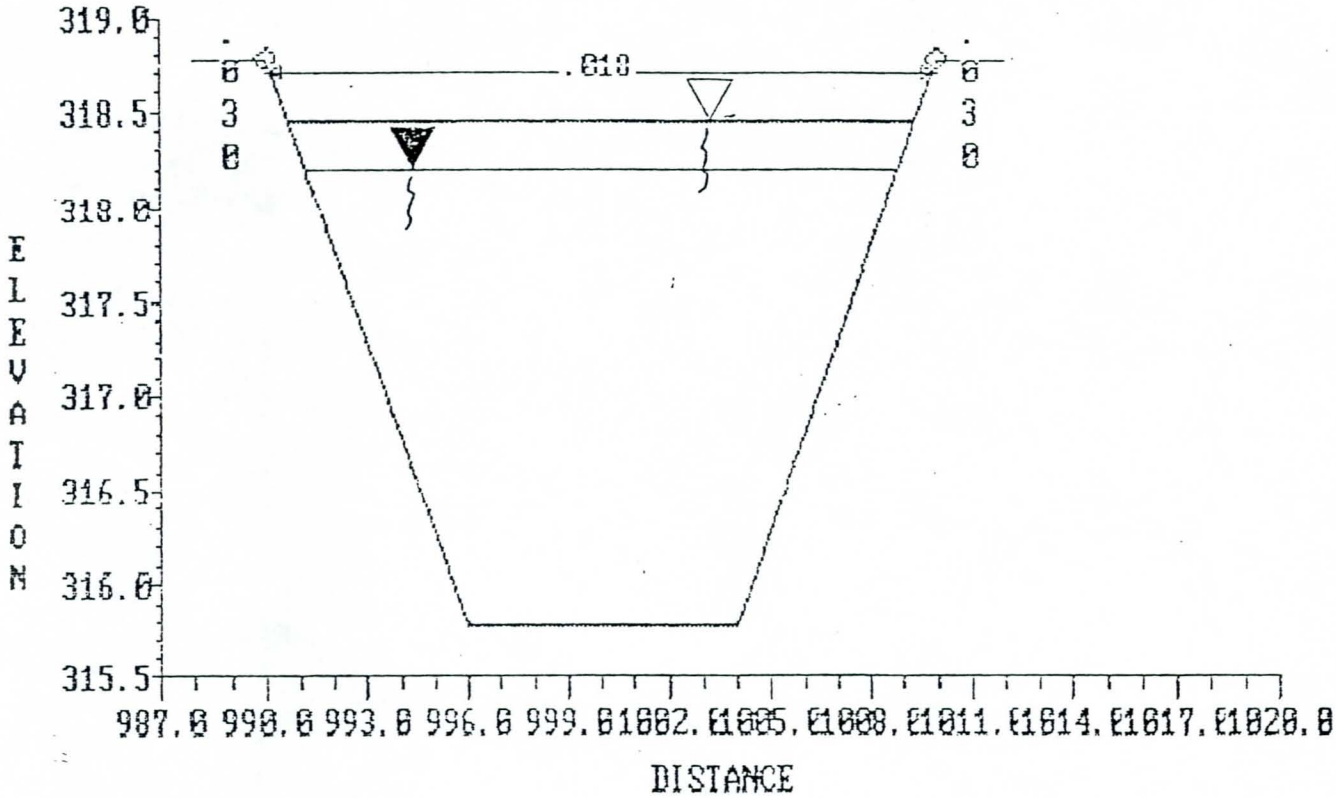

CROSS-SECTION NO. 33300.000

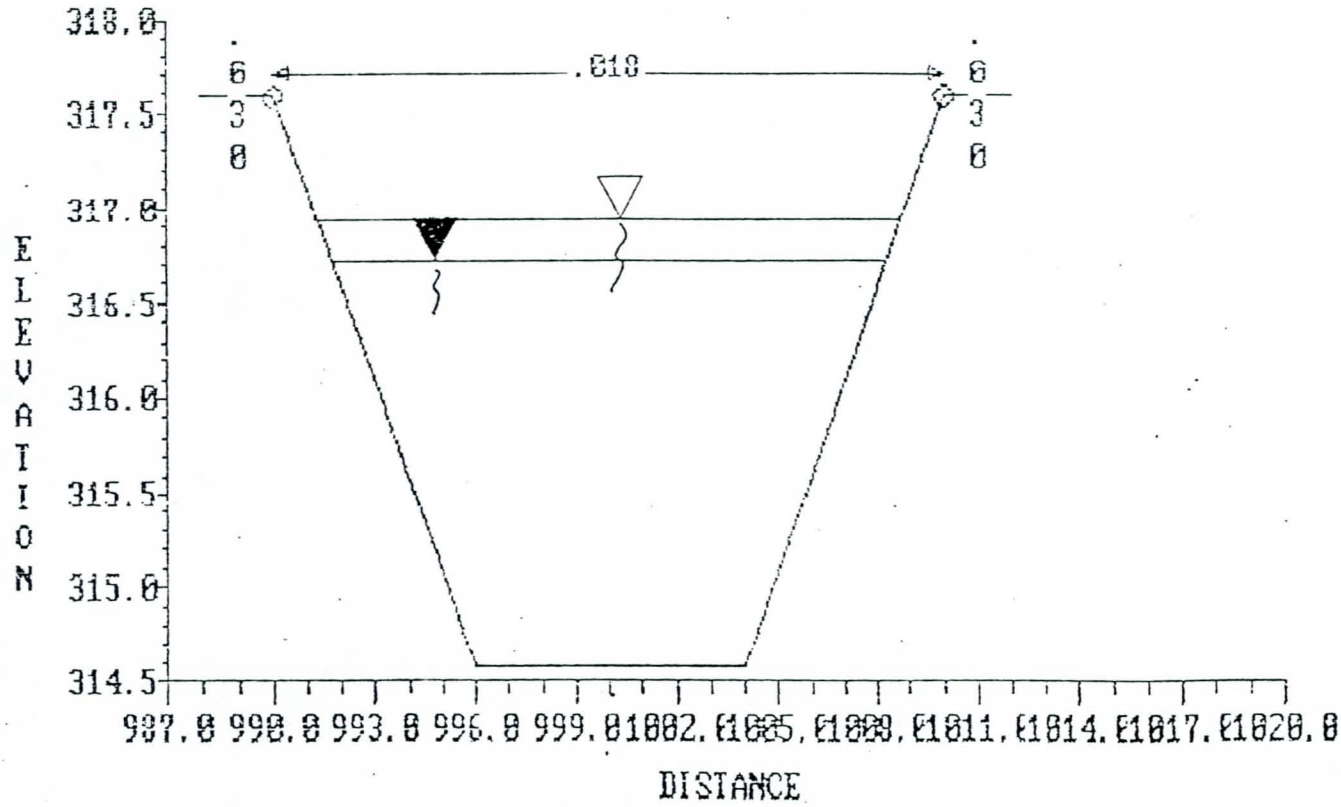

CROSS-SECTION NO. 33100.000

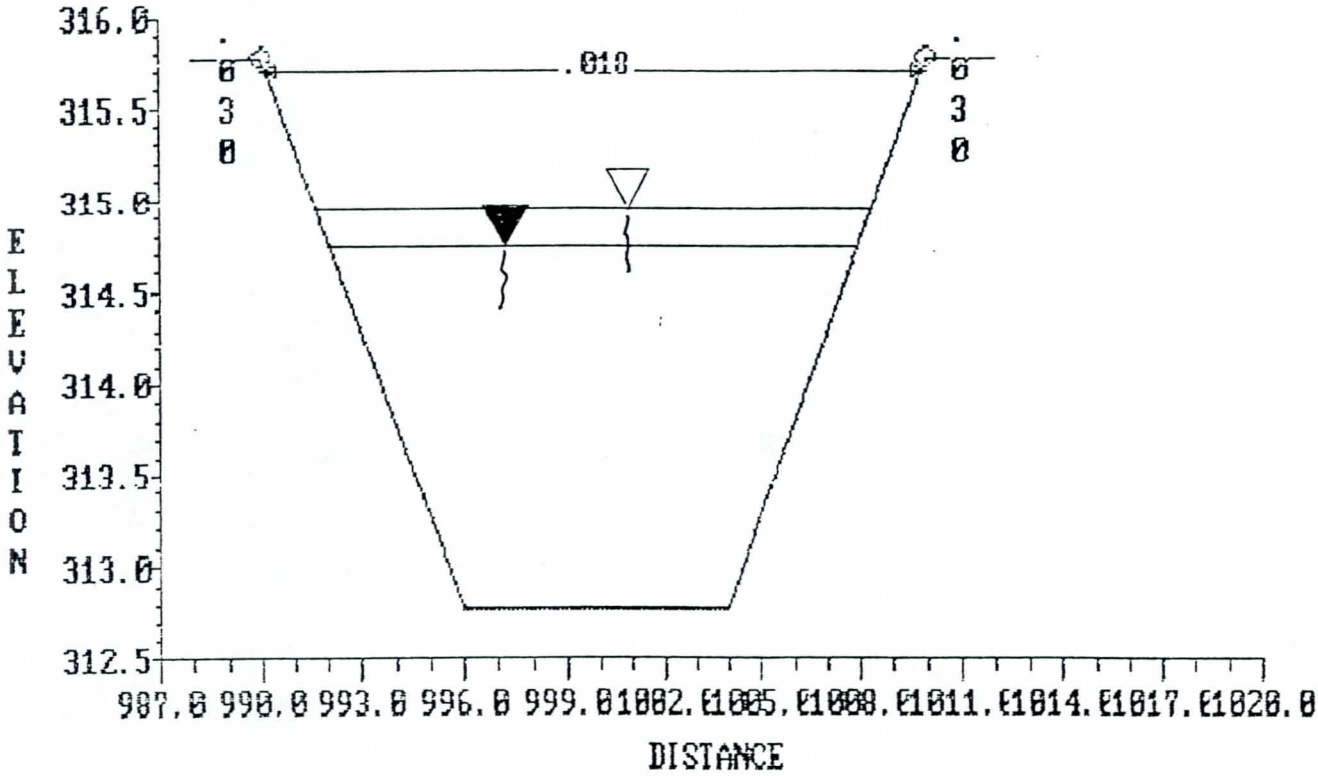

CROSS-SECTION NO. 32800.000

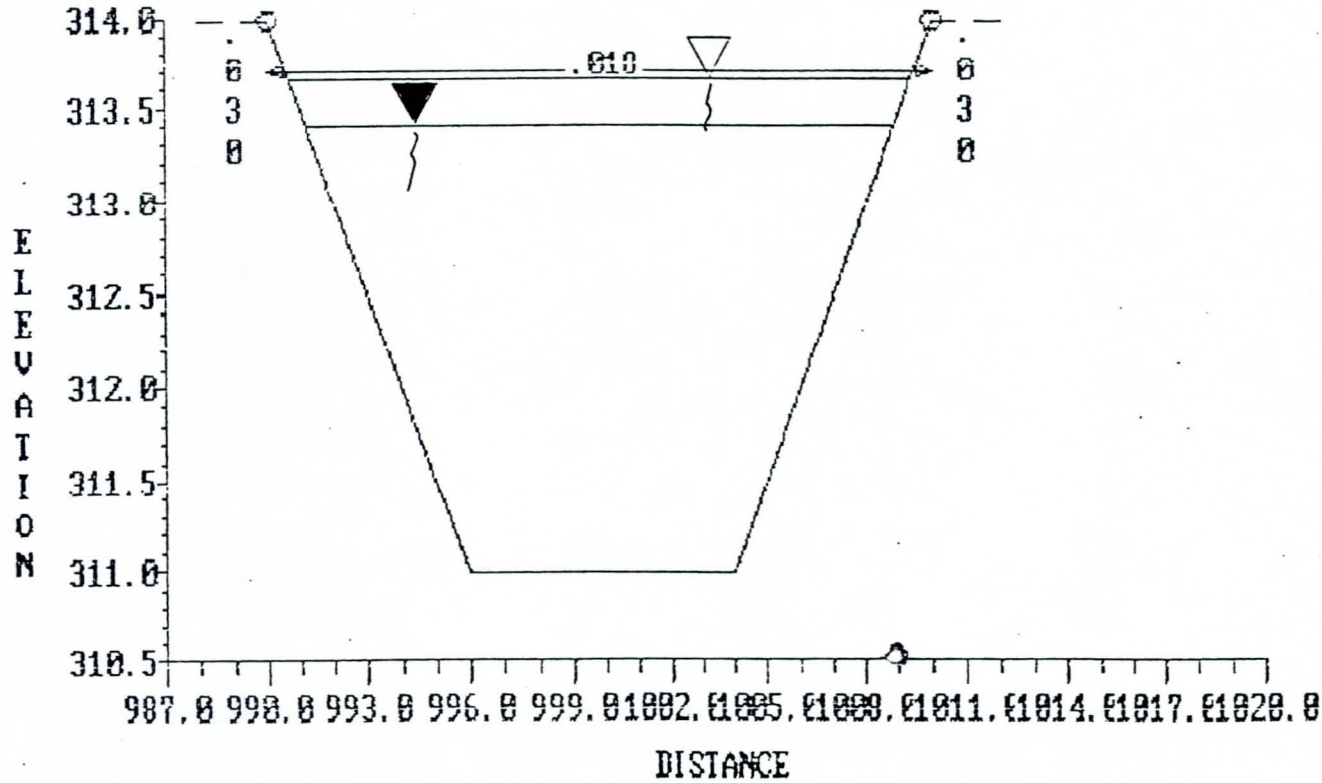

CROSS-SECTION NO. 32492.000

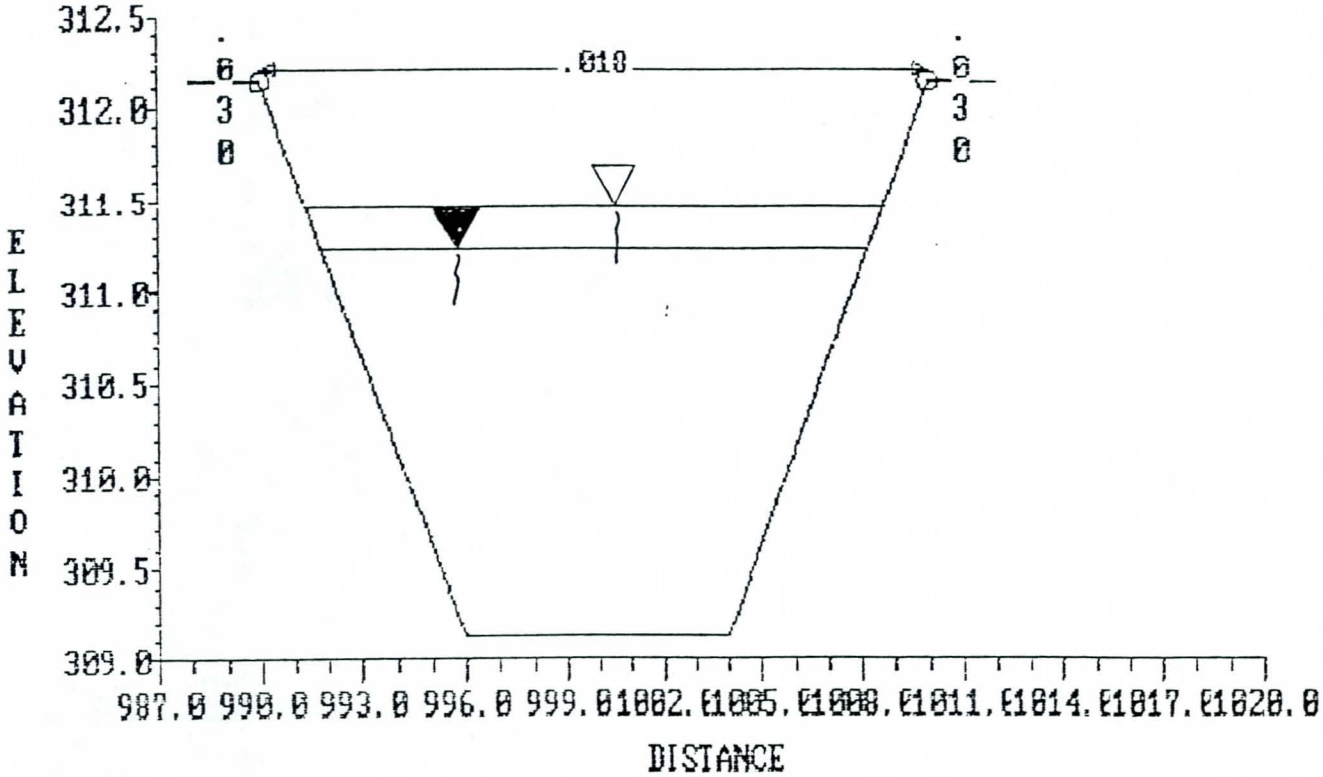

CROSS-SECTION NO. 32472.000

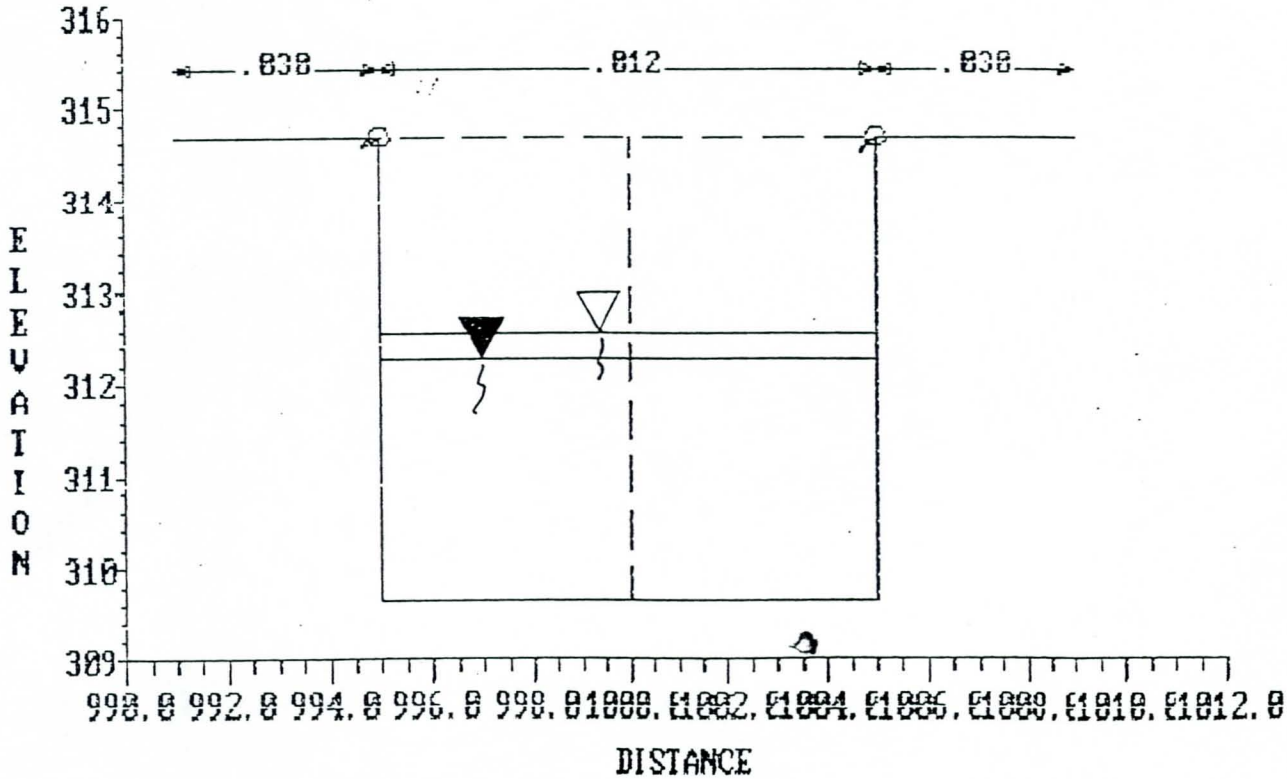

CROSS-SECTION NO. 32432.000

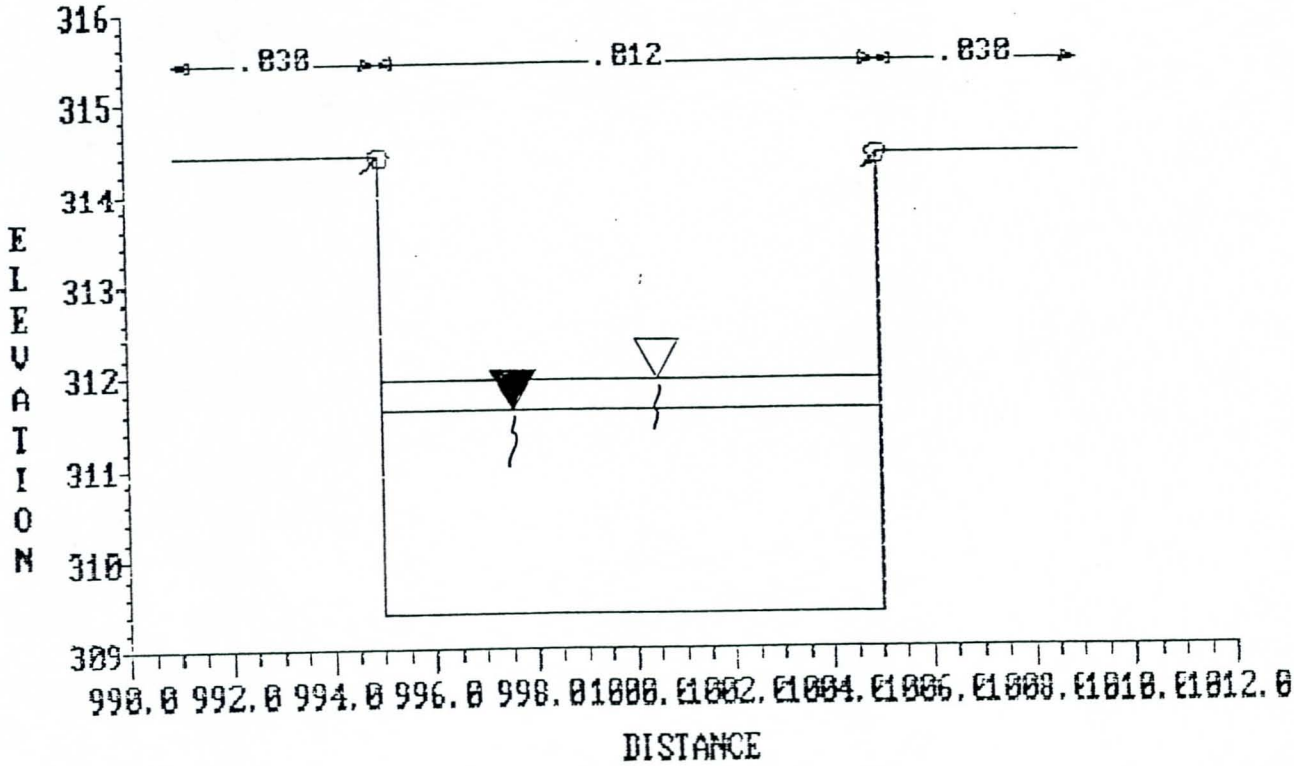

CROSS-SECTION NO. 32433.000

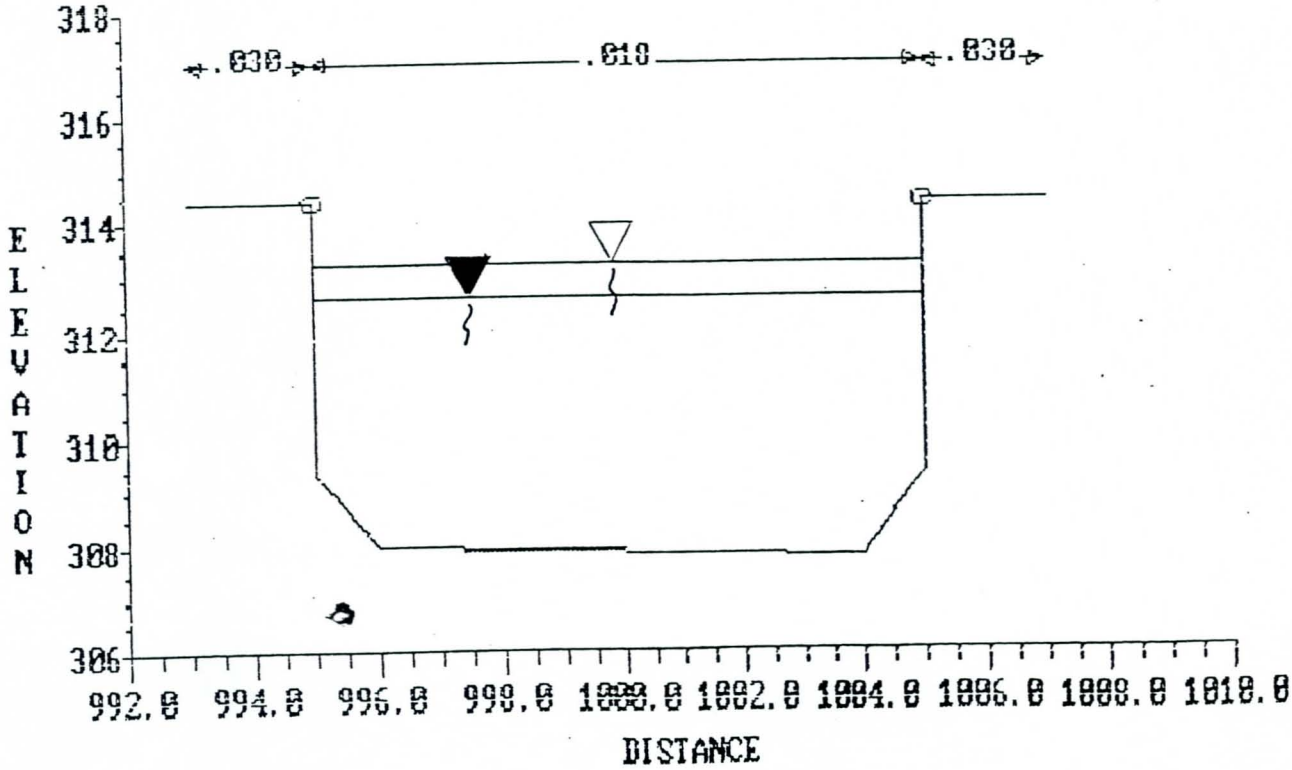

CROSS-SECTION NO. 32400.000

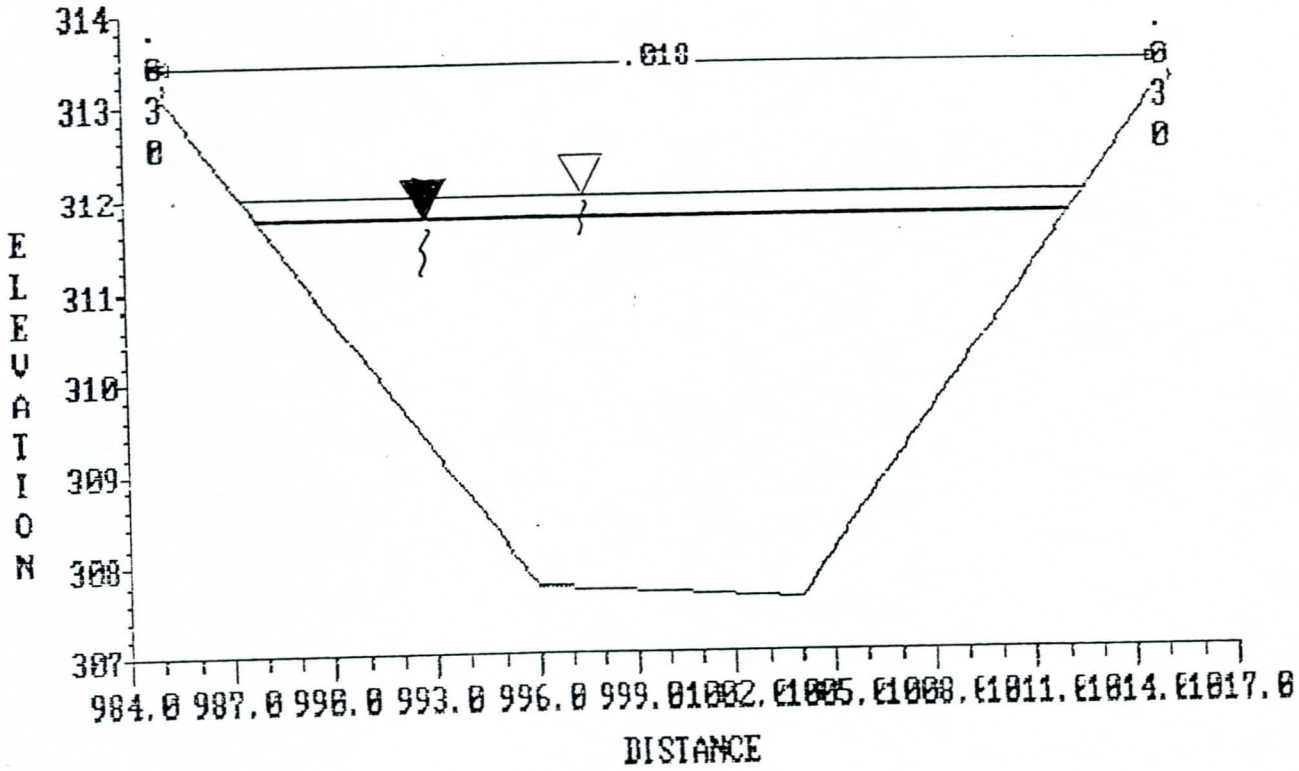

CROSS-SECTION NO. 32200.000

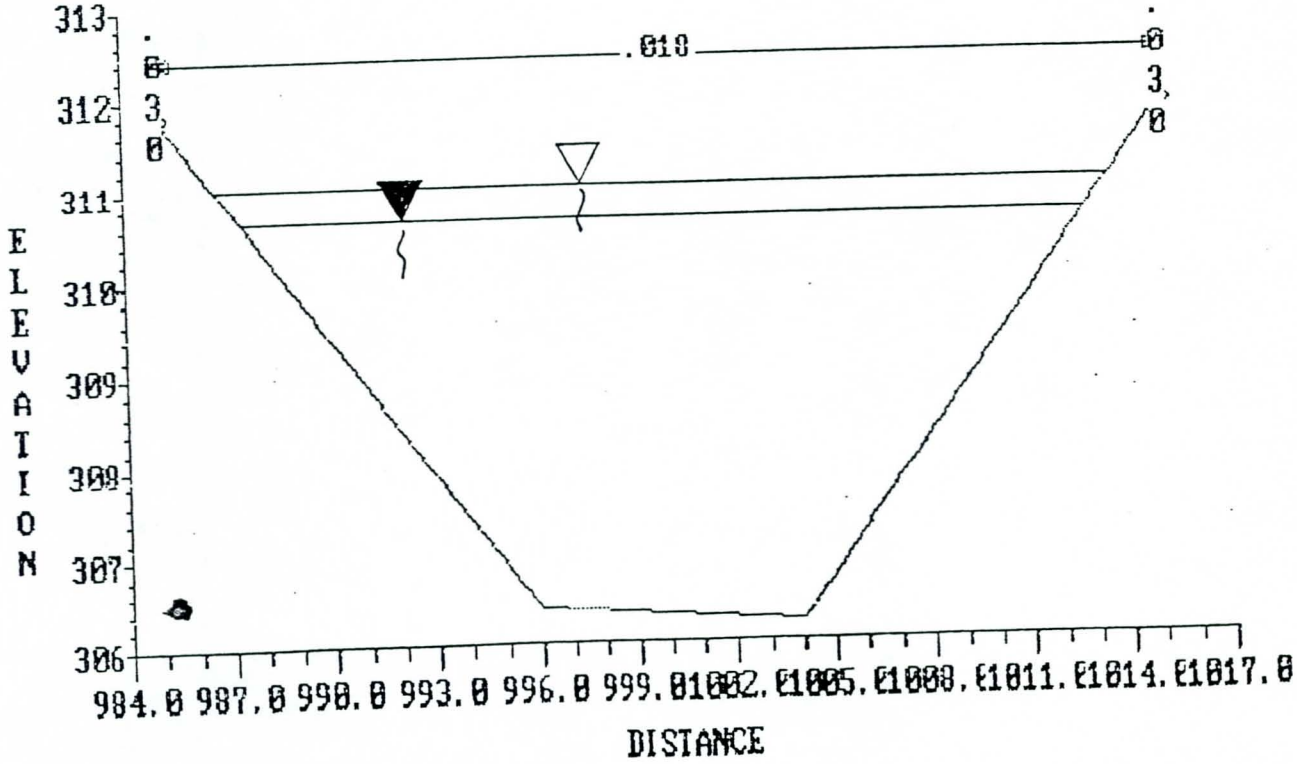

CROSS-SECTION NO. 32000.000

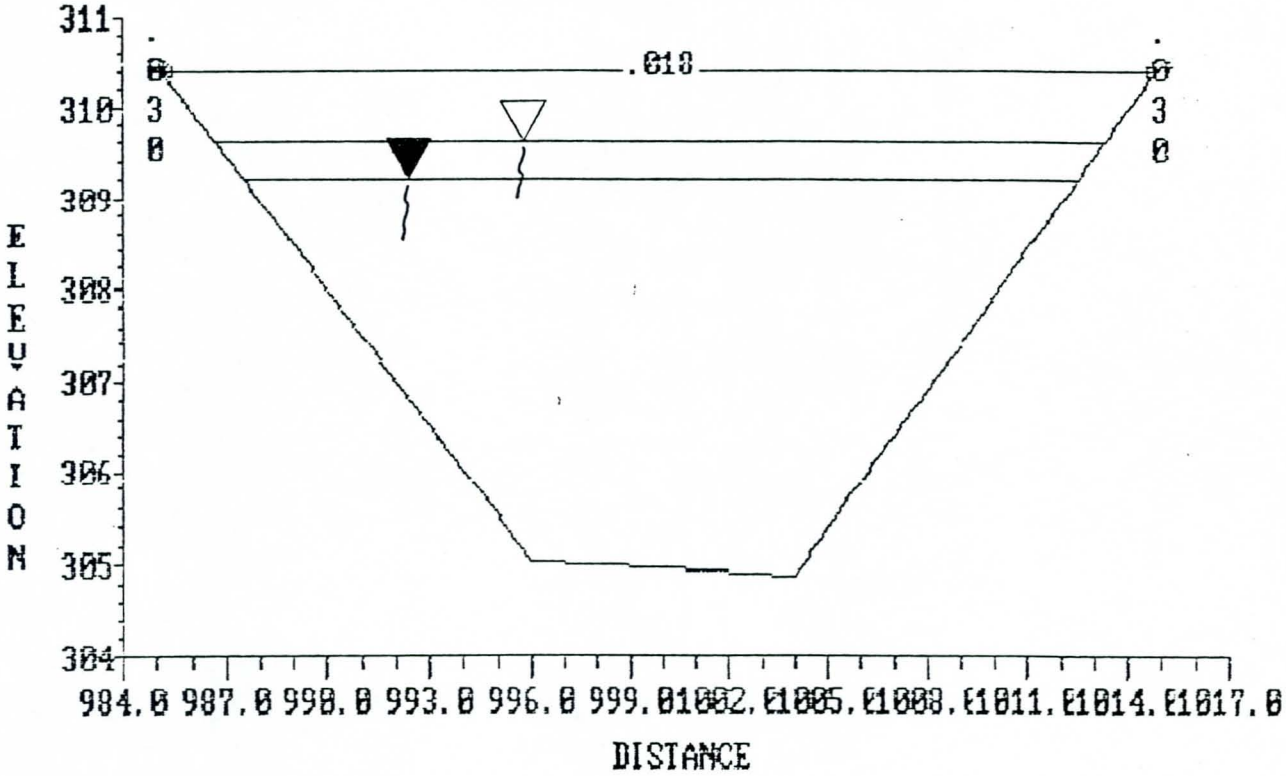

CROSS-SECTION NO. 31800.000

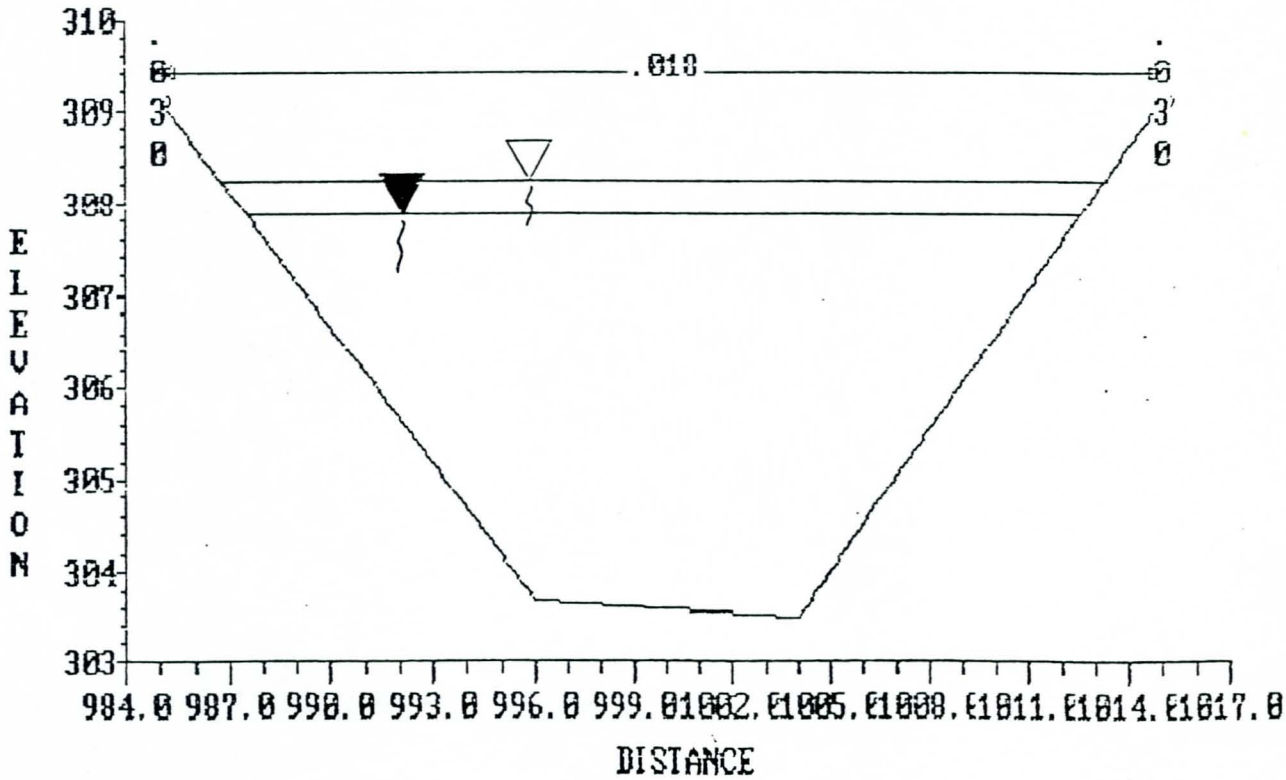

CROSS-SECTION NO. 31600.000

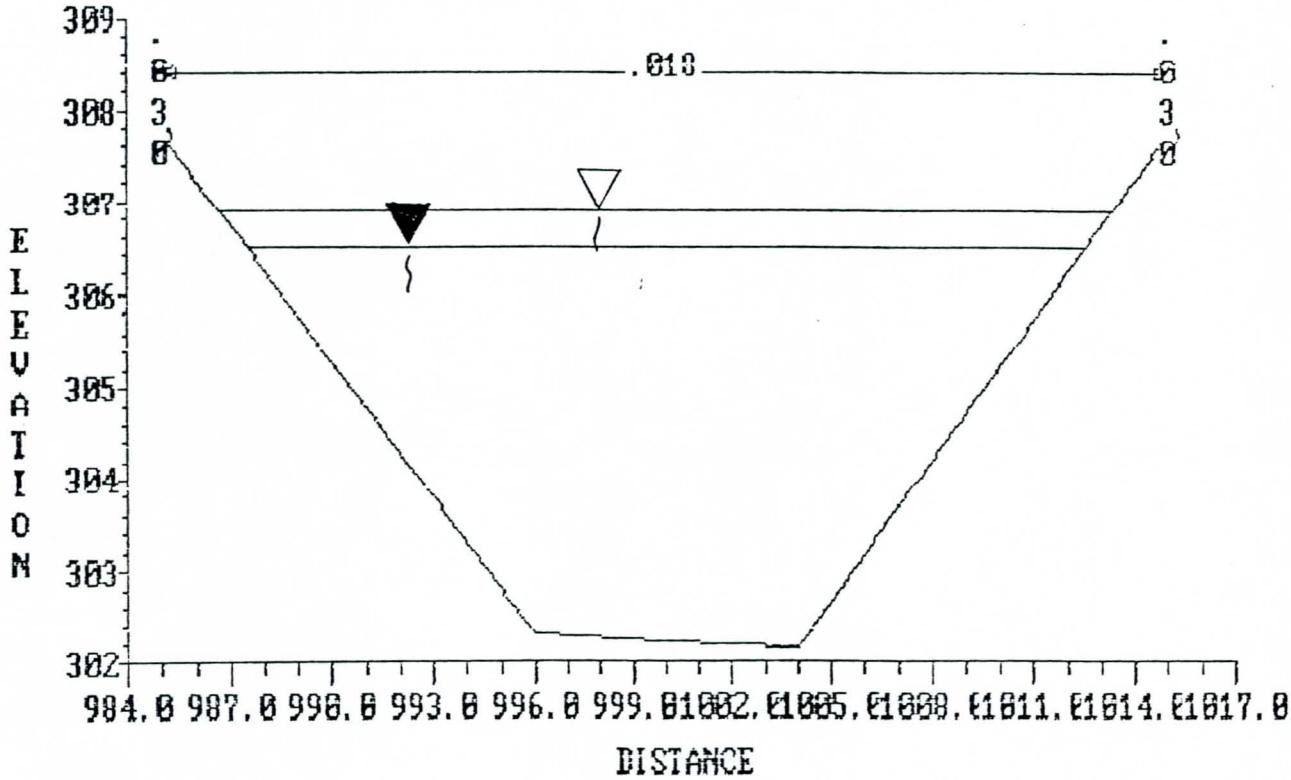

CROSS-SECTION NO. 31400.000

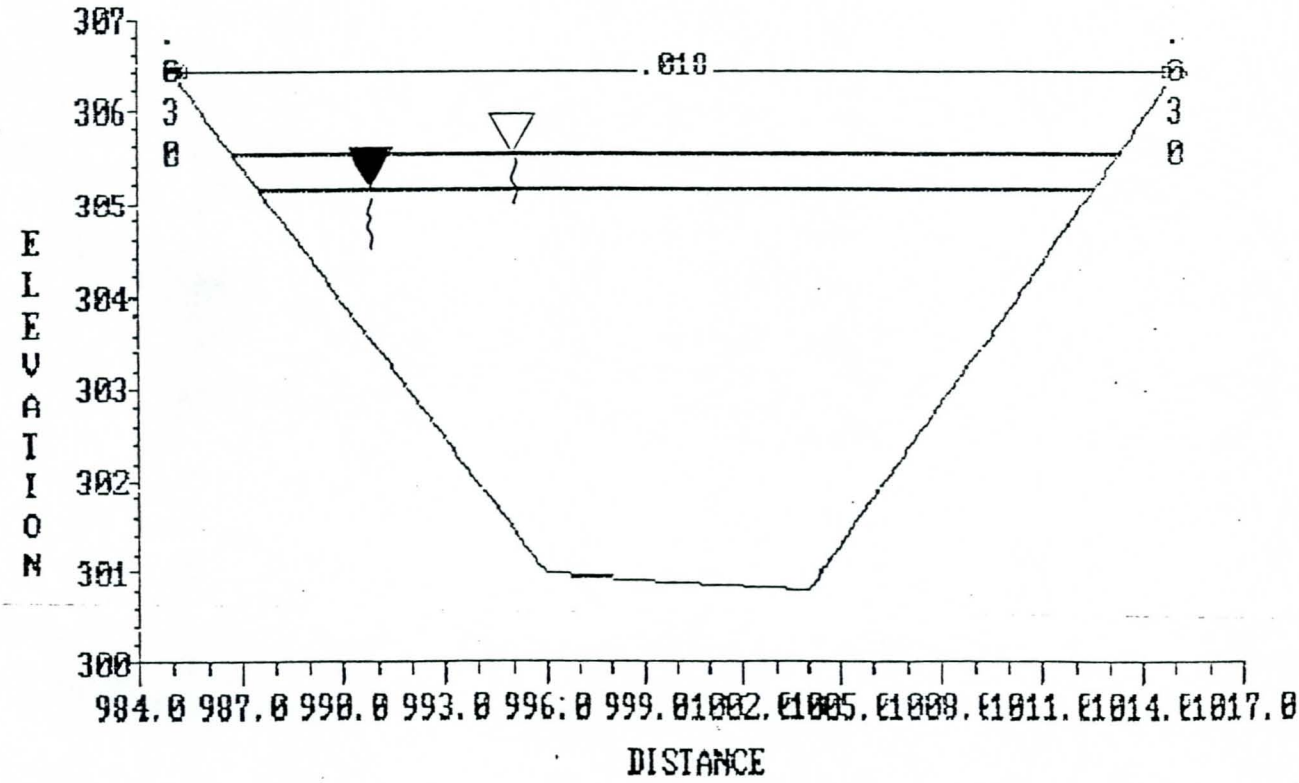

CROSS-SECTION NO. 31200.000

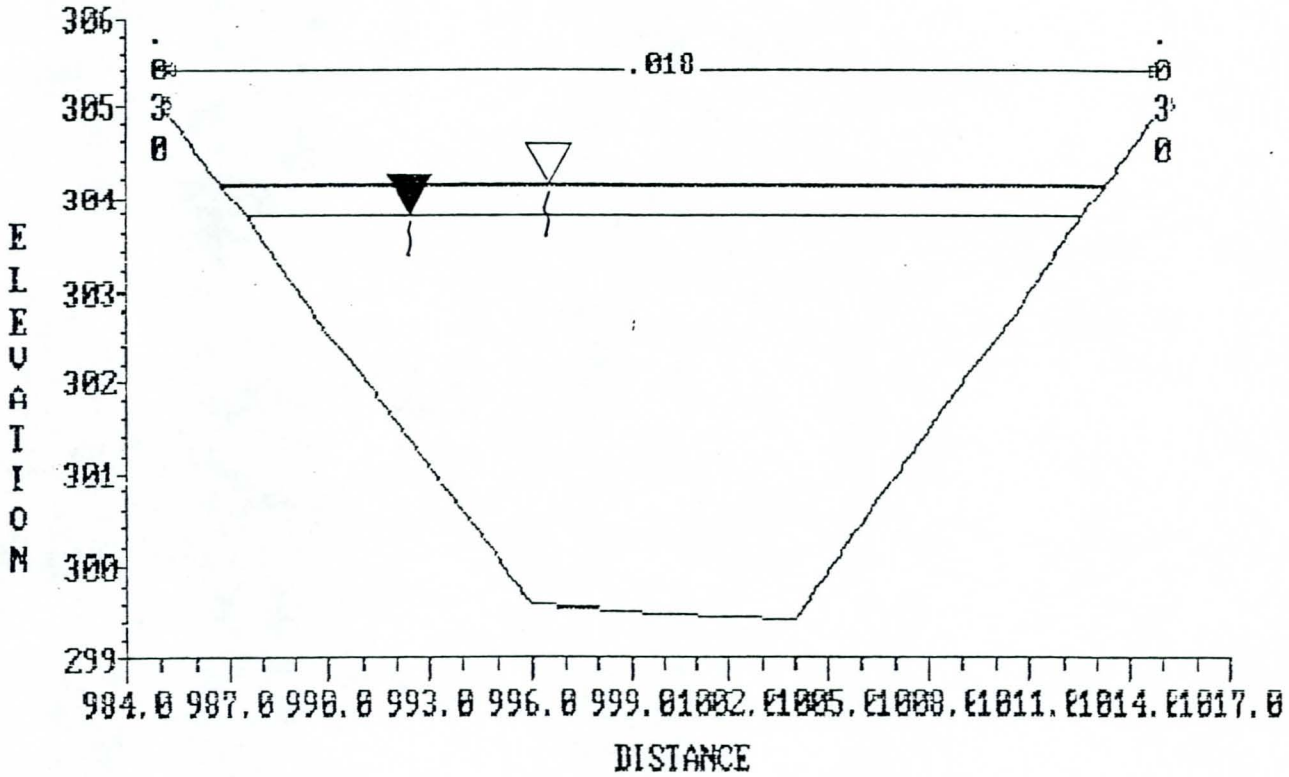
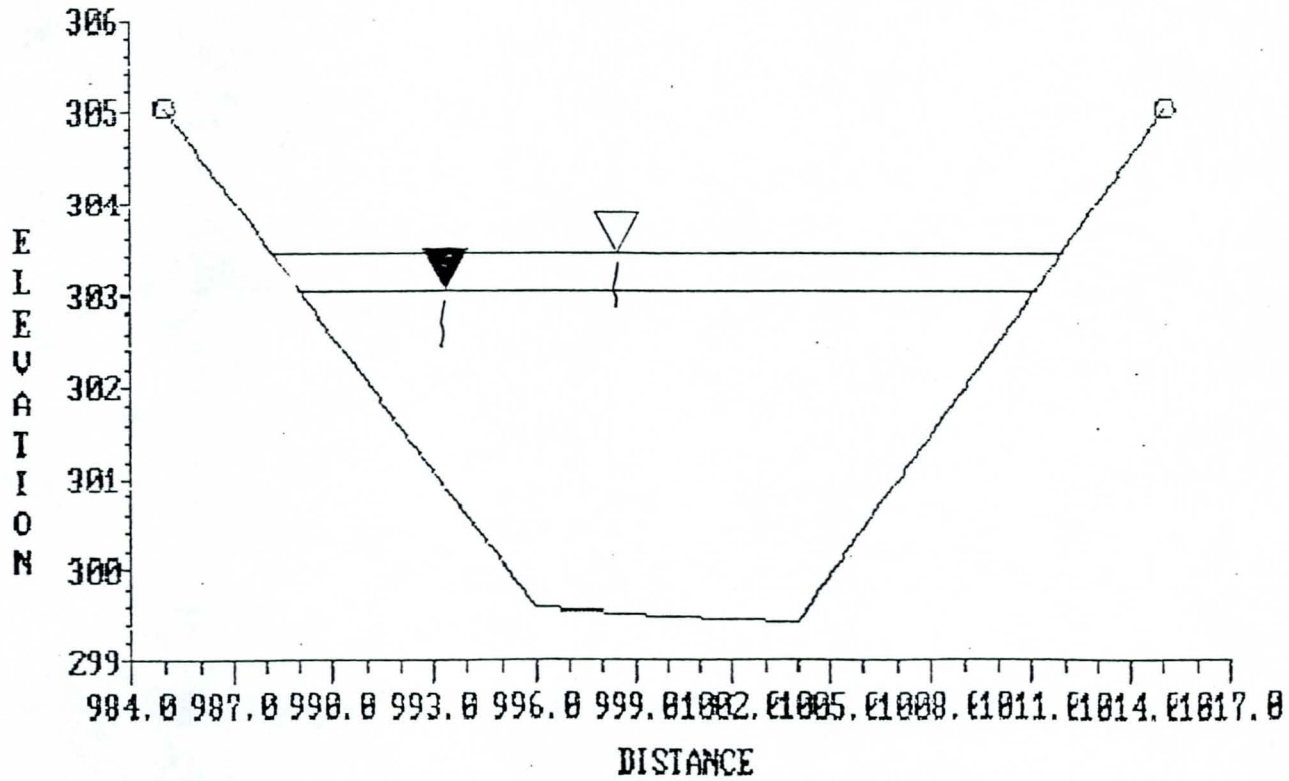
CROSS-SECTION NO. 31096.000